Bridge Standards--Local Governments

WA-RD 166.1

Final Report
November 1988

Washington State Department of Transportation
Planning, Research and Public Transportation

in cooperation with the
United States Department of Transportation
Federal Highway Administration

WASHINGTON STATE DEPARTMENT OF TRANSPORTATION

Duane Berentson, Secretary
A.D. Andreas, Deputy Secretary
James P. Toohey, Assistant Secretary for Planning, Research and Public Transportation

Washington State Transportation Commission Research Committee
William O. Kamps, Chair
Bernice Stern, Commissioner
Leo B. Sweeney, Commissioner

WSDOT Research Executive Committee
A.D. Andreas, Chair, Deputy Secretary for Transportation
E.W. Ferguson, District 4 Administrator
H. W. Parker, Assistant Secretary for Marine Transportation
Robert C. Schuster, Assistant Secretary for Highways
James P. Toohey, Assistant Secretary for Planning Research & Public Transportation

WSDOT Research Technical Committees
Highway Operations and Development
Don Senn, Chair, District 2 Administrator
John Aspaas, District 4 Project Engineer
William P. Carr, Associate Research Director
John Conrad, District 1 District Operations Engineer
Rich Darnell, District 3 Maintenance & Operations Engineer
C. Stewart Gloyd, Bridge/Structures Engineer
Wayne Gruen, State Traffic Engineer
Dennis Jackson, Roadway Construction Engineer
Stan Moon, Location/Design Engineer
Dick Shroll, District 6 Maintenance Superintendent
Ken Thomas, Operations Engr., Bellingham Public Works Dept.
George Tsiatis, Structural Engineer, Washington State University

Materials and Product Evaluation
Del Vandehey, Chair, State Construction Engineer
Keith W. Anderson, Federal Program Manager
Jim Buss, District 5 Construction Engineer
Newton Jackson, Pavement/Soils Engineer
Steve Kramer, Assistant Professor, Civil Engineering, U of W
Bob Krier, Bridge Operations Engineer
Bob Spratt, District 2 Maintenance Engineer
John Strada, Materials Engineer

Planning and Multimodal
Don Tranum, Chair, District 6 Administrator
Ron Anderson, Manager, District 6 Management Services
Ken Casavant, Professor, Washington State University
King Cushman, Director, Pierce County Transit Development
Kris Gupta , Manager, Transportation Data Office
Charles Howard, Transportation Planning Office
Jerry Lenzi, Manager, Multi Modal Branch
Jim Slakey, Manager, Public Transportation
Ray Deardorf, Service Planning Manager, Ferry System

WSDOT Research Implementation Committee
Stan Moon, Chair, Location/Design Engineer
Jack E. Hanson, Location Engineer
Dennis Ingham, State Maintenance Engineer
Dennis Jackson, Roadway Construction Engineer
Kern Jacobson, Engineering Superintendent, WSF
Bob Krier, Bridge Operations Engineer
Ed Schlect, Construction Engineer, Paving
Gerald Smith, District 1, Assistant I-90 Construction Engineer
Bob Spratt, District 2 Maintenance Engineer
John Strada, Materials Engineer

WSDOT Research Office
John Doyle, Director
William P. Carr, Associate Director
Keith W. Anderson, Federal Program Manager
Julie Leverson, Database Coordinator
Carl Toney, Research Administrator

WSDOT Research Liaisons
District 1 - John Conrad, Public Transportation & Planning Engr.
District 2 - Dave House, Project Development Engineer
District 3 - Bob George, Assistant Location Engineer
District 4 - Richard N. Coffman, Maintenance Engineer
District 5 - Robert MacNeil, Design Engineer
District 6 - Richard Larson, Design and Planning Engineer
WSDOT Library - Barbara Russo, Librarian

Transportation Research Council
Transportation Commission
Leo B. Sweeney, Chair
William J. Kamps, Vice Chair
Vaughn Hubbard
Bernice Stern
Richard Odabashian
Albert D. Rosellini
Jim Henning

Federal Highway Administration
Paul C. Gregson, Division Administrator

Private Sector
Milton "Bud" Egbers, President, Skagit Valley Trucking
Richard Ford, Managing Partner, Preston, Thorgrimson, Ellis, Holman
Tom Gaetz, Project Manager, David Mowat & Company, Bellevue
Lawrence Houk, Vice President, Lockheed Shipbuilding
Charles H. Knight, President, Concrete Technology
H. Carl Munson, VP for Strategic Planning, Boeing Co., Seattle
Michael Murphy, President, Central Pre-Mix Concrete
Richard Norman, President, Associated Sand & Gravel, Everett
John Ostrowski, Public Works Director, Vancouver, WA
Richard S. Page, President, Washington Roundtable
Sudarshan Sathe, Dir., Technical Services, Polycarb Inc., Cleveland, OH
Gerald E. Weed, Public Works Director, Snohomish County

Universities
Gene L. Woodruff, Vice Provost for Research, UW
Robert V. Smith, Associate Provost for Research, WSU
Neil Hawkins, Associate Dean for Research, College of Engineering, UW
Reid Miller, Dean, College of Engineering, WSU
Colin Brown, Professor and Chair, Civil Engineering, UW
Surinder K. Bhagat, Professor and Chair, Civil Engineering, WSU

Washington State Department of Transportation
Duane Berentson, Secretary
A.D. Andreas, Deputy Secretary
C.W. Beeman, District 5 Administrator
R.E. Bockstruck, District 1 Administrator
J.L. Clemen, Assistant Secretary for Finance & Budget Management
Don Senn, District 2 Administrator
R.L. Daniels, Administrator, Public Affairs Office
E.W. Ferguson, District 4 Administrator
W. H. Hamilton, Assistant Secretary for Aeronautics
W.I. Hordan, State Aid Engineer
H. W. Parker, Assistant Secretary , Marine Transportation
R.C. Schuster, Assistant Secretary for Highways
A.T. Smelser, District 3 Administrator
J.P. Toohey, Assistant Secretary for Plng, Res., and Pub. Trans.
M.D. Tranum, District 6 Administrator
D.J. Vandehey, State Construction Engineer

Representative George Walk, Chair - Legislative Transportation Committee

Federal Highway Administration
M. Eldon Green, Region 10 Administrator
Otis C. Haselton, Region Office Research and T2 Engineer
Ernest J. Valach, Director, Regional Planning and Program Development

Paul C. Gregson, Division Administrator
Barry Brecto, Division Office Programming and T2 Engineer
Charles W. Chappell, Division Transportation Planner
Mike Duman, Assistant Transportation Planner

Washington State Transportation Center (TRAC)
G. Scott Rutherford, Director
Richard Fragaszy, Deputy Director, WSU
Joe P. Mahoney, Deputy Director, UW
Khossrow Babaei, Senior Research Engineer
Don Ernst, Technology Transfer
Mark Hallenbeck, Senior Research Engineer
Alison Kaye, Word Processing Technician
Ed McCormack, Research Engineer
Amy O'Brien, Editor
Bev Odegaard, Program Assistant
Ron Porter, Word Processing Technician
Cy Ulberg, Senior Research Engineer
Duane Wright, Research Aide

BRIDGE STANDARDS--

LOCAL GOVERNMENTS

by
Harold C. Sorensen

Washington State Transportation Center
Department of Civil and Environmental Engineering
Washington State University
Pullman, Washington 99164-2910

E. H. Henley, Jr., Technical Monitor

Transportation Supervising Engineer I
Bridge and Structures Branch, Highway Division
Washington State Department of Transportation

Final Report

Agreement Number GC8287
Task 6

Prepared for

Washington State Department of Transportation
and in cooperation with U.S. Department of Transportation,
Federal Highway Administration

November, 1988

WASHINGTON STATE DEPARTMENT OF TRANSPORTATION

TECHNICAL REPORT STANDARD TITLE PAGE

1. REPORT NO WA-RD 166.1	2. GOVERNMENT ACCESSION NO.	3. RECIPIENT'S CATALOG NO
4. TITLE AND SUBTITLE Bridge Standards--Local Governments		5. REPORT DATE November 1988 6. PERFORMING ORGANIZATION CODE
7. AUTHOR(S) Harold C. Sorensen[1]		8. PERFORMING ORGANIZATION REPORT NO
9. PERFORMING ORGANIZATION NAME AND ADDRESS Washington Transportation Center and Washington State University Dept. of Civil & Environmental Engineering Pullman, Washington 99164-2910		10. WORK UNIT NO. 11. CONTRACT OR GRANT NO. WSDOT GC8287-06, Item 223 13. TYPE OF REPORT AN PERIOD COVERED
12. SPONSORING AGENCY NAME AND ADDRESS Washington State Department of Transportation Transportation Building Olympia, Washington 98504		Final Report 2/88-11/88 14. SPONSORING AGENCY CODE

15. SUPPLEMENTARY NOTES

FHWA Contact Manager: Mr. Robert W. Pillsbury

1. Washington State Transportation Center, Washington State University

16. ABSTRACT

In this study a survey was conducted to ascertain the needs of employees of local governmental agencies with regard to the conduct of the design of bridges. Recommendations, relative to the development of standard plans which can be used by county engineers, are put forth. These recommendations are based on the needs of the local agencies, information regarding existing manufacturing capabilities, information concerning existing standard plans relative to bridges and information on an existing computer software program (BRADD-2) which is available from the AASHTO. The information on which the recommendations were made was obtained by telephone conversations, written questionnaires and/or personal visits with/from/to 75 local agencies (46 cities and 39 counties) in the state of Washington and by personal visits to 4 precasting plants and 1 fabricating plant.

17. KEY WORDS bridge design, standard plans, precast, prestressed, concrete, local government agencies, suppliers, fabricators, software		18. DISTRIBUTION STATEMENT	
19. SECURITY CLASSIF. (of this report) None	20. SECURITY CLASSIF. (of this page) None	21. NO. OF PAGES 18	22. PRICE

DOT FORM 310-022 (11/86) -1216-

DISCLAIMER

The contents of this report reflect the views of the author, who is responsible for the facts and the accuracy of the data presented herein. The contents do not necessarily reflect the official views or policies of the Washington State Department of Transportation or the Federal Highway Administration. This report does not constitute a standard, specification or regulation.

TABLE OF CONTENTS

	Page
TITLE PAGE	i
ABSTRACT	ii
DISCLAIMER	iii
TABLE OF CONTENTS	iv
LIST OF TABLES	v
SUMMARY	1
CONCLUSIONS AND RECOMMENDATIONS	3
INTRODUCTION	5
REVIEW OF PREVIOUS WORK	6
PROCEDURES	7
DISCUSSION	9
IMPLEMENTATIONS	14
ACKNOWLEDGMENTS	16
REFERENCES	17
ATTACHMENTS	18

LIST OF TABLES

Table Page

1. WSDOT Standard Bridge Plans 11

BRIDGE STANDARDS--LOCAL GOVERNMENTS

SUMMARY

The purpose of this study was to ascertain the needs of local governmental agencies, the capabilities of suppliers/fabricators/contractors, the existence of Standard Plans in Washington and the availability of computer software with regard to the design and construction of bridges by the local agencies in the state of Washington. Specific recommendations regarding the development and implementation of standard plans for use by engineers employed by the local agencies were to be made.

The information required for use in this study was acquired via telephone conversations, questionnaires and personal visits by the P.I. to many local agencies in addition to several precaster and fabricator plants. Time constraints did not allow for personal visits to any individual contractors to be performed.

The conclusions reached after evaluation of the information obtained during the project are as follows:

1. Standard plans for several types of precast prestressed concrete bridges would be of value to the general population of local government engineers.
2. Standard plans for bridges involving timber or steel load carrying members need not be developed.
3. Additional computer software for design of bridges to complement software already in use by state and local agencies is not necessary.
4. Standard plans for concrete bridge sections which exist in the WSDOT should be revised to accommodate present precaster production capabilities. These standard plans should then be provided to the local agencies.

5. Seminars which are oriented toward bridge design should be conducted by and for representatives of the local agencies. Representatives from the WSDOT should actively participate in these seminars.
6. Representatives of the WSDOT should be more sensitive to the needs of the local agencies and a productive exchange of information should be implemented.
7. Representatives of local government are generally satisfied with the status quo involving the design of their bridges. However, many of them could imagine improvements in their operations which would result in better, cheaper bridges through the use of Standard Plans.

CONCLUSIONS AND RECOMMENDATIONS

Based on the information obtained from local government representatives by phone, questionnaires and personal visits, the following items are recommended.

1. Existing WSDOT Standard Plans for various precast, prestressed sections should be revised to incorporate the appropriate dimensions that are mutually agreed upon by WSDOT representatives and the representatives of the WPCI.
2. A complete set of these standard plans should be given to each local government in Washington.
3. The Association of County Engineers in Washington should sponsor annual seminars devoted solely to bridges which involve the use of the design standards, siting procedures for bridge locations, the computer software presently being used by various counties to design bridges and for the general exchange of information related to bridges. WSDOT representatives should attend and participate in these seminars so that mutual expertise can be more readily shared. After all, the financial support for both state and local agency activities ultimately comes from the same source, i.e., the taxpayer.
4. Representatives of the WSDOT should be more sensitive to the needs of the local agencies and a productive exchange of information should be implemented.
5. Computer software for bridge design for general distribution to all county engineers should not be purchased. The use of existing computer software by WSDOT and by some county engineers should be discussed at the annual bridge seminar series.
6. Standard plans for bridges made from timber or steel should not be developed for use by the county engineers. If these plans are developed by WSDOT designers or by county bridge engineers, they should be distributed to any other interested county engineer. However, the impetus for developing such

standards should not be associated with the general needs of the local agencies.

INTRODUCTION

A majority of the local governments (cities and counties) in Washington do not have engineering employees with the expertise and/or time to design bridges. The engineers in local governments who do design bridges seldom have the time to develop alternate designs to be used in the bidding process.

The objective of this study was to ascertain, relative to the design of bridges: 1) the needs of the local governments, 2) the extent to which Standard Plans for Bridges are available and used in Washington, 3) the capabilities of fabricators of bridge elements, and 4) the availability for use of computer software.

The information to be obtained pursuant to the objective would provide a basis for some specific recommendations relative to the development of bridge standards which could be used by engineers in local governments to obtain satisfactory bridges at the lowest possible costs.

REVIEW OF PREVIOUS WORK

A study entitled "Bridge-Standard Systems" (1) was undertaken during the period from March 1986 to July 1987. For this study, a national survey was made to identify the standard designs/details which existed in the United States for various types of bridges. Information on bridge standards was received from one hundred twenty eight (128) different agencies. The responses included information on various road widths, number of spans, span continuity, materials and design load. Other information was received which related to the elements of the superstructure and the substructure. A list of possible bridge design alternatives was prepared from the information which was received.

A questionnaire pertaining to the potential design alternatives was prepared and mailed to all county engineers in Washington. The responses to the questionnaire were tabulated and analyzed. Six alternates were then recommended for development: namely, 3 concrete alternatives, 2 steel alternatives and 1 timber alternative. However, it was decided that, before any work on the development of any new standards be performed, more detailed information needed to be obtained from the local agencies and the fabricators in Washington, and that a more detailed assessment of existing WSDOT standards was needed. Hence, the stimulus for this project was provided.

PROCEDURES

The information needed to form the basis for the conclusions and recommendations in this study was obtained by the use of a questionnaire and by personal visits by the author to the offices of various local governments. The questionnaire which was used is Attachment Number 1 which is included at the end of this report.

The questionnaire was mailed to 85 local agencies (46 cities and 39 counties). (See Attachment Number 2 for the list of agencies.) Seventy-four (74) questionnaires were returned by these agencies (74/85 = 87%) as follows: cities 40/46 for 87% and counties 34/39 for 87%. The majority of the questionnaires received from the cities contained few answers, because it was revealed that many cities in the state of Washington have no city owned bridges. Only 83 bridges were indicated for replacement or renovation in the next 15 years in the cities which responded. However, the majority of the questionnaires received from the counties contained much more useful information with 833 bridges indicated for replacement or renovation in the next 15 years. This information provided the basis for a decision that a majority of the time expended in personal visits would be to the county offices and discussions held with the county engineer or other representative.

The P.I. (i.e., the author) made personal visits to 33 county offices, to 2 city offices, to the offices of 4 prestressed concrete plants and to the office of one steel fabricator. The P.I. also had personal visits with representatives of the Bridge and Structures Branch of WSDOT in Olympia and with representatives of CRAB in Olympia. The PI also obtained and reviewed literature and a video tape which describes BRADD-2, a computer software program which can be used for the design of bridges. BRADD-2 was developed by the Pennsylvania Department of Transportation. A meeting of Washington county engineers was held in conjunction with the 1988 Annual Road Builders Clinic in Moscow, Idaho in order to discuss

directly by the county bridge designer or the design consultant hired by the county.

d. Several of the counties in the Central Basin and on the East side work directly with a representative from a precasting plant to obtain the information needed to design and build a bridge. All of the Precasters have standard plans for specific bridge types. These standard plans are modelled after the guidelines put forth by the Prestressed Concrete Institute. However, much confusion is present in the industry, because each precaster makes a nominal cross-section with many actual dimensions which are different than those in the cross-sections which are made by other precasters and which are different from the dimensions for the cross-sections developed by bridge engineers in the WSDOT. See Attachment Number 3.

3. A majority of county engineers believed that dollar savings on county bridges could be achieved if "standard" standard plans existed for four precast sections; namely, 1) a flat slab (solid or hollow) for spans up to 30 ft, 2) a Tri-beam for spans from 25-60 ft, 3) a bulb tee for spans from 50-160 ft to accommodate a CIP deck, and 4) a full decked bulb tee for spans from 50-160 ft. The need for flat slab standards exists the strongest in the westernmost counties in the lowlands where stream clearances are critical to the flow. Some county engineers prefer to use bulb tee sections on which a CIP deck can be poured. They indicated that a smoother deck surface could be obtained and were willing to pay the additional cost to obtain the smoother deck. In general, however, most of the county engineers prefer the decked bulb tee because of the lower cost, especially in regions where ready-mixed concrete was not easily available for the casting of a separate deck. Standard

plans for several precast prestressed sections have already been developed by WSDOT engineers as shown in Table 1 below.

Table 1

WSDOT Standard Bridge Plans

Section	Span Range (feet)
12 inch flat slab	12.5-28
18 inch flat slab	27-46
26 inch flat slab	42-69
Tri Beam*	28-55.5
34 inch Decked Bulb Tee*	40-75
52 inch Decked Bulb Tee*	70-115

*These standards are being revised as of 2/4/88.

However, if these plans are to be useful to a majority of the county engineers, the dimensions of the cross-sections must be compatible to those sections which can be fabricated by all of the precasters. This requires that the precasters agree with the WSDOT to a set of standard dimensions for each nominal section. (See Attachment 3 for the variations in the cross-sectional dimensions of the desired standard sections.)

4. In the very rural, sparsely populated counties in the state, the Bridge Replacement (BR) policy of the Rural Arterial Program (RAP) has been a tremendous impetus to the county engineers in upgrading badly deteriorated bridges. The program has provided nearly all of the funds necessary to build any new bridge. Without this financial help, these counties probably would not have been able to upgrade their bridges.

5. Information was obtained from the Pennsylvania Department of Transportation concerning a computer software package called BRADD-2 which can be used for the design and drafting of single span bridges from 18 ft to 200 ft long (2). This computer software package has been transferred from PennDOT to AASHTO for on-going support, distribution and licensing. BRADD-2 is available, in the PennDOT format, to the WSDOT for $10,000. The PI of this project (the author of this report) believes that a computer software package of this type could be used very effectively by many county engineers to perform their own bridge design. However, the software cannot be used in Washington based on PennDOT specifications. The cost of revising the program to WSDOT specifications could be as much as $250,000. When the concept of performing the design of bridges with the use of BRADD-2 was discussed with the individual county engineers, a majority of them indicated that it would probably be a good procedure but raised many good questions and concerns relative to the cost and operation of such a system. The main questions and concerns are as follows:

a) How would the system be implemented?

b) Who would be responsible for the operation?

c) What would be the response time?

d) If the system were a "black box" operation relative to the county engineers, who would respond to problems encountered in the field during the construction of the bridge?

e) How would the development costs be shared by the counties?

f) What would be the annual service fees?

Several county engineers suggested that CRAB should be involved in the management of any software of this kind. However, a representative of CRAB

indicated that this board would probably not become involved with such a system because of the present commitments which CRAB already has.

The county engineers did not want to provide lump sum seed money to purchase and upgrade the BRADD-2 program. However, nearly all of the county engineers would favor a fee for each time the program is used by them. An economic analysis shows that, for 800 applications in the next 15 years at $2,000 per application, $1,600,000 could be available to purchase, upgrade, implement and operate the system. This would also result in approximately a $5,000 savings in consulting fees per application, or $4,000,000 in tax dollars in the next 15 years.

Although the potential for saving tax dollars exists with the use of BRADD-2, the county engineers were very reluctant to indicate an approval of such a system. The primary concern was the human response to a problem arising during construction. The uncertainty associated with the "black box" method was more cause for concern than the potential design savings, because many county engineers believed that the total cost of a bridge to the county could actually be more by the "black box" method than by using a consultant, if the responses to their construction problems were not timely.

A video tape which gives the details of BRADD-2 was shown to nine county representatives at a meeting held on March 29, 1988 in Moscow, ID in conjunction with the Annual Road Builders Clinic. The consensus of opinion at this meeting was that the program was very good but that the benefits did not justify the costs involved. Hence, it is concluded that a computer software package such as BRADD-2 should not be purchased for general distribution to and use by the county engineers.

IMPLEMENTATIONS

The following implementations should take place in the next 1-2 years:

1. The Standard Plans for Precast Prestressed Concrete Bridges developed by the WSDOT should be revised. The revisions for each type of cross-section, i.e., flat slab, Tri-beam, bulb tee to accommodate a CIP deck and a full decked bulb tee, should incorporate a standard set of cross-sectional dimensions which have been mutually agreed upon by representatives of the WSDOT and the WPCI. Meetings should be held between these two agencies for the express purpose of determining the appropriate dimensions. The new standards should then be given to each local agency for use by their bridge designers. This procedure would result in cheaper bridges by increased competition among the precasters as well as eliminating the need for the designer to develop several sets of plans where each set is based on the specific section available from each precaster. Additional dollars would be saved by reducing the time required to design a bridge.
2. The Association of County Engineers in Washington should sponsor annual seminars devoted solely to bridges. These seminars should be held in a central location, e.g., Yakima, in the first half of November. Representatives from the Association of Washington Cities should be invited to attend. Members of the Bridge and Structures Branch, WSDOT should actively participate in the planning and presentation of topics at these seminars. The seminars should include topics such as siting procedures for bridge locations, the use of standards in the design of bridges, evaluation/selection procedures for design consultants, explanations for the use of computer software which is available through the WSDOT or local agencies for the design of bridges, presentations by county engineers in various regions of the State regarding their individual specific procedures for accomplishing bridge design, an

explanation of government financial aid programs, and any other topics of general interest to the participants. The concept of the bridge seminar series was conceived and endorsed by country representatives attending the Road Builders Clinic in Moscow, ID in March, 1988. The first seminar should be held in November, 1989. A planning committee should be appointed at the Annual Meeting of the County Engineers in 1988. Several county representatives who are knowledgeable with regard to bridge design should be asked to coordinate the activities. Precasters and other interested parties should also be invited to attend the seminars.

ACKNOWLEDGMENTS

The author expresses his sincere appreciation to the Washington State Department of Transportation in cooperation with the U.S. Department of Transportation, Federal Highway Administration for providing financial support for this study.

Appreciation is also expressed to the Local Government Agencies in Washington (Cities and Counties) for desiring that this project be performed. Special thanks are extended to Jerry Nicholls (Spokane County Bridge Engineer) who was the representative for the Local Government Agencies for this study, and who helped the author develop the questionnaire which was sent to the local agencies. Thanks are extended to E. H. Henley, Jr., WSDOT, who was the Technical Contact for the project, and who provided information to the author in a timely fashion. Thanks are extended to C. A. Toney, WSDOT, for his aid in providing information on the contract, the quarterly reports, and the Final Report for this study.

Very special thanks are extended to each local government representative who returned the questionnaire which provided much needed information to the author for this study, and who gave their time to speak with the author on an unannounced visit to their office. This "open door" attitude was greatly appreciated by the author who drove many miles to speak with them.

And last but not least, the author appreciates the help given to him by A. C. Sorensen, WSU undergraduate student, who entered much of the data received via the questionnaire into the computer data base; by S. J. Kuruvilla, WSU graduate student, who reviewed the questionnaire data, who compiled the data for the precast sections, and who aided the author in collecting all of the materials for the preparation of this report; and by K. M. Cox, WSU Secretary, who did the majority of the word processing which was required in the performance of this study.

REFERENCES

1. Sorensen, H.C. and Olson, C.D., "Bridge-Standard Systems," FINAL REPORT, Research Project Y-3400, Task 12, Washington State Transportation Center, Washington State University, Pullman, Washington 99164-2910, July 1987.
2. Pennsylvania Department of Transportation, An AASHTO Joint Development Project Proposal entitled "Acceptance of a Bridge Automated Design and Drafting (BRADD-2) System." Prepared by F. W. Browser and M. G. Patel, August, 1987.

ATTACHMENTS

1. List of Local Governments
2. Questionnaire for "Bridge Standards--Local Governments"
3. Nominal Standard Bridge Section Dimensional Comparisons

ATTACHMENT NUMBER 1

List of Local Government Agencies

Cities	Counties
Aberdeen	Adams
Anacortas	Asotin
Auburn	Benton
Bellevue	Chelan
Bellingham	Clallam
Bothell	Clark
Bremerton	Columbia
Camas	Cowlitz
Centralia	Douglas
Chehalis	Ferry
Des Moines	Franklin
Edmonds	Garfield
Ellensburg	Grant
Everett	Grays Harbor
Goldendale	Island
Hoquiam	Jefferson
Kelso	King
Kennewick	Kitsap
Kent	Kittitas
Kirkland	Klickitat
Lacey	Lewis
Longview	Lincoln
Lynnwood	Mason
Mercer Island	Okanogan
Monroe	Pacific
Moses Lake	Pend Oreille
Mount Vernon	Pierce
Mountlake Terrace	San Juan
Oak Harbor	Skagit
Olympia	Skamania
Pasco	Snohomish
Port Angeles	Spokane
Port Orchard	Stevens
Pullman	Thurston
Puyallup	Wahkiakum
Redmond	Walla Walla
Renton	Whatcom
Richland	Whitman
Seattle	Yakima
Spokane	
Tacoma	
Tukwila	
Vancouver	
Walla Walla	
Wenatchee	
Yakima	

ATTACHMENT NUMBER 2

REQUIRES A RESPONSE BY MARCH 4, 1988. THANKS!

Questionnaire

for

"Bridge Standards--Local Government"

1. I do not wish to participate in this survey! Cities 21/40 Counties 6/34

Remove our agency name from the mailing list! _____

Reason(s): Not involved in bridge design _____

Will not use standard designs _____

No bridges scheduled for construction in the next 15 years _____

Other _____
(use bottom of sheet, if necessary)

Contact Person: _____

Agency Name: _____

Date: _____

NOTE: The numerator represents the number of responses to the question, while the denominator represents the number of total responses to the questionnaire.

The numbers of questionnaires received that contained useful information are: cities = 19 counties = 28.

PLEASE ANSWER ONLY THE QUESTIONS WHICH FOLLOW THAT APPLY TO YOUR AGENCY.

2. Do you have employees on your staff who are knowledgeable about bridge design?
Yes __*__ No ____. Cities 12/19 Counties 19/28

Do you or your employees perform the design of the bridges built in your jurisdiction?
Yes __*__ No ____. Cities 2/19 Counties 12/28

3. Over the next 15 years, what is your best estimate as to the number of short, intermediate, and medium length single span bridges which you would like to build in your jurisdictional area. (Don't let the lack of dollars influence your answer.) Include in your estimate both the number of bridges to be replaced due to functional or structural deficiencies and the number of bridges to be built resulting from highway realignments.

a. short span	(18-30 ft)	(15 year total)	Cities 19	Counties 317 → 336
b. intermediate span	(30-90 ft)	(15 year total)	Cities 32	Counties 358 → 390
c. medium span	(90-150 ft)	(15 year total)	Cities 32	Counties 158 → 190
		TOTAL	83	833 → 916

4. Please provide the name, address, and telephone number for the following companies so that I can contact them for pertinent information on bridges.

a. A concrete fabricator for bridges

_____ _____ _____
Company Name Address Phone No.

b. A steel fabricator for bridges

_____ _____ _____
Company Name Address Phone No.

c. A timber (including Glulam) fabricator for bridges

_____ _____ _____
Company Name Address Phone No.

d. Local contractors (send a copy of a recent Bid Tabulation sheet in lieu of filling in this list, if you have one available.)

_____ _____ _____
Company Name Address Phone No.

_____ _____ _____
Company Name Address Phone No.

_____ _____ _____
Company Name Address Phone No.

e. A local consultant capable of performing bridge design

_____ _____ _____
Company Name Address Phone No.

NOTE: Too many names were received in response to question 4 to list on this sheet of paper.

5. Do you presently use standard designs for bridges?

Yes __*__ No _____ Cities 9/19 Counties 17/28

6. May I visit your agency to discuss existing standard bridge designs or potential new designs with your bridge engineer or appropriate representative?

Yes __*__ No _____ Cities 15/19 Counties 26/28

7. List any computer software which you to have used in the design of any bridge elements.

Name of Software	Vendor Name	Phone No.
No Responses		

8. Do you have an IBM PC/XT or compatible computer?

Yes __*__ No _____ Cities 17/19 Counties 27/28

9. Do you have an IBM PC/AT or compatible computer?

Yes __*__ No _____ Cities 13/19 Counties 20/28

10. Do you believe that you or your design consultant would use standard bridge designs which have been pre-approved by WSDOT, if they were available, and if they were compatible to your specific bridge requirements?

Yes __*__ No _____ Cities 16/19 Counties 28/28

11. Do you believe that you or your design consultant would use (if available) a computerized design process that would quickly and easily produce bridge drawings and other information which could be used for bidding purposes?

Yes __*__ No _____ Cities 17/19 Counties 26/28

12. In your opinion, would having alternate designs for bridges available for bidding purposes result in bridges being built at a lower overall cost which includes the design costs for all of the alternates?

Yes __*__ No _____ Cities 15/19 Counties 17/28

Reason for "No" answers: _____

13. a. Does the design cost of the bridge influence the type of bridge that you design or have designed?

Yes __*__ No _____ Cities 11/19 Counties 12/28

b. Do you believe that the use of alternate designs in the bidding process would result in reduced construction costs?

Yes __*__ No _____ Cities 13/19 Counties 19/28

c. Do you believe that the reduced cost of construction due to the competition would be low enough to recoup the cost of producing at least one alternate design, especially if the alternate could be developed with the use of design standards?

Yes __*__ No _____ Cities 12/19 Counties 18/28

d. Is the future cost of maintaining a bridge included in your procedure and philosophy for bridge design?

Yes __*__ No _____ Cities 16/19 Counties 27/28

e. Have you ever used alternate designs for bidding purposes?

Yes __*__ No _____. If so, was it cost effective? Yes __*__ No _____

Cities 3/19 Counties 13/28 Cities 2/3 Counties 7/13

Contact Person: _____

Agency: _____

Date: _____

For more information, please contact

Harold C. Sorensen, PhD, SE
Associate Professor - Structures
Department Civil and Environmental Engineering
Washington State University
Pullman, WA 99164-2910
(509) 335-5183 or (509) 335-8546 (Leave Message)

REQUIRES A RESPONSE BY MARCH 4, 1988. THANKS!

ATTACHMENT NUMBER 3

TABLE I

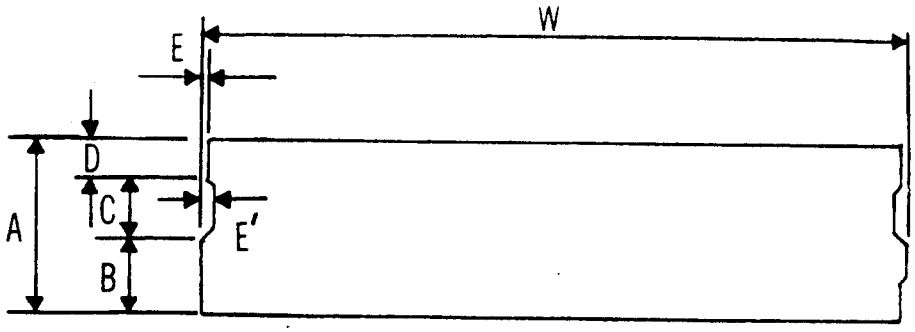

12" Standard Precast Prestressed Slab
(All dimensions in inches)

Company	W	A	B	C	D	E	E'
D.O.T.	48	12	5	4	3	3/8	3/4
P.C.I.	36 to 84*	10 to 18	3 to 11	4	3	3/8	3/4
Y.P.I.	N/A	N/A	N/A	N/A	N/A	N/A	N/A
Central Pre-Mix	48	12	4	2	6	3/8	N/A
Concrete Tech.	N/A	N/A	N/A	N/A	N/A	N/A	N/A
Supercrete	N/A	N/A	N/A	N/A	N/A	N/A	N/A

* Railway trestle slab

TABLE II

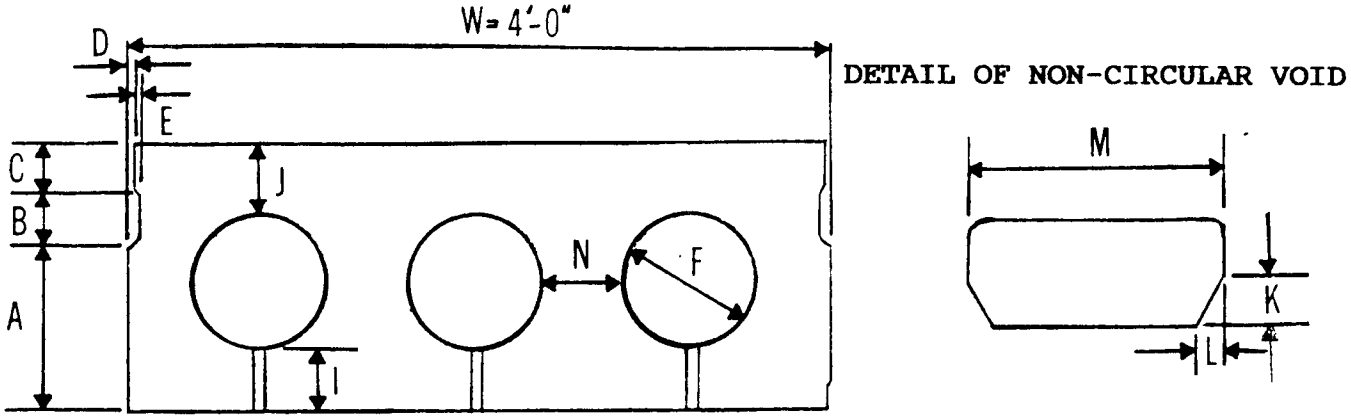

18" Voided Precast Prestressed Slab
(All Dimensions in inches)

Company	A	B	C	D	E	F
D.O.T.	11	4	3	3/8	3/4	10
P.C.I.	8 to 14	4	3	3/8	3/4	8 to 12
Y.P.I.	N/A	N/A	N/A	N/A	N/A	N/A
Central Pre-Mix	4	2	6	3/8	N/A	N/A
Concrete Tech.	N/A	N/A	N/A	N/A	N/A	N/A
Supercrete	N/A	N/A	N/A	N/A	N/A	N/A

18" Voided Precast Prestressed Slab (Cont'd)
(All dimension in inches)

Company	G	H	I	J	K	L
D.O.T.	5	$\frac{1}{4}$	4	4	N/A	N/A
P.C.I.	N/A	N/A	$3\frac{1}{2}$ to $4\frac{1}{2}$	$3\frac{1}{2}$ to $4\frac{1}{2}$	N/A	N/A
Y.P.I.	N/A	N/A	N/A	N/A	N/A	N/A
Central Pre-Mix	N/A	N/A	2	$4\frac{1}{2}$	$2\frac{1}{2}$	$1\frac{1}{2}$
Concrete Tech.	N/A	N/A	N/A	N/A	N/A	N/A
Supercrete	N/A	N/A	N/A	N/A	N/A	N/A

18" Voided Precast Prestressed Slab (Cont'd)
(All Dimensions in inches)

Company	M	N
D.O.T.	N/A	$4\frac{1}{2}$
P.C.I.	N/A	N/A
Y.P.I.	N/A	N/A
Central Pre-Mix	$12^{3}/_{4}$	$11\frac{1}{2}$
Concrete Tech.	N/A	N/A
Supercrete	N/A	N/A

TABLE III

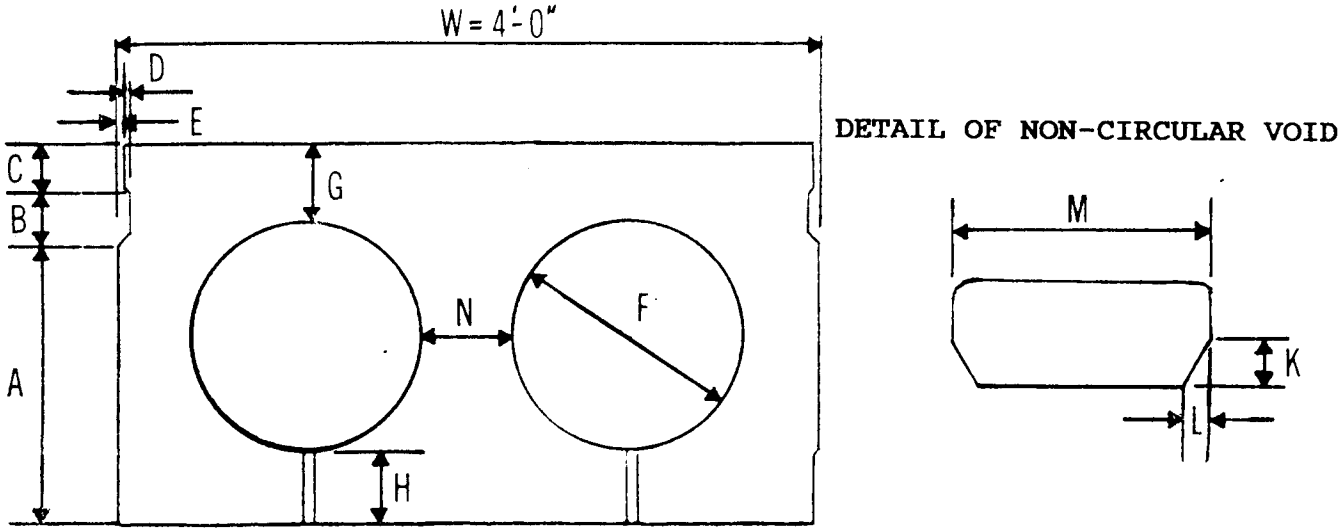

26" Standard Precast Prestressed Slab
(All Dimensions in inches)

Company	A	B	C	D	E	F
D.O.T.	19	4	3	3/8	3/4	16.7
P.C.I.	8 to 14	4	3	3/8	3/4	8 to 12
Y.P.I.	N/A	N/A	N/A	N/A	N/A	N/A
Central Pre-Mix	4	2	6	3/8	N/A	5½
Concrete Tech.	N/A	N/A	N/A	N/A	N/A	N/A
Supercrete	N/A	N/A	N/A	N/A	N/A	N/A

26" Standard Precast Prestressed Slab (Cont'd)
(All Dimensions in inches)

Company	G	H	I	J	K	L
D.O.T.	4.65	4.65	5	$\frac{1}{4}$	N/A	N/A
P.C.I.	$3\frac{1}{2}$ to $4\frac{1}{2}$	$3\frac{1}{2}$ to $4\frac{1}{2}$	N/A	N/A	N/A	N/A
Y.P.I.	N/A	N/A	N/A	N/A	N/A	N/A
Central Pre-Mix	$4\frac{1}{2}$	2	N/A	N/A	$2\frac{1}{2}$	$1\frac{1}{2}$
Concrete Tech.	N/A	N/A	N/A	N/A	N/A	N/A
Supercrete	N/A	N/A	N/A	N/A	N/A	N/A

26" Standard Precast Prestressed Slab (Cont'd)
(All Dimensions in inches)

Company	M	N
D.O.T.	N/A	5.3
P.C.I.	N/A	N/A
Y.P.I.	N/A	N/A
Central Pre-Mix	12.75	$11\frac{1}{2}$
Concrete Tech.	N/A	N/A
Supercrete	N/A	N/A

TABLE IV

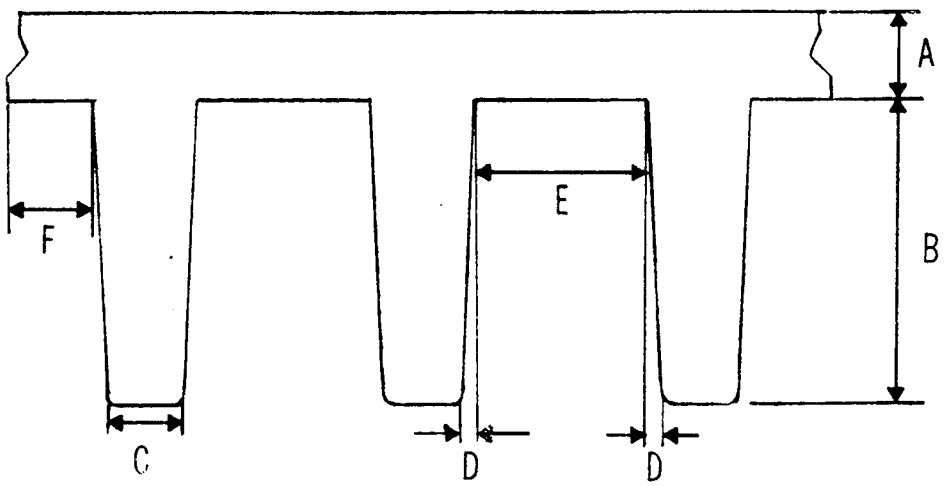

Prestressed Precast Tri Beam (Section I)
(All dimensions in inches)

Company	A	B	C	D	E	F
D.O.T.	6	21	$5\frac{1}{4}$	1	12	$13^{1}/_{8}$
P.C.I.	6	17	$3\frac{1}{2}$	$1\frac{1}{4}$	8	0
Y.P.I.	5 to 6	15	$6\frac{1}{2}$	1	$9\frac{1}{2}$	$4^{3}/_{4}$
Central Pre-Mix	$3\frac{1}{2}$ to $4\frac{1}{2}$	21	$5\frac{1}{4}$	1	12	1 to $18\frac{1}{4}$ (adjustable)
Concrete Tech.	N/A	N/A	N/A	N/A	N/A	N/A
Supercrete	N/A	N/A	N/A	N/A	N/A	N/A

TABLE V

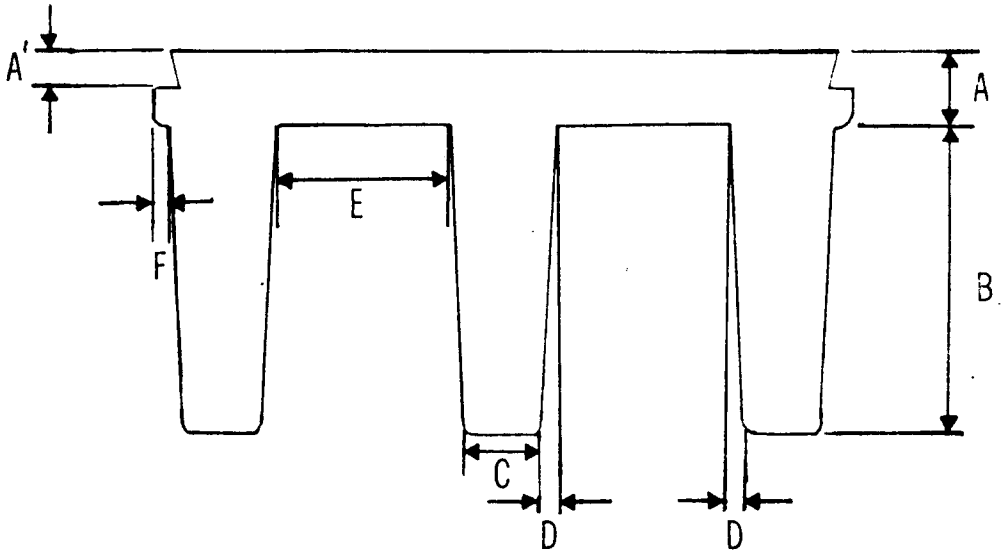

Prestressed Precast Tri Beam (Section II)
(All dimensions in inches)

Company	A	A'	B	C	D	E	F
D.O.T.	5	$2\frac{1}{2}$	21	$5\frac{1}{4}$	1	12	1
P.C.I.	4 to 6	N/A	12 to 17	$3\frac{1}{2}$	$1\frac{1}{4}$	8	0
Y.P.I.	N/A	N/A	N/A	N/A	N/A	N/A	N/A
Central Pre-Mix	4 or 6	$3\frac{1}{2}$ or $5\frac{1}{2}$	12	$3\frac{1}{2}$	$1\frac{1}{4}$	8	0
Concrete Tech.	N/A	N/A	N/A	N/A	N/A	N/A	N/A
Supercrete	N/A	N/A	N/A	N/A	N/A	N/A	N/A

TABLE VI

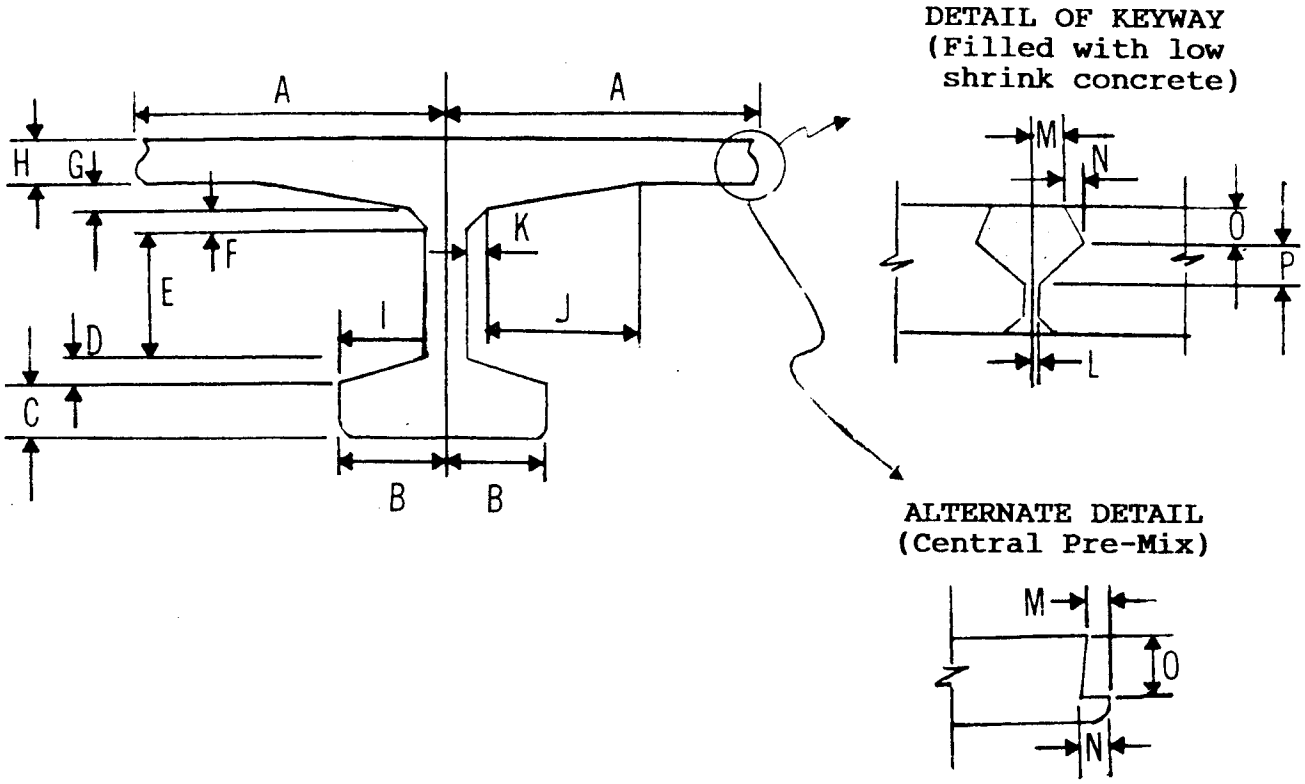

34" Deep Decked Bulb Tee Girders
(All dimensions in inches)

Company	A	B	C	D	E	F
D.O.T.	36	12	6	3	15	2
P.C.I.	24, 24½ or 36	12	6	3	15	2
Y.P.I.	N/A	N/A	N/A	N/A	N/A	N/A
Central Pre-Mix	23.8125 to 47.8125	12	6	3	15	2
Concrete Tech.	24 to 48	12	6	3	15	2
Supercrete	N/A	N/A	N/A	N/A	N/A	N/A

34" Deep Decked Bulb Tee Girders (Cont'd)
(All dimensions in inches)

Company	G	H	I	J	K	L
D.O.T.	3	5	9½	19½	2	½
P.C.I.	3	5	9½	J + K = 21½		N/A
Y.P.I.	N/A	N/A	N/A	N/A	N/A	N/A
Central Pre-Mix	3	5	9½	19 5/16	2	N/A
Concrete Tech.	3	5	9½	2	N/A	N/A
Supercrete	N/A	N/A	N/A	N/A	N/A	N/A

34" Deep Decked Bulb Tee Girders (Cont'd)
(All dimensions in inches)

Company	M	N	O	P
D.O.T.	1½	½	1½	1½
P.C.I.	N/A	N/A	N/A	N/A
Y.P.I.	N/A	N/A	N/A	N/A
Central Pre-Mix	1	1½	3½	N/A
Concrete Tech.	N/A	N/A	N/A	N/A
Supercrete	N/A	N/A	N/A	N/A

TABLE VII

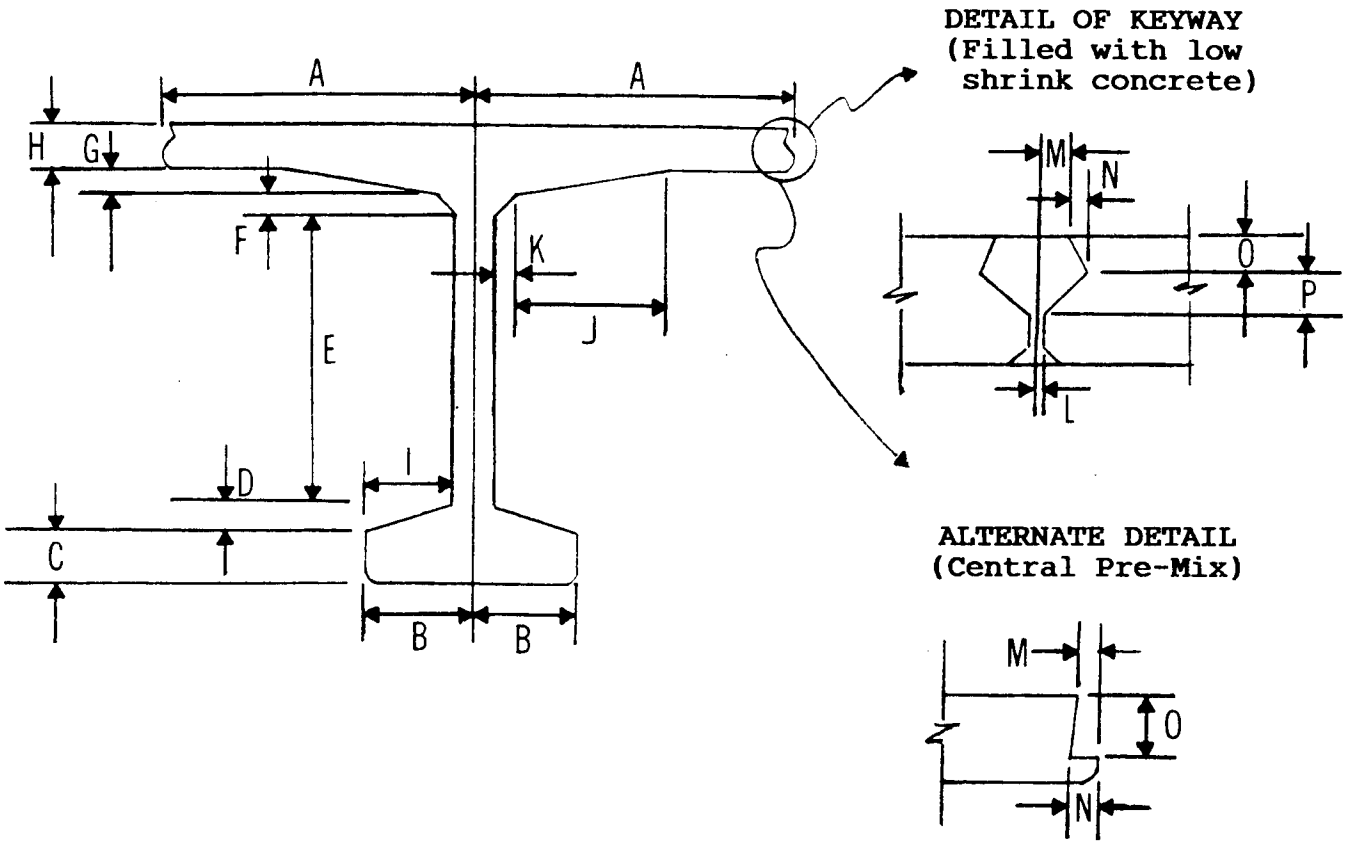

52" Deep Decked Bulb Tee Girders
(All dimensions in inches)

Company	A	B	C	D	E	F
D.O.T.	36	12	6	3	33	2
P.C.I.	30 or 42	12	6	3	10 to 22	2
Y.P.I.	N/A	N/A	N/A	N/A	N/A	N/A
Central Pre-Mix	23.8125 to 47.8125	12	6	3	21 to 45	2
Concrete Tech.	24 to 48	12	6	3	33	2
Supercrete	N/A	N/A	N/A	N/A	N/A	N/A

52" Deep Decked Bulb Tee Girders (Cont'd)
(All dimensions in inches)

Company	G	H	I	J	K or K'	L
D.O.T.	3	5	9½	19½	2	½
P.C.I.	3	5	9½	J + K = 21½ K' = 5		N/A
Y.P.I.	N/A	N/A	N/A	N/A	N/A	N/A
Central Pre-Mix	3	5	9½	19½	K = 2 K' = 5	N/A
Concrete Tech.	3	5	9½	19½	K = 2 K' = 5	N/A
Supercrete	N/A	N/A	N/A	N/A	N/A	N/A

52" Deep Decked Bulb Tee Girders (Cont'd)
(All dimensions in inches)

Company	M	N	O
D.O.T.	1	1½	1½
P.C.I.	N/A	N/A	N/A
Y.P.I.	N/A	N/A	N/A
Central Pre-Mix	1	1½	3½
Concrete Tech.	N/A	N/A	N/A
Supercrete	N/A	N/A	N/A