Low Speed

Concrete Barrier End Treatment

WA-RD 119.1

June1987

Washington State Department of Transportation

WASHINGTON STATE DEPARTMENT OF TRANSPORTATION

TECHNICAL REPORT STANDARD TITLE PAGE

1. REPORT NO WA-RD-119.1	2. GOVERNMENT ACCESSION NO.	3. RECIPIENT'S CATALOG NO.
4. TITLE AND SUBTITLE Concrete Barrier End Treatment--Low Speed		5. REPORT DATE June, 1987
		6. PERFORMING ORGANIZATION CODE
7. AUTHOR(S) C. J. Khisty, Ph.D., P.E. M. Y. Rahi, Ph.D.		8. PERFORMING ORGANIZATION REPORT NO
9. PERFORMING ORGANIZATION NAME AND ADDRESS Dept. of Civil & Environmental Engineering Washington State University Pullman, WA 99164-2910		10. WORK UNIT NO.
		11. CONTRACT OR GRANT NO.
		13. TYPE OF REPORT AN PERIOD COVERED Final
12. SPONSORING AGENCY NAME AND ADDRESS Washington State Dept. of Transportation Olympia, WA 98504-5201		14. SPONSORING AGENCY CODE
15. SUPPLEMENTARY NOTES		

16. ABSTRACT

Low-cost end treatments for concrete barriers and crash cushions/impact attenuators are explored and described for low-speed (40 mph or less) highways. Various proprietary and non-proprietary end treatments have been developed and used in recent years, but most of these systems are costly and are designed for an impact speed of up to 60 mph. As part of the process of collecting information on these devices, a number of selected State DOTs were contacted to obtain their experiences in using crash cushions/impact attenuators on their low-speed highways. While most of the DOTs contacted have been using these systems at hazardous locations on low-speed highways they felt that there is a need for inexpensive low-speed crash cushions and attenuators which would serve the purpose at such locations. Research reports, vendor literature, and contacts with State DOTs yielded 25 different barrier end treatment systems, and these are described in this report.

17. KEY WORDS Crash cushions; end treatment; impact attenuators; inexpensive; low-speed; safety		18. DISTRIBUTION STATEMENT	
19. SECURITY CLASSIF. (of this report) Unclassified	20. SECURITY CLASSIF. (of this page) Unclassified	21. NO. OF PAGES 55	22. PRICE

DOT FORM 310-022 (11 86) -1216-

CONCRETE BARRIER END TREATMENT – LOW SPEED

By

C. J. Khisty, Ph.D., PE.
Associate Professor
and
M.Y. Rahi, Ph.D.
Research Associate

Department of Civil & Environmental Engineering
Washington State University
Pullman, WA 99164

Final Report
Research Project Y-3400
Task 14

Prepared For
Washington State Department of Transportation
Olympia, Washington

June, 1987

Disclaimer

Table of Contents

List of Figures

List of Tables

Abstract

Low-cost end treatments for concrete barriers and crash cushions/impact attenuators are explored and described for low-speed (40 mph or less) highways. Various proprietary and non-proprietary end treatments have been developed and used in recent years, but most of these systems are costly and are designed for an impact speed of up to 60 mph. As part of the process of collecting information on these devices, a number of selected State DOTs were contacted to obtain their experiences in using crash cushions/impact attenuators on their low-speed highways. While most of the DOTs contacted have been using these systems at hazardous locations on low-speed highways they felt that there is a need for inexpensive low-speed crash cushions and attenuators which would serve the purpose at such locations. Research reports, vendor literature, and contacts with State DOTs yielded 25 different barrier end treatment systems, and these are described in this report.

Summary

Although impact attenuators and crash cushions have been installed on high-speed (over 40 mph) highway facilities with success, there is a need to explore cost-effective end treatments on low-speed highways (up to 40 mph). Proprietary impact attenuators, such as Sentre and GREAT, are available, and are being currently used on low-speed highways at hazardous locations, but their initial cost as well as their maintenance cost have been a concern. A cheap, low-maintenance system is, therefore, needed.

Responses to a questionnaire mailed to selected State DOTs yielded the following results :

- A wide variety of (mostly proprietary) end treatments and attenuators are currently used across the country. In a few cases, some non-proprietary systems have been used. Inexpensive, generic systems are needed for low-speed highways.
- Concrete median barriers are somewhat uncommon on low-speed highways and, therefore, end treatments are a rarity.
- Some non-proprietary systems (such as Texas Barrel) are comparable to some proprietary systems (such as GREAT), particularly on low-speed highways.
- There is limited experience regarding the performance of non-proprietary systems in the field.

Twenty-five different impact attenuators/end treatment systems have been briefly described in this report. A comparison was done on these systems to enable engineers in making decisions for their low-speed highways.

Conclusions

1. There are at least twenty-five different traffic barrier end treatments/impact attenuators currently available that can be considered for use on low-speed highways. Of these, eighteen are currently declared as operational. The balance are experimental and under development.
2. Most of these operational systems are good for impact speeds of up to 60 mph.
3. There is an obvious need for traffic barrier end treatments/impact attenuators for low-speed highways (up to 40 mph), that are inexpensive.
4. While most of the currently operational systems are proprietary and costly, there are some non-proprietary systems that can be considered for use on low-speed highways.

1. INTRODUCTION

1.1 — Overview

Rigid objects that cannot be eliminated, relocated, or made "break-away", such as ends of concrete barriers, are generally shielded from errant vehicles by crash cushions and impact attenuators. Crash cushions are protective systems that either decelerate the vehicle to a stop when hit head-on or redirect the vehicle away from the hazard in case of glancing impacts. Various kinds of crash cushions have been installed on high-speed facilities and their safety performance has been good (1). For concrete barrier end treatment on low-speed highways, particularly on shoulders, alternative cost-effective end treatments need to be explored. Proprietary impact attenuators costing $4,500 or more are available, such as Sentre and GREAT. A cheap, low-maintenance system is,therefore, needed.

1.2 — Problem Statement

An untreated end of a barrier is extremely hazardous. Impact with the untreated end of a concrete barrier system will result in intolerable impact forces. A crashworthy end treatment for a barrier is essential if the barrier is terminated within the "clear zone" of travel from either direction (2). Most high-speed highways are provided with crash cushions and impact attenuators which prevent errant vehicles from impacting fixed objects. These attenuators are generally proprietary and costly. There is a need to assess and adopt a low-cost end treatment for low-speed (40 mph or less) highways.

1.3 — Objectives of the Study

The objectives of the study are as follows :

1. To collect recent reports, vendor literature, and articles on the development, design, testing, applications, and evaluation of low-speed, low-cost concrete barrier end treatments.
2. To prepare a questionnaire for distribution to other State DOTs on their experiences with a low-speed, low-cost treatment to concrete barriers.
3. To synthesize this information into a Summary Report.

1.4 — Scope of the Study

This research is based on a literature survey, and responses obtained from State DOTs, in answer to a questionnaire mailed to them. In addition, recent reports and vendor literature were examined. This report specifically covers traffic barrier end treatments for low-speed highways. The contents of this report are based on the collective information drawn from the literature review, vendor reports, and the responses from the State DOTs.

2. STATE-OF-THE-ART REVIEW

2.1 — Introduction

Several concrete barrier end treatment devices have been developed in recent years. In most instances, the State DOTs across the country feel the need of using them only on high-speed (over 40 mph) highways. For major low-speed highways, alternative inexpensive devices or treatments have been considered for use, to avoid the high cost of using proprietary devices. In the course of this research, several State DOTs were contacted to gather information on their practices in dealing with the low-speed concrete barrier end treatments. At the same time, a literature review was done to find if there was any development that had a bearing on this subject. The results of these investigations are documented in this chapter.

2.2 — Literature Review

While the safe, inexpensive and effective crash cushions/impact attenuators for low-speed highways are highly desired, little research has been done on designing such devices. Both the American Association of State Highway and Transportation Officials (AASHTO) and the Transportation Research Board (TRB) have developed guidelines and recommended procedures for design and performance evaluation for general purpose high-speed impact attenuators (2,3). The U.S Department of Transportation has also documented high-speed safety design and operational practices and related research (1,4). In all the documents, the need for traffic barrier/impact attenuator on low-speed highways is emphasized for only hazardous locations. Engineering judgement and safety considerations

are the main criteria in selecting and installing traffic barriers/impact attenuators on low-speed hazardous locations. The crash cushions/impact attenuators developed over the last few years are all for an assumed impact speed of up to 60 mph. Depending on the characteristics of barrier location (e.g., frequency of hits) and ease of repair and maintenance of the system, engineers have a long laundry list of impact attenuators to choose from.

The AASHTO Guide for Selecting, Locating, and Designing Traffic Barriers (2) has documented impact test results of three operational median barrier end treatments and two operational roadside barrier end treatments. It also summarized structural, cost and safety characteristics of six different operational crash cushions. In addition, it included test results on three experimental and four research and development crash cushions. All these devices are applicable for impact speeds of up to 60 mph.

The Federal Highway Administration (FHWA) has synthesized research on eight different crash cushions/impact attenuators in two volumes of a report (1). A summary of approximate costs (initial cost as well as maintenance cost per hit) for six different crash cushions is also documented in another report (4). The FHWA Guide to Safety Features for Local Roads and Streets includes guidelines on selection, installation and maintenance of various crash cushions (5). In-service evaluations of three experimental end treatments/impact attenuators are available in an interim report of FHWA (6).

2.3 — Survey of State DOT Practice

To perform the research, a survey was conducted of various impact attenuators/crash cushions used by the State DOTs across the country. A questionnaire was designed and contact persons in State DOTs were selected for this purpose in collaboration with Mr. Don Gripne of Washington State Department of Transportation. Accordingly, letters were sent to fourteen State DOTs, with a brief description of the research problem. A sample of the letter and questionnaire is placed in Appendix A. Appendix B contains the list of the State DOT personnel who were contacted and who responded to the questionnaire. The results of this survey were documented and analyzed.

In answering the questionnaire, several DOTs provided guidelines/manuals on selecting and installing traffic barrier end treatments/crash cushions in their states. These guidelines/manuals provided information on some other developments on impact attenuation systems on state-wide basis. An analysis of this information is also included in this report.

2.4 — Survey Results

The questionnaire mailed to the fourteen State DOTs was answered by a total of eleven DOTs. In some cases, no definite answer was given. For example, in answering the question on using a device on low-speed highways, some DOTs expressed that they did not have any experience on low-speed barrier end treatments, since they were not required to install a barrier on highways with a speed limit of 40 mph or less, except on hazardous locations.

Responses to the questions obtained from various State DOTs are documented in this

section. For details, including the sketches, of various proprietary and non-proprietary acronyms used in the responses, reference may be made to Appendix C.

Question No. 1 : What types of end treatments (other than guardrail or "burying the ends") do you use for concrete barriers with posted speed limit of 40 mph or less ? (Please send a standard plan or drawing if available) (a) for barriers placed on the right-hand side of the roadway, (b) for barriers placed in the medians.

Responses :

- California –

  (a) No particular system used.

  (b) GREAT.

- Connecticut –

  (a) Metal Tube Crash Cushion (experimental)

  (b) Same as (a).

- Illinois –

  (a) MBET 1, Hi-Dro Cell Sandwich, Hi-Dro Cell Cluster, Hi-Dri Cell Sandwich, GREAT.

  (b) Same as (a).

- Minnesota –

  (a) Texas Barrels, Hi-Dro Cell Sandwich, Hi-Dro Cell Cluster, Hi-Dri Cell Sandwich, GREAT, Fitch Barrels, Energite, Dragnet.

  (b) Hi-Dri Cell Sandwich, Hi-Dro Cell Sandwich, Texas Barrels, GREAT, Minnesota Bullnose.

- Nebraska –

(a) Sentre, Tapered Curb.

(b) Same as (a).

- New York –

  (a) No particular system is used.

  (b) Same as (a)

- North Carolina –

  (a) No experience.

  (b) No experience.

- Oregon –

  (a) End Transitions.

  (b) GREAT.

- Pennsylvania –

  (a) Guardrail End Treatments.

  (b) Median Barrier End Transitions.

- Texas –

  (a) Texas Barrels, Sand-filled Plastic Barrels,

  Hydraulic Crash Cushions, Sand-Tire Attenuator.

  (b) Same as (a).

- Virginia –

  (a) Fixed object attachment methods (End Terminal).

  (b) Barrier End Transitions.

Question No. 2 : How long have you been using this system and what has been the installation cost ?

Responses :

- California – No response.
- Connecticut – No response.
- Illinois – No response.
- Minnesota – 4 years; $3,000 - $10,000.
- Nebraska – 10 years; No response.
- New York – No response.
- North Carolina – No response.
- Oregon – 8-10 years; $600 for transitions, $8,000-$18,000 for GREAT.
- Pennsylvania – No response.
- Texas – 2-18 years; $4,000-$15,000.
- Virginia – 8 years; No response.

Question No. 3 : What maintenance does this treatment demand ?

Responses :

- California – No response.
- Connecticut – No response.
- Illinois – No response.
- Minnesota – $175 - $2,200.
- Nebraska – No response.
- New York – No response.
- North Carolina – None.
- Oregon – Restoration after hits, 8-12 person-hrs.
- Pennsylvania – No response.

- Texas – Minor to substantial.
- Virginia – None.

Question No. 4 : What do your maintenance staff think of this system ?

Responses :

- California – No response.
- Connecticut – No response.
- Illinois – No response.
- Minnesota – No response.
- Nebraska – Little or no maintenance involved.
- New York – No response.
- North Carolina – No response.
- Oregon – GREAT is good, but expensive to maintain after hits.
- Pennsylvania – No response.
- Texas – Sand-filled Plastic Barrels require too much maintenance, others perform well with little or no maintenance for up to several impacts.
- Virginia – No comments.

Question No. 5 : Does the treatment lend itself for use on other barrier systems ? If so, which ?

Responses :

- California – No response.
- Connecticut – No response.
- Illinois – No response.

- Minnesota – No response.
- Nebraska – No response.
- New York – No response.
- North Carolina – No response.
- Oregon – No.
- Pennsylvania – No response.
- Texas – Texas Barrels, Sand-filled Plastic Barrels, and Hydraulic Crash Cushions can be used on bridge columns, overhead sign bridge supports and other rigid objects.
- Virginia – No.

Question No. 6 : What does the treatment cost ? (a) Initial costs, (b) Maintenance costs.

Responses :

- California – No response.
- Connecticut – No response.
- Illinois – No response.
- Minnesota – (a) $3,000-$10,000; (b) No response.
- Nebraska – (a) $40.00/ft; (b) $0.00.
- New York – No response.
- North Carolina – No response.
- Oregon – (a) $8,000-$18,000; (b) Up to $8,000 per hit.
- Pennsylvania – No response.
- Texas – (a) $4,000-$15,000; (b) No response.

- Virginia – No response.

Question No. 7 : What has been the performance experience in the field, and how does this compare with proprietary installations ?

Responses :

- California – No response.
- Connecticut – Scheduled for testing.
- Illinois – No response.
- Minnesota – No response.
- Nebraska – No hard data.
- New York – No response.
- North Carolina – No response.
- Oregon – Overall performance is acceptable.
- Pennsylvania – No response.
- Texas – Texas Barrels perform and compare well, Sand-filled Plastic Barrels require high maintenance even for minor impacts.
- Virginia – Limited usage, functions satisfactorily, much less costly.

Question No. 8 : Any other pertinent information ?

Responses :

- California – Has sponsored research on NCHRP proposal for a study to develop a generic crash cushion last year.
- Connecticut – Dr. J. Carney III of Vanderbilt University has developed the system in cooperation with the FHWA.

- Illinois – No response.
- Minnesota – In general, does not use rigid barriers on low-speed highways and is not aware of suitable economical end treatments for these.
- Nebraska – None.
- New York – There are only a few instances where concrete barriers have been used on highways with a free-flow operating speed of less than 50 mph.
- North Carolina – No response.
- Oregon – Almost always uses GREAT for barrier end treatment where guardrail or burying the end is unacceptable.
- Pennsylvania – Syro Steel has developed an attenuator to compete with GREAT, which is approved for use by the Ohio DOT.
- Texas – In general, does not use concrete barrier on low-speed facilities, since other rail systems and curbed medians perform well and are more economically attractive.
- Virginia – Severe restrictions on appropriate locations for usage make rigid object attachments and end transitions somewhat of a rarity. Some contractors are not willing to cast these units and are reluctant to stock them due to lack of demand.

2.4.1 — Summary and Highlights of Survey Results

A wide variety of end treatments/attenuators are used across the country for low-speed highways. Most of these systems are proprietary devices (such as GREAT, Sentre, Hi-Dro Cell Cluster, etc.) crash tested to meet the needs of high-speed highways (impact speed 60 mph). Non-proprietary systems, such as Texas Barrels (Steel-Drums), Connecti-

cut Impact Attenuation System (CIAS), and Minnesota Bullnose, are also used in some cases. There is a general need, as experienced by CALTRANS, for an inexpensive generic system which can be widely used.

Concrete median barriers are somewhat uncommon on low-speed highways and, therefore, end treatment is a rarity.

The costs vary widely – ranging from $600 for end transitions to $18,000 for GREAT. Maintenance costs also vary widely ranging from $175 to $2,200 per hit for non-proprietary devices. Restorations can need as much as 8-12 person-hrs. GREAT is expensive to maintain after a hit (up to $8,000 per hit). Sand-filled Plastic Barrels require much maintenance.

Performance of Texas Barrels (non-proprietary) is as good as GREAT. Sand-filled Plastic Barrels need high maintenance for even minor impacts.

The following is a list of impact attenuators (operational, experimental or research and development) currently considered for use by the State DOTs surveyed :

1. Median Barrier Breakaway Cable Terminal – Wood Posts (MBET 1)
2. Median Barrier Breakaway Cable Terminal – Steel Posts (MBET 2)
3. Guard Rail Energy Absorbing Terminal (GREAT)
4. Sentre
5. Hi-Dro Cell Sandwich
6. Hi-Dro Cell Cluster
7. Hi-Dri Cell Sandwich
8. Steel-Drums (Texas Barrels)
9. Sand-Tire Attenuator

10. Connecticut Impact Attenuation System (CIAS)
11. Tapered Barrier Curb
12. Sand-filled Plastic Barrels (Fitch Barrels)
13. Energite
14. Dragnet
15. Five-ft Radius Guardrail (Minnesota Bullnose)
16. Metal-Tube Narrow Hazard Crash Cushion
17. Guardrail Breakaway Cable Terminal – Wood Posts (GET 1)
18. Guardrail Breakaway Cable Terminal – Steel Posts (GET 2)

2.4.2 — Other Impact Attenuators

There are a few other impact attenuators developed experimentally in recent years which are not mentioned by any of the State DOTs surveyed (except that Pennsylvania DOT mentioned Syro Steel attenuator). These are listed as below :

1. Lightweight Cellular Concrete Crash Cushions
2. Corrugated Steel Pipe Attenuators
3. Colorado Type 3F Median Barrier End Treatment
4. W-Beam Roadside Barrier Terminal
5. Earth Berm Attenuator
6. Twisted and Anchored Barrier End
7. Syro Steel Attenuator

A brief description, including a sketch, of each of the eighteen impact attenuators listed in the previous section, plus seven other listed in this section, is documented in

Appendix C.

2.4.3 — Matrix of Impact Attenuators/Crash Cushions

A matrix categorizing impact attenuators/crash cushions is shown in Table 1.

Table 1
Matrix of Impact Attenuators/Crash Cushions

Type	Proprietary	Non-proprietary
Operational	Sentre, GREAT, Hi-Dro Cell Cushion, Hi-Dro Cell Cluster, Hi-Dri Cell Cushion, Energite, Fitch Barrels	Texas Barrels, Minnesota Bullnose, Sand-Tire Attenuator, MBET 1, MBET 2, GET 1, GET 2, Tapered Curb
Experimental	Dragnet	CIAS, Colorado 3F, Earth Berm,W-Beam Terminal, Twisted Barrier End
Research and Development	Syro Steel Attenuator	Metal-Tube, Light Concrete, Corrugated Steel pipe

2.4.4 — A Comparison Between the Systems

There are at least twenty five different barrier end treatments/impact attenuators that can be considered for use on low-speed highways. The purpose of this study is to enable engineers in making decisions for their highways with a speed limit of 40 mph or less. A comparison, based on initial, maintenance and repair costs, is, therefore, performed for 25 impact attenuators, and shown in Table 2 and Table 3. The numbers in parentheses

indicate the references from which the cost information was obtained.

Table 2

Comparison Between the Proprietary Systems

System	Initial Cost	Maintenance-Repair Costs
Sentre	moderate(6)	moderate(6)
GREAT	very high(8)	moderate(5)
Hi-Dro Cushion	high(2)	low(5)
Hi-Dri Cushion	high(2)	low(2)
Hi-Dro Cluster	moderate(2)	low(2)
Energite	low(2)	–
Dragnet	–	–
Fitch Barrels	low(2)	moderate
Syro Steel	–	–

Table 3

Comparison Between the Non-proprietary Systems

System	Initial Cost	Maintenance-Repair Costs
Texas Barrels	moderate(2,10)	moderate(10)
Sand-Tire	low(10)	low(10)
Bullnose	low(8)	low(8)
CIAS	high(6)	moderate(6)
Colorado 3F	moderate(6)	low(6)
Metal-Tube	–	–
MBET 1	moderate(4)	high(4)
MBET 2	moderate(4)	high(4)
GET 1	–	–
GET 2	–	–
Tapered Curb	–	–
Light Concrete	–	–
Corrugated Steel	–	–
W-Beam Terminal	–	–
Earth Berm	–	–
Twisted End	–	–

2.5 — Summary

A literature review was done to obtain information regarding various end treatments and impact attenuators developed in recent years. While sufficient details were available on designing these attenuators, little information was forthcoming on their performance and cost-effectiveness.

Responses from a number of State DOTs yielded the following information :

- A wide variety of end treatments/attenuators (mostly proprietary) are currently used across the country. In a few cases, some non-proprietary systems have been used. Inexpensive, generic systems are needed for low-speed highways.
- Concrete median barriers are somewhat uncommon on low-speed highways and, therefore, end treatments are a rarity.
- Some non-proprietary systems (such as Texas Barrels) are as good as proprietary systems (such as GREAT), particularly on low-speed highways.
- There is limited experience regarding the performance of non-proprietary systems in the field.

REFERENCES

1. U.S Department of Transportation (1982). Synthesis of Safety Research Related to Traffic Control and Roadway Elements – Vol. 1 and 2. Report No. FHWA-TS-82-232 and 233. Federal Highway Administration.

2. American Association of State Highway and Transportation Officials (1977). Guide for Selecting, Locating, and Designing Traffic Barriers.

3. Transportation Research Board (1981). Recommended procedures for the Safety Performance Evaluation of Highway Appurtenances. NCHRP Report 230. National Research Council, Washington D.C.

4. U.S Department of Transportation (1980). Safety Design and Operational Practices for Streets and Highways. Technology Sharing Report 80-228. Federal Highway Administration.

5. U.S Department of Transportation (1986). Guide to Safety Features for Local Roads and Streets. Prepared for the Federal Highway Administration, National Highway Institute.

6. U.S Department of Transportation (1986). In-Service Evaluation of Experimental Traffic Barriers : An Interim Report. Federal Highway Administration, No. FHWA-DP 64/EP 7.1.

7. Energy Absorption System, Inc. (1983). Saving Lives by Design. Chicago, Illinois 60601.

8. Minnesota Department of Transportation (1982). Road Design Manual : Design Policy and Criteria.

9. Washington State Department of Transportation (1984). Traffic Barriers and Impact Attenuators. Publications Transmittal.

10. Texas State Department of Highways and Public Transportation (1986). Highway Design Division Operations and Procedures Manual 1-81.

11. Carney III, J.F. (1986). Development of a Metal Tube Crash Cushion for Narrow Hazard Highway Sites. Final Report Prepared for Federal Highway Administration in cooperation with Connecticut Department of Transportation.

Appendix A

Sample Letter and Questionnaire Used in Survey

To

_____

_____

_____

SUB : Concrete Barrier End Treatment – Low Speed

Dear ———

We are conducting a study on concrete barrier end treatment for low-speed highways, up to speeds of 40 mph. We are particularly interested in finding out your experience with low-speed, low-cost concrete barrier end treatments and would appreciate it very much if you could furnish us information on the enclosed questionnaire form.

A one-page problem and background statement is also enclosed. Please feel free to call me at (509)335-6638 if you have any questions.

Sincerely,

C.J. Khisty, Ph.D., PE
Associate Professor (Transportation)

copies: Mr. Don J. Gripne
Washington State Department of Transportation
Transportation Building
Olympia, WA 98504.

CONCRETE BARRIER END TREATMENT - LOW SPEED

1. Problem Statement

An untreated end of a barrier is extremely hazardous. Impact with the untreated end of concrete barrier system will result in intolerable impact forces. A crashworthy end treatment for a barrier is essential if the barrier is terminated within the clear distance of travel from either direction. Most high-speed highways are provided with crash cushions and impact attenuators which prevent errant vehicles from impacting hazards. These attenuators are generally proprietary and costly. There is a need to develop a low-cost end treatment for low-speed highways (40 mph and less).

2. Background Statement

Rigid objects that can not be eliminated, relocated or made "break-away", such as ends of barriers, are generally shielded from errant vehicles by crash cushions and impact attenuators. Crash cushions are protective systems that either decelerate the vehicle to a stop when hit head-on or redirect the vehicle away from the hazard in case of glancing impacts. Various kinds of crash cushions have been installed on high-speed facilities and their safety performance has been good. For concrete barrier end treatment on low-speed highways alternative cost-effective end treatments need to be explored and assessed. Proprietary impact attenuators costing $4,500 or more are available, such as "Sentre" and "Trend". A cheap, low-maintenance system is needed.

Concrete Barrier End Treatment – Low Speed

Questionnaire

1. What types of end treatments (other than guard rail or "burying the ends") do you use for concrete barriers, with posted speed limit of 40 mph or less ? (Please send a standard plan or drawing if available).
   a. for barriers placed on the right-hand side of the roadway

   b. for barriers placed in the median

2. How long have you been using this system and what has been the installation cost ?

3. What maintenance does this treatment demand ?

4. What do your maintenance staff think of this system ?

5. Does the treatment lend itself for use on other barrier systems ? If so, which ?

6. What does the treatment cost ?
   a. Initial Costs
   b. Maintenance Costs

7. What has been the performance experience in the field, and how does this compare with proprietary installations ?

8. Any other pertinent information ?

Please furnish the name & phone number of a contact person to answer any questions we may have.

Appendix B

List of State DOT Personnel Contacted

The following is the list of State DOT personnel contacted for the survey. The State DOTs followed by an asterisk in the parentheses responded to the questionnaire.

1. California(*) — Mr. Linn D. Ferguson, CALTRANS, P.O. Box 1499, Sacramento, CA 95807, and Mr. Edward J. Tye, Calif. Dept. of Transportation, Div. of Traffic Engineering, P.O. Box 1499, Sacramento, CA 95807. Telephone Number : (916)739-2308.

2. Florida — Mr. John Grant, Florida Dept. of Transportation, 605 Suwannee St., M.S. 32, Tallahassee, FL 32301.

3. Illinois(*) — Mr. Charles D. Sanders, Illinois Dept. of Transportation, 2300 S. Dirksen Parkway, Springfield, IL 62764. Telephone Number : (217)782-2245.

4. Kansas — Mr. Richard G. Adams, Kansas Dept. of Transportation, 2706 Burnett Road, Topeka, KS 66614.

5. Minnesota(*) — Mr. Ronald M. Canner, Jr., Minn. Dept. of Transportation, Rm. B-9, Transportation Building, St. Paul, MN 55155. Telephone Number : (612)296-6116.

6. Nebraska(*) — Mr. Walter Witt, Nebraska Dept. of Roads, P.O. Box 94759, Lincoln, NE 68509. Telephone Number : (402)479-4443.

7. New York(*) — Mr. James E. Bryden, New York State Dept. of Transportation, Room 600-7A, 1220 Washington Ave., Albany, NY 12232. Telephone Number : (518)453-6071.

8. North Carolina(*) — Mr. William G. Marley, Jr., N. Carolina Dept. of Transportation, P.O. Box 25201, Raleigh, NC 27611. No Telephone Number provided.
9. Oklahoma — Mr. Charles Whittle, Oklahoma Dept. of Transportation, 200 N.E. 21st St., Rm. 2-C-10, Oklahoma City, OK 73105-3204.
10. Oregon(*) — Mr. Duane O. Christensen, Oregon Dept. of Transportation, 200 Transportation Bldg., Salem, OR 97310, and Mr. David R. Weaver, Oregon Dept. of Transportation, Rm. 504A, Transportation Bldg., Salem, OR 97310. Telephone Number : (503)378-6551.
11. Pennsylvania(*) — Mr. Louis C. Schultz, Jr., Pennsylvania Dept. of Transportation, 917 Transportation & Safety Building, Harrisburg, PA 17120. Telephone Number : (717)783-5110.
12. Texas(*) — Mr. Harold Cooner, Texas State Dept. of Highways and Public Transportation, Highway Design Division, D-8, Austin, TX 78701. Telephone Number : (512)465-6147.
13. Virginia(*) — Mr. Robert A. Mannell, Virginia Dept. of Transportation, 1221 East Broad St., Richmond, VA 23219. Telephone Number : (804)786-2544.
14. Wyoming — Mr. Charles Wilson, Wyoming Highway Department, P.O. Box 1708, Cheyenne, WY 82001.

In addition, Connecticut Dept. of Transportation (Charles E. Dougan, PE., PhD., Director of Research and Materials, Bureau of Highways, 24, Wolcott Hill Road, Wethersfield, CT 06109. Telephone Number : (203)529-7741.) responded to the questionnaire forwarded by Mr. Tye of CALTRANS.

Appendix C

Brief Description of the Attenuators

A total of twenty-five impact attenuation systems (operational, experimental, and research and development) are briefly described below. Details of these systems can be gained from references indicated in parentheses immediately following the title of the system.

1. Median Barrier Breakaway Cable Terminal – Wood Posts (MBET 1) (Reference 2,5) : This terminal is primarily intended for use with W-beam barriers. It can also be used as an end treatment for the thrie beam barrier, if a proper transition unit is used. The bulb end portion of a barrier with this end treatment flattens, and the rail bends away, when the end of the barrier is struck by a vehicle. The cable provides the anchor for the end of the rail if it is struck from the side, beyond the first post, or receives a glancing blow further downstream. The first two posts are weakened and allowed to break, when the barrier is struck. Removal of broken stub posts in the footing makes repair difficult (see Figure 1).

2. Median Barrier Breakaway Cable Terminal – Steel Posts (MBET 2) (Reference 2,5) : This is same as MBET 1. The only difference is that the posts are made of steel (see Figure 2).

3. GREAT (Reference 1,2,7,8,9,10) : The Guard Rail Energy Absorbing Terminal (GREAT) uses hex-foam or lightweight concrete cartridges. It is ideal for narrow-

site hazards, such as the ends of double-faced guardrails and at butterfly signs. From 2 ft. to 3 ft. in width, the system can protect lightweight and heavy vehicles at speeds up to 60 mph. Its redirective capabilities are achieved with triple corrugated structural plate beams (Thrie beams) that telescopes when impacted at the system's nose. The unit is restrained laterally by proof coil chains at the bottom and longitudinally by cables at the top for side impacts. A back-up structure and base pad are required. Its primary advantage is its adaptability to narrow obstacles where encroachment beyond the width of the obstacle cannot be tolerated. It has been reported that repair costs after hits are generally high (see Figure 3).

4. Sentre (Reference 6,7) : It is a crashworthy alternative to buried guardrail ends and breakaway cable terminals. It is designed to dissipate the collision energy of an impacting vehicle, gently redirecting the vehicle away from a rigid guardrail and slowing it to a safe stop. Sentre safely redirects vehicles weighing from 1,800 to 4,500 pounds and traveling at design velocities up to 60 mph. It has low maintenance and installation costs in comparison with GREAT (see Figure 4).

5. Hi-Dro Cell Sandwich (Reference 2,4,7,8,9,10) : It is a crash cushion ideal for most high frequency impact areas. It is also suitable in busy traffic areas, gores at exit ramps, bridge piers, bifurcations on high-volume highways. It can provide protection at impact speeds up to 60 mph. The materials are reusable. The system withstands numerous impacts without severe damage, and after most impacts, only the expelled liquid needs to be replaced (see Figure 5).

6. Hi-Dro Cell Cluster (Reference 2,4,7,8,9,10) : It is specifically designed for areas where space is limited and traffic speeds do not exceed 45 mph. These are 6 in. diameter polyvinyl chloride plastic cells arranged in a cluster and filled with water. It can give protection from hazards like toll booths, utility poles, railroad crossing signals, and traffic lights. The cluster unit also features reusability. The design of the unit is flexible. The dimension and characteristics of a particular site, plus the design specifications given, determine the number of cells needed in a unit (see Figure 6).

7. Hi-Dri Cell Sandwich (Reference 2,4,7,8,9,10) : The system is ideal for hazards in heavy traffic areas, because renewal of the system is fast and easy. The system features easily replaced cartridges as its energy absorbing medium. It is ideal for sites where quick after-crash renewal is critical (see Figure 7).

8. Steel-Drums (Texas Barrels) (Reference 1,2,4,8,9) : This crash cushion system is an array of standard 55-gallon steel drums. The system dissipates the kinetic energy of the impacting vehicle primarily through the plastic deformation or crushing of the steel drums. It requires a rigid back-up structure and has redirective capabilities. The system's maintenance costs are minimal and repair costs are reasonable (see Figure 8).

9. Sand-Tire Attenuator (Reference 1,2,10) : The system was developed to provide a low-cost attenuator to complement the steel barrel system so that additional hazardous locations could be economically protected. Scrap tires are mounted on

wire mesh stands with plywood diaphrams, then filled with sand. The attenuator's low cost combined with simplicity of construction and readily available waste material enables its adoption in many locations not presently considered for attenuation units. There are certain limitations, however. It does not have redirectional capability and its debris can cause operational difficulties when placed in close proximity to the travelled way (see Figure 9).

10. Connecticut Impact Attenuation System (CIAS) (Reference 6) : The system is capable of both entrapment and redirection of errant vehicles which impact the system from the front or sides. Tests and observations have indicated its satisfactory crash cushion performance. While requiring little maintenance, it may require replacement of the entire unit after hits (see Figure 10).

11. Tapered Barrier Curb : The Nebraska State Department of Roads has reported use of this practice. No further information is currently available on its performance.

12. Fitch Barrels (Sand-filled Plastic Barrels) (Reference 8) : This system is an array of plastic containers filled with sand. The vehicle energy is dissipated by a transfer of the vehicle momentum to the mass of the sand. Specific design conditions can be accomodated by varying the weight, number, and location of the barrels. This crash cushion requires no back-up support. It also has no redirective capabilities and it can generate considerable debris upon impact (see Figure 11).

13. Energite (Reference 2,7,8) : This system is similar to the Fitch Barrel design, ex-

cept that the interior of the barrel has a different configuration. Standard size of container is 36 in. diameter top, 32 in. diameter base and 35-3/4 in. height. Standard weights of modules are 200, 400, 700 and 1400 lbs. It provides an economical crash cushion for low frequency impact areas. For very wide hazards such as T-intersections and wide gores, and for areas of less frequent impacts, the system can offer the lowest initial cost and the best alternative for assuring motorist safety (see Figure 12).

14. Dragnet (Reference 8) : The Dragnet barrier uses the cold working of a metal tape for energy absorption. The metal tape is attached to a steel cable net or galvanized chain-link fence net which envelops a vehicle on impact. This is considered an experimental system (see Figure 13).

15. Five-ft Radius Guardrail (Minnesota Bullnose) (Reference 2,8) : The Five-ft Radius design is considered a guardrail installation, and can be used at many locations where a crash cushion may be considered. A typical installation is where the guardrail is warranted downstream from the obstacle to be shielded. It provides excellent continuity with the downstream guardrail (see Figure 14).

16. Metal-Tube Narrow Hazard Crash Cushion (Reference 11) : This system is developed at Vanderbilt University for the FHWA in cooperation with the Connecticut Department of Transportation. It is designed as an inexpensive non-proprietary crash cushion which can be used at narrow sites. Examples of such locations include the ends of guardrail and median barriers, bridge pillars, and center piers.

The system is reported to be scheduled for intensive crash testing (see Figure 15).

17. Guardrail Breakaway Cable Terminal – Wood Posts (GET 1) (Reference 2) : This system is designed for terminating the G4(IW) roadside barrier, but it could be adapted for use with any of the G4 series system. Steel W-section beam is flared and rested on footings with the help of wood posts. Details of end posts, anchorage (by cable assembly) and footings are critical. Tests indicate that the flare sections operate better than the tangent sections (see Figure 16).

18. Guardrail Breakaway Cable terminal – Steel Posts (GET 2) (Reference 2) : This system is similar to the GET 1 system, with the exception that the posts are made of steel and the breakaway mechanism is different (see Figure 17).

19. Lightweight Cellular Concrete Crash Cushion (Reference 1,2) : The system is constructed with lightweight, reinforced cellular concrete anchored with 5/8 in. diameter cable for head-on and side impacts. Vermiculite aggregate is used in the concrete. While acceptable deceleration levels were obtained with 2,000 and 4,000 pounds vehicles in full-scale tests, implementation of these cushions has been a problem. States have had problems with construction, especially in batching and forming the material. Capillarity and poor freeze-thaw properties have discouraged acceptance and implementation of this system. Cluster systems of lightweight concrete cylinders have also been developed for use with narrow objects such as piers or the end of concrete median barriers (see Figure 18).

20. Corrugated Steel Pipe Attenuator (Reference 1,2) : In this system, 18 in. and 24 in. diameter corrugated pipes are arranged in a modular cluster. Flex beam is provided for redirection. Full-scale vehicle crash tests performed on these cushions indicated vehicle ramping. Additional hardware modifications were made, but no further information is currently available (see Figure 19).

21. Colorado Type 3F Median Barrier End Treatment (Reference 6) : This treatment is used in areas where two parallel W-beam guardrails meet. This typically occurs when guardrails are used to shield bridge piers or the opening between twin bridges on divided highways. It is similar in construction and configuration to the Minnesota Bullnose attenuator, except that the radius of the nose in this system is shorter. It was observed that the performance of this system with an impact at 40 mph was similar to that of a standard W-beam guardrail (see Figure 20).

22. W-Beam Barrier Terminal (Reference 2) : This treatment is reported as an experimental end treatment. The system was developed for use with a non-blocked out W-beam rail. No further information on the system is currently available (see Figure 21).

23. Earth Berm Attenuator (Reference 2,5) : An earth berm may be built up as barrier end treatment if there is no cut slope at the end of the barrier. It is used primarily in wide medians. The median is shaped to a particular slope to provide redirection to errant vehicles. If the berm material is not stable, drivers have difficulty steering, and it is possible that the tires sink in and cause a rollover (see Figure 22).

24. Twisted and Anchored Barrier End (Reference 5) : This has two very important features – a flare at the end of the rail of barrier, and a fall-down mechanism. It is a modified form of the so-called "Texas twist". The design needs no posts within the first 25 ft. section of twisted rail. The post spacing is 12.5 ft. for the next 25 ft. section, and 6.25 ft. thereafter. The first 50 ft. of rail is set on a parabolic flare, with a lateral offset of at least 2 ft., and preferably 4 ft. It is intended that the W-beam rails breakaway from the posts when a vehicle rides up on the twisted section. No further information on the performance of the system is currently available (see Figure 23).

25. Syro Steel Attenuator : The Pennsylvania State DOT has reported that this system has been developed by Syro Steel to compete with GREAT. It has been approved for use by the Ohio DOT.

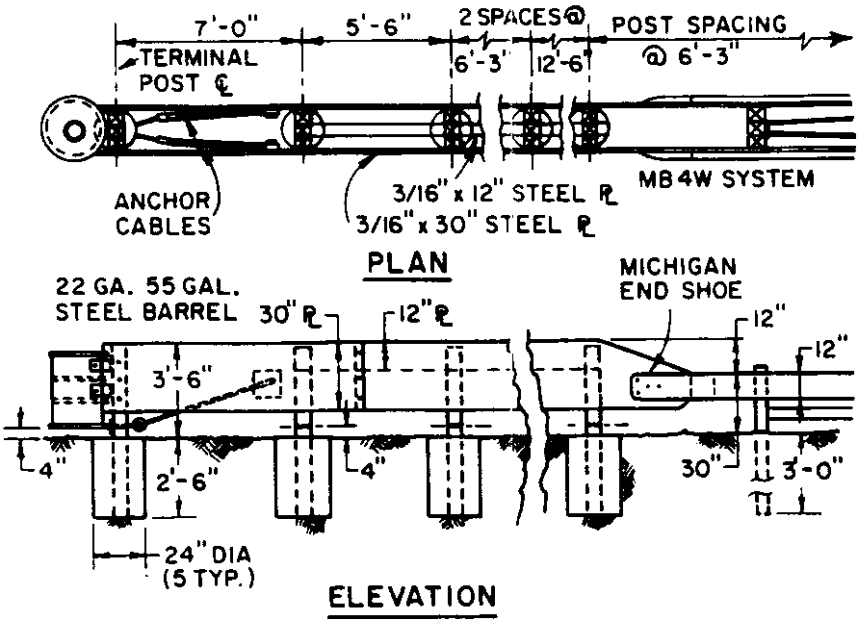

Figure 1. Median Barrier Terminal – Wood Posts (MBET 1)

(Source : Ref. 2)

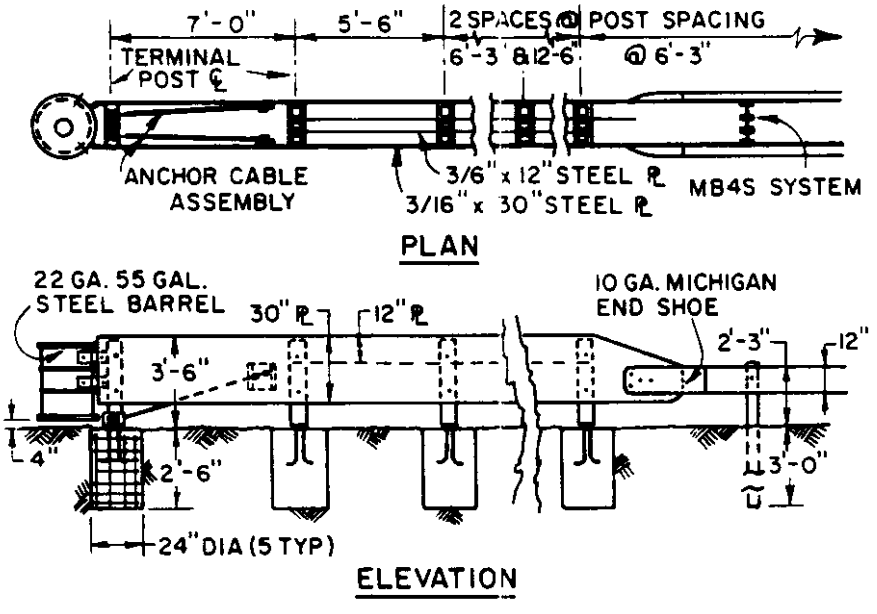

Figure 2. Median Barrier Terminal – Steel Posts (MBET 2)

(Source : Ref. 2)

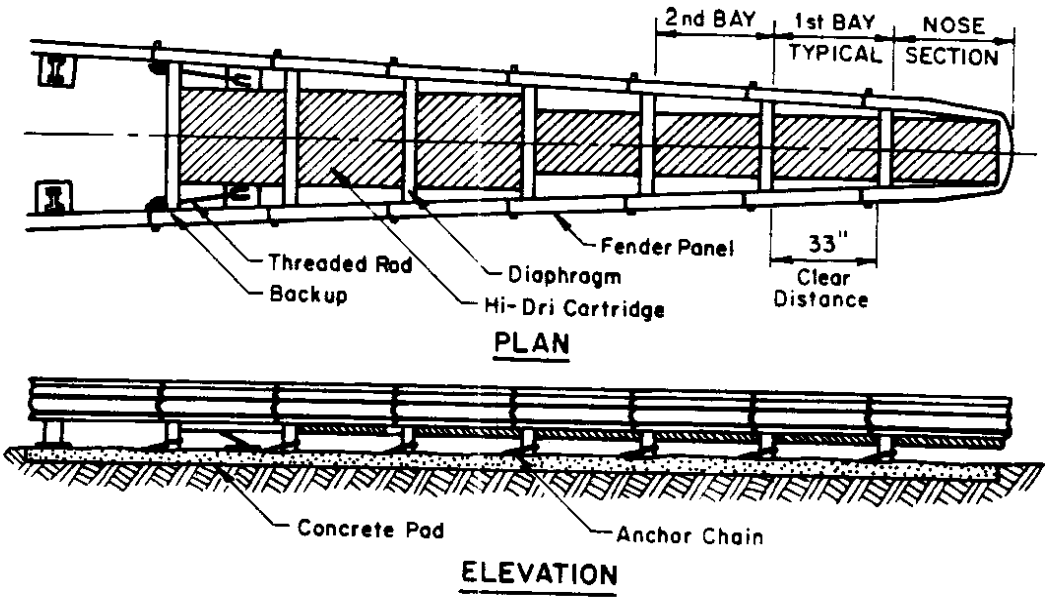

Figure 3. GREAT Crash Cushion System (Source : Ref. 8)

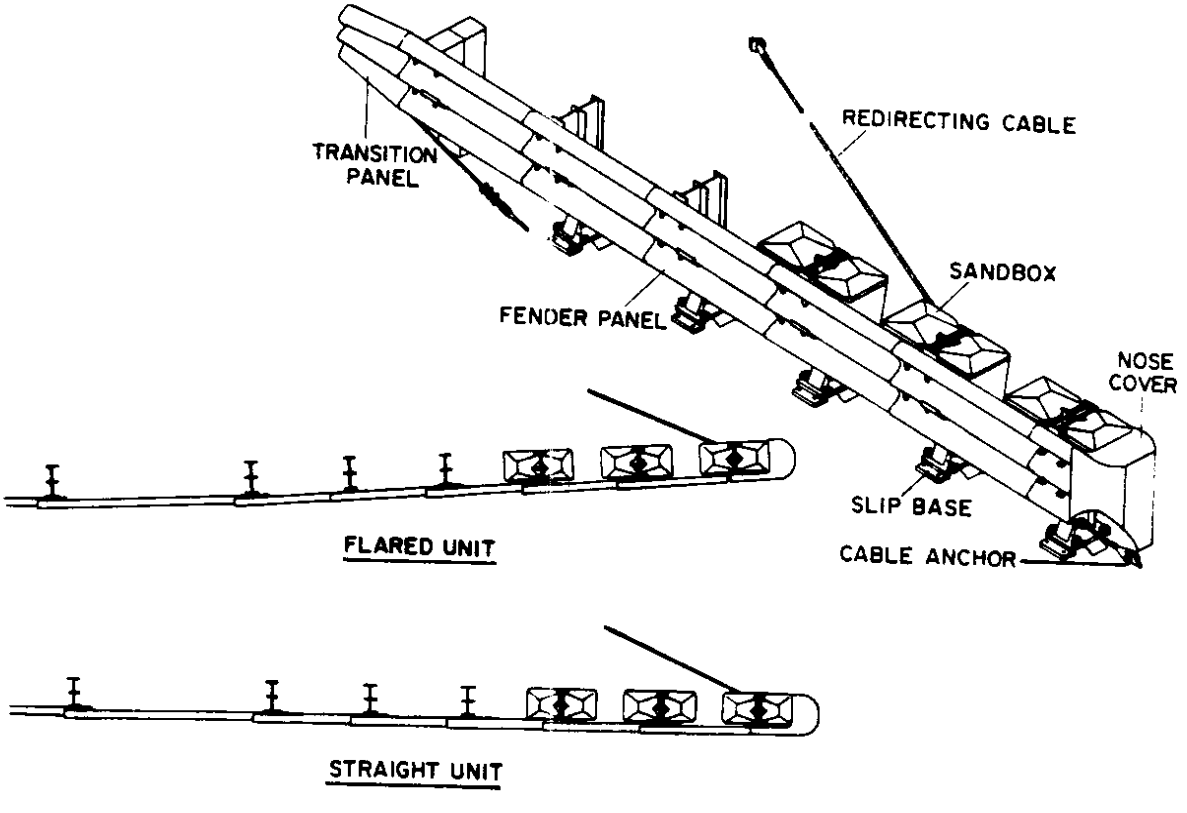

Figure 4. Sentre Crash Cushion System (Source : Ref. 7)

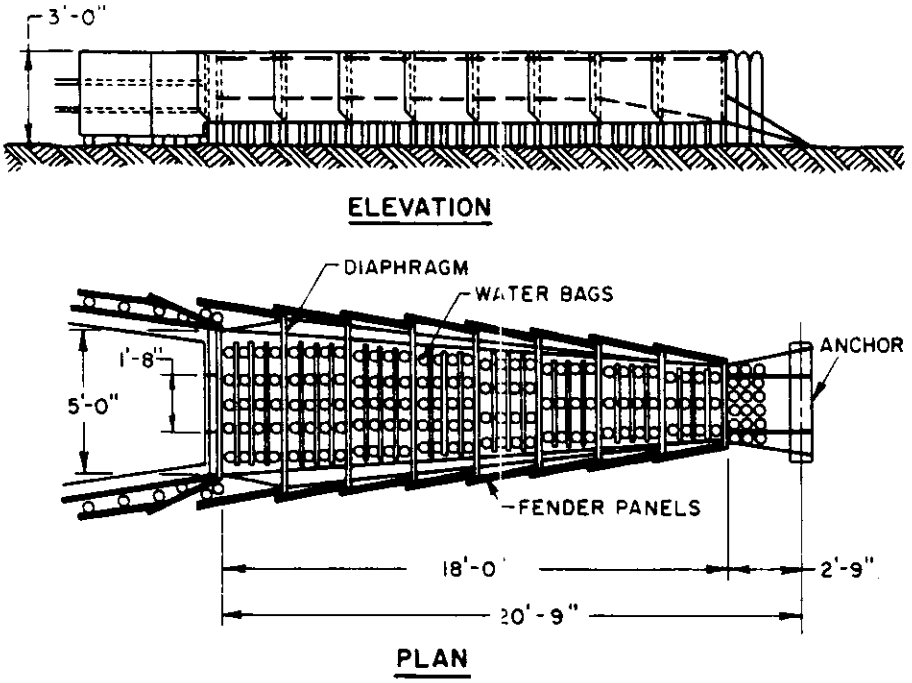

Figure 5. Hi-Dro Cell Sandwich (Source : Ref. 8)

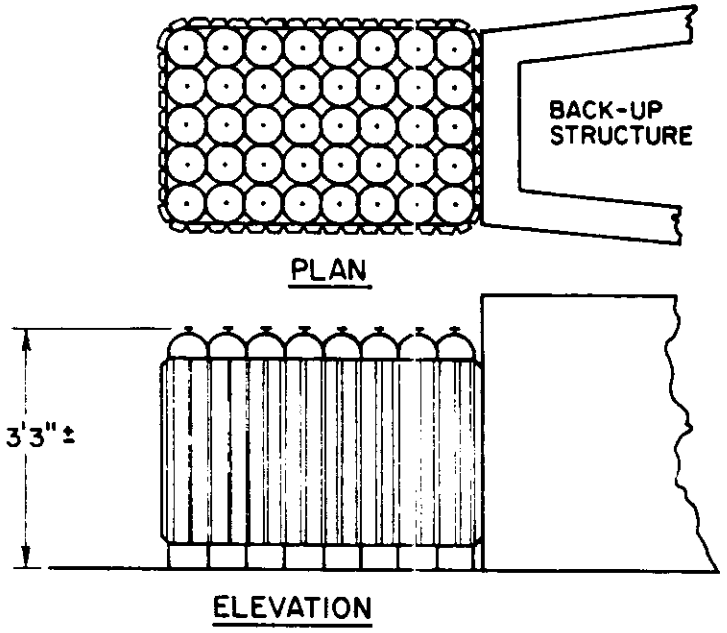

Figure 6. Hi-Dro Cell Cluster (Source : Ref. 2)

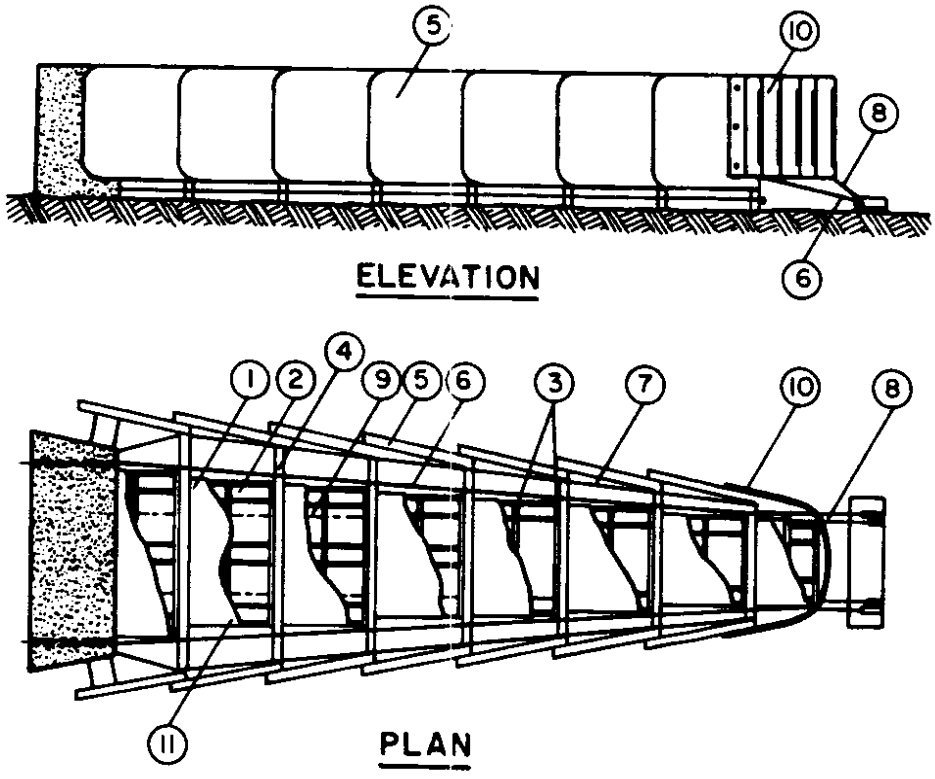

KEY

1. Hi-Dri Cell Cartridge
2. Hi-Dri Cell
3. Retainer Panels
4. Diaphragms
5. Fender Panels
6. Restraining Cables
7. Pull-Out Cables
8. Secondary Cables
9. Slide Straps
10. Safety-Flex Belt
11. Plastic Shrink Wrap

Figure 7. Hi-Dri Cell Sandwich (Source : Ref. 8)

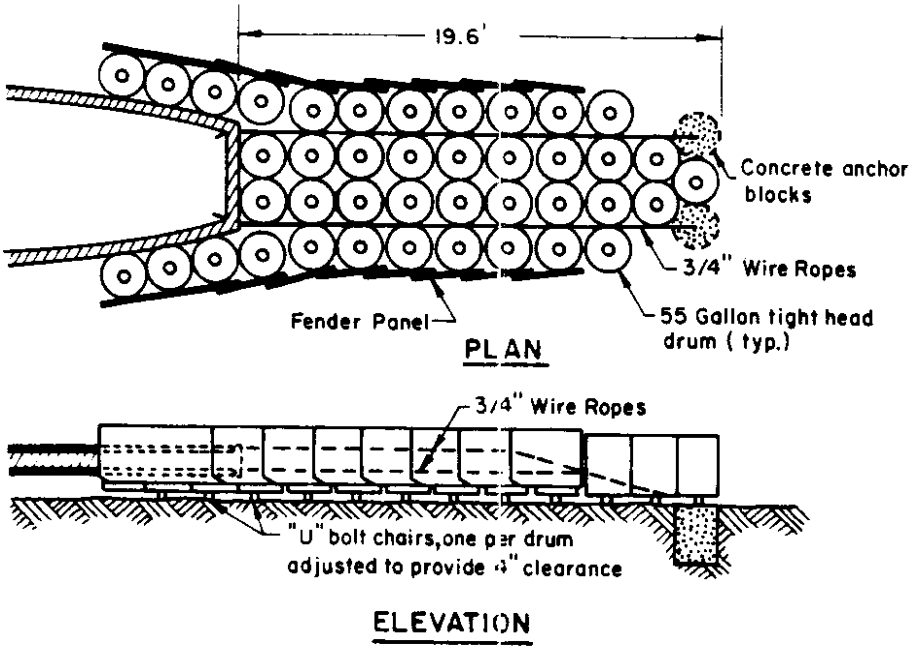

Figure 8. Steel-Drums (Texas Barrels) (Source : Ref. 8)

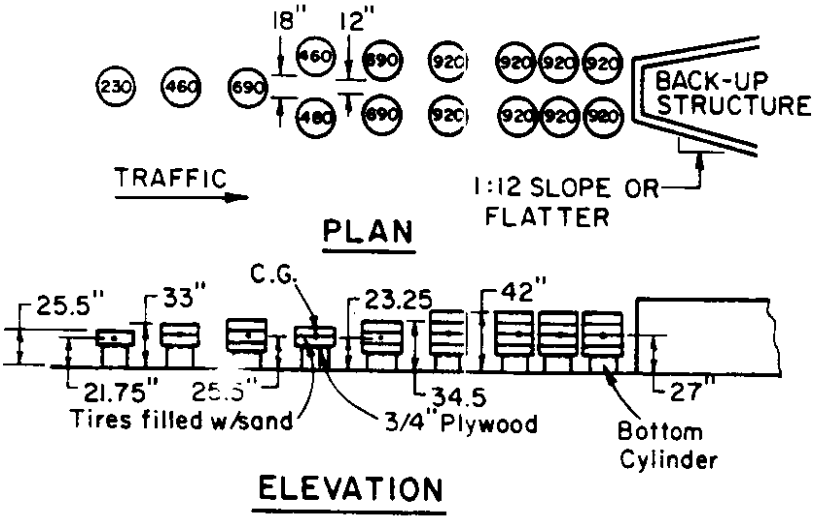

Figure 9. Sand-Tire Attenuator (Source : Ref. 2)

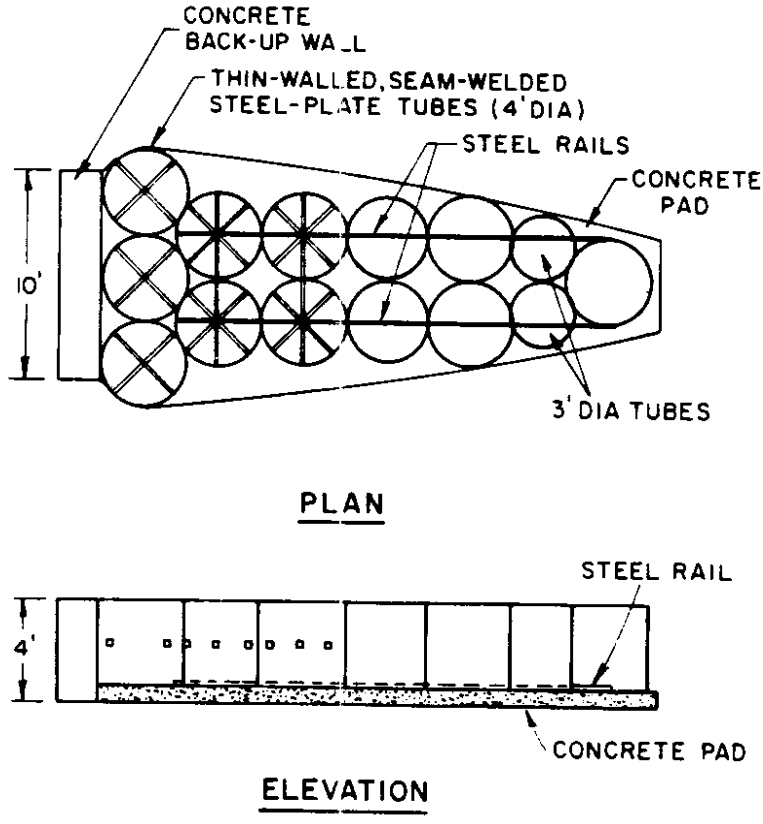

Figure 10. Connecticut Impact Attenuation System(CIAS)

(Source : Ref. 6)

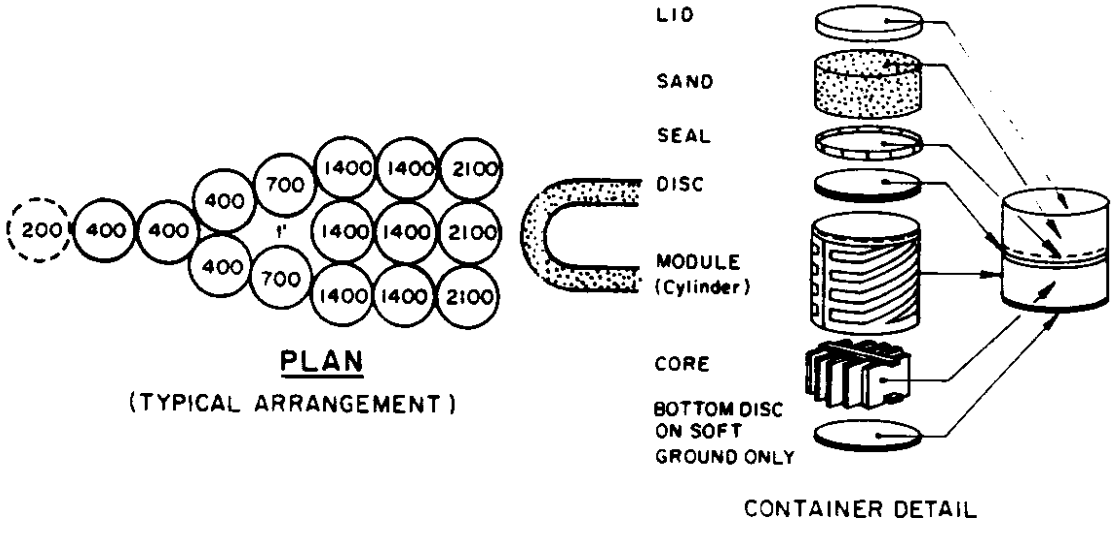

Figure 11. Sand-filled Plastic Barrels (Fitch Barrels)

(Source : Ref. 8)

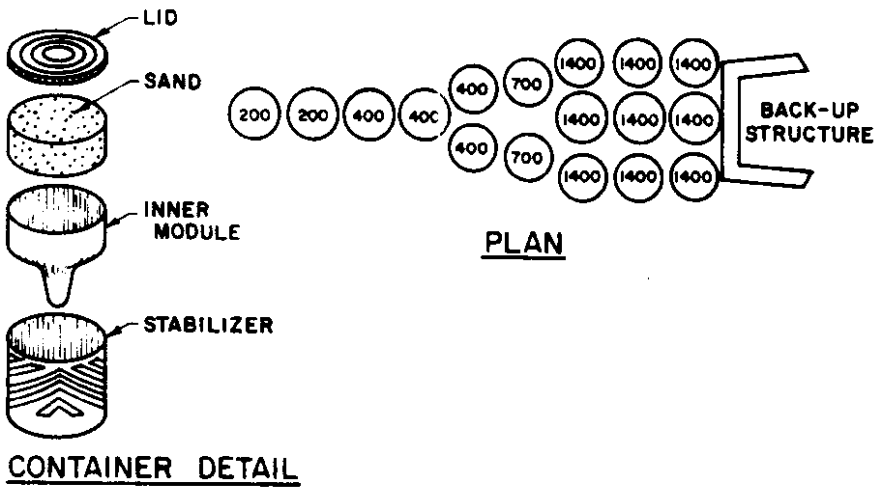

Figure 12. Energite (Source : Ref. 2)

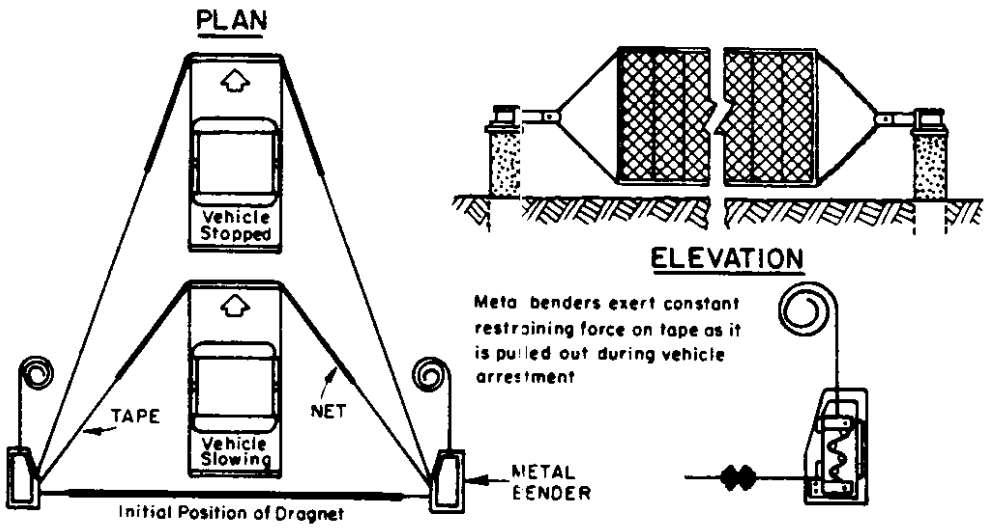

Figure 13. Dragnet (Source : Ref. 8)

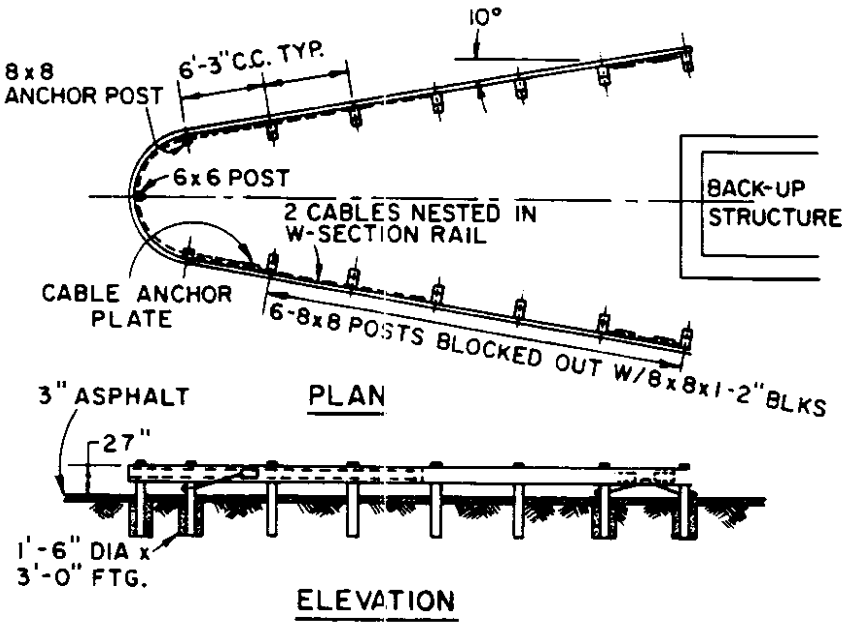

Figure 14. Five-ft Radius Guardrail (Minnesota Bullnose)

(Source : Ref. 2)

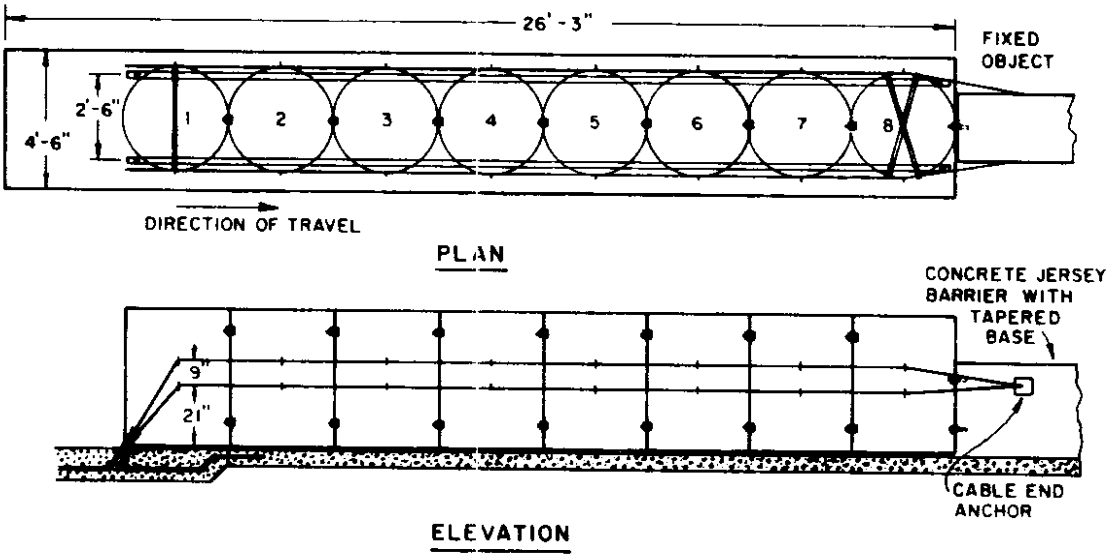

Figure 15. Metal-Tube Narrow Hazard Crash Cushion

(Source : Ref. 11)

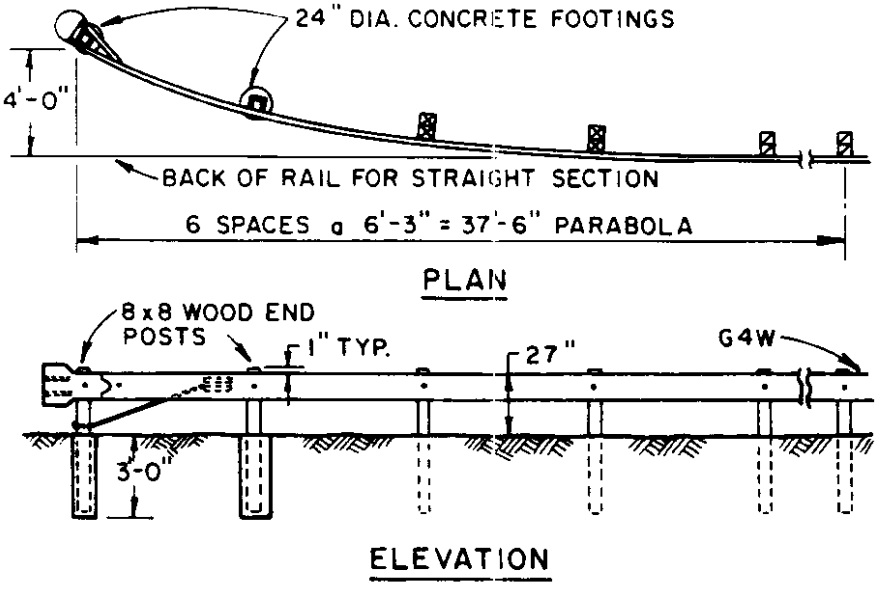

Figure 16. Guardrail Terminal – Wood Posts (GET 1)

(Source : Ref. 2)

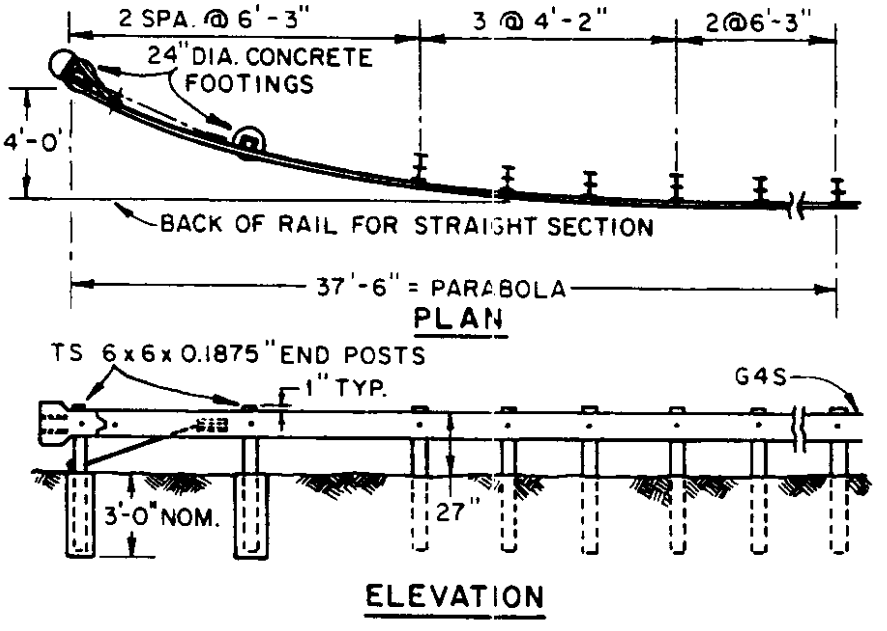

Figure 17. Guardrail Terminal – Steel Posts (GET 2)

(Source : Ref. 2)

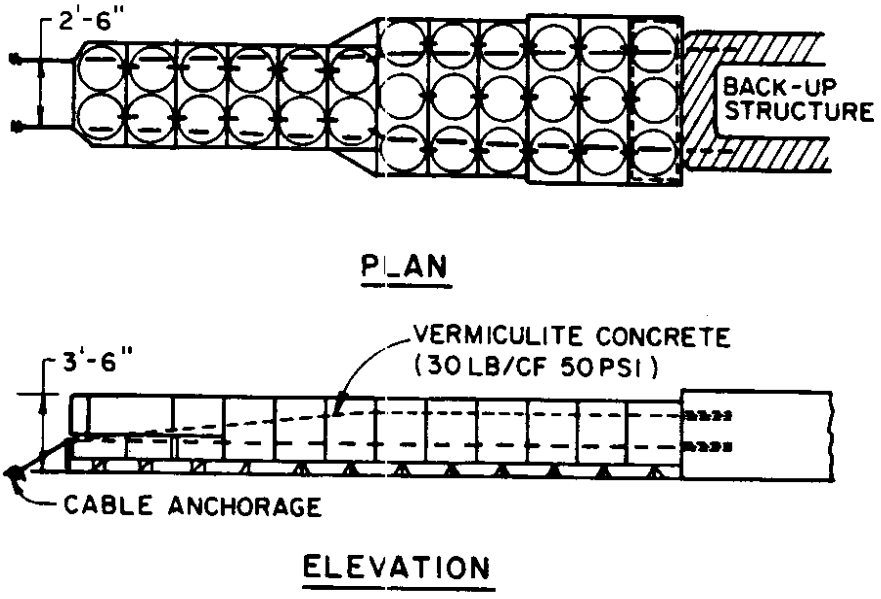

Figure 18. Lightweight Cellular Concrete Crash Cushions

(Source : Ref. 2)

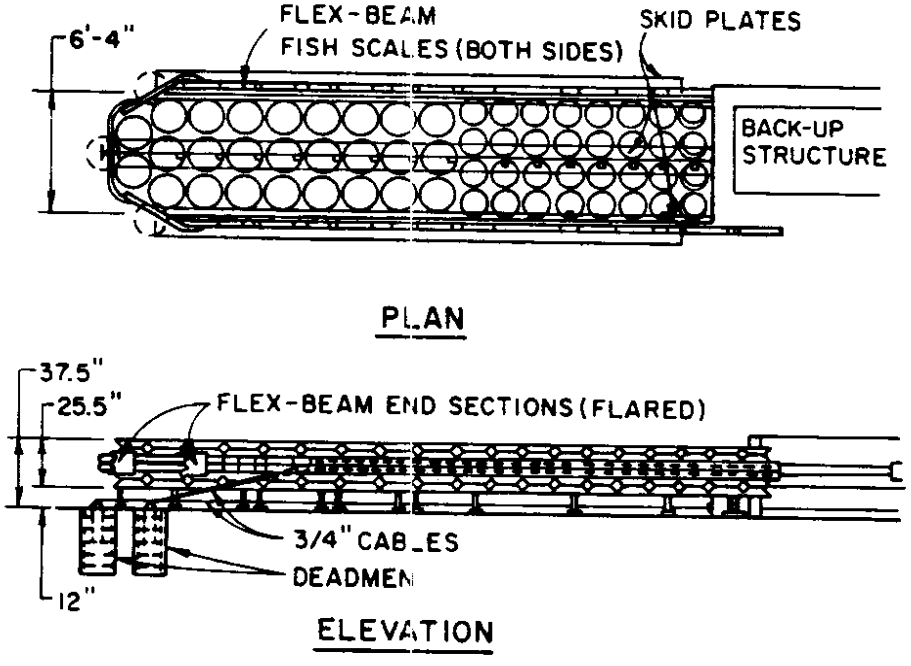

Figure 19. Corrugated Steel Pipe Attenuators

(Source : Ref. 2)

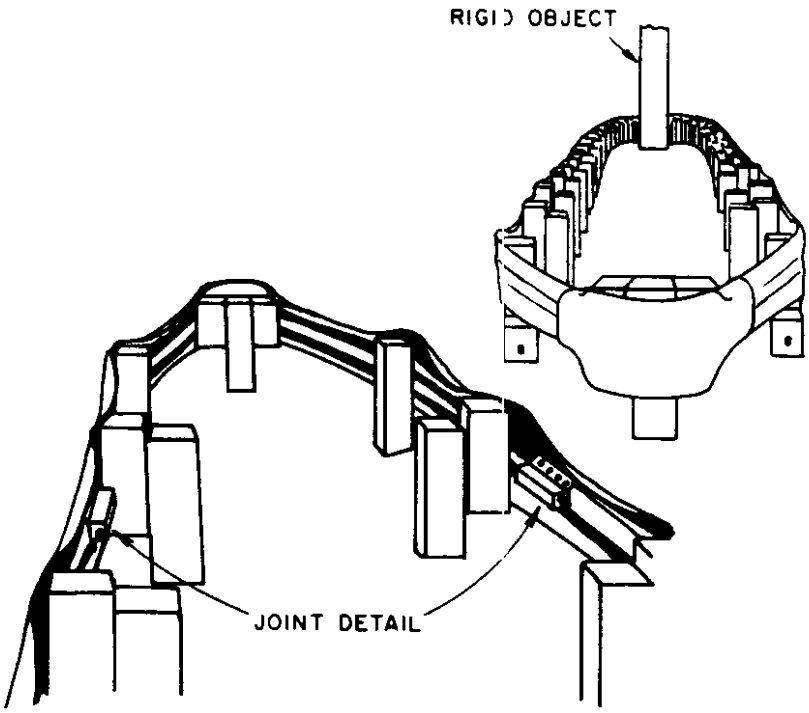

Figure 20. Colorado Type 3F Median Barrier End Treatment

(Source : Ref. 6)

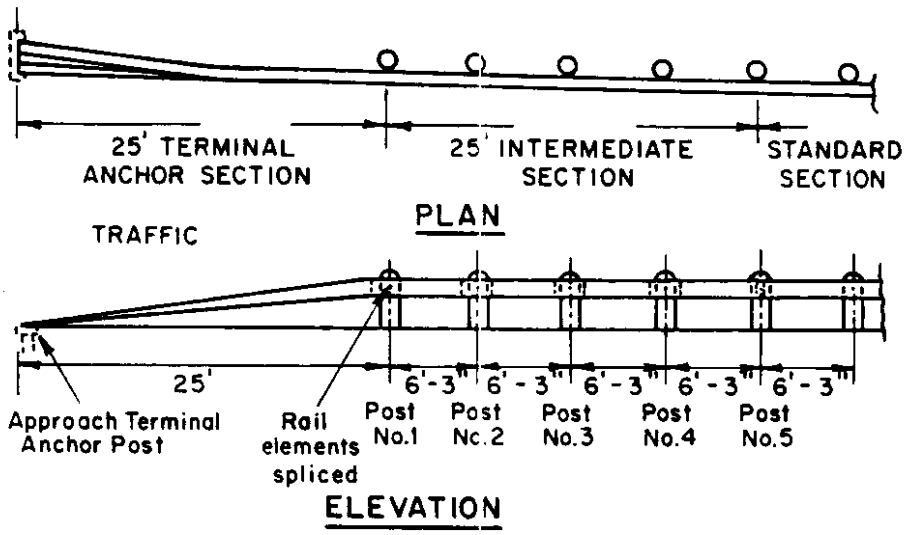

Figure 21. W-Beam Roadside Barrier Terminal

(Source : Ref. 2)

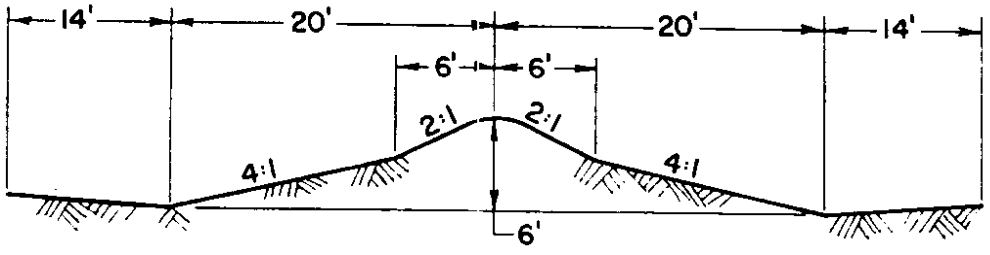

Figure 22. Earth Berm Attenuator (Source : Ref. 2)

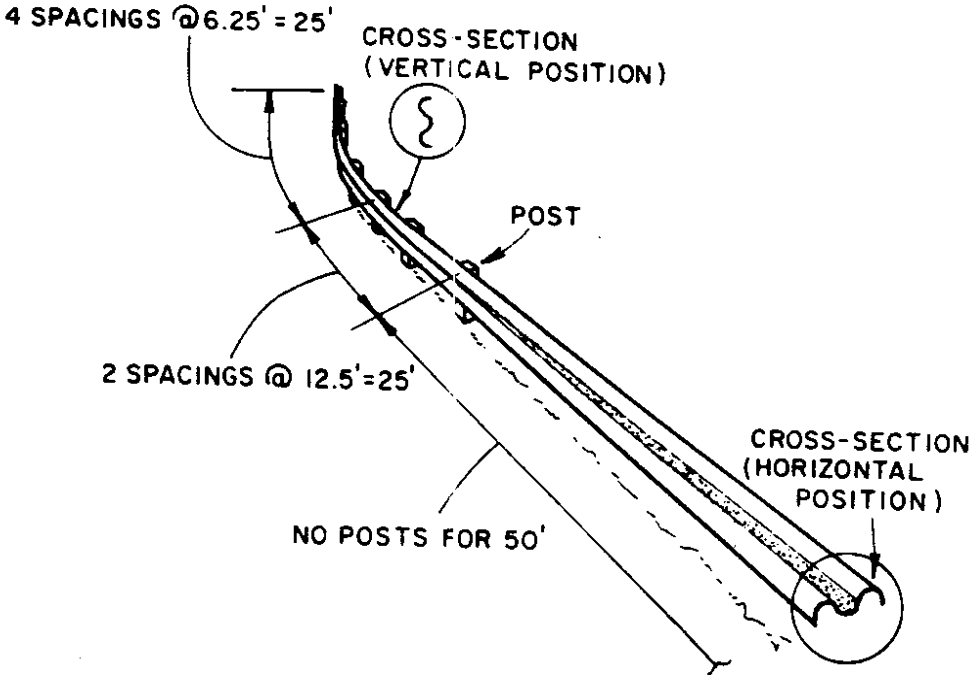

Figure 23. Twisted and Anchored Barrier End

(Source : Ref. 5)