PAVEMENT DEFLECTION MEASUREMENT-DYNAMIC-PHASE III

WSU IMPULSE INDEX COMPUTER, SECTION I

(SUITCASE)

FINAL REPORT

by
Frank W. Brands, P.E.
Electrical Engineering Section

and

John C. Cook, P.E.
Transportation Systems Section

College of Engineering Research Division
Washington State University
Pullman, Washington
August, 1972

Prepared for
Washington State Highway Commission
Department of Highways
in cooperation with
U.S. Department of Transportation
Federal Highway Administration

Project No. Y-1433

(Transportation Systems Section Publication H-37)

TECHNICAL REPORT STANDARD TITLE PAGE

1. Report No. H-37	2. Government Accession No.	3. Recipient's Catalog No.
4. Title and Subtitle PAVEMENT DEFLECTION MEASUREMENT-DYNAMIC-PHASE III WSU IMPULSE INDEX COMPUTER, SECTION I (SUITCASE)		5. Report Date August 1972
		6. Performing Organization Code
7. Author(s) Frank W. Brands, P.E. Electrical Engineering Section; John C. Cook, P.E. Transportation Systems Section		8. Performing Organization Report No.
9. Performing Organization Name and Address College of Engineering Research Division Washington State University Pullman, Washington 99163		10. Work Unit No.
		11. Contract or Grant No. Agreement Y-1433
12. Sponsoring Agency Name and Address Washington State Highway Commission Department of Highways Highway Administration Building Olympia, Washington 98504		13. Type of Report and Period Covered Final Report
		14. Sponsoring Agency Code

15. Supplementary Notes

Study was conducted in cooperation with U.S. Department of Transportation Federal Highway Administration.

16. Abstract

The development of the Impulse Index as an indicator of pavement condition has been previously described in a report of the College of Engineering Research Division of Washington State University entitled, "Pavement Deflection Measurement-Dynamic-A Feasibility Study, Final Report," June 1970, by Frank W. Brands, P.E. and John C. Cook, P.E.

To implement the convenient acquisition of the Impulse Index, a self-contained hand-carriable "Impulse Index Computer" was to be designed and built. The unit is especially adapted for demonstration purposes and for determining the Impulse Index at specific locations.

This report describes the Impulse Index Computer which has been built. Some illustrative test results are also included.

17. Key Words Non-destructive tests Pavement Condition Pavement Evaluation Portable tester	18. Distribution Statement

19. Security Classif. (of this report)	20. Security Classif. (of this page)	21. No. of Pages	22. Price
Unclassified	Unclassified	28	

Form DOT F 1700.7 (8-69)

TABLE OF CONTENTS

LIST OF ILLUSTRATIONS

ABSTRACT

The development of the Impulse Index as an indicator of pavement condition has been previously described in a report of the College of Engineering Research Division of Washington State University entitled, "Pavement Deflection Measurement-Dynamic--A Feasibility Study, Final Report," June 1970, by Frank W. Brands, P.E. and John C. Cook, P.E.

To implement the convenient acquisition of the Impulse Index, a self-contained, hand-carriable "Impulse Index Computer" was to be designed and built. The unit is especially adapted for demonstration purposes and for determining the Impulse Index at specific locations.

This report describes the Impulse Index Computer which has been built. Some illustrative test results are also included.

SUMMARY

The Impulse Index as an indicator of pavement condition has been described in a previous document prepared by the College of Engineering Research Division of Washington State University entitled, "Pavement Deflection Measurement-Dynamic--A Feasibility Study, Final Report," June 1970 by Frank W. Brands, P.E. and John C. Cook, P.E.

Good correlations were obtained between the Impulse Index and other means of pavement evaluation including Dynaflect and Benkelman Beam. To implement the convenient acquisition of additional supporting data, a self-contained, hand-carriable, battery operated, suitcase sized "Impulse Index Computer" was designed and constructed.

The operation of the unit is very simple and fast and is described in detail in this report.

Test data is included demonstrating that the Impulse Index Computer is a valuable aid in determining pavement condition for flexible pavements. Its usefulness on portland cement concrete pavement has not been established at this time.

The Impulse Index Computer as constructed has performed reliably. It should be used in a program of evaluation with sufficient breadth and be conducted by qualified personnel in order to gain additional experience and accumulate adequate data on pavement conditions to conclusively establish its reliability.

CHAPTER I

INTRODUCTION AND REVIEW OF PREVIOUS WORK

The development of the Impulse Index as an indicator of pavement condition has been previously described in a report of the College of Engineering Research Division of Washington State University entitled, "Pavement Deflection Measurement Dynamic--A Feasibility Study, Final Report," June 1970 by Frank W. Brands, P.E. and John C. Cook, P.E.

In that study, it was found that a high degree of correlation existed between the Impulse Index and the pavement condition as determined by other means including Dynaflect and Benkelman Beam measurements.

The Impulse Index is determined in the following manner. A drop hammer provides an impulse of energy to the pavement. An accelerometer is placed on the pavement as near to the hammer as is reasonably practical. A second accelerometer is placed at a distance of 18" from the first one. The output of each accelerometer is individually processed in a small computer to determine the time integral of the magnitude of the acceleration. The resulting quantity from the first accelerometer is referred to as R_o. The quantity from the second accelerometer is referred to as R_{18}. Experiments on flexible pavement indicated that the energy propagated through better pavements was less than poorer pavements. The ratio of R_o/R_{18} provides a quantity which is a direct function of the attenuation of the energy as it propagates through the pavement. It was also determined that poorer pavements yielded higher values of R_o than did the better pavements. Taking both of these observations into account, the Impulse Index was formulated as:

$$\text{Impulse Index} = R_o \times \frac{R_o}{R_{18}} = \frac{(R_o)^2}{R_{18}}$$

Data verifying the usefulness of this quantity as an indicator of pavement condition is presented in the previously mentioned report, "Pavement Deflection Measurement Dynamic--A Feasibility Study." Some additional illustrative data is presented in the following chapters of this report.

In all the previous work that has been done with the Impulse Index, the instrumentation equipment was selected from available, off-the-shelf, laboratory equipment on the basis of its electrical performance. This equipment, mostly of the vacuum tube type and requiring 60-cycle primary power, was heavy and required that an engine generator be provided for power when performing tests on highways.

The purpose of the work reported on here was to design and construct a self-contained, battery-operated, hand-carriable, suitcase size unit which would more conveniently permit the acquisition of Impulse Index data. This unit, referred to as the Impulse Index Computer, has been constructed, and is described in this report.

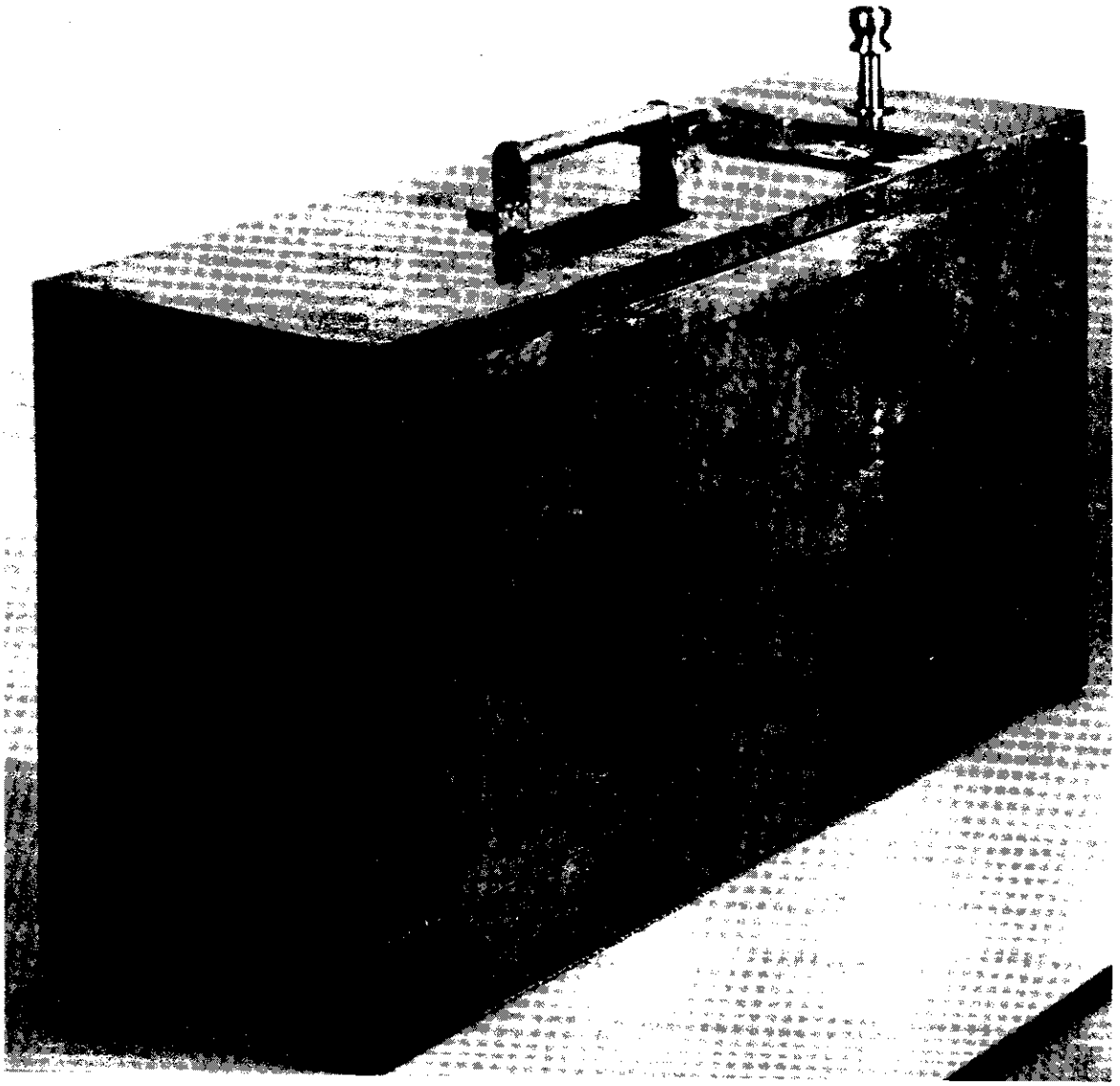

Figure 1

The Impulse Index Computer

CHAPTER II

THE IMPULSE INDEX COMPUTER

Operation

Before operation, the unit is turned on and balanced as described in a later section. In operation, the Impulse Index Computer is positioned on the pavement at the location desired. The operator places a knee on the device to provide additional physical stability. The selector switch must be in the "Impulse Index" position. With one hand the operator raises the drop hammer to its limit. While depressing a push button with the other hand, the hammer is released. See Figure 2.

Readings will appear on each of the three meters, and will remain there until the operator releases the push button, giving him ample time to record the values. The three meters shown in Figure 3 register the values of R_o, R_{18} and the Impulse Index.

The Range Switch

Because of the wide variation of pavement conditions encountered, a range switch is provided. This two-position switch, when in the up position, provides equal gains through the R_o and the R_{18} channels. This position is used for pavements which yield a high value for R_{18}. For other pavements, R_{18} is smaller, and the range switch must be placed in the down position. This provides four times as much gain in the R_{18} channel. The meter reading for R_{18} must then be divided by four to normalize it. Because R_{18} is four times its normal value, the Impulse Index reading will be one-fourth of its normal value and the meter reading for the Impulse Index must be multiplied by four to obtain its true value.

Figure 2

The Impulse Index Computer in Operation on SR 270

The Selector Switch

"Off" position of the selector switch removes all drain from the batteries. The selector switch should be in the "off" position when the unit is not in use, and also when the batteries are being charged.

"Battery" position of the selector switch indicates the condition of the charge on the rechargeable, self-contained batteries. If the top two meters read higher than .96, the charge of the batteries is within operating range. If the battery reading is low, the batteries should be recharged as described in a later section entitled, "Batteries and Charger".

"Balance" position of the selector switch is used when balancing is required. The balancing procedure is described in a later section entitled, "Balance Adjustments".

"Impulse Index" position of the selector switch is the position used when the device is in operation.

Batteries and Charger

The unit contains 24 Burgess #CD10L rechargeable nickel cadmium cells. These provide plus and minus nominal 15 volts with ample storage capacity to permit operation of the device for an eight-hour working day. A self-contained charger will recharge the batteries overnight.

To determine if charging is required, the selector switch is set to the "battery" position. Fully charged batteries will cause the meter to read off scale on the high side (slightly greater than 1.0). As the batteries discharge, the meters will read lower values. When the meters drop to .96 of full scale, the batteries should be recharged. The charging schedule is not critical, however, and partially discharged batteries may be recharged in anticipation of a full working day.

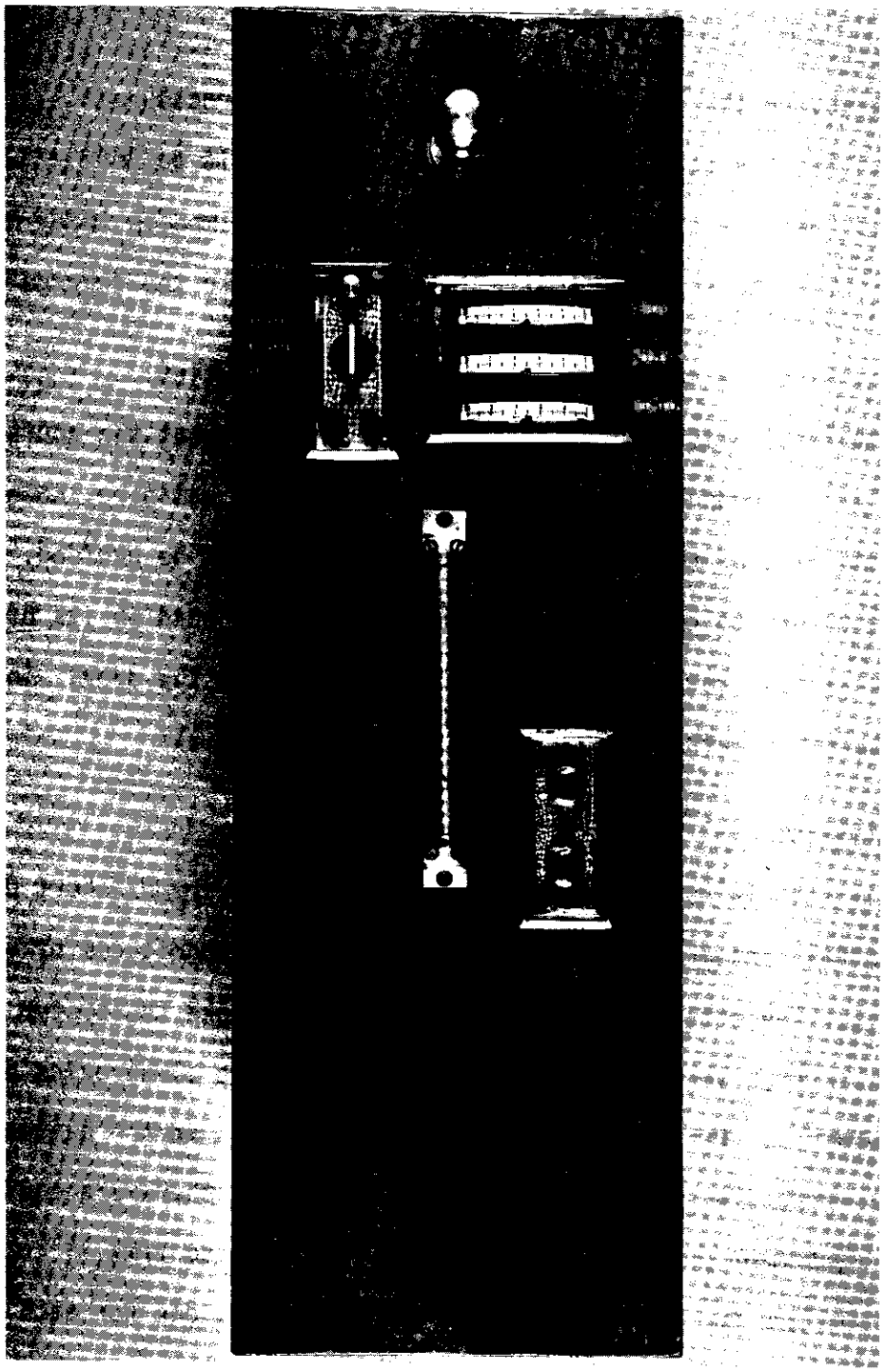

Figure 3

Top Panel of the Impulse Index Computer

To charge the batteries, use the following procedure:

1. Set the selector switch on top of the unit to "off".
2. Open the hinged door on the side of the Impulse Index Computer.
3. Set the selector switch inside the case to the "charge" position.
4. Plug the cord into a 110 volt 60-cycle outlet.

Completely discharged batteries may require about ten hours to charge completely. Extended overcharging is not seriously damaging, however, it does shorten the life of the batteries somewhat and should be avoided.

To return to operation, replace the electric cord in its bracket, return the internal selector switch to "operate", and close the door. The batteries require no other maintenance.

Balance Adjustment

The signals received from the accelerometers are of short duration, requiring fast integration rates to achieve useful magnitudes of voltage for R_0 and R_{18}. These fast integration rates in turn make the system highly sensitive to even very small amounts of drift in the electronics preceding the integrators. Drift is caused in part by changes in the battery voltage, but other factors also contribute. Each channel is therefore equipped with a balance adjustment which must be adjusted from time to time.

There are two balance dials on the top panel, one for each channel. To balance the channel, place the selector switch in the "balance" position. Depress both push buttons and observe if the top two meters move. Adjust the channel one dial until the top meter stops moving, and the channel two dial until the second meter stops moving. Turning the dial to the right will cause the meter to increase its rate of movement to the right, and vice versa.

If the meters have gone to their limit of travel in either direction, momentarily release the push buttons and the meters will return to their zero position. Reiterate the procedure until the meters do not drift from zero at an appreciable rate when both pushbuttons are depressed. Balance is satisfactory if the meters do not drift more than one large division (.1 on the scale) in five seconds.

CHAPTER III

THE ELECTRONICS

Block Diagram

A block diagram of the Impulse Index is shown in Figure 4.

Burr Brown model 3293/14 chopper stabilized operational amplifiers are used in the absolute value circuits and in the integrator circuits. Burr Brown model 4095/15 multipliers are used in the squaring and in the divider circuits. R_0, R_{18}, and the Impulse Index are connected to the meters on the top panel for display.

The Enabling Gate

At the moment that the hammer is released from its top most position, an internal timer generates electronic gate 350 milliseconds wide. It is only for the duration of this gate that the two signal channels are responsive. The inclusion of this gate has helped to significantly reduce the effects of noise and drift in the system.

Several factors were considered in the selection of the gate width. The narrower the gate, the less effect drift and noise will have. It requires 250 milliseconds for the hammer to fall and produce the impulse. The signal from the accelerometers has a duration of about 40 milliseconds. To set the gate at the minimum of 290 milliseconds would require that it be very stable in width. Any change in gate width would be reflected in changed values for R_0 and R_{18}.

If the gate were set only slightly greater than 290 milliseconds, sometimes the signal from the second bounce of the hammer would be accepted

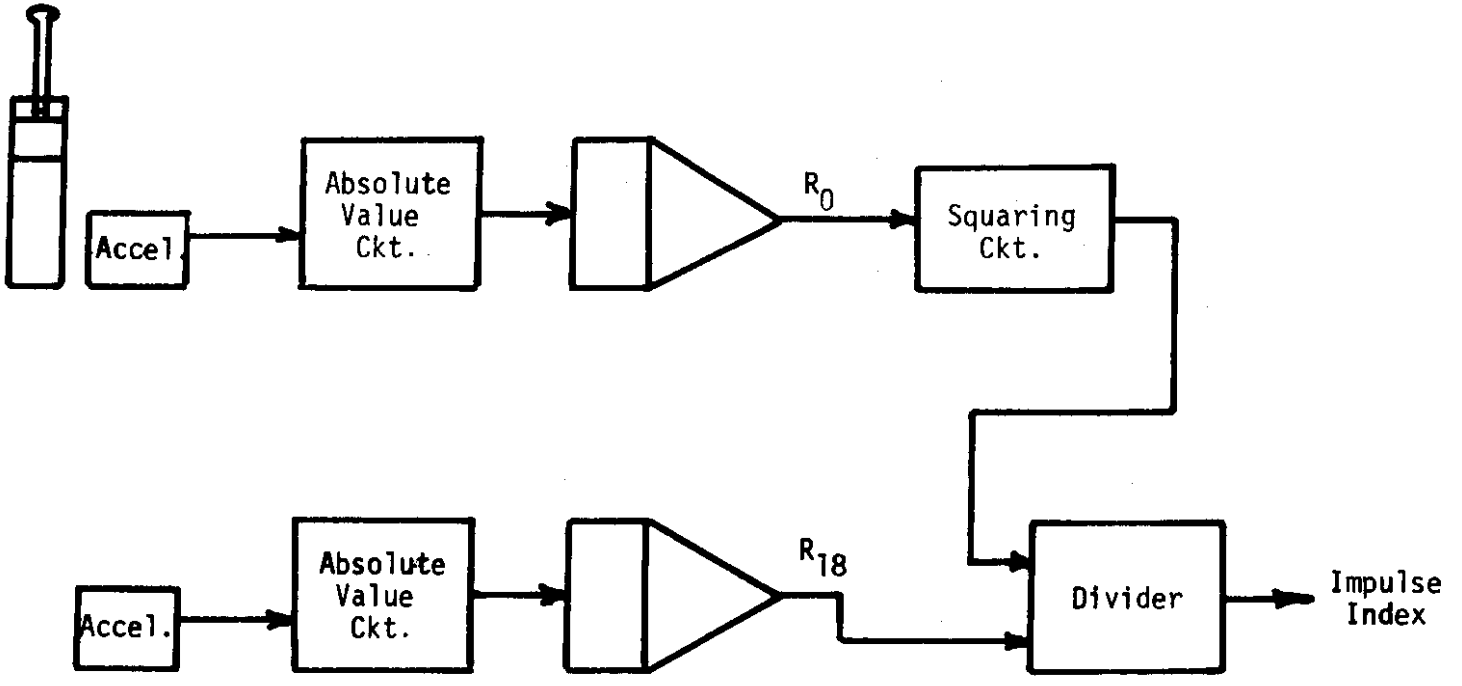

Figure 4

Block Diagram of the Impulse Index Computer

and sometimes it would not, depending on the height of the rebound. On some pavements, the hammer does not bounce at all and on others there is noticeable bounce.

The gate width of 350 milliseconds selected permits the signals from the bounce, if it exists, to pass. Small variations in the gate width will not measurably effect the performance of the device. The gate, as it now exists, has very effectively eliminated almost entirely the problems caused by small drifts and noise. The meter readings obtained in operation hold their values extremely well. No changes in meter readings are observed even after several minutes.

This is not to be construed as a statement that for best results the effect of all bounces should be included. It is not yet known whether better correlations of the Impulse Index with actual pavement conditions would be obtained by including or excluding the effects of the bounces. This should be determined in a later study.

CHAPTER IV

TEST RESULTS

To test the satisfactory operation of the Impulse Index Computer as constructed, a limited amount of testing was performed on highway pavements.

SR 270 and US 195

Tests were made on the Pullman-Moscow Highway, SR 270, and for US 195 at Mile Post 19. For each location, measurements were made at six places on a line crossing the highway. The places measured were the outside wheel track, lane center, inside wheel track; and on across the highway to the opposite lane, the inside wheel track, lane center and outside wheel track. On SR 270, the tests were repeated about 1/4 mile removed. The results of these tests are shown in Figure 5.

It should be noticed from Figure 5, that the Impulse Index is higher in the wheel tracks than it is in the lane center. This is attributed to the greater deterioration of the pavement in the wheel tracks due to the stress of traffic. Similar observations were reported in the feasibility study of this project using available off-the-shelf laboratory type equipment for obtaining the impulse index.

Figure 2 is a photograph of SR 270 and Figure 6 is a photograph of US 195 at Mile Post 19.

Bituminous Treated County Road

Figure 7 is a graph of the results obtained on a bituminous surface treated Pullman-Wawawai county road between Pullman and the Almota turnoff at Wilbur Creek Gulch Road. The opening of the grain shipping seaport at

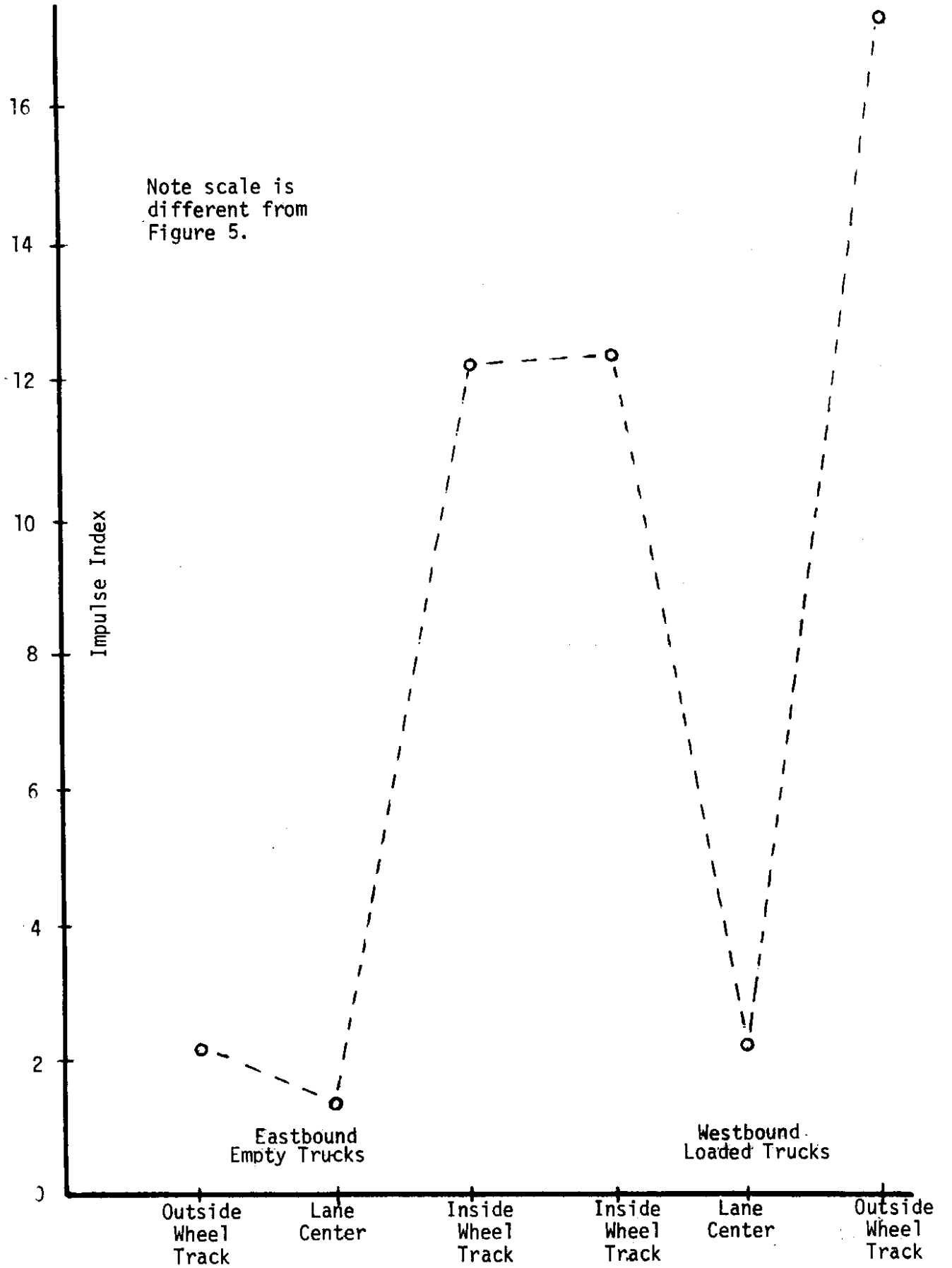

Figure 7

Impulse Index Profile for Bituminous Treated Pullman-Wawawai Road Subjected to Heavy Service in the Westbound Lane

Figure 8

Bituminous Treated Pullman-Wawawai County Road