Washington State
Department of Transportation

Materials Manual

M 46-01.26

January 2017

Engineering and Regional Operations
State Materials Laboratory

Americans with Disabilities Act (ADA) Information

Materials can be made available in an alternate format by emailing the WSDOT Diversity/ADA Affairs Team at wsdotada@wsdot.wa.gov or by calling toll free, 855-362-4ADA (4232). Persons who are deaf or hard of hearing may make a request by calling the Washington State Relay at 711.

Title VI Notice to the Public

It is Washington State Department of Transportation (WSDOT) policy to ensure no person shall, on the grounds of race, color, national origin, or sex, as provided by Title VI of the Civil Rights Act of 1964, be excluded from participation in, be denied the benefits of, or be otherwise discriminated against under any of its federally funded programs and activities. Any person who believes his/her Title VI protection has been violated may file a complaint with WSDOT's Office of Equal Opportunity (OEO). For Title VI complaint forms and advice, please contact OEO's Title VI Coordinator at 360-705-7082 or 509-324-6018.

To get the latest information on WSDOT publications, sign up for individual email updates at www.wsdot.wa.gov/publications/manuals.

Washington State Department of Transportation
Engineering and Regional Operations
State Materials Laboratory
PO Box 47365
Olympia, WA 98504-7365

www.wsdot.wa.gov/business/materialslab/default.htm

Foreword

The *Materials Manual* continues to use AASHTO, ASTM, WAQTC, and WSDOT test methods. The strategic direction for the Materials Laboratory is to continue to expand the use of AASHTO and ASTM standards whenever possible.

The manual has retained its dual unit format. However, English units predominate with metric units in parenthesis. WSDOT is using English units. The manual reflects the Quality System concerns of an AASHTO accredited organization and is organized by numerical test order. It also features two contents and an index.

The manual reflects a continuing policy of adopting "consensus" standards wherever practical. Adoption of these, in the form of AASHTO, ASTM, WAQTC, or other nationally recognized standards eliminates much of the previous text, which merely recopied the national documents. By adopting these standards, we provide a common standard that can be used by neighboring states and other laboratories or organizations. Contractors who work in more than one state also benefit by having to conform with fewer unique tests.

The concept of Field Operating Procedures (FOP) is continued to support the work of Materials Testers at the Field or Project level. Full procedures are provided when WSDOT Test Methods apply, or when a consensus standard (AASHTO, ASTM, or WAQTC) has been adapted to an FOP. The FOP provides the essential performance elements for the field technician.

When not specified by the test procedure, test reports will be generated through the Materials Testing System (MATS) or by the use of forms approved by the State Materials Engineer.

The WSDOT Materials Laboratory is responsible for establishing and managing all test procedures. For technical information or suggested changes to test methods or procedures, contact the WSDOT Materials Laboratory Quality Systems Manager through the departmental mail system at MS 47365; by mail at PO Box 47365, Olympia, WA 98504-7365; by email at mawdslr@wsdot.wa.gov; by telephone at 360-709-5497; or by fax at 360-709-5588, physically located at 1655 South Second Avenue, Tumwater, WA 98512. Please use this physical address for all communications other than U.S. Postal Service mail.

This manual is updated as needed. To order printed copies, go to:
www.wsdot.wa.gov/publications/manuals/orderinformation.htm

To view electronic copies, go to:
www.wsdot.wa.gov/publications/manuals/m46-01.htm

Kurt R. Williams, P.E.
State Materials Engineer

Contents

Aggregate				
Procedure Number	Owner	Field Use	In Manual	Test Method
T 2	WSDOT	✓	✓	FOP for AASHTO for Standard Practice for Sampling Aggregates
T 11	AASHTO			Materials Finer Than 0.075 mm (No. 200) Sieve in Mineral Aggregates by Washing
T 19	AASHTO	✓	✓	Bulk Density (“Unit Weight”) and Voids in Aggregate (Rodding Procedure Only) (Checklist Only)
T 21	AASHTO			Organic Impurities in Fine Aggregates for Concrete
T 27	AASHTO			Sieve Analysis of Fine and Coarse Aggregates
T 27/T 11	WSDOT	✓	✓	FOP for WAQTC/AASHTO for Sieve Analysis of Fine and Coarse Aggregates
T 37	AASHTO			Sieve Analysis of Mineral Filler
T 71	AASHTO			Effect of Organic Impurities in Fine Aggregate on Strength of Mortar
T 84	AASHTO			Specific Gravity and Absorption of Fine Aggregates
T 85	AASHTO			Specific Gravity and Absorption of Coarse Aggregates
T 96	AASHTO			Resistance to Degradation of Small-Size Coarse Aggregate by Abrasion and Impact in the Los Angeles Machine
T 113	WSDOT		✓	Method of Test for Determination of Degradation Value
T 123	WSDOT	✓	✓	Method of Test for Bark Mulch
T 125	WSDOT		✓	Determination of Fiber Length Percentages in Wood Strand Mulch
T 126	WSDOT		✓	Determination of Fiber Length Percentages in Hydraulically-Applied Erosion Control Products
SOP 128	WSDOT	✓	✓	Sampling for Aggregate Source Approval
T 176	AASHT0			Plastic Fines in Graded Aggregates and Soils by Use of the Sand Equivalent Test
T 176	WSDOT	✓	✓	FOP for AASHTO for Plastic Fines in Graded Aggregates and Soils by Use of the Sand Equivalent Test
T 248	AASHT0			Reducing Field Samples of Aggregates to Testing Size
T 248	WSDOT	✓	✓	FOP for AASHTO for Reducing Samples of Aggregate to Testing Size
T 255	AASHTO			Total Evaporable Moisture Content of Aggregate by Drying
T 255	WSDOT	✓	✓	FOP for AASHTO for Total Evaporable Moisture Content of Aggregate by Drying
T 288	AASHTO		✓	Determining Minimum Laboratory Soil Resistivity (Checklist Only)
T 289	AASHTO			Determining pH of Soil for Use in Corrosion
T 304	WSDOT	✓	✓	FOP for AASHTO for Uncompacted Void Content of Fine Aggregate
T 335	AASHTO			Determining the Percentage of Fracture in Coarse Aggregate
T 335	WSDOT	✓	✓	FOP for AASHTO for Determining the Percentage of Fracture in Coarse Aggregate
T 417	WSDOT		✓	Method of Test for Determining Minimum Resistivity and pH of Soil and Water
T 716	WSDOT	✓	✓	Method of Random Sampling for Locations of Testing and Sampling Sites
D 4791	WSDOT	✓	✓	FOP for ASTM for Standard Test Method for Flat Particles, Elongated Particles, or Flat and Elongated Particles in Coarse Aggregate

Bituminous Cement				
Procedure Number	**Owner**	**Field Use**	**In Manual**	**Test Method**
R 28	AASHTO			Practice of Accelerated Aging of Asphalt Binder Using a Pressurized Aging Vessel
R 29	AASHTO			Practice for Grading or Verifying the Performance Grade of an Asphalt Binder
T 44	AASHTO			Solubility of Bituminous Materials
R 47	AASHTO			Standard Recommended Practice for Reducing Samples of Hot Mix Asphalt (HMA) to Testing Size
T 48	AASHTO			Flash and Fire Points by Cleveland Cup
T 49	AASHTO			Penetration of Bituminous Materials
T 50	AASHTO			Float Test for Bituminous Materials
T 51	AASHTO			Ductility of Bituminous Materials
T 53	AASHTO			Softening Point of Bituminous (Ring and Ball Apparatus)
T 59	AASHTO			Emulsified Asphalts
R 66	AASHTO			Sampling Bituminous Materials
R 66	WSDOT	✓	✓	FOP for WAQTC/AASHTO for Sampling Bituminous Materials
T 72	AASHTO			Saybolt Viscosity
T 79	AASHTO			Flash Point With Tag Open-Cup Apparatus for Use With Materials Having a Flash Less Than 93.3°C (200°F)
T 200	AASHTO			pH of Aqueous Solutions With the Glass Electrode
T 201	AASHTO			Kinematic Viscosity of Asphalts
T 202	AASHTO			Viscosity of Asphalts by Vacuum Capillary Viscometer
D 217	ASTM			Standard Test Methods for Cone Penetration of Lubricating Grease
T 228	AASHTO			Specific Gravity of Semi-Solid Bituminous Material
T 240	AASHTO			Effect of Heat and Air on a Moving Film of Asphalt Binder (Rolling Thin-Film Oven Test)
T 301	AASHTO			Elastic Recovery Test of Asphalt Materials by Means of a Ductilometer
T 313	AASHTO			Determining the Flexural Creep Stiffness of Asphalt Binder Using the Bending Beam Rheometer (BBR)
T 315	AASHTO			Determining the Rheological Properties of Asphalt Binder Using a Dynamic Shear Rheometer (DSR)
T 316	AASHTO			Viscosity Determination of Asphalt Binder Using Rotational Viscometer
SOP 318	WSDOT		✓	Standard Operating Procedure for Melting of Flexible Bituminous Pavement Marker Adhesive for Evaluation
CAL 331				Caltrans Method of Test for Residue by Evaporation of Latex Modified Asphalt Emulsion
CAL 332				Caltrans Method of Test for Recovery From Deformation of Latex Modified Asphalt Emulsion Residue
T 426	WSDOT		✓	Pull-Off Test for Hot Melt Traffic Button Adhesive
D 3111	ASTM			Standard Test Method for Flexibility Determination of Hot-Melt Adhesives by Mandrel Bend Test Method

Hot Mix Asphalt				
Procedure Number	Owner	Field Use	In Manual	Test Method
TM 8	WAQTC	✓	✓	In-Place Density of Bituminous Mixes Using the Nuclear Moisture-Density Gauge
T 27/T 11	WSDOT	✓	✓	FOP for WAQTC/AASHTO for Sieve Analysis of Fine and Coarse Aggregates
R 30	AASHTO			Practice for Short and Long Term Aging of Hot Mix Asphalt (HMA)
T 30	AASHTO			Mechanical Analysis of Extracted Aggregate
T 166	AASHTO			Bulk Specific Gravity of Compacted Asphalt Mixtures Using Saturated Surface-Dry Specimens
T 166	WSDOT	✓	✓	FOP for AASHTO for Bulk Specific Gravity of Compacted Hot Mix Asphalt Using Saturated Surface-Dry Specimens
T 168	AASHTO			Sampling Bituminous Paving Mixtures
T 168	WSDOT	✓	✓	FOP for WAQTC/AASHTO for Sampling of Hot Mix Asphalt Paving Mixtures
T 209	AASHTO			Theoretical Maximum Specific Gravity and Density of Hot Mix Asphalt (HMA)
T 209	WSDOT	✓	✓	FOP for AASHTO for Theoretical Maximum Specific Gravity and Density of Hot-Mix Asphalt Paving Mixtures
T 269	AASHTO			Percent Air Void in Compacted Dense and Open Asphalt Mixtures
T 275	AASHTO			Bulk Specific Gravity of Compacted Hot Mix Asphalt (HMA) Using Paraffin-Coated Specimen
T 308	AASHTO			Determining the Asphalt Binder Content of Hot Mix Asphalt (HMA) by the Ignition Method
T 308	WSDOT	✓	✓	FOP for AASHTO for Determining the Asphalt Binder Content of Hot Mix Asphalt (HMA) by the Ignition Method
T 312	WSDOT	✓	✓	FOP for AASHTO for Preparing Hot-Mix Asphalt (HMA) Specimens by Means of the Superpave Gyratory Compactor
T 324	AASHTO		✓	Standard Method of Test for Hamburg Wheel-Track Testing of Compacted Hot Mix Asphalt (HMA)
T 329	WSDOT	✓	✓	FOP for AASHTO for Moisture Content of Asphalt (HMA) by Oven Method
T 331	WSDOT		✓	Bulk Specific Gravity (G_{mb}) and Density of Compacted Hot Mix Asphalt (HMA) Using Automatic Vacuum Sealing Method
T 355		✓	✓	In-Place Density of Asphalt Mixes Using the Nuclear Moisture-Density Gauge
T 712	WSDOT	✓	✓	Standard Method of Reducing Hot Mix Asphalt Paving Mixtures
T 716	WSDOT	✓	✓	Method of Random Sampling for Locations of Testing and Sampling Sites
T 718	WSDOT		✓	Method of Test for Determining Stripping of Hot Mix Asphalt
T 720	WSDOT		✓	Method of Test for Thickness Measurement of Hot Mix Asphalt (HMA) Cores
SOP 723	WSDOT		✓	Standard Operating Procedure for Submitting Hot Mix Asphalt (HMA) Mix Designs for Verification
T 724	WSDOT	✓	✓	Method of Preparation of Aggregate for Hot Mix Asphalt (HMA) Mix Designs
T 726	WSDOT	✓	✓	Mixing Procedure for Hot Mix Asphalt (HMA)
SOP 728	WSDOT	✓	✓	Standard Operating Procedure for Determining the Ignition Furnace Calibration Factor (IFCF) for Hot Mix Asphalt (HMA)

Hot Mix Asphalt				
Procedure Number	**Owner**	**Field Use**	**In Manual**	**Test Method**
SOP 729	WSDOT	✓	✓	Standard Operating Procedure for Determination of the Moving Average of Theoretical Maximum Density (TMD) for HMA
SOP 730	WSDOT	✓	✓	Standard Operating Procedure for Correlation of Nuclear Gauge Densities With Hot Mix Asphalt (HMA) Cores
SOP 731	WSDOT	✓	✓	Standard Operating Procedure for Determining Volumetric Properties of Hot Mix Asphalt
SOP 732	WSDOT	✓	✓	Standard Operating Procedure for Volumetric Design for Hot-Mix Asphalt (HMA)
SOP 733	WSDOT	✓	✓	Standard Operating Procedure for Determination of Pavement Density Differentials Using the Nuclear Density Gauge
SOP 734	WSDOT	✓	✓	Standard Operating Procedure for Sampling Hot Mix Asphalt After Compaction (Obtaining Cores)
SOP 735	WSDOT	✓	✓	Standard Operating Procedure for Longitudinal Joint Density
SOP 736	WSDOT		✓	In-Place Density of Bituminous Mixes Using Cores
SOP 737			✓	Procedure for the Forensic Testing of HMA Field Cores
T 738	WSDOT		✓	In-Place Density of Asphalt Mixtures Using the Nuclear Moisture-Density Gauge
D 6931	ASTM		✓	Standard Test Method for Indirect Tensile (IDT) Strength of Bituminous Mixtures
D 7227	ASTM			Standard Practice for Rapid Drying of Compacted Asphalt Specimens Using Vacuum Drying Apparatus

Cement				
Procedure Number	Owner	Field Use	In Manual	Test Method
T 105	AASHTO			Chemical Analysis of Hydraulic Cement
T 106	AASHTO			Compressive Strength of Hydraulic Cement Mortars (Using 2-in. or (50-mm) Cube Specimens)
T 106	WSDOT	✓	✓	FOP for AASHTO for Compressive Strength of Hydraulic Cement Mortars (Using 2-in. or (50-mm) Cube Specimens)
T 107	AASHTO			Autoclave Expansion of Portland Cement
T 129	AASHTO			Normal Consistency of Hydraulic Cement
T 131	AASHTO			Time of Setting of Hydraulic Cement by Vicat Needle
T 133	AASHTO			Density of Hydraulic Cement
T 137	AASHTO			Air Content of Hydraulic Cement Mortar
T 153	AASHTO			Fineness of Hydraulic Cement by Air Permeability Apparatus
T 154	AASHTO			Time of Setting of Hydraulic Cement by Gillmore Needles
T 162	AASHTO			Mechanical Mixing of Hydraulic Cement Pastes and Mortars of Plastic Consistency
T 260	AASHTO			Sampling and Testing for Chloride Ion in Concrete and Concrete Raw Materials
T 303	AASHTO			Accelerated Detection of Potentially Deleterious Expansion of Mortar Bars Due to Alkali-Silica Reaction
T 313	WSDOT		✓	Method of Test for Cement-Latex Compatibility
T 314	WSDOT		✓	Method of Test for Photovolt Reflectance
T 413	WSDOT		✓	Method of Test for Evaluating Waterproofing Effectiveness of Membrane and Membrane-Pavement Systems
D 562	ASTM			Standard Test Method for Consistency of Paints Measuring Krebs Unit (KU) Viscosity Using a Stormer-Type Viscometer
T 813	WSDOT	✓	✓	Field Method of Fabrication of 2 in (50 mm) Cube Specimens for Compressive Strength Testing of Grouts and Mortars
T 814	WSDOT		✓	Method of Test for Water Retention Efficiency of Liquid Membrane-Forming Compounds and Impermeable Sheet Materials for Curing Concrete
T 816	WSDOT		✓	Method of Test for Parting Compound
C 939	WSDOT	✓	✓	FOP for ASTM for Flow of Grout for Preplaced-Aggregate Concrete (Flow Cone Method)
D 1475	ASTM			Test Method for Consistency of Paints Test Method for Density of Paint, Varnish, Lacquer, and Related Products
D 4758	ASTM			Test Method for Nonvolatile Contents of Latexes

Chemical				
Procedure Number	**Owner**	**Field Use**	**In Manual**	**Test Method**
T 65	AASHTO			Mass (Weight) of Coating on Iron and Steel Articles With Zinc or Zinc-Alloy Coatings
T 267	AASHTO			Determination of Organic Content in Soils by Loss on Ignition
T 420	WSDOT	✓	✓	Test Method for Determining the Maturity of Compost (Solvita Test)
C 881	ASTM			Standard Specification for Epoxy-Resin-Base Bonding Systems for Concrete
C 882	ASTM		✓	Bond Strength (Diagonal Shear) (Checklist Only)
C 1218	ASTM			Standard Test Method for Water-Soluble Chloride in Mortar and Concrete
D 1429	ASTM			Standard Test Methods for Specific Gravity of Water and Brine
D 2628/ M 220	ASTM		✓	Test for High and Low Temperature Recovery of Elastomeric Joint Seals for Concrete Pavements
D 5329	ASTM			Standard Test Methods for Sealants and Fillers, Hot-Applied, for Joints and Cracks in Asphaltic and Portland Cement Concrete Pavements
D 7091	ASTM	✓	✓	Nondestructive Measurement of Thickness of Nonmagnetic Coatings on a Ferrous Base (Checklist Only)

Concrete				
Procedure Number	Owner	Field Use	In Manual	Test Method
TM 2	WAQTC	✓	✓	FOP for WAQTC for Sampling Freshly Mixed Concrete
T 22	AASHTO			Compressive Strength of Cylindrical Concrete Specimens
T 22	WSDOT	✓	✓	FOP for AASHTO for Compressive Strength of Cylindrical Concrete Specimens
T 23	AASHTO			Making and Curing Concrete Test Specimens in the Field
T 23	WSDOT	✓	✓	FOP for AASHTO for Making and Curing Concrete Test Specimens in the Field
R 39	AASHTO			Making and Curing Concrete Test Specimens in the Laboratory
T 71	AASHTO			Effect of Organic Impurities in Fine Aggregate on Strength of Mortar
T 106	AASHTO			Compressive Strength of Hydraulic Cement Mortars (Using 2-in. or (50-mm) Cube Specimens)
T 106	WSDOT	✓	✓	FOP for AASHTO for Compressive Strength of Hydraulic Cement Mortars (Using 2-in. or (50-mm) Cube Specimens)
T 119	AASHTO			Slump of Hydraulic Cement Concrete
T 119	WSDOT	✓	✓	FOP for AASHTO for Standard Test Method for Slump of Hydraulic-Cement Concrete
T 121	AASHTO	✓	✓	Density (Unit Weight), Yield and Air Content (Gravimetric) of Concrete (Checklist Only)
C 140	ASTM			Standard Test Methods for Sampling and Testing Concrete Masonry Units and Related Units
T 141	AASHTO			Sampling Freshly Mixed Concrete
T 152	AASHTO			Air Content of Freshly Mixed Concrete by the Pressure Method
T 152	WSDOT	✓	✓	FOP for WAQTC for Air Content of Freshly Mixed Concrete by the Pressure Method
T 177	AASHTO			Flexural Strength of Concrete (Using Simple Beam With Center-Point Loading)
T 196	AASHTO		✓	Air Content of Concrete (Volumetric Method) (Checklist Only)
T 197	AASHTO			Time of Setting of Concrete Mixtures by Penetration Resistance
T 198	AASHTO			Splitting Tensile Strength of Cylindrical Concrete Specimens
T 231	AASHTO			Capping Cylindrical Concrete Specimens
T 231	WSDOT	✓	✓	FOP for AASHTO for Capping Cylindrical Concrete Specimens
T 260	AASHTO			Sampling and Testing for Chloride Ion in Concrete and Concrete Raw Materials
T 277	AASHTO			Electrical Indication of Concrete's Ability to Resist Chloride Ion Penetration
T 309	AASHTO			Temperature of Freshly Mixed Portland Cement Concrete
T 309	WSDOT	✓	✓	FOP for AASHTO for Temperature of Freshly Mixed Portland Cement Concrete
C 457	ASTM			Standard Test Method for Microscopical Determination of Parameters of the Air-Void System in Hardened Concrete
C 495	ASTM			Test Method for Compressive Strength of Lightweight Insulated Concrete
T 716	WSDOT	✓	✓	Method of Random Sampling for Locations of Testing and Sampling Sites
T 802	WSDOT	✓	✓	Method of Test for Flexural Strength of Concrete (Using Simple Beam With Center-Point Loading)

Concrete				
Procedure Number	**Owner**	**Field Use**	**In Manual**	**Test Method**
C 805	ASTM			Test Method for Rebound Number of Hardened Concrete
C 805	WSDOT	✓	✓	Rebound Hammer Determination of Compressive Strength of Hardened Concrete
T 808	WSDOT	✓	✓	Method for Making Flexural Test Beams
T 810	WSDOT	✓	✓	Method of Test for Determination of the Density of Portland Cement Concrete Pavement Cores
T 812	WSDOT	✓	✓	Method of Test for Measuring Length of Drilled Concrete Cores
T 813	WSDOT	✓	✓	Field Method of Fabrication of 2 in (50 mm) Cube Specimens for Compressive Strength Testing of Grouts and Mortars
T 818	WSDOT		✓	Air Content of Freshly Mixed Self-Compacting Concrete by the Pressure Method
T 819	WSDOT		✓	Making and Curing Self-Compacting Concrete Test Specimens in the Field
C 939	ASTM			Standard Test Method for Flow of Grout for Preplaced-Aggregate Concrete (Flow Cone Method)
C 939	WSDOT	✓	✓	FOP for ASTM for Flow of Grout for Preplaced-Aggregate Concrete (Flow Cone Method)
C 1218	ASTM			Standard Test Method for Water-Soluble Chloride in Mortar and Concrete
D 1429	ASTM			Standard Test Methods for Specific Gravity of Water and Brine
C 1611	WSDOT	✓	✓	FOP for ASTM C 1611/C 1611M Standard Test Method for Slump Flow of Self-Consolidating Concrete
C 1621	WSDOT	✓	✓	FOP for ASTM C 1621/C 1621M Standard Test Method for Passing Ability of Self-Consolidating Concrete by J-Ring

Electrical and Traffic				
Procedure Number	**Owner**	**Field Use**	**In Manual**	**Test Method**
IP 78-16	FHWA			Signal Controller Evaluation
T 257	AASHTO			Instrumental Photometeric Measurements of Retroreflectivie Material and Retroreflective
T 314	WSDOT		✓	Method of Test for Photovolt Reflectance
T 421	WSDOT		✓	Test Method for Traffic Controller Inspection and Test Procedure
T 422	WSDOT		✓	Test Method for Traffic Controller Transient Voltage Test (Spike Test) Procedure
T 423	WSDOT		✓	Test Method for Traffic Controller Conflict Monitoresting
T 424	WSDOT		✓	Test Method for Traffic Controller Power Interruption Test Procedure
T 425	WSDOT		✓	Test Method for Traffic Controller NEM and 170 Type Environmental Chamber Test
T 426	WSDOT		✓	Pull-Off Test for Hot Melt Traffic Button Adhesive
T 427	WSDOT		✓	Test Method for Loop Amplifier Testing Procedure
T 428	WSDOT		✓	Test Method for Traffic Controller Compliance Inspection and Test Procedure
SOP 429	WSDOT		✓	Methods for Determining the Acceptance of Traffic Signal Controller Assembly
T 429	WSDOT	✓	✓	Retroreflectance of Newly Applied Pavement Marking Using Portable Hand-Operated Instruments
D 470	ASTM			Test Method for Crossedlinked Insulation and Jackets for Wire and Cable
DMCT 700	ATSI			Manual on Signal Controller Evaluation
PCMZ 2000	TS			Manual on Signal Controller Evaluation
D 2633	ASTM			Standard Test Methods for Thermoplastic Insulations and Jackets for Wire and Cable
D 4956	ASTM			Standard Specification for Retroreflective Sheeting for Traffic Control
D 7585	ASTM			Standard Practice for Evaluating Retroreflective Pavement Markings Using Portable Hand-Operated Instruments
TS1	NEMA			Signal Controller Evaluation Geotechnical – Soils

Geotechnical – Soils				
Procedure Number	**Owner**	**Field Use**	**In Manual**	**Test Method**
R 58	AASHTO			Dry Preparation of Disturbed Soil and Soil Aggregate Samples for Test
T 88	AASHTO			Particle Size Analysis of Soils
T 89	AASHTO			Determining the Liquid Limit of Soils
T 90	AASHTO		✓	Determining the Plastic Limit and Plasticity Index of Soils (Checklist Only)
T 99	AASHTO	✓	✓	Moisture-Density Relations of Soils Using a 5.5 lb (2.5 kg) Rammer and a 12 in (305 mm) Drop Checklist
T 100	AASHTO			Specific Gravity of Soil
T 180	AASHTO	✓	✓	Moisture-Density Relations of Soils Using a 10 lb (4.54 kg) Rammer and an 18 in (457 mm) Drop Checklist
T 208	AASHTO			Unconfined Compressive Strength of Cohesive Soil
T 215	AASHTO			Permeability of Granular Soils (Constant Head)
T 216	AASHTO			One-Dimensional Consolidation Properties of Soils
T 217	WSDOT	✓	✓	FOP for AASHTO for Determination of Moisture in Soils by Means of a Calcium Carbide Gas Pressure Moisture Tester
T 224	AASHTO			Correction for Coarse Particles in the Soil Compaction Test
T 236	AASHTO			Direct Shear Test of Soils Under Consolidated Drained Conditions
T 265	AASHTO		✓	Laboratory Determination of Moisture Content of Soils
T 296	AASHTO			Unconsolidated, Undrained Compressive Strength of Cohesive Soils in Triaxial Compression
T 297	AASHTO			Consolidated, Undrained Triaxial Compressive Test on Cohesive Soils Shear
D 2487	ASTM			Practice for Classification of Soils for Engineering Purposes (Unified Soil Classification System)
D 2488	ASTM			Practice for Description and Identification of Soils (Visual-Manual Procedure)
D 4186	ASTM			Standard Test Method for One-Dimensional Consolidation Properties of Saturated Cohesive Soils Using Controlled-Strain Loading
D 4644	ASTM			Standard Test Method for Slake Durability of Shales and Similar Weak Rocks
T 501	WSDOT		✓	Test Method to Determine Durability of Very Weak Rock
D 5084	ASTM			Standard Test Methods for Measurement of Hydraulic Conductivity of Saturated Porous Materials Using a Flexible Wall Permeameter
D 5311	ASTM			Standard Test Method for Load Controlled Cyclic Triaxial Strength of Soil
D 5731	ASTM			Standard Test Method for Determination of the Point Load Strength Index of Rock and Application to Rock Strength Classifications
D 6467	ASTM			Standard Test Method for Torsional Ring Shear Test to Determine Drained Residual Shear Strength of Cohesive Soils
D 6528	ASTM			Standard Test Method for Consolidated Undrained Direct Simple Shear Testing of Cohesive Soils
D 7012	ASTM		✓	Standard Test Method for Unconfined Compressive Strength of Intact Rock Core Specimens

Geotextile and Steel				
Procedure Number	Owner	Field Use	In Manual	Test Method
A 143	ASTM			Standard Practice for Safeguarding Against Embrittlement of Hot-Dip Galvanized Structural Steel Products and Procedure for Detecting Embrittlement
T 244	AASHTO			Mechanical Testing of Steel Products
A 370	ASTM			Standard Test Methods and Definitions for Mechanical Testing of Steel Products
F 606	ASTM			Mechanical Properties: Steel Fasteners
T 914	WSDOT	✓	✓	Practice for Sampling of Geosynthetic Material for Testing
T 915	WSDOT		✓	Practice for Conditioning of Geotextiles for Testing
T 923	WSDOT		✓	Thickness Measurement of Geotextiles
T 925	WSDOT		✓	Standard Practice for Determination of Long-Term Strength for Geosynthetic Reinforcement
T 926	WSDOT		✓	Geogrid Brittleness Test
D 1683	ASTM			Sewen Seams (Geotextiles)
D 3786	ASTM			Burst Test (Geotextiles)
D 4355	ASTM			Standard Test Method for Deterioration of Geotextiles From Exposure to Ultraviolet Light and Water (Xenon-Arc Type Apparatus)
D 4491	ASTM			Water Permeability (Geotextiles)
D 4533	ASTM			Tear Strength (Geotextiles)
D 4354	ASTM		✓	Standard Practice for Sampling of Geosynthetics for Testing
D 4595	ASTM			Wide Width Breaking Load (Geotextiles)
D 4632	ASTM			Grab Breaking Load (Geotextiles)
D 4751	ASTM			Apparent Opening Size (Geotextiles)
D 4833	ASTM			Puncture (Geotextiles)

Paint				
Procedure Number	**Owner**	**Field Use**	**In Manual**	**Test Method**
D 185	ASTM			Standard Test Methods for Coarse Particles in Pigments, Pastes, and Paints
T 314	ASTM			Method of Test for Photovolt Reflectance
D 562	ASTM			Standard Test Method for Consistency of Paints Measuring Krebs Unit (KU) Viscosity Using a Stormer-Type Viscometer
D 1208	ASTM			Method for Determination of Loss on Ignition
D 1210	ASTM			Standard Test Method for Fineness of Dispersion of Pigment-Vehicle Systems by Hegman-Type Gage
D 1475	ASTM			Test Method for Density of Paint and Related Products
D 2244	ASTM			Standard Practice for Calculation of Color Tolerances and Color Differences From Instrumentally Measured Color Coordinates
D 2369	ASTM			Method for Determination of Volatile and Nonvolatile Content (Ordinary Laboratory Oven)
D 2371	ASTM			Standard Test Method for Pigment Content of Solvent-Reducible Paints (Centrifuge)
D 2621	ASTM			Standard Test Method for Infrared Identification of Vehicle Solids From Solvent-Reducible Paints
D 2697	ASTM			Standard Test Method for Volume Nonvolatile Matter in Clear or Pigmented Coatings
3011	FTMS			Method for Determination of Condition in Container
D 3723	ASTM			Standard Test Method for Pigment Content of Water Emulsion Paints by Temperature Ashing
4053	FTMS			Method for Determination of Nonvolatile Vehicle Content
4061	FTMS			Method for Determination of Drying Time (Oil-Based Paints)
4122	FTMS			Method for Determination of Hiding Power (Contrast Ratio)
D 4505	ASTM			Standard Specification for Preformed Plastic Pavement Marking Tape for Extended Service Life Pavement Soils

Pavement Soils				
Procedure Number	**Owner**	**Field Use**	**In Manual**	**Test Method**
T 242	AASHTO			Frictional Properties of Paved Surfaces Using a Full-Size Tire
T 272	AASHTO			Family of Curves – One Point Method
T 272	WSDOT	✓	✓	FOP for AASHTO for Family of Curves – One Point Method
T 307	AASHTO		✓	Determining the Resilient Modulus of Soils and Aggregate Materials
T 310	WSDOT	✓	✓	FOP for AASHTO for In-Place Density and Moisture Content of Soil and Soil-Aggregate by Nuclear Methods (Shallow Depth)
T 606	WSDOT		✓	Method of Test for Compaction Control of Granular Materials
T 610	WSDOT		✓	Method of Test for the Capillary Rise of Soils
SOP 615	WSDOT	✓	✓	Determination of the % Compaction for Embankment & Untreated Surfacing Materials Using the Nuclear Moisture-Density Gauge
T 807	WSDOT	✓	✓	Method of Operation of California Profilograph and Evaluation of Profiles
D 4694	ASTM			Test Method for Deflections With Falling-eight Type Impulse Load Device

Standard Practice				
Procedure Number	**Owner**	**Field Use**	**In Manual**	**Test Method**
QC 1	WSDOT		✓	Standard Practice for Cement Producers/Importers/Distributors That Certify Portland Cement and Blended Hydraulic Cement
QC 2	WSDOT		✓	Standard Practice for Asphalt Suppliers That Certify Performance Graded and Emulsified Asphalts
QC 3	WSDOT		✓	Quality System Laboratory Review
QC 4	WSDOT		✓	Standard Practice for Fly Ash Producers/Importers/Distributors That Certify Fly Ash
QC 5	WSDOT		✓	Standard Practice for Ground Granulated Blast-Furnace Slag Producers/Importers/Distributors That Certify Ground Granulated Blast-Furnace Slag
QC 6	WSDOT		✓	Annual Prestressed Plant Review and Approval Process
QC 7	WSDOT		✓	Annual Precast Plant Review and Approval Process
QC 8	WSDOT		✓	Standard Practice for Approval of Hot Mix Asphalt Mix Designs for the Qualified Products List

Numerical Order				
Procedure Number	**Owner**	**Field Use**	**In Manual**	**Test Method**
QC 1	WSDOT		✓	Standard Practice for Cement Producers/Importers/Distributors That Certify Portland Cement and Blended Hydraulic Cement
QC 2	WSDOT		✓	Standard Practice for Asphalt Suppliers That Certify Performance Graded and Emulsified Asphalts
QC 3	WSDOT		✓	Quality System Laboratory Review
QC 4	WSDOT		✓	Standard Practice for Fly Ash Producers/Importers/Distributors That Certify Fly Ash
QC 5	WSDOT		✓	Standard Practice for Ground Granulated Blast-Furnace Slag Producers/ Importers/Distributors That Certify Ground Granulated Blast-Furnace Slag
QC 6	WSDOT		✓	Annual Prestressed Plant Review and Approval Process
QC 7	WSDOT		✓	Annual Precast Plant Review and Approval Process
QC 8	WSDOT		✓	Standard Practice for Approval of Hot Mix Asphalt Mix Designs for the Qualified Products List
TS1	NEMA			Signal Controller Evaluation Geotechnical – Soils
T 2	WSDOT	✓	✓	FOP for AASHTO for Standard Practice for Sampling Aggregates
TM 2	WAQTC	✓	✓	FOP for WAQTC for Sampling Freshly Mixed Concrete
T 11	AASHTO			Materials Finer Than 0.075 mm (No. 200) Sieve in Mineral Aggregates by Washing
E 18	ASTM			Standard Test Methods for Rockwell Hardness of Metallic Materials
T 19	AASHTO	✓	✓	Bulk Density (“Unit Weight”) and Voids in Aggregate (Rodding Procedure Only) (Checklist Only)
T 21	AASHTO			Organic Impurities in Fine Aggregates for Concrete
T 22	AASHTO			Compressive Strength of Cylindrical Concrete Specimens
T 22	WSDOT	✓	✓	FOP for AASHTO for Compressive Strength of Cylindrical Concrete Specimens
T 23	AASHTO			Making and Curing Concrete Test Specimens in the Field
T 23	WSDOT	✓	✓	FOP for AASHTO for Making and Curing Concrete Test Specimens in the Field
T 27	AASHTO			Sieve Analysis of Fine and Coarse Aggregates
T 27/T 11	WSDOT	✓	✓	FOP for WAQTC/AASHTO for Sieve Analysis of Fine and Coarse Aggregates
R 28	AASHTO			Practice of Accelerated Aging of Asphalt Binder Using a Pressurized Aging Vessel
R 29	AASHTO			Practice for Grading or Verifying the Performance Grade of an Asphalt Binder
R 30	AASHTO			Practice for Short and Long Term Aging of Hot Mix Asphalt (HMA)
T 30	AASHTO			Mechanical Analysis of Extracted Aggregate
T 37	AASHTO			Sieve Analysis of Mineral Filler
R 39	AASHTO			Making and curing Concrete Test Specimens in the Laboratory
T 44	AASHTO			Solubility of Bituminous Materials
R 47	AASHTO			Standard Recommended Practice for Reducing Samples of Hot Mix Asphalt (HMA) to Testing Size

Numerical Order				
Procedure Number	Owner	Field Use	In Manual	Test Method
T 48	AASHTO			Flash and Fire Points by Cleveland Cup
T 49	AASHTO			Penetration of Bituminous Materials
T 50	AASHTO			Float Test for Bituminous Materials
T 51	AASHTO			Ductility of Bituminous Materials
T 53	AASHTO			Softening Point of Bituminous (Ring and Ball Apparatus)
R 58	AASHTO			Dry Preparation of Disturbed Soil and Soil Aggregate Samples for Test
T 59	AASHTO			Emulsified Asphalts
R 60	WSDOT	✓	✓	FOP for WAQTC/AASHTO for Sampling Bituminous Materials
T 65	AASHTO			Mass (Weight) of Coating on Iron and Steel Articles With Zinc or Zinc-Alloy Coatings
R 66	AASHTO			Sampling Bituminous Materials
R 66	WSDOT	✓	✓	FOP for WAQTC/AASHTO for Sampling Bituminous Materials
T 71	AASHTO			Effect of Organic Impurities in Fine Aggregate on Strength of Mortar
T 72	AASHTO			Saybolt Viscosity
IP 78-16	FHWA			Signal Controller Evaluation
T 79	AASHTO			Flash Point With Tag Open-Cup Apparatus for Use With Materials Having a Flash Less Than 93.3°C (200°F)
T 84	AASHTO			Specific Gravity and Absorption of Fine Aggregates
T 85	AASHTO			Specific Gravity and Absorption of Coarse Aggregates
T 88	AASHTO			Particle Size Analysis of Soils
T 89	AASHTO			Determining the Liquid Limit of Soils
T 90	AASHTO		✓	Determining the Plastic Limit and Plasticity Index of Soils (Checklist Only)
T 96	AASHTO			Resistance to Degradation of Small-Size Coarse Aggregate by Abrasion and Impact in the Los Angeles Machine
T 99	AASHTO	✓	✓	Moisture-Density Relations of Soils Using a 5.5 lb (2.5 kg) Rammer and a 12 in (305 mm) Drop Checklist
T 100	AASHTO			Specific Gravity of Soil
T 105	AASHTO			Chemical Analysis of Hydraulic Cement
T 106	AASHTO			Compressive Strength of Hydraulic Cement Mortars (Using 2-in. or (50-mm) Cube Specimens)
T 106	WSDOT	✓	✓	FOP for AASHTO for Compressive Strength of Hydraulic Cement Mortars (Using 2-in. or (50-mm) Cube Specimens)
T 107	AASHTO			Autoclave Expansion of Hydraulic Cement
T 112	AASHTO		✓	Clay Lumps and Friable Particles in Aggregate
T 113	WSDOT		✓	Method of Test for Determination of Degradation Value
T 119	AASHTO			Slump of Hydraulic Cement Concrete
T 119	WSDOT	✓	✓	FOP for AASHTO for Standard Test Method for Slump of Hydraulic-Cement Concrete
T 121	AASHTO	✓	✓	Density (Unit Weight), Yield and Air Content (Gravimetric) of Concrete (Checklist Only)
T 123	WSDOT	✓	✓	Method of Test for Bark Mulch
T 124	WSDOT			Method of Testing Top Soils

Numerical Order				
Procedure Number	**Owner**	**Field Use**	**In Manual**	**Test Method**
T 125	WSDOT		✓	Determination of Fiber Length Percentages in Wood Strand Mulch
T 126	WSDOT		✓	Determination of Fiber Length Percentages in Hydraulically-Applied Erosion Control Products
T 127	WSDOT		✓	Preparation of Leachate Sample for Testing Toxicity of HECP Effluent
SOP 128	WSDOT	✓	✓	Sampling for Aggregate Source Approval
T 129	AASHTO			Normal Consistency of Hydraulic Cement
T 131	AASHTO			Time of Setting of Hydraulic Cement by Vicat Needle
T 133	AASHTO			Density of Hydraulic Cement
T 137	AASHTO			Air Content of Hydraulic Cement Mortar
C 140	ASTM			Standard Test Methods for Sampling and Testing Concrete Masonry Units and Related Units
T 141	AASHTO			Sampling Freshly Mixed Concrete
A 143	ASTM			Standard Practice for Safeguarding Against Embrittlement of Hot-Dip Galvanized Structural Steel Products and Procedure for Detecting Embrittlement
T 152	AASHTO			Air Content of Freshly Mixed Concrete by the Pressure Method
T 152	WSDOT	✓	✓	FOP for WAQTC for Air Content of Freshly Mixed Concrete by the Pressure Method
T 153	AASHTO			Fineness of Hydraulic Cement by Air Permeability Apparatus
T 154	AASHTO			Time of Setting of Hydraulic Cement by Gillmore Needle
T 162	AASHTO			Mechanical Mixing of Hydraulic Cement Pastes and Mortars of Plastic Consistency
T 166	AASHTO			Bulk Specific Gravity of Compacted Hot Mix Asphalt (HMA) Using Saturated Surface-Dry Specimens
T 166	WSDOT	✓	✓	FOP for AASHTO for Bulk Specific Gravity of Compacted Hot Mix Asphalt Using Saturated Surface-Dry Specimens
T 168	AASHTO			Sampling Bituminous Paving Mixtures
T 168	WSDOT	✓	✓	FOP for WAQTC/AASHTO for Sampling of Hot Mix Asphalt Paving Mixtures
T 176	AASHTO			Plastic Fines in Graded Aggregates and Soils by Use of the Sand Equivalent Test
T 176	WSDOT	✓	✓	FOP for AASHTO for Plastic Fines in Graded Aggregates and Soils by Use of the Sand Equivalent Test
T 177	AASHTO			Flexural Strength of Concrete (Using Simple Beam With Center-Point Loading)
T 180	AASHTO	✓	✓	Moisture-Density Relations of Soils Using a 10 lb (4.54 kg) Rammer and an 18 in (457 mm) Drop Checklist
D 185	ASTM			Standard Test Methods for Coarse Particles in Pigments, Pastes, and Paints
T 196	AASHTO		✓	Air Content of Concrete (Volumetric Method) (Checklist Only)
T 197	AASHTO			Time of Setting of Concrete Mixtures by Penetration Resistance
T 198	AASHTO			Splitting Tensile Strength of Cylindrical Concrete Specimens
T 200	AASHTO			pH of Aqueous Solutions With the Glass Electrode
T 201	AASHTO			Kinematic Viscosity of Asphalts

Numerical Order				
Procedure Number	Owner	Field Use	In Manual	Test Method
T 202	AASHTO			Viscosity of Asphalts by Vacuum Capillary Viscometer
T 208	AASHTO			Unconfined Compressive Strength of Cohesive Soil
T 209	AASHTO			Theoretical Maximum Specific Gravity and Density of Hot Mix Asphalt (HMA)
T 209	WSDOT	✓	✓	FOP for AASHTO for Theoretical Maximum Specific Gravity and Density of Hot-Mix Asphalt Paving Mixtures
T 215	AASHTO			Permeability of Granular Soils (Constant Head)
T 216	AASHTO			One-Dimensional Consolidation Properties of Soils
D 217	ASTM			Standard Test Methods for Cone Penetration of Lubricating Grease
T 217	WSDOT	✓	✓	FOP for AASHTO for Determination of Moisture in Soils by Means of a Calcium Carbide Gas Pressure Moisture Tester
T 224	AASHTO			Correction for Coarse Particles in the Soil Compaction Test
T 228	AASHTO			Specific Gravity of Semi-Solid Bituminous Material
T 231	AASHTO			Capping Cylindrical Concrete Specimens
T 231	WSDOT	✓	✓	FOP for AASHTO for Capping Cylindrical Concrete Specimens
T 236	AASHTO			Direct Shear test of Soils Under Consolidated Drained Conditions
T 240	AASHTO			Effect of Heat and Air on a Moving Film of Asphalt Binder (Rolling Thin-Film Oven Test)
T 242	AASHTO			Frictional Properties of Paved Surfaces Using a Full-Size Tire
T 244	AASHTO			Mechanical Testing of Steel Products
T 248	AASHTO			Reducing Field Samples of Aggregates to Testing Size
T 248	WSDOT	✓	✓	FOP for AASHTO for Reducing Samples of Aggregate to Testing Size
T 255	AASHTO			Total Evaporable Moisture Content of Aggregate by Drying
T 255	WSDOT	✓	✓	FOP for AASHTO for Total Evaporable Moisture Content of Aggregate by Drying
T 257	AASHTO			Instrumental Photometeric Measurements of Retroreflectivie Material and Retroreflective
T 260	AASHTO			Sampling and Testing for Chloride Ion in Concrete and Concrete Raw Materials
T 265	AASHTO		✓	Laboratory Determination of Moisture Content of Soils
T 267	AASHTO			Determination of Organic Content in Soils by Loss on Ignition
T 269	AASHTO			Percent Air Void in Compacted Dense and Open Asphalt Mixtures
T 272	AASHTO			Family of Curves – One Point Method
T 272	WSDOT	✓	✓	FOP for AASHTO for Family of Curves – One Point Method
T 275	AASHTO			Bulk Specific Gravity of Compacted Hot Mix Asphalt (HMA) Using Paraffin-Coated Specimen
T 277	AASHTO			Electrical Indication of Concrete's Ability to Resist Chloride Ion Penetration
T 288	AASHTO		✓	Determining Minimum Laboratory Soil Resistivity (Checklist Only)
T 289	AASHTO			Determining pH of Soil for Use in Corrosion
T 296	AASHTO			Unconsolidated, Undrained Compressive Strength of Cohesive Soils in Triaxial Compression

Numerical Order				
Procedure Number	**Owner**	**Field Use**	**In Manual**	**Test Method**
T 297	AASHTO			Consolidated, Undrained Triaxial Compressive Test on Cohesive Soils Shear
T 301	AASHTO			Elastic Recovery Test of Asphalt Materials by Means of a Ductilometer
T 303	AASHTO			Accelerated Detection of Potentially Deleterious Expansion of Mortar Bars Due to Alkali-Silica Reaction
T 304	WSDOT	✓	✓	FOP for AASHTO for Uncompacted Void Content of Fine Aggregate
T 307	AASHTO		✓	Determining the Resilient Modulus of Soils and Aggregate Materials
T 308	AASHTO			Determining the Asphalt Binder Content of Hot Mix Asphalt (HMA) by the Ignition Method
T 308	WSDOT	✓	✓	FOP for AASHTO for Determining the Asphalt Binder Content of Hot Mix Asphalt (HMA) by the Ignition Method
T 309	AASHTO			Temperature of Freshly Mixed Hydraulic Cement Concrete
T 309	WSDOT	✓	✓	FOP for AASHTO for Temperature of Freshly Mixed Portland Cement Concrete
T 310	WSDOT	✓	✓	FOP for AASHTO for In-Place Density and Moisture Content of Soil and Soil-Aggregate by Nuclear Methods (Shallow Depth)
T 312	WSDOT	✓	✓	FOP for AASHTO for Preparing Hot-Mix Asphalt (HMA) Specimens by Means of the Superpave Gyratory Compactor
T 313	AASHTO			Determining the Flexural Creep Stiffness of Asphalt Binder Using the Bending Beam Rheometer (BBR)
T 313	WSDOT		✓	Method of Test for Cement-Latex Compatibility
T 314	WSDOT		✓	Method of Test for Photovolt Reflectance
T 315	AASHTO			Determining the Rheological Properties of Asphalt Binder Using a Dynamic Shear Rheometer (DSR)
T 316	AASHTO			Viscosity Determination of Asphalt Binder Using Rotational Viscometer
SOP 318	WSDOT		✓	Standard Operating Procedure for Melting of Flexible Bituminous Pavement Marker Adhesive for Evaluation
T 324	AASHTO		✓	Standard Method of Test for Hamburg Wheel-Track Testing of Compacted Hot Mix Asphalt (HMA)
T 329	WSDOT	✓	✓	FOP for AASHTO for Moisture Content of Asphalt (HMA) by Oven Method
CAL 331				Caltrans Method of Test for Residue by Evaporation of Latex Modified Asphalt Emulsion
T 331	WSDOT		✓	Bulk Specific Gravity (G_{mb}) and Density of Compacted Hot Mix Asphalt (HMA) Using Automatic Vacuum Sealing Method
CAL 332				Caltrans Method of Test for Recovery From Deformation of Latex Modified Asphalt Emulsion Residue
T 335	AASHTO			Determining the Percentage of Fracture in Coarse Aggregate
T 335	WSDOT	✓	✓	FOP for AASHTO for Determining the Percentage of Fracture in Coarse Aggregate
T 355		✓	✓	In-Place Density of Asphalt Mixes Using the Nuclear Moisture-Density Gauge
A 370	ASTM			Standard Test Methods and Definitions for Mechanical Testing of Steel Products
D 395	ASTM			Test Methods for Rubber Property – Compression Set

Numerical Order				
Procedure Number	Owner	Field Use	In Manual	Test Method
D 412	ASTM			Test Methods for Vulcanized Rubber and Thermoplastic Elastomers – Tension
T 413	WSDOT	✓	✓	Method of Test for Evaluating Waterproofing Efectiveness of Membrane and Membrane-Pavement Systems
T 417	WSDOT		✓	Method of Test for Determining Minimum Resistivily and pH of Soil and Water
T 420	WSDOT	✓	✓	Test Method for Determining the Maturity of Compost (Solvita Test)
T 421	WSDOT		✓	Test Method for Traffic Controller Inspection and Test Procedure
T 422	WSDOT		✓	Test Method for Traffic Controller Transient Voltage Test (Spike Test) Procedure
T 423	WSDOT		✓	Test Method for Traffic Controller Conflict Monitoresting
T 424	WSDOT		✓	Test Method for Traffic Controller Power Interruption Test Procedure
T 425	WSDOT		✓	Test Method for Traffic Controller NEM and 170 Type Environmental Chamber Test
T 426	WSDOT		✓	Pull-Off Test for Hot Melt Traffic Button Adhesive
T 427	WSDOT		✓	Test Method for Loop Amplifier Testing Procedure
T 428	WSDOT		✓	Test Method for Traffic Controller Compliance Inspection and Test Procedure
SOP 429	WSDOT		✓	Methods for Determining the Acceptance of Traffic Signal Controller Assembly
T 429	WSDOT	✓	✓	Retroreflectance of Newly Applied Pavement Marking Using Portable Hand-Operated Instruments
T 432	WSDOT		✓	Flexibility Test for Hot-Melt Adhesives
C 457	ASTM			Standard Test Method for Microscopical Determination of Parameters of the Air-Void System in Hardened Concrete
D 470	ASTM			Test Method for Crossedlinked Insulation and Jackets for Wire and Cable
C 495	ASTM			Test Method for Compressive Strength of Lightweight Insulated Concrete
T 501	WSDOT		✓	Test Method to Determine Durability of Very Weak Rock
D 562	ASTM			Standard Test Method for Consistency of Paints Measuring Krebs Unit (KU) Viscosity Using a Stormer-Type Viscometer
T 601	WSDOT		✓	Method of Test for Sieve Analysis of Soils – Coarse Sieving
F 606	ASTM			Test Methods for Determining the Mechanical Properties of Externally and Internally Threaded Fasteners, Washers, Direct Tension Indicators, and Rivets
T 606	WSDOT		✓	Method of Test for Compaction Control of Granular Materials
T 610	WSDOT		✓	Method of Test for the Capillary Rise of Soils
SOP 615	WSDOT	✓	✓	Determination of the % Compaction for Embankment and Untreated Surfacing Materials Using the Nuclear Moisture-Density Gauge
DMCT 700	ATSI			Manual on Signal Controller Evaluation
T 712	WSDOT	✓	✓	Standard Method of Reducing Hot Mix Asphalt Paving Mixtures
T 716	WSDOT	✓	✓	Method of Random Sampling for Locations of Testing and Sampling Sites
T 718	WSDOT		✓	Method of Test for Determining Stripping of Hot Mix Asphalt
T 720	WSDOT		✓	Method of Test for Thickness Measurement of Hot Mix Asphalt (HMA) Cores

Numerical Order				
Procedure Number	Owner	Field Use	In Manual	Test Method
SOP 723	WSDOT		✓	Standard Operating Procedure for Submitting Hot Mix Asphalt (HMA) Mix Designs for Verification
T 724	WSDOT	✓	✓	Method of Preparation of Aggregate for Hot Mix Asphalt (HMA) Mix Designs
T 726	WSDOT	✓	✓	Mixing Procedure for Hot Mix Asphalt (HMA)
SOP 728	WSDOT	✓	✓	Standard Operating Procedure for Determining the Ignition Furnace Calibration Factor (IFCF) for Hot Mix Asphalt (HMA)
SOP 729	WSDOT	✓	✓	Standard Operating Procedure for Determination of the Moving Average of Theoretical Maximum Density (TMD) for HMA
SOP 730	WSDOT	✓	✓	Standard Operating Procedure for Correlation of Nuclear Gauge Densities With Hot Mix Asphalt (HMA) Cores
SOP 731	WSDOT	✓	✓	Standard Operating Procedure for Determining Volumetric Properties of Hot Mix Asphalt
SOP 732	WSDOT	✓	✓	Standard Operating Procedure for Volumetric Design for Hot-Mix Asphalt (HMA)
SOP 733	WSDOT	✓	✓	Standard Operating Procedure for Determination of Pavement Density Differentials Using the Nuclear Density Gauge
SOP 734	WSDOT	✓	✓	Standard Operating Procedure for Sampling Hot Mix Asphalt After Compaction (Obtaining Cores)
SOP 735	WSDOT	✓	✓	Standard Operating Procedure for Longitudinal Joint Density
SOP 736	WSDOT		✓	In-Place Density of Bituminous Mixes Using Cores
SOP 737			✓	Procedure for the Forensic Testing of HMA Field Cores
T 738	WSDOT		✓	In-Place Density of Asphalt Mixtures Using the Nuclear Moisture-Density Gauge
T 802	WSDOT	✓	✓	Method of Test for Flexural Strength of Concrete (Using Simple Beam With Center-Point Loading)
C 805	ASTM			Test Method for Rebound Number of Hardened Concrete
C 805	WSDOT	✓	✓	Rebound Hammer Determination of Compressive Strength of Hardened Concrete
T 807	WSDOT	✓	✓	Method of Operation of California Profilograph and Evaluation of Profiles
T 808	WSDOT	✓	✓	Method for Making Flexural Test Beams
E 810	ASTM			Standard Test Method for Coefficient of Retroreflection of Retroreflective Sheeting Utilizing the Coplanar Geometry
T 810	WSDOT	✓	✓	Method of Test for Determination of the Density of Portland Cement Concrete Pavement Cores
T 812	WSDOT	✓	✓	Method of Test for Measuring Length of Drilled Concrete Cores
T 813	WSDOT	✓	✓	Field Method of Fabrication of 2 in (50 mm) Cube Specimens for Compressive Strength Testing of Grouts and Mortars
T 814	WSDOT		✓	Method of Test for Water Retention Efficiency of Liquid Membrane-Forming Compounds and Impermeable Sheet Materials for Curing Concrete
T 816	WSDOT		✓	Method of Test for Parting Compound
T 818	WSDOT		✓	Air Content of Freshly Mixed Self-Compacting Concrete by the Pressure Method

Numerical Order				
Procedure Number	Owner	Field Use	In Manual	Test Method
T 819	WSDOT		✓	Making and Curing Self-Compacting Concrete Test Specimens in the Field
C 881	ASTM			Standard Specification for Epoxy-Resin-Base Bonding Systems for Concrete
C 882	ASTM		✓	Bond Strength (Diagonal Shear) (Checklist Only)
T 914	WSDOT	✓	✓	Practice for Sampling of Geosynthetic Material for Testing
T 915	WSDOT		✓	Practice for Conditioning of Geotextiles for Testing
T 923	WSDOT		✓	Thickness Measurement of Geotextiles
T 925	WSDOT		✓	Standard Practice for Determination of Long-Term Strength for Geosynthetic Reinforcement
T 926	WSDOT		✓	Geogrid Brittleness Test
C 939	ASTM			Standard Test Method for Flow of Grout for Preplaced-Aggregate Concrete (Flow Cone Method)
C 939	WSDOT	✓	✓	FOP for ASTM for Flow of Grout for Preplaced-Aggregate Concrete (Flow Cone Method)
D 1208	ASTM			Test Methods for Common Properties of Certain Pigments (Loss on Ignition)
D 1210	ASTM			Standard Test Method for Fineness of Dispersion of Pigment-Vehicle Systems by Hegman-Type Gage
C 1218	ASTM			Standard Test Method for Water-Soluble Chloride in Mortar and Concrete
C 1231	ASTM			Standard Practice for Use of Unbonded Caps in Determination of Compressive Strength of Hardened Concrete Cylinders
D 1293	ASTM			Standard Test Methods for pH of Water
D 1347	ASTM			Standard Test Method for Color and Color-Difference Measurement by Tristimulus Colorimetry
D 1429	ASTM			Standard Test Methods for Specific Gravity of Water and Brine
C 1437	ASTM			Standard Test Method for Flow of Hydraulic Cement Mortar
D 1475	ASTM			Test Method for Consistency of Paints Test Method for Density of Paint, Varnish, Lacquer, and Related Products
C 1611	WSDOT	✓	✓	FOP for ASTM C 1611/C 1611M Standard Test Method for Slump Flow of Self-Consolidating Concrete
C 1621	WSDOT	✓	✓	FOP for ASTM C 1621/C 1621M Standard Test Method for Passing Ability of Self-Consolidating Concrete by J-Ring
D 1632	ASTM			Standard Practice for Making and Curing Soil-Cement Compression and Flexure Test Specimens in the Laboratory
D 1683	ASTM			Standard Test Method for Failure in Sewn Seams of Woven Apparel Fabrics
PCMZ 2000	TS			Manual on Signal Controller Evaluation
D 2240	ASTM			Standard Test Method for Rubber Property – Durometer Hardness
D 2244	ASTM			Standard Practice for Calculation of Color Tolerances and Color Differences From Instrumentally Measured Color Coordinates
D 2369	ASTM			Test Method for Volatile Content of Coatings (Ordinary Laboratory Oven)
D 2371	ASTM			Standard Test Method for Pigment Content of Solvent-Reducible Paints (Centrifuge)

Numerical Order				
Procedure Number	**Owner**	**Field Use**	**In Manual**	**Test Method**
D 2487	ASTM			Practice for Classification of Soils for Engineering Purposes (Unified Soil Classification System)
D 2488	ASTM			Practice for Description and Identification of Soils (Visual-Manual Procedure)
D 2621	ASTM			Standard Test Method for Infrared Identification of Vehicle Solids From Solvent-Reducible Paints
D 2628/ M 220	ASTM	✓	✓	Test for High and Low Temperature Recovery of Elastomeric Joint Seals for Concrete Pavements
D 2633	ASTM			Standard Test Methods for Thermoplastic Insulations and Jackets for Wire and Cable
D 2697	ASTM			Standard Test Method for Volume Nonvolatile Matter in Clear or Pigmented Coatings
3011	FTMS			Method for Determination of Condition in Container
D 3111	ASTM			Standard Test Method for Flexibility Determination of Hot-Melt Adhesives by Mandrel Bend Test Method
D 3723	ASTM			Standard Test Method for Pigment Content of Water Emulsion Paints by Temperature Ashing
D 3786	ASTM			Standard Test Method for Bursting Strength of Textile Fabrics – Diaphragm Bursting Strength Tester Method
4053	FTMS			Method for Determination of Nonvolatile Vehicle Content
4061	FTMS			Method for Determination of Drying Time (Oil-Based Paints)
4122	FTMS			Method for Determination of Hiding Power (Contrast Ratio)
D 4186	ASTM			Standard Test Method for One-Dimensional Consolidation Properties of Saturated Cohesive Soils Using Controlled-Strain Loading
D 4354	ASTM		✓	Standard Practice for Sampling of Geosynthetics for Testing
D 4355	ASTM			Standard Test Method for Deterioration of Geotextiles From Exposure to Ultraviolet Light and Water (Xenon-Arc Type Apparatus)
D 4491	ASTM			Standard Test Methods for Water Permeability of Geotextiles by Permittivity
D 4505	ASTM			Standard Specification for Preformed Plastic Pavement Marking Tape for Extended Service Life
D 4533	ASTM			Standard Test Method for Trapezoid Tearing Strength of Geotextiles
D 4595	ASTM			Standard Test Method for Tensile Properties of Geotextiles by the Wide-Width Strip Method
D 4632	ASTM			Standard Test Method for Grab Breaking Load and Elongation of Geotextiles
D 4644	ASTM			Standard Test Method for Slake Durability of Shales and Similar Weak Rocks
D 4694	ASTM			Test Method for Deflections With Falling-Eight Type Impulse Load Device
D 4751	ASTM			Test Method for Determining Apparent Opening Size of a Geotextile
D 4758	ASTM			Test Method for Nonvolatile Contents of Latexes
D 4791	WSDOT	✓	✓	FOP for ASTM for Standard Test Method for Flat Particles, Elongated Particles, or Flat and Elongated Particles in Coarse Aggregate
D 4833	ASTM			Test Method for Index Puncture Resistance of Geomembranes and Related Products

Numerical Order				
Procedure Number	Owner	Field Use	In Manual	Test Method
D 4956	ASTM			Standard Specification for Retroreflective Sheeting for Traffic Control
D 5084	ASTM			Standard Test Methods for Measurement of Hydraulic Conductivity of Saturated Porous Materials Using a Flexible Wall Permeameter
D 5311	ASTM			Standard Test Method for Load Controlled Cyclic Triaxial Strength of Soil
D 5329	ASTM			Standard Test Methods for Sealants and Fillers, Hot-Applied, for Joints and Cracks in Asphaltic and Portland Cement Concrete Pavements
D 5731	ASTM			Standard Test Method for Determination of the Point Load Strength Index of Rock and Application to Rock Strength Classifications
D 6467	ASTM			Standard Test Method for Torsional Ring Shear Test to Determine Drained Residual Shear Strength of Cohesive Soils
D 6528	ASTM			Standard Test Method for Consolidated Undrained Direct Simple Shear Testing of Cohesive Soils
D 6931	ASTM		✓	Standard Test Method for Indirect Tensile (IDT) Strength of Bituminous Mixtures
D 7012	ASTM		✓	Standard Test Method for Unconfined Compressive Strength of Intact Rock Core Specimens
D 7091	ASTM	✓	✓	Nondestructive Measurement of Thickness of Nonmagnetic Coatings on a Ferrous Base (Checklist Only)
D 7227	ASTM			Standard Practice for Rapid Drying of Compacted Asphalt Specimens Using Vacuum Drying Apparatus
D 7585	ASTM			Standard Practice for Evaluating Retroreflective Pavement Markings Using Portable Hand-Operated Instruments

Washington State
Department of Transportation

WSDOT Standard Practice QC 1

Standard Practice for Approval of Portland Cement and/or Blended Hydraulic Cement Producers/Suppliers

1. Scope

   This standard specifies requirements for all producers/suppliers of portland cement and/or blended hydraulic cement.

   This standard may involve hazardous materials, operations and equipment. It does not address all of the safety problems associated with their use. It is the responsibility of those using this standard to consult and establish appropriate safety and health practices and determine the applicability of regulatory limitations prior to use.

2. Referenced Documents

   2.1 AASHTO Standards:

   2.1.1 M-85 Standard Specifications for Portland Cement

   2.1.2 M-240 Standard Specifications for Blended Hydraulic Cement

   2.1.3 R-18 Establishing and Implementing a Quality System for Construction Materials Testing Laboratories

   2.2 ASTM Standards

   2.2.1 C-150 Standard Specification for Portland Cement

   2.2.2 C-595 Standard Specification for Blended Hydraulic Cement

   2.3 Agency's Standard Specifications

3. Terminology

   3.1 AASHTO – American Association of State Highway and Transportation Officials

   3.2 ASTM – American Society of Testing and Materials

   3.3 CCRL – Cement and Concrete Reference Laboratory

   3.4 NIST – National Institute of Standards and Technology

   3.5 WSDOT – Washington State Department of Transportation

   3.6 Producer – A production facility that has the capacity for producing and/or grinding portland cement and/or blended hydraulic cement meeting the requirements of the *Standard Specifications* Section 9-01.

   3.7 Supplier – A company that supplies portland cement and/or blended hydraulic cement that meets the requirements of *Standard Specifications* Section 9-01.

   3.8 Specification Compliance Testing – Complete testing in accordance with the specification requirements for the material identified.

3.9 Quality Management Plan – The producer/supplier plan to ensure that the portland cement and/or blended hydraulic cement meets the specification requirements through systematic program of sampling, testing, and inspection.

3.10 Quality Control Testing – Testing performed per the producer/supplier quality management plan to evaluate the production process.

3.11 CAP – Cement Acceptance Program

3.12 Cement Mill Test Report – A document provided by the producer showing the physical and chemical test results with specification limits for each property tested.

3.13 Cement Certificate of Analysis – A document provided by the supplier showing the physical and chemical test results with specification limits for the properties tested on each shipment of imported portland cement or imported blended hydraulic cement.

3.14 Portland Cement – portland cement meeting the requirements of *Standard Specifications* Section 9-01.2(1).

3.15 Blended Hydraulic Cement – blended hydraulic cement meeting the requirements of *Standard Specifications* Section 9-01.2(4).

3.16 Negative Report – a document provided to the agency when portland cement and/or blended hydraulic cement was not produced or shipped during a given month.

4. Significance and Use

This standard specifies procedures for accepting portland cement and blended hydraulic cement. This is accomplished by a system that evaluates quality control and specification compliance tests performed by the producers and suppliers according to their quality management plan. Products determined to meet the requirements of this standard are eligible for listing on the WSDOT Qualified Products List (QPL).

5. Laboratory and Tester Requirements

The producers/suppliers testing laboratory used to conduct specification compliance testing for the quality management program shall be AASHTO accredited by January 1, 2016. Only laboratories that are participants in the CCRL on-site inspection and proficiency sample program and are accredited from the AASHTO Accreditation Program (AAP) are recognized as approved laboratories for this program. The testing laboratory must maintain AASHTO accreditation while providing materials to WSDOT.

6. Qualification of Producers/Suppliers

   6.1 Producers/Suppliers shall submit a written request to WSDOT for acceptance into the CAP and provide the following:

   - A copy of the producer/supplier Quality Management Plan meeting the requirements of Section 7 of QC 1.
   - A copy of the producer/supplier testing laboratory's AASHTO accreditation. One representative 10 pound sample for each type of portland cement and/or blended hydraulic cement along with the corresponding "Cement Mill Test Report" or the "Cement Certificate of Analysis". Samples shall be taken in accordance with AASHTO T 127.
   - A copy of the Material Safety Data Sheet (MSDS) or Safety Data Sheet (SDS) as applicable for each sample submitted.
   - Cement Mill Test Reports or the Cement Certificate of Analysis from the previous three (3) months from the production facility.

   6.2 WSDOT will evaluate the submittal and may test the samples provided in accordance with Section 9 of QC 1. WSDOT will notify prospective producers/suppliers in writing after completion of the evaluation. All determinations of approval or rejection by WSDOT shall be final.

   6.3 The producer/supplier shall allow WSDOT to visit and observe the quality control activities and provide samples to WSDOT upon request.

7. Producers/Suppliers Quality Management Plan

   7.1 The quality management plan as a minimum shall identify the following:

   - Facility type
   - Facility address.
   - Name, email address, and telephone number of the contact person responsible for the quality control of the facility.
   - List each quality control test method to be performed on each type of portland cement or blended hydraulic cement.
   - Name and address of the AAP testing laboratory performing specification compliance testing.
   - Declaration stating that if a test result indicates a lot of portland cement or blended hydraulic cement is not in compliance with the WSDOT specifications, the facility shall immediately notify WSDOT of the lot in question.
   - Description of the method and frequency of sampling, quality control testing, and specification compliance testing.
   - Type of portland cement and/or blended hydraulic cement to be provided to WSDOT.
   - A statement of compliance with Section 5.

   7.2 A new quality management plan shall be required whenever changes occur that cause the existing quality management plan to become inaccurate or invalid.

8. Documentation Requirements

8.1 Each producer/supplier shall certify conformance to *Standard Specifications* for physical and chemical requirements of AASHTO M-85, AASHTO M-240, ASTM C-150 or ASTM C-595 by means of a "Cement Mill Test Report" or "Cement Certificate of Analysis".

8.2 A "Cement Mill Test Report" shall be provided monthly by the cement producer to WSDOT on a continuous basis for AASHTO M-85, AASHTO M-240, ASTM C-150 or ASTM C-595 cement production.

Cement mill test reports shall be in English and include the following information:

- Name of producer
- Specific type of cement in accordance with *Standard Specifications* Section 9-01
- Unique identification number traceable to the date of production
- Production date

8.3 A "Cement Certificate of Analysis" shall be provided by the cement supplier to WSDOT whenever a new shipment of AASHTO M-85, AASHTO M-240, ASTM C-150 or ASTM C-595 imported cement is received for distribution.

Cement certificate of analysis shall be in English and include the following information:

- Name of supplier
- Specific type of cement in accordance with *Standard Specifications* Section 9-01
- Unique identification number traceable to each shipment
- Certification date

8.4 Separate sequences of Cement Mill Test Reports or Cement Certificate of Analyses shall be provided for each individual production facility and a unique lot number traceable to a production run on cement shall identify each report.

8.5 "Cement Mill Test Report" or "Cement Certificate of Analysis" shall show the test results and the applicable specifications of AASHTO M-85, AASHTO M-240, ASTM C-150 or ASTM C-595 for each component or property tested and shall show the test requirements specified by WSDOT.

8.6 When a production facility does not produce cement in a given month, or no shipments are received by a supplier, the producer/supplier shall notify the Agency with a Negative Report for each month of no production or shipment.

8.7 Cement Mill Test Report, Cement Certificate of Analysis and negative reports shall be emailed to the CAP program at following email address: capprogram@wsdot.wa.gov.

8.8 The producer/supplier shall notify WSDOT at the email address noted above of any temporary stops in production (greater than one month) or permanent stops in production.

9.0 Quarterly Split Sample

9.1 Cement producers/suppliers shall, on a quarterly basis, provide a split sample of each type of portland cement or blended hydraulic cement being produced

9.2 For the purpose of this standard, quarters are defined as; January through March, April through June, July through September, October through December.

9.3 Split samples shall be taken from production or shipment in accordance with the producer/supplier's quality management plan.

9.4 The production sample shall be split into two portions (approximately 10 pounds each) for each type of cement being produced. One portion shall be retained by the producer/supplier and one portion shall be sent to WSDOT CAP.

9.5 The producer/supplier testing laboratory shall conduct chemical and physical testing on their portion.

9.6 The sample submitted to WSDOT will include the "Cement Mill Test Report" or "Cement Certificate of Analysis" for the lot number that is traceable to this production run or lot of cement. WSDOT may elect to test the sample.

9.7 Samples and accompanying documentation shall be sent to:

WSDOT State Materials Laboratory
ATTN: Cement Acceptance Program
1655 S. Second Ave SW
Tumwater, WA 98512-6951

9.8 The producer/supplier shall email CAP at the email address noted in Section 8.7 if no cement was produced and no sample will be submitted.

10. Comparison of Quarterly Split Sample Test Results

10.1 Results of the split sample testing must conform to the applicable AASHTO or ASTM specification requirements.

10.2 If any discrepancy is identified between the producer/suppliers and WSDOT's test results the producer/supplier shall prepare a response to WSDOT, within 30 days of being notified of discrepancy.

10.3 The response shall identify the cause of the discrepancy and describe any corrective action taken.

11. Revocation Of Qualification

11.1 A Producer/Supplier may have its qualification status revoked and be removed from the Qualified Products List if found in nonconformance with the *Standard Specifications* or this Standard Practice. Causes for removal from the QPL may include, but are not limited to, the following:

- Failure to comply with requirements of Standard Practice QC 1.
- Failing test results on production, shipment or project samples.
- Failure to notify WSDOT of changes in product formulation.

Prior to removing a producer/supplier from the Qualified Products List (QPL), WSDOT will take appropriate measures to confirm the validity of the information and will confer with the producer/supplier.

12. Requalification

12.1 Once a product has been removed from the QPL, the producer/supplier may request reinstatement by providing the following written information to WSDOT:

- The root cause and corrective action taken to prevent future reoccurrences of the problem that caused the removal from the QPL.
- Updated Quality Management Plan showing compliance with QC 1.
- Other information and test data as determined by WSDOT.

Provided there is a satisfactory resolution of the initial problem, at WSDOT's discretion the product may either be reinstated into the QPL, or the producer/supplier may be required to reapply to the QPL. All costs of the QPL process shall be borne by the producer/supplier.

WSDOT Standard Practice QC 2

Standard Practice for Asphalt Suppliers That Certify Performance Graded and Emulsified Asphalts

1. Scope

   1.1 This standard specifies requirements and procedures for a certification system that shall be applicable to all suppliers of performance graded asphalt binder (PGAB) and emulsified asphalts. The requirements and procedures cover materials manufactured at refineries, materials mixed at terminals, in-line blended materials, and materials blended at the hot mix plant.

   1.2 This standard may involve hazardous materials, operations and equipment. It does not address all of the safety problems associated with their use. It is the responsibility of whoever uses this standard to consult and establish appropriate safety and health practices and determine the applicability of regulatory limitations prior to use.

2. Referenced Documents

   2.1 AASHTO Standards:

   M 320 Specifications for Performance-Graded Asphalt Binder

   R 29 Standard Practice for Grading or Verifying the Performance Grade of an Asphalt Binder

   T 40 Method of Sampling Bituminous Materials

   R 18 Establishing and Implementing a Quality System for Construction Materials Testing Laboratories

   R 5 Selection and use of emulsified asphalts

   T 59 Standard Method of Test for Emulsified Asphalts

   2.2 ASTM Standards

   D 8 Definitions of Terms Relating to Materials for Roads and Pavements

   D 3665 Random Sampling of Construction Materials

   2.3 WSDOT Standards and Documents

   Current WSDOT *Standard Specifications*

   Current WSDOT *Construction Manual*

   Appropriate State Specifications

   Current WSDOT Qualified Products List

3. Terminology

3.1 AAP — AASHTO Accreditation Program

3.2 Asphalt Binder — An asphalt-based cement that is produced from petroleum residue either with or without the addition of modifiers.

3.3 ASC — Approved Supplier Certification

3.4 Modification — Any manufacturing process which alters the properties of a single asphalt binder or emulsified asphalt for the purposes of meeting the requirements of a PGAB or emulsified asphalt.

3.5 PGAB — Performance Graded Asphalt Binder

3.6 Supplier — A supplier shall be defined as one who produces the final PGAB or emulsified asphalt product, or who makes, blends, modifies, or alters properties of the PGAB or emulsified asphalt. This process can occur at the refinery, terminal, the HMA Plant, or in a transport vehicle.

If no modifications are made to the PGAB or emulsified asphalt after its initial production at the refinery, the refinery shall be the supplier and must provide the certification. If material is purchased with the intent to resell with or without modification, the reseller shall then be considered the supplier.

If any modifications are made to the PGAB or emulsified asphalt at the terminal or in the transport vehicle, then the terminal or transporter shall be the supplier and must provide the certification.

If any modifications, blending or commingling of PGAB or emulsified asphalt from different sources is made at the HMA Plant or by the supplier of HMA or emulsified asphalt, then the supplier shall provide the certification for the PGAB or emulsified asphalt.

3.7 Agency — Agency shall be defined as a state highway agency or other agency responsible for the final acceptance of the PGAB.

3.8 Specification Compliance Testing – Complete testing in accordance with the specification requirements for the material identified.

3.9 Quality Control Testing – The quality control testing shall be described in the Supplier's quality control plan. The Supplier's quality control plan shall be approved by the Agency.

3.10 HMA- Hot Mix Asphalt

3.11 Emulsified asphalt-An emulsion of asphalt cement and water which contains a small amount of an emulsifying agent. Emulsified asphalt droplets may be of either the anionic or cationic type, depending upon the emulsifying agent.

3.12 QPL-Washington State Department of Transportation, Qualified Products List.

Note 1: Definitions for many terms common to asphalt binder are found in ASTM D8.

4. Significance and Use

4.1 This standard specifies procedures for minimizing the disruption of PGAB and emulsified asphalt shipments. This is accomplished by a certification system that evaluates quality control, on-site assessments, and specification compliance tests performed by the Supplier according to their quality control plan.

5. Sampling

   5.1 All test samples required by this standard shall be obtained in accordance with AASHTO T 40. The use of a random sampling procedure similar to ASTM D3665 isimportant to the establishment of a valid certification program.

6. Laboratory and Tester Requirements

   AASHTO accreditation in any test required by this standard is applicable. Laboratories which are not AASHTO accredited must meet the following requirements

   6.1 Laboratory facilities shall adequately house and allow proper operation of all required equipment in accordance with the applicable test procedures.

   6.2 The laboratory shall use personnel qualified in accordance with the appropriate sections of AASHTO R-18.

   6.3 The laboratory shall use testing equipment that has been calibrated/standardized/checked to meet the requirements of each test procedure in accordance with the appropriate sections of AASHTO R-18.

   6.4 Documentation of personnel qualifications and the equipment calibration/standardization/check records shall be maintained.

   6.5 The Agency at their discretion may review the laboratory facility, testing equipment, personnel performing the testing, and review all qualification and calibration and verification testing.

7. Supplier Requirements

   7.1 The Supplier shall submit a written request to the Agency for authorization to supply PGAB or emulsified asphalts. The request shall include copies of their preliminary test reports for the proposed PGAB or emulsified asphalts with the appropriate documentation. If requested by the Agency, a sample of the PGAB or emulsified asphalt shall be provided to the Agency for testing.

   Note: Suppliers currently on the Qualified Products List shall be exempt from submitting a written request for those products they are already approved. WSDOT may request preliminary test reports and a sample for testing.

   7.2 The Supplier shall allow the Agency to visit the production and/or shipping site to observe the Supplier's quality control activities, and to obtain samples for testing.

   7.3 The Supplier shall submit to the Agency for approval a complete quality control plan that complies with the requirements of Section 8.

   7.4 The Supplier shall follow the procedures described in the approved quality control plan.

   7.5 A new Quality Control Plan shall be required whenever changes occur that cause the existing Quality Control Plan to become inaccurate or invalid.

   7.6 The Supplier shall establish a continuing test record for each test required on each PGAB or emulsified asphalts.

8. Supplier Quality Control Plan (Minimum Requirements)

8.1 The Supplier's quality control plan shall identify the following:

8.1.1 Facility type (refinery, terminal, in-line blending or HMA plant).

8.1.2 Facility location.

8.1.3 Name and telephone number of the contact person responsible for the quality control of the PGAB or emulsified asphalt at the facility.

8.1.4 Name the laboratory performing quality control tests on the PGAB or emulsified asphalt that is shipped.

8.2 The Supplier's quality control plan shall include a declaration stating that if a test result indicates that a shipment of PGAB or emulsified asphalt is not in compliance with the purchase specifications, the Supplier shall (1) immediately notify the Agency of the shipment in question, (2) identify the material type and grade, (3) cease shipment until the material meets specification compliance, (4) notify the Agency prior to resuming shipment.

8.3 The Supplier's quality control plan shall describe the method and frequency for, sampling, specification compliance testing and quality control testing.

8.3.1 Specification Compliance Testing shall be performed on an adequate amount of material to ensure specification compliance. The amount of material shall be agreed upon by the supplier and the Agency and included in the Quality Control Plan.

Note: Due to the various operations and manufacturing processes, each supplier will be treated individually.

8.3.2 With the exception of the 24 Hour Storage Stability test, the Supplier of Emulsified Asphalt shall provide test results for each production batch of CRS-2P showing the product meets WSDOT *Standard Specification* 9-02.1(6)A upon or prior of delivery to the project. The 24 Hour Storage Stability test results shall be provided to the State Materials Laboratory in Tumwater within 48 hours of completion of the production batch.

8.3.3 Quality Control Testing as identified in the quality control plan can be specification compliance testing or non-specification compliance testing. The quality control testing does not preclude the need to meet the Agency specifications.

8.4 The Supplier's quality control plan shall include a statement that the Supplier will prepare reports for all quality control and specification compliance tests performed during a given period and submit them to the Agency upon request.

8.5 The Supplier's Quality Control Plan shall include a procedure, which must be followed, for checking transport vehicles before loading to prevent contamination of shipments.

9. Agency Requirements

   9.1 The Agency shall review the Supplier's Quality Control Plan and respond to the supplier within 30 days.

   9.2 The Agency may perform quality assurance, acceptance sampling, or verification sampling and testing in accordance with the Agency standards.

10. Requirements For Shipping PGAB or Emulsified Asphalt By An Approved Supplier

   10.1 The Supplier's Quality Control Plan as approved by the Agency (see Section 9) shall be implemented.

   10.2 Each shipment shall be accompanied by two copies of the bill of lading, which shall include (1) the name and location of the Supplier, (2) the type and grade of material, (3) the quantity of material shipped, (4) the date of shipment, (5) a statement certifying the material meets specification requirements (6) a statement certifying that the transport vehicle was inspected before loading and was found acceptable for the material shipped, and (7) shipments of CRS-2P shall include test results per section 8.3.2.

11. Split Sample Testing

   11.1 The Agency or the Supplier may request split sample testing. The test results will be provided immediately to both parties.

   11.2 If the split sample test data is not within the precision specified for that particular test, a review of both sampling and testing procedures will be conducted by both the Supplier and the Agency.

12. Decertification

   12.1 A Supplier may have its authorization to certify and supply a specific PGAB or emulsified asphalt revoked by the Agency if it is found not to conform to the specifications and standards as established under this standard. This will include being removed from the *Qualified Products List* (QPL)

   12.2 The following criteria shall be used to judge the conditions of non-conformance:

      12.2.1 Failure to control the quality of the PGAB or emulsified asphalt by failing to follow the procedures described in the Supplier's approved Quality Control Plan as required under Section 8.4.

      12.2.2 Failure to cease shipment of PGAB or emulsified asphalt as required under Section 9.2 when a test result indicates that the PGAB or emulsified asphalt is not in compliance with the Agency specifications.

   12.3 A Supplier that has been decertified may seek reinstatement by demonstrating conformance to Agency certification criteria. Reinstatement will also include reapplication to the *Qualified Products List*.

Washington State
Department of Transportation

WSDOT Standard Practice QC 3

Quality System Laboratory Review

1. Scope

   This standard specifies requirements and procedures for the review of WSDOT Regional Materials Laboratory and for Private Laboratories by the Quality Systems Laboratory Review Team. The on-site laboratory review shall include the following elements:

   - Review of the testing facility.
   - Review of the equipment calibration/verification records.
   - Review of the testing technician's training records.
   - Physical inspection of the equipment used to perform tests.
   - Observation of technician performing the test procedure.
   - Review of test reports and calculations.

2. Referenced Documents

   2.1 AASHTO Standards

   R 18 – Establishing and Implementing a Quality System for Construction Materials Testing Laboratories

   R 61 – Establishing Requirements for and Performing Equipment Calibrations, Standardizations, and Checks

   2.2 WSDOT Standards

   Materials Manual M 46-01
   Construction Manual M 41-01
   Standard Specifications for Road, Bridge, and Municipal Construction M 41-10

3. Terminology

   3.1 AASHTO – American Association of State Highway and Transportation Officials

   3.2 ASTM – American Society for Testing and Materials

   3.3 Calibration – A process that establishes the relationship (traceability) between the results of a measurement instrument, measurement system, or material measure and the corresponding values assigned to a reference standard (Note 1).

   Note 1: The definition for calibration and the following definitions for check, standardization, traceability, uncertainty, and verification of calibration are based on the definitions in R 61.

   3.4 Check – A specific type of inspection and/or measurement performed on equipment and materials to indicate compliance or otherwise with stated criteria.

3.5 Standardization – A process that determines (1) the correction to be applied to the result of a measuring instrument, measuring system, material measure, or reference material when its values are compared to the values realized by standards; or (2) the adjustment to be applied to a piece of equipment when its performance is compared with that of an accepted standard or process.

3.6 WSDOT – Washington State Department of Transportation

4. Significance and Use

4.1 This standard specifies procedures for reviewing laboratories for the purpose of determining the capability of the facility and its personnel to perform the necessary acceptance testing for WSDOT.

5. Laboratory Requirements

5.1 Facility and Equipment

5.1.1 Laboratory facilities shall adequately house and allow proper operation of all required equipment in accordance with the applicable test procedures.

5.1.2 The temperature and humidity of the laboratory shall meet the requirements of all test procedures performed in the laboratory.

5.1.3 The testing areas shall be clean and free of clutter.

5.1.4 The laboratory shall use testing equipment that meets the requirements of each test procedure.

5.1.5 Testing equipment for private laboratories and the State Materials Laboratory shall be calibrated/standardized/checked in accordance with the test procedure, appropriate sections of AASHTO R 18 and AASHTO R 61. WSDOT region and field laboratories testing equipment shall be calibrated/standardized/checked in accordance with the test procedure and Section 9-5 of the *Construction Manual* M 41-01.

5.1.6 Documentation of equipment calibration/standardization/check shall be maintained and available on-site during laboratory review.

5.1.7 Safety equipment will be available and maintained in proper working order.

5.2 Tester Training and Records

5.2.1 The laboratory shall use personnel qualified in accordance with the appropriate sections of AASHTO R 18. WSDOT region and field laboratory personnel shall be qualified in accordance with Section 9-5 of the *Construction Manual* M 41-01.

5.2.2 The laboratory shall maintain records of training for each tester.

5.2.3 A tester's competency for performing a test procedure shall be evaluated using a checklist relating to the test procedure. The checklist shall be filed in the tester's training record.

Note: Private laboratories may use test procedure checklists from the *Materials Manual*, or may develop their own checklists similar to those found in the *Materials Manual*.

5.2.4 Testers for private laboratories shall be reviewed for qualification at the frequency stated in the *Laboratory Quality Systems Manual* (LQSM).

5.3 Manuals and Records

5.3.1 Private laboratories shall have an up-to-date LQSM meeting the requirements of AASHTO R 18 and approved by the State Materials Engineer.

5.3.2 All private laboratories shall have an up-to-date copy of the LQSM on-site and available to all testers.

5.3.3 Each tester must have access to the most current copy of the AASHTO, ASTM, and *Materials Manual*. WSDOT testers must have access to the most current copy of the *Construction Manual* M 41-01.

5.3.4 If an earlier version of the *Materials Manual* or *Construction Manual* M 41-01 is required by contract, the laboratory shall maintain an unaltered version of the required manual.

5.3.5 A file of MSDS sheets must be maintained in the laboratory and must be available to all testers.

5.3.6 Test records are required to contain sufficient information to permit verification of any test report (original observations, calculations, derived data, and identification of personnel involved in the sampling and testing).

5.3.7 Amendments to reports must be made in the manner stated in the LQSM.

5.3.8 The laboratory shall define the process used to ensure testers are performing the correct testing procedure according to the clients' contractual requirements (i.e., AASHTO, ASTM, or WSDOT test procedure as required by the contract).

5.3.9 Test reports are required to contain the following information:

- Name and address of the testing laboratory.
- Name and address of the client or identification of the project.
- Date of receipt of the test sample.
- Date of test performance.
- Identification of the standard test method used and notation of all know deviations from the test method.
- Test results and specification of the material.
- Name of tester performing the test.
- Date report was issued.
- Name of person accepting technical responsibility for test report.

6. Sampling

6.1 Test samples required for observation of test procedures shall be obtained by:

T 2 – WSDOT FOP for AASHTO for Soils and Aggregate

T 168 – WSDOT FOP for WAQTC for Hot Mix Asphalt

TM 2 – WSDOT FOP for WAQTC for Concrete

7. Sample Preparation Requirements

7.1 Prior to the performance portion of the laboratory review, for the testing being performed, samples are required to be prepared as shown in Table 1.

Test Procedure	Test	Required Preparation
Aggregate Tests		
FOP for AASHTO T 335	Fracture	Material washed, graded, and ready for counting fracture.
FOP for WAQTC T 27/T 11	Sieve Analysis of Fine and Coarse Aggregates	1. Split or quarter proper amount of the original sample and dry to constant weight. 2. Have a split of the original sample that has been washed and dried, ready for sieving. 3. Retain all weights in order to do calculations.
FOP for AASHTO T 176	Sand Equivalent Test	1. Have a sample (approximately 1000 g) of #4 minus material prepared for the moisture conditioning process (do not moisten). 2. Have two properly prepared tins ready for introduction into the SE tube.
FOP for AASHTO T 248	Reducing Sample	30 lbs dry material.
FOP for AASHTO T 304	Uncompacted Voids	1. Have sample washed and dried. 2. Sample separated into individual size fractions.
Concrete Tests		
FOP for AASHTO T 106	Compressive Strength	Three mortar cubes.
FOP for AASHTO T 22	Compressive Strength	Two cylinders.
FOP for AASHTO T 231	Capping Cylinder	1. Have capping sulfur compound heated and ready for capping. 2. Have two cylinders available for capping (can be the cylinders for T 22).
WSDOT T 810	Density of Pavement Core	Have a drilled pavement core available.
WSDOT T 812	Length of Drilled PCC Core	May use the core from T 810.
Soils Tests		
WSDOT T 417*	Resistivity and pH	1. Prepare a 100 g sample of natural #8 minus material for the pH test. 2. Prepare the soil/water slurry a minimum of 1 hour prior to test review. 3. Prepare a sample of #8 minus material that is four times the volume of the soil box for the resistivity test. 4. Add 10 percent by weight of water to the sample and allow it to stand a minimum of 12 hours in a waterproof container.
AASHTO T 84*	Specific Gravity and Absorption Fine Agg.	Prepare sample to step 6.1.2 of the procedure.
AASHTO T 85*	Specific Gravity and Absorption Coarse Agg.	Prepare sample to step 8.2 of the procedure.
AASHTO T 87*	Dry Preparation of Disturbed Soil and Soil Aggregate Samples for Test	500 g of soil aggregate air dried.
AASHTO T 88*	Particle Size Analysis	No preparation.
AASHTO T 100*	Specific Gravity Soils	No preparation.

Sample Preparation Requirements
Table 1

Test Procedure	Test	Required Preparation
AASHTO T 255	Moisture Content	No preparation.
AASHTO T 265	Moisture Content	No preparation.
FOP for AASHTO T 99/T 180	Proctor	Prepare five representative samples of #4 or ¾″ material at approximately 2 percent moisture already added to each sample starting at approximately 4 percent below optimum moisture of the material. Store in sealed containers.
WSDOT T 606	Maximum Density Curve	1. Dry and split a sample of material into coarse and fine material. 2. Prepare fine material for Test 1. 3. Prepare coarse material for either Test 2, Procedure 1 or Test 2, Procedure 2.
Hot Mix Asphalt Tests (Have HMA samples ready on the first day of review.)		
WSDOT T 712*	Reducing Sample	An adequate amount of HMA to perform all the testing required. Heat sample and have it ready to reduce. Required to split material from sample for T 308, T 312, T 329, T 209.
FOP for AASHTO T 166*	Bulk Specific Gravity	A room temperature compacted sample must be provided for this test. A gyratory sample or a core sample will suffice.
WSDOT SOP 724*	Preparation of Aggregates	Representative aggregate from stockpiles used in JMF, dried to a constant weight.
WSDOT SOP 726*	Mixing Procedure HMA	Binder used in JMF mix design heated to mixing temperature as recommended by binder supplier (typically one quart container). Aggregate representative of JMF sample size based on class of HMA heated to mixing temperature as recommended by binder supplier.

*WSDOT Laboratories only unless review of a private laboratory is requested by the project office.

Sample Preparation Requirements
Table 1 (continued)

8. Performance of Test Procedure

   8.1 All technicians must be current in their qualifications.

   8.2 The laboratory review team will evaluate the technician's testing proficiency using an approved WSDOT checklist.

   8.3 All equipment, used during the evaluation of the technician's proficiency, must be operational and have a current calibration sticker on the equipment.

   8.4 When the test is complete, the reviewer will go over the checklist with the tester and point out any deficiencies that occurred during the performance of the test procedure.

9. Termination of Review

9.1 A laboratory review team member may choose to terminate the review of a procedure for the following reasons:

9.1.1 Equipment is non-operational or the wrong equipment is being used.

9.1.2 Tester is not qualified in the test procedure being reviewed.

9.1.3 Tester makes multiple major errors in the performance of the test.

9.2 The review of the laboratory may be terminated by the WSDOT Quality Systems Manager for the following reasons:

9.2.1 Facility is not adequate for the test procedures being reviewed.

9.2.2 Two or more testers fail during the proficiency portion of the review.

9.2.3 Documentation of qualification of testers or calibration of equipment is not available for review when team arrives.

10. Failure of Review

10.1 Rescheduling a review will require the following wait periods:

- First Failure – Minimum of one week wait to reschedule.
- Second Failure – Minimum of one month wait to reschedule.
- Third Failure – Minimum of one month wait and submittal of corrective action documentation. The documents submitted must state the concerns of the review team and the corrective action taken to solve the problem.

11. Laboratory Review Team Report

11.1 The Laboratory Review Team will review the facility, equipment, records, and testers compliance with the established requirements.

11.2 The evaluation report will be prepared and sent to the laboratory within 30 days of the completion of the review.

11.3 Any items that did not meet the requirements of Section 5 will be written up as "Issues."

11.3.1 Issues resolved during the review shall be noted as "Issue Resolved No Response" necessary. If a "Resolved No Response Required" issue reoccurs in subsequent evaluations, the issue will be escalated to a "Response Required Issue."

11.3.2 Issues that were not able to be resolved during the review will be noted as "Response Required Issue."

11.4 During the review, members of the team may make suggestions for improvements to the performance of the test procedure or operation of equipment. These are suggestions only and will be noted in the report as "Observations." These do not require a response.

12. Response to Report

12.1 Once the evaluation report has been received, the laboratory will have 90 days to respond in writing to all "Issues" labeled "Response Required."

12.2 The response must be a detailed explanation stating how the laboratory has resolved the issue and what measures they have taken to prevent this issue from reoccurring in the future.

13. Approval of Laboratory

13.1 If the laboratory review report had no issues or the issues are minor and resolved at the time of the review, the laboratory may be approved to perform acceptance, Independent Assurance, or dispute resolution testing.

13.2 If the laboratory review contained Response Required Issues, the laboratory may receive a conditional approval until the deficiencies are corrected or the review team may recommend that the laboratory be disapproved for all testing until the deficiencies are corrected to the satisfaction of the WSDOT Quality System Manager.

14. Suspension of Laboratory Approval

14.1 Laboratory approvals are subject to satisfactory results from WSDOT evaluations, including Independent Assurance evaluations. If WSDOT determines an Approved Laboratory no longer meets the approval requirements a Notification of Pending Suspension will be sent to the laboratory stating the reason for the suspension.

14.1.1 The following conditions may result in suspension of a laboratory's approval status:

a. Failure to supply required information in a timely manner

b. Failure to correct deficiencies in a timely manner

c. Unsatisfactory performance report by the Independent Assurance Inspector

d. Changing the laboratory's physical location without notification to the WSDOT Quality Systems Manager

f. Delays in reporting the test data to WSDOT

g. Incomplete or inaccurate reporting

h. Using unqualified technicians to perform testing

i. Using equipment that is not calibrated, standardized or checked in accordance with AASHTO R 18

14.1.2 The laboratory will be given one week to respond to the pending suspension notice with a Letter of Correction, detailing how the suspension issue has been corrected and what measures have been enacted to prevent the issue from reoccurring. The State Materials Engineer will review the Letter of Correction and determine if the corrections are adequate or if a suspension is still required and the duration of the suspension.

14.1.3 A suspended laboratory must resolve all issues to the WSDOT's satisfaction and obtain reinstatement of qualification, prior to being allowed to test materials for a WSDOT project,

14.2 Should an approved laboratory be accused of falsifying test data or records the laboratory's approval will be suspended until the charge can be investigated. If found the approved laboratory is found to have falsified test data or records the laboratory will be disqualified from testing for a WSDOT project for a minimum of one year and be subject to further investigation and penalty under state and federal law.

Washington State
Department of Transportation

WSDOT Standard Practice QC 4

Standard Practice for Fly Ash Producers/Importers/Distributors That Certify Fly Ash

1. Scope

   This standard specifies requirements and procedures for a certification system that shall be applicable to all Producers/Importers/Distributors of Fly Ash.

   This standard may involve hazardous materials, operations and equipment. It does not address all of the safety problems associated with their use. It is the responsibility of those using this standard to consult and establish appropriate safety and health practices and determine the applicability of regulatory limitations prior to use.

2. Referenced Documents

   2.1 AASHTO Standards

   2.1.1 M 295 – Standard Specifications for Coal Fly Ash and Raw or Calcined Natural Pozzolan for Use in Concrete

   2.1.2 R 18 – Establishing and Implementing a Quality System for Construction Materials Testing Laboratories

   2.2 ASTM Standards

   2.2.1 C 618 – Standard Specifications for Coal Fly Ash and Raw or Calcined Natural Pozzolan for Use in Concrete

   2.3 Agency's Standard Specifications

3. Terminology

   3.1 AASHTO – American Association of State Highway and Transportation Officials

   3.2 ASTM – American Society of Testing and Materials

   3.3 CCRL – Cement and Concrete Reference Laboratory

   3.4 NIST – National Institute of Standards and Technology

   3.5 Import/Distribution Facility – A facility that receives finished fly ash products for distribution.

   3.6 Production Facility – A facility that has the capacity for producing fly ash.

   3.7 Supplier – A supplier stores and then delivers fly ash produced by another entity to a concrete plant or another supplier.

3.8 Supplier Certification – Certification of fly ash provided by the supplier or importer using representative test results obtained in accordance with an agency approved QC plan and approved testing lab.

3.9 Agency – State highway agency or other agency responsible for the final acceptance of fly ash. Samples and documentation shall be sent to:

WSDOT State Materials Laboratory
Attn: Cement Acceptance Program Director
PO Box 47365
Olympia, WA 98504-47365

3.10 Specification Compliance Testing – Complete testing in accordance with the specification requirements.

3.11 Quality Control Testing – The quality control testing shall be described in the Production/Import/Distribution Facility's quality control plan. The Production/Import/Distribution Facility's quality control plan must be approved by the Agency.

3.12 CAP – Cement Acceptance Program

3.13 Mill Test Report – A document provided to the Agency on a monthly basis by a fly ash producer for fly ash that is actually produced at a U.S. or Canadian production facility. This document will list the actual chemical and physical test results of the product sample along with the appropriate AASHTO or ASTM specification limits.

3.14 Certificate of Analysis – A document provided to the Agency on a per shipload basis by a fly ash importer/distributor. This document shall represent a specific shipload of imported fly ash. This document will list the actual chemical and physical test results of the product sample along with the appropriate AASHTO or ASTM specification limits.

4. Significance and Use

4.1 This standard specifies procedures for accepting fly ash. This is accomplished by a certification system that evaluates quality control and specification compliance tests performed by the Production/Import/Distribution Facility according to their quality control plan.

5. Laboratory and Tester Requirements

5.1 Laboratories shall be AASHTO accredited in all tests required by specification compliance testing or meet the following requirements:

5.1.1 Laboratory facilities shall adequately house and allow proper operation of all required equipment in accordance with the applicable test procedures.

5.1.2 The laboratory shall use personnel qualified in accordance with the appropriate sections of AASHTO R 18.

5.1.3 The laboratory shall use testing equipment that has been calibrated/standardized/checked to meet the requirements of each test procedure in accordance with the appropriate sections of AASHTO R 18.

5.1.4 Documentation of personnel qualifications and the equipment certification/standardization/checked records shall be maintained.

5.1.5 The agency at their discretion may review the laboratory in accordance with WSDOT QC 3.

5.1.6 The laboratory must participate in the NIST's CCRL proficiency sample program.

6. Production/Import/Distribution Facility Qualification

6.1 The Production/Import/Distribution Facility shall submit a written request for acceptance into the Cement Acceptance Program to the Agency along with a copy of the Production/Import/Distribution Facility's Quality Control Plan.

6.2 The Production/Import/Distribution Facility shall submit one sample with its "Mill Test Report" or "Certificate of Analysis" for the initial lot for each class of fly ash it intends to provide to the Agency.

6.3 Initial lots shall be tested for conformance to Agency Standard Specifications and both physical and chemical requirements of either AASHTO M 295 or ASTM C 618.

6.4 The Production/Import/Distribution Facility shall allow the Agency to visit and observe the quality control activities and obtain samples for testing.

7. Production/Import/Distribution Facility Quality Control Plan

7.1 The quality control plan, as a minimum, shall identify the following:

7.1.1 Facility type.

7.1.2 Facility location.

7.1.3 Name and telephone number of the contact person responsible for the quality control of the facility.

7.1.4 The quality control tests to be performed on each class of fly ash.

7.1.5 Name of the laboratory performing quality control tests on the fly ash if independent of the Production/Import/Distribution Facility.

7.1.6 Declaration stating that if a test result indicates that a lot of fly ash is not in compliance with the specifications, the facility shall immediately notify the Agency of the lot in question.

7.1.7 Description of the method and frequency for sampling, quality control testing, and specification compliance testing.

7.1.8 Class of fly ash the Production/Import/Distribution Facility intends to provide to the Agency.

7.1.9 Show compliance with Section 5.

7.2 The Quality Control Plan shall be submitted to the Agency annually for review.

8. Documentation Requirements

8.1 Each Production/Import/Distribution Facility shall document its conformance to the Agency's Standard Specifications and both physical and chemical requirements of AASHTO M 295 or ASTM C 618 by means of either a "Mill Test Report" or "Certificate of Analysis" that certifies the sample test results.

8.2 "Mill Test Reports" of all fly ash shall be submitted by the producer on a monthly basis to the Agency. Negative reports (i.e., reports indicating no production for the month) are required to insure that a continuous flow of documentation is maintained.

8.3 "Certificates of Analysis" shall be provided by the importer/distributor to the Agency whenever a new shipment of imported fly ash is received for distribution.

8.4 Separate sequences of "Mill Test Reports" shall be provided for each individual production facility and a unique lot number traceable to a production run shall be included in each report.

8.5 "Mill Test Reports" and "Certificates of Analysis" shall show the applicable test results and the applicable specifications for each component or property tested and shall show the test requirements specified by the Agency.

9. Agency Requirements

9.1 The Agency will review the Production/Import/Distribution Facility's quality control plan listed in Section 6 and respond to the Production Facility within 30 days.

9.2 The Agency may perform quality assurance or acceptance sampling and testing in accordance with the agency standards.

10. Requirements for Shipping Fly Ash to Projects

10.1 The Production/Import/Distribution Facility's quality control plan as approved by the Agency (see Section 9) shall be implemented.

10.2 Each shipment shall identify the applicable "Mill Test Report" or "Certificate of Analysis." This may be included on the Bill of Lading for the shipment, or provided by other means as long as each shipment can be traced to the applicable "Mill Test Report" or "Certificate of Analysis."

11. Quarterly Split Sample Testing

11.1 Production/Import/Distribution Facilities, on a quarterly basis, shall split a production sample into two portions (10 pounds each) for each class of fly ash being produced.

11.2 For the purpose of this standard, quarters are defined as January through March, April through June, July through September, and October through December.

11.3 All fly ash test samples required by this standard shall be obtained as provided in the applicable standard specification or the Production Facility's quality control plan.

11.4 The Production/Import/Distribution Facility or an independent test facility meeting the requirements specified in Section 5 shall conduct chemical and physical testing on one portion.

11.5 The other portion, along with accompanying chemical and physical analysis, shall be submitted to the Agency. The sample will include the "Mill Test Report" or "Certificate of Analysis" for the lot number that is traceable to the production run of fly ash.

11.6 The Production/Import/Distribution Facility shall submit a letter in lieu of split sample(s) indicating the class(es) of fly ash (if any) for which they were accepted under this program that were not produced during the quarter.

12. Comparison of Split Sample Test Results

12.1 The Agency may elect not to test their portion, but when the Agency does elect to test, the Agency may conduct chemical and/or physical tests.

12.2 The results of split sample tests must conform to the applicable AASHTO or ASTM specification requirements.

12.3 If any discrepancies or problems are identified between the Production/Import/Distribution Facility's test results and the Agency's test results the Production/Import/Distribution Facility shall respond to the Agency within 30 days and address the following points concerning their results:

a. Did the results reported accurately reflect the results obtained?

b. Were the test results properly transferred to the report?

c. Were the calculations leading to the test result correct?

d. Did the equipment used to perform the test meet specification requirements?

e. Did the test procedures conform to specification requirements?

f. Was corrective action taken to repair or replace defective equipment?

g. Was the technician instructed of the correct procedure?

12.4 The Production/Import/Distribution Facility shall prepare a response to the Agency, summarizing the results of the investigation, identifying the cause, if determined, and describing any corrective action taken. Comments may include the test facility's data from CCRL Proficiency Tests.

13. Revocation of Certification Status

13.1 A Production/Import/Distribution Facility may have its certification status with the Agency revoked if found in nonconformance with the Standard Specifications or this Standard Practice.

13.2 The following criteria will be used to judge the conditions of nonconformance:

13.2.1 Failure to follow the Production/Import/Distribution Facility's approved quality control plan as required in Section 8.

13.2.2 Failure to declare that test results indicated that a lot of fly ash was not in compliance with the specifications as required under Section 8.1.

13.2.3 When a test report shows nonconformance to the applicable specification, the results will be referred for comment and action to the Production/Import/Distribution Facility.

13.2.3.1 The Production Facility shall submit one sample for retest from the next two available production runs.

13.2.3.2 The Import/Distribution Facility shall submit two random samples for retest.

13.2.3.3 If two of three successive samples show nonconformance, the Agency will revoke certification status.

13.3 A Production/Import/Distribution Facility that has had its certification status revoked may seek reinstatement by demonstrating conformance to the qualification criteria shown in Section 7.

Washington State
Department of Transportation

WSDOT Standard Practice QC 5

Standard Practice for Ground Granulated Blast-Furnace Slag Producers/Importers/ Distributors That Certify Ground Granulated Blast-Furnace Slag

1. Scope

   This standard specifies requirements and procedures for a certification system that shall be applicable to all Producers/Importers/Distributors of Ground Granulated Blast-Furnace Slag.

   This standard may involve hazardous materials, operations and equipment. It does not address all of the safety problems associated with their use. It is the responsibility of those using this standard to consult and establish appropriate safety and health practices and determine the applicability of regulatory limitations prior to use.

2. Referenced Documents

   2.1 AASHTO Standards

   2.1.1 M 302 – Standard Specifications for Ground Granulated Blast-Furnace Slag for Use in Concrete and Mortars

   2.1.2 R 18 – Establishing and Implementing a Quality System for Construction Materials Testing Laboratories

   2.2 ASTM Standards

   2.2.1 C 989 – Standard Specifications for Ground Granulated Blast-Furnace Slag for Use in Concrete and Mortars

   2.3 Agency's Standard Specifications

3. Terminology

   3.1 AASHTO – American Association of State Highway and Transportation Officials

   3.2 ASTM – American Society of Testing and Materials

   3.3 CCRL – Cement and Concrete Reference Laboratory

   3.4 NIST – National Institute of Standards and Technology

   3.5 Import/Distribution Facility – A facility that receives finished ground granulated blast-furnace slag for distribution.

   3.6 Production Facility – A facility that has the capacity for producing and/or grinding ground granulated blast-furnace slag.

   3.7 Supplier – A supplier stores and then delivers ground granulated blast-furnace slag produced by another entity to a concrete plant or another supplier.

3.8 Supplier Certification – Certification of ground granulated blast-furnace slag provided by the supplier or importer using representative test results obtained in accordance with an agency approved QC plan and approved testing lab.

3.9 Agency – State highway agency or other agency responsible for the final acceptance of ground granulated blast-furnace slag. Samples and documentation shall be sent to:

WSDOT State Materials Laboratory
Attn: Cement Acceptance Program Director
PO Box 47365
Olympia, WA 98504-47365

3.10 Specification Compliance Testing – Complete testing in accordance with the specification requirements.

3.11 Quality Control Testing – The quality control testing shall be described in the Production/Import/Distribution Facility's quality control plan. The Production/Import/Distribution Facility's quality control plan must be approved by the Agency.

3.12 CAP – Cement Acceptance Program

3.13 Mill Test Report – A document provided to the Agency on a monthly basis by a ground granulated blast-furnace slag producer that is actually produced at a U.S. or Canadian production facility. This document will list the actual chemical and physical test results of the product sample along with the appropriate AASHTO or ASTM specification limits.

3.14 Certificate of Analysis – A document provided to the Agency on a per shipload basis by a ground granulated blast-furnace slag importer/distributor for imported ground granulated blast-furnace slag. This document shall represent a specific shipload of imported ground granulated blast-furnace slag. This document will list the actual chemical and physical test results of the product sample along with the appropriate AASHTO or ASTM specification limits.

4. Significance and Use

4.1 This standard specifies procedures for accepting ground granulated blast-furnace slag. This is accomplished by a certification system that evaluates quality control and specification compliance tests performed by the Production/Import/Distribution Facility according to their quality control plan.

5. Laboratory and Tester Requirements

5.1 Laboratories shall be AASHTO accredited in all tests required by specification compliance testing or meet the following requirements:

5.1.1 Laboratory facilities shall adequately house and allow proper operation of all required equipment in accordance with the applicable test procedures.

5.1.2 The laboratory shall use personnel qualified in accordance with the appropriate sections of AASHTO R 18.

5.1.3 The laboratory shall use testing equipment that has been calibrated/standardized/checked to meet the requirements of each test procedure in accordance with the appropriate sections of AASHTO R 18.

5.1.4 Documentation of personnel qualifications and the equipment certification/standardization/checked records shall be maintained.

5.1.5 The agency at their discretion may review the laboratory in accordance with WSDOT QC 3.

5.1.6 The laboratory must participate in the NIST's CCRL proficiency sample program.

6. Production/Import/Distribution Facility Qualification

6.1 The Production/Import/Distribution Facility shall submit a written request for acceptance into the Cement Acceptance Program to the Agency along with a copy of the Production/Import/Distribution Facility's Quality Control Plan.

6.2 The Production/Import/Distribution Facility shall submit one sample with its "Mill Test Report" or "Certificate of Analysis" for the initial lot for each grade of ground granulated blast-furnace slag it intends to provide to the Agency.

6.3 Initial lots shall be tested for conformance to Agency Standard Specifications and both physical and chemical requirements of either AASHTO M 302 or ASTM C 989.

6.4 The Production/Import/Distribution Facility shall allow the Agency to visit and observe the quality control activities and obtain samples for testing.

7. Production/Import/Distribution Facility Quality Control Plan

7.1 The quality control plan, as a minimum, shall identify the following:

7.1.1 Facility type.

7.1.2 Facility location.

7.1.3 Name and telephone number of the contact person responsible for the quality control of the facility.

7.1.4 The quality control tests to be performed on each grade of ground granulated blast-furnace slag.

7.1.5 Name of the laboratory performing quality control tests on the ground granulated blast-furnace slag if independent of the Production/Import/Distribution Facility.

7.1.6 Declaration stating that if a test result indicates that a lot of ground granulated blast-furnace slag is not in compliance with the specifications, the facility shall immediately notify the Agency of the lot in question.

7.1.7 Description of the method and frequency for sampling, quality control testing, and specification compliance testing.

7.1.8 Type of ground granulated blast-furnace slag the Production/Import/Distribution Facility intends to provide to the Agency.

7.1.9 Show compliance with Section 5.

7.2 The Quality Control Plan shall be submitted to the Agency annually for review.

8. Documentation Requirements

8.1 Each Production/Import/Distribution Facility shall document its conformance to the Agency's Standard Specifications and both physical and chemical requirements of AASHTO M 302 or ASTM C 989 by means of either, a "Mill Test Report" or "Certificate of Analysis" that certifies the sample test results.

8.2 "Mill Test Reports" of all ground granulated blast-furnace slag shall be submitted by the producer on a monthly basis to the Agency. Negative reports (i.e., reports indicating no production for the month) are required to insure that a continuous flow of documentation is maintained.

8.3 "Certificates of Analysis" shall be provided by the importer/distributor to the Agency whenever a new shipment of imported ground granulated blast-furnace slag is received for distribution.

8.4 Separate sequences of "Mill Test Reports" shall be provided for each individual production facility and a unique lot number traceable to a production run shall be included in each report.

8.5 "Mill Test Reports" and "Certificates of Analysis" shall show the applicable test results and the applicable specifications of AASHTO M 302 or ASTM C 989 for each component or property tested and shall show the test requirements specified by the Agency.

9. Agency Requirements

9.1 The Agency will review the Production/Import/Distribution Facility's quality control plan listed in Section 6 and respond to the Production Facility within 30 days.

9.2 The Agency may perform quality assurance or acceptance sampling and testing in accordance with the agency standards.

10. Requirements for Shipping Ground Granulated Blast-Furnace Slag to Projects

10.1 The Production/Import/Distribution Facility's quality control plan as approved by the Agency (see Section 9) shall be implemented.

10.2 Each shipment shall identify the applicable "Mill Test Report" or "Certificate of Analysis." This may be included on the Bill of Lading for the shipment, or provided by other means as long as each shipment can be traced to the applicable "Mill Test Report" or "Certificate of Analysis."

11. Quarterly Split Sample Testing

11.1 Production/Import/Distribution Facilities, on a quarterly basis, shall split a production sample into two portions (10 pounds each) for each type of ground granulated blast-furnace slag being produced.

11.2 For the purpose of this standard, quarters are defined as January through March, April through June, July through September, and October through December.

11.3 All ground granulated blast-furnace slag test samples required by this standard shall be obtained as provided in the applicable standard specification or the Production Facility's quality control plan.

11.4 The Production/Import/Distribution Facility or an independent test facility meeting the requirements specified in Section 5 shall conduct chemical and physical testing on one portion.

11.5 The other portion, along with accompanying chemical and physical analysis, shall be submitted to the Agency. The sample will include the "Mill Test Report" or "Certificate of Analysis" for the lot number that is traceable to the production run of ground granulated blast-furnace slag.

11.6 The Production/Import/Distribution Facility shall submit a letter in lieu of split sample(s) indicating the grade(s) of ground granulated blast-furnace slag (if any) for which they were accepted under this program that were not produced during the quarter.

12. Comparison of Split Sample Test Results

12.1 The Agency may elect not to test their portion, but when the Agency does elect to test, the Agency may conduct chemical and/or physical tests.

12.2 The results of split sample tests must conform to the applicable AASHTO or ASTM specification requirements.

12.3 If any discrepancies or problems are identified between the Production/Import/Distribution Facility's test results and the Agency's test results the Production/Import/Distribution Facility shall respond to the Agency within 30 days and address the following points concerning their results:

a. Did the results reported accurately reflect the results obtained?

b. Were the test results properly transferred to the report?

c. Were the calculations leading to the test result correct?

d. Did the equipment used to perform the test meet specification requirements?

e. Did the test procedures conform to specification requirements?

f. Was corrective action taken to repair or replace defective equipment?

g. Was the technician instructed of the correct procedure?

12.4 The Production/Import/Distribution Facility shall prepare a response to the Agency, summarizing the results of the investigation, identifying the cause, if determined, and describing any corrective action taken. Comments may include the test facility's data from CCRL Proficiency Tests.

13. Revocation of Certification Status

13.1 A Production/Import/Distribution Facility may have its certification status with the Agency revoked if found in nonconformance with the Standard Specifications or this Standard Practice.

13.2 The following criteria will be used to judge the conditions of nonconformance:

13.2.1 Failure to follow the Production/Import/Distribution Facility's approved quality control plan as required in Section 8.

13.2.2 Failure to declare that test results indicated that a lot of ground granulated blast-furnace slag was not in compliance with the specifications as required under Section 8.1.

13.2.3 When a test report shows nonconformance to the applicable specification, the results will be referred for comment and action to the Production/Import/Distribution Facility.

13.2.3.1 The Production Facility shall submit one sample for retest from the next two available production runs.

13.2.3.2 The Import/Distribution Facility shall submit two random samples for retest.

13.2.3.3 If two of three successive samples show nonconformance, the Agency will revoke certification status.

13.3 A Production/Import/Distribution Facility that has had its certification status revoked may seek reinstatement by demonstrating conformance to the qualification criteria shown in Section 7.

Washington State
Department of Transportation

WSDOT Standard Practice QC 6

Annual Prestressed Plant Review and Approval Process

1. Scope

   This standard specifies requirements and procedures for WSDOT annual approval of all manufacturing facilities producing prestressed concrete girders or precast prestressed concrete members in accordance with WSDOT *Standard Specifications* Section 6-02.3(25).Standard Practice QC 6 also applies to precast concrete units that are prestressed as identified in WSDOT *Standard Specifications* Section 6-02.3(28).

2. Referenced Documents

   2.1 Precast/Prestressed Concrete Institute (PCI) Certification Program

   2.2 WSDOT Qualified Products List (QPL)

   2.3 WSDOT Standard Specification

3. Terminology

   3.1 Plant – Manufacturing facility producing prestressed concrete members with single plant location.

   3.2. NRMCA – National Ready Mix Concrete Association

   3.3 PCI – Precast/Prestressed Concrete Institute

   3.4 RAM - Request for Approval of Material (WSDOT Form 350-071) document submitted by the plant, identifying their material sources for WSDOT approval.

   3.5 Quality Control – Quality control inspection and documentation provided by the plant.

   3.6 QPL – WSDOT Qualified Products List

   3.7 WSDOT – Washington State Department of Transportation

   3.8 WSDOT Annual Approval – The approval process defined in WSDOT Standard Practice QC 6.

   3.9 WSDOT Fabrication Inspector – Quality Assurance inspector provided by the WSDOT Headquarters Materials Laboratory Materials and Fabrication Inspection Office.

4. Significance and Use

4.1 This Standard Practice specifies procedures for approving plants on an annual basis and maintaining a plant approval document reviewed annually. Submittal documents pre approve specific documentation identified in this Standard Practice; replacing the requirement for contract specific submittals. Modifications can be made to the plants submittal at any time during the annual approval period.

5. Annual Plant Approval Requirements

5.1 Plants shall be initially approved through the QPL or RAM approval process. Plants shall not begin fabricating prestress members prior to receiving WSDOT annual plant approval.

5.2 Maintain current PCI certification for the type of prestressed member being manufactured.

5.3 Maintain quality control staff meeting the training and certification requirements specified by the PCI plant certification program.

5.4 Submit and maintain an annual approval document detailed in Section 6 .Plants must complete and maintain all submittal requirements to remain in active approval status.

5.5 Submit annually by December 1st a document identifying the plant has reviewed their annual approval document and identifies whether the plant approval document remains unchanged, or details any anticipated revisions.

5.6 Successful completion of initial WSDOT plant approval detailed in Section 7 or successful maintenance of annual approval status detailed in Section 10.

6. Plant Submittal Requirement

6.1 Plants shall initially submit a document for annual approval that covers the submittal requirements of this section starting with Section 6.1.1. The document may be submitted by mail or submitted electronically. Submit documents to the WSDOT Fabrication and Coatings Engineer.

6.1.1 Table of Contents

6.1.2 PCI plant certification document. Submit plants current PCI certification letter.

6.1.3 Table of Organization.

6.1.4 RAM documents. Submit RAM documents for the following materials.

- Concrete Ready Mix Batch Plant (as applicable)
- Epoxy Coated Reinforcing Steel
- Fabrication Facilities Manufacturing Welded Embeds and Fabricating Reinforcing Steel
- Prestress Strand
- Reinforcing Steel

6.1.5 Concrete mix designs. Submit mix designs on the latest revision of WSDOT Form 350-040 EF. Mix designs are to be filled out completely. Aggregate, cement, slag, and admixtures must be from WSDOT approved sources. Mix design submittal shall include the following for each mix design;

- Compressive strength break history. A minimum of 15 sets (2 cylinders per set)
- Cement mill certification report
- Chloride Ion test results

6.1.6 Curing procedures. Submit the procedure that will be used to cure prestressed members. Identify whether accelerated curing will be used and detail the procedure for monitoring and documenting curing operations.

6.1.7 Fabrication procedures and drawings. This submittal is for standard fabrication procedures and specialized fabrication procedures. Specialized procedures may be added to the annual plant submittal as approved by the WSDOT Bridge and Structures Office, to facilitate fabrication of prestressed members. Examples of specialized procedures are as follows:

- Tensioning and Detensioning procedures
- Hold down devices
- Other procedures and drawings as determined by the Plant.

6.1.8 Weld procedures. Submit weld procedures for welding of embed plates or other structures as applicable to the plants manufacturing process.

6.1.9 Repair procedures. Submit repair procedures for anticipated repair scenarios. Approved repair procedures can be used during fabrication of prestressed members without further WSDOT engineering approval. Repair procedures must be detailed, including dimensional limits, and specific repair materials identified by material type, and brand name. Submittal shall include catalog cuts for repair materials.

6.1.10 Quality control plan. Submit quality control procedures and inspection forms. Inspection forms shall include information for the following.

- Pre Pour Inspection Report
- Wet Concrete Testing Report
- Stressing Record
- Compressive Strength Testing Report
- Non Conformance Report
- Post Pour Inspection Report

6.1.11 Ready mix batch plant NRMCA or NRMCA self-certification documentation as applicable. Not required for plants in house batch plant.

6.1.12 Problem resolution form. Submit a plant specific problem resolution form. Appendix "B" has an example of the Problem Resolution Form. This form is used to expedite resolution of construction Issues encountered during fabrication of prestressed concrete members.

6.1.13 Certificate of Compliance Document: Submit the form that will be used for the Certificate of Compliance document.

6.1.14 Final documentation package. Detail or outline the documents that will be provided to the WSDOT Materials and Fabrication Inspector prior to WSDOT final approval of prestressed members. Documents required in the final document package are as listed below.

- Pre Pour Inspection Report
- Wet Concrete Testing Report
- Compressive Strength Testing Report
- Post Pour Inspection Report
- Gradation Reports
- Cure Charts for accelerated curing
- Stressing Records
- Non Conformance Reports
- Problem Resolution documents
- Certificate of Compliance
- Certificate of Materials Origin (for projects with "Buy America" Requirement, WSDOT Form #350-109 EF)
- Mill certs
  - Cement
  - Epoxy Coated Reinforcing Steel
  - Fly Ash
  - Micro Silica
  - Prestress Strand
  - Reinforcing Steel
  - Slag
  - Steel components not used for Contractors convenience

7. Initial Plant Approval Process

7.1 Upon receiving the plants initial submittal, WSDOT will review the contents of the submittal in preparation for WSDOT's initial plant approval meeting with representatives of the plant.

7.2 WSDOT will be allowed 90 days for review of the plants initial submittal document. Time for review will be longer if submittals are incomplete.

7.3 WSDOT review responsibilities.

7.3.1 WSDOT Fabrication and Coatings Engineer. Overall responsibility for annual approval and submittal review process. Coordinates all annual approval submittal activities. Reviews for acceptance all documentation with the exception of mix designs, specialized fabrication procedures, and repair procedures.

7.3.2 WSDOT HQ Materials Laboratory Structural Materials Testing Engineer. Responsible for review and acceptance of mix designs.

7.3.3 WSDOT Bridge Construction Office. Responsible for review and approval of repair procedures.

7.3.4 WSDOT Bridge and Structures Office. Responsible for approval of specialized fabrication procedures, and review and approval of a welding procedures.

7.4 Review process.

7.4.1 The WSDOT Fabrication and Coatings Engineer will review portions of the plant submittal and will send specific sections referenced in Section 7.3 to the respective approving authorities.

7.4.2 Approving authorities will send reviewed documents back to the WSDOT Fabrication and Coatings Engineer.

7.4.3 The WSDOT Fabrication and Coatings Engineer will review the status of the submittals returned from the approving authorities and incorporate the documents into the annual plant approval document.

7.4.4 Submittal documents will be signed or stamped "Approved", "Approved as Noted", "Not Approved", or Accepted depending on their review status.

7.4.5 RAM documents will be coded with acceptance codes by the WSDOT Fabrication and Coatings Engineer. RAM codes for specific items are referenced in Appendix "C" of this Standard Practice.

7.4.6 The WSDOT Fabrication and Coatings Engineer will make an itemized list of review comments and action items and will place them at the front of the annual submittal document returned to the plant at the time of the initial plant approval meeting. If time allows, the Fabrication and Coatings Engineer will work directly with representatives from the plant to address review comments prior to the initial plant approval meeting.

7.4.7 The WSDOT Fabrication and Coatings Engineer will schedule the initial plant approval meeting and will send the plant a letter and email notifying them of the date and time WSDOT will be at the plant for the initial plant approval meeting.

7.4.8 WSDOT will perform a formal audit of the plants facility, and operating and quality control procedures prior to the initial plant approval meeting. WSDOT will contact the plant and inform them of the date and time a WSDOT inspector will be at the plant for an inspection audit. The audit will follow the outline detailed in Appendix A.

7.4.9 WSDOT will provide the plant with an electronic version of the reviewed annual approval document within 15 days following completion of the initial plant approval meeting.

8. Initial Plant Approval Meeting

8.1 Scheduling

8.1.1 An initial plant approval meeting will be scheduled after WSDOT has completed its review of the plants initial submittal. The meeting will be held at the plants physical location. WSDOT will notify the plant of the date and time the meeting will be held.

8.2 Attendees

8.2.1 WSDOT attendees will include at a minimum, the WSDOT Fabrication and Coatings Engineer and a supervising inspector from the Materials and Fabrication Inspection Office.

8.2.2 Attendees from the plant shall include at a minimum the plant manager, production manager, and quality control manager, or their respective representatives.

8.3 Meeting Agenda

8.3.1 The meeting agenda will focus on comments from WSDOT's review of the plants annual approval document submittal, and WSDOT's plant inspection audit completed prior to the meeting.

8.3.2 WSDOT will inform the plant of their approval status upon completion of the initial approval meeting. Any deficiencies that would prevent approval will be identified and discussed during the meeting.

9. Initial Plant Approval Status Notification

9.1 Within 30 days following the initial plant approval meeting, the WSDOT Fabrication and Coatings Engineer will send the plant a letter informing the plant of their approval status and the period of effectiveness. Any deficiencies identified during the annual plant review and audit that would prevent annual approval will be identified in the letter.

10. Maintenance of Plant Approval Status After Initial Approval

    10.1 Annual approval documents will remain in affect indefinitely as long as the document is maintained each calendar year.

    10.2 The WSDOT Fabrication and Coatings Engineer will send each plant a letter in October requesting a document identifying the plant has reviewed their annual approval document and identifies whether the plant approval documents remain unchanged, or details any anticipated revisions. The letter will also detail any changes to WSDOT's program that would affect the annual approval document. The document and any revisions ready for submittal shall be sent electronically to the WSDOT Fabrication and Coatings Engineer no later than December 1st.

    10.3 Revisions to mix designs, repair procedures, and specialized fabrication procedures will be processed through the QPL or reviewed during WSDOT project specific work activities. WSDOT will provide plants with a cost estimate for review of submittals being submitted through the QPL process. Submittals reviewed during WSDOT project specific work activities will be added to the annual approval document. Costs associated with approval through project specific work activities will be based on the same process for approvals through the RAM process.

    10.4 Revisions submitted by the plant will be reviewed as detailed in Section 7.4.1 through 7.4.5.

    10.5 The WSDOT Fabrication and Coatings Engineer will review annual plant approval documents in December. Review comments will be provided to plants for their action by January 15th. Upon resolution of review comments, the WSDOT Fabrication and Coatings Engineer will document revisions to the annual approval document and will maintain revision control by adding "Approved", "Approved as Noted", "Not Approved", or "Accepted" revisions to the document and providing plants with an electronic version of the plants complete approval document. WSDOT will provide a revision control document at the front of the annual approval document, which details the changes from the previous version.

    10.6 Onsite inspection audits will be performed by WSDOT when the plant starts its first project each calendar year. Audits will not be performed by WSDOT until there is work taking place. If a calendar year passes without an active project, WSDOT will perform an inspection audit when WSDOT project specific work starts. The audit will follow the outline detailed in Appendix A.

11. Annual Maintenance Approval Status Notification

    11.1 Upon successful completion of WSDOT's annual plant approval document review and onsite plant inspection audit as applicable, the WSDOT Fabrication and Coatings Engineer will send the plant a letter informing the plant of their approval status and the period of effectiveness. Any deficiencies identified during the annual plant review that would prevent annual approval will be identified in the letter.

WSDOT Standard Practice QC 6

Appendix A Precast / Prestress Plant Inspection Audit

Plant: _____ Date: _____

Phone Number: _____ Contact Person: _____

Plant Reviewed by: _____

Review Results: Acceptable Unacceptable

Materials

Concrete Cylinders

Is cylinder fabrication and testing in accordance with WSDOT test methods? Yes No

Does cylinder storage comply with specifications? Yes No

Is cylinder capping acceptable? Yes No

Method of capping: Sulphur Rubber caps Other _____

What types of molds are used? Paper Plastic Steel Securer

Is cylinder testing machine calibrated? Yes No

Comments: _____

Cement

Is cement from an approved source? Yes No

Are cement certifications available? Yes No

Is cement storage acceptable? Yes No

Comments: _____

Aggregate

Has aggregate source been approved by WSDOT? Yes No

Does plant use WSDOT grading? Yes No

Is aggregate sampled and tested prior to use? Yes No

Is aggregate storage acceptable? Yes No

Comments: _____

Reinforcing Steel

Are mill test certificates available? Yes No

Is fabrication acceptable? Yes No

Is storage acceptable? Yes No

Comments: _____

Forms

Are forms clean, straight and in good condition? Yes No

Are forms checked for dimensions prior to use? Yes No

Comments: _____

Batch Plant

Does batch plant meet the certification requirements of the WSDOT Std. Spec. Yes No

Date of scale calibration: _____

Comments: _____

Fabrication

Set up

Is reinforcing steel placed per contract Yes No

Is steel tied according to specifications and held in place during concrete placement? Yes No

Is the plant aware tack welding is not permitted? Yes No

Is there a Plant QC hold point for inspection prior to setting forms? Yes No

Comments: _____

Concrete Placement

Is concrete delivered in a timely manner? Yes No

Is plant using approved concrete mix design? Yes No

Is required concrete testing being done? Yes No

Is there adequate equipment for concrete placement in forms? Yes No

Is concrete placed per specifications? Yes No

Comments: _____

Curing

Is temperature measuring equipment acceptable? Yes No

Is product protected during curing? Yes No

Are test cylinders cured under same conditions as product? Yes No

What type of curing system is used?

Radiant _____
Hot air _____
Convection _____
Conducted Steam _____
Other _____

Comments: _____

Stripping Procedures

Are concrete cylinders for verification of stripping strength representative of the product? Yes No

Is required stripping strength being verified with cylinder breaks prior to stripping? Yes No

Comments: _____

Inspection

Does plant inspection staff have a good understanding of their job responsibilities? Yes No

Does plant inspection staff have adequate Training? Yes No

Is plant inspection staff familiar with the WSDOT Annual Approval process and procedures? Yes No

Are approved shop drawings, plans, and calculations available? Yes No

Are quality control procedures being followed? Yes No

Are quality control reports being filled out Properly? Yes No

Has the plant quality control department verified product repairs, workmanship, and finish are acceptable? Yes No

Comments: _____

Product Handling and Storage

Are products handled and stored properly? Yes No

Comments: _____

Overall Review Comments

Review Attendees

Name	Job Description	Phone/Email

Appendix B Manufacturers Name Problem Resolution Request

Date: _____

Submitted To: _____

WSDOT Bridge Construction Engineer Fax: 360-705-6809/Email: _____

Contractor _____

Fax: _____/Email: _____

WSDOT Contract No: _____

Project Name: _____

Company Name: _____

Submitted By (Contact Person): _____

Telephone No: _____ Fax No: _____

Email: _____

Priority: High Medium Low

Request Response Time: _____

Description of Problem:

Proposed Resolution:

WSDOT Fabrication Inspector's Name and Signature:

_____ _____

Name Signature

Appendix C RAM Acceptance Codes

Products	RAM Code
Concrete Ready Mix Batch Plant	8
Epoxy Coated Reinforcing Steel	2, 5, 6
Fabrication Facilities (Steel Embeds & Fabricating Rebar)	8
Prestress Strand	1, 2, 6
Reinforcing Steel	2, 6

Acceptance Action Codes

1) Acceptance based upon 'Satisfactory' Test Report for samples of materials to be incorporated into the project.

2) Mfg. Cert. of Compliance for 'Acceptance' prior to use of material.

3) Catalog Cuts for 'Acceptance' prior to use of material.

4) Not Listed (No relevance to annual submittal process)

5) Only Materials Tagged 'Approved for Shipment'

6) Submit Certificate of Materials Origin to Project Engineer Office.(Only for projects with "Buy America" requirement.

7) Not Listed (No relevance to annual submittal process)

8) Source Approved

9) Approval Withheld; submit samples for preliminary evaluation

10) Approval Withheld

11) Miscellaneous Acceptance Criteria

Washington State
Department of Transportation

WSDOT Standard Practice QC 7

Annual Precast Plant Review and Approval Process

1. Scope

   This standard specifies requirements and procedures for WSDOT annual approval of all manufacturing facilities producing precast concrete structures in accordance with WSDOT *Standard Specification* Section 6-02.3(28).

2. Referenced Documents

   2.1 WSDOT Qualified Products List (QPL)

   2.2 WSDOT Standard Specification

3. Terminology

   3.1 Plant – Manufacturing facility producing precast concrete structures with single plant location.

   3.2 NRMCA – National Ready Mix Concrete Association

   3.3 ICBO – International Congress Building Officials

   3.4 ICC-ES – International Code Council Evaluation Services

   3.5 PCI – Precast/Prestressed Concrete Institute

   3.6 NPCA – National Precast Concrete Association

   3.7 RAM - Request for Approval of Material (WSDOT Form 350-071 EF) submitted by the plant, identifying their material sources for WSDOT approval.

   3.8 Quality Control – Quality control inspection and documentation provided by the plant.

   3.9 QPL – WSDOT Qualified Products List

   3.10 WSDOT – Washington State Department of Transportation

   3.11 WSDOT Annual Approval – The certification process defined in WSDOT Standard Practice QC 7.

   3.12 WSDOT Fabrication Inspector – Quality Assurance inspector provided by the WSDOT Headquarters Materials Laboratory Materials and Fabrication Inspection Office.

4. Significance and Use

   4.1 This Standard Practice specifies procedures for approving plants on an annual basis and maintaining a plant approval document reviewed annually. Submittal documents pre approve specific documentation identified in this Standard Practice; replacing the requirement for contract specific submittals. Modifications can be made to the plants submittal at any time during the annual approval period.

5. Annual Plant Approval Requirements

5.1 Plants shall be initially approved through the QPL or RAM approval process. Plants shall not begin fabricating precast members prior to receiving WSDOT annual plant approval.

5.2 Maintain current PCI, or NPCA certification, or maintain current status as a recognized fabricator by ICBO or ICC-ES.

5.3 Maintain quality control staff meeting the training and certification requirements specified by the certifying organization.

5.4 Submit and maintain an annual approval document detailed in Section 6. Plants must complete and maintain all submittal requirements to remain in active approval status.

5.5 Submit annually by December 1st a document identifying the plant has reviewed their annual approval document and identifies whether the plant approval document remains unchanged, or details any anticipated revisions.

5.6 Successful completion of initial WSDOT plant approval detailed in Section 7 or successful maintenance of annual approval status detailed in Section 10.

6. Plant Submittal Requirement

6.1 Plants shall initially submit a document for annual approval that covers the submittal requirements of this section starting with section 6.1.1. The document may be submitted by mail or submitted electronically. Submit documents to the WSDOT Fabrication and Coatings Engineer.

6.1.1 Table of Contents

6.1.2 PCI, NPCA, ICBO, or ICC-ES plant certification document. Submit plants current certification letter.

6.1.3 Table of Organization.

6.1.4 RAM documents. Submit RAM documents for the following materials.

- Concrete Ready Mix Batch Plant (as applicable)
- Epoxy Coated Reinforcing Steel
- Fabrication Facilities Manufacturing Welded Embeds and Fabricating Reinforcing Steel
- Reinforcing Steel

6.1.5 Concrete mix designs. Submit mix designs on the latest revision of WSDOT Form #350-040 EF. Mix designs are to be filled out completely. Aggregate, cement, slag, and admixtures must be from WSDOT approved sources.

Mix design submittal shall include the following for each mix design;

- Compressive strength break history. A minimum of 15 sets (2 cylinders per set)
- Cement mill certification report
- Chloride Ion test results
- Self-compacting concrete test data

6.1.6 Curing procedures. Submit the procedure that will be used to cure precast members. Identify whether accelerated curing will be used and detail the procedure for monitoring and documenting curing operations.

6.1.7 Fabrication procedures and drawings. This submittal is for standard fabrication procedures and specialized fabrication procedures. Specialized procedures may be added to the annual plant submittal as approved by the WSDOT Bridge and Structures Office, to facilitate fabrication of precast structures. This is the section to add lower stripping strength approvals per Standard Specification section 6-02.3(28)B.

6.1.8 Weld procedures. Submit weld procedures for welding of embed plates or other structures as applicable to the plants manufacturing process.

6.1.9 Repair procedures. Submit repair procedures for anticipated repair scenarios. Approved repair procedures can be used during fabrication of precast members without further WSDOT engineering approval. Repair procedures must be detailed, including dimensional limits, and specific repair materials identified by material type, and brand name. Submittal shall include catalog cuts for repair materials.

6.1.10 Quality control plan. Submit quality control procedures and inspection forms. Inspection forms shall include information for the following.

- Pre Pour Inspection Report
- Wet Concrete Testing Report
- Compressive Strength Testing Report
- Non Conformance Report
- Post Pour Inspection Report

6.1.11 Ready mix batch plant NRMCA certification documentation as applicable. Not required for plants in house batch plant.

6.1.12 Problem resolution form. Submit a plant specific problem resolution form. Appendix “B” has an example of the Problem Resolution Form. This form is used to expedite resolution of construction Issues encountered during fabrication of precast concrete structures.

6.1.13 Certificate of Compliance Document: Submit the form that will be used for the Certificate of Compliance document.

6.1.14 Final documentation package. Detail or outline the documents that will be provided to the WSDOT Materials and Fabrication Inspector prior to WSDOT final approval of precast members. Documents required in the final document package are as listed below.

- Pre Pour Inspection Report
- Wet Concrete Testing Report
- Compressive Strength Testing Report
- Post Pour Inspection Report
- Gradation Reports
- Cure Charts for accelerated curing
- Non Conformance Reports
- Problem Resolution documents
- Certificate of Compliance

- Certificate of Materials Origin (for projects with "Buy America" Requirement, WSDOT Form #350-109 EF)
- Mill certs
  - Cement
  - Epoxy Coated Reinforcing Steel
  - Fly Ash
  - Micro Silica
  - Reinforcing Steel
  - Slag
  - Steel components not used for Contractors convenience

7. Initial Plant Approval Process

7.1 Upon receiving the plants initial submittal, WSDOT will review the contents of the submittal in preparation for WSDOT's initial plant approval meeting with representatives of the plant.

7.2 WSDOT will be allowed 90 days for review of the plants initial submittal document. Time for review will be longer if submittals are incomplete.

7.3 WSDOT review responsibilities.

7.3.1 WSDOT Fabrication and Coatings Engineer. Overall responsibility for annual approval and submittal review process. Coordinates all annual approval submittal activities. Reviews for acceptance all documentation with the exception of mix designs, specialized fabrication procedures, and repair procedures.

7.3.2 WSDOT HQ Materials Laboratory Structural Materials Testing Engineer. Responsible for review and acceptance of mix designs.

7.3.3 WSDOT Bridge Construction Office. Responsible for review and approval of repair procedures.

7.3.4 WSDOT Bridge and Structures Office. Responsible for approval of specialized fabrication procedures, and review and approval of a welding procedures.

7.4 Review process.

7.4.1 The WSDOT Fabrication and Coatings Engineer will review portions of the plant submittal and will send specific sections referenced in Section 7.3 to the respective approving authorities.

7.4.2 Approving authorities will send reviewed documents back to the WSDOT Fabrication and Coatings Engineer.

7.4.3 The WSDOT Fabrication and Coatings Engineer will review the status of the submittals returned from the approving authorities and incorporate the documents into the annual plant approval document.

7.4.4 Submittal documents will be signed or stamped "Approved", "Approved as Noted", "Not Approved", or "Accepted" depending on their review status.

7.4.5 RAM documents will be coded with acceptance codes by the WSDOT Fabrication and Coatings Engineer. RAM codes for specific items are referenced in Appendix "C" of this Standard Practice.

7.4.6 The WSDOT Fabrication and Coatings Engineer will make an itemized list of review comments and action items and will place them at the front of the annual submittal document returned to the plant at the time of the initial plant approval meeting. If time allows, the Fabrication and Coatings Engineer will work directly with representatives from the plant to address review comments prior to the initial plant approval meeting.

7.4.7 The WSDOT Fabrication and Coatings Engineer will schedule the initial plant approval meeting and will send the plant a letter and email notifying them of the date and time WSDOT will be at the plant for the initial plant approval meeting.

7.4.8 WSDOT will perform a formal audit of the plants facility, and operating and quality control procedures prior to the initial plant approval meeting. WSDOT will contact the plant and inform them of the date and time a WSDOT inspector will be at the plant for an inspection audit. The audit will follow the outline detailed in Appendix "A".

7.4.9 WSDOT will provide the plant with an electronic version of the reviewed annual approval document within 15 days following completion of the initial plant approval meeting.

8. Initial Plant Approval Meeting

8.1 Scheduling

8.1.1 An initial plant approval meeting will be scheduled after WSDOT has completed its review of the plants initial submittal. The meeting will be held at the plants physical location. WSDOT will notify the plant of the date and time the meeting will be held.

8.2 Attendees

8.2.1 WSDOT attendees will include at a minimum, the WSDOT Fabrication and Coatings Engineer and a supervising inspector from the Materials and Fabrication Inspection Office.

8.2.2 Attendees from the plant shall include at a minimum the plant manager, production manager, and quality control manager, or their respective representatives.

8.3 Meeting Agenda

8.3.1 The meeting agenda will focus on comments from WSDOT's review of the plants annual approval document submittal, and WSDOT's plant inspection audit completed prior to the meeting.

8.3.2 WSDOT will inform the plant of their approval status upon completion of the initial approval meeting. Any deficiencies that would prevent approval will be identified and discussed during the meeting.

9. Initial Plant Approval Status Notification

9.1 Within 30 days following the initial plant approval meeting, the WSDOT Fabrication and Coatings Engineer will send the plant a letter informing the plant of their approval status and the period of effectiveness. Any deficiencies identified during the annual plant review audit that would prevent annual approval will be identified in the letter.

10. Maintenance of Plant Approval Status After Initial Approval

10.1 Annual approval documents will remain in affect indefinitely as long as the document is maintained each calendar year.

10.2 The WSDOT Fabrication and Coatings Engineer will send each plant a letter in October requesting a document identifying the plant has reviewed their annual approval document and identifies whether the plant approval documents remain unchanged, or details any anticipated revisions. The letter will also detail any changes to WSDOT's program that would affect the annual approval document. The document and any revisions ready for submittal shall be sent electronically to the WSDOT Fabrication and Coatings Engineer no later than December 1st.

10.3 Revisions to mix designs, repair procedures, and specialized fabrication procedures will be processed through the QPL or reviewed during WSDOT project specific work activities. WSDOT will provide plants with a cost estimate for review of submittals being submitted through the QPL process. Submittals reviewed during WSDOT project specific work activities will be added to the annual approval document. Costs associated with approval through project specific work activities will be based on the same process for approvals through the RAM process.

10.4 Revisions submitted by the plant will be reviewed as detailed in Section 7.4.1 through 7.4.5.

10.5 The WSDOT Fabrication and Coatings Engineer will review annual plant approval documents in December. Review comments will be provided to plants for their action by January 15th. Upon resolution of review comments, the WSDOT Fabrication and Coatings Engineer will document revisions to the annual approval document and will maintain revision control by adding "Approved", "Approved as Noted", "Not approved", or "Accepted" revisions to the document and providing plants with an electronic version of the plants complete approval document. WSDOT will provide a revision control document at the front of the annual approval document, which details the changes from the previous version.

10.6 Onsite inspection audits will be performed by WSDOT when the plant starts its first project each calendar year. Audits will not be performed by WSDOT until there is work taking place. If a calendar year passes without an active project, WSDOT will perform an inspection audit when WSDOT project specific work starts. The audit will follow the outline detailed in Appendix A.

11. Annual Maintenance Approval Status Notification

11.1 Upon successful completion of WSDOT's annual plant approval document review and onsite plant inspection as applicable, the WSDOT Fabrication and Coatings Engineer will send the plant a letter informing the plant of their approval status and the period of effectiveness. Any deficiencies identified during the annual plant review that would prevent annual approval will be identified in the letter.

Appendix A Precast / Prestress Plant Inspection Audit

Plant: _____ Date: _____

Phone Number: _____ Contact Person: _____

Plant Reviewed by: _____

Review Results: Acceptable Unacceptable

Materials

Concrete Cylinders

Is cylinder fabrication and testing in accordance with WSDOT test methods? Yes No

Does cylinder storage comply with specifications? Yes No

Is cylinder capping acceptable? Yes No

Method of capping: Sulphur Rubber caps Other _____

What types of molds are used? Paper Plastic Steel Securer

Is cylinder testing machine calibrated? Yes No

Comments: _____

Cement

Is cement from an approved source? Yes No

Are cement certifications available? Yes No

Is cement storage acceptable? Yes No

Comments: _____

Aggregate

Has aggregate source been approved by WSDOT? Yes No

Does plant use WSDOT grading? Yes No

Is aggregate sampled and tested prior to use? Yes No

Is aggregate storage acceptable? Yes No

Comments: _____

Reinforcing Steel

Are mill test certificates available? Yes No

Is fabrication acceptable? Yes No

Is storage acceptable? Yes No

Comments: _____

Forms

Are forms clean, straight and in good condition? Yes No

Are forms checked for dimensions prior to use? Yes No

Comments: _____

Batch Plant

Does batch plant meet the certification requirements of the WSDOT Std. Spec. Yes No

Date of scale calibration: _____

Comments: _____

Fabrication

Set Up

Is reinforcing steel placed per contract Yes No

Is steel tied according to specifications and held in place during concrete placement? Yes No

Is the plant aware tack welding is not permitted? Yes No

Is there a Plant QC hold point for inspection prior to setting forms? Yes No

Comments: _____

Concrete Placement

Is concrete delivered in a timely manner? Yes No

Is plant using approved concrete mix design? Yes No

Is required concrete testing being done? Yes No

Is there adequate equipment for concrete placement in forms? Yes No

Is concrete placed per specifications? Yes No

Comments: _____

Curing

Is temperature measuring equipment acceptable? Yes No

Is product protected during curing? Yes No

Are test cylinders cured under same conditions as product? Yes No

What type of curing system is used?

Radiant _____
Hot air _____
Convection _____
Conducted Steam _____
Other _____

Comments: _____

Stripping Procedures

Are concrete cylinders for verification of stripping strength representative of the product? Yes No

Is required stripping strength being verified with cylinder breaks prior to stripping? Yes No

Comments: _____

Inspection

Does plant inspection staff have a good understanding of their job responsibilities? Yes No

Does plant inspection staff have adequate Training? Yes No

Is plant inspection staff familiar with the WSDOT Annual Approval process and procedures? Yes No

Are approved shop drawings, plans, and calculations available? Yes No

Are quality control procedures being followed? Yes No

Are quality control reports being filled out Properly? Yes No

Has the plant quality control department verified product repairs, workmanship, and finish are acceptable? Yes No

Comments: _____

Product Handling and Storage

Are products handled and stored properly? Yes No

Comments: _____

Overall Review Comments

Review Attendees

Name	Job Description	Phone/Email

Appendix B Manufacturers Name Problem Resolution Request

Date: _____

Submitted To: _____

WSDOT Bridge Construction Engineer Fax: 360-705-6809/Email: _____

Contractor _____

Fax: _____/Email: _____

WSDOT Contract No: _____

Project Name: _____

Company Name: _____

Submitted By (Contact Person): _____

Telephone No: _____ Fax No: _____

Email: _____

Priority: High Medium Low

Request Response Time: _____

Description of Problem:

Proposed Resolution:

WSDOT Fabrication Inspector's Name and Signature:

_____ _____

Name Signature

Appendix C AM Acceptance Codes

Products	RAM Code
Concrete Ready Mix Batch Plant	8
Epoxy Coated Reinforcing Steel	2, 5, 6
Fabrication Facilities (Steel Embeds & Fabricating Rebar)	8
Reinforcing Steel	2, 6

Acceptance Action Codes

1) Acceptance based upon 'Satisfactory' Test Report for samples of materials to be incorporated into the project.
2) Mfg. Cert. of Compliance for 'Acceptance' prior to use of material.
3) Catalog Cuts for 'Acceptance' prior to use of material.
4) Not Listed (No relevance to annual submittal process)
5) Only Materials Tagged 'Approved for Shipment'
6) Submit Certificate of Materials Origin to Project Engineer Office. (Only for projects with "Buy America" requirement.
7) Not Listed (No relevance to annual submittal process)
8) Source Approved
9) Approval Withheld; submit samples for preliminary evaluation
10) Approval Withheld
11) Miscellaneous Acceptance Criteria

Washington State
Department of Transportation

WSDOT Standard Practice for QC 8

Standard Practice for Approval of Hot Mix Asphalt Mix Designs for the Qualified Products List

1. Scope

   1.1. This standard specifies requirements and procedures for approval of Hot Mix Asphalt mix designs for the Qualified Products List.

   1.2. This standard may involve hazardous materials, operations and equipment. It does not address all of the safety problems associated with their use. It is the responsibility of whoever uses this standard to consult and establish appropriate safety and health practices and determine the applicability of regulatory limitations prior to use.

2. Referenced Documents

   2.1. WSDOT Standards

      2.1.1. *Standard Specifications for Road, Bridge, and Municipal Construction* M 41-10

3. Terminology

   3.1. AASHTO – American Association of State Highway and Transportation Officials

   3.2. Contractor/Producer – The Contractor, Producer or production facility that has the capacity for producing HMA meeting WSDOT *Standard Specifications*.

   3.3. ASA – Aggregate Source Approval

   3.4. ASTM – American Society of Testing and Materials

   3.5. HMA – Hot Mix Asphalt

   3.6. PGAB – Performance Graded Asphalt Binder

   3.7. QPL – Qualified Products List

   3.8. State Materials Laboratory – 1655 S. 2nd Avenue SW, Tumwater, WA 98512-6951

   3.9. WSDOT – Washington State Department of Transportation.

4. Significance and Use

   4.1. This standard specifies procedures for designing, submitting, evaluating and approving HMA mix designs for inclusion to the QPL.

5. Mix Design Development

   5.1. The Contractor/Producer or designee shall develop a HMA mix design in accordance with Section 5-04.3(7)A of the *Standard Specifications*. The HMA mix design aggregate structure, asphalt binder content, anti-stripping additive, rutting susceptibility and indirect tensile strength shall be determined in accordance with WSDOT SOP 732, FOP for AASHTO T 324 and WSDOT FOP for ASTM D 6931 and meet the requirements of Sections 9-03.8(2) and 9-03.8(6) of the *Standard Specifications*.

6. Submission to the WSDOT Qualified Products List

6.1. Once the HMA mix design has been developed, the Contractor/Producer shall contact the QPL Engineer (www.wsdot.wa.gov/Business/MaterialsLab/QPL.htm) or 360-709-5442 to initiate the HMA mix design submittal process.

6.2. To initiate the mix design submittal process the Contractor/Producer shall provide the following:

- Company contact and billing information
- A completed copy of WSDOT Form 350-042EF and test reports in accordance with Section 5-04.3(7)A1 of the *Standard Specifications*
- A completed QPL Application
- ASA Report for the aggregate source(s)
- QPL Contractor/Producer Product Information page(s) for the PGAB and the anti-stripping additive

6.3. The QPL Engineer will provide the following to the Contractor/Producer:

- QPL evaluation tracking number
- Initial letter detailing mix design evaluation
- Cost sheet for mix design evaluation detailing submittal requirements and associated charges

6.4. After payment is received for the mix design evaluation the QPL Engineer shall provide:

- Assigned delivery date of materials and documentation to State Materials Laboratory
- Estimated date of completion
- Final letter indicating QPL status

6.5. A priority queue will be established by the State Materials Laboratory for HMA mix design evaluations.

6.6. Preference will be given to mix designs submitted for WSDOT contracts.

6.6.1. HMA mix design evaluation for WSDOT contracts shall be completed within 25 calendar days of acceptance by the State Materials Laboratory. Acceptance will be determined when all required documentation, materials and payment have been received at the State Materials Laboratory.

6.6.2. HMA mix design evaluations submitted that are not for WSDOT contracts will be completed within approximately 40 calendar days of acceptance by the State Materials Laboratory.

6.6.3. The State Materials Laboratory reserves the right to limit the number of HMA mix design evaluations accepted that are not for WSDOT contracts at any given time. Workload and staffing will dictate the number of HMA mix designs accepted at one time.

7. Mix Design Evaluation

   7.1. The HMA mix design submitted by the Contractor/Producer will be evaluated by the State Materials Laboratory in accordance with Section 9-03.8(2) and 9-03.8(6) of the *Standard Specifications*.

   7.2. HMA mix designs will be placed on the QPL provided they meet the requirements of Section 9-03.8(2) and 9-03.8(6) of the *Standard Specifications*.

      7.2.1. Voids in Mineral Aggregate (VMA) must be within 1.5% of the minimum specification in accordance with Section 9-03.8(2) of the *Standard Specifications* for the class of HMA evaluated.

      7.2.2. % Gmm at N design must be within 1.5% of the specification in Section 9-03.8(2) of the *Standard Specifications* for the class of HMA evaluated.

      7.2.3. Voids Filled with Asphalt (VFA) in Section 9-03.8(2) will not be part of the mix design evaluation.

   7.3. A mix design that fails to meet the requirements listed in Section 7.2, 7.2.1 and 7.2.2 will not be accepted or placed on the QPL.

   7.4. Adjustments to mix designs will not be allowed once they have been evaluated.

   7.5. The Contractor/Producer will be issued a QPL mix design record providing the mix design is in compliance with Section 9 of this Standard Practice.

   7.6. The QPL listing for HMA mix designs will show the following information:

      - Company name
      - HMA Class
      - Aggregate Source(s)
      - PGAB Grade
      - PGAB Supplier
      - Anti-stripping additive brand and quantity (if applicable)

8. Referencing Mix Designs From The QPL

   8.1. Requests for reference HMA mix designs for non WSDOT projects will be completed on WSDOT Form 350-041EF and emailed to BituminousMaterials@wsdot.wa.gov.

   8.2. Reference HMA mix design reports will be issued for new mix designs on active and awarded WSDOT contracts once accepted and placed on the QPL.

   8.3. Reference HMA mix design reports will be issued for current mix designs on active and awarded WSDOT contracts provided the HMA production history is in compliance with *Standard Specifications* Section 5-04.3(11)D.

9. Removal From The QPL

   9.1. HMA mix designs will be automatically removed from the QPL in accordance with *Standard Specifications* Section 5-04.3(7)A.

   9.2. HMA mix designs may be removed from the QPL if found in nonconformance with the *Standard Specifications* or this Standard Practice. Causes for removal from the QPL may include, but are not limited to the following:

   - Failure to comply with requirements of Standard Practice QC 8.
   - HMA mix designs that are out of compliance in accordance with Section 5-04.3(11)D of the *Standard Specifications*.
   - Failure to notify WSDOT of changes in HMA production.
   - Removal at the request of the Contractor/Producer

10. Ignition Furnace Calibration Factor (IFCF) Samples

   10.1. Each HMA mix design submitted for evaluation will have 12 IFCF samples produced for WSDOT as part of the QPL evaluation process.

   10.2. The Contractor/Producer may elect to have 4 IFCF samples produced as part of the QPL evaluation process.

WSDOT FOP for AASHTO T 2

Standard Practice for Sampling Aggregates

1. Scope

1.1 This practice covers sampling of coarse and fine aggregates for the following purposes:

1.1.1 Preliminary investigation of the potential source of supply.

1.1.2 Control of the product at the source of supply.

1.1.3 Control of the operations at the site of use.

1.1.4 Acceptance or rejection of the materials.

1.2 The values stated in English units are to be regarded as the standard.

1.3 This standard does not purport to address all of the safety concerns, if any, associated with its use. It is the responsibility of the user of this standard to establish appropriate safety and health practices and determine the applicability of regulatory limitations prior to use.

2. Referenced Documents

2.1 AASHTO Standards

T 248 – Reducing Samples of Aggregate to Testing Size

2.2 ASTM Standards

C 702 – Practice for Reducing Field Samples of Aggregate to Testing Size

D 2234 – Test Method for Collection of a Gross Sample of Coal

D 3665 – Practice for Random Sampling of Construction Materials

E 105 – Practice for Probability Sampling of Materials

E 122 – Practice for Choice of Sample Size to Estimate the Average Quality of a Lot or Process

E 141 – Practice for Acceptance of Evidence Based on the Results of Probability Sampling

3. Significance and Use

3.1 Sampling is equally as important as the testing, and the sampler shall use every precaution to obtain samples that will show the nature and condition of the materials which they represent.

3.2 Samples taken for preliminary testing of aggregate sources must be witnessed or taken by a designated representative of the Regional Materials Engineer or the State Materials Laboratory. A qualified tester employed by the contracting agency or their designated qualified representative will take the acceptance samples.

Note 1: For more comprehensive guidance, on preliminary investigation and sampling of potential aggregate sources see the Appendix 1.

4. General Procedures

4.1 Where practicable, samples to be tested for quality shall be obtained from the finished product.

4.2 Samples of the finished product taken for testing abrasion loss shall not be subject to further crushing or manual reduction in particle size in preparation for the abrasion test unless the size of the finished product is such that it requires further reduction for testing purposes.

4.3 Native soils within the contract limits used for embankment construction and/or backfill material do not require sampling by a qualified tester. For material that requires gradation testing, such as but not limited to manufactured aggregates and Gravel Borrow, a qualified tester shall be required for sampling.

4.4 The number of field samples required depends on the testing required.

4.5 Generally, the sample sizes specified in Table 1 will provide adequate material for routine grading and quality analysis.

4.6 Reduce the field sample to test size in accordance with T 248 or as required by other applicable test methods.

Nominal Maximum Size*in (mm)		Minimum Mass lb (kg)	
US No. 4	(4.75)	5	(2)
¼	(6.3)	10	(4)
⅜	(9.5)	10	(4)
½	(12.5)	20	(8)
⅝	(16.0)	20	(8)
¾	(19.0)	30	(12)
1	(25.0)	55	(25)
1¼	(31.5)	70	(30)
1½	(37.5)	80	(36)
2	(50)	90	(40)
2½	(63)	110	(50)
3	(75)	140	(60)
3½	(90)	180	(80)

*For aggregate, the nominal maximum size sieve is the largest standard sieve opening listed in the applicable specification upon which more than 1 percent of the material is permitted to be retained. For concrete aggregate, the nominal maximum size sieve is the smallest standard sieve opening through which the entire amount of aggregate is permitted to pass.

Size of Samples
Table 1

Note 2: For an aggregate specification having a generally unrestrictive gradation (i.e., wide range of permissible upper sizes), where the source consistently fully passes a screen substantially smaller than the maximum specified size, the nominal maximum size, for the purpose of defining sampling and test specimen size requirements may be adjusted to the screen, found by experience to retain no more than 5 percent of the materials.

5. Procedure

5.1 Sampling From A Flowing Aggregate Stream (Bins or Belt Discharge) – A mechanical, automatic, or semi-automatic sampling device is required for processed materials.

5.1.1 Obtain a field sample with a mass equal to or greater than the minimum recommended mass in Table 1.

5.1.2 Take the sample from the entire cross section of the flowing stream.

5.1.3 Avoid sampling from the beginning or end of the aggregate run due to the potential for segregation.

5.2 Sampling From the Conveyor Belt (Stopped) – Avoid sampling at the beginning or end of the aggregate run due to the potential for segregation.

5.2.1 Select sample by a random method.

5.2.2 Stop the conveyor belt.

5.2.3 Set the sampling template(s) on the belt. The template(s) must have enough space between the sides such that, the material contained between the sides will yield an increment of the required weight.

5.2.4 Carefully scoop all material between the sides of the template(s) into a suitable container being sure to include all fines.

5.2.5 Obtain a minimum of 3 approximately equal increments

5.2.6 Combine increments to form a single sample.

5.3 Sampling From Transportation Units

5.3.1 Visually divide the unit into four quadrants.

5.3.2 Identify one sampling location in each quadrant.

5.3.3 Dig down and remove approximately 0.3 m (1 ft.) of material to avoid surface segregation. Obtain each increment from below this level.

5.3.4 Combine the increments to form a single sample.

5.4 Sampling From Stockpile – Method A – Coarse, Fine, or a Combination of Coarse and Fine Aggregates:

5.4.1 Sampling From a Flat Surface Created by a Loader

5.4.1.1 With a loader form a small sampling pile at the base of the stockpile

5.4.1.2 Create a flat surface by having the loader back drag the small pile.

5.4.1.3 Divide the flat surface into four quadrants.

5.4.1.4 Collect a representative sample from each quadrant by fully inserting the shovel into the flat pile as vertically as possible, take care to exclude the underlying material, roll back the shovel and lift the material slowly out of the pile to avoid material rolling off the shovel.

5.4.1.5 Combine the increments to form a single sample.

5.4.2 Sampling From a Horizontal Surface on The Stockpile Face

5.4.2.1 Create, with a loader if one is available, horizontal surfaces with vertical faces in the top, middle, and bottom third of the stockpile. When no equipment is available a shovel may be used to create the horizontal surfaces with vertical faces.

5.4.2.2 Prevent continued sloughing by shoving a flat board in against the vertical face. Discarded sloughed material to create a horizontal surface.

5.4.2.3 Obtain sample from the horizontal surface as close to the intersection as possible of the horizontal and vertical faces.

5.4.2.4 Obtain at least one increment of equal size from each of the top, middle, and bottom thirds of the pile.

5.4.2.5 Combine the increments to form a single sample.

5.5 Sampling From Stockpiles – Method B – Fine Aggregate (Alternate Tube Method):

5.5.1 Remove the outer layer to avoid potential segregation.

5.5.2 Use a sampling tube to obtain one increment of equal size from a minimum of five random locations on the pile.

5.5.3 Combine the increments to form a single sample.

5.6 Sampling From Roadway (Bases and Subbases) – WSDOT has deleted this section.

6. Shipping Samples

6.1 Transport aggregates in bags or other containers that prevent loss, contamination or damage from mishandling during shipment. The weight limit for each bag of aggregate is 30 pounds maximum.

6.2 Shipping containers for aggregate samples shall have a transmittal or suitable individual identification attached and enclosed so that the sample can be identified when it reaches the laboratory.

6.3 All samples submitted for testing to the Regional or State Materials Laboratories shall be accompanied by a completed sample information report from the Materials Testing System (MATS).

Note 4: Agencies that do not have access to MATS may submit a completed DOT Form 350-056.

Appendices

X1. Exploration of Potential Aggregate Sources

X1.1 Scope

X1.1.1 Sampling for evaluation of potential aggregate sources should be performed by a responsible trained and experienced person. Because of the wide variety of conditions under which sampling may have to be done, it is not possible to describe detailed procedures applicable to all circumstances. This appendix is intended to provide general guidance and list more comprehensive references.

X1.2 Sampling Stone From Quarries of Ledges

X1.2.1 Inspection – The ledge or quarry face should be inspected to determine discernible variations or strata. Differences in color and structure should be recorded.

X1.2.2 Sampling and Size of Sample – Separate samples having a mass of at least 55 lbs (25 kg) should be obtained from each discernible stratum. The sample should not include material weathered to such an extent that it is no longer suitable for the purpose intended. One or more pieces in each sample should be at least 6 × 6 × 4 in (150 × 150 × 100 mm) in size with the bedding plane plainly marked, and this piece should be free of seams or fractures.

X1.2.3 Record – In addition to the general information accompanying all samples, the following information should accompany samples taken from ledges or quarry faces:

X1.2.3.1 Approximate quantity available. (If quantities is very large, this may be recorded as practically unlimited.)

X1.2.3.2 Quantity and character of overburden.

X1.2.3.3 A detailed record showing boundaries and location of material represented by each sample.

Note X1.1: A sketch, plan, and elevation showing the thickness and location of the different layers is recommended for this purpose.

X1.3 Sampling Roadside or Bank Run Sand and Gravel Deposits

X1.3.1 Inspection – Potential sources of bank run sand and gravel may include previously worked pits from which there is an exposed face or potential deposits discovered through air-photo interpretation, geophysical exploration, or other types of terrain investigation.

X1.3.2 Sampling – Samples should be so chosen from each different stratum in the deposit discernible to the sampler. An estimate of the quantity of the different materials should be made. If the deposit is worked as an open-face bank or pit, samples should be taken by channeling the face vertically, bottom to top, so as to represent the materials proposed for use. Overburdened or disturbed material should not be included in the sample. Test holes should be excavated or drilled at numerous locations in the deposit to determine the quality of the material and the extent of the deposit beyond the exposed face, if any. The number and depth of test holes will depend upon the quantity of the material needed, topography of the area, nature of the deposit, character of the material, and potential value of the material in the deposit. If visual inspection indicates that there is considerable variation in the material, individual samples should be selected from the material in each well defined stratum. Each sample should be thoroughly mixed and quartered if necessary so that the field sample thus obtained will be at least 25 lb (12 kg) for sand and 75 lb (35 kg) if the deposit contains an appreciable amount of coarse aggregate.

X1.3.3 Record – In addition to the general information accompanying all samples, the following information should accompany samples of bank run sand and gravel:

X1.3.3.1 Location of supply.

X1.3.3.2 Estimate of approximate quantity available.

X1.3.3.3 Quantity and character of overburden.

X1.3.3.4 Length of haul to proposed site of work.

X1.3.3.5 Character of haul (kind of road, maximum grades, etc.).

X1.3.3.6 Details as to extent and location of material represented by each sample.

Performance Exam Checklist

Sampling of Aggregates
FOP for AASHTO T 2

Participant Name _____ Exam Date _____

Procedure Element

Preparation **Yes No**

1. The tester has a copy of the current procedure on hand?

Conveyor Belts – Stopped

2. Belt stopped?
3. Sampling device set on belt, avoiding intrusion of adjacent material?
4. Sample, including all fines, scooped off?

Flowing Aggregate Sampler

5. Container passed through full stream of material as it runs off end of belt? (Mechanical, Automatic, or Semi Automatic Sampler Only)

Transport Units

6. Transport Unit divided into 4 quadrants?
7. 1 foot of material removed each sampling site and sample taken?
8. Four incremental samples into one combined sample?

Stockpiles

9. Create vertical face, if one does not exist, or use mechanical equipment to build a small sampling pile?
10. At least three increments taken, at various locations?

Procedure Element

11. When sampling sand, outer layer removed and increments taken from a least five locations?
12. Correct sample size?

First Attempt: Pass Fail Second Attempt: Pass Fail

Signature of Examiner _____

Comments:

WSDOT FOP FOR WAQTC TM 2

Sampling Freshly Mixed Concrete

Scope

This method covers procedures for obtaining representative samples of fresh concrete delivered to the project site and on which tests are to be performed to determine compliance with quality requirements of the specifications under which concrete is furnished. The method includes sampling from stationary, paving and truck mixers, and from agitating and non-agitating equipment used to transport central mixed concrete.

This method also covers the procedure for preparing a sample of concrete for further testing where it is necessary to remove aggregate larger than the designated size for the test method being performed. The removal of large aggregate particles is accomplished by wet sieving.

Sampling concrete may involve hazardous materials, operations, and equipment. This standard does not purport to address all of the safety problems associated with its use. It is the responsibility of the user of this standard to establish appropriate safety and health practices.

Warning – Fresh Hydraulic cementitious mixtures are caustic and may cause chemical burns to skin and tissue upon prolonged exposure.

Apparatus

- Wheelbarrow
- Cover for wheelbarrow (plastic, canvas, or burlap)
- Shovel
- 5 gal bucket for water

Procedure

Use every precaution in order to obtain samples representative of the true nature and condition of the concrete being placed being careful not to obtain samples from the very first or very last portions of the batch. The size of the sample will be 1.5 times the volume of concrete required for the specified testing, but not less than 1 ft^3 after wet-sieving, if required.

Note 1: Sampling should normally be performed as the concrete is delivered from the mixer to the conveying vehicle used to transport the concrete to the forms; however, specifications may require other points of sampling, such as at the discharge of a concrete pump.

- **Sampling from stationary mixers, except paving mixers**

  Obtain the sample after a minimum of 1/2 m3 (1/2 yd3) of concrete has been discharged. Perform sampling by passing a receptacle completely through the discharge stream, or by completely diverting the discharge into a sample container. If discharge of the concrete is too rapid to divert the complete discharge stream, discharge the concrete into a container or transportation unit sufficiently large to accommodate the entire batch and then accomplish the sampling in the same manner as given for paving mixers. Take care not to restrict the flow of concrete from the mixer, container, or transportation unit so as to cause segregation. These requirements apply to both tilting and nontilting mixers.

- **Sampling from paving mixers**

  Obtain material from at least five different locations in the pile and combine into one test sample. Avoid contamination with subgrade material or prolonged contact with absorptive subgrade. To preclude contamination or absorption by the subgrade, sample the concrete by placing a shallow

container on the subgrade and discharging the concrete across the container. The container shall be of a size sufficient to provide a sample size that is in agreement with the nominal maximum aggregate size.

- **Sampling from revolving drum truck mixers or agitators**

  Obtain the sample after a minimum of 1/2 m3 (1/2 yd3) of concrete has been discharged. Do not obtain samples until after all of the water has been added to the mixer. Do not obtain samples from the very first or last portions of the batch discharge. Sample by repeatedly passing a receptacle through the entire discharge stream or by completely diverting the discharge into a sample container. Regulate the rate of discharge of the batch by the rate of revolution of the drum and not by the size of the gate opening.

- **Sampling from open-top truck mixers, agitators, non-agitating equipment or other types of open-top containers**

  Sample by whichever of the procedures described above is most applicable under the given conditions.

- **Sampling from pump or conveyor placement systems**

  Obtain sample after a minimum of 1/2 m3 (1/2 yd3) of concrete has been discharged. Do not obtain samples until after all of the pump slurry has been eliminated. Sample by repeatedly passing a receptacle through the entire discharge system or by completely diverting the discharge into a sample container. Do not lower the pump arm from the placement position to ground level for ease of sampling, as it may modify the air content of the concrete being sampled. Do not obtain samples from the very first or last portions of the batch discharge.

Transport samples to the place where fresh concrete tests are to be performed and specimens are to be molded.

Combine and remix the sample minimum amount necessary to ensure uniformity. Protect the sample from direct sunlight, wind, rain, and sources of contamination.

Complete test for temperature and start tests for slump and air content within 5 minutes of obtaining the sample. Complete tests as expeditiously as possible. Start molding specimens for strength tests within 15 minutes of obtaining the sample.

Report results on concrete delivery ticket (i.e., Certificate of Compliance).

The name of the qualified tester who performed the field acceptance test is required on concrete delivery tickets containing test results.

Wet Sieving

When required for slump testing, air content testing or molding test specimens the concrete sample shall be wet-sieved, prior to remixing, by the following:

1. Place the sieve designated by the test procedure over dampened sample container.
2. Pass the concrete over the designated sieve. Do not overload the sieve (one particle thick.)
3. Shake or vibrate the sieve until no more material passes the sieve.
4. Discard oversize material including all adherent mortar.
5. Repeat until sample of sufficient size is obtained.
6. Mortar adhering to the wet-sieving equipment shall be included with the sample.

Note 1: Wet-sieving is not allowed for samples being utilized for density determinations according to the FOP for AASHTO T 121.

Performance Exam

Checklist Sampling Freshly Mixed Concrete
FOP for WAQTC TM 2

Participant Name _____ Exam Date _____

Procedure Element	**Yes**	**No**
1. The tester has a copy of the current procedure on hand?		
2. Obtain a representative sample:		
a. Sample the concrete after ½ cy discharged?		
b. Pass receptacle through entire discharge stream or completely divert discharge stream into sampling container?		
c. Transport samples to place of testing?		
d. Sample remixed?		
e. Sample protected?		
f. Correct sample size?		
3. Start tests for slump and air within 5 minutes of sample being obtained?		
4. Start molding cylinders within 15 minutes of sample being obtained?		
5. Protect sample against rapid evaporation and contamination?		

First Attempt: Pass Fail Second Attempt: Pass Fail

Signature of Examiner _____

This checklist is derived, in part, from copyrighted material printed in ACI CP-1, published by the American Concrete Institute.

Comments:

WSDOT FOP for WAQTC TM 8

In-Place Density of Bituminous Mixes Using the Nuclear Moisture-Density Gauge

Scope

This test method describes a test procedure for determining the density of bituminous mixes by means of a nuclear density gauge employing either direct transmission or thin layer methods. Correlation with densities determined under SOP 730 is required.

Apparatus

- Nuclear density gauge with the factory matched standard reference block.
- Drive pin, guide, scraper plate, and hammer for testing in direct transmission mode.
- Transport case for properly shipping and housing the gauge and tools.
- Operator manual for the specific make and model of gauge.
- Radioactive materials information and calibration packet containing:
  - Daily Standard Count Log
  - Factory and Laboratory Calibration Data Sheet
  - Density Standard Decay Sheet
  - Leak Test Certificate
  - Shippers Declaration for Dangerous Goods
  - Procedure Memo for Storing, Transporting, and Handling Nuclear Testing Equipment
  - Other radioactive materials documentation as required by local regulatory requirements.

Material

WSDOT does not use filler material.

Radiation Safety

This method does not purport to address the safety concerns, if any, associated with its use. This test method involves potentially hazardous materials. The gauge utilizes radioactive materials that may be hazardous to the health of the user unless proper precautions are taken. Users of this gauge must become familiar with the applicable safety procedures and governmental regulations. All operators will be trained in radiation safety prior to operating nuclear density gauges. Some agencies require the use of personal monitoring devices such as a thermoluminescent dosimeter or film badge.

Effective instructions together with routine safety procedures such as source leak tests, recording and evaluation of personal monitoring device data, etc., are a recommended part of the operation and storage of this gauge.

Calibration

WSDOT performs calibrations according to the manufacturer's operators manual.

Standardization (Standard Count)

1. Turn the gauge on and allow it to stabilize for a minimum of 45 minutes prior to taking a Standard Count. Leave the power on during the day's testing.

   Note 1: If for any reason the gauge loses power or is turned off during the work period, the Standard Count must be re-established prior to use.

2. Prior to any correlation of the nuclear gauge, perform a Stat Test in accordance with the gauge's operator manual. If the gauge passes the Stat Test, perform a Standard Count. If the gauge fails the Stat Test, run a second Stat Test. If the gauge fails the second Stat Test, it should be repaired or recalibrated.

3. Take a Standard Count at the start of each day's work and as often as deemed necessary by the operator or agency. Daily variations in Standard Count shall not exceed the daily variations established by the manufacturer of the gauge. Compare the daily Standard Count to the Density Standard Decay Sheet (Note 2) to ensure the standard count falls within acceptable limits. If the daily variations in Standard Count are exceeded after repeating the Standard Count procedure or if the daily Standard Count is outside the range of the Standard Decay Sheet, the gauge should be repaired and or recalibrated.

4. Record the Standard Count for both density and moisture in the Daily Standard Count Log. Instructions for taking a Standard Count are found in the gauge's operator manual.

   Note 2: The Density Standard Decay Sheet is found in the calibration documentation packet. This sheet shows the anticipated standard count range based on the calculated decay rate of the gauges radioactive source over the passage of time.

Test Site Location

1. Select a test location(s) randomly and in accordance with WSDOT Test Method T 716. Test sites should be relatively smooth and flat and meet the following conditions:

   a. At least 33 ft (10 m) away from other sources of radioactivity.

   b. At least 10 ft (3 m) away from large objects (i.e., vehicles).

   c. No closer than 24 in (600 mm) to any vertical mass, or less than 6 in (152.0 mm) from a vertical pavement edge.

Overview

There are two approved methods for determining in-place density of bituminous mixes:

- Direct Transmission – When the lift thickness is 0.15 foot or greater.
- Thin Layer – When the lift thickness is 0.10 foot or greater. Only gauges with two sets of photon detectors (i.e., Troxler 3450) operating in "Thin Layer Mode" will be allowed.

Note 3: When a density lot is started in thin layer mode, it must remain in thin layer mode until the lot is completed. If a density lot is started in direct transmission mode, the lot must be completed in direct transmission mode unless the pavement depth falls below 0.15 feet. In such a case, the gauge must be correlated in thin layer mode prior to use.

Procedure

Direct Transmission Mode

1. Maintaining maximum contact between the base of the gauge and the surface of the material under test is critical.
2. Use the guide and scraper plate as a template and drill a hole to a depth of at least ¼ in (7 mm) deeper than the measurement depth required for the gauge.
3. Place the gauge on the prepared surface so the source rod can enter the hole. Insert the probe in the hole and lower the source rod to the desired test depth using the handle and trigger mechanism. Position the gauge with the long axis of the gauge parallel to the direction of paving. Pull the gauge so that the probe is firmly against the side of the hole. Draw an outline around the entire gauge base for correlation coring, when applicable.

   WSDOT Note: For alignment purposes, the user may expose the source rod for a maximum of 10 seconds.
4. Take test in accordance with manufacturer's recommendation.
5. Take one 4-minute test and record the wet density (WD) reading.

Thin Layer Mode

1. Maintaining maximum contact between the base of the gauge and the surface of the material under test is critical.
2. A thin layer gauge (i.e., Troxler 4640) or a moisture density and thin layer gauge that has a thin layer mode setting (i.e., Troxler 3450) is required to perform this testing.
3. Ensure that the depth entered into the gauge matches the pavement depth and the depth at which the gauge was correlated. Draw an outline around the entire gauge base for correlation coring.
4. Take test in accordance with manufacturer's recommendation.
5. Take one 4-minute test and record the density (D) reading.

Calculation of Percent of Compaction

The percent compaction is determined by comparing the in-place wet density (WD) or density (D), as determined by this method, to the Average Theoretical Maximum Density of the bituminous mix as determined by the WSDOT SOP 729.

The density gauge operator will receive a new average Theoretical Maximum Density from the tester at the bituminous mix plant each day that production requires a mix test. The density gauge operator will continue to use the previous moving average until a new moving average is received from the tester at the bituminous mix plant.

Each gauge shall be correlated in accordance with WSDOT SOP 730. A correlation factor will be provided to the density gauge operator for each gauge.

Use the following equations to calculate the percent of compaction:

1. Calculate the corrected gauge reading to the nearest tenth of a percent as follows:

   Corrected Gauge Reading = WD x CF or D x CF

   Where:
   WD = moisture density gauge wet density reading
   D = Bituminous Mix Density reading for thin layer mode gauge
   CF = gauge correlation factor (WSDOT SOP 730)

2. Calculate the percent compaction as follows.

$$\text{Percent Compaction} = \frac{\text{Corrected Gauge Reading}}{\text{Average Theoretical Maximum Density}} \times 100$$

Correlation With Cores

WSDOT has deleted this section, refer to WSDOT SOP 730.

Report

Report the results using one of the following:

- Materials Testing System (MATS)
- DOT Forms 350-092 and 350-157
- Form approved in writing by the State Materials Engineer

Report the percent compaction to the nearest tenth of a percent (0.1 percent).

Tester Qualification Practical Exam Checklist

In-Place Density of Bituminous Mixes Using the Nuclear Moisture-Density Gauge FOP for WAQTC TM 8

Participant Name _____ Exam Date _____

Procedure Element	**Yes**	**No**
1. The tester has a copy of the current procedure on hand?		
2. All equipment is functioning according to the test procedure, and if required, has the current calibration/verification tags present?		
3. Gauge turned on?		
4. Gauge standardized and Standard Count recorded?		
5. Standard Count compared with Density Standard Decay sheet?		
6. Test location selected appropriately?		
7. Direct Transmission Mode:		
a. Hole made a minimum of ¼ inch deeper than measurement depth?		
b. Gauge placed parallel to direction of paving, probe extended, gauge pulled back so probe against hole?		
c. For alignment purposes did not expose the source rod for more than 10 seconds.		
d. One 4-minute test made?		
e. Wet density recorded?		
8. Thin Layer Gauge or Gauge in Thin Layer Mode:		
a. Gauge placed, probe extended to backscatter position?		
b. One 4-minute test made; gauge placed as described in the manufacturer recommendations?		
c. Density (D) recorded?		
9. All calculations performed correctly?		
10. Nuclear Gauge secured in a manner consistent with current DOH requirements?		

First Attempt: Pass Fail Second Attempt: Pass Fail

Signature of Examiner _____

Comments:

Performance Exam Checklist

AASHTO T 19M/T 19
Bulk Density ("Unit Weight") and Voids in Aggregate (Rodding Procedure Only)

WSDOT has adopted AASHTO T 19.

Participant Name _____ Exam Date _____

Procedure Element	Yes	No
1. The tester has a copy of the current procedure on hand?	❐	❐
2. All equipment is functioning according to the test procedure, and if required, has the current calibration/verification tags present?	❐	❐
3. Sample is approximately 125 to 200 percent of quantity required to fill measure?	❐	❐
4. Sample is handled correctly to avoid segregation?	❐	❐
5. Sample is dried in accordance with WSDOT FOP for AASHTO T 255?	❐	❐
Rodding Procedure		
6. Mass of empty unit weight measure is determined and recorded (nearest 0.1 lb)?	❐	❐
7. Measure is filled in three equal layers?	❐	❐
8. Each layer is rodded throughout it's depth 25 times with a hemispherical end of rod but rodding does not penetrating into the next layer?	❐	❐
9. Rodding is evenly distributed over the surface of the sample?	❐	❐
10. Mass of unit weight measure plus contents is determined to the nearest 0.1 lb and recorded?	❐	❐
11. All calculations performed correctly?	❐	❐
12. Bulk density reported to the nearest 1 lb/ft^3?	❐	❐

First Attempt: Pass ❐ Fail ❐ Second Attempt: Pass ❐ Fail ❐

Signature of Examiner _____

Comments:

WSDOT FOP for AASHTO T 22[1]

Compressive Strength of Cylindrical Concrete Specimens

1. Scope

1.1 This test method covers determination of compressive strength of cylindrical concrete specimens such as molded cylinders and drilled cores. It is limited to concrete having a unit weight in excess of 50 lb/ft^3 (800 kg/m^3).

1.2 The values stated in English units are the standard.

1.3 This standard may involve hazardous materials, operations, and equipment. This standard does not purport to address all of the safety problems associated with its use. It is the responsibility of whoever uses this standard to consult and establish appropriate safety and health practices and determine the applicability of regulatory limitations prior to use.

Warning: Means should be provided to contain concrete fragments during sudden rupture of specimens. Tendency for sudden rupture increases with increasing concrete strength (Note 1).

Note 1: The safety precautions given in the Manual of Aggregate and Concrete Testing, located in the Related Materials section of Volume 04.02 of the Annual Book of ASTM Standards, are recommended.

1.4 The text of this standard references notes which provide explanatory material. These notes shall not be considered as requirements of the standard.

2. Referenced Documents

2.1 AASHTO Standards

R 39 – Making and Curing Concrete Test Specimens in the Laboratory

T 23 – Making and Curing Concrete Test Specimens in the Field

T 24 – Obtaining and Testing Drilled Cores and Sawed Beams of Concrete

T 231 – Capping Cylindrical Concrete Specimens

2.2 ASTM Standards

C 873 – Test Method for Compressive Strength of Concrete Cylinders Cast in Place in Cylindrical Molds

C 1231 – Practice for Use of Unbonded Caps in Determination of Compressive Strength of Hardened Concrete Cylinders

E 74 – Practice for Calibration of Force-Measuring Instruments for Verifying the Load Indication of Testing Machines

[1]This FOP is based on AASHTO T 22-11 and has been modified per WSDOT standards. To view the redline modifications, contact the WSDOT Quality Systems Manager at 360-709-5412.

3. Summary of Test Method

3.1 This test method consists of applying a compressive axial load to molded cylinders or cores at a rate which is within a prescribed range until failure occurs. The compressive strength of the specimen is calculated by dividing the maximum load attained during the test by the cross-sectional area of the specimen.

4. Significance and Use

4.1 Care must be exercised in the interpretation of the significance of compressive strength determinations by this test method since strength is not a fundamental or intrinsic property of concrete made from given materials. Values obtained will depend on the size and shape of the specimen, batching, mixing procedures, the methods of sampling, molding, and fabrication and the age, temperature, and moisture conditions during curing.

4.2 This test method is used to determine compressive strength of cylindrical specimens prepared and cured in accordance with Methods T 23, T 24, T 231, and ASTM C873.

4.3 The results of this test method are used as a basis for quality control of concrete proportioning, mixing, and placing operations; determination of compliance with specifications; control for evaluating effectiveness of admixtures and similar uses.

5. Apparatus

5.1 Testing Machine – The testing machine shall be of a type having sufficient capacity and capable of providing the rates of loading prescribed in Section 7.5. As a minimum, the machine should be capable of achieving 170 percent of the design strength.

5.1.1 Verify calibration of the testing machines in accordance with Method T 67 except that the verified loading range shall be as required in Section 5.3.2. Verification is required under the following conditions:

5.1.1.1 At least annually, but not to exceed 13 months.

5.1.1.2 On original installation or immediately after relocation.

5.1.1.3 Immediately after making repairs or adjustments that affect the operation of the force applying system or the values displayed on the load indicating system, except for zero adjustments that compensate for the mass (weight) of tooling, or specimen, or both.

5.1.1.4 Whenever there is reason to suspect the accuracy of the indicated loads.

5.1.2. Design – The design of the machine must include the following features:

5.1.2.1 The machine must be power operated and must apply the load continuously rather than intermittently, and without shock. If it has only one loading rate (meeting the requirements of Section 7.5), it must be provided with a supplemental means for loading at a rate suitable for verification. This supplemental means of loading may be power or hand operated.

5.1.2.2 The space provided for test specimens shall be large enough to accommodate, in a readable position, an elastic calibration device which is of sufficient capacity to cover the potential loading range of the testing machine and which complies with the requirements of Practice E 74.

Note 2: The types of elastic calibration devices most generally available and most commonly used for this purpose are the circular proving ring or load cell.

5.1.3 Accuracy – The accuracy of the testing machine shall be in accordance with the following provisions:

5.1.3.1 The percentage of error for the loads within the proposed range of use of the testing machine shall not exceed ± 1.0 percent of the indicated load.

5.1.3.2 The accuracy of the testing machine shall be verified by applying five test loads in four approximately equal increments in ascending order. The difference between any two successive test loads shall not exceed one third of the difference between the maximum and minimum test loads.

5.1.3.3 The test load as indicated by the testing machine and the applied load computed from the readings of the verification device shall be recorded at each test point. Calculate the error, E, and the percentage of error, Ep, for each point from these data as follows:

$$E = A - B$$
$$Ep = 100(A - B)/B$$

where:
A = load, lbf (kN) indicated by the machine being verified; and
B = applied load, lbf (kN) as determined by the calibrating device.

5.1.3.4 The report on the verification of a testing machine shall state within what loading range it was found to conform to specification requirements rather than reporting a blanket acceptance or rejection. In no case shall the loading range be stated as including loads below the value which is 100 times the smallest change of load that can be estimated on the load-indicating mechanism of the testing machine or loads within that portion of the range below 10 percent of the maximum range capacity.

5.1.3.5 In no case shall the loading range be stated as including loads outside the range of loads applied during the verification test.

5.1.3.6 The indicated load of a testing machine shall not be corrected either by calculation or by the use of a calibration diagram to obtain values within the required permissible variation.

5.2 The testing machine shall be equipped with two steel bearing blocks with hardened faces (Note 3), one of which is a spherically seated block that will bear on the upper surface of the specimen, and the other a solid block on which the specimen shall rest. Bearing faces of the blocks shall have a minimum dimension at least 3 percent greater than the diameter of the specimen to be tested. Except for the concentric circles described below, the bearing faces shall not depart from a plane by more than 0.001 in (0.025 mm) in any 6 in (150 mm) of blocks 6 in (150 mm) in diameter or larger, or by more than 0.001 in (0.025 mm) in the diameter of any smaller block; and new blocks shall be manufactured within one half of this tolerance. When the diameter of the bearing face of the spherically seated block exceeds the diameter of the specimen by more than 0.5 in (13 mm), concentric circles not more than 0.031 in (0.8 mm) deep and not more than 0.047 in (1 mm) wide shall be inscribed to facilitate proper centering.

Note 3: It is desirable that the bearing faces of blocks used for compression testing of concrete have a Rockwell hardness of not less than 55 HRC.

5.2.1 Bottom bearing blocks shall conform to the following requirements:

5.2.1.1 The bottom bearing block is specified for the purpose of providing a readily machinable surface for maintenance of the specified surface conditions (Note 4). The top and bottom surfaces shall be parallel to each other. Its least horizontal dimension shall be at least 3 percent greater than the diameter of the specimen to be tested. Concentric circles as described in Section 5.2 are optional on the bottom block.

Note 4: The block may be fastened to the platen of the testing machine.

5.2.1.2 Final centering must be made with reference to the upper spherical block when the lower bearing block is used to assist in centering the specimen. The center of the concentric rings, when provided, or the center of the block itself must be directly below the center of the spherical head. Provision shall be made on the platen of the machine to assure such a position.

5.2.1.3 The bottom bearing block shall be at least 1 in (25 mm) thick when new, and at least 0.9 in (22.5 mm) thick after any resurfacing operations, except when the block is in full and intimate contact with the lower platen of the testing machine, the thickness may be reduced to 0.38 in (10 mm).

Note 5: If the testing machine is so designed that the platen itself can be readily maintained in the specified surface condition, a bottom block is not required.

5.2.2 The spherically seated bearing block shall conform to the following requirements:

5.2.2.1 The maximum diameter of the bearing face of the suspended spherically seated block shall not exceed the values given below:

Diameter of Test Specimens in (mm)	Maximum Diameter of Bearing Face in (mm)
2 (50)	4 (105)
3 (75)	5 (130)
4 (100)	6.5 (165)
6 (150)	10 (255)
8 (200)	11 (280)

Note 6: Square bearing faces are permissible, provided the diameter of the largest possible inscribed circle does not exceed the above diameter.

5.2.2.2 The center of the sphere shall coincide with the surface of the bearing face within a tolerance of ± 5 percent of the radius of the sphere. The diameter of the sphere shall be at least 75 percent of the diameter of the specimen to be tested.

5.2.2.3 The ball and the socket shall be designed so that the steel in the contact area does not permanently deform when loaded to the capacity of the test machine. (Note 7).

Note 7: The preferred contact area is in the form of a ring (described as preferred "bearing" area) as shown on Figure 1.

5.2.2.4 The curved surfaces of the socket and of the spherical portion shall be kept clean and shall be lubricated with a petroleum-type oil such as conventional motor oil, not with a pressure type grease. After contacting the specimen and application of small initial load, further tilting of the spherically seated block is not intended and is undesirable.

5.2.2.5 If the radius of the sphere is smaller than the radius of the largest specimen to be tested, the portion of the bearing face extending beyond the sphere shall have a thickness not less than the difference between the radius of the sphere and radius of the specimen. The least dimension of the bearing face shall be at least as great as the diameter of the sphere (see Figure 1).

5.2.2.6 The movable portion of the bearing block shall be held closely in the spherical seat, but the design shall be such that the bearing face can be rotated freely and tilted at least 4 degrees in any direction.

5.2.2.7 If the ball portion of the upper bearing block is a two-piece design composed of a spherical portion and a bearing plate, a mechanical means shall be provided to ensure that the spherical portion is fixed and centered on the bearing plate.

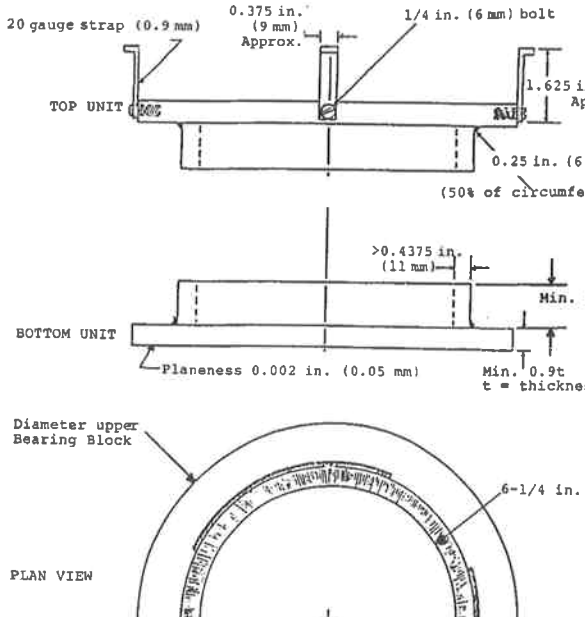

Note: Provision shall be made for holding the ball in the socket and for holding the entire unit in the testing machine

Schematic Sketch of a Typical Spherical Bearing Block
Figure 1

5.3 Load Indication

5.3.1 If the load of a compression machine used in concrete testing is registered on a dial, the dial shall be provided with a graduated scale that is readable to at least the nearest 0.1 percent of the full scale load (Note 8). The dial shall be readable within 1 percent of the indicated load at any given load level within the loading range. In no case shall the loading range of a dial be considered to include loads below the value that is 100 times the smallest change of load that can be read on the scale. The scale shall be provided with a graduation line equal to zero and so numbered. The dial pointer shall be of sufficient length to reach the graduation marks; the width of the end of the pointer shall not exceed the clear distance between the smallest graduations. Each dial shall be equipped with a zero adjustment which is easily accessible from the outside of the dial case, while observing the zero mark and dial pointer, and with a *suitable device that at all times until reset will indicate to within one percent accuracy the maximum load applied to the specimen*.

Note 8: As close as can reasonably be read is considered to be 0.02 in (0.5 mm) along the arc described by the end of the pointer. Also, one half of a scale interval is close as can reasonably be read when the spacing on the load indicating mechanism is between 0.04 in (1 mm) and 0.06 in (2 mm). When the spacing is between 0.06 and 0.12 in (2 and 3 mm), one third of a scale interval can be read with reasonable certainty. When the spacing is 0.12 in (3 mm) or more, one fourth of a scale interval can be read with reasonable certainty.

5.3.2 If the testing machine load is indicated in digital form, the numerical display must be large enough to be easily read. The numerical increment must be equal to or less than 0.10 percent of the full scale load of a given loading range. In no case shall the verified loading range include loads less than the minimum numerical increment multiplied by 100. The accuracy of the indicated load must be within 1.0 percent for any value displayed within the verified loading range. Provision must be made for adjusting to indicate true zero at zero load. There shall be provided a maximum load indicator that at all times until reset will indicate within 1.0 percent system accuracy the maximum load applied to the specimen.

5.4 Provide a means for containing fragments in the event of explosive rupture of the cylinders during testing.

6. Specimens

6.1 Specimens shall not be tested if any individual diameter of a cylinder differs from any other diameter of the same cylinder by more than 2 percent (Note 9).

Note 9: This may occur when single use molds are damaged or deformed during shipment, when flexible single use molds are deformed during molding, or when a core drill deflects or shifts during drilling.

6.2 Neither end of compressive test specimens when tested shall depart from perpendicularity to the axis by more than 0.5 degrees (approximately equivalent to 0.12 in in 12 in (3 mm in 300 mm). The ends of compression test specimens that are not plane within 0.002 in (0.050 mm) shall be sawed, ground, or capped in accordance with T 231 to meet that tolerance or if the ends meet the requirements of A6, then neoprene caps with steel controllers may be used instead of capping. The diameter used for calculating the cross-sectional area of the test specimen shall be determined to the nearest 0.01 in (0.25 mm) by averaging two diameters measured at right angles to each other at about mid-height of the specimen.

6.3 The height of the cylinder shall be determined to 0.01 in. The mass of the cylinder shall be determined to the nearest 0.1 lb or better.

7. Procedure

7.1 Compression tests of moist-cured specimens shall be made as soon as practicable after removal from moist storage.

7.2 Test specimens shall be kept moist by any convenient method during the period between removal from moist storage and testing. They shall be tested in the moist condition.

7.3 All test specimens for a given test age shall be broken within the permissible time tolerances prescribed as follows:

Test Age	Permissible Tolerance
12 h	± 0.25 h or 2.1%
24 h	± 0.5 h or 2.1%
3 days	+ 2 h or 2.8%
7 days	+ 6 h or 3.6%
28 days	+ 20 h or 3.0%
56 days	+ 40 h or 3.0%
90 days	+ 2 days 2.2%

Note: The 28-day compressive break may be extended by up to 48 hours if the scheduled 28-day break falls on a Saturday, Sunday, or Holiday. The Regional Materials Engineer must authorize the time extension in writing.

7.4 Placing the Specimen Place the plain (lower) bearing block, with its hardened face up, on the table or platen of the testing machine directly under the spherically seated (upper) bearing block. Wipe clean the bearing faces of the upper and lower bearing blocks and of the test specimen and place the test specimen on the lower bearing block.

7.4.1 Zero Verification and Block Seating – Prior to testing the specimen, verify that the load indicator is set to zero. In cases where the indicator is not properly set to zero, adjust the indicator (Note 10). Prior to the spherically-seated block is being brought to bear on the specimen, rotate its movable portion gently by hand so that uniform seating is obtained.

Note 10: The technique used to verify and adjust load indicator to zero will vary depending on the machine manufacturer. Consult your owner's manual or compression machine calibrator for the proper technique.

7.5 Rate of Loading – Apply the load continuously and without shock.

7.5.1 The load shall be applied at a rate of movement (platen to crosshead measurement) corresponding to a stress rate on the specimen of 35 ± 7 psi/s (0.25 ± 0.05 MPa/s) (Note 11). The designated rate of movement shall be maintained at least during the latter half of the anticipated loading phase.

Note 11: For a screw driven or displacement-controlled testing machine, preliminary testing will be necessary to establish the required rate of movement to achieve the specified stress rate. The required rate of movement will depend on the size of the test specimen, the elastic modulus of the concrete, and the stiffness of the testing machine.

7.5.2 During application of the first half of the anticipated loading phase, a higher rate of loading shall be permitted. The higher loading rate shall be applied in a controlled manner so that the specimen is not subjected to shock loading.

7.5.3 Make no adjustment in the rate of movement (platen to crosshead) as the ultimate load is being approached and the stress rate decreases due to cracking in the specimen.

7.6 Apply the compressive load until the load indicator shows that the load is decreasing steadily and the specimen displays a well-defined fracture pattern (Figure 2). For a testing machine equipped with a specimen break detector, automatic shut-off of the testing machine is prohibited until the load has dropped to a value that is less than 95 percent of the peak load. When testing with unbonded caps, a corner fracture may occur before the ultimate capacity of the specimen has been attained. Continue compressing the specimen until the user is certain that the ultimate capacity has been attained. Record the maximum load carried by the specimen during the test and note the type of fracture pattern according to Figure 2. If the fracture pattern is not one of the typical patterns shown in Figure 2, sketch and describe briefly the fracture pattern. If the measured strength is lower than expected, examine the fractured concrete and note the presence of large air voids, evidence of segregation, whether fractures pass predominantly around or through the coarse aggregate particles, and verify end preparations were in accordance with Practice T 231 or Practice C1231.

Note WSDOT 1: The test loading should be stopped when 80% of the loading capacity of the testing machine has been reached. Record the maximum load achieved and note that the sample was not taken to failure as it exceeded the safe working limits of the testing machine.

8. Calculation

8.1 Calculate the compressive strength of the specimen by dividing the maximum load carried by the specimen during the test by the average cross-sectional area determined as described in Section 6 and express the result to the nearest 10 psi (0.1 MPa).

8.2 If the specimen length to diameter ratio is 1.75 or less, correct the result obtained in Section 8.1 by multiplying by the appropriate correction factor shown in the following table (Note 11):

L/D:	1.75	1.50	1.25	1.00	
Factor:	0.98	0.96	0.93	0.87	(Note 11)

Use interpolation to determine correction factors for L/D values between those given in the table.

Note 11: Correction factors depend on various conditions such as moisture condition, strength level, and elastic modulus. Average values are given in the table. These correction factors apply to lightweight concrete weighing between 100 and 120 lb/ft^3 (1,600 and 1,920 kg/m^3) and to normal weight concrete. They are applicable to concrete dry or soaked at the time of loading and for nominal concrete strengths from 2,000 to 6,000 psi(15 to 45 MPa). For strengths higher than 6,000 psi (45 MPa), correction factors may be larger than the values listed above x.

8.3 Calculate the average compressive strength of the set of specimens to the nearest 10 psi or 0.1MPa.

$$\text{Average Compressive Strength} = \frac{(CS_1 + CS_2)}{2}$$

Where:

CS_1 = Compressive Strength of Specimen 1
CS_2 = Compressive Strength of Specimen 2

Calculate the density of the specimen to the nearest 1 lb/ft^3 (10 kg/m^3) as follows:

$$\text{Density} = \frac{W}{V}$$

where:

W = mass of specimen, lb (kg)
V = volume of specimen computed from the average diameter and average length or from weighing the cylinder in air and submerged, ft^3 (m^3)

9. Report

9.1 Report the following information:

9.1.1 Identification number.

9.1.2 Diameter (and length, if outside the range of 1.8D to 2.2D), in inches or millimeters.

9.1.3 Cross-sectional area, in square inches or centimeters.

9.1.4 Maximum load, in pounds-force or Newton.

9.1.5 Compressive strength calculated to the nearest 10 psi or 0.1MPa.

9.1.6 Average compressive strength for the set of specimens calculated to the nearest 10 psi or 0.1 MPa.

9.1.7 Type of fracture, if other than the usual cone (see Figure 2).

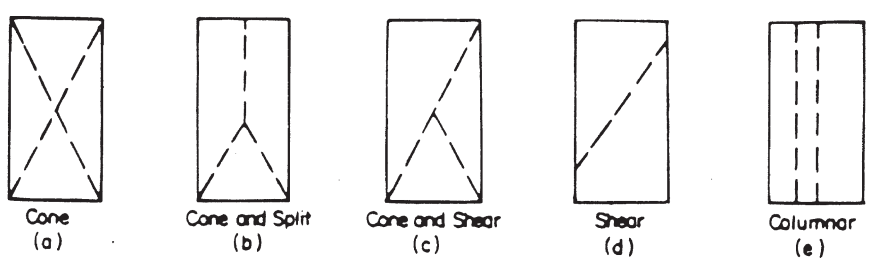

Sketches of Types of Fracture
Figure 2

9.1.8 Defects in either specimen or caps.

9.1.9 Age of specimen.

9.1.10 Report the density to the nearest 10 kg/m^3 (1 lb/ft^3).

10. Precision and Bias

See AASHTO T 22 for precision and bias.

WSDOT has added Appendix A and it is an excerpt of ASTM C1231-00 sections 1 through 7.

Appendix A

A1. Scope

A1.1 This practice covers requirements for a capping system using unbonded caps for testing concrete cylinders molded in accordance with Practice C 31/C 31M or C 192/C 192M. Unbonded neoprene caps of a defined hardness are permitted to be used for testing for a specified maximum number of reuses without qualification testing up to a certain concrete compressive strength level. Above that strength, level neoprene caps will require qualification testing. Qualification testing is required for all elastomeric materials other than neoprene regardless of the concrete strength.

A1.2 Unbonded caps are not to be used for acceptance testing of concrete with compressive strength below 1500 psi (10 MPa) or above 12,000 psi (85 MPa).

A1.3 The values stated in either inch-pound or SI units shall be regarded as standard. SI units are shown in brackets. That values stated in each system may not be exact equivalents. Therefore, each system must be used independently of the other, without combining the values in any way.

A1.4 This standard does not purport to address all of the safety concerns, if any, associated with its use. It is the responsibility of the user of this standard to establish appropriate safety and health practices and determine the applicability of regulatory limitations prior to use. For a specific hazard statement, see Note 4.

A2. Referenced Documents

A2.1 ASTM Standards

C 31/C 31M – Practice for Making and Curing Concrete Test Specimens in the Field[2]

C 39 – Test Method for Compressive Strength of Cylindrical Concrete Specimens[2]

C 192/C 192M – Practice for Making and Curing Concrete Test Specimens in the Laboratory[2]

C 617 – Practice for Capping Cylindrical Concrete Specimens[2]

D 2000 – Classification System for Rubber Products in Automotive Applications[3]

D 2240 – Test Method for Rubber Property—Durometer Hardness[4]

A3. Terminology

A3.1 Definitions of Terms Specific to This Standard

A3.1.1 pad, n – An unbonded elastomeric pad.

A3.1.2 unbonded cap, n – A metal retainer and an elastomeric pad.

A4. Significance and Use

A4.1 This practice provides for using an unbonded capping system in testing hardened concrete cylinders made in accordance with Practices C 31/C 31M or C 192/C 192M in lieu of the capping systems described in Practice C 617.

A4.2 The elastomeric pads deform in initial loading to conform to the contour of the ends of the cylinder and are restrained from excessive lateral spreading by plates and metal rings to provide a uniform distribution of load from the bearing blocks of the testing machine to the ends of the concrete or mortar cylinders.

A5. Materials and Apparatus

A5.1 Materials and equipment necessary to produce ends of the reference cylinders that conform to planeness requirements of Test Method C 39 and the requirements of Practice C 617. This may include grinding equipment or capping materials and equipment to produce neat cement paste, high strength gypsum plaster, or sulfur mortar caps.

A5.2 Elastomeric Pads

A5.2.1 Pads shall be ½ ± 1⁄16 in (13 ± 2 mm) thick and the diameter shall not be more than 1⁄16 in (2 mm) smaller than the inside diameter of the retaining ring.

[1]This practice is under the jurisdiction of ASTM Committee C09 on Concrete and Concrete Aggregate sand is the direct responsibility of Subcommittee C09.61 on Testing Concrete for Strength. Current edition approved January 2000. Published April 2000. Originally published as C 1231-93. Last previous edition C 1231-99.

[2]Annual Book of ASTM Standards, Volume 04.02.

[3]Annual Book of ASTM Standards, Volume 09.02.

[4]Annual Book of ASTM Standards, Volume 09.01.

A5.2.2 Pads shall be made from polychloroprene (neoprene) meeting the requirements of Classification D 2000 as follows:

Shore A Durometer	Classification D 2000 Line Call-Out
50	M2BC514
60	M2BC614
70	M2BC714

The tolerance on Shore A durometer hardness is ± 5. Table 1 provides requirements for use of caps made from material meeting the requirements of Classification D 2000, above.

A5.2.3 Other elastomeric materials that meet the performance requirements of qualification tests in Section 8 are permitted.

A5.2.4 Elastomeric pads shall be supplied with the following information:

A5.2.4.1 The manufacturer's or supplier's name.

A5.2.4.2 The Shore A hardness.

A5.2.4.3 The applicable range of concrete compressive strength from Table 1 or from qualification testing.

A5.2.5 The user shall maintain a record indicating the date the pads are placed in service, the pad durometer, and the number of uses to which they have been subjected.

A5.3 Retainers shall be made of metal that will prove durable in repeated use (Note 1). The cavity in the metal retainers shall have a depth at least twice the thickness of the pad. The inside diameter of the retaining rings shall not be less than 102 percent or greater than 107 percent of the diameter of the cylinder. The surfaces of the metal retainer which contact the bearing blocks of the testing machine shall be plane to within 0.002 in (0.05 mm).

The bearing surfaces of the retainers shall not have gouges, grooves, or indentations greater than 0.010 in (0.25 mm) deep or greater than 0.05 in^2 (32 $mm^{2)}$ in surface area.

Note 1: Retainers made from steel and some aluminum alloys have been found acceptable. Steel retaining rings that have been used successfully with ½ in (13 mm) neoprene pads are shown in Figure 1. Retainer design and metals used are subject to the performance and acceptance requirements of Section 8.

A6. Test Specimens

A6.1 The specimens shall be either 6 by 12 in (150 by 300 mm) or 4 by 8 in (100 by 200 mm) cylinders made in accordance with Practices C 31/C 31M or C 192/C 192M.

Neither end of a cylinder shall depart from perpendicularity to the axis by more than 0.5° (approximately equivalent to ⅛ in in 12 in (3 mm in 300 mm). No individual diameter of a cylinder may differ from any other diameter by more than 2 percent.

Note 2: One method of measuring the perpendicularly of ends of cylinders is to place a try square across any diameter and measure the departure of the longer blade from an element of the cylindrical surface. An alternative method is to place the end of the cylinder on a plane surface and support the try square on that surface.

A6.2 Depressions under a straight edge measured with a round wire gage across any diameter shall not exceed 0.20 in (5 mm). If cylinder ends do not meet this tolerance, the cylinder shall not be tested unless irregularities are corrected by sawing or grinding.

Cylinder Compressive Strength, psi (MPa)	Shore A Durometer Hardness	Qualification Tests Required	Maximum Reuses[A]
1500 to 6000 (10 to 40)	50	None	100
2500 to 7000 (17 to 50)	60	None	100
4000 to 7000 (28 to 50)	70	None	100
7000 to 12000 (50 to 80)	70	Required	50
Greater than 12000 (80)		Not Permitted	

[A]Maximum number of reuses. Will be less if pads wear, crack or split (Note 6).

Requirements for Use of Polychloroprene (Neoprene) Pads
Table 1

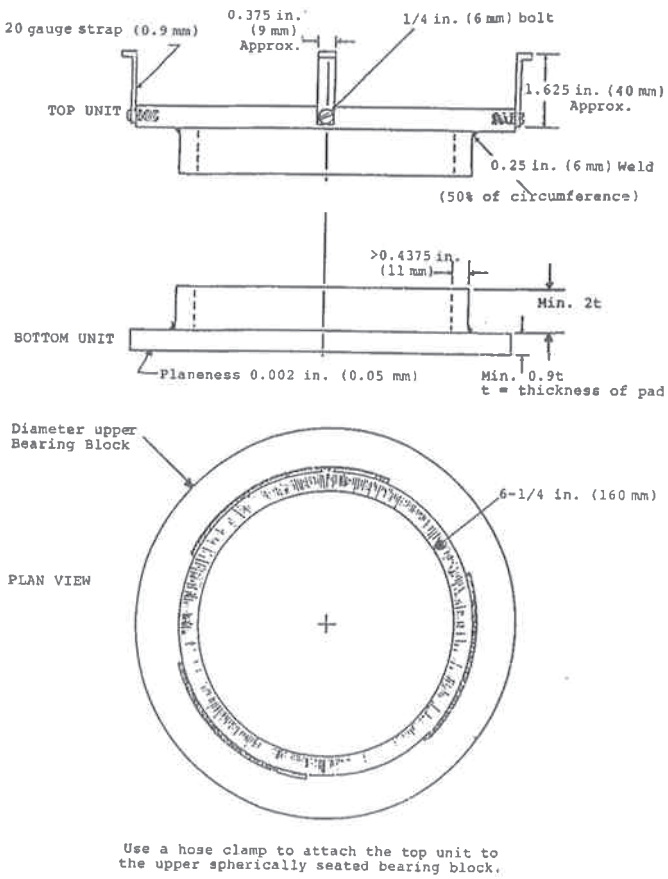

Example of Steel Retaining Rings for 6 by 12 in (150 by 300 mm) Cylinders (Nonmandatory)
Figure 1

A7 Procedure

A7.1 Unbonded caps are permitted to be used on one or both ends of a cylinder in lieu of a cap or caps meeting Practice C 617, provided they meet the requirements of Section 5.

A7.2 Examine the pads for excessive wear or damage (Note 6). Replace pads which have cracks or splits exceeding ⅜ in (10 mm) in length regardless of depth. Insert the pads in the retainers before they are placed on the cylinder (Note 3).

Note 3: Some manufacturers recommend dusting the pads and the ends of the cylinders with corn starch or talcum powder prior to testing.

Note 4: Caution: Concrete cylinders tested with unbonded caps rupture more violently than comparable cylinders tested with bonded caps. As a safety precaution, the cylinder testing machine must be equipped with a protective cage. In addition, some users have reported damage to testing machines from the sudden release of energy stored in the elastomeric pads.

A7.3 Center the unbonded cap or caps on the cylinder and place the cylinder on the lower bearing block of the testing machine. Carefully align the axis of the cylinder with the center of thrust of the testing machine by centering the upper retaining ring on the spherically seated bearing block. As the spherically seated block is brought to bear on the upper retaining ring, rotate its movable portion gently by hand so that uniform seating is obtained. After application of load, but before reaching 10 percent of the anticipated specimen strength, check to see that the axis of the cylinder is vertical within a tolerance of ⅛ in in 12 in (3.2 mm in 300 mm) and that the ends of the cylinder are centered within the retaining rings. If the cylinder alignment does not meet these requirements, release the load, check compliance with Section 6.1, and carefully recenter the specimen. Reapply load and recheck specimen centering and alignment. A pause in load application to check cylinder alignment is permissible.

A7.4 Complete the load application, testing, calculation, and reporting of results in accordance with Test Method C 39.

Note 5: Because of the violent release of energy stored in pads, the broken cylinder rarely exhibits conical fracture typical of capped cylinders and the sketches of types of fracture in Test Method C 39 are not descriptive. Occasionally, unbonded capped cylinders may develop early cracking, but continue to carry increasing load. For this reason, cylinders must be tested to complete failure.

Performance Exam Checklist

Compressive Strength of Cylindrical Concrete Specimens
FOP for AASHTO T 22

Participant Name _____ Exam Date _____

Procedure Element	**Yes**	**No**
1. The tester has a copy of the current procedure on hand?		
2. All equipment is functioning according to the test procedure, and if required, has the current calibration/verification tags present?		
3. Specimens kept moist between removal from moist storage and testing?		
4. Is the diameter of the cylinder reported to the nearest 0.01 inch by averaging two diameters taken at about mid-height?		
5. Is the length of the cylinder reported to the nearest 0.01 inches?		
6. Is the mass of the cylinder reported to the nearest 0.1 lbs or better?		
7. Ends of cylinders checked for perpendicularity to axis?		
8. Ends of cylinders checked for depressions greater than 0.2 inch?		
9. Ends of cylinders checked for plane?		
10. If ends did not meet plane, was correct method chosen to correct plane?		
11. Are lower and upper bearing surface wiped clean?		
12. Is the axis of the cylinder aligned with center of the spherical block?		
13. Is the spherical block rotated prior to it contacts with the cylinder?		
14. Is the load applied continuously and without shock?		
15. Is the load applied at the specified rate and maintain for the latter half of the anticipated load.		
16. Is no rate adjustment made while the cylinder is yielding?		
17. Is the maximum load recorded?		
18. Are cylinders tested to failure and the type of fracture recorded?		
19. Specimens broken within the permissible time tolerance?		
20. All calculations performed correctly?		

Unbonded Caps – AASHTO 22 Appendix A

1. Pads examined for splits or cracks?		
2. Cylinders centered in retaining rings?		
3. Is cylinders checked for alignment with a small load applied?		

First Attempt: Pass Fail Second Attempt: Pass Fail

Signature of Examiner _____

Comments:

WSDOT FOP for AASHTO T 23[1]

Making and Curing Concrete Test Specimens in the Field

1. Scope

   1.1 This method covers procedures for making and curing cylinder specimens from representative samples of fresh concrete for a construction project.

   1.2 The concrete used to make the molded specimens shall be sampled after all on-site adjustments have been made to the mixture proportions, including the addition of mix water and admixtures, except as modified in Section 5.1. This practice is not satisfactory for making specimens from concrete not having measurable slump or requiring other sizes or shapes of specimens.

   1.3 The values stated in English units are to be regarded as the standard.

   1.4 This standard does not purport to address the safety problems associated with its use. It is the responsibility of the user of this standard to establish appropriate safety and health practices and determine the applicability of regulatory limitations prior to use. (***Warning:*** Fresh hydraulic cementitious mixtures are caustic and may cause chemical burns to exposed skin and tissue upon prolonged exposure.)

2. Referenced Documents

   2.1 AASHTO Standards

   T 23 Making and Curing Concrete Test Specimens in the Field

   M 201 Moist Cabinets, Moist Rooms, and Water Storage Tanks Used in the Testing of Hydraulic Cements and Concretes

   M 205 Molds for Forming Concrete Test Cylinders Vertically

   R 39 Making and Curing Concrete Test Specimens in the Laboratory

   T 231 Capping Cylindrical Concrete Specimens

   2.2 ASTM Standards

   C 125 Terminology Related to Concrete and Concrete Aggregates

   2.3 ACI Standards

   309 R Guide for Consolidation of Concrete

   2.4 WSDOT

   FOP for WAQTC TM 2 Sampling Freshly Mixed Concrete

[1]This FOP is based on AASHTO T 23-08.

3. Terminology

For definitions of terms used in this practice, refer to Terminology ASTM C 125.

4. Significance and Use

4.1 This practice provides standardized requirements for making, curing, protecting, and transporting concrete test specimens under field conditions.

4.2 If the specimens are made and standard cured, as stipulated herein, the resulting strength test data where the specimens are tested are able to be used for the following purposes:

4.2.1 Acceptance testing for specified strength.

4.2.2 Checking the adequacy of mixture proportions for strength.

4.2.3 Quality control.

4.3 If the specimens are made and field cured, as stipulated herein, the resulting strength test data when the specimens are tested are able to be used for the following purposes:

4.3.1 Determination of whether a structure is capable of being put in service.

4.3.2 Comparison with test results of standard cured specimens or with test results from various in-place test methods,

4.3.4 Adequacy of curing and protection of concrete in the structure.

4.3.5 Form or shoring removal time requirements.

5. Apparatus

5.1 Molds, General – Refer to AASHTO T 23.

5.2 Cylinder – Molds for casting concrete test specimens shall conform to the requirements of M 205.

5.3 Beam Molds – Refer to WSDOT Test Method T 808.

5.4 Tamping Rod – Two sizes are specified as indicated in Table 1. Each shall be a round, straight steel rod with at least the tamping end rounded to a hemispherical tip of the same diameter as the rod. Both ends may be rounded if preferred.

Diameter of Cylinder (in mm)	Rod Dimensions	
	Diameter (in mm)	Length of Rod (in mm)
4 (100)	⅜ (10)	12 (300)
6 (150)	⅝ (16)	20 (500)

Rod tolerances length ± 4 in (100 mm) and diameter ± 1⁄16 in (2 mm).

Tamping Rod Requirements
Table 1

5.5 Vibrators – Internal vibrators shall be used. The vibrator frequency shall be at least 7,000 vibrations per minute at 117 Hz while the vibrator is operating in the concrete. The diameter of a round vibrator shall be no more than one-fourth the diameter of the cylinder mold or one-fourth the width of the beam mold. Other shaped vibrators shall have a perimeter equivalent to the circumference of an appropriate round vibrator. The combined length of the vibrator shaft and vibrating element shall exceed the depth of the section being vibrated by at least 3 in (75 mm). The vibrator frequency shall be checked periodically.

Note 1: For information on size and frequency of various vibrators and a method to periodically check vibrator frequency, see ACI 309R.

5.6 Mallet – A mallet with a rubber or rawhide head weighing 1.25 ± 0.50 lb (0.57 ± 0.23 kg) shall be used.

5.7 Small Tools – Tools and items that may be required are shovels, pails, trowels, wood float, metal float, blunted trowels, straightedge, feeler gauge, scoops, and rules.

5.8 Sampling and Mixing Receptacle – The receptacle shall be a suitable heavy gage metal pan, wheelbarrow, or flat, clean non-absorbent mixing board of sufficient capacity to allow easy remixing of the entire sample with a shovel or trowel.

5.9 Cure Box – The cure box shall be a commercially manufactured cure box meeting AASHTO T 23 standards and the following requirements:

5.9.1. The interior shall be rustproof with a moisture-proof seal between the lid and the box.

5.9.2. The lid shall lock or have loops for padlocks that allow the box to be locked.

5.9.3. The box shall be equipped with a heating and cooling system. If the system uses a water circulating system, the box shall be equipped with a bottom drain and an overflow port. The cure box shall provide an environment that prevents loss of moisture from the specimens. The curing temperature and moist environment shall be controlled by the use of heating and cooling devices installed in the cure box.

5.10 Temperature Measuring Device – The temperature measuring device shall be capable of reading from 30°F to 120°F (0°C to 50°C) with an accuracy of ± 1.0°F (±0.5°C) and continuously recording the internal temperature of the cure box for a minimum of 24 hrs with an accuracy of ± 1.0 °F (±0.5 °C). During the initial cure, a thermometric recording device shall be used to record the interior temperature of the cure box at intervals of not more than 10 minutes.

6. Testing Requirements

Testing for determining the compressive strength at 28 days shall require a set of two specimens made from the same sample.

6.1 Compressive Strength Specimens – Compressive strength specimens shall be cylinders cast and allowed to set in an upright position. The length shall be twice the diameter. The cylinder diameter shall be at least three times the nominal maximum size of the coarse aggregate. The standard specimen shall be the 4 by 8 in (100 by 200 mm) cylinder when the nominal maximum size of the coarse aggregate does not exceed 1 in (25 mm). When the nominal maximum size of the coarse aggregate exceeds 1 in (25 mm), the specimens shall be made with 6 by 12 in (150 by 300 mm) cylinders. **Mixing of cylinder sizes for a particular concrete mix design is not permitted on a project.** When the nominal maximum size of the coarse aggregate exceeds 2 in (50 mm), the concrete sample shall be treated by wet sieving through a 2 in (50 mm) sieve as described in FOP for WAQTC TM 2. Contact the Materials Laboratory for directions.

Note 2: The nominal maximum size is the smallest standard sieve opening through which the entire amount of aggregate is permitted to pass.

Note 3: When molds in SI units are required and not available, equivalent inch-pound unit size molds should be permitted.

6.2 Flexural Strength Specimens

Refer to WSDOT Test Method T 808.

7. Sampling Concrete

7.1 The samples used to fabricate test specimens under this standard shall be obtained in accordance with FOP for WAQTC TM 2 unless an alternative procedure has been approved.

7.2 Record the identification of the sample with respect to the location of the concrete represented and the time of casting.

7.3 Cylinders shall be made using fresh concrete from the same sample as the slump, air content and temperature tests. Material from the slump, air content, and unit weight tests cannot be reused to construct cylinders.

8. Slump, Air Content, and Temperature

As required, perform the following tests prior to making cylinders:

8.1 Slump – FOP for AASHTO T 119

8.2 Air Content – FOP for WAQTC T 152 or FOP for AASHTO T 196

8.3 Temperature – FOP for AASHTO T 309

8.4 Unit Weight – AASHTO T 121

9. Molding Cylinders

9.1 Place of Molding – Mold cylinders on a level, rigid horizontal surface, free of vibration and other disturbances, at a place as near as practicable to the location where they are to be stored.

9.2 Casting the Concrete – Begin casting cylinders within 15 minutes of obtaining the sample. Prior to molding of the specimens remix the sample the minimum amount necessary to ensure uniformity. Place the concrete in the mold using a scoop, blunted trowel, or shovel. Select each scoopful, trowelful, or shovelful of concrete from the sampling receptacle to ensure that it is representative of the batch. Move the scoop, trowel, or shovel around the perimeter of the mold opening when adding concrete so the concrete is uniformly distributed within each layer with a minimum of segregation. In placing the final layer, the operator shall attempt to add an amount of concrete that will exactly fill the mold after consolidation. Underfilled molds shall be adjusted with representative concrete during consolidation of the top layer. Overfilled molds shall have excess concrete removed.

9.2.1 Number of Layers – Make specimens in layers as indicated in Table 2 or 3.

Cylinders: Diameter, in (mm)	Number of Layers of Approximately Equal Depth	Number of Roddings per Layer
Cylinders: Diameter, in (mm)		
4 (100)	2	25
6 (150)	3	25

Molding Requirements by Rodding
Table 2

Cylinders: Diameter, in (mm)	Number of Layers	Number of Vibrator Insertions per Layer	Approximate Depth of Layer, in (mm)
Cylinders: Diameter, in (mm)			
4 (100)	2	1	one-half depth of specimen
6 (150)	2	2	one-half depth of specimen

Molding Requirements by Vibration
Table 3

9.2.2 Select the proper tamping rod from Section 5.4 and Table 1 or the proper vibrator from Section 5.5. If the method of consolidation is rodding, determine molding requirements from Table 2. If the method of consolidation is vibration, determine molding requirements from Table 3.

9.3 Consolidation

9.3.1 Method of Consolidation – Preparation of satisfactory cylinders require different methods of consolidation. The methods of consolidation are rodding and vibration. Base the selection of the method of consolidation on slump, unless the method is stated in the specifications under which the work is being performed. Rod or vibrate concretes with slumps greater than 1 in (25 mm). Vibrate concretes with slumps less than or equal to 1 in (25 mm). Concretes of such low water content that they cannot be properly consolidated by the method herein, or requiring other sizes and shapes of specimens to represent the product or structure, are not covered by this method. Specimens for such concretes shall be made in accordance with the requirements of R 39 with regards to specimen size and shape and method of consolidation.

9.3.2 Rodding – Place the concrete in the mold in the required number of layers of approximately equal volume. Rod each layer with the rounded end of the rod using the required number of roddings specified in Table 2. Rod the bottom layer throughout its depth. Distribute the strokes uniformly over the cross section of the mold. For each layer, allow the rod to penetrate through the layer being rodded and into the layer below approximately 1 in (25 mm). After each layer is rodded, tap the outsides of the mold lightly 10 to 15 times with the open hand, mallet, or rod to close any holes left by rodding and to release any large air bubbles that may have been trapped.

9.3.3 Vibration – Maintain a uniform time period for duration of vibration for the particular kind of concrete, vibrator, and specimen mold involved. The duration of vibration required will depend upon the workability of the concrete and the effectiveness of the vibrator. Usually, sufficient vibration has been applied as soon as the surface of the concrete has become relatively flat and large air bubbles cease to break through the top surface. Continue vibration only long enough to achieve proper consolidation of the concrete (Note 4). Fill the molds and vibrate in the required number of approximately equal layers. Place all the concrete for each layer in the mold before starting vibration of that layer. Compacting the specimen, insert the vibrator slowly and do not allow it to rest on the bottom or sides of the mold. Slowly withdraw the vibrator so that no large air pockets are left in the specimen. When placing the final layer, avoid overfilling by more than ¼ in (6 mm).

Note 4: Generally, no more than 5 s of vibration should be required for each insertion to adequately consolidate concrete with a slump greater than 3 in (75 mm). Longer times may be required for lower slump concrete, but the vibration time should rarely have to exceed 10 s per insertion.

9.3.3.1 Cylinders – The number of insertions of a vibrator per layer is given in Table 3. When more than one insertion per layer is required, distribute the insertion uniformly within each layer. Allow the vibration to penetrate through the layer being vibrated, and into the layer below, approximately 1 in (25 mm). After each layer is vibrated, tap the outsides of the mold lightly 10 to 15 times with the open hand, mallet, or rod to close any holes left by rodding and to release any large air bubbles that may have been trapped.

9.3.3.2 Beam – Refer to WSDOT Test Method T 808.

9.4 Finishing – After consolidation, strike off excess concrete from the surface. Perform all finishing with the minimum manipulation necessary to produce a flat even surface that is level with the rim or edge of the mold and that has no depressions or projections larger than ⅛ in (3.2 mm). Place lid on cylinder.

9.5 Storage – Immediately after finishing, place the cylinders in a cure box. The supporting surface on which specimens are stored shall be level to within ¼ in/ft (20 mm/m). When moving the cylinders to the cure box, lift and support the cylinders from the bottom of the molds with a large trowel or similar device. If the top surface is marred during movement to cure box, immediately refinish.

10. Curing

10.1 Standard Curing – Standard curing is the curing method used when the specimens are made and cured for the purposes stated in Section 4.2.

10.1.1 Initial Curing – Immediately after molding and finishing, the specimens shall be stored in a cure box for a period up to 48 hours, unless Contractor provides initial curing information for final set. The cure box, at all times during the curing process, shall maintain a temperature between 60 and 80 °F [16 and 27 °C] for concrete mix designs with a specified strength below 6000 psi [40 MPa] and between 68 and 78°F [20 and 26 °C] for concrete mixtures with a specified strength of 6000 psi [40 MPa] or greater.

10.1.2 Transportation of Specimens to Final Cure Location – Prior to transporting, cure and protect specimens as required in Section 10. Specimens shall not be transported until at least 8 h after final set (Note 5). During transporting, protect the specimen with suitable cushioning material to prevent damage from jarring and transport in an upright position. During cold weather, protect the specimens from freezing by transporting in an insulated container. Prevent moisture loss during transportation by use of tight-fitting plastic caps on plastic molds. Transportation time shall not exceed 4 h.

Note 5: If a specimen does not attain final set within 32 hours, it is to remain in place until final set is reached. The time of final set shall be provided by the concrete producer. After final set is reached, it can then be transported.

10.1.3 Final Curing

10.1.3.1 Cylinders – Upon completion of initial curing and within 30 minutes after removing the molds, cure specimens with free water maintained on their surfaces at all times at a temperature of 73 ± 3°F (23 ± 2°C) using water storage tanks or moist rooms complying with the requirements of Specification M 201, except when capping with sulfur mortar capping compound and immediately before testing. When capping with sulfur mortar capping compounds, the ends of the cylinder shall be dry enough to preclude the formation of steam or foam pockets under or in cap larger than ¼ in (6 mm) as described in T 231. For a period not to exceed 3 h immediately prior to test, standard curing temperature is not required provided free moisture is maintained on the cylinders and ambient temperature is between 68 to 80°F (20 and 30°C).

10.1.3.2 Beams – Refer to WSDOT Test Method T 808.

10.2 Field Curing – Field curing is the curing method used for the specimens made for the purposes stated in Section 4.3.

10.2.1 Cylinders – Store cylinders in or on the structure as near to the point of deposit of the concrete represented as possible. Protect all surfaces of the cylinders from the elements in as near as possible the same way as the formed work. Provide the cylinders with the same temperature and moisture environment as the structural work. Test the specimens in the moisture condition resulting from the specified curing treatment. To meet these conditions, specimens made for the purpose of determining when a structure is capable of being put in service shall be removed from the molds at the time of removal of form work.

10.2.2 Beams – Refer to WSDOT Test Method T 808.

11. Report

11.1 Report the following information to the laboratory that will test the specimens:

11.1.1 Identification number.

11.1.2 Location of concrete represented by the samples.

11.1.3 Date, time, and name of individual molding specimens.

11.1.4 Slump, air content, and concrete temperature, test results and results of any other tests on the fresh concrete and any deviations from referenced standard test methods.

11.1.5 High and low temperature of cure box during initial curing.

11.1.6 All other information required by the Materials Testing System (MATS) electronic Concrete Transmittal.

Note: Agencies that do not have access to MATS may use DOT Form 350-009, Concrete Cylinder Transmittal.

Performance Exam Checklist

Making and Curing Concrete Test Specimens in the Field
FOP for AASHTO T 23

Participant Name _____ Exam Date _____

Procedure Element	**Yes**	**No**
1. The tester has a copy of the current procedure on hand?		
2. All equipment is functioning according to the test procedure, and if required, has the current calibration/verification tags present?		
3. Molds placed on a level, rigid, horizontal surface free of vibration?		
4. Making of specimens begun within 15 minutes of sampling?		
5. Concrete placed in the mold, moving a scoop or trowel around the perimeter of the mold to evenly distribute the concrete as discharged?		
6. Mold filled in correct number of layers, attempting to slightly overfill the mold on the last layer?		
7. Correct consolidation procedure chosen?		
8. Rodding		
a. Each layer rodded throughout its depth 25 times with hemispherical end of rod, uniformly distributing strokes?		
b. Bottom layer rodded throughout its depth?		
c. Middle and top layers rodded, each throughout their depths, and penetrate into the underlying layer?		
d. Sides of the mold tapped 10 to 15 times after rodding each layer?		
9. Internal Vibration		
a. All concrete for each layer placed in the mold before starting vibration of that layer.		
b. Vibrator inserted slowly and not allowed to rest on the bottom or sides of the mold?		
c. The final layer was not overfilled by more than ¼ in?		
d. Concrete vibrated at a rate to achieve proper consolidation?		
10. Strike off excess concrete and finished the surface with a minimum of manipulation?		
11. Specimens covered with nonabsorbent, nonreactive cap or plate?		
12. Cure box meets requirements?		

First Attempt: Pass Fail Second Attempt: Pass Fail

Signature of Examiner _____

Comments:

WSDOT FOP for WAQTC T 27/T 11

Sieve Analysis of Fine and Coarse Aggregates

Significance

Sieve analyses are performed on aggregates used in roadway bases and in portland cement and asphalt cement concretes. Sieve analyses reveal the size makeup of aggregate particles – from the largest to the smallest. A gradation curve or chart showing how evenly or unevenly the sizes are distributed between largest and smallest is created in this test. How an aggregate is graded has a major impact on the strength of the base or on the properties and performance of concrete. In portland cement concrete (PCC), for example, gradation influences shrinkage and shrinkage cracking, pumpability, finishability, permeability, and other characteristics.

Scope

This procedure covers sieve analysis in accordance with AASHTO T 27 and materials finer than No. 200 (75 µm) in accordance with AASHTO T 11. The procedure combines the two test methods.

Sieve analyses determines the gradation or distribution of aggregate particles within a given sample in order to determine compliance with design and production standards.

Accurate determination of material smaller than No. 200 (75 µm) cannot be made with AASHTO T 27 alone. If quantifying this material is required, it is recommended that AASHTO T 27 be used in conjunction with AASHTO T 11. Following AASHTO T 11, the sample is washed through a No. 200 (75 µm) sieve. The amount of material passing this sieve is determined by comparing dry sample masses before and after the washing process.

This procedure covers sieve analysis in accordance with AASHTO T 27 and materials finer than No. 200 (75 µm) in accordance with AASHTO T 11. The procedure includes two method choices, A and B.

Note: All Field Operating Procedures (FOPs) referred to in this procedure are WSDOT FOPs.

Apparatus

- Balance or Scale – Capacity sufficient for the masses shown in Table 2, accurate to 0.1 percent of the sample mass or better and conform to the requirements of AASHTO M 231.
- Sieves – Meeting the requirements of AASHTO M 92.
- Mechanical Sieve Shaker – Meeting the requirements of AASHTO T 27.
- Suitable Drying Equipment – See FOP for AASHTO T 255.
- Containers and Utensils – A pan or vessel of a size sufficient to contain the sample covered with water and to permit vigorous agitation without loss of any part of the sample or water.
- Optional mechanical washing device.

Sample Sieving

In all procedures, it is required to shake the sample over nested sieves. Sieves are selected to furnish information required by specification. The sieves are nested in order of decreasing size from the top to the bottom and the sample, or a portion of the sample, is placed on the top sieve. The sample may also be sieved in increments.

Sieves are shaken in a mechanical shaker for the minimum time determined to provide complete separation for the sieve shaker being used.

Time Evaluation

WSDOT has deleted this section.

Overload Determination

Additional sieves may be necessary to provide other information, such as fineness modulus, or to keep from overloading sieves. The sample may also be sieved in increments.

For sieves with openings smaller than No. 4 (4.75 mm), the mass retained on any sieve shall not exceed 4 g/in^2 (7 kg/m^2) of sieving surface. For sieves with openings No. 4 (4.75 mm) and larger, the mass, in grams shall not exceed the product of 2.5 × (sieve opening in mm) × (effective sieving area). See Table 1.

Sieve Size in (mm)		8 φ (203)	12 φ (305)	12 × 12 (305 × 305)	14 × 14 (350 × 350)	16 × 24 (372 × 580)
		Sieving Area m^2				
		0.0285	0.0670	0.0929	0.1225	0.2158
3½	(90)	*	15.1	20.9	27.6	48.5
3	(75)	*	12.6	17.4	23.0	40.5
2½	(63)	*	10.6	14.6	19.3	34.0
2	(50)	3.6	8.4	11.6	15.3	27.0
1½	(37.5)	2.7	6.3	8.7	11.5	20.2
1	(25.0)	1.8	4.2	5.8	7.7	13.5
¾	(19.0)	1.4	3.2	4.4	5.8	10.2
⅝	(16.0)	1.1	2.7	3.7	4.9	8.6
½	(12.5)	0.89	2.1	2.9	3.8	6.7
⅜	(9.5)	0.67	1.6	2.2	2.9	5.1
¼	(6.3)	0.44	1.1	1.5	1.9	3.4
No. 4	(4.75)	0.33	0.80	1.1	1.5	2.6
Less than	(No. 4)	0.20	0.47	0.65	0.86	1.5

Sample sizes above are in kilograms. To covert to grams, multiple by 1,000. To convert to pounds, multiple by 2.2.

Maximum Allowable Mass of Material Retained On a Sieve (kg)
Table 1

Sample Preparation

Obtain samples in accordance with FOP for AASHTO T 2 and reduce to the size shown in Table 2 in accordance with FOP for AASHTO T 248. If the gradation sample is obtained from FOP for AASHTO T 308, the Ignition Furnace, proceed to Procedure Method A, Step 2.

Nominal Maximum Size* in (mm)		Minimum Dry Mass lb (kg)	
US No. 4	(4.75)	1	(0.5)
¼	(6.3)	2	(1)
⅜	(9.5)	2	(1)
½	(12.5)	5	(2)
⅝	(16.0)	5	(2)
¾	(19.0)	7	(3)
1	(25.0)	13	(6)
1¼	(31.5)	17	(7.5)
1½	(37.5)	20	(9)
2	(50)	22	(10)
2½	(63)	27	(12)
3	(75)	33	(15)
3½	(90)	44	(20)

*For aggregate, the nominal maximum size sieve is the largest standard sieve opening listed in the applicable specification upon which more than 1 percent of the material is permitted to be retained. For concrete aggregate, the nominal maximum size sieve is the smallest standard sieve opening through which the entire amount of aggregate is permitted to pass.

Sample Sizes for Aggregate Gradation Test
Table 2

Note: For an aggregate specification having a generally unrestrictive gradation (i.e., wide range of permissible upper sizes), where the source consistently fully passes a screen substantially smaller than the maximum specified size, the nominal maximum size, for the purpose of defining sampling and test specimen size requirements may be adjusted to the screen, found by experience to retain no more than 5 percent of the materials.

WSDOT Note 1: These sample sizes are standard for aggregate testing but, due to equipment restraints, samples may need to be partitioned into several "subsamples" (see Method A).

Overview

Method A – This method is the preferred method of sieve analysis for HMA aggregate.

- Determine dry mass of original sample.
- Wash through a No. 200 (75 µm) sieve.
- Determine dry mass of washed sample.
- Sieve material.

Method B

- Determine dry mass of original sample.
- Wash through a No. 200 (75 µm) sieve.
- Determine dry mass of washed sample.
- Sieve coarse material.
- Determine mass of fine material.
- Reduce fine portion.
- Determine mass of reduced portion.
- Sieve fine portion.

Procedure Method A

1. Dry the sample in accordance with FOP for AASHTO T 255, and record to the nearest 0.1 percent of total mass or better.

2. When the specification requires that the amount of material finer than No. 200 (75 µm) be determined, do Step 3 through Step 9. Otherwise, skip to Step 10.

   WSDOT Note 2: If the applicable specification requires that the amount passing the No. 200 (75 µm) sieve be determined on a portion of the sample passing a sieve smaller than the nominal maximum size of the aggregate, separate the sample on the designated sieve and determine the mass of the material passing that sieve to 0.1 percent of the mass of this portion of the test sample. Use the mass as the original dry mass of the test sample.

3. Nest a sieve, any sieve ranging from a No. 8 (2.36 mm) to a No. 16 (1.18 mm) may be used, above the No. 200 (75 µm) sieve.

4. Place the test sample in a container and add sufficient water to cover it.

   WSDOT requires the use of a detergent, dispersing agent, or other wetting solution when washing a sample from FOP for AASHTO T 308, an ignition furnace sample.

   WSDOT Note 3: A detergent, dispensing agent, or other wetting solution may be added to the water to assure a thorough separation of the material finer than the No. 200 (75 µm) sieve from the coarser particles. There should be enough wetting agent to produce a small amount of suds when the sample is agitated. Excessive suds may overflow the sieves and carry material away with them.

5. Agitate vigorously to ensure complete separation of the material finer than No. 200 (75 µm) from coarser particles and bring the fine material into suspension above the coarser material. When using a mechanical washing device, exercise caution to not degrade the sample.

6. Immediately pour the wash water containing the suspended and dissolved solids over the nested sieves, being careful not to pour out the coarser particles.

7. Add a second change of water to the sample remaining in the container, agitate, and repeat Step 6. Repeat the operation until the wash water is reasonably clear.

8. Return all material retained on the nested sieves to the container by flushing into the washed sample.

   WSDOT Note 4: A suction device may be used to extract excess water from the washed sample container. Caution will be used to avoid removing any material greater than the No. 200.

9. Dry the washed aggregate in accordance with FOP for AASHTO T 255, and then cool prior to sieving. Record the cooled dry mass.

10. Select sieves to furnish information required by the specifications. Nest the sieves in order of decreasing size from top to bottom and place the sample, or a portion of the sample, on the top sieve.

11. Place sieves in mechanical shaker and shake for a minimum of 10 minutes, or the minimum time determined to provide complete separation if this time is greater than 10 minutes for the sieve shaker being used.

12. Determine the individual or cumulative mass retained on each sieve and the pan to the nearest 0.1 percent or 0.1 g.

    WSDOT Note 5: Use coarse wire brushes to clean the No. 40 (425 µm) and larger sieves and soft bristle brushes for smaller sieves.

Calculations

The total mass of material after sieving should be verified with the mass before sieving. If performing T 11 with T 27, this would be the dry mass after wash. If performing just T 27, this would be the original dry mass. When the masses before and after sieving differ by more than 0.3 percent, do not use the results for acceptance purposes. When performing the gradation from HMA using T 308, the masses before and after sieving shall not differ by more than 0.2 percent.

Calculate the total percentages passing, individual or cumulative percentages retained, or percentages in various size fractions to the nearest 0.1 percent by dividing the masses for Method A, or adjusted masses for Methods B and C, on the individual sieves by the total mass of the initial dry sample. If the same test sample was first tested by T 11, use the total dry sample mass prior to washing in T 11 as the basis for calculating all percentages. Report percent passing as indicated in the "Report" section at the end of this FOP.

Percent Retained:

$$\mathrm{IPR} = \frac{\mathrm{IMR}}{\mathrm{M}} \times 100 \text{ or } \mathrm{CPR} = \frac{\mathrm{CMR}}{\mathrm{M}} \times 100$$

Where:

IPR = Individual Percent Retained
CPR = Cumulative Percent Retained
M = Total Dry Sample mass before washing
IMR = Individual Mass Retained OR Adjusted Individual mass from Methods B or C
CMR = Cumulative Mass Retained OR Adjusted Individual mass from Methods B or C

OR

Percent Passing (Calculated):

$$\mathrm{PP} = \mathrm{PPP} - \mathrm{IPR} \text{ or } \mathrm{PP} = 100 - \mathrm{CPR}$$

Where:

PP = Percent Passing
PPP = Previous Percent Passing

Calculate cumulative percent retained on and passing each sieve on the basis of the dry mass of total sample, before washing. This will include any material finer than No. 200 (75 µm) that was washed out.

Divide the cumulative masses, or the corrected masses, on the individual sieves by the total mass of the initial dry sample (prior to washing) to determine the percent retained on and passing each sieve. Calculate the percent retained on and passing each sieve. Report percent passing as indicated in the "Report" section at the end of this FOP.

Example:

Dry mass of total sample, before washing: 3214.0 g

Dry mass of sample, after washing out the No. 200 (75 µm) minus: 3085.1 g

For the ½″ sieve:

Cumulative Mass retained on ½″ sieve = 161.0 g

$$\text{Cumulative \% retained} = \frac{161.0}{3214.0} \times 100 = 5.0\% \text{ retained}$$

% passing = 100-5.0 = 95% passing ½″ sieve

Sieve Size in (mm)		Cumulative Mass Retained (g)	Cumulative Percent Retained	Reported Percent Passing*
¾	(19.0)	0	0	100
½	(12.5)	161.0	5.0	95
⅜	(9.5)	642.0	20.0	80
No. 4	(4.75)	1118.3	34.8	65
**No. 6	(3.35)	1515.2		
No. 10	(2.0)	1914.7	59.6	40
No. 40	(0.425)	2631.6	81.9	18
No. 80	(0.210)	2862.7	89.1	11
No. 200	(0.075)	3051.1	94.9	5.1
Pan		3086.4		

*Report No. 200 (75 µm) sieve to 0.1 percent. Report all others to 1 percent.

**Intermediate sieve used to prevent overloading the U.S. No. 10 sieve.

Gradation On All Screens

Test Validation: (3086.4 – 3085.1)/3085.1 x 100 = 0.04% which is within the 0.3 percent requirement and the results can be used for acceptance purposes.

Procedure Method B

1. Perform steps 1 through 9 from the Procedure Method A, then continue as follows:
2. Select sieves to furnish information required by the specifications. Nest the sieves in order of decreasing size from top to bottom through the No. 4 (4.75 mm) with a pan at the bottom to retain the minus No. 4 (4.75 mm). See Table 1.
3. Place sieves in mechanical shaker and shake for a minimum of 10 minutes, or the minimum time determined to provide complete separation if this time is greater than 10 minutes for the sieve shaker being used.
4. Determine the individual or cumulative mass retained on each sieve and the pan to the nearest 0.1 percent or 0.1 g. Ensure that all material trapped in the openings of the sieve are cleaned out and included in the mass retained (see Note 5).
5. Determine the mass retained on each sieve to the nearest 0.1 percent of the total mass or better.
6. Determine the mass of the material in the pan (minus No. 4 (4.75 mm)).
7. Reduce the minus No. 4 (4.75 mm) using a mechanical splitter in accordance with FOP for AASHTO T 248 to produce a sample with a mass of 500 g minimum. Determine and record the mass of the minus No. 4 (4.75 mm) split.
8. Select sieves to furnish information required by the specifications. Nest the sieves in order of decreasing size from top to bottom through the No. 200 (75 µm) with a pan at the bottom to retain the minus No. 200 (75 µm).
9. Place sieves in mechanical shaker and shake for a minimum of 10 minutes, or the minimum time determined to provide complete separation if this time is greater than 10 minutes for the sieve shaker being used.
10. Determine the individual or cumulative mass retained on each sieve and the pan to the nearest 0.1 percent or 0.1 g. Ensure that all material trapped in the openings of the sieve are cleaned out and included in the mass retained (see Note 5).

Calculations

Compute the “Adjusted Cumulative Mass Retained” of the size increment of the original sample as follows when determining “Cumulative Mass Retained”:

Divide the cumulative masses, or the corrected masses, on the individual sieves by the total mass of the initial dry sample (prior to washing) to determine the percent retained on and passing each sieve. Calculate the percent retained on and passing each sieve. Report percent passing as indicated in the “Report” section at the end of this FOP.

When material passing the No. 4 (4.75 mm) sieve is split and only a portion of that is tested, the proportionate share of the amount passing the No. 200 (75 µm) sieve must be added to the sample mass to obtain a corrected test mass. This corrected test mass is used to calculate the gradation of the material passing the No. 4 (4.75 mm) sieve.

$$C = \left(\frac{M_1}{M_2} \times B\right) + D$$

Where:

C = Total cumulative mass retained of the size increment based on a total sample
M_1 = Mass of fraction finer than No. 4 (4.75 mm) sieve in total sample
M_2 = Mass of reduced portion of material finer than No. 4 (4.75 mm) sieve actually sieved
B = Cumulative mass of the size increment in the reduced portion sieved
D = Cumulative mass of plus No. 4 (4.75 mm) portion of sample

Example:

Dry mass of total sample, before washing: 3214.0 g

Dry mass of sample, after washing out the No. 200 (75 µm) minus: 3085.1 g

Sieve Size in (mm)		Cumulative Mass Retained (g)	Cumulative Percent Retained	Reported Percent Passing
¾	(19.0)	0	0	100
½	(12.5)	161.0	5.0	95
⅜	(9.50)	642.0	20.0	80
No. 4	(4.75)	1118.3	34.8	65

Gradation On Coarse Screens

Pan = 1968.0

Test Validation: (1118.3 + 1968.0 – 3085.1)/3085.1 x 100 = 0.04% which is within the 0.3 percent requirement and the results can be used for acceptance purposes.

The actual mass of material passing the No. 4 (4.75 mm) sieve and retained in the pan is 1968.0 g. This is M_1.

The pan (1968.0 grams) was reduced in accordance with the FOP for AASHTO T 248, so that at least 500 g are available. In this case, the mass determined was 512.8 g. This is M_2.

Sieve Size in (mm)		Cumulative Mass Retained (g)
No. 4	(4.75)	0
No. 10	(2.00)	207.5
No. 40	(0.425)	394.3
No. 80	(0.210)	454.5
No. 200	(0.075)	503.6
Pan		512.8

Gradation On Fine Screens

Test Validation: (512.8 – 512.8)/512.8 = 0.0% which is within the 0.3 percent requirement and the results can be used for acceptance purposes.

For the No. 10 sieve:

M_1 = 1968.0g
M_2 = 512.8g
B = 207.5g
D = 1118.3g

$$C = \frac{M_1}{M_2} \times B + D = \frac{1968.0g}{512.8g} \times 207.5g + 1118.3g = 1914.7g$$

$$\%\ \text{retained}\ \frac{1914.7g}{3214.0g} = 59.6\%$$

$$\%\ \text{passing} = 100 - 59.6 = 40.4\%, \text{reported as } 40\%$$

Sieve Size in (mm)		Cumulative Mass Retained (g)	Adjusted Cumulative Mass Retained (g)	Cum. Percent Retained	Reported Percent Passing*
¾	(19.0)	0	0	0	100.0
½	(12.5)	161.1	161.1	5.0	95
⅜	(9.5)	642.5	642.5	20.0	80
No. 4	(4.75)	1118.3	1118.3	34.8	65
No. 10	(2.0)	207.5 × 3.838 + 1118.3	1914.7	59.6	40
No. 40	(0.425)	394.3 × 3.838 + 1118.3	2631.6	81.6	18
No. 80	(0.210)	454.5 × 3.838 + 1118.3	2862.7	89.1	11
No. 200	(0.075)	503.6 × 3.838 + 1118.3	3051.1	94.9	5.1
Pan		512.8 × 3.838 + 1118.3	3086.4		

*Report No. 200 (75 µm) sieve to 0.1 percent. Report all others to 1 percent.

Final Gradation On All Screens

Alternative Method B

As an alternate method to account for the fact that only a portion of the minus No. 4 (4.75 mm) material was sieved, multiply the fine screen "Percent Passing" values by the percent passing the No. 4 (4.75 mm) sieve obtained in the coarse screen procedure, 65 percent in this case.

The mass retained in the pan must be corrected to include the proper percent of No. 200 (.075 mm) minus material washed out.

Divide the cumulative masses, or the corrected masses, on the individual sieves by the corrected pan mass of the initial dry sample (prior to washing) to determine the percent retained on and passing each sieve. Calculate the percent retained on and passing each sieve. Report percent passing as indicated in the "Report" section at the end of this FOP.

Dry mass of total sample, before washing: 3214.0 g

Dry mass of sample, after washing out the No. 200 (75 µm) minus: 3085.1 g

Amount of No. 200 (75 µm) minus washed out: 3214.0 g – 3085.1 g = 128.9 g

Sieve Size in (mm)		Cumulative Mass Retained (g)	Cumulative Percent Retained	Reported Percent Passing
¾	(19.0)	0	0	100
½	(12.5)	161.0	5.0	95
⅜	(9.50)	642.0	20.0	80
No. 4	(4.75)	1118.3	34.8	65

Gradation On Coarse Screens

Pan = 1968.0

$$\text{Test validation: } \frac{1118.3 + 1968.0 - 3085.1}{3085.1} \times 100 = 0.04\%$$

which is within the 0.3 percent requirement and the results can be used for acceptance purposes.

The actual mass of material passing the No. 4 (4.75 mm) sieve and retained in the pan is 1968.0 g. This is M_3.

The pan (1968.0 grams) was reduced in accordance with FOP for AASHTO T 248, so that at least 500 g are available. In this case, the mass determined was 512.8 g. This is M_4.

$$\text{Corrected pan mass} = M_4 + \frac{(M_4)(C_1)}{M_3}$$

Where:

M_4 = Mass retained in the pan from the split of the No. 4 (4.75 mm) minus

M_3 = Mass of the No. 4 (4.75 mm) minus of entire sample, not including No. 200 (.075 mm) minus washed out

C_1 = Mass of No. 200 (.075 mm) minus washed out

Sieve Size in (mm)		Cumulative Mass Retained (g)	Cumulative Percent Retained	Percent Passing
No. 4	(4.75)	0	0	100.0
No. 10	(2.00)	207.5	38.0	62.0
No. 40	(0.425)	394.3	72.2	27.8
No. 80	(0.210)	454.5	83.2	16.8
No. 200	(0.075)	503.6	92.2	7.8
Pan		512.8		

The corrected pan mass is the mass used to calculate the percent retained for the fine grading.

Example:

M_4 = 512.8g

M_3 = 1968.0g

C_1 = 128.9g

Corrected pan mass $= 512.8\text{g} + \frac{(512.8\text{g})(128.9\text{g})}{1968.0\text{g}} = 546.4\text{g}$

For the No. 10 sieve:

Mass of No. 10 sieve = 207.5g

Corrected Pan Mass = 546.4g

Cumulative % retained $= \frac{207.5\text{g}}{546.4\text{g}} = 38\%$

% passing = 100-38.0 = 62.0%

Adjusted % passing No. 10 = % passing No. 10 × % No. 4 = 62.0 × 0.65 = 40%

Sieve Size in (mm)		Adjustment	Reported Percent Passing*
¾	(19.0)		100
½	(12.5)		95
⅜	(9.5)		80
No. 4	(4.75)	100 × .65 =	65
No. 10	(2.00)	62.0 × .65 =	40
No. 40	(0.425)	27.8 × .65 =	18
No. 80	(0.210)	16.8 × .65 =	11
No. 200	(0.075)	7.8 × .65 =	5.1

*Report No. 200 (75 µm) sieve to 0.1 percent. Report all others to 1 percent.

Final Gradation On All Screens

Sample Calculation for Fineness Modulus

Fineness Modulus (FM) is used in determining the degree of uniformity of aggregate gradation in PCC mix designs. It is an empirical number relating to the fineness of the aggregate. The higher the FM, the coarser the aggregate. Values of 2.40 to 3.00 are common for FA in PCC.

The FM is the sum of the percentages retained on specified sieves, for PCC fine aggregate they are: No. 4 (4.75 mm), No. 8 (2.36 mm), No. 16 (1.18 mm), No. 30 (0.60 mm), No. 50 (0.30 mm), and No. 100 0.15 mm) divided by 100 gives the FM.

The following example is for WSDOT Class 2 Sand:

Sieve Size in (mm)		Percent Passing	Percent Retained	Percent Retained on Specified Sieves
No. 4	4.75 mm	100	0	0
No. 8	2.36 mm	87	13	13
No. 16	1.18 mm	69	31	31
No. 30	0.60 mm	44	56	56
No. 50	0.30 mm	18	82	82
No. 100	0.15 mm	4	96	96
				= 278
				FM = 2.78

Report

Results shall be reported on standard forms approved for use by the agency. Depending on the agency, this may include:

- Cumulative mass retained on each sieve.
- Cumulative percent retained on each sieve.
- Percent passing and retained on each sieve shall be reported to the nearest 1 percent except for the percent passing the U.S. No. 200 (75 µm) sieve, which shall be reported to the nearest 0.1 percent.
- FM to the nearest 0.01 percent for WSDOT Class 2 Sand.

Report the results using one or more of the following:

- Materials Testing System (MATS)
- DOT Forms 422-020, 422-020A, or 422-020B
- Form approved in writing by the State Materials Engineer

Performance Exam Checklist

WAQTC FOP for AASHTO T 27/T 11
Sieve Analysis of Fine And Coarse Aggregates

Participant Name _____ Exam Date _____

Procedure Element	Yes	No
1. The tester has a copy of the current procedure on hand?		
2. All equipment is functioning according to the test procedure, and if required, has the current calibration/verification tags present?		
3. Minimum sample mass meets requirement of Table 1 or from FOP for AASHTO T 308?		
4. Test sample dried to a constant mass by FOP for AASHTO T 255?		
5. Test sample cooled and mass determined to nearest 0.1 percent of mass?		
6. Sample placed in container and covered with water? (If specification requires that the amount of material finer than the No. 200 sieve is to be determined.)		
7. Dispersing Agent used for HMA?		
8. Contents of the container vigorously agitated?		
9. Complete separation of coarse and fine particles achieved?		
10. Wash water poured through required nested sieves?		
11. Operation continued until wash water is reasonably clear?		
12. Material retained on sieves returned to washed sample?		
13. Washed aggregate dried to a constant mass by FOP for AASHTO T 255?		
14. Washed aggregate cooled and mass determined to nearest 0.1 percent of mass?		
15. Sample placed in nest of sieves specified? (Additional sieves may be used to prevent overloading as allowed in FOP.)		
16. Material sieved in verified mechanical shaker for minimum of 10 minutes or for the minimum verified time whichever is longer?		
17. Mass of residue on each sieve determined to 0.1 percent of mass?		
18. Total mass of material after sieving agrees with mass before sieving to within 0.3 percent, or 0.2 percent for HMA (per FOP for AASHTO T 308)?		
19. Percentages calculated to the nearest 0.1 percent and reported to the nearest whole number, except No. 200 - reported to the nearest 0.1 percent?		
20. Percentage calculations based on original dry sample mass?		
21. Calculations performed properly? If material passing No. 4 sieve is split and only a portion is tested, calculation as noted in FOP performed properly?		

First Attempt: Pass Fail Second Attempt: Pass Fail

Signature of Examiner _____

Comments:

WSDOT FOP for WAQTC/AASHTO R 66

Sampling Bituminous Materials

Significance

Sampling is as important as testing and precautions shall be taken to obtain samples to show the true nature and condition of the materials. Because of the numerous types and grades of bituminous materials that are alternately shipped and stored in the same or similar containers, the opportunity for contaminating these containers with residues, precipitates, or cleaning solvents is ever present. Numerous opportunities also exist for obtaining samples which are not strictly representative of the material or are contaminated after removal. Therefore it is incumbent upon the producer, transporter, user and sampler to exercise continuous precaution in the sampling and handling of these materials

This standard does not purport to address all of the safety concerns, if any, associated with its use.

It is the responsibility of the user of the standard to establish appropriate safety and health practices and determine the applicability of regulatory limitations prior to use.

Scope

This practice applies to the sampling of liquid bituminous materials in accordance with AASHTO R 66. Sampling of solid and semi-solid bituminous materials (included in AASHTO R 66) is not covered here.

Agencies may be more specific on exactly who obtains the samples, where to sample, and what type of sampling device to use.

WSDOT personnel will observe the contractor's personnel obtaining the samples to assure that proper sampling procedures are followed. If proper sampling procedures are not followed the Contractor's personnel shall resample.

Procedure

1. Coordinate sampling with the contractor or supplier.
2. Use appropriate safety equipment and precautions.
3. A minimum of 1 gal (4 L) of the product shall be drawn and discarded or reintroduced to the tank before obtaining samples.
4. Sampling Asphalt Binder – Obtain samples at the asphalt mixing plant from the valve in either the storage tank or in the supply line to the mixer while the plant is in operation.
5. Sampling Emulsified Asphalt – Obtain samples from the distributor spray bar or application device just before or during application.

Containers

Sample containers must be new, and the inside may not be washed or rinsed. The outside may be wiped with a clean, dry cloth.

All samples shall be put in 1 qt (1 L) containers and properly identified on the outside of the container with contract number, date sampled, data sheet number, brand and grade of material, and sample number. Include lot and sublot numbers when appropriate.

All samples shall be protected from freezing.

Note: The filled sample container shall not be submerged in solvent, nor shall it be wiped with a solvent saturated cloth. If cleaning is necessary, use a clean dry cloth.

- Asphalt Binder – Use metal cans.
- Emulsified Asphalt – Use wide-mouth plastic jars with screw caps. Place tape around the seam of the cap to keep the cap from loosening and spilling the contents.

Standard sample labels (WSDOT Form 350-016) shall be completely filled out and attached to each sample container.

Performance Exam Checklist

Sampling Bituminous Materials
WAQTC FOP for AASHTO R 66

Participant Name _____ Exam Date _____

Procedure Element	**Yes**	**No**
1. The tester has a copy of the current procedure on hand?		
2. Appropriate containers used?		
a. Metal cans (all other bituminous liquids).		
b. Wide-mouth plastic containers (emulsified).		
3. Containers not washed or rinsed on inside?		
4. Minimum of 1 gallon allowed to flow before sample taken?		
5. Material obtained at correct location?		
a. Line between storage tank and mixing plant or the storage tank (HMA plants).		
b. Spray bar or application device, if not diluted (distributors).		
c. From delivery vehicle or prior to dilution, if diluted (distributors).		

Sample Taken By: Contractor

First Attempt: Pass Fail Second Attempt: Pass Fail

Signature of Examiner _____

Comments:

WSDOT FOP for AASHTO T 89[1]

Determining the Liquid Limit of Soils

WSDOT has adopted AASHTO T 89.

[1]This FOP is based on AASHTO T 23-08.

Performance Exam Checklist

Determining the Liquid Limit of Soils
AASHTO T 89 (Method B Only)

Participant Name _____ Exam Date _____

Preparation **Yes No**

1. The tester has a copy of the current procedure on hand?
2. All equipment is functioning according to the test procedure, and if required, has the current calibration/verification tags present?
3. Sample obtained using AASHTO R 58?
4. Minimum sample mass meets requirement of AASHTO T 89 Method B?
5. Sample mixed with 15 to 20 mL of distilled or demineralized water?
6. Additional water added at 1 to 3 mL as necessary until mass is uniform and of a stiff consistency?
7. No dry soil added after test has begun?
8. If soil was too wet, was sample discarded or allowed to dry?

Procedure **Yes No**

1. Sample placed in cup and spread to 10 mm maximum thickness?
2. Care taken to avoid entrapment of air bubbles?
3. Soil in cup divided through centerline of follower to the bottom of the cup in no more than six strokes?
4. Liquid Limit Device counter zeroed and base checked for level?
5. Was cup lifted and dropped at two revolutions per second until gap at bottom of groove closed about 0.5 in (13mm) in 22 to 28 blows?
6. Blows to closure recorded?
7. Was closure in acceptable blow count material?
8. Was material removed from cup and placed in a covered container?
9. Was procedure repeated a second time from step 1-6 without adding water?
10 Was second closure within two blows of first closure? If not was test rerun?
11. Was sample removed from device and moisture content determined per T 265?
12. Were all calculations performed correctly?

First Attempt: Pass Fail Second Attempt: Pass Fail

Signature of Examiner _____

Comments:

WSDOT FOP for AASHTO T 90

Determining the Plastic Limit and Plasticity Index of Soils

WSDOT has adopted AASHTO T 90.

Performance Exam Checklist

AASHTO T 90
Determining the Plastic Limit and Plasticity Index of Soils

Participant Name _____ Exam Date _____

Preparation	**Yes**	**No**
1. The tester has a copy of the current procedure on hand?		
2. All equipment is functioning according to the test procedure, and if required, has the current calibration/verification tags present?		
3. Sample obtained using AASHTO R 58?		
4. Minimum sample mass meets requirement of AASHTO T 90?		
5. Sample mixed with distilled or demineralized water until plastic enough to form ball allowed to sit for 12 hours undisturbed?		
6. 8 g ball formed from the moist sample material?		
7. Ball broken into 1.5-2 g portions and formed into ellipsoidal masses?		

Procedure	**Yes**	**No**
1. Mass rolled at between 80-90 strokes per minute (using one of the techniques described in T 90) for no more than 2 minutes to form a 3 mm diameter thread?		
2. Thread broken into six or eight pieces and pieces squeezed together into ellipsoidal shape and rerolled until thread crumbles under and soil can no longer be rolled into a thread?		
3. Tested material placed in a tared covered container and procedure steps 1-6 repeated until all 8 g of material is tested?		
4. Sample dried in accordance with T 265 to determine moisture content?		
5. Were all calculations performed correctly?		

First Attempt: Pass Fail Second Attempt: Pass Fail

Signature of Examiner _____

Comments:

AASHTO T 99

Moisture-Density Relations of Soils Using a 5.5 lb (2.5 kg) Rammer and a 12 in (305 mm) Drop

AASHTO T 99, Method A, has been adopted by WSDOT.

Tester Qualification Practical Exam Checklist

Moisture-Density Relations of Soils Using a 5.5 lb (2.5 kg) Rammer and a 12 in (305 mm) Drop
FOP for AASHTO T 99

Participant Name _____ Exam Date _____

Procedure Element	**Yes**	**No**
1. The tester has a copy of the current procedure on hand?	❒	❒
2. All equipment is functioning according to the test procedure, and if required, has the current calibration/verification tags present?	❒	❒
Sample Preparation		
1. If damp, sample dried in air or drying apparatus, not exceeding 140°F (60°C)?	❒	❒
2. Sample pulverized and adequate amount sieved over the No. 4 (4.75 mm) sieve?	❒	❒
3. Material retained on the sieve discarded?	❒	❒
4. Sample passing the sieve has appropriate mass?	❒	❒
Procedure		
1. Sample mixed with water to approximately 4 percent below expected optimum moisture content?	❒	❒
2. Layer of soil placed in mold with collar attached?	❒	❒
3. Mold placed on rigid and stable foundation?	❒	❒
4. Lightly tamp soil in mold?	❒	❒
5. Soil compacted with 25 blows?	❒	❒
6. Scrape sides of mold and evenly distributed on top of the layer?	❒	❒
7. Soil placed and compacted in three equal layers?	❒	❒
8. No more than ½ inch of soil above the top of the bottom portion of the mold?	❒	❒
9. Collar removed and soil trimmed to top of mold with straightedge?	❒	❒
10. Mass of mold and contents determined to appropriate precision?	❒	❒
11. Wet mass of specimen multiplied by mold factor to obtain wet density?	❒	❒
12. Soil removed from mold using sample extruder when applicable?	❒	❒
13. Soil sliced vertically through center?	❒	❒
14. Moisture sample removed from the entire face of one of the cut faces?	❒	❒
15. Sample weighed immediately and mass recorded?	❒	❒

16. Moisture sample mass per Table 1? ❒ ❒
17. Sample dried and water content determined according to AASHTO T 255 or T 265? ❒ ❒
18. Remainder of material from mold broken up to about passing sieve size and added to remainder of original test sample? ❒ ❒
19. Water added to increase moisture content in approximately 2 percent increments? ❒ ❒
20. Steps 2 through 15 repeated for each increment of water added? ❒ ❒
21. If soil is plastic (clay types):
    a. Sample mixed with water varying moisture content by approximately 2 percent, bracketing the optimum moisture content? ❒ ❒
    b. Samples placed in covered containers and allowed to stand for at least 12 hours ❒ ❒
22. Process continued until wet density either decreases or stabilizes? ❒ ❒
23. Water content and dry density calculated for each sample? ❒ ❒
24. All calculations performed correctly? ❒ ❒

First Attempt: Pass ❒ Fail ❒ Second Attempt: Pass ❒ Fail ❒

Signature of Examiner _____

Comments:

WSDOT FOP for AASHTO T 106[1]

Compressive Strength of Hydraulic Cement Mortars (Using 2 in or (50 mm) Cube Specimens)

1. Scope

   1.1 This test method covers determination of the compressive strength of hydraulic cement mortars, using 2 in or (50 mm) cube specimens.

   Note 1: Test Method C 349 provides an alternative procedure for this determination (not to be used for acceptance tests).

   1.2 The values stated in SI units are to be regarded as the standard. The values in parentheses are for information only.

   1.3 Values in SI units shall be obtained by measurement in SI units or by appropriate conversion, using the Rules for Conversion and Rounding given in Standard IEEE/ASTM SI 10, of measurements made in other units.

   1.4 *This standard does not purport to address all of the safety concerns, if any, associated with its use. It is the responsibility of the user of this standard to establish appropriate safety and health practices and determine the applicability of regulatory limitations prior to use.*

2. Referenced Documents

   2.1 AASHTO Standards

   M 85 Portland Cement

   M 152 Mixing Rooms, Flow Table for Use in Tests of Hydraulic Cement

   M 201 Moist Cabinets, Moist Rooms, and Water Storage Tanks Used in the Testing of Hydraulic Cements and Concretes

   M 240 Blended Hydraulic Cements

   M 295 Coal Fly Ash and Raw or Calcined Natural Pozzolan for Use in Concrete

   M 302 Ground Granulated Blast-Furnace Slag for Use in Concrete and Mortars

   R11 Recommended Practice for Indicating Which Places of Figures Are to be Considered Significant in Specified Limiting Values

   T 105 Chemical Analysis of Hydraulic Cement

   T 162 Mechanical Mixing of Hydraulic Cement Pastes and Mortars of Plastic Consistency

[1] This Test Method is based on AASHTO T 106-09

2.2 ASTM Standards

C 91 Masonry Cement

C 349 Test Method for Compressive Strength of Hydraulic Cement Mortars (Using Portions of Prisms Broken in Flexure)

C 670 Practice for Preparing Precision and Bias Statements for Test Methods for Construction Materials

C 778 Specification for Standard Sand 2

C 1005 Specification for Weights and Weighing Devices for Use in Physical Testing of Hydraulic Cements

C 1157 Hydraulic Cement

C 1328 Plastic (Stucco) Cement

C 1329 Mortar Cement

IEEE/ASTM SI 10
Standard for Use of the International System of Units (SI): The Modern Metric System

3. Summary of Test Method

3.1 The mortar used consists of one part cement and 2.75 parts of sand proportioned by mass. Portland or air-entraining portland cements are mixed at specified water/cement ratios. Water content for other cements is sufficient to obtain a flow of 110 ± 5 in 25 drops of the flow table. Two-inch or (50 mm) test cubes are compacted by tamping in two layers. The cubes are cured 24 hours in the molds and stripped and immersed in lime water until tested.

4. Significance and Use

4.1 This test method provides a means of determining the compressive strength of hydraulic cement and other mortars and results may be used to determine compliance with specifications. Further, this test method is referenced by numerous other specifications and test methods. Caution must be exercised in using the results of this test method to predict the strength of concretes.

5. Apparatus

5.1 *Standard Masses and Balances,* shall conform to the requirements of ASTM C 1005. The balance device shall be evaluated for precision and bias at a total load of 2000 g.

5.2 *Glass Graduates*, of suitable capacities (preferably large enough to measure the mixing water in a single operation) to deliver the indicated volume at 20°C. The permissible variation shall be ±2 mL. These graduates shall be subdivided to at least 5 mL, except that the graduation lines may be omitted for the lowest 10 mL for a 250-mL graduate and for the lowest 25 Ml of a 500-mL graduate. The main graduation lines shall be circles and shall be numbered. The least graduations shall extend at least one seventh of the way around, and intermediate graduations shall extend at least one fifth of the way around.

5.3 *Specimen Molds*, for the 2 in or (50 mm) cube specimens shall be tight fitting. The molds shall have not more than three cube compartments and shall be separable into not more than two parts. The parts of the molds when assembled shall be positively held together. The molds shall be made of hard metal not attacked by the cement mortar. For new molds the Rockwell hardness number of the metal shall be not less than 55 HRB. The sides of the molds shall be sufficiently rigid to prevent spreading or warping. The interior faces of the molds shall be plane surfaces and shall conform to the tolerances of Table 1.

	2 in Cube Molds		50 mm Cube Molds	
Parameter	**New**	**In Use**	**New**	**In Use**
Planeness of Sides	<0.001 in	<0.002 in	<0.025 mm	<0.05 mm
Distance Between Opposite Sides	2 in ± 0.005 in	2 in ± 0.02 in	50 mm ± 0.13 mm	50 mm ± 0.50 mm
Height of Each Compartment	2 in ± 0.001 in to -0.005 in	2 in ± 0.01 in to -0.015 in	50 mm ± 0.25 mm to -0.013 mm	50 mm ± 0.25 mm to -0.38 mm
Angle Between Adjacent Faces[A]	90 ± 0.5°	90 ± 0.5°	90 ± 0.5°	90 ± 0.5°

Notes:

A Measured at points slightly removed from the intersection. Measured separately for each compartment between all the interior faces and the adjacent face and between interior faces and top and bottom planes of the mold.

Permissible Variations of Specimen Molds
Table 1

5.4 *Mixer, Bowl and Paddle*, an electrically driven mechanical mixer of the type equipped with paddle and mixing bowl, as specified in T 162.

5.5 *Flow Table and Flow Mold*, conforming to the requirements of M 152.

5.6 *Tamper,* a non-absorptive, nonabrasive, non-brittle material such as a rubber compound having a Shore A durometer hardness of 80 ± 10 or seasoned oak wood rendered non-absorptive by immersion for 15 min in paraffin at approximately 392°F or (200°C), shall have a cross section of about ½ by 1 in or (13 by 25 mm) and a convenient length of about 5 to 6 in or (120 to 150 mm). The tamping face shall be flat and at right angles to the length of the tamper.

5.7 *Trowel*, having a steel blade 4 to 6 in (100 to 150 mm) in length, with straight edges.

5.8 *Moist Cabinet or Room,* conforming to the requirements of Specification M 201.

5.9 *Testing Machine*, either the hydraulic or the screw type, with sufficient opening between the upper bearing surface and the lower bearing surface of the machine to permit the use of verifying apparatus. The load applied to the test specimen shall be indicated with an accuracy of ± 1.0%. If the load applied by the compression machine is registered on a dial, the dial shall be provided with a graduated scale that can be read to at least the nearest 0.1% of the full scale load (Note 2). The dial shall be readable within 1% of the indicated load at any given load level within the loading range. In no case shall the loading range of a dial be considered to include loads below the value that is 100 times the smallest change of load that can be read on the scale. The scale shall be provided with a graduation line equal to zero and so numbered. The dial pointer shall be of sufficient

length to reach the graduation marks; the width of the end of the pointer shall not exceed the clear distance between the smallest graduations. Each dial shall be equipped with a zero adjustment that is easily accessible from the outside of the dial case, and with a suitable device that at all times until reset, will indicate to within 1 percent accuracy the maximum load applied to the specimen.

5.9.1 If the testing machine load is indicated in digital form, the numerical display must be large enough to be easily read. The numerical increment must be equal to or less than 0.10 percent of the full scale load of a given loading range. In no case shall the verified loading range include loads less than the minimum numerical increment multiplied by 100. The accuracy of the indicated load must be within 1.0 percent for any value displayed within the verified loading range. Provision must be made for adjusting to indicate true zero at zero load. There shall be provided a maximum load indicator that at all times until reset will indicate within 1 percent system accuracy the maximum load applied to the specimen.

Note 2: As close as can be read is considered 1/50 in or (0.5 mm) along the arc described by the end of the pointer. Also, one half of the scale interval is about as close as can reasonably be read when the spacing on the load indicating mechanism is between 1/25 in or (1 mm) and 1/16 in or (1.6 mm). When the spacing is between 1/16 in or (1.6 mm) and 1/8 in or (3.2 mm), one third of the scale interval can be read with reasonable certainty. When the spacing is 1/8 in or (3.2 mm) or more, one fourth of the scale interval can be read with reasonable certainty.

5.9.2 The upper bearing shall be a spherically seated, hardened metal block firmly attached at the center of the upper head of the machine. The center of the sphere shall lie at the center of the surface of the block in contact with the specimen. The block shall be closely held in its spherical seat, but shall be free to tilt in any direction. A hardened metal bearing block shall be used beneath the specimen to minimize wear of the lower platen of the machine. To facilitate accurate centering of the test specimen in the compression machine, one of the two surfaces of the bearing blocks shall have a diameter or diagonal of between 70.7 mm (2.83 in) (See Note 3) and 2.9 in (73.7 mm). When the upper block surface meets this requirement, the lower bearing surface shall be greater than 70.7 (2.83 in). When the lower block bearing surface meets this requirement, the diameter or diagonal of upper block bearing surface shall be between 70.7 and 79.4 (2.83 and 3 1/8 in). When the lower block is the only block with a diameter or diagonal between 70.7 and 73.7 mm [2.83 in and 2.9 in], the lower block shall be used to center the test specimen. In that case, the lower block shall be centered with respect to the upper bearing block and held in position by suitable means. The bearing block surfaces intended for contact with the specimen shall have a Rockwell hardness number not less than 60 HRC. These surfaces shall not depart from plane surfaces by more than 0.013 mm [0.0005 in] when the blocks are new and shall be maintained within a permissible variation of 0.001 in (0.025 mm).

Note 3: The diagonal of 2 in or (50 mm) cube is 2.83 in (70.7 mm).

6. Materials

6.1 *Graded Standard Sand:*

6.1.1 The sand (Note 4) used for making test specimens shall be natural silica sand conforming to the requirements for graded standard sand in ASTM C 778.

Note 4: *Segregation of Graded Sand* — The graded standard sand should be handled in such a manner as to prevent segregation, since variations in the grading of the sand cause variations in the consistency of the mortar. In emptying bins or sacks, care should be exercised to prevent the formation of mounds of sand or craters in the sand, down the slopes of which the coarser particles will roll. Bins should be of sufficient size to permit these precautions. Devices for drawing the sand from bins by gravity should not be used.

7. Temperature and Humidity

7.1 *Temperature* — The temperature of the air in the vicinity of the mixing slab, the dry materials, molds, base plates, and mixing bowl, shall be maintained between 68 and 81.5°F or (20 and 27.5°C). The temperature of the mixing water, moist closet or moist room, and water in the storage tank shall be set at 73.5°F or (23°C) and shall not vary from this temperature by more than ± 3°F or (± 1.7°C).

7.2 *Humidity* — The relative humidity of the laboratory shall be not less than 50 percent. The moist closet or moist room shall conform to the requirements of M 201.

8. Test Specimens

8.1 Make two or three specimens from a batch of mortar for each period of test or test age.

9. Preparation of Specimen Molds

9.1 Apply a thin coating of release agent to the interior faces of the mold and non-absorptive base plates. Apply oils and greases using an impregnated cloth or other suitable means. Wipe the mold faces and the base plate with a cloth as necessary to remove any excess release agent and to achieve a thin, even coating on the interior surfaces. When using an aerosol lubricant, spray the release agent directly onto the mold faces and base plate from a distance of 6 to 8 in or (150 to 200 mm) to achieve complete coverage. After spraying, wipe the surface with a cloth as necessary to remove any excess aerosol lubricant. The residue coating should be just sufficient to allow a distinct fingerprint to remain following light finger pressure (Note 5).

9.2 Seal the surfaces where the halves of the mold join by applying a coating of light cup grease such as petrolatum. The amount should be sufficient to extrude slightly when the two halves are tightened together. Remove any excess grease with a cloth.

9.3 After placing the mold on its base plate (and attaching, if clamp-type) carefully remove with a dry cloth any excess oil or grease from the surface of the mold and the base plate to which watertight sealant is to be applied. As a sealant, use paraffin, microcrystalline wax, or a mixture of three parts paraffin to five parts rosin by mass. Liquefy the sealant by heating between 230 and 248°F or (110 and 120°C). Effect a watertight seal by

applying the liquefied sealant at the outside contact lines between the mold and its base plate.

Note 5: Because aerosol lubricants evaporate, molds should be checked for a sufficient coating of lubricant immediately prior to use. If an extended period of time has elapsed since treatment, retreatment may be necessary.

Note 6: *Watertight Molds* — The mixture of paraffin and rosin specified for sealing the joints between molds and base plates may be found difficult to remove when molds are being cleaned. Use of straight paraffin is permissible if a watertight joint is secured, but due to the low strength of paraffin it should be used only when the mold is not held to the base plate by the paraffin alone. A watertight joint may be secured with paraffin alone by slightly warming the mold and base plate before brushing the joint. Molds so treated should be allowed to return to the specified temperature before use.

10. Procedure

Note: For Field fabrication of grout cubes, follow WSDOT Test Method 813.

10.1 Composition of Mortars

10.1.1 The proportions of materials for the standard mortar shall be one part of cement to 2.75 parts of graded standard sand by mass. Use a water-cement ratio of 0.485 for all portland cements and 0.460 for all air-entraining portland cements. The amount of mixing water for other than portland and air-entraining portland cements shall be such as to produce a flow of 110 ± 5 as determined in accordance with Section 10.3 and shall be expressed as mass percent of cement.

10.1.2 The quantities of materials to be mixed at one time in the batch of mortar for making six and nine test specimens shall be as follows in Table 2:

	No. of Specimens	
	6	**9**
Cement, g	500	740
Sand, g	1375	2035
Water, mL: Portland (0.485)	242	359
Air-entraining portland (0.460)	230	340
Other (to flow of 110 ± 5)	—	—

Mixing Proportions for 2 in Cubes
Table 2

10.2 Preparation of Mortar

10.2.1 Mechanically mix in accordance with the procedure given in T 162.

10.3 Determination of Flow

10.3.1 Carefully wipe the flow-table top clean and dry, and place the flow mold at the center. Place a layer of mortar about 1 in or (25 mm) in thickness in the mold and tamp 20 times with the tamper. The tamping pressure shall be just sufficient to ensure uniform filling of the mold. Then fill the mold with mortar

and tamp as specified for the first layer. Cut off the mortar to a plane surface, flush with the top of the mold, by drawing the straight edge of a trowel (held nearly perpendicular to the mold) with a sawing motion across the top of the mold. Wipe the table top clean and dry, being especially careful to remove any water from around the edge of the flow mold. Lift the mold away from the mortar 1 min after completing the mixing operation. Immediately, drop the table through a height of ½ in or (13 mm) 25 times in 15 seconds. Using the calipers, determine the flow by measuring the diameters of the mortar along the lines scribed in the table top, adding the four readings. The total of the four readings from the calipers equals the percent increase of the original diameter of the mortar.

10.3.2 For portland and air-entraining portland cements, merely record the flow.

10.3.3 In the case of cements other than portland or air-entraining portland cements, make trial mortars with varying percentages of water until the specified flow is obtained. Make each trial with fresh mortar.

10.3.4 Immediately following completion of the flow test, return the mortar from the flow table to the mixing bowl. Quickly scrape the bowl sides and transfer into the batch the mortar that may have collected on the side of the bowl and then remix the entire batch 15 seconds at medium speed. Upon completion of mixing, the mixing paddle shall be shaken to remove excess mortar into the mixing bowl.

10.3.5 When a duplicate batch is to be made immediately for additional specimens, the flow test may be omitted and the mortar allowed to stand in the mixing bowl 90 seconds without covering. During the last 15 seconds of this interval, quickly scrape the bowl sides and transfer into the batch the mortar that may have collected on the side of the bowl. Then remix for 15 seconds at medium speed.

10.4 Molding Test Specimens

10.4.1 Complete the consolidation of the mortar in the molds either by hand tamping or by a qualified alternative method. Alternative methods include but are not limited to the use of vibrating table or mechanical devices.

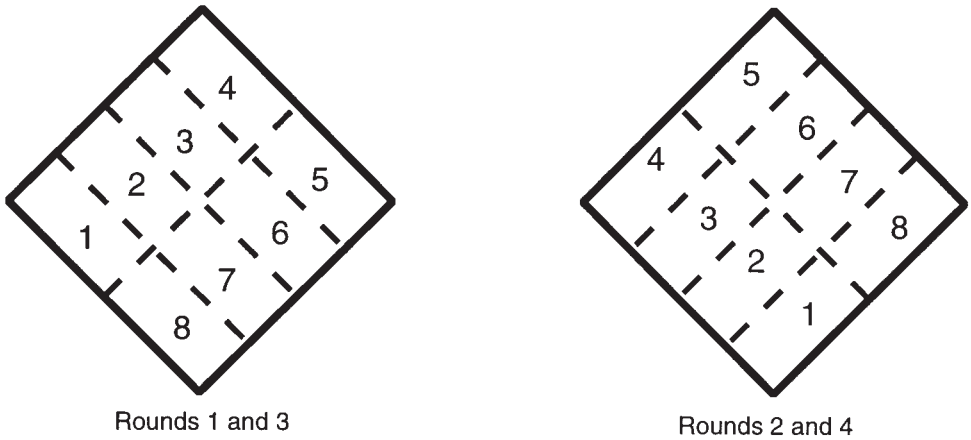

Order of Tamping in Molding of Test specimens
Figure 1

10.4.2 Hand Tamping-Start molding the specimens within a total elapsed time of not more than 2 min and 30 seconds after completion of the original mixing of the mortar batch. Place a layer of mortar about 1 in or (25 mm) (approximately one half of the depth of the mold) in all of the cube compartments. Tamp the mortar in each cube compartment 32 times in about 10 seconds in 4 rounds, each round to be at right angles to the other and consisting of eight adjoining strokes over the surface of the specimen, as illustrated in Figure 1. The tamping pressure shall be just sufficient to ensure uniform filling of the molds. The 4 rounds of tamping (32 strokes) of the mortar shall be completed in one cube before going to the next. When the tamping of the first layer in all of the cube compartments is completed, fill the compartments with the remaining mortar and then tamp as specified for the first layer. During tamping of the second layer bring in the mortar forced out onto the tops of the molds after each round of tamping by means of the gloved fingers and the tamper upon completion of each round and before starting the next round of tamping. On completion of the tamping, the tops of all cubes should extend slightly above the tops of the molds. Bring in the mortar that has been forced out onto the tops of the molds with a trowel and smooth off the cubes by drawing the flat side of the trowel (with the leading edge slightly raised) once across the top of each cube at right angles to the length of the mold. Then, for the purpose of leveling the mortar and making the mortar that protrudes above the top of the mold of more uniform thickness, draw the flat side of the trowel (with the leading edge slightly raised) lightly once along the length of the mold. Cut off the mortar to a plane surface flush with the top of the mold by drawing the straight edge of the trowel (held nearly perpendicular to the mold) with a sawing motion over the length of the mold.

10.4.3 *Alternative Methods*—Any consolidation method may be used that meets the qualification requirements of this section. The consolidation method consists of a specific procedure, equipment and consolidation device, as selected and used in a consistent manner by a specific laboratory. The mortar batch size of the method may be modified to accommodate the apparatus, provided the proportions maintain the same ratios as given in Section 10.1.2.

10.4.3.1 Separate qualifications are required for the following classifications:

10.4.3.2 *Class A, Non-air Entrained Cements*—For use in concrete. Refer to M 85, M 240 and ASTM C 1157.

10.4.3.3 *Class B, Air-entrained Cements*—For use in concrete. Refer to M 85, M 240 and ASTM C 1157.

10.4.3.4 *Class C, Masonry, Mortar and Stucco Cements*—Refer to ASTM C 91, C 1328, and C 1329.

10.4.3.5 An alternative method may only be used to test the cement types as given in Section 10.4.3.1 above, for which it has been qualified.

10.4.3.6 It can also be used for Strength Activity Index determinations for fly ash and slag, refer to M 295 and M 302, provided the alternative method has qualified for both Class A and Class C cements.

10.4.4 *Qualification Procedure*—Contact CCRL to purchase cement samples that have been used in the Proficiency Sample Program (PSP). Four samples (5 kg each) of the class to be qualified will be required to complete a single qualification (See Note 7).

10.4.4.1 In one day, prepare replicate six-cube or nine-cube batches using one of the cements and cast a minimum of 36 cubes. Complete one round of tests on each cement on different days. Store and test all specimens as prescribed in the sections below. Test all cubes at the age of seven-days.

10.4.4.2 Tabulate the compressive strength data and complete the mathematical analyses as instructed in Annex A1.

10.4.5 *Re-qualification of the Alternate Compaction Method:*

10.4.5.1 Re-qualification of the method shall be required if any of the following occur:

- Evidence that the method may not be providing data in accordance with the requirements of Table 2.
- Results that differ from the reported final average of a CCRL-PSP sample with a rating of three or less.
- Results that differ from the accepted value of a known reference sample with established strength values by more than twice the multi-laboratory 1s percent values of Table 2. Before starting the re-qualification procedure, evaluate all aspects of cube fabrication and testing process to determine if the offending result is due to some systematic error or just an occasional random event.

10.4.5.2 If the compaction equipment is replaced, significantly modified, repaired, or has been recalibrated, re-qualify the equipment in accordance with Section 10.4.4.

Note 7: It is recommended that a large homogenous sample of cement be prepared at the time of qualification for use as a secondary standard and for method evaluation. Frequent testing of this sample will give early warning of any changes in the performance of the apparatus.

10.5 *Storage of Test Specimens* — Immediately upon completion of molding, place the test specimens in the moist closet or moist room. Keep all test specimens, immediately after molding, in the molds on the base plates in the moist closet or moist room from 20 to 24 hrs with their upper surfaces exposed to the moist air but protected from dripping water. If the specimens are removed from the molds before 24 hrs, keep them on the shelves of the moist closet or moist room until they are 24 hrs old, and then immerse the specimens, except those for the 24-hr test, in saturated lime water in storage tanks constructed of non-corroding materials. Keep the storage water clean by changing as required.

10.6 *Determination of Compressive Strength*:

10.6.1 Test the specimens immediately after their removal from the moist closet in the case of 24 hrs specimens, and from storage water in the case of all other specimens. All test specimens for a given test age shall be broken within the permissible tolerance prescribed as follows in Table 3:

Test Age	Permissible Tolerance
24 hrs	± ½ hr
3 days	± 1 hr
7 days	± 3 hr
28 days	± 12 hr

Testing Time tolerances
Table 3

If more than one specimen at a time is removed from the moist closet for the 24-hr tests, keep these specimens covered with a damp cloth until time of testing. If more than one specimen at a time is removed from the storage water for testing, keep these specimens in water at a temperature of 73.4 ± 3°F or (23 ± 2°C) and of sufficient depth to completely immerse each specimen until time of testing.

10.6.2 Wipe each specimen to a surface-dry condition, and remove any loose sand grains or incrustations from the faces that will be in contact with the bearing blocks of the testing machine. Check these faces by applying a straightedge (Note 8). If there is appreciable curvature, grind the face or faces to plane surfaces or discard the specimen. A periodic check of the cross-sectional area of the specimens should be made.

Note 8: *Specimen Faces* — Results much lower than the true strength will be obtained by loading faces of the cube specimen that are not truly plane surfaces. Therefore, it is essential that specimen molds be kept scrupulously clean, as otherwise, large irregularities in the surfaces will occur. Instruments for cleaning molds should always be softer than the metal in the molds to prevent wear.

In case grinding specimen faces is necessary, it can be accomplished best by rubbing the specimen on a sheet of fine emery paper or cloth glued to a plane surface, using only a moderate pressure. Such grinding is tedious for more than a few thousandths of an inch (hundredths of a millimeter); where more than this is found necessary, it is recommended that the specimen be discarded.

10.6.3 Apply the load to specimen faces that were in contact with the true plane surfaces of the mold. Carefully place the specimen in the testing machine below the center of the upper bearing block. Prior to the testing of each cube, it shall be ascertained that the spherically seated block is free to tilt. Use no cushioning or bedding materials. Bring the spherically seated block into uniform contact with the surface of the specimen. Apply the load rate at a relative rate of movement between the upper and lower platens corresponding to a loading on the specimen with the range of 200 to 400 lbs/s (900 to 1800 N/S). Obtain this designated rate of movement of the platen during the first half of the anticipated maximum load and make no adjustment in the rate of movement of the platen in the latter half of the loading especially while the cube is yielding before failure.

Note 9: It is advisable to apply only a very light coating of a good quality, light mineral oil to the spherical seat of the upper platen.

11. CALCULATION

11.1 Record the total maximum load indicated by the testing machine, and calculate the compressive strength as follows:

$$fm = P/A \quad (1)$$

where:

fm = compressive strength in psi or (MPa),
P = total maximum load in lbf or (N), and
A = area of loaded surface in 2 or (mm 2).

Either 2 in or (50 mm) cube specimens may be used for the determination of compressive strength, whether inch-pound or SI units are used. However, consistent units for load and area must be used to calculate strength in the units selected. If the cross-sectional area of a specimen varies more than 1.5 percent from the nominal, use the actual area for the calculation of the compressive strength. The compressive strength of all acceptable test specimens (see Section 12) made from the same sample and tested at the same period shall be averaged and reported to the nearest 10 psi (0.1 MPa).

12. Report

12.1 Report the flow to the nearest 1 percent and the water used to the nearest 0.1 percent. Average compressive strength of all specimens from the same sample shall be reported to the nearest 10 psi (0.1 MPa).

13. Faulty Specimens and Retests

13.1 In determining the compressive strength, do not consider specimens that are manifestly faulty.

13.2 The maximum permissible range between specimens from the same mortar batch, at the same test age is 8.7 percent of the average when three cubes represent a test age and 7.6 percent when two cubes represent a test age (Note 10).

Note 10: The probability of exceeding these ranges is 1 in 100 when the within-batch coefficient of variation is 2.1 percent. The 2.1 percent is an average for laboratories participating in the portland cement and masonry cement reference sample programs of the Cement and Concrete Reference Laboratory.

13.3 If the range of three specimens exceeds the maximum in 13.2, discard the result which differs most from the average and check the range of the remaining two specimens. Make a retest of the sample if less than two specimens remain after discarding faulty specimens or discarding tests that fail to comply with the maximum permissible range of two specimens.

Note 11: Reliable strength results depend upon careful observance of all of the specified requirements and procedures. Erratic results at a given test period indicate that some of the requirements and procedures have not been carefully observed; for example, those covering the testing of the specimens as prescribed in 10.6.2 and 10.6.3. Improper centering of specimens resulting in oblique fractures or lateral movement of one of the heads of the testing machine during loading will cause lower strength results.

14. Precision and Bias

See AASHTO T 106-09 for Precision and Bias.

Performance Exam Checklist

Compressive Strength of Hydraulic Cement Mortar for AASHTO T 106

Participant Name _____ Exam Date _____

Procedure Element	Yes	No
1. The tester has a copy of the current procedure on hand?	❐	❐
2. All equipment is functioning according to the test procedure, and if required, has the current calibration/verification tags present?	❐	❐
3. Cubes are broken within permissible tolerance for time?	❐	❐
4. Cubes tested immediately after removal from moist closet?	❐	❐
5. Specimens covered with damp cloth while out of moist room closet?	❐	❐
6. Cubes wiped clean of sand, and wiped to surface dry condition prior to testing?	❐	❐
7. Faces to contact the bearing blocks are those that were in contact with the mold?	❐	❐
8. Faces that will contact the bearing blocks checked with a straightedge?	❐	❐
9. Cross-sectional area determined in respect to those faces contacting the bearing blocks?	❐	❐
10. Prior to testing each cube, the spherically seated block was checked for freedom to tilt?	❐	❐
11. Load rate of 200 to 400 lbf/s (900-1800 N/s) obtained during the first half of the anticipated load?	❐	❐
12. No adjustment in rate was made during the second half of the loading?	❐	❐
13. Compressive strength of cubes averaged and reported to the nearest 10 psi (0.1 MPa)?	❐	❐

First attempt: Pass ❐ Fail ❐ Second attempt: Pass ❐ Fail ❐

Signature of Examiner _____

Comments:

AASHTO T 112 (Modified)

Clay Lumps and Friable Particles in Aggregate

AASHTO T 112 has been adopted by WSDOT.

The following definition for "Constant Mass" has been added to this procedure.

> "Constant Mass - Test samples dried at a temperature of 230 ± 9°F (110 ± 5°C) to such a condition that it will not lose more than 0.1 per cent moisture after 2 hours of drying. Such a condition of dryness can be verified by determining the mass of the sample before and after successive 2 hour drying periods. In lieu of such determination, samples may be considered to have reached constant mass when they have been dried at a temperature of 230 ± 9°F (110 ± 5°C) for an equal or longer period than that previously found adequate for producing the desired constant mass condition under equal or heavier loading condition of the oven."

Washington State
Department of Transportation

WSDOT Test Method T 113

Method of Test for Determination of Degradation Value

1. Scope
   a. This method covers the procedure for determining the susceptibility of an aggregate to degrade into plastic fines when abraded in the presence of water.
2. Apparatus
   a. Balance — 5000 g capacity, sensitive to 0.1 g
   b. Degradation Shaker — Tyler Portable Sieve Shaker CL-305 modified to provide 300 ± 5 oscillations per minute with a 1¾ in (44.5 mm) throw on the cam or a shaker with equivalent movement
   c. Washing Canister — Shall be either Plastic or Steel meeting the following:
      - Plastic Canister — 7½ in ± ¼ in (190.5 mm ± 6.3 mm) diameter x 6 ± ½ in (152.4 mm ± 12.5 mm) high. Sidewalls of the plastic canister should meet the bottom at 90 degrees with little or no fillet
      - Steel Canister: Meeting the requirements of AASHTO T 210 (ASTM D 3744)
   d. Sand equivalent graduated cylinder and rubber stopper
   e. Sand equivalent stock solution
   f. Sieves — ½ in (12.5 mm), ⅜ in (9.5 mm), ¼ in (6.3 mm), U.S. No. 10 (2.00 mm) and U.S. No. 200 (0.075 mm) sieves conforming to the requirement of AASHTO M-92
   g. Graduates — 500 ml tall form, 100 ml
   h. Interval timer
   i. Funnel — Large enough to securely hold the nest of sieves and a mouth that fits into the 500 ml graduate
   j. Sieve Shaker – Shaker that meets the requirements of AASHTO T-27
   k. Oven – Sufficient size, capable of maintaining a uniform temperature of 230 ± 9°F (110 ± 5°C)
   l. Sprayer – Water sprayer, device to produce a low volume stream of water. i.e. 500 ml wash bottle
   m. Suitable Containers – Pans for washing and drying

3. Sample Preparation

   a. If testing pit run material: dry at 230 ± 9°F (110 ± 5°C) to allow for clean separation from the fine material. Separate the material over the ½ in (12.5 mm) sieve and discard that finer than the ½ in (12.5 mm) and proceed to step 3d.

   b. If testing crushed and stockpiled material: dry at 230 ± 9°F (110 ± 5°C) to allow for clean separation from the fine material and proceed to step 3e.

   c. If testing quarry material: if necessary, separate the material over the ½ in (12.5 mm) sieve and discard that finer than the ½ in (12.5 mm).

   d. Crush the material to be tested to pass the ½ in sieve (12.5 mm).

   e. Split out an adequate amount of crushed material (approximately 5000 grams).

   f. Sieve the approx. 5000 g split over a ½ in (12.5 mm), ⅜ in (9.5 mm), ¼ in (6.3 mm), and U.S. No. 10 (2.00 mm) screens in a sieve shaker. Steps should be taken to avoid overloading the sieves. Use shaking time determined to meet the requirement of AASHTO T 27 Section 8.2 for the shaker being used.

   g. By splitting or quartering, obtain from the sieved material approximately 550 g of ½ -⅜ (12.5-9.5 mm), 550 g of ⅜-¼ (9.5-6.3 mm), and 1100 g of ¼ -#10 (6.3-2.00 mm).

   h. Combine the ½-⅜ (12.5-9.5 mm) with the ⅜-¼ (9.5-6.3 mm).

   i. Wash the ½-¼ (12.5-6.3 mm) and ¼-#10 (6.3-2.00 mm) portions separately by placing in a container and adding sufficient water to cover it. Agitate vigorously to ensure complete separation of the material finer than No. 200 (0.075 mm) from coarser particles and bring the fine material into suspension above the coarser material.

      Note 1: The use of a mechanical aggregate washer is NOT permitted in the washing procedure.

      Immediately pour the wash water containing the suspended and dissolved solids over a U.S. No. 10 (2.00 mm) sieve, being careful not to pour out the coarser particles. Add a second charge of water to the portion remaining in the container, agitate, and repeat the operation until the wash water is reasonably clear. Return all material retained on the sieve to the container. Repeat the process for the second portion.

   j. Place washed portions into suitable containers and dry to a constant weight at 230 ± 9°F (110 ± 5°C).

   k. Allow to cool to room temperature.

   l. From the washed and dried material, prepare two - 1000 g test samples as follows:

      1. Quarter or split the ½-¼ (12.5-6.3 mm) to achieve two 500 ± 1 g portions; hand selection of up to 50 g to attain the 500 ± 1 grams is acceptable.

      2. Split the ¼-#10 (6.3-2.00 mm) to achieve two 500 ± 1 g portions; hand selection of up to 50 g to attain the 500 ± 1 grams is acceptable.

      3. Combine each of the ½-¼ (12.5-6.3 mm) portions with one of the ¼-#10 (6.3-2.00 mm) portions to create two - 1000 ± 2 g test samples consisting of ½-#10 (12.5-2.00 mm) material.

4. Procedure

   a. Place one test sample in the washing canister, add 200 ± 5 ml of water, cover tightly and place in degradation shaker.

   b. Immediately agitate the material for 20 minutes.

   c. At the end of the shaking time, empty the washing canister into nested U.S. No. 10 (2.00 mm) and U.S. No. 200 (0.075 mm) sieves fitted into the funnel placed over a 500 ml graduate to catch all wash water.

      Note 2: IMPORTANT! It is critical to the test result that material finer than the U.S. No. 200 (0.075 m) is washed off the larger particles into the 500 ml graduate. This process has to be completed using approximately 300 ml of water such that the total amount water used in the test is only 500 ml. (200 ml with shaking, plus the 20-50 ml used for rinsing the canister and lid, plus that remaining to wash the fines off the particles) The process should be slow and meticulous, utilizing a high pressure, low volume spray of water. Use of a 500 ml squeeze type wash bottle has been found to work well for this process. The washing process should take 5 - 10 minutes.

   d. Rinse material finer than U.S. No. 200 (0.075 mm) off the lid into the washing canister and then from the washing canister into the nested sieves using minimal amount of water. (20-50 ml).

   e. Shake the nested sieves to spread the sample evenly. (Note 3).

   f. Wash the sample using only 20-50 ml. of water. (Note 2).

   g. Shake the nested sieves to release any water and 200- that may be sitting on the U.S. No. 200 (0.075 mm) sieve. (Note 3).

   h. Raise the funnel and tilt slightly, insure that the mouth of the funnel remains over the 500 ml graduate and catches all of the wash water, to allow the sieves to drain easier. Observe the liquid for clarity.

   i. Lower the funnel back into the 500 ml graduate.

   j. Repeat steps 4e. through 4i. until the liquid in the graduate reaches the 500 ml mark. Do not allow drainage above the 500 ml mark.

      Note 3: Shaking should be vigorous enough to move the aggregate but with care such that no spillage of wash water or loss of aggregate occurs.

   k. Measure 7 ± 1 ml of sand equivalent stock solution and pour into a sand equivalent cylinder.

   l. Bring all solids in the 500 ml graduate into suspension by capping the top with the palm of the hand and turning it completely upside down and back as rapidly as possible, allowing the air bubble to traverse from end to end. Repeat this cycle 10 times, shaking the graduate on the first inversion to release sediment on the bottom.

   m. After the tenth cycle, immediately pour the agitated liquid into the sand equivalent cylinder to the 15 ± 0.1 inch. (381 ± 2.5 mm) mark before any settling occurs. (Note 4.)

Note 4: The pour should be immediate and continuous without pause. Allowing the agitated liquid to flow back into the 500 ml graduate and then resuming the pour will allow settling and yield inconsistent results.

n. Insert rubber stopper into the sand equivalent cylinder and mix the contents by turning the cylinder completely upside down and back as rapidly as possible, allowing the bubble to traverse from end to end. Repeat this cycle 20 times.

o. Gently place the sand equivalent cylinder on the table, remove stopper, and immediately start timer. Allow to stand undisturbed for 20 minutes. After 20 minutes read and record the height of the sediment column to the nearest 0.1 in (2.5 mm).

p. Repeat steps 4a. thru 4o. for the second test sample.

5. Calculations

a. Calculate the degradation factors for the two test samples using the following formula:

$$D_1 = \frac{(15-H_1)}{(15 + 1.75H_1) \times 100} \qquad D_2 = \frac{(15-H_2)}{(15 + 1.75H_2) \times 100}$$

Note: Table 1 may be used to determine the values of D1and D2 by finding the corresponding H value.

b. Average the two degradation factors if they meet the requirements of Section 6, Repeatability:

$$D = \frac{(D_1+D_2)}{2}$$

Where:

D	=	Degradation Factor
D_1	=	Degradation Factor for the first test sample
D_2	=	Degradation Factor for the second test sample
H_1	=	Height of Sediment in first sand equivalent cylinder
H_2	=	Height of Sediment in second sand equivalent cylinder

c. Report the Degradation Factor (D) to the nearest whole number.

d. Degradation Factors range from 0 to 100, with higher values representing the best materials.

6. Repeatability

a. The two test samples, D_1 & D_2 must agree within 6 points.

b. Repeat the entire test if variation between the test samples exceeds 6 points, see following calculation:

$$\text{Absolute Value } (D_1-D_2) > 6$$

$$D = \frac{(15\text{-}H)}{(15 + 1.75H)} \times 100$$

H	D	H	D	H	D	H	D	H	D
0.0	100	3.1	58	6.1	35	9.1	19	12.1	8
0.1	98	3.2	57	6.2	34	9.2	19	12.2	8
0.2	96	3.3	56	6.3	33	9.3	18	12.3	7
0.3	95	3.4	55	6.4	33	9.4	18	12.4	7
0.4	93	3.5	54	6.5	32	9.5	17	12.5	7
0.5	91	3.6	54	6.6	32	9.6	17	12.6	6
0.6	90	3.7	53	6.7	31	9.7	17	12.7	6
0.7	88	3.8	52	6.8	30	9.8	16	12.8	6
0.8	87	3.9	51	6.9	30	9.9	16	12.9	6
0.9	85	4.0	50	7.0	29	10.0	15	13.0	5
1.0	84								
1.1	82	4.1	49	7.1	29	10.1	15	13.1	5
1.2	81	4.2	48	7.2	28	10.2	15	13.2	5
1.3	79	4.3	48	7.3	28	10.3	14	13.3	4
1.4	78	4.4	47	7.4	27	10.4	14	13.4	4
1.5	77	4.5	46	7.5	27	10.5	13	13.5	4
1.6	75	4.6	45	7.6	26	10.6	13	13.6	4
1.7	74	4.7	44	7.7	26	10.7	13	13.7	3
1.8	73	4.8	44	7.8	25	10.8	12	13.8	3
1.9	71	4.9	43	7.9	25	10.9	12	13.9	3
2.0	70	5.0	42	8.0	24	11.0	12	14.0	3
2.1	69	5.1	41	8.1	24	11.1	11	14.1	2
2.2	68	5.2	41	8.2	23	11.2	11	14.2	2
2.3	67	5.3	40	8.3	23	11.3	11	14.3	2
2.4	66	5.4	39	8.4	22	11.4	10	14.4	1
2.5	65	5.5	39	8.5	22	11.5	10	14.5	1
2.6	63	5.6	38	8.6	21	11.6	10	14.6	1
2.7	62	5.7	37	8.7	21	11.7	9	14.7	1
2.8	61	5.8	37	8.8	20	11.8	9	14.8	0
2.9	60	5.9	36	8.9	20	11.9	9	14.9	0
3.0	59	6.0	35	9.0	20	12.0	8	15.0	0

Degradation Value "D"
Table 1

Performance Exam Checklist

Method of Test for Determination of Degradation Value
WSDOT TM 113

Participant Name _____ Exam Date _____

Procedure Element	Yes	No
Equipment:		
1. Balance - 5000g capacity, sensitive to 0.1g- Calibrated?	❒	❒
2. Degradation Shaker – 1¾" throw, 300 ± 5 oscillations per minute – Verified?	❒	❒
3. Canister – plastic, 7½ in diameter x 6 in high, walls meet floor at 90 deg with min fillet, or steel meeting AASHTO T210, or ASTM D 3744?	❒	❒
4. Sand Equivalent Cylinder & Rubber Stopper?	❒	❒
5. Sand Equivalent Stock Solution?	❒	❒
6. Sieves – ½, ⅜, ¼, No. 10, No. 200 – Verified?	❒	❒
7. Graduates – 500 ml tall form & 100 ml?	❒	❒
8. Interval Timer – Verified?	❒	❒
9. Funnel – Large enough to hold the sieves with a mouth that fits in the 500 ml graduate?	❒	❒
10. Sieve Shaker(s) – Verified?	❒	❒
11. Oven – verified at 230 ± 9°F.- Calibrated?	❒	❒
12. Sprayer – produces a low volume stream of water?	❒	❒
13. Containers – suitable for drying and washing?	❒	❒
Procedure:		
1. a. Pit Run – Dried and separated over the ½ in, ½-discarded?	❒	❒
b. Processed material – Dried?	❒	❒
c. Quarry material – prepared for crushing?	❒	❒
2. Material crushed to pass the ½"?	❒	❒
3. Split out approx. 5000g?	❒	❒
4. Separate the material over the ½, ⅜, ¼, and No. 10?	❒	❒
5. Split or quarter approx. 550g ½-⅜, 550g ⅜-¼, & 1100g ¼-No. 10?	❒	❒
6. Combine the ½-⅜ with the ⅜-¼?	❒	❒
7. Hand wash the ½-¼ and ¼-No. 10 separately?	❒	❒
8. Dry the portions in suitable containers at 230 ± 9 to a constant weight?	❒	❒
9. Split of quarter the two sizes into two 500 ± 1g portions, hand selection ok to 50g?	❒	❒

Procedure Element	Yes	No
10. Combine to create two 1000 ± 2g, ½ - No. 10 test samples?	❒	❒
11. Place one sample into a canister, cover with 200 ± 5 ml water, cover & shake for 20 min?	❒	❒
12. Empty canister into the nested No. 10 & No. 200 fitted in the funnel over the 500 ml grad.?	❒	❒
13. Rinse the lid into the canister and then the canister into the nested sieves?	❒	❒
14. Shake the sieves to spread the sample?	❒	❒
15. Wash using only 20-50 ml.?	❒	❒
16. Shake the sieves to release trapped water and then lift observing liquid for clarity?	❒	❒
17. Repeat 14-16 until water reaches the 500 ml mark – water not to exceed 500 ml?	❒	❒
18. No loss of fines or liquid during the washing process?	❒	❒
19. Place 7 ± 1 ml of SE Stock Solution in a SE Graduated Cylinder?	❒	❒
20. Turn capped 500 ml upside down & back allowing bubble to traverse 10 cycles?	❒	❒
21. Immediately pour into a SE Cylinder to the 15 ± 0.1 mark – no settling allowed?	❒	❒
22. Rubber stopper inserted and SE Cylinder turned upside down & back 20 cycles?	❒	❒
23. Place gently, remove stopper, start timer, allow to sit undisturbed for 20 min?	❒	❒
24. Record height of column to nearest 0.1 in?	❒	❒
25. Repeat for second sample?	❒	❒
26. Calculations performed correctly?	❒	❒
27. Second sample must be within 6 points?	❒	❒

First attempt: Pass ❒ Fail ❒ Second attempt: Pass ❒ Fail ❒

Signature of Examiner _____

Comments:

WSDOT FOP for AASHTO T 119[1]

Standard Test Method for Slump of Hydraulic-Cement Concrete

1. Scope

   1.1 This test method covers determination of slump of concrete, both in the laboratory and in the field.

   1.2 The values stated in either inch-pound units or SI units are to be regarded separately as standard. Within the text, the SI units are shown in brackets. The values stated in each system are not exact equivalents; therefore, each system shall be used independently of the other. Combining values from the two systems may result in nonconformance with the standard.

   1.3 The text of the standard reference notes and footnotes provide explanatory material. These notes and footnotes (excluding those in tables and figures) shall not be considered as requirements of the standard.

   1.4 This standard does not purport to address all of the safety problems associated with its use. It is the responsibility of the user of this standard to establish appropriate safety and health practices and determine the applicability of regulatory limitations prior to use. (***Warning:*** Fresh Hydraulic cementitious mixtures are caustic and may cause chemical burns to skin and tissue upon prolonged exposure.)

2. Referenced Documents

   2.1 AASHTO Standards

   T 141 – Sampling Freshly Mixed Concrete

   2.2 ASTM Standards

   C 172 – Practice for Sampling Freshly Mixed Concrete

3. Summary of Test Method

   3.1 A sample of freshly mixed concrete is placed and compacted by rodding in a mold shaped as the frustum of a cone. The mold is raised and the concrete allowed to subside. The distance between the original and displaced position of the center of the top surface of the concrete is measured and reported as the slump of the concrete.

4. Significance and Use

   4.1 This test method is intended to provide the user with a procedure to determine slump of plastic hydraulic-cement concretes.

   Note 1: This test method was originally developed to provide a technique to monitor the consistency of unhardened concrete. Under laboratory conditions, with strict control of all concrete materials, the slump is generally found to increase proportionally with the water content of a given concrete mixture, and thus to be inversely related to concrete

[1]This FOP is based on AASHTO T 119-11.

strength. Under field conditions, however, such a strength relationship is not clearly and consistently shown. Care should therefore be taken in relating slump results obtained under field conditions to strength.

4.2 This test method is considered applicable to plastic concrete having coarse aggregate up to 1½ in (37.5 mm) in size. If the coarse aggregate is larger than 1½ in (37.5 mm) in size, remove per FOP for WAQTC TM 2.

4.3 This test method is not considered applicable to non-plastic and non-cohesive concrete.

Note 2: Concretes having slumps less than 0.5 in (15 mm) may not be adequately plastic and concretes having slumps greater than about 9 in (230 mm) may not be adequately cohesive for this test to have significance. Caution should be exercised in interpreting such results.

5. Apparatus

5.1 Mold – The test specimen shall be formed in a mold made of metal not readily attacked by the cement paste. The metal shall not be thinner than 0.060 in (1.5 mm) and if formed by the spinning process, there shall be no point on the mold at which the thickness is less than 0.045 in (1.15 mm). The mold shall be in the form of the lateral surface of the frustum of a cone with the base 8 in (200 mm) in diameter, the top 4 in (100 mm) in diameter, and the height 12 in (300 mm). Individual diameters and heights shall be within ± ⅛ in (3.2 mm) of the prescribed dimensions. The base and the top shall be open and parallel to each other and at right angles to the axis of the cone. The mold shall be provided with foot pieces and handles similar to those shown in Figure 1. The mold shall be constructed without a seam. The interior of the mold shall be relatively smooth and free from projections. The mold shall be free from projections. A mold which clamps to a nonabsorbent base plate is acceptable instead of the one illustrated provided the clamping arrangement is such that it can be fully released without movement of the mold and the base is large enough to contain all of the slumped concrete in an acceptable test.

5.1.1 Check and record conformance to the mold's specified dimensions when it is purchased or first placed in service and at least annually thereafter.

5.1.2 Mold With Alternative Materials

5.1.2.1 Molds other than metal are permitted if the following requirements are met: The mold shall meet the shape, height, and internal dimensional requirements of Section 5.1. The mold shall be sufficiently rigid to maintain the specified dimensions and tolerances during use, resistant to impact forces, and shall be nonabsorbent. The mold shall be demonstrated to provide test results comparable to those obtained when using a metal mold meeting the requirements of Section 5.1. Comparability shall be demonstrated on behalf of the manufacturer by an independent testing laboratory. Test for comparability shall consist of not less than 10 consecutive pairs of comparisons performed at each of three different slumps ranging from 50 to 200 mm (2 to 8 in). No individual test results shall vary by more than 15 mm (0.50 in) from that obtained using the metal mold. The average test results of

each slump range obtained using the mold constructed of alternative material shall not vary by more than 0.25 in (6 mm) from the average of test results obtained using the metal mold. Manufacturer comparability test data shall be available to users and laboratory inspection authorities (Note 4). If any changes in material or method of manufacture are made, tests for comparability shall be repeated.

Note 3: The phrase "consecutive pairs of comparisons" does not mean without interruption or all in one day. At a schedule selected by the testing entity, the pairs of tests leading to 10 consecutive pairs may be accomplished in small groups. The word consecutive prevents ignoring pairs of tests which may not meet criteria.

Note 4: Because the slump of concrete decreases with time and higher temperatures, it will be advantageous for the comparability tests to be performed by alternating the use of metal cones and alternative material cones, to utilize several technicians, and to minimize the time between test procedures.

5.1.2.2 If the condition of any individual mold is suspected of being out of tolerance from the as manufactured condition, a single comparative test shall be performed. If the test results differ by more than 0.50 in (15 mm) from that obtained using the metal mold, the mold shall be removed from service.

5.2 Tamping Rod – The tamping rod shall be a round, straight steel rod ⅝ in (16 mm) in diameter and approximately 24 in (600 mm) in length, having the tamping end or both ends rounded to a hemispherical tip, the diameter of which is ⅝ in (16 mm).

5.3 Measuring Device – A ruler, metal roll-up measuring tape, or similar rigid or semi-rigid length measuring instrument marked in increments of 5 mm (¼ in) or smaller. The instrument length shall be at least 300 mm (12 in).

5.4 Torpedo level.

5.5 Base – Flat, nonabsorbent, rigid surface.

6. Sample

6.1 The sample of concrete from which test specimens are made shall be representative of the entire batch. It shall be obtained in accordance with FOP for WAQTC TM 2. With concrete using 1½ in (37.5 mm) or larger aggregate, the aggregate larger than 1½ in (37.5 mm) must be removed per FOP for WAQTC TM 2. Contact the Materials Laboratory for directions.

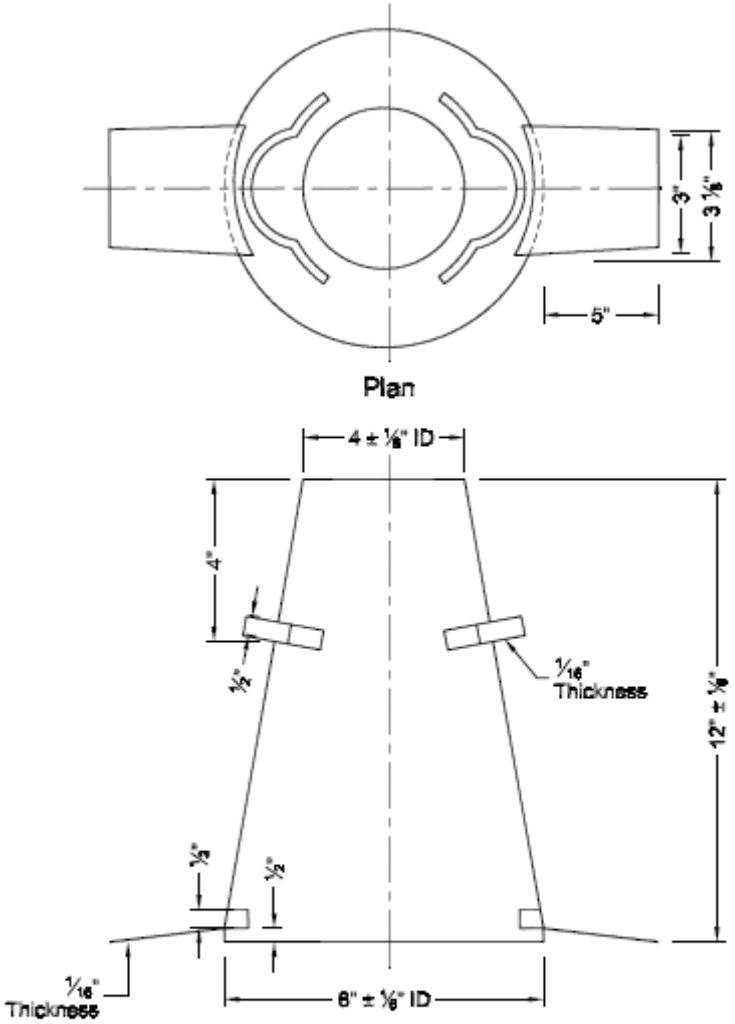

Dimensional Units

mm.	2	3	15	25	75	80	100	200	300
in.	[1/16]	[1/8]	[1/2]	[1]	[3]	[3 1/8]	[4]	[8]	[12]

Mold for Slump Test
Figure 1

7. Procedure

7.1 Dampen the mold and place it on a flat, level, moist, nonabsorbent rigid horizontal surface, free from vibration and other disturbances, such as a pre-moistened concrete floor or a base plate on a rigid surface. It shall be held firmly in place during filling and perimeter cleaning by the operator standing on the two foot pieces, or by clamping arrangements to a base plate as described in Section 5.1. From the sample of concrete obtained in accordance with Section 6, immediately fill the mold in three layers, each approximately one-third the volume of the mold.

Note 5: One-third of the volume of the slump mold fills it to a depth of 2⅝ in (67 mm); two-thirds of the volume fills it to a depth of 6⅛ in (155 mm).

7.2 Rod each layer with 25 strokes of the tamping rod. Uniformly distribute the strokes over the cross section of each layer. For the bottom layer, this will necessitate inclining the rod slightly and making approximately half of the strokes near the perimeter, and then progressing with vertical strokes spirally toward the center. Rod the bottom layer throughout its depth. Rod the second layer and the top layer each throughout its depth, so that the strokes just penetrate into the underlying layer.

7.3 In filling and rodding the top layer, heap the concrete above the mold before rodding is started. If the rodding operation results in subsidence of the concrete below the top edge of the mold, add additional concrete to keep an excess of concrete above the top of the mold at all times. After the top layer has been rodded, strike off the surface of the concrete by means of a screeding and rolling motion of the tamping rod. Continue to hold the mold down firmly and remove concrete from the area surrounding the base of the mold to preclude interface with the movement of slumping concrete.

Remove the mold from the concrete by raising it carefully in a vertical direction. Raise the mold a distance of approximately 12 in (300 mm) in 5 ± 2 seconds by a steady upward lift with no lateral or torsional motion. Complete the entire test from the start of the filling through removal of the mold without interruption and complete it within an elapsed time of 2½ min.

7.4 Immediately measure the slump by determining the vertical difference between the top of the mold and the displaced original center of the top surface of the specimen. If a decided falling away or shearing off of concrete from one side or portion of the mass occurs (Note 6), disregard the test and make a new test on another portion of the sample.

Note 6: If two consecutive tests on a sample of concrete show a falling away or shearing off of a portion of the concrete from the mass of the specimen, the concrete probably lacks necessary plasticity and cohesiveness for the slump test to be applicable. Report material cannot be slumped due to shearing or falling away.

8. Report

8.1 Report the slump in terms of inches (millimeters) to the nearest ¼ in (5 mm) of subsidence of the specimen during the test.

Report results on concrete delivery ticket (i.e., Certificate of Compliance).

The name of the tester who performed the field acceptance test is required on concrete delivery tickets containing test results.

9. Precision and Bias

9.1 Precision – See AASHTO T 119 for precision and bias.

Performance Exam Checklist

Slump of Hydraulic Cement Concrete
FOP for AASHTO T 119

Participant Name _____ Exam Date _____

Procedure Element	Yes	No
1. The tester has a copy of the current procedure on hand?	❒	❒
2. All equipment is functioning according to the test procedure, and if required, has the current calibration/verification tags present?	❒	❒
3. Cone and floor or base plate dampened?	❒	❒
4. Cone held firmly against the base by standing on the two foot pieces? Cone not allowed to move in any way during filling?	❒	❒
5. Representative samples scooped into the cone?	❒	❒
6. Cone filled in three approximately equal layers by volume?	❒	❒
7. Each layer rodded throughout its depth 25 times with hemispherical end of rod, uniformly distributing strokes?	❒	❒
8. Middle and top layers rodded to just penetrate into the underlying layer?	❒	❒
9. When rodding the top layer, excess concrete kept above the mold at all times?	❒	❒
10. Concrete struck off level with top of cone using tamping rod?	❒	❒
11. Excess concrete removed from around the base?	❒	❒
12. Cone lifted upward approximately 12 in (300 mm) in one smooth motion, without twisting the cone, in 5 ± 2 seconds?	❒	❒
13. Slump measured to the nearest ¼ in (5 mm) from the top of the cone to the displaced original center of the top surface of the specimen?	❒	❒
14. Test performed from start to finish within 2½ minutes?	❒	❒

First Attempt: Pass ❒ Fail ❒ Second Attempt: Pass ❒ Fail ❒

Signature of Examiner _____

Comments:

Performance Exam Checklist

AASHTO T 121M/T 121
Density (Unit Weight), Yield and Air Content (Gravimetric) of Concrete

Participant Name _____ Exam Date _____

Procedure Element	Yes	No
1. The tester has a copy of the current procedure on hand?	❐	❐
2. All equipment is functioning according to the test procedure, and if required, has the current calibration/verification tags present?	❐	❐
3. Container dampened?	❐	❐
4. Freshly mixed concrete sampled in accordance with WAQTC TM 2?	❐	❐
5. Container filled in three equal layers, slightly overfilling the last layer?	❐	❐
6. Each layer rodded throughout its depth 25 times with hemispherical end of rod, uniformly distributing strokes?	❐	❐
7. Bottom layer rodded throughout its depth, without forcibly striking the bottom of the container?	❐	❐
8. Middle and top layers rodded, each throughout their depths and penetrating 1 in (25 mm) into the underlying layer?	❐	❐
9. Sides of the container tapped 10 to 15 times with the mallet after rodding each layer?	❐	❐
10. Concrete struck off level with top of container using the strike off plate?	❐	❐
11. Clean all excess concrete from the exterior and determine the net mass of concrete to the nearest 0.1 lb.	❐	❐
12. All calculations performed correctly?	❐	❐

First attempt: Pass ❐ Fail ❐ Second attempt: Pass ❐ Fail ❐

Signature of Examiner _____

Comments:

Washington State
Department of Transportation

WSDOT Test Method T 123

Method of Test for Bark Mulch

1. Scope
   a. This method covers a procedure for determining the sieve analysis and material finer than ~~¼ in~~ No. 4 sieve using a loose volume bucket.
2. Equipment
   a. A mechanical sieve shaker.
   b. Sieves — Sieves conforming to the requirements of AASHTO M-92. Breaker sieves may be used.
   c. Volume Bucket — A container calibrated in 1 gal. increments from 1 to 5 gal. A 5-gal. bucket may be used when calibrated as follows:

      On a level surface calibrate the container by gradually filling it with water in 1 gal. increments. Mark the inner wall of the container after the addition of each gallon
3. Procedure
   a. Air dry (140°F max.) the sample for 15 hours, ± 4 hours.
   b. Reduce the sample to testing size per the FOP for AASHTO T 248.
   c. Place the sample in the volume bucket and record the volume as the total volume.
   d. Shake the sample over the ~~1½~~2 in and No. 4 sieves. Using breaker sieves inserted between the two specified sieves so the No. 4 sieve will not be **overloaded**. Use caution to avoid over sieving as the wood material breaks down.
   e. The material retained on the ~~1½~~2 in sieve is measured in the volume bucket and recorded.
   f. The material on the breaker sieves is added to the material retained on the No. 4 sieve and the volume measured in the volume bucket and recorded.
   g. The percent passing is calculated as follows:

$$100 - \frac{(\text{Volume on sieve} \times 100)}{\text{Total Volume}} = \%\ \text{passing}$$

Performance Exam Checklist

Method of Test for Bark Mulch
WSDOT T 123

Participant Name _____ Exam Date _____

Procedure Element	Yes	No
1. The tester has a copy of the current procedure on hand?	❒	❒
2. All equipment is functioning according to the test procedure, and if required, has the current calibration/verification tags present?	❒	❒
3. Bark mulch sample dried for 15 ± 4 hrs @ 140°F?	❒	❒
4. Five (5) gallon bucket calibrated in 1 gal. increments?	❒	❒
5. Sample quartered or split and placed in calibrated bucket?	❒	❒
6. Volume of sample in bucket recorded as total volume?	❒	❒
7. Sample screened in the shaker through 1½ in screen, breaker screens and No. 4 screen?	❒	❒
8. Do not over shake to prevent degrading of sample?	❒	❒
9. Remove 1½ in screen and damp material in calibrated bucket and record volume as volume on 1½ in screen?	❒	❒
10. Place all breaker screen material down to No. 4 screen in bucket and record volume as volume on No. 4 screen?	❒	❒
11. All calculations performed correctly?	❒	❒
12. Report results?	❒	❒

First attempt: Pass ❒ Fail ❒ Second attempt: Pass ❒ Fail ❒

Signature of Examiner _____

Comments:

Washington State
Department of Transportation

WSDOT Test Method T 125

Determination of Fiber Length Percentages in Wood Strand Mulch

1. Scope

   1.1. This test method covers the determination of the percentage, by mass, of fiber strands in a wood strand mulch sample meeting the specified requirements.

   1.2. This standard may involve hazardous materials, operations, and equipment. This standard does not purport to address all of the safety problems associated with its use. It is the responsibility of the user of this standard to establish appropriate safety and health practices and determine the applicability of regulatory limitations prior to use.

2. Referenced Documents

   2.1. AASHTO Standards:
   - M 231 Weighing Devices Used in the Testing of Materials
   - T 248 Reducing Samples of Aggregate to Testing Size

3. Summary of Test Method

   3.1. A sample of wood strand mulch is separated into individual fiber strands and the length, width and thickness of each strand is measured. The fiber stands are then separated into two categories; Strands meeting specified requirements and Strands not meeting specified requirements. The percentage of wood fiber strand is then computed and compared to the requirements of the specification. (See Calculation below)

4. Apparatus

   4.1. *Balance* — shall have sufficient capacity, be readable to 0.1 percent of the sample mass, or better, and conform to the requirements of AASHTO M 231 for general-purpose balance required for the principle sample mass being tested.

   4.2 *Measuring device* — capable of reading to the nearest 1/16th inch (can either be one device or two separate devices)

5. Sampling

   5.1 Split a bale of wood strand mulch into three approximately equal sections. From the interior face of each section obtain a minimum of 150 g of fiber strand, taking care not to damage the material.

   5.2 Recombine the three 150 g samples and reduce the combined sample to a minimum sample size of 100g, in accordance with FOP for AASHTO T 248, Method B Quartering.

6. Sample Preparation

   6.1. Air dry the sample to a Constant Mass as defined in AASHTO T 265.

7. Procedure

   7.1. Spread the sample on a clean flat surface large enough to permit careful inspection of each strand. Measure the length, width and thickness of each strand in the 100g sample.

   7.2. Compare the measurements of each strand to the specified requirements and separate the strands into two categories:

   Strands meeting specified requirements

   Strands not meeting specified requirements

   7.3. Determine the total mass of each category.

8. Calculation

   8.1. Report the following information:

   8.1.1. Calculate the percentage of fiber strand meeting the specified requirements to the nearest one percent as follows:

   $P = [(S) / (S+N)] \times 100$

   where:

   P = percent of strands meeting the required specifications
   S = mass of strands meeting required specifications
   N = mass of strands not meeting required specifications

Performance Exam Checklist

WSDOT Test Method 125

Participant Name _____ Exam Date _____

Procedure Element	Yes	No
1. The tester has a copy of the current procedure on hand?	❐	❐
2. All equipment is functioning according to the test procedure, and if required, has the current calibration/verification tags present?	❐	❐
3. Sample reduced to correct size?	❐	❐
4. Sample dried and cooled, if necessary?	❐	❐
5. Sample properly measured?	❐	❐
6. Strands separated into “meeting specification” and “not meeting specifications” categories?	❐	❐
7. Dry mass of each category determined to nearest 0.1 g?	❐	❐
8. Calculation performed correctly?	❐	❐

First attempt: Pass ❐ Fail ❐ Second attempt: Pass ❐ Fail ❐

Signature of Examiner _____

Comments:

Washington State
Department of Transportation

WSDOT Test Method T 126

Determination of Fiber Length Percentages in Hydraulically-Applied Erosion Control Products

1. Scope

   1.1 This method covers the procedure for measuring the fiber length of a Hydraulically-applied Erosion Control Product (HECP).

   1.2 HECP is engineered and processed to specific length and width dimensions to facilitate the hydraulic application process. When the correct percentages of fiber lengths and widths exist within the HECP for hydraulic planting, the result will be a properly layered, interlocking mulch to hold seed and moisture.

   1.3 This standard does not purport to address the safety problems associated with its use. It is the responsibility of the user of this standard to establish appropriate safety and health practices and determine the applicability of regulatory limitations prior to use. (**Warning**- HECP's may be dusty, a dust mask is recommended when working with these products.

2. Terminology

   2.1 Hydraulically applied - applied within a slurry, solution, or emulsion to the soil surface as a spray-on or dropped-on application through various means (e.g. nozzle, tower, aerially, etc.) formation of a compound by the combining of water with some other substance.

   2.2 Hydraulically-applied Erosion Control Product (HECP) - A manufactured, degradable, pre-packaged fibrous material that is mixed with water and hydraulically applied as slurry, solution, or emulsion to reduce soil erosion and assist in the establishment and growth of vegetation.

3. Apparatus

   3.1 Balance – shall have sufficient capacity, readable to 0.1 percent of the sample mass, or better, and conform to the requirements of AASHTO M 231 for general-purpose balance required for the principle sample mass being tested.

   3.2 Sieves – Meeting the requirements of AASHTO M 92

   3.3 Mechanical sieve shaker – Meeting the requirements of AASHTO T 27

4. Sample Preparation

   Obtain approximate 60 grams of material from a full, sealed bag or bale in the following manner:

   Divide the bag or bale into thirds; top, middle and bottom of bag or bale.

Extract approximately 20 grams of material from the center of each portion (or the inside face of each ⅓ of a bale) taking care not to damage the extracted material.

Recombine the three samples and reduce the sample, in accordance with AASHTO 248 Method B, to approximately 15 grams. Place the sample in a large container and gently separate the compressed fiber.

5. Procedure

   5.1 Select sieves with suitable openings to furnish data required by the specifications. Nest the sieves in order of decreasing size from top to bottom and place the sample, or a portion of the sample, on the top sieve.

   5.2 Place sieves in mechanical shaker and shake for a 5 minutes.

   5.3 Determine the individual or cumulative mass retained on each sieve and the pan to the nearest 0.1g

6. Calculations

   Calculate the percentage of fiber retained on each of the sieves using the following formula:

   Percent Retained:

$$CPR = \frac{CMR}{M} \times 100$$

   Where:
   CPR = Cumulative Percent Retained
   CMR= Cumulative Mass Retained
   M = Total Sample mass

7. Report

   Results shall be reported as follows:

   - Cumulative mass retained on each sieve
   - Cumulative percent retained on each sieve
   - Percent passing and retained on each sieve shall be reported to the nearest 1 percent

WSDOT Test Method T 127

Preparation of Leachate Sample for Testing Toxicity of HECP Effluents

1. Scope

   This test method outlines the procedure for collecting leachate from a HECP sample.

2. References

   2.1 EPA-821-R-02-012 Methods for Measuring Acute Toxicity of Effluents

3. Preparation of the HECP Sample

   3.1 Lay cheesecloth over clean topsoil

   3.2 Apply the HECP to the cheesecloth at the following coverage:

   3.2.1 HECP Long-Term or Moderate-Term Mulch 3,500 lbs per acre in two lifts with no more than 2000# per acre in any one lift.

   3.2.2 HECP Short-Term Mulch 2000# per acre minimum, or manufacturer's recommended rate may be used.

   3.3 Allow material to cure for 48 hours

   3.4 Pull cheesecloth up with mat of HECP, brush off any soil

   3.5 Cut HECP into squares and provide 1.02 pounds of HECP to the laboratory.

4. Preparation of the Leachate (done by the laboratory)

   4.1 Allow hydromulch product to soak in water for one hour

   4.2 Remove hydromulch sheet from water

   4.3 Filter water through a 60 micron filter – water may be pre-filtered through a 35 mesh and then a 120 mesh before using the 230 mesh/63 micron filter.

   Note: Leachate not immediately used for testing should be stored at 4° C in the dark until use.

   4.4 Test leachate according to EPA-821-R-02-012 Methods for Measuring Acute Toxicity of Effluents.

Washington State
Department of Transportation

WSDOT SOP 128

Sampling for Aggregate Source Approval

1. Scope

   This method describes the procedure for sampling pits and quarries for Aggregate Source Approval (ASA).

2. Significance and Use

   There are two methods for initiating the process for an Aggregate Source Approval:

   a. The source owner request approval, pays for the sampling and testing, and coordinates this through the State Materials Laboratory who coordinates with the Regions. Sample is obtained by the Region Independent Assurance Inspector (IAI) or a delegate of the Region Materials Engineer.

   b. The aggregate source is sampled and tested as part of a WSDOT project, in which case the WSDOT project pays for the sampling and testing costs which may or may not be coordinated with the ASA process at the State Materials Laboratory. Sample is obtained by the IAI or a delegate of the Region Materials Engineer.

3. Safety

   All WSDOT employee required to sample from a pit or quarry will contact the pit/quarry owner or their designated representative prior to arrival at the site and arrange for an escort into the sampling site.

   All WSDOT employees will be accompanied by the pit/quarry owner or their representative during the sampling process.

   This standard does not purport to address all of the safety concerns, associated with its use. It is the responsibility of the user of this standard operating procedure to establish a pre-activity safety plan prior to use.

4. Sampling

   All samples will be obtained in accordance with WSDOT FOP for AASHTO T 2.

   Stockpiles produced for ASA sampling must contain a minimum of 10 tons of material. The material in the stockpile shall be of the same quality as the final product.

   Sampling location and size of sample is listed in Table 1.

Aggregate Type	Sampling Site	Size of Sample in lbs	Notes
Concrete Coarse	Stockpile	50-100	Material must be clean and washed
Concrete Fine	Stockpile	30-40	Material must be clean and washed
Crushed Surfacing /Mineral Aggregate	Stockpile	80-100	For quality tests on crushed materials submit approximately 80 lbs of 1¼” minus material. Samples obtained for quarry spalls may not be used for quality tests for crushed materials.
Quarry Spalls	Face of pit , transport unit or stockpile	50-80	No rock larger than 4” in diameter.
All other Aggregate Types	Face of pit , transport unit or stockpile	50-80	No rock larger than 4” in diameter.

Table 1

6. Report

The Regional Materials Engineer’s (RME) representative will record the following information in an Inspector’s Daily Report (IDR) DOT form 422-004A EF:

- Name of Source Owner’s Representative accompanying the RME representative during sampling process.
- Time and Date of sampling
- Location where the sample is taken (stockpile/pit/face)
- Amount of sample (pounds and number of bags)
- Any concerns or specific request the Owner’s representative may have.

The RME's representative shall take pictures of the following items; a wide view of the mining operation, the sampling location in the pit or quarry, a close-up of the material in the stockpile being sampled (when applicable), and a close-up of the material sampled.

The IDR information and pictures will be e-mailed to the State ASA Engineer.

WSDOT FOP for WAQTC T 152[1]

Air Content of Freshly Mixed Concrete by the Pressure Method

Significance

Concrete is not a solid, but rather a solid with void spaces. The voids may contain gas such as air, or liquid such as water. All concrete contains air voids, and the amount can be increased by the addition of an air entraining agent to the mix. When such an agent is used, the size of the voids drastically decreases and the number of voids greatly increases, providing a much greater dispersal of voids.

Air entrainment is necessary in concrete that will be saturated and exposed to cycles of freezing and thawing and to deicing chemicals. The microscopic entrained air voids provide a site for relief of internal pressure that develops as water freezes and thaws inside the concrete. Without the proper entrained-air content, normal concrete that is saturated and is exposed to cycles of freezing and thawing can fail prematurely by scaling, spalling, or cracking.

Care must be taken, however, not to have too much entrained air. As the air content increases, there will be a corresponding reduction in the strength and other desirable properties of the concrete. Typically, this strength reduction will be on the order of 3 to 5 percent for each 1 percent of air content. A concrete mix design proportioned for 5 percent air, for example, will be approximately 15 to 25 percent lower in strength if the air content were to double.

Scope

This procedure covers determination of the air content in freshly mixed portland cement concrete containing dense aggregates in accordance with AASHTO T 152 (Type B meter). It is not for use with lightweight or highly porous aggregates. This procedure includes calibration of the "Type B" air meter gauge and two methods for calibrating the gauge are presented. Concrete containing aggregate that would be retained on the 2 inch (50 mm) sieve must be wet sieved. Sieve a sufficient amount of the sample over the 1½ in (37.5 mm) sieve in accordance with the FOP for WAQTC TM 2.

Apparatus

- Air Meter – Type B, as described in AASHTO T 152.
- Balance or Scale – Accurate to 0.3 percent of the test load at any point within the range of use (for Method 1 calibration only).
- Verified external or internal calibration vessel of known volume (usually 5 percent ± of the volume of the meter base).
- Tamping Rod – ⅝ inch (16 mm) diameter and approximately 24 inch (600 mm) long, having a hemispherical tip. (Hemispherical means half a sphere; the tip is rounded like half of a ball.)
- Vibrator – 7,000 vibrations per minute, 0.75 to 1.50 inch (19 to 38 mm) in diameter, at least 3 in (75 mm) longer than the section being vibrated for use with low slump concrete.
- Scoop.
- Container for Water – Rubber syringe (may also be a squeeze bottle).

[1]This FOP is based on WAQTC T 152 and has been modified per WSDOT standards. To view the redline modifications, contact the WSDOT Quality Systems Manager at 360-709-5412.

- Strike-Off Bar – Approximately 12 inch × ¾ inch × ⅛ inch (300 mm × 22 mm × 3 mm).
- Strike-Off Plate – A flat rectangular metal plate at least ¼ in (6 mm) thick or a glass or acrylic plate at least ½ in (12 mm) thick, with a length and width at least 2 in (50 mm) greater than the diameter of the measure with which it is to be used. The edges of the plate shall be straight and smooth within tolerance of 1⁄16 inch (1.5 mm).

  Note 1: Use either the strike-off bar or strike-off plate; both are not required. Unit weight requires the use of a strike-off plate.
- Mallet – With a rubber or rawhide head having a mass of 1.25 ± 0.5 lb (0.57 ± 0.23 kg).

Calibration of Air Meter Gauge

Note 2: There are two methods for calibrating the air meter, mass, or volume.

1. Screw the short piece of straight tubing into the threaded petcock hole on the underside of the cover. Determine the mass of the dry, empty air meter base and cover assembly (Mass Method only).
2. Fill the base nearly full with water.
3. Clamp the cover on the base with the tube extending down into the water. Mark the petcock with the tube attached for future reference.
4. Add water through the petcock having the pipe extension below until all air is forced out the other petcock. Rock the meter slightly until all air is expelled through the petcock.
5. Wipe off the air meter base and cover assembly and determine the mass of the filled unit (Mass Method only).
6. Pump up the air pressure to a little beyond the predetermined initial pressure indicated on the gauge. Wait a few seconds for the compressed air to cool and then stabilize the gauge hand at the proper initial pressure by pumping up or relieving pressure, as needed.
7. Close both petcocks and immediately open the main air valve exhausting air into the base. Wait a few seconds until the meter needle stabilizes. The gauge should now read 0 percent. If two or more tests show a consistent variation from 0 percent in the result, change the initial pressure line to compensate for the variation and use the newly established initial pressure line for subsequent tests.
8. Determine which petcock has the straight tube attached to it. Attach the curved tube to external portion of the same petcock.
9. Pump air into the air chamber. Open the petcock with the curved tube attached to it. Open the main air valve for short periods of time until 5 percent of water by mass or volume has been removed from the air meter. Remember to open both petcocks to release the pressure in the base and drain the water in the curved tube back into the base. To determine the mass of the water to be removed, subtract the mass found in Step 1 from the mass found in Step 5. Multiply this value by 0.05. This is the mass of the water that must be removed. To remove 5 percent by volume, remove water until the external calibrating vessel is level full.

Note 3: Many air meters are supplied with a calibration vessel(s) of known volume that are used for this purpose. Calibration vessels must be protected from damage that would change their volume.

If an external or internal calibration vessel is used, confirm what percentage volume it represents for the air meter being used. Vessels commonly represent 5 percent volume, but they are for specific size meters. This should be confirmed by mass.

10. Remove the curved tube. Pump up the air pressure to a little beyond the predetermined initial pressure indicated on the gauge. Wait a few seconds for the compressed air to cool and then stabilize the gauge hand at the proper initial pressure by pumping up or relieving pressure, as needed.

11. Close both petcocks and immediately open the main air valve exhausting air into the base. Wait a few seconds until the meter needle is stabilized. The gauge should now read 5.0 ± 0.2 percent. If the gauge is outside that range, the meter needs adjustment (consult the Regional Materials Laboratory). The adjustment could involve adjusting the starting point so that the gauge reads 5.0 ± 0.2 percent when this calibration is run, or could involve moving the gauge needle to read 5.0 percent. Any adjustment should comply with the manufacturer's recommendations.

    Note 4: Calibration shall be performed per agency standards, prior to field use, and weekly during construction use. Record the date of the calibration, the calibration results, and the name of the technician performing the calibration in the log book kept with each air meter.

    WSDOT Note: Air meter calibration standard for WSDOT:

    Regional Laboratory – Required to calibrate air meter yearly.

    Project Office – Required to calibrate air meter as follows:

    1. First Time Use Calibration – Calibrate air meter prior to first time use in the field each construction season or when the air meter has not been used for more than a month during the construction season.

    2. Construction Use Calibration – After "First Time Use Calibration," calibrate the air meter once a week when used during construction.

12. When the gauge hand reads correctly at 5.0 percent, additional water may be withdrawn in the same manner to check the results at other values such as 10 percent or 15 percent.

    Note 5: Remove the extension tubing from threaded petcock hole in the underside of the cover before starting the test procedure.

    An internal calibration vessel of known volume, usually 5 percent of the volume of the bucket, may be employed as a quick method to verify the calibration of the air meter during construction use. To employ this vessel proceed as follows.

13. Fill the base nearly full with water and place the internal calibration vessel into the base. Place the cover back on the base and gently add water through the petcock until all the air has been expelled. Do not disturb the meter to such an extent as to knock the calibration vessel from an upright position. Do not install either of the threaded tubes into the petcock when using the calibration vessels.

14. Pump up the air pressure to a little beyond the predetermined initial pressure indicated in the calibration record log book. Wait a few seconds for the compressed air to cool and then stabilize the gauge hand at the proper initial pressure by pumping up or relieving pressure, as needed.

15. Close both petcocks and immediately open the main air valve exhausting air into the base. Wait a few seconds and gently tap the back of the gauge until the meter needle stabilizes. The gauge should now read 5.0 ± 0.2 percent or ± 0.2 percent of the volume indicated in the calibration vessel. If the gauge is outside of that range, follow step 1 through step 12 of the calibration procedure to recalibrate the air meter. If further adjustment is required, consult the Regional Materials Laboratory.

16. If necessary, additional vessels may be placed into the base to verify the calibration of the air meter at 10 percent volume and 15 percent volume or the sum of the volumes indicated on the individual calibration vessels.

17. Record the date that the calibration of the air meter was verified in the calibration log book.

18. Gently release the air pressure in the base by opening one of the petcocks, then remove and drain any water from within the calibration vessel and store it in a safe location. The air meter is now ready for use.

Procedure Selection

There are two methods of consolidating the concrete – rodding and vibration. If the slump is greater than 3 in (75 mm), consolidation is by rodding. When the slump is 1 to 3 in (25 to 75 mm), internal vibration or rodding can be used to consolidate the sample, but the method used must be that required by the agency in order to obtain consistent, comparable results. For slumps less than 1 in (25 mm), consolidate the sample by internal vibration.

Procedure – Rodding

1. Obtain the sample in accordance with the FOP for WAQTC TM 2. If the concrete contains coarse aggregate particles that would be retained on a 2-in (50-mm) sieve, wet-sieve a sufficient amount of the representative sample over a 1½-in (37.5-mm) sieve, in accordance with the Wet Sieving portion of the FOP for WAQTC TM 2. Contact the Materials Laboratory for directions.

   Note 6: Testing shall begin within five minutes of obtaining the sample.

2. Dampen the inside of the air meter base and place on a firm, level surface.

3. Fill the base approximately ⅓ full with concrete.

4. Consolidate the layer with 25 strokes of the tamping rod, using the rounded end. Distribute the strokes evenly over the entire cross section of the concrete. Rod throughout its depth without hitting the bottom too hard.

5. Tap the sides of the base smartly 10 to 15 times with the mallet to close voids and release trapped air.

6. Add the second layer, filling the base about ⅔ full.

7. Consolidate this layer with 25 strokes of the tamping rod, penetrating about 1 in (25 mm) into the bottom layer.

8. Tap the sides of the base 10 to 15 times with the mallet.
9. Add the final layer, slightly overfilling the base.
10. Consolidate this layer with 25 strokes of the tamping rod, penetrating about 1 in (25 mm) into the second layer.
11. Tap the sides of the base smartly 10 to 15 times with the mallet.

    Note 7: The base should be slightly over full, about ⅛ inch (3 mm) above the rim. If there is a great excess of concrete, remove a portion with the trowel or scoop. If the base is under full, add a small quantity. This adjustment may be done only after consolidating the final layer and before striking off the surface of the concrete.

12. Strike off the surface of the concrete and finish it smoothly with a sawing action of the strike-off bar or plate, using great care to leave the base just full. The surface should be smooth and free of voids as much as possible.
13. Clean the top flange of the base to ensure a proper seal.
14. Moisten the inside of the cover and check to see that both petcocks are open and the main air valve is closed.
15. Clamp the cover on the base.
16. Inject water into one petcock until water emerges from the second petcock. (***Note:*** Water is injected into only one petcock during the entire procedure.)
17. Rock the air meter gently until no air bubbles appear to be coming out of the second petcock. The petcock expelling water should be higher than the petcock where water is being injected. Return the air meter to a level position and verify that water is present in both petcocks.
18. Close the air bleeder valve and pump air into the air chamber until the needle goes past the initial pressure line. Allow a few seconds for the compressed air to cool.
19. Tap the gauge gently with one hand while slowly opening the air bleeder valve until the needle rests on the initial pressure line. Close the air bleeder valve.
20. Close both petcocks.
21. Open the main air chamber valve.
22. Tap the sides of the base smartly with the mallet.
23. With the main air chamber valve open, lightly tap the gauge to settle the needle, and then read the air content to the nearest 0.1 percent, while the air chamber valve is open.
24. Release or close the main air chamber valve.
25. Open both petcocks to release pressure, remove the concrete, and thoroughly clean the cover and base with clean water.
26. Open the main air valve to relieve the pressure in the air chamber.

Procedure – Internal Vibration

1. Obtain the sample in accordance with FOP for WAQTC TM 2. If any aggregate larger than 2 in (50 mm) is present, the larger aggregate must be removed. Sieve a sufficient amount of the sample over the 1½ in (37.5 mm) sieve in accordance with the wet sieving portion of FOP for WAQTC TM 2. Contact the Materials Laboratory for directions.
2. Dampen the inside of the air meter bowl and place on a firm level surface.
3. Fill the base approximately half full.
4. Insert the vibrator at three different points. Do not let the vibrator touch the bottom or sides of the base.

   Note 8: Remove the vibrator slowly so that no air pockets are left in the material.

   Note 9: Continue vibration only long enough to achieve proper consolidation of the concrete. Over vibration may cause segregation and loss of appreciable quantities of intentionally entrained air.
5. Fill the base a bit over full.
6. Insert the vibrator as in Step 3. Do not let the vibrator touch the sides of the base and penetrate the first layer approximately 1 in (25 mm).
7. Return to Step 12 of the rodding procedure and continue.

Report

Results shall be reported on standard forms approved for use by the agency. Record the percent of air to the nearest 0.1 percent.

Report results on concrete delivery ticket (i.e., Certificate of Compliance).

The name of the tester who performed the field acceptance test is required on concrete delivery tickets containing test results.

Performance Exam Checklist

WSDOT FOP for WAQTC T 152
Air Content of Freshly Mixed Concrete by the Pressure Method

Participant Name _____ Exam Date _____

Procedure Element	**Yes**	**No**
1. The tester has a copy of the current procedure on hand?		
2. All equipment is functioning according to the test procedure, and if required, has the current calibration/verification tags present?		
3. Container filled in three equal layers, slightly overfilling the last layer?		
4. Correct consolidation procedure chosen?		
5. Rodding		
a. Each layer rodded throughout its depth 25 times with hemispherical end of rod, uniformly distributing strokes?		
b. Bottom layer rodded throughout its depth, without forcibly striking the bottom of the container?		
c. Middle and top layers rodded, each throughout their depths and penetrating 1 inch (25 mm) into the underlying layer?		
d. Sides of the container tapped 10 to 15 times with the mallet after rodding each layer?		
6. Internal Vibration		
a. Aggregate larger than 1½ removed?		
b. Inside of air meter dampened?		
c. Base filled to approximately half full for first lift?		
d. Vibrator inserted in three different locations without touching sides or base?		
e. Vibrator removed slowly and concrete not over vibrated?		
f. Base filled to just overfull?		
g. Vibrator inserted approximately 1 inch into first layer in three different locations without touching sides?		
Finishing		
7. Concrete struck off level with top of container and rim cleaned?		

Using a Type B Meter **Yes No**

8. Both petcocks open?
9. Air valve closed between air chamber and the bowl?
10. Inside of cover cleaned and moistened before clamping to base?
11. Water injected through petcock until it flows out the other petcock?
12. Water injection into the petcock continued while tipping the meter to ensure all air is expelled?
13. Air pumped up to initial pressure line?
14. A few seconds allowed for the compressed air to stabilize?
15. Gauge adjusted to the initial pressure?
16. Both petcocks closed?
17. Air valve opened between chamber and bowl?
18. Sides of bowl tapped with the mallet?
19. With air valve open, Air percentage read after lightly tapping the gauge to stabilize the hand?
20. Air valve closed and then petcocks opened to release pressure before removing the cover?
21. Air content recorded to 0.1 percent?
22. All calculations performed correctly?

First Attempt: Pass Fail Second Attempt: Pass Fail

Signature of Examiner _____

Comments:

WSDOT FOP for AASHTO T 166[1]

Bulk Specific Gravity of Compacted Hot Mix Asphalt Using Saturated Surface-Dry Specimens

1. Scope

   1.1 This method of test covers the determination of bulk specific gravity of specimens of compacted hot mix asphalt.

   1.2 Definition:

   1.2.1 Bulk specific gravity (of solids) – The ratio of the mass in air of a unit volume of a permeable material (including both permeable and impermeable voids normal to the material) at a stated temperature to the weight in air of equal density of an equal volume of gas-free distilled water at a stated temperature. The form of the expression shall be:

   Bulk specific gravity x/y °C

   Where:

   x = temperature of the material, and

   y = temperature of the water

   1.3 The bulk specific gravity of the compacted hot mix asphalt may be used in calculating the unit mass of the mixture.

   1.4 The values stated in English units are to be regarded as the standard.

   Note: Method A shall be used for laboratory compacted specimens, and field specimens compacted using gyratory compactor.

   Method C shall be used for asphalt pavement cores.

2. Referenced Documents

   2.1 AASHTO Standards

   M 231 – Weighing Devices Used in the Testing of Materials

   PP 75 – Standard Practice for Vacuum Drying Compacted Asphalt Specimens

   T 331 – Bulk Specific Gravity (Gmb) and Density of Compacted Hot Mix Asphalt (HMA) Using Automatic Vacuum Sealing Method

3. Test Specimens

   3.1 Test specimens may be either laboratory-molded HMA mixtures or from HMA pavements. The mixtures may be surface, wearing, leveling or base course materials.

   3.2 Size of Specimens – It is recommended that: (1) the diameter of cylindrically molded or cored specimens, or the length of the sides of sawed specimens, be at least equal to four times the maximum size of the aggregate; and (2) the thickness of specimens be at least one-and-one-half times the maximum size of the aggregate.

[1]This Test Method is based on AASHTO T 166-10.

3.3 Specimens shall be taken from pavements with core drill, diamond or carborundum saw, or by other suitable means.

3.4 Care shall be taken to avoid distortion, bending, or cracking of specimens during and after the removal from pavement or mold. Specimens shall be stored in a safe, cool place.

3.5 Specimens shall be free from foreign materials such as seal coat, tack coat, foundation material, soil, paper, or foil.

3.6 If desired, specimens may be separated from other pavement layers by sawing or other suitable means. Care should be exercised to ensure sawing does not damage the specimens.

Method A

4. Apparatus

4.1 Weighing Device – The weighing device shall have sufficient capacity, be readable to 0.1 percent of the specimen mass, or better, and conform to the requirements of AASHTO M 231. The weighing device shall be equipped with suitable suspension apparatus and holder to permit weighing the specimen while suspended from the center of scale pan of the weighing device.

4.2 Suspension Apparatus – The wire suspending the container shall be the smallest practical size to minimize any possible effects of a variable immersed length. The suspension apparatus shall be constructed to enable the container to be immersed to a depth sufficient to cover it and the specimen during weighing. Care should be exercised to ensure no trapped air bubbles exist under the specimen.

4.3 Water Bath – For immersing the specimen in water while suspended under the weighing device, equipped with an overflow outlet for maintaining a constant water level.

4.4 Thermometric Device – Liquid-in-glass thermometers or other suitable thermometric device, accurate to 1ºF (0.5º C).

5. Procedure

5.1 Dry the specimen to a constant mass (Note 1) at a temperature of 125 ± 5°F (52 ± 3°C). As an alternative to oven drying to constant mass, drying the sample according to PP 75 may be used.

5.2 Cool the specimen to room temperature for a minimum of 15 hours and a maximum of 24 hours at 77 ± 9°F (25 ± 5°C) per SOP 731 and record the dry mass as A (Note 2). Immerse each specimen in water at 77 ± 1.8°F (25 ± 1°C) for 4 ± 1 minute and record the immersed mass as C. Remove the specimen from the water, damp dry the specimen by blotting with a damp towel as quickly as possible (blotting not to exceed 10s), and determine the surface-dry mass as, B (Note 3). Any water that seeps from the specimen during the weighing operation is considered part of the saturated specimen. Each specimen shall be immersed and weighed individually.

Note 1: Constant mass shall be defined as the mass at which further drying does not alter the mass by more than 0.05 percent when weighed at 2-hour intervals when using oven drying or by more than 0.05 percent when weighed after at least two drying cycles of the vacuum-drying apparatus required in AASHTO PP 75. Recently molded laboratory specimens which have not been exposed to moisture do not require drying.

Note 2: If desired, the sequence of testing operations may be changed to expedite the test results. For example, first the immersed mass (C) can be taken, then the surface-dry mass (B), and finally the dry mass (A).

Note 3: Terry cloth has been found to work well for an absorbent cloth. Damp is considered to be when no water can be wrung from towel.

6. Transportation of Warm Specimens

It is not recommended that specimens be transported before they have cooled to room temperature. If however, a specimen must be transported prior to reaching room temperature the following guidelines should be used to transport the specimen:

a. Place the specimen in a container that has a flat bottom surface to prevent deformation of the bottom of the specimen.

Note: A flat piece of wood, rigid aluminum or reinforced cardboard may be used to create a flat surface in an HMA sample box.

b. Make sure the specimen is not deformed in handling.

c. Do not stack anything on top of the specimen container.

d. Transport the container in the cab of the vehicle or secure it in the vehicle bed to prevent movement during transit.

7. Calculation

7.1 Calculate the bulk specific gravity of the specimens as follows (round and report the value to the nearest three decimal places):

$$\text{Bulk Specific Gravity} = \frac{A}{B - C}$$

Where:

A = Mass in grams of specimen in air
B = Mass in grams of surface-dry specimen in air
C = Mass in grams of specimen in water.

7.2 Calculate the percent water absorbed by the specimen (on volume basis) as follows:

$$\text{Percent Water Absorbed by Volume} = \frac{B - A}{B - C} \times 100$$

7.3 If the percent water absorbed by the specimen as calculated in Section 7.2 exceeds 2 percent, use AASHTO T 331 Bulk Specific Gravity (Gmb) and Density of Compacted Hot Mix Asphalt (HMA) Using Automatic Vacuum Sealing Method to determine the bulk specific gravity (G_{mb}).

Method B

WSDOT does not use Method B and has removed this section from the procedure.

Method C

8. Procedure

    8.1 This procedure can be used for testing specimens which contain substantial amount of moisture. Specimens obtained by coring or sawing can be tested the same day by this method.

    8.2 The testing procedure shall be the same as given in Section 5 except for the sequence of operations. The dry mass (A) of the specimen is determined last.

9. Calculations

    9.1 Calculate the bulk specific gravity per Section 7.1.

10. Report

    10.1 The report shall include the following:

        10.1.1 Bulk Specific Gravity reported to the nearest thousandth (0.001).

        10.1.2 Absorption reported to the nearest hundredth (0.01).

11. Precision

    11.1 See AASHTO T 166 for precision statement.

Performance Exam Checklist

WSDOT FOP for AASHTO T 166
Bulk Specific Gravity of Compacted Hot Mix Asphalt Using Saturated Surface Dry Specimens

Participant Name _____ Exam Date _____

Procedure Element	**Yes**	**No**
1. The tester has a copy of the current procedure on hand?		
2. All equipment is functioning according to the test procedure, and if required, has the current calibration/verification tags present?		

Method A (For use with laboratory compacted specimens.)

1. Compacted specimen cooled to room temperature (refer to step 5.2), 77 ± 9º F, and record the dry mass.		
2. Immerse each specimen in water at 77 ± 1.8°F for 3 to 5 minutes and record the immersed mass to the nearest 0.1 gram?		
3. Remove sample from water, surface dry with damp towel and weigh the specimen in air at 77 ± 9º F to the nearest 0.1 gram?		
4. Calculated the bulk specific gravity of the specimens per Section 7.1?		

Method C (For use with pavement cores and chunks.)

1. Immerse specimen in water at 77 ± 1.8º F for 3 to 5 minutes and record the immersed weight to the nearest 0.1 gram?		
2. Remove sample from water, surface dry by blotting with damp towel and immediately weigh specimen in air at 77 ± 9º F to the nearest 0.1 gram?		
3. Dry specimen in vacuum drying apparatus? <u>(Steps 4-7 not required when using vacuum drying apparatus)</u>		
4. Place specimen in container (noting the empty container weight), then place in an oven at 125 ± 5º F?		
5. Weigh specimen in container?		
6. Return specimen and container to oven until it has reached a constant weight?		
7. Remove container and sample from oven and allow to cool to room temperature, 77 ± 9º F?		
8. Weigh container with sample and record to nearest 0.1 gram, deducting known weight of container to arrive at oven-dried sample weight?		
9. Calculated the bulk specific gravity of the specimen per Section 7.1?		

First Attempt: Pass Fail Second Attempt: Pass Fail

Signature of Examiner _____

Comments:

WSDOT FOP for WAQTC T 168

Sampling of Hot Mix Asphalt Paving Mixtures
FOP for WAQTC T 168

Significance

Testing bituminous paving mixtures in the field begins with obtaining and preparing the sample to be tested. Standardized procedures for obtaining a representative sample have been established. Producing strong, durable, reliable pavement in roadways requires careful sampling and accurate testing.

Technicians must be patient and follow these procedures. If one considers that the specifications require quality tests to be made on only a small portion of the total material placed, the need for a truly representative sample is apparent. For this reason, every precaution must be taken to obtain a sample that is truly representative of the entire batch and then to protect that sample from contamination and physical damage.

Scope

This procedure covers the sampling of bituminous paving mixtures from HMA plants, truck transports, and roadways in accordance with AASHTO T 168. Sampling is as important as testing, and every precaution must be taken to obtain a truly representative sample.

Apparatus

- Shovel.
- Sample containers such as cardboard boxes, metal cans, stainless steel bowls, or other agency-approved containers.
- Mechanical sampling device.
- Thermometer- Metal probe or other suitable thermometric device, accurate to 1ºF (0.5º C)

Sample Size

Sample size depends on the test methods specified by the agency for acceptance.

For Acceptance sampling and testing only: WSDOT requires a minimum of two times the amount required for testing. This should be 60 lbs.

For Acceptance and Conformation sampling and testing: WSDOT requires a minimum of four times the amount required for testing. This should be approximately 120 lbs. (See WSDOT *Construction Manua*l Section 9-3.7 for Conformation sampling frequency)

Sampling

- **General**

1. The material shall be tested to determine variations. The supplier/contractor shall sample the HMA mixture in the presence of the Project Engineer. The supplier/contractor shall provide one of the following for safe and representative sampling:

   a. A mechanical sampling device installed between the discharge of the silo and the truck transport that is approved by the Regional Materials Engineer.

   b. Platforms or devices to enable sampling from the truck transport without entering the truck transport for sampling HMA.

2. The supplier/contractor shall place dense graded mixture samples in cardboard boxes or stainless steel bowls or other agency provided containers. The samples shall be delivered to a location designated by the Project Engineer. Place open graded mixture samples in stainless steel bowls. Do not put open graded mixture samples in boxes until they have cooled to the point that bituminous material will not migrate from the aggregate.

   Note: Care shall be taken to prevent contamination of bituminous mixes by dust or other foreign matter, and to avoid segregation of aggregate and bituminous materials.

   - **Attached Sampling Devices** – Some agencies require mechanical sampling devices for HMA and cold feed aggregate on some projects. These are normally permanently attached devices that allow a sample container to pass perpendicularly through the entire stream of material or divert the entire stream of material into the container. Operation may be hydraulic, pneumatic, or manual and allows the sample container to pass through the stream twice, once in each direction, without overfilling. Special caution is necessary with manually operated systems since a consistent speed is difficult to maintain and non-representative samples may result. Check agency requirements for the specifics of required sampling systems.

     WSDOT requires the mechanical sampling device be located between the silo and the truck transport unless otherwise approved by the Region Materials Engineer.

   - **Sampling from Truck Transports Haul Units**

     a. Obtain samples in four approximately equal increments from truck transports.

     b. Obtain each increment from approximately 12 in (300 mm) below the surface, in each of the four quadrants of the load.

     c. Combine the increments to form a sample of the required size.

   - **Sampling from Roadway Prior to Compaction (Plate Method)**

     WSDOT has deleted this section.

Temperature of Mix

Immediately upon obtaining a sample, using a verified thermometer, check and record temperature of the sample.

Identification and Shipping

1. Identify sample containers as required by the agency.
2. Ship samples in containers that will prevent loss, contamination, or damage.
3. Refer to the sample identification requirements in FOP for WSDOT Test Method 712.

Performance Exam Checklist

WSDOT FOP for WAQTC/AASHTO T 168
Sampling of Hot Mix Asphalt Paving Mixtures

Participant Name _____ Exam Date _____

Procedure Element	**Yes**	**No**
1. The tester has a copy of the current procedure on hand?		
2. Containers of correct type and ample size available?		
3. Sampling		
a. Samples from truck transport taken from four quadrants at approximate depth of 12 inches?		
b. Samples taken with approved mechanical sampling device?		
4. Temperature of mix checked?		
5. Sample size meets agency requirements?		
6. Sample identified as required?		

First Attempt: Pass Fail Second Attempt: Pass Fail

Signature of Examiner _____

Comments:

WSDOT FOP for AASHTO T 176[1]

Plastic Fines in Graded Aggregates and Soils by Use of the Sand Equivalent Test

1. Scope

1.1 This test is intended to serve as a rapid field test to show the relative proportions of fine dust or claylike material in soils or graded aggregates.

1.2 The following applies to all specified limits in this standard: For the purpose of determining conformance with these specifications, an observed value or a calculated value shall be rounded off "to the nearest unit" in the last right-hand place of figures used in expressing the limiting value, in accordance with E 29, Using Significant Digits in Test Data to Determine Conformance With Specifications.

1.3 The values stated in English units are to be regarded as the standard.

1.4 Refer to R 16 for regulatory information for chemicals.

2. Reference Document

2.1 AASHTO Standards

M 92 – Wire-Cloth Sieves for Testing Purposes

M 231 – Weighing Devices Used in the Testing of Materials

2.2 ASTM Standards

E 29 – Using Significant Digits in Test Data to Determine Conformance With Specifications

2.3 WSDOT Standards

T2 – FOP for Sampling of Aggregates

T 248 – FOP for Reducing Samples of Aggregate to Testing Size

3. Significance and Use

3.1 This test method is used to determine the proportion of detrimental fines in the portion passing the 4.75-mm (No. 4) sieve of soils or graded aggregates.

4. Apparatus

4.1 A graduated plastic cylinder, rubber stopper, irrigator tube, weighted foot assembly, and siphon assembly, all conforming to their respective specifications and dimensions shown in Figure 1. Fit the siphon assembly to a 1 gal (4L) bottle of working calcium chloride solution (see Section 4.9) placed on a shelf 36 ± 1 in (915 ± 25 mm) above the work surface. In lieu of the specified 1 gal (4L) bottle, a glass or plastic vat having a larger capacity may be used provided the liquid level of the working solution is maintained between 36 and 46 inches (915 and 1170 mm) above the work surface.

[1]This FOP is based on AASHTO T 176-08 and has been modified per WSDOT standards. To view the redline modifications, contact the WSDOT Quality Systems Manager at 360-709-5412.

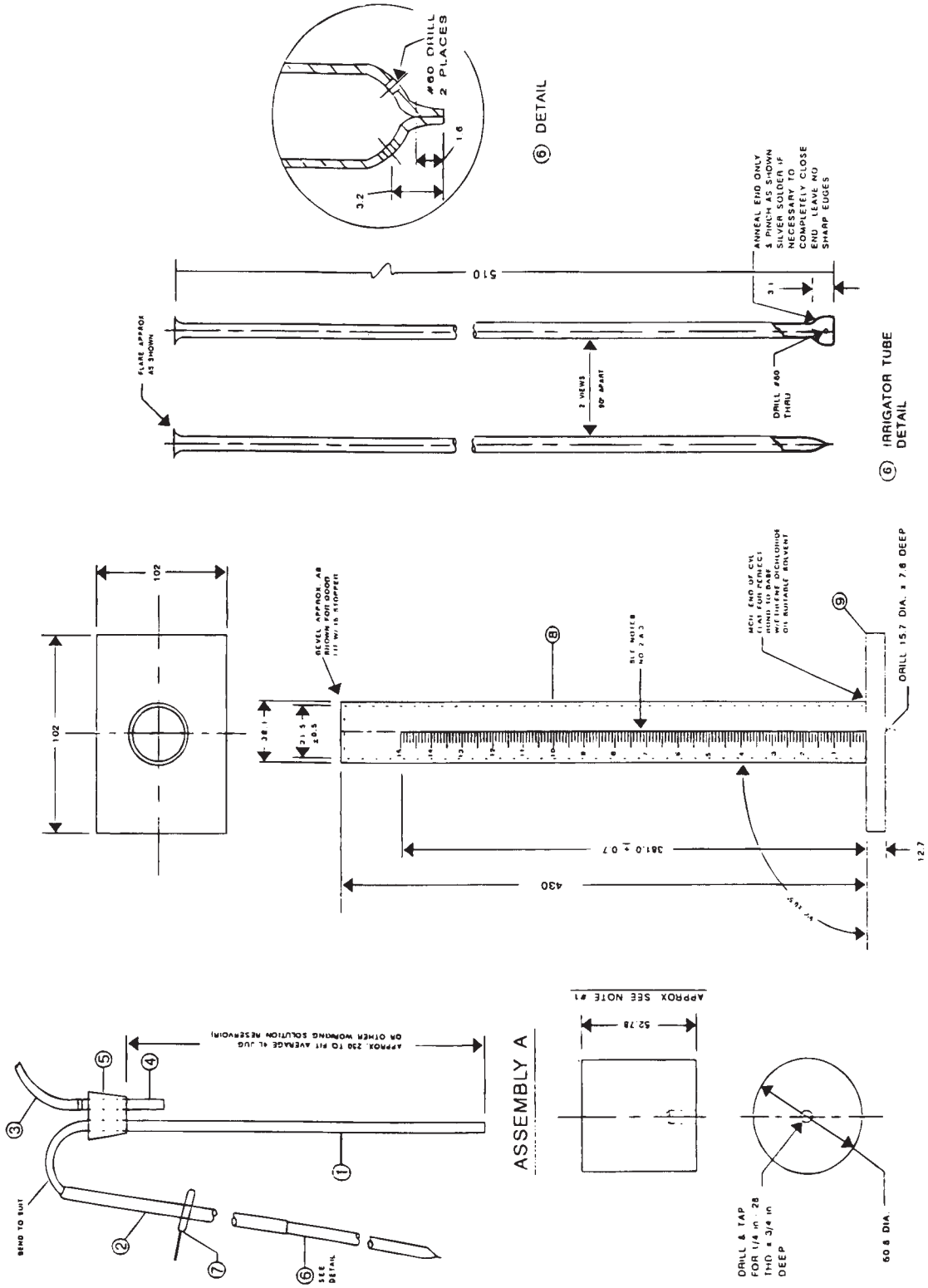
#60 DRILL
2 PLACES
3.2
1.6
⑥ DETAIL
ANNEAL END ONLY
3. PINCH AS SHOWN
SILVER SOLDER IF
NECESSARY TO
COMPLETELY CLOSE
END. LEAVE NO
SHARP EDGES
510
3.1
FLARE APPROX
AS SHOWN
2 WEWS
90° APART
DRILL #60
THRU
⑥ IRRIGATOR TUBE
DETAIL
102
102
REVEL APPROX. AS
SHOWN. POSSIBLY
THINNER STOPPER
38.1
31.5
25.5
⑧
BLT NOTES
NO 7 & 3
MCH END OF CYL
FLAT FOR PERFECT
CONTACT WITH GLASS
WITH THENE DICHLORIDE
OR SUITABLE SOLVENT
⑨
DRILL 15.7 DIA. x 7.6 DEEP
381.0 ± 0.7
430
12.7
ASSEMBLY B
Note: all dimensions are shown in mm unless otherwise indicated.
FIGURE 1 Sand Equivalent Apparatus
BEND TO SUIT
③
⑤
④
APPROX. 230 TO FIT AVERAGE 4L JUG
OR OTHER WORKING SOLUTION RESERVOIR
①
②
⑦
⑥
SEE
DETAIL
ASSEMBLY A
APPROX SEE NOTE #1
52.78
DRILL & TAP
FOR 1/4 in - 28
THD x 3/4 in
DEEP
60.8 DIA.
⑫ WEIGHT

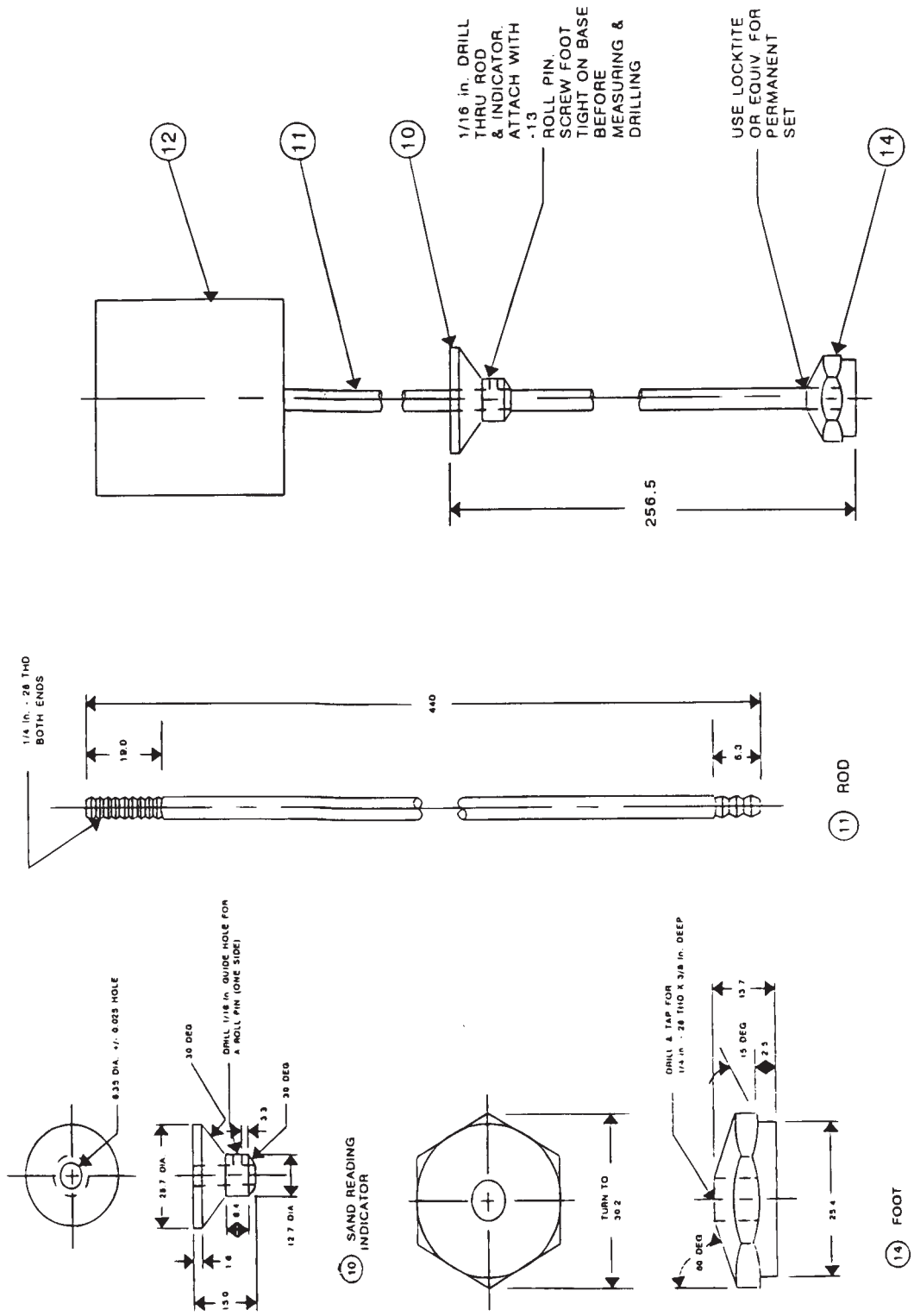

Note: all dimensions are shown in mm unless otherwise indicated.

FIGURE 1 Sand Equivalent Apparatus (continued)

List of Material					
Assembly	No. Reg.	Description	Stock size	Material	Heat Treatment
A	Siphon Assembly				
	1	Siphon Tube	6.4 dia. × 400		
	2	Siphon Hose	4.6 I.D. × 1220		
	3	Blow Hose	4.8 I.D. × 50.8		
	4	Blow Tube	6.4 dia × 50.8		
	5	Two-Hole Stopper	No. 6		
	6	Irrigator Tube	6.4 O.D. 0.89 Wall × 500 Stainless Steel Tube, Type 316		
	7	Clamp	Pinchcock, Day, BKH No. 21730 or Equiv.		
B	Graduate Assembly				
	8	Tube	38.1 Od. × 430	Trans. Acrylic Plastic	
	9	Base	12.7 × 102 × 102	Trans. Acrylic Plastic	
C	Weighted Foot Assembly				
	10	Sand Reading Indicator	6.4 dia. × 14.9	Nylon 101 Type 66 Annealed	
	11	Rod	6.4 dia. × 438.2	Brass	
	12	Weight	50.8 dia. × 52.78	C.R. SH.	
	13	Roll Pin	0.16 dia. × 12.7	Steel	
	14	Foot	0.16 dia. × 13.7	Brass	
	15	Solid Stopper	No. 7	Rubber	

Notes

1. "C" Weighted Foot Assembly to Weigh 1000 ± 5g.
2. Graduations of graduate to be 2.54 mm apart and every tenth mark to be numerically designated as shown. Every fifth line should be approximately 9.5 mm long. All other lines should be approximately 5.5 mm long. Depth to be 0.4 mm. Width to be 0.8 mm across the top.
3. Accuracy of scale to be ± 0.25 mm. Error at any point on scale to be ± 0.75 mm of true distance to zero.
4. Glass or stainless steel may be substituted as a material type for the copper siphon and blow tubing.

Sand Equivalent Apparatus
Figure 1

Note 1: An older model of weighted foot assembly has a guide cap that fits over the upper end of the graduated cylinder and centers the rod in the cylinder, and the foot of the assembly has a conical upper surface and three centering screws to center it loosely in the cylinder. The older model does not have the same reading indicator affixed to the rod (Figure 1), but a slot in the centering screws of the weighted foot is used to indicate the sand reading. Apparatus with the sand reading indicator (Figure 2) is preferred for testing clayey materials.

Apparatus
Figure 2

4.2 A tinned measure, having a capacity of 3 oz (85 ± 5 mL), approximately 2.25 in (57 mm) in diameter.

4.3 A balance with sufficient capacity, readable to 0.1 percent of the sample mass, or better, and conforming to the requirements of M 231.

4.4 A wide-mouth funnel approximately 4 in (100 mm) in diameter at the mouth.

4.5 A clock or watch reading in minutes and seconds.

4.6 A mechanical shaker having a throw of 8.00 ± 0.04 in (203.2 ± 1.0 mm) and operating at 175 ± 2 cycles per minute (2.92 ± 0.03 Hz) (Note 2). Prior to use, fasten the mechanical sand equivalent shaker securely to a firm and level mount.

Note 2: The mechanical shaker shall be used when performing referee sand equivalent determinations.

4.7 A manually operated shaker capable of producing an oscillating motion at the rate of 100 complete cycles in 45 ± 5 seconds, with a hand-assisted half stroke length of 5.0 ± 0.2 in (127 ± 5 mm). The shaker shall be fastened securely to a firm and level mount by bolts or clamps.

4.8 Stock Solution

4.8.1 Prepare a calcium chloride stock solution

Ingredients: 454 g (1.0 lb) of technical grade Anhydrous Calcium Chloride
2050 g (4.515 lb) of USP Glycerin

Calcium chloride stock solution: Dissolve the 454 g (1.0 lb) of calcium chloride in 1.89 L (1/2 gal) of distilled water. Cool and filter it through ready pleated rapid filtering paper. Add the 2050 g (4.515 lb) of glycerin to the filtered solution, mix well and dilute to 3.78 L (1 gal).

Note 3: The stock solution can be stored provided the time of storage is not sufficient to promote the growth of fungi.

4.9 Working calcium chloride solution: Prepare the working calcium chloride solution by diluting one measuring tin full 3 oz. (85 ± 5 mL), or from a graduated cylinder of the stock calcium chloride solution to 1 gal (3.8 L) with water. Use distilled or demineralized water for the normal preparation of the working solution. Record the date the working solution was made on the gallon container. Working solutions more than 30 days old shall be discarded.

4.10 A straightedge or spatula, suitable for striking off the excess soil from the tin measure.

4.11 A thermostatically controlled drying oven.

4.12 Quartering or splitting cloth, approximately 2 ft. square, nonabsorbent material such as plastic or oil cloth.

4.13 A No. 4 (4.75-mm) sieve conforming to the requirements of M 92.

4.14 Optional Handle for Irrigation Tube – A 25 mm diameter wooden dowel to aid in pushing the irrigation tube into firm materials. See Figure 1, Assembly B.

5. Temperature Control

5.1 The temperature of the working solution should be maintained at 67–77°F (22 ± 3°C) during the performance of this test. If field conditions preclude the maintenance of the temperature range, frequent reference samples should be submitted to a laboratory where proper temperature control is possible. It is also possible to establish temperature correction curves for each material being tested where proper temperature control is not possible. However, no general correction curve should be utilized for several materials even within a narrow range of sand equivalent values. Samples which meet the minimums and equivalent requirement at a working solution temperature below the recommended range need not be subject to reference testing.

6. Sampling

6.1 Obtain a sample of the material to be tested in accordance with WSDOT FOP for AASHTO T 2.

6.2 Reduce the sample in accordance with WSDOT FOP for AASHTO T 248.

6.3 Sieve the sample over No. 4 (4.75 mm) sieve using a mechanical shaker. (Make sure all large clumps of material are broken up before placing sieves in the mechanical shaker.)

6.3.1 Shake the sample in the mechanical shaker for a minimum of 10 minutes or for the minimum verified shaking time, whichever is greater.

6.3.2 The material shall be at Saturated Surface Dry (Saturated Surface Dry is defined herein as no visible free moisture, but material may still appear damp) or drier prior to sieving.

6.3.2.1 If the "as received" sample requires drying to achieve the required SSD or dryer condition prior to initial sieving, either air dry it or dry it in a thermostatically controlled oven at a temperature not to exceed 350°F.

6.3.3 Sieves may be nested above the No. 4 (4.75 mm) to prevent overloading, as defined in Table 1 of WSDOT FOP for WAQTC/AASHTO T 27/T 11, or the sample may be sieved in increments.

6.3.4 Break up any remaining clumps of fine-grained material and clean the fines from particles retained above the No. 4 (4.75 mm) sieve. Pass this material over the No. 4 (4.75 mm) sieve and include the material that passes in the total material passing the No. 4 (4.75 mm) sieve.

6.4 Split or quarter the material passing the No. 4 (4.75 mm), in accordance with WSDOT FOP for AASHTO T 248, to yield approximately 1,000 g to 1,500 g of material. Use extreme care to obtain a truly representative portion of the original sample (Note 4).

Note 4: Experiments show that as the amount of material being reduced by splitting or quartering is decreased, the accuracy of providing representative portions is decreased. It is imperative that the sample be split or quartered carefully. When it appears necessary, dampen the material before splitting or quartering to avoid segregation or loss of fines.

7. Sample Preparation

7.1 Prepare two test samples by the following method:

7.1.1 The sample must be in the proper moisture condition to achieve reliable results. Condition is determined by tightly squeezing a small portion of the thoroughly mixed sample in the palm of the hand. If the cast that is formed permits careful handling without breaking, the correct moisture range has been obtained. If the material is too dry, the cast will crumble and it will be necessary to add water and remix and retest until the material forms a cast. If the material shows any free water, it is too wet to test and must be drained and air-dried, mixing it frequently to ensure uniformity. This overly wet material will form a good cast when checked initially, so the drying process should continue until a squeeze check on the drying material gives a cast which is more fragile and delicate to handle than the original.

Place the sample on the splitting cloth and mix by alternately lifting each corner of the cloth and pulling it over the sample toward the diagonally opposite corner, causing the material to be rolled. When the material appears homogeneous, finish the mixing with the sample in a pile near the center of the cloth.

7.1.2 Fill the 3 oz (85 mL) tin measure by pushing it through the base of the pile while exerting pressure with the hand against the pile on the side opposite the measure. As the tin is moved though the pile, hold enough pressure with the hand to cause the material to fill the tin to overflowing. Press firmly with the palm of the hand, compacting the material and allowing the maximum amount to be placed in the tin. Strike off the tin measure level full with a spatula or straightedge. For the second determination, remix the sample and fill the tin again.

Dry the test sample in an oven in accordance with FOP for AASHTO T 255. The oven temperature shall not exceed 350°F (177°C). Cool to room temperature before testing. It is acceptable to place the test sample in a larger container to aid drying.

8. Procedure

8.1 Start the siphon by forcing air into the top of the solution bottle through the bent copper, glass, or stainless steel blow tube while the pinch clamp is open. The apparatus is now ready for use.

8.2 Siphon 4.0 ± 0.1 in (101.6 ± 2.5 mm) of working calcium chloride solution into the plastic cylinder. Pour the prepared test sample into the plastic cylinder using the funnel to avoid spillage (see Figure 3). Tap the bottom of the cylinder sharply on the heel of the hand several times to release air bubbles and to promote thorough wetting of the sample.

Tapping Bottom of Cylinder
Figure 3

8.3 Allow the wetted sample to stand undisturbed for 10 ± 1 minute. At the end of the 10-minute soaking period, stopper the cylinder, then loosen the material from the bottom by partially inverting the cylinder and shaking it simultaneously.

8.4 After loosening the material from the bottom of the cylinder, shake the cylinder and contents by any one of the following methods:

8.4.1 Mechanical Shaker Method – Place the stoppered cylinder in the mechanical sand equivalent shaker, set the timer, and allow the machine to shake the cylinder and contents for 45 ± 1 second.

8.4.2 Manual Shaker Method – Secure the stoppered cylinder in the three spring clamps on the carriage of the hand-operated sand equivalent shaker and reset the stroke counter to zero. Stand directly in front of the shaker and force the pointer to the stroke limit marker painted on the backboard by applying an abrupt horizontal thrust to the upper portion of the right hand spring steel strap. Then remove the hand from the strap and allow the spring action of the straps to move the carriage and cylinder in the opposite direction without assistance or hindrance. Apply enough force to the right-hand spring steel strap during the thrust portion of each stroke to move the pointer to the stroke limit marker by pushing against the strap with the ends of the fingers to maintain a smooth oscillating motion. The center of the stroke limit marker is positioned to provide the proper stroke length and its width provides the maximum allowable limits of variation. The proper shaking action is accomplished only when the tip of the point reverses direction within the marker limits. Proper shaking action can best be maintained by using only the forearm and wrist action to propel the shaker. Continue the shaking action for 100 strokes.

Manually-Operated Shaker
Figure 4

8.5 Following the shaking operation, set the cylinder upright on the work table and remove the stopper.

8.6 Irrigation Procedure – Insert the irrigator tube in the cylinder and rinse material from the cylinder walls as the irrigator is lowered. Force the irrigator through the material to the bottom of the cylinder by applying a gentle stabbing and twisting action while the working solution flows from the irrigator tip. This flushes the fine material into suspension above the coarser sand particles (see Figure 5). Continue to apply the stabbing and twisting action while flushing the fines upward until the cylinder is filled to the 15 in (381 mm) mark. Then raise the irrigator slowly without shutting off the flow so that the liquid level is maintained at about 15 in (381 mm) while the irrigator is being withdrawn. Regulate the flow just before the irrigator is entirely withdrawn and adjust the final level to 15 in (381 mm). Final level as judged by the bottom of the meniscus shall be between the top two gradations on the tube but shall not be above the 15 in (381 mm) level.

Irrigation
Figure 5

Note 5: For certain soils, particularly on crushed materials, the stabbing action may not be possible. For these materials, the irrigation technique is as follows: Continue to apply a twisting action as the irrigation tube is slowly withdrawn. As the tube is withdrawn, it is essential that as many fines as possible flushed upward until the cylinder is filled to the 15 in (381 mm) mark.

8.7 Allow the cylinder and contents to stand undisturbed for 20 minutes ± 15 seconds. Start the timing immediately after withdrawing the irrigator tube

8.8 At the end of the 20 minute sedimentation period, read and record the level of the top of the clay suspension. This is referred to as the "clay reading." If no clear line of demarcation has formed at the end of the specified 20 minute sedimentation period, allow the sample to stand undisturbed until a clear reading can be obtained, then immediately read and record the level of the top of the clay suspension and the total sedimentation time. If the total sedimentation time exceeds 30 minutes, it will be rejected.

8.9 After the clay reading has been taken, the "sand reading" shall be obtained by one of the following methods:

8.9.1 When using the weighted foot assembly having the sand indictor on the rod of the assembly, place the assembly over the cylinder and gently lower the assembly toward the sand. Do not allow the indicator to hit the mouth of the cylinder as the assembly is being lowered. As the weighted foot comes to rest on the sand, tip the assembly toward the graduations on the cylinder until the indicator touches the inside of the cylinder. Subtract 10 in (254 mm) from the level indicated by the extreme top edge of the indicator and record this value as the "sand reading" (see Figure 6).

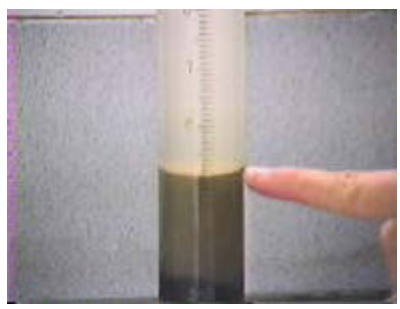

Clay Reading
Figure 6

8.9.2 If an older model weighted foot assembly having centering screws is used, keep one of the centering screws in contact with the cylinder wall near the graduations so that it can be seen at all times while the assembly is being lowered. When the weighted foot has come to rest on the sand, read the level of the centering screw and record this value as the "sand reading."

8.10 If clay or sand readings fall between 0.1 in (2.5 mm) graduations, record the level of the higher graduation as the reading. For example, a clay reading of 7.95 would be recorded as 8.0, and a sand reading of 3.22 would be recorded as 3.3.

9. Calculations

9.1 Calculate the sand equivalent (SE) to the nearest 0.1 using the following formula:

$$SE = \frac{\text{Sand Reading} \times 100}{\text{Clay Reading}}$$

9.2 If the calculated sand equivalent is not a whole number, report it as the next higher whole number, as in the following example:

$$SE = \frac{3.3 \times 100}{8} = 41.25$$

which is reported as 42.

9.3 Average the whole number values determined as described above. If the average of these values is not a whole number, raise it to the next higher whole number, as in the following example:

Calculated SE values: 41.2, 40.9

After raising each to the next higher whole number, they become: 42, 41

The average of these values is then determined:

$$\frac{42 + 41}{2} = 41.5$$

which is reported as 42.

If the two results from the same SE sample vary by more than 8 points, the test shall be invalid and a new test completed.

9.3.1 Since the average value is not a whole number, it is raised to the next higher whole number and the reported averages and equivalent value is reported as 42.

10. Report

10.1 Report the results using one or more of the following:

- Materials Testing System (MATS)
- DOT Form 350-161, 422-022, 422-022A, or 422-022B
- Form approved in writing by the State Materials Engineer

Performance Exam Checklist

Plastic Fines in Graded Aggregates and Soils by the Use of the Sand Equivalent Test FOP for AASHTO T 176

Participant Name _____ Exam Date _____

Procedure Element	**Yes**	**No**
Preparation		
1. The tester has a copy of the current procedure on hand?		
2. All equipment is functioning according to the test procedure, and if required, has the current calibration/verification tags present?		
3. Sample passed through No. 4 (4.75 mm) sieve?		
4. Material in clods broken up and re-screened?		
5. No fines lost?		
6. Temperature of working solution 72 ± 5°F (22 ± 3°C)?		
7. Working calcium chloride solution 36 ± 1 in (915 mm ± 25 mm) above the work surface?		
8. 4 ± 0.1 in (101.6 ± 2.5 mm) working calcium chloride solution siphoned into cylinder?		
9. Working solution dated?		
Sample Preparation		
1. If necessary, sample sprayed with water to prevent loss of fines?		
2. Material checked for moisture condition by tightly squeezing small portion in palm of hand and forming a cast?		
3. Sample at proper water content?		
a. If too dry (cast crumbles easily), water added and remixed?		
b. If too wet (shows free water), sample drained, air dried and mixed frequently?		
4. Sample placed on splitting cloth and mixed by alternately lifting each corner of the cloth and pulling it over the sample toward diagonally opposite corner, causing material to be rolled?		
5. Is material thoroughly mixed?		
6. When material appears to be homogeneous, mixing finished with sample in a pile near center of cloth?		
7. Fill the 85 mL tin by pushing through base of pile with other hand on opposite side of pile?		
8. Material fills tin to overflowing?		
9. Material compacted into tin with palm of hand?		
10. Tin struck off level full with spatula or straightedge?		
11. Test sample dried in an oven at the correct temperature?		
12. Sample cooled to room temperature		

Procedure

1. Prepared sample funneled into cylinder with no loss of fines?
2. Bottom of cylinder tapped sharply on heel of hand several times to release air bubbles?
3. Wetted sample allowed to stand undisturbed for 10 min ± 1 min?
4. Cylinder stoppered and material loosened from bottom by shaking?
5. Properly performed shaking method?
   - Mechanical Shaker Method
   - Manual Shaker Method
6. Following shaking, cylinder set vertical on work surface and stopper removed?
7. Irrigator tube inserted in cylinder and material rinsed from cylinder walls as irrigator is lowered?
8. Irrigator tube forced through material to bottom of cylinder by gently stabbing and twisting action?
9. Stabbing and twisting motion applied until cylinder filled to 15 in (381 mm) mark?
10. Liquid raised and maintained at 15 in (381 mm) mark while irrigator is being withdrawn?
11. No clear solution at top of column?
12. Contents let stand 20 minutes ± 15 seconds?
13. Timing started immediately after withdrawal of irrigator?
14. No vibration or disturbance of the sample?
15. Readings taken at 20 minutes or up to 30 minutes, when a definite line appears?
16. Weighted foot assembly lowered into cylinder without hitting mouth of cylinder?
17. Calculations made to 0.1 and reported to the next higher whole number?
18. SE is based on the average results of two samples?
19. If the two SE values vary by more than 8 points, additional tests run?
20. All calculations performed correctly?

First Attempt: Pass Fail Second Attempt: Pass Fail

Signature of Examiner _____

Comments:

AASHTO T 180

Moisture-Density Relations of Soils Using a 10 lb (4.54 kg) Rammer and an 18 in (457 mm) Drop

AASHTO T 180, Method D, has been adopted by WSDOT.

Performance Exam Checklist

Tester Qualification Practical Exam Checklist

Moisture-Density Relations of Soils Using a 10 lb (4.54 kg) Rammer and an 18 in (457 mm) Drop
FOP for AASHTO T 180

Participant Name _____ Exam Date _____

Procedure Element	**Yes**	**No**
1. The tester has a copy of the current procedure on hand?	❒	❒
2. All equipment is functioning according to the test procedure, and if required, has the current calibration/verification tags present?	❒	❒
Sample Preparation		
1. If damp, sample dried in air or drying apparatus, not exceeding 140°F (60°C)?	❒	❒
2. Sample pulverized and adequate amount sieved over the ¾ inch (19 mm) sieve?	❒	❒
3. Material retained on the sieve discarded?	❒	❒
4. Sample passing the sieve has appropriate mass?	❒	❒
Procedure		
1. Sample mixed with water to approximately 4 percent below expected optimum moisture content?	❒	❒
2. Layer of soil placed in mold with collar attached?	❒	❒
3. Mold placed on rigid and stable foundation?	❒	❒
4. Lightly tamp soil in mold?	❒	❒
5. Soil compacted with 56 blows?	❒	❒
6. Scrape sides of mold and evenly distributed on top of the layer?	❒	❒
7. Soil placed and compacted in five equal layers?	❒	❒
8. No more than ½ inch of soil above the top of the bottom portion of the mold?	❒	❒
9. Collar removed and soil trimmed to top of mold with the straightedge?	❒	❒
10. Mass of mold and contents determined to appropriate precision?	❒	❒
11. Wet mass of specimen multiplied by appropriate factor to obtain wet density (.075 lbs/ft^3)?	❒	❒
12. Soil removed from mold using sample extruder?	❒	❒
13. Soil sliced vertically through center?	❒	❒

Procedure Element	Yes	No
14. Moisture sample removed from one cut face and moist mass determined immediately?	❒	❒
15. Moisture sample mass of at least 500 g?	❒	❒
16. Sample dried and water content determined according to AASHTO T 255 or T 265?	❒	❒
17. Remainder of material from mold broken up to about passing sieve size and added to remainder of original test sample?	❒	❒
18. Water added to increase moisture content in approximately 2 percent increments?	❒	❒
19. Steps 2 through 15 repeated for each increment of water added?	❒	❒
20. If soil is plastic (clay types):		
a. Sample mixed with water varying moisture content by approximately 2 percent, bracketing the optimum moisture content?	❒	❒
b. Samples placed in covered containers and allowed to stand for at least 12 hours?	❒	❒
21. Process continued until wet density either decreases or stabilizes?	❒	❒
22. Water content and dry density calculated for each sample?	❒	❒
23. Dry density plotted on vertical axis, moisture content plotted on horizontal axis, and points connected with a smooth curve?	❒	❒
24. Water content at peak of curve recorded as optimum water content and recorded to nearest 1 percent?	❒	❒
25. Dry density at optimum water content reported as maximum density, to nearest 1 lb/ft^3 (10 kg/m^3)?	❒	❒
26. All calculations performed correctly?	❒	❒

First Attempt: Pass ❒ Fail ❒ Second Attempt: Pass ❒ Fail ❒

Signature of Examiner _____

Comments:

Performance Exam Checklist

Air Content of Concrete (Volumetric Method) for AASHTO T 196

Participant Name _____ Exam Date _____

Procedure Element	Yes	No
1. Bowl filled in two equal layers?		
2. Each layer rodded 25 times?		
3. Bowl tapped (sharply) 10 to 15 times after rodding each layer?		
4. Excess concrete removed with strike-off bar or plate?		
5. Flange of bowl wiped clean?		
6. Using funnel, water added, then alcohol added, then final water added until liquid level appears in neck?		
7. Funnel removed & water adjusted to zero mark using rubber syringe?		
8. Screw cap is attached and tightened?		
Initial Reading		
9. Unit inverted and agitated at 5 second intervals for a minimum of 45 seconds and until concrete is free from base?		
10. Unit vigorously rolled ¼ to ½ turn forward and back several times with base at a 45° angle. Then turn base about ⅓ turn and rolling process resumed.		
11. Was meter checked for leaking?		
a. If leak was found, was test started over with new sample?		
12. Apparatus placed upright, top loosened and allowed to stand until air rises to the top?		
a. < 0.25 percent change in 2 minutes (without excessive foam), initial reading recorded to the nearest 0.25%?		
b. More than 6 minutes to stabilize or excessive foam, was test discarded and new test run?		
Confirmation of Initial Meter Reading		
13. 1 minute rolling repeated and liquid level checked?		
14. Confirmation reading > 0.25 percent of initial, new reading recorded as new initial reading, repeat 1 minute rolling		
15. Level of liquid read < 0.25 percent change, final meter reading recorded to nearest 0.25%?		
16. Apparatus disassembled and checked for undisturbed concrete		
Calculations		
17. Correction factor from Table 1 subtracted for use of 2.5 pts or more of alcohol?		
18. If required, number of calibration cups of water added to air content?		
19. Air content reported to the nearest 0.25 percent air?		

First Attempt: Pass Fail Second Attempt: Pass Fail

Signature of Examiner _____

Comments:

WSDOT FOP for AASHTO T 209[1]

Theoretical Maximum Specific Gravity and Density of Hot-Mix Asphalt Paving Mixtures

1. Scope

   1.1 This test method covers the determination of the theoretical maximum specific gravity and density of uncompacted hot-mix asphalt paving mixtures at 77°F (25°C).

   1.2 The values stated in English units are to be regarded as the standard.

   1.3 This standard does not purport to address all of the safety concerns, if any, associated with its use. It is the responsibility of the user of this standard to establish appropriate safety and health practices and determine the applicability of regulatory limitations prior to use.

2. Referenced Documents

   2.1 AASHTO Standards

   M 231 – Weighing Devices Used in the Testing of Materials

   R 61 – Establishing Requirements for and Performing Equipment Standardizations and Checks

   2.2 ASTM Standards

   D 4311 – Practice for Determining Asphalt Volume Correction to a Base Temperature

   C 670 – Preparing Precision and Bias Statements for Test Methods for Construction Materials

   2.3 Other Standards

   T 168 – WAQTC FOP for AASHTO for Sampling Bituminous Paving Mixtures

   T 712 – WSDOT Standard Method of Reducing Hot Mix Asphalt Paving Mixtures

3. Terminology

   3.1 Definitions

   3.1.1 Density, as determined by this test method. The mass of a cubic meter of the material at 77°F (25°C) in English units, or the mass of a cubic foot of the material at 77°F (25°C) in inch-pound units.

   3.1.2 Residual pressure, as employed by this test method. The pressure in a vacuum vessel when vacuum is applied.

   3.1.3 Specific gravity, as determined by this test method. The ratio of a given mass of material at 77°F (25°C) to the mass of an equal volume of water at the same temperature.

[1]This FOP is based on AASHTO T 209 (2011) and has been modified per WSDOT standards. To view the redline modifications, contact the WSDOT Quality Systems Manager at 360-709-5412.

4. Summary of Test Method

4.1 A weighed sample of HMA paving mixture in the loose condition is placed in a tared vacuum vessel. Sufficient water is added to completely submerge the sample. Vacuum is applied for 15 ± 2 min to gradually reduce the residual pressure in the vacuum vessel. At the end of the vacuum period, the vacuum is gradually released. The volume of the sample of paving mixture is obtained by filling the vacuum container level full of water and weighing in air. At the time of weighing, the temperature is measured as well as the mass. From the mass and volume measurements, the specific gravity or density at 77°F (25°C) is calculated. If the temperature employed is different from 77°F (25°C), an appropriate correction is applied.

5. Significance and Use

5.1 The theoretical maximum specific gravities and densities of hot-mix asphalt paving mixtures are intrinsic properties whose values are influenced by the composition of the mixtures in terms of types and amounts of aggregates and asphalt binder materials.

5.1.1 These properties are used to calculate percent air voids in compacted HMA.

5.1.2 These properties provide target values for the compaction of HMA.

5.1.3 These properties are essential when calculating the amount of asphalt binder absorbed by the internal porosity of the individual aggregate particles in HMA.

6. Apparatus

6.1 Follow the procedures for performing equipment standardizations, standardization, and checks found in R 61.

6.2 Vacuum Container

6.2.1 The vacuum containers described must be capable of withstanding the full vacuum applied, and each must be equipped with the fittings and other accessories required by the test procedure being employed. The opening in the container leading to the vacuum pump shall be covered by a piece of No. 200 (75-µm) mesh to minimize the loss of fine material.

6.2.2 The capacity of the vacuum container should be between 2000 and 10,000-mL and depends on the minimum sample size requirements given in Section 7.2. Avoid using a small sample in a large container.

6.2.3 Vacuum Bowl – Either a metal or plastic bowl with a diameter of approximately 7.1 to 10.2 in (180 to 260 mm) and a bowl height of at least 6.3 in (160 mm) equipped with a transparent cover fitted with a rubber gasket and a connection for the vacuum line.

6.2.4 Vacuum Flask for Weighing in Air Only – A thick-walled volumetric glass flask and a rubber stopper with a connection for the vacuum line.

6.2.5 Pycnometer for Weighing in Air Only – A glass, metal, or plastic pycnometer.

6.3 Balance, conforming to the requirements of AASHTO M 231, Class G 2. The balance shall be standardized at least every 12 months.

6.3.1 For the mass determination-in-water method, the balance shall be equipped with a suitable apparatus and holder to permit determining the mass of the sample while suspended below the balance. The wire suspending the holder shall be the smallest practical size to minimize any possible effects of a variable immersed length.

6.4 Vacuum pump or water aspirator, capable of evacuating air from the vacuum container to a residual pressure of 30 mm Hg (4.0 kPa) or less.

6.4.1 When a vacuum pump is used, a suitable trap of one or more filter flasks, or equivalent, shall be installed between the vacuum vessel and vacuum source to reduce the amount of water vapor entering the vacuum pump.

6.5 Absolute pressure gauge or vacuum gauge, used for annual standardization and traceable to NIST (mandatory) to be connected directly to the vacuum vessel and to be capable of measuring residual pressure down to 30 mm Hg (4.0 kPa), or less (preferably to zero). It is to be connected at the end of the vacuum line using an appropriate tube and either a "T" connector on the top of the vessel or by using a separate opening (from the vacuum line) in the top of the vessel to attach the hose.

Note 2: A residual pressure of 30 mm Hg (4.0 kPa) absolute pressure is approximately equivalent to 730 mm Hg (97 kPa) reading on vacuum gauge at sea level.

6.6 Bleeder valve, attached to the vacuum train to facilitate adjustment of the vacuum being applied to the vacuum vessel.

6.7 Thermometric device (mass determination in air), liquid-in-glass thermometers, or other suitable thermometric device, accurate to 1ºF (0.5ºC). The thermometric device shall be standardized at the test temperature at least every 12 months.

6.8 Water bath that can be maintained at a constant temperature between 73 and 82.9°F (22.8 and 28.3°C).

6.9 Protective gloves, used when handling glass equipment under vacuum.

6.10 Mallet, with a rubber or rawhide head.

7. Sampling

7.1 Obtain the sample in accordance with WAQTC FOP for AASHTO T 168 and WSDOT T 712.

7.2 The size of the sample shall conform to the requirements in Table 1. Samples larger than the capacity of the container may be tested a portion at a time.

Nominal Maximum Aggregate Size, in (mm)	Minimum Sample Size, lb (g)
1½ (37.5) or greater	8 (4000)
¾ (19) to 1 (25)	5 (2500)
½ (12.5) or smaller	3 (1500)

Minimum Sample Sizes
Table 1

8. Standardization of Flasks, Bowls, and Pycnometers

This section has been deleted by WSDOT and replaced with the following:

The volumetric flask or metal vacuum pycnometer will be standardized periodically in conformance with established verification procedures or per AASHTO T 209. Standardization shall be done at 77°F.

9. Sample Preparation

9.1 Separate the particles of the HMA sample by hand, taking care to avoid fracturing the aggregate, so that the particles of the fine aggregate portion are not larger than ¼ in (6.3 mm). If an HMA sample is not sufficiently soft to be separated manually, place it in a flat pan, and warm it in an oven until it can be separated as described.

9.2 WSDOT has deleted this section.

9.3 Cool the sample to room temperature and place it in a tared and standardized flask, bowl, or pycnometer. Weigh and designate the net mass of the sample as A. Add sufficient water at a temperature of approximately 25°C (77°F) to cover the sample completely.

Test Method A – Mechanical Agitation

10. Apparatus

10.1 In addition to the apparatus listed in Section 6, the following apparatus is required for Method A.

10.1.1 Mechanical shaker-shaker for removing air from asphalt mix.

11. Procedure

11.1 Remove air trapped in the sample by applying gradually increased vacuum until the absolute pressure gauge or vacuum gauge reads 30 mm HG or less (4.0 kPa or less). Maintain this residual pressure for 15 ± 2 min. Agitate the container and contents using the mechanical device during the vacuum period. Glass vessels should be shaken on a resilient surface such as a rubber or plastic mat, and not on a hard surface, so as to avoid excessive impact while under vacuum. To aid in releasing the trapped air from the metal vacuum pycnometer, tap the sides of the metal vacuum pycnometer 3 to 5 times with the mallet at approximately two-minute intervals.

Note: The release of entrapped air may be facilitated by the addition of a few drops of suitable wetting agent.

11.2 At the end of the vacuum period, release the vacuum within 10 to 15 seconds. Start the 9 to 11 minute time, as described in Section 13.2, immediately upon starting the release of vacuum. Proceed to Section 13.2.

Test Method B – Manual Agitation

12. Procedure

12.1 Remove air trapped in the sample by applying gradually increased vacuum until the absolute pressure gauge or vacuum gauge reads 30 mm HG or less (4.0 kPa or less). Maintain this residual pressure for 15 ± 2 min. Agitate the container and contents during the vacuum period by vigorous shaking at intervals of about 2 minutes. Glass vessels should be shaken on a resilient surface such as a rubber or plastic mat, and not on a hard surface, so as to avoid excessive impact while under vacuum.

12.2 At the end of the vacuum period, release the vacuum within 10 to 15 seconds. Start the 9 to 11 minute time, as described in Section 13.2 immediately upon starting the release of vacuum. Proceed to Section 13.2.

13. Mass Determination

13.1 WSDOT has deleted this section.

13.2 Mass Determination in Air – Fill the flask or any one of the pycnometers with water and adjust the contents to a temperature of 77 ± 2°F (25 ± 1°C) in a constant temperature water bath. Determine the mass of the container (and contents), completely filled, 9 to 11 minutes after starting Section 11.2 or 12.1. Designate this mass as E. Accurate filling may be ensured by the use of a glass cover plate.

In lieu of a constant temperature water bath described above, determine the temperature of the water within the flask or metal vacuum pycnometer and determine the appropriate density correction factor "R" using Table 2.

14. Calculation

14.1 Calculate the theoretical maximum specific gravity of the sample at 77°F (25°C) as follows:

14.1.1 WSDOT has deleted this section.

14.1.2 Weighing Mass Determination in Air

$$\text{Theoretical Maximum Specific Gravity} = \frac{A}{A + D - E}$$

Where:

A = Mass of oven-dry sample in air, g
D = Mass of container filled with water at 77°F (25°C), g
E = Mass of container filled with sample and water at 77°F (25°C), g

14.1.3 If the test temperature differs significantly from 77°F (25°C), correct for thermal effects as follows:

WSDOT has removed the AASHTO calculation and replaced it with the following calculations:

a. Determination using temperature correction:

$$\text{Theoretical Maximum Gravity} = \frac{A}{A + D - E} \times R$$

Where:

A = Mass of oven-dry sample in air, g;
D = Mass of container filled with water at 77°F (25°C), g; and
E = Mass of container filled with sample and water at 77°F (25°C), g.
R = Factor from Table 2 to correct density of water from the test temperature to 77°F (25°C).

Note: The flask standardization is done at 77 ± 0.4°F (25 ± 0.2°C).

C°	F°	"R"	C°	F°	"R"
22.8	73.0	1.00054	25.2	77.4	0.99995
23.0	73.4	1.00050	25.4	77.7	0.99990
23.2	73.8	1.00045	25.6	78.1	0.99984
23.3	73.9	1.00042	25.8	78.4	0.99979
23.4	74.1	1.00040	26.0	78.8	0.99974
23.6	74.5	1.00035	26.1	79.0	0.99971
23.8	74.8	1.00030	26.2	79.2	0.99968
23.9	75.0	1.00028	26.4	79.5	0.99963
24.0	75.2	1.00025	26.6	79.9	0.99958
24.2	75.6	1.00020	26.7	80.1	0.99955
24.4	75.9	1.00015	27.2	81.0	0.99941
24.6	76.3	1.00010	27.3	81.1	0.99938
24.8	76.6	1.00005	27.8	82.0	0.99924
25.0	77.0	1.00000	28.3	82.9	0.99910

Density Correction Factor "R"
Table 2

b. Determination using weighted average:

$$\text{Weighted Average Maximum Specific Gravity} = \frac{(Sp.G_1 \times A_1) + (Sp.G_2 \times A_2)}{(A1 + A2)}$$

Where:

$Sp.G_1$ = Specific gravity of first test segment
$Sp.G_2$ = Specific gravity of second test segment
A_1 and A_2 = Mass of dry sample in air of respective test segments

14.2 Theoretical Maximum Density (Rice) at 77°F (25°C)

14.2.1 Calculate the corresponding theoretical maximum density at 77°F (25°C) as follows:

Theoretical maximum density at 77°F (25°C) = theoretical maximum specific gravity × 62.245 lb/ft3 in inch-pound units (or 997.1 kg/m^3 in SI units).

Where:
The specific gravity of water at 77°F (25°C) = 62.245 in inch-pound units (or 997.1 in SI units).

15. Supplemental Procedure for Mixtures Containing Porous Aggregate

WSDOT has removed this section.

16. Report

16.1 Report the results using one of the following:

- Materials Testing System (MATS)
- DOT Form 350-092 and 350-157
- Form approved in writing by the State Materials Engineer

16.2 Report the Theoretical Maximum Specific Gravity (G_{mm}) to three decimal places. Report the Theoretical Maximum Density to 0.1 lb/ft^3.

17. Precision

See AASHTO T 209 for Precision.

Appendix

(Nonmandatory Information)

A1. Theoretical Maximum Specific Gravity for a Loose-Paving Mixture

WSDOT has removed this section.

Performance Exam Checklist

Theoretical Maximum Specific Gravity and Density of Hot Mix Asphalt Paving Mixtures FOP for AASHTO T 209

Participant Name _____ Exam Date _____

Procedure Element	Yes	No
1. The tester has a copy of the current procedure on hand?	❒	❒
2. All equipment is functioning according to the test procedure, and if required, has the current standardization/verification tags present?	❒	❒
3. Particles of sample separated?	❒	❒
4. Care used not to fracture mineral fragments?	❒	❒
5. After separation, fine HMA particles not larger than ¼ inch?	❒	❒
6. Sample at room temperature?	❒	❒
7. Mass of bowl or flask determined?	❒	❒
8. Mass of sample and bowl or flask determined?	❒	❒
9. Mass of sample determined?	❒	❒
10. Water at approximately 77°F (25°C) added to cover sample?	❒	❒
11. Entrapped air removed using partial vacuum for 15 ± 2 min?	❒	❒
12. Container and contents agitated continuously by mechanical device or manually by vigorous shaking at intervals of about 2 minutes?	❒	❒
13. For metal pycnometer, strike 3 to 5 times with a mallet?	❒	❒
14. Release of entrapped air facilitated by addition of suitable wetting agent (optional)?	❒	❒
15. Vacuum released within 10 to 15 seconds.	❒	❒
16. Flask determination:		
a. Flask filled with water?	❒	❒
1. Flask then placed in constant temperature water bath (optional) or?	❒	❒
2. Temperature of water in flask determined upon completion of 16b?	❒	❒
b. Contents at 77 ± 2°F or density of water corrected using Table 2 in FOP?	❒	❒
c. Mass of filled flask determined 9 to 11 minutes after removal of entrapped air completed?	❒	❒
17. All calculations performed correctly?	❒	❒

First Attempt: Pass ❒ Fail ❒ Second Attempt: Pass ❒ Fail ❒

Signature of Examiner

Comments:

WSDOT FOP for AASHTO T 217[1]

Determination of Moisture in Soils by Means of a Calcium Carbide Gas Pressure Moisture Tester

1. Scope

   1.1 This method of test is intended to determine the moisture content of soils by means of a calcium carbide gas pressure moisture tester. The manufacturer's instructions shall be followed for the proper use of the equipment.

   1.2 The following applies to all specified limits in this standard: For the purposes of determining conformance with these specifications, an observed value or a calculated value shall be rounded off "to the nearest unit" in the last right-hand place of figures used in expressing the limiting value, in accordance with R 11, Recommended Practice for Indicating Which Places of Figures Are to Be Considered Significant in Specified Limiting Values.

   Note 1: This method shall not be used on granular materials having particles large enough to affect the accuracy of the test in general any appreciable amount retained on a No. 4 (4.75 mm) sieve. The super 200 D tester is intended to be used to test aggregate.

   1.3 The values stated in English units are to be regarded as the standard.

   1.4 Refer to R 16 for regulatory information for chemicals.

2. Referenced Document

   2.1 AASHTO Standards:

   R 11, Indicating Which Places of Figures Are to Be Considered Significant in Specified Limiting Values

   T 265, Laboratory Determination of Moisture Content of Soils

3. Apparatus

   3.1 Calcium carbide pressure moisture test – a chamber with attached pressure gage for the water content of specimens having a mass of at least 20 g. (Figure 1).

   Those "Speed Moisture Testers" which use a 20 g sample may be used to test aggregates and soil-aggregate mixtures where the maximum particle size is ¾ in (20 mm) or less.

   3.2 Balance – shall conform to AASHTO M 231, Class G-2.

   3.3 Two 1.25 in (31.75 mm) steel balls

   3.4 Cleaning brush and cloth.

   3.5 Scoop for measuring calcium carbide reagent.

[1] This FOP is based on AASHTO T 217-02

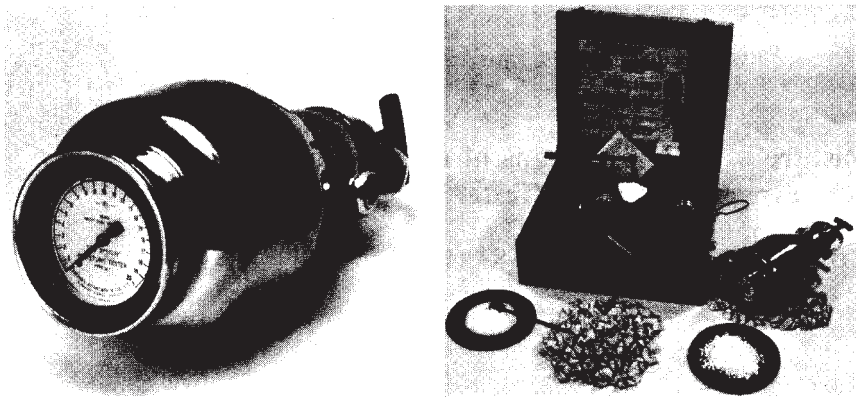

Calcium Carbide Gas Pressure Moisture Meter
Figure 1

4. Material

4.1 Calcium carbide reagent.

Note 2: The calcium carbide must be finely pulverized and should be of a grade capable of producing acetylene gas in the amount of at least 2.25 ft^3/lb (0.14 m^3/kg) of carbide.

Note 3: ~~The "shelf life" of the calcium carbide reagent is limited, so it should be used according to the manufacturer's recommendations.~~ When a can of calcium carbide is opened, it shall be dated. After 3 months of use, or if the can becomes contaminated, it shall be discarded.

5. Procedure

5.1 When using the 20 g or 26 g tester, place three scoops (approximately 24 g) of calcium carbide in the body of the moisture tester (or per the manufacturers recommendations). When using the super 200 D tester to test aggregate, place six scoops (approximately 48 g) of calcium carbide in the body of the moisture tester.

Note 4: Care must be exercised to prevent the calcium carbide from coming into direct contact with water.

5.2 Weigh a sample of the exact mass specified by the manufacturer of the instrument in the balance provided, and place the sample in the cap of the tester. When using the 20-g or 26-g size tester, place two 1.25 in (31.75 mm) steel balls in the body of the tester with the calcium carbide (or per the manufacturers recommendations).

Note 5: Manufacturer's instructions shall be followed for the use of steel balls, particularly when testing sand.

Note 6: If the moisture content of the sample exceeds the limit of the pressure gage (12 percent moisture for aggregate tester to 20-percent moisture for soil tester), a one-half size sample must be used and the dial reading must be multiplied by 2. This proportional method is not directly applicable to the dry mass percent scale on the super 200 D tester.

5.3 With the pressure vessel in an approximately horizontal position, insert the cap in the pressure vessel and seal the unit by tightening the clamp, taking care that no carbide comes in contact with the soil until a complete seal is achieved.

5.4 Raise the moisture tester to a vertical position so that the soil in the cap will fall into the pressure vessel.

5.5 Shake the instrument vigorously so that all lumps will be broken up to permit the calcium carbide to react with all available free moisture. When steel balls are being used in the tester and when using the large tester to test aggregate, the instrument should be shaken with a rotating motion so the steel balls or aggregate will not damage the instrument or cause soil particles to become embedded in the orifice leading to the pressure diaphragm.

Note 7: Shaking should continue for at least 60 seconds with granular soils and for up to 180 seconds for other soils so as to permit complete reaction between the calcium carbide and the free moisture. Time should be permitted to allow dissipation of the heat generated by the chemical reaction.

5.6 When the needle stops moving, read the dial while holding the instrument in a horizontal position at eye level.

5.7 Record the sample mass and the dial reading.

5.8 With the cap of the instrument pointed away from the operator, and away from open flame or source of ignition, slowly release the gas pressure. Empty the pressure vessel and examine the material for lumps. If the sample is not completely pulverized, the test should be repeated using a new sample. Clean the cap thoroughly of all carbide and soil before running another test.

Note 8: When removing the cap, care should be taken to point the instrument away from the operator to avoid breathing the fumes, and away from any potential source of ignition for the acetylene gas.

5.9 The dial reading is the percent of moisture by wet mass and must be converted to dry mass. With the super 200 D tester the dial reading is the percent of moisture by dry mass, and no further calculation is required.

6. Calculation

6.1 The percentage of moisture by dry mass of the soil may be determined from a correction curve similar to Figure 2.

6.2 A correction curve similar to Figure 2 is normally supplied with each moisture tester. ~~Each moisture tester, however, should be checked for the accuracy of its gage, and for the accuracy of its correction curve.~~

~~5.2.1 The accuracy of the moisture tester gage should be checked by using a calibration kit (available from the manufacturer), equipped with a standard gage. In case of discrepancy, the gage on the tester should be adjusted to conform with the standard gage.~~

~~5.2.2 The accuracy of the correction curve should be checked by comparing curve-corrected moisture contents to moisture contents of locally prepared soils determined using T 265. In case of discrepancy, develop a new correction curve based on moisture contents determined from T 265.~~

~~5.2.3 The range of the factory-supplied or laboratory-determined curves may be extended by additional testing.~~

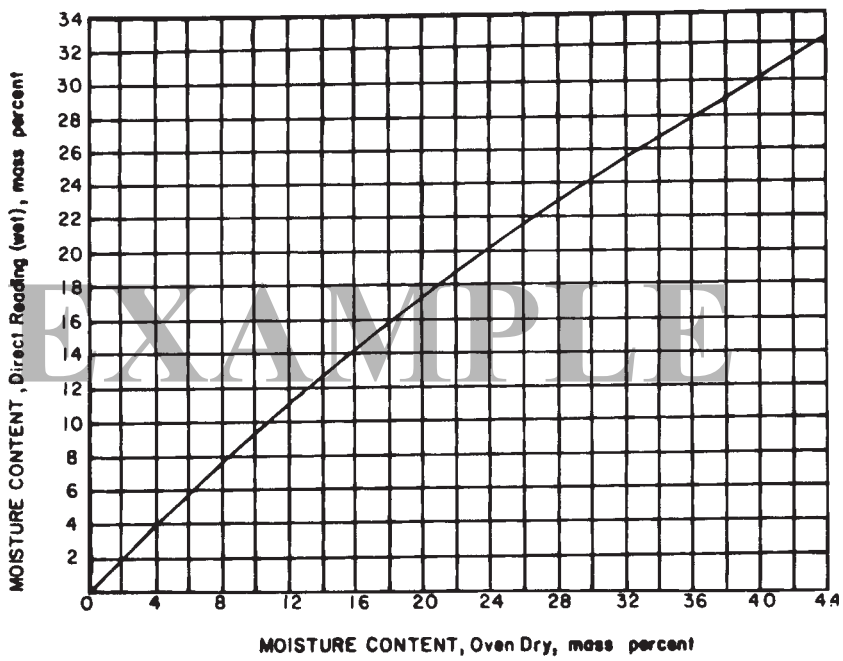

Conversion Curve for Moisture Tester Reading
Figure 2

Figure 2 —Correction Curve for Moisture Tester Reading (Example Only—Use curve provided by the manufacturer with the specific apparatus, or a correction curve calibrated or extended for local soils at known moisture contents determined in accordance with 6.2.)

Note 9: It may be more convenient for field use of the apparatus to prepare a table of moisture tester readings versus oven-dry moisture content for the moisture tester.

6.3 Determine the percentage of moisture to the nearest whole percent.

Performance Exam Checklist

Determination of Moisture in Soils by Means of Calcium Carbide Gas Pressure Moisture Tester
FOP for AASHTO T 217

Participant Name _____ Exam Date _____

Procedure Element

Preparation	**Yes**	**No**
1. The tester has a copy of the current procedure on hand?		
2. All equipment is functioning according to the test procedure, and if required, has the current calibration/verification tags present?		
3. Shelf life of calcium carbide reagent checked?		
4. Correct amount of reagent placed in body of tester?		
5. Number and size of steel balls correct?		
6. Correct mass of moist soil placed in cap of tester?		
7. Cap clamped to body with tester in horizontal position?		
8. Shaking done for proper time (60 seconds for granular soils, 180 seconds for other soils)?		
9. Shaking done without steel balls hitting cap or bottom of tester?		
10. Reading taken with tester in horizontal position at eye level?		
11. Reading taken after gauge stops moving?		
12. Gauge reading recorded?		
13. Tester positioned with cap away from user and away from open flame or source of ignition before gas slowly released?		
14. Moisture content on wet mass basis converted to dry mass basis?		

First Attempt: Pass Fail Second Attempt: Pass Fail

Signature of Examiner _____

Comments:

WSDOT FOP for AASHTO T 231[1]

Capping Cylindrical Concrete Specimens

1. Scope

   1.1 This method covers apparatus, materials, and procedures for capping freshly molded concrete cylinders with neat cement and hardened cylinders and drilled concrete cores with high-strength gypsum plaster or sulfur mortar.

   1.2 The values stated in English units are the preferred standard.

   1.3 *This standard may involve hazardous materials, operations, and equipment. This standard does not purport to address all of the safety problems associated with its use. It is the responsibility of the user of this standard to establish appropriate safety and health practices and determine the applicability of regulatory limitations prior to use.* For specific precaution statements, see Sections 4.3 and 6.2.3.1.

2. Referenced Documents

   2.1 A*ASHTO Standards:*

M 85	Portland Cement
T 22	Compressive Strength of Cylindrical Concrete Specimens
T 106	Compressive Strength of Hydraulic Cement Mortar (Using 2 in (50 mm) Cube Specimens)
M 240	Blended Hydraulic Cement

   2.2 *ASTM Standards:*

C 287	Specification for Chemical-Resistant Sulfur Mortar
C 472	Physical Testing of Gypsum, Gypsum Plasters and Gypsum Concrete

   2.3 *ANSI Standards:*

B 46.1	Standard for Surface Texture

3. Significance and Use

   3.1 This practice describes procedures for providing plane surfaces on the end surfaces of freshly molded concrete cylinders, hardened cylinders, or drilled concrete cores when the end surfaces do not conform with the planeness and perpendicularity requirements of applicable standards.

[1] This Test Method is based on AASHTO T 231-05.

4. CAPPING Equipment

4.1 *Capping Plates* — Neat cement caps and high-strength gypsum-plaster caps shall be formed against a glass plate of at least ¼ in (6 mm) thick, a machined metal plate at least 0.45 in (11 mm) thick (Note 1), on a polished plate of granite or diabase at least 3 in (75 mm) think. Sulfur mortar caps shall be formed against similar metal or stone plates. In all cases, plates shall be at least 1 in (25 mm) greater in diameter than the test specimen and the working surfaces shall not depart from a plane by more than 0.002 in (0.05 mm) in 6 in (150 mm). The surface roughness of newly finished metal plates shall not exceed that set forth in Table 4 of the American National Standard for Surface Texture (ANSI B46.1) or 125 μ in (0.003 mm) for any type of surface and direction of lay. The surface when new shall be free of gouges, grooves, or indentations beyond those caused by the finishing operation. Metal plates that have been in use shall be free of gouges, grooves, or indentations greater than 0.010 in (0.25 mm) deep or greater than 0.05 in^2 (32 mm^2) in surface area. If a recess is machined into the metal plate, the thickness of the plate beneath the recessed area shall be at least ½ in (13 mm). In no case shall the recess in the plate be deeper than ½ in (13 mm).

Note 1: In vertical capping devices, use of two-piece metal capping plates is advantageous as this facilitates refinishing of the capping surface should it become necessary to do so. In such devices, the lower section is a solid plate and the upper section has a circular hole which forms the recess. The two sections are customarily fastened together with machine screws. It is advantageous to have the upper surface of the lower plate case hardened. A Rockwell hardness of HRC 48 is suggested.

4.2 *Alignment Devices* — Suitable alignment devices such as guide bars or bull's-eye levels shall be used in conjunction with capping plates to ensure that no single cap will depart from perpendicularity of cylindrical specimen by more than 0.5° [approximately equivalent to ⅛ in in 12 in (3.2 mm in 305 mm)]. The same requirement is applicable to the relationship between the axis of the alignment device and the surface of a capping plate when guide bars are used. In addition, the location of each bar with respect to its plate must be such that no cap will be off-centered on a test specimen by more than 1⁄16 in (1.6 mm).

4.3 *Melting Pots for Sulfur Mortars* — Pots used for melting sulfur mortars shall be equipped with automatic temperature controls and shall be made of metal or lined with a material that is nonreactive with molten sulfur.

Caution: Melting pots equipped with peripheral heating will ensure against accidents during reheating of cooled sulfur mixtures which have a crusted-over surface. When using melting pots not so equipped, a buildup of pressure under the hardened surface crust on subsequent reheating may be avoided by use of a metal rod which contacts the bottom of the pot and projects above the surface of the fluid sulfur mix as it cools. The rod should be of sufficient size to conduct enough heat to the top of reheating to melt a ring around the rod first and thus avoid the development of pressure. A large metal ladle can be substituted for the rod.

Sulfur melting pots should be used under a hood to exhaust the fumes to outdoors. Heating over an open flame is dangerous because the flash point of sulfur is approximately 440°F (227°C) and the mixture can ignite due to overheating. Should the mixture start to burn, covering will snuff out the flame. The pot should be recharged with fresh material after the flame has been extinguished.

5. CAPPING MATERIALS

5.1 The strength of the capping material and the thickness of the caps shall conform to the requirements of Table 1.

Cylinder Compressive Strength MPa (psi)	Minimum Strength of Capping Material	Maximum Average Thickness of Cap	Maximum Thickness Any Part of Cap
500 to 7,000 psi (3.5 to 50 MPa)	5,000 psi (35 MPa) or cylinder strength, whichever is greater	0.25 in (6 mm)	0.31 in (8 mm)
greater than 7,000 psi (50 MPa)	Compressive strength not less than cylinder strength, except as provided in Section 5.1.1.	0.125 in (3 mm)	0.20 in (5 mm)

Compressive Strength and Maximum Thickness of Capping Materials
Table 1

5.1.1 If sulfur mortar, high strength gypsum plaster and other materials except neat cement paste are to be used to test concrete with a strength greater than 7000 psi (50 MPa), the manufacturer or the user of the material must provide documentation:

- that the average strength of 15 cylinders capped with the materials is not less than 98 percent of the average strength of 15 companion cylinders capped with neat cement paste or 15 cylinders ground plane to within 0.002 in (0.05 mm),
- that the standard deviation of the strengths of the capped cylinders is not greater than 1.57 times that of the standard deviation of the reference cylinders,
- that the cap thickness requirements were met in the qualification tests, and
- of the hardening time of the caps used in the qualification tests.

5.1.2 Additionally, the qualification test report must include the compressive strength of 2 in (50 mm) cubes of the material qualified and of neat cement paste cubes, if used. Capping materials conforming to these requirements are permitted to be used for cylinders with strengths up to 20 percent greater than the concrete tested in these qualification tests. The manufacturer must requalify lots of material manufactured on an annual basis or whenever there is a change in the formulation of the raw materials. The user of the material must retain a copy of the qualification results, and the dates of manufacture of material qualified and of the material currently being used. See Table 2.

Note-Manufacturer: Testing Supplies Co.

Capping Material: Super Strong AAA-Sulfur mortar

Lot: 12a45 Date Tested: 11/3/98

Signed by:_____
(Testing Agency and Responsible Official)

Item	Capping Material	Control Cylinders	Ratio	Criteria	Pass/ Fail
Concrete Cylinder Test Data Type of Capping Material	Sulfur	Ground			
Average Concrete Strength, MPa (psi) Standard Deviation MPa (psi)	76.2 (11,061) 2.59 (376)	75.9 (11,008) 1.72 (250)	1.005 1.504	>0.98 Xc ≤1.57 C	Pass Pass
Number of cylinders tested	15	15			
Cap age when cylinders tested	7 days	n/a			
Capping Material Test Data Average cap thickness mm (in)	2.8 (0.11)	n/a			
Compressive strength of 50 mm (2 in) cubes, MPa (psi)	91 (12,195)				
Cube age when tested	7 days				
Maximum concrete strength qualified, MPa (psi) *a*Nominally a specified strength of 75 MPa (11,000 psi) and perhaps somewhat higher.			1.2 Av. Str = 91.5 (13,273)*a*		

Sample Report of Qualifications of a Capping Material
Table 2

5.1.3 The compressive strength of capping materials shall be determined by testing 2 in (50 mm) cubes following the procedure described in Test Method T 106. Except for sulfur mortars, molding procedures shall be as in Test Method T 106 unless other procedures are required to eliminate large entrapped air voids. See test methods for alternative compaction procedures. Cure cubes in the same environment for the same length of time as the materials used to cap specimens.

5.1.4 The strength of the capping material shall be determined on receipt of a new lot and at intervals not exceeding three months. If a given lot of the capping material fails to conform to the strength requirements, it shall not be used, and strength tests of the replacement material shall be made weekly until four consecutive determinations conform to specification requirements.

5.2 Neat Hydraulic Cement Paste:

5.2.1 Make qualification test of the neat hydraulic cement paste prior to use for capping to establish the effects of water-cement ratio and age on compressive strength of 2 in (50 mm) cubes (Note 2).

Note 2: The cements used generally conform to Specification M 85 Types I, II, or III; however, Specification M 240 blended cements, calcium aluminate or other hydraulic cements producing acceptable strength may be used.

5.2.2 Mix the neat cement paste to the desired consistency at a water-cement ratio equal to or less than that required to produce the required strength, generally two to four hours before the paste is to be used (Note 3). Remix as necessary to maintain acceptable consistency (Note 4). Some re-tempering of the paste is acceptable if the required water-cement ratio is not exceeded. Optimum consistency is generally produced at water-cement ratios of 0.32 to 0.36 by mass for Type I and Type II cements and 0.35 to 0.39 by mass for Type III cements.

Note 3: Freshly mixed pastes tend to bleed, shrink, and make unacceptable caps. The two to four hour period is generally appropriate for Portland cements.

Note 4: The required consistency of the paste is determined by the appearance of the cap when it is stripped. Fluid paste results in streaks in the cap. Stiff paste results in thick caps.

5.3. High-Strength Gypsum Cement Paste:

5.3.1 No fillers or extenders may be added to neat high-strength gypsum cement paste subsequent to the manufacture of the cement (Note 5). Qualification tests shall be made to determine the effects of water-cement ratio and age on the compressive strength 2 in (50 mm) cubes. Retarders may be used to extend working time, but their effects on required water-cement ratio and strength must be determined (Note 6.)

Note 5: Low-strength molding plaster, plaster of paris, or mixtures of plaster of paris and portland cement are unsuitable for capping.

Note 6: The water-gypsum cement ratio should be between 0.26 and 0.30. Use of low water-cement ratios and vigorous mixing will usually permit development of 35 MPa (5,000 psi) at ages of one to two hours. Higher water-gypsum cement ratios extend working time, but reduce strength.

5.3.2 Mix the neat gypsum cement paste at the desired water-cement ratio and use it promptly since it sets rapidly.

5.4 Sulfur Mortar:

5.4.1 Proprietary or laboratory prepared sulfur mortars are permitted if allowed to harden a minimum of two hours before testing concrete with strength less than 35 MPa (5000 psi). For concrete strengths of 35 MPa (5000 psi) or greater, sulfur mortar caps must be allowed to harden at least 16 hours before testing, unless a shorter time has been shown to be suitable as specified in Section 5.1.1.

5.4.2 *Determination of Compressive Strength*—Prepare test specimens using a cube mold and base plate conforming to the requirements of T 106 and a metal cover plate conforming in principle to the design shown in Figure 1 (Note 7). Bring the various parts of the apparatus to a temperature of 20 to 30ºC (68 to 86ºF), lightly coat the surfaces that will be in contact with the sulfur mortar with mineral oil and assemble near the melting pot. Bring the temperature of the molten-sulfur mortar in the pot within a range of 129 to 143ºC (265 to 290ºF), stir thoroughly, and begin casting cubes. Using a ladle or other suitable pouring device, quickly fill each of the three compartments until the molten material reaches the top of the filling hole. Allow sufficient time for maximum shrinkage, due to cooling, and solidification to occur (approximately 15 minutes) and refill each hole with molten material (Note 8). After solidification is complete, remove the cubes from the mold without breaking off the knob formed by the filling hole in the cover plate. Remove oil, sharp edges, and fins from the cubes and check the planeness of the bearing surfaces in the manner described in T 106. After storage at room temperature to the desired age, but not less than two hours, test cubes in compression following the procedure described in T 106 and calculate the compressive strength in MPa (psi).

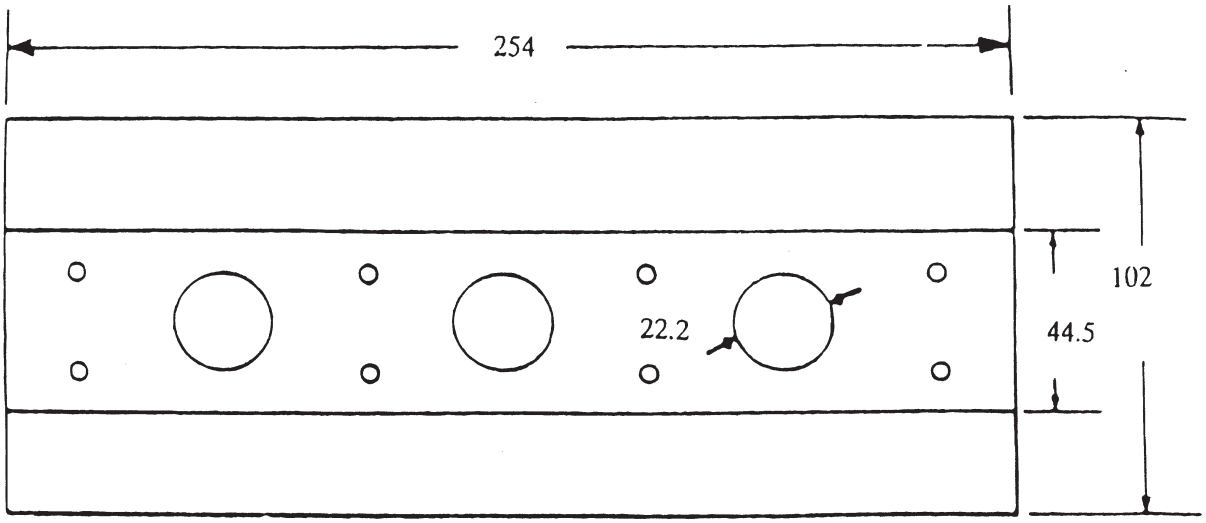

COVER PLATE – Plan View

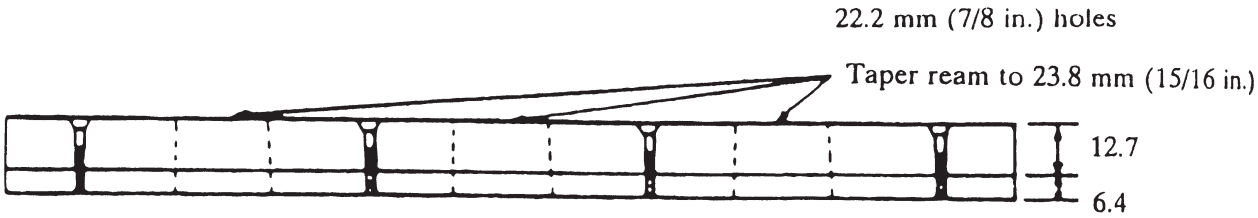

COVER PLATE – Front View

Note: All dimensions are in millimeters unless otherwise indicated.

Dimensional Equivalents

mm	6.4	12.7	22.2	44.5	102	254
in.	1/4	1/2	7/8	1 3/4	4	10

FIGURE 1 Sketch of Cover for 50-mm (2-in.) Cube Mold

Dimensional Equivalents						
mm	6.4	12.7	22.2	44.5	100	250
in	¼	½	⅞	1¾	4	10

Notes:
All dimensions shown in millimeters unless otherwise noted.Sketch of Cover for 2 in (50 mm) Cube Mold

Figure 1

Note 7: If desired, a plane phenol formaldehyde (bakelite) plate of 0.125 in (3 mm) thickness, provided with three appropriately spaced filling holes, may be inserted between the cover plate and the mold to slow the rate of cooling of test specimens.

Note 8: The second filling helps to prevent the formation of a large void or shrinkage pipe in the body of a cube. However, such defects may occur no matter how much care is exercised, and it therefore is advisable to inspect the interior of tested sulfur mortar cubes for homogeneity whenever the strength values obtained are significantly lower than anticipated.

6. CAPPING PROCEDURES

6.1 *Freshly Molded Cylinders* — Use only neat Portland cement pastes (Note 9) to cap freshly molded cylinders. Make caps as thin as practicable. Do not apply the neat paste to the exposed end until the concrete has ceased settling in the molds, generally from 2 to 4 hours after molding. During the molding of the cylinder, strike off the upper end even with or slightly below the plane of the rim of the mold. Mix the neat paste to a stiff consistency 2 or 4 hour before it is to be used in order to allow the paste to go through its period of initial shrinkage. The strength of the paste will depend on the consistency, water-cement ratio, curing, brand, and type of cement. For Type I and Type II cement pastes, the optimum consistency is generally produced at a water-cement ratio of 0.32 to 0.36 by mass. For Type III cement, the water ratio should generally be between 0.35 to 0.39 by mass. The paste will stiffen during the 2 to 4 hours waiting period and the use of re-tempering water is not recommended. However, if re-tempering water is used, the amount should not increase the water-cement ratio by more than 0.05 by mass. Remove free water and laitance from the top of the specimen immediately before capping. Form the cap by placing a conical mound of paste on the specimen and then gently pressing a freshly oiled capping plate on the conical mound until the plate contacts the rim of the mold. A very slight twisting motion may be required to extrude excess paste and minimize air voids in the paste. The capping plate must not rock during this operation. Carefully cover the capping plate and mold with a double layer of damp burlap and a polyethylene sheet to prevent drying. Removal of the capping plate after hardening may be accomplished by tapping the edge with a rawhide hammer in a direction parallel to the plane of the cap.

Note 9: Type I neat cement caps generally require at least 6 days to develop acceptable strength and Type III neat cement caps at least 2 days. Dry concrete specimens will absorb water from freshly mixed neat cement paste and produce unsatisfactory caps. Neat cement paste caps will shrink and crack on drying and, therefore, should be used only for specimens which are to be moist-cured continuously until time of testing.

6.2 *Hardened Concrete Specimens*:

6.2.1 General — Caps should be about ⅛ in (3 mm) thick, and in no instance shall any part of a cap be more than 5⁄16 in (8 mm) thick. If either or both ends of a specimen have coatings or deposits of oily or waxy materials that would interfere with the bond of the cap, remove such coatings or deposits. If necessary, the ends of a specimen may be slightly roughened with a steel file or wire brush to produce proper adhesion of the cap. If desired, capping plates may be coated with a thin layer of mineral oil or grease to prevent the capping material from adhering to the surface of the plate.

Form the caps as described in Section 6.1 using capping plates described in Section 4.1 to achieve the alignment required in Section 4.2 (Note 10). Generally capping plates may be removed within 45 minutes with gypsum cement pastes and after 12 hours with neat cement paste, without visibly damaging the cap.

Note 10: A number of methods have been used to obtain the desired perpendicularity of the cap to the axis of the cylinder. A mound of paste can be placed on a capping plate and the specimen lowered into it. A bull's-eye level on the top of the cylinder helps obtain alignment. A mound of paste can be placed on top of the cylinder and a capping plate pressed into it, again using the bull's-eye level. A better system is to make a half-height mold with a vertical split so that it can be slipped over the hardened cylinder. A clamp is used to position the mold and to ensure the required cap thickness. The mound of paste can then be placed either on a capping plate or on top of the cylinder and pressed until the plate contacts the mold. As noted earlier, very stiff paste may require excessive force and produce thick or defective caps.

6.2.2 *End Condition*—The distance of any point on an uncapped end from a plane that passes through the highest point of the end surface and is perpendicular to the axis of the cylinder shall not exceed 0.125 in (3 mm) (Note 11). If the end exceeds this limit, the end of the cylinder shall be cut, lapped or ground prior to capping.

Note 11: This provision is to control the difference between the thickest and thinnest parts of a cap. The distance may be checked using a square with one blade touching the cylinder parallel to the cylinder axis and the other blade touching the highest point on the end of the cylinder. The distance between the blade of the square and the lowest point on the end of the cylinder is measured.

6.2.3 *Capping with High-Strength Gypsum Plaster* — Mix high-strength plaster for capping, using the same percent of mixing water as was used in making the qualification test described in Section 5.2.1 (Note 12).

Note 12: High-strength gypsum caps soften and deteriorate on contact with water and cannot be used on freshly mixed concrete or stored in a moist room for more than very brief periods up to four hours.

6.2.4 *Capping with Sulfur Mortar* — Prepare sulfur mortar for use by heating to about 265°F (130°C), as periodically determined by an all-metal thermometer inserted near the center of the mass. Empty the pot and recharge with fresh material at frequent enough intervals to ensure that the oldest material in the pot has not been used more than five times (Note 13). Fresh sulfur mortar must be dry at the time it is placed in the pot as dampness may cause foaming. Keep water away from molten sulfur mortar for the same reason. The capping plate or device should be warmed slightly before use to slow the rate of hardening and permit the production of thin caps. Oil the capping plate lightly and stir the molten sulfur mortar immediately prior to pouring each cap. The ends of moist-cured specimens shall be dry enough at the time of capping to preclude the formation of steam or foam pockets under or in the cap larger than ¼ in (6 mm) in diameter. To ensure that the cap shall be bonded to the surface of the specimen, the end of the specimen shall not be oiled prior to application of the cap. When using a vertical device, pour the mortar onto the surface of the capping plate, lift the cylinder above the plate and contact the cylinder sides with the guides; slide the cylinder down the guides onto the capping plate while keeping constant contact with the alignment guides. The cylinder end should continue to rest on the capping plate with cylinder sides in positive contact with the alignment guides until the mortar has hardened. Use sufficient material to cover the cylinder end after the sulfur mortar solidifies. The sulfur mortar cap may be tapped or rubbed with a light metal implement. If a hollow sound is produced, an unsatisfactory mortar cap is indicated. See Section 25.16 of the ASTM Manual of Aggregate and Concrete Testing.

Note 13: Reuse of material must be restricted in order to minimize loss of strength and pourability occasioned by contamination of the mortar with oil miscellaneous debris, and loss of sulfur through volatilization.

6.2.4.1 ***Caution:*** Hydrogen sulfide gas may be produced during capping when sulfur mortar is contaminated with organic materials such as paraffin or oil. The gas is colorless and has a notoriously bad odor of rotten eggs; however, the odor should not be relied upon as a warning sign, since the sensitivity to the odor disappears rapidly on exposure. High concentrations are lethal and less concentrated dosages may produce nausea, stomach ache, distress, dizziness, headache, or irritation of the eyes. For this and other reasons, it is desirable that the melting pot be located under a hood or near an exhaust fan and that the capping area be well ventilated.

6.2.4 *Daily Check* — During each day's capping operation, planeness of the caps on at least three specimens representing the start, middle, and end of the run, shall be check by means of a straight-edge and feeler gage, making a minimum of three measurements on different diameters to ensure that the surfaces of the caps do not depart from a plane by more than 0.002 in (0.05 mm).

7. PROTECTION OF SPECIMENS AFTER CAPPING

7.1 Moist-cured specimens shall be maintained in a moist condition between the completion of capping and the time of testing by returning them to moist storage or wrapping them with a double layer of wet burlap. Specimens with gypsum plaster caps shall not be immersed in water and shall not be stored in a moist room for more than 4 hours. If stored in a moist room, the plaster caps shall be protected against water dripping on their surfaces.

APPENDIX

(Nonmandatory Information)

A1. COMPOSITION AND DETERMINATION OF LOSS ON IGNITION OF SULFUR MORTAR CAPPING MATERIALS

A1.1 *Composition:*

A1.1.1. Loss on ignition, percent 48 to 70 Residue after ignition, percent 30 to 52.

A1.2 Determination of Loss on Ignition – Obtain samples from caps on concrete cylinders or from cast specimens similar to caps in size and thickness. Divide each cap-size specimen into eight approximately equal triangular sections, and secure test samples by breaking either two or four of the triangular sections into small pieces with the fingers. Using a balance capable of determining mass to an accuracy of 0.01 g, measure out 20 to 25 g of fragmented material in a previously ignited, cooled, and tared Coors No. 3, high-form porcelain crucible. Place the crucible on a ring approximately 2 in (50 mm) above a Terrel-type Bunsen burner and adjust the flame so that the sulfur burns slowly without spattering (Note 14). (see Section 4). When the sulfur has been completely consumed, adjust the burner for high heat and ignite the residue for 30 minutes. Cool the crucible and residue in a desiccator and determine the mass. Continue to ignite, cool, and determine the mass of the crucible until a constant mass is obtained. Calculate the percentage of loss on ignition C, as follows (Note 15):

C = X 100

where:

A = original mass of sample less mass of the residue after ignition, and
B = original mass of sample.

NOTE 14– Where the filler is known or found to be composed of carbonate minerals, the ignition test shall be made at a carefully controlled temperature in the range from 600 to 650°C, to prevent calcinations of the mineral. Small amounts of plasticizer and carbon filler will be included in the reported value for loss on ignition using the simple test herein described.

NOTE 15: A referee procedure for the determination of the percent of sulfur contained in sulfur mortar may be found in ASTM C 287.

Performance Exam Checklist

Capping Cylindrical Concrete Specimens
FOP for AASHTO T 231

Participant Name _____ Exam Date _____

Procedure Element	**Yes**	**No**
1. The tester has a copy of the current procedure on hand?	❒	❒
2. All equipment is functioning according to the test procedure, and if required, has the current calibration/verification tags present?	❒	❒
Sulfur Only		
1. Is the temperature taken and the mortar stirred at the beginning of the operation?	❒	❒
2. Is the capping plate lightly oiled prior to use?	❒	❒
Procedure Element (cont.)		
3. Are perpendicularity guides or leveling devices used effectively?	❒	❒
4. Are caps checked for planeness?	❒	❒
a. If yes, how often? _____		
5. Are cylinders kept moist after capping?	❒	❒

First attempt: Pass ❒ Fail ❒ Second attempt: Pass ❒ Fail ❒

Signature of Examiner _____

Comments:

WSDOT FOP for AASHTO T 248[1]

Reducing Samples of Aggregate to Testing Size

1. Scope

   1.1 This methods covers for the reduction of large samples of aggregate to the appropriate size for testing employing techniques that are intended to minimize variations in measured characteristics between the test samples so selected and the large sample.

   1.2 The values stated in English units are to be regarded as the standard.

   1.3 *This standard does not purport to address all of the safety concerns, if any, associated with its use. It is the responsibility of the user of this standard to establish appropriate safety and health practices and determine the applicability of regulatory limitations prior to use.*

2. Referenced Documents

   2.1 AASHTO Standards

   T 2 – Sampling of Aggregate
   T 84 – Specific Gravity and Absorption of Coarse Aggregate

   2.2 ASTM Standards

   C 125 – Terminology Relating to Concrete and Concrete Aggregates

3. Terminology

   3.1 Definitions – The terms used in this practice are defined in ASTM C 125.

4. Significance and Use

   4.1 Specifications for aggregates require sampling portions of the material for testing. Other factors being equal, larger samples will tend to be more representative of the total supply. These methods provides for reducing the large sample obtained in the field or produced in the laboratory to a convenient size for conducting a number of tests to describe the material and measure its quality in a manner that the smaller test sample portion is most likely to be a representation of the larger sample, and thus of the total supply. The individual test methods provide for minimum amount of material to be tested.

   4.2 Under certain circumstances, reduction in size of the large sample prior to testing is not recommended. Substantial differences between the selected test samples sometimes cannot be avoided, as for example, in the case of an aggregate having relatively few large size particles in the sample. The laws of chance dictate that these few particles may be unequally distributed among the reduced size test samples. Similarly, if the test sample is being examined for certain contaminants occurring as a few discrete fragments in only small percentages, caution should be used in interpreting results from the reduced size test sample. Chance inclusion or exclusion of only one or two particles in the selected test sample may importantly influence interpretation of the characteristics of the original sample. In these cases, the entire original sample should be tested.

[1]This FOP is based on AASHTO T 248-11.

4.3 Failure to carefully follow the procedures in this practice could result in providing a nonrepresentative sample to be used in subsequent testing.

5. Selection of Method

5.1 Fine Aggregate – Samples of fine aggregate that are at saturated-surface-dry condition or drier (Note 1) may be reduced using a mechanical splitter according to Method A. Samples having free moisture on the particle surfaces may be reduced in size by quartering according to Method B, or by treating as a miniature stockpile as described in Method C.

5.1.1 If the use of Method B or Method C is desired, and the sample does not have free moisture on the particle surfaces, the sample may be moistened to achieve this condition, thoroughly mixed, and then the sample reduction performed.

Note 1: The method of determining the saturated-surface-dry condition is described in Test Method T 84. As a quick approximation, if the fine aggregate will retain its shape when molded in the hand, it may be considered to be wetter than saturated-surface-dry.

5.1.2 If use of Method A is desired and the sample has free moisture on the particle surfaces, the entire sample may be dried to at least the saturated-surface-dry condition, using temperatures that do not exceed those specified for any of the tests contemplated, and then the sample reduction performed. Alternatively, if the moist sample is very large, a preliminary split may be made using a mechanical splitter having wide chute openings of 1½ in (38 mm) or more to reduce the sample to not less than 5000 g. The portion so obtained is then dried, and reduction to test sample size is completed using Method A.

5.2 Mixtures of Coarse and Fine Aggregates

5.2.1 If the sample does not exceed a saturated surface dry condition (there is no visible free water, sample may still appear damp) then the sample may be reduced using Method A.

5.2.2 If the sample exceeds a saturated surface dry condition the sample may be reduced using Method B or dried to a constant mass per WSDOT FOP for T 255 and then reduced using Method A.

5.3 Coarse Aggregates – Reduce the sample using a mechanical splitter in accordance with Method A (preferred method) or by quartering in accordance with Method B. The miniature stockpile Method C is not permitted for coarse aggregates.

5.4 Untreated materials shall be prepared for testing using this procedure. Treated materials (i.e., Hot Mix Asphalt or Asphalt Treated Base) shall be prepared for testing using WSDOT Test Method No. T 712 for reduction of size of samples of Asphalt treated materials.

6. Sampling

6.1 The samples of aggregate obtained in the field shall be taken in accordance with T 2, or as required by individual test methods. When tests for sieve analysis only are contemplated, the size of field sample listed in T 2 is usually adequate. When additional tests are to be

conducted, the user shall determine that the initial size of the field sample is adequate to accomplish all intended tests. Similar procedures shall be used for aggregate production in the laboratory.

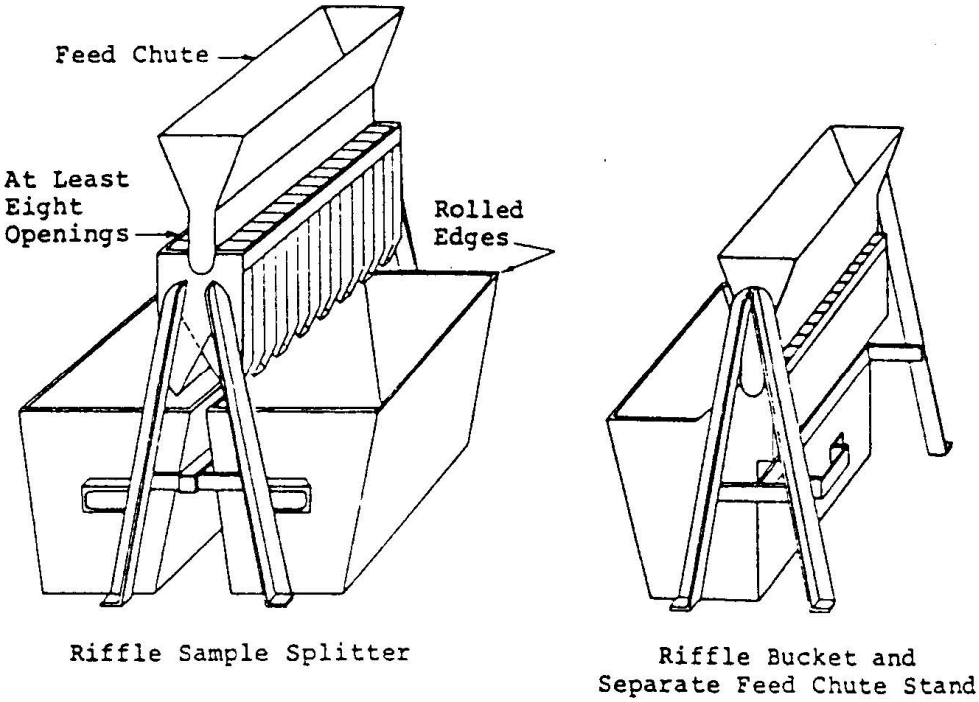

(*a*) Large Riffle Samplers for Coarse Aggregate.

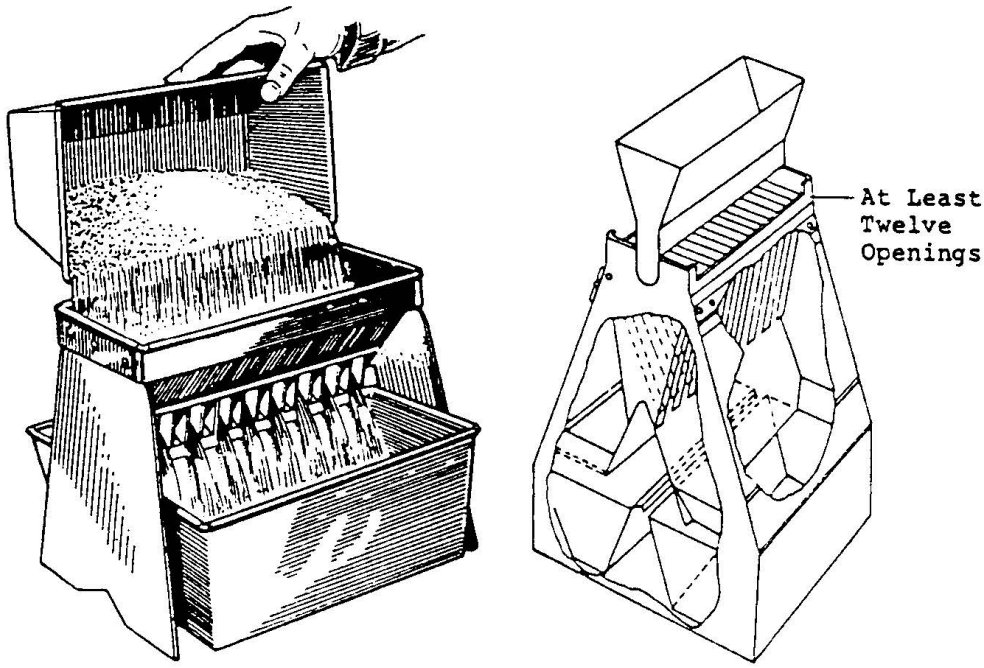

NOTE—May be constructed as either closed or open type. Closed type is preferred.
(*b*) Small Riffle Sampler for Fine Aggregate.

Sample Dividers (Riffles)
Figure 1

Method A – Mechanical Splitter

7. Apparatus

7.1 Sample Splitter – Sample splitters shall have an even number of equal width chutes, but not less than a total of eight for coarse aggregate, or 12 for fine aggregate, which discharge alternately to each side of the splitter, For coarse aggregate and mixed aggregate, the minimum width of the individual chutes shall be approximately 50 percent larger than the largest particles in the sample to be split (Note 2). For dry fine aggregate in which the entire sample will pass the ⅜ in (9.5 mm) sieve, the minimum width of the individual chutes shall be at least 50 percent larger than the largest particles in the sample and the maximum width shall be ¾ in (19 mm). The splitter shall be equipped with two receptacles to hold the two-halves of the sample following splitting. It shall also be equipped with a hopper or straight edge pan which has a width equal to or slightly less than the overall width of the assembly of chutes, by which the sample may be fed at a controlled rate to the chutes. The splitter and accessory equipment shall be so designed that the sample will flow smoothly without restriction or loss of material (Figure 1).

8. Procedure

8.1 Place the original sample in the hopper or pan and uniformly distribute it from edge to edge, so that when it is introduced into the chutes, approximately equal amounts will flow through each chute. The rate at which the sample is introduced shall be such as to allow free flowing through the chutes into the receptacles below. Reintroduce the portion of the sample in one of the receptacles into the splitter as many times as necessary to reduce the sample to the size specified for the intended test. The portion of the material collected in the other receptacle may be reserved for reduction in size for other tests.

Method B – Quartering

9. Apparatus

9.1 Apparatus shall consist of a straightedge, scoop, shovel, or trowel; a broom or brush; and a canvas blanket or tear-resistant tarp approximately 6 by 8 ft (2 by 2.5 m).

10. Procedure

10.1 Use either the procedure described in 10.1.1 or 10.1.2 or a combination of both.

10.1.1 Place the original sample on a hard clean, level surface where there will be neither loss of material nor the accidental addition of foreign material. Mix the material by turning the entire sample over at least three times until the material is thoroughly mixed. With the last turning, form the entire sample into a conical pile by depositing individual lifts on top of the preceding lift. Carefully flatten the conical pile to a uniform thickness and diameter by pressing down the apex with a shovel or trowel so that each quarter sector of the resulting pile will contain the material originally in it. The diameter should be approximately four to eight times the thickness. Divide the flattened mass into four equal quarters with a shovel or trowel and remove two diagonally opposite quarters, including all fine material, and brush the cleared spaces clean. The two unused quarters may be set aside for later use or testing, if desired. Successively mix and quarter the remaining material until the sample is reduced to the desired size (Figure 2).

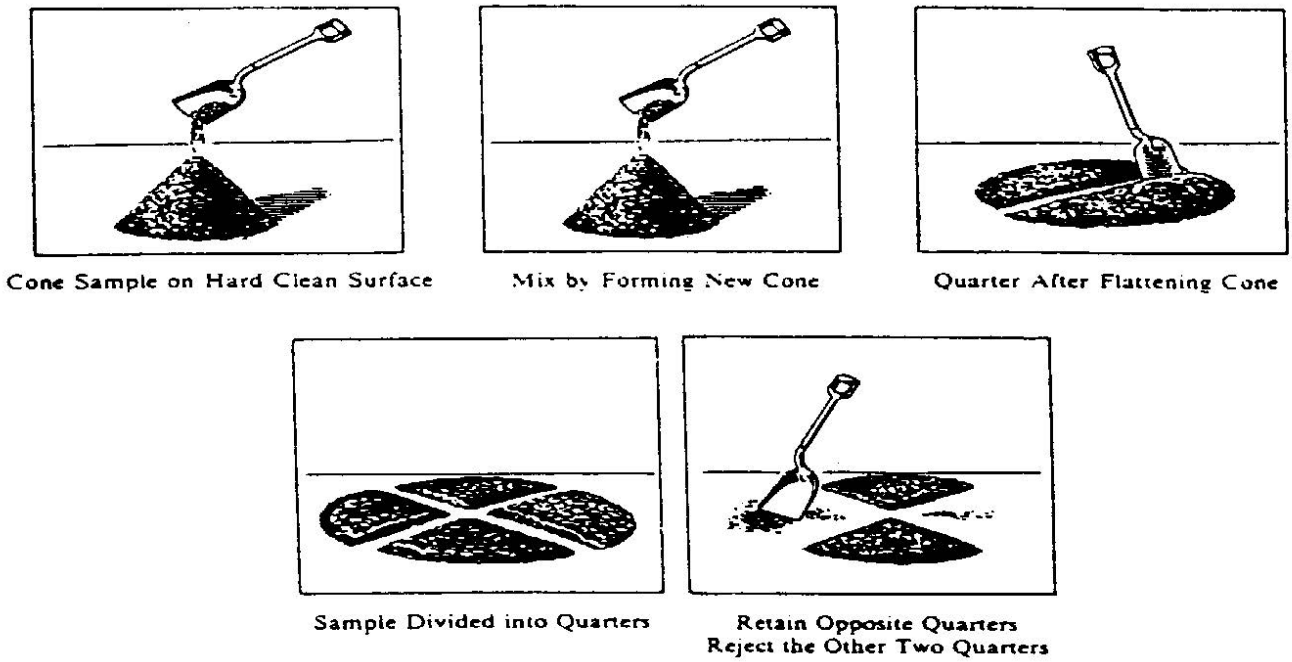

Quartering on a Hard, Clean Level Surface
Figure 2

10.1.2 As an alternative to the procedure in 10.1.1 when the floor surface is uneven, the field sample may be placed on a canvas blanket or tear-resistant tarp and mixed with a shovel or trowel as described in 10.1.1, leaving the sample in a conical pile. As an alternative to mixing with a shovel or trowel, lift each corner of the blanket or tarp and pulling it over the sample toward the diagonally opposite corner causing the material to be rolled. After the material has been rolled a sufficient number of times so that it is thouroughly mixed, pull each corner of the blanket or tarp toward the center of the pile so the material will be left in a conical pile. Flatten the pile as described in 10.1.1. Divide the sample as described in 10.1.1 or insert a stick or pipe beneath the blanket or tarp and under the center of the pile, then lift both ends of the stick, dividing the sample into two equal parts. Remove the stick leaving a fold of the blanket between the divided portions. Insert the stick under the center of the pile at right angles to the first division and again lift both ends of the stick, dividing the sample into four equal parts. Remove two diagonally opposite quarters, being careful to clean the fines from the blanket or tarp. Successively mix and quarter the remaining material until the sample is reduced to the desired size (Figure 3).

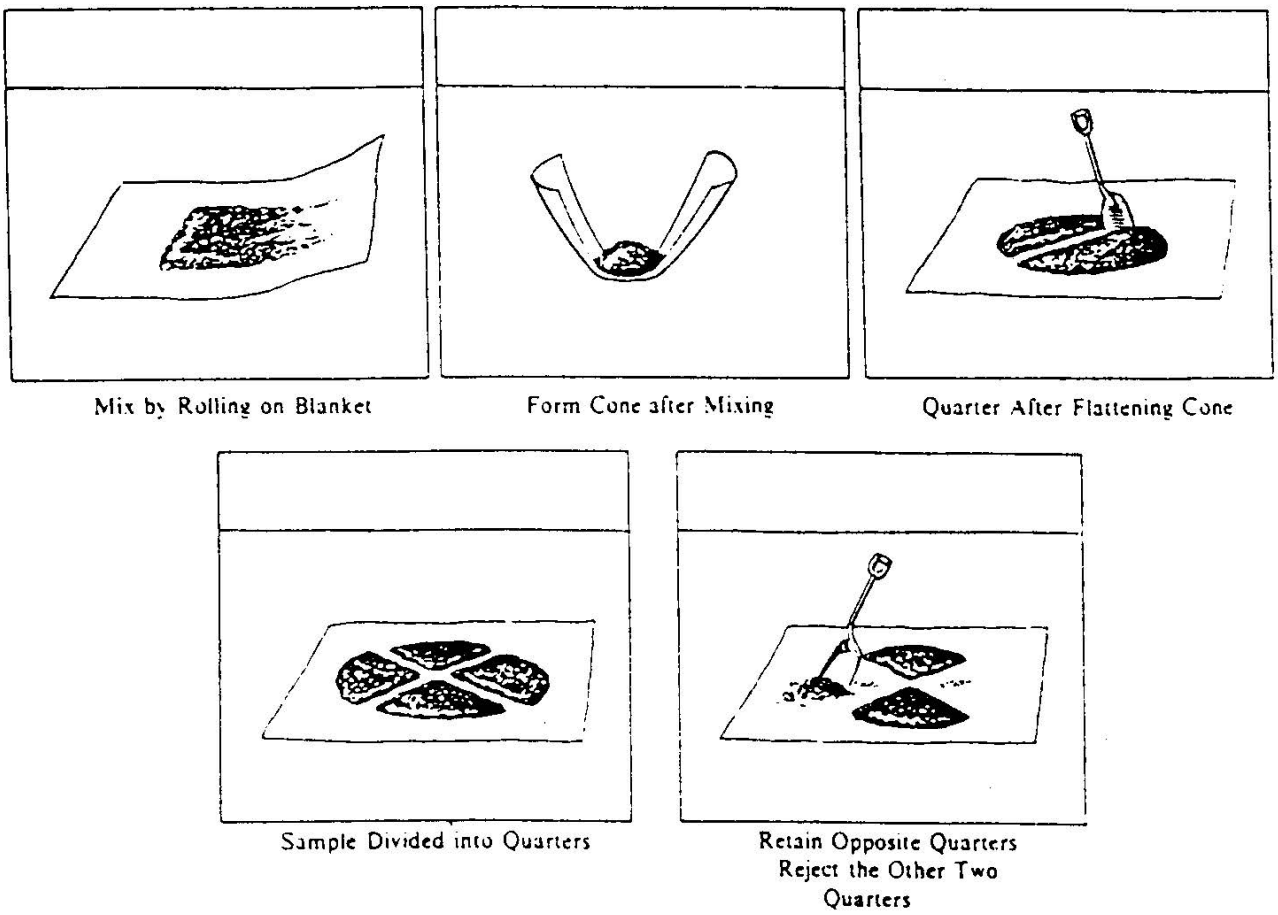

Quartering on a Canvas Blanket or Tear-Resistant Tarp
Figure 3

Method C – Miniature Stockpile Sampling (Damp Fine Aggregate Only)

11. Apparatus

    11.1 Apparatus shall consist of a straight-edged scoop, shovel, or trowel for mixing the aggregate, and either a small sampling thief, small scoop, or spoon for sampling.

12. Procedure

    12.1 Place the original sample of damp fine aggregate on a hard clean, level surface where there will be neither loss of material nor the accidental addition of foreign material. Mix the material by turning the entire sample over at least three times until the material is thoroughly mixed. With the last turning, form the entire sample into a conical pile by depositing individual lifts on top of the preceding lifts. If desired, the conical pile may be flattened to a uniform thickness and diameter by pressing the apex with a shovel or trowel so that each quarter sector of the resulting pile will contain the material originally in it. Obtain a sample for each test by selecting at least five increments of material at random locations from the miniature stockpile, using any of the sampling devices described in 11.1.

Performance Exam Checklist

Reducing Samples of Aggregates to Testing Size
FOP for AASHTO T 248

Participant Name _____ Exam Date _____

Procedure Element	**Yes**	**No**
Preparation		
1. The tester has a copy of the current procedure on hand?	❒	❒
Selection of Method		
1. Fine Aggregate or Mixture of Fine and Coarse Aggregates		
a. Saturated surface dry or drier: Method A (Splitter) used?	❒	❒
b. Free moisture present: Method B (Quartering) used?	❒	❒
2. Coarse Aggregate		
a. Method A used (preferred)?	❒	❒
b. Method B used?	❒	❒
Method A – Splitting		
1. Material spread uniformly on feeder?	❒	❒
2. Rate of feed slow enough so that sample flows freely through chutes?	❒	❒
3. Material in one pan re-split until desired mass is obtained?	❒	❒
4. Chutes are set correctly for material being split?	❒	❒
Method B – Quartering		
1. Sample placed on clean, hard, and level surface?	❒	❒
2. Mixed by turning over three times with shovel or by raising canvas and pulling over pile?	❒	❒
3. Conical pile formed?	❒	❒
4. Diameter equal to about 4 to 8 times thickness?	❒	❒
5. Pile flattened to uniform thickness and diameter?	❒	❒
6. Divided into 4 equal portions with shovel or trowel?	❒	❒
7. Two diagonally opposite quarters, including all fine material, removed?	❒	❒
8. Cleared space between quarters brushed clean?	❒	❒
9. Process continued until desired sample size is obtained when two opposite quarters combined?	❒	❒

The sample may be placed upon a blanket and a stick or pipe may be placed under the blanket to divide the pile into quarters.

First Attempt: Pass ❒ Fail ❒ Second Attempt: Pass ❒ Fail ❒

Signature of Examiner

Comments:

WSDOT FOP for AASHTO T 255[1]

Total Evaporable Moisture Content of Aggregate by Drying

1. Scope

   1.1 This test method covers the determination of the percentage of evaporable moisture in a sample of aggregate by drying, both surface moisture and moisture in the pores of the aggregate. Some aggregate may contain water that is chemically combined with the minerals in the aggregate. Such water is not evaporable and is not included in the percentage determined by this test method.

   1.2 The values stated in English units are to be regarded as the standard. The values stated in parentheses are provided for information only.

   1.3 *This standard does not purport to address all of the safety concerns, if any, associated with its use. It is the responsibility of the user of this standard to establish appropriate safety and health practices and determine the applicability of regulatory limitations prior to use.* For specific precautionary statements, see 5.3.1, 7.2.1, and 7.3.1.

2. Referenced Documents

   2.1 AASHTO Standards

   M 92 – Wire-Cloth Sieves for Testing Purposes

   M 231 – Weighing Devices Used in Testing Materials

   R 16 – Regulatory Information for Chemicals Used in AASHTO Tests

   T 2 – Sampling of Aggregate

   T 19/T 19M – Bulk Density ("Unit Weight") and Voids in Aggregate

   T 84 – Specific Gravity and Absorption of Coarse Aggregate

   T 85 – Specific Gravity and Absorption of Fine Aggregate

   2.2 ASTM Standards

   C 125 – Terminology Relating to Concrete and Concrete Aggregates

   C 670 – Practice for Preparing Precision Statements for Test Methods for Construction Materials

3. Terminology

   3.1 Definitions

   3.1.1 For definitions of terms used in this test method, refer to ASTM C 125.

[1]This FOP is based on AASHTO T 255-00.

4. Significance and Use

4.1 This test method is sufficiently accurate for usual purposes, such as adjusting batch quantities of ingredients for concrete. It will generally measure the moisture in the test sample more reliably than the sample can be made to represent the aggregate supply. In rare cases where the aggregate itself is altered by heat, or where more refined measurement is required, the test should be conducted using a ventilated, controlled temperature oven.

4.2 Large particles of coarse aggregate, especially those larger than 2 in (50 mm), will require greater time for the moisture to travel from the interior of the particle to the surface. The user of this test method should determine by trial if rapid drying methods provide sufficient accuracy for the intended use when drying large size particles.

5. Apparatus

5.1 Balance – The balances shall have sufficient capacity, be readable to 0.1 percent of the sample mass, or better, and conform to the requirements of M 231.

5.2 Source of Heat – A ventilated oven capable of maintaining the temperature surrounding the sample at 110 ± 5°C (230 ± 9°F). Where close control of the temperature is not required (see Section 4.1), other suitable sources of heat may be used, such as an electric or gas hot plate, electric heat lamps, or a ventilated microwave oven.

5.3 Sample Container – A container not affected by the heat, and of sufficient volume to contain the sample without danger of spilling, and of such shape that the depth of sample will not exceed one fifth of the least lateral dimension.

5.3.1 Precaution – When a microwave oven is used, the container shall be nonmetallic.

Note 1: Except for testing large samples, an ordinary frying pan is suitable for use with a hot plate, or any shallow flat-bottomed metal pan is suitable with heat lamps or oven. Note Precaution in Section 5.3.1.

5.4 Stirrer – A metal spoon or spatula of convenient size.

6. Sampling

6.1 Sampling shall generally be accomplished in accordance with FOP for AASHTO T 2, except for the sample size may be as stated in Table 1.

6.2 Secure a sample of the aggregate representative of the moisture content in the supply being tested and having a mass not less than the amount listed in Table 1. Protect the sample against loss of moisture prior to determining the mass.

Nominal Maximum[A]		Minimum Mass[B]	
Size* in	**(mm)**	**lb**	**kg**
US No. 4	(4.75)	1	0.5
¼	(6.3)	2	1
⅜	(9.5)	2	1
½	(12.5)	5	2
⅝	(16.0)	5	2
¾	(19.0)	7	3
1	(25.0)	13	6
1¼	(31.5)	17	7.5
1½	(37.5)	20	9
2	(50)	22	10
2½	(63)	27	12
3	(75)	33	15
3½	(90)	44	20
4	(100)	55	25
6	(150)	110	50

*For aggregate, the nominal maximum size, (NMS) is the largest standard sieve opening listed in the applicable specification, upon which any material is permitted to be retained. For concrete aggregate, NMS is the smallest standard sieve opening through which the entire amount of aggregate is permitted to pass.

Note: For an aggregate specification having a generally unrestrictive gradation (i. e. wide range of permissible upper sizes), where the source consistently fully passes a screen substantially smaller than the maximum specified size, the nominal maximum size, for the purpose of defining sampling and test specimen size requirements may be adjusted to the screen, found by experience to retain no more than 5% of the materials.

Note: When determining moisture content for T 99 samples, use approximately 100 grams, and approximately 500 grams for T 180 samples.

[A]Based on sieves with square openings.

[B]Determine the minimum sample mass for lightweight aggregate by multiplying the value listed by the dry-loose unit mass of the aggregate in kg/m3 (determined using T 19M/T 19) and dividing by 1600.

Sample Size for Aggregate
Table 1

7. Procedure

7.1 Determine the mass of the sample to the nearest 0.1 percent or better of the total sample mass.

7.2 Dry the sample thoroughly in the sample container by means of the selected source of heat, exercising care to avoid loss of any particles. Very rapid heating may cause some particles to explode, resulting in loss of particles. Use a controlled temperature oven when excessive heat may alter the character of the aggregate, or where more precise measurement is required. If a source of heat other than the controlled temperature oven is used, stir the sample during drying to accelerate the operation and avoid localized overheating. When using a microwave oven, stirring of the sample is optional.

7.2.1 Caution – When using a microwave oven, occasionally minerals are present in aggregates that may cause the material to overheat and explode. If this occurs, it can damage the microwave oven.

7.3 When a hot plate is used, drying can be expedited by the following procedure. Add sufficient anhydrous denatured alcohol to cover the moist sample. Stir and allow suspended material to settle. Decant as much of the alcohol as possible without losing any of the sample. Ignite the remaining alcohol and allow it to burn off during drying over the hot plate.

7.3.1 Warning – Exercise care to control the ignition operation to prevent injury or damage from the burning alcohol.

7.4 The sample is thoroughly dry when further heating causes, or would cause, less than 0.1 percent additional loss in mass.

WSDOT Note: When weighing hot samples, use a heat sink to protect the balance.

7.5 Determine the mass of the dried sample to the nearest 0.1 percent or better of the total sample mass after it has to room temperature.

8. Calculation

8.1 Calculate total evaporable moisture content as follows:

$$p = \frac{100\ (W - D)}{D}$$

where:

p = total evaporable moisture content of sample, percent;
W = mass of original sample, g; and
D = mass of dried sample, g

8.2 Surface moisture content is equal to the difference between the total evaporated moisture content and the absorption, with all values based on the mass of a dry sample. Absorption may be determined in accordance with T 85, Test for Specific Gravity and Absorption of Coarse Aggregates, or T 84, Test for Specific Gravity and Absorption of Fine Aggregates

9. Precision and Bias

See AASHTO T 255 for Precision and Bias.

10. Report

Report the results using one or more of the following:

- Materials Testing System (MATS)
- WSDOT Form 422-020, 422-020A, or 422-020B
- Form approved in writing by the State Materials Engineer

Performance Exam Checklist

Total Moisture Content of Aggregate by Drying
FOP for AASHTO T 255

Participant Name _____ Exam Date _____

Procedure Element	Yes	No
1. The tester has a copy of the current procedure on hand?	❐	❐
2. All equipment is functioning according to the test procedure, and if required, has the current calibration/verification tags present?	❐	❐
3. Representative sample of appropriate mass obtained?	❐	❐
4. Mass of clean, dry container determined?	❐	❐
5. Sample placed in container and mass determined?	❐	❐
6. Test sample mass conforms to the required mass?	❐	❐
7. Sample mass determined to 0.1 percent?	❐	❐
8. Loss of moisture avoided prior to mass determination?	❐	❐
9. Sample dried by a suitable heat source?	❐	❐
10. Sample cooled prior to mass determination?	❐	❐
11. If aggregate heated by means other than a controlled oven, is sample stirred to avoid localized overheating?	❐	❐
12. Mass determined and compared to previous mass – showing less than 0.1 percent loss?	❐	❐
13. Calculations performed properly and results reported to the nearest 0.1 percent?	❐	❐

First Attempt: Pass ❐ Fail ❐ Second Attempt: Pass ❐ Fail ❐

Signature of Examiner _____

Comments:

AASHTO T 265 (Modified)

Laboratory Determination of Moisture Content of Soils

AASHTO T 265 has been adopted by WSDOT with the following definition for "Constant Mass."

> "Constant Mass — Test samples dried at a temperature of 230 ± 9º F (110 ± 5º C) to such a condition that it will not lose more than 0.1 per cent moisture after 2 hours of drying. Such a condition of dryness can be verified by determining the mass of the sample before and after successive 2 hour drying periods. In lieu of such determination, samples may be considered to have reached constant mass when they have been dried at a temperature of 230 ± 9º F (110 ± 5º C) for an equal or longer period than that previously found adequate for producing the desired constant mass condition under equal or heavier loading condition of the oven."

Performance Exam Checklist

Laboratory Determination of Moisture Content of Soils
FOP for AASHTO T 265

Participant Name _____ Exam Date _____

Procedure Element	Yes	No
1. The tester has a copy of the current procedure on hand?	❐	❐
2. All equipment is functioning according to the test procedure, and if required, has the current calibration/verification tags present?	❐	❐
3. Representative sample of appropriate mass obtained?	❐	❐
4. Mass of clean, dry container determined?	❐	❐
5. Sample placed in container and mass determined?	❐	❐
6. Test sample mass conforms to the required mass?	❐	❐
7. Sample mass determined to 0.1 percent?	❐	❐
8. Loss of moisture avoided prior to mass determination?	❐	❐
9. Sample dried in a drying oven at 230 ± 9 0F (110 ± 5 0C)?	❐	❐
10. Sample dried to a constant mass?	❐	❐
11. Sample cooled prior to mass determination?	❐	❐
12. Calculations performed properly and results reported to the nearest 0.1 percent or better of the original sample?	❐	❐

First attempt: Pass ❐ Fail ❐ Second attempt: Pass ❐ Fail ❐

Signature of Examiner _____

Comments:

AASHTO T 272

Standard Method of Test for Family of Curves—One Point Method

AASHTO T 272 has been adopted by WSDOT.

Performance Exam Checklist

Family of Curves — One-Point Method
FOP for AASHTO T 272

Participant Name _____ Exam Date _____

Procedure Element	Yes	No
1. The tester has a copy of the current procedure on hand?	❐	❐
2. One-point determination of dry density and corresponding moisture content made in accordance with the FOP for AASHTO T 99, or AASHTO T 180?	❐	❐
a. Correct size mold used?	❐	❐
b. Correct number of blows per layer used (25 or 56)?	❐	❐
c. Correct number of layers used (3, 4, or 5)?	❐	❐
d. Moisture content determined in accordance with FOP for AASHTO T 255/T 265 or AASHTO T 217?	❐	❐
3. One-point plotted on family of curves supplied?	❐	❐
4. One-point falls within 80 to 100 percent of optimum moisture content in order to be valid?	❐	❐
5. If one-point does not fall within 80 to 100 percent of optimum moisture content, another one-point determination with an adjusted water content is made?	❐	❐
6. Maximum dry density and corresponding optimum moisture content correctly estimated?	❐	❐

First Attempt: Pass ❐ Fail ❐ Second Attempt: Pass ❐ Fail ❐

Signature of Examiner _____

Comments:

Performance Exam Checklist

Determining Minimum Laboratory Soil Resistivity
AASHTO T 288 Checklist

Participant Name _____ Exam Date _____

Procedure Element *Laboratory method of Determining Minimum Resistivity*	**Yes**	**No**
1. Sample dried at 140 F, and screened through # 10 sieve?	❐	❐
2. Quartered or split out 1500 grams of passing #10 material?	❐	❐
3. 150 ml of distilled water added to the 1500 gram and thoroughly mixed?	❐	❐
4. Sample covered with a wet cloth and allow to stabilize or cure for 12 hours?	❐	❐
5. Sample placed & compacted in soil box in layers and the excess trimmed off with a straightedge?	❐	❐
6. Resistivity measured with the instrument?	❐	❐
7. Soil removed and retained from box and 100 ml of distilled water added and thoroughly mixed?	❐	❐
8. Soil box cleaned with distilled water?	❐	❐
9. Repeat procedure by increasing moisture content by 100 ml until minimum resistivity can be established?	❐	❐
10. Record the lowest value during the repeated measurements?	❐	❐
11. Report the resistivity reading.	❐	❐

First attempt: Pass ❐ Fail ❐ Second attempt: Pass ❐ Fail ❐

Signature of Examiner _____

Comments:

WSDOT FOP for AASHTO T 304[1]

Uncompacted Void Content of Fine Aggregate

1. Scope

1.1 This method describes the determination of the loose uncompacted void content of a sample of fine aggregate. When measured on any aggregate of a known grading, void content provides an indication of that aggregate's angularity, sphericity, and surface texture compared with other fine aggregates tested in the same grading. When void content is measured on an as-received fine aggregate grading, it can be an indicator of the effect of the fine aggregate on the workability of a mixture in which it may be used.

1.2 Three procedures are included for the measurement of void content. Two use graded fine aggregate (standard grading or as-received grading), and the other uses several individual size fractions for void content determinations:

1.2.1 Standard Graded Sample (Method A) – This method uses a standard fine aggregate grading that is obtained by combining individual sieve fractions from a typical fine aggregate sieve analysis (see Section 9).

Note: WSDOT Specifications require Method A.

1.2.2 See the Section 5 for guidance on the method to be used.

1.3 The values stated in English units shall be regarded as the standard.

1.4 This standard does not purport to address all of the safety problems, if any, associated with its use. It is the responsibility of the user of this standard to establish appropriate safety and health practices and determine the applicability of regulatory limitations prior to use.

2. References Documents

2.1 AASHTO Standards

T 84 – Specific Gravity and Absorption of Fine Aggregate

2.1 WSDOT Standards

T 2 – FOP for AASHTO for the Sampling of Aggregates

T 248 – FOP for AASHTO for Reducing Field Samples of Aggregates to Testing Size

T 27/T 11 – FOP for WAQTC for the Sieve Analysis of Fine and Coarse Aggregates

[1]This FOP is based on AASHTO T 304-11 and has been modified per WSDOT standards. To view the redline modifications, contact the WSDOT Quality Systems Manager at 360-709-5412.

2.1 ASTM Standards

B 88 – Specification for Seamless Copper Water Tube

B 88M – Specification for Seamless Copper Water Tube (Metric)

C 29/29M – Test Method for Bulk Density ("Unit Weight") and Voids in Aggregate

C 117 – Test Method for Materials Finer than 75-um (No. 200) Sieve in Mineral Aggregates by Washing

C 125 – Terminology Relating to Concrete and Concrete Aggregates

C 128 – Test Method for Specific Gravity and Absorption of Fine Aggregate

C 136 – Test Method for Sieve Analysis of Fine and Coarse Aggregates

C 702 – Practice for Reducing Samples of Aggregate to Testing Size

C 778 – Specification for Standard Sand

D 75 – Practice for Sampling Aggregates

2.2 ACI Document

ACI 116R – Cement and Concrete Terminology[1]

3. Terminology

3.1 Terms used in this standard are defined in ASTM C 125 or ACI 116R.

4. Summary of Test Method

4.1 A nominal 100-mL calibrated cylindrical measure is filled with fine aggregate of prescribed grading by allowing the sample to flow through a funnel from a fixed height into the measure. The fine aggregate is struck off and its mass is determined by weighing. Uncompacted void content is calculated as the difference between the volume of the cylindrical measure and the absolute volume of the fine aggregate collected in the measure. Uncompacted void content is calculated using the bulk dry specific gravity of the fine aggregate. Two runs are made on each sample and the results are averaged.

4.1.1 For a graded sample, the percent void content is determined directly and the average value from two runs is reported.

5. Significance and Use

5.1 Methods A provide percent void content determined under standardized conditions which depend on the particle shape and texture of a fine aggregate. An increase in void content by these procedures indicates greater angularity, less sphericity, or rougher surface texture, or some combination of the three factors. A decrease in void content results is associated with more rounded, spherical, smooth surfaced fine aggregate, or a combination of these factors.

5.2 The standard graded sample (Method A) is most useful as a quick test which indicates the particle shape properties of a graded fine aggregate. Typically, the material used to make up the standard graded sample can be obtained from the remaining size fractions after performing a single sieve analysis of the fine aggregate.

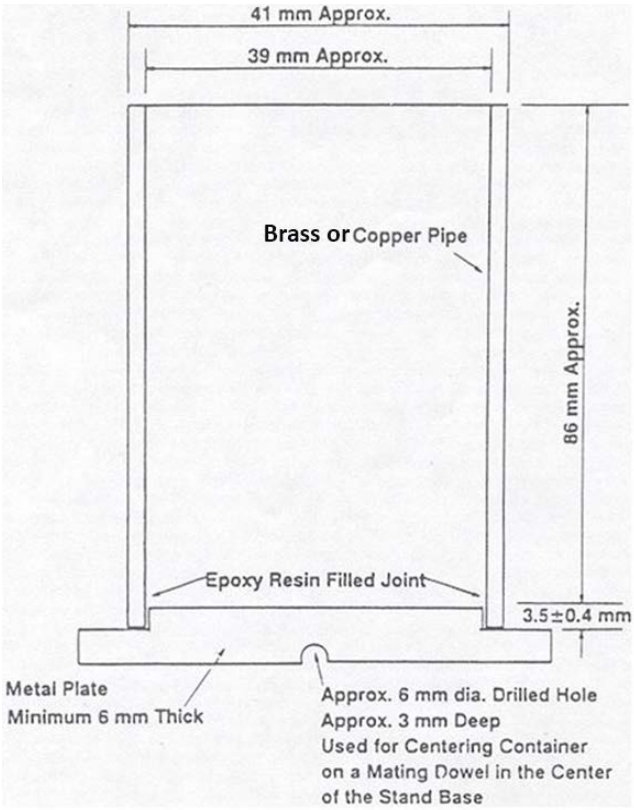

Nominal 100-ml Cylindrical Measure
Figure 1

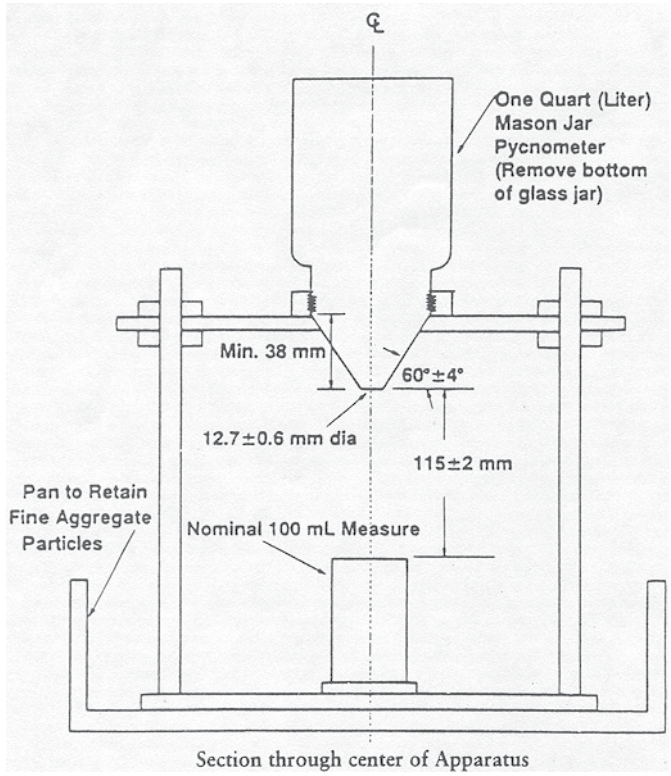

Suitable Funnel Stand Apparatus With Cylindrical Measure in Place
Figure 2

5.3 The bulk dry specific gravity of the fine aggregate is used in calculating the void content. The effectiveness of these methods of determining void content and its relationship to particle shape and texture depends on the bulk specific gravity of the various size fractions being equal, or nearly so. The void content is actually a function of the volume of each size fraction. If the type of rock or minerals, or its porosity, in any of the size fractions varies markedly, it may be necessary to determine the specific gravity of the size fractions used in the test.

5.4 Void content information from Method A will be useful as an indicator of properties such as in bituminous concrete, the effect of the fine aggregate on stability and voids in the mineral aggregate; or the stability of the fine aggregate portion of a base course aggregate.

6. Apparatus

6.1 Cylindrical Measure – A right cylinder of approximately 100 mL capacity having an inside diameter of approximately 39 mm and an inside height of approximately 86 mm made of brass or drawn copper water tube meeting ASTM Specification B 88 Type M, or B 88 M Type C. The bottom of the measure shall be metal at least 6 mm thick, shall be firmly sealed to the tubing, and shall be provided with means for aligning the axis of the cylinder with that of the funnel (see Figure 1).

6.2 Funnel – The lateral surface of the right frustum of a cone sloped 60 ± 4º from the horizontal with an opening of 12.7 ± 0.6 mm diameter. The funnel section shall be a piece of metal, smooth on the inside and at least 38 mm high. It shall have a volume of at least 200 mL or shall be provided with a supplemental glass or metal container to provide the required volume (see Figure 2).

Note 1: Pycnometer top C9455 sold by Hogentogler and Co., Inc., 9515 Gerwig, Columbia, MD 21045, 410-381-2390 is satisfactory for the funnel section, except that the size of the opening has to be enlarged and any burrs or lips that are apparent should be removed by light filing or sanding before use. This pycnometer top must be used with suitable glass jar with the bottom removed (Figure 2).

6.3 Funnel Stand – A three or four legged support capable of holding the funnel firmly in position with the axis of the funnel colinear (within a 4º angle and a displacement of 2 mm) with the axis of the cylindrical measure. The funnel opening shall be 115 ± 2 mm above the top of the cylinder. A suitable arrangement is shown in Figure 2.

6.4 Glass Plate – A square glass plate approximately 60 mm by 60 mm with a minimum 4 mm thickness used to calibrate the cylindrical measure.

6.5 Pan – A metal or plastic pan of sufficient size to contain the funnel stand and to prevent loss of material. The purpose of the pan is to catch and retain fine aggregate particles that overflow the measure during filling and strike off. The pan shall not be warped so as to prevent rocking of the apparatus during testing.

6.6 Metal spatula with a blade approximately 100 mm long, and at least 20 mm wide, with straight edges. The end shall be cut at a right angle to the edges. The straight edge of the spatula blade is used to strike off the fine aggregate.

6.7 Scale or balance accurate and readable to ±0.1 g within the range of use, capable of weighing the cylindrical measure and its contents.

7. Sampling

7.1 The sample(s) used for this test shall be obtained using FOP for AASHTO T 2 and FOP for AASHTO T 248, or from sieve analysis samples used for FOP for WAQTC/AASHTO T 27/11, or from aggregate extracted from a bituminous concrete specimen. For Method A, the sample is washed over a 150-um (No. 100) or 75-um (No. 200) sieve in accordance with FOP for WAQTC/AASHTO T 27/11 and then dried and sieved into separate size fractions according to FOP for WAQTC/AASHTO T 27/11 procedures. Maintain the necessary size fractions obtained from one (or more) sieve analysis in a dry condition in separate containers for each size.

8. Calibration of Cylindrical Measure

8.1 Apply a light coat of grease to the top edge of the dry, empty cylindrical measure. Weigh the measure, grease, and glass plate. Fill the measure freshly boiled, deionized water at a temperature of 18 to 24ºC. Record the temperature of the water. Place the glass plate on the measure, being sure that no air bubbles remain. Dry the outer surfaces of the measure and determine the combined mass of measure, glass plate, grease, and water by weighing. Following the final weighing, remove the grease, and determine the mass of the clean, dry, empty measure for subsequent test.

8.2 Calculate the volume of the measure as follows:

$$V = 1000 \frac{M}{D}$$

Where:

V = volume of cylinder, mL,
M = net mass of water, g, and
D = density of water (see table in ASTM C 29/C 29M for density at the temperature used), Kg/m^3

Determine the volume to the nearest 0.1 mL.

Note 2: If the volume of the measure is greater than 100.0 mL, it may be desirable to grind the upper edge of the cylinder until the volume is exactly 100.0 mL, to simplify subsequent calculations.

9. Preparation of Test Samples

9.1 Method A – Standard Graded Sample – Weigh out and combine the following quantities of fine aggregate which has been dried and sieved in accordance with FOP for AASHTO T 27/11.

Individual Size Fraction		
Passing	**Retained On**	**Mass, g**
No. 8 (2.36 mm)	No. 16 (1.18 mm)	44
No. 16 (1.18 mm)	No. 30 (600 um)	57
No. 30 (600 um)	No. 50 (300 um)	72
No. 50 (300 um)	No. 100 (150 um)	17
	Total	190

The tolerance on each of these amounts is ± 0.2 g.

9.2 Method B – Individual Size Fractions – WSDOT has deleted this section. They use Method A.

9.3 Method C – As Received Grading – WSDOT has deleted this section. They use Method A.

9.4 Specific Gravity of Fine Aggregate – If the bulk dry specific gravity of fine aggregate from the source is unknown, determine it on the minus No. 4 (4.75 mm) material according to AASHTO T 84. Use this value in subsequent calculations unless some size fractions differ by more than 0.05 from the specific gravity typical of the complete sample, in which case the specific gravity of the fraction (or fractions) being tested must be determined. An indicator of differences in specific gravity of various particle sizes is a comparison of specific gravities run on the fine aggregate in different gradings. Specific gravity can be run on gradings with and without specific size fractions of interest. If specific gravity differences exceed 0.05, determine the specific gravity of the individual 2.36 mm (No. 8) to 150 um (No. 100) sizes for use with Method A or the individual size fractions for use with Method B either by direct measurement or by calculation using the specific gravity data on gradings with and without the size fraction of interest. A difference in specific gravity of 0.05 will change the calculated void content about 1 percent.

10. Procedure

10.1 Mix each test sample with the spatula until it appears to be homogeneous. Position the jar and funnel section in the stand and center the cylindrical measure as shown in Figure 2. Use a finger to block the opening of the funnel. Pour the test sample into the funnel. Level the material in the funnel with the spatula. Remove the finger and allow the sample to fall freely into the cylindrical measure.

10.2 After the funnel empties, strike-off excess heaped fine aggregate from the cylindrical measure by a single pass of the spatula with the width of the blade vertical using the straight part of its edge in light contact with the top of the measure. Until this operation is complete, exercise care to avoid vibration or any disturbance that could cause compaction of the fine aggregate in the cylindrical measure (Note 3). Brush adhering grains from the outside of the container and determine the mass of the cylindrical measure and contents to the nearest 0.1 g. Retain all fine aggregate particles for a second test run.

Note 3: After strike-off, the cylindrical measure may be tapped lightly to compact the sample to make it easier to transfer the container to scale or balance without spilling any of the sample.

10.3 Recombine the sample from the retaining pan and cylindrical measure and repeat the procedure. The results of two runs are averaged (see Section 11).

10.4 Record the mass of the empty measure. Also, for each run, record the mass of the measure and fine aggregate.

11. Calculation

11.1 Calculate the uncompacted voids for each determination as follows:

$$U = \frac{V - (F/G)}{V} \times 100$$

V = volume of cylindrical measure, mL;

F = net mass, g, of fine aggregate in measure (gross mass minus the mass of the empty measure);

G = Bulk dry specific gravity of fine aggregate; and

U = uncompacted voids, percent, in the material

11.2 For the standard Graded Sample (Method A), calculate the average uncompacted voids for the two determinations and report the result as U_s.

12. Report

12.1 For the Standard Graded Sample (Method A) report:

12.1.1 The Uncompacted Voids (U_s) in percent to the nearest 1 percent.

12.1.2 The specific gravity value used in the calculations.

12.2 Report the results using one or more of the following:

- Materials Testing System (MATS)
- DOT Form 350-161
- Form approved in writing by the State Materials Engineer

13. Precision and Bias

See AASHTO T 304 for precision and bias.

Performance Exam Checklist

Uncompacted Void Content of Fine Aggregate
FOP AASHTO T 304

Participant Name _____ Exam Date _____

Procedure Element	**Yes**	**No**
1. The tester has a copy of the current procedure on hand?		
2. All equipment is functioning according to the test procedure, and if required, has the current calibration/verification tags present?		

Sample Preparation (Method A)

Note: If Bulk Dry Specific Gravity is unknown, determine it on the minus No. 4 (4.75 mm) material according to AASHTO T 84.

1 Field sample obtained per FOP for AASHTO T 2?		
2. Sample reduced to testing size per FOP for AASHTO T 248?		
3. Sample washed over No. 100 or No. 200 sieve in accordance with FOP for WAQTC/AASHTO T 27/11?		
4. Sample dried to constant weight?		
5. Standard Graded sample achieved per FOP for WAQTC/AASHTO T 27/11?		
6. Necessary size fractions obtained, maintained in a dry condition in separate containers for each size?		
7. Standard Graded sample-weighed out and combined per Section 9.1, FOP for AASHTO T 304?		

Procedure Element
Procedure (Method A)
N***ote:*** If Bulk Dry Specific Gravity is unknown, determine it on the minus
No. 4 (4.75 mm) material according to AASHTO T 84. **Yes** **No**

1. Test sample mixed until it appears to be homogeneous?
2. Jar and funnel section positioned in stand and cylindrical measure centered on stand?
3. Finger used to block the opening of the funnel?
4. Test sample poured into the funnel and leveled?
5. Finger removed and sample allowed to fall freely into cylindrical measure?
6. After funnel empties, is excess material struck off w/single pass of upright spatula?
7. Was care taken to avoid any vibration or disturbance that could cause compaction of material?
8. All adhering grains brushed off before weighing the cylindrical measure?
9. Mass of the cylindrical measure and contents weighed to nearest 0.1 gram?
10. All fine aggregate particles retained and re-homogenized for a second test run?
11. Percent (%) of Uncompacted Voids calculated for each run, as per FOP for AASHTO T 304, Method A?
12. Were the results for each run averaged for a final result?
13. Was the (%) percent of Uncompacted voids reported to the nearest one percent (1%)?
14. All calculations performed correctly?

First Attempt: Pass Fail Second Attempt: Pass Fail

Signature of Examiner _____

Comments:

Washington State
Department of Transportation

AASHTO T 307 (Modified)

Determining the Resilient Modulus of Soils and Aggregate Materials

AASHTO T 307 has been adopted by WSDOT with the following changes and/or additions:

Section 3.3 and Section 3.4:

Any material that is cohesive enough that it can form a cylinder and remain intact through a Resilient Modulus test shall be considered Type 2 material. All other material shall be considered Type 1.

Section 3.8:

The Contact Load is 5.0 psi.

Section 6.1:

The LVDTs will be clamped to the center of the specimen.

Section 6.3.1:

The load cell will have a capacity of 1,000 pound-force, and an accuracy of ± 2.5 1,000 pound-force.

Section 6.3.3:

The LVDTs will be inside the test chamber.

Section 6.3.3.2 through Section 6.3.3:

Note 2 Following Section 6.3.1, Section 6.3.3.2, and Section 6.7:

The load cell will be calibrated by outside services and the LVDTs will be verified by WSDOT Verification Procedure VP-68.

Section 6.4:

Specimens will be compacted by impact or vibration.

Section 6.6:

Remove bubble chamber, nor a membrane expander, and porous stones nor porous bronze discs from list of equipment.

Section 7.1.1:

Use 4-inch diameter specimens for all types of materials. Particles retained on the 19 mm sieve will be scalped. The sample gradation will be per Appendix C of the WSDOT Lab. Manual.**

Section 7.3 Replace in its entirety with:

The target moisture content of the sample is to be the amount of moisture, which will cause exudation from the sample at 300 psi.

The target density of cohesive material is that produced by impact compaction per the section on compaction.

The target density of granular materials is that produced by vibratory compaction per the section on vibratory compaction.

Section 7.4:

See comments under Section 6.4.

Section 7.4.3:

Samples will be prepared and used the same day.

8. RESILIENT MODULUS SPECIMEN SET UP FOR SUBGRADE, AND BASE MATERIALS

Section 8.1.

WSDOT uses the Resilient Modulus test only for laboratory compacted samples. All samples will be approximately 4 inches in diameter.

Section 8.2.

Cohesive specimens are placed in the triaxial chamber and loading apparatus in the following steps:

Place a filter paper on the base, place the specimen on top of the filter paper, and put the load cell on top of the specimen.

Section 8.3.

Granular specimens are compacted on the base of the triaxial chamber inside a rubber membrane, with a vacuum applied to the membrane.

When compaction is finished, the vacuum line will be moved to produce a vacuum inside the membrane. The membrane is checked for leaks.

If leaks are found they can usually be sealed for the duration of the test with masking tape or the equivalent. If leaks cannot be sealed, remove the specimen from the rubber membrane, and prepare a new specimen using another rubber membrane.

Once a specimen has been prepared in an airtight membrane, the O-ring sealing the membrane at the base is checked. The load cell is placed on top of the specimen, and the membrane is extended over the load cell. An O-ring or other seal is placed on the load cell.

Section 8.4.

For both cohesive and granular specimens, the LVDTs will be placed at about the middle of the specimen, and adjusted so that the LVDTs make good contact with the clamps.

Section 8.5.

Place the chamber on the base plate and the cover plate on the chamber. Insert the loading piston and obtain a firm connection with the load cell. Tighten the chamber tie rods firmly.

Section 8.6.

Slide the assembly apparatus into position under the axial loading device. Position the piston rod precisely under the loading device. Apply a small (1 to 3 psi) contact stress to the test specimen then put the triaxial chamber under pressure.

Check that there are no air leaks. If air leaks from the edges of the chamber, the chamber must be disassembled, the edges cleaned, and possibly moistened. Repeat until chamber is airtight. (A very small amount of air leak around the piston road is acceptable.)

Section 8.7.

Connect the air pressure supply line to the triaxial chamber and apply the pre-conditioning confining pressure of 4 psi to the test specimen. Raise the contact stress to 5 psi.

9. RESILIENT MODULUS TEST PROCEDURE- FOR SUBGRADE, AND BASE MATERIALS

Section 8.8.

Begin the test by sample conditioning with a minimum of 1,000 repetitions of a load equivalent to a cyclic Stress of 8 psi.

If the total vertical permanent strain exceeds 5 percent during conditioning, stop the test and report the result on the appropriate worksheet. Recreate the sample, using extra care to assure adequate compaction. If the sample again reaches 5 percent total vertical strain during conditioning terminate the test and report on the worksheet.

Apply 200 load applications between each item on the testing sequence. Record the average recovered deformations for each LVDT separately for one cycle on the report form.

Modified table 5 and 6 are used for the conditioning and testing sequences. **

If at any time the total vertical permanent strain exceeds 5 percent, stop the test and report the result on the appropriate worksheet.

10. CALCULATIONS

Use the WSDOT computer generated stress-strain curve for the specimen.

11 Report

Fill out the RESILIENT MODULUS WORKSHEET, and the SOILS Software Worksheet.

The report will be generated by the SOILS Software.

Appendix A SAMPLE PREPARATION

Section A.1.2.2. and A.1.2.2.3.

Omit

Section A.1.1.2.7

Cure sample only if necessary according the judgment of the operator.

Appendix B VIBRATORY COMPACTION

Section B.2.3:

The compactor head diameter is approximately 50mm.

Section B.3.2.

Omit

Section B.3.8. through Section B.3.10

Omit

Section B.3.14.

Insert the vibrator and vibrate the soil, being careful that the only pressure applied is from the weight of the vibrator. Vibrate for approximately one minute, moving vibrator head to different parts of the layer.

Appendix C COMPACTION OF TYPE 2 SOILS

Type 2 soils are compacted as for T-99, except that the specimen shall be compacted in eight lifts to a height of eight inches.

WSDOT FOP for AASHTO T 308[1]

Determining the Asphalt Binder Content of Hot Mix Asphalt (HMA) by the Ignition Method

1. Scope

   1.1 This test method covers the determination of asphalt binder content of HMA mixtures by ignition at temperatures that reach the flashpoint of the binder in a furnace. The means of specimen heating may be the convection method or the direct infrared (IR) irradiation method. The aggregate remaining after burning can be used for sieve analysis using FOP for AASHTO T 27/T 11.

   1.2 The values in English units are to be regarded as the standard.

   1.3 This standard may involve hazardous materials, operations, and equipment. This standard does not purport to address all of the safety problems associated with its use. It is the responsibility of whoever uses this standard to consult and establish appropriate safety and health practices and determine the applicability of regulatory limitations prior to use.

2. Referenced Documents

   2.1 AASHTO Standards

   M 231 – Weighing Devices Used in the Testing of Materials

   2.2 Other Standards

   Manufacturer's Instruction Manual

   2.3 WSDOT Standards

   T 329 – FOP for AASHTO Moisture Content of Asphalt (HMA) by Oven Method

   T 27/11 – FOP for WAQTC Sieve Analysis of Fine and Coarse Aggregates

   T 168 – FOP for WAQTC Sampling Bituminous Paving Materials

   T 712 – Reducing Samples of Hot Mix Asphalt to Testing Size

   SOP 728 – Method for Determining Ignition Furnace Calibration Factor

3. Summary of Test Method

   3.1 The asphalt binder in the paving mixture is ignited using the furnace equipment applicable to the particular method.

   3.2 The asphalt binder content is calculated as the difference between the initial mass of the asphalt mixture and the mass of the HMA residual aggregate, with adjustments for the calibration factor, and the moisture content. The asphalt content is expressed as mass percent of moisture-free mixture.

[1]This FOP is based on AASHTO T 308-10 and has been modified per WSDOT standards. To view the redline modifications, contact the WSDOT Quality Systems Manager at 360-709-5412.

4. Significance and Use

4.1 This method can be used for quantitative determinations of asphalt binder content and gradation in HMA mixtures and pavement specimens for quality control, specification acceptance, and mixture evaluation studies. This method does not require the use of solvents. Aggregate obtained by this test method may be used for gradation analysis according to T 27/11.

5. Apparatus

5.1 Ignition Furnace – A forced-air ignition furnace that heats the specimens by either the convection or direct IR irradiation method. The convection-type furnace must be capable of maintaining the temperature at 578°C (1072°F). The furnace chamber dimensions shall be adequate to accommodate a specimen size of 3500 g. The furnace door shall be equipped so that the door cannot be opened during the ignition test. A method for reducing furnace emissions shall be provided. The furnace shall be vented into a hood or to the outside and, when set up properly, shall have no noticeable odors escaping into the laboratory. The furnace shall have a fan with the capability to pull air through the furnace to expedite the test and reduce the escape of smoke into the laboratory.

5.1.1 For Method A, the furnace shall also have an internal balance thermally isolated from the furnace chamber and accurate to 0.1 g. The balance shall be capable of weighing a 3500-g specimen in addition to the specimen baskets. A data collection system will be included so that the mass can be automatically determined and displayed during the test. The furnace shall have a built-in computer program to calculate the change in mass of the specimen baskets and provide for the input of a correction factor for aggregate loss. The furnace shall provide a printed ticket with the initial specimen mass, specimen mass loss, temperature compensation, correction factor, corrected asphalt binder content (percent), test time, and test temperature. The furnace shall provide an audible alarm and indicator light when the specimen mass loss does not exceed 0.01 percent of the total specimen mass for three consecutive minutes. The furnace shall also allow the operator to change the ending mass loss percentage to 0.02 percent.

5.2 Specimen Basket Assembly – Consisting of specimen basket(s), catch pan, and an assembly guard to secure the specimen basket(s) to the catch pan.

5.2.1 Specimen basket(s) – Of appropriate size that allows the specimens to be thinly spread and allows air to flow through and around the specimen particles. Sets with two or more baskets shall be nested. The specimen shall be completely enclosed with screen mesh, perforated stainless steel plate, or other suitable material.

Note 1: Screen mesh or other suitable material with maximum and minimum openings of 2.36 mm (No. 8) and 0.600 mm (No. 30), respectively, has been found to perform well.

5.2.2 Catch Pan – Of sufficient size to hold the specimen basket(s) so that aggregate particles and melting asphalt binder falling through the screen are caught.

5.3 Oven – Capable of maintaining 110 ± 5°C (230 ± 9°F).

5.4 Balance – Of sufficient capacity and conforming to the requirements of M 231, Class G 2.

5.5 Safety Equipment – Safety glasses or face shield, dust mask, high temperature gloves, long sleeve jacket, a heat-resistant surface capable of withstanding 650°C (1202°F), and a protective cage capable of surrounding the specimen baskets during the cooling period.

5.6 Miscellaneous Equipment – A pan larger than the specimen basket(s) for transferring the specimen after ignition, spatulas, bowls, and wire brushes.

6. Sampling

6.1 Obtain specimens of freshly produced hot-mix asphalt in accordance with FOP for WAQTC T 168.

6.2 The test specimen for asphalt content determination shall be the end result of a larger specimen taken in accordance with FOP for WAQTC T 168.

6.3 If the mixture is not sufficiently soft to separate for testing, carefully heat the mixture in an oven until sufficiently soft, not to exceed 350°F or the recommended mixing temperature from the mix design verification report. Do not leave the specimen in the oven for an extended period of time.

6.4 The size of the test specimen shall be governed by the nominal maximum aggregate size of the mixture and shall conform to the mass requirement shown below. Specimen sizes shall not be more than 500 g greater than the minimum recommended specimen mass. The maximum specimen size including basket shall not exceed the capacity of the balance.

Note 2: Large specimens of fine mixes tend to result in incomplete ignition of asphalt binder.

Nominal Max. Agg. * Size	Class		Minimum Mass of Specimen, g	Maximum Mass of Specimen, g
	HMA	Other		
US No. 4			1200	1700
⅜ in	⅜ in		1200	1700
½ in	½ in	ATB	1500	2000
¾ in	¾ in		2000	2500
1 in	1 in		3000	3500
1½ in			4000	4500

*For aggregate, the nominal maximum size, (NMS) is the largest standard sieve opening listed in the applicable specification, upon which any material is permitted to be retained. For concrete aggregate, NMS is the smallest standard sieve opening through which the entire amount of aggregate is permitted to pass.

Note: For an aggregate specification having a generally unrestrictive gradation (i.e., wide range of permissible upper sizes), where the source consistently fully passes a screen substantially smaller than the maximum specified size, the nominal maximum size, for the purpose of defining sampling and test specimen size requirements may be adjusted to the screen, found by experience to retain no more than 5 percent of the materials.

Test Method A

7. Test Procedures

7.1 Test Initiation

7.1.1 Preheat the ignition furnace to 1000°F (538°C). Manually record the furnace temperature (set point) prior to the initiation of the test if the furnace does not record automatically.

7.2 Determine the moisture content of the specimens according to FOP for AASHTO T 329 Moisture Content of Asphalt (HMA) by Oven Method.

7.3 Enter the calibration factor for the specific mix to be tested.

7.4 Weigh and record the mass of the specimen basket(s) and catch pan (with guards in place) to the nearest 0.1 g.

7.5 Prepare the specimen as described in Section 6. Evenly distribute this specimen in the specimen basket(s) that have been placed in the catch pan, taking care to keep the material away from the edges of the basket. Use a spatula or trowel to level the specimen.

7.6 Determine and record the total mass of the specimen, basket(s), catch pan, and basket guards to the nearest 0.1 g. Calculate and record the initial mass of the specimen (total mass minus the mass of the specimen basket assembly).

7.7 Input the initial mass of the specimen in whole grams into the ignition furnace controller. Verify that the correct mass has been entered.

7.8 Tare or zero furnace balance, open the chamber door, and gently set the specimen baskets in the furnace. Close the chamber door, and verify that the specimen mass (including the basket(s)) displayed on the furnace scale equals the total mass recorded in Section 7.6 within ± 6 g. Differences greater than 6 g or failure of the furnace scale to stabilize may indicate that the sample basket(s) are contacting the furnace wall.

Note 3: Due to the extreme heat of the furnace, the operator should wear safety equipment high temperature gloves, face shield, and fire-retardant shop coat when opening the door to load or unload the specimen.

7.9 Initiate the test by pressing the start/stop button. This will lock the specimen chamber and start the combustion blower.

Note 4: The furnace temperature will drop below the setpoint when the door is opened, but will recover with the door closed and when ignition occurs. Specimen ignition typically increases the temperature well above the setpoint, depending on specimen size and asphalt content.

WSDOT Safety Note: Do not attempt to open the furnace door until the binder has been completely burned off.

7.10 Allow the test to continue until the stable light and audible stable indicator indicate the test is complete (the change in mass does not exceed 0.01 percent for three consecutive minutes). Press the start/stop button. This operation will unlock the specimen chamber and cause the printer to print out the test results.

7.11 Open the chamber door, remove the specimen basket assembly and place it on a heat resistance surface. Place the protective cage over the specimen basket assembly, and allow specimen to cool to room temperature (approximately 30 minutes).

7.12 Use the corrected asphalt binder content (0.01 percent) from the printed ticket. If a moisture content (0.01 percent) has been determined, subtract the percent moisture from the printed ticket corrected asphalt content, and report the resultant value as the corrected asphalt binder content to 0.1 percent.

Test Method B

8. Test Procedure

WSDOT does not use Method B and has deleted it from the procedure.

9. Gradation

9.1 Allow the specimen to cool to room temperature in the sample baskets.

9.2 Empty the contents of the baskets into a flat pan. Use a small wire sieve brush to ensure that any residual fines are removed from the baskets. Determine and record the total mass of the specimen to the nearest 0.1g.

9.3 Perform the gradation analysis according to FOP for WAQTC T 27/T 11.

10. Report

10.1 Report the test method (A), corrected asphalt binder content, calibration factor, temperature compensation factor (if applicable), total percent loss, specimen mass, moisture content (if determined) and the test temperature. Attach the original printed tickets to the report for units with internal balances.

10.2 The asphalt percentage and aggregate gradation shall be reported on one or more of the following:

- Materials Testing System (MATS)
- DOT Forms 350-092 and 350-157
- Form approved in writing by the State Materials Engineer

11. Precision and Bias

See AASHTO T 308 for precision and bias.

Performance Exam Checklist

WSDOT FOP for AASHTO T 308
Determining the Asphalt Cement Content of Hot Mix Asphalt (HMA) by the Ignition Method

Participant Name _____ Exam Date _____

Procedure Element	**Yes**	**No**
1. The tester has a copy of the current procedure on hand?	❒	❒
2. All equipment is functioning according to the test procedure, and if required, has the current calibration/verification tags present?	❒	❒
Procedure		
1. Oven at correct temperature 538°C?	❒	❒
2. Mass of specimen baskets and catch pan recorded?	❒	❒
3. Specimen evenly distributed in basket?	❒	❒
4. Mass of specimen recorded?	❒	❒
Method A		
5. Enter calibration factor for specific mix design?	❒	❒
6. Initial mass entered into furnace controller?	❒	❒
7. Specimen correctly placed into furnace?	❒	❒
8. Test continued until stable indicator signals?	❒	❒
9. Binder content obtained on printed ticket?	❒	❒
10. Binder content corrected for moisture?	❒	❒
11. All calculations performed correctly?	❒	❒

First Attempt: Pass ❒ Fail ❒ Second Attempt: Pass ❒ Fail ❒

Signature of Examiner

Comments:

WSDOT FOP for AASHTO T 309[1]

Temperature of Freshly Mixed Portland Cement Concrete

1. Scope

   1.1 This test method covers the determination of temperature of freshly mixed Portland cement concrete.

   1.2 The values stated in English units are to be regarded separately as standard.

   1.3 This standard does not purport to address all of the safety concerns, if any, associated with its use. It is the responsibility of the user of this standard to establish appropriate safety and health practices and determine the applicability of regulatory limitations prior to use.

2. Referenced Documents

   2.1 AASHTO Standards

   T 141 – Sampling Freshly Mixed Concrete

   2.2 ASTM Standards

   C 1721 – Practice for Sampling Freshly Mixed Concrete

3. Significance and Use

   3.1 This test method provides a means for measuring the temperature of freshly mixed concrete. It may be used to verify conformance to a specified requirement for temperature of concrete.

   3.2 Concrete containing aggregate of a nominal maximum size greater than 3 in (75 mm) may require up to 20 min for the transfer of heat from aggregate to mortar. (See ACI Committee 207.1R Report 3.)

4. Apparatus

   4.1 Container – Shall be made of nonabsorptive material and large enough to provide at least 3 in (75 mm) of concrete in all directions around the sensor of the temperature measuring device; concrete cover must also be at least three times the nominal maximum size of the coarse aggregate.

   4.2 Temperature Measuring Device – The temperature measuring device shall be capable of measuring the temperature of the freshly mixed concrete to ± 1°F (± 0.5°C) throughout the entire temperature range likely to be encountered in the fresh concrete. Liquid-in-glass thermometers having a range of 0 to 120°F (-18 to 49°C) are satisfactory. Other thermometers of the required accuracy, including the metal immersion type, are acceptable.

   4.3 Partial immersion liquid-in-glass thermometers (and possibly other types) shall have a permanent mark to which the device must be immersed without applying a correction factor.

[1]This FOP is based on AASHTO T 309-11 and has been modified per WSDOT standards. To view the redline modifications, contact the WSDOT Quality Systems Manager at 360-709-5412.

5. Calibration of Temperature Measuring Device

5.1 Each temperature measuring device used for determining temperature of freshly mixed concrete shall be calibrated.

6. Sampling Concrete

6.1 The temperature of freshly mixed concrete may be measured in the transporting equipment provided the sensor of the temperature measuring device has at least 3 in (75 mm) of concrete cover in all directions around it.

6.2 Temperature of the freshly mixed concrete may be obtained following concrete placement using the forms as the container.

6.3 If the transporting equipment or placement forms are not used as the container, a sample shall be prepared as follows:

6.3.1 Immediately, prior to sampling the freshly mixed concrete, dampen (with water) the sample container.

6.3.2 Sample the freshly mixed concrete in accordance with Practice C 172, except that composite samples are not required if the only purpose for obtaining the sample is to determine temperature.

6.3.3 Place the freshly mixed concrete into the container.

7. Procedure

7.1 Place the temperature measuring device in the freshly mixed concrete so that the temperature sensing portion is submerged a minimum of 3 in (75 mm). Gently press the concrete around the temperature measuring device at the surface of the concrete so that ambient air temperature does not affect the reading.

7.2 Leave the temperature measuring device in the freshly mixed concrete for a minimum period of 2 min or until the temperature reading stabilizes, then read and record the temperature.

7.3 Complete the temperature measurement of the freshly mixed concrete within 5 min after obtaining the sample.

8. Report

8.1 Record the measured temperature of the freshly mixed concrete to the nearest 1°F (0.5°C).

8.2 Report results on concrete delivery ticket (i.e., Certificate of Compliance).

8.3 The name of the tester who performed the field acceptance test is required on concrete delivery tickets containing test results.

9. Precision and Bias

9.1 The precision and bias of this test method have not been determined. A precision and bias statement will be included when sufficient test data have been obtained and analyzed.

Performance Exam Checklist

Temperature of Freshly Mixed Concrete
FOP for AASHTO T 309

Participant Name _____ Exam Date _____

Procedure Element	Yes	No
1. The tester has a copy of the current procedure on hand?	❐	❐
2. All equipment is functioning according to the test procedure, and if required, has the current calibration/verification tags present?	❐	❐
3. Use calibrated thermometer approved for concrete:	❐	❐
4. Place thermometer in sample with a minimum of 3 in (75 mm) cover around sensor?	❐	❐
5. Gently press concrete around thermometer?	❐	❐
6. Read temperature after a minimum of 2 minutes or when temperature reading stabilizes? Complete temperature measurement within 5 minutes of obtaining sample?	❐	❐
7. Record temperature to nearest 1°F (0.5°C)?	❐	❐

First Attempt: Pass ❐ Fail ❐ Second Attempt: Pass ❐ Fail ❐

Signature of Examiner _____

Comments:

WSDOT FOP for AASHTO T 310[1]

In-Place Density and Moisture Content of Soil and Soil-Aggregate by Nuclear Methods (Shallow Depth)

1. Scope

1.1 This test method describes the procedure for determining the in-place density and moisture of soil and soil-aggregate by use of nuclear equipment. The density of the material may be determined by direct transmission, backscatter, or backscatter/air-gap ratio method. The WSDOT standard method for determining density is by direct transmission.

1.2 Density – The total or wet density of soil and soil-rock mixtures is determined by the attenuation of gamma radiation where the source or detector is placed at a known depth up to 12 in (300 mm) while the detector(s) or source remains on the surface (Direct Transmission Method) or the source and detector(s) remain on the surface (Backscatter Method).

1.2.1 The density in mass per unit volume of the material under test is determined by comparing the detected rate of gamma radiation with previously established calibration data.

1.3 Moisture – The moisture content of the soil and soil-rock mixtures is determined by thermalization or slowing of fast neutrons where the neutron source and the thermal neutron detector both remain at the surface.

1.3.1 The water content in mass per unit volume of the material under test is determined by comparing the detection rate of thermalized or slow neutrons with previously established calibration data.

1.4 SI Units – The values stated in SI units are to be regarded as the standard.

1.5 This standard does not purport to address all of the safety problems, if any, associated with its use. It is the responsibility of the user of this standard to establish appropriate safety and health practices and determine the applicability of regulatory limitations prior to use (see Section 6).

2. Referenced Documents

2.1 AASHTO Standards

T 99 – Moisture-Density Relations of Soils Using a 5.5 lb (2.5 kg) Rammer and a 12 in (305 mm) Drop

T 180 – Moisture-Density Relations of Soils Using a 10 lb (4.54 kg) Rammer and an 18 in (457 mm) Drop

T 191 – Density of Soil In-Place by the Sand-Cone Method

[1]This FOP is based on AASHTO 310-11 and has been modified per WSDOT standards. To view the redline modifications, contact the WSDOT Quality Systems Manager at 360-709-5412.

T 217 – Determination of Moisture in Soils by Means of a Calcium Carbide Gas Pressure Moisture Tester

T 224 – Correction for Coarse Particles in the Soil Compaction Test

T 255 – Total Evaporable Moisture Content of Aggregate by Drying

T 265 – Laboratory Determination of Moisture Content of Soils

T 272 – Family of Curves – One-Point Method

2.2 ASTM Test Method

D 2216 – Laboratory Determination of Moisture Content of Soil

D 2487 – Classification of Soils for Engineering Purposes (Unified Soil Classification System)

D 2488 – Description and Identification for Soils (Visual-Manual Procedure)

D 2937 – Density of Soil in Place by the Drive-Cylinder Method

D 4253 – Maximum Index Density and Unit Weight of Soils Using a Vibratory Table

D 4254 – Maximum Index Density and Unit Weight of Soils and Calculation of Relative Density

D 7013 – Standard Guide for Nuclear Surface Moisture and Density Gauge Calibration Facility Setup

2.3 WSDOT Standards

T 606 – Method of Test for Compaction Control of Granular Materials

SOP 615 – Determination of the % Compaction for Embankment & Untreated Surfacing Materials using the Nuclear Moisture-Density Gauge

3. Significance

3.1 The test method described is useful as a rapid, nondestructive technique for the in-place determination of the wet density and water content of soil and soil-aggregate.

3.2 The test method is used for quality control and acceptance testing of compacted soil and rock for construction and for research and development. The non-destructive nature allows repetitive measurements at a single test location and statistical analysis of the results.

3.3 Density – The fundamental assumptions inherent in the methods are that Compton scattering is the dominant interaction and that the material under test is homogeneous.

3.4 Moisture – The fundamental assumptions inherent in the test method are that the hydrogen present is in the form of water as defined by ASTM D 2216, and that the material under test is homogeneous.

3.5 Test results may be affected by chemical composition, sample heterogeneity, and, to a lesser degree, material density and the surface texture of the material being tested. The technique also exhibits spatial bias in that the gauge is more sensitive to water contained in the material in close proximity to the surface and less sensitive to water at deeper levels.

4. Interferences

4.1 In-Place Density Interferences

4.1.1 The chemical composition of the sample may affect the measurement, and adjustments may be necessary.

4.1.2 The gauge is more sensitive to the density of the material in close proximity to the surface in the Backscatter Method.

Note 1: The nuclear gauge density measurements are somewhat biased to the surface layers of the soil being tested. This bias has largely been corrected out of the Direct Transmission Method and any remaining bias is insignificant. The Backscatter Method is still more sensitive to the material within the first several inches from the surface. Density measurements with direct transmission is the WSDOT standard method for soil and soil aggregate.

4.1.3 Oversize rocks or large voids in the source-detector path may cause higher or lower density determination. Since there is lack of uniformity in the soil due to layering, rock, or voids the test site beneath the gauge will be excavated and a representative sample will be taken to determine the gradation per WSDOT SOP 615.

4.1.4 Keep all other radioactive sources at least the minimum distance recommended by the manufacture away from the gauge to avoid affecting the measurement.

4.2 In-Place Moisture Content Interferences

4.2.1 The chemical composition of the sample may dramatically affect the measurement and adjustments may be necessary. Hydrogen in forms other than water, as defined by ASTM D 2216, and carbon will cause measurements in excess of the true value. Some chemical elements such as boron, chlorine, and minute quantities of cadmium will cause measurements lower than the true value.

4.2.2 The water content determined by this test method is not necessarily the average water within the volume of the sample involved in the measurement. The measurement is heavily influenced by the water content of the material closest to the surface. The volume of soil and rock represented in the measurement is indeterminate and will vary with the water content of the material. In general, the greater the water content of the material, the smaller the volume involved in the measurement. At 10 lbs/ft^3 (160 kg/m^3), approximately 50 percent of the typical measurement results from the water content of the upper 2 to 3 in (50 to 75 mm).

4.2.3 Keep all other neutron sources at least the minimum distance recommended by the manufacture away from the gauge to avoid affecting the measurement.

5. Apparatus

5.1 Nuclear Density/Moisture Gauge – While exact details of construction of the gauge may vary, the system shall consist of:

5.1.1 A sealed source of high energy gamma radiation such as cesium or radium.

5.1.2 Gamma Detector – Any type of gamma detector such as a Geiger-Mueller tube(s).

5.2 Fast Neutron Source – A sealed mixture of a radioactive material such as americium, radium, or californium-252 and a target material such as beryllium.

5.3 Slow Neutron Detector – Any type of slow neutron detector such as boron trifluoride or helium-3 proportional counter.

5.4 Reference Standard – A block of material used for checking instrument operation, correction of source decay, and to establish conditions for a reproducible reference count rate.

5.5 Site Preparation Device – A plate, straightedge, or other suitable leveling tool which may be used for planing the test site to the required smoothness, and in the Direct Transmission Method, guiding the drive pin to prepare a perpendicular hole.

5.6 Drive Pin – A pin not to exceed the diameter of the rod in the Direct Transmission Gauge by more than ¼ in (6 mm) or as recommended by the gauge manufacturer used to prepare a hole in the material under test for inserting the rod.

5.7 Hammer – Hand-held hammer of sufficient size and weight to drive the drive pin into the material being tested. A slide hammer with an attached drive pin is an acceptable alternate to the Drive Pin, Hammer, and Drive Pin Extractor.

5.8 Drive Pin Extractor – A tool that may be used to remove the drive pin in a vertical direction so that the pin will not distort the hole in the extraction process.

6. Hazards

6.1 This gauge utilizes radioactive materials that may be hazardous to the health of the users unless proper precautions are taken. Users of this gauge must become familiar with applicable safety procedures and government regulations.

6.2 Effective user instructions together with routine safety procedures, such as source leak tests, recording, and evaluation of film badge data, etc., are a recommended part of the operation and storage of this gauge.

7. Calibration

Nuclear gauges used for the purpose of acceptance testing, independent assurance testing, or dispute resolution shall be calibrated

WSDOT-owned nuclear density gauges will be calibrated by WSDOT using the manufacturer's recommended procedures or may be calibrated by an external calibration facility that has been approved by the State Materials Engineer.

Nuclear gauges that are not owned by WSDOT shall be calibrated in accordance with AASHTO T 310 Annexes A1, A 2, and A3.

8. Standardization

8.1 Turn the gauge on and allow it to stabilize for a minimum of 45 minutes prior to standardization. Leave the power on during the day's testing.

Note 2: If for any reason the gauge loses power or is turned off during the work period, the Standard Count must be re-established prior to use.

8.2 Standardize the gauge at the start of each day's work and as often as deemed necessary by the operator or agency. Daily variations in Standard Count shall not exceed the daily variations established by the manufacturer of the gauge. Compare the daily Standard Count to the Density Standard Decay Sheet (Note 3) to ensure the Standard Count falls within acceptable limits. If the daily variations are exceeded after repeating the standardization procedure or if the daily Standard Count is outside the range of the Standard Decay Sheet, the gauge should be repaired and or recalibrated.

8.3 Record the Standard Count for both density and moisture in the Daily Standard Count Log. The exact procedure for standard count is listed in the manufacturer's operators manual.

Note 3: The Density Standard Decay Sheet is located in the calibration documentation. This sheet shows the anticipated Standard Count range based on the calculated decay rate of the gauges radioactive source over the passage of time.

9. Procedure

9.1 Select a test location per WSDOT SOP 615.

9.2 Prepare the test site in the following manner:

9.2.1 Remove all loose and disturbed material and additional material as necessary to expose the top of the material to be tested.

Note 4: The spatial bias should be considered in determining the depth at which the gauge is to be seated.

9.2.2 Select a horizontal area sufficient in size to accommodate four gauge readings that will be 90° to each other. Plane the area to a smooth condition so as to obtain maximum contact between the gauge and the material being tested.

9.2.3 The maximum void beneath the gauge shall not exceed ⅛ in (3 mm). Use native fines or fine sand to fill the voids and smooth the surface with a rigid plate or other suitable tool. The depth of the filler shall not exceed approximately ⅛ in (3 mm).

9.3 This section has been deleted because WSDOT does not use this method.

9.4 Direct Transmission Method of In-Place Nuclear Density and Moisture Content

9.4.1 When selecting a test location, the tester shall visually select a site where the least compactive effort has been applied. Select a test location where the gauge will be at least 6 in (150 mm) away from any vertical mass. If closer than 24 in (600 mm) to a vertical mass, such as in a trench, follow gauge manufacturer correction procedures.

The test location should be at least 33 ft (10 m) away from other sources of radioactivity and at least 10 ft (3 m) away from large objects or the minimum distance recommended by the manufacturer, whichever is the greater distance.

9.4.2 Make a hole perpendicular to the prepared surface using the guide and the hole-forming device (Section 5). The hole shall be a minimum of 2 in (50 mm) deeper than the desired measurement depth and of an alignment that insertion of the probe will not cause the gauge to tilt from the plane of the prepared area.

9.4.3 Mark the test area to allow the placement of the gauge over the test site and to allow the alignment of the source rod to the hole. Follow manufacturer recommendations if applicable.

Note 5: For alignment purposes, the user may expose the source rod for a maximum of ten seconds.

9.4.4 Remove the hole forming device carefully to prevent the distortion of the hole, damage to the surface, or loose material to fall into the hole.

Note 6: If the hole cannot be maintained, contact the Regional Materials Laboratory for directions on how to proceed.

9.4.5 Place the instrument on the material to be tested, making sure of maximum surface contact as described above.

9.4.6 Lower the source rod into the hole to the desired test depth. Pull gently on the gauge in the direction that will bring the side of the probe to face the center of the gauge so that the probe is in intimate contact with the side of the hole in the gamma measurement path.

9.4.7 If the gauge is so equipped, set the depth selector to the same depth as the probe before recording the automated (gauge computed densities, moisture contents, and weights) values.

9.4.8 Secure and record one, one minute dry density and moisture content readings, then turn the gauge 90º and perform another set of readings. If the two dry density readings are not within 3 lbs/cf (50 kg/m^3) of each other, see Note 7.

Note 7: If two readings are not within tolerances stated, rotate gauge 90º and retest. Again compare both 90º readings. If after four readings the results are not within the tolerances stated, rotate gauge 90º and retest. Again compare both readings. If these reading are still not within tolerances stated, move to another location to perform test.

10. Calculation of Results

10.1 If dry density is required, the in-place water content may be determined by using the nuclear methods described herein, gravimetric samples and laboratory determination, or other approved instrumentation.

10.1.1 If the water content is determined by nuclear methods, use the gauge readings directly.

10.1.2 If the water content is determined by other methods and is in the form of percent, proceed as follows:

$$d = \frac{100}{100+W} (m)$$

where:

d = dry density in lb/ft^3 (kg/m^3)
m = wet density in lb/ft^3 (kg/m^3)
W = water as a percent of dry mass

10.2. Percent Compaction

WSDOT has deleted this section. Refer to WSDOT SOP 615 for determining the percent compaction.

11. Report

WSDOT has deleted this section. Refer to WSDOT SOP 615 for reporting.

12. Precision and Bias

WSDOT has deleted this section. Refer to AASHTO T 310 for precision and bias information.

Appendix

WSDOT has deleted this section. WSDOT uses the manufacturer's software to calibrate the gauge.

Performance Exam Checklist

In-Place Density and Moisture Content of Soil and Soil-Aggregate by Nuclear Methods (Shallow Depth)
FOP for AASHTO T 310

Participant Name _____ Exam Date _____

Procedure Element	Yes	No
1. The tester has a copy of the current procedure on hand?		
2. All equipment is functioning according to the test procedure, and if required, has the current calibration/verification tags present?		
3. Gauge turned on and allowed to stabilize?		
4. Gauge standardized and standard count recorded?		
5. Test location selected per WSDOT SOP 615?		
6. Loose, disturbed material removed?		
7. Flat, smooth area prepared?		
8. Surface voids filled with native fines (⅛ in (3 mm) maximum thickness)?		
9. Hole driven 2 in (50 mm) deeper than material to be tested?		
10. Gauge placed, probe placed, and source rod lowered without disturbing loose material?		
11. For alignment purposes, did not expose the source rod for more than 10 seconds?.		
12. Method B		
a. Gauge firmly seated and gently pulled back so that source rod is against hole?		
b. A one-minute count taken; dry density and moisture data recorded?		
c. Gauge turned 90° (180° in trench)?		
d. Gauge firmly seated and gently pulled back so that source rod is against hole?		
e. A second one-minute count taken; dry density and moisture data recorded?		
f. Dry density counts within 3 lb/ft3 (50 kg/m3)?		
g. Average of two tests?		
13. A minimum 9 lbs (4 kg) sample obtained from below gauge?		
14. Oversize determined following WSDOT SOP 615?		
15. All calculations performed correctly?		
16. Nuclear Gauge secured in a manner consistent with current DOH requirements?		

First Attempt: Pass Fail Second Attempt: Pass Fail

Signature of Examiner _____

Comments:

WSDOT FOP for AASHTO T 312

Preparing Hot-Mix Asphalt (HMA) Specimens by Means of the Superpave Gyratory Compactor

1. Scope

   1.1 This standard covers the compaction of cylindrical specimens of hot-mix asphalt (HMA) using the Superpave gyratory compactor.

   1.2 This standard may involve hazardous materials, operations, and equipment. This standard does not purport to address all of the safety problems associated with its use. It is the responsibility of the user of this standard to establish appropriate safety and health practices and determine the applicability of regulatory limitations prior to use.

2. Referenced Documents

   2.1 AASHTO Standards

   M 231 – Weighing Devices Used in Testing of Materials

   T 344 – Evaluation of the Superpave Gyratory Compactor (SGC) Internal Angle of Gyration Using Simulated Loading

   R 30 – Mixture Conditioning of Hot-Mix Asphalt (HMA)

   R 35 – Superpave Volumetric Design for Hot-Mix Asphalt (HMA)

   T 166 – Bulk Specific Gravity of Compacted Hot Mix Asphalt (HMA) Using Saturated Surface-Dry Specimens

   T 168 – Sampling Bituminous Paving Mixtures

   T 209 – Theoretical Maximum Specific Gravity and Density of Hot Mix Asphalt (HMA)

   T 275 – Bulk Specific Gravity of Compacted Hot Mix Asphalt (HMA) Using Paraffin-Coated Specimens

   T 316 – Viscosity Determination of Asphalt Binder Using Rotational Viscometer

   2.2 Other Standards

   WSDOT SOP 731 – Method for Determining Volumetric Properties of Hot Mix Asphalt (HMA)

3. Significance and Use

   3.1. This standard is used to prepare specimens for determining the mechanical and volumetric properties of HMA. The specimens simulate the density, aggregate orientation, and structural characteristics obtained in the actual roadway when proper construction procedure is used in the placement of the paving mix.

   3.2. This test method may be used to monitor the density of test specimens during their preparation. It may also be used for field control of an HMA production process.

4. Apparatus

4.1. Superpave Gyratory Compactor – An electrohydraulic or electromechanical compactor with a ram and ram heads as described in Section 4.3. The axis of the ram shall be perpendicular to the platen of the compactor. The ram shall apply and maintain a pressure of 600 ± 18 kPa perpendicular to the cylindrical axis of the specimen during compaction (Note 1). The compactor shall tilt the specimen molds at an average internal angle of 1.16 ± 0.02° (20.2 ± 0.35 mrad), determined in accordance with AASHTO T 344. The compactor shall gyrate the specimen molds at a rate of 30.0 ± 0.5 gyrations per minute throughout compaction.

Note 1: This stress calculates to 10,600 ± 310 N total force for 6 inches (150 mm) specimens.

4.1.1 Specimen Height Measurement and Recording Device – When specimen density is to be monitored during compaction, a means shall be provided to continuously measure and record the height of the specimen to the nearest 0.1 mm during compaction once per gyration.

4.1.2 The system may include a connected printer capable of printing test information, such as specimen height per gyration. In addition to a printer, the system may include a computer and suitable software for data acquisition and reporting.

4.2 Specimen Molds – Specimen molds shall have steel walls that are at least 7.5 mm thick and are hardened to at least a Rockwell hardness of C48. The initial inside finish of the molds shall have a root mean square (rms) of 1.60 um or smoother (Note 2). New molds shall have an inside diameter of 149.90 to 150.00 mm and be at least 250 mm high at room temperature. The inside diameter of in-service molds shall not exceed 150.2 mm.

Note 2: Smoothness measurement is in accordance with ANSI B 46.1. One source of supply for a surface comparator, which is used to verify the rms value of 1.60 um, is GAR Electroforming, Danbury, Connecticut.

4.3 Ram Heads and Mold Bottoms – Ram heads and mold bottoms shall be fabricated from steel with a minimum Rockwell hardness of C48. The ram heads shall stay perpendicular to its axis. The platen side of each mold bottom shall be flat and parallel to its face. All ram and base plate faces (the sides presented to the specimen) shall be flat to meet the smoothness requirement in Section 4.2 and shall have a diameter of 149.50 to 149.75 mm.

4.4 Thermometric Device – Used for determining the temperature of aggregates, binder, and HMA between 18 to 418ºF (10 and 232ºC).

4.5 Balance – A balance meeting the requirements of M 231, Class G5, for determining the mass of aggregates, binder, and HMA.

4.6 Oven – An oven, thermostatically controlled to ± 5ºF (± 3ºC) for heating aggregates, binder, HMA, and equipment as required. The oven shall be capable of maintaining the temperature required for mixture conditioning in accordance with R 30.

4.7 Miscellaneous – Flat-bottom metal pans for heating aggregates, scoop for batching aggregates, containers (grill-type tins, beakers, containers for heating asphalt), large mixing spoon or small trowel, large spatula, gloves for handling hot equipment, paper disks, mechanical mixer (optional), lubricating materials recommended by the compactor manufacturer.

4.8 Maintenance – In addition to routine maintenance recommended by the manufacturer, check the Superpave gyratory compactor's mechanical components for wear, and perform repair, as recommended by the manufacturer.

5. Hazards

5.1 Use standard safety precautions and protective clothing when handling hot materials and preparing test specimens.

6. Standardization

6.1 Items requiring periodic verification of calibration include the ram pressure, angle of gyration, gyration frequency, LVDT (or other means used to continuously record the specimen height), and oven temperature. Verification of the mold and platen dimensions and the inside finish of the mold are also required. When the computer and software options are used, periodically verify the data processing system output using a procedure designed for such purposes. Verification of calibration, system standardization, and quality checks may be performed by the manufacturer, other agencies providing such services, or in-house personnel. Frequency of verification shall follow the manufacturer's recommendations.

6.2 The angle of gyration refers to the internal angle (tilt of mold with respect to end plate surface within the gyratory mold). The calibration of the internal angle of gyration should be verified in accordance with AASHTO T 344.

7. Preparation of Apparatus

7.1 Immediately prior to the time when the HMA is ready for placement in the mold, turn on the main power for the compactor for the manufacturer's required warm-up period.

7.2 Verify the machine settings are correct for angle, pressure, and number of gyrations.

7.3 Lubricate any bearing surfaces as needed per the manufacturer's instructions.

7.4 When specimen height is to be monitored, the following additional item of preparation is required. Immediately prior to the time when the HMA is ready for placement in the mold, turn on the device for measuring and recording the height of the specimen, and verify the readout is in the proper units, mm, and the recording device is ready. Prepare the computer, if used, to record the height data, and enter the header information for the specimen.

8. HMA Mixture Preparation

8.1 Weigh the appropriate aggregate fractions into a separate pan, and combine them to the desired batch weight. The batch weight will vary based on the ultimate disposition of the test specimens. If a target air void level is desired, as would be the case for Superpave mix analysis and performance specimens, batch weights will be adjusted to create a given density in a known volume. If the specimens are to be used for the determination of volumetric properties, the batch weights will be adjusted to result in a compacted specimen having dimensions of 150 mm in diameter and 115 ± 5 mm in height at the desired number of gyrations.

Note 3: It may be necessary to produce a trial specimen to achieve this height requirement. Generally, 4500 to 4700 g of aggregate are required to achieve this height for aggregates with combined bulk specific gravities of 2.55 to 2.70, respectively.

8.2 Place the aggregate and binder container in the oven, and heat them to the required mixing temperature.

8.2.1. The mixing temperature range is defined as the range of temperatures where the unaged binder has a kinematic viscosity of 170 ± 20 mm^2/s (approximately 0.17 ± 0.02 Pa·s for a binder density of 1.00 g/cm^3) measured in accordance with T 316.

Note 4: Modified asphalts may not adhere to the equi-viscosity requirements noted, and the manufacturer's recommendations should be used to determine mixing and compaction temperatures.

Note 5: The SI unit kinematic viscosity is m^2/s; for practical use, the submultiple mm^2/s is recommended. The more familiar centistokes is a cgs unit of kinematic viscosity; it is equal to 1 mm^2/s. The kinematic viscosity is the ratio of the viscosity of the binder to its density. For a binder with a density equal to 1.000 g/cm^3, a kinematic viscosity of 170 mm^2/s is equivalent to a viscosity of 0.17 Pa·s measured in accordance with T 316.

8.3 Charge the mixing bowl with the heated aggregate from one pan and dry-mix thoroughly. Form a crater in the dry blended aggregate and weigh the required amount of binder into the mix. Immediately initiate mixing.

8.4 Mix the aggregate and binder as quickly and thoroughly as possible to yield HMA having a uniform distribution of binder. As an option, mechanical mixing may be used.

8.5 After completing the mixture preparation, perform the required mixture conditioning in accordance with R 30.

8.6 Place a compaction mold and base plate in an oven not to exceed 350°F for a minimum of 60 minutes prior to the estimated beginning of compaction (during the time the mixture is being conditioned in accordance with R 30).

8.7 Following the mixture conditioning period specified in R 30, if the mixture is at the compaction temperature, proceed immediately with the compaction procedure as outlined in Section 9. If the compaction temperature is different from the mixture conditioning temperature used in accordance with R 30, place the mix in another oven at the compaction temperature for a brief time (maximum of 30 minutes) to achieve the required temperature.

8.7.1 The compaction temperature is the mid-point of the range of temperatures where the unaged binder has a kinematic viscosity of 280 ± 30 mm^2/s (approximately 0.28 ± 0.03 Pa·s) measured in accordance with T 316 (Note 4).

8.8 If loose HMA plant mix is used, the sample should be obtained in accordance with T 168. Place the gyratory sample in an oven set no more than 25° F above the compaction temperature (Note 1) as soon as possible to reduce sample cooling. The gyratory test is temperature sensitive. The sample should be heated five degrees above the compaction temperature as shown on the mix design verification report.

Note 1: Any change in compaction temperature must be confirmed by the temperature viscosity chart provided by the asphalt supplier, which can be obtained from the Paving Contractor.

9. Compaction Procedure

9.1 When the temperature of the HMA is five degrees above the compaction temperature as shown on the Mix Design Verification Report, remove the heated mold, base plate, and upper plate (if required) from the oven. Place the base plate and a paper disk in the bottom of the mold.

9.2 Remove the pan of HMA from the oven and in one motion invert the pan onto the construction paper, vinyl mat, etc. Quickly remove any material that remains in the pan and include it with the HMA sample to be compacted. Grasp opposing edges of the paper and roll them together to form the HMA into a cylindrical shape. Insert one end of the paper roll into the bottom of the compaction mold and remove the paper as the HMA slides into the mold. This process needs to be accomplished in approximately 60 seconds. Place the mixture into the mold in one lift. Care should be taken to avoid segregation in the mold. After all the mix is in the mold, level the mix, and place another paper disk and upper plate (if required) on top of the leveled materials.

9.3 Load the charged mold into the compactor and center the loading ram.

9.4 Apply a pressure of 600 ± 18 kPa on the specimen.

9.5 Apply a 1.16 ± 0.02° (20.2 ± 0.35 mrad) average internal angle, as appropriate, to the mold assembly, and begin.

9.6 Allow the compaction to proceed until the desired number of gyrations specified is reached and the gyratory mechanism shuts off.

9.7 Remove the angle from the mold assembly; retract the loading ram; remove the mold from the compactor (if required); and extrude the specimen from the mold.

Note 6: The specimens can be extruded from the mold immediately after compaction for most HMA. However, a cooling period of 5 to 10 minutes in front of a fan may be necessary before extruding some specimens to insure the specimens are not damaged.

9.8 Remove the paper disks from the top and bottom of the specimens.

Note 7: Before reusing the mold, place it in an oven for at least 5 minutes. The use of multiple molds will speed up the compaction process.

10. Density Procedure

10.3 When the specimen height is to be monitored, record the specimen height to the nearest 0.1 mm after each revolution.

11. Density Calculations

WSDOT has removed this section. Refer to WSDOT SOP 731.

12. Report

WSDOT has removed this section. Refer to WSDOT SOP 731.

13. Precision and Bias

See AASHTO T 312 for precision and bias.

Performance Exam Checklist

Determining Density of Hot Mix Asphalt (HMA) Specimens by Means of the SHRP Gyratory Compactor
FOP for AASHTO T 312

Participant Name _____ Exam Date _____

Procedure Element	**Yes**	**No**
1. The tester has a copy of the current procedure on hand?		
2. All equipment is functioning according to the test procedure, and if required, has the current calibration/verification tags present?		
3. Main power for compactor turned on for manufacturer's required warm-up period if applicable?		
4. Angle, pressure, and number of gyrations set?		
5. Bearing surfaces, rotating base surface, and rollers lubricated?		
Preparation of Mixtures		
1. Is mixture 5°F above compaction temperature? If not, was mixture placed in an oven and brought up to 5°F above compaction temperature?		
2. Mold and base plate heated for a minimum of 60 minutes in an oven at a temperature not to exceed 350°F?		
Plant Mix – Loose mix brought to compaction temperature by uniform heating immediately prior to molding.		
1. Mold, base plate, and upper plate (if required) removed from oven and paper disk placed on bottom of mold?		
2. Mixture placed into mold in one lift, mix leveled, and paper disk and upper plate (if required) placed on top of material?		
3. Mold loaded into compactor and a pressure of 600 ± 18 kPa applied?		
4. Angle of 1.16 ± 0.02° (20.2 ± 0.35 mrad) applied to the mold assembly and gyratory compaction started?		
5. Compactor shuts off when appropriate gyration level is reached?		
6. Mold removed and specimen extruded?		
7. Paper disks removed?		
8. If specimens are used for determination of volumetric properties, are the heights of the specimens 115 ± 5 mm?		
9. All calculations performed correctly?		

First Attempt: Pass Fail Second Attempt: Pass Fail

Signature of Examiner _____

Comments:

WSDOT Test Method T 313

Method of Test for Cement-Latex Compatibility

1. Scope

   This method tests the compatibility of cement and latex additives when combined.

2. Equipment

   a. Two brass cylindrical unit weight cups having an inside diameter of 3 in (76 mm) and a depth of approximately 3 15/32 in (88 mm).

   b. Mixer, bowl, and paddle conforming to AASHTO 162.

   c. Straightedge — A steel straight edge, not less than 4 in (102 mm) long, and not less than 1/16 in (1.6 mm) nor more than 1/8 in (3.2 mm) in thickness.

   d. Glass Graduated Cylinder — Shall have 250 ml capacity, graduations at 2 ml intervals, made to deliver indicated volume at 20°C.

   e. Glass Beaker — Shall have at least a 300 ml capacity.

   f. Balance — Must conform to ASTM C 1005.

   g. Tapping Stick — Made of hardwood, a diameter of 1/8 in (3.2 mm), and a length of 6 in (152 mm).

   h. Tamper — Made of hardwood, a diameter of 7/16 in (11 mm), and a length of 6 in (152 mm).

   i. Scoop — Approximately 8 in (203 mm) long, and 3 in (76 mm) wide.

   j. Scraper — Shall consist of a semirigid rubber blade attached to a handle about 6 in (152 mm) long. Blade is about 3½ in (90 mm) long and 2 in (50 mm) wide. (Kitchen tool called a plate and bowl scraper meets these requirements.)

3. Procedure

   a. Weigh out a batch of washed and dried Steilacoom aggregate (B-1), using the follwing table:

		Batch Weights (grams)	
U.S. No. Screen Size		**Individual Wt.**	**Accumulative Wt.**
⅜ in - #4	(9.5 mm - 4.75 mm)	14	14
#4 - #8	(4.75 mm - 2.36 mm)	205	219
#8 - #16	(2.36 mm - 1.18 mm)	186	405
#16 - #30	(1.18 mm - 600 um)	230	635
#30 - #50	(600 µm - 300 µm)	561	1196
#50 - minus	(600 µm - minus)	278	1474

   b. Weigh out 1 lb (454 g) of the cement candidate. Measure 4.80 oz (142 ml) of the latex candidate into a beaker. 2.976 oz. (Measure 88 ml) of water into the graduated cylinder.

c. Put the aggregate and cement into the mixer bowl. (Adjust the blade to bowl clearance for the largest aggregate size first.) Mix the dry ingredients for 45 seconds at speed 1. Stop the mixer.

d. Pour the latex sample into the mixer bowl. Rinse the latex beaker with the measured mixing water, then pour the solution into the mixing bowl.

e. Mix for one minute at speed 1.

f. Stop mixer for three minutes. Scrape down the sides and check the bottom of the bowl for sand pockets using the bowl scraper.

g. Mix for ten seconds at speed 1.

h. Tare the first unit weight (mass) cup.

i. Use the scoop to fill the unit weight (mass) cup in three lifts. For each lift, tamp with the small wood dowel 25 times, just penetrating the layer below it, and strike the side of the unit weight (mass) cup sharply five times with the large wood dowel, at equal intervals around its circumference.

j. Cut off the mortar to a plane surface, flush with the top of the unit weight (mass) cup, by drawing the straight edge, held at 90 degrees, with a sawing motion across the top, making two passes over the entire surface, the second pass being made at right angles to the first. Wipe off all mortar and water from the sides of the unit weight (mass) cup. Record the weight (mass). Tare the second unit weight (mass) cup and fill with the remaining mortar from the bowl, and repeat the procedure. Record the second weight (mass).

4. CALCULATIONS

a. Calculate the average weight (mass) of the two samples.

5. SIGNIFICANCE

If a latex additive and concrete mix are incompatible, they will react chemically, changing the specific gravity and density, which will adversely affect the final strength of the concrete/latex. In this test method, an adverse reaction is determined by examining the weight (mass) of the two wet products when combined. A very lightweight means there is probably a problem, and a different latex or cement should be submitted for testing.

Washington State
Department of Transportation

WSDOT Test Method T 314

Method of Test for Photovolt Reflectance

1. Scope
   a. This method covers the determination of the 45-degree, 0-degree directional reflectance factor of nonfluorescent opaque specimens by means of a filter photometer.
2. Apparatus
   a. Photovoltmeter/reflectometer conforming to ASTM E 1347.
   b. Calibrated standard plaques.
   c. Black plastic film canister.
   d. Filters.
3. Procedure
   a. Reflectometer Calibration
      1. Warm up the reflectometer for 30 minutes before use.
      2. Calibrate and zero the reflectometer, Photovolt Model 577 or equivalent per ASTM E 1347, according to the manufacturer's User Manual.
         a. Select standard plaque for calibration that is slightly higher than the expected percent reflectance of the samples.
   b. Reflectance Determination
      1. For testing lane markers, move the unit to determine an average reading. Recheck the standard plaque reading and the zero reading between each sample measurement.
      2. Report
         a. Report the average result of all readings for a sample to the nearest percent.

Washington State
Department of Transportation

WSDOT SOP 318

Standard Operating Procedure for Melting of Flexible Bituminous Pavement Marker Adhesive for Evaluation

1. Scope

   1.1. This standard covers the handling, cutting, and melting of Flexible Bituminous Adhesive.

   1.2. This standard may involve hazardous materials, operations, and equipment. This standard does not purport to address all of the safety concerns associated with its use. It is the responsibility of the user of this standard to establish appropriate safety and health practices and determine the applicability of regulatory limitations prior to use.

2. Referenced Documents

   2.1. ASTM Standards:

   - D 5167 Standard Practice for Melting of Hot-Applied Joint and Crack Sealant and Filler for Evaluation.

3. Significance and Use

   3.1. This standard establishes the procedure for handling, cutting and melting of Flexible Bituminous Pavement Marker Adhesives in preparation for the making of test specimens used in the laboratory evaluations of the Flexible Bituminous Pavement Marker Adhesives.

4. Apparatus

   4.1. Laboratory Melter:

   - An appropriate laboratory melter as described in section 6.1 of ASTM D5167.

   4.2. Cutting Device:

   - A heated knife or saw capable of cutting a vertical cross section from a solid adhesive sample.

5. Hazards

   5.1. Use standard safety precautions and Personal Protective Equipment (PPE) when handling hot materials and preparing test specimens.

   5.2 Prior to handling, cutting, or melting flexible bituminous pavement marker adhesive, a Material Safety Data Sheet (MSDS) must be obtained from the manufacturer so that proper safe handling techniques will be used.

6. Procedure

6.1 Cut a complete vertical section from the block of adhesive in order to obtain a uniform representative sample (see figure 1) and to supply enough product to pour all specimens for testing.

6.2 To avoid compatibility problems clean the melting container so that it is free of all cleaning solvents and previously melted material.

6.3 All segments from one vertical section must be melted in the same melting container. If necessary cut the sample to fit into container.

6.4 Heat and maintain the oil bath to 405 ± 5°F. Place the sample container into the heating apparatus. Insert paddle for stirring as soon as sample begins to melt. Begin continuous stirring immediately after inserting the paddle. Check the sample temperature frequently. Keep the sample container covered except when checking the sample temperature.

6.5 Heat the sample to 398 ± 2°F. Once the sample has become fluid and reached temperature, stop the mechanical stirring device and immediately remove sample container from the melter. Clean oil residue or wrap container with towel to ensure bath oil does not contaminate sample. Pour all required specimens immediately following removal of the sample container from the melter to minimize temperature loss.

6.6 Do not reuse sample once melted and split for testing. If retesting is necessary, a new specimen must be cut from the original sample.

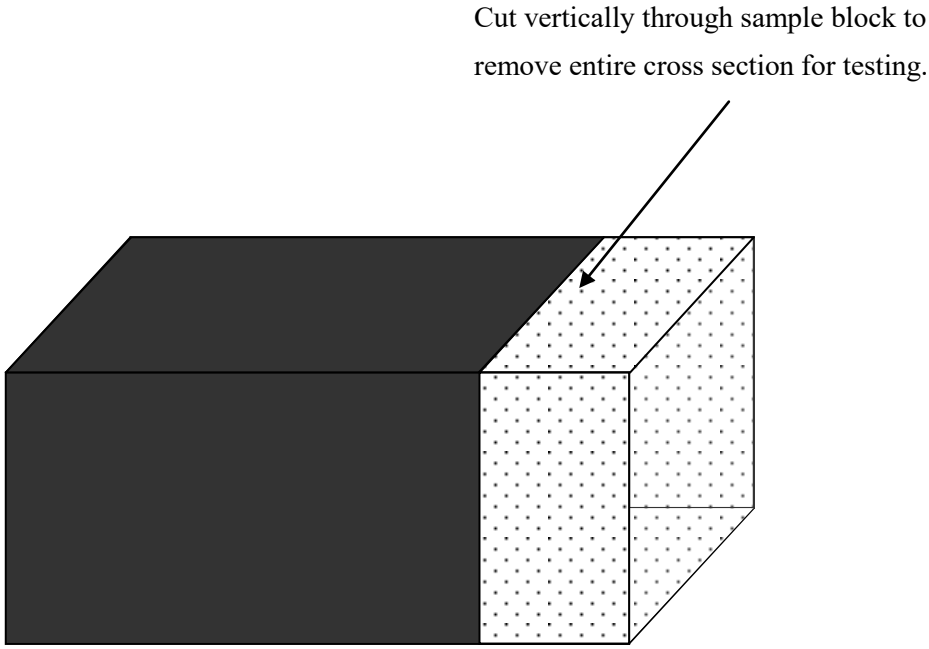

Figure 1

WSDOT Errata to AASHTO T 324

Hamburg Wheel-Track Testing of Compacted Hot Mix Asphalt (HMA)

AASHTO T 324 has been adopted by WSDOT with the following changes:

7. Determining Air Void Content

   7.3. Determine the air void content of the specimens in accordance with T 269. The recommended target air void content is 7.0 ± 1.0 percent for laboratory-compacted SGC cylindrical specimens and 7.0 ± 1.0 percent for laboratory-compacted slab specimens. Field specimens may be tested at the air void content at which they are obtained.

8. Procedure

   8.6.1. Select a test temperature of 50° C.

Tester Qualification Practical Exam Checklist

Hamburg Wheel-Track Testing of Compacted Hot Mix Asphalt (HMA)
FOP for AASHTO T 324

Participant Name _____ Exam Date _____

Procedure Element	**Yes**	**No**
1. The tester has a copy of the current procedure on hand?		
2. All equipment is functioning according to the test procedure, and if required, has the current calibration/verification tags present?		
3. Specimen height is 62 ± 1.0 mm (2.44 ± 0.04 in.) or 38.1 mm (1.5 inch) minimum for cores?		
4. Specimen meets air void tolerance of 7.0 + 1.0 %?		
5. Specimens placed in molds and loaded into trays with a maximum gap of 7.5 mm between molds?		
6. Tray mounted in machine and securely fastened?		
7. Sample data and testing parameters entered into computer? (e.g., sample name, agg source, wheel speed, maximum rut depth, number of passes, and water temperature)		
8. Wheels gently lowered and samples allowed to soak at testing temperature for 30 minutes?		
9. Wheel tracking device shut off when test parameters are reached?		
10. Test data obtained for charting and analysis?		

First Attempt: Pass Fail Second Attempt: Pass Fail

Signature of Examiner

Comments:

WSDOT FOP for AASHTO T 329[1]

Moisture Content of Asphalt (HMA) by Oven Method

1. Scope

   1.1 This method is intended for the determination of moisture content of hot mix asphalt (HMA) by drying in an oven.

   1.2 The values stated in SI units are to be regarded as the standard.

   1.3 This standard may involve hazardous materials, operations, and equipment. This standard does not purport to address all of the safety concerns associated with its use. It is the responsibility of the user of this standard to consult and establish appropriate safety and health practices and determine the applicability of regulatory limitations prior to use.

2. Referenced Documents

   2.1 AASHTO Standards

   M 231 – Weighing Devices Used in the Testing of Materials

   T 168 – Sampling Bituminous Paving Mixtures

   2.2 WAQTC Standards

   T 168 – Sampling Bituminous Paving Mixtures

   2.3 WSDOT Standards

   T 712 – Standard Method of Reducing Hot Mix Asphalt Paving Mixtures

3. Terminology

   3.1 Constant mass shall be defined as the mass at which further drying at 325 ± 25°F (163 ± 14°C) does not alter the mass by more than 0.1 percent.

4. Summary of Test Method

   4.1 A sample of HMA is dried in a forced-air, ventilated, or convection oven to a constant mass.

5. Apparatus

   5.1 Balance or Scale – 4.4-lb (2-kg) capacity, readable to at least 0.1 g and conforming to the requirements of M 231.

   5.2 Forced-Air, Ventilated, or Convection Oven – Capable of maintaining the temperature surrounding the sample at 325 ± 25°F (163 ± 14°C).

   5.3 Sample Container – The container in which the sample is dried shall be of sufficient size to contain the sample without danger of spilling and to allow the sample to be evenly distributed in a manner that will allow completion of the test in an expeditious manner.

[1]This FOP is based on AASHTO T 329-08 and has been modified per WSDOT standards. To view the redline modifications, contact the WSDOT Quality Systems Manager at 360-709-5412.

5.4 Thermometric Devices – Armored glass, Infrared gun or dial-type thermometers with metal stems for determining the temperature of aggregates, binder, and HMA.

6. Sample

6.1 A sample of HMA shall be obtained in accordance with WSDOT FOP for WAQTC T 168.

6.2 The sample shall be reduced in size in accordance with WSDOT T 712. The size of the test sample shall be a minimum of 1,000 g.

7. Procedure

7.1 Determine and record the mass of the sample container to the nearest 0.1g.

7.2 Place the test sample in the sample container. Determine and record the temperature of the test sample. To facilitate drying, evenly distribute the test sample in the sample container.

7.3 Determine and record the total mass of the sample container and moist test sample to the nearest 0.1 g.

7.4 Preheat the oven to drying temperature of 325 ± 25°F (163 ± 14°C).

Note 1: For repeatability between operators and or laboratories the difference between drying temperatures for samples should not exceed 15°F (9°C).

7.5 Calculate the mass of the initial, moist test sample by subtracting the mass of the sample container determined in Section 7.1 from the total mass of the sample container and moist test sample determined in Section 7.3.

7.6 The test sample shall be initially dried for a minimum of 90 minutes, and it's mass determined. Then, at 30 min intervals until constant mass is achieved.

Note 2: The moisture content of test samples and the number of test samples in the oven will affect the rate of drying at any given time. Placing wet test samples in the oven with nearly dry test samples could affect the drying process.

7.7 Cool the sample container and test sample to approximately the same temperature as determined in Section 7.2.

7.8 Determine and record the total mass of the sample container and dry test sample to the nearest 0.1 g.

Note 3: Do not attempt to remove the test sample from the sample container for the purposes of determining the dry mass of the test sample.

7.9 Calculate the mass of the final, dry test sample by subtracting the mass of the sample container determined in Section 7.1 from the total mass of the sample container and dry test sample determined in Section 7.8.

8. Calculations

8.1 WSDOT uses the following formula to calculate moisture content:

8.1.1

$$\text{Moisture Content, \%} = \frac{M_i - M_f}{M_i} \times 100$$

Where:

M_i = Mass of the initial, moist test sample
M_f = Mass of the final, dry test sample

Example: M_i = 1,389.8 g

M_f = 1,388.0 g

$$\text{Moisture Content} = \frac{1{,}389.8 - 1{,}388.0}{1{,}389.8} \times 100 = 0.129\% = 0.13\%$$

9. Report

9.1 Report the moisture content to the nearest 0.01 percent.

9.2 Report the results using one or more of the following:

- Materials Testing System (MATS)
- WSDOT Forms 350-092 and 350-157
- Form approved in writing by the State Materials Engineer

Performance Exam Checklist

Moisture Content of Asphalt (HMA) by Oven Method
WSDOT FOP for AASHTO T 329

Participant Name _____ Exam Date _____

Procedure Element	**Yes**	**No**
1. The tester has a copy of the current procedure on hand?	❒	❒
2. All equipment is functioning according to the test procedure, and if required, has the current calibration/verification tags present?	❒	❒

Test for Moisture

1. Representative sample obtained; 1,000 g minimum?	❒	❒
2. Mass of sample determined to nearest 0.1 g?	❒	❒
3. Initial temperature recorded?	❒	❒
4. Sample placed in drying oven for a minimum of 90 minutes?	❒	❒
5. Sample dried to a constant weight at 325 ±25° F?	❒	❒
6. Samples checked for additional loss?	❒	❒
7. Sample and container cooled to approximately the initial temperature before mass determined?	❒	❒
8. Calculation of moisture content performed correctly?	❒	❒

% Moisture as percent of Wet Mass

$$\frac{M_i - M_f}{M_i} \times 100$$

First Attempt: Pass ❒ Fail ❒ Second Attempt: Pass ❒ Fail ❒

Signature of Examiner _____

Comments:

WSDOT Test Method T 330

Method for Coatings (Pigmented Sealers) Used on Concrete Structures

Scope

The test method covers preparing film of uniform thickness of coating on test panels, the calculation of color differences from instrumentally measured color coordinates and the infrared identification of vehicle from pigmented sealer.

Apparatus

Penopac paper charts/test panel.

Film Applicator Blade

Plastic centrifuge tube -50 ml capacity

Centrifuge machine

Fourier Transform Infrared Spectrophotometer (FTIR)

Portable Color Spectrophotometer – BYK-Gardner

Procedure

1. Gently stir pigmented sealer until sample is thoroughly mixed, usually 3-5 minutes is sufficient.
2. Prepare a uniform film of a coating material is produced on a test panel by means of a hand-held applicator blade. The thickness of coating applied is controlled by the rate at which the applicator blade is drawn across the test panel, the viscosity of material, the amount of nonvolatile matter in the material, and the clearance of the blade.
   a. Select an applicator blade that has a clearance that will provide a theoretical wet film thickness of 6 mils.
   b. Position the applicator blade near the edge of the panel and place a pool of the liquid material in front of it.
   c. Grasp the sides of the applicator with the fingers and pull it across the panel at a speed of about 10-12 inches/second.
   d. Air dry the applied coating in a horizontal position in a dust free atmosphere.

3. Perform instrumental measurements using portable spectrophotometer and calculate color differences between working standard and applied coating on test panel.
   a. Calibrate and verify the portable spectrophotometer in accordance to the manufacturer's user manual.
   b. Take the spectrophotometer reading on the prepared dry sample overlaying the white matte section of the Penopac paper chart/test panel.
   c. Report the spherical spectral Delta E (CIE L*a*b*) ΔE*ab and the gloss reading.
4. Prepare infrared spectra from the coating vehicle.
   a. Place 30 – 45 mls of thoroughly mixed pigmented sealer in a 50 ml centrifuge tube. Spin in a centrifuge at approximately 2000 RPM's until clear vehicle is visible on the top of the sealer.
   b. Initialize and verify the FTIR is optimally functioning according to the manufacturer's user manual. Set the configuration so that the X axis reads from 500 to 4000 wavenumbers and the Y axis is reading in percent transmittance.
   c. Analyze the separated vehicle and compare the test sample results to the library of sample spectral scans. The resulting spectral scan is specific to this class of material – methyl methacrylate-ethyl acrylate copolymer, Washington State gray, Mount Saint Helen's Gray, Mt. Baker Gray or Cascade Green. The sample should be within a minimum match of 80% to the specific material scan in the library file.

WSDOT FOP for AASHTO T 331

Bulk Specific Gravity (G_{mb}) and Density of Compacted Hot Mix Asphalt (HMA) Using Automatic Vacuum Sealing Method

AASHTO T 331 has been adopted by WSDOT with the following changes:

6. Procedure

AASHTO PP 75 shall be used throughout section 6 in lieu of ASTM D7227/D7227M

Note 3: Laboratory specimens 3000 grams or greater shall be cooled to room temperature for a minimum of 15 hours and a maximum of 24 hours at 77 ± 9°F (25 ± 5°C).

8. Verification

8.1 WSDOT VP 103 shall be used for vacuum system verification.

8.2 This section is deleted.

Performance Exam Checklist

Bulk Specific Gravity of Compacted HMA Using Automatic Vacuum Sealing Method FOP for AASHTO T 331

Participant Name _____ Exam Date _____

Procedure Element	**Yes**	**No**
1. The tester has a copy of the current procedure on hand?		
2. All equipment is functioning according to the test procedure, and if required, has the current calibration/verification tags present?		
3. Water bath of suitable size to entirely submerge and suspend the specimen with an adequate holder?		
4. Water bath equipped with an overflow outlet?		
5. Water bath controlled to 77 ± 1.8°F (25 ± 1°C)?		
6. Plastic bag meets procedure specifications?		
Sample Preparation		
1. Specimen dried to constant mass per AASHTO PP 75 or according to T 331 Section 6.1?		
2. Specimen at room temperature, 77 ± 9°F (25 ± 5°C)? Laboratory compacted specimens cooled for 15 – 24 hours at 77 ± 9°F (25 ± 5°C)?		
3. Sharp edges removed from specimen (recommended)?		
Procedure		
1. Specimen mass, A, determined at room temperature, 77 ± 9°F (25 ± 5°C)?		
2. Appropriate size bag selected, inspected for holes and it's mass determined?		
3. Sealed dry mass of specimen determine by adding specimen and bag masses together then recorded as B?		
4. If needed, filler plates added or removed before placing bag inside vacuum chamber and inserting specimen into bag?		
5. Specimen placed in bag with the smoothest side down?		
6. End of bag pulled over sample and centered over sealing bar with minimum of 1" overlap?		
7. Bag wrinkles smoothed out over seal bar just prior to closing lid?		
8. CorLok operation initiated by closing and latching lid?		
9. CorLok test cycle allowed to continue until chamber door opens?		
10. Sealed specimen carefully removed from vacuum chamber without puncturing bag?		
11. Bag inspected for loose areas which indicate poor seal or bag puncture?		
12. If needed, test started over because seal ruptured or bag punctured?		
13. Sealed specimen fully submerged in water bath within 1 minute of vacuum chamber door releasing?		
14. Bag is not touching the sides of the water bath and no trapped air bubbles exist under specimen?		

Procedure (continued)	**Yes**	**No**
15. Mass of sealed specimen underwater, E, at 77 ± 1.8°F (25 ± 1°C) recorded as soon as scale stabilizes?		
16. Specimen removed from bag and mass recorded as C then checked to be no more than 5 grams of the mass recorded as A?		
17. Process restarted at section 6.1 if test fails section 6.5 check? Section 6.5 check: If difference between C and A are greater than 5 grams the specimen is acceptable if less than 0.08 percent is lost (material loss) or 0.04 percent is gained (from water) as compared to A.		
18. All calculations performed correctly?		

First Attempt: Pass Fail Second Attempt: Pass Fail

Signature of Examiner _____

Comments:

WSDOT FOP for AASHTO T 335[1]

Determining the Percentage of Fracture in Coarse Aggregate

1. Scope

   1.1 This test method covers the determination of the percentage, by mass, of a coarse aggregate sample that consists of fractured particles meeting specified requirements.

   1.2 This standard may involve hazardous materials, operations, and equipment. This standard does not purport to address all of the safety problems associated with its use. It is the responsibility of the user of this standard to establish appropriate safety and health practices and determine the applicability of regulatory limitations prior to use.

   1.3 The text of the standard reference notes provide explanatory material. These notes (excluding those in tables and figures) shall not be considered as requirements of the standard.

   1.4 Method 1 will be used by WSDOT for determining the fracture of aggregate as required by the *Standard Specifications*.

2. Referenced Documents

   2.1 AASHTO Standards

   M 92 – Wire-Cloth Sieves for Testing Purposes

   M 231 – Weighing Devices Used in the Testing of Materials

   2.2 WSDOT Standards

   T 2 – FOP for AASHTO Sampling of Aggregates

   T 27/11 – FOP for WAQTC/AASHTO Sieve Analysis of Fine and Coarse Aggregates

   T 248 – FOP for AASHTO Reducing Samples of Aggregate to Testing Size

   T 255 – FOP for AASHTO Total Evaporable Moisture Content of Aggregate by Drying

3. Summary of Test Method

   3.1 A sample of aggregate is separated using the designated size of screen conforming to the specification controlling the determination of coarse and fine aggregate. The coarse aggregate particles are visually evaluated to determine their conformance to the defined fracture. The percentage of conforming particles, by mass, is determined for comparison to standard specifications.

[1]This FOP is based on AASHTO T 335-09 and has been modified per WSDOT standards. To view the redline modifications, contact the WSDOT Quality Systems Manager at 360-709-5412.

4. Apparatus

4.1 Balance – Shall have sufficient capacity, be readable to 0.1 percent of the sample mass, or better, and conform to the requirements of M 231 for general-purpose balance required for the principle sample mass being tested.

4.2 Sieves – Meeting the requirements of M 92.

4.3 Splitter – Meeting the requirements of T 248.

5. Terminology

5.1 Fractured Face – An angular, rough, or broken surface of an aggregate particle created by crushing, or by other means. A face is considered a "fractured face" whenever one-half or more of the projected area, when viewed normal to that face, is fractured with sharp and well-defined edges (this excludes small nicks).

5.2 Fractured Particle – A particle of aggregate having at least the minimum number of fractured faces specified.

6. Sampling

Sample the aggregate in accordance with WSDOT FOP for AASHTO T 2 and reduce the sample in accordance with WSDOT FOP for AASHTO T 248, to the sample sizes shown in Table 2 of WSDOT FOP for AASHTO T 27/11.

7. Sample Preparation

7.1 Where the specifications list only a total fracture percentage, the sample shall be prepared in accordance with Method 1.

7.2 Method 1 – Combined Fracture Determination

7.2.1 Dry the sample sufficiently to obtain a clean separation of fine and coarse material in the sieving operation. Sieve the sample in accordance with WSDOT FOP for WAQTC/AASHTO T 27/11 over the No. 4 (4.75 mm) sieve.

Note 1: Where necessary, wash the sample over the sieve or sieves designated for the determination of fractured particles to remove any remaining fine material and dry in accordance with WSDOT FOP for AASHTO T 255.

7.2.2 Reduce the sample using a splitter in accordance with WSDOT FOP for AASHTO T 248 to the appropriate size for test.

Nominal Maximum Particle Size	Minimum Sample Mass Retained No. 4 (4.75 mm) Sieve
1½ in (37.5 mm)	6 lb (2500 g)
1 in (25 mm)	3.5 lb (1500 g)
¾ in (19.0 mm)	2.5 lb (1000 g)
⅝ in (16.0 mm)	2.0 lb (800 g)
½ in (12.5 mm)	1.5 lb (700 g)
⅜ in (9.5 mm)	0.9 lb (400 g)
No. 4 (4.75 mm)	0.4 lb (200 g)

*For aggregate, the nominal maximum size (NMS) is the largest standard sieve opening listed in the applicable specification, upon which any material is permitted to be retained. For concrete aggregate, NMS is the smallest standard sieve opening through which the entire amount of aggregate is permitted to pass.

Note 2: For an aggregate specification having a generally unrestrictive gradation (i.e., wide range of permissible upper sizes), where the source consistently fully passes a screen substantially smaller than the maximum specified size, the nominal maximum size, for the purpose of defining sampling and test specimen size requirements may be adjusted to the screen, found by experience to retain no more than 5 percent of the materials.

Note 3: If less than 5 percent of the total mass is retained on the No. 4 sieve, then a fracture determination will not be required for this material.

Sample Size (Method 1 – Combined Sieve Fracture)
Table 1

7.3 Method 2 – Individual Sieve Fracture Determination

WSDOT has deleted this section.

8. Procedure

8.1 Spread the sample on a clean flat surface large enough to permit careful inspection of each particle. To verify that a particle meets the fracture criteria, hold the aggregate particle so that the face is viewed directly (see Section 5.1).

8.2 To aid in making the fracture determination, separate the sample into three categories: (1) fractured particles meeting the above criteria, (2) particles not meeting specification criteria, and (3) questionable or borderline particles.

8.3 Determine the mass of particles in the fractured category, the mass of questionable particles, and the mass of the unfractured particles.

9. Calculation

9.1 Report the following information:

9.1.1 Calculate the mass percentage of fracture faces to the nearest 1 percent as follows:

$$P = ((F + Q/2) / (F + Q + N)) \times 100$$

where:

P = percent of fracture,
F = mass of fractured particles,
Q = mass of questionable or borderline particles, and
N = mass of unfractured particles

10. Report

Results shall be reported on standard forms approved for use by the agency. Report fracture to the nearest 1 percent.

Report the results using one or more of the following:

- Materials Testing System (MATS)
- DOT Forms 350-092 and 350-157
- Form approved in writing by the State Materials Engineer

11. Precision and Bias

See AASHTO T 335 for precision and bias statements.

Performance Exam Checklist

Determining the Percentage of Fracture In Coarse Aggregate
WSDOT FOP for AASHTO T 335

Participant Name _____ Exam Date _____

Procedure Element	Yes	No
1. The tester has a copy of the current procedure on hand?	❐	❐
2. All equipment is functioning according to the test procedure, and if required, has the current calibration/verification tags present?	❐	❐
3. Sample reduced to correct size, if needed?	❐	❐
4. Sample dried and cooled, if necessary?	❐	❐
5. Sample properly sieved through specified sieve(s)?	❐	❐
6. Particles separated into fractured, unfractured, and questionable categories?	❐	❐
7. Dry mass of each category determined to nearest 0.1 g?	❐	❐
8. Calculation performed correctly?	❐	❐

First Attempt: Pass ❐ Fail ❐ Second Attempt: Pass ❐ Fail ❐

Signature of Examiner _____

Comments:

WSDOT FOP for AASHTO T 355

In-Place Density of Asphalt Mixtures Using the Nuclear Moisture-Density Gauge

Scope

This test method describes a procedure for determining the density of asphalt mixtures by means of a nuclear gauge using the backscatter or thin layer method in accordance with AASHTO T 355-15. Correlation with densities determined under the FOP for AASHTO T 166 is required by some agencies.

Apparatus

- Nuclear density gauge with the factory-matched standard reference block.
- Transport case for properly shipping and housing the gauge and tools.
- Instruction manual for the specific make and model of gauge.
- Radioactive materials information and calibration packet containing:
  - Daily standard count log
  - Factory and laboratory calibration data sheet
  - Leak test certificate
  - Shippers' declaration for dangerous goods
  - Procedure memo for storing, transporting and handling nuclear testing equipment
  - Other radioactive materials documentation as required by local regulatory requirements

Material

- WSDOT does not use filler material

Radiation Safety

This method does not purport to address all of the safety problems associated with its use. This test method involves potentially hazardous materials. The gauge utilizes radioactive materials that may be hazardous to the health of the user unless proper precautions are taken. Users of this gauge must become familiar with the applicable safety procedures and governmental regulations. All operators will be trained in radiation safety prior to operating nuclear density gauges. Some agencies require the use of personal monitoring devices such as a thermoluminescent dosimeter or film badge. Effective instructions, together with routine safety procedures such as source leak tests, recording and evaluation of personal monitoring device data, etc., are a recommended part of the operation and storage of this gauge.

Calibration

Calibrate the nuclear gauge as required by the agency. This calibration may be performed by the agency using the manufacturer's recommended procedures or by other facilities approved by the agency. Verify or re-establish calibration curves, tables, or equivalent coefficients every 12 months.

Standardization (Standard Count)

1. Turn the gauge on and allow it to stabilize for a minimum of 45 minutes prior to taking a Standard Count. Leave the power on during the day's testing.

   Note 1: If for any reason the gauge loses power or is turned off during the work period, the Standard Count must be re-established prior to use.

2. Prior to any correlation of the nuclear gauge, perform a Stat Test in accordance with the gauge's operator manual. If the gauge passes the Stat Test, perform a Standard Count. If the gauge fails the Stat Test, run a second Stat Test. If the gauge fails the second Stat Test, it should be repaired or recalibrated.

3. Take a Standard Count at the start of each day's work and as often as deemed necessary by the operator or agency. Daily variations in Standard Count shall not exceed the daily variations established by the manufacturer of the gauge. Compare the daily Standard Count to the Density Standard Decay Sheet (Note 2) to ensure the standard count falls within acceptable limits. If the daily variations in Standard Count are exceeded after repeating the Standard Count procedure or if the daily Standard Count is outside the range of the Standard Decay Sheet, the gauge should be repaired and or recalibrated.

4. Record the Standard Count for both density and moisture in the Daily Standard Count Log. Instructions for taking a Standard Count are found in the gauge's operator manual.

   Note 2: The Density Standard Decay Sheet is found in the calibration documentation packet. This sheet shows the anticipated standard count range based on the calculated decay rate of the gauges radioactive source over the passage of time.

Test Site Location

Select a test location(s) randomly and in accordance with WSDOT Test Method T 716. Test sites should be relatively smooth and flat and meet the following conditions:

a. At least 30 ft. (10 m) away from other sources of radioactivity.

b. At least 10 ft. (3 m) away from large objects.

c. If the gauge will be closer than 24 in (600 mm) to any vertical mass, or less than 6 in (150 mm) from a vertical pavement edge, use the gauge manufacturer's correction procedure.

Procedure

Place the gauge on the test site. Using a crayon (not spray paint), mark the outline or footprint of the gauge. Extend the probe to the backscatter position.

Method 1 – Average of two one-minute tests WSDOT does not use Method 1

1. Take a one-minute test and record the wet density reading.
2. Rotate the gauge 90 degrees centered over the original footprint. Mark the outline or footprint of the gauge.
3. Take another one-minute test and record the wet density reading.
4. If the difference between the two one-minute tests is greater than 2.5 lb/ft^3 (40 kg/m^3), retest in both directions. If the difference of the retests is still greater than 2.5 lb/ft^3 (40 kg/m^3) test at 180 and 270 degrees.
5. The density reported for each test site shall be the average of the two individual one-minute wet density readings.

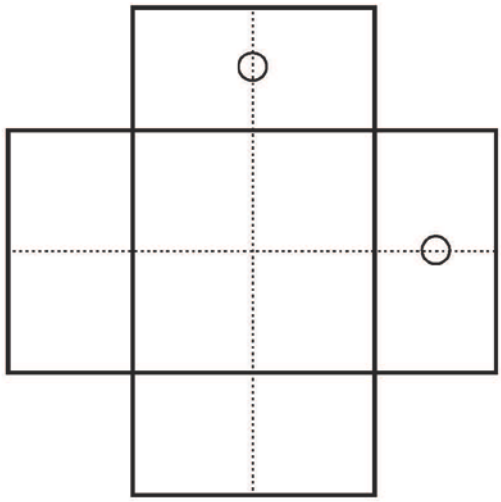

Footprint of The Gauge Test Site
Method 1

Method 2 – One four minute test

1. For Thin Layer Mode (Use with Troxler 3450 only) ensure the depth entered into the gauge matches the pavement depth and the depth at which the gauge was correlated. Set the source rod depth to the Backscatter position.
2. For Backscatter Mode set the source rod to depth to the Backscatter position.
   - *Thin Layer or Backscatter are different modes of measurement, ensure that the correct form of measurement is utilized.*
3. Draw an outline around the entire gauge base for correlation coring.
4. Take one 4-minute test and record the wet density reading parallel to the direction of travel.

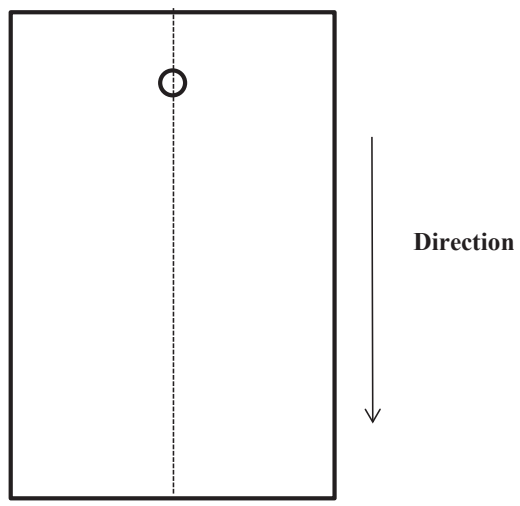

Footprint of The Gauge Test Site Parallel to Direction of Travel
Method 2

Calculation of Results

Percent compaction is determined by comparing the in-place wet density as determined by this method to the appropriate agency density standard. See appropriate agency policy for use of density standards.

Example for Method 1 :

Reading #1:	141.5 lb/ft^3	
Reading #2:	140.1 lb/ft^3	Are the two readings within the tolerance? (YES)
Reading average:	140.8 lb/ft^3	
Core correction:	+2.1 lb/ft^3	
Corrected reading:	142.9 lb/ft^3	

Example for Method 2:

Reading #1:	140.8 lb/ft^3
Core correction:	+2.1 lb/ft^3
Corrected reading:	142.9 lb/ft^3

Example percent compaction:

From the FOP for AASHTO T 209:

$\mathbf{G_{mm}}$ = 2.466

Maximum Laboratory Dry Density = 153.5 lb/ft^3

$$\frac{Corrected\ Reading}{Maximum\ Density} \times 100 = \%\ compaction \qquad \frac{142.9\ lb/ft^3}{153.5\ lb/ft^3} \times 100 = 93.1\%$$

Report

- Results on forms approved by the agency
- Test ID
- Location of test and thickness of layer tested
- Mixture type
- Make, model and serial number of the nuclear moisture-density gauge
- Calculated wet density of each measurement and any adjustment data
- Density standard
- Compaction 0.1 percent
- Name and signature of operator

Appendix – Correlation With Cores

(Nonmandatory Information)

The Bulk Specific Gravity (G_{mb}) of the core is a physical measurement of the in-place HMA and can be compared with the nuclear density gauge readings. Comparing the core value to the corresponding gauge values, a correlation can be established.

The correlation can then be used to adjust the gauge readings to the in-place density of the cores. The core correlation is gauge specific and must be determined without traffic allowed on the pavement between nuclear density gauge readings and obtaining the core. When using multiple nuclear density gauges each gauge should be correlated to the core locations prior to removal of the core.

When density correlation with the FOP for AASHTO T 166 is required, correlation of the nuclear gauge with pavement cores shall be made on the first day's paving (within 24 hours) or from a test strip constructed prior to the start of paving. Cores must be taken before traffic is allowed on the pavement.

Correlation with Cores

1. Determine the number of cores required for correlation from the agency's specifications. Cores shall be located on the first day's paving or on the test strip. Locate the test sites in accordance with the agency's specifications. Follow the "Procedure" section above to establish test sites and obtain densities using the nuclear gauge.
2. Obtain a pavement core from each of the test sites according to AASHTO R 67. The core should be taken from the center of the nuclear gauge footprint.

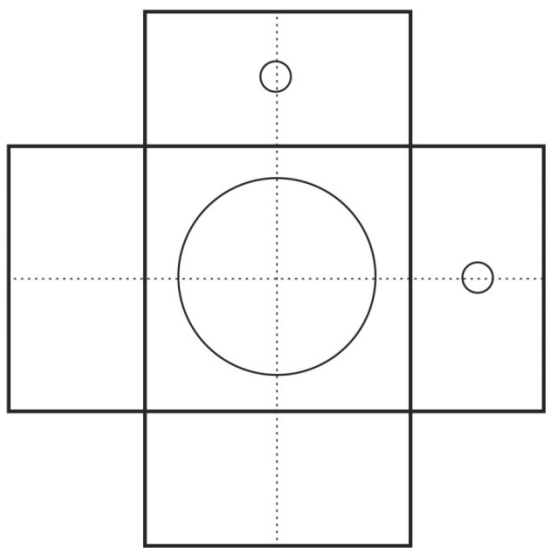

Footprint of The Gauge Test Site
Method 1

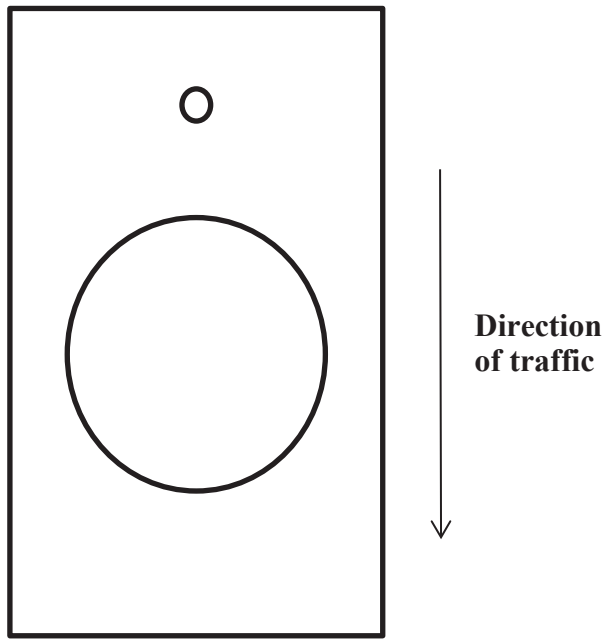

Footprint of The Gauge Test Site
Method 2

3. Determine the density of the cores by the FOP for AASHTO T 166, Bulk Specific Gravity of Compacted Asphalt Mixtures Using Saturated Surface Dry Specimens.
4. Calculate a correlation factor for the nuclear gauge reading as follows:
   a. Calculate the difference between the core density and the average nuclear gauge density at each test site to the nearest 0.1 lb/ft^3 (1 kg/m^3). Calculate the average difference and standard deviation of the differences for the entire data set to the nearest 0.1 lb/ft^3 (1 kg/m^3).
   b. If the standard deviation of the differences is equal to or less than 2.5 lb/ft^3 (40 kg/m^3), the correlation factor applied to the average nuclear gauge density shall be the average difference calculated above in 4.a.
   c. If the standard deviation of the differences is greater than 2.5 lb/ft^3 (40 kg/m^3), the test site with the greatest variation from the average difference shall be eliminated from the data set and the data set properties and correlation factor recalculated following 4.a and 4.b.
   d. If the standard deviation of the modified data set still exceeds the maximum specified in 4.b, additional test sites will be eliminated from the data set and the data set properties and correlation factor recalculated following 4.a and 4.b. If the data set consists of less than five test sites, additional test sites shall be established.

Note A1: The exact method used in calculating the nuclear gauge correlation factor shall be defined by agency policy.

Note A2: The above correlation procedure must be repeated if there is a new job mix formula. Adjustments to the job mix formula beyond tolerances established in the contract documents will constitute a new job mix formula. A correlation factor established using this procedure is only valid for the particular gauge and at the probe depth used in the correlation procedure. If another gauge is brought onto the project, it shall be correlated using the same procedure. Multiple gauges may be correlated from the same series of cores if done at the same time.

Note A3: For the purpose of this procedure, a job mix formula is defined as the percent and grade of paving asphalt used with a specified gradation of aggregate from a designated aggregate source. A new job mix formula may be required whenever compaction of the wearing surface exceeds the agency's specified maximum density or minimum air voids.

Core Correlation Example:

	Core Results From T 166:	English Average Gauge Reading:	Difference:	X	X^2
1	144.9 lb/ft^3	142.1 lb/ft^3	2.8 lb/ft^3	-0.7	0.49
2	142.8 lb/ft^3	140.9 lb/ft^3	1.9 lb/ft^3	0.2	0.04
3	143.1 lb/ft^3	140.7 lb/ft^3	2.4 lb/ft^3	-0.3	0.09
4	140.7 lb/ft^3	138.9 lb/ft^3	1.8 lb/ft^3	0.3	0.09
5	145.1 lb/ft^3	143.6 lb/ft^3	1.5 lb/ft^3	0.6	0.36
6	144.2 lb/ft^3	142.4 lb/ft^3	1.8 lb/ft^3	0.3	0.09
7	143.8 lb/ft^3	141.3 lb/ft^3	2.5 lb/ft^3	-0.4	0.16
8	142.8 lb/ft^3	139.8lb/ft^3	3.0 lb/ft^3	0.9	0.81
9	144.8 lb/ft^3	143.3 lb/ft^3	1.5 lb/ft^3	-0.6	0.36
10	143.0 lb/ft^3	141.0 lb/ft^3	2.0 lb/ft^3	-0.1	0.01
		Average Difference:	+2.1 lb/ft^3		

$$\sqrt{\frac{\sum x^2}{n-1}}$$

Where:

$\sum$ = Sum
x = Difference from the average Difference
n-1 = number of data sets minus 1

Example: 10 – 1 = 9

$$\sqrt{\frac{2.5}{9}} = 0.53$$

The Sum of X^2 = 2.5 and the number of data sets = 9 for a computed standard deviation of 0.53. This is within the allowable 2.5 therefore no cores are eliminated, use the average difference from all ten cores.

Performance Exam Checklist

In-Place Density of Asphalt Mixtures Using The Nuclear Moisture-Density Gauge FOP For AASHTO T 355

Participant Element _____

Procedure Element	Trial 1	Trial 2
1. Does the tester have a copy of the current procedure on hand?	_____	_____
2. All equipment is functioning according to the test procedure, and if required, has the current calibration/verification tags present?	_____	_____
3. Gauge turned on?	_____	_____
4. Gauge standardized and Standard Count recorded?	_____	_____
5. Standard Count compared with Density Standard Decay sheet?	_____	_____
6. Test location selected appropriately?	_____	_____
7. Test location selected appropriately [24 in (600 mm) from vertical projections or 30 ft (10 m) from any other radioactive sources]?	_____	_____
8. Procedure:		
a. Gauge placed on pavement surface and footprint of gauge marked?	_____	_____
b. Probe extended to backscatter position?	_____	_____
c. Does measurement depth match planned pavement depth (Thin Layer Mode Only)	_____	_____
d. Was a four-minute count taken?	_____	_____
e. Core correlation applied if required?	_____	_____
9. Percent compaction calculated correctly?	_____	_____
10. Nuclear Gauge secured in a manner consistent with current DOH requirements?	_____	_____

First Attempt: Pass Fail Second Attempt: Pass Fail

Signature of Examiner _____

Comments:

Washington State
Department of Transportation

WSDOT Test Method T 413

Method of Test for Evaluating Waterproofing Effectiveness of Membrane and Membrane-Pavement Systems

1. SCOPE

   a. This method describes a procedure for evaluating the waterproofing effectiveness of membranes and membrane-pavement systems as applied to bridge decks. The tests can be performed on the membrane alone or on the membrane-pavement combination.

2. APPARATUS

   a. Ohmmeter — Simpson VOM Model 313 or equal; driving voltage for the range of "R × 10K" should be 1.56 ± 0.05 V.; the range of "R × 100K" should be 1.43 ± 0.05 V.

   b. No. 18 Insulated Wire — Belden test probe wire or equivalent, two spools, 250 ft. (76.2 m) each, with connectors.

   c. Metal Contact Plate — 12 × 12 × ⅛ in. (304.8 mm × 304.8 mm × 3.175 mm), with a connection for the ohmmeter and a 36-in. (914.4 mm) nonmetallic handle (see Figure 1, below).

   d. Polyurethane Sponge — 12 × 12 × 1 in. (304.8 mm × 304.8 mm × 25.4 mm), medium density (see Figure 1, below).

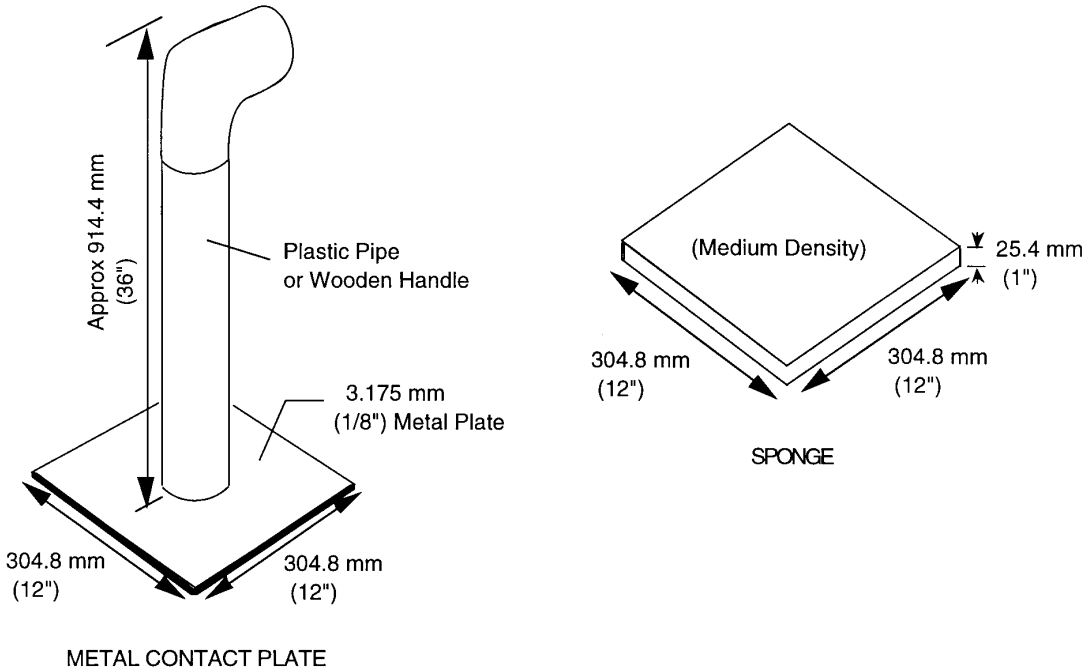

Figure 1

e. Wetting Agent — Aerosol OT (10 percent solution as manufactured by the American Cyanamid Company) or equal; mix 0.4 cup (100 ml) of wetting agent with 5 gal. (18.9 L) of water to make up wetting solution.

f. Pressure Spray Can — 3 gal. (11.4 L) capacity.

g. ¾-in. Stone Cutter's Chisel.

h. Hammer.

i. Eye Protection.

Note: Items g, h, and i are used for connection to reinforcing steel in deck (negative pole).

3. PROCEDURE

The following procedures shall be used **only** when the surface of the membrane-only system is dry or when the membrane-pavement system is judged to be dry internally. The latter condition is an important consideration since moisture will conduct electricity throughout an entire asphalt concrete overlay producing erroneous results at the individual test locations.

a. Membrane Only

(1) When the membrane has cured sufficiently to allow foot traffic on it, divide the bridge deck into a grid pattern similar to that illustrated in Figure 2. The grid spacing shall be as ordered by the Engineer, but it is suggested that the grid lines be spaced at 5 ft. (1.5 m) intervals to provide adequate test coverage. A definite connection to the top mat of reinforcing steel in the bridge deck is desirable; however, if this is not feasible, the bridge railing, expansion joints, light standards, drainage scoupers, or other exposed steel should provide the necessary connection. New bridges are supplied with connection to the reinforcing steel along each edge of the bridge via a junction box.

(2) Uncoil an ample length of wire to reach the areas to be tested and attach the negative (–) connection of the ohmmeter to the reinforcing steel and the positive (+) connection to the 12 in. × 12 in. by ⅛ in. (304.8 mm × 304.8 mm × 3.175 mm) metal contact plate. Check ohmmeter battery for satisfactory charge, then zero the ohmmeter dial indicator.

(3) Attach the polyurethane sponge to the metal plate with heavy-duty rubber bands and saturate the sponge with the wetting solution.

(4) In order to check for proper electrical connections and overall equipment operation, prewet two or three areas along the exposed concrete curb and place the measuring device at each location; read and record the resistance readings displayed on the ohmmeter. These readings will normally range from 500 to 8,000 ohms, if the connection to the reinforcing steel is good.

(5) Once the connections and equipment show proper operation, continue testing at each grid intersection and record the resistance values on photocopies of Figure 3, using blank sheets where additional space is needed.

b. Membrane-Pavement

(1) New pavement — Procedure steps 3.a.(1) through 3.a.(5) may be used in measuring the resistance of the membrane-pavement system, except that in step 3.a.(5) the test locations should be prewetted with the wetting solution. Only enough wetting solution should be used to saturate the test zone. Surface runoff should be kept to a minimum to prevent interconnecting the test zones electrically.

(2) Old Pavement — Procedure steps 3.a.(1) through 3.a.(5) may be used in measuring the resistance of the membrane-pavement system, except that tin step 3.a.(5) a checkpoint should be selected at a grid intersection that appears dense-graded and well compacted. Saturate the check point with the wetting solution. Keep surface runoff to a minimum to prevent interconnecting the test zones electrically. Take resistance readings at the checkpoint until the value has stabilized at its lowest point. The penetration process should not required more than 15 to 20 minutes. If its takes more than 20 minutes, select a reasonable penetration time and saturate each grid intersection thereafter for that length of time.

4. REPORTING

a. Report the resistance values for the exposed membrane and the membrane-pavement system on photostatic copies of Figure 3, using blank sheets where additional space is needed.

b. Copies of the report are to be submitted to the following offices:

(1) Project Engineer (for final records).

(2) FOSSC Materials Laboratory (master file).

5. ACCEPTANCE LEVEL

Refer to the Contract Special Provisions under the section entitled “Membrane Waterproofing (Deck Seal).”

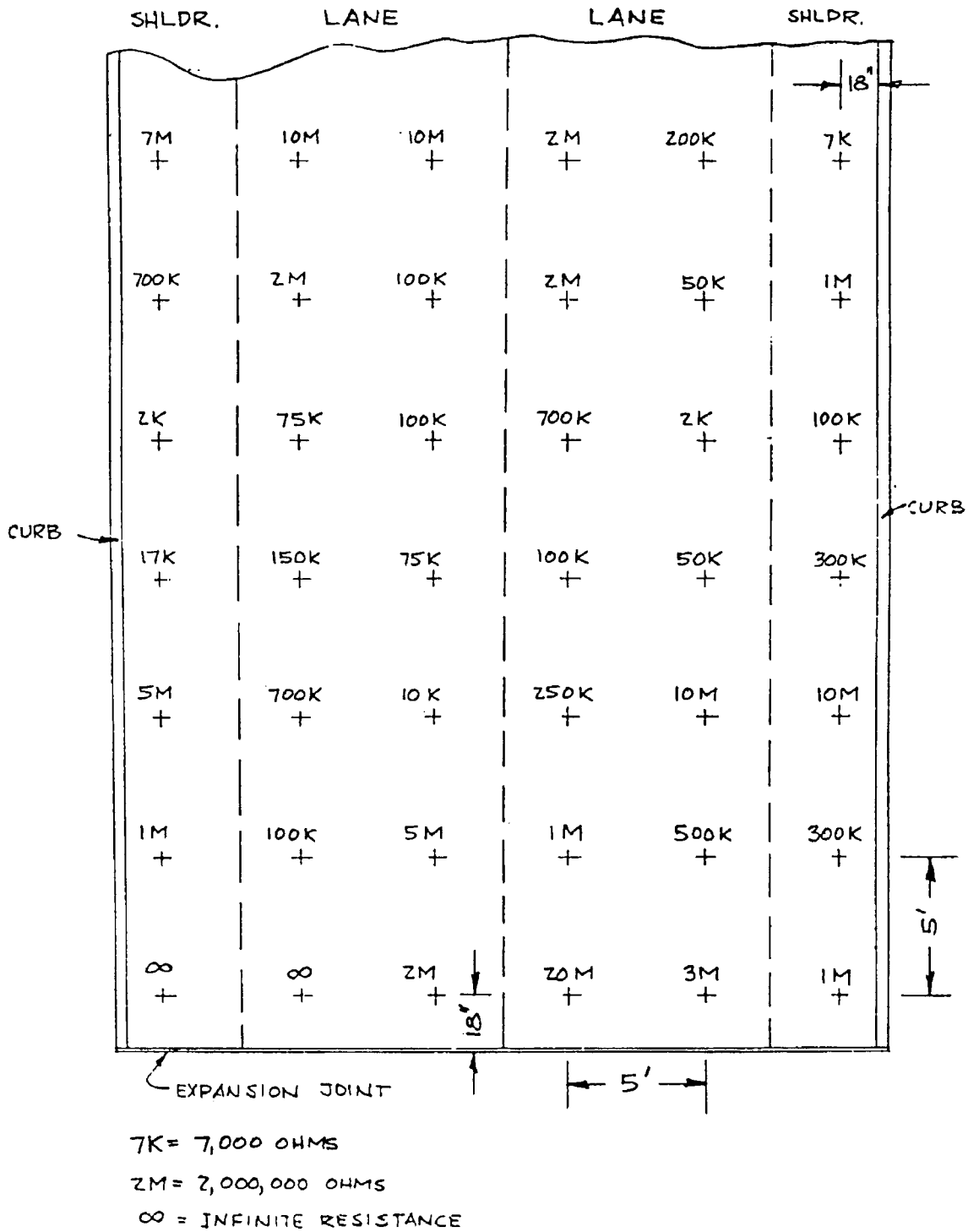

Example of Test Grid and Resistance Tabulation
Figure 2

ELECTRICAL RESISTIVITY MEASUREMENTS
(WDOT Test Method No. 413)

SR____ CONTRACT_____ BRIDGE _____ BR. NO.____/____

TEST PHASE: (Check one) DATE_____/_____/_____

____ MEMBRANE ONLY; TYPE_____

____ MEMBRANE-PAVEMENT; PAVT. TYPE_____ THCK_____ft.

GROUND CHECK RDG._____ohms (avg.) OHMMETER RANGE USED R x_____

GRID SPACING_____ft. CREW_____

•••BRIDGE & GRID LAYOUT AND MEASUREMENTS•••

SCALE: VERT._____in. =_____ft.; HORIZ._____in. =_____ft. NOTE: Use additional sheets (blank) if necessary.

Example of Electrical Resistivity Measurements
Figure 3

WSDOT Test Method T 417

Method of Test for Determining Minimum Resistivity and pH of Soil and Water

1. Scope

   a. This method covers the procedure for determining the minimum resistivity and pH of soil or water samples at metal culvert locations. These values are used to assist in determining the type of metal culvert materials and protective coating that are permissible at each location.

   b. This test method is divided into the following parts:

      (1) Method of field resistivity survey and sampling for laboratory tests.

      (2) Method of determining pH of water.

      (3) Method of determining pH of soil.

      (4) Laboratory method of determining minimum resistivity.

2. Method of Field Resistivity Survey and Sampling for Laboratory Tests

   a. Scope

      The field resistivity test is an indication of the soluble salts in the soil or water; it is used primarily as a guide for selecting samples that will be tested in the laboratory. The natural soil in each channel or culvert location and the structural backfill material are tested by a portable earth resistivity meter, and samples are selected on the basis of these tests. These samples are tested in the laboratory using a soil box to determine the minimum resistivity that will be used in the culvert-type determination.

   b. Apparatus and Materials

      (1) Portable earth resistivity meter, suitable for rapid in-place determination of soil resistivity.

      (2) Field probe(s).

      (3) Steel starting rod, for making hole (in hard ground) for inserting probe(s).

      (4) Sledge hammer 4 lbs (1.8 kg).

      (5) Distilled, deionized, or other clean water that has a resistivity greater than 20,000 ohm-cm.

   c. Recording Data

      Record test data in a field record book for use in selecting samples and also for use in analyzing laboratory test data.

   d. Test Procedures

      (1) In the channel of a proposed culvert site, insert the field probe into the soil between 6 in (152.4 mm) and 12 in (304.8 mm) and measure the resistivity. Follow the manufacturer's instructions for use of the meter. Remove the field probe and pour about 2 oz (59 ml) of distilled water into the hole.

(2) Reinsert the probe while twisting to mix the water and soil, then measure the resistivity.

(3) Withdraw the probe and add an additional 2 oz (59 ml) of distilled water.

(4) Reinsert the probe and again measure the resistivity of the soil.

(5) Multiply the lowest probe reading by ten to determine the minimum field soil resistivity and record this result. Note the multiplication factor of **ten** for soil resistivity readings when using the field probe.

(6) In addition to the single probe method described above another method is available for determination of soil resistivity in the field. Refer to the manufacturer's instructions as well as ASTM G 57 if the 4 probe "Wenner" method is being employed to determine the soil resistivity in the field.

e. Selection of Soil Samples for Laboratory Tests

(1) Make sufficient resistivity determinations at various locations in the channel or culvert site area to adequately represent the entire area. Should the soil appear consistent at a test site, take two resistivity determinations to verify. Additional readings should be taken if different soils are present.

(2) If the resistivity is reasonably uniform within the limits of the project, soil samples from three different locations will be sufficient. If, however, some locations show resistivities that differ significantly from the average of the determinations for the area being surveyed, additional soil samples should be taken to represent these locations — particularly those with resistivities significantly below the average.

For example, if the soil resistivities throughout the surveyed area are all at or near an average value of 20 ohm meter, three samples will be enough. If any of the locations tested have resistivities markedly below this average, for example 8 ohm meter, then such "hot spots" should definitely be represented by additional samples. Scattered locations of higher resistivity, for example 30 ohm meter or more, do not require additional samples.

Judgment must be exercised both in the field testing and sampling, and in evaluating the laboratory tests. In all cases, take a minimum of three samples per project.

Samples should be about 10 lb (4.5 kg) each and should be identified as to material type and location.

3. Method of Determining pH of Water

a. Scope

This method is suitable for use in the field or laboratory for determining the pH of water samples.

b. Apparatus and Materials

(1) 5 oz. (148 ml) or larger nonmetallic wide-mouth container, e.g., glass jar, beaker, or wax coated paper cup.

(2) pH meter.

(3) pH standard solution of pH 7.

c. Recording Data

Record test data in a field record book and report the results to the Project Engineer and in the Regional Soils Report.

d. Method of Sampling

(1) To avoid contamination from container, dip the wide-mouth container into the water to be tested, swirl to rinse and pour out contents.

(2) Dip the container into the water again to obtain a sample.

(3) Pour off any film which is on the surface of the sample before testing.

e. Standardization of pH Meter

Follow the instructions provided with the pH meter.

f. Use of pH Meter to Determine pH of Water

Follow the instructions provided with the pH meter.

g. Precautions

Follow the manufacturer's instructions for use of the meter and observe the usual precautions for making chemical tests.

Note: Field pH readings may be taken at any period other than flood flow. For water which has a pH of less than 6, take a 1 L (minimum) sample for laboratory analysis.

4. Laboratory Method of Determining pH OF SOIL

a. Scope

This method covers the laboratory procedure for determining pH of soil samples selected as indicated in Section 2.

b. Apparatus and Materials

(1) pH meter suitable for laboratory testing.

(2) Suitable containers constructed of glass or wax coated paper, with moisture proof covers.

(3) pH buffer solutions of pH 4.0, 7.0 & 10.0 (or those recommended by the pH meter manufacturer for meter standardization.)

(4) Distilled water and wash bottle.

(5) Thermometer (if required) readable to 0.2°F (0.1°C).

(6) U.S. No. 8 (2.36 mm) sieve.

(7) Balance, with sufficient capacity and readable to 0.1% of the sample mass, or better, conforming to the requirements of AASHTO M 231.

(8) Oven capable of maintaining a temperature of 140°F (60°C) around sample.

(9) Glass stirring rod.

c. Initial Preparation of Test Samples

(1) As received samples are to be tested for pH in a "moist" condition. If the soil as received is too wet to facilitate proper screening and reduction to test size it shall be air dried or dried to a "moist" condition in an oven at a temperature not to exceed 140°F (60°C).

(2) Split or quarter a sufficient amount of the moist sample to yield approximately 100g of material after the material has been pulverized or mulled, taking care not to crush rock particles or naturally occurring grains, and screened over a U.S. No. 8 (2.36 mm) sieve. Discard any material retained on the U.S. No. 8 sieve. Only natural material passing the U.S. No. 8 sieve is to be used for the test.

d. Procedure for pH Determination

(1) Place a 30.0 ± 0.1 gram sample of prepared soil into the test container.

(2) Add 30.0 ± 0.1 grams of distilled water to the soil sample. Stir the sample to obtain a slurry and cover.

(3) Allow the sample to stand for a minimum of 1 hour, stirring every 10 to 15 minutes.

(4) Standardize the pH meter in accordance with the manufacturer's instructions.

(5) Stir the sample with a glass rod immediately prior to placing the pH meter electrode into the sample. Place the electrode in the sample taking precaution to ensure good contact between the electrode and the soil slurry. DO NOT place the electrode into any soil that may have accumulated in the bottom of the container, only into the soil slurry.

(6) Allow the electrode to remain immersed in the soil slurry for a sufficient time for the meter to stabilize. Refer to the manufacturer's instructions for recommended pH determination procedure and stabilization time.

(7) Read and record the pH of the sample to the nearest tenth of a whole number. If the meter reads to the hundredth place it shall be rounded to the nearest tenth place.

(8) Clean pH meter electrode and store in accordance with the manufacturer's instructions.

e. Precautions

(1) Follow all manufacturer's recommendations regarding proper use of the pH meter.

f. Report

(1) Report the pH value to the nearest tenth of a whole number.

5. Laboratory Method of Determining Minimum Soil Resistivity

   a. Scope

      This method covers the procedure for determining the minimum resistivity of soil samples selected as indicated in Section 2.

   b. Apparatus and Materials

      (1) Resistivity meter suitable for laboratory testing.

      (2) Soil box calibrated for use with resistivity meter.

      (3) U.S. No. 8 (2.36 mm) sieve.

      (4) Non-absorbent pans, bowls or other containers of sufficient size to eliminate spilling during mixing, moisture conditioning, and sample handling.

      (5) Oven capable of maintaining a temperature of 140°F (60°C) around sample.

      (6) Balance, with sufficient capacity and readable to 0.1% of the sample mass, or better, and conform to the requirements of AASHTO M 231.

      (7) Distilled or deionized water.

      (8) Spoon or spatula.

      (9) Graduated cylinder or other suitable device of sufficient size to accurately add quantities of moisture to sample.

      (10) Straightedge

   c. Preparation of Soil Samples

      (1) Dry the sample as received from the field to a constant mass at a temperature not to exceed 140°F (60°C). (Air drying is also acceptable.) Split or quarter a sufficient amount of the dried material to yield a suitable sample after the material has been pulverized or mulled, taking care not to crush rock particles or naturally occurring grains, and screened over a U.S. No. 8 (2.36 mm) sieve. Discard any material retained on the U.S. No. 8 sieve. Only natural material passing the U.S. No. 8 sieve is to be used for the test.

   d. Measuring the Resistivity of Soil Sample

      (1) Split or quarter an amount of prepared soil that will fill approximately 4 times the volume of the soil box being utilized to determine resistivity.

      (2) Add approximately 10% by weight of distilled water to the sample and mix thoroughly. Allow the sample to stand in a moisture proof container for a minimum of 12 hours.

      (3) Re-mix the sample and immediately compact it (moderate compaction with the fingers is sufficient) slightly over the top of the soil box that has been cleaned with distilled water prior to use. Strike the material level to the top of the soil box with a straightedge.

      (4) Measure the resistivity of the soil in accordance with the instructions furnished with the meter *and record the value.*

(5) Remove the soil from the soil box and recombine it with the remainder of the original sample then add an additional 5% by *original dry soil* weight of distilled water and thoroughly mix.

(6) Rinse the soil box with distilled water then immediately place the soil in the soil box and compact as described in step 3.

(7) Measure the resistivity of the soil in accordance with the instructions furnished with the meter and record the value.

(8) Repeat steps 5 through 7 until a minimum value can be determined.

(9) Record the lowest value measured during the repeated measurements in the soil box. The multiplication factor for the soil box is one, *(do not assume this as this value should be verified or reconciled with the manufacturer's recommendations provided with the soil box)* so a direct reading of the meter is the value used.

(10) Report the minimum resistivity of the soil in ohms-cm.

6. Laboratory Method of Determining Water Resistivity

a. Measuring the Resistivity of a Water Sample

(l) Thoroughly clean the soil box of all soil particles and rinse the soil box a minimum of three times with distilled water.

(2) Fill the soil box with distilled water and measure its resistivity.

(3) If the distilled water in the soil box measures infinite resistivity, empty the soil box of distilled water, fill with the test water, measure its resistivity, and record the measured value.

(4) If the distilled water in the soil box measures less than infinite resistivity, continue to rinse with distilled water until the box is absolutely clean. This condition is indicated by an infinite resistivity measurement when the box is filled with distilled water.

b. Recording Data

Record data in a field record book and report the results to the Project Engineer and in the Regional Soils Report.

7. Minimum Requirements

a. Metal pipe may be used at locations where the pH and soil resistivity are within the limits specified in the *Hydraulics Manual* M 23-01 for Aluminum (Aluminum Coated) Steel Pipe, Aluminum Pipe, and Galvanized (Zinc Coated) Steel Pipe.

Performance Exam Checklist

Method T 417 Checklist
Determining Minimum Resistivity and pH of Soil and Water

Participant Name Exam Date

Procedure Element	Yes	No
Determining pH of H_2O.		
1. pH meter standardized in accordance with manufacturer's instructions?	❒	❒
2. H_2O sample placed in suitable non-metallic container for testing?	❒	❒
3. pH of H_2O determined in accordance with pH meter manufacturer's instructions?	❒	❒
4. pH recorded and reported to the nearest one tenth of a whole number?	❒	❒
Determining pH of soil.		
1. Sample dried (if required) to a moist condition at a temperature not to exceed 140°F (60°C)?	❒	❒
2. Sample cooled, pulverized or mulled, and screened over a U.S. #8 sieve?	❒	❒
3. Only natural material passing U.S. #8 sieve used for test?	❒	❒
4. Approximately 100 grams of passing #8 material selected for testing?	❒	❒
5. 30 ± 0.1 grams of soil and 30 ± 0.1 grams of distilled H_2O added to suitable non-metallic testing container?	❒	❒
6. Sample immediately stirred to produce slurry and covered?	❒	❒
7. Sample allowed to stand for 1 hour, stirring every 10 to 15 minutes?	❒	❒
8. pH meter standardized in accordance with manufacturer's instructions?	❒	❒
9. Soil stirred immediately prior to pH determination?	❒	❒
10. pH of soil slurry correctly determined?	❒	❒
11. pH of soil read, rounded (if necessary) and reported to the nearest one tenth of a whole number?	❒	❒

Determining minimum resistivity of soil.	**Yes**	**No**
1. As received sample dried to a constant mass at a temperature not to exceed 140°F (60°C)?	❒	❒
2. Sample cooled, pulverized or mulled, and screened over a U.S. #8 sieve?	❒	❒
3. Only natural material passing U.S. #8 sieve used for test?	❒	❒
4. Approximately 4 times the volume of the soil box of material passing the U.S. #8 sieve split or quartered for testing?	❒	❒
5. 10% by weight of distilled H_2O added to sample?	❒	❒
6. Sample mixed, covered and allowed to stand for a minimum of 12 hours in a moisture proof container?	❒	❒
7. Sample re-mixed, moderately compacted in soil box and resitivity determined?	❒	❒
8. Resistivity value recorded?	❒	❒
9. Sample from soil box removed, placed with remainder of sample and additional 5% by original dry soil weight of distilled H_2O added?	❒	❒
10. Sample remixed and resistivity determined and recorded?	❒	❒
11. Steps 8 and 9 repeated until minimum resistivity can be determined?	❒	❒
12. Minimum resistivity of soil reported in ohms/cm?	❒	❒

Determination of H_2O resistivity.		
1. Soil box thoroughly cleaned and rinsed at least three times with distilled H_2O?	❒	❒
2. Soil box filled level full with distilled H_2O and resistivity determined?	❒	❒
3. Resistivity from step #2 measures as infinite?	❒	❒
4. If yes, soil box emptied and resistivity of test sample determined and recorded?	❒	❒
5. If no, soil box further cleaned until condition described in step 3 satisfied?	❒	❒
6. Resistivity of H_2O sample reported in ohms/cm?	❒	❒

First Attempt: Pass Fail Second Attempt: Pass Fail

Signature of Examiner

Comments:

WSDOT Test Method T 420

Test Method for Determining the Maturity of Compost (Solvita Test)

1. Scope

   The Solvita test is used for evaluating compost conditions.

2. Reference Documents

   AASHTO T-2

3. Terminology

   3.1 Definitions

   3.1.1 Compost shall be stable, mature, decomposed organic solid waste that is the result of the accelerated, aerobic biodegradation and stabilization under controlled conditions. The result is a uniform dark, soil-like appearance.

   3.1.2 Maturity of any compost sample may be judged using both color test results from paddle A and C. Paddle A is a styrene paddle with a gel component that measures the ammonia content of the compost. Paddle C is a styrene paddle with a gel component that measures the carbon dioxide emitted by the compost sample.

4. Summary of Test Method

   There are three easy steps involved in using the Solvita test kit to evaluate compost.

   4.1 Obtain and prepare the sample.

   4.2 Perform the test by placing both Solvita gel-paddles in the jar.

   4.2 Determine compost maturity using the color keys provided in the kit.

5. Significant and Use

   This test is used to determine the maturity of compost materials delivered in the field for use. This test measures the amount of ammonia and carbon dioxide in the compost.

6. Apparatus

   6.1 Solvita Kit containing the following:

   - a testing jar with lid
   - a carbon-dioxide paddle (marked with “C”) is purple
   - an ammonia paddle (marked with “A”) is yellow
   - color determination charts

   6.2 Shovel

   6.3 Small trowel or spoon

   6.4 A clean container large enough to combine the sample (approximately 5 gallons)

   6.5 A clean surface for mixing the sample such as a tarp or plywood

7. Sample Preparation

7.1 A composite sample (approximately 1 cubic foot) representing the lot to be tested should be sampled in accordance with AASHTO T-2 "Sampling from Stockpiles" or "Sampling from Transport Units".

7.2 Place the sample on a hard, clean, level surface where there will be neither loss of material nor the accidental addition of foreign material.

7.3 Particles such wood chips which are too large for the jar (over ½ inch) should be removed or screened from the compost sample.

7.4 Checking for optimal moisture is absolutely necessary for accurate maturity testing. Samples which are either too wet or too dry are not likely to produce accurate results. The moisture level should be judged by the squeeze test before proceeding. Perform the Squeeze test by squeezing a small handful of compost. When squeezed tightly the compost should feel wet without producing any free water. Compost that is too dry is dusty and will not clump with hard squeezing.

7.5 Mix the material thoroughly by turning the entire sample over three times. With the last turning, the entire sample shall be placed into a conical pile.

7.6 Using a small trowel, or other device, remove a portion from the center of the pile.

7.7 Fill the jar to the fill line and obtain proper density by sharply tapping the bottom of the jar on a counter. Fluffy or coarse composts should be compacted by pressing firmly into the jar.

7.8 If compost to be tested is in an optimal state, allow to air out for one hour.

7.9 If compost to be tested in not in an optimal state, then the following should be performed:

7.9.1 If the sample is hot, it should be covered and allowed to cool to room temperature before testing.

7.9.2 If the sample is too wet, it should be dried until it passes the squeeze test.

7.9.3 If the sample is too dry, add clean water until it passes the squeeze test. This sample shall be covered and allowed to stand at room temperature for 24 hours before performing the test.

8. Procedure

8.1 Open each package by tearing along the top strip and carefully remove the paddle by grasping the handle. *Do not touch the special gel surface, and don't allow compost to touch it.* Once the gelpack is opened, the test should be started within 30-minutes. The gel is not harmful to touch, but should be kept out of the mouth and eyes.

8.2 Insert the paddles into the sample at right angles to each other so that they can be seen through the viewing side. The edges of the paddles can be touching in the middle. Position the two paddles as indicated by the color squares on the jar label. Push the paddle tips into the compost to the bottom of the jar. Be careful not to jostle or tip the jar. Do not use a paddle if the gel is dried out or if the color is not the "Control Color" indicated on the respective color charts.

8.3 Screw the lid on tight, and keep the jar at room temperature 68-77º F (20-25º C) out of direct sunlight for 4 hours ± 10 minutes.

9. Evaluating the Results

9.1 Read the Solvita paddle colors 4 hours after the test is started. To read the colors, observe the paddles through the viewing side of the jar with the lid in place and illuminated from the front. Color rendition is best in moderate-intensity, fluorescent room light. Compare to the color charts provided with the kit, and record the color numbers that most closely match. Since the Solvita colors may continue to change after 4-hours, the proper interpretation for this test is based on a 4-hour ± 10 minute reading.

10. Reports

10.1 Report both the readings for the "A" paddle and the "C" paddle in the Inspector's Daily Report.

Performance Exam Checklist

Determining the Maturity of Compost (Solvita Test)
WSDOT Test Method T 420

Participant Name _____ Exam Date _____

Procedure Element	**Yes**	**No**
1. The tester has a copy of the current procedure on hand?	❐	❐
Sample Preparation		
1. Representative sample obtained per AASHTO T-2?	❐	❐
2. Sample placed on clean hard surface?	❐	❐
3. Check for optimal moisture?	❐	❐
4. Sampled mixed thoroughly?	❐	❐
5. Small sample taken from the center of the pile?	❐	❐
6. Sample filled in jar to the proper line and compacted?	❐	❐
7. Sample allowed to air out for 1 hour or equilibrate for 24 hours?	❐	❐
Sample Preprocedure		
1. Open the gel packs with out touching the gel sticks?	❐	❐
2. Is the test started within 30 minutes of opening the gel pack?	❐	❐
3. Are the paddles inserted in the compost at right angles to each other?	❐	❐
4. Are the paddles positioned to be seen through the viewing window?	❐	❐
5. Are the paddles pushed to the bottom of the jar?	❐	❐
6. Is the lid screwed on tight?	❐	❐
7. Is the jar at room temperature 68-77°F?	❐	❐
8. Is the test run for 4 hours ± 10 minutes?	❐	❐
9. Maturity determined per Manufacturers instructions?	❐	❐

First attempt: Pass ❐ Fail ❐ Second attempt: Pass ❐ Fail ❐

Signature of Examiner _____

Comments:

WSDOT Test Method T 421

Test Method for Traffic Controller Inspection and Test Procedure

1. SCOPE

   The purpose of this procedure is to provide a documented method for the steps involved with inspection and testing of the completed traffic controller cabinets.

2. REFERENCE DOCUMENTS

   WSDOT *Standard Specifications* 9-29.13
   NEMA Publication TS-1
   FHWA Publication IP-78-16
   Caltrans: Traffic Signal Controller Equipment Specification

3. SAFETY

   Use proper equipment to reduce the risk of electrical shock.

4. APPARATUS

   Equipment as defined to perform WSDOT Test Methods T 422, T 423, T 424, T 425, and T 427.

   Resistor load bank to simulate each traffic signal light (150 Ohm 100W wire wound resistors).

5. PROCEDURE

   The traffic controller cabinet shall be inspected to ensure that it is in compliance with the contract documents. Ensure that all of the required equipment is installed and the cabinet and meets the requirements of the contract documents. The results of successful completion of this procedure will be acceptance for testing.

   As a minimum, the following items shall be inspected:

   1) Mylar and four cabinet prints
   2) Manuals
   3) Labeling
   4) Air filter
   5) All wire laced and clamped
   6) Field wire terminal blocks
   7) Door locks
   8) Police keys
   9) Police panel switches
   10) Circuit breakers
   11) Transient voltage suppresser
   12) Modem(s)
   13) Phone jack for modem
   14) Radio interference suppresser
   15) Door light switch(s)
   16) Pedestrian switches
   17) Cabinet light
   18) 120 VAC receptacle outlet
   19) Ground fault interrupter

20) Equipment/Cabinet clearance
21) Load switches
22) Intersection display panel
23) Isolated 120VAC bus bar (neutral)
24) Phase Selectors
25) Flash transfer relays
26) Supplemental resistor loads
27) Two position door stop
28) Emergency indicator lights
29) Railroad preemption
30) Cabinet Construction
31) Detector Panel
32) Detector Panel shorting plug (NEMA)
33) Plastic document envelope (NEMA)
34) DB9 socket and C20 plug (170)
35) C-2 plug and cable (170)
36) Rack mounted document drawer (170)
37) Verify circuit breakers capacities
38) Absence of red assembly (170)
39) Controller
40) Software
41) AC isolator (170)
42) DC isolator (170)
43) Aux. file (170)
44) External logic (NEMA)
45) CMU door interlock switch
46) Stop Time switch
47) Cabinet Ground Bus bar
48) Conflict Monitor
49) Inside auto/flash switch
50) Loop Amplifiers

a. The traffic controller cabinet shall be connected to the resistor load bank.

b. WSDOT Test Method T 425, Environmental Chamber Test shall be performed. Any deficiencies shall be documented on the test report.

6. REPORT

Record any response found to be in disagreement with the published standards, report pass or fail and any corrective actions taken on the test report.

Performance Exam Checklist

Test Method for Traffic Controller Inspection and Test Procedure Method T 421 Checklist

Participant Name Exam Date

Procedure Element	**Yes**	**No**
Preparation		
1. Cabinet inspected for damage during shipping.	❒	❒
2. Letter to project office sent	❒	❒
3. Traffic controller assessed for compliance with contract provisions.	❒	❒
4. Simulated load connected to the Controller.	❒	❒
5. Perform Environmental test WSDOT Method T 425	❒	❒
6. Document test results on report.	❒	❒

First attempt: Pass ❒ Fail ❒ Second attempt: Pass ❒ Fail ❒

Signature of Examiner

Comments:

Washington State
Department of Transportation

WSDOT Test Method T 422

Test Method for Traffic Controller Transient Voltage Test (Spike Test) Procedure

1. Scope

   This test method is intended to evaluate traffic signal controllers for the transient voltage test defined in NEMA TS-1 2.2.3.2, as modified. This test is to be performed with the surge protector or line filter properly connected in the cabinet.

2. Reference Documents

   NEMA Publication TS-1

3. Safety

   Use proper equipment to reduce the risk of electrical shock.

4. Apparatus

   Transient voltage generator capable of placing a 300 V spike on the power supplied to the controller cabinet.

5. Procedure

   a. Program the controller unit to cycle on minimum recall.

   b. Connect the controller cabinet to the transient voltage generator as outlined by the manufacturer.

   c. With the spike generator set to minimum, apply power to the system. Ensure the controller unit is operating normally.

   d. Adjust the generator output so that a 300 V ± 5% positive or negative pulse with a 1 microsecond rise and a 10 microsecond width pulse (spike) is placed on the input power, for 10 minutes.

   e. Reverse the polarity from step 5d, reapply the pulse for 10 minutes.

   f. Reduce the spike to minimum, then disconnect the power.

   g. Restore normal power supply to the cabinet.

   h. During the preceding transient test the controller unit must continue its programmed functions. During phase cycling, the controller unit shall not skip intervals; shall not place false calls or produce false indications while in dwell; shall not disrupt normal sequences in any manner; or shall not change timings.

6. Report

   Record any response found to be in disagreement with the published standards, report pass or fail and any corrective actions taken on the test report.

Performance Exam Checklist

Test Method for Traffic Controller Transient Voltage Test (Spike Test) Procedure Method T 422 Checklist

Participant Name _____ Exam Date _____

Procedure Element	Yes	No
1. Program controller for minimum recall	❒	❒
2. Connect line noise generator to controller per manufactures recommendations.	❒	❒
3. With the noise generator set to minimum verify controller is operating normally.	❒	❒
4. Adjust noise generator for 300V spike.	❒	❒
5. Reverse polarity and repeat 4	❒	❒
6. Reduce spike to minimum and restore normal power.	❒	❒
7. Document test results on report.	❒	❒

First attempt: Pass ❒ Fail ❒ Second attempt: Pass ❒ Fail ❒

Signature of Examiner _____

Comments:

Washington State
Department of Transportation

WSDOT Test Method T 423

Test Method for Traffic Controller Conflict Monitor Testing

1. Scope

   This test method is intended to evaluate traffic signal controller conflict monitors for various simulated conflicting signal indications to ensure that the conflict monitor is effective in sensing conflicting signal conditions. binet.

2. Significance of Use

   This test method describes procedures to be used for simulating conflicting signals to the conflict monitor, and ensuring the proper response. As an alternative to this procedure, manufactured test equipment designed to tests all parameters can be used.

3. Reference Documents

   NEMA Publication TS-1
   FHWA Publication IP-78-16
   Caltrans: Traffic Signal Controller Equipment Specification

4. Safety

   Use proper equipment to reduce the risk of electrical shock.

5. Apparatus

   A conflict monitor tester capable of testing to NEMA standards (see NEMA Publication TS-1 Section 2.2.9) and/or Caltrans standards (see Caltrans Traffic Signal Control Equipment Specifications article 4) as required, such as ATSI DCMT-700 or ATSI PCMT-2000 Conflict Monitor.

6. Procedure

   Perform testing as shown in NEMA TS1 Section 2.2.9.3 or follow manufacture's recommendations.

7. Report

   Record any response found to be in disagreement with the published standards. Report pass or fail and any corrective actions taken on the test report.

Performance Exam Checklist

Test Method for Traffic Controller Conflict Monitor Testing
WSDOT Test Method T 423

Participant Name _____ Exam Date _____

Procedure Element	Yes	No
1. Remove Conflict Monitor from controller cabinet.	❐	❐
2. Configure CMU tester for CMU to be tested.	❐	❐
3. Connect CMU to tester.	❐	❐
4. Perform CMU test as defined in appropriate manufactures test procedures.	❐	❐
5. File raw data as required.	❐	❐
6. Document test results on report.	❐	❐

First attempt: Pass ❐ Fail ❐ Second attempt: Pass ❐ Fail ❐

Signature of Examiner _____

Comments:

Washington State
Department of Transportation

WSDOT Test Method T 424

Test Method for Traffic Controller Power Interruption Test Procedure

1. SCOPE

   This test method is intended to evaluate traffic signal controllers for the Power Interruption test defined in NEMA TS-1 2.2.7, as modified, and is not required for the Type 2070 controllers. This test is to be performed at normal voltage and room temperature.

2. REFERENCE DOCUMENTS

   NEMA Publication TS-1

3. SAFETY

   Use proper equipment and training to reduce the risk of electrical shock

4. APPARATUS

   A power interrupting device capable of interrupting the controller power for supplied to the controller cabinet of predetermined time intervals as defined in NEMA TS1.

5. PROCEDURE

   a. Program the controller unit to cycle on minimum recall.

   b. Connect the controller cabinet to the power interrupting device as outlined by the manufacture's instructions.

   c. Apply power to the system with the power line modifier connected as required.

   d. NEMA Remove the input voltage for a period of 450 milliseconds. Upon restoration of the input voltage, check to insure that the controller unit continues normal operation as though no power interruption had occurred. Repeat this test three times.

   e. Type 170 Remove the input voltage for a period of 1500 milliseconds. Upon restoration of the input voltage, check to insure that the controller unit continues normal operation as though no power interruption had occurred. Repeat this test three times.

   f. NEMA Remove the input voltage for a period of > 500 milliseconds. Upon restoration of the input voltage, check to insure that the controller unit reverts to its start up sequence. Repeat this test three times.

   g. Type 170 Remove the input voltage for a period of > 2000 milliseconds. Upon restoration of the input voltage, check to insure that the controller unit reverts to its start up sequence. Repeat this test three times.

   h. Restore normal supply to the cabinet.

6. REPORT

   Record any response found to be in disagreement with the published standards. Report pass or fail and any corrective actions taken on the test report.

Performance Exam Checklist

Test Method for Traffic Controller Power Interruption Test Procedure
WSDOT Test Method T 424

Participant Name _____ Exam Date _____

Procedure Element	Yes	No
1. Program traffic controller for minimum recall.	❐	❐
2. Connect traffic controller to power interrupter per the manufactures recommendations.	❐	❐
3. Verify traffic controller operates normally for the prescribed interruption.	❐	❐
4. Verify traffic controller reverted to the start-up sequence.	❐	❐
5. Restore normal power to the cabinet.	❐	❐
6. Document test results on test report.	❐	❐

First attempt: Pass ❐ Fail ❐ Second attempt: Pass ❐ Fail ❐

Signature of Examiner _____

Comments:

Washington State
Department of Transportation

WSDOT Test Method T 425

Test Method for Traffic Controller NEMA and 170 Type Environmental Chamber Test

1. Scope

   This test method is intended to evaluate the traffic signal controller to the temperature and environmental extremes as defined in the NEMA TS-1 Standard. This procedure will cover temperatures from minus 30ºF (-34ºC) to 165ºF (74ºC) and voltages from 95 VAC to 135 VAC with a power interruption as defined in NEMA TS-1.

2. Reference Documents

   NEMA Publication TS-1
   FHWA Publication IP-78-16
   Caltrans: Traffic Signal Controller Equipment Specification

3. Safety

   The environmental chamber provides extreme temperatures. Caution should be exercised to avoid injury.

4. Apparatus

   A suitable chamber in which the traffic controller can be subjected to the specified temperatures (-30ºF and 165ºF) and provide safe access to the equipment under test. A temperature recording device shall record the temperature in the chamber during the test with an accuracy of ± 3ºF. The air inside the chamber shall be circulated so that no more than a 3ºF difference will occur. The chamber control shall maintain constant absolute humidity from 109ºF to 165ºF.

   Variable voltage transformer capable of delivering the power required at the voltages defined in NEMA TS-1 (20 amps at 0 to 150 VAC)

   Volt-Ohm-Milliamp meter (VOM)

   Resistance load device to simulate each traffic signal light (150 ohm 100W wire wound resistors)

5. Procedure

5.1 Low-Temperature Low-Voltage Test:

5.1.1 Test conditions:

a. Environmental chamber door closed

b. Temperature: minus 30ºF

c. Low Voltage: 95 VAC

d. Equipment cabinet door open

e. Humidity control off

5.1.2 Procedure:

5.1.2.1 While at room temperature, adjust the input voltage to 95 VAC NEMA & Type 170 & 2070 ± modified 2010ECL; 102VAC 2070 ± standard 2010ECL and verify that the test unit is operational.

5.1.2.2 With the equipment under test cycling on minimum recall, lower the test chamber to –30ºF at a rate not to exceed 30ºF per hour. With the humidity control off, allow the controller assembly under test to cycle on minimum recall during the time it takes to cool down the chamber.

5.1.2.3 Then operate the test switches listed in TABLE 1 to ensure their proper operation.

5.1.2.4 NEMA only remove power from the controller assembly for a period of 3 hours.

5.1.2.5 Upon restoration of power, the controller assembly shall resume cycling at minimum recall.

5.1.2.6 Upon satisfactory completion of this test proceed to the Low-Temperature High-Voltage Test.

5.2 Low-Temperature High-Voltage Test

5.2.1 Test conditions:

a. Environmental chamber door closed

b. Temperature: minus 30ºF

c. High Voltage: 135 VAC

d. Equipment cabinet door open

e. Humidity control off

5.2.2 Procedure:

5.2.2.1 While at –30ºF and the humidity control off, adjust the input voltage to 135 VAC and allow the controller assembly to cycle on minimum recall.

5.2.2.2 Then operate the test switches listed in TABLE 1 to ensure their proper operation.

5.2.2.3 With the input voltage at135 VAC bring the chamber and test controller assembly to room temperature at a rate no greater than 30ºF per hour.

5.2.2.4 Upon satisfactory completion of this test proceed to the High-Temperature High/Low Voltage Test.

5.3 High-Temperature High/Low Voltage

5.3.1 Test Conditions

a. Environmental chamber door closed

b. High temperature 165 F

c. High voltage 135 VAC

d. Equipment door open

e. Humidity control as given in TABLE 2

5.3.2 Procedure:

5.3.2.1 With the controller assembly cycling on minimum recall, raise the test chamber temperature to 165ºF at a rate not to exceed 30ºF per hour. Check to see that the input voltage is set at 135 VAC.

5.3.2.2 Set the humidity controls to not exceed 95% relative humidity over the temperature range of 40ºF to 110ºF. When the temperature reaches 109ºF readjust the humidity control to maintain constant absolute humidity.

5.3.2.3 Verify that the controller assembly continues to cycle satisfactorily during the period of temperature increase and established levels of relative humidity.

5.3.2.4 Allow the test unit to cycle on minimum recall upon reaching 165ºF at 18% relative humidity. Then operate the test switches listed in TABLE 1 to ensure their proper operation.

5.3.2.5 Allow test unit to cycle for a minimum of 2 hours at 165ºF and 18% relative humidity and 135 VAC.

5.3.2.6 With the test unit at 165ºF and 18% relative humidity, again operate the test switches listed in TABLE 1 to ensure their proper operation.

5.3.2.7 Lower the voltage to 95 VAC NEMA & Type 170 & 2070 ± modified 2010ECL; 102VAC 2070 ± standard 2010ECL. Bring the chamber and controller assembly back to room temperature at a rate no greater than 30ºF per hour.

6. Report

Record any response found to be in disagreement with the published standards. Report pass or fail and any corrective actions taken on the test report.

1. Verify function of intersection display panel switches
2. Verify function of police panel switches (on/off, auto/flash)
3. Verify stop time switch function (inside)
4. Verify auto/flash switch function (inside)
5. Reserve for future use
6. Verify function of external logic (NEMA)
7. Verify operation of loop detection panel
8. Verify function of preemption push button on door (NEMA)
9. Verify function of preemption switches on phase selectors
10. Verify operation of emergency indicator light
11. Verify CMU functioning properly

Switches
Table 1

Dry Bulb		Relative Humidity, Percent*	Wet Bulb	
°F	°C		°F	°C
40	4.4	75	37	2.8
50	10.0	80	47	8.3
60	15.6	83	57	13.9
70	21.1	86	67	19.4
80	26.7	87	77	25.0
90	32.2	89	87	30.6
100	37.8	89	97	36.1
110	43.3	90	107	41.7
120	48.9	70	109	42.8
130	54.4	50	109	42.8
140	60.0	38	109	42.8
150	65.6	28	109	42.8
160	71.1	21	109	42.8
165	73.9	18	109	42.8
*For dynamic testing.				

Wet-Bulb Dry-Bulb Relative Humidity at Barometric Pressure of 29.92 in hg
Table 2

Performance Exam Checklist

Test Method for Traffic Controller NEMA and 170 Type Environmental Chamber Test
WSDOT Test Method T 425

Participant Name _____ Exam Date _____

Procedure Element	Yes	No
1. Place Traffic Controller into the Environmental chamber.	❐	❐
2. Perform Low-Temperature Low Voltage Test.	❐	❐
3. Perform Low- Temperature High Voltage Test.	❐	❐
4. Perform High- Temperature Low Voltage Test.	❐	❐
5. Perform High-Temperature High Voltage Test.	❐	❐
6. Document test results on report.	❐	❐

First attempt: Pass ❐ Fail ❐ Second attempt: Pass ❐ Fail ❐

Signature of Examiner _____

Comments:

WSDOT Test Method T 426

Pull-Off Test for Hot Melt Traffic Button Adhesive

1. Scope

   This method describes the procedure for determining the force (psi) required to pull a Type 1 raised pavement marker, from an asphalt or concrete surface that has been adhered with hot melt button adhesive.

2. Apparatus and Materials

   a. Asphalt or concrete surface, conditioned for 24 hours at standard laboratory conditions prior to testing.

   b. Raised pavement marker – WSDOT Type 1 plastic or thermoplastic, drilled in the center to accept a threaded steel rod.

   c. Laboratory melter – as described in ASTM D5167.

   d. Threaded steel eye bolt for attaching to the raised pavement marker.

   e. Tensile testing apparatus – as described in AASHTO T 237 Section 15, fitted with a threaded steel rod with a 2″ hook.

3. Procedure

   a. Pull-off tests shall be run in triplicate.

   b. Hot melt traffic button adhesive shall be heated in a laboratory melter to the manufacturer's recommended application temperature.

   c. A quantity of adhesive sufficient to squeeze out a small bead around the entire periphery of a 4″ button shall be poured onto surface and a pre-drilled raised pavement marker shall be seated on the adhesive and allowed to cure for at least 4 hours.

   d. A threaded steel eye bolt shall be inserted into the pre-drilled hole in the button.

   e. The puck/block and button shall be placed in the tensile testing apparatus and the threaded hook shall be inserted in the eye bolt.

   f. Load shall be applied slowly until the button pulls off from the surface and the maximum load shall be recorded.

4. Calculation

   The pull-off strength shall be calculated as follows:

   Pull-off Strength, psi = L/A

   L = Maximum load, pounds

   A = Surface area of Pavement marker (in^2)

5. Report

   The pull-off strength reported shall be the average of the three determinations.

Washington State
Department of Transportation

WSDOT Test Method T 427

Test Method for Loop Amplifier Testing Procedure

1. SCOPE

   This test method is intended to evaluate operation of individual loop amplifiers that are included with the traffic controller cabinet.

2. REFERENCE DOCUMENTS

   WSDOT *Standard Specification* 9-29.13

   NEMA Publication TS-1

3. SAFETY

   Use proper equipment and training to reduce the risk of electrical shock

4. APPARATUS

   Loop Detector Sensitivity Tester.

5. PROCEDURE

   Perform the following tests per manufacturer's instructions.

   a. Loop Amplifier Tests:
   b. Maximum Sensitivity Check
   c. Sustained Presence Check
   d. Sustained Presence Recovery Check
   e. Pulse Check
   f. Second Vehicle Check
   g. Delay Check
   h. Extension Check

6. REPORT

   Record any response found to be in disagreement with the published standards. Report pass or fail and any corrective actions taken on the test report.

Performance Exam Checklist

Test Method for Loop Amplifier Testing Procedure
WSDOT Test Method T 427

Participant Name _____ Exam Date _____

Procedure Element	Yes	No
1. Maximum Sensitivity Check	❒	❒
2. Sustained Presence Check	❒	❒
3. Sustained Presence Recovery Check	❒	❒
4. Pulse Check	❒	❒
5. Second Vehicle Check	❒	❒
6. Delay Check	❒	❒
7. Extension Check	❒	❒

First attempt: Pass ❒ Fail ❒ Second attempt: Pass ❒ Fail ❒

Signature of Examiner _____

Comments:

WSDOT Test Method T 428

Test Method for Traffic Controller Compliance Inspection and Test Procedure

1. SCOPE

The purpose of this procedure is to provide a documented method for the steps involved with inspection and testing of the completed traffic controller cabinets.

2. REFERENCE DOCUMENTS

WSDOT Test Method T 422, Transient Voltage Test Procedure (optional)
WSDOT Test Method T 423, Conflict Monitor Testing
WSDOT Test Method T 424, Power Interruption Test Procedure
WSDOT Test Method T 425, Environmental Chamber Test
WSDOT Test Method T 427, Loop Amplifier Test Procedure

3. SAFETY

Use proper equipment to reduce the risk of electrical shock.

4. APPARATUS

Equipment as defined to perform WSDOT Test Methods T 422, T 423, T 424, T 425, and T 427.

Resistor load bank to simulate each traffic signal light (150 Ohm 100W wire wound resistors).

5. PROCEDURE

a. The traffic controller cabinet shall be inspected to ensure that it is in compliance with the contract documents. Ensure that all of the required equipment is installed and the cabinet meets the requirements of the contract documents. Any deficiencies shall be documented on the test report.

b. Perform the following tests:

WSDOT Test Method T 422, Transient Voltage Test (Spike Test) Procedure
WSDOT Test Method T 423, Conflict Monitor Testing
WSDOT Test Method T 424, Power Interruption Test Procedure
WSDOT Test Method T 427, Loop Amplifier Test Procedure

c. After performing the Environmental Chamber Test, at a minimum, verify the operation of the following functions. The NEMA or 170 that are in the ( ) are for those type cabinets only. In addition verify the controller assembly will function as required for the intended intersection.

1) Verify function of test button on the GFI is operational

2) Verify vent fan functional

3) Verify operation of cabinet light door switches

4) Verify the correct operation of controller and of master if supplied

5) Use computer to verify the DB9 to C20 plug communication (170)

6) Verify communication using modem if supplied

7) Verify operation of pedestrian call switches

8) Verify the pedestrian field terminal

9) Verify loop amplifiers operational

10) Use dummy loop and test loop amplifier field terminals (NEMA)

11) Verify function of detection panel shorting plug is operational (NEMA)

12) Verify operation of preemption field terminal with detector and strobe

13) Verify railroad preemption as required

14) Verify internal wiring

15) Verify the operation of all switches on the intersection display panel and loop detector panel

16) Verify operation of inside "auto/flash switch"

17) Verify operation of "stop-time" switch

18) Running test: Set up cabinet with load resistors connected to output field terminals and run a performance test for a period of 72 hours.

19) Verify 2' extension of ped. Yellow from the CMU edge connector.

6. REPORT

Record any response found to be in disagreement with the published standards, report pass or fail and any corrective actions taken on the test report.

Performance Exam Checklist

Test Method for Traffic Controller Inspection and Test Procedure
Method T 428 Checklist

Participant Name _____ Exam Date _____

Procedure Element	Yes	No
1. Cabinet inspected for damage during shipping.	☐	☐
2. Letter to project office sent	☐	☐
3. Traffic controller assessed for compliance with contract provisions.	☐	☐
4. Simulated load connected to the Controller.	☐	☐
5. Perform Transient Voltage Test WSDOT Method T 422 (optional)	☐	☐
6. Perform Conflict Monitor Test WSDOT Method T 423	☐	☐
7. Perform Power Interruption Test WSDOT Method T 424	☐	☐
8. Verify Traffic controller function (Section g of T 421)	☐	☐
9. Document test results on report.	☐	☐

First attempt: Pass ☐ Fail ☐ Second attempt: Pass ☐ Fail ☐

Signature of Examiner

Comments:

WSDOT SOP 429

Methods for Determining the Acceptance of Traffic Signal Controller Assembly

1. Scope

   The purpose of this procedure is to provide a description of the steps involved with traffic signal controller assembly testing.

2. Reference Documents

   WSDOT Test Method T 421 Receiving Inspection and Test Procedure

   WSDOT Test Method T 422 Transient Voltage (Spike Test) Procedure

   WSDOT Test Method T 423 Conflict Monitor Testing

   WSDOT Test Method T 424 Power interruption Test

   WSDOT Test Method T 425 Environmental Chamber Test

   WSDOT Test Method T 427 Loop Amplifier Test

   WSDOT Test Method T 428 Compliance Inspection and Test Procedure

3. Process

   WSDOT Test Method T 421 Receiving Inspection and Test Procedure

   When the traffic controller assembly arrives for testing, the supplier should have arranged an appointment. Within 5 days of arrival the supplier shall assemble and demonstrate the controller assembly, Test Method T421 is to be completed in the presence of the supplier. After acceptance for testing a letter or e-mail is to be sent to the Project Engineer and/or the local agency identifying the assembly as ready of testing.

   WSDOT Test Method T 425 Environmental Chamber Test

   After completion of the environmental chamber test the controller assembly is to be sent to the Region Signal Shop to complete the test regimen. The Region Signal Shop will be informed when a traffic signal controller assembly has passed T425. The Region can choose to have the assembly picked up or it can be shipped commercially. If the controller assembly is not to be sent to the Region Signal Shop the Materials Lab will complete the test regimen beginning with Method T428.

   WSDOT Test Method T 428 Compliance Inspection and Test Procedure

   After receiving the controller assembly for testing a letter or e-mail is to be sent to the Project Engineer and/or the local agency identifying the assembly as ready for testing. At this point order is no longer important.

WSDOT Test Method T 422 Transient Voltage (Spike Test) Procedure

Test Method T422 is to be done only randomly and is not to be done on every assembly.

WSDOT Test Method T 423 Conflict Monitor Testing

WSDOT Test Method T 424 Power interruption Test

Test Method T424 is not to be performed on type 2070 controllers

WSDOT Test Method T 427 Loop Amplifier Test

Upon completion of all testing send the satisfactory test report to the Project Engineer with a copy to the Region Administrator, the State Signal Operation Engineer and the State Material Laboratory Electrical Engineer.

Note: All of the testing may not be performed at the same facility; there may be more than one satisfactory test report to document all of the required tests.

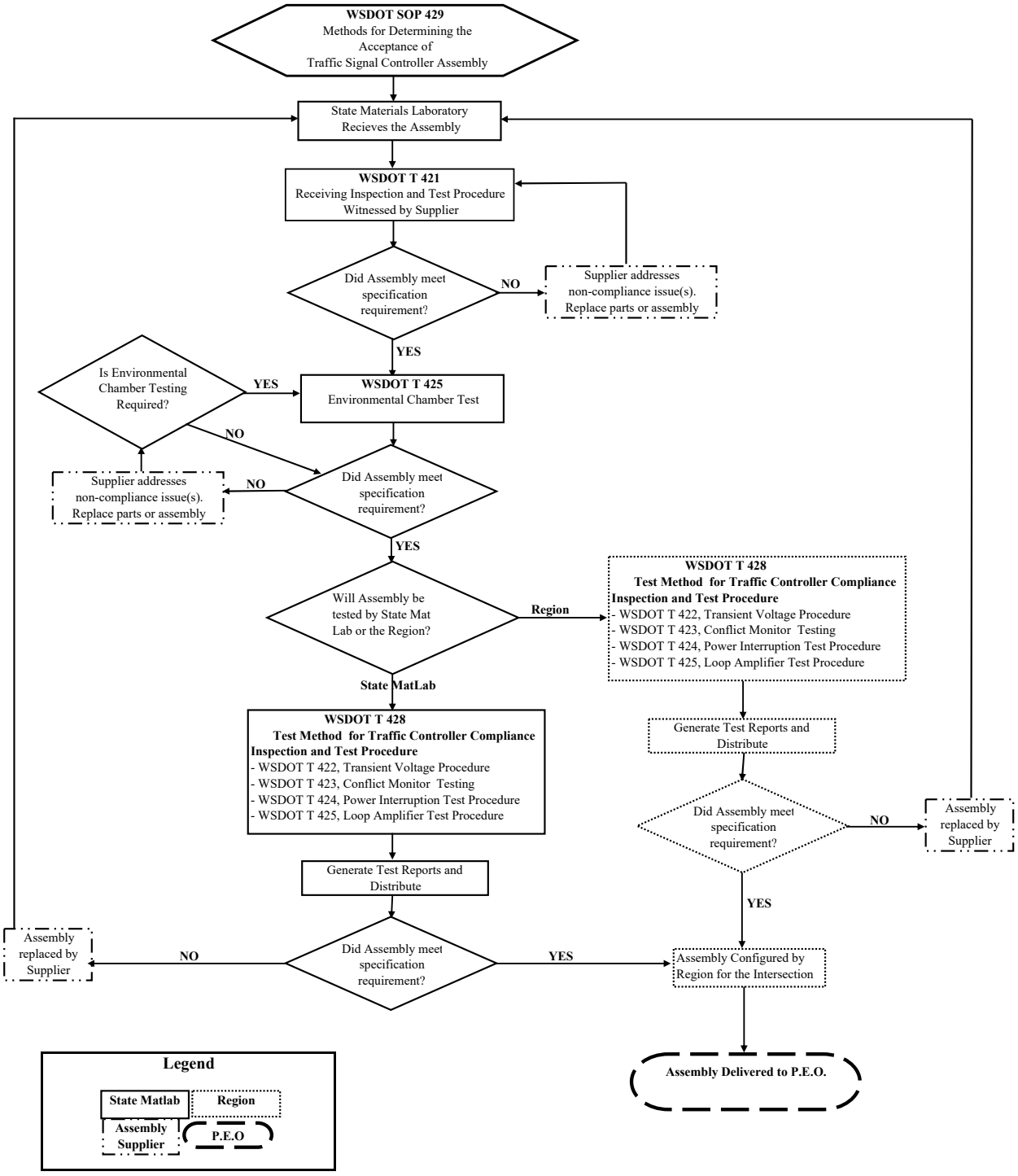
WSDOT SOP 429
Methods for Determining the Acceptance of Traffic Signal Controller Assembly
State Materials Laboratory Recieves the Assembly
WSDOT T 421
Receiving Inspection and Test Procedure Witnessed by Supplier
Did Assembly meet specification requirement?
NO
Supplier addresses non-compliance issue(s). Replace parts or assembly
YES
Is Environmental Chamber Testing Required?
YES
WSDOT T 425
Environmental Chamber Test
NO
Supplier addresses non-compliance issue(s). Replace parts or assembly
NO
Did Assembly meet specification requirement?
YES
Will Assembly be tested by State Mat Lab or the Region?
Region
WSDOT T 428
Test Method for Traffic Controller Compliance Inspection and Test Procedure
- WSDOT T 422, Transient Voltage Procedure
- WSDOT T 423, Conflict Monitor Testing
- WSDOT T 424, Power Interruption Test Procedure
- WSDOT T 425, Loop Amplifier Test Procedure
Generate Test Reports and Distribute
Did Assembly meet specification requirement?
NO
Assembly replaced by Supplier
YES
State MatLab
WSDOT T 428
Test Method for Traffic Controller Compliance Inspection and Test Procedure
- WSDOT T 422, Transient Voltage Procedure
- WSDOT T 423, Conflict Monitor Testing
- WSDOT T 424, Power Interruption Test Procedure
- WSDOT T 425, Loop Amplifier Test Procedure
Generate Test Reports and Distribute
Did Assembly meet specification requirement?
NO
Assembly replaced by Supplier
YES
Assembly Configured by Region for the Intersection
Assembly Delivered to P.E.O.
Legend
State Matlab
Region
Assembly Supplier
P.E.O

Washington State
Department of Transportation

WSDOT Test Method T 429

Retroreflectance of Newly Applied Pavement Marking Using Portable Hand-Operated Instruments

1. Scope

   This test method outlines the procedure for measuring the retroreflective properties of horizontal pavement marking materials containing retroreflecting beads, such as traffic stripes and surface symbols, using a portable retroreflectometer. Pavement markings must be checked for retroreflectivity within 14 days of application.

2. References

   2.1. ASTM E 1710 Measurement of Retroreflective Pavement Marking Materials with CEN-Prescribed Geometry Using a Portable Retroreflectometer

   2.2. WSDOT Test Method T 716 Method of Random Sampling for Location of Testing and Sampling Sites

   2.3 CEN EN 1436 Road Marking Materials—Road Marking Performance for Road Users

3. Apparatus

   3.1 Portable retroreflectometer meeting the requirements of ASTM E 1710

4. Test Locations

   4.1 Testing locations will be selected at random by WSDOT Test Method T 716

   4.2 Solid Longitudinal Lines

   4.2.1 Road Lengths < 1000 Feet
   Randomly select one test location of pavement marking for testing.

   4.2.2 1000 Feet < Road Lengths < One Mile
   Randomly select two test locations of pavement marking for testing.

   4.2.3 One Mile < Road Length < Six Miles
   Randomly select three test locations: near the start, near the midpoint and near the end of the project.

   4.2.4 Road Length > Six Miles
   Randomly select test locations: near the start and end of the project and at random intervals of approximately every 2 miles within the length of the project.

4.3 Broken Longitudinal Lines

4.3.1 Road Lengths < 1000 Feet
Randomly select one test location of pavement marking for testing.

4.3.2 1000 Feet < Road Lengths < One Mile
Randomly select two test locations of pavement marking for testing.

4.3.3 One Mile < Road Length < Six Miles
Randomly select three test locations: one near the start, one near the midpoint and one near the end of the project.

4.3.4 Road Length > Six Miles
Randomly select test locations near the start and end of the project and at random intervals of approximately every 2 miles within the length of the project.

Note: If the random test location does not fall on a line, the marking closest to the random location will be tested.

5. TESTING LOTS

5.1. Each test location shall be divided into lots as follows:

5.1.1 Divided multi-Lane Two Way Roadways

WHITE -Each edge-line will be a lot.

WHITE -Each lane line will be a lot.

YELLOW -Each edge line will be a lot.

Other non-continuous lines included in the test location (i.e. Drop lane lines, channelizing lines, etc.) shall be included with existing lots by material type, line type and color. If these lines cannot be matched with other lines they shall be a separate lot.

Lines on ramps that are included in the test location shall be included with existing lots by material type, line type and color. If these lines cannot be matched with other lines they shall be a separate lot.

5.1.2 Undivided Two and Four Lane Two Way Roadways with Center Turn Lane

WHITE- Each edge line will be a lot

WHITE- Each lane line will be a lot

YELLOW-Each combination of solid and broken centerline will be a lot

Other non-continuous lines included in the test location (i.e. drop lane lines, channelizing lines, and etc.) shall be included with existing lots by material type, line type and color. If these lines cannot be matched with other lines they shall be a separate lot.

5.1.3 Undivided Four lane and Two Lane Two Way Roadways with or without channelization

WHITE- Each edge line will be a lot

WHITE- Each lane line will be a lot.

YELLOW-Any centerline combination (broken and or solid) will be a lot

Other non-continuous lines included in the test location (i.e. drop lane lines, channelizing lines, and etc.) shall be included with existing lots by material type, line type and color. If these lines cannot be matched with other lines they shall be a separate lot.

6. MEASUREMENT PROCEDURE

6.1 Take retroreflectivity measurements between 7 and 14 days of pavement marking application

6.2 Check pavement marking surface to see that it is clean, dry and free of any loose retroreflective media. If loose media is found, remove it by using a strong brushing motion with a broom, air pressure or any other method that doe not damage the correctly embedded spheres.

6.3 Standardize and operate the retroreflectometer per manufacture's recommendations.

6.4 Measurements will be taken at each test location as follows:

6.4.1 Divided multi-Lane Two Way Roadways

Edge lines - Take ten measurements spaced a minimum of ten feet apart on each edge line within 200 feet of the of the random test location. All measurements will be taken in the direction of traffic. Measurements for lots will be recorded and kept separate.

Lane lines - Take ten measurements, two on each of five broken line segments, within 200 feet of the of the random test location. All measurements will be taken in the direction of traffic. Measurements for lots will be recorded and kept separate.

Other non-continuous lines and ramp lines as described in 5.2.1 above. Ten measurements will be taken on each line.

6.4.2 Undivided Two and Four Lane Two Way Roadways with Center Two-Way Left-Turn Lane or Undivided Four lane and Two Lane Two Way Roadways with channelization.

Edge lines - Take ten measurements spaced a minimum of ten feet apart on each edge line within 200 feet of the of the random test location. All measurements will be taken in the direction of traffic. Measurements for lots will be recorded and kept separate.

Lane lines - Take ten measurements, two on each of five broken line segments, within 200 feet of the of the random test location. All measurements will be taken in the direction of traffic. Measurements for lots will be recorded and kept separate.

Yellow Centerlines - Take five measurements within 200 feet of the of the random test location on each line (broken or solid) in one direction then turn the retroreflectometer 180 degrees and take five more measurements on each line in the other direction. Measurements for lots will be recorded and kept separate.

Other non-continuous lines as described in 5.2.2 and 5.2.3 above - Ten measurements will be taken on each line.

7. Report

7.1 Report the following information:

Contract number

Test date

Inspector name

Identification of the instrument used.

Value and date of standardization of the instrument standard panel used.

Ambient temperature

Milepost of test locations

Lot description by test location, lot number, type of line, color, material, date of installation and bid item number of the pavement marking

Print out of retroreflectometer readings for each lot at each test location per section, expressed as millicandelas per square meter per lux (mcd•m−2•lx−1). Include GPS coordinates for each retroreflectometer reading.

Remarks concerning the overall condition of the line, such as rubber skid marks, carryover of asphalt, snow plow damage, and other factors that may affect the retroreflection measurement.

Washington State
Department of Transportation

WSDOT Test Method T 432

Flexibility Test for Hot-Melt Adhesives

1. Scope

   This method describes the determination of flexibility of hot-melt adhesives under specific conditions.

2. Referenced Documents

   a. WSDOT SOP 318 – Standard Operating Procedure for Melting of Bituminous Pavement Marker Adhesive.

   b. ASTM D3111 – Standard Test Method for Flexibility of Hot-Melt Adhesives by Mandrel Bend Test Method – modified to meet WSDOT specification.

3. Apparatus and Materials

   a. 1″ diameter Mandrel and holder.

   b. Three-specimen stainless steel flexibility mold, 1/8″ x 1″ x 6″ dimensions.

4. Procedure

   a. Adhesive material is melted and prepared by Liquid Asphalt lab per WSDOT SOP 318.

   b. Test specimens poured into the flexibility mold.

   c. Test specimens allowed to cure at room temperature for at least one hour.

   d. The test specimens removed from the mold and conditioned at 20°F for minimum of four hours.

   e. The 1″ diameter Mandrel and its holder are also conditioned at 20°F for minimum of four hours.

   f. Flexibility test is done in the same environment used to condition the specimens, by bending each specimen over the 1″ Mandrel in an arc of 90° at a uniform rate for ten seconds.

5. Report

   Flexibility shall be reported as Pass/Fail. Failure is a visible fracture, crazing, or cracking of the hot-melt adhesive that can occur at any time during the bending of two out of the three specimens.

Washington State
Department of Transportation

WSDOT Test Method T 501

Test Method to Determine Durability of Very Weak Rock

1. Scope

   1.1 This test method covers the determination of the Jar Slake Index, Ij, of weak rock.

   1.2 The values stated in SI units are regarded as the standard.

   1.3 This standard does not purport to address all of the safety concerns, if any, associated with its use. It is the responsibility of the user of this standard to establish appropriate safety and health practices and determine the applicability of regulatory limitations prior to use.

2. Referenced Documents

   2.1 ASTM Standards

   - D 653 Terminology Relating to Soil, Rock, and Contained Fluids
   - D 2113 Practice for Rock Core Drilling and Sampling of Rock for Site Investigation
   - D 5079 Practices for Preserving and Transporting Rock Core Samples

3. Terminology

   3.1 For terminology used in this test method, refer to Terminology D 653.

   3.2 Definitions of terms specific to this test method:

   3.2.1 Jar Slake Index, Ij – the visual determination of degradation of weak rock at some elapsed time after immersion in water or polymer slurry. This value is an integer ranging from 1 to 6.

4. Significance and Use

   4.1 The Jar Slake test is a simple test developed to determine the reaction of weak rock material to water and/or polymer slurry during a certain period of time which can be tested on irregular bulk samples. Results of this test have implications on the porosity, grain interactions and density of the material.

   4.2 This test method is used to qualitatively estimate and assign durability values to weak rocks.

5. Apparatus

   5.1 300 ml to 600 ml clear glass laboratory jar, no taper.

   5.2 Drying Apparatus – Any suitable device capable of drying samples at a temperature not exceeding 60°C [140°F].

6. Test Sample and Specimen

   6.1 Collect, transport, and store test samples in such manner to retain the natural water content using the guidelines in ASTM D 2113 and D 5079.

   6.2 Test specimen shall be an air dried intact rock fragment with minimum dimensions of 25 mm × 25 mm and maximum dimensions of 65 mm × 50 mm. Specimen may be dried in an oven not exceeding 60°C [140°F].

7. Procedure

7.1 Place the specimen into an empty jar taking care not to break or fracture any part of it.

7.2 Photograph the specimen in the empty jar.

7.3 Add enough distilled water to cover the specimen by at least 15mm taking care not to disturb the specimen. A pre-mixed polymer slurry conforming to construction industry standards may be used in place of distilled water to investigate the retardation effects the polymer may have on the slaking process.

7.4 After two minutes of immersion, visually inspect the specimen to determine the Jar Slake Index, Ij, using the criteria contained in Table 1 and record the Ij for the reading.

7.5 Repeat Step 7.4 after 4, 6, 8, 10, 15, 20, 60, and 1440 minutes.

7.6 Take a final photograph of the specimen.

Jar Slake Index, Ij	General behavior during test
1	Degrades rapidly into a pile of flakes or mud
2	Breaks readily and/or forms many chips
3	Breaks slowly and/or forms few chips
4	Breaks rapidly and/or develops several fractures
5	Breaks slowly and/or develops few fractures
6	Very little or no change

Jar Slake Index Descriptions
Table 1

8. Report

8.1 The report shall include the following:

8.1.1 Specimen identification and description, test date, and test fluid used.

8.1.2 Jar Slake Index value for all required readings.

8.1.3 The Jar Slake Index Table (Table 1).

8.1.4 Beginning and final photographs.

WSDOT Test Method T 601

Method of Test for Sieve Analysis of Soils – Coarse Sieving

1. Scope

   a. This test method describes the procedure for quantitative determinations of the distribution of particles larger than the 4.75 mm (U.S. No. 4) sieve.

2. Equipment

   a. Drying oven to maintain a temperature of approximately 50°C (122°F).

   b. Drying pans.

   c. A sieve shaker with sieves of the following sizes which conform to the Specifications for Sieves for Testing Purposes (Appendix A), 1 in. (25.4 mm), ¾ in. (19.0 mm), ½ in. (12.5 mm), ⅜ in. (9.5 mm), and U.S. No. 4 (4.75 mm).

   d. A platform scale which has a capacity of 100 lbs. (45 kg) and graduations of 0.1 lb. (0.1 kg).

   e. A metal scoop for removing the sample fraction from the sieves. A heavy-duty household dustpan is satisfactory.

   f. Metal tub or pan for retaining the fine fraction of the screend sample.

   g. Paper sacks, size No. 6.

   h. 5 gal. (20 liter).

   i. Riffle splitter.

   j. Box sieves are to be used for determining the size of particles which are larger than 1½ in. (37.5 mm).

   k. Rotary screen.

3. Preparations

   a. Empty the sample, unless thoroughly dry, into a large drying pan, spread evenly, and break up large lumps. With some materials, especially those containing clay, it will be necessary to break up aggregations of particles. This may be done by using rodding-type blows with a hammer or by using the rotary screen as a maller (see note).

      Note: Some materials are resistant to shock and abrasion, but are sensitive to moisture. For samples of this nature, a representative portion is soaked in water to observe possible slaking or decomposition characteristics. If slaking or decomposition occurs place the entire sample in a large, rectangular, shallow pan, completely soak with water until decomposition ceases, then thoroughly dry the sample for sieve analysis.

   b. Place a sample identification tag marked with the laboratory and storage container number with the sample.

c. Dry the sample in the oven for approximately 24 hours. Although most materials will dry sufficiently in 24 hours, some clay requires a longer time.

(1) An alternate method of drying a large sample is by the "Air-drying Method" below. Use the following procedure:

Spread the sample, in a uniform layer, on a clean, dry, flat surface (e.g., concrete floor), and allow it to air-dry.

4. Procedure

a. Insert the sieves in the sieve shaker and secure them.

b. Put the sample in the top sieve and start the machine.

c. When the sample contains particles larger than 1½ in. (38 mm), place these particles in the box sieves to determine their maximum size. Particles larger than 2½ in. (63.5 mm) must be measured. Weigh the particles and record the weight (mass) on the test record form.

d. When the sieving is complete, remove the particles retained on each sieve and weigh to the nearest 0.1 lb. (0.056 g). Record the weight (mass) retained on each sieve.

e. Any sample that contains individual fractured particles must be checked to determine the percent of fracture by AASHTO T 335. Record the 1 percent of fracture.

f. Unless otherwise instructed under "Remarks," on DOT Form 351-007, the portions of the sample retained on the 1½ in. (38 mm), 1 in. (25 mm), and ¾ in. (19 mm) sieves are discarded in the waste bin. The ¾ in. (19 mm) to ⅜ in. (9.5 mm) and ⅜ in. (9.5 mm) to U.S. No. 4 (4.75 mm) fractions are to be labeled and placed in separate paper sacks.

g. Weigh and record the weight (mass) of the portion passing the U.S. No. 4 (4.75 mm) sieve.

h. Separate the fines using the riffle splitter until a 3 to 4 lb. (1.4 to 1.8 kg) representative sample is obtained this portion is placed in a paper sack, identified by laboratory number, and forwarded to the Fine Grading Laboratory for grain-size analysis, AASHTO T 38.

i. Place the remainder of the fines U.S. No. 4 (4.75 mm) passing sieve in numbered storage container along with the sacks containing the U.S. No. 4 (4.75 mm) plus fractions (from g. above).

j. Store the storage container pending further soil tests.

5. Precautions

a. Do not wear loose clothing or apron that will catch on the rotary screen.

6. Reports

a. Test results will be reported on a computer generated test report.

Washington State
Department of Transportation

WSDOT Test Method T 606

Method of Test for Compaction Control of Granular Materials

1. Scope

   This test method is used to establish the theoretical maximum density of granular materials and non-granular materials with more than 30 percent by weight of the original specimen is retained on the No. 4 sieve or more than 30 percent by weight of the original specimen is retained on the ¾ in sieve.

2. Reference Documents

   2.1 AASHTO Standards

   T 99 – Moisture-Density Relations of Soils Using a 5.5 lb (2.5 kg) Rammer and a 12 in (305 mm) Drop (Method A only)

   M 92 – Standard Specification for Wire-Cloth Sieves for Testing Purposes

   M 231 – Standard Specification for Weighing Devices Used in the Testing of Materials

   2.2 WSDOT Standards

   T 2 – FOP for AASHTO Standard Practice for Sampling Aggregates

   T 248 – FOP for AASHTO Reducing Samples of Aggregate to Testing Size

   T 255 – FOP for AASHTO Total Moisture Content of Aggregate by Drying

3. Definitions

   3.1 Fine Aggregate Portion – Material passing the No. 4 Sieve.

   3.2 Coarse Aggregate Portion – Material retained on the No. 4 Sieve.

4. Significance and Use

   This test method consists of three separate tests which present a method for establishing the proper theoretical maximum density values to be used for controlling the compaction of granular materials. In general, this test method is applicable to granular materials having 30 to 70 percent of the material passing the No. 4 (4.75 mm) sieve. These methods account for variations of maximum obtainable density of a given material for a given compactive effort, due to fluctuations in gradation.

5. Apparatus

5.1 A vibratory spring-loaded compactor. Information on where to obtain this equipment will be provided by the State Materials Laboratory.

5.2 Small Mold height = 8 in ± 0.1 internal diameter = 6 in ± 0.15, a piston to fit inside the mold with a maximum 1⁄16 in clearance between piston and mold.

5.3 Large Mold- Approximately ½ ft^3 (internal height 85-150% of diameter) with a piston to fit inside mold having a maximum 1⁄16 in clearance between piston and mold.

5.3.1 The molds and pistons will be constructed of metal of such dimensions as to remain rigid and inflexible under test conditions.

5.4 Spacer blocks of varying heights compatible with the compactor and pistons.

5.5 Measuring device, accurate and readable to 0.01 in with a minimum 6 in length.

5.6 Pycnometer calibrated at the test temperature having a capacity of at least 1 quart (100 ml). Glass pycnometers shall be used to determine the specific gravity of the fine particles. The glass pycnometer shall have a companion glass plate large enough to cover the jar's opening when calibrating or weighing the pycnometer.

5.7 Absolute pressure gauge or vacuum gauge, used for annual standardization and traceable to NIST (mandatory) to be connected directly to the vacuum vessel and to be capable of measuring residual pressure down to 30 mm Hg (4.0 kPa), or less (preferably to zero). It is to be connected at the end of the vacuum line using an appropriate tube and either a "T" connector on the top of the vessel or by using a separate opening (from the vacuum line) in the top of the vessel to attach the hose.

Note 2: A residual pressure of 30 mm Hg (4.0 kPa) absolute pressure is approximately equivalent to 730 mm Hg (97 kPa) reading on vacuum gauge at sea level.

5.8 One vacuum pump or aspirator (pressure not to exceed 100 mm mercury).

5.9 One balance accurate to 0.1 g.

5.10 3 in (75 mm), ¾ in (19 mm), and a No. 4 (4.75 mm) sieve conforming to AASHTO M 92 requirements.

5.11 Balance or Scale – Capacity sufficient for the principle sample mass, readable to 0.1 percent or 0.1 g, and meeting the requirements of AASHTO M 231.

5.12 Manually Operated Metal Rammer – As specified in AASHTO T 99, Apparatus.

5.13 Tamping rod of straight steel, ⅝ in (16 mm) in diameter and approximately 24 in (400 mm) long having at least one end rounded to a hemispherical tip.

5.14 Graduated cylinder.

5.15 A stopwatch or timer readable to 1 second.

6. Selection of T 606 Test and Procedure

   To select the proper method for determining the maximum density of the fine aggregate portion of the sample, refer to the Fine Aggregate Split of Original Sample section of Table 1.

   To select the proper procedure in Test 2 for determining the maximum density of the coarse aggregate portion of the sample, refer to the Coarse Aggregate Split of Original Sample section of Table 1.

Fine Aggregate Split of Original Sample	
Soil Type	**Test Method**
Sandy, non-plastic, permeable soils or non-cohesive soils.	T 606, Test 1
Silt, some plasticity, low permeability.	T 99, Method A
Sandy/silt, some plasticity, permeable.	T 606, Test 1/T 99, Method A (use highest results)
Coarse Aggregate Split of Original Sample	
No more than 15 percent by weight of the original aggregate specimen exceeds ¾ in.	T 606, Test 2, Procedure 1
15 percent or more by weight of the original aggregate specimen is greater than ¾ in (19 mm), but does not exceed 3 in (76 mm).	T 606, Test 2, Procedure 2

Test Selection
Table 1

7. Sampling Material

   7.1 Sample the material in accordance with WSDOT FOP for AASHTO T 2.

   7.2 Native soils within the contract limits to be used for embankment construction and/or backfill material do not require sampling by a qualified tester.

   7.3 For material that requires gradation testing such as but not limited to manufactured aggregates and gravel borrow, sampling shall be performed by a qualified testers.

8. Sample Preparation

   8.1 Prepare the field sample by splitting out a representative portion in accordance with WSDOT FOP for AASHTO T 248.

   8.2 Dry the compaction sample in accordance with WSDOT FOP for AASHTO T 255.

   8.3 Scalp the plus 75 mm (3 in) material from the compaction sample and discard, if not required for other tests.

8.4 Separate the remainder of the compaction sample into coarse and fine aggregate fractions as follows:

8.4.1 Fine Aggregate (No. 4 minus) – Minimum of three portions approximately 13 lb (6 kg) each.

8.4.2 Coarse Aggregate

8.4.2.1 Procedure 1 (Aggregate Size: No. 4 to ¾ in (19 mm) – Separate a representative specimen of 10 to 11 lbs (4.5 to 5 kg) and weigh to 0.01 lbs (5 g) or less if using a balance that is more accurate than 0.1 lbs.

8.4.2.2 Procedure 2 (Aggregate Size: No. 4 to 3 in (76 mm) – Separate a representative specimen of 45 lbs (20 kg) and weigh to 0.1 lbs (50 g) or less if using a balance that is more accurate than 0.1 lbs.

9. Procedure

9.1 Test No. 1 – Compaction Test of the Fine Fraction (No. 4 Minus Material)

9.1.1 Assemble the small mold and determine its mass, along with the piston, to the nearest 0.01 lb (5 g). Record this as the Mass of Mold Assembly.

9.1.2 Using one of the fine aggregate portions, add an amount of water estimated to produce a saturated sample (see Note 1). Mix the water and aggregate until the sample is homogenous.

Note 1: The sample is considered saturated when one to two drops of free water are visible at the base of the mold at the end of the first 2-minute cycle. Do not over saturate the material.

9.1.3 Set the piston aside and place the sample in the mold in three approximately equal layers. Consolidate each lift by 25 strokes of the tamping rod followed by 25 blows of the manually operated metal rammer. The surface of the top lift should be finished as level as possible.

9.1.4 Place the piston on top of the sample and mount the mold on the jack platform in the compactor. Spacers between the load spring and piston must be used to adjust the elevation of the mold so the hammers strike the mold in the center of the lift area.

9.1.5 Elevate the mold until the loading head seats on top of the piston. Apply an initial seating load of approximately 100 lbs on the sample.

9.1.6 Start the compactor hammers and, by elevating the jack, begin the loading procedure. The load is gradually applied over the time stated in the table below.

Load Application Rate	
Load	**Time**
0 to 500 lb	1 minute
500 lb to 1,000 lb	30 sec
1000 lb to 2,000 lb	30 sec

9.1.7 Upon reaching the 2,000 lb load at the end of the 2-minute cycle, stop the hammers, release the load on the jack, return to zero pressure, and check for free water.

Note 2: If dirty water is flooding off the base of the mold or excessive material is pumping around the sides of the top piston, the sample is beyond the saturation point. Stop the test, remove the material from the mold, prepare a new sample at lower moisture content, and begin the test again.

9.1.8 Repeat Steps 9.1.5 through 9.1.7 four additional times (excluding check for free water). After the last run, remove the mold from the compactor.

9.1.9 Measure the height of the compacted sample to the nearest 0.01 in (0.1 mm) and record as the "Depth."

9.1.10 Determine the mass of the specimen in the mold to the nearest 0.01 lb (5 g). Record this as: Mass of Mold + Sample.

9.1.11 Remove the specimen from the mold and determine the moisture content in accordance with WSDOT FOP for AASHTO T 255.

9.1.12 Vertically slice through the center of the specimen, take a representative specimen (at least 1.1 lbs (500 g)) of the materials from one of the cut faces (using the entire specimen is acceptable), weigh immediately, dry in accordance with AASHTO T 255 to determine the moisture content, and record the results.

9.1.13 Calculate and record the dry density of fine fraction.

9.2 Test No. 2 – Compaction Test of the Coarse Fraction

9.2.1 Procedure 1 – ¾ in (19 mm) to No. 4 (4.75 mm) Aggregates

9.2.1.1 Determine the mass of the coarse aggregate to the nearest 0.01 lb (5 g).

9.2.1.2 Add 2.5 percent moisture to the sample, mix thoroughly.

9.2.1.3 Place in 0.1 ft^3 (0.0028 m^3) mold in approximately three equal lifts. Tamp each lift lightly to consolidate material and achieve a level surface. Avoid the loss of any material during placement.

9.2.1.4 Follow steps 9.1.5 through 9.1.8.

9.2.1.5 Measure the height of the compacted sample to the nearest 0.01 in (0.1 mm) and record as the "Depth."

9.2.1.6 Calculate and record the dry density of coarse fraction.

9.2.2 Procedure 2 – 3 in (76 mm) to No. 4 Aggregates

9.2.2.1 Determine the mass of the coarse aggregate to the nearest 0.01 lb (5 g) or better.

9.2.2.2 Divide the sample into five representative, approximately equal portions.

9.2.2.3 Place one of the portions into the ½ ft^3 (0.014 m^3) mold and level the surface.

9.2.2.4 Position the piston on the material, mount the mold in the compactor, and compact as described in steps 9.1.5 through 9.1.7.

Note 3: Spacers may be needed between the load spring and piston to adjust the elevation of the mold to the height of the lift being compacted.

9.2.2.5 Repeat 9.2.2.3 and 9.2.2.4 for the remaining four portions of material.

9.2.2.6 After the final portion is compacted, determine the height of the compacted sample to the nearest 0.01 in (0.1 mm) and record as the "Depth."

9.2.2.7 Calculate and record the dry density of coarse fraction (see Calculations section).

9.3 Test No. 3 – Specific Gravity Determination for Maximum Density Test

9.3.1 Material

9.3.1.1 Fine fraction No. 4 (4.75 mm) minus 1.1 lbs (500 g) minimum.

9.3.1.2 Coarse fraction No. 4 (4.75 mm) plus 2.2 lbs (1,000 g) minimum.

9.3.2 Procedure

9.3.2.1 Place dry materials, either fine or coarse fraction, in pycnometer.

9.3.2.2 Fill the pycnometer approximately ¾ full with 68°F (20°C) water.

9.3.2.3 Connect the pycnometer to the vacuum system. Apply a partial vacuum of 30 mm Hg or less absolute pressure for a period of 20 minutes.

9.3.2.4 Agitate container either continuously by mechanical device or manually by vigorous shaking at 2-minute intervals.

9.3.2.5 Release vacuum and disconnect the hoses.

9.3.2.6 Fill pycnometer with water. Water temperature during test should be maintained as close to 68° ± 1°F (20° ± 0.5°C) as possible.

Note 4: It may be necessary to place the pycnometer in a water bath for 10 minutes, after release of vacuum, to bring the water temperature back to 68° ± 1°F (20° ± 0.5°C).

9.3.2.6.1 Metal Pycnometer (Coarse Specific Gravity Only) – Fill the vessel, according to the manufacturer's instructions, with 68° ± 1°F (20° ± 0.5°C) water. Dry the outside of the vessel and weigh to the nearest 0.1g. Record the weight.

9.3.2.6.2 Glass Pynometer (Fine or Coarse Specific Gravity) – Completely fill the pycnometer with 68° ± 1°F (20° ± 0.5°C) water, then slide the calibrated glass plate over the mouth of the jar making sure air bubbles are not trapped under the glass plate. Dry the outside of the pycnometer and glass plate and weigh to the nearest 0.1g. Record the weight.

Calculations

10. Determine the dry density of each of the fine aggregate points as follows:

10.1 Calculate Specific Gravity as follows:

$$\text{Sp. Gr.} = = \frac{a}{(a + b - c)}$$

Where:

a = Weight of dry material, grams
b = Weight of pycnometer + water, grams
c = Weight of pycnometer + material + water, grams

10.2 Calculate the wet sample weight:

$$e = c - d$$

Where:

e = Wet sample weight, g
c = mold and wet sample weight
d = Tare of mold assembly

10.3 Calculate the wet density by:

$$g = \frac{e}{b \times f}$$

Where:

g = wet density, lb/ft^3
e = wet sample weight, lbs
b = mold constant, ft^3/in
f = height of sample, in (height constant-depth)

10.4 Calculate the dry density of each of the fine fraction specimens as follows:

$$h = \frac{g}{1 + n}$$

Where:

h = dry density, lb/ft^3
g = wet density, lb/ft^3
n = moisture content, expressed as a decimal

11. Reports

11.1 Enter information into the WSDOT Materials Testing System (MATS) or other form approved in writing by the State Materials Engineer to obtain the theoretical maximum density curve.

Performance Exam Checklist

Method of Test for Compaction Control of Granular Materials
WSDOT Test Method T 606

Participant Name _____ Exam Date _____

Procedure Element **Yes No**

1. The tester has a copy of the current procedure on hand?
2. All equipment is functioning according to the test procedure, and if required, has the current calibration/verification tags present?

Fine Fraction – 100% Passing the No. 4 (4.75 mm) Sieve

Specimen Preparation

1. Has the specimen been oven-dried?
2. Has the specimen been separated on the No. 4 (4.75 mm) sieve?
3. Is the specimen weight approximately 13 lbs?

Procedure

1. Is specimen saturated when compacted?
2. Has specimen been placed in three layers, rodded 25, and tamped 25 times, each layer?
3. Is the hammer blow approximately a 12 in free fall to prevent severe displacement of the specimen?
4. The specimen is as level as possible?
5. Has piston been placed on top of the specimen?
6. Has the mold been mounted on the jack in the compactor?
7. Has the mold been elevated until the load-spring retainer sits on top of the piston?
8. Has the initial load been set at 100 lbs?
9. Is the loading rate applied as specified in the test procedure?
10. Has the hammer been stopped, jack released, and pressure returned to zero when 2,000 lbs pressure was reached?
11. Are one to two drops of free water visible at the base of the mold at the end of the first 2-minute cycle?
12. Steps 7 through 10 repeated four additional times?
13. The mold removed from the compactor?
14. Has the height of the specimen been determined?
15. Has specimen been weighed?
16. Has specimen been removed from mold and a representative portion immediately weighted and the moisture percentage determined?
17. Moisture content, dry density determined and entered on the testing sheet?
18. Theoretical maximum density determined by testing fresh specimens, as necessary, at different moisture contents and entered on the testing sheets?

Procedure Element **Yes No**

Aggregate Size: No. 4 to ¾ in (19 mm)

Specimen Preparation

1. Has the specimen been oven-dried?
2. Has the specimen been separated on the No. 4 (4.75 mm) sieve?
3. Does more than 85 percent of the material pass the ¾ in (19 mm) sieve?

Procedure

1. Weight and record specimen weight?
2. Has the specimen been dampened to 2½ percent and placed in three lifts in a 0.1 ft^3 mold?
3. Specimen lightly tamped to archive a level surface?
4. Piston placed on top of specimen and mold mounted on jack in compactor?
5. Mold elevated until the load-spring retainer sits on top of the piston?
6. Initial load of 100 lbs set prior to starting machine?
7. Is the load rate applied as specified in the test procedure?
8. Hammers stopped, jack released, and pressure returned to zero when 2,000 lb load has been reached?
9. Steps 5 through 8 repeated four additional times?
10. The mold removed from the compactor and the height measured?
11. Dry density calculated and entered on the testing sheets?

Aggregate Size: No. 4 to 3 in

Specimen Preparation

1. Has the specimen been oven-dried?
2. Has the specimen been separated on the No. 4 (4.75 mm) sieve?
3. Is the specimen weight approximately 45 lbs?
4. Does the specimen contain 15 percent or more ¾ + material?
5. Has material greater than 3 in (76 mm) been removed?
6. Specimen separated into five approximately equal parts?

Procedure

1. Specimen placed in the mold in five separate lifts?
2. The specimen is as level as possible?
3. After each lift, mold placed in compactor and compacted according to test procedure?
4. After compacting final lift, specimen removed from compactor and volume determined?
5. Dry density determined calculated and entered onto testing sheet?

Procedure Element **Yes No**

Specific Gravity Determination for Theoretical Maximum Density Test

Specimen Preparation

1. Has the specimen been oven-dried?
2. Has the specimen been separated on the No. 4 (4.75 mm) sieve?
3. Weight of fine fraction approximately 500 g?
4. Weight of coarse fraction approximately 1000 g?

Procedure

1. Material placed in pycnometer and 68°F water added?
2. Vacuum applied for at least 20 minutes?
3. Container and contents agitated manually by shaking at intervals of 2 minutes?
4. Pycnometer filled with water at 68°F?
5. Pycnometer dried, weighted, and recorded on testing sheet?
6. Specific Gravity calculated and entered onto testing sheet?

First Attempt: Pass Fail Second Attempt: Pass Fail

Signature of Examiner _____

Comments:

WSDOT Test Method T 610

Method of Test for the Capillary Rise of Soil

1. Scope
   a. This test method describes the capillary rise test which determines the susceptibility of soil to damage by frost. The soil sample, closing the top of a glass tube, is subjected to the pull of an increasing head of water which compresses the soil and reduces its moisture content until air is forced through the soil by a maximum head which is termed the capillary rise.
2. Equipment
   a. Capillary Apparatus — The capillary apparatus shall conform to the details shown in Figure 1 and shall consist of the following components:
      (1) Glass Filter Tube — A glass filter tube, as detailed in Figure 1, fitted with a cork disk shaped to fit the shoulder of the tube and having a 1.57 in (40 mm) diameter hole in the center. A disk of No. 200 (0.075 mm) sieve is placed above the cork disk to retain the soil particles
      (2) Glass Tube — A glass extension tube, 3.3 ft (1,000 mm) in length, and the same diameter as the lower part of the filter tube, connected to the filter tube by means of a short piece of rubber tubing.
      (3) Glass Cylinder — A glass cylinder, 2 in (50 mm) in diameter and 4 ft (1220 mm) long, fitted with a single hole rubber stopper with a short piece of glass tubing, and a rubber hose about 3 ft (1 m) long with a clamp or other device for controlling the inlet-outlet flow of water.

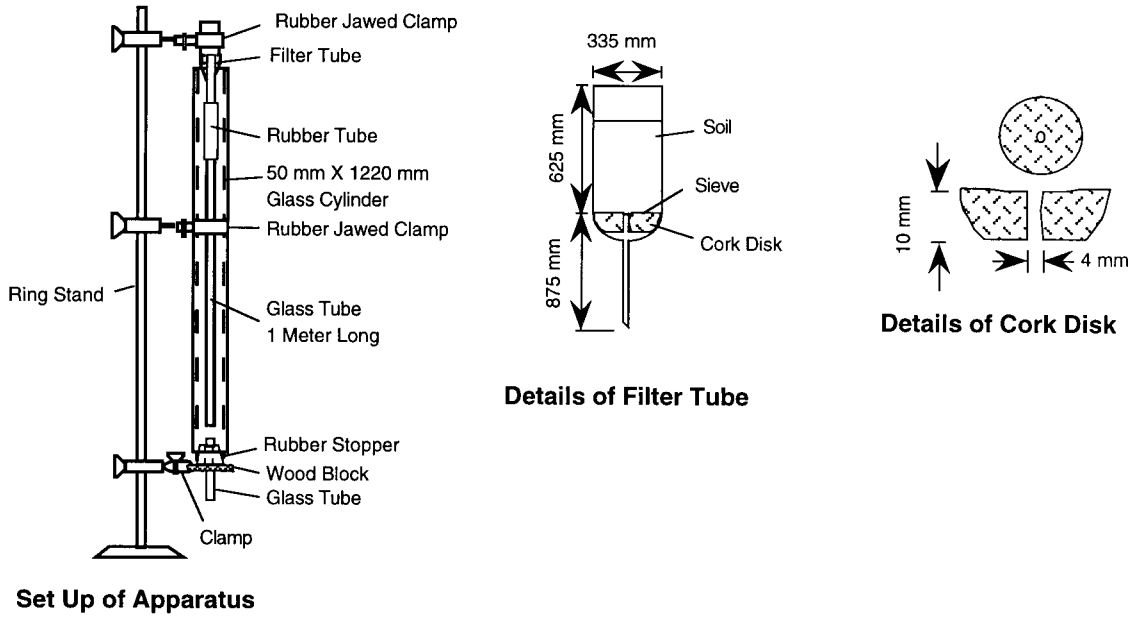

Capillary Apparatus
Figure 1

3. Procedure
   a. Assemble the equipment as shown in Figure 1.
   b. Select from the material passing the No. 10 (2 mm) sieve a 200 g sample. Select from this 200-g sample a portion large enough to fill the filler tube, without tamping, to a height of 1.57 in (40 mm).
   c. Admit water into the jacket through the bottom tube until it is filled to a level slightly above the top of the soil in the filter tube and allow to stand for five minutes.
   d. After five minutes, lower the water until it is level with the bottom of the cork disk. Allow the excess water to drain from the soil
   e. After the excess water has drained from the soil, allow the water level in the jacket to drop slowly 2 in (50 mm) every five minutes until the water in the filter tube breaks.
4. Calculations
   a. The distance, in inches, between the top of the water in the jacket and the top of the soil when the water column in the tube breaks is reported as the capillary rise.
5. Reports
   a. All test results will be reported to the Soils Engineer.

Washington State
Department of Transportation

WSDOT Standard Operating Procedure SOP 615

Determination of the % Compaction for Embankment & Untreated Surfacing Materials Using the Nuclear Moisture-Density Gauge

1. Scope

   This procedure covers the procedures for determining the in-place density, moisture content, gradation analysis, oversize correction, and determination of maximum density of compacted soils and untreated surfacing materials using a nuclear density device in the direct transmission mode.

2. References

   a. AASHTO T 99 for Method of Test for Moisture-Density Relations of Soils

   b. AASHTO T 180 for Method of Test for Moisture-Density Relations of Soils

   c. AASHTO T 224 for Correction for Coarse Particles in Soil Compaction Test

   d. T 255 – WSDOT FOP for AASHTO for Total Moisture Content of Aggregate by Drying

   e. T 272 – WSDOT FOP for AASHTO for Family of Curves — One Point Method

   f. T 310 – WSDOT FOP for AASHTO for In-Place Densities and Moisture Content of Soils and Soil-Aggregate by Nuclear Methods (Shallow Depth)

   g. WSDOT T 606 Method of Test for Compaction Control of Granular Materials

3. Test Location

   When selecting a test location, the tester shall visually select a site where the least compactive effort has been applied. Select a test location where the gauge will be at least 6 in (150 mm) away from any vertical mass. If closer than 24 in (600 mm) to a vertical mass, such as in a trench, follow gauge manufacturer correction procedures.

   When retesting is required due to a failing test; retest within a 10-foot radius of the original station and offset.

4. Nuclear Density Test

   Determine the dry density and moisture content of soils and untreated surfacing materials using the nuclear moisture-density gauge in accordance with WSDOT FOP for AASHTO T 310, and record in the Materials Testing System (MATS), WSDOT Form 350-074, Field Density Test, or other form approved in writing by the State Materials Engineer.

5. Oversize Determination

   a. AASHTO T 99 and WSDOT T 606

   A sample weighing a minimum of 4.08 kg (9 lbs) will be taken from beneath the gauge. Care shall be taken to select material that is truly representative of where the moisture density gauge determined the dry density and moisture content.

   There are two methods for determining the percentage of material retained on the No. 4 sieve:

   1. Method 1 – material that allows for the easy separation of fine and coarse aggregate.

      a. Dry the sample until no visible free moisture is present (material may still appear damp but will not be shiny).

      b. Determine and record the mass of the sample to the nearest 0.1 percent of the total mass or better.

      c. Shake the sample by hand over a verified No. 4 (4.75 mm) sieve taking care not to overload the sieve. Overloading for a No. 4 (4.75 mm) sieve is defined as; A retained mass of more than 800 g (1.8 lbs), on a 12 inch sieve, or 340 g, (0.75 lbs); on an 8 inch sieve after sieving is complete.

         Note 1: If the tester suspects a sieve will be overloaded the sample can be separated into smaller increments and recombined after sieving.

      d. Determine and record the mass of the material retained on the No. 4 (4.75 mm) sieve to the nearest 0.1 percent of the total mass or better and record.

   2. Method 2 – recommended for crushed surfacing materials, materials with high clay content, or other granular materials that are at or near the optimum moisture content for compaction.

      a. Determine and record the mass of the sample to the nearest 0.1 percent of the total mass or better and record.

      b. Shake sample by hand over a verified No. 4 (4.75 mm) sieve. Do not overload the sieve. (See Section 1a and Note 1 for overload definition and information on how to prevent overloading of a sieve)

      c. Shake material until no particles are observed passing the No. 4 (4.75 mm) sieve

      d. Rinse the sample with potable water

      e. Continue rinsing the material until it is visibly free of any coating or minus No. 4 material.

      f. Place the washed material, retained on the No. 4 (4.75 mm) sieve, into a tared container and blot until no visible free moisture is present on the material (material may still appear damp but will not appear shiny).

      g. Determine and record the mass of the material retained on the No. 4 (4.75 mm) sieve to the nearest 0.1 percent of the total mass or better.

b. AASHTO T 180

1. Follow either Method 1 or Method 2 in 5 a. with the following exception; sieve the material over a ¾ in (19.0 mm) sieve.
2. Do not overload the ¾" (19.0 mm) sieve. Overloading of a ¾" (19.0 mm) sieve is defined as: A retained mass of more than 3.2 kg (7.04 pounds) on a 12 inch sieve or 1.4 kg (3.08 pounds) on an 8 inch sieve after sieving is complete.

6. Calculations

a. Calculate the percent retained as follows:

$$\% \text{ retained (Pc)} = 100 \times \frac{\text{mass retained on sieve}}{\text{original mass}} \text{ (round to nearest percent)}$$

b. Calculate percent passing as follows:

% passing = 100 – % retained

c. Calculate the dry density as follows:

$$d = \frac{100}{100 + W} (m)$$

Where:

d = dry field density of total sample, pcf
m = total field wet density, pcf
W = moisture content of total field sample

d. Calculate the corrected theoretical maximum density as follows:

$$D_d = \frac{100 \times (D_f) \times (k)}{[(D_f) \times (P_c) + (k) \times (P_f)]}$$

Where:

D_d = corrected dry density of combined fine and oversized particles, expressed as lbs/ft^3.
D_f = dry density of fine particles expressed as lbs/ft^3, determined in lab.
P_c = percent of coarse particles, by weight.
P_f = percent of fine particles, by weight.
k = 62.4 x Bulk Specific Gravity.

Calculate in-place dry density to the nearest 0.1 lbs/ft^3.

Note 2: If the specific gravity of the coarse particles has been determined, use this value in the calculation for the "k" value. If the specific gravity is unknown then use 2.67. Either AASHTO T 85 or WSDOT T 606 Test 3 may be used to determine the specific gravity of the coarse particles.

e. Calculate the percent of compaction using the following equation:

$$\% \text{ compaction} = \frac{\text{Dry Density (lbs/ft}^3)}{\text{corrected theoretical maximum density (lbs/ft}^3)}$$

7. Density Curve Tables

   The Materials Testing System (MATS) Density Curve Tables is the WSDOT preferred method for determining the corrected theoretical maximum density.

   a. MATS calculates the corrected theoretical maximum density in accordance with AASHTO T 224 Section 4.2 and reports the results in the Density Curve Table.

   b. To determine the corrected theoretical maximum density using the Density Curves Table enter the Table at the line corresponding to the % passing or % retained (T 99 & T 180 requires percent retained, T 606 requires percent passing), read across to the column labeled Max this number is the Corrected Theoretical Maximum Density.

8. Report

   a. Report the results using one or more of the following:
      - Materials Testing System (MATS)
      - WSDOT Form 350-074 and 351-015
      - Form approved in writing by the State Materials Engineer

   b. Report the percent of compaction to the nearest whole number.

Performance Exam Checklist

WSDOT Standard Operating Procedure SOP 615
Determination of the % Compaction for Embankment &
Untreated Surfacing Materials Using the Nuclear Moisture-Density Gauge

Participant Name _____ Exam Date _____

Procedure Element	**Yes**	**No**
1. The tester has a copy of the current procedure on hand?		
2. All equipment is functioning according to the test procedure, and if required, has the current calibration/verification tags present?		

Gradation Analysis
3(A) Method 1

1. Sample Dried to a SSD condition (dried until no visible free moisture present) and mass recorded?		
2. Sample allowed to cool sufficiently prior to sieving?		
3. Sample was shaken by hand through the appropriate sieve for a sufficient period of time?		
4. Recorded mass of material retained on the appropriate sieve?		
5. Calculated and recorded percent of material retained and passing the appropriate sieve?		

3(B) Method 2

1. Mass of sample determined prior to washing?		
2. Material charged with water in suitable container and agitated to suspend fines?		
3. Sample decanted over required sieve for a sufficient amount of time without overloading sieve?		
4. Retained material dried to SSD condition and mass determined?		
5. Recorded mass of material retained on appropriate sieve?		
6. Calculated and recorded percent of material retained and passing appropriate sieve?		

Correction for Coarse Particles

7. Appropriate MATS Density Curve Table used to determine the corrected theoretical maximum density, based on the percent passing or retained on the appropriate sieve?		
8. All calculations performed correctly?		

First Attempt: Pass Fail Second Attempt: Pass Fail

Signature of Examiner _____

Comments:

WSDOT Test Method T 712

Standard Method of Reducing Hot Mix Asphalt Paving Mixtures

Significance

Samples of bituminous paving mixes taken in accordance with FOP for WAQTC T 168 are composites and are large to increase the likelihood that they are representative of the product being tested. Materials sampled in the field need to be reduced to appropriate sizes for testing. It is extremely important that the procedure used to reduce the field sample not modify the material properties.

1. Scope

   This method covers the procedure for reducing samples of Hot Mixed Asphalt (HMA). The samples are to be acquired in accordance with FOP for WAQTC T 168. The sample is to be representative of the average of the HMA being produced.

2. Apparatus
   - Flat-bottom scoop.
   - Broom or brush.
   - Non-stick splitting surface such as metal, paper, canvas blanket or heat-resistant plastic.
   - Large spatulas, trowels, metal straight edge or 12 inch dry wall taping knife, sheet metal quartering splitter.
   - Mechanical Splitter – The splitter shall have four equal width chutes, which will discharge the material into four appropriate size containers. The splitter shall be designed with a receiving hopper that will hold the HMA field sample until a handle releases the material to fall through a divider and is distributed into four equal portions. The splitter shall be designed so that the HMA field sample will flow smoothly and freely through the divider without loss of materials (see Figures 1 to 3).
   - Oven – An oven of appropriate size, capable of maintaining a uniform temperature within the allowable tolerance for the grade of asphalt.
   - Miscellaneous equipment including trowel(s), spatula(s), hot plate, non-asbestos heat-resistant gloves or mittens, pans, buckets, cans.

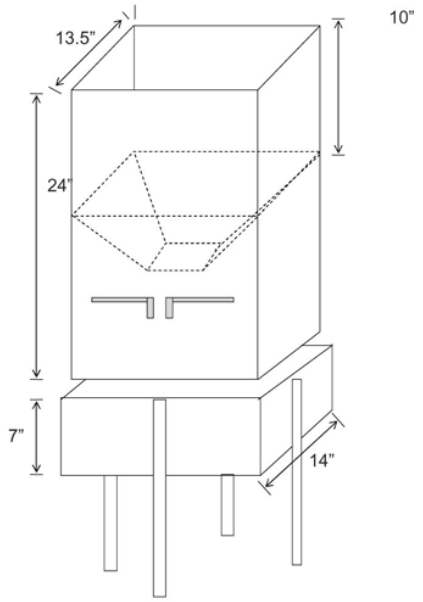

Mechanical Splitter
Figure 1

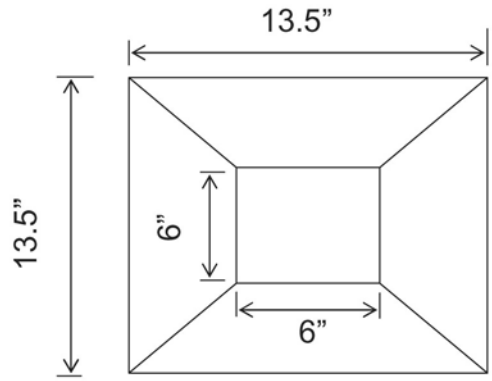

Plan View of Splitter
Figure 2

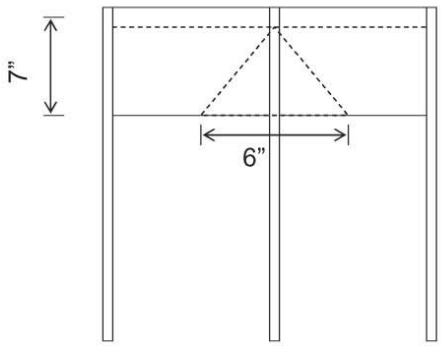

a. Elevation View of the Top Portion of the Splitter

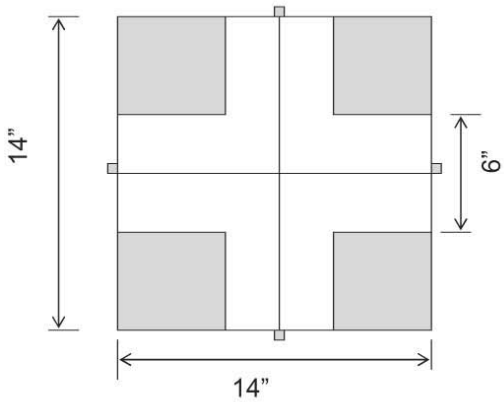

Elevation and Plan View of Bottom Portion of Splitter
Figure 3

3. Sample Preparation

   The sample must be warm enough to separate. If not, warm in an oven until it is sufficiently soft to mix and separate easily.

4. Procedure

   Initial Reduction of Field Sample

   a. Place the sample on a hard, clean, non-stick, level surface where there will be neither loss of material nor the accidental addition of foreign material. The surface may be covered with a canvas blanket, heavy paper or other suitable material. Remove the sample from the agency approved containers by dumping into a conical pile.

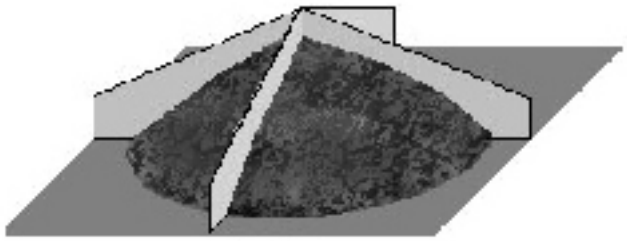

Figure 4

   b. Divide the sample into four approximately equal quarters with a spatula, trowel, flat metal plate, sheet metal quartering splitter, or mechanical splitter.

   c. For Acceptance sampling and testing only: With the quartering device in place remove all the material from each quarter. Retain opposite quarters for testing. The remaining two quarters should be placed in an agency approved containers for storage or shipment, identified as the "Retest".

      For Acceptance and Conformation sampling and testing: With the quartering device in place remove all the material from each quarter. Retain the material from one quarter for testing and the opposite quarter should be placed in an agency approved container if needed for additional testing, or discarded. The two remaining quarters should be placed in agency approved containers and shipped to the Headquarters Materials Laboratory for Conformation Testing.

      Note 1: When testing lean mixes or mixes with aggregate larger than ¾ inch (19 mm), sampling as described in Method B, with no remixing and no removal of a similar amount of material from the opposite quarter, is recommended at this point to obtain samples for each acceptance test.

   d. Pay particular attention that excessive amounts of materials is not left on the splitting surface or splitting equipment.

   e When the further reduction of the HMA is to be done, proceed according to step 2 of methods A, B, or C.

Method A – Reducing to Test Size

1. On a hard, clean, non-stick, level surface where there will be neither loss of material nor the accidental addition of foreign material. Remove the sample from the agency approved containers by dumping into a conical pile. The surface shall be covered with either a canvas blanket, heavy paper or other suitable material.
2. With the material on the canvas or paper, mix the sample thoroughly by turning the entire sample over the minimum amount of times to achieve a uniform distribution. Alternately lift each corner of the canvas or paper and pull it over the sample diagonally toward the opposite corner causing the material to be rolled. With the last turning, lift both opposite corners to form a conical pile.
3. Grasp the canvas or paper, roll the material into a loaf and flatten the top.

Figure 5

4. Pull the canvas or paper so approximately ¼ of the length of the loaf is off the edge of the counter. Allow this material to drop into a container to be saved. As an alternate, use a straight edge to slice off approximately ¼ of the length of the loaf and place in a container to be saved.

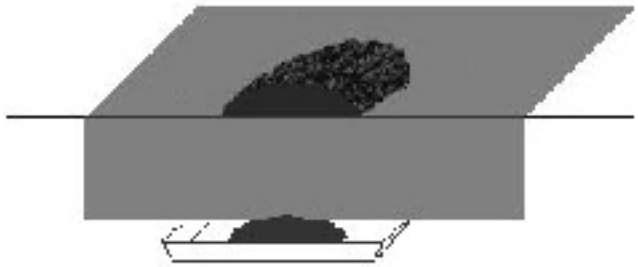

Figure 6

5. Pull additional material (loaf) off the edge of the counter and drop the appropriate size sample into a sample pan or container. As an alternate use a straightedge to slice off an appropriate size sample from the length of the loaf and place in a sample pan or container.
6. Repeat step 5 until the proper size sample has been acquired. Step 5 is to be repeated until all the samples for testing have been obtained.

   Note 3: When reducing the sample to test size it is advisable to take several small increments determining the mass each time until the proper minimum size is achieved. Unless, the sample size is below the minimum or exceeds the maximum test size use the sample as reduced for the test.

Method B – Reducing to Test Size

1. On a hard, clean, non-stick, level surface where there will be neither loss of material nor the accidental addition of foreign material. Remove the sample from the agency approved containers by dumping into a conical pile. The surface shall be covered with either a canvas blanket, heavy paper or other suitable material. (See Note 1.)
2. With the material on the canvas or paper, mix the sample thoroughly by turning the entire sample over the minimum amount of times to achieve a uniform distribution. Alternately lift each corner of the canvas or paper and pull it over the sample diagonally toward the opposite corner causing the material to be rolled. With the last turning, lift both opposite corners to form a conical pile.
3. Quarter the conical pile using a quartering device or straightedge.

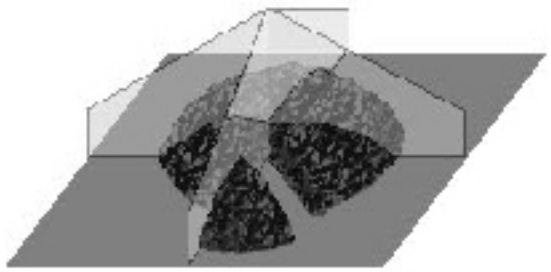

Figure 7

4. With the quartering device in place using a suitable straight edge slice through the quarter of the HMA from the apex of the quarter to the outer edge. Pull or drag the material from the quarter holding one edge of the straight edge in contact with the quartering device. Two straightedges may be used in lieu of the quartering device.
5. Slide or scoop the material into a sample pan. Repeat steps 4 and 5 removing a similar amount of material from the opposite quarter. Steps 4 and 5 are is to be repeated until all the samples for testing have been obtained.

   Note 4: When reducing the sample to test size it is advisable to take several small increments determining the mass each time until the proper minimum size is achieved. Unless, the sample size is below the minimum or exceeds the maximum test size use the sample as reduced for the test.

Method C – Reducing to Test Size

1. On a hard, clean, non-stick, level surface where there will be neither loss of material nor the accidental addition of foreign material. Remove the sample from the agency approved containers by dumping into a conical pile. The surface shall be covered with either a canvas blanket, heavy paper or other suitable material.
2. With the material on the canvas or paper, mix the sample thoroughly by turning the entire sample over the minimum amount of times to achieve a uniform distribution. Alternately lift each corner of the canvas or paper and pull it over the sample diagonally toward the opposite corner causing the material to be rolled. With the last turning, lift both opposite corners to form a conical pile.
3. Quarter the conical pile using a quartering device or straightedge.
4. Remove the opposite quarters saving the material for future use.
5. Repeat step 2 through 4 until the proper size sample has been achieved.
6. When additional test specimens are required, dump the removed material into a conical pile as in step 1 and repeat steps 2 through 5. This process may be repeated until the sample have has been reduced to testing size for all tests.
7. Sample Identification
    a. Each sample submitted for testing shall be accompanied by a transmittal letter completed in detail. Include the contract number, acceptance and mix design verification numbers, mix ID.
    b. Samples shall be submitted in standard sample boxes, secured to prevent contamination and spillage.
    c. Sample boxes shall have the following information inscribed with indelible-type marker: Contract number, acceptance and mix design verification numbers, mix ID.
    d. The exact disposition of each quarter of the original field sample shall be determined by the agency.

Performance Exam Checklist

Reducing Samples of Hot Mix Asphalt to Testing Size
WSDOT Test Method T 712

Participant Name _____ Exam Date _____

Procedure Element	**Yes**	**No**
1. The tester has a copy of the current procedure on hand?		
2. Sample warmed if not sufficiently soft?		
Method A		
3. Sample placed on paper on clean, hard, and level surface?		
4. Sample mixed thoroughly?		
5. Rolled into loaf and then flattened?		
6. At least ¼ of loaf removed by slicing off or dropping off edge of counter?		
7. Proper sample size quantity of material sliced off or dropped off edge of counter onto sample container?		
Method B		
8. Sample thoroughly mixed and conical pile formed?		
9. Divided into 4 equal portions with quartering device or straightedge?		
10. Two straight edges or a splitting device and one straight edge used?		
11. Was material sliced from apex to outer edge of the quarter?		
12. Similar amount of material taken from opposite quarter?		
13. Process continued until proper test size is obtained?		
Method C		
13. Sample thoroughly mixed and conical pile formed?		
14. Divided into 4 equal portions with quartering device or straightedge?		
15. Two diagonally opposite quarters removed and saved?		
16. Cleared spaces scraped clean?		
17. Process repeated until proper test size is obtained?		
18. Were opposite quarters and combined to make sample?		

First Attempt: Pass Fail Second Attempt: Pass Fail

Signature of Examiner _____

Comments:

Washington State
Department of Transportation

WSDOT Test Method T 716

Method of Random Sampling for Locations of Testing and Sampling Sites

A. Scope

1. This method outlines the procedure for selecting sampling and testing sites in accordance with accepted random sampling techniques. It is intended that all testing and sampling locations be selected in an unbiased manner based entirely on chance.
2. Testing and sampling locations and procedures are as important as testing. For test results or measurements to be meaningful, it is necessary that the sampling locations be selected at random, typically by use of a table of random numbers. Other techniques yielding a system of randomly selected locations are also acceptable.

B. Summary of Method for Selecting Random Test Location

- Method A – Determining a Random Location for Hot Mixture Asphalt (HMA) Density Tests
- Method B – Determining Random Test Location for Sampling HMA Mix, Aggregates, and Miscellaneous Materials
- Method C – Determining Random Test Location for Portland Cement Concrete
- Appendix A – Hot Mix Asphalt Density Test Locations for Irregular Paving Areas

C. Procedure for Determining Random Test/Sampling Location

Method A – Selection of Random Location for HMA Density

1. Stationing

   This method outlines the procedure for determining the random location of HMA Density testing sites using stationing.

   Calculate the linear foot distance for tons specified per sublot (i.e. 80 or 100 ton sublots).

   Equations:

$$Sublot\ length\ (ft) = \frac{Sublot\ quantity\ (\ tons)}{(width\ (ft)\ x\ depth\ (\ ft)\ x\ 2.05\ tons)}$$

   a. Use a random number generator (i.e. calculator, computer) or a random number determined by a stopwatch (See Note 1) to enter Table 1. Use the corresponding X value to determine the test station. A new X value is required for every test.

      Note 1: To use the stopwatch method, randomly start and stop the stopwatch 10 or more times, then use the decimal part of the seconds as your entry point.

b. Determine the test station as follows:

Test Station = (sublot length × "X" multiplier) + beginning station of paving (round to the nearest foot)

c. Use a random number generator (i.e. calculator, computer) or a random number determined by a stopwatch (See Note 1) to enter Table 2. Use the corresponding "Y" multiplier to determine the offset. A new "Y" multiplier is required for every test.

d. Determine the offset as follows:

Offset = (width of pavement × "Y" multiplier) (round to the nearest 0.1 ft)

Offset may be figured from the right or left edge of pavement. Tester shall indicate in MATS or approved density form from which edge the offset is measured.

e. If a tester must move a testing location due to an obstruction of other interference, a new random number for the offset and station shall be picked and the location recalculate. Document the new location and the reason the testing location was changed.

Example for a 100 ton sublot:

Given:

Paving width = 12 ft
Paving depth = 0.15 ft
Beginning Station = 10 + 00
Offset from left edge of pavement

Calculations:

$$Sublot\ length = \frac{100}{12 \times 0.15 \times 2.05} = 731.7\ lf$$

Ending Station = (Beginning Station + Sublot length) = (1000 + 731.7) = 17 + 32
Random generated number = X=25, Y=10
Beginning Test Location
Enter Table 1 at (25): "X" multiplier = 0.080
Enter Table 2 at (10): "Y" multiplier 0.167
Testing Station = (732 × 0.080) + 1000 =1058.5 = 10 + 59 (round to the nearest ft)
Offset = (12 × 0.167) = 2.00 = 2.0 ft left of pavement edge (round to the nearest 0.1 ft)

2. Milepost

   This method outlines the procedure for determining the random location of HMA Density testing sites using mileposts.

   a. Convert to tons per mile using the roadway area based on the roadway width and depth.

      Equations:

$$Sublot\ length\ (mile) = \frac{sublot\ quantity\ (\ tons)}{\left(width\ (\ ft)\ \times\ depth\ (\ ft) \times\ 2.05\,\frac{tons}{cy}\right) \times\ 5{,}280\ lf}$$

Round sublot length to the nearest thousandth (0.001) of a mile

Calculate the location of the test site and offset using the same method as described in Method A Stationing except use tons per mile instead of the tons per *lf*.

Test site = (sublot length × "X" multiplier) + beginning milepost

Offset = (width × "Y" multiplier)

Example for 100-ton sublot:

Given:
Paving width = 12 ft
Paving depth = 0.15 ft
Beginning Milepost (MP) = 1.00
Offset determined from right side of pavement

Calculations:

$$Sublot\ length\ =\ \frac{100}{(12\ \times 0.15 \times 2.05) \times\ 5{,}280} = 0.138$$

Ending MP = (Beginning MP + Sublot length) = (1.00 + 0.138) = 1.138
Random generated number = X=25, Y=90
Beginning Test Location
Enter Table 1 at (25): "X" multiplier = 0.080
Enter Table 2 at (90): "Y" multiplier = 0.060
Testing MP = (.138 × 0.080) + 1.00 = 1.011
Offset = (12 × 0.060) = 0.72 = 0.72 ft right of edge of pavement

Random #	X	Random #	X	Random #	X	Random #	X
1	0.794	26	0.526	51	0.304	76	0.617
2	0.500	27	0.519	52	0.167	77	0.584
3	0.393	28	0.446	53	0.308	78	0.591
4	0.427	29	0.219	54	0.570	79	0.563
5	0.165	30	0.780	55	0.322	80	0.482
6	0.821	31	0.574	56	0.491	81	0.499
7	0.562	32	0.730	57	0.349	82	0.227
8	0.284	33	0.435	58	0.681	83	0.476
9	0.704	34	0.338	59	0.858	84	0.258
10	0.988	35	0.515	60	0.716	85	0.227
11	0.692	36	0.751	61	0.521	86	0.364
12	0.491	37	0.063	62	0.568	87	0.186
13	0.769	38	0.269	63	0.168	88	0.791
14	0.675	39	0.357	64	0.460	89	0.985
15	0.205	40	0.555	65	0.708	90	0.562
16	0.187	41	0.837	66	0.453	91	0.753
17	0.238	42	0.699	67	0.778	92	0.097
18	0.400	43	0.456	68	0.484	93	0.723
19	0.263	44	0.730	69	0.609	94	0.214
20	0.545	45	0.314	70	0.949	95	0.215
21	0.230	46	0.179	71	0.575	96	0.428
22	0.700	47	0.152	72	0.263	97	0.647
23	0.616	48	0.334	73	0.192	98	0.794
24	0.179	49	0.284	74	0.845	99	0.154
25	0.080	50	0.819	75	0.095	100	0.964

Random Number - X
Table 1

Random #	Y	Random #	Y	Random #	Y	Random #	Y
1	0.823	26	0.755	51	0.068	76	0.298
2	0.646	27	0.922	52	0.709	77	0.217
3	0.928	28	0.299	53	0.742	78	0.662
4	0.247	29	0.855	54	0.704	79	0.709
5	0.742	30	0.270	55	0.230	80	0.634
6	0.666	31	0.875	56	0.584	81	0.245
7	0.624	32	0.076	57	0.663	82	0.672
8	0.553	33	0.393	58	0.727	83	0.620
9	0.311	34	0.366	59	0.559	84	0.580
10	0.167	35	0.860	60	0.907	85	0.452
11	0.198	36	0.605	61	0.311	86	0.141
12	0.814	37	0.239	62	0.665	87	0.937
13	0.876	38	0.349	63	0.134	88	0.228
14	0.356	39	0.201	64	0.241	89	0.225
15	0.898	40	0.650	65	0.384	90	0.060
16	0.141	41	0.822	66	0.268	91	0.820
17	0.913	42	0.157	67	0.629	92	0.883
18	0.384	43	0.799	68	0.227	93	0.528
19	0.815	44	0.340	69	0.187	94	0.749
20	0.761	45	0.479	70	0.167	95	0.441
21	0.370	46	0.925	71	0.127	96	0.221
22	0.156	47	0.494	72	0.288	97	0.863
23	0.397	48	0.833	73	0.436	98	0.082
24	0.416	49	0.128	74	0.913	99	0.467
25	0.705	50	0.294	75	0.665	100	0.828

Random Number - Y
Table 2

Method B – Hot Mix Asphalt (HMA) Pavement Mixture or Aggregates

1. Determine the sublot increment of the material.
2. Use a random number generator (i.e. calculator, computer, etc) or a random number determined by a stopwatch (See Note 1) to enter Table 1. Use the corresponding X multiplier to determine the offset.
3. A new X multiplier is required for every sublot.
4. Random sample tonnage may be adjusted per sublot to accommodate field testing. Adjustments to random sample tonnage must be documented.
5. Calculate the location of the sampling site as follows:

Equations:

First Sample Site = Sublot increment × "X" multiplier (Table 1)
Subsequent Sites= (sublot increment + (Sublot increment × "X" multiplier)

Aggregate Sample Example:

Given: Crushed Surfacing Base Coarse
Random sample frequency per 9-3.7 =1 per 2,000 tons.
Calculate the location of the first random sample site as follows:

The computer-generated number is 22.
Sublot Increment (Frequency of sampling) = 2,000 tons
Enter Table 1 at (22) "X" = 0.700
Sampling Site = 2000 × 0.700= 1400 tons

Calculate subsequent sample sites as follows:

The computer-generated number is (53).
Sublot Increment (Frequency of sampling) = 2,000 tons
Enter Table 1at 53 "X" = 0.308
Sampling Site = 2000 + (2000 × 0.308) = 2616 tons

Method C Portland Cement (PCC)

1. Determine subsequent random sampling locations as follows:
   a. Example for less than 10 truckloads remaining after reducing frequency:
      (1) Determine amount of pour remaining this will be the sublot increment
      (2) Use a random number generator (i.e. calculator, computer) or a random number determined by a stopwatch (See Note 1) to enter Table 1. Use the corresponding X multiplier to determine the test station. A new X multiplier is required for every test.
      (3) Determine the sample location as follows:

      Sampling Location = Concrete remaining × "X" multiplier (Table 2)

      Given:

      Total cubic yards (cy) of concrete placement = 80 cy
      Truckload = 10 cy
      Given: First two trucks are in specification = 20 cy
      Remaining cubic yards = 80 cy-20 cy= 60 cy< 100 cy
      Sublot increment =60 cy
      Random number =30
      Sampling Location = 60 cy × 0.780 = 46.8= 47 cy or 7th truck

   b. Example for greater than 10 truckloads remaining after reducing frequency
      (1) Determine the sublot increment for the random test sample.

      Sublot increment = cubic yards per truck × 10 truckloads

      Given:

      Pour = 130 cy
      Each truck carries 8 cy of concrete
      First two trucks are in specification = 16 cy
      Remaining cubic yards = 130 - 16 = 114 > 80 cy
      Sublot Increment = 8 cy × 10 trucks = 80 cy

      Use a random number generator (i.e. calculator, computer) or a random number determined by a stopwatch (See Note 1) to enter Table 1. Use the corresponding X value to determine the test station. A new X value is required for every test.

      Determine the sample location as follows:

      Sampling Location = Sublot increment × "X" multiplier (Table 1)

      Example:

      Random number = 15 "X"= 0.205
      Sample location = 80 cy × 0.205 = 16.4
      Determine where the first sample will be taken:
      Testing location = (accumulated cy of last truck sampled) + sample yardage

Example:

First Sample Location:

Accumulated cy successive trucks = 8 × 2 =16
Sample location = 16 cy + 16.4 cy = 32.4 cy
Truck load = 32/8 = 4
Sampling = first half of 4th truck

Determine subsequent sampling locations as follows:

Sublot increment = total pour – (initial loads tested to get two consecutive loads in specification)-(first sublot increment)
Sublot increment = 130 cy – (16 cy) – (80 cy) = 34 cy
Random number = 70 "X" = 0.167
Testing location = (initial loads tested to get two consecutive loads in specification) + (first sublot increment) +(testing location within the second sublot)
Testing location = (16 cy)+(80 cy)+(0.167 × 34 cy)
Testing location = 101.67 cy or 101.67/8 cy per truck = 12.7 = 13th truck

3. Report
   a. Report the random number used to determine station and offset
   b. Document any changes in station or offset of random testing location
   c. Use one of the following to report random location information:
      - Materials Testing System (MATS)
      - Form approved in writing by the State Materials Engineer

Appendix A

Hot Mix Asphalt Density Test Locations for Irregular Paving Areas

A. Track tonnage placed in the irregular shaped area until specified tons are placed, note the stationing.

B. Measure back to the beginning of the paving or end of the previous lot to obtain the length (this is also your beginning station).

C. Use a computer-generated random number or a random number determined by a stopwatch (See Note 1) to enter Table 1. Use the corresponding X value to determine the test station. A new X value is required for every test.

D. Multiply the length by the "X" value and add to the beginning station to locate your testing site.

E. Use a computer-generated random number or a random number determined by a stopwatch (See Note 1) to enter Table 2. Use the corresponding Y value to determine the offset. A new Y value is required for every test.

F. Measure the width at the testing station and multiply the width time the "Y" value to determine the offset of the testing site.

G. Make a sketch of the area to document the test location in the event a retest is required.

Example:

Paving began at Station 101 + 00.

The tester determined Station 105 + 75 was the end of the 100 ton lot.

The width of the pavement began at 0 and transitioned to 12.

Testing Station

Sta 105 + 75 – Sta 101 + 00 = 475 ft
Random number = 45, "X" value = 0.314
475 ft × 0.314= 149.15= 149 Testing station = 10100 + 149 =102 + 49

Testing Offset

Measure width at station 102 + 49
Width = 3.76
Random # 65 "Y" value = 0.384
Offset = 3.76 × 0.384 = 1.44 = 1.4 ft from right edge

Washington State
Department of Transportation

WSDOT Test Method T 718

Method of Test for Determining Stripping of Hot Mix Asphalt

1. Scope

   a. This test is used to determine the amount of stripping resulting from the effects of water saturation and accelerated water conditioning, with a freeze-thaw cycle of laboratory – compacted Hot Mix Asphalt.

   b. This test is the WSDOT equivalent to AASHTO T 283.

2. Equipment

   a. Water bath controlled at 140 ± 1.8°F.

   b. Vacuum container capable of holding a vacuum of approximately 26mm Hg and large enough to accommodate test specimens and volume of water as described in this procedure.

   c. Perforated platform to hold test samples 2 inches off the bottom of the vacuum container.

   d. Vacuum pump, vacuum system or water aspirator, for vacuum saturation of specimens.

   e. Air-bath freezer, maintained at 0 ± 5°F.

   f. Water bath maintained at 55 ± 1°F.

   g. Testing machine – A compression testing machine having a minimum capacity of 10,000 lbf and capable of producing a uniform vertical movement of 0.065 inches per minute.

   h. Equipment for preparing and compacting specimens for WSDOT FOP for AASHTO T 312.

   i. 100 ± 0.10mm gyratory specimen mold and 99.50 to 99.75mm top/bottom plates which meet WSDOT FOP for AASHTO T 312 section 4.2 (excluding inside diameter measurements) and section 4.3 (excluding diameter measurement).

3. Preparation of Laboratory-Mixed, Laboratory-Compacted Specimens for Mix Designs

   a. Mix specimens per WSDOT Test Method 726, at optimum asphalt binder content with appropriate grade and supplier of asphalt binder per the mix design to achieve approximately 4% air voids.

   b. Mix six specimens per asphalt binder supplier, two samples with 0% anti-strip additive and the other specimens with varying amounts of anti-strip additive (Note 1).

      Note 1: Liquid anti-strip agents added directly to the asphalt binder shall be added by weight of asphalt at levels of ¼%, ½%, ¾% and 1% or levels not exceeding 1% which test an even progression of anti-strip additive per manufacture recommendation. Latex anti-strip agents shall be added to the aggregate in a Saturated Surface Dry (SSD) condition at levels of 0.08%, 0.17%, 0.33% and 0.50% by weight of dry aggregate.

c. Condition and compact the 100 mm specimens per WSDOT FOP for AASHTO T 312 sections 8.5 through 9.8.

Preconditioning of Test Specimens

a. Once the set of six specimens have been compacted and cooled to room temperature, set one of the specimens mixed with 0% anti-strip aside to be stored at room temperature, this will be the referee specimen.

b. Test remaining set of specimens per AASHTO T 166 Method A. Calculate the air void level of the specimen using mix design Theoretical Maximum Specific Gravity value.

c. Place the specimens in the vacuum container. The container must be filled with potable water at room temperature (77 ± 9°F) so that the specimens have at least 1 inch of water above their surface. Apply a vacuum for a short amount of time, suitable to saturate the specimens air voids between 60 and 80 percent.

d. Determine the mass of the saturated, surface-dry specimen after partial vacuum saturation per AASHTO T 166 Method A.

e. Calculate the volume of absorbed water (J) in cubic centimeters by use of the following equation:

$$J = B - A$$

Where:

J = volume of absorbed water, cubic centimeters.
B = mass of saturated, surface-dry specimen after partial vacuum.
A = mass of dry specimen in air.

f. Determine the degree of saturation (S) by comparing the volume of absorbed water (J) with the volume of air voids (Va) using the following equation.

$$S = \frac{100J}{Va}$$

Where:

S = Degree of saturation, percent.
Va = **Volume** of air voids

Determine the Volume of air voids using the following equation:

$$Va = \frac{Pa \times E}{100}$$

Where:

Pa = **Percent** of air voids
E = Volume of Specimen, cubic centimeters (SSD wt. – wt. In water)

g. If the degree of saturation is between 60 and 80 percent then proceed. If the degree of saturation is less than 60 percent then repeat the procedure beginning with c above, using more vacuum and/or time. If the degree of saturation is more than 80 percent then the specimen has been damaged and must be discarded.

h. After saturation is achieved place each specimen in a plastic bag, seal the bag and place specimen in a freezer at a temperature of 0 ± 5°F for a minimum of 16 hours.

i. Remove specimens from the freezer, remove plastic bags and place them in a water bath maintained at 140 ± 2°F for 24 ± 1 hour (Note 2).

Note 2: Some specimens become fragile after curing in the hot bath for 24 hours, as a precaution it may be necessary to place samples into suitable transfer dishes prior to placing them into the hot bath, to facilitate the movement of samples for the hot bath to the cold-water bath.

j. After 24 ± 1 hours in the 140 ± 2°F water bath, remove the specimens and place them into the cold water bath maintained at 55 ± 1°F. At this time the referee specimen shall be placed into the cold water bath with the conditioned specimens. Testing must begin within 2 hours ± 10 minutes after specimens have been placed into the cold water bath.

4. Testing

a. After 2 hours ± 10 minutes in the cold water bath, remove and test one specimen at a time in the testing machine on the diametrical vertical plane. Apply the diametrical loading at a vertical deformation rate of 0.065 inches per minute. Record the maximum compressive load of each specimen.

b. Continue to load specimen until specimen can be easily broken open.

c. Remove specimen from machine, break specimen in half by hand for visual inspection. Record the visual condition of each specimen as to stripping action: none, slight, moderate, or severe.

d. Determine the Tensile Strength Ratio (TSR) of each specimen by comparing the load needed to break the testing specimen to the load needed to break the referee specimen, using the following equation:

$$TSR = \left(\frac{S_1}{S_2}\right) \times 100$$

Where:

S_1 = tensile strength of the conditioned specimen
S_2 = tensile strength of the unconditioned specimen

5. Visiual Condition Definitions

- None – The specimen condition is solid with no evidence of asphalt binder withdrawing from aggregate. After the specimen has air-dried, the appearance is black.
- Slight – The specimen condition is solid to slightly soft with evidence of the asphalt binder beginning to withdraw from edges and surfaces of the aggregates. After the specimen has air-dried, the appearance remains black.
- Moderate – The specimen condition is soft, easily broken in half, with partial to completely exposed aggregates. After the specimen has air-dried, the appearance is slightly gray.

- Severe – The specimen condition is soft to falling apart with the majority of coarse aggregate completely exposed and asphalt binder almost nonexistent. After the specimen has air-dried, the appearance is gray.

6. Report

   The report shall include the following: Visually estimated moisture damage (stripping) and Tensile Strength Ratio (TSR) of the specimens.

Washington State
Department of Transportation

WSDOT Test Method T 720

Method of Test for Thickness Measurement for Hot Mix Asphalt (HMA) Cores

1. Scope
   a. This procedure is used to determine the thickness of the lifts in a Hot Mix Asphalt core.
2. Apparatus
   a. Protection goggles, safety shield, or safety glasses.
   b. Hatchet.
   c. Striking tool such as a hammer, sledge, or maul suitable for striking the hatchet to separate the lifts.
   d. Tape, rule, calipers, or a measuring device suitable for measuring core lifts to 0.01 LF (3 mm).
   e. Hard stable surface, such as a cement concrete table, on which to place core for striking.
   f. Hard rubber pad.
3. Procedure
   a. Measure the total thickness of the core as received to 0.01 LF (3 mm).
   b. Carefully remove all crushed surfacing top course, old pavement, prelevel, and prime coat from the core with the hatchet and striking tool.
   c. Measure the total thickness of the remaining core to 0.01 LF (3 mm).
   d. Split off the individual pavement lifts by placing core on the hard rubber pad, on the hard stable surface. Place the hatchet on the lift line and striking with the striking tool at several points around the core. Care must be taken in order to get a clean split of the core at the lift line and not damage the core.

      Note: Lift lines are often more visible by rolling the core on a flat surface. Chilling the cores may aid in splitting lifts.
   e. Each lift shall be measured from a plane surface to a plane surface. Two or more measurements shall be taken around the lift and the average shall be reported to 0.01 LF (3 mm) for each lift in the core.

      Note: The top lift is designated as lift number one. Each subsequent lift shall be designated as lifts 2, 3, 4, etc.
4. Report

   Report the results of the thickness measurements in the Materials Testing System (MATS)

WSDOT SOP 723

Standard Operating Procedure for Submitting Hot Mix Asphalt (HMA) Mix Designs for Verification

1. Scope

   1.1 This standard covers the procedural steps required for submitting a HMA mix design for verification to the Bituminous Materials Section of the State Materials Laboratory.

   1.2 The values stated in English units are to be regarded as the standard.

   1.3 This standard does not purport to address all of the safety concerns, if any, associated with its use. It is the responsibility of the user of this standard to establish appropriate safety and health practices and determine the applicability of regulatory limitations prior to use.

2. Approval of Material

   2.1 Approvals of the material for HMA are required prior to use per *Standard Specifications* Section 1-06.1.

   2.2 A HMA mix design is required for each contract.

3. Referenced Documents

   3.1 WSDOT Standards

   - WSDOT FOP for AASHTO T 2, Standard Practice for Sampling Aggregates
   - WSDOT Test Method T 724, Method of Preparation of Aggregate for Hot Mix Asphalt (HMA) Mix Designs
   - WSDOT *Standard Specifications* M 41-10

4. Procedure

   4.1 The Contractor shall determine a design aggregate structure and asphalt binder content in accordance with WSDOT Standard Operating Procedure 732.

   4.2 Once the design aggregate structure and asphalt binder content have been determined, the Contractor shall submit the HMA mix design on WSDOT form 350-042 demonstrating that the design meets the requirements of *Standard Specifications* Section 9-03.8(2) and 9-03.8(6). For mix designs that contain > 20% RAP and any amount of RAS, the contractor shall include test results for asphalt content and gradation per GSP 5-04.2OPT8.GR5, along with a statement certifying the tonnage of the RAP and/or RAS stockpile(s) to be used in the HMA production.

   4.3 For mix designs that contain ≤ 20% RAP and no amount of RAS, the Contractor shall obtain representative samples of aggregate per WSDOT FOP for AASHTO T 2 that will be used in the HMA production.

4.4 For mix designs that contain > 20% RAP and any amount of RAS, the contractor shall obtain representative samples of aggregate, RAP and/or RAS per WSDOT FOP for AASHTO T 2 that will be used in the HMA production. Additionally, the contractor will submit 100 grams each of recovered asphalt residue from the RAP and/or RAS that are to be used in the HMA production.

4.5 The Contractor shall submit representative samples of aggregate, RAP and RAS (if required), totaling 700 pounds proportioned to match the Contractor's proposal to the State Material's Laboratory for testing.

For example, if the Contractor's proposal consists of five stockpiles with the following blending ratio:

Material	Ratio
¾″ – #4	20%
½″ – #8	30%
#4 – 0	30%
RAP	15%
RAS	5%

Calculate the amount of aggregate needed from each stockpile in the following manner.

Material		Pounds of Aggregate Needed Per Stockpile
¾″ – #4	700 lbs x 0.20	140 pounds
½″ – #8	700 lbs x 0.30	210 pounds
#4 – 0	700 lbs x 0.30	210 pounds
RAP	700 lbs x 0.15	105 pounds
RAS	700 lbs x 0.05	35 pounds

5. Shipping Samples

5.1 Transport aggregate in bags or other containers so constructed as to preclude loss or contamination of any part of the sample, or damage to the contents from mishandling during shipment. The weight limit for each bag or container of aggregate is 30 pounds maximum.

5.2 Each aggregate bag or container shall be clearly marked or labeled with suitable identification including the contract number, aggregate source identification and size of stockpile material. Aggregate bags or containers submitted to the State Materials Laboratory shall be accompanied by a completed transmittal for each stockpile used in the HMA mix design and a completed copy of DOT Form 350-042.

Washington State
Department of Transportation

WSDOT Test Method T 724

Method of Preparation of Aggregate for HOT MIX ASPHALT (HMA) Mix Designs

1. Scope

   This method of test is intended for the processing and preparation of aggregate samples for use in HMA mix designs and Ignition Furnace calibration samples for Hot Mix Asphalt, asphalt treated base, or open graded products.

2. Apparatus

   a. Sieves — shall conform to the specifications of sieves for testing purposes.

   b. Mechanical sieve shaker — of sufficient size to separate the material to the specification sieves.

   c. Oven(s) — of appropriate size, capable of maintaining a uniform temperature of 325 ± 25° F (163 ± 14° C).

   d. Container — pans or containers of suitable size to dry and store the aggregate.

   e. Balance — capacity of at least 8 kg sensitive to 0.1 g and meeting the requirements of AASHTO M 231.

   f. Aggregate washer (optional).

3. Procedure

   a. Representative sample(s) of the production aggregates shall be obtained.

   b. Dry the aggregate in an oven to a constant mass not to exceed 350º F.

      Note: When developing an Ignition Furnace Calibration Factor, samples from separate stockpiles can be combined in the same percentages as the job mix formula prior to further processing. The combined sample should be at least four times the amount required for a single test (i.e., IFCF determination).

   c. Sieve the aggregate over all the specification sieves designated for class of mix being tested. Place the material retained on each sieve in separate containers.

   d. Wash the separated aggregate samples, except the portion passing the No. 200 (0.075 mm) sieve, in accordance with WSDOT FOP for WAQTC/AASHTO T 27/11.

   e. Dry the washed, aggregate samples to constant mass.

   f. Recombine the aggregate samples to match the grading of the job mix formula. The sample size as determined by the specific test procedure performed.

Performance Exam Checklist

Method of Preparation of Aggregate for Hot Mix Asphalt (HMA) Mix Designs
WSDOT Test Method T 724

Participant Name _____ Exam Date _____

Procedure Element	Yes	No
1. The tester has a copy of the current procedure on hand?	❐	❐
2. All equipment is functioning according to the test procedure, and if required, has the current calibration/verification tags present?	❐	❐
3. Representative sample(s) of the production aggregates obtained.	❐	❐
4. Aggregate dried in an oven to a constant mass?	❐	❐
5. Aggregate sieved over designated sieves for class of mix being tested?	❐	❐
6. Material retained on each sieve placed in separate containers?	❐	❐
7. Separated aggregates washed, except the portion passing the No. 200 (0.075mm) sieve, in accordance with FOP for AASHTO T27/T11?	❐	❐
8. Washed aggregate samples dried in an oven to a constant mass?	❐	❐
9. Aggregate recombined to match the grading of the job mix formula?	❐	❐
10. Sample size determined by the specific test procedure to be performed?	❐	❐

First attempt: Pass ❐ Fail ❐ Second attempt: Pass ❐ Fail ❐

Signature of Examiner _____

Comments:

Washington State
Department of Transportation

WSDOT Test Method T 726

Mixing Procedure for Hot Mix Asphalt (HMA)

1. Scope

   This is the mixing procedure for laboratory prepared samples of asphalt concrete, asphalt treated base, or open graded asphalt products mixtures. The aggregates used in this procedure are prepared by means of WSDOT Test Method No. 724.

2. Equipment

   a. Mixing Spoon — A large metal spoon capable of handling hot mix asphalt.

   b. Scoop — A metal scoop of ample size, capable of handling hot mix asphalt.

   c. Curing Pan — A heat resistant pan of ample size to handle samples of hot mix sphalt.

   d. Mixing Bowl — A heat resistant bowl for hand mixing or mechanical mixer of ample size to handle samples of hot mix asphalt.

   e. Mechanical Mixer — A mechanical mixer with heat source may be used in lieu of hand mixing.

   f. Balance — The balance shall have capacity of 11 kg and sensitive to 0.1 gm.

   g. Oven — An oven of appropriate size, capable of maintaining a uniform temperature within the allowable tolerance for the grade of asphalt binder.

   h. Thermometer- Armored glass or dial-type thermometric devices with metal stems or probe for determining the temperature of aggregates, binder, and HMA between 18θ and 418θ ° F (10θ and 232θ° C).

3. Procedure

   a. Heat asphalt binder, aggregate sample(s), and mixing bowl(s) in a preheated oven to the mixing temperature specified by the supplier of asphalt binder or as indicated on mix design report.

   b. Stir the asphalt binder and verify that the temperature of asphalt binder is within the temperature recommended by the asphalt supplier or as indicated on mix design verification report.

   c. After the materials are heated place mixing bowl on balance and tare.

   d. Place heated aggregate sample in the tared mixing bowl and determine the mass of the aggregate sample. Use this mass to calculate the mass of asphalt binder required to produce a sample of HMA at the Job Mix Formula (JMF) asphalt binder content (See calculation below).

   e. Form a crater in the aggregate sample and weigh in asphalt binder as determined above.

      Note: If mixing bowl is not buttered an additional sample should be prepared, mixed and then discarded to properly coat the mixing bowl with asphalt and fines.

f. Mix aggregate sample and asphalt binder for approximately 3 minutes or until aggregate sample is completely coated with asphalt binder. This can be accomplished by hand mixing or by mechanical mixer.

Note*:* Reheating of the HMA for a short period of time may be necessary to assure complete coating of the aggregate.

g. Transfer mixed HMA to the proper container for other testing as required.

h. Repeat steps A thru H for each sample to be mixed.

Calculation for Mass of Asphalt Binder:

$$\text{Designated Mass of Asphalt Binder} = \frac{(\mathrm{A})\ \mathrm{D}}{(1 - \mathrm{A})}$$

Where:

A = Designated asphalt binder content (expressed in decimal)
D = Dry aggregate mass (from step 3(c))

Example:

The designated asphalt binder content is 5.3%, and dry aggregate mass is 1567.1 grams.

$$\text{Designated Mass of Asphalt Binder} = \frac{(0.053)\ 1567.1}{(1 - 0.053)} = \frac{83.1}{0.947} = 87.7\mathrm{g}$$

Performance Exam Checklist

Mixing Procedure for Hot Mix Asphalt (HMA)
WSDOT Test Method T 726

Participant Name _____ Exam Date _____

Procedure Element	Yes	No
1. The tester has a copy of the current procedure on hand?	❐	❐
2. All equipment is functioning according to the test procedure, and if required, has the current calibration/verification tags present?	❐	❐
3. Aggregate samples prepared as per WSDOT Test Method T 724?	❐	❐
4. Mixing bowl(s), aggregate and asphalt binder heated to appropriate mixing temperature?	❐	❐
5. Asphalt binder stirred and temperature confirmed by thermometer?	❐	❐
6. Heated mixing bowl placed on scale and scale then tared?	❐	❐
7. Heated aggregate sample placed in bowl and scale then tared?	❐	❐
8. Crater formed into center aggregate, weigh in asphalt binder in accordance with mix design information?	❐	❐
9. Mix aggregate and asphalt for approximately 3 minutes or until aggregate is completely coated?	❐	❐
10. When mixing is complete carefully scrape off mixing apparatus, tools and bowl is dumped into correctly marked pan?	❐	❐
11. Repeat steps 4 - 8 for each sample to be mixed?	❐	❐
12. All calculations performed correctly?	❐	❐

First attempt: Pass ❐ Fail ❐ Second attempt: Pass ❐ Fail ❐

Signature of Examiner _____

Comments:

Washington State
Department of Transportation

WSDOT SOP 728

Method for Determining the Ignition Furnace Calibration Factor (IFCF) for Hot Mix Asphalt (HMA)

1. Scope

   This method may be affected by the type of aggregate in the mixture. Accordingly, to optimize accuracy, a calibration factor will be established with the testing of a set of HMA calibration samples for each mix type. This procedure must be performed before any acceptance testing is completed. The calibration process should be repeated each time there is a significant change in the mix ingredients or design.

2. Apparatus

   a. Equipment as described to perform FOP for AASHTO T 308 Method A.

3. Sample Preparation

   a. Prepare a minimum of two HMA calibration samples in accordance with WSDOT Test Method No. 724 and No. 726 or use previously prepared HMA calibration samples.

   b. If the HMA calibration samples are not sufficiently soft to separate for testing, carefully heat the samples in an oven until sufficiently soft. Dry sample to a constant mass, not to exceed 325 ± 25°F (163 ± 14°C). Do not heat the sample basket assemblies.

4. Procedure

   a. Test two HMA calibration samples in accordance with WSDOT FOP for AASHTO T 308.

   b. Determine the measured asphalt binder contents for each sample from the printed tickets.

   c. If the difference between the measured asphalt binder contents of the two samples exceeds 0.15 percent, test two additional HMA calibration samples. From the four tests, discard the high and low results and determine the IFCF from the two remaining results. Calculate the difference between the actual and measured asphalt binder contents for each sample. The IFCF is the average of the differences expressed in percent by mass of the HMA.

Washington State
Department of Transportation

WSDOT SOP 729

Determination of the Moving Average of Theoretical Maximum Density (TMD) for HMA

1. Scope

This procedure covers the process for obtaining the moving average of the Theoretical Maximum Density (TMD) for calculating pavement compaction in accordance with WSDOT FOP for WAQTC T 355. The TMD is to be determined in accordance with WSDOT FOP for AASHTO T 209.

2. Procedure

The procedure for determining the moving average of TMD is as follows:

a. On the initial day of production of a new Job Mix Formula, two determinations shall be made to establish an initial average value. The samples shall not be from the same truck. Average the two TMDs and report the result to the Moisture Density Gauge Operator. The TMD value from the Mix Design Verification Report shall not be included in the average. If the two TMDs determined on the initial day do not agree within 1.5 lb/ft^3 (24 kg/m^3), a third determination shall be made. The initial average density shall be based on the two closest results.

b. A TMD test shall be taken with each mix sample. The moving average is defined as the average of the last five TMD values for the HMA being placed. Until five TMD values have been determined, the moving average will consist of all previous TMD values plus the first TMD value for the current production shift. When five TMD values have been determined, the moving average for each shift will include the last four TMD values plus the first TMD value for the current paving shift. This new moving average value will be used for the entire paving shift.

c. Each TMD shall be compared with the previously computed moving average. If a TMD deviates from the moving average by more than 1.5 lb/ft^3 (± 24 kg/m3), a second test shall be made on another portion of the same sample. If the second TMD agrees within 1.5 lb/ft^3 (± 24 kg/m^3) of the moving average then the first TMD will be discarded and the second TMD will be included in the moving average. If the second TMD is not within 1.5 lb/ft^3 (± 24 kg/m^3) of the moving average but is within 1.5 lb/ft^3 (± 24 kg/m^3) of the first TMD, a new moving average will be initiated, discarding all previous results. The new moving average will be sent to the Moisture Density Gauge operator and will replace the current moving average.

d. A moving average will be sent to the Moisture Density Gauge operator once per production shift, unless two tests during a shift are not within 1.5 lb/ft^3 (± 24 kg/m^3), then a new moving average will be calculated in accordance with "c" of this procedure and sent to the Moisture Density Gauge operator as the new moving average for the shift. The Moisture Density Gauge Operator will continue to use the previous moving average until a new moving average is available.

3. Report

The gauge operator will record the average TMD received from the tester at the HMA plant on WSDOT Form 350-092 and 350-157 or in the MATS database. The average TMD will be used in WSDOT FOP for WAQTC T 355 to calculate the percent of compaction for statistical evaluation.

Washington State
Department of Transportation

WSDOT SOP 730

Correlation of Nuclear Gauge Densities With Hot Mix Asphalt (HMA) Cores

1. When evaluating HMA compaction:

   1.1 A gauge correlation is required:

   a. For each combination of gauge and HMA Mix Design (initial JMF).

   b. When gauge mode changes (i.e., direct transmission to thin layer).

   c. When wearing course lift thickness changes per Note 1.

   d. When a gauge is recalibrated.

   Note 1: For density determined with the "Thin Layer Mode," a layer thickness change of greater than 0.08 feet requires a new correlation. For density determined with the "Direct Transmission Mode," a layer thickness change of greater than 0.15 feet requires a new gauge correlation.

   1.2 A gauge correlation is not required but may be considered by the Regional Materials Engineer when:

   a. Base material changes from the original correlation base (i.e., from a surfacing base to an asphalt base).

   b. The same gauge HMA Mix Design (Reference Mix Design) combination are used on a different contract within the same construction year.

   c. When JMF has been adjusted in accordance with *Standard Specifications* Section 9-03.8(7)A.

2. Gauge correlation is based on ten in-place HMA densities and ten cores taken at the same location as the in-place density.

   2.1 In-place HMA densities shall be determined in accordance with WSDOT FOP for WAQTC T 355.

   2.2 Cores should be taken no later than the day following paving and before traffic has been allowed on roadway. Correlation cores are not required to be taken at record density locations. Therefore, a site outside the traveled way should be considered for worker safety, as long as the lift thickness matches that of the plan lift thickness of the record density locations.

   Note 2: If a core becomes damaged, it shall be eliminated from the average.

   Note 3: Cores may be taken sooner than the day after paving if the HMA is cooled to prevent damage during coring and removal of cores. Water, ice, or dry-ice may be used to cool the pavement. Another method of cooling that may be used is substitution of nitrogen gas or CO_2 for drilling fluids.

3. Obtain a pavement core from each of the test sites in accordance with WSDOT SOP 734. The core shall be taken in the nuclear gauge footprint.

   3.1 For "direct transmission mode," locate the core at least 1 in (25 mm) away from the edge of the drive pin hole.

   3.2 For "thin layer mode," locate the core in the approximate center of the nuclear gauge footprint. If the core thickness exceeds the plan pavement thickness by more than 0.04 feet, then the core shall be saw cut to the plan thickness prior to performing density testing. If a core thickness is less than the plan thickness by more than 0.04 feet, it shall be eliminated from the average.

4. Bulk Specific Gravity (G_{mb}) of core shall be determined in conformance with WSDOT FOP for AASHTO T 166 Bulk Specific Gravity of Compacted Hot Mix Asphalt (HMA) Using Saturated Surface-Dry Specimens.

   Calculate core density as follows, round to the nearest 0.1 pcf:

   $$\text{Core Density} = G_{mb} \times 62.245 \text{ pcf}$$

   Calculate gauge correlation factor as follows:

   $$\text{Density Ratio} = \frac{\textit{(core density)}}{\textit{(nuclear gauge density)}}$$

   Round Density Ratio to the nearest 0.001

   $$\text{Gauge correlation factor} = \frac{\textit{(Sum of ratios)}}{\textit{(number of cores)}}$$

5. Gauge Correlation Factor shall be determined to 0.001.

6. Report the Gauge Correlation Factor using MATS or DOT Form 350-112.

Washington State
Department of Transportation

WSDOT SOP 731

Method for Determining Volumetric Properties of Hot Mix Asphalt

1. Scope

   This procedure covers the determination of volumetric properties of Hot Mix Asphalt, i.e., Air Voids (Va), Voids in Mineral Aggregate (VMA), Voids Filled with Asphalt (VFA), and Dust to Binder Ratio ($P_{\#200}/P_{be}$).

2. References

   T 329 – WSDOT FOP for AASHTO Moisture Content of Hot Mix Asphalt (HMA) by Oven Method

   T 27/11 – WSDOT FOP for WAQTC/AASHTO Sieve Analysis of Fine and Coarse Aggregates

   T 166 – WSDOT FOP for AASHTO Bulk Specific Gravity of Compacted Hot Mix Asphalt Using Saturated Surface-Dry Specimens

   T 168 – WSDOT FOP for WAQTC/AASHTO Sampling of Hot Mix Asphalt Paving Mixtures

   T 209 – WSDOT FOP for AASHTO Theoretical Maximum Specific Gravity and Density of Hot Mix Asphalt Paving Mixtures

   T 308 – WSDOT FOP for AASHTO Determining the Asphalt Binder Content of Hot Mix Asphalt (HMA) by the Ignition Method

   T 312 – WSDOT FOP for AASHTO Preparing Hot Mix Asphalt (HMA) Specimens by Means of the Superpave Gyratory Compactor

   T 712 – WSDOT Test Method Standard Method of Reducing Hot Mix Asphalt Paving Mixtures

3. Calibration of Compactor

   a. The gyratory compactor will be calibrated in accordance with WSDOT VP-58 and according to the manufacturer's established calibration procedure. Anytime the gyratory compactor is moved to a new testing site a new calibration is required in accordance with WSDOT VP-58.

4. Test Samples

   a. All test samples shall be obtained per WSDOT FOP for WAQTC/AASHTO T 168, and reduced in accordance with WSDOT Test Method T 712. It is recommended that the gyratory test sample be the first sample acquired in order to minimize heat loss.

   b. The size of the gyratory sample shall be such that it will produce a compacted specimen 115.0 ± 5.0 mm in height. Generally, the mix design verification report from the State Materials Laboratory initial starting mass is adequate.

   c. Place the gyratory sample in an oven set no more than 25° F above the compaction temperature (Note 1) as soon as possible to reduce sample cooling. The gyratory test is

temperature sensitive. The sample should be heated five degrees above the compaction temperature as shown on the mix design verification report.

Note 1: Any change in compaction temperature must be confirmed by the temperature viscosity chart provided by the asphalt supplier, which can be obtained from the Paving Contractor.

5. Procedure

   a. Place a compaction mold, base plate, and top plate (if required), in an oven set at no more than 350°F for a minimum of 60 minutes prior to the estimated beginning of compaction. Subsequent uses of a conditioned mold will require 5 minutes of reheating.

   b. Place a thermometer into the center of the mix, do not stir the mixture. (Note 3) Compact the sample immediately upon achieving compaction temperature in accordance with step 4 (c).

   Note 2: While the gyratory test sample is heating it is beneficial to prepare and/or run the other tests as times permits.

   c. Perform the sample compaction in accordance with WSDOT FOP for AASHTO T 312 Section 9.

   d. Determine theoretical maximum density per WSDOT FOP for AASHTO T 209.

   e. Determine asphalt content and gradation per WSDOT FOP for AASHTO T 308 and WSDOT FOP for WAQTC/AASHTO T 27/11.

   f. Determine moisture content per WSDOT FOP for AASHTO T 329.

   g. Allow the gyratory compacted specimen to cool at room temperature for 15 to 24 hours. Determine the Bulk Specific Gravity (Gmb) of the specimen in accordance with WSDOT FOP for AASHTO T 166 Method A.

   Note 3: For repeatability between operators the retest sample should be cooled for the same amount of time at room temperature as the original specimen. When sending retest samples to the Region or State Laboratory, note the time the original sample was cooled at room temperature in the remarks section of the transmittal.

6. Volumetric Calculations

   Calculations

   a. Calculate $\%G_{mm}$ @ N_{design} as follows:

$$\%G_{mm}@N_{design} = \frac{G_{mb}}{G_{mm}} \times 100$$

Example:

$$\%G_{mm}@N_{design} = \frac{2.383}{2.493} \times 100 = 95.6\%$$

Where:

$\%G_{mm}@N_{design}$ = % theoretical maximum specific gravity @ N_{design}
G_{mb} = Bulk specific gravity of the compacted specimen
G_{mm} = Maximum specific gravity of the paving mixture
N_{design} = Number of design gyrations

b. Calculate $\%G_{mm}@N_{ini}$ as follows:

$$\%G_{mm}@N_{ini} = 100 \times \left(\frac{G_{mb} \times h_d}{G_{mm} \times h_i}\right)$$

Example:

$$\%G_{mm}@N_{ini} = 100 \times \left(\frac{2.383 \times 110.0}{2.493 \times 123.1}\right) = 85.4\%$$

Where:

$\%G_{mm}@N_{ini}$ = Percent theoretical maximum specific gravity @ $N_{initial}$
h_d = Height of specimen at design gyration level
h_i = Height of specimen at initial design gyration level
$N_{initial}$ = Number of initial gyrations

c. Calculate Air Voids (V_a) as follow:

$$V_a = 100 \times \left(1 - \left(\frac{G_{mb}}{G_{mm}}\right)\right)$$

Example:

$$V_a = 100 \times \left(1 - \left(\frac{2.383}{2.493}\right)\right) = 4.4\%$$

Where:

V_a = Percent air voids

d. Calculate Voids in Mineral Aggregate (VMA) as follows:

$$VMA = 100 - \left(\frac{(G_{mb} \times P_s)}{G_{sb}}\right)$$

Example:

$$VMA = 100 - \left(\frac{(2.383 \times 94.8)}{2.630}\right) = 14.1\%$$

Where:

P_s = Percent of aggregate in the mixture (100-P_b)

Example:
100% mix – 5.2% asphalt = 94.8% aggregate

Where:

G_{sb} = Bulk specific gravity of the combined aggregate
VMA = Voids in Mineral Aggregate, percent

e. Calculate Voids Filled with Asphalt (VFA) as follows:

$$VFA = 100 \times \left(\frac{VMA - V_a}{VMA}\right)$$

Example:

$$VFA = 100 \times \left(\frac{14.1 - 4.4}{14.1}\right) = 68.8\%$$

Where:

VFA = Voids Filled with Asphalt, percent

f. Calculate Gravity Stone Effective (G_{se}) as follows:

$$G_{se} = \frac{100 - P_b}{\left(\frac{100}{G_{mm}} - \frac{P_b}{G_b}\right)}$$

Example:

$$G_{se} = \frac{100 - 5.2}{\left(\frac{100}{2.493} - \frac{5.2}{1.025}\right)} = 2.706$$

Where:

G_{se} = Gravity Stone Effective (specific gravity of aggregates, excluding voids permeable to asphalt)
P_b = Percent of binder
G_b = Gravity binder

Note 4: G_b is the specific gravity of the asphalt binder. It is imperative that current G_b is used in the volumetric calculations. Any changes in the binder specific gravity must be confirmed by the temperature viscosity curve provided by the asphalt supplier, which can be obtained from the paving Contractor.

g. Calculate Percent Binder Effective (P_{be}) as follows:

$$P_{be} = P_b - \left(\frac{(P_s \times G_b)(G_{se} - G_{sb})}{(G_{se} \times G_{sb})}\right)$$

Example:

$$P_{be} = 5.2 - \left(\frac{(94.8 \times 1.025)(2.706 - 2.630)}{(2.706 \times 2.630)}\right) = 4.2$$

Where:

P_{be} = Percent binder effective, the percent by mass of effective asphalt content minus the quantity of binder lost by absorption into the aggregate particles.
P_s = Percent of aggregate in the mixture
G_b = Gravity binder
G_{se} = Effective specific gravity of the aggregate
G_{sb} = Bulk specific gravity of the combined aggregate
P_b = Percent of binder

h. Calculate dust-to-binder ratio (P_{200}/P_{be}) as follows:

$$P_{200}/P_{be} = P_{200} \div P_{be}$$

Example:
$5.0 \div 3.6 = 1.4$

Where:

P_{200}/P_{be} = Dust-to-binder ratio
P_{200} = Percent of aggregate passing the No. 200 sieve

7. Report

Report the results using one or more of the following of the following:

- Materials Testing System (MATS)
- WSDOT Form 350-560 for asphalt content, gradation, and moisture content
- WSDOT Form 350-162 for volumetric properties
- Form approved in writing by the State Materials Engineer

Washington State
Department of Transportation

WSDOT SOP 732[1]

Volumetric Design for Hot-Mix Asphalt (HMA)

1. SCOPE

1.1 This standard for mix design evaluation uses aggregate and mixture properties to produce a hot-mix asphalt (HMA) job-mix formula. The mix design is based on the volumetric properties of the HMA in terms of the air voids (V_a), voids in the mineral aggregate (VMA), and voids filled with asphalt (VFA).

1.3 This standard may involve hazardous materials, operations, and equipment. This standard does not purport to address all of the safety problems associated with its use. It is the responsibility of the user of this procedure to establish appropriate safety and health practices and determine the applicability of regulatory limitations prior to use.

2. Referenced Documents

2.1 AASHTO Standards

M 320 – Performance-Graded Asphalt Binder

M 323 – Superpave Volumetric Mix Design

R 30 – Mixture Conditioning of Hot-Mix Asphalt (HMA)

R 35 – Superpave Volumetric Design for Hot-Mix Asphalt (HMA)

T 2 – Sampling of Aggregates

T 11 – Materials Finer Than 75-µm (No. 200) Sieve in Mineral Aggregates by Washing

T 27 – Sieve Analysis of Fine and Coarse Aggregates

T 84 – Specific Gravity and Absorption of Fine Aggregate

T 85 – Specific Gravity and Absorption of Coarse Aggregate

T 100 – Specific Gravity of Soils

T 166 – Bulk Specific Gravity of Compacted Hot Mix Asphalt Using Saturated Surface-Dry Specimens

T 209 – Theoretical Maximum Specific Gravity and Density of Hot Mix Asphalt Paving Mixtures

T 228 – Specific Gravity of Semi-Solid Bituminous Materials

T 248 – Reducing Samples of Aggregate to Testing Size

T 275 – Bulk Specific Gravity of Compacted Hot Mix Asphalt (HMA) Using Paraffin-Coated Specimens

T 283 – Resistance of Compacted Asphalt Mixture to Moisture-Induced Damage

[1]This Standard Operating procedure is based on AASHTO T 323-04

T 304 – Uncompacted Void Content of Fine Aggregate

T 312 – Preparing and Determining the Density of the Hot-Mix Asphalt (HMA) Specimens by Means of the Superpave Gyratory Compactor

2.2 Asphalt Institute

2.3 ASTM Standards

2.4 WSDOT Standards

M 41-01 – *Construction Manual*

M 41-10 – *Standard Specifications for Road, Bridge, and Municipal Construction* (Stdandard Specifications)

M 46-01 – *Materials Manual*

SOP 731 – Method for Determining Volumetric Properties of Hot-Mix Asphalt (HMA)

T 2 – WSDOT FOP for AASHTO for Standard Practice for Sampling Aggregate

T 27/11 – WSDOT FOP for WAQTC/AASHTO for Sieve Analysis of Fine and Coarse Aggregates

T 113 – Method of Test for Determination of Degradation Value

T 166 – WSDOT FOP for AASHTO for Bulk Specific Gravity of Compacted Hot Mix Asphalt Using Saturated Surface-Dry Specimens

T 176 – WSDOT FOP for AASHTO for Plastic Fines in Graded Aggregates and Soils by Use of the Sand Equivalent Test

T 209 – WSDOT FOP for AASHTO for Method of Test for Maximum Specific Gravity of Hot Mix Asphalt Paving Mixtures "Rice Density"

T 248 – WSDOT FOP for AASHTO for Reducing Samples of Aggregates to Testing Size

T 304 – WSDOT Test Method for AASHTO T 304 Uncompacted Void Content of Fine Aggregate

T 312 – WSDOT FOP for AASHTO for Preparing and Determining the Density of Hot-Mix Asphalt (HMA) Specimens by Means of the Superpave Gyratory Compactor

T 335 – WSDOT FOP for AASHTO T 335 Determining the Percentage of Fracture in Coarse Aggregate

T 718 – Method of Test for Determining Stripping of Hot Mix Asphalt

T 724 – Method of Preparation of Aggregate for HMA Mix Designs

T 726 – Mixing Procedure for Hot-Mix Asphalt (HMA)

3. Terminology

3.1 HMA – Hot-mix asphalt.

3.2 Design ESALs – Design equivalent (80kN) single-axle loads.

3.2.1 Discussion – Design ESALs are the anticipated project traffic level expected on the design lane over a 15-year period. For pavements designed for more or less than 15 years, determine the design ESALs for 15 years when using this standard.

3.3 Air voids (V_a) – The total volume of the small pockets of air between the coated aggregate particles throughout a compacted paving mixture, expressed as a percent of the bulk volume of the compacted paving mixture (Note 1).

Note 1: Term defined in Asphalt Institute Manual MS-2, *Mix Design Methods for Asphalt Concrete and Other Hot-Mix Types*.

3.4 Voids in the mineral aggregate (VMA) – The volume of the intergranular void space between the aggregate particles of a compacted paving mixture that includes the air voids (V_a), and the effective binder content(P_{be}), expressed as a percent of the total volume of the specimen (Note 1).

3.5 Absorbed binder volume (V_{ba}) – The volume of binder absorbed into the aggregate (equal to the difference in aggregate volume when calculated with the bulk specific gravity and effective specific gravity).

3.6 Binder content (P_b) – The percent by mass of binder in the total mixture including binder and aggregate.

3.7 Effective binder volume (V_{be}) – The volume of binder which is not absorbed into the aggregate.

3.8 Voids filled with asphalt (VFA) – The percentage of the voids in the mineral aggregate (VMA) filled with binder (the effective binder volume divided by the VMA).

3.9 Dust/Asphalt Ratio (P_{200}/P_{be}) – By mass, ratio between percent passing the No. 200 (0.075 mm) sieve (P_{200}) and the effective binder content (P_{be}).

3.10 Nominal maximum aggregate size – For aggregate, the nominal maximum size, (NMS) is the largest standard sieve opening listed in the applicable specification, upon which any material is permitted to be retained. For concrete aggregate, NMS is the smallest standard sieve opening through which the entire amount of aggregate is permitted to pass.

WSDOT Note 1: For an aggregate specification having a generally unrestrictive gradation (i.e., wide range of permissible upper sizes), where the source consistently fully passes a screen substantially smaller than the maximum specified size, the nominal maximum size, for the purpose of defining sampling and test specimen size requirements may be adjusted to the screen, found by experience to retain no more than 5% of the materials.

3.11 Maximum aggregate size – One size larger than the nominal maximum aggregate size (Note 2).

Note 2: The definitions given in sections 3.10 and 3.11 apply to Superpave mixes only and differ from the definitions published in other AASHTO standards.

3.12 Reclaimed asphalt pavement (RAP) – Removed and/or processed pavement materials containing asphalt binder and aggregate.

3.13 $N_{initial}$, N_{design}, $N_{maximum}$ – the number of gyrations defined in WSDOT *Standard Specification* 9-03.8(2).

3.14 Effective Asphalt Content (P_{be}) – The total asphalt content of a paving mixture minus the portion of asphalt that is lost by absorption into the aggregate particles (Note 1).

4. Summary of the Practice

4.1 Materials Selection – Binder and aggregate and RAP stockpiles are selected that meet the environmental and traffic requirements applicable to the paving project. The bulk specific gravity of all aggregates proposed for blending and the specific gravity of the binder are determined.

Note 3: If RAP is used, the bulk specific gravity of the RAP aggregate may be estimated by determining the theoretical maximum specific gravity (G_{mm}) of the RAP mixture and using an assumed asphalt absorption for the RAP aggregate to back-calculate the RAP aggregate bulk specific gravity, if the absorption can be estimated with confidence. The RAP aggregate effective specific gravity may be used in lieu of the bulk specific gravity at the discretion of the Agency. The use of the effective specific gravity may introduce an error into the combined aggregate bulk specific gravity and subsequent VMA calculations. The Agency may choose to specify adjustments to the VMA requirements to account for this error based on experience with their local aggregates.

4.2 Design Aggregate Structure – It is recommended at least three trial aggregate blend gradations from selected aggregate stockpiles are blended. For each trial gradation, an initial trial binder content is determined, and at least two specimens are compacted in accordance with WSDOT FOP for AASHTO T 312. A design aggregate structure and an estimated design binder content are selected on the basis of satisfactory conformance of a trial gradation meeting the requirements given in Section 9-03.8(2) of the *Standard Specifications for Road, Bridge, and Municipal Construction* (*Standard Specifications*) for V_a, VMA, VFA, Dust/Asphalt Ratio at N_{design}, and relative density at N_{intial}.

Note 4: Previous Superpave mix design experience with specific aggregate blends may eliminate the need for three trial blends.

4.3 Design Binder Content Selection – Replicate specimens are compacted in accordance with WSDOT FOP for AASHTO T 312 at the estimated design binder content and at the estimated design binder content ± 0.5%. The design binder content is selected on the basis of satisfactory conformance with the requirements of Section 9-03.8(2) of the *Standard Specifications* for V_a, VMA, VFA, and Dust/Asphalt Ratio (P_{200}/P_{be}) at N_{des}, and the relative density at N_{ini} and N_{max}. For WSDOT projects, the design binder content selection is determined by the Contractor and is verified by the WSDOT.

4.4 Evaluating Moisture Susceptibility – The moisture susceptibility of the design aggregate structure is evaluated at the design binder content: compacted to approximately 4.0% air voids in accordance with WSDOT FOP for AASHTO T 312, and evaluated according to WSDOT T 718. The design shall meet the tensile strength ratio requirement of WSDOT T 718. The WSDOT State Materials Laboratory will evaluate the HMA for moisture susceptibility.

5. Significance and Use

5.1 The procedure described in this practice is used to produce HMA which satisfies Superpave HMA volumetric mix design requirements.

6. Preparing Aggregate Trial Blend Gradations

6.1 The asphalt binder grade will be indicated in WSDOT Contract Plans.

6.2 Determine the specific gravity of the binder according to T 228.

6.3 Obtain samples of aggregates proposed to be used for the project from the aggregate stockpiles in accordance with WSDOT FOP for AASHTO T 2.

Note 5: Each stockpile usually contains a given size of an aggregate fraction. Most projects employ three to five stockpiles to generate a combined gradation conforming to the job-mix formula and Section 9-03.8(6) of the *Standard Specifications*.

6.4 Reduce the samples of aggregate fractions according to WSDOT FOP for AASHTO T 248 to samples of the size specified in WAQTC FOP for AASHTO T 27/T 11.

6.5 Wash and grade each aggregate sample according to WAQTC FOP for AASHTO T 27/T 11.

6.6 Determine the bulk and apparent specific gravity for each coarse and fine aggregate fraction in accordance with T 85 and T 84, respectively, and determine the specific gravity of the mineral filler in accordance with T 100. WSDOT requires specific gravity determinations to be reported to an accuracy of 0.001.

6.7 Blend the aggregate fractions using Equation 1:

$$P = Aa + Bb + Cc, etc. \quad (1)$$

Where:

P	=	Percentage of material passing a given sieve for the combined aggregates *A, B, C, etc*.
A, B, C, etc.	=	Percentage of material passing a given sieve for aggregates *A, B, C, etc*.
a, b, c, etc.	=	proportions of aggregates *A, B, C, etc*. used in the combination, and where the total = 1.00.

6.8 Prepare a minimum of three trial aggregate blend gradations; plot the gradation of each trial blend on a 0.45-power gradation analysis chart, and confirm that each trial blend meets the Aggregate Gradation Control Points in Section 9-03.8(6) of the *Standard Specifications* Gradation control is based on four control sieve sizes: the sieve for the maximum aggregate size, the sieve for the nominal maximum aggregate size, the No. 4 or No. 8 (4.75- or 2.36 mm) sieve, and the No. 200 (0.075 mm) sieve. For WSDOT projects, gradation shall be determined by the following sieves as defined in table W1T An example of three acceptable trial blends in the form of a gradation plot is given in Figure 1.

Sieves Required for Gradation Determination				
Sieve Size	⅜ in	½ in	¾ in	1 in
1½”				X
1”			X	X
¾”		X	X	X
½”	X	X	X	X
⅜”	X	X	X	X
No. 4	X	X	X	X
No. 8	X	X	X	X
No. 16	X	X	X	X
No. 30	X	X	X	X
No. 50	X	X	X	X
No. 100	X	X	X	X
No. 200	X	X	X	X

X = indicates sieve is required for gradation determination

Table W1T

6.9 Obtain a test specimen from each of the trial blends according to WSDOT FOP for AASHTO T 248, and conduct the quality tests specified in Section 9-03.8(2) subsections 1, 2, 3, and 4 of the *Standard Specifications* to confirm that the aggregate in the trial blends meets the minimum quality requirements specified in Section 9-03.8(2) of the *Standard Specifications*.

Note 6: The designer has an option of performing the quality tests on each stockpile instead of the trial aggregate blend. The test results from each stockpile can be used to estimate the results for a given combination of materials.

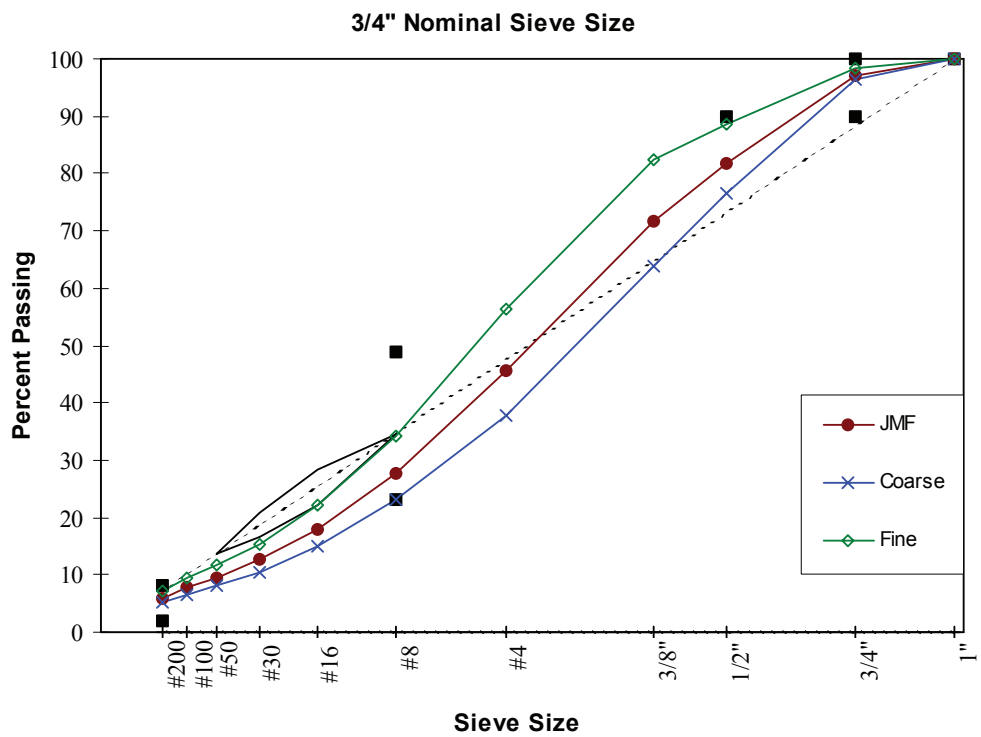

Evaluation of the Gradations of Three Trial Blends (Example)
Figure 1

7. Determining an Initial Trial Binder Content for Each Trial Aggregate Gradation

   7.1 Designers can either use their experience with the materials or the procedure given in Appendix A1 to determine an initial trial binder content for each trial aggregate blend gradation.

   Note 7: When using RAP, the initial trial asphalt content should be reduced by an amount equal to that provided by the RAP.

8. Compacting Specimens of Each Trial Gradation

   8.1 Prepare replicate mixtures (Note 8) at the initial trial binder content for each of the chosen trial aggregate trial blend gradations. From Table 1, determine the number of gyrations based on the design ESALs for the project. On WSDOT projects the ESAL level will be indicated in the Contract Special Provisions.

   Note 8: At least two replicate specimens are required, but three or more may be prepared if desired. Generally, 4500 to 4700 g of aggregate is sufficient for each compacted specimen with a height of 110 to 120 mm for aggregates with combined bulk specific gravities of 2.550 to 2.700, respectively.

   8.2 Condition the mixtures according to R 30, and compact the specimens to N_{design} gyrations in accordance with WSDOT FOP for AASHTO T 312. Record the specimen height to the nearest 0.1 mm after each revolution.

   8.3 Determine the bulk specific gravity (G_{mb}) of each of the compacted specimens in accordance with WSDOT FOP for AASHTO T 166 or T 275 as appropriate. The bulk specific gravity results of the replicate specimens shall not differ by more than 0.020.

Design ESALs[a] (million)	Compaction Parameters			Typical Roadway Application[b]
	$N_{initial}$	N_{design}	N_{max}	
< 0.3	6	50	75	Applications include roadways with very light traffic volumes such as local roads, county roads, and city streets where truck traffic is prohibited or at a very minimal level. Traffic on these roadways would be considered local in nature, not regional, intrastate, or interstate. Special purpose roadways serving recreational sites or areas may also be applicable to this level.
0.3 to < 3	7	75	115	Applications include many collector roads or access streets. Medium-trafficked city streets and the majority of county roadways may be applicable to this level.
3 to < 30	8	100	160	Applications include many two-lane, multilane, divided, and partially or completely controlled access roadways. Among these are medium to highly trafficked city streets, many state routes, U.S. highways, and some rural Interstates.
≥ 30	9	125	205	Applications include the vast majority of the U.S. Interstate system, both rural and urban in nature. Special applications such as truck-weighing stations or truck-climbing lanes on two-lane roadways may also be applicable to this level.

[a]The anticipated project traffic level expected on the design lane over a 15-year period. Regardless of the actual design life of the roadway, determine the design ESALs for 15 years.
[b]As defined by *A Policy on Geometric Design of Highways and Streets, 2001*, AASHTO.

Superpave Gyratory Compaction Effort
Table 1

8.4 Determine the theoretical maximum specific gravity (G_{mm}) according to WSDOT FOP for AASHTO T 209 of separate samples representing each of these combinations that have been mixed and conditioned to the same extent as the compacted specimens.

Note 11: The maximum specific gravity for each trial mixture shall be based on the average of at least two tests. The maximum specific gravity results of the replicate specimens shall not differ by more than 0.011.

9. Evaluating Compacted Trial Mixtures

9.1 Determine the volumetric requirements for the trial mixtures in accordance with Section 9-03.8(2) of the *Standard Specifications*.

9.2 Calculate V_a and VMA at N_{design} for each trial mixture using equations 2 and 3:

$$V_a = 100 \times \left(1 - \left(\frac{G_{mb}}{G_{mm}}\right)\right) \tag{2}$$

$$VMA = 100 - \left(\frac{G_{mb} P_s}{G_{sb}}\right) \tag{3}$$

Where:

G_{mb} = Bulk specific gravity of the extruded specimen
G_{mm} = Theoretical maximum specific gravity of the mixture
P_s = Percent of aggregate in the mixture (100-P_b)
G_{sb} = Bulk specific gravity of the combined aggregate

Note 12: Although the initial trial binder content was estimated for a design air void content of 4.0%, the actual air void content of the compacted specimen is unlikely to be exactly 4.0%. Therefore, the change in binder content needed to obtain a 4.0% air void content, and the change in VMA caused by this change in binder content, is estimated. These calculations permit the evaluation of VMA and VFA of each trial aggregate gradation at the same design air void content, 4.0%.

9.3 Estimate the volumetric properties at 4.0 percent air voids for each compacted specimen. On WSDOT projects, the gyration level will be specified in the Contract Provisions.

9.3.1 Determine the difference in average air void content at N_{design} (ΔV_a) of each aggregate trial blend from the design level of 4.0% using Equation 4:

$$\Delta V_a = 4.0 - V_a \tag{4}$$

9.3.2 Estimate the change in binder content (ΔP_b) needed to change the air void content to 4.0% using Equation 5:

$$\Delta P_b = -0.4\,(\Delta V_a) \tag{5}$$

9.3.3 Estimate the change in VMA (ΔVMA) caused by the change in the air void content (ΔV_a) determined in Section 9.3.1 for each trial aggregate blend gradation, using Equations 6 or 7.

$$\Delta VMA = 0.2(\Delta V_a) \text{ if } V_a > 4.0 \quad (6)$$

$$\Delta VMA = -0.1(\Delta V_a) \; if \; V_a < 4.0 \quad (7)$$

Note 13: A change in binder content affects the VMA through a change in the bulk specific gravity of the compacted specimen (G_{mb}).

9.3.4 Calculate the VMA for each aggregate trial blend at N_{design} gyrations and 4.0% air voids using Equation 8:

$$VMA_{design} = VMA_{trial} + \Delta VMA \quad (8)$$

Where:

VMA_{design} = VMA estimated at a design air void content of 4.0%
VMA_{trial} = VMA determined at the initial trial binder content

9.3.5 Using the values of ΔV_a determined in Section 9.3.1 and Equation 9, estimate the relative density of each specimen at N_{initial} when the design air void content is adjusted to 4.0 percent at N_{design}:

$$\%G_{mm_{initial}} = 100 \times \left(\frac{G_{mb}h_d}{G_{mm}h_i}\right) - \Delta V_a \quad (9)$$

Where:

$\%G_{mm\ \text{initial}}$ = relative density at N_{initial} gyrations at the adjusted design binder content
h_d = Height of the specimen after N_{design} gyrations, from the Superpave gyratory compactor, *mm*
h_i = Height of the specimen after N_{initial} gyrations, from the Superpave gyratory compactor, *mm*

9.3.6 Estimate the percent of effective binder (P_{be}) and calculate the Dust/Asphalt Ratio (P_{200}/P_{be}) for each trial blend using Equations 10 and 11:

$$P_{be_{est}} = -(P_s \times G_b)\frac{(G_{se} - G_{sb})}{(G_{se} \times G_{sb})} + P_{b_{est}} \quad (10)$$

Where:

$P_{be_{est}}$ = Estimated effective binder content
P_s = Percent of aggregate in the mixture (100-P_b)
G_b = Specific gravity of the binder
G_{se} = Effective specific gravity of the aggregate
G_{sb} = Bulk specific gravity of the combined aggregate
$P_{b_{est}}$ = Estimated binder content

$$\text{Dust/Asphalt Ratio} = \frac{P_{200}}{P_{be}} \quad (11)$$

Where:

P_{200} = Percent passing the No. 200 (0.075 mm) sieve

9.3.7 Compare the estimated volumetric properties from each trial aggregate blend gradation at the adjusted design binder content with the criteria specified in Section 9-03.8(2) of the *Standard Specifications*. Choose the trial aggregate blend gradation that best satisfies the volumetric criteria.

Note 14: Table 2 presents an example of the selection of a design aggregate structure from three trial aggregate blend gradations.

Note 15: Many trial aggregate blend gradations will fail the VMA criterion. Generally, the % criterion will be met if the VMA criterion is satisfied. Section 12.1 gives a procedure for the adjustment of VMA.

Note 16: If the trial aggregate gradations have been chosen to cover the entire range of the gradation controls, then the only remaining solution is to make adjustments to the aggregate production or to introduce aggregates from a new source. The aggregates that fail to meet the required criteria will not produce a quality mix and should not be used. One or more of the aggregate stockpiles should be replaced with another material which produces a stronger structure. For example, a quarry stone can replace a crushed gravel, or crushed fines can replace natural fines.

Volumetric Property	Trial Mixture (¾ Inch Nominal Maximum Aggregate) 15 Year Project Design ESALs = 5 million			Criteria
	1	2	3	
	At the Initial Trial Binder Content			
P_b (trial)	4.4	4.4	4.4	
$\%G_{mm\ initial}$(trial)	88.1	87.8	87.1	
$\%G_{mm\ design}$(trial)	95.9	95.3	94.7	
V_a at N_{design}	4.1	4.7	5.3	4.0
VMA_{trial}	12.9	13.4	13.9	
	Adjustments to Reach Design Binder Content (V_a = 4.0% at N_{design})			
ΔV_a	–0.1	–0.7	–1.3	
ΔP_b	0.0	0.3	0.5	
ΔVMA	0.0	–0.1	–0.3	
	At the Estimated Design Binder Content (V_a = 4.0 % at N_{design})			
Estimated P_b (design)	4.4	4.7	4.9	
VMA (design)	12.9	13.3	13.6	≥ 13.0
$\%G_{mm\ initial}$(design)	88.2	89.5	88.4	≤ 89.0

Notes:

1. The top portion of this table presents measured densities and volumetric properties for specimens prepared for each aggregate trial blend at the initial trial binder content.
2. None of the specimens had an air void content of exactly 4.0 percent. Therefore, the procedures described in Section 9 must be applied to:
   (1) estimate the design binder content at which TV_a = 4.0 percent, and
   (2) obtain adjusted VMA and relative density values at this estimated binder content.
3. The middle portion of this table presents the change in binder content (ΔP_b) and VMA (ΔVMA) that occurs when the target air void content (TV_a) is adjusted to 4.0 percent for each trial aggregate blend gradation.
4. A comparison of the VMA and densities at the estimated design binder content to the criteria in the last column shows that trial aggregate blend gradation No. 1 does not have sufficient VMA (12.9% versus a requirement of ≥ 13.0%). Trial blend No. 2 exceeds the criterion for relative density at $N_{initial}$ gyrations (89.5% versus requirement of ≤ 89.0%). Trial No. 3 meets the requirement for relative density and VMA and, in this example, is selected as the design aggregate structure.

Selection of a Design Aggregate Structure (Example)
Table 2

10. Selecting the Design Binder Content

10.1 Prepare replicate mixtures (Note 8) containing the selected design aggregate structure at each of the following three binder contents: (1) the estimated design binder content, $P_{b\ (design)}$; (2) 0.5% below $P_{b\ (design)}$; and (3) 0.5% above $P_{b\ (design)}$.

10.1.1 Use the number of gyrations previously determined in Section 8.1.

10.2 Condition the mixtures according to R 30, and compact the specimens to N_{design} gyrations according to WSDOT FOP for AASHTO T 312. Record the specimen height to the nearest 0.1 mm after each revolution.

10.3 Determine the bulk specific gravity of each of the compacted specimens in accordance with WSDOT FOP for AASHTO T 166 or AASHTO T 275 as appropriate.

10.4 Determine the theoretical maximum specific gravity (G_{mm}) according to WSDOT FOP for AASHTO T 209 of each of the three mixtures using companion samples which have been conditioned to the same extent as the compacted specimens (Note 8).

10.5 Determine the design binder content which produces a target air void content of 4.0 percent at N_{design} gyrations using the following steps:

10.5.1 Calculate V_a, VMA, and VFA at N_{design} using Equations 2, 3 and 12: The volumetric properties are determined for each specimen and then averaged for each replicate mixture.

$$VFA = 100 \times \left(\frac{VMA - V_a}{VMA}\right) \tag{12}$$

10.5.2 Calculate the Dust/Asphalt Ratio, using Equation 13.

$$\text{Dust/Asphalt Ration } \frac{P_{200}}{P_{be}} \tag{13}$$

Where:

P_{be} = Effective binder content

10.5.3 For each of the three mixtures, determine the average corrected specimen relative densities at N_{initial} (%), using Equation 14.

$$\%G_{mm_{initial}} = 100 \times \left(\frac{G_{mb}h_d}{G_{mm}h_i}\right) \tag{14}$$

10.5.4 Plot the average V_a, VMA, VFA, and relative density at N_{design} for replicate specimens versus binder content.

Note 17: All plots are generated automatically by the Superpave software. Figure 2 presents a sample data set and the associated plots.

10.5.5 By graphical or mathematical interpolation (Figure 2), determine the binder content to the nearest 0.1 percent at which the target V_a is equal to 4.0 percent. This is the design binder content (P_b) at N_{design}.

10.5.6 By interpolation (Figure 2), verify that the volumetric requirements specified in Section 9-03.8(2) of the *Standard Specifications* are met at the design binder content.

10.6 Compare the calculated percent of maximum relative density with the design criteria at N_{initial} by interpolation, if necessary. This interpolation can be accomplished by the following procedure.

10.6.1 Prepare a densification curve for each mixture by plotting the measured relative density at x gyrations, $\%G_{mm\,x}$, versus the logarithm of the number of gyrations (see Figure 3).

10.6.2 Examine a plot of air void content versus binder content. Determine the difference in air voids between 4.0 percent and the air void content at the nearest, lower binder content. Determine the air void content at the nearest, lower binder content at its data point, not on the line of best fit. Designate the difference in air void content as ΔV_a.

10.6.3 Using Equation 14, determine the average corrected specimen relative densities at N_{initial}. Confirm that satisfies the design requirements in Section 9-03.8(2) of the *Standard Specifications* at the design binder content.

10.7 Prepare replicate (Note 8) specimens composed of the design aggregate structure at the design binder content to confirm that $\%G_{mm\ \max}$ satisfies the design requirements in Section 9-03.8(2) of the *Standard Specifications*.

10.7.1 Condition the mixtures according to R-30, and compact the specimens according to WSDOT FOP for AASHTO T312 to the maximum number of gyrations, $N_{\max}$, from Section 9-03.8(2) of the *Standard Specifications.*

10.7.2 Determine the average specimen relative density at $N_{\max}$, $\%G_{mm\ \max}$, by using Equation 15, and confirm that satisfies the volumetric requirement in Section 9-03.8(2) of the *Standard Specifications*.

$$\%G_{mm_{max}} = 100 \times \frac{G_{mb}}{G_{mm}} \tag{15}$$

Where:

$\%G_{mm\ \max}$ = Relative density at $N_{\max}$ gyrations at the design binder content

P_b(%)	V_a(%)	VMA (%)	VFA (%)	Maximum Density at N_{design} (G_{mm})	Density at N_{design} lbs/ft^3
4.3	9.9	17.0	41.8	2.660	165.6
4.8	8.2	16.7	50.9	2.636	164.1
5.3	6.9	16.6	58.5	2.617	162.9
5.8	5.2	16.5	68.5	2.585	160.9
6.3	3.9	16.2	76.0	2.574	160.2

In this example, the estimated design binder content is 4.8 percent; the minimum VMA requirement for the design aggregate structure (¾ in nominal maximum size) is 13.0 percent, and the VFA requirements is 65 to 78 percent.

Entering the plot of percent air voids versus percent binder content at 4.0 percent air voids, the design binder content is determined as 6.2 percent.

Entering the plots of percent VMA versus percent binder content and percent VFA versus percent binder content at 6.2 percent binder content, the mix meets the VMA and VFA requirement.

Sample Volumetric Design Data at N_{des}
Figure 2

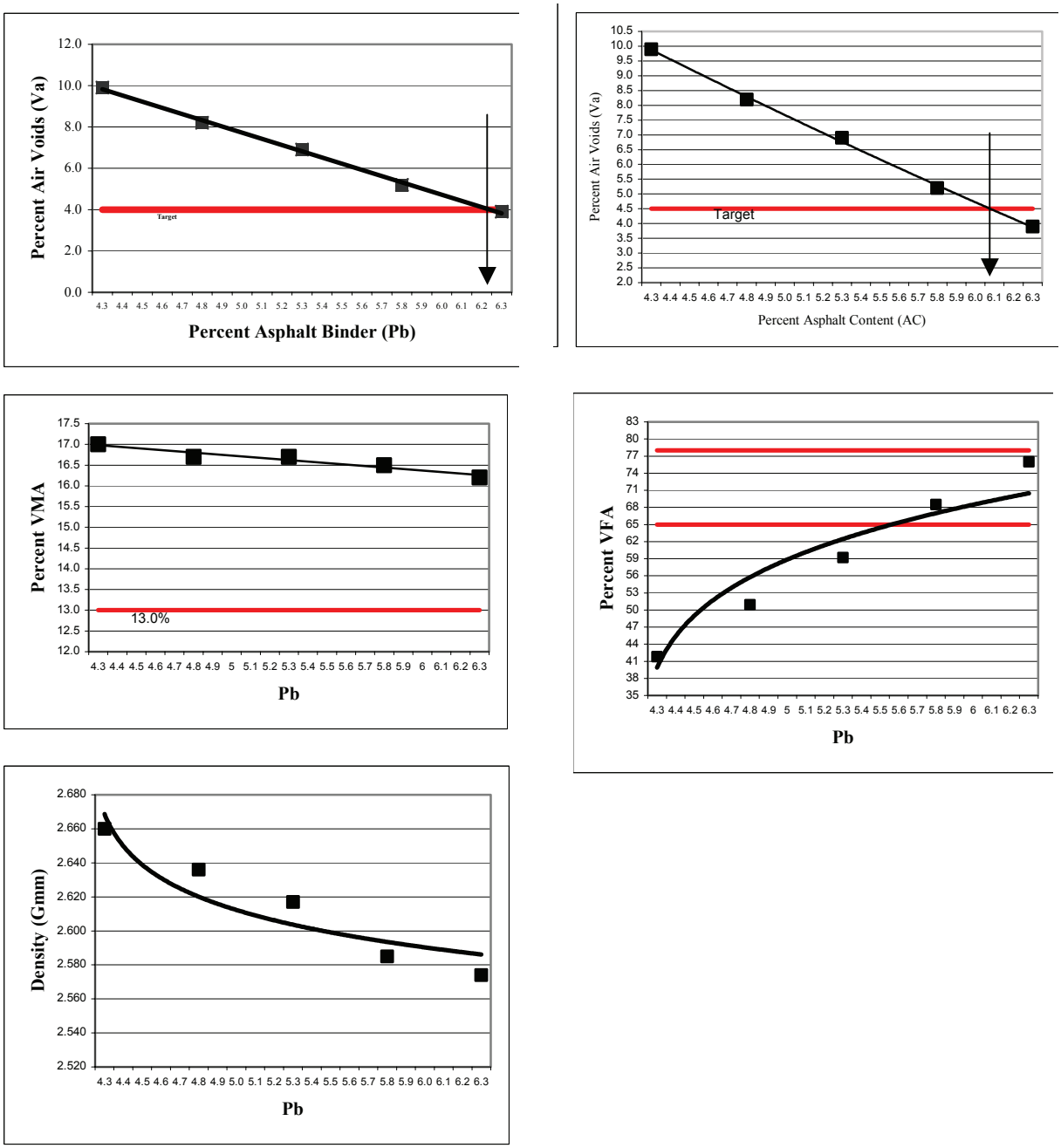

Sample Densification Curve

Figure 3

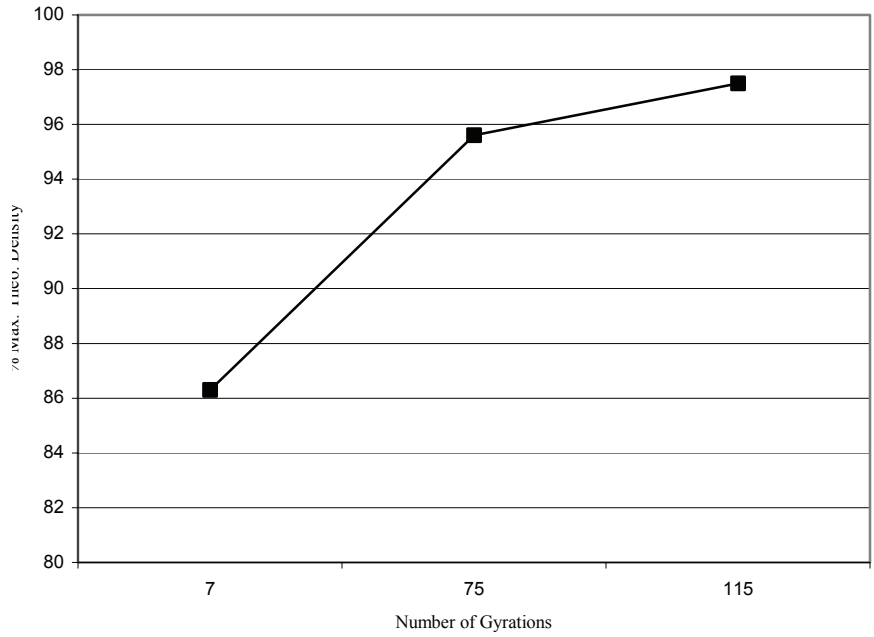

Figure 4

11. Evaluating Moisture Susceptibility

    11.1 Prepare six mixture specimens composed of the design aggregate structure at the design binder content. Prepare the specimens according to WSDOT T 726, and compact the specimens to approximate 4.0% air voids in accordance to WSDOT FOP for AASHTO T 312. The WSDOT State Materials Laboratory will evaluate the HMA for moisture susceptibility.

    11.2 Test the specimens and calculate the tensile strength ratio in accordance with WSDOT T 718.

12. Adjusting the Mixture to Meet Properties

    12.1 Adjusting VMA – If a change in the design aggregate skeleton is required to meet the specified VMA, there are three likely options: (1) change the gradation (Note 18); (2) reduce the minus No. 200 (0.075 mm) fraction (Note 19); or (3) change the surface texture and/or shape of one or more of the aggregate fractions (Note 20).

    Note 18: Changing gradation may not be an option if the trial aggregate blend gradation analysis includes the full spectrum of the gradation control area.

    Note 19: Reducing the percent passing the No. 200 (0.075 mm) sieve of the mix will typically increase the VMA. If the percent passing the No. 200 (0.075 mm) sieve is already low, this is not a viable option.

    Note 20: This option will require further processing of existing materials or a change in aggregate sources.

12.2 Adjusting VFA – The lower limit of the VFA range should always be met at 4.0% air voids if the VMA meets the requirements. If the upper limit of the VFA is exceeded, then the VMA is substantially above the minimum required. If so, redesign the mixture to reduce the VMA. Actions to consider for redesign include: (1) changing to a gradation that is closer to the maximum density line; (2) increasing the minus No. 200 (0.075 mm) fraction, if room is available within the specification control points; or (3) changing the surface texture and shape of the aggregates by incorporating material with better packing characteristics, e.g., less thin, elongated aggregate particles.

13. Report

13.1 The report shall include the identification of the project number, mix class designation, and mix design number.

13.2 The report shall include information on the design aggregate structure including the source of aggregate, and gradation, including the blending ratios.

13.3 The report shall contain information about the design binder including the source of binder and the performance grade.

13.4 The report shall contain information about the HMA including the percent of binder in the mix; the relative density; the number of initial, design, and maximum gyrations; and the VMA, VFA, V_a, and Dust/Asphalt Ratio P_{be}, G_{mm}, G_{mb}, G_{sb} and G_{se} of the aggregate blend, G_{sb} of the fine aggregate, and G_b.

13.5 The report shall contain the results of the moisture susceptibility testing and the required level of anti-strip additive needed.

14. Keywords

14.1 HMA mix design; Superpave; volumetric mix design.

Appendix

A1. Calculating an Initial Trial Binder Content for Each Aggregate Trial Blend

Nonmandatory Information

A1.1 Calculate the bulk and apparent specific gravities of the combined aggregate in each trial blend using the specific gravity data for the aggregate fractions obtained in Section 6.6 and Equations 16 and 17:

$$G_{sb} = \frac{P_1 + P_2 + \cdots + P_n}{\frac{P_1}{G_1} + \frac{P_2}{G_2} + \cdots + \frac{P_n}{G_n}} \tag{16}$$

$$G_{sa} = \frac{P_1 + P_2 + \cdots + P_n}{\frac{P_1}{G_1} + \frac{P_2}{G_2} + \cdots + \frac{P_n}{G_n}} \tag{17}$$

Where:

G_{sb} = Bulk specific gravity for the combined aggregate
G_{sa} = Apparent specific gravity for the combined aggregate
P_1, P_2, P_n = Percentages by mass of aggregates 1, 2, n
G_1, G_2, G_n = Bulk specific gravities (Equation 16) or apparent specific gravities (Equation 17) of aggregates 1, 2, *n*.

A1.2 Estimate the effective specific gravity of the combined aggregate in the aggregate trial blend using Equation 18:

$$G_{se} = G_{sb} + 0.8(G_{sa} - G_{sb}) \tag{18}$$

Where:

G_{se} = Effective specific gravity of the combined aggregate
G_{sb} = Bulk specific gravity of the combined aggregate
G_{sa} Apparent specific gravity of the combined aggregate

Note 21: The multiplier, 0.8, can be changed at the discretion of the designer. Absorptive aggregates may require values closer to 0.6 or 0.5.

Note 22: The Superpave mix design system includes a mixture conditioning step before the compaction of all specimens; this conditioning generally permits binder absorption to proceed to completion. Therefore, the effective specific gravity of Superpave mixtures will tend to be close to the apparent specific gravity in contrast to other design methods where the effective specific gravity generally will lie near the midpoint between the bulk and apparent specific gravities.

A1.3 Estimate the volume of binder absorbed into the aggregate, V_{ba}, using Equations 19 and 20:

$$V_{ba} = W_s\left(\frac{1}{G_{sb}} - \frac{1}{G_{se}}\right) \tag{19}$$

Where:

W_s = The mass of aggregate in 1 cm^3 of mix, g, is calculated as
=

$$W_s = \frac{P_s(1 - V_a)}{\frac{P_b}{G_b} + \frac{P_s}{G_{se}}} \tag{20}$$

and Where:

P_b = Percent of binder, in decimal equivalent, assumed to be 0.05
P_s = Percent of aggregate in mixture, in decimal equivalent, assumed to be 0.95
G_b = Specific gravity of the binder
V_a = Volume of air voids, assumed to be 0.04 cm^3 in 1 cm^3 of mix

Note 23: This estimate calculates the volume of binder absorbed into the aggregate, V_{ba}, and subsequently, the initial, trial binder content at a target air void content of 4.0%.

A1.4 Estimate the volume of effective binder using Equation 21:

$$V_{be} = 0.176 - (0.0675 \log\ (S_n)) \tag{21}$$

Where:

V_{be} = Volume of effective binder, cm^3
S_n = Nominal maximum sieve size of the largest aggregate in the aggregate trial blend, mm.

Note 24: This regression Equation is derived from an empirical relationship between: (1) VMA and V_{be} when the air void content, V_a, is equal to 4.0 percent: V_{be} = VMA – V_a = VMA – 4.0; and (2) the relationship between VMA and the nominal maximum sieve size of the aggregate in MP 2. For WSDOT projects, see contract provisions.

A1.5 Calculate the estimated initial trial binder (P_{bi}) content for the aggregate trial blend gradation using Equation 22:

$$P_{bi} = 100 \times \left(\frac{G_b(V_{be} + V_{ba})}{\left(G_b(V_{be} + V_{ba})\right) + W_s}\right) \tag{22}$$

Where:

P_{bi} = Estimated initial trial binder content, percent by weight of total mix

Washington State
Department of Transportation

WSDOT SOP 733

Determination of Pavement Density Differentials Using the Nuclear Density Gauge

1. Scope

This test method describes the procedure for locating and testing areas of suspected low cyclic density. Lower pavement density has been related to temperature differentials and areas of "spots, streaks" or visual pavement irregularities. This method uses infrared detection devices and visual inspection to identify areas of potentially low cyclic density.

2. Definitions

a. Temperature Differential Area- Any area where the temperature of the newly placed HMA pavement is greater than 25° F different than the surrounding area.

b. Aggregate segregation- "Spots, streaks" or visual pavement irregularities in the newly placed HMA pavement that has a significant difference in texture when compared to the surrounding material.

c. Systematic Density Testing - the testing of temperature differential areas or areas of aggregate segregation to determine if there is a pattern of low cyclic density.

3. Equipment

a. An approved infrared camera OR a handheld noncontact infrared thermometer (features for both should include continuous reading, minimum, maximum, and average readings, laser sighting, and a minimum distance to spot size ratio (D:S) of 30:1.

b. Nuclear moisture-density gauge.

c. Tape measure.

d. A can of spray paint for marking test locations.

e. Required report form.

4. Testing Criteria

a. Where temperature differentials are 25° F or greater a systematic HMA compaction test is required.

b. Where temperature differentials are less than 25° F a systematic HMA compaction test is not required unless, an area shows signs of visual pavement irregularities, surface segregation or a significantly different texture.

5. Determination of Systematic Density Testing Locations

Use either and infrared camera or a handheld non-contact infrared device to locate temperature differential areas as follows:

5.1 Infrared Camera

a. Delineate a 500 ft section of pavement and systematically check the area for temperature differentials within one minute of HMA placement and prior to any compaction of the pavement.

b. No temperature profiles shall be performed within the first or last 25 tons of production each day or within 25 feet of any transverse joint.

c. Focus the camera on the freshly placed HMA pavement prior to compaction. Adjust the camera to show the high and low temperatures.

d. Viewing should occur from the side of the paved lane approximately 15 to 20 feet back from the paver looking toward the paver.

e. The "spot" function on the camera should be used to obtain the temperature of the cool area and the surrounding HMA to assess for temperature differentials.

f. If the temperature differential is 25° F or more, locate the approximate center of the temperature differential area with the camera. The offset is from the center of the temperature differential area to the edge of the lane. Mark the location to be tested for systematic HMA compaction by placing a paint mark at the edge of the lane corresponding to the center of the temperature differential. Record the HMA surface temperature, temperature differential, offset, and station on DOT form 350-170 and in the MATS database.

g. If the temperature differential is less than 25° F, there is no need to mark the location unless an area within the paved lane has a significantly different texture.

   If testing is performed because of a significantly different textured area, locate the center of the affected area and mark the location as described in step g and as shown in Figure 1 with an (S) after the temperature differential.

5.2 Handheld Noncontact Infrared Device

a. Delineate a 500 ft section of pavement and systematically check the area for temperature differentials within one minute of HMA placement and prior to any compaction of the pavement.

b. No temperature profiles shall be performed within the first or last 25 tons of production each day or within 25 feet of any transverse joint.

c. Perform a longitudinal scan of the pavement by standing at the edge of the paving lane about 5 to 10 feet back from the paver. Scan the mat with the handheld noncontact thermometer continuously in a longitudinal manner by walking behind the paver in the direction of paving, staying the same distance away from the paver for 500 ft of HMA placement.

d. The offset for the longitudinal profile should be anywhere from 18 inches from the edge to no more than half the width of the paved lane. (The need to vary the longitudinal offset will be necessary to get an accurate representation of the whole mat.) Scanning temperatures for the other half of the paved lane should be performed from the other side.

   Note: Typically, temperature differentials or surface segregation can be captured with the longitudinal scan.

e. Perform a transverse scan after completion of the longitudinal scan, making sure to scan the entire width of the paved lane excluding the outer 18 inches on each side. It should be performed approximately 5 to 10 feet behind the paver (to check for streaking of the mat).

Note: Typically, streaking caused by temperature differentials or surface segregation will be captured by the transverse scan.

f. If the temperature differential is 25° F or more, locate the approximate center of the temperature differential area by scanning that specified location. The offset is from the center of the temperature differential area to the edge of the paved lane. Mark the location to be tested for systematic density testing by placing a paint mark at the edge of the lane corresponding to the center of the temperature differential. Record the HMA surface temperature, temperature differential, offset, and station on DOT form 350-170 or in the MATS database.

g. If the temperature differential is less than 25° F, there is no need to mark the location unless an area within the paved lane has visual pavement irregularities, surface segregation or a significantly different texture. If testing is performed because of a significantly different textured area, locate the center of the affected area and mark the location as described in step g and as shown in Figure 1 with an (S) after the temperature differential.

6. Systematic Density Testing Procedure

a. Systematic density testing shall begin after finish rolling is completed.

b. All systematic density testing shall be performed in accordance with WSDOT FOP for WAQTC T 355.

c. Systematic density testing shall be performed at all the locations recorded in 5.1f and 5.2f of this procedure. Gauge probe shall be placed at the station and offset determined above as the center of the temperature differential area.

e. If any temperature differentials are found in the initial assessment of the paving operations, at least one temperature profile shall be taken for every subsequent 500 ft of paving operation.

d. If no temperature differentials or streaks greater than 25° F are found or if there are no more than 2 density readings lower than 90 percent found in a 500 ft section, the testing frequency may be reduced. Random checks however, should continue to be made throughout the day and the results recorded.

e. If any significant equipment or weather changes occur, temperature profiles should be performed to determine if the new operation is capable of producing uniform HMA temperatures.

f. If it is found that the paving machine is creating areas that are significantly different in texture from the surrounding pavement, systematic density tests should be performed to determine if these are areas of low cyclic density.

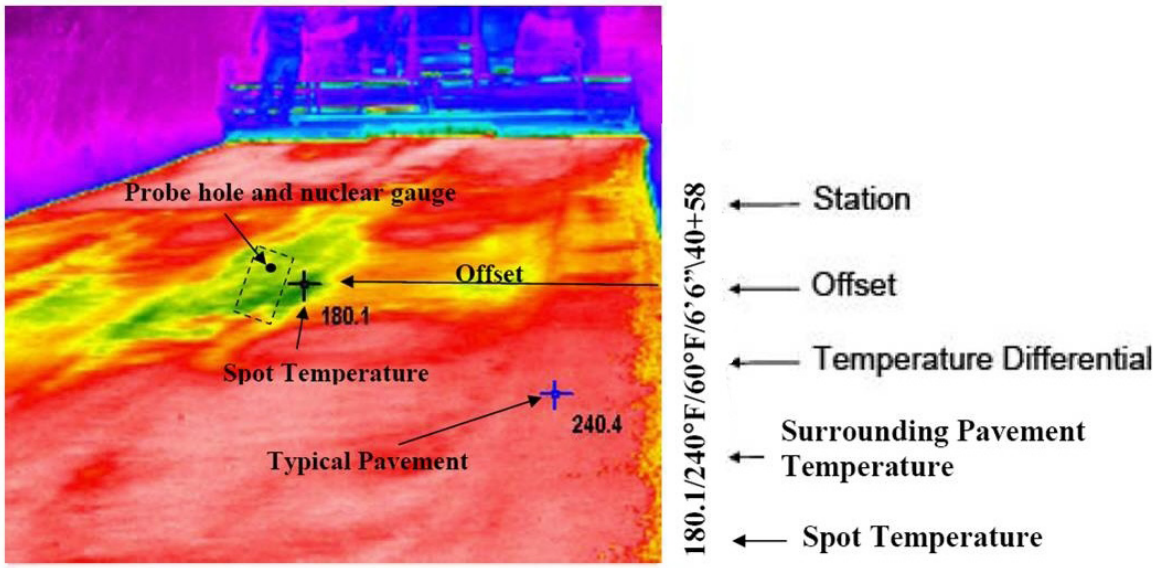

Marking Location of Temperature Differential
Figure 1

Washington State
Department of Transportation

WSDOT SOP 734

Sampling Hot Mix Asphalt After Compaction (Obtaining Cores)

1. Scope
   - This method describes the process for obtaining Hot Mix Asphalt test cores for Laboratory testing after compaction has been completed. Cores may range in size from 2 in to 12 in
2. Significance and Use
   - Samples obtained in accordance with the procedure given in this practice may be used for measuring pavement thickness, density, and acceptance testing.
   - When cores are used to determine nuclear gauge correlation, refer to WSDOT SOP 730.
   - When cores are used to determine pavement density, the Bulk Specific Gravity ($\mathbf{G_{mb}}$) is determined according to WSDOT FOP for AASHTO T 166.
   - When cores are used for forensic testing of HMA, refer to SOP 737 "Procedure for the Forensic Testing of HMA Field Cores" to determine the required number and size of cores.
3. Apparatus
   - Core Drill Machine –A Core Drill Machine of sufficient horsepower and depth to minimize distortion of the compacted cores of Hot Mix Asphalt.
   - Core Bit – The cutting edge of the core drill bit shall be of hardened steel or other suitable material with diamond chips embedded in the metal cutting edge or as recommended by the core drill bit manufacturer. Typically the core drill bit should have an inside diameter of 4" ± 0.25" (100 mm ± 6 mm) or 6" ± 0.25" (150 mm ± 6 mm), these core bit dimensions are agency preferred alternatives. Suitable larger and smaller diameter core bit alternatives shall be employed as required by the agency.
   - Tools – Core layers may be separated using a saw or other suitable device which provides a clean smooth surface and does not damage the core.
   - Retrieval Device (Optional) –The retrieval device used for removing core samples from holes must preserve the integrity of the core. The device may be a steel rod of suitable length and with a diameter that will fit into the space between the core and the pavement material. There may be a 90 degree bend at the top to form a handle and a 90 degree bend at the bottom, approximately 2 in (50 mm) long, forming a hook to assist in the retrieval of the core or other suitable device.
4. Safety

   This standard does not purport to address all of the safety concerns, associated with its use. It is the responsibility of the user of this standard operating procedure to establish a pre activity safety plan prior to use.

5. Test Site Location
   - The quantity of cores to be obtained shall be determined by the test procedure to be performed or agency requirements. Refer to WSDOT SOP 730 when taking correlation cores.
   - Determine the location of the core(s) as required by the agency.
6. Procedure
   - For freshly placed Hot Mix Asphalt materials, the core shall be taken when the material has had sufficient amount of time to cool to prevent damage to the core.
   - Pavement may be cooled to expedite the removal of the core by the following methods; water, ice water, ice, or dry ice or liquid nitrogen.
   - Place the coring machine and core bit over the selected location.
   - Keep the core bit perpendicular to the Hot Mix Asphalt surface during the coring process.

     Note 1: If any portion of the coring machine shifts during the operation, the core may break or distort.
   - Constant downward pressure should be applied on the core bit. Failure to apply constant pressure, or too much pressure, may cause the bit to bind or distort the core.
   - Continue the coring operation until the desired depth is achieved.
   - If necessary, use a retrieval device to remove the core.
   - Clearly identify the cores location and offset without causing damage (i.e., lumber crayon or grease pencil).

     Note 2: If the core is damaged to a point that it cannot be used for its intended purpose, a new core shall be obtained within 6 in of the original location.
7. Filling Core Holes
   - When necessary, the hole made from the coring operation shall be filled with a material that will not separate from the surrounding material. If a Hot Mix Asphalt is available and used, it shall be compacted into the hole. A fast set grout product may be used in lieu of a Hot Mix Asphalt. A black dye can be used to color the grout on wearing lifts.
8. Transporting Cores
   - Transport cores in a suitable container(s) that prevents damage from jarring, rolling, hitting together, and/or impact with any object.
   - Prevent cores from freezing or excessive heat above 130º F (54º C), during transport.

     Note 1: In extreme ambient temperature conditions, cores should be placed in water during transport.
   - If the core is damaged in transport to a point it can not be utilized for its intended purpose the core will not be used.
9. Separate The Layers
   - When necessary, separate the lifts or layers of pavement courses by using a water cooled saw to cut the core on the designated lift line or separate by other suitable methods that will not damage the lifts or layers to be tested.

     Note 4: Lift lines are often more visible by rolling the core on a flat surface and/or surface drying the core.

10. Length Determination

    Measure the thickness of the designated lift to the nearest 0.01' or ⅛" according to WSDOT Test Method 720.

11. Report

    Core information shall be reported on standard agency forms and should include the following information.

    - The date the cores were obtained
    - Paving date
    - Contract number
    - Project title
    - Location of test
    - The lift being evaluated
    - Type of material being evaluated
    - Mix Design Lab Number
    - Average thickness of each core (to the nearest 0.01' or ⅛ ")
    - Average Theoretical Maximum Density

Washington State
Department of Transportation

WSDOT SOP 735

Standard Operating Procedure for Longitudinal Joint Density

1. General Scope

a. This procedure describes the method for determining the location of a longitudinal joint density test.

b. Longitudinal joint density tests are performed in addition to Quality Assurance (QA) density tests.

c. One longitudinal joint density test will be performed on the confined or unconfined edge at each longitudinal joint.

2. Longitudinal Joint Testing

a. The longitudinal joint density test will be conducted in accordance with WSDOT FOP for WAQTC T 355, except "Test Site Location, Section 1, subsection c, which is modified by this procedure to read "No closer than 18 in (450mm) to any vertical mass, or less than 6 in (152 mm) from a vertical pavement edge," making sure the gauge will sit flush with the hot-mix asphalt (HMA). See Figure 1.

b. A longitudinal joint density will be required on the lane edge side of a shoulder if the shoulder is required to meet the same QA density requirements as the traveled lane.

Note: Hot lap joints are not included in longitudinal joint testing.

3. Number of Longitudinal Joint Tests

a. For projects requiring 400 tons sublot with 5 sublots – One reading, at each longitudinal joint to be tested, will be taken within each compaction lot at the same station location as the third sublot.

b. For projects requiring 80 ton sublots – One reading, at each longitudinal joint to be tested, will be taken every four hundred tons or at every fifth sublot tested.

4. Calculation of Results

a. Calculate the Longitudinal Joint density in accordance WSDOT SOP 729.

5. Report

a. Report the results using one or more of the following:

- Materials Testing System (MATS)
- WSDOT Form 350-095
- Form approved in writing by the State Materials Engineer

Note: Lot Number corresponds to the lot where the set of longitudinal joint readings were taken. The station corresponds to the station within the lot (i.e., third sublot) where the set of longitudinal joint readings were taken.

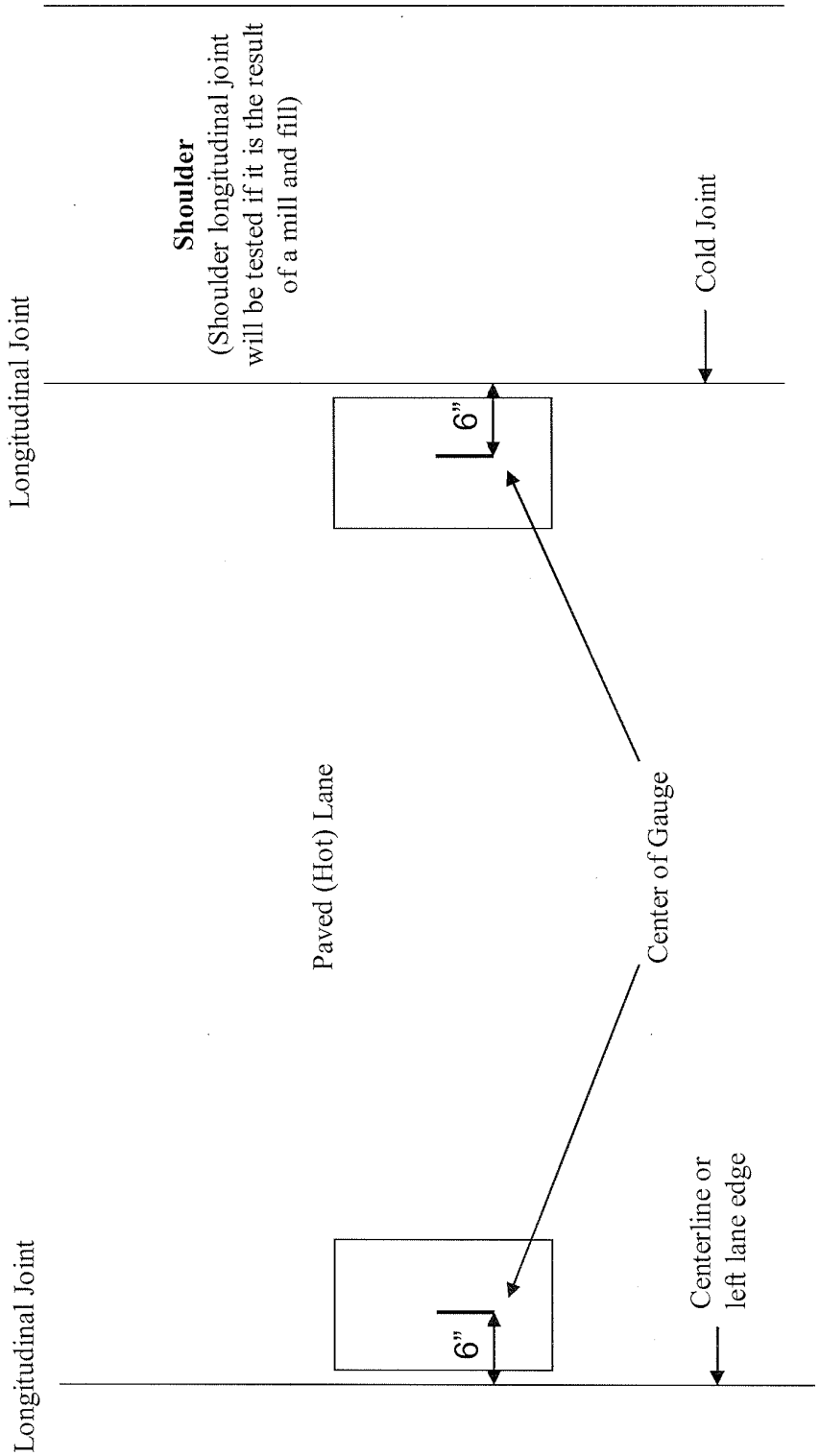

Longitudinal Joint Testing Locations
Figure 1

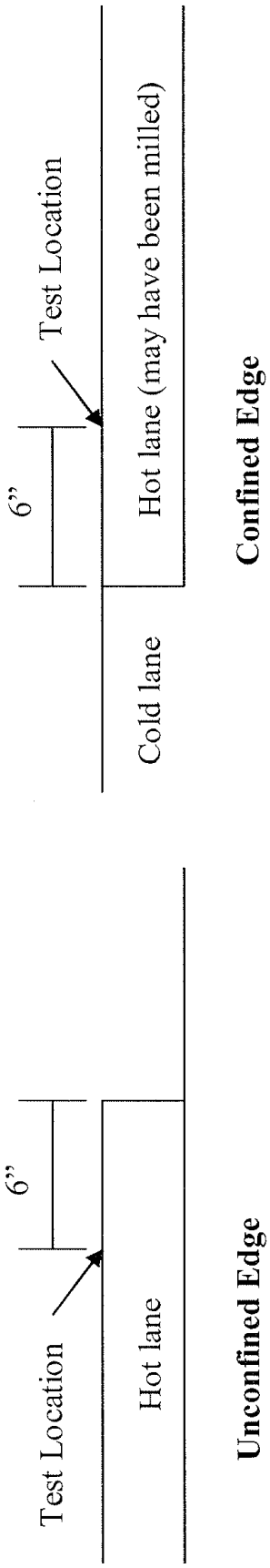

Longitudinal Test Location Examples
Figure 2

Washington State
Department of Transportation

WSDOT SOP 736

In-Place Density of Bituminous Mixes Using Cores

1. Scope

   This test method describes the procedure for determining the relative density of bituminous mixes by means of roadway cores.

2. Procedure

   Cores for densities will be taken in accordance with WSDOT SOP 734 Sampling Hot Mix Asphalt After Compaction (Obtaining Core)

   The bulk specific gravity (Gmb) of the core will be determined in accordance with WSDOT FOP for T 166 Bulk Specific Gravity of Compacted Hot Mix Asphalt (HMA) Using Saturate Surface-Dry Specimens.

   The Theoretical maximum density of the mix will be determined in accordance with WSDOT FOP for AASHTO T 209 Theoretical Maximum Specific Gravity and Density of Hot-Mix Asphalt Paving Mixtures.

   Determine the average theoretical maximum density in accordance with WSDOT SOP 729 Determination of the Moving Average of Theoretical Maximum Density (TMD) for HMA

3. Calculation of Percent of Compaction

   The percent compaction is determined by comparing the density of the roadway core to the theoretical maximum density.

   Calculate core density to the nearest 0.1 pcf as follows:

   $$\text{Core Density} = Gmb \times 62.245 \text{ pcf}$$

   Calculate percent compact (round to the nearest 0.1 percent) as follows:

   $$\text{Percent Compaction} = (\text{Core Density})/(\text{Average Theoretical Maximum Density}) \times 100$$

WSDOT Test Method T 736

Method of Test for Determining Indirect Tensile Strength (IDT) of Compacted Bituminous Mixtures

1. Scope

   1.1 This test method is used for determining tensile strength of compacted bituminous mixtures.

   1.2 This test method is the WSDOT equivalent of Tex-226-F and ASTM D6931.

   1.3 This standard may involve hazardous materials, operations, and equipment. This standard does not purport to address all of the safety concerns, if any, associated with its use. It is the responsibility of the user of this standard to establish appropriate safety and health practices and determine the applicability of regulatory limitations prior to use.

2. Referenced Documents

   2.1 AASHTO Standards

   T 269 – Percent Air Voids in Compacted Dense and Open Asphalt Mixtures

   2.2 Other Standards

   WSDOT FOP for WAQTC/AASHTO T 168 – Sampling of Hot Mix Asphalt (HMA) Paving Mixtures for WAQTC

   WSDOT T 712 – Standard Method of Reducing Hot Mix Asphalt Paving Mixtures

   WSDOT Test Method T 724 – Method of Preparation of Aggregate for Hot Mix Asphalt (HMA) Mix Designs

   WSDOT FOP for AASHTO T 312 – Preparing Hot Mix Asphalt (HMA) Specimens by Means of the Superpave Gyratory Compactor

   WSDOT FOP for AASHTO T 166 – Bulk Specific Gravity (Gmb) of Compacted Hot Mix Asphalt (HMA) Using Saturated Surface-Dry Specimens

   WSDOT FOP for AASHTO T 209 – Theoretical Maximum Specific Gravity (Gmm) and Density of Hot Mix Asphalt (HMA) Paving Mixtures

3. Significance and Use

   3.1 The values of IDT may be used to evaluate the relative quality of bituminous mixtures in conjunction with laboratory mix design testing and for estimating the potential for rutting or cracking. This test measures the strength of compacted bituminous mixtures under a vertical compressive load. Peak load at failure is reported in psi.

4. Apparatus

   4.1 Loading Press – A press capable of applying a compressive load at a controlled deformation rate of 2 inches per minute.

4.2 Loading Strips – 0.75 ± 0.001 inch (19.05 ± 0.3 mm) steel square bars. The surface in contact with the specimen shall be machined to the curvature of the test specimen.

4.3 Water Bath – A constant temperature bath capable of maintaining the specimen at the specified test temperature ± 2.0°F (1.0°C).

5. Specimen

5.1 Laboratory Molded Specimens – 5.9 inches (150 mm) diameter specimen compacted to a height of 2.44 ± 0.04 inches (62 ± 1.0 mm) prepared in accordance with WSDOT FOP for AASHTO T 312.

5.1.1 Air void of test specimen must be 7.0 + 1.0 percent.

5.2 Core Specimens – Must have a minimum height of 1.5 inches (38.1 mm).

5.2.1 There is not a specific density requirement for core specimens

6. Procedure

6.1 For laboratory-produced mixtures, proceed to Section 6.2. For plant-produced mixtures, proceed to Section 6.3. For roadway cores, proceed to Section 6.4.

6.2 Laboratory-Produced Mixtures

6.2.1 Combine aggregate for three individual specimens per WSDOT Test Method T 724.

6.2.2 Mix specimens as described in WSDOT FOP for AASHTO T-312, Section 8.

6.2.3 Compact mixed specimens to specification in accordance with WSDOT FOP for AASHTO T 312, Section 9, using the Superpave Gyratory Compactor.

6.2.4 Cool specimen to room temperature, 77 ± 9°F (25 ± 5°C), and determine Gmb using WSDOT FOP for AASHTO T 166.

6.2.5 Determine Gmm of mixture using WSDOT FOP for AASHTO T 209.

6.2.6 Determine air void using AASHTO T 269, Section 7.

6.2.7 Proceed to Section 6.4.

6.3 Plant-Produced Mixtures

6.3.1 Split out three representative specimens in accordance with WSDOT FOP for WAQTC/AASHTO T 168.

6.3.2 Compact specimens to specification in accordance with WSDOT FOP for AASHTO T 312, Section 9, using the Superpave Gyratory Compactor.

6.3.3 Proceed to Section 6.4.

6.4 Record air void, height (in), and diameter (in) of each laboratory or plant-produced specimen or roadway core.

6.5 Place specimen or core in a constant temperature water bath of 77 + 2°F (25 + 1°C) for a minimum of 30 minutes but not longer than 120 minutes.

6.6 Ensure that the testing device is set to operate at a deformation rate of 2 inches per minute.

6.7 Carefully place the specimen on the lower loading strip.

6.8 Slowly lower top loading strip onto specimen with light contact. Ensure the two loading strips stay parallel to each other during testing.

6.9 Apply the load at a controlled deformation rate of two inches per minute and determine the total vertical load failure of the specimen. Record the total applied vertical load at failure of each specimen in pounds (lbs).

7. Calculation

7.1 $$S_T = \frac{2F}{3.14\,(hd)}$$

Where:

S_T = Indirect tensile strength (psi)
F = Total applied vertical load at failure (lbs)
h = Height of specimen (inches)
d = Diameter of specimen (inches)

Tester Qualification Practical Exam Checklist

Determining Indirect Tensile Strength of Compacted Bituminous Mixtures
WSDOT Test Method T 736

Participant Name _____ Exam Date _____

Procedure Element	Yes	No
1. The tester has a copy of the current procedure on hand?	❐	❐
2. All equipment is functioning according to the test procedure, and if required, has the current calibration/verification tags present?	❐	❐
3. Specimen height is 2.44 ± 0.04 inches (62 ± 1.0 mm) or 1.5 inch (38.1 mm) minimum for cores?	❐	❐
4. Specimen meets air void tolerance of 7.0 ± 1.0 %?	❐	❐
5. Specimen placed in water bath at 77 ± 2°F (25 ± 1°C) for a minimum of 30 minutes but not longer than 120 minutes?	❐	❐
6. Press turned on and operating at a deformation rate of 2 inches per minute?	❐	❐
7. Specimen placed on lower loading strip?	❐	❐
8. Upper loading strip lowered onto specimen with light contact?	❐	❐
9. Upper and lower loading strips parallel with each other?	❐	❐
10. Load applied at 2 inches per minute?	❐	❐
11. Total applied vertical load recorded?	❐	❐
12. Indirect tensile strength in psi calculated and recorded correctly?	❐	❐

First Attempt: Pass ❐ Fail ❐ Second Attempt: Pass ❐ Fail ❐

Signature of Examiner _____

Washington State
Department of Transportation

WSDOT SOP 737

Procedure for the Forensic Testing of HMA Field Cores

1. Scope

   This method describes the process for testing Hot Mix Asphalt (HMA) field cores for asphalt content, gradation, volumetric analysis, Hamburg Wheel-Test, Indirect Tensile Strength and asphalt binder grade determination.

   1.1 This standard covers the procedural steps required for forensic testing of HMA field cores. Cores for forensic testing may range in size from 4-12 inches, although many specific test procedures require the core specimen to be six inches.

   1.2 The values stated in English units are to be regarded as the standard.

2. Significance And Use

   2.1 Approvals of the material for HMA are required prior to use per *Standard Specifications* Section 1-06.1.

   2.2 Samples obtained in accordance with this procedure, shall be obtained using WSDOT SOP 734, "Sampling Hot Mix Asphalt after Compaction (Obtaining Cores)".

3. Reference Documents

   Refer to applicable test methods within this procedure.

4. Apparatus

   Refer to applicable test methods within this procedure.

5. Safety

   This standard does not purport to address all of the safety concerns, associated with its use.

   It is the responsibility of the user of this standard operating procedure to establish a pre activity safety plan prior to use.

6. Test Site Location

   The sample location and quantity of cores to be obtained shall be determined by the test procedure to be performed or agency requirements.

7. Procedures

Perform procedures as needed to obtain desired test results:

7.1 Obtain cores per WSDOT SOP 734, "Sampling Hot Mix Asphalt after Compaction". The required quantity and size of cores for each procedure shall be as shown in Table 1:

Procedure	Size	Number of Cores	Special Instructions
AASHTO T331, "Standard Method of Test for Bulk Specific Gravity (Gmb) Density of Compacted Hot Mix Asphalt (HMA) Using Automatic Vacuum Sealing Method"	4" or 6"	1	
WSDOT FOP for AASHTO T209, "Theoretical Maximum Specific Gravity Density of Hot Mix Asphalt Paving Mixtures"	4" or 6"	1	
WSDOT FOP for AASHTO T308, "Determining the Asphalt Binder Content of Hot Mix Asphalt by the Ignition Method"	6"	1	
WSDOT FOP for AASHTO T27/11, "MechanicalAnalysis of Extracted Aggregate"	6"	1	
WSDOT FOP for AASHTO T324, "Hamburg Wheel-Track Testing of Compacted Hot Mix Asphalt	6"	2	Obtain cores 6" apart for each determination
WSDOT FOP for ASTM D 6931, "Standard Test Method for Indirect Tensile Strength of Bituminous Mixtures"	6"	3	Obtain cores 6" apart for each determination
AASHTO R29, "Standard Practice for Grading or Verifying the Performance Grade (PG) of an Asphalt Binder"	6"	2	Obtain cores 6" apart for each determination

Table 1

7.2 Remove moisture from cores per AASHTO PP 75, "Vacuum Drying Compacted Asphalt Specimens".

7.3 Determine core density per AASHTO T331, "Standard Method of Test for Bulk Specific Gravity (Gmb) and Density of Compacted Hot Mix Asphalt (HMA) Using Automatic Vacuum Sealing Method", and WSDOT FOP for AASHTO T209, "Theoretical Maximum Specific Gravity and Density of Hot Mix Asphalt Paving Mixtures". Theoretical Maximum Specific Gravity and Density of Hot Mix Asphalt Paving Mixtures data from corresponding field testing may be substituted in lieu of testing core material.

Note 1: AASHTO T331 shall be performed prior to WSDOT FOP for AASHTO T 209. Before performing T 209 all shaved or bare aggregate surfaces either from coring, surface wear or handling of the specimen shall be removed and separated from the specimen by carefully picking them from the specimen using a sharp tipped tool. Care must be taken not to remove fully coated aggregate. Removed particles shall be discarded and not included with the WSDOT FOP for AASHTO T209 test specimen.

7.4 Determine asphalt content per WSDOT FOP for AASHTO T308, "Determining the Asphalt Binder Content of Hot Mix Asphalt by the Ignition Method", if an ignition furnace correction factor (IFCF) is available. Otherwise, perform AASHTO T 164, "Standard Method of Test for Quantitative Extraction of Asphalt Binder from Hot Mix Asphalt".

7.5 Determine aggregate sieve analysis per WSDOT FOP for AASHTO T 27/11, "Mechanical Analysis of Extracted Aggregate". WSDOT FOP for AASHTO T27/11 shall be performed following binder extraction per WSDOT FOP for AASHTO T 308, "Determining the Asphalt Binder Content of Hot Mix Asphalt by the Ignition Method" or AASHTO T164, "Standard Method of Test for Quantitative Extraction of Asphalt Binder from Hot Mix Asphalt".

7.6 Determine rutting and moisture-susceptibility of HMA per WSDOT FOP for AASHTO T324, "Hamburg Wheel-Track Testing of Compacted Hot Mix Asphalt".

7.7 Determine Indirect Tensile Strength (IDT) per WSDOT FOP for ASTM D6931, "Standard Test Method for Indirect Tensile Strength of Bituminous Mixtures".

7.8 Determine grade of asphalt per AASHTO R29, "Standard Practice for Grading or Verifying the Performance Grade (PG) of an Asphalt Binder". Extract the binder in accordance with AASHTO R59, "Recovery of Asphalt Binder from Solution by Abson Method" or ASTM D1856, "Standard Test Method for Recovery of Asphalt from Solution by Abson Method", for each asphalt grade determination.

Note 2: Binder specimens for AASHTO R29, Standard Practice for Grading or Verifying the Performance Grade (PG) of an Asphalt Binder may be obtained in conjunction with AASHTO T164, Standard Method of Test for Quantitative Extraction of Asphalt Binder from Hot Mix Asphalt.

WSDOT T 738

In-Place Density of Asphalt Mixtures Using the Nuclear Moisture-Density Gauge

Scope

This test method describes the procedure for using a nuclear moisture gauge to determine the in-place density of asphalt mixtures, the correction of the gauge reading by correlation core, and the calculation of the percentage of compaction for asphalt mixtures.

Apparatus

- Nuclear density gauge with the factory matched standard reference block.
- Drive pin, guide, scraper plate, and hammer for testing in direct transmission mode.
- Transport case for properly shipping and housing the gauge and tools.
- Operator manual for the specific make and model of gauge.
- Radioactive materials information and calibration packet containing:
  - Daily Standard Count Log
  - Factory and Laboratory Calibration Data Sheet
  - Density Standard Decay Sheet
  - Leak Test Certificate
  - Shippers Declaration for Dangerous Goods
  - Procedure Memo for Storing, Transporting, and Handling Nuclear Testing Equipment
  - Other radioactive materials documentation as required by local regulatory requirements.

Radiation Safety

This method does not purport to address the safety concerns, if any, associated with its use. This test method involves potentially hazardous materials. Take proper precautions when utilizing the nuclear gauge, radioactive materials can be hazardous to the health of the user. Users of this gauge must become familiar with the applicable safety procedures and governmental regulations. All operators will be trained in radiation safety prior to operating nuclear density gauges. The use of personal monitoring devices such as a thermoluminescent dosimeter or film badge is required by WSDOT.

Calibration

Perform calibrations in accordance with the manufacturer's operators manual.

Standardization (Standard Count)

1. Turn the gauge on and allow it to stabilize for 10-20 minutes prior to taking a Standard (extra carriage return) Count. Do not turn the gauge off during the work period.
2. Prior to any correlation of the nuclear gauge, perform a Stat Test in accordance with the gauge's operator manual.
   a. If the gauge passes the Stat Test, perform a Standard Count.
   b. If the gauge fails the Stat Test, run a second Stat Test. If the gauge fails the second Stat Test, it should be repaired or recalibrated.
3. Take a Standard Count at the start of each day's work and prior to testing whenever the gauge has been turned off during the work period. Daily variations in Standard Count shall not exceed the acceptable limits established by the manufacturer of the gauge. Compare the daily standard count to the average of the last four counts to ensure acceptable limits are not exceeded.
4. Compare the daily Standard Count to the Density Standard Decay Sheet (Note 2) to ensure the standard count falls within acceptable limits.
   a. If the acceptable limits in Standard Count are exceeded after repeating the Standard Count procedure or if the daily Standard Count is outside the range of the Standard Decay Sheet, the gauge should be repaired and or recalibrated.
5. Record the Standard Count for both density and moisture in the Daily Standard Count Log.
6. The gauge operator manual has instructions for taking a Standard Count.

   Note 2: The Density Standard Decay Sheet is found in the calibration documentation packet. This sheet shows the anticipated standard count range based on the calculated decay rate of the gauges radioactive source over the passage of time.

Test Site Location

1. Select a test location(s) randomly and in accordance with WSDOT Test Method T 716. Test sites should be relatively smooth and flat and meet the following conditions:
   a. At least 33 ft (10 m) away from other sources of radioactivity
   b. At least 10 ft (3 m) away from large objects (i.e., vehicles)
   c. No closer than 24 in (600 mm) to any vertical mass, or less than 6 in (152.0 mm) from a vertical pavement edge

Overview

There are two approved methods for determining in-place density of asphalt mixes:

- Direct Transmission Mode – When the lift thickness is 0.15 foot or greater.

  If a density lot is started in this mode it must continue in this mode until the pavement thickness falls below 0.15 feet. At that time, the mode of testing will change to Thin Layer Mode and the gauge must be correlated in thin layer mode prior to resuming testing.
- Thin Layer Mode – When the lift thickness is 0.10 foot or greater. Only gauges with two sets of photon detectors (i.e., Troxler 3450) operating in "Thin Layer Mode" will be allowed.

  If a density lot is started in thin layer mode, it must remain in thin layer mode until the lot is completed.

Procedure

Direct Transmission Mode

1. Maintaining maximum contact between the base of the gauge and the surface of the material under test is critical.
2. Use the guide and scraper plate as a template and drill a hole to a depth of at least ¼ in (7 mm) deeper than the measurement depth required for the gauge.
3. Place the gauge on the prepared surface so the source rod can enter the hole. Insert the probe in the hole and lower the source rod to the desired test depth using the handle and trigger mechanism. Ensure that the pavement depth is within 0.15' of the correlation depth. If the pavement depth not within 0.15' of the correlation depth an new correlation is required per SOP 730.
4. Position the gauge with the long axis of the gauge parallel to the direction of paving. Pull the gauge so that the probe is firmly against the side of the hole. Draw an outline around the entire gauge base for correlation coring, when applicable.

   WSDOT Note: For alignment purposes, the user may expose the source rod for a maximum of 10 seconds.
5. Take one 4-minute test and record the wet density (WD) reading.

Thin Layer Mode

1. Maintaining maximum contact between the base of the gauge and the surface of the material under test is critical.
2. A thin layer gauge (i.e., Troxler 4640) or a moisture density and thin layer gauge that has a thin layer mode setting (i.e., Troxler 3450) is required to perform this testing.
3. Ensure that the depth entered into the gauge matches the pavement depth and is within 0.08' of the correlation depth. If the pavement depth is not within than 0.08' of the correlation depth, a new correlation is required per SOP 730. Draw an outline around the entire gauge base for correlation coring.
4. Take test in accordance with manufacturer's recommendation except, WSDOT does not fill voids in asphalt with sand or cement.
5. Take one 4-minute test and record the density (D) reading.

Calculation of Percent of Compaction

The percent compaction is determined by comparing the in-place wet density (WD) or density (D), as determined by this method, to the Average Theoretical Maximum Density of the asphalt mix as determined by the WSDOT SOP 729.

The gauge operator will receive a new average Theoretical Maximum Density from the asphalt mix tester for each day of production a mix test is required. The gauge operator will continue to use the previous moving average until a new moving average is received. The gauge operator will then change the moving average value and calculate the percent compaction using the new moving average value. Density tests performed prior to the receipt of the new moving average will not be adjusted with the new moving average value.

Each gauge shall be correlated in accordance with WSDOT SOP 730. A correlation factor will be provided for each nuclear-moisture density gauge.

Use the following equations to calculate the percent of compaction:

1. Calculate the corrected gauge reading to the nearest tenth of a percent as follows:

   Corrected Gauge Reading = WD × CF or D × CF

   Where:
   WD = moisture density gauge wet density reading
   D = Asphalt Mix Density reading for thin layer mode gauge
   CF = gauge correlation factor (WSDOT SOP 730)

2. Calculate the percent compaction as follows.

$$\text{Percent Compaction} = \frac{\text{Corrected Gauge Reading}}{\text{Average Theoretical Maximum Density}} \times 100$$

Correlation With Cores

Refer to WSDOT SOP 730 for the procedure for correlation cores

Report

Report the results using one of the following:

- Materials Testing System (MATS)
- DOT Forms 350-092 and 350-157
- Form approved in writing by the State Materials Engineer

Report the percent compaction to the nearest tenth of a percent (0.1 percent).

Tester Qualification Practical Exam Checklist

In-Place Density of Asphalt Mixes Using the Nuclear Moisture-Density Gauge FOP for WAQTC T 738

Participant Name _____ Exam Date _____

Procedure Element	**Yes**	**No**
1. The tester has a copy of the current procedure on hand?		
2. All equipment is functioning according to the test procedure, and if required, has thecurrent calibration/verification tags present?		
3. Gauge turned on?		
4. Gauge standardized and Standard Count recorded?		
5. Standard Count compared with Density Standard Decay sheet?		
6. Stat test run prior to correlation?		
7. Test location selected appropriately?		
8. Direct Transmission Mode:		
a. Hole made a minimum of ¼ inch deeper than measurement depth?		
b. Gauge placed parallel to direction of paving, probe extended, gauge pulled back so probe against hole?		
c. For alignment purposes did not expose the source rod for more than 10 seconds.		
d. One 4-minute test made?		
e. Wet density recorded?		
9. Thin Layer Gauge or Gauge in Thin Layer Mode:		
a. Gauge placed, probe extended to backscatter position?		
b. One 4-minute test made; gauge placed as described in the manufacturer recommendations?		
c. Density (D) recorded?		
10. All calculations performed correctly?		
11. Nuclear Gauge secured in a manner consistent with current DOH requirements?		

First Attempt: Pass Fail Second Attempt: Pass Fail

Signature of Examiner _____

Comments:

WSDOT Test Method No. 802

Method of Test for Flexural Strength of Concrete (Using Simple Beam With Center-Point Loading)

1. Scope
   a. This method is similar to AASHTO T 177 and covers the procedure for determining the flexural strength of concrete by the use of a simple beam with center-point loading.
2. Apparatus
   a. The center-point loading method shall be used in the laboratory. The testing machine shall conform to the requirements of Sections 15, 16, and 17 of the Methods of Verification of Testing Machines (AASHTO T 67). In the field, a manually operated calibrated jack shall be used in conjunction with the field testing machine supplied by the Regional Materials Engineer. The apparatus shall incorporate the following requirements. The load shall be applied at the center point of the span, normal to the loaded surface of the beam, employing bearing blocks designed to ensure that forces applied to the beam will be vertical only and applied without eccentricity. The direction of the reactions shall be parallel to the direction of the applied load at all times during the test. The load shall be applied at a uniform rate and in such a manner as to avoid shock. The edges of the load-applying block and of the supports shall not depart from a plane by more than .002 in (0.051 mm).
   b. Caliper — A 12 in (1300 mm) long caliper accurate to 0.01 in (0.25 mm).

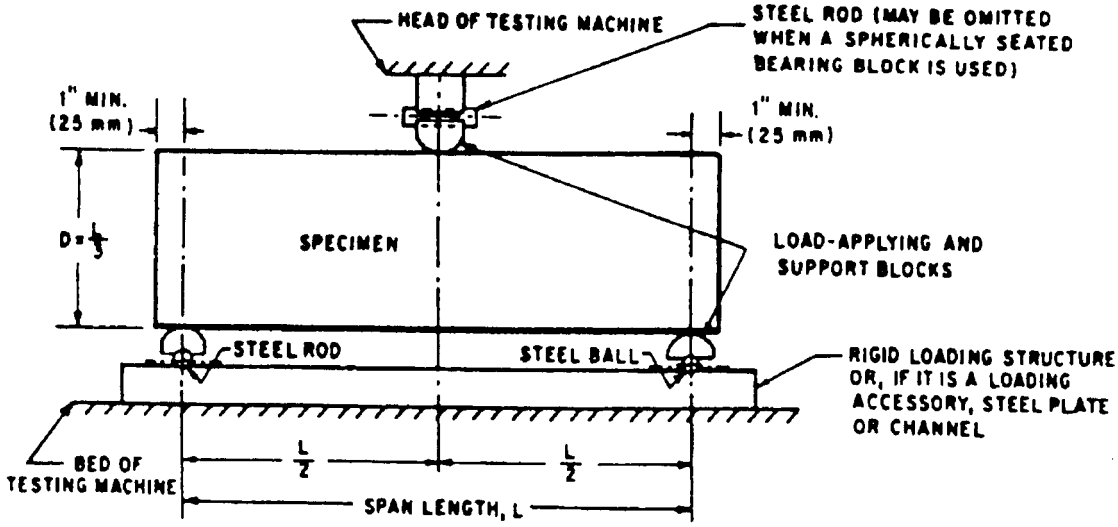

NOTE—Apparatus may be used inverted.

Diagrammatic View of Apparatus for Flexure Test of Concrete be Center-point Loading Method
Figure 1

3. Test Specimen

   As nearly as practicable, the test specimen, as tested, shall have a span three times its depth. The test specimen shall be formed and stored as prescribed in WSDOT Test Method No. 808.

4. Procedure

   a. Turn the specimen on its side with respect to its position when molded, and center it on the supporting bearing blocks. The load-applying block shall be brought in contact with the upper surface at the center line between the supports.

   b. Bring load applying block in full contact with the beam surface by applying a 100 lbs (3.1 N) preload. Check to ensure that the beam is in uniform contact with the bearing blocks and the load applying block.

   c. If load is applied with a hand pump, load the beam by applying the load at a rate of one full pump stroke per second. When the applied load is about 4,000 lbs (125 N), reduce the full pump stroke to about a 12-pump stroke and maintain the one second stroke rate. Rate of load application for screw power machines, with the moving head operating at 0.05 in (1.3 mm) per minute when the machine is running idle, is acceptable.

5. Measurement of Specimens

   a. Determine the beam dimensions, width (b) and depth (d), by averaging two measurements for width and two measurements for depth. The measurements shall be taken at the failure plane to an accuracy of 0.05 in (1.3 mm).

6. Calculation

   a. The modulus of rupture is calculated as follows:

   $$R = \frac{3P1}{2bd^2}$$

   Where:

   R = Modulus of rupture in psi or MPa
   P = Maximum applied load indicated by the testing machine in lb•f or N
   l = Span length in inches or mm
   b = Average width of specimen in inches or mm
   d = Average depth of specimen in inches or mm

7. Report

   a. The report shall include the following:

      (1) Identification number,

      (2) Average width,

      (3) Average depth,

      (4) Span length in inches or mm,

      (5) Maximum applied load in lb•f or N,

      (6) Modulus of rupture calculated to the nearest 5 psi (0.03MPa),

      (7) Defects in specimen, and

      (8) Age of specimen.

   b. All test results will be reported on DOT Form 350-042.

Performance Exam Checklist

Method of Test for Flexural Strength of Concrete (Using Simple Beam With Center-Point Loading)
WSDOT Test Method T 802

Participant Name _____ Exam Date _____

Procedure Element		
Preparation	**Yes**	**No**
1. Copy of current procedure available at test site?	❐	❐
2. In the field, Jack properly calibrated?	❐	❐
3. Beam turned on its side with respect to its position when molded, and centered on the supporting bearing blocks?	❐	❐
4. Load applying block brought into contact with the beam at the center line between the supports?	❐	❐
5. 100 lbs (3.1 N) preload applied and the beam then checked to ensure uniform contact with the bearing blocks and load applying block?	❐	❐
6. Load applied to the beam at the proper uniform rate?	❐	❐
Equipment		
1. Where required are calibration/verifications tags present on equipment used in this procedure?	❐	❐
2. All equipment functions according to the requirements of this procedure?	❐	❐

First attempt: Pass ❐ Fail ❐ Second attempt: Pass ❐ Fail ❐

Signature of Examiner _____

Comments:

WSDOT FOP for C 805[1]

Rebound Hammer Determination of Compressive Strength of Hardened Concrete

1. Scope

   1.1 This test method covers the determination of a rebound number of hardened concrete using a spring-driven steel hammer.

   1.2 The values stated in inch-pound units are to be regarded as the standard.

   1.3 This standard does not purport to address all of the safety concerns, if any, associated with its use. It is the responsibility of the user of this standard to establish appropriate safety and health practices and determine the applicability of regulatory limitations prior to use.

2. Referenced Documents

   2.1 ASTM Standards

   C 125 – Terminology Relating to Concrete and Concrete Aggregates

   C 670 – Practice for Preparing Precision and Bias Statements for Test Methods for Construction Materials

   E 18 – Test Methods for Rockwell and Rockwell Superficial Hardness of Metallic Materials

3. Significance and Use

   3.1 This test method is not intended as the basis for acceptance or rejection of concrete because of the inherent uncertainty in the estimated strength.

4. Apparatus

   4.1 Rebound Hammer – Consisting of a spring-loaded steel hammer that when released strikes a steel plunger in contact with the concrete surface. The spring-loaded hammer must travel with a consistent and reproducible velocity. The rebound distance of the steel hammer from the steel plunger is measured on a linear scale attached to the frame of the instrument.

   Note 1: Use type N rebound hammers that are commercially available to accommodate testing of various sizes and types of concrete construction.

   4.2 Abrasive Stone – Consisting of medium-grain texture silicon carbide or equivalent material.

   4.3 Test Anvil – Approximately 150 mm (6 in) diameter by 150 mm (6 in) high cylinder made of tool steel with an impact area hardened to 66 ± 2 HRC as measured by test method ASTM E 18. An instrument guide is provided to center the rebound hammer over the impact area and keep the instrument perpendicular to the surface.

[1]This FOP is based on ASTM C 805 and has been modified per WSDOT standards. To view the redline modifications, contact the WSDOT Quality Systems Manager at 360-709-5412.

4.4 Verification – Rebound hammers shall be serviced and verified annually and whenever there is reason to question their proper operation. Verify the functional operation of a rebound hammer using the test anvil described in Section 4.3. During verification, support the test anvil on a bare concrete floor or slab. The manufacturer shall report the rebound number to be obtained by a properly operating instrument when tested on an anvil of specified hardness.

Note 2: Typically, a rebound hammer will result in a rebound number of 80 ± 2 when tested on the anvil described in Section 4.3. The test anvil needs to be supported on a rigid base to obtain reliable rebound numbers. Verification on the test anvil does not guarantee that the hammer will yield repeatable data at other points on the scale. The hammer can be verified at lower rebound numbers by using blocks of polished stone having uniform hardness. Some users compare several hammers on concrete or stone surfaces encompassing the usual range of rebound numbers encountered in the field.

5. Test Area and Interferences

5.1 Selection of Test Surface – Concrete members to be tested shall be at least 100 mm (4 in) thick and fixed within a structure. Smaller specimens must be rigidly supported. Avoid areas exhibiting honeycombing, scaling, or high porosity. Do not compare test results if the form material against which the concrete was placed is not similar. Troweled surfaces generally exhibit higher rebound numbers than screeded or formed finishes. If possible, test structural slabs from the underside to avoid finished surfaces.

5.2 Preparation of Test Surface – A test area shall be at least 150 mm (6 in) in diameter. Heavily textured, soft, or surfaces with loose mortar shall be ground flat with the abrasive stone described in Section 4.2. Smooth-formed or troweled surfaces do not have to be ground prior to testing. Do not compare results from ground and unground surfaces.

5.3 Do not test frozen concrete.

Note 3: Moist concrete at 0°C (32°F) or less may exhibit high rebound values. Concrete should be tested only after it has thawed. The temperatures of the rebound hammer itself may affect the rebound number. Rebound hammers at -18°C (0°F) may exhibit rebound numbers reduced by as much as two or three units (1 unit = 1 whole number).

5.4 For readings to be compared, the direction of impact, horizontal, downward, upward, or at another angle, must be the same or established correction factors shall be applied to the readings.

5.5 Do not conduct tests directly over reinforcing bars with cover less than 0.75 in (20 mm).

***Note 4*:** The location of reinforcement may be established using reinforcement locators or metal detectors. Follow the manufacturer's instructions for proper operation of such devices.

6. Procedure

6.1 Hold the instrument firmly so that the plunger is perpendicular to the test surface. Gradually push the instrument toward the test surface until the hammer impacts. After impact, maintain pressure on the instrument and, if necessary, depress the

button on the side of the instrument to lock the plunger in its retracted position. Read the rebound number on the scale to the nearest whole number and record the rebound number. Take ten readings from each test area. No two impact tests shall be closer together than 25 mm (1 in). Examine the impression made on the surface after impact, and if the impact crushes or breaks through a near-surface air void, disregard the reading and take another reading.

7. Calculation

7.1 Discard readings differing from the average of ten readings by more than six units and determine the average of the remaining readings. If more than two readings differ from the average by six units, discard the entire set of readings and determine rebound numbers at ten new locations within the test area.

8. Report

8.1 Report the following information for each test area:

8.1.1 Date and time of testing.

8.1.2 Identification of location tested in the concrete construction and the type and size of member tested.

8.1.2.1 Description of the concrete mixture proportions including type of coarse aggregates if known.

8.1.2.2 Design strength of concrete tested.

8.1.3 Description of the test area including:

8.1.3.1 Surface characteristics (trowelled, screeded) of area.

8.1.3.2 If surface was ground and depth of grinding.

8.1.3.3 Type of form material used for test area.

8.1.3.4 Curing conditions of test area.

8.1.3.5 Type of exposure to the environment.

8.1.4 Hammer identification and serial number.

8.1.4.1 Air temperature at the time of testing.

8.1.4.2 Orientation of hammer during test.

8.1.5 Average rebound number for test area.

8.1.5.1 Remarks regarding discarded readings of test data or any unusual conditions.

10. Precision and Bias

See ASTM C 805 precision and bias.

Performance Exam Checklist

Rebound Hammer Determination of Compressive Strength of Hardened Concrete FOP for ASTM C 805

Participant Name _____ Exam Date _____

Procedure Element		
Preparation	**Yes**	**No**
1. Copy of current procedure available at test site?	❒	❒
2. Hammer properly serviced and calibrated or verified?	❒	❒
3. Test location properly prepared?	❒	❒
4. Test location meets minimum size requirement?	❒	❒
5. Ten acceptable readings taken in each test area?	❒	❒
6. Readings properly spaced in test area?	❒	❒
7. Test readings properly converted to estimated strength?	❒	❒
8. Test information properly recorded?	❒	❒
9. All calculations performed correctly?	❒	❒
Equipment		
10. Are calibration/verifications tags present on equipment used in this procedure?	❒	❒
11. All equipment functions according to the requirements of this procedure?	❒	❒

First Attempt: Pass ❒ Fail ❒ Second Attempt: Pass ❒ Fail ❒

Signature of Examiner _____

Comments:

WSDOT Test Method T 807

Method of Operation of California Profilograph and Evaluation of Profiles

1. Scope

   a. The operation of the California Profilograph, the procedure used for determining the Profile Index from profilograms of pavements made with the Profilograph, and the procedure used to locate individual high points in excess of 0.3 in are described in Parts I, II, and III, respectively, in this test method.

Part I
Operation of the California Profilograph

2. Procedure

   a. Equipment – The California Profilograph consists of a frame 25 LF long supported upon multiple wheels at either end arranged in a staggered pattern, such that no two wheels cross the same bump at the same time. The profile is recorded from the vertical movement of a wheel attached to the frame at midpoint and is in reference to the mean elevation of the 12 points of contact with the road surface established by the support wheels (see Figure 1). The profilogram is recorded on a scale of 1 in = 25 LF longitudinally and the actual change in elevation vertically. Motive power is provided manually.

   b. Operation – The instructions for assembling the Profilograph are contained in a booklet accompanying each unit. Particular attention should be paid to the listed precautions.

      In operation, the Profilograph should be moved at a speed no greater than a walk so as to eliminate as much bounce as possible. Too high a speed will result in a profilogram that is difficult to evaluate.

      Calibration of the Profilograph should be checked periodically. The horizontal scale can be checked by running a known distance and scaling the result on the profilogram. If the scale is off, the profile wheel should be changed to one of a proper diameter. The vertical scale is checked by putting a board of known thickness under the profile wheel and again scaling the result on the profilogram. If the scale is off, the cause of the incorrect height should be determined and corrected.

3. Procedure

   a. Equipment – To determine the Profile Index, use a plastic scale 1.70 in wide and 1.76 LF long representing a pavement length of 528 LF at a scale of 1 in = 25 LF. A plastic scale for the Profilograph may be obtained by the regions from the State Materials Laboratory. Near the center of the scale is an opaque band 0.2 in wide extending the entire length of 21.12 in. On either side of this band are scribed lines 0.1 in apart, parallel to the opaque band. These lines serve as a convenient scale to measure deviations or excursions of the graph above or below the blanking band. These are called “scallops.”

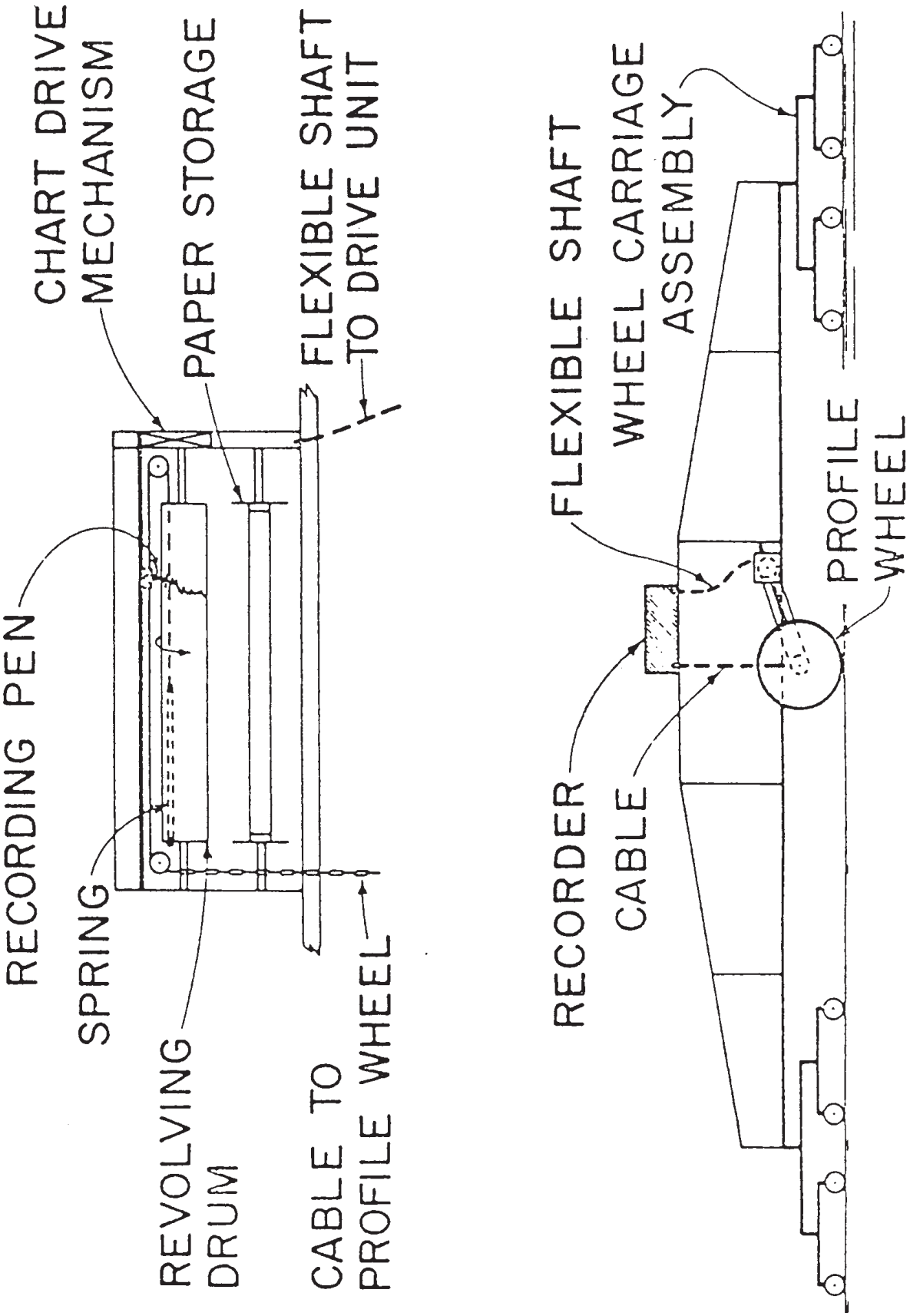
CHART DRIVE MECHANISM
PAPER STORAGE
FLEXIBLE SHAFT TO DRIVE UNIT
RECORDING PEN
SPRING
REVOLVING DRUM
CABLE TO PROFILE WHEEL
FLEXIBLE SHAFT
WHEEL CARRIAGE ASSEMBLY
PROFILE WHEEL
RECORDER
CABLE

Figure 1

b. Method of Counting – Place the plastic scale over the profile in such a way as to "blank out" as much of the profile as possible. When this is done, the scallops above and below the blanking band usually will be approximately balanced. See Figure 2.

The profile trace will move from a generally horizontal position when going around super-elevated curves making it impossible to blank out the central portion of the trace without shifting the scale. When such a condition occurs, the profile should be broken into short sections and the blanking band repositioned on each section while counting as shown in the upper part of Figure 3.

Starting at the right end of the scale, measure and total the height of all the scallops appearing both above and below the blanking band, measuring each scallop to the nearest 0.05 in (half a tenth). Write this total on the profile sheet near the left end of the scale together with a small mark to align the scale when moving to the next section. Short portions of the profile line may be visible outside the blanking band but unless they project 0.03 in or more and extend longitudinally for 2 LF (0.08 in on the profilogram) or more, they are not included in the count. (See Figure 2 for illustration of these special conditions.)

When scallops occurring in the first 0.1 mile are totaled, slide the scale to the left, aligning the right end of the scale with the small mark previously made, and proceed with the counting in the same manner. The last section counted may or may not be an even 0.1 mile. If not, its length should be scaled. An example follows:

	Section Length, miles	Counts, tenth of an inch
	0.10	5.0
	0.10	4.0
	0.10	3.5
400 ft =	0.076	2.0
Total	0.376	14.5

The Profile Index is determined as "inches per mile in excess of the 0.2 in blanking band" but is simply called the Profile Index. The procedure for converting counts of Profile Index is as follows:

Using the figures from the above example:

Length = 0.376 mi., total count = 14.5 tenths of an inch

$$\text{Profile Index} = \frac{1 \text{ mile}}{\text{length of profiles in miles}} \times \text{a total count in inches}$$

$$\text{Pr I} = \frac{1 \text{ mile}}{0.376 \text{ mile}} \times 1.45 = 3.9$$

(Note that the formula uses the count in inches rather than tenths of an inch and is obtained by dividing the count by ten.)

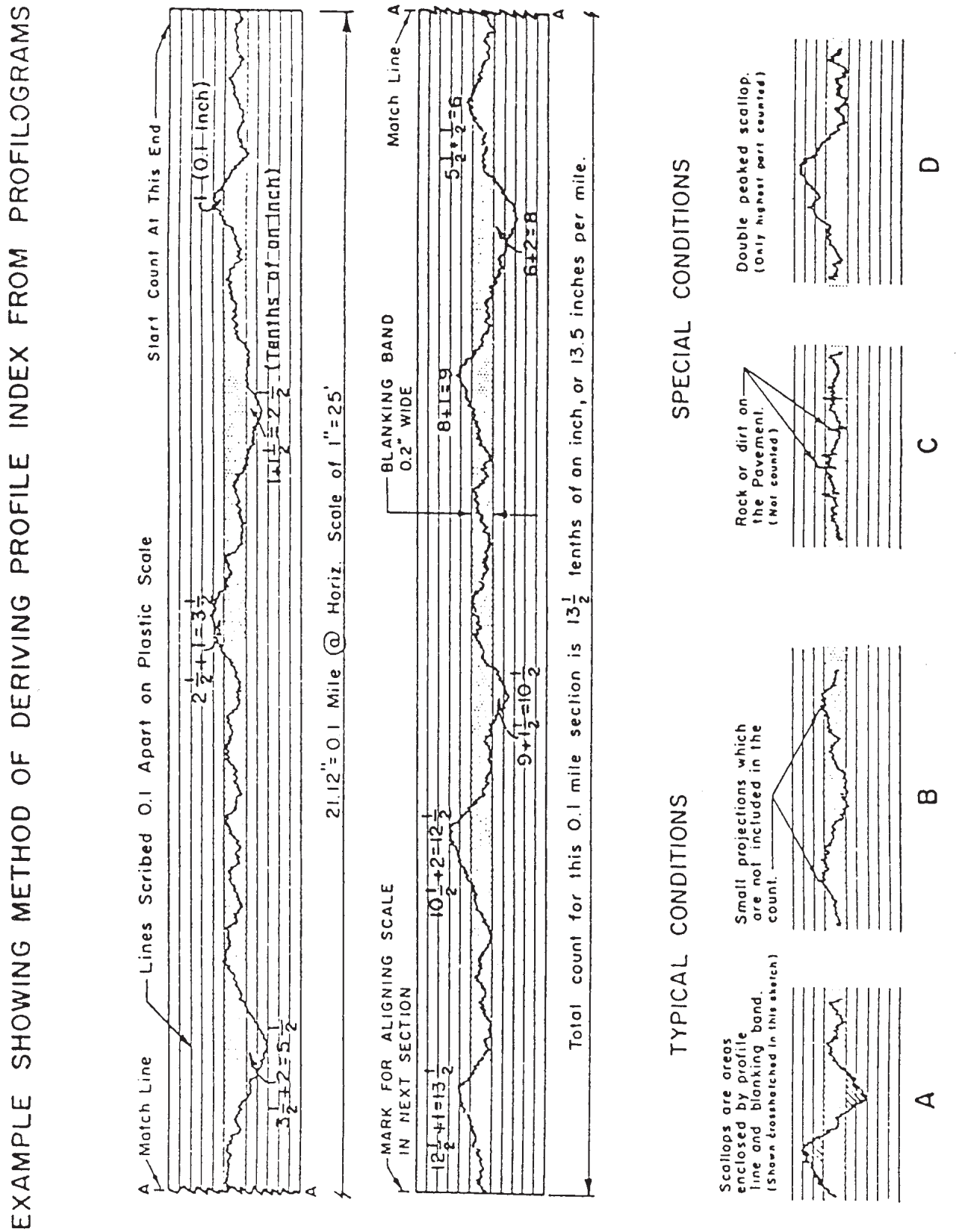
EXAMPLE SHOWING METHOD OF DERIVING PROFILE INDEX FROM PROFILOGRAMS
Match Line
Lines Scribed 0.1 Apart on Plastic Scale
Start Count At This End
(0.1 Inch)
(Tenths of an Inch)
21.12" = 0.1 Mile @ Horiz. Scale of 1" = 25'
MARK FOR ALIGNING SCALE IN NEXT SECTION
BLANKING BAND 0.2" WIDE
Match Line
Total count for this 0.1 mile section is 13½ tenths of an inch, or 13.5 inches per mile.
TYPICAL CONDITIONS
Scallops are areas enclosed by profile line and blanking band. (Shown crosshatched in this sketch)
Small projections which are not included in the count.
A
B
SPECIAL CONDITIONS
Rock or dirt on the Pavement. (Not counted)
Double peaked scallop. (Only highest part counted)
C
D

Figure 2

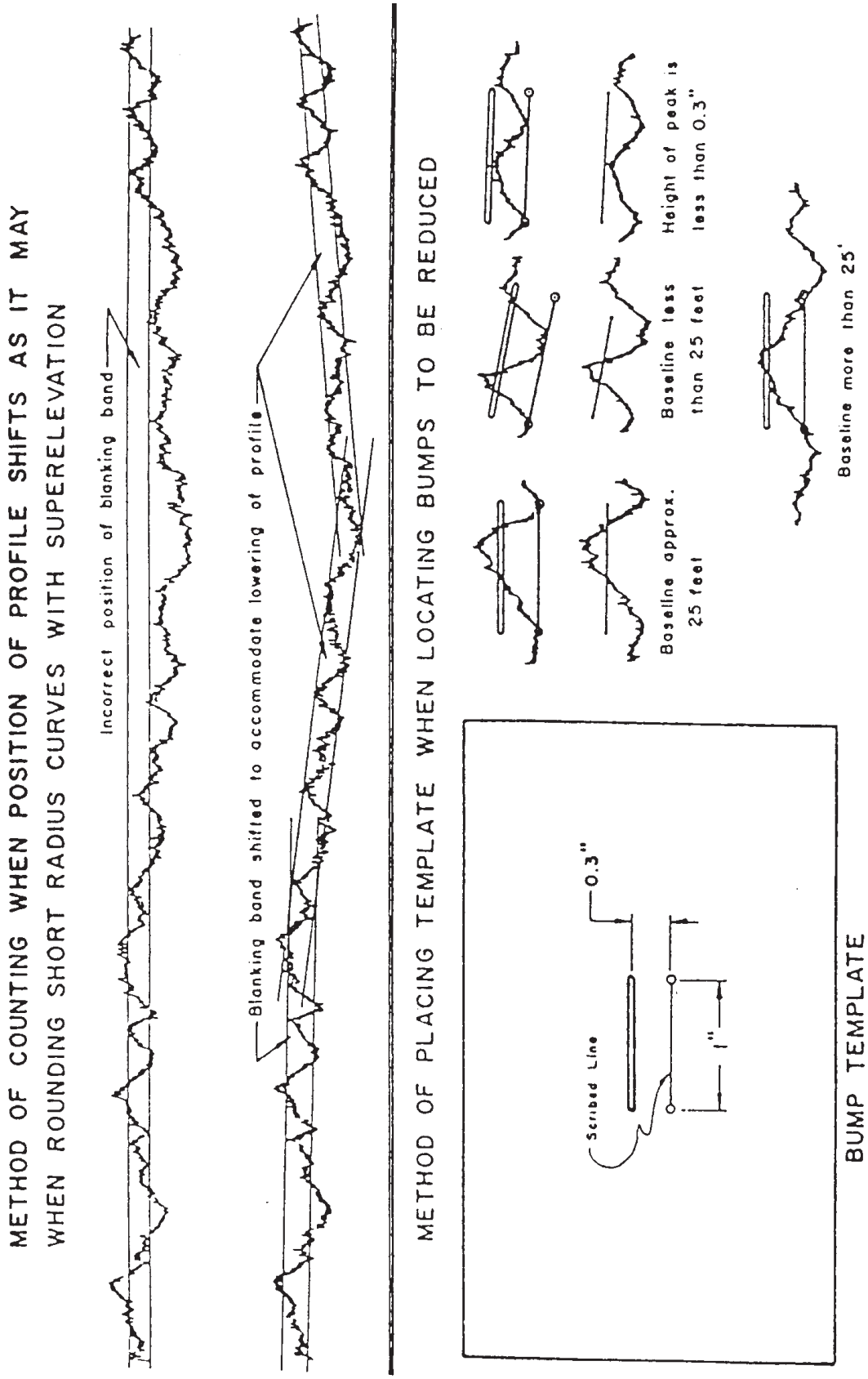
METHOD OF COUNTING WHEN POSITION OF PROFILE SHIFTS AS IT MAY
WHEN ROUNDING SHORT RADIUS CURVES WITH SUPERELEVATION
Incorrect position of blanking band
Blanking band shifted to accommodate lowering of profile
METHOD OF PLACING TEMPLATE WHEN LOCATING BUMPS TO BE REDUCED
Baseline approx. 25 feet
Baseline less than 25 feet
Height of peak is less than 0.3"
Baseline more than 25'
0.3"
Scribed Line
1"
BUMP TEMPLATE

Figure 3

The Profile Index is thus determined for the profile of any line called for in the specifications.

To determine the daily profile index to check the Contractors methods and procedures, profile indexes may be averaged for two or more profiles of the same section of road if the profiles are the same length.

Example:

	Section Length, miles	Counts, tenths of an inch: Left wheel track	Counts, tenths of an inch: Right wheel track
	0.10	5.0	4.5
	0.10	4.0	5.0
	0.10	3.5	3.0
400 LF =	0.076	2.0	1.5
Total	0.376	14.5	14.0
PrI (by formula)		3.9	3.7

$$\text{Averages} = \frac{3.9 + 3.7}{2} = 3.8$$

The specifications state which profiles to use when computing the average Profile Index for control of construction operations.

c. Limitations of Count in 0.1 Mile Sections – When the specifications limit the amount of roughness in "any one-tenth mile section," the scale is moved along the profile and counts made at various locations to find those sections if any, that do not conform to specifications. The limits are then noted on the profile and can be later located on the pavement preparatory to grinding.

d. Limits of Counts – Joints – When counting profiles, a day's paving is considered to include the last portion of the previous day's work, which includes the daily joint. The last 15 to 30 LF of a day's paving cannot usually be obtained until the following day. In general, the paving contractor is responsible for the smoothness of joints if he places the concrete pavement on both sides of the joint. On the other hand, the contractor is responsible only for the pavement placed by him if the work abuts a bridge or a pavement placed under another contract. Profilograph readings when approaching such joints should be taken in conformance with current specifications.

Part III
Determination of High Points in Excess of 0.3 in

4. Procedure

a. Equipment – Use a plastic template having a line 1 in long scribed on one face with a small hole or scribed mark at either end, and a slot 0.3 in from and parallel to the scribed line (see Figure 3). (The 1 in line corresponds to a horizontal distance of 0.3 in on the horizontal scale of the profilogram.) The plastic template may be obtained from the State Materials Laboratory.

b. Locating High Points in Excess of 0.3 in – At each prominent peak or high point on the profile trace, place the template so that the small holes or scribe marks at each end of the scribed line intersect the profile trace to form a chord across the base of the peak or indicated bump. The line on the template need not be horizontal. With a sharp pencil, draw a line using the narrow slot in the template as a guide. Any portion of the trace extending above this line will indicate the approximate length and height of the deviation in excess of 0.3 in.

There may be instances where the distance between easily recognizable low points is less than 1 in (25 LF). In such cases, a shorter chord length shall be used in making the scribed line on the template tangent to the trace at the low points. It is the intent, however, of this requirement that the baseline for measuring the height of bumps will be as near 25 LF as possible, but in no case to exceed this value. When the distance between prominent low points is greater than 25 LF, make the ends of the scribed line intersect the profile trace when the template is in a nearly horizontal position. A few examples of the procedure are shown in the lower portion of Figure 3.

Washington State
Department of Transportation

WSDOT Test Method T 808

Method for Making Flexural Test Beams

1. Scope
   a. This method covers the procedures for molding and curing Portland cement concrete flexural test beams.
2. Equipment
   a. Test beam molds, 6 in × 6 in × 21 ± ½ in (150 mm × 150 mm × 550 ± 13 mm) or 8 in × 8 in × 26 ± ½ in (200 mm × 200 mm × 670 ± 13 mm).
   b. Vibrator, capable of 7,000 vibrations per minute with a diameter not less than ¾ in (19.0 mm) or greater than 1½ in (38.1 mm).
   c. Tamping Rod – The tamping rod is a round, straight steel rod ⅝ in (16.0 mm) diameter and approximately 24 in (610 mm) long, having the tamping end rounded to a ⅝ in (16.0 mm) diameter hemispherical tip.
   d. Mallet – A mallet with a rubber or rawhide head weighing 1.25 ± 0.50 lb (0.57 ± 0.23 kg).
   e. Assorted tools such as scoops, shovels, etc.
3. Procedure
   a. For laboratory made beam specimens, mix sufficient concrete to make all the required specimens from one batch. Each beam specimen requires approximately .45 ft^3 (0.015 m^3) of concrete.

      For field-made beam specimens, the concrete sample is obtained in accordance with WSDOT Test Method No. 803, Method of Sampling Fresh Concrete. Making of the beam specimens shall begin within 15 minutes of remixing the sample.
   b. Mold specimens as near as practicable to the place where they are to be stored during the first 24 hours.
   c. Assemble the molds on a rigid surface free from vibration and other disturbances. Remix the concrete to a uniform appearance. When the method of consolidation is by internal vibrators, the mold is filled in a single layer. Make sure that each shovel or scoop of concrete is representative of the batch. When the method of consolidation is by rodding, the mold is filled in two layers with each layer being rodded one time for each 2 in^2 (1290 mm^2) of surface area. The rodding should be distributed evenly over the entire surface. On the succeeding layers, the rod should not penetrate the previous layer more than ½ in (13 mm). After each layer is rodded, tap the outsides of the mold lightly 10 to 15 times with a mallet.
   d. Insert the vibrator at intervals not to exceed 6 in (150 mm) along the centerline of the long dimension of the beam. For specimens wider than 6 in (150 mm), use alternating insertions along two lines at least 2 in (50 mm) away from the sides of the mold. Withdraw the vibrator so that no air voids are left in the concrete. Then tap the mold lightly 10-15 times with mallet.

e. Finish the surface of the concrete by striking off with a straightedge. Use the minimum amount of manipulation necessary to leave a flat surface that has no depressions or projections larger than ⅛ in (3.2 mm) and is level with the sides of the mold.

f. The top surface of the laboratory-made specimen shall be covered with a saturated towel and a plastic sheet to prevent moisture loss from the concrete.

For the field made specimen, the top surface of the beam shall be sprayed with the same curing compound as is used for the pavement and covered with a plastic tarpaulin.

4. Storage and Handling

The method of storing and handling the beam specimen depends on the purpose for which the beam is intended. Two methods are provided as follows:

a. Laboratory Method – Beam for determining the acceptability of a contractor-provided paving mix.

Cover the beam to prevent moisture loss and allow beam to remain undisturbed for an initial cure period of 24 ± 4 hours at a temperature of 60° to 80°F (16° to 27°C). After the initial cure period, the beam will be removed from the mold and within 30 minutes stored in saturated limewater at 73.4° ± 3°F (23° ± 2°C) for a minimum of 20 hours prior to testing. Surface drying of the beam between removal from the limewater and completion of testing shall be prevented. Relatively small amounts of drying of the test beam surfaces induces tensile stress in the extreme fibers that will markedly reduce the indicated flexural strength.

b. Field Method – Beam for determining the flexural strength of the inplace pavement.

After applying the curing compound to the top surface, cover the beam specimen with white reflective sheeting and allow beams to remain undisturbed for an initial cure period of 24 ± 4 hours at ambient conditions. After the initial cure period, remove the specimen from the mold and cure the specimen either by:

(1) Burying the specimen in wet sand making sure that the specimen is never allowed to become surface dry. Temperature of the sand should be similar to the concrete pavement temperature, or

(2) Wrap the beam in a saturated towel, place in a plastic bag, and seal the opening. The plastic should be at least 4 mils thick. Leave the specimen on the pavement in the vicinity where it was molded until time to test. Take specimen to the testing location and store in lime water at 73.4° ± 5°F (23° ± 2.8°C) for 24 ± 4 hours immediately before time of testing to ensure uniform moisture condition from specimen to specimen.

Note: The beam specimen must be kept in a surface moist condition or wet environment for the entire time in storage **and** testing. Even minor amounts of surface drying of the specimen induces extreme fiber stresses which can markedly reduce the flexural strength.

5. Testing

a. Beam specimens are tested for flexural strength in accordance with WSDOT Test Method No. 802.

Performance Exam Checklist

Method for Making Flexural Test Beams
WSDOT T 808

Participant Name _____ Exam Date _____

Procedure Element	**Yes**	**No**
1. Copy of current procedure available at test site?		
2. Making of test specimens begins within 15 minutes for sampling?		
3. Assemble of molds on a rigid surface free from vibration and other disturbances?		
4. Concrete remixed to a uniform appearance?		
5. When method of concrete consolidation is by rodding:		
a. Mold filled in two layers?		
b. Each layer rodded one time for each 2 in^2 (1290 mm) of mold surface area?		
c. Rodding, evenly distributed over the entire surface area?		
d. After rodding each layer, mold tapped lightly 10-15 times with mallet?		
6. When method of concrete consolidation is by internal vibrators:		
a. Mold filled in a single layer?		
b. Vibrator inserted at intervals not to exceed 6 in (150 mm) along the centerline of the long dimension?		
c. For molds wider than 6 in (150 mm), vibrator inserted along two alternating lines at least 2 in (50 mm) away from sides of mold?		
d. Mold tapped lightly 10-15 times with mallet?		
7. Top of mold properly finished?		
8. Top of mold properly treated to prevent moisture loss?		

Equipment

1. Where required are calibration/verifications tags present on equipment used in this procedure?
2. All equipment functions according to the requirements of this procedure?

First Attempt: Pass Fail Second Attempt: Pass Fail

Signature of Examiner _____

Comments:

Washington State
Department of Transportation

WSDOT Test Method T 810

Method of Test for Determination of the Density of Portland Cement Concrete Pavement Cores

1. Scope

   a. This method of test is intended for use in determining the density of Portland cement concrete pavement cores. The object of this test is to determine the in place density of the concrete as it exists. This density is the value desired for comparison to the density of freshly mixed portland cement as determined by AASHTO T 121 or by the densities on the mix design.

2. Equipment

   a. Balance – Capacity sufficient for the masses required by the test procedure, accurate to 0.1 percent of the sample mass or better and conforms to the requirements of AASHTO M 231.

   b. Wire Basket – A wire basket of appropriate size, constructed of wire mesh.

   c. Container – A container suitable for immersing the wire basket in water, and an apparatus for suspending the wire basket from the center of the scale pan of the balance. Maintain a constant water level when weighing under water.

   d. Absorbent towels.

   e. Thermometer – The Thermometer shall be verified and readable to 1°F (0.5°C). Thermometers having a range of 0 to 120°F (-18 to 49°C) are satisfactory. Other thermometers of the required accuracy, including the metal immersion type and conforming to ASTM E 1, are acceptable.

3. Procedure

   a. Density determinations are made as soon as practicable after coring and with a minimum change in moisture content from the condition as taken. Where on-site determination is not practicable within one hour, cores are stored in airtight plastic bags or completely immersed in water until weighed. Core densities shall be determined within 24 hours after coring.

Temperature °F	Pounds Per Cubic Foot	Temperature °F	Pounds Per Cubic Foot
65	62.336	74	62.269
66	62.329	75	62.261
67	62.322	76	62.252
68	62.315	77	62.243
69	62.308	78	62.234
70	62.301	79	62.225
71	62.293	80	62.216
72	62.285		
73	62.277		

Unit Mass of Water
Table 1

b. Wash thoroughly to remove dust or other coatings from the surface of the core. Place the sample in the wire basket and determine its mass in water. Determine this and all subsequent weights to the nearest gram. Determine the temperature of the water to the nearest degree.

c. Remove the sample from the water and roll it in a large absorbent cloth until all visible films of water are removed, although the surfaces still appear to be damp. Take care to avoid evaporation from aggregate pores during the operation of surface drying. Obtain the weight of the sample in the surface dry condition.

4. Calculation

a. Calculate the density as follows:

$$\text{Density (surface} - \text{dry basis)} = \frac{A}{A - B} \times d_w$$

Where:

A = Mass in grams of the surface-dry sample in air
B = Mass in grams of the sample in water
d_w = Density of the water at the test temperature (see Table 1)

Calculate the density to the nearest 0.1 lb per ft^3 (1 kg per m^3).

5. Reproducibility of Results

a. Duplicate determinations should check to within 0.1 lb per ft^3 (3 kg per m^3).

6. Reports

a. The test results will be reported on the appropriate test data sheet.

Performance Exam Checklist

Method of Test for Determination of the Density of PCC Pavement Cores (WSDOT TM 810)

Participant Name _____ Exam Date _____

Procedure Element	**Yes**	**No**
1. The tester has a copy of the current procedure on hand?		
2. All equipment is functioning according to the test procedure, and if required, has the current calibration/verification tags present?		
3. Finished pavement cored after a minimum of 24 hours of curing?		
4. Core's moisture content preserved in bags or by immersion?		
5. Density determined within 24 hours of coring?		
6. Core washed thoroughly?		
7. Weight in water determined to nearest gram?		
8. Temperature of water determined to nearest degree?		
9. Core rolled on absorbent towel removing visible films of water but still appearing damp?		
10. Core not over-dried or allowed to evaporate?		
11. Weight of surface-dry core determined to nearest gram?		
12. All calculations performed correctly?		

First Attempt: Pass Fail Second Attempt: Pass Fail

Signature of Examiner _____

Comments:

WSDOT Test Method T 812

Method of Test for Measuring Length of Drilled Concrete Cores

1. Scope

a. This method is for the WSDOT ten point callipering device it is similar to AASHTO T- 48 and covers the procedure for determining the length of a core drilled from a concrete structure, and from Portland cement concrete pavement. It is acceptable to use the commercially available nine point callipering device defined in AASHTO T 148.

2. Apparatus

a. The apparatus shall be a callipering device that will measure the length of axial elements of the core. While the details of the mechanical design are not prescribed, the apparatus shall conform to the requirements of 2 (B) to 2 (F).

b. The apparatus shall be designed so that the specimen will be held with its axis in a vertical position by three symmetrically placed supports bearing against the lower end. These supports shall be short posts or stubs of hardened steel, and the ends that bear against the surface of the specimen shall be rounded to a diameter of not less than ¼ inch more than ½ inch.

c. The apparatus shall provide for the accommodation of specimens of different nominal lengths. (A range of at least 9 to 12 inches.)

d. The callipering apparatus shall be designed so that it will be possible to make a length measurement at the center of the upper end of the specimen and at nine additional points (See Note 1) spaced at equal intervals along the circumference of a circle whose center point coincides with that of the end area of the specimen and whose radius is not less than one-half nor more than three-fourths of the radius of the specimen.

Note 1: Commercially available nine point callipering device is acceptable.

e. The measuring rod or other device that makes contact with the end surface of the specimen for measurement shall be rounded to a radius of ⅛ inch. The scale on which the length readings are made shall be marked with clear, definite, accurately-spaced graduations. The spacing of the graduations shall be 0.10 inch or a decimal part thereof.

f. The apparatus shall be stable and sufficiently rigid to maintain its shape and alignment without a distortion or deflection of more than 0.01 inch during all normal measuring operations.

3. Test Specimens

a. Cores shall be obtained per AASHTO T 24. Cores that show abnormal defects or that have been damaged appreciably in the drilling operation shall not be used.

4. Procedure

a. Before any measurement of the core length is made, the apparatus is calibrated with suitable gauges so that errors caused by mechanical imperfections in the apparatus are known. When these errors exceed 0.01 inch, suitable corrections are applied to the core length measurements.

b. The specimen is placed in the measuring apparatus with the smoothest end of the core facing down, to bear against the three hardened-steel supports. The specimen is placed on the supports so that the central measuring position of the measuring apparatus is directly over the mid-point of the upper end of the specimen.

c. Ten measurements (See Note 2) of the length are made on each specimen, one at the central position and one each at nine additional positions spaced at equal intervals along the circumference of a circle of measurement as described in 2(D). Each of these ten measurements is read directly to 0.10 inch and to 0.01 inch either directly or by estimation.

Note 2: For commercially available callipering devices nine measurements is allowed.

d. If, in the course of the measuring operation, it is discovered that at one or more of the measuring points the surface of the specimen is not representative of the general plane of the core end because of a small projection or depression, rotate the specimen slightly about its axis, and make a complete set of nine measurements in the new position.

5. Report

a. The individual observations are recorded to the nearest 0.01 inch and the average of the ten measurements (See Note 3), expressed to the nearest 0.01 foot, Measurements will be reported in the Materials Tracking System (MATS) database.

Note 3: For commercially available callipering devices average nine measurements.

Performance Exam Checklist

Method T 812 Checklist
Measuring Length of PCC Cores

Participant Name _____ Exam Date _____

Procedure Element	**Yes**	**No**
1. Only concrete measured?		
2. Damaged cores not measured?		
3. Apparatus calibrated?		
4. Smooth (top) end of core set on pins?		
5. Center probe located at center of core?		
6. Ten measurements taken?		
7. Measurements read to 0.10 in directly?		
8. Measurements read indirectly to 0.01 in?		
9. Measurements recorded to 0.01 in?		
10. Averaged and reported to 0.01 foot?		

First Attempt: Pass Fail Second Attempt: Pass Fail

Signature of Examiner _____

Comments:

Washington State
Department of Transportation

WSDOT Test Method T 813

Field Method of Fabrication of 2 in (50 mm) Cube Specimens for Compressive Strength Testing of Grouts and Mortars

1. Scope

   This method covers the fabrication of 2 in (50 mm) cube specimens for compressive strength testing of grouts and mortars.

2. Equipment

   a. Specimen Molds – Specimen molds for the 2 in (50 mm) cube specimens shall be tight fitting. The molds shall not have more than three cube compartments and shall not be separable into more than two parts. The parts of the molds, when assembled, shall be positively held together. The molds shall be made of hard metal not attacked by the cement mortar. For new molds, the Rockwell hardness number shall not be less than HRB 55. The sides of the molds shall be sufficiently rigid to prevent spreading or warping. The interior faces of the molds shall conform to the tolerances of Table 1.

Parameter	2 in Cube Molds		50 mm Cube Molds	
	New	In Use	New	In Use
Planeness of Sides	<0.001 in	<0.002 in	<0.025 mm	<0.05 mm
Distance Between Opposite Sides	2 in ± 0.005 in	2 in ± 0.02 in	50 mm + 0.13 mm	50 mm + 0.50 mm
Height of Each Compartment	2 in + 0.001 in to -0.005 in	2 in + 0.01 in to -0.015 in	50 mm + 0.25 mm to -0.013 mm	50 mm + 0.25 mm to -0.38 mm
Angle Between Adjacent Faces*	90 + 0.5°	90 + 0.5°	90 + 0.5°	90 + 0.5°

*Measured at points slightly removed from the intersection. Measured separately for each compartment between all the interior faces and the adjacent face and between interior faces and top and bottom planes of the mold.

Permissible Variations of Specimen Molds
Table 1

   b. Base Plates – Base plates shall be made of a hard metal not attacked by cement mortar. The working surface shall be plane and shall be positively attached to the mold with screws into the side walls of the mold.

   c. Cover Plates – Cover plates shall be made of a hard metal or glass not attacked by cement mortar. The surface shall be relatively plane.

   d. Tamper – The tamper shall be made of a nonabsorptive, nonabrasive, nonbrittle material such as a rubber compound having a Shore A durometer hardness of 80 + 10, or seasoned oak wood rendered nonabsorptive by immersion for 15 minutes in paraffin at approximately 392°F (200°C), and shall have a cross-section of ½ in × 1 in (13 mm × 25 mm) and a length of about 5 to 6 in (125 to 150 mm). The tamping face shall be flat and at right angles to the length of the tamper.

e. Trowel – A trowel which has a steel blade 4 to 6 in (100 to 150 mm) in length, with straightedges.

3. Field Procedure

a. Three or more specimens shall be made for each period of test specified.

b. All joints shall be water tight. If not water tight, seal the surfaces where the halves of the mold join by applying a coating of light cup grease. The amount should be sufficient to extrude slightly when the halves are tightened together. Repeat this process for attaching the mold to the base plate. Remove any excess grease.

c. Apply a thin coating of release agent to the interior faces of the mold and base plate. (WD-40 has been found to work well as a release agent.) Wipe the mold faces and base plate as necessary to remove any excess release agent and to achieve a thin, even coating on the interior surfaces. Adequate coating is that which is just sufficient to allow a distinct fingerprint to remain following light finger pressure.

d. Begin molding the specimens within an elapsed time of not more than 2½ minutes from completion of the mixing.

e. For plastic mixes, place a first layer of mortar about 1 in (25 mm) deep in all the cube compartments (about one-half the depth of the mold). Tamp the mortar in each cube compartment 32 times in about 10 seconds making four rounds, each round perpendicular to the other and consisting of eight adjoining strokes over the surface of the specimen, as illustrated in Figure 1, below. The tamping pressure should be just sufficient to ensure uniform filling of the molds. The four rounds of tamping (32 strokes) shall be completed in one cube before going on to the next. When the tamping of the first layer is completed, slightly over fill the compartments with the remaining mortar and then tamp as specified for the first layer. During tamping of the second layer, bring in the mortar forced out onto the tops of the molds after each round of tamping, by means of gloved fingers and the tamper, before starting the next round of tamping. On completion of tamping, the tops of all the cubes should extend slightly above the tops of the molds.

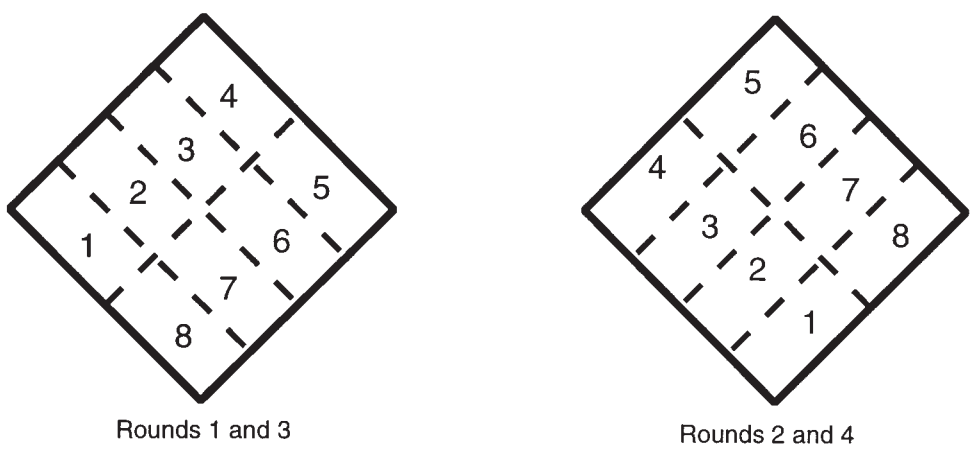

Figure 1

f. Bring in the mortar that has been forced out onto the tops of the molds with a trowel and smooth off the cubes by drawing the flat side of the trowel (with the leading edge slightly raised) once across the top of each cube at right angles to the length of the mold. Then, for the purpose of leveling the mortar and making the mortar that protrudes above the top of the mold of more uniform thickness, draw the flat trailing edge of the trowel (with leading edge slightly raised) once lightly along the length of the mold. Cut off the mortar to a plane surface flush with the top of the mold by drawing the straight edge of the trowel (held nearly perpendicular to the mold) with a sawing motion over the length of the mold.

g. When fabricating fluid mixes, steps e. and f. need not be followed. Instead, the cube mold is filled with mortar and cut off to a plane surface with a sawing motion over the length of the mold.

h. Immediately after molding, place cover plate on top of the mold, cover the sample with wet burlap, towels, or rags, seal it in a plastic sack in a level location out of direct sunlight, avoid freezing of cubes and record the time. Allow the sample to set undisturbed, away from vibration, for a minimum of four hours before moving.

i. Deliver the sample to the Regional or State Materials Laboratory **in the mold** with the cover plate in wet burlap, towels or rags sealed in a plastic bag within 24 hours. **Time of molding MUST be recorded on the Concrete Transmittal.** If delivery within 24 hours is unachievable, contact the Laboratory for instructions on caring for the cubes.

j. Once received in the lab, the molded sample is to be immediately placed in a moist curing room, with the upper surfaces exposed to the moist air but protected from dripping until the sample is a minimum of 20 hours old or has cured sufficiently that removal from the mold will not damage the cube. If the specimens are removed from the mold before they are 24 hours old they are to be kept on the shelves of the moist curing room until they are 24 to 36 hours old.

k. When the specimens are 24 to 36 hours old, immerse them in a lime-saturated water storage tank (Note 1). The specimens are to remain in the storage tank until time of test. (Curing test specimens of material other than hydraulic cement shall be in conformance with the manufacturer's recommendations.)

   Note 1: The storage tank shall be made of noncorroding materials. The water shall be saturated with calcium hydroxide such that excess is present. Stir the lime-saturated water once a month and clean the bath as required by AASHTO M 201.

Performance Exam Checklist

Field Method of Fabrication of 2 in (50 mm) Cube Specimens for Compressive Strength Testing of Grouts and Mortars
WSDOT Test Method T 813

Participant Name _____ Exam Date _____

Procedure Element	Yes	No
1. The tester has a copy of the current procedure on hand?	❐	❐
2. All equipment is functioning according to the test procedure, and if required, has the current calibration/verification tags present?	❐	❐
3. Three cubes made for each time period of test?	❐	❐
4. All joints (mold halves, mold to base plate) shall be water tight?	❐	❐
5. Adequate coating of release agent applied to interior surfaces of the mold?	❐	❐
6. Molding began within 2½ minutes from completion of mixing?	❐	❐
7. Molding performed in two lifts? (Not necessary if mix is fluid.)	❐	❐
8. Lifts tamped 32 times, made up of 4 rounds of 8, each perpendicular to the other? (Not required if mix is fluid.)	❐	❐
9. For second layer, mortar forced out of the mold brought back in before each round? (Not required if mix is fluid.)	❐	❐
10. Mix extends slightly above the mold at the completion of tamping?	❐	❐
11. Mortar smoothed by drawing flat side of trowel across each cube at right angles?	❐	❐
12. Mortar leveled by drawing the flat side of trowel lightly along the length of mold?	❐	❐
13. Mortar cut off flush with mold with edge of trowel using sawing motion?	❐	❐
14. Time of molding recorded?	❐	❐
15. Cover plate placed on top of the mold and covered with wet burlap, towel or rag?	❐	❐
16. Covered sample sealed in a plastic sack in a level location out of sunlight?	❐	❐
17. Sample delivered to the laboratory in the mold within 24 hours?	❐	❐
18. Transmittal includes the time of molding?	❐	❐

First Attempt: Pass ❐ Fail ❐ Second Attempt: Pass ❐ Fail ❐

Signature of Examiner _____

Comments:

WSDOT Test Method T 814

Method of Test for Water Retention Efficiency of Liquid Membrane-Forming Compounds and Impermeable Sheet Materials for Curing Concrete

1. SCOPE

This method is intended for laboratory use in determining the efficiency of liquid membrane-forming compounds, papers, and other impermeable sheet materials for curing concrete, as measured by their ability to prevent moisture loss during the early hardening period.

2. APPARATUS

a. Molds — The molds shall be seamless tin ointment cans 3.4374 in. (87.31 mm) in diameter by 1.1874 in. (30.16 mm) deep.

b. Mortar — Mortar for test specimens shall consist of a portland cement mixture of equal parts of Type II and Type III Portland cements, air entraining agent, sand and water, all well mixed in the proportions by mass of 1 part cement, 0.003 parts neutralized Vinsol resin (NVX), 2.2 parts sand, and 0.4 parts water, The portland cement shall conform to the *Standard Specifications for Portland cement*, ASTM Designation: C 150. The sand shall conform to the specifications for graded standard sand, ASTM Designation C 778.

(1) Mixing — Mixing shall preferably be done in a room in which the air temperature is 70°F ± 5°F (21° ± 2.8°C) and the relative humidity 40 to 60 percent. The temperature of the mortar at the time of molding shall be 70°F ± 5°F (21° ± 2.8°C). The cement and sand shall be mixed dry in a nonabsorptive vessel and the specified quantity of water, in which the Vinsol resin has been dissolved, shall be added. The mixture shall be allowed to absorb the water for a period of one minute. Testing shall be accomplished by WSDOT Test Method No. 307.

(2) Molding — The mold shall be filled with mortar and the mortar puddled with the gloved fingers only to the extent required for uniform and thorough consolidation. Excess mortar shall be removed and the surface smoothed with the gloved hands, immediately after which the surface shall be finished with one pass of a straightedge, using pressure and a sawing motion.

(3) Storage — Immediately after molding, the excess mortar on the outside of the molds shall be removed with a damp cloth. The molds containing the specimens shall be placed in a moist closet in an atmosphere maintained at 73.4°F ± 3.6°F (23° ± 2°C) and relative humidity of not less than 95 percent.

3. PROCEDURE

a. Application of Compound — Four hours after molding, the specimens shall be removed from the moist closet and the junction of specimen and mold sealed by means of a hot applied rosin/paraffin wax sealing material applied to the edges by means of a small brush or syringe, and shall not extend more than 3/16 in. (4.8 mm) onto the surface of the specimen.

A single coat of curing compound shall be applied to each specimen by the use of a brush. The compound shall be applied at the rate of 1.29 ml per test specimen. The proper mass of compound for the prescribed coverage shall be determined from the specific gravity of the material. This mass of compound (±0.05 g) shall be measured by weighing the test specimens before and after application. When testing impermeable sheet materials, the sample is taped over the specimen with a pressure sensitive tape.

b. Determination of Moisture Loss — One-half hour after application of the curing compound, each of the coated specimens shall be place individually in 4-in. (101.6 mm) Scheibler desiccators. A 30 to 50 mm low form glass weighing bottle containing approximately 20 g of potassium hydroxide pellets accurately weighed to the nearest 5 mg, shall be placed on a wire screen supported about ¼ in. (6.3 mm) above the surface of the mortar. The cover of the weighing bottle shall be removed and desiccator closed tightly with its cover. The desiccators shall be kept at a temperature of 70°F ± 2°F (21° ± 1°C) for 72 hours. At the conclusion of this period, the desiccator shall be opened, the cover shall be placed on the weighing bottle, and the mass (weight) determined to the nearest 5 mg. The increase in mass (weight) of the potassium hydroxide shall be taken as the lost of moisture from the specimen. The results of not less than three test specimens shall be averaged in computing the lost of moisture.

4. REPORTS

a. Test results will be reported on Test Data Form WSDOT 350-034.

Washington State
Department of Transportation

WSDOT Test Method T 816

Method of Test for Parting Compound

1. Scope:
   a. This method of test covers the procedure used for determining if parting compound enables concrete to release cleanly from forms without any dusting or staining.
2. Apparatus:
   a. Materials required for preparing PCC Class 4,000 concrete.
   b. APA grade High Density Overlaid (HDO) Plyform Class I.
   c. Vibrator or other consolidation device.
   d. Rubber gloves, clean rag, spray apparatus, or other type of applicator as per mfg. recommendations.
3. Procedure:
   a. Apply parting compound to plyform surface as per manufactures recommendation.
   b. Prepare PCC Cl. 4000 concrete by mixing all preweighed materials together in mixing bowl. Visually mix the concrete to a 3.00″ slump. Mix 3 minutes, rest 3 minutes with damp towel covering mixing bowl, and then resume mixing for another 2 minutes. Scrape concrete to one side of bowl. Remix by hand to get a representative sample. Take a proportionate amount of concrete for the size of board you have.
   c. Place concrete on prepared surface of the plyform board. Place vibrator on the board and allow vibrations to consolidate the concrete mix or utilize other consolidation method.
   d. Allow to sit uncovered for 24 ± 2 hours
   e. Lift the specimen vertically without any twisting or sliding movement.
   f. Specimen should separate cleanly from form without any staining or dusting of concrete surface as per *Standard Specification* 6-02.3(17)J.
4. Report
   a. Note any non-specification elements observed. The Physical Testing Supervisor and/or Engineer will determine acceptability of the parting compound.

Performance Exam Checklist

Method of Test for Parting Compound
Method T 816

Participant Name _____ Exam Date _____

Procedure Element	Yes	No
1. Parting Compound applied to the plyform surface as per Mfg. recommendations?	❐	❐
2. Class 4000 concrete mixed correctly?	❐	❐
3. A portion of the concrete placed on the prepared surface of the plyform?	❐	❐
4. Concrete consolidated?	❐	❐
5. Allowed to sit uncovered for 24 ± 2 hours?	❐	❐
6. Specimen lifted vertically without any twisting or sliding?	❐	❐
7. Separation, Staining, and Dusting determinations made correctly?	❐	❐
8. If non-conforming elements are observed, is the supervisor notified?	❐	❐

First attempt: Pass ❐ Fail ❐ Second attempt: Pass ❐ Fail ❐

Signature of Examiner _____

Comments:

WSDOT Test Method T 818

Air Content of Freshly Mixed Self-Compacting Concrete by the Pressure Method

1. The air test will be performed in accordance with WSDOT FOP for WAQTC T 152 with the following modifications to the procedure:

   a. Change item 3 to read: Fill the base completely in one lift.

      Note: Filling the base with concrete by using multiple scoops or by pouring from a bucket or similar container has been found to be acceptable.

   b. Change item 4 to read: Do not consolidate the concrete by rodding, vibration, or tamping. When the base is filled, lightly tap around the exterior of the base with a rubber mallet to allow entrapped air bubbles to escape.

   c. Delete items 5 through 11.

Performance Exam Checklist

Air Content of Freshly Mixed Self Compacting Concrete by the Pressure Method
WSDOT T 818

Participant Name _____ Exam Date _____

Procedure Element	**Yes**	**No**
1. The tester has a copy of the current procedure on hand?		
2. All equipment is functioning according to the test procedure, and if required, has the current calibration/verification tags present?		
3. Container filled in one layer, slightly overfilling?		
4. Sides of the container lightly tapped with the mallet?		
5. Concrete struck off level with top of container using the bar and rim cleaned off?		
6. Inside of cover cleaned and moistened before clamping to base?		
Using a Type B Meter		
7. Both petcocks open?		
8. Air valve closed between air chamber and the bowl?		
9. Water injected through petcock until it flows out the other petcock?		
10. Water injection into the petcock continued while jarring and tapping the meter to insure all air is expelled?		
11. Air pumped up to initial pressure line?		
12. A few seconds allowed for the compressed air to stabilize?		
13. Gauge adjusted to the initial pressure?		
14. Both petcocks closed?		
15. Air valve opened between chamber and bowl?		
16. Sides of bowl tapped with the mallet?		
17. Air percentage read after lightly tapping the gauge to stabilize the hand?		
18. Air valve closed and then petcocks opened to release pressure before removing the cover?		
19. Air content recorded to 0.1 percent?		
20. All calculations performed correctly?		

First Attempt: Pass Fail Second Attempt: Pass Fail

Signature of Examiner _____

This checklist is derived, in part, from copyrighted material printed in ACI CP-1, published by the American Concrete Institute.

Comments:

WSDOT Test Method T 819

Making and Curing Self-Compacting Concrete Test Specimens in the Field

1. The cylinders will be made and cured in accordance with WSDOT FOP for AASHTO T 23 with the following modifications:

   9. Molding Specimens

      9.2 Casting Cylinders is revised to read:

      Place the concrete in the mold using a scoop, blunted trowel or shovel. Molds shall be filled in one layer by pouring material from a suitable container into the mold. Do not rod, vibrate, or tap the mold.

      Note: Filling the mold with concrete by using multiple scoops or by pouring from a bucket or similar container has been found to be acceptable.

      9.3 Consolidation is deleted

      9.4 Finishing is revised to read:

      Strike off the surface of the concrete level with the top of the mold using a float, trowel or steel strike off bar. Immediately after finishing place a plastic cylinder lid on the cylinder.

Performance Exam Checklist

Making and Curing Self-Compacting Concrete Test Specimens in the Field
WSDOT T 819

Participant Name _____ Exam Date _____

Procedure Element	Yes	No
1. The tester has a copy of the current procedure on hand?	❐	❐
2. Molds placed on a level, rigid, horizontal surface free of vibration?	❐	❐
3. Making of specimens begun within 15 minutes of sampling?	❐	❐
4. Concrete poured into the mold using a suitable container?	❐	❐
5. Mold filled in one lift?	❐	❐
6. Excess concrete struck off?	❐	❐
7. Specimens covered immediately with plastic cylinder lid?	❐	❐

First Attempt: Pass ❐ Fail ❐ Second Attempt: Pass ❐ Fail ❐

Signature of Examiner _____

This checklist is derived, in part, from copyrighted material printed in ACI CP-1, published by the American Concrete Institute.

Comments:

Performance Exam Checklist

Bond Strength (Diagonal Shear)
ASTM C 882

Participant Name _____ Exam Date _____

Procedure Element	Yes	No
1. Confirmation that the concrete lab will be ready to mix mortar?	❐	❐
2. Half cylinders taken from moisture room?	❐	❐
3. Elliptical surface acid washed, rinsed with water and allowed to dry?	❐	❐
4. Half cylinders placed in cylinder molds awaiting the epoxy and mortar?	❐	❐
5. Epoxy mixed using manufacturer's mix ratio and directions?	❐	❐
6. With elliptical surface maintained horizontal, coat the surface with epoxy?	❐	❐
7. Epoxy layer thickness 10 to 15 mils (0.3 mm to 0.4 mm)?	❐	❐
After the epoxy coating:		
8. Fill up the remainder of the mold with fresh plastic mortar?	❐	❐
9. New mortar rodded and the top smoothed off?	❐	❐
10. Specimens (epoxy/mortar) cured for two (2) days or fourteen (14)days at 100 % relative humidity?	❐	❐
11. Compressive load determined as per WSDOT Test Method T 22?	❐	❐
12. Compressive strength calculated based on elliptical surface area?	❐	❐

First attempt: Pass ❐ Fail ❐ Second attempt: Pass ❐ Fail ❐

Signature of Examiner _____

Comments:

Washington State
Department of Transportation

WSDOT Test Method T 914

Practice for Sampling of Geosynthetic Material for Testing

1. Scope
   a. This practice covers the procedure for sampling Geosynthetic Material for testing.
2. Definitions
   a. Geogrid- A regular network of integrally connected polymer tensile elements with an aperture geometry sufficient to permit mechanical interlock with the surrounding backfill.
   b. Geosynthetic Material- general term which includes all geotextiles, geogrids, and prefabricated drainage mats.
   c. Geotextile — Any permeable textile used with foundation, soil, rock, earth, or any other geotechnical material, as an integral part of a manmade product, structure, or system.
   d. Lot — All geosynthetic material rolls within a consignment (i.e., all rolls sent to the project site) which were manufactured at the same manufacturing plant having the same product name and specifications, style, or physical characteristics of a particular geosynthetic material product.
   e. Lot Sample — Sample(s) from one or more geosynthetic material rolls taken at random to represent an acceptance sampling lot and used as a source of laboratory samples.
   f. Production Unit — As referred to in this practice, it shall be considered to be synonymous with the geosynthetic material roll as shipped by the manufacturer. Two or more geosynthetic material rolls joined together by sewn seams shall be considered as separate rolls.
   g. Minimum Average Roll Value — The test results of any sampled roll in a lot shall meet or exceed the minimum values specified.
3. Significance and Use
   a. Sampling is an important part of testing and the sampler should make every effort to obtain samples that will show the nature and condition of the materials they represent.
   b. This sampling procedure will provide a representation of the lot which is adequate to establish minimum average roll values as defined by this practice.
4. Procedure
   a. Divide the shipment or consignment into lots as defined in 2.d.
   b. Determine the number of rolls in the shipment or consignment to be sampled using Table 1.

Number of Rolls in Lot	Number of Rolls to be Selected for Lot Sample
1 to 24	1
25 to 49	2
50 to 99	3
100 to 125	5
125 to 216	6
217 to 343	7
344 to 512	8
513 to 729	9
730 to 1,000	10

Number of Rolls to be Selected as Lot Sample
Table 1

c. Laboratory sample selection.

(1) Obtain a laboratory sample from each roll in the Lot Sample. The sample shall be a minimum of 6 feet long by the full width of the geosynthetic material roll with a total area greater than or equal to 6.0 yd^2.

(2) The laboratory sample should not be taken from the outer wrap of the roll nor the inner wrap of the core (i.e., do not take the sample from the very ends of the roll).

(3) Protect the sample from exposure to Ultraviolet light.

5. Sample Submittal

a. All geotextile samples submitted to the State Material Laboratory are to be prepared and shipped as follows:

Roll sample around a 4 in diameter minimum, tube such as PCV pipe or cardboard mailing tube and wrap to protect sample from shipping damage and ultraviolet light (UV) exposure.

b. If sample is for Acceptance of Lots used on project, the following information must be submitted with the sample:

(1) Manufacturer's name and current address.

(2) Full product name.

(3) Roll number(s).

(4) Proposed use(s).

(5) Certified test results from the manufacturer.

(6) The Lot Number being submitted for acceptance. In lieu of a manufacturer provided Lot Number, the Bill of Lading Number can be used.

Testing by the State Materials Laboratory will not begin until all of the required information is received.

Performance Exam Checklist

Practice for Sampling Geosynthetic Material for Testing
WSDOT Test Method T 914

Participant Name _____ Exam Date _____

Procedure Element	**Yes**	**No**
1. The tester has a copy of the current procedure on hand?	❐	❐
2. Sampling		
a. Divided shipment/consignment into lot(s) and used Table 1 to determine the number of rolls to be sampled.	❐	❐
b. Rolls to be sampled selected at random.	❐	❐
c. Samples are a minimum of 6 feet long by the full width of the geosynthetic material roll with a total area greater than or equal to 6.0 yd^2	❐	❐
d. Sample does not include outer wrap or inner wrap of the roll.	❐	❐
3. Shipment Preparation		
a. Roll sample around a 4-in diameter minimum, tube such as PCV pipe or cardboard mailing tube	❐	❐
b. Wrap the sample to protect from ultra-violet light exposure.	❐	❐

First attempt: Pass ❐ Fail ❐ Second attempt: Pass ❐ Fail ❐

Signature of Examiner _____

Comments:

Washington State
Department of Transportation

WSDOT Test Method T 915

Practice for Conditioning of Geotextiles for Testing

1. Scope
   a. This practice covers a procedure for conditioning geotextile specimens for testing and establishes atmospheric conditions which are acceptable for testing when the standard atmosphere for testing cannot be obtained due to local laboratory conditions.
2. Applicable Documents
   a. ASTM Standards.

      D 123 Terminology Relating to Textiles

      D 1776 Practice for Conditioning Textiles for Testing

      D 4439 Terminology for Geotextiles

      D 4533 Standard Test Method for Trapezoid Tearing Strength of Geotextiles

      D 4595 Standard Test Method for tensile Properties of Geotextiles by the Wide-Width Strip Method

      D 4632 Standard Test Method for Breaking Load and Elongation of Geotextiles (Grab Method)
3. Definitions
   a. Atmosphere for Testing Geotextiles — Air maintained at a relative humidity of 55 ± 25 percent relative humidity and temperature of 70° ± 4°F (21° ± 2°C).
   b. Geotextile — Any permeable textile used with foundation, soil, rock, earth, or any other geotechnical material, as an integral part of a manmade product, structure, or system.
   c. Specimen — A specific portion of a material or laboratory sample upon which a test is performed or which is taken for that purpose.
   d. Preconditioning — Atmospheric conditioning of a test specimen prior to testing in a specified environment in which the specimen is allowed to come to equilibrium with that specified preconditioning environment.
4. Summary of Practice
   a. Specimens are preconditioned by soaking them in distilled water for a specified period of time and are tested at ambient laboratory room temperature and humidity conditions without allowing the specimens time to come to equilibrium with the ambient testing atmosphere.

5. Uses and Significance
   a. The conditioning prescribed in this practice is designed to obtain reproducible test results on geotextiles.
6. Apparatus
   a. Water filled pan for soaking specimens.
   b. Equipment for recording the temperature of the air and the water, and the humidity of the air.
7. Procedure
   a. Precondition specimens by immersing them in distilled water maintained at a temperature of 70° ± 4°F (21 ± 2°C). The time of immersion must be sufficient to wet-out the specimens thoroughly, but must be a minimum of two hours. To obtain thorough wetting, add not more than 0.05 percent of a nonionic neutral wetting agent to the water.
   b. After the specimens have been thoroughly wetted, remove each specimen from the water, and allow excess water contained in the pores of the specimen to drain from the specimen for a period of time less than or equal to one minute. After the specimen has drained during the maximum allowed time period of one minute, the specimen test must begin before nine minutes of time have elapsed from the end of the draining period.

      Note 1: If more than a total of nine minutes from the time the specimen is removed from the water is allowed to elapse before the specimen test is actually begun, the specimen should not be considered to be thoroughly wetted. If this occurs, the specimen should be reimmersed for a minimum of two hours before a test is attempted again for that specimen. Thorough wetting is needed to ensure that the specimen is not affected by the ambient humidity conditions during testing if those ambient conditions are not at the standard atmosphere for testing.
   c. The atmosphere for testing, geotextiles must be maintained at a temperature of 70° ± 4°F (21 ± 2°C). and a relative humidity of 55 ± 25 percent.
   d. If dry testing of the geotextile is required in addition to wet testing, the specimens must be conditioned in the atmosphere for testing as stated in Section 7.3. Specimen conditioning shall be accomplished in this case by allowing the specimens to reach moisture equilibrium in the atmosphere for testing. Equilibrium is considered to have been reached when the change in the mass of the specimen in successive weighings made at intervals of not less than two hours does not exceed 0.1 percent of the mass of the specimen. Specimen immersion requirements do not apply to specimens which are to be tested dry. Specimens tested dry must be tested in the atmosphere for testing as previously defined.

WSDOT Test Method T 923

Thickness Measurement of Geotextiles

1. Scope
   a. This test method provides procedures for measuring the thickness of geotextiles.
2. Summary of Method
   a. Specimens from the geotextile sample submitted for testing are measured for thickness and the average of those measurements is used as the multiplier in converting permittivity to permeability. The measured thickness is reported as information only in case disagreements arise concerning the permeability of the material.
3. Apparatus
   a. The thickness measurement instrument shall be a precision electronic micrometer conforming to ASTM D 1777-64
   b. The specimen cutting template shall meet the requirements of ASTM D 4491 for cutting the specimens to size.
4. Specimens for Testing
   a. Specimens shall be cut from the sample submitted for testing in the pattern and number specified in ASTM D 4491.
5. Conditioning
   a. Thickness testing shall be done prior to conditioning the specimens for permeability testing.
6. Procedure
   a. Handle the specimens carefully to avoid altering the natural state of the material.
   b. Turn the machine on and allow it to warm up for approximately five minutes. As the machine cycles, clean presser foot and base by inserting a clean, lint free cloth between presser foot and base while in the raised position. Carefully and gently pull the cloth from between presser foot and base as the foot is in lowered position. Allow the machine to cycle for several readings and if no variation, zero machine with the zero set knob. Repeat cleaning and zeroing process a second time to ensure the base and foot are clean.
   c. As the machine cycles to a raised presser foot position, (with a zero reading) quickly but carefully insert the sample under the presser foot in a centered position.
   d. The machine will cycle presser foot down. Record the reading of the first cycle only. Record the reading to 0.00030 in (0.01 mm).

e. When the machine cycles up remove the sample and allow the machine to cycle with no sample. Check for zero reading. If machine does not read zero repeat cleaning procedure b.

f. Continue to measure the remaining specimens using these same procedures.

g. Average the readings and record the results.

h. Report the average reading on the worksheet for permeability testing as the nominal thickness of the geotextile.

7. Calibration

a. The thickness measuring micrometer shall be calibrated in accordance with the manufacturers' directions once a year, and will be checked accuracy on the first working day of each month. Accuracy shall be within 0.00030 in (0.01 mm).

WSDOT Standard Practice T 925

Standard Practice for Determination of Long-Term Strength for Geosynthetic Reinforcement

Summary and Use of Standard Practice

Abbreviations and Symbols

Definitions

Test Methods and Practices Used

Data Requirements for Initial Product Acceptance

1. General Product Information (required for all geosynthetic reinforcement products):
2. Installation Damage Data Requirements (RF_{ID}):
3. Creep Data Requirements (RF_{CR} and Creep Stiffness J):
4. Long-Term Durability Data Requirements (RF_D):7
5. Evaluation of Product Lines

Determination of Long-term Geosynthetic Strength for Initial Product Acceptance

1. Calculation of Long-Term Strength
2. Wall or Slope Class
3. Environment Aggressiveness
4. Requirements for Class 1 Walls and Slopes to Determine T_{al}
5. Requirements for Class 2 Walls and Slopes to Determine T_{al}
6. Minimum Polymer and Physical Property Requirements to Allow Use of Default Reduction Factors for RF and RF_D in Nonaggressive Environments

Quality Assurance Requirements for Products that have been Through Initial Acceptance

1. Data Verification Requirements
2. Quality Assurance (QA) Testing Approach
3. Quality Assurance (QA) Sampling
4. Quality Assurance (QA) Testing
   A. Installation Damage Testing
   B. Creep Testing
   C. Durability Testing

5. Quality Assurance (QA) Criteria for Comparison to Initial Product Acceptance Test Results

A. Short-term Index Tensile Testing

B. Installation Damage Testing

C. Creep Rupture Testing for Prediction of Creep Limit

D. Creep Strain Testing for Prediction of Creep Limit

E. Assessment of the Creep Stiffness at Low Strain

F. Durability Testing

References

WSDOT Test Method No. 925, Appendix A

References

WSDOT Test Method No. 925, Appendix B

B.1 Overview of Extrapolation Approach to Determine the Ultimate Limit State Creep Limit, T_1

B.2 Step-By-Step Procedures for Extrapolating Creep Rupture Data –Conventional Method

B.3 Procedures for Extrapolating Creep Rupture Data – Stepped Isothermal Method (SIM)

B.4 Determination of RF_{CR}

B.5 Use of Creep Data from "Similar" Products and Evaluation of Product Lines

References

WSDOT Test Method No. 925, Appendix C

C.1 Creep Strain Assessment Tools and Concepts

C.2 Creep Strain Data Extrapolation

C.2.1 Step-By-Step Procedures for Extrapolating Creep Strain Data – Conventional Method

C.2.2 Step-By-Step Procedures for Extrapolating Creep Strain Data – Stepped Isothermal Method (SIM)

C.3 Determination of RF_{CR}

C.4 Estimation of Long-Term Creep Deformation

C.5 Estimation of Creep Stiffness for Working Stress Design

C.6 Evaluation of Product Lines

References

WSDOT Test Method No. 925, Appendix D

References

Washington State
Department of Transportation

WSDOT Standard Practice T 925

Standard Practice for Determination of Long-Term Strength for Geosynthetic Reinforcement

Summary and Use of Standard Practice

Through this protocol, the long-term strength of geosynthetic reinforcements can be determined. This protocol contains test and evaluation procedures to determine reduction factors for installation damage, creep, and chemical/biological durability, as well as the method to combine these factors to determine the long-term strength. The long-term strength values determined from this protocol can be compared to the required design strengths provided in the contract for the geosynthetic structure(s) in question to determine if the selected product meets the contract requirements. This protocol can be used for initial product qualification or acceptance (e.g., for inclusion in the Qualified Products List), or for quality assurance (QA) to facilitate periodic review of products for which the long-term strength has been previously determined using this Standard Practice.

This protocol has been developed to address polypropylene (PP), polyethylene (PE or HDPE), and polyester (PET) geosynthetics. For other geosynthetic polymers (e.g., polyamide or PVA), the installation damage and creep protocols provided herein are directly applicable. While the chemical and biological durability procedures and criteria provided herein may also be applicable to other polymers (for example, hydrolysis testing as described in Appendix D is likely applicable to polyamide and PVA geosynthetics), additional investigation will be required to establish a detailed protocol and acceptance criteria for these other polymers. These other polymers may be considered for evaluation using this protocol once modifications to the chemical/biological durability aspects of this protocol have been developed and are agreed upon by the approval authority.

Abbreviations and Symbols

AASHTO = American Association of State Highway and Transportation Officials

d_{50} = The grain size at 50% passing by weight for the backfill.

HDPE = High Density Polyethylene

MARV = The minimum average roll value for the geosynthetic, defined as two standard deviations below the mean for the product (i.e., 97.5% of all test results will meet or exceed the MARV). For practical purposes from the user's viewpoint, the average for a sample taken from any roll in the lot shipped to the job site should meet or exceed the MARV.

MSE = Mechanically Stabilized Earth

PET = Polyester

PP	=	Polypropylene
QPL	=	Qualified Products List
RF	=	Combined reduction factor to account for long-term degradation due to installation damage, creep, and chemical/biological aging
$\mathbf{RF_{CR}}$	=	Strength reduction factor to prevent long-term creep rupture of the reinforcement
$\mathbf{RF_{D}}$	=	Strength reduction factor to prevent rupture of the reinforcement due to long-term chemical and biological degradation
$RF_{\mathbf{ID}}$	=	Strength reduction factor to account for installation damage to the reinforcement
$\boldsymbol{T}_{\mathbf{al}}$	=	The long-term tensile strength which will not result in rupture of the reinforcement during the required design life, calculated on a load per unit of reinforcement width basis
$\boldsymbol{T}_{\mathbf{ult}}$	=	The ultimate tensile strength of the reinforcement determined from wide width tensile tests
UV	=	Ultraviolet light
WSDOT	=	Washington State Department of Transportation

Definitions

Apertures — The open spaces formed between the interconnected network of longitudinal and transverse ribs of a geogrid.

Class 1 Structure — Typically includes geosynthetic walls or slopes that support bridge abutments, buildings, critical utilities, or other facilities for which the consequences of poor performance or failure would be severe. In general, geosynthetic walls greater than 6 m (20 ft) in height and reinforced slopes greater than 9.2 m (30 ft) in height will be considered to be Class 1.

Class 2 Structure — All geosynthetic walls and slopes not considered to be Class 1.

Confined Testing — Geosynthetic testing in which the specimen is surrounded and confined by soil to simulate conditions anticipated for the geosynthetic in use.

Effective Design Temperature — The temperature that is halfway between the average yearly air temperature and the normal daily air temperature for the warmest month at the wall site.

Hydrolysis — The reaction of water molecules with the polymer material, resulting in polymer chain scission, reduced molecular weight, and strength loss.

In-isolation Testing — Geosynthetic testing in which the specimen is surrounded by air or a fluid (not soil).

Installation Damage — Damage to the geosynthetic such as cuts, holes (geotextiles only), abrasion, fraying, etc., created during installation of the geosynthetic in the backfill soil.

Load Level For creep or creep rupture testing, the load applied to the test specimen divided by T_{lot}, the short-term ultimate strength of the lot or roll of material used form the creep testing.

Nonaggressive Environment
For geosynthetic walls and slopes, soils which have a d_{50} of 4.75 mm or less, a maximum particle size of 31.5 mm or less, a pH of 4.5 to 9, and an effective design temperature of 30° C or less.

Oxidation The reaction of oxygen with the polymer material, initiated by heat, UV radiation, and possibly other agents, resulting in chain scission and strength loss.

Post-consumer Recycled Material
Polymer products sold to consumers which have been returned by the consumer after use of the products for the purpose of recycling.

Product Line A series of products manufactured using the same polymer in which the polymer for all products in the line comes from the same source, the manufacturing process is the same for all products in the line, and the only difference is in the product weight/unit area or number of fibers contained in each reinforcement element.

Sample A portion of material which is taken for testing or for record purposes, from which a group of specimens can be obtained to provide information that can be used for making statistical inferences about the population(s) from which the specimens are drawn.

Specimen A specific portion of a material or laboratory sample upon which a test is performed or which is taken for that purpose.

Survivability The ability of a geosynthetic to survive a given set of installation conditions with an acceptable level of damage.

Test Methods and Practices Used

The following test methods and practices are used or referenced by Standard Practice T 925:

1. AASHTO Bridge Standard Specifications for Highway Bridges, 17th Edition, 2002
2. AASHTO Bridge LRFD Specifications for Highway Bridges, 3rd Edition, 2004 with current interims
3. ASTM D4354 Standard Practice for Sampling of Geosynthetics for Testing
4. ASTM D4873 –Standard Guide for Identification, Storage, and Handling of Geosynthetic Rolls and Samples
5. ASTM D5261 – Standard Test method for Measuring Mass per Unit Area of Geotextiles
6. ASTM D4595 – Standard Test Method for Tensile Properties of Geotextiles by the Wide-Width Strip Method
7. ASTM D 6637 – Standard Test Method for Determining Tensile Properties of Geogrids by the Single or Multi-Rib Tensile Method.

8. ASTM D-1248 – Standard Specification for Polyethylene Plastics Extrusion Materials for Wire and Cable
9. ASTM D-4101 – Standard Specification for Polypropylene Injection and Extrusion Materials
10. WSDOT Test Method T 926 – Geogrid Brittleness Test
11. ISO/DIS 10722-1 - Procedure for simulating damage during installation. Part 1: Installation in granular materials
12. ASTM D5818 – Standard Practice for Obtaining Samples of Geosynthetics from a Test Section for Assessment of Installation Damage
13. ASTM D2488 – Standard Practice for Description and Identification of Soils (Visual-Manual Procedure)
14. ASTM D1557 – Standard Test Methods for Laboratory Compaction Characteristics of Soil Using Modified Effort (56,000 ft-lbf/ft^3)(2700 kN-m/m^3)
15. AASHTO T96 - Resistance to Degradation of Small-Size Coarse Aggregate by Abrasion and Impact in the Los Angeles Machine
16. ASTM D6992 – Accelerated Tensile Creep and Creep-Rupture of Geosynthetic Materials Based on Time-Temperature Superposition Using the Stepped Isothermal Method
17. ASTM D5262 – Standard Test Method for Evaluating Unconfined Tension Creep Behavior of Geosynthetics
18. *ISO/FDIS 9080:2001* - Plastic piping and ducting systems – Determination of long-term hydrostatic strength of thermoplastics materials in pipe form by extrapolation.
19. ASTM D2837 – Standard Test Method for Obtaining Hydrostatic Design Basis for Thermoplastic Pipe Materials
20. ASTM D4355 – Standard Test Method for Deterioration of Geotextiles from Exposure to Ultraviolet Light and Water (Xenon-Arc Type Apparatus)
21. ASTM D4603 – Standard Test Method for Determining Inherent Viscosity of Poly(Ethylene Terephthalate) (PET) by Glass Capillary Viscometer
22. GRI-GG7 – Carboxyl End Group Content of PET Yarns
23. GRI-GG8 – Determination of the Number Average Molecular Weight of PET Yarns Based on a Relative Viscosity Value
24. ASTM D3045 – Standard Practice for Heat Aging of Plastics Without Load
25. ASTM D 3417-99 - Enthaplies of Fusion and Crystallinization of Polymers by DSC
26. ENV ISO 13438:1999 - Geotextiles and Geotextile-Related Products - Screening Test Method for Determining the Resistance to Oxidation
27. ASTM D 3895 – Standard Test Method for Oxidative-Induction Time of Polyolefins by Differential Scanning Calorimetry
28. ASTM D 5885 – Standard Test Method for Oxidative Induction Time of Polyolefins by High-Pressure Differential Scanning Calorimetry

Per mutual agreement between the testing laboratory, the geosynthetic manufacturer, and the approval authority, “equivalent" ISO standards and practices may be used in lieu of ASTM, AASHTO, or GRI standards and practices where equivalent procedures are available.

Data Requirements for Initial Product Acceptance

1. General Product Information (required for all geosynthetic reinforcement products):
    a. Geosynthetic type and structure.
    b. Spacing and dimensions of geogrid elements. The receiving laboratory should verify these dimensions upon receipt of the sample(s) using hand measurement techniques. This is especially critical for strength determination based on a single or limited number of ribs in the specimens tested.
    c. Polymer(s) used for fibers, ribs, etc.
    d. Polymer(s) used for coating, if present.
    e. Roll size (length, width, and area).
    f. Typical lot size.
    g. Polymer source(s) used for product.
    h. For HDPE and PP, primary resin ASTM type, class, grade, and category (for HDPE use ASTM D-1248, and for PP use ASTM D-4101).
    i. For PET, minimum production number average molecular weight (ASTM D4603 and GRI:GG8) and maximum carboxyl end group content (GRI:GG7), with supporting test data. Information regarding the laboratory where the testing was conducted and date of testing shall also be provided.
    j. % of post-consumer recycled material by weight.
    k. Minimum weight per unit area for product (ASTM D5261).
    l. MARV for ultimate wide width tensile strength (ASTM D4595 or ASTM D6637), with supporting test data. Information regarding the laboratory where the testing was conducted and date of testing shall also be provided.
    n. UV resistance at 500 hours in weatherometer (ASTM D4355), with supporting test data (as a minimum, provide supporting data for one product in the product line, preferably the lightest weight product submitted in the product line). Information regarding the laboratory where the testing was conducted and date of testing shall also be provided.
    o. In addition, to establish a baseline for quality assurance testing, oven aging tests conducted in accordance with ENV ISO 13438:1999, Method A (PP) or B (HDPE), for polyolefin geosynthetics shall be performed. As a minimum, the lightest weight product in the product line should be tested. Unexposed and post-exposure specimens shall be tested for tensile properties (ASTM D4595 or ASTM D6637).
    p. for geogrids, evaluation of geogrid brittleness per WSDOT Test Method T 926.

2. Installation Damage Data Requirements (RF_{ID}):

Installation damage testing and interpretation shall be conducted in accordance with Appendix A. As a minimum, for each product tested, the following information should be obtained:

a. Date tests were conducted.

b. Name(s), location(s), and telephone number(s) of laboratory(ies) conducting the testing and evaluation.

c. Identify whether installation damage testing was conducted as a site specific evaluation for an actual construction project or was conducted as a non-site specific evaluation.

d. Description of specific procedures used to conduct the installation damage testing, including installation procedures, sample size, method of specimen selection, sample removal procedures, etc. Identify any deviations in the installation procedures relative to typical installation practice in full scale structures, if the testing was not site specific.

q. Photographs illustrating procedures used and the conditions at the time of the testing, if available.

r. Measured mass/unit area per ASTM D5261 for the sample tested for installation damage and for the sample used to establish the undamaged strength. Also obtain product manufacturer Quality Control (QC) data on the uncoated product (i.e., “greige -good”) for the lot used for installation damage testing.

g. Tensile test results for the product before exposure to installation conditions (i.e., virgin material), and whether both virgin and damaged samples were taken from the same roll of material, or just from rolls within the same lot of material.

h. Tensile test results for specimens taken from the damaged material after installation.

i. Tensile test results for both virgin and damaged specimens should include individual test results for each specimen, typical individual load-strain curves which are representative of the specimens tested, including associated calibration data as necessary to interpret the curves (curves in which strain and load/unit width are already calculated are preferred), the average value for each sample, the coefficient of variation for each sample, and a description of any deviations from the standard tensile test procedures required by Appendix A.

j. Gradation curves for backfill material located above and below the installation damage geosynthetic samples, including the d50 size, maximum particle size, and a description of the angularity of the soil particles per ASTM D2488, including photographs illustrating the soil particle angularity, if available. Also include LA Wear test results for the backfill material used.

k. Photographs and/or a description of the type and extent of damage visually evident in the exhumed samples and specimens.

l. RFID, and a description of the data interpretation method used to determine RF_{ID} for each sample.

3. Creep Data Requirements (RF_{CR} and Creep Stiffness J):

   Creep testing and interpretation shall be conducted in accordance with Appendices B and C. As a minimum, for each product tested, the following information should be obtained:

   a. Date tests were conducted.

   b. Name(s), location(s), and telephone number(s) of laboratory(ies) conducting the testing and evaluation.

   c. Photographs illustrating the creep testing equipment and procedures used, as available.

   d. Tensile test results for the product before creep testing (i.e., virgin material), and whether both virgin and creep tested samples were taken from the same roll of material, or just from rolls within the same lot of material.

   e. Tensile test results should include individual test results for each specimen, typical load-strain curves which are representative of the specimens tested, including associated calibration data as necessary to interpret the curves (curves in which strain and load/unit width are already calculated are preferred), the average value for each sample, the coefficient of variation for each sample, and a description of any deviations from the standard tensile test procedures required by Appendices B and C.

   f. Creep test procedures used, especially any deviations from the procedures required in Appendices B and C.

   g. If RF_{CR} is determined using data obtained in accordance with Appendix B, provide load and time to rupture for each specimen as a minimum; however, strain data as a function of time are desirable if available.

   h. If RF_{CR} is determined using data obtained in accordance with Appendix C, provide strain data as a function of time, and strain at beginning of tertiary creep (if rupture occurred), in addition to load applied and time to rupture (if rupture occurred), is required.

   j. Creep data plots should include both major and minor gridlines for ease in viewing and interpreting the data.

   k. If elevated temperature testing is conducted, creep data before and after time/load shifting, including shift factors used and a description of how the shift factors were derived, must be provided.

   l. Data illustrating the variability of the creep test environment, including temperature and humidity, during the creep test time period, or some assurance that the creep test environment was maintained within the variation of temperature prescribed within Standard Practice T 925, must be provided.

   m. A detailed description of creep extrapolation procedures used (i.e., step-by-step procedures and theoretical/empirical justification) if procedures other than those outlined in Appendices B and C are used.

n. Description of statistical extrapolation procedures used in accordance with Appendices B and C, if statistical extrapolation is performed.

o. RFCR, and a description of how RF_{CR} was determined for each product.

p. In addition, regardless of which approach is used to determine RF_{CR}, creep strain data at a load level that results in a strain of 2% at approximately 1,000 hours shall be submitted to determine the low strain (i.e., 2%) creep stiffness at 1,000 hours and at the specified design life (typically 75 years) using isochronous curves determined in accordance with Appendix C.

q. For both creep rupture and low strain creep stiffness testing, if single rib, yarn, or narrow width specimens are used, 1,000 hour creep data in accordance with Appendices B and C that demonstrates the single rib, yarn, or narrow width test results are consistent with the results from multi-rib/wide width testing.

4. Long-Term Durability Data Requirements (RF_D):

As a minimum, the durability test data requested in part (1), which include molecular weight and CEG for PET, oven aging tests for polyolefins, and UV resistance for all polymers, shall be provided.

If it is desired to submit detailed durability performance test data to justify a lower RF_D, or to allow use in environments classified as chemically aggressive, durability testing and interpretation shall be conducted in accordance with Appendix D, and, as a minimum, for each product tested, the following information should be obtained:

a. Date tests were conducted.

b. Name(s), location(s), and telephone number(s) of laboratory(ies) conducting the testing and evaluation.

c. Photographs and drawings illustrating the durability testing equipment and procedures used, as well as a summary of the specific procedures used.

d. Tensile test results for the product before durability testing (i.e., virgin material), and whether both virgin and durability test samples were taken from the same roll of material, or just from rolls within the same lot of material.

e. Polymer characteristics for the lot or roll of material actually tested before long-term exposure in the laboratory, including, for example, molecular weight and carboxyl end group content for PET, melt flow index and OIT for polyolefins, percent crystallinity, SEM photographs of fiber surface, etc.

Note 1: Percent crystallinity can be determined using Differential Scanning calorimetry (DSC). An appropriate test method is ASTM D3417-99. By definition, crystallinity (X) is calculated as follows:

$$X = \frac{\Delta H}{\Delta H^\circ} \text{ (times 100 for \%)}$$

where:

ΔH is the latent heat under the DSC melt curve

ΔH° is the latent heat for a 100% crystalline polymer

Temperature scan should start 10° C below, continue through, and stop 10° C above the melt range. Recommended test parameters are as follows:

Homo-Polymer	Sample Size (mg)	Melt Range (°C)	Latent Heat, ΔH° (cal/gm)	DSC Scan Speed (°C/min)
HDPE	5	100-145	68.4	10
PP	7.5	100-165	45	10
PET	10	200-245	30	10

Other values of sample size, melt range, and DSC scan speed can be used with justification.

f. Tensile test results for specimens taken for each retrieval from the incubation chambers.

g. Tensile test results, including tensile strength, strain at peak load, and 5 percent secant or offset modulus, for both virgin material and degraded material should include individual test results for each specimen, typical load-strain curves which are representative of the specimens tested, including associated calibration data as necessary to interpret the curves (curves in which strain and load/unit width are already calculated are preferred), the average value for each sample, the coefficient of variation for each sample, and a description of any deviations from the standard tensile test procedures required by Appendix D.

h. A detailed description of the data characterization and extrapolation procedures used, including data plots illustrating these procedures and their theoretical basis.

i. Results of any chemical tests taken (e.g., OIT or HPOIT, molecular weight, product weight/unit area, etc.), and any scanning electron micrographs taken, to verify the significance of any degradation in strength observed.

j. Results of biological degradation testing, if performed.

k. RFD, and a description of the method used to determine RF_D for the product.

5. Evaluation of Product Lines

If determining the long-term strengths for a product line, the data required under "General Product Information" must be obtained for each product. Product specific information for creep and durability must be obtained for at least one product in the product line to qualify the product line for Class 1 structures or aggressive environments, or in the case of Class 2 structures to allow the use of a total long-term strength reductfion factor of less than 7 (see description of environment aggressiveness and Class 1 and Class 2 structures in "Determination Of Long-Term Geosynthetic Strength" later in this Standard Practice). Additional product specific information for creep and durability shall also be obtained for each product in the product line in accordance with Appendices B, C and D regarding use of long-term data for "similar" products. This data is to be used to determine long-term strengths for each product in the product line.

In general, product specific installation damage data must be obtained for each product in the line. However, it is permissible to obtain installation damage data for only some of the products in the product line if interpolation of the installation damage reduction factor between products is feasible. Interpolation of the product specific installation damage reduction factor RF_{ID} between tested products can be based on the weight per unit area or undamaged tensile strength of each product, provided that the progression of weight per unit area or tensile strength as compared to the progression of RF_{ID} for each tested product is consistent. For coated geogrids, the weight of coating placed on the fibers or yarns may influence the amount of installation damage obtained (Sprague, et al., 1999). In that case, the installation damage reduction factor may need to be correlated to the coating weight instead. If it is determined that the RF_{ID} values obtained for a product line are not correlated with product weight per unit area, undamaged tensile strength, coating weight, or some other product parameter, and the variance of RF_{ID} between any two products in the product line is 0.1 or more, then each product in the product line shall be tested.

Determination of Long-term Geosynthetic Strength for Initial Product Acceptance

1. Calculation of Long-Term Strength

Reinforcement elements in MSE walls and reinforced slopes should be designed to have a durability to ensure a minimum design life of 75 years for permanent structures in accordance with AASHTO (2002, 2004). For ultimate limit state conditions:

$$T_{al} = \frac{T_{ult}}{RF} \quad (1)$$

where:

$$RF = RF_{ID} \times RF_{CR} \times RF_{D} \quad (2)$$

T_{al} = The long-term tensile strength that will not result in rupture of the reinforcement during the required design life, calculated on a load per unit of reinforcement width basis

T_{ult} = the ultimate tensile strength (MARV) of the reinforcement determined from wide width tensile tests

RF = a combined reduction factor to account for potential long-term degradation due to installation damage, creep, and chemical/biological aging

RF_{ID} = a strength reduction factor to account for installation damage to the reinforcement

RF_{CR} = a strength reduction factor to prevent long-term creep rupture of the reinforcement

RF_{D} = a strength reduction factor to prevent rupture of the reinforcement due to chemical and biological degradation

See Appendices A through D for protocols to use to determine RF from product specific data. Unless otherwise indicated in the contract specifications for a given project, the design temperature used to determine RF and T_{al} from product specific data shall be assumed to be 20° C (68° F).

The value selected for T_{ult} is the minimum average roll value (MARV) for the product to account for statistical variance in the material strength. T_{ult} should be based on a wide width tensile strength (i.e., ASTM D4595 for geotextiles or ASTM D6637 for geogrids). Other sources of uncertainty and variability in the long-term strength include installation damage (Appendix A), creep extrapolation (Appendices B and C), and chemical degradation (Appendix D). It is assumed that the observed variability in the creep rupture envelope is 100% correlated with the short-term tensile strength, as the creep strength is typically directly proportional to the short-term tensile strength within a product line (see Appendix B and Note 7 in Appendix B if this is not the case). Therefore, the MARV of T_{ult} adequately takes into account that source of variability. For additional discussion of this issue, see Note 2 below.

Note 2: *The product strength variability is not taken into account by using the creep limited strength, T_l, directly or in normalizing T_l by T_{lot} (see Appendix B). T_l only accounts for extrapolation uncertainty. Furthermore, T_{lot} is specific to the lot of material used for the creep testing. Normalizing by T_{lot} makes the creep reduction factor RF_{CR} applicable to the rest of the product line, as creep strength is typically directly proportional to the ultimate tensile strength, within a product line.. As shown below, it is not correct to normalize the creep strength T_l using T_{ult}, the MARV of the tensile strength for the product, nor is it correct to use T_l directly in the numerator to calculate T_{al}.*

$$RF_{CR} = \frac{T_{lot}}{T_l} \neq \frac{T_{ult}}{T_l} \quad \textit{and} \quad T_{al} \neq \frac{T_l}{RF_{ID} \times RF_D}$$

In the former case, the creep strength is not indexed to the actual tensile strength of the material used in the creep testing, and since there is a 50% chance that T_{ult} will be less than or equal to T_{lot}, using T_{ult} in this case would result in an unconservative determination of RF_{CR}. In the latter case, where T_l is used directly as a creep reduced strength, the product strength variability is not taken into account, since Tl is really a mean creep strength. Hence, RF_{CR} must be determined as shown in Equation B.4-1 (see Appendix B), and the MARV must be used for T_{ult} when determining T_{al}. Note that the use of the MARV for T_{ult} may not fully take into account the additional variability caused by installation damage. For the typical degree of installation damage observed in practice, this additional variability is minor and can be easily handled through the overall safety factor used in design of reinforced structures. For durability (RF_D), additional variability does not come into play if a default reduction factor is used. If a more refined durability analysis is performed, additional variability resulting from chemical degradation may need to be considered.

The type and amount of data to be obtained, and the approach used to determine the long-term design strength, will depend on the geosynthetic wall or reinforced slope class and the aggressiveness of the environment.

2. Wall or Slope Class

The class of a given geosynthetic structure will be identified in the contract specifications. A Class 1 geosynthetic wall or reinforced slope typically includes walls or slopes that support bridge abutments, buildings, critical utilities, or other facilities for which the consequences of poor performance or failure would be severe. Examples of severe consequences include serious personal injury, loss of life, or significant property damage. Cost and impact to the public if a poorly performing wall or slope must be repaired or replaced may also be considered in the determination of wall or slope class. In general, geosynthetic walls greater than 6 m (20 ft) in height and reinforced slopes greater than 9.2 m (30 ft) in height will be considered to be Class 1. All other geosynthetic walls and reinforced slopes will in general be considered to be Class 2. The specific application of geosynthetic structure class shall be carried out in accordance with AASHTO (2002, 2004) and other requirements of the approval authority.

3. Environment Aggressiveness

A nonaggressive environment is defined based on soil gradation and particle characteristics, chemical properties of the environment, and site temperature. Normally, the backfill pH will be the key chemical property that will affect the chemical aggressiveness of the geosynthetic environment. Soil gradation and particle characteristics primarily affect potential high RF_{ID} values, chemical properties affect the potential for high RF_D values, and temperature affects potential for high RF_D and high RF_{CR} values. The aggressiveness of the soil gradation will depend on the distribution, the maximum size, the angularity, and the durability of the soil particles. In general, the more angular the soil, the more uniform its gradation, the greater the maximum particle size, and the more durable the particles, the more aggressive the soil is with regard to potential for installation damage. Installation damage for geosynthetic reinforcement has been approximately correlated to the d_{50} size of the soil, and the d_{50} size can be used as a basis to interpolate to a specific soil gradation using test results at other gradations (Elias, 2000). However, other gradation characteristics may need to be considered to more accurately interpolate to a specific soil gradation and angularity. While installation damage can be evaluated for the anticipated soil gradation and characteristics, it is generally undesirable to use soils and associated installation conditions that result in a RF_{ID} value that is greater than approximately 1.7 due to the likelihood of excessive variability in the results. The decision as to what gradation characteristics are to be considered too aggressive shall be made by the approval authority.

Regarding chemical properties of the environment surrounding the geosynthetic in the wall or slope, the pH shall be between 4.5 and 9 to be considered nonaggressive. This applies both in the reinforced backfill and at the back of the face of walls.

Regarding temperature, the effective design temperature at the wall or slope site shall be less than 30° C (85° F) for the environment to be considered nonaggressive. In all but the most southerly tier of states in the USA, all wall and slope sites are anticipated to have an effective design temperature that is below 30° C.

For most soil conditions in the USA, the environment will likely be chemically nonaggressive. A possible exception to this is immediately behind a concrete wall face, where pH levels could possibly be elevated above a pH of 9. However, recent research has indicated that for well drained backfills, the pH adjacent to a concrete face stays below 9 in the long-term (Koerner, et al., 2001, Koerner, et al., 2002). In any case, the long-term strength determination must account for the environment at the face. However, there are specific geological regions in the USA that are more likely to have chemically aggressive conditions as described in Elias (2000). Examples include salt affected soils in the arid western (especially southwest) regions of the USA, acid-sulphate soils that are commonly found in the Appalachian region of the USA, and calcareous soils commonly found in Florida, Texas, New Mexico, and many western states.

The wall or slope contract specifications will identify if the environment is anticipated to be aggressive and the reason for the aggressive environment designation (i.e., backfill gradation, site chemistry, or site temperature). If aggressive conditions are not identified in the contract specifications, and the contract specifications provide soil chemical criteria that are consistent with nonaggressive conditions as described herein, the environment should be considered to be nonaggressive to determine the longterm strength. However, the backfill should be tested prior to use to verify that it is nonaggressive.

4. Requirements for Class 1 Walls and Slopes to Determine T_{al}

RF_{ID} and RF_{CR} shall be determined from product specific data for all geosynthetics used in Class 1 walls and slopes. See submission requirements for installation damage and creep data provided in this document. The product specific data for these reduction factors shall be interpreted/extrapolated in accordance with Appendices A, B, and C. RF_D shall be determined from long-term product specific data, or a default value may be used as described below. See submission requirements for durability data provided herein. Long-term product specific data for RF_D should be interpreted in accordance with Appendix D. If adequate long-term durability data is not available, a default reduction factor for RF_D may be used if the environment is nonaggressive and if the product meets the minimum polymer and physical property requirements provided in Table 1. In this case, a default value for RF_D of 1.3 may be used for PET, HDPE, and PP geosynthetics.

Note 3: *The default value for RF_D of 1.3, which can be used for products that meet the minimum property requirements in Table 1, was determined based on FHWA (1997) and Elias, et. al. (1997) and in consideration of the relatively cool climate which exists in the state of Washington, where effective design temperatures are always less than 20° C (68° F) and are likely to be on the order of 10° C (50° F) or less. A higher default value of 1.5 for products which meet the property requirements in Table 1 may be desirable for more temperate climates which still meet the requirements for a nonaggressive environment, especially to address polyolefin oxidative degradation, as the potential for this type of degradation, even for products which meet the property requirements in Table 1, becomes more uncertain at higher temperatures due to the lack of protocols which can accurately identify the amount or effectiveness of end use antioxidants present. The UV resistance criteria provided in Table 1 only provides a rough indication of the effectiveness of end use antioxidants in polyolefins (see additional commentary following Table 1).*

If the environment is identified as aggressive due to the chemical regime or due to temperature, or if the geosynthetic product does not meet the requirements in Table 1, default reduction factors may not be used for RF_D. For chemically aggressive or elevated temperature environments, RF_D must be determined based on long-term product specific data for an environment that is as or more aggressive than the project specific environment in question. Aggressive environments need to be addressed in the product submittal only if specifically requested by the contracting agency or the geosynthetic supplier. Once the appropriate reduction factors are established, the long-term geosynthetic strength is determined using Equations 1 and 2, or as determined in Note 7 of Appendix B.

5. Requirements for Class 2 Walls and Slopes to Determine T_{al}

The strength reduction factors RF_{ID}, RF_{CR}, and RF_D may be determined based on product specific data as described for Class 1 walls and slopes. If long-term product specific data is not available, the environment is nonaggressive, and the product meets the minimum requirements provided in Table 1, a default value of 7 may be used for RF to determine the long-term strength of the product in accordance with Equations 1 and 2.

6. Minimum Polymer and Physical Property Requirements to Allow Use of Default Reduction Factors for RF and RF_D in Nonaggressive Environments

If a default reduction factor is to be used, geosynthetic products that are likely to have good resistance to installation stresses and to long-term chemical degradation are required to minimize the risk of significant long-term degradation. The physical and polymer material requirements provided in Table 1 must be met if detailed product specific data as described in Appendices A, B, C and/or D is not obtained. Polymer materials not meeting the requirements in Table 1 could be used if detailed product specific data extrapolated to the design life intended for the structure (see Appendices A, B, C and D) is provided.

Table 1

Minimum Requirements for Geosynthetic Products to Allow Use of Default Reduction Factor for Long-Term Degradation.

Polymer Type	Property	Test Method	Criteria to Allow Use of Default RF*
PP and HDPE	UV Oxidation Resistance	ASTM D4355	Min. 70% strength retained after 500 hrs in weatherometer
PET	UV Oxidation Resistance	ASTM D4355	Min. 50% strength retained after 500 hrs in weatherometer if geosynthetic will be buried within one week, 70% if left exposed for more than one week.
PP and HDPE	Thermo- Oxidation Resistance	ENV ISO 13438:1999, Method A (PP) or B (HDPE)	Min. 50% strength retained after 28 days (PP) or 56 days (HDPE)
PET	Hydrolysis Resistance	Inherent Viscosity Method (ASTM D4603 and GRI Test Method GG8), or Determine Directly Using Gel Permeation Chromatography	Min. Number Average Molecular Weight of 25,000
PET	Hydrolysis Resistance	GRI Test Method GG7	Max. Carboxyl End Group Content of 30
All Polymers	Survivability	[1]Weight per Unit Area (ASTM D5261)	[1]Min. 270 g/m^2
All Polymers	% Post-Consumer Recycled Material by Weight	Certification of Materials Used	Maximum of 0%

*Polymers not meeting these requirements may be used if product specific test results obtained and analyzed in accordance with Appendices A, B, C, and D are provided.

[1]Alternatively, a default $RF_D = 1.3$ may be used if product specific installation damage testing is performed and it is determined that RF_{ID} is 1.7 or less, and if the other requirements in Table 1 are met.

Note 4: *The requirements provided in Table 1 utilize currently available index tests and are consistent with current AASHTO design specifications (AASHTO, 2004, 2002), with the exception of the oven aging test, which is a new requirement. These index tests can provide an approximate measure of relative resistance to long-term chemical degradation of geosynthetics. Values selected as "minimum" criteria to allow use without additional long-term testing are based on values for such properties reported in the literature. These values are considered indicative of good long-term performance or represent a readily available current standard within the industry that signifies that a product has been enhanced for long-term environmental exposure.*

Though UV resistance (i.e., photo-oxidation resistance) is not a direct indicator of thermo-oxidation resistance for polypropylene and polyethylene, both photo-oxidation and thermo-oxidation are oxidation reactions, and many UV inhibitors also provide at least some long-term resistance to thermo-oxidation (Van Zanten, 1986). Regarding polyester requirements, maximum resistance to strength losses due to hydrolysis can be obtained by formulating to high molecular weights (> 25,000) and low (i.e., < 30) Carboxyl End Group numbers (Risseeuw and Schmidt, 1990; FHWA, 1997; and Elias, et. al., 1997).

Minimum weight/area requirements are based on the results of numerous exhumations of geosynthetics, in which it was determined that installation damage was minimal for products with a minimum of weight of 270 g/m^2 (8 oz/yd^2) (Koerner and Koerner, 1990; Allen, 1991). This roughly corresponds to a Class 1 geotextile as specified in AASHTO M-288.

There is little long-term history or even laboratory data regarding the durability of geosynthetics containing a significant percentage of recycled material. Therefore, their potential long-term performance is unknown, and it is recommended that long-term data be obtained for products with significant recycled material to verify their performance before using them.

Quality Assurance Requirements for Products that have been Through Initial Acceptance

1. Data Verification Requirements

   The following information about each product shall be submitted for verification purposes:

   a. Geosynthetic type and structure.

   b. Spacing and dimensions of geogrid elements. The receiving laboratory should verify these dimensions upon receipt of the sample(s) using hand measurement techniques. This is especially critical for strength determination based on a single or limited number of ribs in the specimens tested.

   c. Polymer(s) used for fibers, ribs, etc.

   d. Polymer(s) used for coating, if present.

   e. Roll size (length, width, and area).

   f. Typical lot size.

   g. Polymer source(s) used for product.

   h. For HDPE and PP, primary resin ASTM type, class, grade, and category (for HDPE use ASTM D-1248, and for PP use ASTM D-4101).

   j. % post-consumer recycled material by weight.

   k. Minimum weight per unit area for product (ASTM D5261).

   l. MARV for ultimate wide width tensile strength (ASTM D4595 or ASTM D6637).

2. Quality Assurance (QA) Testing Approach

   Results from index and performance tests will be compared to baseline index or performance test results obtained for initial product acceptance purposes. If the QA test results are within acceptable tolerances relative to the baseline results, the acceptance status of the product or product line will be maintained (e.g., the product will continue to be listed in the QPL). Re-testing must be done if there is any change in the product. If changes in the product identified through product data verification as described in part 1 above or identified through other means are such that the validity of the last complete assessment for initial acceptance is too questionable, a complete assessment of the product or product line in accordance with this Standard Practice instead of just a QA evaluation may be required by the approval authority to maintain acceptance status.

3. Quality Assurance (QA) Sampling

   All materials and/or products to be tested will be furnished by the manufacturer/supplier at no cost to the review/approval authority. Samples will be selected for testing by Department of Transportation personnel or designated parties. As a minimum, the following shall be obtained:

   - a geosynthetic product sample of sufficient size to accommodate all of the specified testing;
   - information showing the manufacturer's name and description of product: (style, brand name, etc.);
   - product roll and lot number;
   - a sample of the polymer component(s) in sufficient quantity to conduct the specified polymer tests.

   All samples for the specified QA testing shall be from the same roll of material for each product tested.

4. Quality Assurance (QA) Testing

   Short-term ultimate tensile strength test results, and QA test results to verify the correctness of RF_{ID}, RF_{CR}, and RF_D determined from initial product acceptance testing, shall be obtained. Short-term tensile strength shall be determined in accordance with ASTM D4595 for geotextiles and ASTM D6637 for geogrids. QA testing required to verify the correctness of RF_{ID}, RF_{CR}, and RF_D determined from initial product acceptance testing is as follows:

   A. Installation Damage Testing

      For installation damage evaluation, a field exposure trial conducted in accordance with Appendix A shall be conducted for the product in the product line with the highest RF_{ID} from the initial product acceptance testing using the soil with a d_{50} size which is equal to or larger than a d_{50} size of 4.75 mm, or other d_{50} size as determined by the approval authority, and the aggregate shall have a maximum LA Wear percent loss of 35 percent. The d_{50} size, angularity, and durability of the selected backfill should be consistent with the d_{50} size used for initial product acceptance (preferably, the same material should be used for both the acceptance testing and the quality assurance testing, if possible). Alternatively, reduced scale laboratory installation

damage tests conducted in accordance with ISO/DIS 10722-1 may be used. In this case, these laboratory installation damage tests must also be conducted during initial product acceptance testing to establish a baseline value. The ultimate tensile strength of the lot or roll of material used in the installation damage testing obtained in accordance with ASTM D4595 or ASTM D6637 using the multi-rib procedure (or ISO 10319 if ISO/DIS 10722-1 is used) shall be obtained to normalize the installation damage test results in accordance with Appendix A. If it was determined during the initial product acceptance testing, for coated geogrids, that the installation damage factor was not a function of product weight or tensile strength, the coating weight shall also be evaluated. In this case, the mass/unit area of the sample tested shall be determined in accordance with ASTM D5261. The coating weight can then be established using the lot specific mass/unit area of the uncoated product from product manufacturer Quality Control (QC) data. The information required in part 2 of "Data Requirements for Initial Product Acceptance" as it applies to the QA testing shall be obtained and included in the test report for this QA testing.

B. Creep Testing

For creep rupture evaluation, a minimum of three creep-rupture points shall be obtained using SIM (ASTM D6992) or conventional ASTM D5262 tests (for which elevated test temperatures may be employed to accelerate creep – see Appendix B) at a load level established at the time of initial product acceptance testing that corresponds to a minimum rupture time of 100,000 hours at the reference temperature. If elevated temperature conventional creep testing using ASTM D5262 is performed, the shift factors obtained from the conventional creep testing for the temperatures used in the QA testing conducted for initial product acceptance shall be used to extrapolate the test data to the reference temperature. A fourth SIM test (or conventional ASTM D5262 test conducted at the reference temperature) shall be performed at a load level established at the time of initial product acceptance testing that corresponds to a minimum rupture time of 500 hours at the reference temperature. Note that if initial product acceptance was based on Appendix C (creep strain testing), creep strain measurements must be obtained, and the load levels selected for the QA creep testing should be equal to the load level that results in reaching a specified strain using the creep data used to establish the initial product acceptance envelope (see Appendix C, Section C.2.2) at 500 hours (one test) and 50,000 hours (three tests), at the reference temperature. The strain level used for this purpose shall preferably be 5 to 10% or more, and be as close to the instability limit strain as possible while catching as many of the creep curves as possible. See Section 5(d) for additional explanation.

For creep stiffness evaluation, if the product acceptance testing conducted indicates that the creep is log linear at the low strain levels tested, short-term (1,000 second) ramp and hold (R+H) tests as described in ASTM D6992 may be used and extrapolated to 1,000 hours in lieu of 1,000 hour creep tests. A minimum of two R+H tests shall be conducted for one product in the product line at the load level in which 2 percent strain at 1,000 hours was achieved in the product acceptance testing. If the product acceptance testing indicates that the creep is not log linear at the low strain level tested, then a minimum of two full 1,000 hour creep tests must be conducted at that load level. These tests shall be conducted on the same width specimens as was used for the product acceptance creep stiffness testing.

If SIM is used for this creep rupture testing, it shall have been demonstrated for the initial acceptance testing that the reduced specimen width typically used for SIM testing does not have a significant effect on the creep rupture results, and provided that the validity of SIM for the product through comparison of SIM data with "conventional" creep rupture data was established for the initial product acceptance testing.

The ultimate tensile strength of the lot or roll of material used in the creep testing obtained in accordance with ASTM D4595 or ASTM D6637 shall be obtained to normalize the creep rupture loads in accordance with Appendix B or C. The information required in part 3 of "Data Requirements for Initial Product Acceptance" as it applies to the QA testing shall be obtained and included in the test report for this QA testing.

Note 5: *If "conventional" creep testing is performed for QA purposes, it is assumed that the product has not changed relative to what was tested for initial product acceptance purposes, thereby allowing the assumption to be made that the shift factors obtained through the initial product acceptance testing are valid for the QA testing. Requiring new "conventional" creep test shift factors to be re-established would result in the need to fully repeat the test program for the initial product acceptance, which would not be practical for QA purposes. Regarding the fourth creep test data point, the requirement to use only data obtained at the reference temperature if "conventional" creep testing is performed provides a second check that eliminates the need for this shift factor assumption and any inaccuracies associated with that assumption.*

C. Durability Testing

If only index durability testing was conducted to allow use of a default value for RF_D for the initial product acceptance testing, only index durability testing need be conducted for QA purposes. In this case, durability testing for QA purposes shall consist of the determination of molecular weight based on GRI-GG7 and carboxyl end group content based on GRI-GG8 for polyesters, UV resistance based on ASTM D4355 for polyolefins and PET's), and an oven aging exposure test per ENV ISO 13438:1999 for polyolefin geosynthetics. Regarding the oven aging test, control and post-exposure specimens shall be tested for tensile properties (ASTM D4595 or ASTM D6637). The results of this oven aging testing will be used only to compare a product with itself, and to meet the minimum requirements in Table 1. In addition, geogrid brittleness shall be evaluated per WSDOT Test Method T 926.

If long-term performance durability testing was conducted to justify the use of a lower RF_D or to justify use in aggressive environments for initial product acceptance, a minimum of five specimens shall be exposed to the most aggressive environment used in the initial product acceptance testing at the highest temperature tested, for a minimum of 2,000 hours. These specimens, and unexposed specimens from the same roll of material, shall be tested for tensile properties (ASTM D4595 or ASTM D6637). In addition, for polyolefins, either oxidative induction time per ASTM D 3895 or high pressure oxidative induction time per ASTM D 5885 shall be conducted for each specimen tested (before and after exposure), and for PET's, molecular weight (ASTM D4603 and GRI:GG8) and specimen weight per unit area (ASTM D5261) shall be conducted for each specimen tested (before and after exposure).

5. Quality Assurance (QA) Criteria for Comparison to Initial Product Acceptance Test Results

The acceptability of the QA test results to allow a product or product line to maintain its prior acceptance status is established based on the statistical significance, or lack thereof, of the difference between the QA test results and the initial product acceptance test results. The criteria and methods for determining the statistical significance between the QA and initial product acceptance test results are as follows:

A. Short-term Index Tensile Testing

For wide width tensile strength, the mean of the test results for the sample for each product tested shall be greater than or equal to the MARV reported for the product.

B. Installation Damage Testing

If the mean of the average strength of the sample after damage as a percent of the undamaged strength is less than the average value obtained for the same product and condition during the product acceptance phase, the maximum difference between the two means shall be no greater that what is defined as statistically insignificant based on a one-sided student-t distribution at a level of significance of 0.05. In this case, t is determined as follows:

$$t_{\alpha/2,n_1+n_2-2} = \frac{\left(\overline{P_1}-\overline{P_2}\right)-\delta}{\sqrt{(n_1-1)s_1^2+(n_2-1)s_2^2}}\sqrt{\frac{n_1 n_2(n_1+n_2-2)}{(n_1+n_2)}} \quad (3)$$

where,

$t_{\alpha/2,n1+n2-2}$	=	value of the t-distribution for the installation damage samples
P_1	=	the mean of the strength retained after installation damage (i.e., T_{dam}/T_{lot}) obtained for initial product acceptance
P_2	=	the mean of the strength retained after installation damage (i.e., T_{dam}/T_{lot}) obtained for QA testing
δ	=	the difference in the means for the populations corresponding to the sample means P_1 and P_2 (assumed equal to zero for this test)
s_1	=	the standard deviation corresponding to P_1
s_2	=	the standard deviation corresponding to P_2
n_1	=	the number of data points corresponding to P_1
n_2	=	the number of data points corresponding to P_2

$t_{\alpha/2,n1+n2-2}$ calculated using Equation 3 shall be no greater than t determined from the applicable Student t table (or from the Microsoft EXCEL function TINV(α,n-2)) at α = 0.05 and n1+n2-2 degrees of freedom. If this is not true, the difference between P_1 and P_2 is determined to be statistically significant, and $P_1 > P_2$, two additional samples from the same installation condition shall be tested and P_2 recalculated and statistically compared to P_1. If the QA test results are still too low, a full installation damage study for initial product acceptance must be completed in accordance with Appendix A, and new values of RF_{ID} established.

C. Creep Rupture Testing for Prediction of Creep Limit

For creep evaluation, the four creep-rupture points, one at a load level that results in an approximate rupture time, after time shifting, of 500 hours and three at a load level that results in an approximate rupture time, after time shifting, of 100,000 hours on the rupture envelope obtained for initial product acceptance purposes shall be compared to the creep data obtained for initial product acceptance purposes. The log of the rupture time for each of these four rupture points shall be equal to or greater than the 95% lower prediction limit of the variable, log time, established by the Student's **t** test of the original product acceptance data set.

The prediction limit for the regression performed for initial product acceptance is given by (Wadsworth, 1998):

$$\log t_L = \log t_{reg} - \left[t_{\alpha/2,n-2} \sqrt{1 + \frac{1}{n} + \frac{\left(P - \overline{P}\right)^2}{\sum \left(P_i - \overline{P}\right)^2}} \right] \times \sigma \tag{4}$$

and

$$\sigma = \sqrt{\frac{\sum \left[\log t_i - \overline{\log t}\right]^2 - \frac{\left\{\sum \left[\left(P_i - \overline{P}\right)\left(\log t_i - \overline{\log t}\right)\right]\right\}^2}{\sum \left(P_i - \overline{P}\right)^2}}{n-2}} \tag{5}$$

where:

$\log t_L$	=	lower bound prediction limit
t_{reg}	=	time corresponding to the load level from the initial product acceptance creep rupture envelope at which QA creep tests were performed (e.g., at 500 and 100,000 hrs after time shifting)
$t_{\alpha/2,n-2}$	=	value of the **t** distribution determined from applicable Student **t** table (or from the Microsoft EXCEL function TINV(α,n-2)) at $\alpha/2 = 0.05$ and n-2 degrees of freedom (this corresponds to the 95% one-sided prediction limit)
n	=	the number of rupture or allowable run-out points in the original test sample (i.e., for initial product acceptance)
P	=	load level obtained at t_{reg} from the regression line developed from the initial product acceptance testing
P	=	the mean rupture load level for the original test sample (i.e., all rupture or run-out points used in the regression to establish the rupture envelope for initial product acceptance)
P_i	=	the rupture load level of the i'th point for the rupture points used in the regression for establishing the rupture envelope for initial product acceptance
$\overline{\log t}$	=	the mean of the log of the rupture time for the original test sample (i.e., all rupture or run-out points used in the regression to establish the rupture envelope for initial product acceptance)
t_i	=	the rupture time of the i'th point for the rupture points used in the regression for establishing the rupture envelope for initial product acceptance

The comparison between the QA test results and the initial product acceptance test results is illustrated conceptually in Figure 1. Once log t_L has been determined at each specified load level, compare this value to the log rupture time (i.e., log t_{QA}) obtained for each QA creep rupture test at the specified load level (e.g., 500 and 100,000 hours). If log t_{QA} < log t_L for any of the QA creep rupture test results, perform two additional tests at the load level P for the specified t_{reg} where this QA criteria was not met and compare those results to log t_L. If for these two additional tests this criterion is not met, perform adequate additional creep rupture testing to establish a new rupture envelope for the product in accordance with initial product acceptance requirements (Appendix B). This new rupture envelope will form the baseline for any future QA testing.

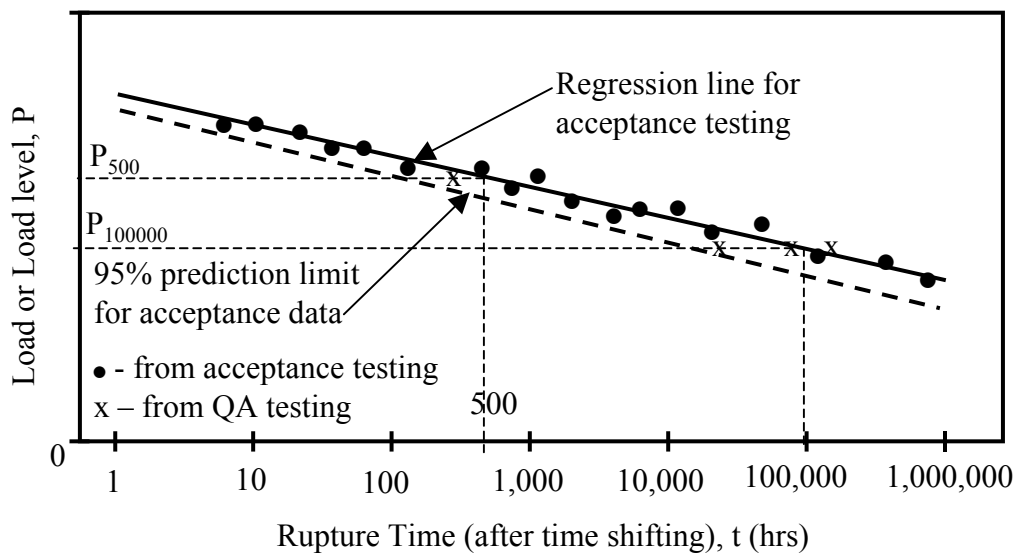

Figure 1. Conceptual illustration of the comparison of QA creep rupture test results to initial product acceptance creep rupture test results.

D. Creep Strain Testing for Prediction of Creep Limit

The comparison between the creep data obtained for the initial product acceptance testing and the QA creep data shall be performed at a specified strain. The specified strain will depend on the strains observed in all of the creep tests (initial product acceptance and QA). Select a strain that will intercept all of the creep curves as much as possible. Preferably, the strain level should be approximately 5 to 10% or more, and as close to the instability limit strain as possible. Where the selected strain level intersects each creep curve, determine the time required to reach the specified strain. Plot the load level as a function of the logarithm of time to reach the specified strain for the initial product acceptance data, and perform a regression for this data set. The log times to the specified strain level for the QA creep data shall be determined at a load level that corresponds to 500 hours and 50,000 hours on the initial product acceptance creep envelope. This is illustrated conceptually in Figure 2. The log of the time to reach the same specified strain for each of the four QA creep data points shall be equal to or greater than the 95% lower prediction limit of the variable, log time, established by the Student's **t** test of the original product acceptance data set, using Equations 4 and 5 (see part "c" above).

Once log t_L has been determined at each specified load level, compare this value to the log time to reach the specified strain (i.e., log t_{QA}) obtained for each QA creep test at the specified load level (e.g., 500 and 50,000 hours). If log t_{QA} < log t_L for any of the QA creep rupture test results, perform two additional tests at the load level P for the specified t_{reg} where this QA criteria was not met and compare those results to log t_L. If for these two additional tests this criterion is not met, perform adequate additional creep testing to establish a new creep stiffness curve for the product in accordance with initial product acceptance requirements (Appendix C). This new creep stiffness curve will form the baseline for any future QA testing.

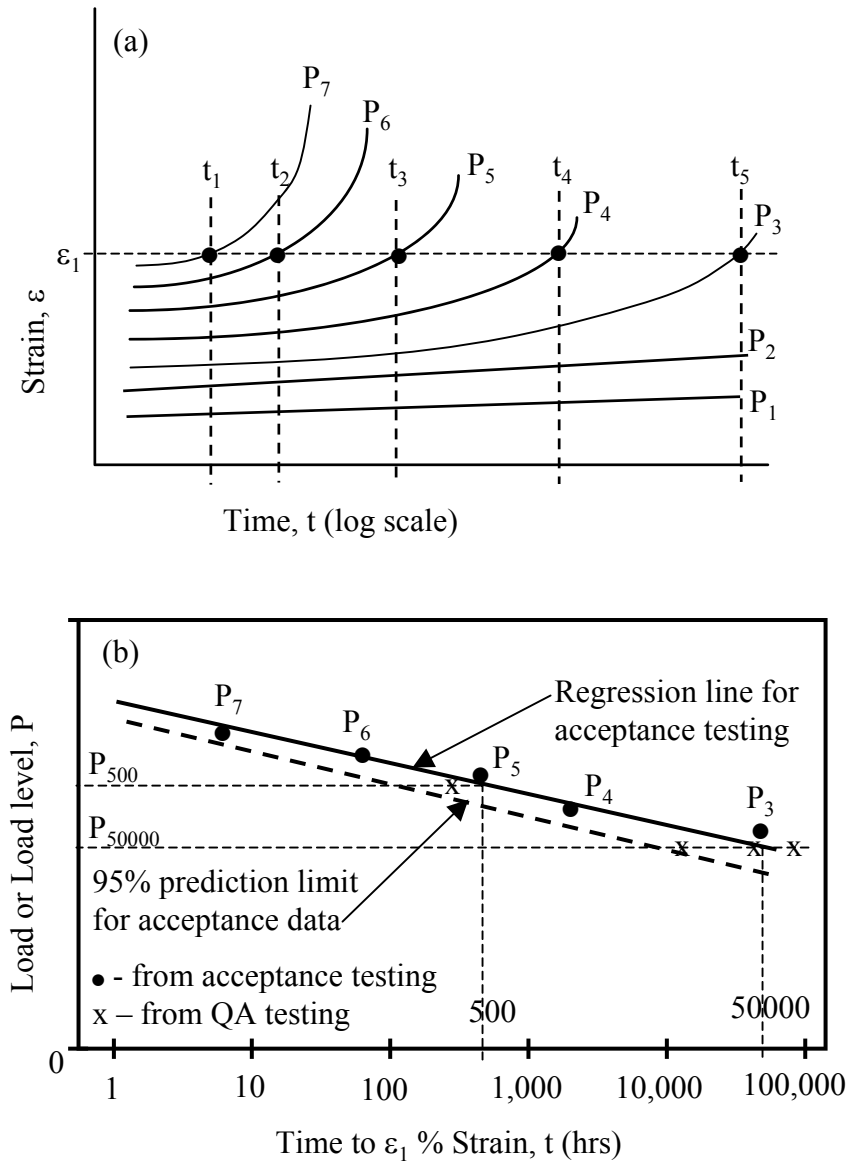

Figure 2. Conceptual illustration of the comparison of QA creep strain test results to initial product acceptance creep strain test results (a) creep strain curves, and (b) envelope of time to the specified strain.

E. Assessment of the Creep Stiffness at Low Strain

The comparison between the creep data obtained for the initial product acceptance testing and the QA creep data shall be performed at a specified strain, in this case typically 2%. Where the selected strain level intersects each creep curve, determine the time required to reach the specified strain. Plot the load level as a function of the logarithm of time to reach the specified strain for the initial product acceptance data, and perform a regression for this data set. The log times to the specified strain level for the QA creep data shall be determined at a load level that corresponds to 1,000 hours on the initial product acceptance creep curve. The estimated time to reach the same specified strain for each of the two QA creep data points shall be equal to or greater than the 95% lower prediction limit of the variable, log time, established by the Student's **t** test of the original product acceptance data set, using Equations 4 and 5 (see part "c" above).

Once log t_L has been determined at the specified load level, compare this value to the log time to reach the specified strain (i.e., log t_{QA}) obtained for each QA creep test at the specified load level (e.g., 1,000 hours). If log t_{QA} < log t_L for any of the QA creep rupture test results, perform two additional tests at the same load level P for the specified strain and compare those results to log t_L. If for these two additional tests this criterion is not met, perform adequate additional creep testing to establish a new low strain creep stiffness value for the product in accordance with initial product acceptance requirements (Appendix C). This new low strain creep stiffness value will form the baseline for any future QA testing.

F. Durability Testing

For UV resistance (all polymers), molecular weight and CEG (PET only), and oven aging (PP and HDPE), the QA test results shall meet the minimum requirements provided in Table 1. For the oven aging tests (polyolefins only), compare the tensile strength retained (i.e., strength after oven exposure divided by the strength of the control specimens) to the strength observed during initial product acceptance testing. The maximum difference between the values of the changes shall be no greater that what is defined as statistically insignificant based on a one-sided student-**t** distribution at a level of significance of 0.05, as determined using Equation 3. In this case, P_1 and P_2 are defined as the strength retained after oven aging.

$t_{\alpha/2,n1+n2-2}$ calculated using Equation 3 shall be no greater than ***t*** determined from the applicable Student t table (or from the Microsoft EXCEL function TINV(α,n-2)) at α/2 = 0.05 and n_1+n_2-2 degrees of freedom. If this is not true, and the difference between P_1 and P_2 is determined to be statistically significant, and $P_1 > P_2$, two additional samples from the same installation condition shall be tested and recalculated and statistically compared to P_1. If the QA test results are still unacceptable, or if the product loses more than 50% of its tensile strength during the QA test, a more complete investigation performed in accordance with Appendix D shall be performed.

If long-term performance durability testing was conducted to justify the use of a lower RF_D or to justify use in aggressive environments for initial product acceptance, the statistical methodology and criteria provided above for index oven aging (i.e., that there be no statistically significant difference between the initial product acceptance test results and the QA test results at a level of significance of 0.05) shall be applied to the oxidation or hydrolysis performance test results at the maximum exposure time and environmental conditions used for the QA testing.

References

AASHTO, 2002, *Standard Specifications for Highway Bridges,* American Association of State Highway and Transportation Officials, Seventeenth Edition, Washington, D.C., USA.

AASHTO, 2004, *LRFD Bridge Design Specifications, with Interims*, American Association of State Highway and Transportation Officials, Third Edition, Washington, D.C., USA.

Allen, T.M., 1991, "Determination of Long-Term Strength of Geosynthetics: a State-of-the-Art Review", *Proceedings of Geosynthetics '91*, Atlanta, GA, USA, Vol. 1, pp. 351-379.

Elias, V., 2000, Corrosion/Degradation of Soil Reinforcements for Mechanically Stabilized Earth Walls and Reinforced Soil Slopes, FHWA-NHI-00-044, Federal Highway Administration, Washington, D.C.

Elias, V., DiMaggio, J., and DiMillio, A., 1997, "FHWA Technical Note on the Degradation-Reduction Factors for Geosynthetics," *Geotechnical Fabrics Report*, Vol. 15, No. 6, pp. 24-26.

Federal Highway Administration (FHWA), 1997, "Degradation Reduction Factors for Geosynthetics," *Federal Highway Administration Geotechnology Technical Note*.

Geosynthetic Research Institute, 1998, "Carboxyl End Group Content of Polyethylene Terephthalate (PET) Yarns," GRI Test Method GG7.

Geosynthetic Research Institute, 1998, "Determination of the Number Average Molecular Weight of Polyethylene Terephthalate (PET) Yarns based on a Relative Viscosity Value," GRI Test Method GG8.

Koerner, G. R., Hsuan, Y. G., and Hart, M., 2001, *Field Monitoring and Laboratory Study of Geosynthetics in Reinforcement Applications*, GRI Report #26, Geosynthetic Research Institute, Drexel University, Philadelphia, PA, USA, 116 pp.

Koerner, G. R., Hsuan, Y. G., and Koerner, R. M., 2002, "Field Measurements of Alkalinity (pH) Levels Behind Segmental Retaining Walls, or SRW's," *7th International Geosynthetics Conference*, Nice, France, Delmas, Gourc, and Girard, ed's, Vol. 4, pp. 1443-1446.

Koerner, R. M. and Koerner, G. R., 1990, "A quantification and assessment of installation damage to geotextiles." *Proc. Fourth Intl. Conf. on Geotextiles, Geomembranes, and Related Products,* The Hague, pp. 597-602.

Risseeuw, P, and Schmidt, H. M., 1990, "Hydrolysis of HT Polyester Yarns at Moderate Temperatures," *Proceedings of the Fourth International Conference on Geotextiles, Geomembranes, and Related Products*, The Hague, pp. 691-696.

Sprague, C. J., Allen, S., and Thornton, S., 1999, "Installation Damage Testing, Sensitivity Assessment and Derivation of RF_{ID}," Geosynthetics '99, Boston, MA, USA, pp. 1123-1132.

Van Zanten, V., ed., 1986, *Geotextiles and Geomembranes in Civil Engineering,* Wiley-Halsted.

Wadsworth, H., 1998, *Handbook of Statistical Methods for Engineers and Scientists*, McGraw-Hill, 688 pp.

WSDOT Test Method No. 925, Appendix A

Product Specific Testing and Data Interpretation Requirements to Determine RF_{ID} for Geosynthetic Reinforcements

The effect of installation damage on geosynthetic reinforcement strength and deformation shall be determined from the results of full scale installation damage tests in accordance with ASTM D5818, except as modified herein:

1. The locations of specimens within the sample to be removed for testing after installation and exhumation should be predetermined before installation through the use of a template. The specimens shall be large enough to be used for wide width testing (ASTM D4595 for geotextiles or ASTM D6637, specimen preparation method B or C for geogrids). A minimum of 20 specimen locations should be identified using a template for each installation condition evaluated. No specimen should be located closer than 150 mm (6 in.) from the edge of the sample. The locations of the specimens should be evenly distributed throughout the sample. Each specimen should be consecutively numbered before installation. The sample size shall be large enough to obtain the minimum number of specimens (i.e., 20) of the required dimensions.
2. Place and compact 150 mm (6 in.) or more of soil (same soil as used to cover the geosynthetic) on a flat, level, relatively incompressible subgrade. The compacted layer shall simulate the roughness and compressibility of the backfill conditions in which the geosynthetic layer is likely to be placed in full scale structures.
3. Place the geosynthetic on top of the compacted soil pad. The geosynthetic shall pulled taught with no wrinkles or folds. It may be necessary to pin the corners of the geosynthetic to maintain its position as soil is placed over the geosynthetic.
4. Place and compact 150 to 200 mm (6 to 8 in.) of backfill material (or other previously agreed upon depth to simulate actual installation conditions likely to be encountered) over the geosynthetic using the type of spreading and compacting equipment that is likely to be used in full scale structures. The backfill should be compacted to a minimum of 90 percent of Modified Proctor per ASTM D1557, or to another compaction standard typically used for geosynthetic reinforced structures if agreed upon in advance by the approval authority.
5. The sample shall be removed from the compacted fill in a way that minimizes damage to the sample caused by the excavation process. The sample removal process is generally described in ASTM D5818. In addition to the removal methods described therein, a lifting plate may be placed below the compacted soil pad below the geosynthetic layer as described in Sprague and Allen (2003) to facilitate easy removal of the soil above the geosynthetic.
6. The first nine prenumbered specimens identified on the exhumed sample shall be selected for testing. If any of these specimens were damaged due to the exhumation process, that specimen(s) shall be skipped, and the next consecutively numbered specimen(s) shall be selected for testing. If the coefficient of variation for the tensile test results of these first nine prenumbered specimens is greater than 5%, the required number of specimens shall be recomputed using the one-sided student t distribution as required by ASTM D4595 or ASTM D6637. The additional specimens shall be selected from the next consecutively numbered specimens.

7. Samples subjected to installation damage shall be tested for tensile strength and deformation characteristics in accordance with ASTM D4595, or ASTM D6637. The number of specimens tested should be in accordance with ASTM D4595 or D6637. Single rib tests such as GRI:GG1 shall not be used for installation damage evaluation, as it is difficult to assess the effect of severed ribs on the strength and stiffness of damaged materials. Test results from damaged specimens shall be compared to tensile test results obtained from undamaged (i.e., not exposed to installation conditions) specimens taken from the same lot, and preferably the same roll, of material as the damaged specimens.

8. The installation damage reduction factor RF_{ID} is then determined as follows:

$$RF_{ID} = \frac{T_{lot}}{T_{dam}} \qquad \text{(A-1)}$$

where, Tlot is the average lot specific tensile strength before exposure to installation, and T_{dam} is the average lot specific tensile strength after installation. In no case should RFID be less than 1.1.

9. To select an appropriate reduction factor for design, the project site installation conditions must be related to the installation test conditions. To relate the installation damage test conditions to the actual site conditions, primary consideration will be given to the backfill characteristics (d50 particle size, potential for oversize material, particle angularity, and overall gradation), and to a lesser degree the method of spreading the backfill over the geosynthetic, the type of compaction equipment, and initial backfill lift thickness over the geosynthetic, provided that the initial lift thickness is 150 mm (6 in.) or more. The actual installation conditions used in the test must be clearly stated in the test report, specifically identifying any deviations from typical geosynthetic reinforcement installation practices in full scale structures, and the impact those deviations may have on the values of RF_{ID} determined. Typical installation conditions, for the purposes of this protocol, are generally described as follows:

   - The geosynthetic is placed on a subgrade prepared as described in step 2.
   - Backfill material is placed and spread on the geosynthetic using full scale spreading and compaction equipment commonly used in wall or reinforced slope construction (e.g., loaded dump trucks, dozers such as a D-6 or larger, etc.).
   - Backfill is compacted using a full scale vibratory drum roller (i.e., one that someone can drive, not a smaller walk behind unit typically used to compact near the face of a wall to prevent distortion of facing elements during compaction).

   If it is not possible to conduct the installation damage test in a way that fully simulates these “typical” installation conditions (i.e., installation conditions in the test are less severe than the conditions described above, for example, use lighter equipment, less movement of soil over the geosynthetic as the backfill is spread, etc.), data must be provided that demonstrates the effect the use of these less severe installation conditions would have on RF_{ID}.

10. If the installation damage test is conducted for a specific project, the actual backfill material planned for use in the geosynthetic structure should be used for the test. If the purpose of the installation damage testing is to generate RF_{ID} values for general use for future projects (i.e., the testing is not intended to be project specific), a range of soil backfill gradations/types should be used in the testing. The range of backfill materials selected should permit interpolation as needed to match the specific soil to be used as reinforced soil backfill. In general, the backfill materials tested should range from soil classified as a sand to coarse gravel (e.g., d_{50} sizes ranging from 0.5 to 25 mm). The backfill materials selected should be angular to subangular and shall be durable. The coarse sand and gravel portions of the backfill material should have a Los Angeles Wear (LA Wear) percent loss after 500 revolutions (AASHTO T96) of no more than 35 percent. Additional installation damage tests may be conducted with a less durable backfill material, at the discretion of the manufacturer and the approval authority. If tests are conducted using a backfill material that does not meet the LA Wear requirement stated above, the condition of the backfill shall be evaluated for changes in angularity and gradation after each use. If changes in these two parameters are observed, the aggregate shall be immediately replaced with fresh material. This gradation/angularity evaluation should be conducted periodically even for more durable backfill material. Note that if the backfill materials available in the region for which the approval authority has jurisdiction consistently cannot meet the maximum LA Wear requirement of 35 percent loss, a less durable aggregate may be used for all the backfill materials tested, at the discretion of the approval authority.

11. Values of RF_{ID} may be estimated for a specified soil gradation using interpolation as illustrated in Figure A-1. The d_{50} size of the soil has commonly been used for interpolating between soil backfills for determination of RF_{ID}. Other combinations of soil particle size and factors that account for soil angularity and durability may be considered for this correlation and interpolation procedure per mutual agreement between the geosynthetic manufacturer and the approval authority. The range of backfill gradations, angularity, and durability will affect the range of applicability of the RF_{ID} values obtained from the testing. RF_{ID} values should not be extrapolated beyond the coarsest backfill soil tested.

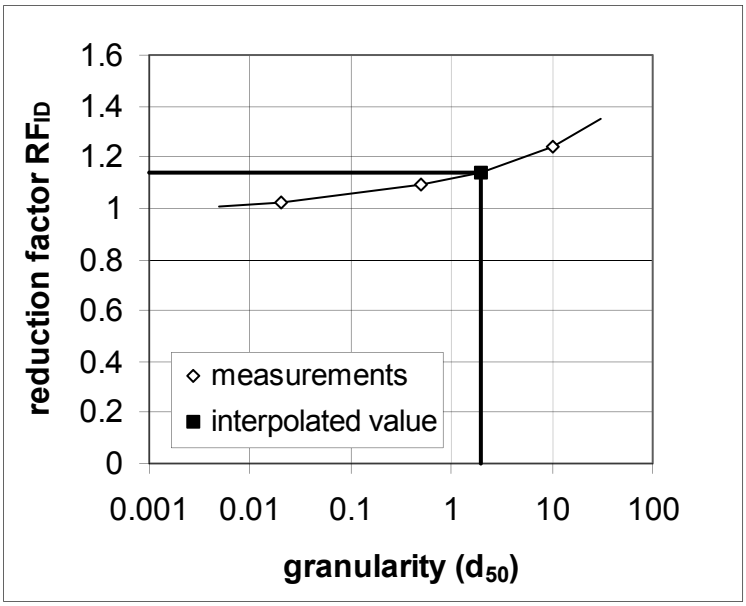

Figure A-1. Interpolation of RF_{ID} for a soil with d_{50} = 2 mm from installation damage data obtained for soils with d_{50} = 0.02, 0.5 and 10 mm (Note: 1in. = 0.0254 mm).

12. Not all products within a product line need to be tested for installation damage. As a minimum, the weakest (lightest) and strongest (heaviest) products within the product line, plus at least one additional intermediate strength (weight) product should be used to characterize RF_{ID} for the product line (note: if the strongest product within the product line is not tested, all heavier products will be assumed to have the same value of RF_{ID} as the heaviest product tested). An example of this interpolation procedure is provided in Figure 2. For coated polyester geogrids, the coating thickness or coating mass per unit area relative to the mass per unit area of the product should be considered for the purpose of correlating RF_{ID} between products rather than product unit weight or tensile strength alone. It is acceptable to obtain the coating mass/unit area through the use of manufacturer Quality Control (QC) data on the lot specific mass/unit area of the uncoated material (i.e., the weight of the "greige-good"), subtracting that mass/unit area from the total mass/unit area of the finished product. Therefore, the total mass per unit area of the sample used in the installation damage testing should be obtained in accordance with ASTM D5261.

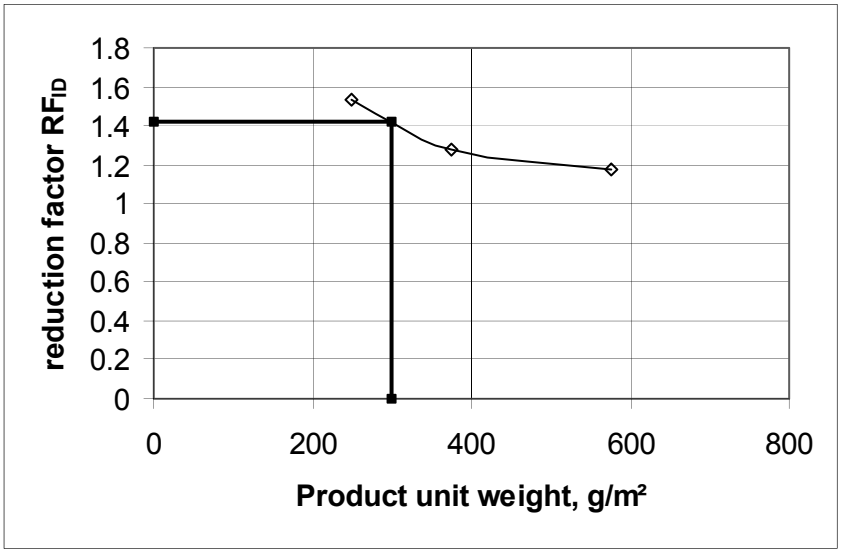

Figure, A-2. Example interpolation of RF_{ID} from damage measurements on products from the same line but with different weights. For a product of weight 300 g/m^2, R F_{ID} = 1.42 (Note: 1 oz/yd^2= 0.0295 gm/m^2).

If it is determined that the RF_{ID} values obtained for a product line are not correlated with product weight per unit area, undamaged tensile strength, coating weight, or some other product parameter, and the variance of RF_{ID} between any two products in the product line is 0.1 or more, then each product in the product line shall be tested. If in this case (i.e., no correlation could be found), the variance of RF_{ID} between any two products in the product line is less than 0.1 and the upper bound value of RF_{ID} is selected for all products in the product line, all products in the product line do not need to be tested.

References

Sprague, C. J., Allen, S. A., 2003, "Testing Installation Damage of Geosynthetic Reinforcement," Geotechnical Fabrics Report, Vol. 21, No. 6, pp. 24-27.

WSDOT Test Method No. 925, Appendix B

Creep Rupture Testing and Extrapolation Procedures

The effect of long-term load/stress on geosynthetic reinforcement strength and deformation characteristics shall be determined from the results of product specific, controlled, long-term laboratory creep tests conducted for a range of load levels and durations in accordance with ASTM D5262 adequate for extrapolation purposes to the desired design life, carried out to rupture of the geosynthetic when possible. Creep testing in accordance with ASTM D5262, but carried out to rupture where feasible, is described herein as the "conventional method." A limited number of conventional creep tests may be supplemented and extended to longer creep rupture times using ASTM D6992 (Stepped Isothermal Method, or SIM) as described in this appendix. Specimens should be tested in the direction in which the load will be applied in use. Test results shall be extrapolated to the required structure design life. Based on the extrapolated test results, for ultimate limit state design, determine the highest load level, designated T_l, which precludes both ductile and brittle creep rupture within the required lifetime. T_l should be determined at the required design life and at the design site temperature.

In both cases, unless otherwise specified or mutually agreed upon by the geosynthetic supplier, the testing laboratory, and the owner, a baseline testing temperature of 68° F (20° C) shall be used for this testing. Higher test temperatures shall be considered as elevated temperatures to be used for the purpose of time extrapolation. ASTM D5262 requires that the testing temperature be maintained at +3.6° F (2° C). For some polymers, this degree of variance could significantly affect the accuracy of the shift factors and extrapolations determined in accordance with this appendix. For polymers that are relatively sensitive to temperature variations, this issue should be considered when extrapolating creep data using time-temperature superposition techniques, or minimized by using a tighter temperature tolerance.

Note that the procedures provided in this appendix are for in-air creep rupture testing. The procedures provided herein can likely also be applied to creep tests conducted confined in-soil. However, there is little information available, at present, on which to confirm that these procedures can be applied to in-soil creep data without modification. Therefore, procedures for use and interpretation of in-soil creep testing in compliance with this standard practice are not provided.

Single ribs for geogrids, or yarns or narrow width specimens for woven geotextiles, may be used for creep testing for the determination of RF_{CR} provided that it can be shown through a limited creep testing program conducted as described in Section B.5 later in this appendix that the rupture behavior and envelope for the single ribs, yarns, or narrow width specimens are the same as that for the full width product, with product width as defined in ASTM D5262. This comparison must demonstrate that there is no statistical difference between the full width product creep rupture regression line and the single rib, yarn, or narrow width specimen regression line at a time of 1,000 hours using a student-t distribution at a confidence level of 0.10 (see Equation B.3-1 later in this appendix).

Note 1: *Creep results in time dependent deformation that may continue to occur as long as the reinforcement is loaded. At low to intermediate load levels, depending on the polymer type, the creep rate will continue to decrease with time and may eventually stabilize, at least within the ability to measure creep. At higher load levels, creep will continue until rupture occurs.*

In general, two types of creep tests are conducted: stress or creep rupture, and creep strain. Creep strains do not have to be monitored in creep rupture testing (strain measurement in this type of test is recommended, however), though creep strain tests can be carried to rupture. Rupture data is necessary if the creep reduction factor for ultimate limit state conditions, RF_{CR}, is to be determined. Creep rupture test results, if properly accelerated and extrapolated, can also be used to investigate the effects of stress cracking and the potential for a ductile to brittle transition to occur. This transition to brittle behavior, if it occurs, can cause a geosynthetic to fail in creep at lower loads and strains than anticipated from evaluating only creep strain and rate data.

B.1 Overview of Extrapolation Approach to Determine the Ultimate Limit State Creep Limit, T_1

Considering that typical design lives for permanent MSE structures are 75 years or more, extrapolation of creep data will be required. Current practice allows creep data to be extrapolated up to one log cycle of time beyond the available data without some form of accelerated creep testing, or possibly other corroborating evidence (Jewell and Greenwood, 1988; Koerner, 1990). Based on this, unless one is prepared to obtain 7 to 10 years of creep data, temperature accelerated creep data, or possibly other corroborating evidence, must be obtained.

It is well known that temperature accelerates many chemical and physical processes in a predictable manner. In the case of creep, this means that the creep strains under a given applied load at a relatively high temperature and relatively short times will be approximately the same as the creep strains observed under the same applied load at a relatively low temperature and relatively long times. Temperature affects time to rupture at a given load in a similar manner. This means that the time to a given creep strain or to rupture measured at an elevated temperature can be made equivalent to the time expected to reach a given creep strain or to rupture at in-situ temperature through the use of a time shift factor.

The ability to accelerate creep with temperature for polyolefins such as polypropylene (PP) or high density polyethylene (HDPE) has been relatively well defined (Takaku, 1981; Bush, 1990; Popelar, et. al., 1991). Also for polyolefins, there is some risk that a “knee” in the stress rupture envelope due to a ductile to brittle transition could occur at some time beyond the available data (Popelar, et. al., 1991). Therefore, temperature accelerated creep data is strongly recommended for polyolefins. However, in practice, a ductile to brittle transition for polyolefin geosynthetic reinforcement products has so far not been observed, likely due to the highly oriented nature of polymer resulting from the processing necessary to make fibers and ribs. In general, the degree of orientation of the polymer is an important factor regarding the potential for ductile to brittle transitions.

For polyester (PET) geosynthetics, available evidence indicates that temperature can also be used to accelerate PET creep, based on data provided by den Hoedt, et. al., 1994 and others. However, the creep rupture envelopes for PET geosynthetics tend to be flatter than polyolefin creep rupture envelopes, and accurate determination of time-shift factors can be difficult for PET geosynthetics because of this. This may require greater accuracy in the PET stress rupture data than would be required for polyolefin geosynthetics to perform accurate extrapolations using elevated temperature data. This should be considered if using elevated temperature data to extrapolate PET stress rupture data. Note that a "knee" in the stress rupture envelope of PET does not appear to be likely based on the available data and the molecular structure of polyester.

If elevated temperature is used to obtain accelerated creep data, it is recommended that minimum increments of 10° C be used to select temperatures for elevated temperature creep testing. The highest temperature tested, however, should be below any transitions for the polymer in question. If one uses test temperatures below 70 to 75° C for polypropylene (PP), high density polyethylene (HDPE), and PET geosynthetics, significant polymer transitions will be avoided. If higher temperatures must be used, the effect of any transitions on the creep behavior should be carefully evaluated. One should also keep in mind that at these high temperatures, significant chemical interactions with the surrounding environment are possible, necessitating that somewhat lower temperatures or appropriate environmental controls be used. These chemical interactions are likely to cause the creep test results to be conservative. Therefore, from the user's point of view, potential for chemical interactions is not detrimental to the validity of the data for predicting creep limits. However, exposure to temperatures near the upper end of these ranges could affect the stress-strain behavior of the material due to loss of molecular orientation, or possibly other effects that are not the result of chemical degradation. Therefore, care needs to be exercised when interpreting results from tests performed at temperatures near the maximum test temperatures indicated above. In general, if the stiffness of the material after exposure to the environment is significantly different from that of the virgin material, the stress-strain properties, and possibly the strength, of the material may have been affected by the exposure temperature in addition to the chemical environment. If the stiffness has been affected, the cause of the stiffness change should be thoroughly investigated to determine whether or not the change in stiffness is partially or fully due to the effect of temperature, or alternatively not use the data obtained at and above the temperature where the stiffness was affected.

Unless otherwise specified or required by site specific temperature data, an effective design temperature of 20° C (T_{amb}) should be assumed.

A number of extrapolation and creep modeling methods have been reported in the literature (Findley, et. al., 1976; Wilding and Ward, 1978; Wilding and Ward, 1981; Takaku, 1981; McGown, et. al., 1984; Andrawes, et. al., 1986; Murray and McGown, 1988; Bush, 1990; Popelar, et. al., 1991; Helwany and Wu, 1992). Many of the methods discussed in the literature are quite involved and mathematically complex.

Two creep extrapolation techniques are provided herein for creep rupture evaluation: the conventional method, which utilizes a simplified visual/graphical approach, temperature acceleration of creep, regression techniques, and statistical extrapolation, and the Stepped Isothermal Method (SIM). This does not mean that the more complex mathematical modeling techniques cannot be used to extrapolate creep of geosynthetics; they are simply not explained herein. These two techniques are described in more detail as follows:

B.2 Step-By-Step Procedures for Extrapolating Creep Rupture Data – Conventional Method

Step 1: Plot the creep rupture data as log time to rupture versus log load level, as shown in Figure B.2-1. Do this for each temperature in which creep rupture data is available. For some materials, a semi-log rather than a log-log plot could be used. The plotting method that provides the best and most consistent fit of the data should be used. In general, approximately 12 to 18 data points (i.e., combined from all temperature levels tested to produce the envelope for a given product, with a minimum of 4 data points at each temperature) are required to establish a rupture envelope (Jewell and Greenwood, 1988; ASTM D2837). The data points should be evenly distributed through each log cycle of time. Rupture points with a time to rupture of less than 5 hours should in general not be used, unless it can be shown that these shorter duration points are consistent with the rest of the envelope (i.e., they do not contribute to non-linearity of the envelope). As a guide, three of the test results should have rupture times (not shifted by temperature acceleration) of 10 to 100 hours, four of the test results should have rupture times between 100 and 1,000 hours, and four of the test results should have rupture times of 1,000 to 10,000 hours, with at least one additional test result having a rupture time of approximately 10,000 hours (1.14 years) or more. It is recommended that creep strain be measured as well as time to rupture, since the creep strain data may assist with conventional time-temperature shifting and in identifying any change in behavior that could invalidate extrapolation of the results.

Step 2: Extrapolate the creep rupture data. Elevated temperature creep rupture data can be used to extrapolate the rupture envelope at the design temperature through the use of a time shift factor, a_T. If the rupture envelope is approximately linear as illustrated in Figure B.2-1(a), the single time shift factor a_T should be adequate to perform the time-temperature superposition.

Note 2*: This time-temperature superposition procedure assumes that the creep-rupture curves at all temperatures are linear on a semi-logarithmic or double logarithmic scale and parallel. It has been found empirically that the curves for PET are semi-logarithmic and approximately parallel, or double logarithmic and approximately parallel in the case of HDPE and PP. It should be pointed out that the theory of Zhurkov (1965), which assumes that the fracture process is activated thermally with the additional effect of applied stress, predicts that the creep-rupture characteristics should be straight when plotted on a double logarithmic diagram, and that their gradients should be stress-dependent.*

Use of a single time shift factor to shift all the creep rupture data at a given temperature, termed "block shifting," assumes that the shift factor a_T is not highly stress level dependent and that the envelopes at all temperatures are parallel, allowing an average value of a_T to be used for all of the rupture points at a given temperature. While research reported in the literature indicates that a_T may be somewhat stress level dependent and that the curves at all temperatures are not completely parallel, this assumption tends to result in a more conservative assessment of the creep reduction factor RF_{CR} (Thornton and Baker, 2002).

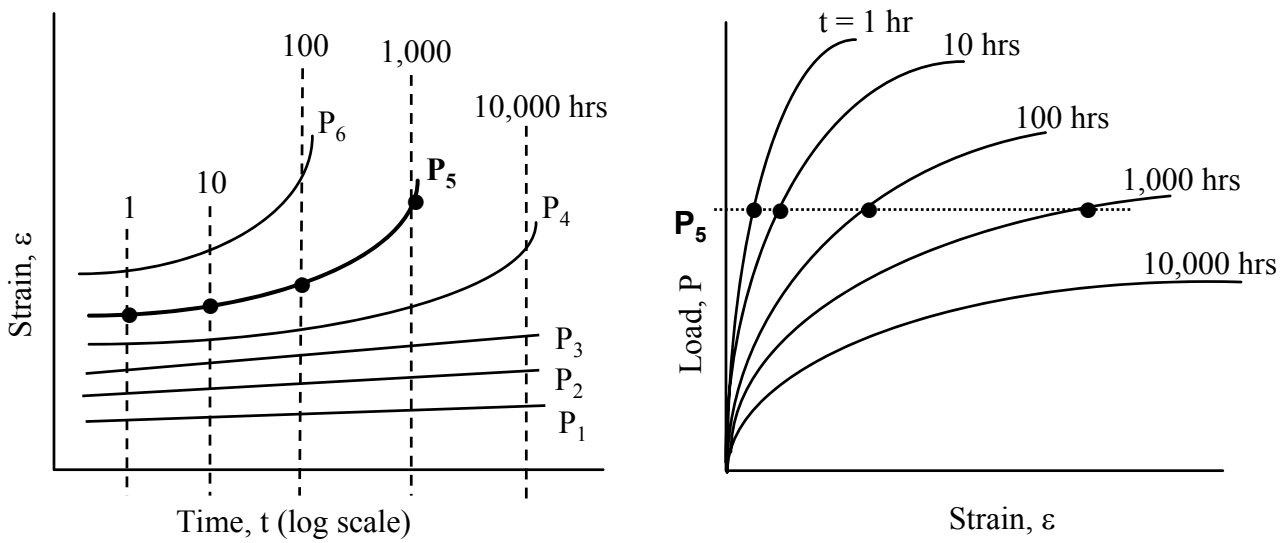

Figure B.2-1. Typical Stress Rupture Data for Geosynthetics, and the Determination of Shift Factors for Time-Temperature Superposition.

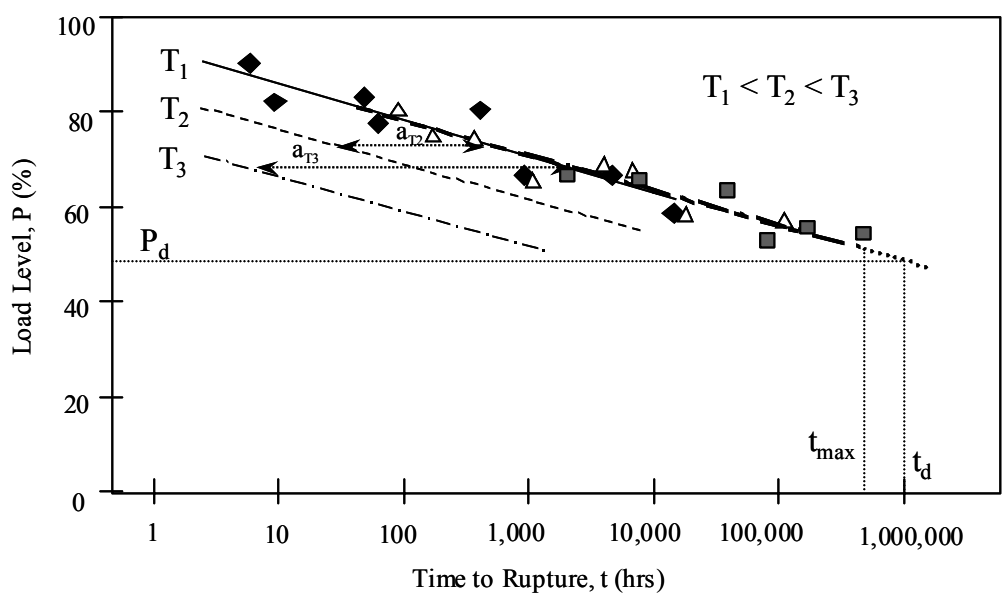

Figure B.2-2. Extrapolation of Stress Rupture Data and the Determination of the Creep Limit Load.

The time to rupture for the elevated temperature rupture data is shifted in accordance with the following equation:

$$t_{amb} = (t_{elev})(a_T) \quad \text{(B.2-1)}$$

where, t_{amb} is the predicted time at the ambient or temperature to reach rupture under the specified load, t_{elev} is the measured time at elevated temperature to reach a rupture under the specified load, and a_T is the time shift factor. a_T can be approximately estimated using a visual/graphical approach as illustrated in figures B.2-1 and B.2-2. The preferred approach, however, is to use a computer spreadsheet optimization program to select the best shift factors for each constant temperature block of data to produce the highest R^2 value for the combined creep rupture envelope to produce the result in Figure B.2-2.

Note 3: *Incomplete tests may be included, with the test duration replacing the time to rupture, but should be listed as such in the reported results, provided that the test duration, after time shifting, is 10,000 hours or more. The rule for incomplete tests is as follows. The regression should be performed with and without the incomplete tests included. If the incomplete test results in an increase in the creep limit, keep the incomplete tests in the regression, but if not, do not include them in the regression, in both cases for incomplete tests that are 10,000 hours in duration after time shifting or more. Record the duration of the longest test which has ended in rupture, or the duration of the longest incomplete test whose duration exceeds its predicted time to failure: this duration is denoted as* t_{max}.

It is preferred that creep rupture data be extrapolated statistically beyond the elevated temperature time shifted data using regression analysis (i.e., curve fitting) up to a maximum of one log cycle of time for all geosynthetic polymers (greater extrapolation using only statistical methods is feasible, but uncertainty in the result increases substantially and must be taken into account). Therefore, adequate elevated temperature data should be obtained to limit the amount of statistical extrapolation required.

Note 4*: There may be situations where extrapolation to create a creep rupture envelope at a lower temperature than was tested is necessary. Situations where this may occur include the need to elevate the ambient temperature to have greater control regarding the temperature variations during the creep testing (i.e., ambient laboratory temperature may vary too much), or for sites where the effective design temperature is significantly lower than the "standard" reference temperature used for creep testing (e.g., northern or high elevation climates). In such cases, it is feasible to use lower bound shift factors based on previous creep testing experience to allow the creep rupture envelope to be shifted to the lower temperature, as shift factors for the materials typically used for geosynthetic reinforcement are reasonably consistent. Based on previous creep testing experience and data reported in the literature (Chow and Van Laeken 1991; Thornton, et al. 1998; Thornton, et al. 1998a; Lothspeich and Thornton 2000; Takemura 1959; Bush, 1990; Popelar, et al. 1990; Wrigley, et al. 2000; Takaku 1980; Thornton and Baker 2000), shift factors for HDPE and PP geosynthetics are typically in the range of 0.05 to 0.18 decades (i.e., log cycles of time) per 1° C increase in temperature (i.e., a 10° C increase would result in a time shift factor of 12 to 15) and 0.05 to 0.12 decades per 1° C increase in temperature for PET geosynthetics. It is recommended that if shifting the creep rupture envelope to temperatures below the available data is necessary, that a shift factor of 0.05 decades per 1° C increase in temperature for PP, HDPE, and PET be used. This default shift factor should not be used to shift the creep rupture data more than 10° C.*

Step 3: Once the creep data has been extrapolated, determine the design, lot specific, creep limit load by taking the load level at the desired design life directly from the extrapolated stress rupture envelope as shown in Figure B.2-2. If statistical extrapolation beyond the time shifted stress rupture envelopes (PP or HDPE), or beyond the actual data if temperature accelerated creep data is not available, is necessary to reach the specified design life, the calculated creep load T_l should be reduced by an extrapolation uncertainty factor as follows:

$$T_l = P_{cl}/(1.2)^{x-1} \qquad \text{(B.2-3)}$$

where P_{cl} is the creep limit load taken directly from the extrapolated stress rupture envelope, and "x" is the number of log cycles of time the rupture envelope must be extrapolated beyond the actual or time shifted data, and is equal to $\log t_d - \log t_{max}$ as illustrated in Figure B.2-2. The factor $(1.2)^{x-1}$ is the extrapolation uncertainty factor. If extrapolating beyond the actual or time shifted data less than one log cycle, set "x-1" equal to "0". This extrapolation uncertainty factor only applies to statistical extrapolation beyond the actual or time shifted data using regression analysis and assumes that a "knee" in the rupture envelope beyond the actual or time shifted data does not occur.

Note 5*: A condition on the extrapolation is that there is no evidence or reason to believe that the rupture behavior will change over the desired design life. It should be checked that at long durations, and at elevated temperatures if used:*

- *There is no apparent change in the gradient of the creep-rupture curve*
- *There is no evidence of disproportionately lower strains to failure*
- *There is no significant change in the appearance of the fracture surface.*

Any evidence of such changes, particularly in accelerated tests, should lead to the exclusion of any reading where either the gradient, strain at failure or appearance of the failure is different to those in the test with the longest failure duration. Particular attention is drawn to the behavior of unoriented thermoplastics under sustained load, where a transition in behavior is observed in long-term creep-rupture testing (i.e., the so called "ductile to brittle transition – Popelar, et al., 1991). The effect of this transition is that the gradient of the creep-rupture curve becomes steeper at the so-called "knee" such that long-term failures occur at much shorter lifetimes than would otherwise be predicted. The strain at failure is greatly reduced and the appearance of the fracture surface changes from ductile to semi-brittle. If this is observed, any extrapolation should assume that the "knee" will occur. For the method of extrapolation reference should be made to ISO/FDIS 9080:2001, ASTM D2837, and Popelar, et al. (1991).

This extrapolation uncertainty factor also assumes that the data quality is good, data scatter is reasonable, and that approximately 12 to 18 data points which are well distributed (see Step 1 for a definition of well distributed) defines the stress rupture envelope for the product. If these assumptions are not true for the data in question, this uncertainty factor should be increased. The uncertainty factor may also need to be adjusted if a method other than the one presented in detail herein is used for extrapolation. This will depend on how well that method compares to the method provided in this appendix. This extrapolation uncertainty factor should be increased to as much as $(1.4)^x$ if there is the potential for a "knee" in the stress rupture envelope to occur beyond the actual or time shifted data, or

if the data quality, scatter, or amount is inadequate. Furthermore, if the data quantity or distribution over the time scale is inadequate, it may be necessary to begin applying the extrapolation uncertainty factor before the end of the time shifted data.

Note 6*: Based on experience, the R^2 value for the composite (i.e., time shifted) creep rupture envelope should be approximately 0.8 to 0.9 or higher to be confident that Equation B.2-3 will adequately address the extrapolation uncertainty. If the R^2 value is less than approximately 0.6 to 0.7, extrapolation uncertainty is likely to be unacceptably high, and additional testing and investigation should be performed. In general, such low R^2 values are typically the result of data that is too bunched up, unusually high specimen to specimen variability, or possibly poor testing technique.*

B.3 Procedures for Extrapolating Creep Rupture Data – Stepped Isothermal Method (SIM)

An alternative creep strain/rupture analysis and extrapolation approach that has recently become available for geosynthetics is the Stepped Isothermal Method (SIM) proposed, illustrated, and investigated by Thornton, et. al. (1997), Thornton, et. al. (1998), Thornton, et. al. (1998), and Thornton and Baker (2002). SIM has been applied successfully to PET geogrids and PP geotextiles. SIM utilizes an approach similar to the Williams-Landell-Ferry, or WLF, approach to creep extrapolation (Ferry, 1980), where master creep curves for a given material are produced from a series of short-term tests (i.e., creep test durations on the order of a few hours) on the same specimen over a wide range of temperatures (i.e., while the load on the specimen is held constant, the temperature is increased in steps). The sections of creep curve at the individual temperatures are shifted in time and combined to form a continuous prediction of the creep strain at the starting temperature.

Though the general principles of this method have been in use for many years in the polymer industry (Ferry, 1980), it has been only recently that this approach has been used for geosynthetics. Though this approach was initially developed to extrapolate creep strain data, it has been adapted to produce stress rupture data by taking the specimen to rupture once the highest test temperature is reached. In effect, through time shifting of the creep strain data obtained prior to rupture, the rupture point obtained has an equivalent shifted time that is several orders of magnitude greater than the actual test time, which could be on the order of only a few days.

The method is conducted in accordance with ASTM D 6992. Key issues are the very short test time used for this method, potential use of temperatures that are well above transitions in the geosynthetic material, and its complexity. Key technical advantages of the method, however, include more accurate determination of time shift factors, since the same specimen is used at the same load level at all of the temperatures (the “conventional” method must deal with the effect of specimen to specimen variability when determining the shift factors), and that time shift factors between temperatures are determined at the same load level, eliminating the effect of load level in the determination of the shift factors (in the “conventional” method, the shift factors used are in fact an average value for a wide range of loads).

SIM can be considered for use in generating and extrapolating geosynthetic creep and creep rupture data provided this method is shown to produce results which are consistent with the “conventional” extrapolation techniques recommended in this appendix. To this end, creep-rupture testing shall be conducted using conventional tests (ASTM D5262) and SIM

tests (ASTM D6992). At least six SIM rupture tests and six conventional rupture tests and shall be conducted one of the products in the product line being evaluated. Of the six SIM rupture tests, four shall have rupture times (shifted as appropriate) between 100 and 2000 hours and two shall have rupture times greater than 2000 hours. All of the conventional creep rupture points shall be obtained at the reference temperature (i.e., not temperature shifted). Creep rupture plots shall be constructed, regression lines computed and the log times to rupture determined at a load level that corresponds to 1,000 hours and 50,000 hours on the conventional creep rupture envelope, for the two data sets. The log time to rupture for the SIM regression at this load level shall be within the upper and lower 90% confidence limits of the mean conventional regressed rupture time at the same load level using Student's **t** test.

The confidence limit for the regression performed for the conventional creep rupture data is given by (Wadsworth, 1998):

$$\log t_L = \log t_{reg} \pm \left[t_{\alpha,n-2} \sqrt{\frac{1}{n} + \frac{\left(P - \overline{P}\right)^2}{\sum \left(P_i - \overline{P}\right)^2}} \right] \times \sigma \qquad \text{(B.3-1)}$$

and

$$\sigma = \sqrt{\frac{\sum \left[\log t_i - \overline{\log t}\right]^2 - \frac{\left\{\sum \left[\left(P_i - \overline{P}\right)\left(\log t_i - \overline{\log t}\right)\right]\right\}^2}{\sum \left(P_i - \overline{P}\right)^2}}{n-2}} \qquad \text{(B.3-2)}$$

where:

$\log t_L$	=	lower and upper bound confidence limit. The + or – term in Equation B.2-1 results in the lower and upper bound confidence limits, respectively.
t_{reg}	=	time corresponding to the load level from the conventional creep rupture envelope at which the comparison between the two envelopes will be made (e.g., at 1,000 and 50,000 hrs after time shifting)
$t_{\alpha,n-2}$	=	value of the **t** distribution determined from applicable Student **t** table (or from the Microsoft EXCEL function TINV(α,n-2)) at α = 0.10 and *n*-2 degrees of freedom (this corresponds to the 90% two-sided prediction limit).
n	=	the number of rupture or allowable run-out points in the original test sample (i.e., the conventional creep rupture data)
P	=	load level obtained at t_{reg} from the regression line developed from the conventional creep rupture testing
P	=	the mean rupture load level for the original test sample (i.e., all rupture or run-out points used in the regression to establish the conventional creep rupture envelope)
P_i	=	the rupture load level of the i'th point for the rupture points used in the regression for establishing the conventional creep rupture envelope
$\log t$	=	the mean of the log of rupture time for the original test sample (i.e., all rupture or run-out points used in the regression to establish the conventional creep rupture envelope)
t_i	=	the rupture time of the i'th point for the rupture points used in the regression for establishing the conventional creep rupture envelope

Once log t_L, both upper and lower bound, has been determined at the specified load level, compare these values to the log rupture time (i.e., log t_{SIM}) obtained for the SIM creep rupture envelope test at the specified load level (e.g., 1,000 and 50,000 hours). The value of log t_{SIM} at the two specified load levels must be between the upper and lower bound confidence limits (log t_L). If this requirement is not met, perform two additional SIM tests at each load level P for the specified t_{reg} where this comparison was made and develop a new SIM creep rupture envelope using all of the SIM data. If for the revised SIM regression envelope resulting from these additional tests this criterion is still not met, perform adequate additional conventional creep rupture testing to establish the complete rupture envelope for the product in accordance with this appendix).

If the criterion provided above is met, the SIM testing shall be considered to be consistent with the conventional data, and SIM may be used in combination with the conventional data to meet the requirements of Section B.2 regarding the number of rupture points and their distribution in time and maximum duration. Therefore, the combined data can be used to create the creep rupture envelope as shown in Figure B.2-2. In that figure, the SIM data shall be considered to already be time shifted. Equation B.2-3 is then used to determine T_l.

B.4 Determination of RF_{CR}

The creep reduction factor, RF_{CR} , is determined by comparing the long-term creep strength, T_l , to the ultimate tensile strength (ASTM D4595 or ASTM D6637) of the sample tested for creep (T_{lot}). The sample tested for ultimate tensile strength should be taken from the same lot, and preferably the same roll, of material that is used for the creep testing. For ultimate limit state design, the strength reduction factor to prevent long-term creep rupture is determined as follows:

$$T_{al} = \frac{P_{95}}{RF_{ID} \times RF_D} \qquad \text{(B.4-1)}$$

where, T_{lot} is the average lot specific ultimate tensile strength (ASTM D4595 or ASTM D6637) for the lot of material used for the creep testing. Note that this creep reduction factor takes extrapolation uncertainty into account, but does not take into account variability in the strength of the material. Material strength variability is taken into account when RF_{CR}, along with RF_{ID} and RF_D, are applied to T_{ult} to determine the long-term allowable tensile strength, as T_{ult} is a minimum average roll value. The minimum average roll value is essentially the value that is two standard deviations below the average value.

B.5 Use of Creep Data from "Similar" Products and Evaluation of Product Lines

Long-term creep data obtained from tests performed on older product lines, or other products within the same product line, may be applied to new product lines, or a similar product within the same product line, if one or both of the following conditions are met:

- The chemical and physical characteristics of tested products and proposed products are shown to be similar. Research data, though not necessarily developed by the product manufacturer, should be provided which shows that the minor differences between the tested and the untested products will result in equal or greater creep resistance for the untested products.
- A limited testing program is conducted on the new or similar product in question and compared with the results of the previously conducted full testing program.

For polyolefins, similarity could be judged based on molecular weight and structure of the main polymer (i.e., is the polymer branched or crosslinked, is it a homopolymer or a blend, percent crystallinity, etc.), percentage of material reprocessed, tenacity of the fibers and processing history, and polymer additives used (i.e., type and quantity of antioxidants or other additives used). For polyesters and polyamides, similarity could be judged based on molecular weight or intrinsic viscosity of the main polymer, carboxyl end group content, percent crystallinity, or other molecular structure variables, tenacity of the fibers and processing history, percentage of material reprocessed or recycled, and polymer additives used (e.g., pigments, etc.). The untested products should also have a similar macrostructure (i.e., woven, nonwoven, extruded grid, needlepunched, yarn structure, etc.) and fiber dimensions (e.g., thickness) relative to the tested products. It should be noted that percent crystallinity is not a controlled property and there is presently no indication of what an acceptable value for percent crystallinity should be.

For creep evaluation of a similar product not part of the original product line, this limited testing program should include creep tests taken to at least 1,000 to 2,000 hours in length before time shifting if using the "conventional" creep testing approach, with adequate elevated temperature data to permit extrapolation to 50,000 hours or more. If it has been verified that SIM can be used, in accordance with Section B.3, durations after time shifting due to elevated temperature up to a minimum of 50,000 hours are required. A minimum of 4 data points per temperature level tested should be obtained to determine time shift factors and to establish the envelope for the similar product. These limited creep test results must show that the performance of the similar product is equal to or better than the performance of the product previously tested. This comparison must demonstrate that there is no statistical difference between the old product regression line and the regression line obtained for the similar product at a time of 2,000 hours (not temperature accelerated) and 50,000 hours (after time shifting) using a student-t distribution at a confidence level of 0.10 (see Equation B.3-1). If no statistical difference is observed, the results from the full testing program on the older or similar product could be used for the new/similar product. If this is not the case, then a full testing and evaluation program for the similar product should be conducted.

Similarly, for extension of the creep data obtained on one product in the product line (i.e., the primary product tested, which is typically a product in the middle of the range of products in the product line) to the entire product line as defined herein, a limited creep testing program must be conducted on at least two additional products in the product line. The combination of the three or more products must span the full range of the product line in terms of weight and/or strength. The limited test program described in the preceding paragraph should be applied to each additional product in the product line. The loads obtained for the data in each envelope should then be normalized by the lot specific ultimate tensile strength, T_{lot}. All three envelopes should plot on top of one another, once normalized in this manner, and the two additional product envelopes should be located within the confidence limits for the product with the more fully developed creep rupture envelope (i.e., the "primary" product) as described above for "similar" products. If this is the case, then the creep reduction factor for the product line shall be the lesser of the reduction factor obtained for the product with the fully developed rupture envelope and the envelope of all three products combined, and normalization using the ultimate tensile strength shall be considered acceptably accurate.

If this is not the case, then the creep rupture envelopes for the other two products, plus enough other products within the product line, to establish the trend in RF_{CR} as a function of product weight or ultimate tensile strength, so that the RF_{CR} for the other products within the product line can be accurately interpolated. Furthermore, T_{al} must be determined in accordance with Note 7.

Note 7: *Note that normalization using the ultimate lot specific tensile strength may not be completely accurate for some geosynthetic products regarding characterization of creep rupture behavior, and other normalization techniques may be needed (Wrigley, et al., 1999). In such cases, individual creep reduction factors for each product in the product line may need to be established through fully developed creep rupture envelopes for representative products obtained at the low, middle, and high strength end of the product series. Once the creep limited strength, P_{cl} and the creep reduction factors are established for each product, in this case, product variability must still be taken into account. In such cases, T_{al} must be the lesser of the determination from Equation 1 and the following determination:*

$$T_{al} = \frac{P_{95}}{RF_{ID} \times RF_{D}}$$

where,

P_{95} = the tensile strength determined from the 95% lower bound prediction limit for the creep rupture envelope at the specified design life (see Equations 4 and 5 in "Quality Assurance (QA) Criteria for Comparison to Initial Product Acceptance Test Results")

References

AASHTO, 2002, *Standard Specifications for Highway Bridges*, American Association of State Highway and Transportation Officials, Seventeenth Edition, Washington, D.C., USA, 686 p.

Andrawes, K. Z., McGown, A., and Murray, R. T., 1986, "The Load-Strain-Time Behavior of Geotextiles and Geogrids," *Proceedings of the Third International. Conference on Geotextiles,* Vienna, Austria, pp. 707-712.

Bush, D.I., 1990, "Variation of Long-Term Design Strength of Geosynthetics in Temperatures up to 40°C", *Proceedings of the Fourth International. Conference on Geotextiles, Geomembranes, and Related Products*, The Hague, Netherlands, pp. 673-676.

Chow and Van Laeken 1991, "Viscoelastic Relaxation in oriented Semicrystalline Polymers," *Polymer,* Vol. 32, pp. 1798-1802.

den Hoedt, G., Voskamp, W., van den Heuvel, C. J. M., 1994, "Creep and Time-to-Rupture of Polyester Geogrids at Elevated Temperatures," *Proceedings of the Fifth International. Conference on Geotextiles, Geomembranes, and Related Products*, Singapore, pp. 1125-1130.

Ferry, J. D., 1980, *Viscoelastic Properties of Polymers*, 3rd Edition, John Wiley and Sons, NY.

Findley, W. N., Lai, J. S., Onaran, K., 1976, *Creep and Relaxation of Nonlinear Viscoelastic Materials,* Dover Publications, NY, 369 pp.

Helwany, B., Wu, J. T. H., 1992, "A Generalized Creep Model for Geosynthetics," *International Symposium on Earth Reinforcement Practice*, Japan, pp.

Jewell, R.A. and Greenwood, J.H., 1988, "Long-Term Strength and Safety in Steep Soil Slopes Reinforced by Polymer Materials", *Geotextiles and Geomembranes*, Vol. 7, Nos. 1 and 2, pp. 81-118.

Koerner, R. M., 1990, "Determination of the Long-Term Design Strength of Stiff Geogrids," GRI Standard Practice GG4(a).

Lothspeich, S., and Thornton, S., 2000, "Comparison of Long-term Design Reduction Factors Based on Creep Rupture and Creep Strength Criteria for Several Geosynthetic Reinforcing Materials," *EuroGeo 2,* pp. 341-346.

McGown, A., Paine, N., and DuBois, D.D., 1984, "Use of Geogrid Properties in Limit Equilibrium Analysis", *Proceedings of the Symposium on Polymer Grid Reinforcement in Civil Engineering*, Paper No. 1.4, pp. 1-5.

Murray, R. T., McGown, A., 1988, "Assessment of the Time Dependent Behavior of Geotextiles for Reinforced Soil Applications," *Durability of Geotextiles RILEM*, Chapman and Hall.

Popelar, et al., 1990, "Viscoelastic Material Characterization and Modeling for Polyethylene," *Polymer Engineering and Science*, Vol. 30, no. 10, pp. 577-586.

Popelar, C.H., Kenner, V.H., and Wooster, J.P., 1991, "An Accelerated Method for Establishing the Long Term Performance of Polyethylene Gas Pipe Materials", *Polymer Engineering and Science*, Vol. 31, pp. 1693-1700.

Takaku, A., 1981, "Effect of Drawing on Creep Fracture of Polypropylene Fibers", *Journal of Applied Polymer Science*, Vol. 26, pp. 3565-3573.

Takemura, 1959, Theoretical Consideration of the Effect of Crystallinity on the Viscoelastic Properties of Polyethylene," *Journal of Applied Polymer Science*, Vol. 38, pp. 471-478.

Thornton, J. S., Allen, S. R., and Thomas, R. W., (1997) "Approaches for the Prediction of Long Term Viscoelastic Properties of Geosynthetics from ShortTerm Tests," Geosynthetics '97, IFAI, Long Beach, CA, Vol. 1, pp. 277-291.

Thornton, J. S., Allen, S. R., Thomas, R. W., and Sandri, D., 1998, "The Stepped Isothermal Method for Time-Temperature Superposition and Its Application to Creep Data of Polyester Yarns," *Sixth International Conference on Geotextiles, Geomembranes, and Related Products,* Atlanta, GA, pp.699-706.

Thornton, J. S., and Baker, T. L., 2002, "Comparison of SIM and conventional Methods for Determining Creep-Rupture Behavior of a Polypropylene Geotextile," 7th International Geosynthetics Conference, Nice, France, Vol. 4, pp. 1545-1550.

Thornton, J. S., Paulson, J., and Sandri, D., 1998a, "Conventional and Stepped Isothermal Methods for Characterizing Long-Term Creep Strength of Polyester Geogrids," *Sixth International Conference on Geotextiles, Geomembranes, and Related Products,* Atlanta, GA, pp.691-698.

Wadsworth, H., 1998, *Handbook of Statistical Methods for Engineers and Scientists*, McGraw-Hill, 688 pp.

Wilding, M.A. and Ward, I.M., 1978, "Tensile and Creep Recovery in Ultra-High Modulus Polyethylenes," Polymer, Vol. 19, pp.

Wilding, M.A. and Ward, I.M., 1981, "Creep and Recovery of Ultra High Modulus Polyethylene", *Polymer*, Vol. 22, pp. 870-876.

Wrigley, N. E., Austin, R. A., and Harrison, P. E., 1999, "The Long-Term Strength of Geogrid Reinforcement," Geosynthetics '99, Boston, MA, USA, Vol. 2, pp. 711-721.

Zhurkov, S. N., 1965, "Kenetic Concept of the Strength of Solids," *International Journal of Fracture Mechanics*, Vol. 1, pp. 311-323.

WSDOT Test Method No. 925, Appendix C

Strain Based Creep Testing and Extrapolation

This appendix provides supplementary information to Appendix B regarding the use and extrapolation of creep strain data.

As is true for stress rupture testing, in-air long-term laboratory creep tests should be conducted for a range of load levels in accordance with ASTM D5262, adequate for extrapolation to the required design life as described in this appendix. Specimens should be tested in the direction in which the load will be applied in use. Full width specimens should be tested, unless it can be shown through a limited testing program that single rib, yarn, or narrow width specimens can be used without affecting the creep rupture envelope (see beginning of Appendix B), though in the case of creep strain testing and extrapolation, the rupture envelope is defined as the time to reach the instability limit strain (described later in Appendix C) Test results should be extrapolated to the required structure design life. Based on the extrapolated test results, for ultimate limit state design, determine the highest load level, designated T_l, at which the log time creep rate continues to decrease with time and which precludes both ductile and brittle creep rupture within the required lifetime. Tl should be determined at the required design life and at the effective design site temperature. Unless otherwise specified or required by site specific temperature data, an effective design temperature of 20° C (T_{amb}) should be assumed.

As stated above, the application of the extrapolated creep data as described in this appendix is to estimate the highest load level within the specified design lifetime that precludes creep rupture. When using creep strain data, creep rupture is assumed to occur, or is at least eminent, when the strain exceeds the instability strain limit (see Section C.1) Creep strain data can be used for other purposes, such as to estimate long-term deformations or to estimate long-term stiffness values. The extrapolated creep strain data developed in accordance with this Appendix can be used for these purposes as well.

C.1 Creep Strain Assessment Tools and Concepts

Creep strain curves are typically plotted as a function of time or the logarithm of time. In general, there are up to three stages of creep observed in polymeric materials – these include primary, secondary or steady-state, and tertiary creep. Primary creep strains are characteristically linear when plotted against a logarithmic time scale and increase at a decreasing rate on an arithmetic time scale. Secondary creep strains are typically linear when plotted against an arithmetic time scale. Tertiary creep is the rupture phase of creep and is characterized by a rapidly increasing creep rate with time. Geosynthetic structure tends to dominate primary creep (at least for nonwoven geotextiles, but much less so for woven geotextiles and not at all for geogrids), and the polymer characteristics tend to dominate secondary and tertiary creep mechanisms (Allen 1991). Polyolefins (HDPE and PP) tend to exhibit all three stages of creep, depending on the load level, whereas PET tends to only exhibit primary and tertiary creep. Figure C.1-1 illustrates these concepts.

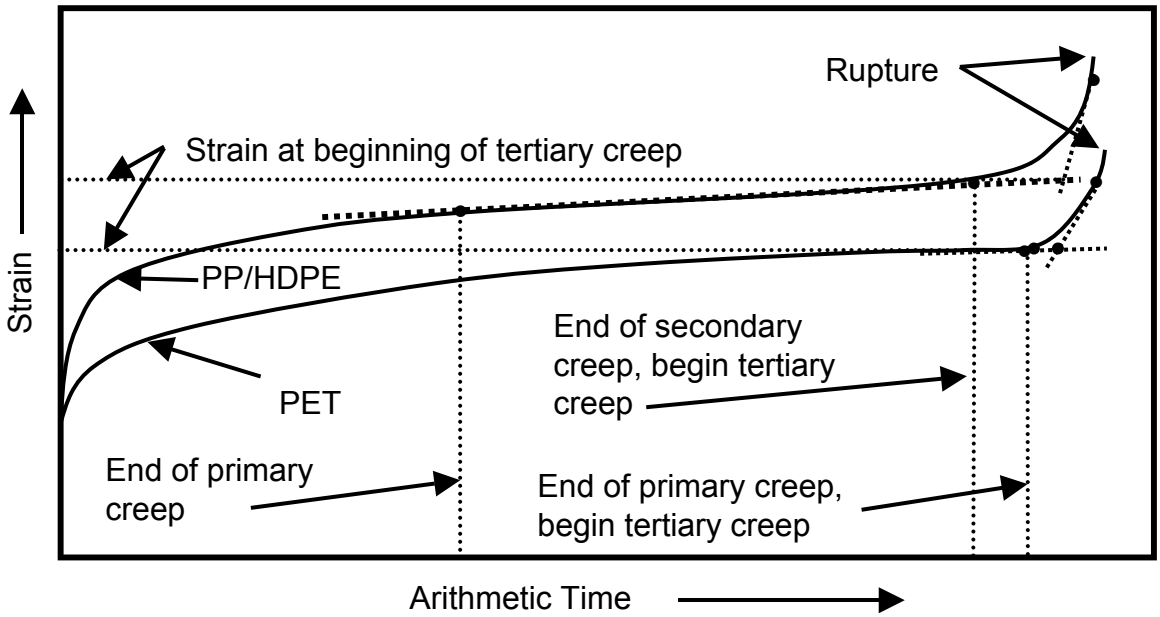

Figure C.1-1. Conceptual illustration of creep strain behavior, and the determination of the strain at the beginning of tertiary creep from creep strain data.

The instability limit strain is defined as the strain beyond which the material exhibits signs of instability, i.e., approaches failure (Andrawes, et. al., 1986). When extrapolating creep strain data, it is important to not extrapolate the data to strain levels that are in excess of the instability limit strain, as doing so would produce invalid results. The determination of this limit strain can be the most difficult part of assessing the creep rupture limit from creep strain data. The actual rupture strain, which occurs at the end of tertiary creep, for a given material at a given load level is difficult to measure as well as to identify. A more consistent and more easily measured instability limit strain would be the strain level where tertiary creep begins as illustrated in Figure C.1-1. However, if rupture occurs during the primary or secondary creep stage (e.g., PET) the instability limit strain is the rupture strain.

Another tool that can be useful in determining the strain at the beginning of tertiary creep is the Sherby-Dorn plot, as illustrated in Figure C.1-2. A Sherby-Dorn plot is a well known plotting technique used in polymer science (McGown et al. 1984a). Each curve represents a specific geosynthetic layer in a wall or a specific geosynthetic specimen tested at a specific load level. Creep strain rates observed under constant load are plotted against the total strain in the specimen or layer measured at the time the creep strain rate was calculated. The creep strain rate is simply the slope of the creep strain curve at a given point in time (see Figure C.1-2a). Curves that are linear or concave downward indicate that only primary creep is occurring, and that stabilization (no rupture) is likely. Curves that are concave upward indicate secondary or tertiary creep is occurring, and that rupture is likely. The closer the curves are located to the bottom left corner of the plot (Figure C.1-2), the better the creep performance of the material. The closer the curves are to the upper right corner, the more likely creep rupture will occur.

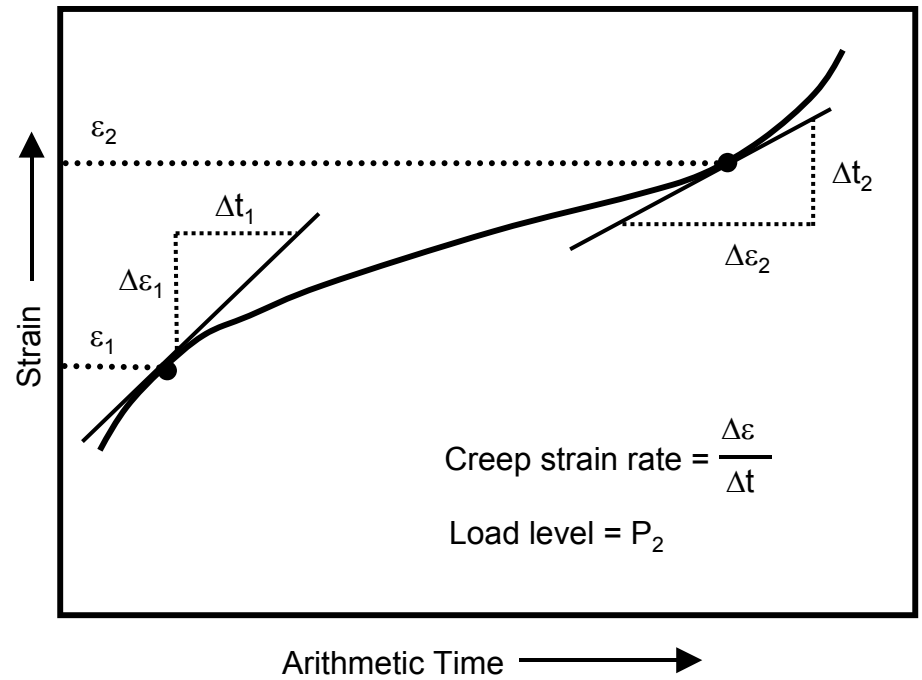

(a) Determination of creep strain rate.

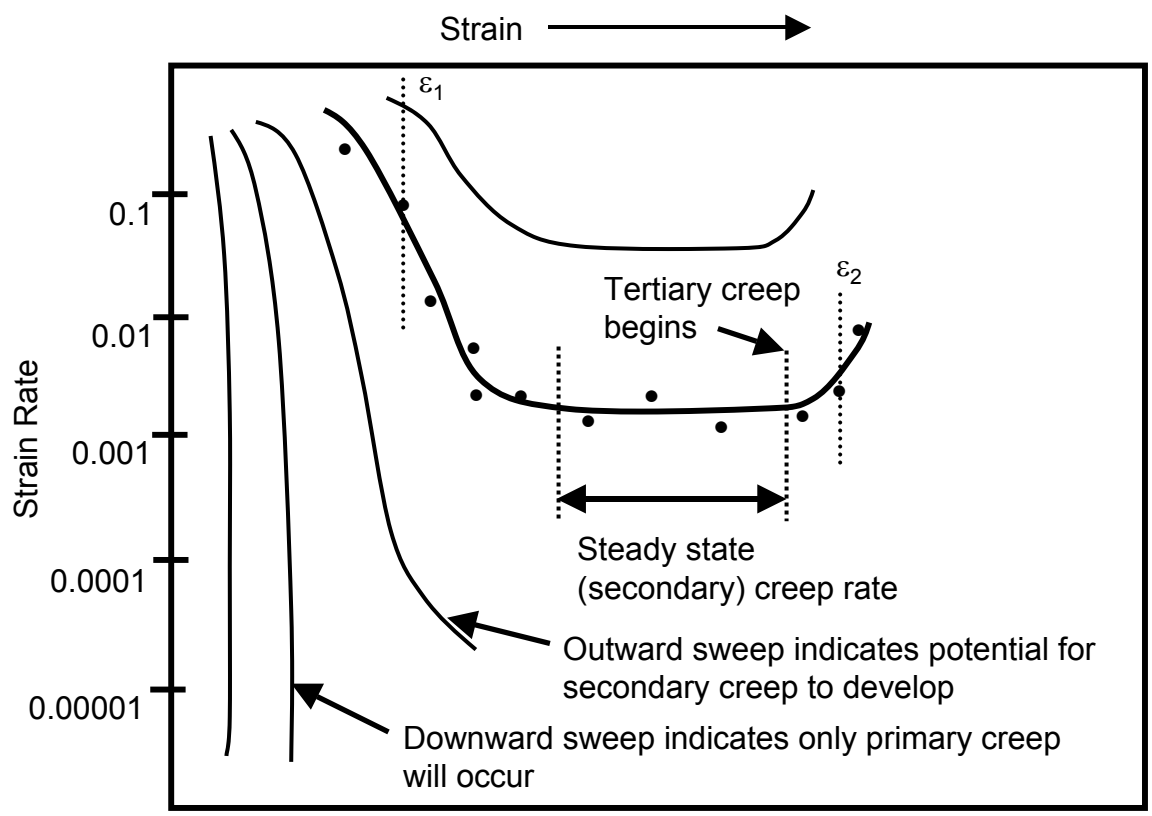

(b) Interpretation of Sherby-Dorn plots.

Figure C.1-2. Development and Use of Sherby-Dorn Plots to Analyze Creep Strain Data.

Note that some interpretation of the creep curves through curve fitting is required to determine strain rates, since local jumps in the measured creep strain curves can cause wide variations in calculated creep strain rates. The jumps in the curves are typically the result of the short increments of time used in the calculations and the small magnitude of changes in strain readings that may be at the limit of the resolution of the measuring devices. Hence, the slope of the measured creep curves must be taken over fairly long increments of time to be meaningful.

Tertiary creep begins where the creep strain rate (based on an arithmetic time scale) begins to increase. The strain at the beginning of tertiary creep is located where the creep strain rate begins to increase after reaching a minimum value, at least for polyolefin geosynthetics. A minimum and then an increasing creep strain rate is very difficult to see for polyester geosynthetics on this type of plot. Therefore, Sherby-Dorn plots tend to not be very useful for polyester geosynthetics.

To determine the long-term instability limit strain, the measured creep strain and time near creep rupture (i.e., at the beginning of tertiary creep) for various load levels must be obtained. These strains are plotted versus time to the beginning of tertiary creep (the rupture phase) on a semi-log plot (i.e., log time), or possibly a log-log plot, to establish the trend in the data. In general, strains near rupture for times to the rupture phase from 10 hours up to approximately 10,000 hours should be obtained so that the data need only be extrapolated two log cycles of time or less. A minimum of one data point per log cycle of time should be obtained to define the trend, but more data points are likely to be needed to establish the trend.

Typical near rupture strain trends for various geosynthetic polymers are illustrated in Figure C.1-3. Strain near rupture which increases as time to the rupture phase increases may be indicative of ductile behavior, whereas strain near rupture which decreases as time to the rupture phase increases may be indicative of brittle behavior (i.e., localized crack growth). If ductile behavior is observed, a transition to brittle behavior is possible. If such a shift to brittle behavior occurred, the strain near rupture increase occurring as time to the rupture phase increases (ductile behavior) could be lost as behavior becomes more brittle. Until more is known, it is recommended that strains near rupture which appear to be increasing as time to the rupture phase increases not be depended upon when assessing the long-term instability limit strain. Therefore, if the strain near rupture increases as time to the rupture phase increases, which appears to be typical of polypropylene (PP) geosynthetics (Takaku, 1981; Allen, 1991, Thornton and Baker, 2002), the short-term (i.e., rupture times on the order of 10 hours) strain near rupture should be used as the instability limit strain. If the strain near rupture decreases as time to the rupture phase increases, which appears to be typical of high density polyethylene (HDPE) geosynthetics (Ingold, et. al., 1994; Allen and Bathurst, 1996) and polyester (PET) geosynthetics (Krumm, 1988; Allen and Bathurst, 1996), extrapolate (up to a maximum of two log cycles) to the strain near rupture at the specified design life using visual extrapolation, regression analysis, or time-temperature superposition if elevated temperature data is available, and reduce that strain by a reduction factor of 1.1 to account for potential uncertainty. This reduction factor could be adjusted depending on the amount and quality of the strain near rupture data. The determination of the long-term instability strain limit is conceptually illustrated in Figure C.1-3.

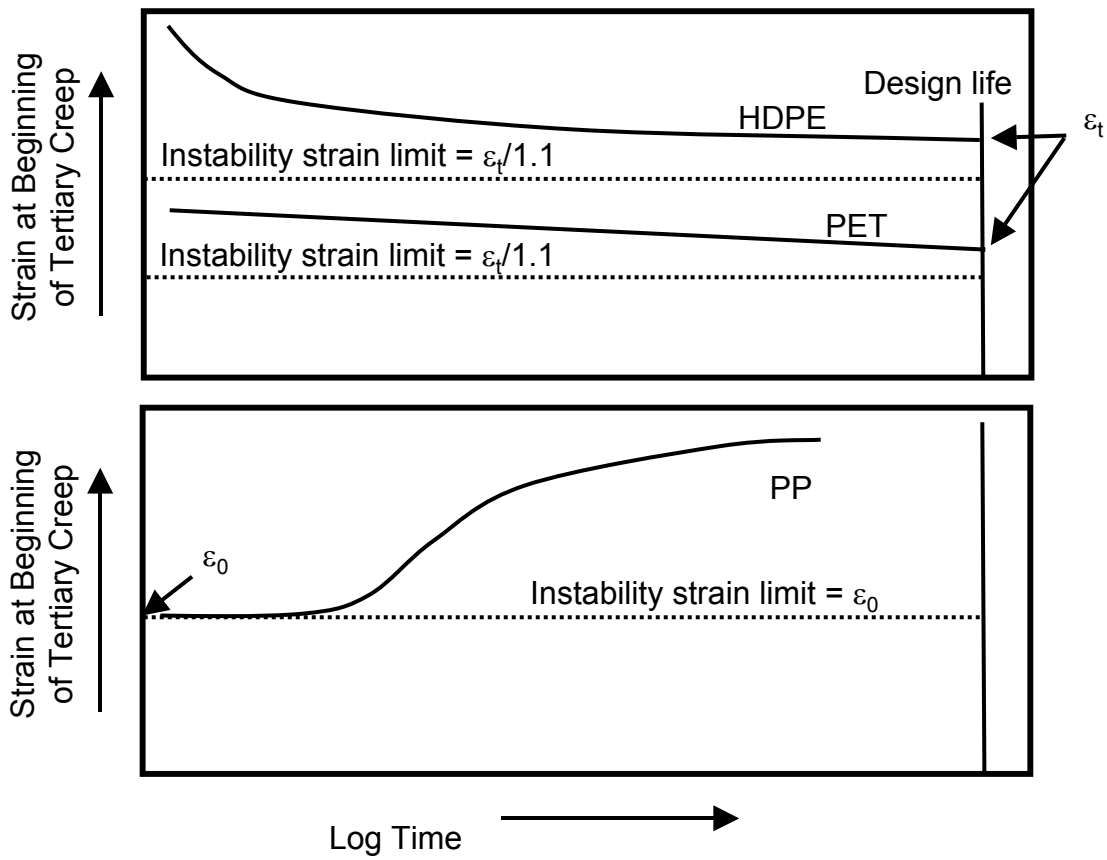

Figure C.1-3. Typical Near Rupture Behavior for Various Geosynthetic Polymers in Terms of Measured Strain.

If inadequate data is available to extrapolate measured strains near rupture to the long-term strain near rupture and the material type is likely to have strains near rupture which decrease with increasing time to the rupture phase (e.g., HDPE and PET), an acceptable alternative to estimate the instability limit strain is to take the peak strain measured from a wide width load-strain test (ASTM D4595 or ASTM D6637) and reduce it by a factor of 2.0.

Another tool that is useful for characterizing and working with creep strain data is the isochronous curve. Each isochronous (i.e., constant time) curve is created by taking load and strain levels from each creep curve at a given constant time and plotting them to form an isochronous curve. Some curve fitting may be necessary to account for specimen variability and to create a reasonably smooth curve. For HDPE, this curve fitting is reasonably straight-forward to do. However, for PET, the isochronous curves characteristically have an “s” shape at low strains resulting from load and strain dependent changes in the crystalline and between crystal arrangement of molecules within the polymer (Jewell and Greenwood, 1988; den Hoedt, et al, 1994). PP geosynthetics may also have inherent abrupt non-linearities in their isochronous curves at certain strain or load levels as observed by McGown, et al. (1984). Such changes in the curves resulting from physical processes in the polymer must be considered when constructing isochronous from creep strain data. Note that isochronous curves are not an extrapolation tool, but instead

are an interpolation tool. Isochronous curves provide a convenient method of interpolating between creep curves, which will be necessary to accomplish the creep extrapolation steps that follow.

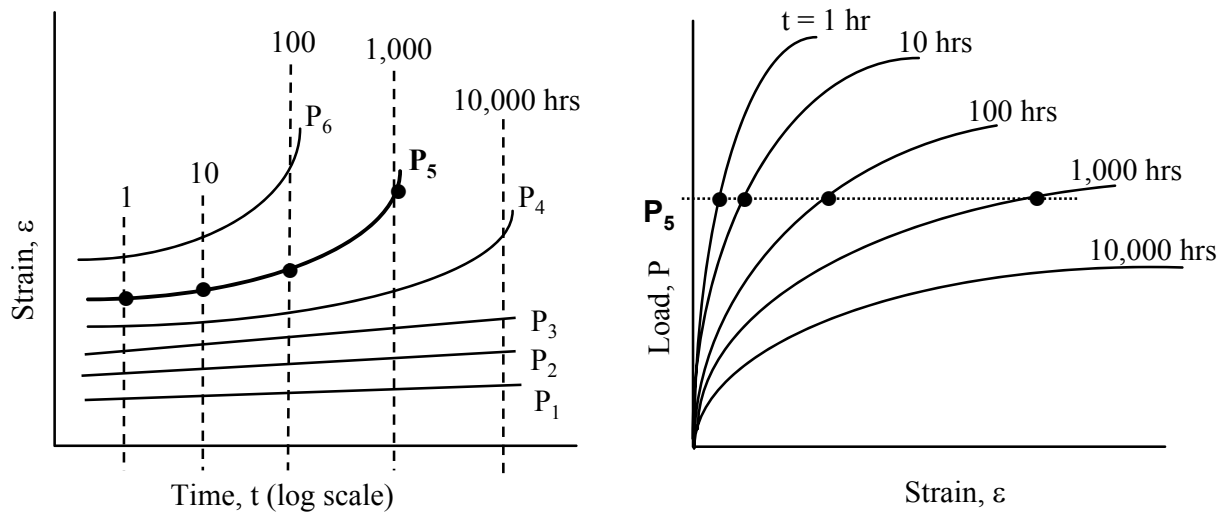

Figure C.1-4. Development of Isochronous Load-Strain Curves.

Creep stiffness curves as a function of time are also very useful to use for extrapolation purposes, or to simply estimate the long-term stiffness of the reinforcement for purposes of estimating deformation behavior. Select a constant strain or a constant load level from which to calculate the creep stiffness from the isochronous creep curves. At each point where the selected strain or load level intersects an isochronous curve, calculate the creep stiffness, J, as shown in Figure C.1-5, using the general form of the equation shown below:

$$J = P/\varepsilon \qquad \text{(C.1-1)}$$

where, "P" is the load, and "ε" is the strain. Each isochronous curve represents the specific time associated with the calculated creep stiffness. The creep stiffness values calculated should be plotted as a function of log time as shown in Figure C.1-5. Note that creep stiffness values can be calculated directly from the creep curves (Figure C.1-1) by identifying where the specified strain intersects each creep curve, or for each creep curve estimate the strain at each selected time. As shown in Figure C.2.1-1, the load or strain level at which the creep stiffness values are calculated should be selected such that the strain near the end of the specified design life is approximately equal to or less than the instability limit strain, if it is desired to predict the maximum load level that will preclude rupture, T_l. Note that other strain or load levels could be selected to calculate the creep stiffness curves if it is desired to estimate deformations at working stress conditions or to estimate the long-term creep stiffness at working strains.

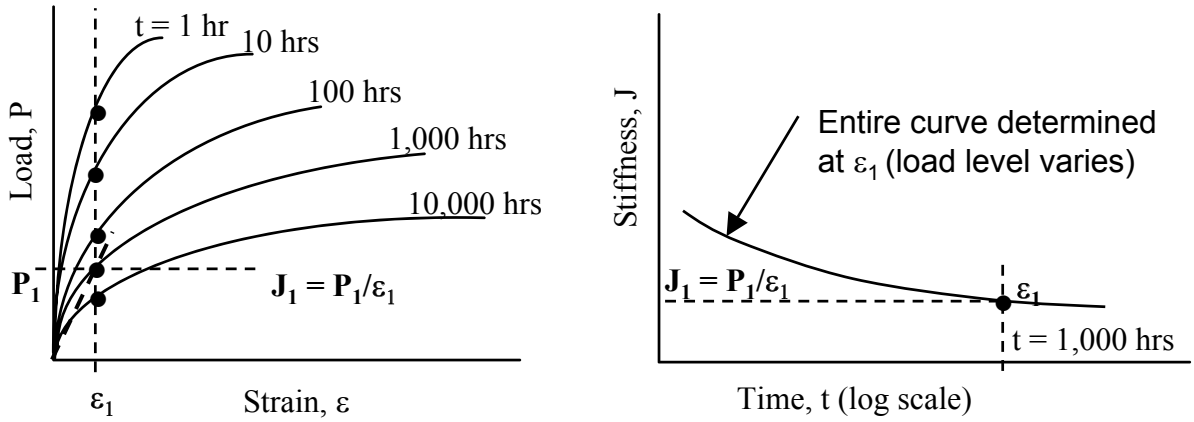

(a) Creep stiffness determined at constant strain level.

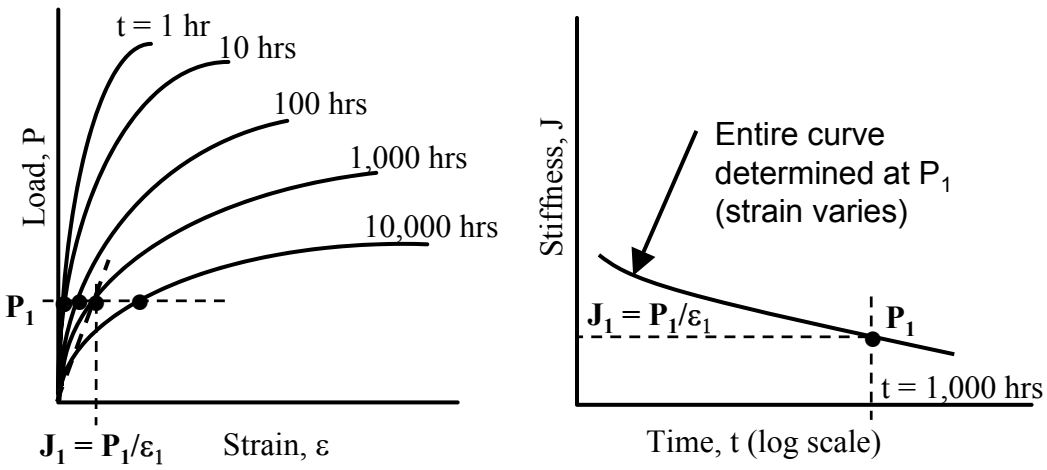

(b) Creep stiffness determined at constant load level.

Figure C.1-5. Development of Creep Stiffness Curves.

C.2 Creep Strain Data Extrapolation

The ability to accelerate creep with temperature for polyolefins such as polypropylene (PP) or high density polyethylene (HDPE) has been relatively well defined (Takaku, 1981; Bush, 1990; Popelar, et. al., 1991). Since the focus of the creep strain extrapolation method provided in this appendix is on the creep limit to prevent rupture during the design lifetime required, the issues affecting creep rupture data extrapolation also affect creep strain data extrapolation. Therefore, as is true for creep rupture testing, temperature accelerated creep data is strongly recommended for polyolefins. For polyester (PET) geosynthetics, evidence indicates that temperature can also be used to accelerate PET creep, based on data provided by den Hoedt, et. al., (1994), and others.

If elevated temperature is used to obtain accelerated creep data, it is recommended that minimum increments of 10° C be used to select temperatures for elevated temperature creep testing. The highest temperature tested, however, should be below any transitions for the polymer in question. If one uses test temperatures below 70 to75° C for polypropylene

(PP), high density polyethylene (HDPE), and PET geosynthetics, significant polymer transitions will be avoided. One should also keep in mind that at these high temperatures, significant chemical interactions with the surrounding environment are possible, necessitating that somewhat lower temperatures or appropriate environmental controls be used. These chemical interactions are likely to cause the creep test results to be conservative. Therefore, from the user's point of view, potential for chemical interactions is not detrimental to the validity of the data for predicting creep limits. However, exposure to temperatures near the upper end of these ranges could affect the stress-strain behavior of the material due to loss of molecular orientation, or possibly other effects that are not the result of chemical degradation. Therefore, care needs to be exercised when interpreting results from tests performed at temperatures near the maximum test temperatures indicated above. In general, if the stiffness of the material after exposure to the environment is significantly different from that of the virgin material, the stress-strain properties, and possibly the strength, of the material may have been affected by the exposure temperature in addition to the chemical environment. If the stiffness has been affected, the cause of the stiffness change should be thoroughly investigated to determine whether or not the change in stiffness is partially or fully due to the effect of temperature, or alternatively not use the data obtained at and above the temperature where the stiffness was affected.

A number of extrapolation and creep modeling methods have been reported in the literature (Findley, et. al., 1976; Wilding and Ward, 1978; Wilding and Ward, 1981; Takaku, 1981; McGown, et. al., 1984a; Andrawes, et. al., 1986; Murray and McGown, 1988; Bush, 1990; Popelar, et. al., 1991; Helwany and Wu, 1992). Many of the methods discussed in the literature are quite involved and mathematically complex.

Two creep extrapolation techniques are provided herein for creep rupture evaluation: the conventional method, which utilizes a simplified visual/graphical approach, temperature acceleration of creep, regression techniques, and statistical extrapolation, and the Stepped Isothermal Method (SIM). This does not mean that the more complex mathematical modeling techniques cannot be used to extrapolate creep of geosynthetics; they are simply not explained herein.

The two techniques identified above are described in more detail in Appendix B, and as follows:

C.2.1 Step-By-Step Procedures for Extrapolating Creep Strain Data – Conventional Method

Step 1: Plot the creep data. Plot the data as a semilog plot (log of time) or as an arithmetic plot (time). Do this separately for each temperature if data at elevated temperatures is available. For examples, see Figure C.1-1.

Step 2: Determine the instability limit strain (see Section C.1).

Step 3: Construct isochronous curves, as shown in Figure C.1-4.

Step 4: Develop creep stiffness curves for each temperature in which creep data is available, all at the same load level or strain level (see Figure C.1-5). Develop these stiffness curves at a strain level near the instability strain limit, or at a load level that results in a strain near the end of the specified design life that is approximately equal to the instability strain limit. These creep stiffness curves can then be used to perform time-

temperature superposition for the purpose of creep extrapolation. Note that more accurate time-temperature shift factors are likely to be obtained if the creep stiffness curves are produced at a constant load level (Figure C.1-5b) rather than constant strain level (Figure C.1-5a), as doing so avoids the additional uncertainty caused by the stress level dependence of the shift factors. In fact, using constant load level creep stiffness curves to determine shift factors should produce nearly identical results to the Stepped Isothermal Method (SIM), except that specimen to specimen variability will still be present (SIM eliminates the specimen to specimen variability when determining shift factors, since only one specimen is used – See Appendix B for more information on SIM).

Step 5: Extrapolate the creep data. For all geosynthetics, creep strain or stiffness data can be extrapolated statistically using regression analysis (i.e., curve fitting), or creep data can be accelerated by temperature to allow extrapolation using time-temperature superposition principles. It is well known that temperature accelerates many chemical and physical processes in a predictable manner. In the case of creep, this means that the creep strains under a given applied load at a relatively high temperature and relatively short times will be approximately the same as the creep strains observed under the same applied load at a relatively low temperature and relatively long times. This means that the time to a given creep strain or stiffness measured at an elevated temperature can be made equivalent to the time expected to reach a given creep strain or stiffness at in-situ temperature through the use of a time shift factor. Therefore, elevated temperature creep strain or stiffness data is made into equivalent in-situ temperature data as follows:

$$t_{amb} = (t_{elev})(a_T) \qquad \text{(C.2.1-1)}$$

where, t_{amb} is the predicted time at in-situ temperature to reach a specified creep stiffness or strain under the specified load, t_{elev} is the measured time at elevated temperature to reach a specified creep stiffness or strain under the specified load, and a_T is the time shift factor. For example, this means that if the time to reach a creep stiffness J_{cl} at elevated temperature is 10,000 hours, the creep stiffness will also be J_{cl} at in-situ temperature at a time of (10,000) (a_T) hours. In this way, the creep stiffness curve at in-situ temperature can be extrapolated to longer times.

The magnitude of the time shift factor can be determined graphically as illustrated in Figure C.2.1-1, or regression analysis of the composite creep stiffness curve can be used to optimize the shift factors to produce the highest R^2 value for all of the time shifted data. Adjust a_T such that the creep stiffness curves at elevated temperature line up with the creep stiffness curve at the design (in-situ) temperature. Note that the magnitude of the shift factors for a given product can be different at different stages of creep (i.e., primary, secondary, or tertiary creep) and different load levels (see Appendix B). This should be considered when determining shift factors. See Note 4 in Appendix B, Section B.2 for additional considerations regarding the use of time shift factors.

Step 6: Once the creep data has been extrapolated, determine the design, lot specific, creep limit load as follows:

$$T_l = (J_{cl})(\varepsilon_i) \qquad \text{(C.2.1-2)}$$

where, J_{cl} is the creep stiffness at the desired design life and temperature, and ε_i is the instability limit strain. If statistical extrapolation beyond the time shifted creep stiffness curves, or beyond the actual data if temperature accelerated creep data is not available, is necessary to reach the specified design life, the calculated creep load T_l should be reduced by an extrapolation uncertainty factor as follows:

$$T_l = (J_{cl})(\varepsilon_i)/(1.2)^{x-1} \qquad \text{(C.2.1-3)}$$

where "x" is the number of log cycles of time the creep stiffness data must be extrapolated. Extrapolations greater than two log cycles of time are not recommended (see Appendix B for a more detailed explanation). The factor $(1.2)^{x-1}$ is the extrapolation uncertainty factor. If extrapolating beyond the actual or time shifted data less than one log cycle, set "x-1" equal to "0". This extrapolation uncertainty factor only applies to statistical extrapolation beyond the actual or time shifted data using regression analysis and assumes that a shift from ductile to brittle behavior beyond the actual or time shifted data does not occur. This extrapolation uncertainty factor also assumes that the data quality is good, data scatter is reasonable, and that a minimum of 5 load levels for each temperature are tested. The load levels should be well distributed within the load range tested, and at least one to two load levels should be high enough to produce rupture within the test time at each test temperature. If these assumptions are not true for the data in question, this uncertainty factor should be increased. The uncertainty factor may also need to be adjusted if a method other than the one presented in detail herein is used for extrapolation. This will depend on how well that method compares to the method provided in this appendix. This extrapolation uncertainty factor should be increased to as much as $(1.4)^x$ if there is the potential for a shift from ductile to brittle behavior to occur beyond the actual or time shifted data, or if the data quality, scatter, or amount is inadequate (see Appendix B, Notes 5 and 6). Furthermore, if the data quality is inadequate, it may be necessary to begin applying the extrapolation uncertainty factor before the end of the time shifted data.

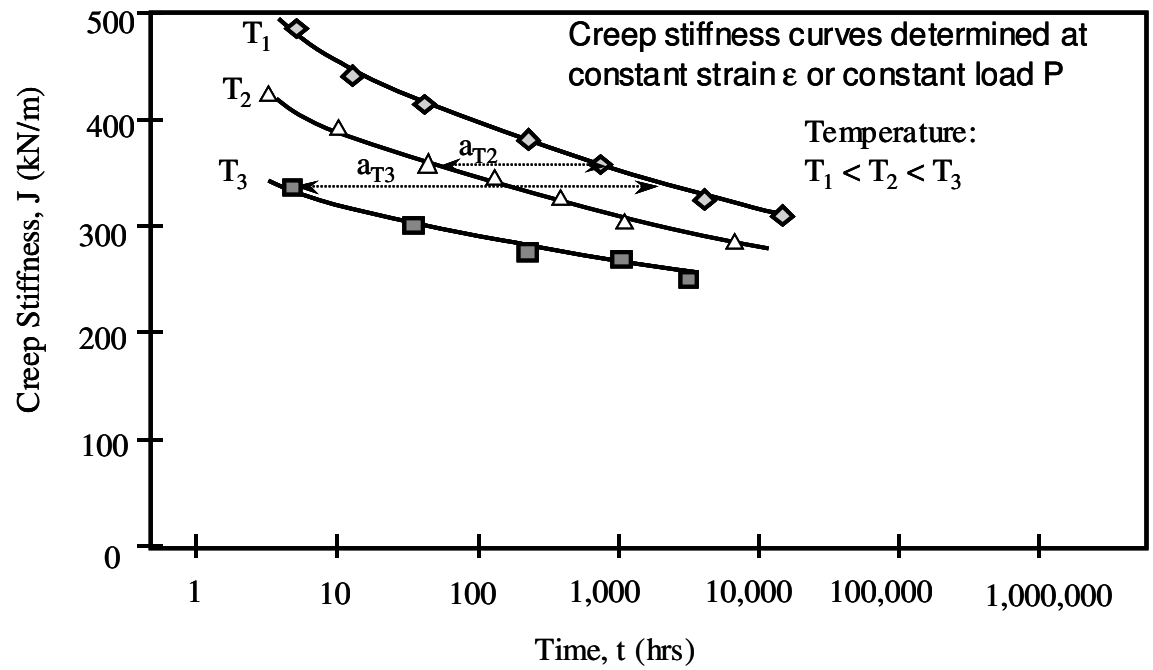

(a) Creep stiffness curves and determination of shift factors.

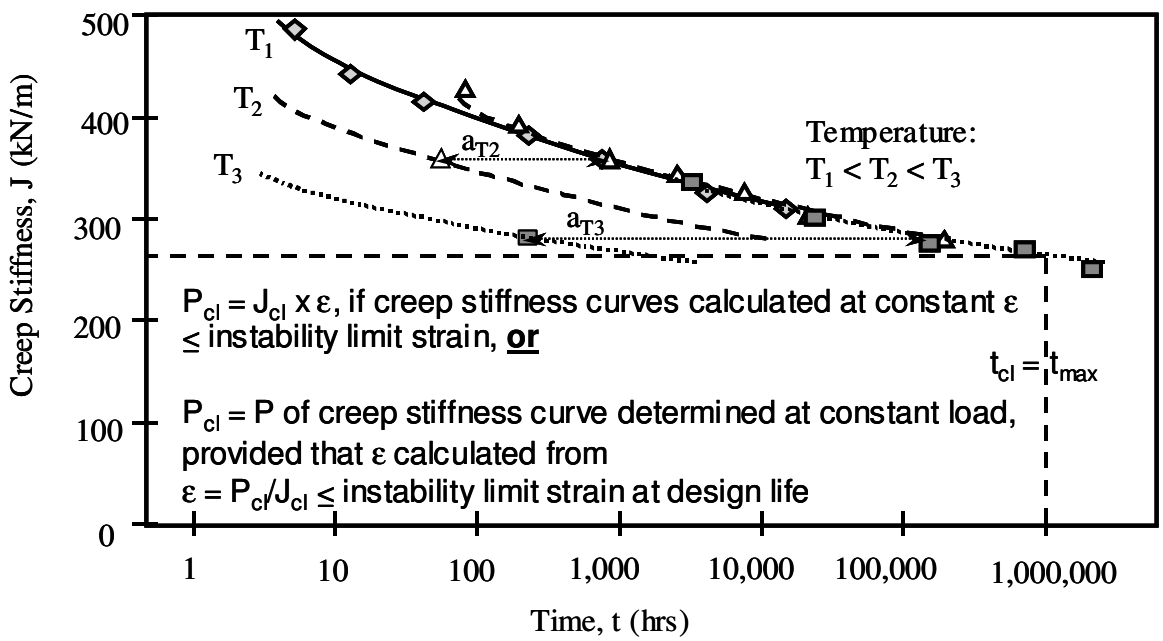

(b) Extrapolation of creep stiffness curves and determination of creep limit.

Use of Time-Temperature Superposition to Extrapolate Creep Stiffness Curves.
Figure C.2.1-1

C.2.2 Step-By-Step Procedures for Extrapolating Creep Strain Data – Stepped Isothermal Method (SIM)

See Appendix B for details regarding the description of SIM and issues regarding its use. SIM can be considered for use in generating and extrapolating geosynthetic creep data provided this method is shown to produce results which are consistent with the "conventional" extrapolation techniques recommended in this appendix. To this end, creep testing shall be conducted using conventional tests (ASTM D5262) and SIM tests (ASTM D6992). At least six SIM creep tests and six conventional creep tests and shall be conducted on at least one of the products in the product line being evaluated. The load levels selected for the SIM tests and the conventional tests shall be the same. The range of load levels for both types of tests shall be evenly distributed between loads near the creep limit typical for the type of geosynthetic and polymer tested and load levels high enough to result in failure in approximately 100 hours or less (shifted time for SIM, unshifted time for conventional tests). All of the conventional creep tests shall be obtained at the reference temperature (i.e., not temperature shifted). The minimum duration of all of the tests shall be 1,000 hours or more (unshifted for conventional tests and time shifted for SIM).

The comparison between the SIM and conventional creep tests data shall be performed at a specified strain. The specified strain will depend on the strains observed in all of the creep tests (SIM and Conventional). Select a strain that will intercept all of the creep curves as much as possible. Preferably, the strain level should be approximately 5 to 10% or more. Where the selected strain level intersects each creep curve, determine the time required to reach the specified strain. Plot the load level as a function of the logarithm of time to reach the specified strain for each set of data, and perform a regression for each data set. Use the confidence limit test for comparing SIM to conventional data as described in Appendix B, using Equations B.3-1 and B.3-2. The log times to the specified strain level shall be determined at a load level that corresponds to 1,000 hours and 50,000 hours on the conventional creep envelope, for both data sets. The log time to rupture for the SIM regression at this load level shall be within the upper and lower 90% confidence limits of the mean conventional regressed time to the specified strain at the same load level using Student's **t** test (see Appendix B for details regarding how to calculate this).

If this requirement is not met, perform two additional SIM tests at each load level *P* for the specified t_{reg} where this comparison was made and develop a new SIM time to the specified creep strain envelope using all of the SIM data. If for the revised SIM regression envelope resulting from these additional tests this criterion is still not met, perform adequate additional conventional creep rupture testing to adequately establish T_1 for the product in accordance with this appendix.

If the criterion provided above is met, the SIM testing shall be considered to be consistent with the conventional data, and SIM may be used in combination with the conventional data to meet the requirements of this appendix regarding the number and duration of creep tests. In this case, the SIM data can be used to establish an isochronous curve at the specified design life (see Figure C.1-4). Once established, using a strain level equal to the instability strain limit for the product determined in accordance with Figure C.1-3 and

Section C.1, determine the load P_{cl} directly from the isochronous curve and calculate the creep limit load T_l.

C.3 Determination of RF_{CR}

The creep reduction factor, RF_{CR} , is determined by comparing the long-term creep strength, T_l , to the ultimate tensile strength (ASTM D4595 or ASTM D6637) of the sample tested for creep. The sample tested for ultimate tensile strength should be taken from the same lot, and preferably the same roll, of material that is used for the creep testing. For ultimate limit state design, the strength reduction factor to prevent long-term creep rupture is determined as follows:

$$RF_{CR} = \frac{T_{lot}}{T_l} \qquad \text{(C.3-1)}$$

where, T_{lot} is the average lot specific ultimate tensile strength (ASTM D4595 or ASTM D6637) for the lot of material used for the creep testing. Note that this creep reduction factor takes extrapolation uncertainty into account, but does not take into account variability in the strength of the material. Material strength variability is taken into account when RF_{CR}, along with RF_{ID} and RF_D, are applied to T_{lot} to determine the long-term allowable tensile strength, as T_{ult} is a minimum average roll value. The minimum average roll value is essentially the value that is two standard deviations below the average value.

C.4 Estimation of Long-Term Creep Deformation

In-isolation creep strain data can be used to estimate post-construction strains and deformations (see Allen and Bathurst, 2002b). Since load levels in full scale structures as a percent of the ultimate tensile strength are generally quite low, adequate creep data must be obtained at low load levels (typically in the range of 2 to 20% of ultimate). The key to accurate estimation of creep strains in full scale structures is an accurate prediction of the load level.

Step 1: Estimate the load levels in the reinforcement layer(s). Current design specifications (AASHTO 2004, 2002) use the Simplified Method to estimate reinforcement loads in walls, or slope stability analysis techniques (Elias, et al., 2001) to assess reinforcement loads in reinforced slopes. Loads should be estimated for this purpose without any factor of safety or load factor applied. Based on the results obtained by Allen and Bathurst (2002a), the methods provided in current design specifications and guidelines tend to significantly over-predict reinforcement load levels in geosynthetic structures. A new method (the K-Stiffness Method) has been developed by Allen et al. (2003) that appears to predict reinforcement loads in geosynthetic structures much more accurately.

Step 2: From the available creep strain data, create isochronous curves (see Section C.1 and Figure C.1-4).

Step 3: Use the isochronous curves to create a creep strain curve at the desired load level, by selecting the strains at each time at the selected constant load level.

Step 4: Select the portion of the creep strain curve that is applicable to the post-construction strains in the full scale structure, accounting for the time required to build the structure (see Figure C.4-1).

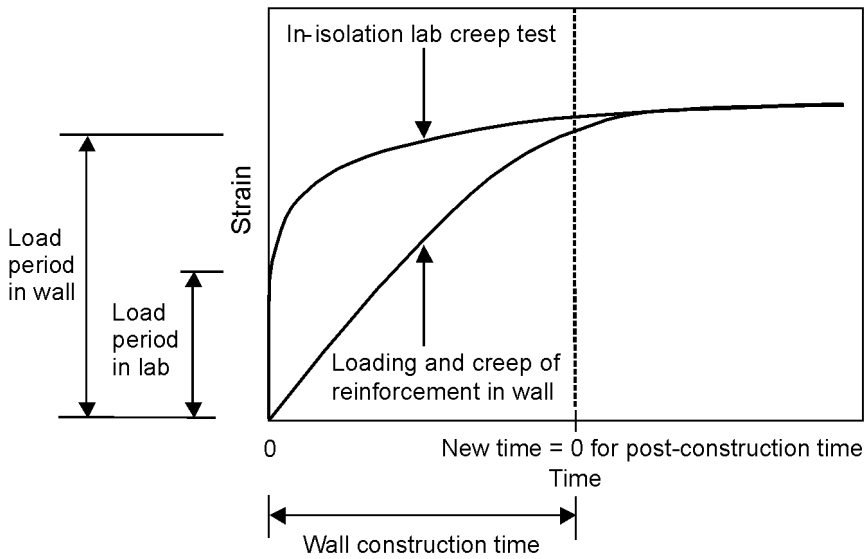

Figure C.4-1. Conceptual illustration showing adjustment of reinforcement creep strains measured in walls to in-isolation laboratory creep data (after Allen and Bathurst, 2002b).

Step 5: The creep strain is calculated as the strain at the desired design life plus the time required for the construction of the geosynthetic structure minus the strain at the end of the geosynthetic structure construction.

C.5 Estimation of Creep Stiffness for Working Stress Design

Strains for working stress design, such as when using the K-Stiffness Method (Allen at al., 2003) are typically small (i.e., approximately 2%). Since reinforcement stiffness is generally a nonlinear function of strain, it is important to obtain the creep stiffness at the appropriate strain level. The primary purpose of this stiffness calculation is to provide input data for working stress methods such as the K-Stiffness method (Allen, at al., 2003), or for more sophisticated analyses such as finite element or finite difference numerical simulations. Typically, the stiffness at the end of structure construction (J_{EOC}) or at the end of the structure design life (J_{DL}) would be required as input for this type of analysis. Either "conventional" creep testing may be used, or SIM may be used if SIM is determined to be consistent with the conventional data as described in Section C.2.2.

The load application rate during creep load ramp up should be consistent with the application rate used in the governing tensile test method (e.g., ASTM D4595 or D6637). If it is not possible to accurately apply the load at a specified rate (e.g., if dead weight is applied through the use of a jack), the actual application rate should be measured and recorded.

If it has been shown that single rib/narrow width specimens can be used in lieu of full width specimens for creep testing at high load levels (see beginning of this appendix), single rib/narrow width specimens may also be used for low strain creep stiffness testing if respective short-term tensile tests also indicate no significant specimen width effects. The maximum difference between the mean values of the load at 2 percent strain in the single rib/narrow width tensile tests and the full width tensile tests must be no greater than what is considered statistically insignificant based on a one sided student-t distribution at a level of significance of 0.05, as determined using Equation 3.

The slack tension, T_o, applied to the specimen based on the governing tensile test (e.g., ASTM D4595 or D6337) will likely be too large for creep stiffness testing due to the very low loads that are likely for this type of testing. A maximum slack tension of approximately 10 percent of the anticipated load at 2 percent strain or 9 N (2 lbf), whichever is less, is recommended for single rib or narrow width specimens. For full width specimens (i.e., per ASTM D5262), a maximum slack tension of approximately 10 percent of the anticipated load at 2 percent strain or 70 N (15 lbf), whichever is less, is recommended. Since these maximum slack tension values differ from what is specified in ASTM D4595 and ASTM D6637, a special set of tensile tests may need to be conducted for use with the low strain creep stiffness testing program. ASTM D4595 and ASTM D6637 allow both the slack tension and the slack displacement, d_o, to be set to zero for calculation purposes. For low strain creep stiffness testing, the slack displacement should be set to zero, but the slack tension should be left at its full value for stiffness calculation purposes.

Step 1: Obtain creep strain data for at least one load level low enough to produce a strain level at the end of structure construction (assume to be 1,000 hrs unless otherwise specified by the approval authority). Per agreement between the approval authority and the reinforcement manufacturer, load levels to produce additional 1,000 hour strain levels may be tested. A minimum of two specimens per product at each load level shall be tested.

To establish the load levels needed to produce the desired 1,000 hour strains for each product, conduct a series of 1,000 second ramp and hold (R+H) tests. An initial estimate of the load levels needed for the R+H tests can be obtained from the tensile tests used to establish T_{lot} for each product tested. Test a load level that is likely to produce a strain of approximately 2 percent at 1,000 hours, and then two other load levels to bracket the 2 percent load level (e.g., at load levels that would yield approximately 1 percent strain and 3 to 4 percent strain at 1,000 hours). Do three replicate R+H tests at each of those load levels, plotting the load level as a function of the estimated strain at 1,000 hours, assuming a log linear extrapolation is valid for the R+H test results. Perform a regression analysis of that data to obtain a more accurate estimation of the load level required to produce a strain of 2 percent at 1,000 hours, and run three replicate R+H tests at that load level. If one of the load levels used for the R + H tests does not produce an estimated strain of 2 percent at 1,000 hours, a fourth set of three replicate R+H tests may be needed, estimating the load level based on a regression of the R+H tests for the first three load levels. Then conduct two full 1,000 hour creep tests at the R+H load level that results in the closest estimate to 2 percent strain at 1,000 hours.

Note 1: It is desirable to conduct the full 1,000 hour creep tests at the R+H load levels tested so that a direct comparison can be made between the 1,000 hour creep tests and the R+H tests. If the creep observed in the 1,000 hour creep tests is in fact log linear, the R+H tests can then be used for quality assurance testing in the future.

Step 2: Use the 1,000 hour creep test results, and any other available creep strain data for the same lot of material, to create isochronous creep curves as shown in Figure C.1-4, if the 1,000 hour creep stiffness tests do not achieve a strain of 2 percent (or other specified strain) at 1,000 hours..

Step 3: Create creep stiffness curves at the desired constant strain level (typically 2%) as shown in Figure C.1.5, and extrapolate to the desired time as necessary using the “conventional” approach illustrated in Figure C.2.1-1 or using SIM, if SIM has been determined to be applicable. In general, extrapolation should not be necessary if the “conventional” approach is used. Be sure to extrapolate the creep stiffness curve to the desired effective design temperature. The “conventional” approach (ASTM D 5262) shall be used unless comparative testing is conducted that demonstrated SIM (ASTM D6992) is providing results that are consistent with the "conventional" approach as defined in T 925.

Step 4: Obtain the creep stiffness, J_{EOC} or J_{DL}, at the desired time from the creep stiffness curve as shown in Figure C.2.1-1.

C.6 Evaluation of Product Lines

Appendix B Section B.5 shall be used as the basis to apply creep strain data to product lines for determination of RF_{CR}. For creep stiffness assessment, a minimum of three products in the product line spanning the range of products in the line shall be tested as described in Section C.5. To interpolate to other products between the products tested, determine T_{lot} for each product tested, plotting the creep stiffness values obtained in Section C.5 as a function of T_{lot}. Creep stiffness values for other products in the product line not tested can be interpolated based on their tensile strength.

References

Allen, T.M., 1991, "Determination of Long-Term Strength of Geosynthetics: a State-of-the-Art Review", *Proceedings of Geosynthetics '91*, Atlanta, GA, USA, Vol. 1, pp. 351-379.

Allen, T. M., and Bathurst, R. J., 1996, "Combined Allowable Strength Reduction Factor for Geosynthetic Creep and Installation Damage", Geosynthetics International, Vol. 3, No. 3, pp. 407-439.

Allen, T.M., and Bathurst, R.J., 2002a, "Soil Reinforcement Loads in Geosynthetic Reinforced Walls at Working Stress Conditions", *Geosynthetics International, Geosynthetics International,* Vol. 9, Nos. 5-6, pp. 525-566.

Allen, T.M., and Bathurst, R.J., 2002b, "Observed Long-Term Performance of Geosynthetic Walls, and Implications for Design", in press with *Geosynthetics International, Geosynthetics International,* Vol. 9, Nos. 5-6, pp. 567-606.

Allen, T.M., Bathurst, R.J., Lee, W. F., Holtz, R. D., and Walters, D.L., 2003, "A New Working Stress Method for Prediction of Reinforcement Loads in Geosynthetic Walls", *Canadian Geotechnical Journal, Vol. 40, No. 5, pp. 976-994.*

Andrawes, K. Z., McGown, A., and Murray, R. T., 1986, "The Load-Strain-Time Behavior of Geotextiles and Geogrids," *Proceedings of the Third International. Conference on Geotextiles,* Vienna, Austria, pp. 707-712.

Bush, D.I., 1990, "Variation of Long-Term Design Strength of Geosynthetics in Temperatures up to 40°C", Proceedings of the Fourth International. Conference on Geotextiles, Geomembranes, and Related Products, The Hague, Netherlands, pp. 673-676.

den Hoedt, G., Voskamp, W., van den Heuvel, C. J. M., 1994, "Creep and Time-to-Rupture of Polyester Geogrids at Elevated Temperatures," *Proceedings of the Fifth International. Conference on Geotextiles, Geomembranes, and Related Products*, Singapore, pp. 1125-1130.

Ferry, J. D., 1980, Viscoelastic Properties of Polymers, 3rd Edition, John Wiley and Sons, NY.

Ingold, T.S., Montanelli, F., and Rimoldi, P., 1994, "Extrapolation Techniques for Long Term Strengths of polymer Geogrids," *Proceedings of the Fifth International. Conference on Geotextiles, Geomembranes, and Related Products*, Singapore, pp. 1117-1120.

Jewell, R.A. and Greenwood, J.H., 1988, "Long-Term Strength and Safety in Steep Soil Slopes Reinforced by Polymer Materials", *Geotextiles and Geomembranes*, Vol. 7, Nos. 1 and 2, pp. 81-118.

Koerner, R. M., 1990, "Determination of the Long-Term Design Strength of Stiff Geogrids," GRI Standard Practice GG4(a).

Krumm, G., 1988, *Der einfluss mechanischer schadigung auf das kriechverhalten von technischem filament - garn aus polyethylenterphthalat*, Diplomarbeit TU - Aachen.

McGown, A., Andrawes, K. Z., Yeo, K. C. and DuBois, D.D., 1984, "The Load-Strain-Time Behavior of Tensar Geogrids", *Proceedings of the Symposium on Polymer Grid Reinforcement in Civil Engineering*, Paper No. 1.2, pp. 1-7.

McGown, A., Paine, N., and DuBois, D.D., 1984a, "Use of Geogrid Properties in Limit Equilibrium Analysis", *Proceedings of the Symposium on Polymer Grid Reinforcement in Civil Engineering*, Paper No. 1.4, pp. 1-5.

Popelar, C.H., Kenner, V.H., and Wooster, J.P., 1991, "An Accelerated Method for Establishing the Long Term Performance of Polyethylene Gas Pipe Materials", *Polymer Engineering and Science*, Vol. 31, pp. 1693-1700.

Takaku, A., 1981, "Effect of Drawing on Creep Fracture of Polypropylene Fibers", *Journal of Applied Polymer Science*, Vol. 26, pp. 3565-3573.

Thornton, J. S., Allen, S. R., and Thomas, R. W., 1997, "Approaches for the Prediction of Long Term Viscoelastic Properties of Geosynthetics from Short Term Tests," *Geosynthetics '97,* IFAI, Long Beach, CA, Vol. 1, pp. 277-291.

Thornton, J. S., Allen, S. R., Thomas, R. W., and Sandri, D., 1998, "The Stepped Isothermal Method for Time-Temperature Superposition and Its Application to Creep Data of Polyester Yarns," *Sixth International Conference on Geotextiles, Geomembranes, and Related Products,* Atlanta, GA, pp. 699-706.

Thornton, J. S., Paulson, J., and Sandri, D., 1998, "Conventional and Stepped Isothermal Methods for Characterizing Long-Term Creep Strength of Polyester Geogrids," *Sixth International Conference on Geotextiles, Geomembranes, and Related Products,* Atlanta, GA, pp. 691-698.

WSDOT Test Method No. 925, Appendix D

Product Specific Testing and Data Interpretation Requirements to Determine RF_D for Geosynthetic Reinforcements

This appendix provides guidance regarding the performance of long-term product specific durability testing that may be conducted for product acceptance in lieu of the durability index testing as described in "Determination of Long-term Geosynthetic Strength for Initial Product Acceptance" as provided in this protocol. The procedures that follow are required if it is desired to use a value of RF_D less than the default minimum of 1.3, or to determine RF_D for environments that are defined as aggressive.

This appendix has been developed to address polypropylene (PP), polyethylene (PE or HDPE), and polyester (PET) geosynthetics. While the chemical and biological durability procedures and criteria provided herein may also be applicable to other polymers (for example, hydrolysis testing as described herein is likely applicable to polyamide and PVA geosynthetics), additional investigation will be required to establish a detailed protocol and acceptance criteria for these other polymers. These other polymers may be considered for evaluation using this protocol once modifications to the chemical/biological durability aspects of this protocol have been developed and are agreed upon by the approval authority.

The product specific durability studies for the determination of RF_D should be conducted in, or if necessary extrapolated to, the chemical/biological environment anticipated in the reinforced backfill. The anticipated temperature of the environment is also a key variable in assessing the durability of a given product, as temperature can have an exponential effect on the rate of product property change. For the purposes of these guidelines, the effective design temperature is defined as the temperature that is halfway between the average yearly air temperature and the normal daily air temperature for the highest month at the wall site. Higher design temperatures may need to be considered for structures with southern exposures. The effective design temperature will be assumed to be 20° C (68° F), if the design temperature is not specifically identified in the contract specifications. Therefore, determine RF_D at a temperature of 20°C (68° F) as a minimum. Determination of RF_D at higher temperatures is optional.

Standards are currently not available for determining the effect of chemical/biological activity on long-term geosynthetic reinforcement strength. However, long-term product specific durability testing can be conducted in a manner that is likely to produce safe results. Geosynthetic durability can be evaluated using either retrieval and testing of geosynthetics in actual installations, or through long-term accelerated laboratory testing. Use of field retrieval data from actual installations requires that the baseline, in terms of tensile strength before and immediately after installation, and possibly other properties, be known with certainty, and that the observation period be of sufficient length to permit extrapolation to the desired design life. The field retrieval approach is in general fraught with practical and technical difficulties (see Allen and Elias, 1996, Elias, 2000, and Elias, 2001). Furthermore, long periods of time may be needed for polyolefins to establish trends that can be extrapolated due to the presence of antioxidants, as no loss in strength will be observed until the antioxidants are used up. Elias (2001) suggests that 30 years of in-service time may be required to obtain adequate observational data for polyolefins, and

even PET products may require 20 years of in-service observations or more to accomplish this. Because of the very long observation periods required, long-term laboratory durability testing is the more practical approach to dealing with the durability issue. An overview of an appropriate laboratory testing approach for each geosynthetic polymer type is provided.

For polyolefin products in which the fibers/ribs do not exhibit micro-cracks or crazes as manufactured, long-term chemical durability testing may consist of elevated temperature oven aging tests to evaluate potential for oxidation effects (FHWA, 1997; Elias, et. al., 1997; Salman, et. al., 1998; Elias, et al., 1999). A magnification of x2,000 to x3,000 may be needed to observe whether or not micro-cracks or crazes are present (Salman, et. al., 1997). If micro-cracks or crazes are present, elevated temperatures may significantly affect the molecular structure of polyolefins in the vicinity of the micro-cracks/crazes, making extrapolation of elevated temperature oxidation behavior to the behavior of the as-manufactured product at ambient temperatures very difficult (Salman, et. al., 1998). For polyolefins in which the fibers/ribs exhibit micro-cracks or crazes, a means other than elevated temperature may be needed to accelerate oxidation behavior. Salman, et. al. (1998) suggest that elevated oxygen concentration and pressure at ambient temperature may prove to be an effective accelerator in lieu of elevated temperature, especially for geosynthetic products in which the fibers/ribs exhibit micro-cracks or crazes as manufactured. In addition, Schröder et al (2002) have performed extensive testing and development of a protocol utilizing elevated oxygen pressure to address this issue. However, long-term validation of the protocol and final development of the protocol as a test standard are yet to be performed.

If oven aging tests are conducted, a forced air oven is strongly recommended to keep the environment inside the oven as uniform as possible during the entire test duration and to keep oxidation products from building up inside the oven, considering the long durations that are likely to be required. Temperature uniformity inside the oven should be maintained at + 1%. An oven with horizontal air flow is recommended. Specimens should be placed in the oven parallel to the air flow and spaced no closer together than 13 mm (0.5 in.) apart (Allen and Elias, 1996; Elias, et al., 1999). The specimens should not be framed to prevent shrinkage, if shrinkage occurs, as doing this will create load in the specimen, making the resulting data difficult to interpret. Note that oxidation testing using forced air ovens will produce conservative estimates of long-term product strength due to the rapid air circulation and the relatively high oxygen content in the oven relative to the oxygen content in the ground. If the geosynthetic supplier wishes to submit data at a lower oxygen content than that of air (approximately 21% O_2), use of such data for approval of a given product may require that the structure be declared experimental, requiring that instrumentation be placed in the ground to verify the actual oxygen content in the structure backfill. Alternatively, the geosynthetic supplier could submit data from previously constructed structures with similar backfill in which the actual oxygen content in the structure backfill was measured.

For polyesters, long-term chemical durability testing should consist of elevated temperature immersion tests to evaluate potential for hydrolysis effects. A reactor similar to that illustrated in Elias, et al. (1999) is recommended for incubating the geosynthetic specimens. A description of the test protocol is provided by Elias, et al. (1999). The reactor should be capable of maintaining temperature uniformity (+ 1%) and stability during long-term use. A minimum solid/liquid ratio of 1:40 should be used to size the reactor and to determine the maximum number of specimens that can be placed in the reactor. Measures should be taken to minimize possibilities for oxidation and reaction with carbon dioxide during the long-term incubation (e.g., replace any air inside the reactor with nitrogen, use de-aired water, keep system well sealed, etc.). Specimens should be suspended in the solution on a hanger made of a material that will not react with or contaminate the immersion fluid and specimens (e.g., Teflon, stainless steel, etc.). The specimens should not be framed to prevent shrinkage, if shrinkage occurs so that an unknown amount of tension is not placed on the specimens. Specimens should each be separated by a distance of at least 13 mm (0.5 in.). The solution should be intensively stirred to ensure solution uniformity. For coated polyester products, the immersion tests should be conducted without the coating or the coated specimen ends should not be recoated (i.e., the ends of the core polymer should be left exposed to the immersion liquid). Elevated temperatures should be used to accelerate the degradation process, which allows the data to be extrapolated to the desired design life. Hydrolysis data should be submitted for the product at a pH of approximately 7 (i.e., neutral conditions - distilled water), at a pH of 9 or more, and at a pH of 4 or less to facilitate the determination of RF_D. RF_D should be determined at a pH of 7 and at an alkaline pH (i.e., a pH of 9) as a minimum. If very acidic soils are anticipated (i.e., a pH near the bottom limit of pH = 4 for conditions defined as nonaggressive), RF_D should be determined at a pH of 4 as well.

Note that EPA 9090 testing, or the ASTM equivalent (ASTM D5322), is not considered adequate for a laboratory testing program to provide an estimate of RF_D. However, EPA 9090 or ASTM D5322 testing can be used as a first cut screening tool. That is, if any significant degradation of the strength of the product in question is observed for the chemical environment tested, the product would be disqualified for use in that chemical environment unless longer term testing conducted in accordance with this appendix is performed. EPA 9090 testing (or ASTM D5322) could also be used verify the effects of certain environmental variables which are known, based on the literature, to not significantly affect the given material. For example, low or high pH is known, based on the literature, to have little effect on polyolefins. This type of testing could be used to verify that the low or high pH does not affect the tensile strength of a polyolefin product, to allow that product to be used in environments that have a pH outside the range defined as a nonaggressive environment.

The long-term chemical durability testing program should be conducted and interpreted using the following guidelines:

- Incubation temperatures for the testing should be high enough to adequately accelerate the degradation process but below any major transitions in polymer behavior (e.g., glass transition, melting). Maximum recommended test temperatures to avoid major transitions are on the order of 70 to 75° C for polypropylene, high density polyethylene, and polyester, except as discussed above for polyolefin products which have micro-cracks or crazes as manufactured. However, exposure to temperatures near the upper end of these ranges could affect the stress-strain behavior of the material due to loss of molecular orientation, or possibly other effects that are not the result of chemical degradation. Therefore, care needs to be exercised when interpreting results from strength testing after exposure to temperatures near the maximum test temperatures indicated above. In general, if the stiffness of the material after exposure to the environment is significantly different from that of the virgin material, the stress-strain properties, and possibly the strength, of the material may have been affected by the exposure temperature in addition to the chemical environment. If the stiffness has been affected, the cause of the stiffness change should be thoroughly investigated to determine whether or not the change in stiffness is partially or fully due to the effect of temperature, or alternatively not use the data obtained at and above the temperature where the stiffness was affected. It is additionally recommended that the Arrhenius plot of the data be checked for linearity (see the discussion of Arrhenius modeling which follows). As a minimum, two to three data points above and below the suspected transition should be obtained and the plot checked for linearity through the entire range of temperatures, if it is desired to validate the use of data above the suspected transition for Arrhenius modeling and extrapolation purposes.
- A minimum of three to four test temperatures are recommended, typically spaced monotonically at 10° C increments (e.g., see ASTM D3045), except as discussed above for some polyolefin products.
- At the lowest test temperature (e.g., 30 to 50° C), incubation times of 2 to 4 years should be anticipated to get data adequate for long-term extrapolation.
- Enough retrievals (e.g., a minimum of three to four retrievals) should be made at a given test condition to adequately define the property loss as a function of incubation time.
- As a minimum, degradation should be tracked using the tensile strength of the specimens retrieved from the incubation chambers. Full wide width (ASTM D4595 or ASTM D6637) specimens are preferred; however, single rib or yarn specimens can be used.
- It is also recommended that degradation be tracked by chemical means, if possible, as well as through the use of scanning electron microscope (SEM) micrographs to verify the significance of the mechanical property degradation observed.

- The statistical variation of the measured properties after degradation are likely to be greater than what would be observed for the virgin material. This may require that the number of specimens per retrieval be greater than what the property variation for the virgin material would indicate.
- Extrapolation of chemical durability data for polymers typically utilizes an Arrhenius approach, though there is evidence which suggests that the Arrhenius model does not always work well for geosynthetics. Assuming Arrhenius modeling is appropriate, the slope of the strength degradation versus time plots (transformed mathematically to be linear through zero, first, or second order Arrhenius equations) can be used to characterize the degradation behavior as a function of temperature, allowing the slope at the desired design temperature to be estimated through the Arrhenius extrapolation. The equation order which best fits the data should be used (see Salman, et. al., 1998, for details). The strength retained at a given time at the design temperature can be calculated directly from the linear equation with the extrapolated slope. Note that Arrhenius modeling could also be conducted as a function of reactant (oxygen) concentration and pressure instead of temperature (Shelton and Bright, 1993; Salman, et. al., 1998). The extrapolation concept would be similar to that used for temperature. See Shelton and Bright (1993), Salman, et. al. (1997), and Salman, et. al. (1998), Elias, et al. (1999), Elias (2000) for guidance on Arrhenius modeling techniques as applied to geosynthetics. Also note that since the extrapolation is being conducted over several log cycles of time, uncertainty in the data should be considered when determining the retained strength at the design life and design environment.
- For polyolefin oxidation, Arrhenius modeling will likely need to be conducted in two steps, as there are two main phases in the oxidation process for polyolefins: 1) the induction phase, where antioxidant consumption is the primary activity and little, if any, product strength loss occurs, and 2) the main polymer oxidation phase, where oxidative degradation of the polyolefin occurs, resulting in strength loss, and can generally be described by the kinetics of a Basic Auto-oxidation Scheme (Salman, et. al., 1997; Elias, et al., 1999). An Arrhenius model for the first phase should be developed so that the induction period t^{ind} at the design temperature or reactant (i.e., oxygen) concentration can be estimated. A second Arrhenius model should then be developed using only the data after the induction period, and time in this case would begin at the end of the induction period at each temperature or reactant concentration tested. This second Arrhenius model is then extrapolated to the design temperature or reactant concentration to estimate the strength loss anticipated at the desired design life minus the induction period. Analysis of the remaining antioxidant content provides an additional method of measuring the duration of Step 1, particularly at lower temperatures and long durations, since changes in the antioxidant content take place ahead of the reduction in strength. Note that if the estimated induction period at the design environment is greater than the desired design life, this second phase Arrhenius modeling is unnecessary.

- Once the tensile strength at a given design life and design temperature has been estimated from the test data, determine RF_D as follows:

$$RF_D = \frac{T_{lot}}{T_D} \quad \text{(D-1)}$$

where, T_{lot} is the average lot specific ultimate tensile strength for the lot of material used for the durability testing, and T_D is the extrapolated (i.e., to the required design life) lot specific tensile strength after degradation based on the laboratory aging tests. In no case should RF_D be less than 1.1.

Biological degradation has not proved a serious factor in the service life of geosynthetics. This is because the high molecular weight polyethylene, polyester, polypropylene and polyamide used are not easily broken down by bacteria and fungi. The high tensile strength of soil reinforcements prevents them from damage by roots of burrowing animals such as rabbits. For this reason it is not in general necessary to apply consider biological degradation in defining RF^D. However, the possibility of biological degradation should be reviewed if new polymers other than those described are used. Biological durability, if specifically requested by the approval authority, should be evaluated based on ASTM D3083-89, except the test should be modified to use ASTM D4595 or ASTM D6637 as the tensile test method. If any significant tensile strength loss is observed, as determined using ASTM D4595 or ASTM D6637, additional longer term testing should be performed before the product is further considered for use in reinforcement applications (see Bright, 1993).

If, as an alternative to long-term laboratory testing, the geosynthetic manufacturer prefers to submit data from long-term field retrievals, the following requirements must be met:

- A minimum of three retrievals must be obtained over a minimum time period adequate to permit extrapolation to the required design life (i.e., the first retrieval is taken right after installation, the second retrieval is taken at some time during the middle of this period, and the third retrieval is taken at the end of the minimum study period).
- The retrieved samples shall be evaluated both physically and chemically to determine changes in strength, fiber/yarn/rib appearance, and polymer chemistry. Lot specific baseline data for the exhumed geosynthetic regarding strength and polymer properties must be available for comparison. The soil environment in which the geosynthetic was placed must also be well defined in terms chemistry, moisture, temperature, gradation, and approximate geosynthetic stress level. Enough specimens for each retrieval must be taken to account for statistical variance in the properties measured. See Elias (2000, 2001) for a more detailed description of the procedures required to obtain the needed information to determine RF_D using this approach.
- The polymer and physical characteristics of the exhumed material must meet the requirements for use in determining RF_D for “similar” products as described later in this appendix.

Note 1: *Chemical degradation of geosynthetics is a result of both environmental factors and polymer compositional factors. For a given polymer type, one can expect the greatest amount of chemical degradation to occur, in general, with polymers which have low molecular weights, low percent crystallinity, low density, and low draw ratios (Elias, 1990). Polymer additives also influence the degradation rate. Regarding environmental factors, one can expect the greatest amount of degradation to occur, in general, at relatively high temperatures, in moderate to high moisture conditions, in soils which are active chemically (especially in terms of pH and certain types of ions present), and with the geosynthetic under stress (Elias, 1990). Thickness of the polymer fibers may also have a strong influence on the degradation rate, as degradation mechanisms are dependent on diffusion processes or exposure and removal of surface material (Wrigley, 1987). Key chemical degradation mechanisms in typical soil environments include oxidation, hydrolysis, and environmental stress cracking (ESC).*

The oxidation reaction can either be initiated by ultraviolet (UV) radiation or thermal energy. The rate of oxidation will be governed by chemical rate kinetics and by the rate of diffusion of the oxygen, the antioxidants and the degradation products. Diffusion (or migration) is frequently the controlling factor. Where the geosynthetic is buried, thermally activated oxidation is of most interest. UV activated oxidation is of importance only where the geosynthetic is exposed to light, such as at the wall face. In general, the wall face is covered from light with a permanent facing. Of the polymers used in geosynthetics, relatively speaking, polypropylene (PP) is potentially the most susceptible to oxidation, followed by high density polyethylene (HDPE) and polyester (PET) which have a relatively low susceptibility. Though in actuality a rather complex reaction, conceptually, polyolefin (i.e., PP and HDPE) oxidation is the reaction of free radicals within the polymer with oxygen, resulting in breakdown and/or crosslinking of the molecular chains and embrittlement of the polymer.

Antioxidants are typically added to the polymer (sometimes multiple types are added to increase effectiveness) to prevent oxidation during processing and use. Broad classes of antioxidants often used in geosynthetics include phenolic stabilizers and hindered amine light stabilizers (HALS). As the antioxidants are used up, resistance of the polymer to oxidation will decrease. The rate of polymer oxidation is dependent on how much and what type of antioxidant is present initially, at what rate it is used up, and how well it is distributed within the polymer (Van Zanten, 1986). Environmental factors which affect the rate of oxidation include temperature, oxygen concentration which in soil can vary from 21% in gravels at shallow depth to on the order of 1% in fine-grained soils at deeper depths (Yanful, 1993; Yanful, et. al., 1993), and the presence of transition metal ions such as iron (most common) or copper which act as a catalyst and accelerate the oxidation reaction. Thermal oxidation at typical in-soil temperatures appears to be quite slow.

O*f the polymers mentioned above, only PET is potentially susceptible to hydrolysis. Hydrolysis occurs when water molecules react with the polymer molecules, resulting in chain scission, reduced molecular weight, and strength loss. Hydrolysis is simply the very slow inverse reaction of the synthesis of PET when water is present. The specifics of the reaction vary depending on the pH of the liquid. This results in high pH (alkaline) hydrolysis being relatively rapid, whereas neutral or low pH conditions can result in a slow hydrolysis rate. The rate of hydrolysis is also highly temperature dependent and*

can become relatively rapid at high temperatures in the vicinity of the glass transition temperature or above for the polymer, which is on the order of 70° C to 80° C (160° F to 180° F). The polymer does not need to be submerged for hydrolysis to occur, as hydrolysis can occur in moderate to high humidity conditions, though the reaction rate becomes slower as the humidity decreases (McMahon, et. al., 1959).

Hydrolysis appears to be the result of both a surface erosional phenomenon as well as a diffusional process of water to the polymer fiber core. These two phenomena have given rise to the terms "outer" and "inner" hydrolysis. Outer, or surficial, hydrolysis is dominant in high pH conditions and is characterized by loss in fiber cross-sectional area with minimal reduction in the molecular weight of the polymer that remains (Anderson, et. al., 1992; Jailloux, et. al., 1992). Inner, or diffusional controlled hydrolysis is dominant in neutral and acidic conditions and is characterized by significant losses in molecular weight of the polymer with minimal surficial erosion or damage (Anderson, et. al., 1992; Jailloux, et. al., 1992).

Rupture of a polymer when under stress is either ductile or brittle in nature. The ductile failure mode occurs when stresses are high enough to cause tie molecules to stretch out, lamellae to separate and start unfolding, resulting in fracture of the spherulites and plastic flow of the molecular structure (Lustiger, 1983). When failure occurs in a brittle manner, stress levels are usually lower, allowing sufficient time for tie molecules to slowly disentangle themselves from adjacent spherulites, initiating crack formation followed by slow crack growth (Bright, 1993).

ESC is the result of an accelerated crack initiation and growth process occurring when a polymer is subjected concurrently to a particular chemical environment and long-term stress. This accelerated crack initiation and growth process can result in premature brittle failure. ESC results in molecular chain disentanglement rather than chain breakage or chemical change.

Evaluation of ESC has been focused on polyethylene due to its use in various critical applications (e.g., telephone transmission cables, natural gas pipe) and the potential sensitivity of some polyethylenes to this phenomenon. The literature indicates that other polymers used for geosynthetics may also experience some sensitivity to this phenomenon (Bright, 1993).

The results of previous studies show that polyethylene resistance to ESC can be improved by increasing its average molecular weight, decreasing its molecular weight distribution, increasing its crystalline content, reducing the crystallite and/or spherulite size, increasing the degree of orientation, and using copolymerization (Wrigley, 1987). Therefore, the potential for ESC in a given polymer can be controlled.

ESC is closely related to the more general phenomenon of stress cracking. The difference between the two is that the chemical present for ESC accelerates the chain disentanglement process, whereas in stress cracking no accelerating chemical is present. Chemicals identified in the literature that can accelerate the stress cracking process include water, weak acids and bases, alcohols, metallic soaps, and solvents (Wrigley, 1987). Water, and to some extent weak acids and bases, are "chemicals" which need to be considered for ESC in typical in-soil environments.

An extensive long-term laboratory study of oxidation and hydrolysis as applied to geosynthetic reinforcement has been carried out (Elias, et al., 1999). Field studies have been carried out to evaluate many of the longer-term installations in which some baseline data was available (Elias, 2001). In most cases, degradation has been minimal, if it is even significant enough be measurable. These laboratory studies appear to corroborate the lack of degradation that has been observed in the field (Elias, 2001). The protocols for oxidation and hydrolysis evaluation provided in this appendix, as well as the durability evaluation criteria provided elsewhere in Standard Practice T925, have been developed based on results from the laboratory and field studies conducted by Elias, et al. (1999) and Elias (2001).

Use of Durability Data from "Similar" Products

Long-term chemical/biological durability data obtained from tests performed on older product lines, or other products within the same product line, may be applied to new product lines, or a similar product within the same product line, if one or both of the following conditions are met:

- The chemical and physical characteristics of tested products and proposed products are shown to be similar. Research data, though not necessarily developed by the product manufacturer, should be provided which shows that the minor differences between the tested and the untested products will result in equal or greater chemical/biological degradation resistance for the untested products.
- A limited testing program is conducted on the new or similar product in question and compared with the results of the previously conducted full testing program.

For polyolefins, similarity could be judged based on molecular weight and structure of the main polymer (i.e., is the polymer branched or crosslinked, is it a homopolymer or a blend, percent crystallinity, etc.), percentage of material reprocessed, tenacity of the fibers and processing history, and polymer additives used (i.e., type and quantity of antioxidants or other additives used). For polyesters and polyamides, similarity could be judged based on molecular weight or intrinsic viscosity of the main polymer, carboxyl end group content, percent crystallinity, or other molecular structure variables, tenacity of the fibers and processing history, percentage of material reprocessed or recycled, and polymer additives used (e.g., pigments, etc.). The untested products should also have a similar macrostructure (i.e., woven, nonwoven, extruded grid, needlepunched, yarn structure, etc.) and fiber dimensions (e.g., thickness) relative to the tested products. It should be noted that percent crystallinity is not a controlled property and there is presently no indication of what an acceptable value for percent crystallinity should be.

For chemical durability evaluation, the limited testing program could consist of laboratory aging tests with a 1,000 to 2,000 hour incubation period in the same environment used for the full testing program conducted previously, conducted at a temperature near but slightly below any major property transitions. These limited durability test results must show that the durability performance of the new or similar product is equal to or better than the performance of the product previously tested. If so, the results from the full testing program on the older or similar product could be used for the new/similar product. If not, then a full testing and evaluation program for the new product should be conducted.

References

AASHTO, 2002, *Standard Specifications for Highway Bridges*, American Association of State Highway and Transportation Officials, Seventeenth Edition, Washington, D.C., USA, 686 p.

Allen, T. M., and Elias, V., 1996, *Durability of Geosynthetics for Highway Applications - Interim Report,* FHWA-RD-95-016, Washington, D.C.

Anderson, P. L., Jailloux, J.-M., and White, D. F., 1992, "Testing Durability of Polyester to Be Used in Earth-Reinforced Structures," Earth Reinforcement Practice, Balkema, Rotterdam, pp. 9-12.

American Society for Testing and Materials (ASTM), 1994, *Annual Book of Standards*, Vol. 8.04, Elastic Pipe and Building Materials, ASTM, Philadelphia, PA, USA.

American Society for Testing and Materials (ASTM), 1994, *Annual Book of Standards*, Vol. 4.08 and 4.09, Soil and Rock, ASTM, Philadelphia, PA, USA.

Bright, D. G., 1993, "The Environmental Stress Cracking of Polymers Used in Geosynthetic Products," Geosynthetics '93 Conference, Vancouver, B.C., pp. 925-934.

Elias, V., 1990, Durability/Corrosion of Soil Reinforced Structures, FHWA/RD-89/186, Federal Highway Administration, Washington, D.C.

Elias, V., 2000, *Corrosion/Degradation of Soil Reinforcements for Mechanically Stabilized Earth Walls and Reinforced Soil Slopes*, FHWA-NHI-00-044, Federal Highway Administration, Washington, D.C.

Elias, V., 2001, *Long-Term Durability of Geosynthetics Based on Exhumed Samples from Construction Projects*, FHWA Report FHWA RD-00-157, 53 pp.

Elias, V., Salman, A., Juran, I., Pearce, E., and Lu, S. 1999, *Testing Protocols for Oxidation and Hydrolysis of Geosynthetics*, FHWA Report FHWA RD-97-144, 200 pp.

Elias, V., DiMaggio, J., and DiMillio, A., 1997, "FHWA Technical Note on the Degradation-Reduction Factors for Geosynthetics," *Geotechnical Fabrics Report*, Vol. 15, No. 6, pp. 24-26.

Federal Highway Administration (FHWA), 1997, "Degradation Reduction Factors for Geosynthetics," *Federal Highway Administration Geotechnology Technical Note*.

Jailloux, J.-M., Anderson, P. L., and Thomas, R., 1992, "Chemical Compatibility Studies of Polyester Fibers and Yarns to Be Used in Geocomposites," Geotextiles and Geomembranes, Vol. 11, No. 3, pp. 277-290.

Jewell, R.A. and Greenwood, J.H., 1988, "Long-Term Strength and Safety in Steep Soil Slopes Reinforced by Polymer Materials", *Geotextiles and Geomembranes*, Vol. 7, Nos. 1 and 2, pp. 81-118.

Lustiger, A., 1983, "The Molecular Mechanism of Slow Crack Growth in Polyethylene," Proceedings, Eighth Plastic Fuel Gas Pipe Symposium, American Gas Association: Arlington, Virginia, pp. 54-56.

McMahon, W., Birdsall, H. A., Johnson, G. R., and Camilli, C. T., 1959, "Degradation Studies of Polyethylene Terephthalate," Journal Chemical Engineering Data, Vol. 4, No. 1, pp. 57-79.

Murray, R. T. and Farrar, D. M., 1988, "Temperature Distributions in Reinforced Soil Retaining Walls," Geotextiles and Geomembranes, No. 7, pp. 33-50.

Salman, A., Elias, V., Juran, I., Lu, S., and Pearce, E., 1997, "Durability of Geosynthetics Based on Accelerated Laboratory Testing," Geosynthetics '97, IFAI, San Diego, CA, pp. 217-234.

Salman, A., Elias, V., and DiMillio, A., 1998, "The Effect of Oxygen Pressure, Temperature, and manufacturing Processes on Laboratory Degradation of Polyolefin Based Geosynthetics," *Sixth International Conference on Geotextiles, Geomembranes, and Related Products,* Atlanta, GA (in press).

Schröder H. F., Bahr H., Lorenz E., Kneip E., Schmücking I., Zeylanov E. B., "Resistance of polyolefin geosynthetics to oxidation – a new accelerated test working at elevated oxygen pressure. Geosynthetics – State of the art – Recent developments," eds Delmas P., and Gourc J P., Proceedings of the Seventh International Conference on Geosynthetics, Nice, France. Balkema, Lisse, Netherlands, 2002, pp 1455-1458.

Shelton, W. S., and Bright, D. G., 1993, "Using the Arrhenius Equation and Rate Expressions, to Predict the Long-Term Behavior of Geosynthetic Polymers," Geosynthetics '93 Conference, Vol. 2, Vancouver, B.C., pp. 789-802.

Van Zanten, V., ed., 1986, *Geotextiles and Geomembranes in Civil Engineering,* Wiley-Halsted.

Wisse, J.D.M., Broos, C.J.M., and Boels, W.H., 1990, "Evaluation of the Life Expectancy of Polypropylene Geotextiles Used in Bottom Protection Structures Around the Ooster Schelde Storm Surge Barrier - A Case Study", *Proceedings of the Fourth International Conference on Geotextiles, Geomembranes, and Related Products*, The Hague, Netherlands, pp. 679-702.

Wrigley, N. E., 1987, "Durability and Long-Term Performance of Tensar Polymer Grids for Soil Reinforcement," Materials Science and Technology, Vol. 3, pp. 161-170.

Yanful, E. K., 1993, Oxygen Diffusion Through Soil Covers on Sulphidic Mine Tailings," ASCE Journal of Geotechnical Engineering, Vol. 119, No. 8, pp. 1207-1228.

Yanful, E. K., Riley, M. D., Woyshner, M. R., and Duncan, J., 1993, "Construction and Monitoring of a Composite Soil Cover on an Experimental Waste-Rock Pile near Newcastle, New Brunswick, Canada," Canadian Geotechnical Journal, No. 30, pp. 588-599.

WSDOT Test Method T 926

Geogrid Brittleness Test

Purpose and Scope

The purpose of this test to determine whether or not the product is likely to exhibit brittle behavior (rapid crack growth) when bent. This test is applicable to geogrids made of High Density Polyethylene (HDPE), polypropylene (PP) fiberglass, or other relatively stiff geogrid materials.

Equipment

The testing device shall have two planes tangent to a 0.5±0.025 inch radius curve fixed at a 90±2 degree angle, such as shown in Figure 1.

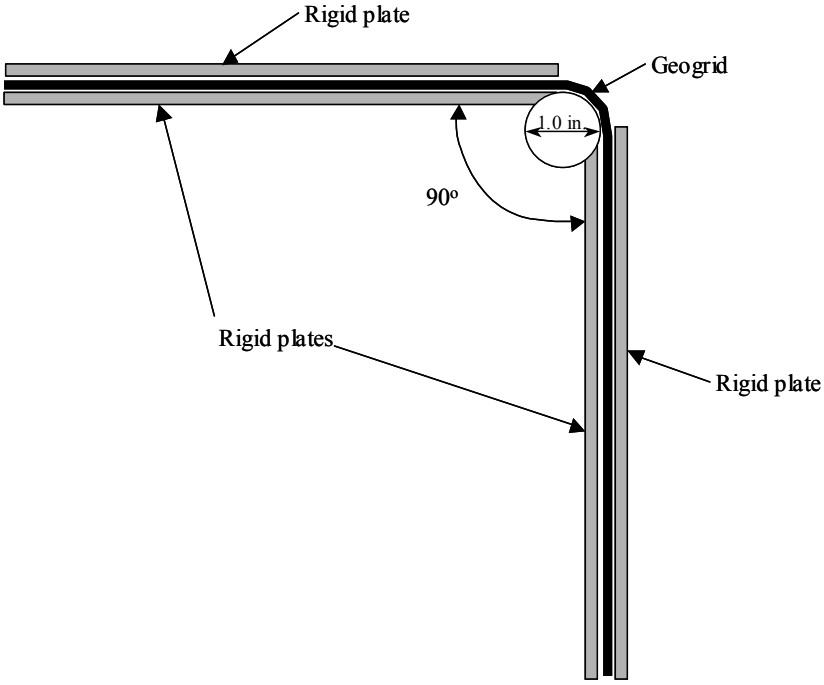

Geogrid bend test setup.
Figure 1

Sampling and Specimens

Sampling shall be in conformance to WSDOT Test Method 914.

Six specimens shall be taken at random locations throughout the sample. The specimens shall be one rib wide, with a minimum length of 12 inches, and approximately 2 inches of the cross-ribs shall remain attached to the rib being tested. No specimen should be located closer than 6 inches from the edge of the sample.

Procedure

The laboratory shall be 70±4 degrees F. Samples shall be allowed to remain at the laboratory temperature for a minimum of 1 hour before testing.

Place the geogrid rib on the bending template as shown in Figure 1. Apply the top cover plate on the geogrid, and apply uniform pressure on the plate and the geogrid specimen. Once the upper plate is in position and fixed, place the vertical cover plate over the geogrid, applying uniform pressure, causing the geogrid rib to conform to the 0.5 inch radius in approximately 3 seconds. Hold the geogrid in place for a minimum of 10±1 seconds.

If any geogrid specimen breaks or otherwise exhibits cracking the full width of the rib or the cracking extends into the cross-rib at the bend at any time during the 10 second hold period, the geogrid sample has failed the test.

Report

Identify the number of specimens that failed, if any, in the sample. Close-up photographs of any failed specimen shall be taken and maintained at the testing lab until the contract is completed.

WSDOT Test Method for ASTM C 939[1]

Flow of Grout for Preplaced-Aggregate Concrete (Flow Cone Method)

This standard is issued under the fixed designation C 939; the number immediately following the designation indicates the year of original adoption or, in the case of revision, the year of last revision. A number in parentheses indicates the year of last reapproval. A superscript epsilon (e) indicates an editorial change since the last revision or reapproval. *This specification has been approved for use by agencies of the Department of Defense.*

1. Scope

   1.1 This test method covers a procedure, used both in the laboratory and in the field, for determining the time of efflux of a specified volume of fluid hydraulic cement grout through a standardized flow cone and used for preplaced-aggregate (PA) concrete; however, the test method may also be used for other fluid grouts.

   1.2 It is for use with neat grout and with grouts containing fine aggregate all passing a No. 8 (2.36 mm) sieve.

   1.3 This test method is intended for use with grout having an efflux time of 35 s or less.

   1.4 When efflux time exceeds 35 s, flowability is better determined by flow table, found in Test Method C 109, using 5 drops in 3 s.

   1.5 The values stated in SI units are to be regarded as the standard.

   1.6 *This standard does not purport to address all of the safety concerns, if any, associated with its use. It is the responsibility of the user of this standard to establish appropriate safety and health practices and determine the applicability of regulatory limitations prior to use.*

2. Referenced Documents

   2.1 *ASTM Standards:*

C 109/C109M	Test Method for Compressive Strength of Hydraulic Cement Mortars (Using 2 in or 50 mm Cube Specimens)
C 938	Practice for Proportioning Grout Mixtures for Preplaced-Aggregate Concrete

3. Summary of Test Method

   3.1 The time of efflux of a specified volume of grout from a standardized flow cone is measured.

4. Significance and Use

   4.1 This test method is applicable to the determination of the fluidity of various fluid grout mixtures.

5. Interferences

   5.1 The presence of solid particles retained on the No. 8 (2.36 mm) sieve or lumps of unmixed material in the grout may cause the grout to flow unevenly through the discharge tube of the flow cone or stop the flow completely. Uneven flow will result in slower transit of the grout, thereby indicating a false consistency.

[1] This Test Method is based on ASTM C 939-97.

6. Apparatus

6.1 *Flow Con*e, ~~with dimensions as shown in Figure 1. The discharge tube shall be stainless steel~~. The body and discharge tube can be stainless steel, cast aluminum, or other essentially non-corroding metal.

Note 1: Cones with high-density polyethylene bodies are acceptable for field use in situations where precision as described in this test method is not required.

6.2 *Receiving Container*, capacity 2000 mL, minimum.

6.3 *Ring Stand* or other device, capable of supporting the flow cone in a vertical, steady position over the receiving container.

6.4 *Leve*l, carpenter's or similar.

6.5 *Stop Watch*, least reading of not more than 0.2 s.

6.6 *Grout Mixe*r, conforming to Practice C 938.

7. Test Sample

7.1 The grout test sample shall be in excess of 1725 mL and shall be representative of the grout in the mixer.

7.2 When sampling and testing is being done for the purpose of proportioning or comparing mixes or for qualifying materials, the temperature of the dry materials and mixing water shall be such that the temperature of the freshly mixed grout is 73.4 ± 3°F (23 ± 1.7°C), unless otherwise specified.

8. Calibration of Apparatus

8.1 Mount the flow cone firmly in such a manner that it is free of vibration. Level the top to assure verticality. Close the outlet of the discharge tube with a finger or a stopper. Introduce 1725 ± 5 mL of water into the cone. Adjust the point gage to indicate the level of the water surface. Then allow the water to drain.

8.2 Before first use of the flow cone with grout and periodically thereafter, check the accuracy of the cone by filling it with water as described in 8.1. After checking or adjusting the point gage, start the stop watch and simultaneously remove the finger. Stop the watch at the first break in the continuous flow of water. The time indicated by the stop watch is the time of efflux of water. If this time is 8.0 ± 0.2 s, the cone may be used for determining the time of efflux of grout.

Note: It is imperative that the water be completely still prior to allowing it to flow from the cone, any movement will cause the time of efflux to increase.

9. Procedure

9.1 Moisten the inside of the flow cone by filling the cone with water and, 1 min before introducing the grout sample, allow the water to drain from the cone. Close the outlet of the discharge tube with a finger or a stopper. Introduce the grout into the cone until the grout surface rises to contact the point gage, start the stop watch, and simultaneously remove the finger or stopper. Stop the watch at the first break in the continuous flow of grout from the discharge tube, then look into the top of the cone; if the grout has passed sufficiently, such that light is visible through the discharge tube, the time indicated by the stop watch is the time of efflux of the grout. If light is not visible through the discharge tube, then the use of the flow cone is not applicable for grout of this consistency. At least two tests having times of efflux within 1.8 s of their average shall be made for each grout mixture.

9.2 The test for time of efflux shall be made within 1 min of drawing of the grout from the mixer or transmission line. When grout is being placed over a significant period of time, the time of efflux may be determined at selected intervals to demonstrate that the consistency is suitable for the work.

10. Report

10.1 Report the following information:

10.1.1 Identification of sample,

10.1.2 Identification of materials in the sample, the proportions, and whether laboratory prepared or taken from the field production mix,

10.1.3 Average time of efflux to nearest 0.2 s and time interval from completion of mixing at which the test was made, and

Note 2: Other means of indicating grout level may be used as long as accurate indication of grout level on volume is obtained.

10.1.4 Temperature, ambient and of the sample at the time of test.

11. Precision and Bias

11.1 *Precision* — The following within-laboratory, multiple-operator precision applies. The single laboratory standard deviation has been found to be 0.88 s. Therefore, results from two properly conducted tests on the same material should not differ by more than 2.49 s.

11.2 *Bias* — No statement on bias can be prepared because there are no standard reference materials.

12. Keywords

12.1 flow cone; grout; preplaced—aggregate concrete; time of efflux

WSDOT FOP for ASTM C 1611

Standard Test Method for Slump Flow of Self-Consolidating Concrete

1. Scope

   1.1 This test method covers the determination of slump flow of self-consolidating concrete.

   1.2 The values stated in either inch-pound units or SI units are to be regarded separately as standard. Within the text, the SI units are shown in brackets. The values stated in each system are not exact equivalents; therefore, each system shall be used independently of the other. Combining values from the two systems may result in nonconformance with the standard.

   1.3 This standard does not purport to address all of the safety concerns, if any, associated with its use. It is the responsibility of the user of this standard to establish appropriate safety and health practices and determine the applicability of regulatory limitations prior to use. (**Warning**: Fresh hydraulic cementitious mixtures are caustic and may cause chemical burns to skin and tissue upon prolonged exposure.)

   1.4 The text of this standard references notes and footnotes that provide explanatory material. These notes and footnotes (excluding those in tables and figures) shall not be considered as requirements of the standard.

2. Referenced Documents

   2.1 ASTM Standards

   C 143/C 143M – Test Method for Slump of Hydraulic-Cement Concrete

   C 172 – Practice for Sampling Freshly Mixed Concrete

   C 173/C 173M – Test Method for Air Content of Freshly Mixed Concrete by the Volumetric Method

   C 670 – Practice for Preparing Precision and Bias Statements for Test Methods for Construction Materials

   2.2 AASHTO Standards

   T 119M/T 119 – Standard Test Method for Slump of Hydraulic-Cement Concrete

   T 347 – Slump Flow of Self-Consolidating Concrete (SCC)

   2.3 WAQTC Standards

   TM 2 – Sampling Freshly Mixed Concrete

3. Terminology

3.1 Definitions of terms specific to this standard:

3.1.1 *halo, n* – An observed cement paste or mortar ring that has clearly separated from the coarse aggregate, around the outside circumference of concrete after flowing from the slump cone.

3.1.2 *spread, n* – The distance of lateral flow of concrete during the slump-flow test.

3.1.3 *stability, n* – The ability of a concrete mixture to resist segregation of the paste from the aggregates.

3.1.4 *viscosity, n* – Resistance of a material to flow under an applied shearing stress.

4. Summary of Test Method

4.1 A sample of freshly mixed concrete is placed in a mold shaped as the frustum of a cone. The concrete is placed in one lift without tamping or vibration. The mold is raised, and the concrete allowed to spread. After spreading ceases, two diameters of the concrete mass are measured in approximately orthogonal directions, and slump flow is the average of the two diameters.

5. Significance and Use

5.1 This test method provides a procedure to determine the slump flow of self-consolidating concrete in the laboratory or the field.

5.2 This test method is used to monitor the consistency of fresh, unhardened self-consolidating concrete and its unconfined flow potential.

5.3 It is difficult to produce self-consolidating concrete that is both flowable and nonsegregating using coarse aggregates larger than 1 in (25 mm). Therefore, this test method is considered applicable to self-consolidating concrete having coarse aggregate up to 1 in (25 mm) in size.

6. Apparatus

6.1 Mold – The mold used in this test method shall conform to that described in FOP for AASHTO T 119.

6.2 Base Plate – The base plate on which the mold rests shall be nonabsorbent, smooth, rigid, and have a minimum diameter of 36 in (915 mm).

Note 1: Field experience and results from the round robin test program have shown that base plates made from sealed/laminated plywood, acrylic plastic, or steel are suitable for performing this test.

6.3 Strike-off Bar – As described in FOP for WAQTC T 152.

7. Sample

7.1 The sample of concrete from which test specimens are made shall be representative of the entire batch. Sample in accordance with FOP for WAQTC TM 2.

8. Procedure

8.1 The slump-flow test shall be performed on a flat, level, nonabsorbent base plate. Position and shim the base plate so it is fully supported, flat, and level.

8.2 Filling the Mold – WSDOT requires the use of Procedure B.

8.2.1 Filling Procedure B (Inverted Mold) – Dampen and place the mold, with the smaller opening of the mold facing down, in the center of a flat, moistened base plate or concrete surface. Using a suitable container, fill the entire mold continuously (Note 2). The mold shall be held firmly in place during filling. Do not rod or tamp the SCC. Slightly overfill the mold.

Note 2: Filling the mold with concrete by using multiple scoops or by pouring from a bucket or similar container has been found to be acceptable.

8.3 Strike off the surface of the concrete level with the top of the mold by a sawing motion of the strike-off bar. Remove concrete from the area surrounding the base of the mold to preclude interference with the movement of the flowing concrete. Remove the mold from the concrete by raising it vertically. Raise the mold a distance of 9 ± 3 in (225 ± 75 mm) in 3 ± 1 seconds by a steady upward lift with no lateral or torsional motion. Complete the entire test from start of the filling through removal of the mold without interruption within an elapsed time of 2½ minutes.

8.4 Wait for the concrete to stop flowing and then measure the largest diameter of the resulting circular spread of concrete to the nearest ¼ in (5 mm). When a halo is observed in the resulting circular spread of concrete, it shall be included as part of the diameter of the concrete. Measure a second diameter of the circular spread at an angle approximately perpendicular to the original measured diameter.

8.5 If the measurement of the two diameters differs by more than 2 in (50 mm), the test is invalid and shall be repeated.

9. Calculation

9.1 Calculate the slump flow using Eq 1:

$$\text{Slump flow} = \frac{(d^1 + d^2)}{2}$$

where:

d^1 = the largest diameter of the circular spread of the concrete, and

d^2 = the circular spread of the concrete at an angle approximately perpendicular to d^1

9.2 Record the average of the two diameters to the nearest ¼ in (5 mm).

10. Report

    10.1 Report the slump flow to the nearest ¼ in (5 mm).

    10.2 Report results on concrete delivery ticket (i.e., Certificate of Compliance).

    10.3 The name of the tester who performed the field acceptance test is required on concrete delivery tickets containing test results.

11. Precision and Bias

    See ASTM C1611/C 1611M for precision and bias.

Performance Exam Checklist

WSDOT FOP for ASTM C 1611/C 1611M
Standard Test Method for Slump Flow of Self-Consolidating Concrete

Participant Name _____ Exam Date _____

Procedure Element	**Yes**	**No**
1. The tester has a copy of the current procedure on hand?		
2. All equipment is functioning according to the test procedure, and if required, has the current calibration/verification tags present?		
3. Sample was taken per WSDOT FOP for WAQTC TM 2?		
4. Molds and base plate dampened and base plate is flat, level, and fully supported?		
5. Mold filled completely (slightly overfilled)?		
6. Mold struck off level with top opening?		
7. Excess material removed from base plate and mold raised 9 ± 3 inches, in 3 ± 1 seconds?		
8. After flow stabilized, measured largest diameter (including halo if necessary)?		
9. Second measurement taken approximately perpendicular to first measurement?		
10.. First and second measurements agree within 2″?		
11. Slump flow was reported as an average of the two measurements?		
12. Slump flow reported to the nearest ¼″?		

First Attempt: Pass Fail Second Attempt: Pass Fail

Signature of Examiner _____

Comments:

WSDOT FOP for ASTM C 1621/C 1621M[1]

Standard Test Method for Passing Ability of Self-Consolidating Concrete by J-Ring

1. Scope

   1.1 This test method covers determination of the passing ability of self-consolidating concrete by using the J-Ring in combination with a slump cone mold. The test method is limited to concrete with maximum size of aggregate of 1 in (25 mm).

   1.2 The values stated in either inch-pounds or SI units are to be regarded separately as standard. Within the text, the SI units are shown in brackets. The values stated in each system are not exact equivalents; therefore, each system shall be used independently of the other. Combining values from the two systems may result in nonconformance with the standard.

   1.3 The text of this standard references notes that provide explanatory material. These notes (excluding those in tables and figures) shall not be considered as requirements of the standard.

   1.4 This standard does not purport to address all of the safety concerns, if any, associated with its use. It is the responsibility of the user of this standard to establish appropriate safety and health practices and determine the applicability of regulatory limitations prior to use. (***Warning:*** Fresh hydraulic cementitious mixtures are caustic and may cause chemical burns to skin and tissue upon prolonged exposure.)

2. Referenced Documents

   2.1 ASTM Standards

   C 125 – Terminology Relating to Concrete and Concrete Aggregates

   C 143/C 143M – Test Method for Slump of Hydraulic-Cement Concrete

   C 172 – Practice for Sampling Freshly Mixed Concrete

   C 173/C 173M – Test Method for Air Content of Freshly Mixed Concrete by the Volumetric Method

   C 1611/C 1611M – Test Method for Slump Flow of Self-Consolidating Concrete

3. Terminology

   3.1 Definitions

   3.1.1 For definitions of terms used in this test method, refer to Terminology C 125.

   3.2 Definitions of terms specific to this standard:

   3.2.1 *Halo* – An observed cement paste or mortar ring that has clearly separated from the coarse aggregate, around the outside circumference of concrete after flowing from the slump cone.

[1]This Test Method is based on ASTM C 1621/C 1621M and has been modified per WSDOT standards. To view the redline modifications, contact the WSDOT Quality Systems Manager at 360-709-5412.

3.2.2 *J-ring* – An apparatus consisting of a rigid ring supported on sixteen ⅝ in (16 mm) diameter rods equally spaced on a 12 in (300 mm) diameter circle 4 in (100 mm) above a flat surface as shown in Figure 1.

3.2.3 *J-ring flow* – The distance of lateral flow of concrete using the J-Ring in combination with a slump cone.

3.2.4 *Passing ability* – The ability of self-consolidating concrete to flow under its own weight (without vibration) and fill completely all spaces within intricate formwork, containing obstacles, such as reinforcement.

4. Summary of Test Method

4.1 A sample of freshly mixed concrete is placed in a slump mold (inverted position) that is concentric with the J-Ring (Figure 2). The concrete is placed in one lift without tamping or vibration. The mold is raised, and the concrete is allowed to pass through J-Ring and subside (Figure 3).

The diameters of the concrete, in two directions approximately perpendicular to each other, are measured and averaged to obtain the J-Ring flow. The test is repeated without the J-Ring to obtain the slump flow.

The difference between the slump flow and J-Ring flow is an indicator of the passing ability of the concrete.

5. Significance and Use

5.1 This test method provides a procedure to determine the passing ability of self-consolidating concrete mixtures. The difference between the slump flow and J-Ring flow is an indication of the passing ability of the concrete. A difference less than 1 in (25 mm) indicates good passing ability and a difference greater than 2 in (50 mm) indicates poor passing ability. The orientation of the slump cone for the J-Ring test and for the slump flow test without the J-Ring shall be the same.

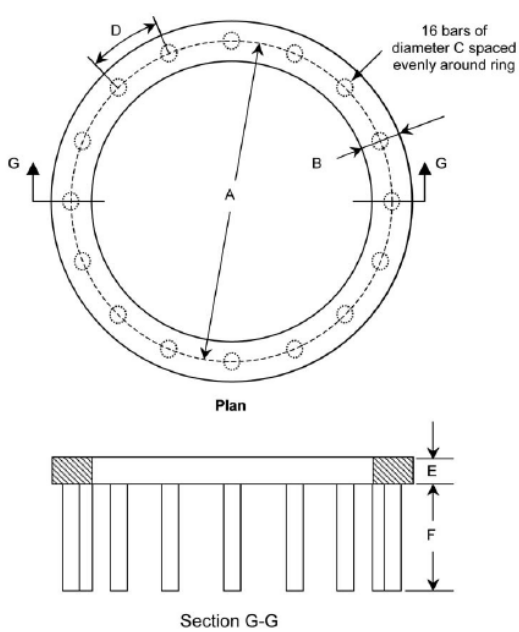

Dimension	in	mm
A	12.0 ± 0.13	300 ± 3.3
B	1.5 ± 0.06	38 ± 1.5
C	0.625 ± 0.13	16 ± 3.3
D	2.36 ± 0.06	58.9 ± 1.5
E	1.0 ± 0.06	25 ± 1.5
F	4.0 ± 0.06	200 ± 1.5

Figure 1

5.2 This test method is applicable for laboratory use in comparing the passing ability of different concrete mixtures. It is also applicable in the field as a quality control test.

6. Apparatus

6.1 J-Ring – The apparatus shall consist of a steel (or equivalent nonabsorbent, rigid material) ring measuring 12 in (300 mm) in diameter at the center of the ring and 1 in (25 mm) in thickness, and sixteen ⅝ in (16 mm) diameter smooth steel rods spaced evenly around the ring measuring 4 in (100 mm) in length (see Figure 1).

6.2 Mold – The mold (slump cone) used in this test method is as described in FOP for AASHTO T 119.

6.3 Base Plate – A nonabsorbent, rigid plate having a diameter of at least 36 in (915 mm).

Note 1: Field experience has shown that base plates made from sealed or laminated plywood, rigid plastic, or steel are suitable for performing this test.

6.4 Strike Off Bar – As described in FOP for WAQTC T 152.

6.5 Measuring Device – A ruler, metal roll-up measuring tape, or similar rigid or semi-rigid length measuring instrument marked in increments of ¼ in (5 mm) or less.

7. Sample

7.1 The sample of concrete from which test specimens are made shall be representative of the entire batch. It shall be obtained in accordance with FOP for WAQTC TM 2.

8. Procedure

8.1 Perform the test on a flat, level, and nonabsorbent base plate. Position and shim the base plate so that it is fully supported and level. Pre-moisten base-plate with a damp towel, rag, or sponge. Rest the J-Ring at the center of the base plate.

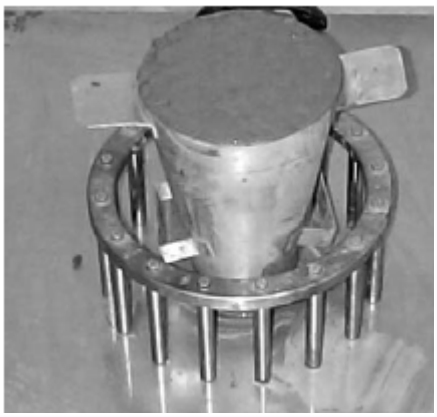

J-Ring Setup with Inverted Mold Filled with Concrete
Figure 2

Ring Flow
Figure 3

8.2 WSDOT uses only Procedure B.

8.1.2 Filling Procedure B (Inverted Mold) – Dampen the mold, and place it on the base plate with the smaller opening facing down and concentric with the J-Ring. Support the mold and fill the mold in one lift (Note 2). Heap the concrete above the top of the mold.

Note 2: Filling the mold with concrete by using multiple scoops or by pouring from a bucket or similar container has been found to be acceptable.

8.3 Strike off the surface of the concrete level with the top of the mold by a sawing motion of the strike off bar. Remove concrete from the area surrounding the mold to preclude interference with the movement of the flowing concrete. Raise the mold a distance of 9 ± 3 in (230 ± 75 mm) in 3 ± 1 s by a steady vertical lift with no lateral or torsional motion. Complete the entire procedure from start of the filling through removal of the mold without interruption within an elapsed time of 2½ min.

8.4 Wait for the concrete to stop flowing and then measure the largest diameter ($d1$) of the resulting circular flow of concrete. When a halo is observed in the resulting circular flow of concrete, it shall be included as part of the diameter of the concrete. Measure a second diameter ($d2$) of the circular flow at approximately perpendicular to the first measured diameter ($d1$). Measure the diameters to the nearest ¼ in (5 mm). Determine the J-Ring flow in accordance with Section 9 of this test method.

8.5 Conduct a slump flow test without the J-Ring in accordance with Test Method C 1611/C 1611M. Use the same filling procedure as used with the J-Ring. Complete the tests with and without the J-Ring within 6 min.

9. Calculation

9.1 Calculate J-Ring flow according to the following equation:

$$\text{J-Ring flow} = \frac{d^1 + d^2}{2}$$

9.2 Calculate the slump flow according to the following equation:

$$\text{Slump flow} = \frac{d^1 + d^2}{2}$$

9.3 Calculate the difference between slump flow and J-Ring flow to the nearest ½ in (10 mm). This number represents the passing ability of the concrete.

10. Blocking Assessment

10.1 Identify blocking assessment according to Table 1.

Difference Between Slump Flow and J-Ring Flow	Blocking Assessment
0 to 1 in (0 to 25 mm)	No visible blocking
> 1 to 2 in (>25 to 50 mm)	Minimal to noticeable blocking
> 2 in (>50 mm)	Noticeable to extreme blocking

Blocking Assessment
Table 1

11. Report

11.1 Report the filling procedure (A or B) that was used.

11.2 Report the J-Ring flow as the average of the two measured diameters to the nearest ½ in (10 mm).

11.3 Report the slump flow (without the J-Ring) as the average of the two measured diameters to the nearest ½ in (10 mm).

11.4 Report the passing ability as the difference between the slump flow and J-Ring flow to the nearest ½ in (10 mm). Identify the blocking assessment.

11.5 Report results on concrete delivery ticket (i.e., Certificate of Compliance).

11.6 The name of the tester who performed the field acceptance test is required on concrete delivery tickets containing test results.

12. Precision and Bias

See ASTM C 1621/C 1621M for precision and bias.

Performance Exam Checklist

WSDOT FOP for ASTM C 1621/C 1621M
Standard Test Method for Passing Ability of Self-Consolidating Concrete by J-Ring

Participant Name _____ Exam Date _____

Procedure Element	**Yes**	**No**
1. The tester has a copy of the current procedure on hand?		
2. All equipment is functioning according to the test procedure, and if required, has the current calibration/verification tags present?		
3. Sample was taken per WSDOT FOP for WAQTC TM 2?		
4. Molds and base plate dampened and base plate is flat, level and fully supported?		
5. Mold is centered in J-Ring and centered on base plate?		
6. Mold filled completely in one lift (slightly overfilled)?		
7. Mold struck off level with top opening?		
8. Excess material removed from base plate and mold raised 9 ± 3 inches, in 3 ± 1 seconds?		
9. After flow has stabilized, measure largest diameter (including halo)?		
10. Second measurement taken approximately perpendicular to first measurement?		
11. Measurements made to nearest ¼″?		
12. Test performed within 6 minutes of FOP for ASTM C 1611?		
13. All calculations performed correctly?		
14. Results reported to the nearest ½″?		

First Attempt: Pass Fail Second Attempt: Pass Fail

Signature of Examiner _____

Comments:

Performance Exam Checklist

Test for High and Low Temperature Recovery of Elastomeric Joint Seals for Concrete Pavements
ASTM D 2628 AASHTO M220

Participant Name _____ Exam Date _____

Procedure Element	**Yes**	**No**
1. Sample is cut into 5-inch pieces?		
2. Specimens for high and low temperature recovery tests (2 each) lightly dusted with talc?		
3. Specimens deflected between parallel plates to 50% of the nominal width using a compression device clamp assembly?		
High Temperature Recovery:		
1. Clamp assembly containing the compressed specimens placed in an oven capable of maintaining 212 ± 2°F (100 ± 1°C) and kept there for 70 hours?		
2. Clamp assembly removed from the oven after 70 hours?		
3. Unclamped the assembly and carefully removed the specimens?		
4. Specimens allowed to rest on a wooden surface at room temperature for 1 hour?		
5. Recovered width of the specimens measured in the center of the 5-inch length at the top of the longitudinal edge using a dial caliper or other measuring device?		
6. Data entered into the computer data base where % Recovery is automatically calculated?		
Low Temperature Recovery:		
1. Clamp assembly containing the compressed specimens placed in a refrigerated chamber capable of maintaining -20 ± 2°F (-29 ± 1°C) and kept there for 22 hours?		
2. Clamp assembly removed from the chamber after 22 hours?		
3. Unclamped the assembly and carefully removed the specimens?		
4. Specimens transferred to a wooden surface in the chamber and allowed to recover for 1 hour?		
5. Specimens removed from the chamber and measured the recovered width in the center of the 5-inch length at the top of the longitudinal edge using a dial caliper or other measuring device?		
6. Data entered into the computer data base where % Recovery is automatically calculated?		

Recovery, % = recovered width × 100/nominal width

First Attempt: Pass Fail Second Attempt: Pass Fail

Signature of Examiner _____

Comments:

ASTM D 4354 (Modified)

Standard Practice for Sampling of Geosynthetics for Testing

ASTM D 4354 has been adopted by WSDOT with the following changes and/or additions:

Geotextiles tested in the Materials Laboratory will be conditioned in accordance with WSDOT Method T 915 in preparation for testing rather than the conditioning prescribed in the ASTM test procedures. This will be identified on all Geotextile Test Reports.

WSDOT FOP for ASTM D 4791[1]

Standard Test Method for Flat Particles, Elongated Particles, or Flat and Elongated Particles in Coarse Aggregate

1. Scope

   1.1 This test method covers the determination of the percentages of flat particles, elongated particles, or flat and elongated particles in coarse aggregates.

   1.2 The values stated in inch-pound units are to be regarded as the standard except in regard to sieve size and the size of aggregate, which are given in SI units in accordance with Specification E 11. The SI units in parentheses are for information purposes only.

   1.3 This standard does not purport to address all of the safety concerns, if any, associated with its use. It is the responsibility of the user of this standard to establish appropriate safety and health practices and determine the applicability of regulatory limitations prior to use.

   Note: WSDOT will be determining flat and elongated particles in accordance with Section 8.3.

2. Referenced Documents

   2.1 WSDOT Standards

   T 2 – FOP for AASHTO for the Sampling of Aggregates

   T 248 – FOP for AASHTO for Reducing Field Samples of Aggregates to Testing Size

   2.2 WAQTC Standards

   T 27/11 – FOP for AASHTO for the Sieve Analysis of Fine and Coarse Aggregates and Materials Finer Than 75 mm (No. 200) in Mineral Aggregates by Washing

3. Terminology

   3.1 Definitions

   3.1.1 *flat or elongated particles of aggregate* – Those particles of aggregate having a ratio of width to thickness or length to width greater than a specified value (see Terminology C 125).

   3.1.2 *flat and elongated particles of aggregate* – Those particles having a ratio of length to thickness greater than a specified value.

   3.1.3 *length* – Maximum dimension of the particle.

   3.1.4 *width* – Maximum dimension in the plane perpendicular to the length.

   3.1.5 *thickness* – Maximum dimension perpendicular to the length and width.

[1]This Test Method is based on ASTM D 4791-05 and has been modified per WSDOT standards. To view the redline modifications, contact the WSDOT Quality Systems Manager at 360-709-5412.

4. Summary of Test Method

4.1 Individual particles of aggregate of specific sieve sizes are measured to determine the ratios of width to thickness, length to width, or length to thickness.

5. Significance and Use

5.1 Flat or elongated particles of aggregates, for some construction uses, may interfere with consolidation and result in harsh, difficult to place materials.

5.2 This test method provides a means for checking compliance with specifications that limit such particles or to determine the relative shape characteristics of coarse aggregates.

6. Apparatus

6.1 The apparatus used shall be equipment suitable for testing aggregate particles for compliance with the definitions in Section 3.1, at the dimensional ratios desired.

6.1.1 Proportional Caliper Device – The proportional caliper devices illustrated in Figures 1, 2, and 3 are examples of devices suitable for this test method. The device illustrated in Figures 1 and 2 consists of a base plate with two fixed posts and a swinging arm mounted between them so that the openings between the arms and the posts maintain a constant ratio. The axis position can be adjusted to provide the desired ratio of opening dimensions. Figure 1 illustrates a device on which ratios of 1:2, 1:3, 1;4, and 1:5 may be set. The device illustrated in Figure 3 contains several fixed posts and has the capability of measuring various ratios simultaneously.

6.1.1.1 Verification of Ratio – The ratio settings on the proportional caliper device shall be verified by the use of a machined block, micrometer, or other appropriate device.

6.1.2 Balance – The balance or scales used shall be accurate to 0.5 percent of the mass of the sample.

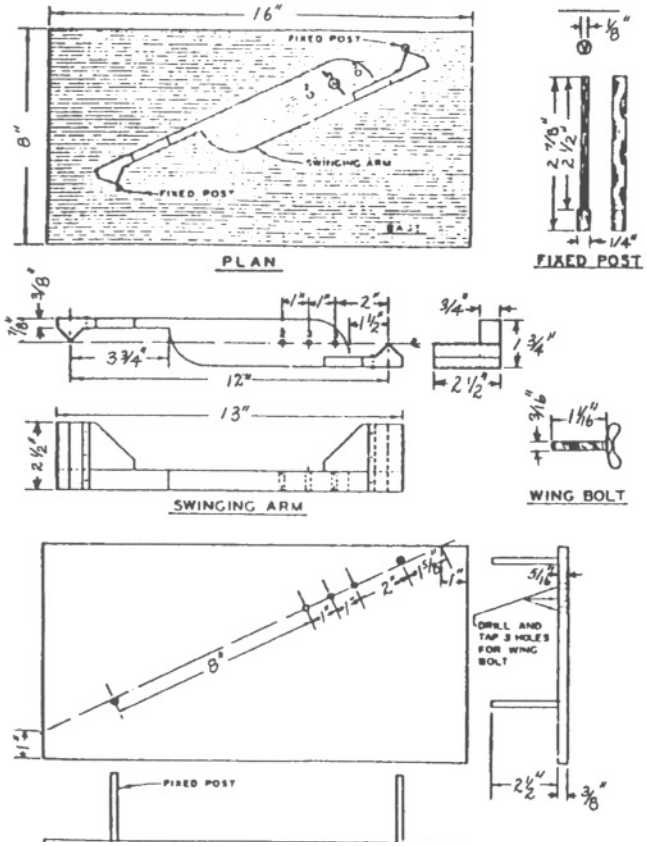

Proportional Caliper
Figure 1

7. Sampling

7.1 Sample the coarse aggregate in accordance with in FOP for AASHTO T 2. The mass of the field sample shall be the mass shown in FOP for AASHTO T 2.

7.2 Thoroughly mix the sample and reduce it to an amount suitable for testing using the applicable procedures described in FOP for AASHTO T 248. The sample for test shall be approximately the mass desired when dry and shall be the end result of the reduction. Reduction to an exact predetermined mass shall not be permitted. The mass of the test sample shall conform to the following:

Nominal Maximum Size* Square Openings, in (mm)	Minimum Mass of Test Sample, lb (kg)
⅜ (9.5)	2 (1)
½ (12.5)	4 (2)
¾ (19)	11 (5)
1 (25.0)	22 (10)
1½ (37.5)	33 (15)
2 (50)	44 (20)
2½ (63)	77 (35)
3 (75)	130 (60)
3½ (90)	220 (100)
4(100)	330 (150)
4½ (112)	440 (200)
5 (125)	660 (300)
6 (150)	1100 (500)

*For aggregate, the nominal maximum size, (NMS) is the largest standard sieve opening listed in the applicable specification, upon which any material is permitted to be retained. For concrete aggregate, NMS is the smallest standard sieve opening through which the entire amount of aggregate is permitted to pass.

Note: For an aggregate specification having a generally unrestrictive gradation (i.e., wide range of permissible upper sizes), where the source consistently fully passes a screen substantially smaller than the maximum specified size, the nominal maximum size, for the purpose of defining sampling and test specimen size requirements may be adjusted to the screen, found by experience to retain no more than 5 percent of the materials.

8. Procedure

8.1 If determination by mass is required, oven dry the sample in accordance with FOP for AASHTO T 255. If determination is by particle count, drying is not necessary.

8.2 Sieve the sample to be tested in accordance with FOP for AASHTO T 27/11. If the material retained on each required size (⅜ and larger) is more than 5 percent of the sample, reduce the material in accordance with FOP for AASHTO T 248 until approximately 100 particles are obtained for each required size.

8.3 Flat and Elongated Particle Test – Test each of the particles in each size fraction and place in one of two groups: (1) flat and elongated or (2) not flat and elongated.

8.3.1 Use the proportional caliper device, set at the desired ratio.

8.3.2 Measurement

8.3.2.1 On proportional caliper devices similar to the devices shown in Figure 1 and Figure 2, set the larger opening equal to the length of the particle. The particle is flat and elongated if the particle, (biggest to smallest) when oriented to measure its thickness (biggest), can pass completely through the smaller opening of the caliper when it is rotated in any direction.

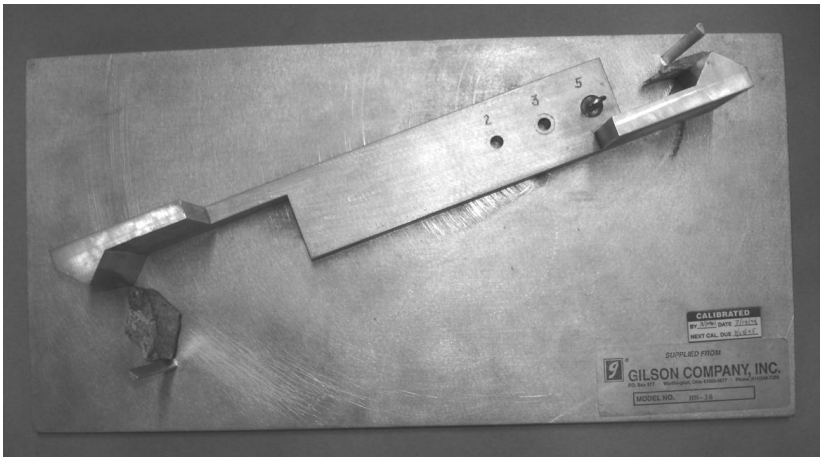

Use of Proportional Caliper
Figure 2

in	mm	in	mm	in	mm
⅛	3.2	⅞	21.2	2½	64.0
3/16	4.8	1	25.4	2⅞	72.0
¼	6.3	1 1/16	27.0	3¾	96.0
5/16	7.9	1½	38.0	8	207.0
⅜	9.5	1⅝	41.0	16	414.0

Metric Equivalents

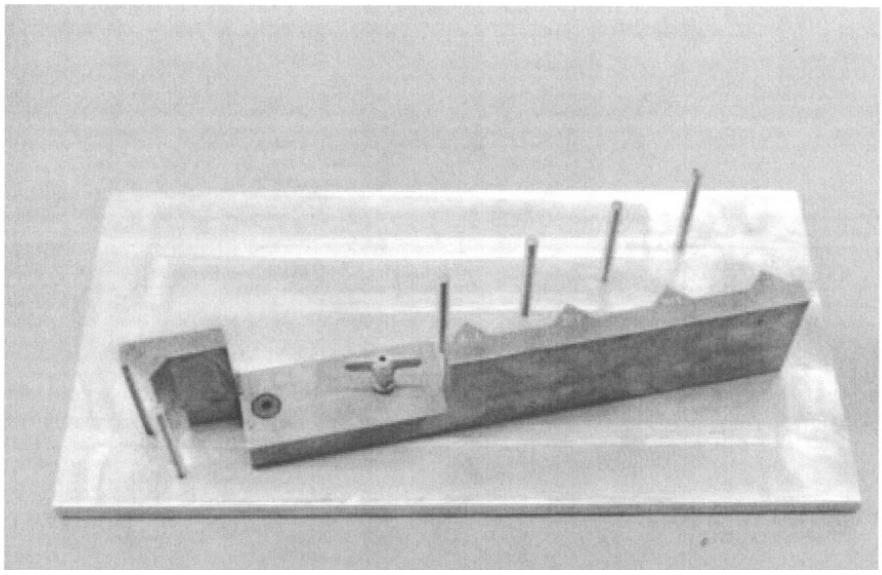

Proportional Caliper
Figure 3

8.3.2.2 On calipers similar to the one described in Figure 3, set the minimum dimension of the proportional caliper device such that the particle, when oriented to measure its thickness, passes snugly between the post and swing arm. The particle is flat and elongated if the particle, when oriented to measure its length, fails to pass the desired large opening of the proportional caliper device.

8.3.3 After the particles have been classified into the groups described in Section 8.3, determine the proportion of the sample in each group by count or mass, as required.

Note: WSDOT performs this test by weight.

9. Calculation

9.1 Calculate the percentage of flat and elongated particles to the nearest 1 percent for each sieve size than ⅜ in and larger (9.5 mm), as required.

10. Report

10.1 Include the following information in the report:

10.1.1 Identification of the coarse aggregate tested.

10.1.2 Grading of the aggregate sample, showing percentage retained on each sieve.

10.1.3 For flat and elongated particle tests:

10.1.3.1 Percentages, calculated by number or by mass, or both, for flat and elongated particles for each sieve size tested.,

10.1.3.2 The dimensional ratio used in the tests.

10.1.4 When required, weighted average percentages based on the actual or assumed proportions of the various sieve sizes tested. Report the grading used for the weighted average if different from that in Section 10.1.2.

10.2 Report results using one or more of the following:

- Materials Testing System (MATS)
- DOT Form 350-161
- Form approved in writing by the State Materials Engineer

11. Precision and Bias

See ASTM D 4791 for precision and bias statements.

Performance Exam Checklist

Flat and Elongated Particles in Coarse Aggregate
FOP for ASTM D 4791

Participant Name _____ Exam Date _____

Procedure Element	**Yes**	**No**
1. The tester has a copy of the current procedure on hand?		
2. All equipment is functioning according to the test procedure, and if required, has the current calibration/verification tags present?		
3. Field sample obtained per AASHTO T 2?		
4. Sample thoroughly mixed prior to reducing to testing size?		
5. Sample reduced to testing size per AASHTO T 248?		
6. Mass of the test sample conforms to the table in Section 7.2, ASTM D 4791?		

Procedure

1. If determination by mass, sample oven dried to a constant weight prior to mass determination?		
2. Sample sieved per AASHTO T 27/T 11?		
3. Proportional caliper device positioned at proper ratio?		
4. Each size fraction ⅜ inch and larger retaining more than 5 percent of the original sample reduced per AASHTO T 248 until approximately 100 particles are obtained for each size fraction required?		
5. Each particle of each size fraction tested for FLAT and ELONGATED using the proportional caliper device put in the appropriate group classification? (Flat and Elongated or Not Flat and Elongated)		
6. Proportion of the sample of each sieve size determined by Mass?		
7. Percent of Flat and Elongated particles figured to the nearest 1 percent for each sieve size?		
8. Record number of particles in each sieve size tested?		
9. Record percentages calculated by Mass?		
10. All calculations performed correctly?		

First Attempt: Pass Fail Second Attempt: Pass Fail

Signature of Examiner _____

Comments:

WSDOT FOP for ASTM D 6931

Standard Test Method for Indirect Tensile (IDT) Strength of Bituminous Mixtures

ASTM D 6931 has been adopted by WSDOT with the following changes:

6. Specimens

   6.1 Laboratory-Molded Specimens – Prepare the 150 mm (5.9 in) laboratory-molded specimens in accordance with WSDOT FOP for AASHTO T 312, to a height of 62 ± 1.0 mm (2.44 ± 0.04 in). A minimum of three replicates shall be prepared for each mixture.

   6.1.1 Air void (Va) of test specimen shall be 7.0 ± 1.0 %.

7. Procedure

   7.1 Section 7.1 shall be deleted in its entirety.

8. Calculation

   8.1 Calculate the IDT strength as follows:

$$S_T = \frac{2F}{3.14\,(hd)}$$

Where:

S_T = Indirect tensile strength (psi)
F = Total applied vertical load at failure (lbs)
h = Height of specimen (inches)
d = Diameter of specimen (inches)

Tester Qualification Practical Exam Checklist

Determining Indirect Tensile Strength of Compacted Bituminous Mixtures FOP for ASTM D 6931

Participant Name _____ Exam Date _____

Procedure Element	**Yes**	**No**
1. The tester has a copy of the current procedure on hand?		
2. All equipment is functioning according to the test procedure, and if required, has the current calibration/verification tags present?		
3. Specimen height is 62 ± 1.0 mm (2.44 ± 0.04 in) or 38.1 mm (1.5 in) minimum for cores?		
4. Specimen meets air void tolerance of 7.0 + 1.0 %?		
5. Specimen placed in water bath at 77 + 2°F (25 + 1°C) for a minimum of 30 minutes but not longer than 120 minutes?		
6. Press turned on and operating at a deformation rate of 2 in per minute?		
7. Specimen placed on lower loading strip?		
8. Upper loading strip lowered onto specimen with light contact?		
9. Upper and lower loading strips parallel with each other?		
10. Load applied at 2 in per minute?		
11. Total applied vertical load recorded?		
12. Indirect tensile strength in psi calculated and recorded correctly?		

First Attempt: Pass Fail Second Attempt: Pass Fail

Signature of Examiner _____

Comments:

WSDOT FOP for ASTM D 7012

Standard Test Method for Unconfined Compressive Strength of Intact Rock Core Specimens

ASTM D 7012 has been adopted by WSDOT with the following changes and/or additions:

The standard preparation of specimens for the above test will be as described below.

4. Test Specimens

   4.1 Specimen arrives cut to length, ready for testing

   4.2 Specimens are measured for length to the nearest 0.01 in (0.25 mm) at the centers of the faces.

   4.3 Specimens are measured for diameter to the nearest 0.01 in (0.25 mm) by averaging two diameters measured at right angles to each other at about mid height of the specimen.

   4.4 The specimen ends are checked that they are at right angles to the longitudinal axis. The ends are recut if greater than 5 degrees different from a right angle.

   4.5 The specimen shall have a length to diameter ratio of 2.0 to 2.5 and the diameter shall be greater than 1⅞ inch (48 mm).

Performance Exam Checklist

Nondestructive Measurement of Thickness of Nonmagnetic Coatings on a Ferrous Base
FOP for ASTM D 7091/SSPC Procedure 2 (Field)

Participant Name _____ Exam Date _____

Procedure Element	**Yes**	**No**
1. The tester has a copy of the current procedure on hand?		
2. All equipment is functioning according to the test procedure, and if required, has the current calibration/verification tags present?		
3. Instrument calibrated in accordance with the manufacturer's instructions before use employing a suitable thickness standard?		
4. Several readings taken and recorded taking into account edge and curvature effects?		
5. (Laboratory) The average thickness converted to oz. ft^2 (g/m^2) using appropriate conversion factor?		
6. (Field) Average thickness reported in mils?		

First Attempt: Pass Fail Second Attempt: Pass Fail

Signature of Examiner _____

Comments:

A

Abrasion resistance ..... T 96
Abrasion test:
  Los Angeles..... T 96
Absorption test:
  coarse aggregate.....T 85, T 96
  fine aggregate ..... T 84
Acidity, alkalinity, pH ..... T 200
Aggregate: (see also coarse or fine aggregate)
  degradation..... T 113
  effect on mortar strength ..... T 71
  extracted, mechanical analysis..... T 30
  fine aggregate angularity..... T 304
  flat and elongated particles.....D 4791
  fracture ..... T 335
  friable particles..... T 112
  lightweight pieces ..... T 113
  material finer than 0.075 mm sieve..... T 11
  moisture content..... T 255
  organic impurities ..... T 21
  preparation for HMA mix design..... T 724
  reducing to testing size..... T 248
  sampling..... T 2, D 75
  sieve analysis ..... T 27
  splitting ..... T 248
  unit weight ..... T 19/T 19M
Aggregate degradation..... T 96, T 113
Aging, pressure .....R 28
Air content of:
  concrete, gravimetric..... T 121
  portland cement mortar..... T 137
  pressure ..... T 152
  self-compacting concrete ..... T 818
  volumetric ..... T 196
Air permeability fineness ..... T 153
Alkali silica reaction ..... T 303
Aqueous solutions..... T 200
Ash, paper .....D 586
Asphalt: (see bituminous materials)
Asphalt content ..... T 308
Asphalt roofing materials.....T 228, T 229
  specific gravity .....T 228, T 229

B

Bark mulch..... T 123
Beams, concrete .....T 177, T 802, T 808
Bending beam rheometer ..... T 313
Bitumen content ..... T 308, D 4
Bituminous materials:
  ash content ..... T 111
  bending beam rheometer..... T 313
  distillation:
    cut-back asphalt ..... T 78
  ductility .....T 51, T 113
  dynamic shear ..... T 315
  emulsions ..... T 59
  flash and fire points, open cup..... T 48
  flash point:
    tagliabue..... T 79
  flexural creep..... T 313
  float test..... T 50
  inorganic matter ..... T 111
  loss on heating..... T 47
  melting joint and crack sealant .....D 5167
  penetration..... T 49
  percentage in mixtures ..... T 308
  pressure aging .....R 28
  rheological properties.....T 313, T 315
  sampling..... T 40
  sofening point..... T 53
  soluable in organic solvents ..... T 44
  specific gravity .....T 228, T 229, D 1298
  supplier certification.....QC 2
  viscosity:
    absolute ..... T 202
    kinematic..... T 201
    rotational .....D 4402, D 2196
    saybolt..... T 72
Bituminous roofing membranes..... T 53
Bituminous mixtures:
  aging.....R 30
  air voids..... T 269
  asphalt binder content ..... T 308
  coating and stripping..... T 718
  compaction..... T 312
  cores .....T 166, T 720, SOP 730

density:
bulk specific gravity-compacted ..... T 166
cores ..... SOP 730
maximum theoretical ..... T 209
nuclear ..... TM 8, SOP 729
paraffin coated ..... T 275
ramdom testing ..... T 716
effect of water ..... T 718
extraction ..... T 164
ignition furnace ..... T 308
ignition furnace calbration ..... SOP 728
gyratory compaction ..... T 312
long-term aging ..... R 30
maximum specific gravity ..... T 209
mix design:
aggregate preparation ..... T 724
mixing ..... T 726
moisture content ..... T 329
moisture induced damage ..... T 718
nuclear density ..... TM 8, SOP 729
preparation for HMA mix design ..... T 724
random Sampling ..... T 716
recovery of asphalt ..... T 170
reducing to testing size ..... T 712
sampling ..... T 168
short-term aging ..... R 30
specific gravity- compacted HMA ..... T 166
splitting ..... T 712
stripping of ..... T 718
superpave mix design ..... SOP 732
superpave volumertics ..... SOP 731
voids ..... T 269
Bond strength, epoxy ..... C 882
Bond test joint sealants ..... T 412
Burst test ..... D 3786

C

Calcium carbide gas pressure moisture tester ..... T 217
Calibration ..... SOP 728
Capillary rise of soils ..... T 610
California profilograph ..... T 807
Cement, hydraulic:
air content of mortar ..... T 137
chemical analysis ..... T 105
chloride ion ..... T 260
compressive strength ..... T 106, T 813
fineness:
air permeability ..... T 153
grout flow cone ..... C 939
latex compatibility ..... T 313
normal consistency ..... T 129
soundness ..... T 107
specific gravity ..... T 133
supplier certification ..... QC 1
time of setting:
gilore needles ..... T 154
vicat needle ..... T 131
Chemical analysis of hydraulic cement ..... T 105
Chloride permeability of concrete ..... T 277
Chloride, water soluble ..... C 1218
Classification (standards) ..... T 59, D 2487
Clay gel absorption ..... D 2007
Clay lumps in aggregate ..... T 112
Cleveland open cup ..... T 48
Coarse aggregate: ..... T 96
clay lumps ..... T 112
flat and elongated ..... D 4791
fracture ..... T 335
lightweight particles ..... T 113
Los Angeles abrasion test ..... T 96
material finer than 0.075 mm sieve ..... T 11
sampling ..... T 2
sieve analysis ..... T 27, T 601
specific gravity and absorption ..... T 85
unit weight ..... T 19
Coating of bituminous aggregate mixtures:
paraffin for specific gravity test ..... T 275
Coatings ..... T 244
Coating, ferrous base ..... D 1186
Cohesive soil, compressive strength ..... T 208
Cohesive soils ..... T 297
Compacted hot mix asphalt ..... TM 8, T 729
Compaction and density of soil ..... T 99, T 180, T 606
Compaction of bituminous mixtures ..... T 112
Compost ..... T 420
Compressive strength:
cohesive soil ..... T 208
concrete:
molded specimens ..... T 22
specimens taken from hardened concrete T 24
epoxy resins ..... D 695
fine aggregate ..... T 71

hydraulic cement ..... T 106, T 813
unconfirmed cohesive:
rock ..... D 2938
soil ..... T 208
Concrete
air content:
gravimetric ..... T 121
pressure ..... T 152
self-compacting ..... T 818
volumetric ..... T 196
alkali-silica reaction ..... T 303
beams ..... T 177, T 802, T 808
chloride ion, total ..... T 260
chloride ion, water soluble ..... C 1218
chloride permeability ..... T 277
consistency ..... T 119
cores ..... T 810
curing materials ..... T 814
density ..... T 810
flexural strengths:
center point loading ..... T 177
speciment taken from hardened concrete T 24
third point loading ..... T 97, T 177, T 802
joint sealers, hot poured .... D 5329, T 48, T 412
joint sealers, two component rubber ..... T 412
light weight ..... C 495
molded specimens ..... T 22
preparation of specimens:
capping ..... T 231
in the field ..... T 23
in the laboratory ..... T 126
self compacting ..... T 819
rebound hammer determination ..... C 805
slump ..... T 119
sampling ..... T 141, TM 2
self compacting:
air content ..... T 818
cylinder ..... T 819
splitting tensile strength ..... T 198
temperature ..... T 310
time of setting ..... T 197
weight per cubic foot ..... T 121
yield ..... T 121
self consolidating concrete ..... C 1611
J-Ring ..... C 1621
slump flow ..... C 1611
Cone penetration of lubricating grease ..... T 217
Conflict monitor test ..... T 423
Consistency ..... T 49
Consistency, normal, of hydraulic cement ... T 59, T 129
Consolidation ..... T 297
Consolidation properties of soils ..... T 216
Constant head testing ..... T 215
Core:
concrete ..... T 810
HMA ..... T 166, T 720, SOP 730, SOP 734
Cutback asphalts ..... T 78
Cyclic segregation ..... SOP 733
Cylinders, compressive strength of concrete T 22
Curing materials ..... T 814

D

Deformation ..... T 297
Degradation ..... T 113, T 131,
Delivery ..... T 40, T 168
Demulsibility ..... T 59
Density. TM 8, T 228, T 229, T 310, SOP 615, SOP 72
Density and compaction of soil ..... T 99, T 180, T 606
Density:
cores ..... SOP 730
HMA ..... TM 8
randon numbers ..... T 716
Density of paint ..... D 1475
Density of soil in-place:
nuclear soils ..... T 310, SOP 615
Determination of bitumen ..... T 44
Directional reselectance ..... T 314
Displacement method ..... T 229
Distillate fuels ..... T 55
Distillation (general) ..... T 55, T 78
Distillation:
cut-back asphalt ..... T 78
emulsions ..... T 59
Disturbed soil samples, preparation:
dry method ..... T 87
Drainage ..... T 297
Ductility of bituminous materials ..... T 51, T 113
Dynamic shear ..... T 315

E

Elastic recovery ..... CAL 331, CAL 332
Electrical measurements ..... T 200
Electrodes..... T 200
Elongation ..... T 51
Elutriation test of aggregates ..... T 11
Embankment nuclear density..... T 310, SOP 615
Emulsified asphalts, test of ..... T 59
Environmental chamber test ..... T 425
Epoxy resins:
  bond strength..... C 882
  compressive strength..... D 695
Extracted aggregates, mechanical analysis ... T 30

F

Falling weight deflections ..... D 4694
Family of curves ..... T 272
Ferrous base, coating ..... D 1186
Fiber Length..... T 126
Filler, mineral..... T 37
Fine aggregate:
  angularity ..... T 304
  absorption..... T 84
  clay lumps in ..... T 112
  elutriation ..... T 11
  friable particles..... T 112
  lightweight material ..... T 113
  mortar strength ..... T 71
  organic impurities ..... T 21
  sampling ..... T 2
  sieve analysis ..... T 27
  specific gravity ..... T 84
  unit weight T19
Fineness of cement:
  air permeability ..... T 153
Fire point, bituminous materials ..... T 48
Fire testing ..... T 48
Flash point, bituminous materials:
  cleveland open cup..... T 48
  tagliabue..... T 79
Flat and elongated aggregate particles..... D 4791
Flexural creep..... T 313
Flexural strength concrete:
  center-point loading ..... T 177
  specimens taken from hardened concrete .. T 24
  third-point loading ..... T 802
Float test, bituminous materials ..... T 50
Flow, hot melt joint sealant..... D 5329
Fracture ..... T 335
Freezing and thawing:
  bituminous mixture ..... T 718
Friable particles..... T 112
Fuel oils..... T 72
Furol viscosity..... T 72

G

Galvanizing:
  embrittlement ..... A 143
  weight of coating..... T 65
Geotextiles:
  apparent opening size..... D 4571
  burst test ..... D 3786
  conditioning ..... T 915
  deterioration from ultraviolet light..... D 4355
  geosynthestic reinforcement ..... T 925
  grab breaking load..... D 4632
  puncture..... D 4833
  sampling ..... T 914
  sewen seams..... D 1683
  tear strength..... D 4533
  thickness..... T 923
  water permeability ..... D 4491
  wide width breaking load..... D 4595
Geosynthetic reinforcement ..... T 925
  sampling ..... D 4354
Glass electrodes ..... T 200
Glass electrodes for pH determinations ..... T 200
Granular soil..... T 215, T 606
Grab breaking load..... D 4632
Gravel (see coarse aggregate)
Grout cubes ..... T 106, T 813
Grout flow ..... C 939
Gyratory compactor ..... T 312

H

High float ..... T 50
Hydraulic cement (see cement)
Hydromulch ..... T 127
Hot mix (see bituminous mixture)

I

Identification of soils.....D 2488
Illumination:
  instrumental photometric ..... T 257
  photovolt reflectance..... T 314
  retroreslective..... T 257
Impact sampling tests..... T 244
Ignition furnace:
  calibration ..... SOP 728
  fineness.....D 1208
  HMA mixture ..... T 308
  loss .....D 1208
Inorganic matter in bituminous materials ... T 111

J

J-Ring (see concrete)
Joint sealants:
  hot poured ..... D 5329, T 48, T 412
  two component rubber ..... T 412
Joint sealants - bond test ..... T 412
Joint sealars for concrete..... T 187
Joint sealant, flow test .....D 5329

K

Kinematic viscosity (general) ..... T 72
Kinematic viscosity of asphalt ..... T 201

L

Lane markers, type 2..... T 427
Latex - cement compatibility ..... T 313
Latex nonvolatile content.....D 4758
Latex paints, pH ..... T 200
Leachate Sample ..... T 127
Length of concrete cores..... T 148
Lightweight concrete .....C 495
Lighweight particles in aggregate..... T 113
Liquid limit ..... T 89
Longitudinal Joint Density..... SOP 735
Long-term aging.....R 30
Loop Amplifying..... T 427
Los Angeles abrasion ..... T 96
Los Angeles test ..... T 96
Loss on heating of asphalt compounds .....D 6

M

Manufacturing processes ..... T 40, T 168
Maximum dry density .....T 99, T 180, T 606,
Mechanical analysis:
  aggregate ..... T 27/T 11
  extracted aggregate ..... T 27/T 11
  mineral filter..... T 37
  soil..... T 88
Mechanical mixing..... T 162
Mechanical properties of steel fasteners ..... T 606
Mechanical testing of steel.....A 370
Melting joint and creack sealant .....D 5167
Membrane, waterproofing..... T 413
Metallic materials:
  impact..... T 244
Mineral filler:
  mechanical analysis ..... T 37
Miscibility ..... T 59
Mixing, mechanical of hydraulic cement.... T 162
Mixtures, bituminous (see bituminous mixtures)
Modulus of soils..... T 307
Moisture analysis ..... T 217
Moisture content HMA ..... T 329
Moisture-density ..... T 310, SOP 615
Moisture-density relations:
  soil:
    5.5 lb rammer ..... T 99
    10 lb rammer ..... T 180
Mortar, cement:
  length change ..... T 168
  mechanical mixing ..... T 162
  water soluable chloride .....C 1218
Mulch, bark ..... T 123, T 125

N

Normal consistency of hydraulic cement.... T 129
Nuclear methods:
  density ..... T 310, TM 8, SOP 615, SOP 729

O

Oils ..... T 72
Open cup:
  flash and fire points ..... T 48
Organic impurities in sand ..... T 21
Organic matter in soils ..... T 267

P

Package stability ..... T 200
Paint:
condition in container ..... FTMS 3011
density .....D 1475
directional reflectance ..... E 1347
drying time ..... FTMS 4061, D 1640
fineness of dispersion of pigment .....D 1210
hiding power ..... FTMS 4122
infrared identification.....D 2621
loss on ignition.....D 1208
pigment content.....D 3723, D 2371
viscosity .....D 562
volatiles .....D 2369
volume of nonvolatiles.....D 2697
Paraffin, coating of bituminous
aggregate mixture..... T 275
pavement friction ..... T 242
Particle charge test ..... T 59
Parting compound ..... T 816
Paving materials..... T 228
Penetration ..... T 49
Penetration, bituminous materials..... T 49
Permeability ..... T 215
Petroleum products:
water in..... T 55
pH..... T 200
soils .....T 288, T 417
Photovolt reflectance..... T 314
Pitches .....T 228, T 229
Plastic fines in:
aggregates and soils ..... T 176
Plastic limit of soil ..... T 90
Plastic pavement marking tape .....D 4505
Pore-water..... T 297
Portland cement (see cement)
Pour point..... T 187
Pouring temperature..... T 50
Power interruption test..... T 424
Preparation of concrete specimens:
capping..... T 231
in field ..... T 23
in laboratory ..... T 126
self compacting ..... T 819
Preparation of disturbed soil samples for test:
dry method ..... T 87
Pressure aging .....R 28
Pressure testing ..... T 297
Profilograph, California ..... T 807
Pycnometer .....T 228, T 209

R

Random sampling ..... T 716
Rebound hammer determination.....C 805
Recovery of asphalt.....TP 2
Reflective materials and devices... T 257, D 4956
Residue.....T 59, T 78
Resiliend modulus of soils ..... T 307
Resistance (R valve) of soil ..... T 611
Resistivity of soil .....T 288, T 417
Retroreflectivity ..... T 429
Reverse-flow viscometers ..... T 201
Ring-and-ball apparatus ..... T 53
Ring-and-ball method, bituminous materials T 53
Road oil..... T 201
Rolling thin film oven ..... T 240
Rotational viscosity..... T 316, D 4402, D 2196

S

Sampling:
aggregate ..... T 2
bituminous materials..... T 40
bituminous mixtures.....T 168, SOP 734
concrete .....TM 2
fresh concrete ..... T 141
gravel..... T 2
geosynthetics.....D 4354
geotextiles, sampling..... T 914
sand ..... T 2
slag ..... T 2
stone ..... T 2
stone block ..... T 2
Sampling concrete/mortar/aggregates..... T 2
Sand (see fine aggregate)
Sand equivalent test ..... T 176
Saybolt-Furol viscometers .....T 59, T 72
Self compacting concrete:
air content..... T 818
cylinders..... T 819
Semi-solid materials..... T 40, T 49, T 168, T 228
Settlement ..... T 59
Sewen seams .....D 1683
Short-term aging .....R 30

Sieve analysis:
aggregate ..... T 27
bark Mulch ..... T 123
extracted aggregate ..... T 30
mineral filler ..... T 37
soil ..... T 88, T 601
Signal controlers ..... T 421, T 422, T 423, T 424, T 425, T 427, T 428, SOP 429
Signs ..... T 257
Skid resistance ..... T 242
Slag (see coarse aggregate)
Slump-self consolidating ..... D 1611
Slump test of concrete ..... T 119
Softening point of bituminous material ..... T 53
Soil permeability ..... T 215
Soils:
capillary rise ..... T 610
classification ..... D 2487
compaction and density correction for coarse particles ..... T 99
consolidation properties ..... T 216
density in place ..... T 310, SOP 615
dry preparation for test ..... T 87
family of curves ..... T 272
identification ..... D 2488
liquid limit ..... T 89
mechanical analysis ..... T 88
moisture:
by calcium carbide method ..... T 217
by laboratory determination ..... T 265
moisture-density relations: 5.5 lb rammer . T 99
moisture-density relations: 10-lb rammer T 180
nuclear ..... T 310, SOP 615
organic matter ..... T 267
permeability ..... T 215
pH ..... T 289
plastic limit ..... T 90
plasticity index ..... T 90
preparation for tests:
dry method ..... T 87
sand equivalent test ..... T 176
specific gravity ..... T 100
unconfined compressive strength ..... T 208
resilient modulus of soils ..... T 307
resistance (r-valve) ..... T 611
resistivity ..... T 288, T 417
Solid phase materials ..... T 40, T 49
Solubility of bituminous materials ..... T 44
Solvita test ..... T 420
Soundness test for:
hydraulic cement ..... T 107
Portland cement ..... T 107
Specific gravity:
bituminous materials ..... T 228, T 229
bituminous mixtures ..... T 166, T 209, T 275
coarse aggregate ..... T 85
fine aggregate ..... T 84
hydraulic cement ..... T 133
maximum, for bituminous paving mixtures ..... T 209
petroleum ..... D 1298
soil ..... T 100
tar ..... T 228
water ..... D 1424
Spike test ..... T 422
Splitting:
aggregate ..... T 248
hot mix asphalt ..... T 712
Steel:
impact ..... T 244
mechanical testing ..... A 370
testing ..... T 244
Stiffness of asphalt ..... T 313
Stone: (see also coarse aggregate)
sampling ..... T 2
Storage stability ..... T 59
Stormer viscosity ..... D 562
Strength of mortar ..... T 106, T 813
Stress ..... T 297
Stripping of bituminous aggregate mixtures ..... T 706, T 718
Superpave mix design ..... SOP 733
Superpave volumertics ..... SOP 731

T

Tar:
specific gravity ..... T 228
Tars ..... T 50
Tear strength, geotextiles ..... D 4533
Temperature tests ..... T 187, T 309
Tension Tensile) properties/tests ..... T 51
Thermoplastic insulation ..... D 2633

Time of setting:
cement, hydraulic:
gillmore needles ..... T 159
vicat needle ..... T 131
concrete ..... T 197
Traffic signal controllers .....T 421, T 422, T 423, T 424, T 425, T 427, T 428, SOP 429
Triaxial compression..... T 297
Type 2 lane markers ..... T 426

U

Unconsigned compressure strength of soil
rock ..... T 208, D 2938
Uncrushed solid material ..... T 40
Unit weight of aggregate..... T 19

V

Vacuum capillary viscometer..... T 202
Vicuum testing ..... T 297
Viscometers..... T 59, T 202, D 562
Viscosity.....T 59, T 72, T 202, D 562
Viscosity tests:
absolute ..... T 202
kinematic..... T 201
rotational ..... T 316, D 4402, D 2196
saybolt ..... T 72
stormer .....D 562
Volatile matter content ..... T 78
Voltage spike test ..... T 422
Volumertic properties..... SOP 731

W

Washing test for aggregates ..... T 11
Water content .....T 55, T 59
Water displacement test ..... T 229
Waterproofing membrane..... T 413
Water penetration ..... T 49
Water permeability.....D 4492
Water soluable chloride in concrete .....C 1218
Water, test for:
emulsions ..... T 59
petroleum products..... T 55
specific gravity .....D 1427
Weight per cubic foot:
aggregates ..... T 19
Wire, test for:
cross linked insulation.....D 470
Thermoplastic insulation.....D 2633
weight of coating..... T 65

Z

Zinc coating:
weight..... T 65