Washington State Department of Transportation

Publications Transmittal

Transmittal Number	Date
PT 13-022	August 2013

Publication Title / Publication Number

Materials Manual M 46-01.16

Originating Organization

Materials Laboratory, Engineering and Regional Operations

Remarks and Instructions

The complete manual, revision packages, and individual chapters can be accessed at www.wsdot.wa.gov/publications/manuals/m46-01.htm.

For updating printed manuals, page numbers indicating portions of the manual that are to be removed and replaced are shown below.

Chapter		Remove Pages	Insert Pages
Title Page		i–ii	i–ii
Foreword		iii–iv	iii–iv
Contents		1–20	1–20
T 2	Standard Practice for Sampling Aggregates	1–10	1–10
QC 3	Quality System Laboratory Review	1–8	1–8
T 22	Compressive Strength of Cylindrical Concrete Specimens	1–18	1–18
T 27/T 11	Sieve Analysis of Fine and Coarse Aggregates	1–14	1–14
T 152	FOP for WAQTC for Air Content of Freshly Mixed Concrete by the Pressure Method	1–8	1–8
T 168	Sampling of Hot Mix Asphalt Paving Mixtures FOP for WAQTC T 168	1–4	1–4
T 196	Air Content of Concrete (Volumetric Method) for AASHTO	1–2	1–2
T 324	Hamburg Wheel-Track Testing of Compacted Hot Mix Asphalt (HMA)	NA	1–4
T 404	Method of Test for Compressive Strength of Epoxy Resin Bonding Systems	1–2	NA
T 408	Method of Test for Quality of Water to be Used in Mixing Concrete	1–2	NA
T 411	Method of Test for Water Absorption and Moisture Vapor Transpiration	1–2	NA
T 414	Method of Test for Total Chloride Ion in Concrete	1–4	NA
T 415	Method of Test for Fertilizer	1–2	NA
T 418	Method of Test for Corrosion of Deicing Materials	1–4	NA
T 419	Test Method for Cold Temperature Impact Resistance of the Plastic Coating on Reinforcing Bar Chair Feet	1–2	NA
T 430	Method of Testing for the Presence of Adhesion Coating in Glass Beads	1–4	NA
T 606	Method of Test for Compaction Control of Granular Materials	1–12	1–12
SOP 615	Determination of the % Compaction for Embankment & Untreated Surfacing Materials Using the Nuclear Moisture-Density Gauge	1–6	1–6
T 716	Method of Random Sampling for Locations of Testing and Sampling Sites	1–14	1–14
SOP 730	Correlation of Nuclear Gauge Densities With Hot Mix Asphalt Cores	1–2	1–2

Chapter	Remove Pages	Insert Pages
D 6931 Standard Test Method for Indirect Tensile (IDT) Strength of Bituminous Mixtures	NA	1–4
Index	1–8	1–8

Please contact Linda Hughes at 360-709-5412 or hughel@wsdot.wa.gov with comments, questions, or suggestions for improvement to the manual.

To get the latest information, please sign up for email updates for individual publications at www.wsdot.wa.gov/publications/manuals.

Washington State Department of Transportation
Materials Laboratory
PO Box 47365
Olympia, WA 98504-7365
www.wsdot.wa.gov/business/materialslab/default.htm

Kurt R. Williams
Approved By

/s/
Signature

Washington State
Department of Transportation

Materials Manual

M 46-01.16

August 2013

Engineering and Regional Operations
Materials Laboratory

Americans with Disabilities Act (ADA) Information

Materials can be made available in an alternate format by emailing the WSDOT Diversity/ADA Affairs Team at wsdotada@wsdot.wa.gov or by calling toll free, 855-362-4ADA (4232). Persons who are deaf or hard of hearing may make a request by calling the Washington State Relay at 711.

Title VI Notice to the Public

It is Washington State Department of Transportation (WSDOT) policy to ensure no person shall, on the grounds of race, color, national origin, or sex, as provided by Title VI of the Civil Rights Act of 1964, be excluded from participation in, be denied the benefits of, or be otherwise discriminated against under any of its federally funded programs and activities. Any person who believes his/her Title VI protection has been violated may file a complaint with WSDOT's Office of Equal Opportunity (OEO). For Title VI complaint forms and advice, please contact OEO's Title VI Coordinator at 360-705-7082 or 509-324-6018.

To get the latest information on WSDOT publications, sign up for individual email updates at www.wsdot.wa.gov/publications/manuals.

Washington State Department of Transportation
Materials Laboratory
PO Box 47365
Olympia, WA 98504-7365

Phone: 360-709-5412
Email: hughel@wsdot.wa.gov
www.wsdot.wa.gov/business/materialslab/default.htm

Foreword

The *Materials Manual* continues to use AASHTO, ASTM, WAQTC, and WSDOT test methods. The strategic direction for the Materials Laboratory is to continue to expand the use of AASHTO and ASTM standards whenever possible.

The manual has retained its dual unit format. However, English units predominate with metric units in parenthesis. WSDOT is using English units. The manual reflects the Quality System concerns of an AASHTO accredited organization and is organized by numerical test order. It also features two contents and an index.

The manual reflects a continuing policy of adopting "consensus" standards wherever practical. Adoption of these, in the form of AASHTO, ASTM, WAQTC, or other nationally recognized standards eliminates much of the previous text, which merely recopied the national documents. By adopting these standards, we provide a common standard that can be used by neighboring states and other laboratories or organizations. Contractors who work in more than one state also benefit by having to conform with fewer unique tests.

The concept of Field Operating Procedures (FOP) is continued to support the work of Materials Testers at the Field or Project level. Full procedures are provided when WSDOT Test Methods apply, or when a consensus standard (AASHTO, ASTM, or WAQTC) has been adapted to an FOP. The FOP provides the essential performance elements for the field technician.

When not specified by the test procedure, test reports will be generated through the Materials Testing System (MATS) or by the use of forms approved by the State Materials Engineer.

The WSDOT Materials Laboratory is responsible for establishing and managing all test procedures. For technical information or suggested changes to test methods or procedures, contact the WSDOT Materials Laboratory Quality Systems Manager through the departmental mail system at MS 47365; by mail at PO Box 47365, Olympia, WA 98504-7365; by telephone at 360-709-5412; or by fax at 360-709-5588, physically located at 1655 South Second Avenue, Tumwater, WA 98512. Please use this physical address for all communications other than U.S. Postal Service mail.

This manual is updated as needed. To order printed copies, go to:
www.wsdot.wa.gov/publications/manuals/orderinformation.htm

To view electronic copies, go to:
www.wsdot.wa.gov/publications/manuals/m46-01.htm

Kurt R. Williams
Construction Materials Engineer

Contents

Procedure Number	Owner	Field Use	In Manual	Test Method
Aggregate				
T 2	WSDOT	✓	✓	FOP for AASHTO for Standard Practice for Sampling Aggregates
T 11	AASHTO			Materials Finer Than 0.075 mm (No. 200) Sieve in Mineral Aggregates by Washing
T 19	AASHTO	✓	✓	Bulk Density (“Unit Weight”) and Voids in Aggregate (Rodding Procedure Only) (Checklist Only)
T 21	AASHTO			Organic Impurities in Fine Aggregates for Concrete
T 27	AASHTO			Sieve Analysis of Fine and Coarse Aggregates
T 27/11	WSDOT	✓	✓	FOP for WAQTC/AASHTO for Sieve Analysis of Fine and Coarse Aggregates
T 37	AASHTO			Sieve Analysis of Mineral Filler
T 71	AASHTO			Effect of Organic Impurities in Fine Aggregate on Strength of Mortar
T 84	AASHTO			Specific Gravity and Absorption of Fine Aggregates
T 85	AASHTO			Specific Gravity and Absorption of Coarse Aggregates
T 96	AASHTO			Resistance to Degradation of Small-Size Coarse Aggregate by Abrasion and Impact in the Los Angeles Machine
T 113	WSDOT		✓	Method of Test for Determination of Degradation Value
T 123	WSDOT	✓	✓	Method of Test for Bark Mulch
T 125	WSDOT		✓	Determination of Fiber Length Percentages in Wood Strand Mulch
T 126	WSDOT		✓	Determination of Fiber Length Percentages in Hydraulically-Applied Erosion Control Products
SOP 128	WSDOT	✓	✓	Sampling for Aggregate Source Approval
T 176	AASHT0			Plastic Fines in Graded Aggregates and Soils by Use of the Sand Equivalent Test
T 176	WSDOT	✓	✓	FOP for AASHTO for Plastic Fines in Graded Aggregates and Soils by Use of the Sand Equivalent Test
T 248	AASHT0			Reducing Field Samples of Aggregates to Testing Size
T 248	WSDOT	✓	✓	FOP for AASHTO for Reducing Samples of Aggregate to Testing Size
T 255	AASHTO			Total Evaporable Moisture Content of Aggregate by Drying
T 255	WSDOT	✓	✓	FOP for AASHTO for Total Evaporable Moisture Content of Aggregate by Drying
T 288	AASHTO		✓	Determining Minimum Laboratory Soil Resistivity (Checklist Only)
T 289	AASHTO			Determining pH of Soil for Use in Corrosion
T 304	WSDOT	✓	✓	FOP for AASHTO for Uncompacted Void Content of Fine Aggregate
T 335	AASHTO			Determining the Percentage of Fracture in Coarse Aggregate
T 335	WSDOT	✓	✓	FOP for AASHTO for Determining the Percentage of Fracture in Coarse Aggregate
T 417	WSDOT		✓	Method of Test for Determining Minimum Resistivity and pH of Soil and Water

Procedure Number	Owner	Field Use	In Manual	Test Method
T 716	WSDOT	✓	✓	Method of Random Sampling for Locations of Testing and Sampling Sites
D 4791	WSDOT	✓	✓	FOP for ASTM for Standard Test Method for Flat Particles, Elongated Particles, or Flat and Elongated Particles in Coarse Aggregate
Bituminous Cement				
R 28	AASHTO			Practice of Accelerated Aging of Asphalt Binder Using a Pressurized Aging Vessel
R 29	AASHTO			Practice for Grading or Verifying the Performance Grade of an Asphalt Binder
T 40	AASHTO			Sampling Bituminous Materials
T 40	WSDOT	✓	✓	FOP for WAQTC/AASHTO for Sampling Bituminous Materials
T 44	AASHTO			Solubility of Bituminous Materials
R 47	AASHTO			Standard Recommended Practice for Reducing Samples of Hot Mix Asphalt (HMA) to Testing Size
T 48	AASHTO			Flash and Fire Points by Cleveland Cup
T 49	AASHTO			Penetration of Bituminous Materials
T 50	AASHTO			Float Test for Bituminous Materials
T 51	AASHTO			Ductility of Bituminous Materials
T 53	AASHTO			Softening Point of Bituminous (Ring and Ball Apparatus)
T 59	AASHTO			Emulsified Asphalts
T 72	AASHTO			Saybolt Viscosity
T 79	AASHTO			Flash Point With Tag Open-Cup Apparatus for Use With Materials Having a Flash Less Than 93.3°C (200°F) 207
T 200	AASHTO			pH of Aqueous Solutions With the Glass Electrode
T 201	AASHTO			Kinematic Viscosity of Asphalts
T 202	AASHTO			Viscosity of Asphalts by Vacuum Capillary Viscometer
D 217	ASTM			Standard Test Methods for Cone Penetration of Lubricating Grease
T 228	AASHTO			Specific Gravity of Semi-Solid Bituminous Material
T 240	AASHTO			Effect of Heat and Air on a Moving Film of Asphalt Binder (Rolling Thin-Film Oven Test)
T 301	AASHTO			Elastic Recovery Test of Asphalt Materials by Means of a Ductilometer
T 313	AASHTO			Determining the Flexural Creep Stiffness of Asphalt Binder Using the Bending Beam Rheometer (BBR)
T 315	AASHTO			Determining the Rheological Properties of Asphalt Binder Using a Dynamic Shear Rheometer (DSR)
T 316	AASHTO			Viscosity Determination of Asphalt Binder Using Rotational Viscometer
SOP 318	WSDOT		✓	Standard Operating Procedure for Melting of Flexible Bituminous Pavement Marker Adhesive for Evaluation
CAL 331				Caltrans Method of Test for Residue by Evaporation of Latex Modified Asphalt Emulsion
CAL 332				Caltrans Method of Test for Recovery From Deformation of Latex Modified Asphalt Emulsion Residue

Procedure Number	Owner	Field Use	In Manual	Test Method
T 426	WSDOT		✓	Pull-Off Test for Hot Melt Traffic Button Adhesive
D 3111	ASTM			Standard Test Method for Flexibility Determination of Hot-Melt Adhesives by Mandrel Bend Test Method
Hot Mix Asphalt				
TM 8	WAQTC	✓	✓	FOP for WAQTC for In-Place Density of Bituminous Mixes Using the Nuclear Moisture-Density Gauge
T 27/11	WSDOT	✓	✓	FOP for WAQTC/AASHTO for Sieve Analysis of Fine and Coarse Aggregates
R 30	AASHTO			Practice for Short and Long Term Aging of Hot Mix Asphalt (HMA)
T 30	AASHTO			Mechanical Analysis of Extracted Aggregate
T 166	AASHTO			Bulk Specific Gravity of Compacted Asphalt Mixtures Using Saturated Surface-Dry Specimens
T 166	WSDOT	✓	✓	FOP for AASHTO for Bulk Specific Gravity of Compacted Hot Mix Asphalt Using Saturated Surface-Dry Specimens
T 168	AASHTO			Sampling Bituminous Paving Mixtures
T 168	WSDOT	✓	✓	FOP for WAQTC/AASHTO for Sampling of Hot Mix Asphalt Paving Mixtures
T 209	AASHTO			Theoretical Maximum Specific Gravity and Density of Hot Mix Asphalt (HMA)
T 209	WSDOT	✓	✓	FOP for AASHTO for Theoretical Maximum Specific Gravity and Density of Hot-Mix Asphalt Paving Mixtures
T 269	AASHTO			Percent Air Void in Compacted Dense and Open Asphalt Mixtures
T 275	AASHTO			Bulk Specific Gravity of Compacted Hot Mix Asphalt (HMA) Using Paraffin-Coated Specimen
T 308	AASHTO			Determining the Asphalt Binder Content of Hot Mix Asphalt (HMA) by the Ignition Method
T 308	WSDOT	✓	✓	FOP for AASHTO for Determining the Asphalt Binder Content of Hot Mix Asphalt (HMA) by the Ignition Method
T 312	WSDOT	✓	✓	FOP for AASHTO for Preparing Hot-Mix Asphalt (HMA) Specimens by Means of the Superpave Gyratory Compactor
T 324	AASHTO		✓	Standard Method of Test for Hamburg Wheel-Track Testing of Compacted Hot Mix Asphalt (HMA)
T 329	WSDOT	✓	✓	FOP for AASHTO for Moisture Content of Asphalt (HMA) by Oven Method
T 712	WSDOT	✓	✓	Standard Method of Reducing Hot Mix Asphalt Paving Mixtures
T 716	WSDOT	✓	✓	Method of Random Sampling for Locations of Testing and Sampling Sites
T 718	WSDOT		✓	Method of Test for Determining Stripping of Hot Mix Asphalt
T 720	WSDOT		✓	Method of Test for Thickness Measurement of Hot Mix Asphalt (HMA) Cores
SOP 723	WSDOT		✓	Standard Operating Procedure for Submitting Hot Mix Asphalt (HMA) Mix Designs for Verification
T 724	WSDOT	✓	✓	Method of Preparation of Aggregate for Hot Mix Asphalt (HMA) Mix Designs

Procedure Number	Owner	Field Use	In Manual	Test Method
T 726	WSDOT	✓	✓	Mixing Procedure for Hot Mix Asphalt (HMA)
SOP 728	WSDOT	✓	✓	Standard Operating Procedure for Determining the Ignition Furnace Calibration Factor (IFCF) for Hot Mix Asphalt (HMA)
SOP 729	WSDOT	✓	✓	Standard Operating Procedure for Determination of the Moving Average of Theoretical Maximum Density (TMD) for HMA
SOP 730	WSDOT	✓	✓	Standard Operating Procedure for Correlation of Nuclear Gauge Densities With Hot Mix Asphalt (HMA) Cores
SOP 731	WSDOT	✓	✓	Standard Operating Procedure for Determining Volumetric Properties of Hot Mix Asphalt
SOP 732	WSDOT	✓	✓	Standard Operating Procedure for Volumetric Design for Hot-Mix Asphalt (HMA)
SOP 733	WSDOT	✓	✓	Standard Operating Procedure for Determination of Pavement Density Differentials Using the Nuclear Density Gauge
SOP 734	WSDOT	✓	✓	Standard Operating Procedure for Sampling Hot Mix Asphalt After Compaction (Obtaining Cores)
SOP 735	WSDOT	✓	✓	Standard Operating Procedure for Longitudinal Joint Density
D 6931	ASTM		✓	Standard Test Method for Indirect Tensile (IDT) Strength of Bituminous Mixtures
Cement				
T 105	AASHTO			Chemical Analysis of Hydraulic Cement
T 106	AASHTO			Compressive Strength of Hydraulic Cement Mortars (Using 2-in. or (50-mm) Cube Specimens)
T 106	WSDOT	✓	✓	FOP for AASHTO for Compressive Strength of Hydraulic Cement Mortars (Using 2-in. or (50-mm) Cube Specimens)
T 107	AASHTO			Autoclave Expansion of Portland Cement
T 129	AASHTO			Normal Consistency of Hydraulic Cement
T 131	AASHTO			Time of Setting of Hydraulic Cement by Vicat Needle
T 133	AASHTO			Density of Hydraulic Cement
T 137	AASHTO			Air Content of Hydraulic Cement Mortar
T 153	AASHTO			Fineness of Hydraulic Cement by Air Permeability Apparatus
T 154	AASHTO			Time of Setting of Hydraulic Cement by Gillmore Needles
T 162	AASHTO			Mechanical Mixing of Hydraulic Cement Pastes and Mortars of Plastic Consistency
T 260	AASHTO			Sampling and Testing for Chloride Ion in Concrete and Concrete Raw Materials
T 303	AASHTO			Accelerated Detection of Potentially Deleterious Expansion of Mortar Bars Due to Alkali-Silica Reaction
T 313	WSDOT		✓	Method of Test for Cement-Latex Compatibility
T 314	WSDOT		✓	Method of Test for Photovolt Reflectanc
T 413	WSDOT		✓	Method of Test for Evaluating Waterproofing Efectiveness of Membrane and Membrane-Pavement Systems

Procedure Number	Owner	Field Use	In Manual	Test Method
D 562	ASTM			Standard Test Method for Consistency of Paints Measuring Krebs Unit (KU) Viscosity Using a Stormer-Type Viscometer
T 813	WSDOT	✓	✓	Field Method of Fabrication of 2 in (50 mm) Cube Specimens for Compressive Strength Testing of Grouts and Mortars
T 814	WSDOT		✓	Method of Test for Water Retention Efficiency of Liquid Membrane-Forming Compounds and Impermeable Sheet Materials for Curing Concrete
T 816	WSDOT		✓	Method of Test for Parting Compound
C 939	WSDOT	✓	✓	FOP for ASTM for Flow of Grout for Preplaced-Aggregate Concrete (Flow Cone Method)
D 1475	ASTM			Test Method for Consistency of Paints Test Method for Density of Paint, Varnish, Lacquer, and Related Products
D 4758	ASTM			Test Method for Nonvolatile Contents of Latexes
Chemical				
T 65	AASHTO			Mass (Weight) of Coating on Iron and Steel Articles With Zinc or Zinc-Alloy Coatings
T 267	AASHTO			Determination of Organic Content in Soils by Loss on Ignition
T 420	WSDOT	✓	✓	Test Method for Determining the Maturity of Compost (Solvita Test)
C 881	ASTM			Standard Specification for Epoxy-Resin-Base Bonding Systems for Concrete
C 882	ASTM		✓	Bond Strength (Diagonal Shear) (Checklist Only)
C 1218	ASTM			Standard Test Method for Water-Soluble Chloride in Mortar and Concrete
D 1429	ASTM			Standard Test Methods for Specific Gravity of Water and Brine
D 2628/ M 220	ASTM		✓	Test for High and Low Temperature Recovery of Elastomeric Joint Seals for Concrete Pavements
D 5329	ASTM			Standard Test Methods for Sealants and Fillers, Hot-Applied, for Joints and Cracks in Asphaltic and Portland Cement Concrete Pavements
D 7091	ASTM	✓	✓	Nondestructive Measurement of Thickness of Nonmagnetic Coatings on a Ferrous Base (Checklist Only)
Concrete				
TM 2	WAQTC	✓	✓	FOP for WAQTC for Sampling Freshly Mixed Concrete
T 22	AASHTO			Compressive Strength of Cylindrical Concrete Specimens
T 22	WSDOT	✓	✓	FOP for AASHTO for Compressive Strength of Cylindrical Concrete Specimens
T 23	AASHTO			Making and Curing Concrete Test Specimens in the Field
T 23	WSDOT	✓	✓	FOP for AASHTO for Making and Curing Concrete Test Specimens in the Field
R 39	AASHTO			Making and Curing Concrete Test Specimens in the Laboratory
T 71	AASHTO			Effect of Organic Impurities in Fine Aggregate on Strength of Mortar
T 106	AASHTO			Compressive Strength of Hydraulic Cement Mortars (Using 2-in. or (50-mm) Cube Specimens)

Procedure Number	Owner	Field Use	In Manual	Test Method
T 106	WSDOT	✓	✓	FOP for AASHTO for Compressive Strength of Hydraulic Cement Mortars (Using 2-in. or (50-mm) Cube Specimens)
T 119	AASHTO			Slump of Hydraulic Cement Concrete
T 119	WSDOT	✓	✓	FOP for AASHTO for Standard Test Method for Slump of Hydraulic-Cement Concrete
T 121	AASHTO	✓	✓	Density (Unit Weight), Yield and Air Content (Gravimetric) of Concrete (Checklist Only)
C 140	ASTM			Standard Test Methods for Sampling and Testing Concrete Masonry Units and Related Units
T 141	AASHTO			Sampling Freshly Mixed Concrete
T 152	AASHTO			Air Content of Freshly Mixed Concrete by the Pressure Method
T 152	WSDOT	✓	✓	FOP for WAQTC for Air Content of Freshly Mixed Concrete by the Pressure Method
T 177	AASHTO			Flexural Strength of Concrete (Using Simple Beam With Center-Point Loading)
T 196	AASHTO		✓	Air Content of Concrete (Volumetric Method) (Checklist Only)
T 197	AASHTO			Time of Setting of Concrete Mixtures by Penetration Resistance
T 198	AASHTO			Splitting Tensile Strength of Cylindrical Concrete Specimens
T 231	AASHTO			Capping Cylindrical Concrete Specimens
T 231	WSDOT	✓	✓	FOP for AASHTO for Capping Cylindrical Concrete Specimens
T 260	AASHTO			Sampling and Testing for Chloride Ion in Concrete and Concrete Raw Materials
T 277	AASHTO			Electrical Indication of Concrete's Ability to Resist Chloride Ion Penetration
T 309	AASHTO			Temperature of Freshly Mixed Portland Cement Concrete
T 309	WSDOT	✓	✓	FOP for AASHTO for Temperature of Freshly Mixed Portland Cement Concrete
C 457	ASTM			Standard Test Method for Microscopical Determination of Parameters of the Air-Void System in Hardened Concrete
C 495	ASTM			Test Method for Compressive Strength of Lightweight Insulated Concrete
T 716	WSDOT	✓	✓	Method of Random Sampling for Locations of Testing and Sampling Sites
T 802	WSDOT	✓	✓	Method of Test for Flexural Strength of Concrete (Using Simple Beam With Center-Point Loading)
C 805	ASTM			Test Method for Rebound Number of Hardened Concrete
C 805	WSDOT	✓	✓	Rebound Hammer Determination of Compressive Strength of Hardened Concrete
T 808	WSDOT	✓	✓	Method for Making Flexural Test Beams
T 810	WSDOT	✓	✓	Method of Test for Determination of the Density of Portland Cement Concrete Pavement Cores
T 812	WSDOT	✓	✓	Method of Test for Measuring Length of Drilled Concrete Cores
T 813	WSDOT	✓	✓	Field Method of Fabrication of 2 in (50 mm) Cube Specimens for Compressive Strength Testing of Grouts and Mortars

Procedure Number	Owner	Field Use	In Manual	Test Method
T 818	WSDOT		✓	Air Content of Freshly Mixed Self-Compacting Concrete by the Pressure Method
T 819	WSDOT		✓	Making and Curing Self-Compacting Concrete Test Specimens in the Field
C 939	ASTM			Standard Test Method for Flow of Grout for Preplaced-Aggregate Concrete (Flow Cone Method)
C 939	WSDOT	✓	✓	FOP for ASTM for Flow of Grout for Preplaced-Aggregate Concrete (Flow Cone Method)
C 1218	ASTM			Standard Test Method for Water-Soluble Chloride in Mortar and Concrete
D 1429	ASTM			Standard Test Methods for Specific Gravity of Water and Brine
C 1611	WSDOT	✓	✓	FOP for ASTM C 1611/C 1611M Standard Test Method for Slump Flow of Self-Consolidating Concrete
C 1621	WSDOT	✓	✓	FOP for ASTM C 1621/C 1621M Standard Test Method for Passing Ability of Self-Consolidating Concrete by J-Ring
Electrical and Traffic				
IP 78-16	FHWA			Signal Controller Evaluation
T 257	AASHTO			Instrumental Photometeric Measurements of Retroreflectivie Material and Retroreflective
T 314	WSDOT		✓	Method of Test for Photovolt Reflectance
T 421	WSDOT		✓	Test Method for Traffic Controller Inspection and Test Procedure
T 422	WSDOT		✓	Test Method for Traffic Controller Transient Voltage Test (Spike Test) Procedure
T 423	WSDOT		✓	Test Method for Traffic Controller Conflict Monitoresting
T 424	WSDOT		✓	Test Method for Traffic Controller Power Interruption Test Procedure
T 425	WSDOT		✓	Test Method for Traffic Controller NEM and 170 Type Environmental Chamber Test
T 426	WSDOT		✓	Pull-Off Test for Hot Melt Traffic Button Adhesive
T 427	WSDOT		✓	Test Method for Loop Amplifier Testing Procedure
T 428	WSDOT		✓	Test Method for Traffic Controller Compliance Inspection and Test Procedure
SOP 429	WSDOT		✓	Methods for Determining the Acceptance of Traffic Signal Controller Assembly
T 429	WSDOT	✓	✓	Retroreflectance of Newly Applied Pavement Marking Using Portable Hand-Operated Instruments
D 470	ASTM			Test Method for Crossedlinked Insulation and Jackets for Wire and Cable
DMCT 700	ATSI			Manual on Signal Controller Evaluation
PCMZ 2000	TS			Manual on Signal Controller Evaluation
D 2633	ASTM			Standard Test Methods for Thermoplastic Insulations and Jackets for Wire and Cable
D 4956	ASTM			Standard Specification for Retroreflective Sheeting for Traffic Control

Procedure Number	Owner	Field Use	In Manual	Test Method
D 7585	ASTM			Standard Practice for Evaluating Retroreflective Pavement Markings Using Portable Hand-Operated Instruments
TS1	NEMA			Signal Controller Evaluation Geotechnical – Soils
Geotechnical – Soils				
R 58	AASHTO			Dry Preparation of Disturbed Soil and Soil Aggregate Samples for Test
T 88	AASHTO			Particle Size Analysis of Soils
T 89	AASHTO			Determining the Liquid Limit of Soils
T 90	AASHTO		✓	Determining the Plastic Limit and Plasticity Index of Soils (Checklist Only)
T 99	AASHTO	✓	✓	Moisture-Density Relations of Soils Using a 5.5 lb (2.5 kg) Rammer and a 12 in (305 mm) Drop Checklist
T 100	AASHTO			Specific Gravity of Soil
T 180	AASHTO	✓	✓	Moisture-Density Relations of Soils Using a 10 lb (4.54 kg) Rammer and an 18 in (457 mm) Drop Checklist
T 208	AASHTO			Unconfined Compressive Strength of Cohesive Soil
T 215	AASHTO			Permeability of Granular Soils (Constant Head)
T 216	AASHTO			One-Dimensional Consolidation Properties of Soils
T 217	WSDOT	✓	✓	FOP for AASHTO for Determination of Moisture in Soils by Means of a Calcium Carbide Gas Pressure Moisture Tester
T 224	AASHTO			Correction for Coarse Particles in the Soil Compaction Test
T 236	AASHTO			Direct Shear Test of Soils Under Consolidated Drained Conditions
T 265	AASHTO		✓	Laboratory Determination of Moisture Content of Soils
T 296	AASHTO			Unconsolidated, Undrained Compressive Strength of Cohesive Soils in Triaxial Compression
T 297	AASHTO			Consolidated, Undrained Triaxial Compressive Test on Cohesive Soils Shear
D 2487	ASTM			Practice for Classification of Soils for Engineering Purposes (Unified Soil Classification System)
D 2488	ASTM			Practice for Description and Identification of Soils (Visual-Manual Procedure)
D 4186	ASTM			Standard Test Method for One-Dimensional Consolidation Properties of Saturated Cohesive Soils Using Controlled-Strain Loading
D 4644	ASTM			Standard Test Method for Slake Durability of Shales and Similar Weak Rocks
D 5084	ASTM			Standard Test Methods for Measurement of Hydraulic Conductivity of Saturated Porous Materials Using a Flexible Wall Permeameter
D 5311	ASTM			Standard Test Method for Load Controlled Cyclic Triaxial Strength of Soil
D 5731	ASTM			Standard Test Method for Determination of the Point Load Strength Index of Rock and Application to Rock Strength Classifications
D 6467	ASTM			Standard Test Method for Torsional Ring Shear Test to Determine Drained Residual Shear Strength of Cohesive Soils

Procedure Number	Owner	Field Use	In Manual	Test Method
D 6528	ASTM			Standard Test Method for Consolidated Undrained Direct Simple Shear Testing of Cohesive Soils
D 7012	ASTM		✓	Standard Test Method for Unconfined Compressive Strength of Intact Rock Core Specimens
Geotextile and Steel				
A 143	ASTM			Standard Practice for Safeguarding Against Embrittlement of Hot-Dip Galvanized Structural Steel Products and Procedure for Detecting Embrittlement
T 244	AASHTO			Mechanical Testing of Steel Products
A 370	ASTM			Standard Test Methods and Definitions for Mechanical Testing of Steel Products
F 606	ASTM			Mechanical Properties: Steel Fasteners
T 914	WSDOT	✓	✓	Practice for Sampling of Geosynthetic Material for Testing
T 915	WSDOT		✓	Practice for Conditioning of Geotextiles for Testing
T 923	WSDOT		✓	Thickness Measurement of Geotextiles
T 925	WSDOT		✓	Standard Practice for Determination of Long-Term Strength for Geosynthetic Reinforcement
T 926	WSDOT		✓	Geogrid Brittleness Test
D 1683	ASTM			Sewen Seams (Geotextiles)
D 3786	ASTM			Burst Test (Geotextiles)
D 4355	ASTM			Standard Test Method for Deterioration of Geotextiles From Exposure to Ultraviolet Light and Water (Xenon-Arc Type Apparatus)
D 4491	ASTM			Water Permeability (Geotextiles)
D 4533	ASTM			Tear Strength (Geotextiles)
D 4354	ASTM		✓	Standard Practice for Sampling of Geosynthetics for Testing
D 4595	ASTM			Wide Width Breaking Load (Geotextiles)
D 4632	ASTM			Grab Breaking Load (Geotextiles)
D 4751	ASTM			Apparent Opening Size (Geotextiles)
D 4833	ASTM			Puncture (Geotextiles)
Paint				
D 185	ASTM			Standard Test Methods for Coarse Particles in Pigments, Pastes, and Paints
T 314	ASTM			Method of Test for Photovolt Reflectance
D 562	ASTM			Standard Test Method for Consistency of Paints Measuring Krebs Unit (KU) Viscosity Using a Stormer-Type Viscometer
D 1208	ASTM			Method for Determination of Loss on Ignition
D 1210	ASTM			Standard Test Method for Fineness of Dispersion of Pigment-Vehicle Systems by Hegman-Type Gage
D 1475	ASTM			Test Method for Density of Paint and Related Products
D 2244	ASTM			Standard Practice for Calculation of Color Tolerances and Color Differences From Instrumentally Measured Color Coordinates

Procedure Number	Owner	Field Use	In Manual	Test Method
D 2369	ASTM			Method for Determination of Volatile and Nonvolatile Content (Ordinary Laboratory Oven)
D 2371	ASTM			Standard Test Method for Pigment Content of Solvent-Reducible Paints (Centrifuge)
D 2621	ASTM			Standard Test Method for Infrared Identification of Vehicle Solids From Solvent-Reducible Paints
D 2697	ASTM			Standard Test Method for Volume Nonvolatile Matter in Clear or Pigmented Coatings
3011	FTMS			Method for Determination of Condition in Container
D 3723	ASTM			Standard Test Method for Pigment Content of Water Emulsion Paints by Temperature Ashing
4053	FTMS			Method for Determination of Nonvolatile Vehicle Content
4061	FTMS			Method for Determination of Drying Time (Oil-Based Paints)
4122	FTMS			Method for Determination of Hiding Power (Contrast Ratio)
D 4505	ASTM			Standard Specification for Preformed Plastic Pavement Marking Tape for Extended Service Life Pavement Soils
Pavement Soils				
T 242	AASHTO			Frictional Properties of Paved Surfaces Using a Full-Size Tire
T 272	AASHTO			Family of Curves – One Point Method
T 272	WSDOT	✓	✓	FOP for AASHTO for Family of Curves – One Point Method
T 307	AASHTO		✓	Determining the Resilient Modulus of Soils and Aggregate Materials
T 310	WSDOT	✓	✓	FOP for AASHTO for In-Place Density and Moisture Content of Soil and Soil-Aggregate by Nuclear Methods (Shallow Depth)
T 606	WSDOT		✓	Method of Test for Compaction Control of Granular Materials
T 610	WSDOT		✓	Method of Test for the Capillary Rise of Soils
SOP 615	WSDOT	✓	✓	Determination of the % Compaction for Embankment & Untreated Surfacing Materials Using the Nuclear Moisture-Density Gauge
T 807	WSDOT	✓	✓	Method of Operation of California Profilograph and Evaluation of Profiles
D 4694	ASTM			Test Method for Deflections With Falling-eight Type Impulse Load Device
Standard Practice				
QC 1	WSDOT		✓	Standard Practice for Cement Producers/Importers/Distributors That Certify Portland Cement and Blended Hydraulic Cement
QC 2	WSDOT		✓	Standard Practice for Asphalt Suppliers That Certify Performance Graded and Emulsified Asphalts
QC 3	WSDOT		✓	Quality System Laboratory Review
QC 4	WSDOT		✓	Standard Practice for Fly Ash Producers/Importers/Distributors That Certify Fly Ash
QC 5	WSDOT		✓	Standard Practice for Ground Granulated Blast-Furnace Slag Producers/Importers/Distributors That Certify Ground Granulated Blast-Furnace Slag

Procedure Number	Owner	Field Use	In Manual	Test Method
Numerical Order				
QC 1	WSDOT		✓	Standard Practice for Cement Producers/Importers/Distributors That Certify Portland Cement and Blended Hydraulic Cement
QC 2	WSDOT		✓	Standard Practice for Asphalt Suppliers That Certify Performance Graded and Emulsified Asphalts
QC 3	WSDOT		✓	Quality System Laboratory Review
QC 4	WSDOT		✓	Standard Practice for Fly Ash Producers/Importers/Distributors That Certify Fly Ash
QC 5	WSDOT		✓	Standard Practice for Ground Granulated Blast-Furnace Slag Producers/Importers/Distributors That Certify Ground Granulated Blast-Furnace Slag
TS1	NEMA			Signal Controller Evaluation Geotechnical – Soils
T 2	WSDOT	✓	✓	FOP for AASHTO for Standard Practice for Sampling Aggregates
TM 2	WAQTC	✓	✓	FOP for WAQTC for Sampling Freshly Mixed Concrete
TM 8	WAQTC	✓	✓	FOP for WAQTC for In-Place Density of Bituminous Mixes Using the Nuclear Moisture-Density Gauge
T 11	AASHTO			Materials Finer Than 0.075 mm (No. 200) Sieve in Mineral Aggregates by Washing
E 18	ASTM			Standard Test Methods for Rockwell Hardness of Metallic Materials
T 19	AASHTO	✓	✓	Bulk Density (“Unit Weight”) and Voids in Aggregate (Rodding Procedure Only) (Checklist Only)
T 21	AASHTO			Organic Impurities in Fine Aggregates for Concrete
T 22	AASHTO			Compressive Strength of Cylindrical Concrete Specimens
T 22	WSDOT	✓	✓	FOP for AASHTO for Compressive Strength of Cylindrical Concrete Specimens
T 23	AASHTO			Making and Curing Concrete Test Specimens in the Field
T 23	WSDOT	✓	✓	FOP for AASHTO for Making and Curing Concrete Test Specimens in the Field
T 27	AASHTO			Sieve Analysis of Fine and Coarse Aggregates
T 27/11	WSDOT	✓	✓	FOP for WAQTC/AASHTO for Sieve Analysis of Fine and Coarse Aggregates
R 28	AASHTO			Practice of Accelerated Aging of Asphalt Binder Using a Pressurized Aging Vessel
R 29	AASHTO			Practice for Grading or Verifying the Performance Grade of an Asphalt Binder
R 30	AASHTO			Practice for Short and Long Term Aging of Hot Mix Asphalt (HMA)
T 30	AASHTO			Mechanical Analysis of Extracted Aggregate
T 37	AASHTO			Sieve Analysis of Mineral Filler
R 39	AASHTO			Making and curing Concrete Test Specimens in the Laboratory
T 40	AASHTO			Sampling Bituminous Materials
T 40	WSDOT	✓	✓	FOP for WAQTC/AASHTO for Sampling Bituminous Materials
T 44	AASHTO			Solubility of Bituminous Materials
R 47	AASHTO			Standard Recommended Practice for Reducing Samples of Hot Mix Asphalt (HMA) to Testing Size

Procedure Number	Owner	Field Use	In Manual	Test Method
T 48	AASHTO			Flash and Fire Points by Cleveland Cup
T 49	AASHTO			Penetration of Bituminous Materials
T 50	AASHTO			Float Test for Bituminous Materials
T 51	AASHTO			Ductility of Bituminous Materials
T 53	AASHTO			Softening Point of Bituminous (Ring and Ball Apparatus)
R 58	AASHTO			Dry Preparation of Disturbed Soil and Soil Aggregate Samples for Test
T 59	AASHTO			Emulsified Asphalts
T 65	AASHTO			Mass (Weight) of Coating on Iron and Steel Articles With Zinc or Zinc-Alloy Coatings
T 71	AASHTO			Effect of Organic Impurities in Fine Aggregate on Strength of Mortar
T 72	AASHTO			Saybolt Viscosity
IP 78-16	FHWA			Signal Controller Evaluation
T 79	AASHTO			Flash Point With Tag Open-Cup Apparatus for Use With Materials Having a Flash Less Than 93.3°C (200°F) 207
T 84	AASHTO			Specific Gravity and Absorption of Fine Aggregates
T 85	AASHTO			Specific Gravity and Absorption of Coarse Aggregates
T 88	AASHTO			Particle Size Analysis of Soils
T 89	AASHTO			Determining the Liquid Limit of Soils
T 90	AASHTO		✓	Determining the Plastic Limit and Plasticity Index of Soils (Checklist Only)
T 96	AASHTO			Resistance to Degradation of Small-Size Coarse Aggregate by Abrasion and Impact in the Los Angeles Machine
T 99	AASHTO	✓	✓	Moisture-Density Relations of Soils Using a 5.5 lb (2.5 kg) Rammer and a 12 in (305 mm) Drop Checklist
T 100	AASHTO			Specific Gravity of Soil
T 105	AASHTO			Chemical Analysis of Hydraulic Cement
T 106	AASHTO			Compressive Strength of Hydraulic Cement Mortars (Using 2-in. or (50-mm) Cube Specimens)
T 106	WSDOT	✓	✓	FOP for AASHTO for Compressive Strength of Hydraulic Cement Mortars (Using 2-in. or (50-mm) Cube Specimens)
T 107	AASHTO			Autoclave Expansion of Hydraulic Cement
T 112	AASHTO		✓	Clay Lumps and Friable Particles in Aggregate
T 113	WSDOT		✓	Method of Test for Determination of Degradation Value
T 119	AASHTO			Slump of Hydraulic Cement Concrete
T 119	WSDOT	✓	✓	FOP for AASHTO for Standard Test Method for Slump of Hydraulic-Cement Concrete
T 121	AASHTO	✓	✓	Density (Unit Weight), Yield and Air Content (Gravimetric) of Concrete (Checklist Only)
T 123	WSDOT	✓	✓	Method of Test for Bark Mulch
T 124	WSDOT			Method of Testing Top Soils
T 125	WSDOT		✓	Determination of Fiber Length Percentages in Wood Strand Mulch
T 126	WSDOT		✓	Determination of Fiber Length Percentages in Hydraulically-Applied Erosion Control Products

Procedure Number	Owner	Field Use	In Manual	Test Method
T 127	WSDOT		✓	Preparation of Leachate Sample for Testing Toxicity of HECP Effluent
SOP 128	WSDOT	✓	✓	Sampling for Aggregate Source Approval
T 129	AASHTO			Normal Consistency of Hydraulic Cement
T 131	AASHTO			Time of Setting of Hydraulic Cement by Vicat Needle
T 133	AASHTO			Density of Hydraulic Cement
T 137	AASHTO			Air Content of Hydraulic Cement Mortar
C 140	ASTM			Standard Test Methods for Sampling and Testing Concrete Masonry Units and Related Units
T 141	AASHTO			Sampling Freshly Mixed Concrete
A 143	ASTM			Standard Practice for Safeguarding Against Embrittlement of Hot-Dip Galvanized Structural Steel Products and Procedure for Detecting Embrittlement
T 152	AASHTO			Air Content of Freshly Mixed Concrete by the Pressure Method
T 152	WSDOT	✓	✓	FOP for WAQTC for Air Content of Freshly Mixed Concrete by the Pressure Method
T 153	AASHTO			Fineness of Hydraulic Cement by Air Permeability Apparatus
T 154	AASHTO			Time of Setting of Hydraulic Cement by Gillmore Needle
T 162	AASHTO			Mechanical Mixing of Hydraulic Cement Pastes and Mortars of Plastic Consistency
T 166	AASHTO			Bulk Specific Gravity of Compacted Hot Mix Asphalt (HMA) Using Saturated Surface-Dry Specimens
T 166	WSDOT	✓	✓	FOP for AASHTO for Bulk Specific Gravity of Compacted Hot Mix Asphalt Using Saturated Surface-Dry Specimens
T 168	AASHTO			Sampling Bituminous Paving Mixtures
T 168	WSDOT	✓	✓	FOP for WAQTC/AASHTO for Sampling of Hot Mix Asphalt Paving Mixtures
T 176	AASHTO			Plastic Fines in Graded Aggregates and Soils by Use of the Sand Equivalent Test
T 176	WSDOT	✓	✓	FOP for AASHTO for Plastic Fines in Graded Aggregates and Soils by Use of the Sand Equivalent Test
T 177	AASHTO			Flexural Strength of Concrete (Using Simple Beam With Center-Point Loading)
T 180	AASHTO	✓	✓	Moisture-Density Relations of Soils Using a 10 lb (4.54 kg) Rammer and an 18 in (457 mm) Drop Checklist
D 185	ASTM			Standard Test Methods for Coarse Particles in Pigments, Pastes, and Paints
T 196	AASHTO		✓	Air Content of Concrete (Volumetric Method) (Checklist Only)
T 197	AASHTO			Time of Setting of Concrete Mixtures by Penetration Resistance
T 198	AASHTO			Splitting Tensile Strength of Cylindrical Concrete Specimens
T 200	AASHTO			pH of Aqueous Solutions With the Glass Electrode
T 201	AASHTO			Kinematic Viscosity of Asphalts
T 202	AASHTO			Viscosity of Asphalts by Vacuum Capillary Viscometer
T 208	AASHTO			Unconfined Compressive Strength of Cohesive Soil

Procedure Number	Owner	Field Use	In Manual	Test Method
T 209	AASHTO			Theoretical Maximum Specific Gravity and Density of Hot Mix Asphalt (HMA)
T 209	WSDOT	✓	✓	FOP for AASHTO for Theoretical Maximum Specific Gravity and Density of Hot-Mix Asphalt Paving Mixtures
T 215	AASHTO			Permeability of Granular Soils (Constant Head)
T 216	AASHTO			One-Dimensional Consolidation Properties of Soils
D 217	ASTM			Standard Test Methods for Cone Penetration of Lubricating Grease
T 217	WSDOT	✓	✓	FOP for AASHTO for Determination of Moisture in Soils by Means of a Calcium Carbide Gas Pressure Moisture Tester
T 224	AASHTO			Correction for Coarse Particles in the Soil Compaction Test
T 228	AASHTO			Specific Gravity of Semi-Solid Bituminous Material
T 231	AASHTO			Capping Cylindrical Concrete Specimens
T 231	WSDOT	✓	✓	FOP for AASHTO for Capping Cylindrical Concrete Specimens
T 236	AASHTO			Direct Shear test of Soils Under Consolidated Drained Conditions
T 240	AASHTO			Effect of Heat and Air on a Moving Film of Asphalt Binder (Rolling Thin-Film Oven Test)
T 242	AASHTO			Frictional Properties of Paved Surfaces Using a Full-Size Tire
T 244	AASHTO			Mechanical Testing of Steel Products
T 248	AASHTO			Reducing Field Samples of Aggregates to Testing Size
T 248	WSDOT	✓	✓	FOP for AASHTO for Reducing Samples of Aggregate to Testing Size
T 255	AASHTO			Total Evaporable Moisture Content of Aggregate by Drying
T 255	WSDOT	✓	✓	FOP for AASHTO for Total Evaporable Moisture Content of Aggregate by Drying
T 257	AASHTO			Instrumental Photometeric Measurements of Retroreflectivie Material and Retroreflective
T 260	AASHTO			Sampling and Testing for Chloride Ion in Concrete and Concrete Raw Materials
T 265	AASHTO		✓	Laboratory Determination of Moisture Content of Soils
T 267	AASHTO			Determination of Organic Content in Soils by Loss on Ignition
T 269	AASHTO			Percent Air Void in Compacted Dense and Open Asphalt Mixtures
T 272	AASHTO			Family of Curves – One Point Method
T 272	WSDOT	✓	✓	FOP for AASHTO for Family of Curves – One Point Method
T 275	AASHTO			Bulk Specific Gravity of Compacted Hot Mix Asphalt (HMA) Using Paraffin-Coated Specimen
T 277	AASHTO			Electrical Indication of Concrete's Ability to Resist Chloride Ion Penetration
T 288	AASHTO		✓	Determining Minimum Laboratory Soil Resistivity (Checklist Only)
T 289	AASHTO			Determining pH of Soil for Use in Corrosion
T 296	AASHTO			Unconsolidated, Undrained Compressive Strength of Cohesive Soils in Triaxial Compression
T 297	AASHTO			Consolidated, Undrained Triaxial Compressive Test on Cohesive Soils Shear
T 301	AASHTO			Elastic Recovery Test of Asphalt Materials by Means of a Ductilometer

Procedure Number	Owner	Field Use	In Manual	Test Method
T 303	AASHTO			Accelerated Detection of Potentially Deleterious Expansion of Mortar Bars Due to Alkali-Silica Reaction
T 304	WSDOT	✓	✓	FOP for AASHTO for Uncompacted Void Content of Fine Aggregate
T 307	AASHTO		✓	Determining the Resilient Modulus of Soils and Aggregate Materials
T 308	AASHTO			Determining the Asphalt Binder Content of Hot Mix Asphalt (HMA) by the Ignition Method
T 308	WSDOT	✓	✓	FOP for AASHTO for Determining the Asphalt Binder Content of Hot Mix Asphalt (HMA) by the Ignition Method
T 309	AASHTO			Temperature of Freshly Mixed Hydraulic Cement Concrete
T 309	WSDOT	✓	✓	FOP for AASHTO for Temperature of Freshly Mixed Portland Cement Concrete
T 310	WSDOT	✓	✓	FOP for AASHTO for In-Place Density and Moisture Content of Soil and Soil-Aggregate by Nuclear Methods (Shallow Depth)
T 312	WSDOT	✓	✓	FOP for AASHTO for Preparing Hot-Mix Asphalt (HMA) Specimens by Means of the Superpave Gyratory Compactor
T 313	AASHTO			Determining the Flexural Creep Stiffness of Asphalt Binder Using the Bending Beam Rheometer (BBR)
T 313	WSDOT		✓	Method of Test for Cement-Latex Compatibility
T 314	WSDOT		✓	Method of Test for Photovolt Reflectance
T 315	AASHTO			Determining the Rheological Properties of Asphalt Binder Using a Dynamic Shear Rheometer (DSR)
T 316	AASHTO			Viscosity Determination of Asphalt Binder Using Rotational Viscometer
SOP 318	WSDOT		✓	Standard Operating Procedure for Melting of Flexible Bituminous Pavement Marker Adhesive for Evaluation
T 324	AASHTO		✓	Standard Method of Test for Hamburg Wheel-Track Testing of Compacted Hot Mix Asphalt (HMA)
T 329	WSDOT	✓	✓	FOP for AASHTO for Moisture Content of Asphalt (HMA) by Oven Method
CAL 331				Caltrans Method of Test for Residue by Evaporation of Latex Modified Asphalt Emulsion
CAL 332				Caltrans Method of Test for Recovery From Deformation of Latex Modified Asphalt Emulsion Residue
T 335	AASHTO			Determining the Percentage of Fracture in Coarse Aggregate
T 335	WSDOT	✓	✓	FOP for AASHTO for Determining the Percentage of Fracture in Coarse Aggregate
A 370	ASTM			Standard Test Methods and Definitions for Mechanical Testing of Steel Products
D 395	ASTM			Test Methods for Rubber Property – Compression Set
D 412	ASTM			Test Methods for Vulcanized Rubber and Thermoplastic Elastomers – Tension
T 413	WSDOT	✓	✓	Method of Test for Evaluating Waterproofing Efectiveness of Membrane and Membrane-Pavement Systems
T 417	WSDOT		✓	Method of Test for Determining Minimum Resistivily and pH of Soil and Water

Procedure Number	Owner	Field Use	In Manual	Test Method
T 420	WSDOT	✓	✓	Test Method for Determining the Maturity of Compost (Solvita Test)
T 421	WSDOT		✓	Test Method for Traffic Controller Inspection and Test Procedure
T 422	WSDOT		✓	Test Method for Traffic Controller Transient Voltage Test (Spike Test) Procedure
T 423	WSDOT		✓	Test Method for Traffic Controller Conflict Monitoresting
T 424	WSDOT		✓	Test Method for Traffic Controller Power Interruption Test Procedure
T 425	WSDOT		✓	Test Method for Traffic Controller NEM and 170 Type Environmental Chamber Test
T 426	WSDOT		✓	Pull-Off Test for Hot Melt Traffic Button Adhesive
T 427	WSDOT		✓	Test Method for Loop Amplifier Testing Procedure
T 428	WSDOT		✓	Test Method for Traffic Controller Compliance Inspection and Test Procedure
SOP 429	WSDOT		✓	Methods for Determining the Acceptance of Traffic Signal Controller Assembly
T 429	WSDOT	✓	✓	Retroreflectance of Newly Applied Pavement Marking Using Portable Hand-Operated Instruments
T 432	WSDOT		✓	Flexibility Test for Hot-Melt Adhesives
C 457	ASTM			Standard Test Method for Microscopical Determination of Parameters of the Air-Void System in Hardened Concrete
D 470	ASTM			Test Method for Crossedlinked Insulation and Jackets for Wire and Cable
C 495	ASTM			Test Method for Compressive Strength of Lightweight Insulated Concrete
D 562	ASTM			Standard Test Method for Consistency of Paints Measuring Krebs Unit (KU) Viscosity Using a Stormer-Type Viscometer
T 601	WSDOT		✓	Method of Test for Sieve Analysis of Soils – Coarse Sieving
F 606	ASTM			Test Methods for Determining the Mechanical Properties of Externally and Internally Threaded Fasteners, Washers, Direct Tension Indicators, and Rivets
T 606	WSDOT		✓	Method of Test for Compaction Control of Granular Materials
T 610	WSDOT		✓	Method of Test for the Capillary Rise of Soils
SOP 615	WSDOT	✓	✓	Determination of the % Compaction for Embankment and Untreated Surfacing Materials Using the Nuclear Moisture-Density Gauge
DMCT 700	ATSI			Manual on Signal Controller Evaluation
T 712	WSDOT	✓	✓	Standard Method of Reducing Hot Mix Asphalt Paving Mixtures
T 716	WSDOT	✓	✓	Method of Random Sampling for Locations of Testing and Sampling Sites
T 718	WSDOT		✓	Method of Test for Determining Stripping of Hot Mix Asphalt
T 720	WSDOT		✓	Method of Test for Thickness Measurement of Hot Mix Asphalt (HMA) Cores
SOP 723	WSDOT		✓	Standard Operating Procedure for Submitting Hot Mix Asphalt (HMA) Mix Designs for Verification

Procedure Number	Owner	Field Use	In Manual	Test Method
T 724	WSDOT	✓	✓	Method of Preparation of Aggregate for Hot Mix Asphalt (HMA) Mix Designs
T 726	WSDOT	✓	✓	Mixing Procedure for Hot Mix Asphalt (HMA)
SOP 728	WSDOT	✓	✓	Standard Operating Procedure for Determining the Ignition Furnace Calibration Factor (IFCF) for Hot Mix Asphalt (HMA)
SOP 729	WSDOT	✓	✓	Standard Operating Procedure for Determination of the Moving Average of Theoretical Maximum Density (TMD) for HMA
SOP 730	WSDOT	✓	✓	Standard Operating Procedure for Correlation of Nuclear Gauge Densities With Hot Mix Asphalt (HMA) Cores
SOP 731	WSDOT	✓	✓	Standard Operating Procedure for Determining Volumetric Properties of Hot Mix Asphalt
SOP 732	WSDOT	✓	✓	Standard Operating Procedure for Volumetric Design for Hot-Mix Asphalt (HMA)
SOP 733	WSDOT	✓	✓	Standard Operating Procedure for Determination of Pavement Density Differentials Using the Nuclear Density Gauge
SOP 734	WSDOT	✓	✓	Standard Operating Procedure for Sampling Hot Mix Asphalt After Compaction (Obtaining Cores)
SOP 735	WSDOT	✓	✓	Standard Operating Procedure for Longitudinal Joint Density
T 802	WSDOT	✓	✓	Method of Test for Flexural Strength of Concrete (Using Simple Beam With Center-Point Loading)
C 805	ASTM			Test Method for Rebound Number of Hardened Concrete
C 805	WSDOT	✓	✓	Rebound Hammer Determination of Compressive Strength of Hardened Concrete
T 807	WSDOT	✓	✓	Method of Operation of California Profilograph and Evaluation of Profiles
T 808	WSDOT	✓	✓	Method for Making Flexural Test Beams
E 810	ASTM			Standard Test Method for Coefficient of Retroreflection of Retroreflective Sheeting Utilizing the Coplanar Geometry
T 810	WSDOT	✓	✓	Method of Test for Determination of the Density of Portland Cement Concrete Pavement Cores
T 812	WSDOT	✓	✓	Method of Test for Measuring Length of Drilled Concrete Cores
T 813	WSDOT	✓	✓	Field Method of Fabrication of 2 in (50 mm) Cube Specimens for Compressive Strength Testing of Grouts and Mortars
T 814	WSDOT		✓	Method of Test for Water Retention Efficiency of Liquid Membrane-Forming Compounds and Impermeable Sheet Materials for Curing Concrete
T 816	WSDOT		✓	Method of Test for Parting Compound
T 818	WSDOT		✓	Air Content of Freshly Mixed Self-Compacting Concrete by the Pressure Method
T 819	WSDOT		✓	Making and Curing Self-Compacting Concrete Test Specimens in the Field
C 881	ASTM			Standard Specification for Epoxy-Resin-Base Bonding Systems for Concrete

Procedure Number	Owner	Field Use	In Manual	Test Method
C 882	ASTM		✓	Bond Strength (Diagonal Shear) (Checklist Only)
T 914	WSDOT	✓	✓	Practice for Sampling of Geosynthetic Material for Testing
T 915	WSDOT		✓	Practice for Conditioning of Geotextiles for Testing
T 923	WSDOT		✓	Thickness Measurement of Geotextiles
T 925	WSDOT		✓	Standard Practice for Determination of Long-Term Strength for Geosynthetic Reinforcement
T 926	WSDOT		✓	Geogrid Brittleness Test
C 939	ASTM			Standard Test Method for Flow of Grout for Preplaced-Aggregate Concrete (Flow Cone Method)
C 939	WSDOT	✓	✓	FOP for ASTM for Flow of Grout for Preplaced-Aggregate Concrete (Flow Cone Method)
D 1208	ASTM			Test Methods for Common Properties of Certain Pigments (Loss on Ignition)
D 1210	ASTM			Standard Test Method for Fineness of Dispersion of Pigment-Vehicle Systems by Hegman-Type Gage
C 1218	ASTM			Standard Test Method for Water-Soluble Chloride in Mortar and Concrete
C 1231	ASTM			Standard Practice for Use of Unbonded Caps in Determination of Compressive Strength of Hardened Concrete Cylinders
D 1293	ASTM			Standard Test Methods for pH of Water
D 1347	ASTM			Standard Test Method for Color and Color-Difference Measurement by Tristimulus Colorimetry
D 1429	ASTM			Standard Test Methods for Specific Gravity of Water and Brine
C 1437	ASTM			Standard Test Method for Flow of Hydraulic Cement Mortar
D 1475	ASTM			Test Method for Consistency of Paints Test Method for Density of Paint, Varnish, Lacquer, and Related Products
C 1611	WSDOT	✓	✓	FOP for ASTM C 1611/C 1611M Standard Test Method for Slump Flow of Self-Consolidating Concrete
C 1621	WSDOT	✓	✓	FOP for ASTM C 1621/C 1621M Standard Test Method for Passing Ability of Self-Consolidating Concrete by J-Ring
D 1632	ASTM			Standard Practice for Making and Curing Soil-Cement Compression and Flexure Test Specimens in the Laboratory
D 1683	ASTM			Standard Test Method for Failure in Sewn Seams of Woven Apparel Fabrics
PCMZ 2000	TS			Manual on Signal Controller Evaluation
D 2240	ASTM			Standard Test Method for Rubber Property – Durometer Hardness
D 2244	ASTM			Standard Practice for Calculation of Color Tolerances and Color Differences From Instrumentally Measured Color Coordinates
D 2369	ASTM			Test Method for Volatile Content of Coatings (Ordinary Laboratory Oven)
D 2371	ASTM			Standard Test Method for Pigment Content of Solvent-Reducible Paints (Centrifuge)
D 2487	ASTM			Practice for Classification of Soils for Engineering Purposes (Unified Soil Classification System)

Procedure Number	Owner	Field Use	In Manual	Test Method
D 2488	ASTM			Practice for Description and Identification of Soils (Visual-Manual Procedure)
D 2621	ASTM			Standard Test Method for Infrared Identification of Vehicle Solids From Solvent-Reducible Paints
D 2628/ M 220	ASTM	✓	✓	Test for High and Low Temperature Recovery of Elastomeric Joint Seals for Concrete Pavements
D 2633	ASTM			Standard Test Methods for Thermoplastic Insulations and Jackets for Wire and Cable
D 2697	ASTM			Standard Test Method for Volume Nonvolatile Matter in Clear or Pigmented Coatings
3011	FTMS			Method for Determination of Condition in Container
D 3111	ASTM			Standard Test Method for Flexibility Determination of Hot-Melt Adhesives by Mandrel Bend Test Method
D 3723	ASTM			Standard Test Method for Pigment Content of Water Emulsion Paints by Temperature Ashing
D 3786	ASTM			Standard Test Method for Bursting Strength of Textile Fabrics – Diaphragm Bursting Strength Tester Method
4053	FTMS			Method for Determination of Nonvolatile Vehicle Content
4061	FTMS			Method for Determination of Drying Time (Oil-Based Paints)
4122	FTMS			Method for Determination of Hiding Power (Contrast Ratio)
D 4186	ASTM			Standard Test Method for One-Dimensional Consolidation Properties of Saturated Cohesive Soils Using Controlled-Strain Loading
D 4354	ASTM		✓	Standard Practice for Sampling of Geosynthetics for Testing
D 4355	ASTM			Standard Test Method for Deterioration of Geotextiles From Exposure to Ultraviolet Light and Water (Xenon-Arc Type Apparatus)
D 4491	ASTM			Standard Test Methods for Water Permeability of Geotextiles by Permittivity
D 4505	ASTM			Standard Specification for Preformed Plastic Pavement Marking Tape for Extended Service Life
D 4533	ASTM			Standard Test Method for Trapezoid Tearing Strength of Geotextiles
D 4595	ASTM			Standard Test Method for Tensile Properties of Geotextiles by the Wide-Width Strip Method
D 4632	ASTM			Standard Test Method for Grab Breaking Load and Elongation of Geotextiles
D 4644	ASTM			Standard Test Method for Slake Durability of Shales and Similar Weak Rocks
D 4694	ASTM			Test Method for Deflections With Falling-Eight Type Impulse Load Device
D 4751	ASTM			Test Method for Determining Apparent Opening Size of a Geotextile
D 4758	ASTM			Test Method for Nonvolatile Contents of Latexes
D 4791	WSDOT	✓	✓	FOP for ASTM for Standard Test Method for Flat Particles, Elongated Particles, or Flat and Elongated Particles in Coarse Aggregate
D 4833	ASTM			Test Method for Index Puncture Resistance of Geomembranes and Related Products
D 4956	ASTM			Standard Specification for Retroreflective Sheeting for Traffic Control

Procedure Number	Owner	Field Use	In Manual	Test Method
D 5084	ASTM			Standard Test Methods for Measurement of Hydraulic Conductivity of Saturated Porous Materials Using a Flexible Wall Permeameter
D 5311	ASTM			Standard Test Method for Load Controlled Cyclic Triaxial Strength of Soil
D 5329	ASTM			Standard Test Methods for Sealants and Fillers, Hot-Applied, for Joints and Cracks in Asphaltic and Portland Cement Concrete Pavements
D 5731	ASTM			Standard Test Method for Determination of the Point Load Strength Index of Rock and Application to Rock Strength Classifications
D 6467	ASTM			Standard Test Method for Torsional Ring Shear Test to Determine Drained Residual Shear Strength of Cohesive Soils
D 6528	ASTM			Standard Test Method for Consolidated Undrained Direct Simple Shear Testing of Cohesive Soils
D 6931	ASTM		✓	Standard Test Method for Indirect Tensile (IDT) Strength of Bituminous Mixtures
D 7012	ASTM		✓	Standard Test Method for Unconfined Compressive Strength of Intact Rock Core Specimens
D 7091	ASTM	✓	✓	Nondestructive Measurement of Thickness of Nonmagnetic Coatings on a Ferrous Base (Checklist Only)
D 7585	ASTM			Standard Practice for Evaluating Retroreflective Pavement Markings Using Portable Hand-Operated Instruments

WSDOT FOP for AASHTO T 2[1]

Standard Practice for Sampling Aggregates

1. Scope

   1.1 This practice covers sampling of coarse and fine aggregates for the following purposes:

      1.1.1 Preliminary investigation of the potential source of supply.

      1.1.2 Control of the product at the source of supply.

      1.1.3 Control of the operations at the site of use.

      1.1.4 Acceptance or rejection of the materials.

   1.2 The values stated in English units are to be regarded as the standard.

   1.3 This standard does not purport to address all of the safety concerns, if any, associated with its use. It is the responsibility of the user of this standard to establish appropriate safety and health practices and determine the applicability of regulatory limitations prior to use.

2. Referenced Documents

   2.1 AASHTO Standards

      T 248 – Reducing Samples of Aggregate to Testing Size

   2.2 ASTM Standards

      C 702 – Practice for Reducing Field Samples of Aggregate to Testing Size

      D 2234 – Test Method for Collection of a Gross Sample of Coal

      D 3665 – Practice for Random Sampling of Construction Materials

      E 105 – Practice for Probability Sampling of Materials

      E 122 – Practice for Choice of Sample Size to Estimate the Average Quality of a Lot or Process

      E 141 – Practice for Acceptance of Evidence Based on the Results of Probability Sampling

3. Significance and Use

   3.1 Sampling is equally as important as the testing, and the sampler shall use every precaution to obtain samples that will show the nature and condition of the materials which they represent.

[1]This Procedure is based on AASHTO T 2-91 (2000) and has been modified per WSDOT standards. To view the redline modifications, contact the WSDOT Quality Systems Manager at 360-709-5412.

3.2 When sampling of aggregate sources for preliminary testing, the sampling must be witnessed or taken by a designated representative of the Regional Materials Engineer. The Acceptance samples will be taken by a qualified tester employed by the contracting agency or their designated qualified representative.

Note 2: The preliminary investigation and sampling of potential aggregate sources and types occupies a very important place in determining the availability and suitability of the largest single constituent entering into the construction. It influences the type of construction from the standpoint of economics and governs the necessary material control to ensure durability of the resulting structure, from the aggregate standpoint. This investigation should be done only by agency guidelines. For more comprehensive guidance, see the appendix.

4. Securing Samples

4.1 General – Where practicable, samples to be tested for quality shall be obtained from the finished product. Samples from the finished product to be tested for abrasion loss shall not be subject to further crushing or manual reduction in particle size in preparation for the abrasion test unless the size of the finished product is such that it requires further reduction for testing purposes.

Native soils within the contract limits to be used for embankment construction and/or backfill material do not require the sampling by a qualified tester. For material that requires gradation testing, such as but not limited to manufactured aggregates and Gravel Borrow, a qualified tester shall be required for sampling.

4.2 Inspection – The material shall be inspected to determine discernible variations. The seller shall provide suitable equipment needed for proper inspection and sampling.

4.3 Procedure

4.3.1 Sampling From a Flowing Aggregate Stream (Bins or Belt Discharge) – Select units to be sampled by a random method from the production. Obtain a field sample whose mass equals or exceeds the minimum recommended in Section 4.4.2. Take the sample from the entire cross section of the material as it is being discharged. The *Standard Specifications* require an mechanical, automatic, or semi-automatic sampling device be used for processed materials.

Note 3: Sampling the initial discharge or the final few tons from a bin or conveyor belt increases the chances of obtaining segregated material and should be avoided.

4.3.2 Sampling From the Conveyor Belt (Stopped) – Select units to be sampled by a random method from the production. Obtain a field sample selected at random from the unit being sampled and combine to form a field sample whose mass equals or exceeds the minimum recommended in Section 4.4.2. Stop the conveyor belt while the sample increments are being obtained. Insert two templates, the shape of which conforms to the shape of the belt in the aggregate stream on the belt, and space them such that the material contained between them will yield an increment of the required weight. Carefully scoop all material between the templates into a suitable container and collect the fines on the belt with a brush and dust pan and add to the container.

4.3.3 Sampling From Stockpiles or Transportation Units – Avoid sampling coarse aggregate or mixed coarse and fine aggregate from stockpiles or transportation units whenever possible, particularly when the sampling is done for the purpose of determining aggregate properties that may be dependent upon the grading of the sample. If circumstances make it necessary to obtain samples from a stockpile of coarse aggregate or a stockpile of combined coarse and fine aggregate, design a sampling plan for the specific case under consideration. The sampling plan shall define the number of samples necessary to represent lots and sublots of specific sizes. General principles for sampling from stockpiles are applicable to sampling from trucks, rail cars, barges, or other transportation units. For general guidance in sampling from stockpiles, see the appendix.

4.3.4 Sampling From Roadway (Bases and Subbases) – WSDOT has deleted this section.

4.4 Number and Masses of Field Samples

4.4.1 The number of field samples (obtained by one of the methods described in Section 4.3) required depends on the criticality of, and variation in, the properties to be measured. Designate each unit from which a field sample is to be obtained prior to sampling. The number of field samples from the production should be sufficient to give the desired confidence in test results.

Note 4: Guidance for determining the number of samples required to obtain the desired level of confidence in test results may be found in Test Method D 2234, Practice E 105, Practice E 122, and Practice E 141.

4.4.2 The field sample masses cited are tentative. The masses must be predicated on the type and number of tests to which the material is to be subjected and sufficient material obtained to provide for the proper execution of these tests. Standard acceptance and control tests are covered by ASTM standards and specify the portion of the field sample required for each specific test. Generally speaking, the amounts specified in Table 1 will provide adequate material for routine grading and quality analysis. Extract test portions from the field sample according to T 248 or as required by other applicable test methods.

5. Shipping Samples

5.1 Transport aggregates in bags or other containers so constructed as to preclude loss or contamination of any part of the sample, or damage to the contents from mishandling during shipment. The weight limit for each bag of aggregate is 30 pounds maximum.

5.2 Shipping containers for aggregate samples shall have suitable individual identification attached and enclosed so that field reporting, laboratory logging, and test reporting may be facilitated.

All samples submitted for testing to the Regional or State Materials Laboratories shall be accompanied by a completed sample information report from the Materials Testing System (MATS).

Nominal Maximum Size* in (mm)		Minimum Mass lb (kg)	
US No. 4	(4.75)	5	(2)
¼	(6.3)	10	(4)
⅜	(9.5)	10	(4)
½	(12.5)	20	(8)
⅝	(16.0)	20	(8)
¾	(19.0)	30	(12)
1	(25.0)	55	(25)
1¼	(31.5)	70	(30)
1½	(37.5)	80	(36)
2	(50)	90	(40)
2½	(63)	110	(50)
3	(75)	140	(60)
3½	(90)	180	(80)

*For aggregate, the nominal maximum size sieve is the largest standard sieve opening listed in the applicable specification upon which more than 1 percent of the material is permitted to be retained. For concrete aggregate, the nominal maximum size sieve is the smallest standard sieve opening through which the entire amount of aggregate is permitted to pass.

Size of Samples
Table 1

Note: Agencies that do not have access to MATS may submit a completed DOT Form 350-056 EF.

Note 5: For an aggregate specification having a generally unrestrictive gradation (i.e., wide range of permissible upper sizes), where the source consistently fully passes a screen substantially smaller than the maximum specified size, the nominal maximum size, for the purpose of defining sampling and test specimen size requirements may be adjusted to the screen, found by experience to retain no more than 5 percent of the materials.

Appendices

Xl. Sampling Aggregate From Stockpiles or Transportation Units

X1.1 Scope

X1.1.1 In some situations, it is mandatory to sample aggregates that have been stored in stockpiles or loaded into rail cars, barges, or trucks. In such cases, the procedure should ensure that segregation does not introduce a serious bias in the results.

Xl.2 Sampling From Stockpiles

X1.2.1 In sampling material from stockpiles, it is very difficult to ensure unbiased samples, due to the segregation which often occurs when material is stockpiled, with coarser particles rolling to the outside base of the pile. For coarse or mixed coarse and fine aggregate, every effort should be made to enlist the services of power equipment, such as a front end loader, to develop a separate, small sampling pile composed of materials drawn from various levels and locations in the main pile after which several increments may be combined to compose the field sample. If necessary to indicate the degree of variability existing within the main pile, separate samples should be drawn from separate areas of the pile.

X1.2.2 Where power equipment is not available, the contractor may be required to sample the stockpile witnessed by WSDOT personnel. Samples from stockpiles should be made up of at least three increments taken from the top third, at the mid-point, and at the bottom third of the volume of the pile. A board shoved vertically into the pile just above the sampling point aids in preventing further segregation. In sampling stockpiles of fine aggregate, the outer layer, which may have become segregated, should be removed and the sample taken from the material beneath. Sampling tubes approximately 1½ in (30 mm) min by 6 ft (2 m) min in length may be inserted into the pile at random locations to extract a minimum of five increments of material to form the sample.

WSDOT Note: For aggregate accepted by non-statistical, the tester may want to take three samples in case the material fails and a statistical evaluation is required.

Xl.3 Sampling From Transportation Units

X1.3.1 In sampling coarse aggregates from railroad cars or barges, effort should be made to enlist the services of power equipment capable of exposing the material at various levels and random locations. Where power equipment is not available, a common procedure requires excavation of three or more trenches across the unit at points that will, from visual appearance, give a reasonable estimate of the characteristics of the load. The trench bottom should be approximately level, at least 1 ft (0.3 m) in width and in depth below the surface. A minimum of three increments from approximately equally spaced points along each trench should be taken by pushing a shovel downward into the material. Coarse aggregate in trucks should be sampled in essentially the same manner as for rail car or barges, except for adjusting the number of increments according to the size of the truck. For fine aggregate in transportation units, sampling tubes as described in Section Xl.2 may be used to extract an appropriate number of increments to form the sample.

X2. Exploration of Potential Aggregate Sources

X2.1 Scope

X2.1.1 Sampling for evaluation of potential aggregate sources should be performed by a responsible trained and experienced person. Because of the wide variety of conditions under which sampling may have to be done, it is not possible to describe detailed procedures applicable to all circumstances. This appendix is intended to provide general guidance and list more comprehensive references.

X2.2 Sampling Stone From Quarries of Ledges

X2.2.1 Inspection – The ledge or quarry face should be inspected to determine discernible variations or strata. Differences in color and structure should be recorded.

X2.2.2 Sampling and Size of Sample – Separate samples having a mass of at least 55 lbs (25 kg) should be obtained from each discernible stratum. The sample should not include material weathered to such an extent that it is no longer suitable for the purpose intended. One or more pieces in each sample should be at least 6 × 6 × 4 in (150 × 150 × 100 mm) in size with the bedding plane plainly marked, and this piece should be free of seams or fractures.

X2.2.3 Record – In addition to the general information accompanying all samples, the following information should accompany samples taken from ledges or quarry faces:

X2.2.3.1 Approximate quantity available. (If quantities is very large, this may be recorded as practically unlimited.)

X2.2.3.2 Quantity and character of overburden.

X2.2.3.3 A detailed record showing boundaries and location of material represented by each sample.

Note X2.1: A sketch, plan, and elevation showing the thickness and location of the different layers is recommended for this purpose.

X2.3 Sampling Roadside or Bank Run Sand and Gravel Deposits

X2.3.1 Inspection – Potential sources of bank run sand and gravel may include previously worked pits from which there is an exposed face or potential deposits discovered through air-photo interpretation, geophysical exploration, or other types of terrain investigation.

X2.3.2 Sampling – Samples should be so chosen from each different stratum in the deposit discernible to the sampler. An estimate of the quantity of the different materials should be made. If the deposit is worked as an open-face bank or pit, samples should be taken by channeling the face vertically, bottom to top, so as to represent the materials proposed for use. Overburdened or disturbed material should not be included in the sample. Test holes should be excavated or drilled at numerous locations in the deposit to determine the quality of the material and the extent of the deposit beyond the exposed face, if any. The number and depth of test holes will depend upon the quantity of the material needed, topography of the area, nature of the deposit, character of the material, and potential value of the material in the deposit. If visual inspection indicates that there is considerable variation in the material, individual samples should be selected from the material in each well defined stratum. Each sample should be thoroughly mixed and quartered if necessary so that the field sample thus obtained will be at least 25 lb (12 kg) for sand and 75 lb (35 kg) if the deposit contains an appreciable amount of coarse aggregate.

X2.3.3 Record – In addition to the general information accompanying all samples, the following information should accompany samples of bank run sand and gravel:

X2.3.3.1 Location of supply.

X2.3.3.2 Estimate of approximate quantity available.

X2.3.3.3 Quantity and character of overburden.

X2.3.3.4 Length of haul to proposed site of work.

X2.3.3.5 Character of haul (kind of road, maximum grades, etc.).

X2.3.3.6 Details as to extent and location of material represented by each sample.

Performance Exam Checklist

Sampling of Aggregates
FOP for AASHTO T 2

Participant Name _____ Exam Date _____

Procedure Element	**Yes**	**No**
Preparation		
1. The tester has a copy of the current procedure on hand?	☐	☐
Conveyor Belts – Stopped		
2. Belt stopped?	☐	☐
3. Sampling device set on belt, avoiding intrusion of adjacent material?	☐	☐
4. Sample, including all fines, scooped off?	☐	☐
Flowing Aggregate Sampler		
5. Container passed through full stream of material as it runs off end of belt? (Mechanical, Automatic, or Semi Automatic Sampler Only)	☐	☐
Transport Units		
6. Three or more trenches cut across the unit?	☐	☐
7. Trench bottom level and approximate 1 foot wide and 1 foot below surface of material in unit?	☐	☐
8. Three samples taken at equal spacing along each trench?	☐	☐
Stockpiles	☐	☐
9. Create vertical face, if one does not exist, or use mechanical equipment to build a small sampling pile?	☐	☐
10. At least three increments taken, at various locations?	☐	☐
Procedure Element	☐	☐
11. When sampling sand, outer layer removed and increments taken from a least five locations?	☐	☐
12. Correct sample size?	☐	☐

First Attempt: Pass ☐ Fail ☐ Second Attempt: Pass ☐ Fail ☐

Signature of Examiner _____

Comments:

Washington State Department of Transportation

WSDOT Standard Practice QC 3

Quality System Laboratory Review

1. Scope

This standard specifies requirements and procedures for the review of WSDOT Regional Materials Laboratory and for Private Laboratories by the Quality Systems Laboratory Review Team. The on-site laboratory review shall include the following elements:

- Review of the testing facility.
- Review of the equipment calibration/verification records.
- Review of the testing technician's training records.
- Physical inspection of the equipment used to perform tests.
- Observation of technician performing the test procedure.
- Review of test reports and calculations.

2. Referenced Documents

2.1 AASHTO Standards

R 18 – Establishing and Implementing a Quality System for Construction Materials Testing Laboratories

R 61 – Establishing Requirements for and Performing Equipment Calibrations, Standardizations, and Checks

2.2 WSDOT Standards

Materials Manual M 46-01

Construction Manual M 41-01

Standard Specifications for Road, Bridge, and Municipal Construction M 41-10

3. Terminology

3.1 AASHTO – American Association of State Highway and Transportation Officials

3.2 ASTM – American Society for Testing and Materials

3.3 Calibration – A process that establishes the relationship (traceability) between the results of a measurement instrument, measurement system, or material measure and the corresponding values assigned to a reference standard (Note 1).

Note 1: The definition for calibration and the following definitions for check, standardization, traceability, uncertainty, and verification of calibration are based on the definitions in R 61.

3.4 Check – A specific type of inspection and/or measurement performed on equipment and materials to indicate compliance or otherwise with stated criteria.

3.5 Standardization – A process that determines (1) the correction to be applied to the result of a measuring instrument, measuring system, material measure, or reference material when its values are compared to the values realized by standards; or (2) the adjustment to be applied to a piece of equipment when its performance is compared with that of an accepted standard or process.

3.6 WSDOT – Washington State Department of Transportation

4. Significance and Use

4.1 This standard specifies procedures for reviewing laboratories for the purpose of determining the capability of the facility and its personnel to perform the necessary acceptance testing for WSDOT.

5. Laboratory Requirements

5.1 Facility and Equipment

5.1.1 Laboratory facilities shall adequately house and allow proper operation of all required equipment in accordance with the applicable test procedures.

5.1.2 The temperature and humidity of the laboratory shall meet the requirements of all test procedures performed in the laboratory.

5.1.3 The testing areas shall be clean and free of clutter.

5.1.4 The laboratory shall use testing equipment that meets the requirements of each test procedure.

5.1.5 Testing equipment for private laboratories and the State Materials Laboratory shall be calibrated/standardized/checked in accordance with the test procedure, appropriate sections of AASHTO R 18 and AASHTO R 61. WSDOT region and field laboratories testing equipment shall be calibrated/standardized/checked in accordance with the test procedure and Section 9-5 of the *Construction Manual* M 41-01.

5.1.6 Documentation of equipment calibration/standardization/check shall be maintained and available on-site during laboratory review.

5.1.7 Safety equipment will be available and maintained in proper working order.

5.2 Tester Training and Records

5.2.1 The laboratory shall use personnel qualified in accordance with the appropriate sections of AASHTO R 18. WSDOT region and field laboratory personnel shall be qualified in accordance with Section 9-5 of the *Construction Manual* M 41-01.

5.2.2 The laboratory shall maintain records of training for each tester.

5.2.3 A tester's competency for performing a test procedure shall be evaluated using a checklist relating to the test procedure. The checklist shall be filed in the tester's training record.

Note: Private laboratories may use test procedure checklists from the *Materials Manual*, or may develop their own checklists similar to those found in the *Materials Manual*.

5.2.4 Testers for private laboratories shall be reviewed for qualification at the frequency stated in the *Laboratory Quality Systems Manual* (LQSM).

5.3 Manuals and Records

5.3.1 Private laboratories shall have an up-to-date LQSM meeting the requirements of AASHTO R 18 and approved by the State Materials Engineer.

5.3.2 All private laboratories shall have an up-to-date copy of the LQSM on-site and available to all testers.

5.3.3 Each tester must have access to the most current copy of the AASHTO, ASTM, and *Materials Manual*. WSDOT testers must have access to the most current copy of the *Construction Manual* M 41-01.

5.3.4 If an earlier version of the *Materials Manual* or *Construction Manual* M 41-01 is required by contract, the laboratory shall maintain an unaltered version of the required manual.

5.3.5 A file of MSDS sheets must be maintained in the laboratory and must be available to all testers.

5.3.6 Test records are required to contain sufficient information to permit verification of any test report (original observations, calculations, derived data, and identification of personnel involved in the sampling and testing).

5.3.7 Amendments to reports must be made in the manner stated in the LQSM.

5.3.8 The laboratory shall define the process used to ensure testers are performing the correct testing procedure according to the clients' contractual requirements (i.e., AASHTO, ASTM, or WSDOT test procedure as required by the contract).

5.3.9 Test reports are required to contain the following information:

- Name and address of the testing laboratory.
- Name and address of the client or identification of the project.
- Date of receipt of the test sample.
- Date of test performance.
- Identification of the standard test method used and notation of all know deviations from the test method.
- Test results and specification of the material.
- Name of tester performing the test.
- Date report was issued.
- Name of person accepting technical responsibility for test report.

6. Sampling

   6.1 Test samples required for observation of test procedures shall be obtained by:
   T 2 – WSDOT FOP for AASHTO for Soils and Aggregate
   T 168 – WSDOT FOP for WAQTC for Hot Mix Asphalt
   TM 2 – WSDOT FOP for WAQTC for Concrete

7. Sample Preparation Requirements

   7.1 Prior to the performance portion of the laboratory review, for the testing being performed, samples are required to be prepared as shown in Table 1.

Test Procedure	Test	Required Preparation
Aggregate Tests		
FOP for AASHTO T 335	Fracture	Material washed, graded, and ready for counting fracture.
FOP for WAQTC T 27/T 11	Sieve Analysis of Fine and Coarse Aggregates	1. Split or quarter proper amount of the original sample and dry to constant weight. 2. Have a split of the original sample that has been washed and dried, ready for sieving. 3. Retain all weights in order to do calculations.
FOP for AASHTO T 176	Sand Equivalent Test	1. Have a sample (approximately 1000 g) of #4 minus material prepared for the moisture conditioning process (do not moisten). 2. Have two properly prepared tins ready for introduction into the SE tube.
FOP for AASHTO T 248	Reducing Sample	30 lbs dry material.
Concrete Tests		
FOP for AASHTO T 106	Compressive Strength	Three mortar cubes.
FOP for AASHTO T 22	Compressive Strength	Two cylinders.
FOP for AASHTO T 231	Capping Cylinder	1. Have capping sulfur compound heated and ready for capping. 2. Have two cylinders available for capping (can be the cylinders for T 22).
WSDOT T 810	Density of Pavement Core	Have a drilled pavement core available.
WSDOT T 812	Length of Drilled PCC Core	May use the core from T 810.
Soils Tests		
WSDOT T 417*	Resistivity and pH	1. Prepare a 100 g sample of natural #8 minus material for the pH test. 2. Prepare the soil/water slurry a minimum of 1 hour prior to test review. 3. Prepare a sample of #8 minus material that is four times the volume of the soil box for the resistivity test. 4. Add 10 percent by weight of water to the sample and allow it to stand a minimum of 12 hours in a waterproof container.

Sample Preparation Requirements
Table 1

Test Procedure	Test	Required Preparation
AASHTO T 84*	Specific Gravity and Absorption Fine Agg.	Prepare sample to step 6.1.2 of the procedure.
AASHTO T 85*	Specific Gravity and Absorption Coarse Agg.	Prepare sample to step 8.2 of the procedure.
AASHTO T 87*	Dry Preparation of Disturbed Soil and Soil Aggregate Samples for Test	500 g of soil aggregate air dried.
AASHTO T 88*	Particle Size Analysis	No preparation.
AASHTO T 100*	Specific Gravity Soils	No preparation.
AASHTO T 255	Moisture Content	No preparation.
AASHTO T 265	Moisture Content	No preparation.
FOP for AASHTO T 99/T 180	Proctor	Prepare five representative samples of #4 or ¾″ material at approximately 2 percent moisture already added to each sample starting at approximately 4 percent below optimum moisture of the material. Store in sealed containers.
WSDOT T 606	Maximum Density Curve	1. Dry and split a sample of material into coarse and fine material. 2. Prepare fine material for Test 1. 3. Prepare coarse material for either Test 2, Procedure 1 or Test 2, Procedure 2.
Hot Mix Asphalt Tests (Have HMA samples ready on the first day of review.)		
WSDOT T 712*	Reducing Sample	An adequate amount of HMA to perform all the testing required. Heat sample and have it ready to reduce. Required to split material from sample for T 308, T 312, T 329, T 209.
FOP for AASHTO T 166*	Bulk Specific Gravity	A room temperature compacted sample must be provided for this test. A gyratory sample or a core sample will suffice.
WSDOT SOP 724*	Preparation of Aggregates	Representative aggregate from stockpiles used in JMF, dried to a constant weight.
WSDOT SOP 726*	Mixing Procedure HMA	Binder used in JMF mix design heated to mixing temperature as recommended by binder supplier (typically one quart container). Aggregate representative of JMF sample size based on class of HMA heated to mixing temperature as recommended by binder supplier.

*WSDOT Laboratories only unless review of a private laboratory is requested by the project office.

Sample Preparation Requirements
Table 1 (continued)

8. Performance of Test Procedure

   8.1 All technicians must be current in their qualifications.

   8.2 The laboratory review team will evaluate the technician's testing proficiency using an approved WSDOT checklist.

   8.3 All equipment, used during the evaluation of the technician's proficiency, must be operational and have a current calibration sticker on the equipment.

   8.4 When the test is complete, the reviewer will go over the checklist with the tester and point out any deficiencies that occurred during the performance of the test procedure.

9. Termination of Review

   9.1 A laboratory review team member may choose to terminate the review of a procedure for the following reasons:

      9.1.1 Equipment is non-operational or the wrong equipment is being used.

      9.1.2 Tester is not qualified in the test procedure being reviewed.

      9.1.3 Tester makes multiple major errors in the performance of the test.

   9.2 The review of the laboratory may be terminated by the WSDOT Quality Systems Manager for the following reasons:

      9.2.1 Facility is not adequate for the test procedures being reviewed.

      9.2.2 Two or more testers fail during the proficiency portion of the review.

      9.2.3 Documentation of qualification of testers or calibration of equipment is not available for review when team arrives.

10. Failure of Review

   10.1 Rescheduling a review will require the following wait periods:

      - First Failure – Minimum of one week wait to reschedule.
      - Second Failure – Minimum of one month wait to reschedule.
      - Third Failure – Minimum of one month wait and submittal of corrective action documentation. The documents submitted must state the concerns of the review team and the corrective action taken to solve the problem.

11. Laboratory Review Team Report

   11.1 The Laboratory Review Team will review the facility, equipment, records, and testers compliance with the established requirements.

   11.2 The evaluation report will be prepared and sent to the laboratory within 30 days of the completion of the review.

11.3 Any items that did not meet the requirements of Section 5 will be written up as "Issues."

11.3.1 Issues resolved during the review shall be noted as "Issue Resolved No Response" necessary. If a "Resolved No Response Required" issue reoccurs in subsequent evaluations, the issue will be escalated to a "Response Required Issue."

11.3.2 Issues that were not able to be resolved during the review will be noted as "Response Required Issue."

11.4 During the review, members of the team may make suggestions for improvements to the performance of the test procedure or operation of equipment. These are suggestions only and will be noted in the report as "Observations." These do not require a response.

12. Response to Report

12.1 Once the evaluation report has been received, the laboratory will have 90 days to respond in writing to all "Issues" labeled "Response Required."

12.2 The response must be a detailed explanation stating how the laboratory has resolved the issue and what measures they have taken to prevent this issue from reoccurring in the future.

13. Approval of Laboratory

13.1 If the laboratory review report had no issues or the issues are minor and resolved at the time of the review, the laboratory may be approved to perform acceptance, Independent Assurance, or dispute resolution testing.

13.2 If the laboratory review contained Response Required Issues, the laboratory may receive a conditional approval until the deficiencies are corrected or the review team may recommend that the laboratory be disapproved for all testing until the deficiencies are corrected to the satisfaction of the WSDOT Quality System Manager.

WSDOT FOP for AASHTO T 22[1]

Compressive Strength of Cylindrical Concrete Specimens

1. Scope

   1.1 This test method covers determination of compressive strength of cylindrical concrete specimens such as molded cylinders and drilled cores. It is limited to concrete having a unit weight in excess of 50 lb/ft^3 (800 kg/m^3).

   1.2 The values stated in English units are the standard.

   1.3 This standard may involve hazardous materials, operations, and equipment. This standard does not purport to address all of the safety problems associated with its use. It is the responsibility of whoever uses this standard to consult and establish appropriate safety and health practices and determine the applicability of regulatory limitations prior to use.

   Warning: Means should be provided to contain concrete fragments during sudden rupture of specimens. Tendency for sudden rupture increases with increasing concrete strength (Note 1).

   Note 1: The safety precautions given in the Manual of Aggregate and Concrete Testing, located in the Related Materials section of Volume 04.02 of the Annual Book of ASTM Standards, are recommended.

   1.4 The text of this standard references notes which provide explanatory material. These notes shall not be considered as requirements of the standard.

2. Referenced Documents

   2.1 AASHTO Standards

   R 39 – Making and Curing Concrete Test Specimens in the Laboratory

   T 23 – Making and Curing Concrete Test Specimens in the Field

   T 24 – Obtaining and Testing Drilled Cores and Sawed Beams of Concrete

   T 231 – Capping Cylindrical Concrete Specimens

   2.2 ASTM Standards

   C 873 – Test Method for Compressive Strength of Concrete Cylinders Cast in Place in Cylindrical Molds

   C 1231 – Practice for Use of Unbonded Caps in Determination of Compressive Strength of Hardened Concrete Cylinders

   E 74 – Practice for Calibration of Force-Measuring Instruments for Verifying the Load Indication of Testing Machines

[1]This FOP is based on AASHTO T 22-11 and has been modified per WSDOT standards. To view the redline modifications, contact the WSDOT Quality Systems Manager at 360-709-5412.

3. Summary of Test Method

3.1 This test method consists of applying a compressive axial load to molded cylinders or cores at a rate which is within a prescribed range until failure occurs. The compressive strength of the specimen is calculated by dividing the maximum load attained during the test by the cross-sectional area of the specimen.

4. Significance and Use

4.1 Care must be exercised in the interpretation of the significance of compressive strength determinations by this test method since strength is not a fundamental or intrinsic property of concrete made from given materials. Values obtained will depend on the size and shape of the specimen, batching, mixing procedures, the methods of sampling, molding, and fabrication and the age, temperature, and moisture conditions during curing.

4.2 This test method is used to determine compressive strength of cylindrical specimens prepared and cured in accordance with Methods T 23, T 24, T 231, and ASTM C873.

4.3 The results of this test method are used as a basis for quality control of concrete proportioning, mixing, and placing operations; determination of compliance with specifications; control for evaluating effectiveness of admixtures and similar uses.

5. Apparatus

5.1 Testing Machine – The testing machine shall be of a type having sufficient capacity and capable of providing the rates of loading prescribed in Section 7.5. As a minimum, the machine should be capable of achieving 170 percent of the design strength.

5.1.1 Verify calibration of the testing machines in accordance with Method T 67 except that the verified loading range shall be as required in Section 5.3.2. Verification is required under the following conditions:

5.1.1.1 At least annually, but not to exceed 13 months.

5.1.1.2 On original installation or immediately after relocation.

5.1.1.3 Immediately after making repairs or adjustments that affect the operation of the force applying system or the values displayed on the load indicating system, except for zero adjustments that compensate for the mass (weight) of tooling, or specimen, or both.

5.1.1.4 Whenever there is reason to suspect the accuracy of the indicated loads.

5.1.2. Design – The design of the machine must include the following features:

5.1.2.1 The machine must be power operated and must apply the load continuously rather than intermittently, and without shock. If it has only one loading rate (meeting the requirements of Section 7.5), it must be provided with a supplemental means for loading at a rate suitable for verification. This supplemental means of loading may be power or hand operated.

5.1.2.2 The space provided for test specimens shall be large enough to accommodate, in a readable position, an elastic calibration device which is of sufficient capacity to cover the potential loading range of the testing machine and which complies with the requirements of Practice E 74.

Note 2: The types of elastic calibration devices most generally available and most commonly used for this purpose are the circular proving ring or load cell.

5.1.3 Accuracy – The accuracy of the testing machine shall be in accordance with the following provisions:

5.1.3.1 The percentage of error for the loads within the proposed range of use of the testing machine shall not exceed ± 1.0 percent of the indicated load.

5.1.3.2 The accuracy of the testing machine shall be verified by applying five test loads in four approximately equal increments in ascending order. The difference between any two successive test loads shall not exceed one third of the difference between the maximum and minimum test loads.

5.1.3.3 The test load as indicated by the testing machine and the applied load computed from the readings of the verification device shall be recorded at each test point. Calculate the error, E, and the percentage of error, Ep, for each point from these data as follows:

$$E = A - B$$
$$Ep = 100(A - B)/B$$

where:
A = load, lbf (kN) indicated by the machine being verified; and
B = applied load, lbf (kN) as determined by the calibrating device.

5.1.3.4 The report on the verification of a testing machine shall state within what loading range it was found to conform to specification requirements rather than reporting a blanket acceptance or rejection. In no case shall the loading range be stated as including loads below the value which is 100 times the smallest change of load that can be estimated on the load-indicating mechanism of the testing machine or loads within that portion of the range below 10 percent of the maximum range capacity.

5.1.3.5 In no case shall the loading range be stated as including loads outside the range of loads applied during the verification test.

5.1.3.6 The indicated load of a testing machine shall not be corrected either by calculation or by the use of a calibration diagram to obtain values within the required permissible variation.

5.2 The testing machine shall be equipped with two steel bearing blocks with hardened faces (Note 3), one of which is a spherically seated block that will bear on the upper surface of the specimen, and the other a solid block on which the specimen shall rest. Bearing faces of the blocks shall have a minimum dimension at least 3 percent greater than the diameter of the specimen to be tested. Except for the concentric circles described below, the bearing faces shall not depart from a plane by more than 0.001 in (0.025 mm) in any 6 in (150 mm) of blocks 6 in (150 mm) in diameter or larger, or by more than 0.001 in (0.025 mm) in the diameter of any smaller block; and new blocks shall be manufactured within one half of this tolerance. When the diameter of the bearing face of the spherically seated block exceeds the diameter of the specimen by more than 0.5 in (13 mm), concentric circles not more than 0.031 in (0.8 mm) deep and not more than 0.047 in (1 mm) wide shall be inscribed to facilitate proper centering.

Note 3: It is desirable that the bearing faces of blocks used for compression testing of concrete have a Rockwell hardness of not less than 55 HRC.

5.2.1 Bottom bearing blocks shall conform to the following requirements:

5.2.1.1 The bottom bearing block is specified for the purpose of providing a readily machinable surface for maintenance of the specified surface conditions (Note 4). The top and bottom surfaces shall be parallel to each other. Its least horizontal dimension shall be at least 3 percent greater than the diameter of the specimen to be tested. Concentric circles as described in Section 5.2 are optional on the bottom block.

Note 4: The block may be fastened to the platen of the testing machine.

5.2.1.2 Final centering must be made with reference to the upper spherical block when the lower bearing block is used to assist in centering the specimen. The center of the concentric rings, when provided, or the center of the block itself must be directly below the center of the spherical head. Provision shall be made on the platen of the machine to assure such a position.

5.2.1.3 The bottom bearing block shall be at least 1 in (25 mm) thick when new, and at least 0.9 in (22.5 mm) thick after any resurfacing operations, except when the block is in full and intimate contact with the lower platen of the testing machine, the thickness may be reduced to 0.38 in (10 mm).

Note 5: If the testing machine is so designed that the platen itself can be readily maintained in the specified surface condition, a bottom block is not required.

5.2.2 The spherically seated bearing block shall conform to the following requirements:

5.2.2.1 The maximum diameter of the bearing face of the suspended spherically seated block shall not exceed the values given below:

Diameter of Test Specimens in (mm)	Maximum Diameter of Bearing Face in (mm)
2 (50)	4 (105)
3 (75)	5 (130)
4 (100)	6.5 (165)
6 (150)	10 (255)
8 (200)	11 (280)

Note 6: Square bearing faces are permissible, provided the diameter of the largest possible inscribed circle does not exceed the above diameter.

5.2.2.2 The center of the sphere shall coincide with the surface of the bearing face within a tolerance of ± 5 percent of the radius of the sphere. The diameter of the sphere shall be at least 75 percent of the diameter of the specimen to be tested.

5.2.2.3 The ball and the socket shall be designed so that the steel in the contact area does not permanently deform when loaded to the capacity of the test machine. (Note 7).

Note 7: The preferred contact area is in the form of a ring (described as preferred "bearing" area) as shown on Figure 1.

5.2.2.4 The curved surfaces of the socket and of the spherical portion shall be kept clean and shall be lubricated with a petroleum-type oil such as conventional motor oil, not with a pressure type grease. After contacting the specimen and application of small initial load, further tilting of the spherically seated block is not intended and is undesirable.

5.2.2.5 If the radius of the sphere is smaller than the radius of the largest specimen to be tested, the portion of the bearing face extending beyond the sphere shall have a thickness not less than the difference between the radius of the sphere and radius of the specimen. The least dimension of the bearing face shall be at least as great as the diameter of the sphere (see Figure 1).

5.2.2.6 The movable portion of the bearing block shall be held closely in the spherical seat, but the design shall be such that the bearing face can be rotated freely and tilted at least 4 degrees in any direction.

5.2.2.7 If the ball portion of the upper bearing block is a two-piece design composed of a spherical portion and a bearing plate, a mechanical means shall be provided to ensure that the spherical portion is fixed and centered on the bearing plate.

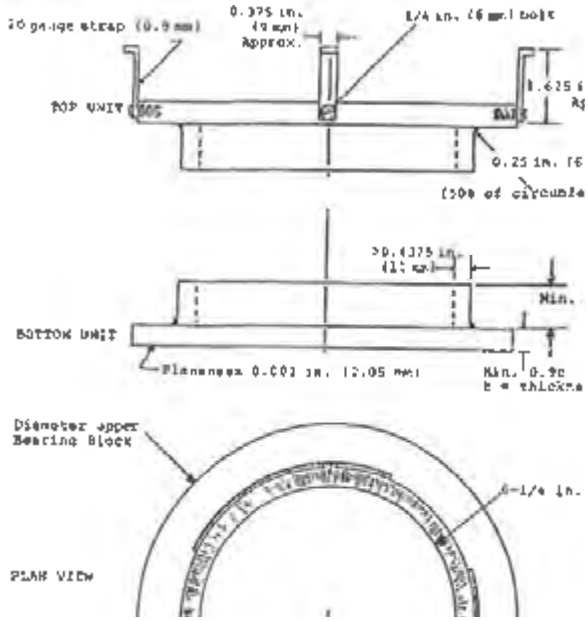

Note: Provision shall be made for holding the ball in the socket and for holding the entire unit in the testing machine

Schematic Sketch of a Typical Spherical Bearing Block
Figure 1

5.3 Load Indication

5.3.1 If the load of a compression machine used in concrete testing is registered on a dial, the dial shall be provided with a graduated scale that is readable to at least the nearest 0.1 percent of the full scale load (Note 8). The dial shall be readable within 1 percent of the indicated load at any given load level within the loading range. In no case shall the loading range of a dial be considered to include loads below the value that is 100 times the smallest change of load that can be read on the scale. The scale shall be provided with a graduation line equal to zero and so numbered. The dial pointer shall be of sufficient length to reach the graduation marks; the width of the end of the pointer shall not exceed the clear distance between the smallest graduations. Each dial shall be equipped with a zero adjustment which is easily accessible from the outside of the dial case, while observing the zero mark and dial pointer, and with a *suitable device that at all times until reset will indicate to within one percent accuracy the maximum load applied to the specimen*.

Note 8: As close as can reasonably be read is considered to be 0.02 in (0.5 mm) along the arc described by the end of the pointer. Also, one half of a scale interval is close as can reasonably be read when the spacing on the load indicating mechanism is between 0.04 in (1 mm) and 0.06 in (2 mm). When the spacing is between 0.06 and 0.12 in (2 and 3 mm), one third of a scale interval can be read with reasonable certainty. When the spacing is 0.12 in (3 mm) or more, one fourth of a scale interval can be read with reasonable certainty.

5.3.2 If the testing machine load is indicated in digital form, the numerical display must be large enough to be easily read. The numerical increment must be equal to or less than 0.10 percent of the full scale load of a given loading range. In no case shall the verified loading range include loads less than the minimum numerical increment multiplied by 100. The accuracy of the indicated load must be within 1.0 percent for any value displayed within the verified loading range. Provision must be made for adjusting to indicate true zero at zero load. There shall be provided a maximum load indicator that at all times until reset will indicate within 1.0 percent system accuracy the maximum load applied to the specimen.

5.4 Provide a means for containing fragments in the event of explosive rupture of the cylinders during testing.

6. Specimens

6.1 Specimens shall not be tested if any individual diameter of a cylinder differs from any other diameter of the same cylinder by more than 2 percent (Note 9).

Note 9: This may occur when single use molds are damaged or deformed during shipment, when flexible single use molds are deformed during molding, or when a core drill deflects or shifts during drilling.

6.2 Neither end of compressive test specimens when tested shall depart from perpendicularity to the axis by more than 0.5 degrees (approximately equivalent to 0.12 in in 12 in (3 mm in 300 mm). The ends of compression test specimens that are not plane within 0.002 in (0.050 mm) shall be sawed, ground, or capped in accordance with T 231 to meet that tolerance or if the ends meet the requirements of A6, then neoprene caps with steel controllers may be used instead of capping. The diameter used for calculating the cross-sectional area of the test specimen shall be determined to the nearest 0.01 in (0.25 mm) by averaging two diameters measured at right angles to each other at about mid-height of the specimen.

6.3 The height of the cylinder shall be determined to 0.01 in. The mass of the cylinder shall be determined to the nearest 0.1 lb or better.

7. Procedure

7.1 Compression tests of moist-cured specimens shall be made as soon as practicable after removal from moist storage.

7.2 Test specimens shall be kept moist by any convenient method during the period between removal from moist storage and testing. They shall be tested in the moist condition.

7.3 All test specimens for a given test age shall be broken within the permissible time tolerances prescribed as follows:

Test Age	Permissible Tolerance
12 h	± 0.25 h or 2.1%
24 h	± 0.5 h or 2.1%
3 days	+ 2 h or 2.8%
7 days	+ 6 h or 3.6%
28 days	+ 20 h or 3.0%
56 days	+ 40 h or 3.0%
90 days	+ 2 days 2.2%

Note: The 28-day compressive break may be extended by up to 48 hours if the scheduled 28-day break falls on a Saturday, Sunday, or Holiday. The Regional Materials Engineer must authorize the time extension in writing.

7.4 Placing the Specimen Place the plain (lower) bearing block, with its hardened face up, on the table or platen of the testing machine directly under the spherically seated (upper) bearing block. Wipe clean the bearing faces of the upper and lower bearing blocks and of the test specimen and place the test specimen on the lower bearing block.

7.4.1 Zero Verification and Block Seating – Prior to testing the specimen, verify that the load indicator is set to zero. In cases where the indicator is not properly set to zero, adjust the indicator (Note 10). Prior to the spherically-seated block is being brought to bear on the specimen, rotate its movable portion gently by hand so that uniform seating is obtained.

Note 10: The technique used to verify and adjust load indicator to zero will vary depending on the machine manufacturer. Consult your owner's manual or compression machine calibrator for the proper technique.

7.5 Rate of Loading – Apply the load continuously and without shock.

7.5.1 The load shall be applied at a rate of movement (platen to crosshead measurement) corresponding to a stress rate on the specimen of 35 ± 7 psi/s (0.25 ± 0.05 MPa/s) (Note 11). The designated rate of movement shall be maintained at least during the latter half of the anticipated loading phase.

Note 11: For a screw driven or displacement-controlled testing machine, preliminary testing will be necessary to establish the required rate of movement to achieve the specified stress rate. The required rate of movement will depend on the size of the test specimen, the elastic modulus of the concrete, and the stiffness of the testing machine.

7.5.2 During application of the first half of the anticipated loading phase, a higher rate of loading shall be permitted. The higher loading rate shall be applied in a controlled manner so that the specimen is not subjected to shock loading.

7.5.3 Make no adjustment in the rate of movement (platen to crosshead) as the ultimate load is being approached and the stress rate decreases due to cracking in the specimen.

7.6 Apply the compressive load until the load indicator shows that the load is decreasing steadily and the specimen displays a well-defined fracture pattern (Figure 2). For a testing machine equipped with a specimen break detector, automatic shut-off of the testing machine is prohibited until the load has dropped to a value that is less than 95 percent of the peak load. When testing with unbonded caps, a corner fracture may occur before the ultimate capacity of the specimen has been attained. Continue compressing the specimen until the user is certain that the ultimate capacity has been attained. Record the maximum load carried by the specimen during the test and note the type of fracture pattern according to Figure 2. If the fracture pattern is not one of the typical patterns shown in Figure 2, sketch and describe briefly the fracture pattern. If the measured strength is lower than expected, examine the fractured concrete and note the presence of large air voids, evidence of segregation, whether fractures pass predominantly around or through the coarse aggregate particles, and verify end preparations were in accordance with Practice T 231 or Practice C1231.

Note WSDOT 1: The test loading should be stopped when 80% of the loading capacity of the testing machine has been reached. Record the maximum load achieved and note that the sample was not taken to failure as it exceeded the safe working limits of the testing machine.

8. Calculation

8.1 Calculate the compressive strength of the specimen by dividing the maximum load carried by the specimen during the test by the average cross-sectional area determined as described in Section 6 and express the result to the nearest 10 psi (0.1 MPa).

8.2 If the specimen length to diameter ratio is 1.75 or less, correct the result obtained in Section 8.1 by multiplying by the appropriate correction factor shown in the following table (Note 11):

L/D:	1.75	1.50	1.25	1.00	
Factor:	0.98	0.96	0.93	0.87	(Note 11)

Use interpolation to determine correction factors for L/D values between those given in the table.

Note 11: Correction factors depend on various conditions such as moisture condition, strength level, and elastic modulus. Average values are given in the table. These correction factors apply to lightweight concrete weighing between 100 and 120 lb/ft^3 (1,600 and 1,920 kg/m^3) and to normal weight concrete. They are applicable to concrete dry or soaked at the time of loading and for nominal concrete strengths from 2,000 to 6,000 psi(15 to 45 MPa). For strengths higher than 6,000 psi (45 MPa), correction factors may be larger than the values listed above x.

8.3 Calculate the average compressive strength of the set of specimens to the nearest 10 psi or 0.1MPa.

$$\text{Average Compressive Strength} = \frac{(CS_1 + CS_2)}{2}$$

Where:

CS_1 = Compressive Strength of Specimen 1
CS_2 = Compressive Strength of Specimen 2

Calculate the density of the specimen to the nearest 1 lb/ft^3 (10 kg/m^3) as follows:

$$\text{Density} = \frac{W}{V}$$

where:

W = mass of specimen, lb (kg)
V = volume of specimen computed from the average diameter and average length or from weighing the cylinder in air and submerged, ft^3 (m^3)

9. Report

9.1 Report the following information:

9.1.1 Identification number.

9.1.2 Diameter (and length, if outside the range of 1.8D to 2.2D), in inches or millimeters.

9.1.3 Cross-sectional area, in square inches or centimeters.

9.1.4 Maximum load, in pounds-force or Newton.

9.1.5 Compressive strength calculated to the nearest 10 psi or 0.1MPa.

9.1.6 Average compressive strength for the set of specimens calculated to the nearest 10 psi or 0.1 MPa.

9.1.7 Type of fracture, if other than the usual cone (see Figure 2).

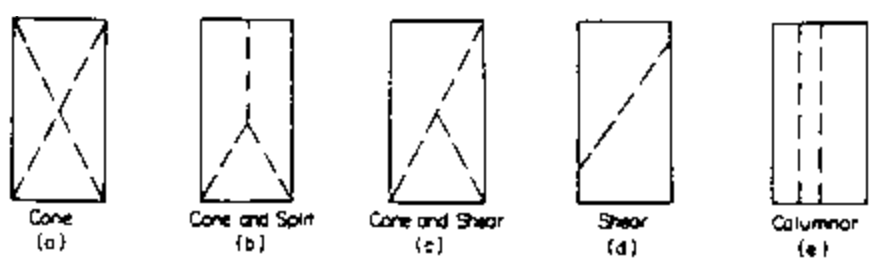

Sketches of Types of Fracture
Figure 2

9.1.8 Defects in either specimen or caps.

9.1.9 Age of specimen.

9.1.10 Report the density to the nearest 10 kg/m^3 (1 lb/ft^3).

10. Precision and Bias

    See AASHTO T 22 for precision and bias.

    WSDOT has added Appendix A and it is an excerpt of ASTM C1231-00 sections 1 through 7.

Appendix A

A1. Scope

A1.1 This practice covers requirements for a capping system using unbonded caps for testing concrete cylinders molded in accordance with Practice C 31/C 31M or C 192/C 192M. Unbonded neoprene caps of a defined hardness are permitted to be used for testing for a specified maximum number of reuses without qualification testing up to a certain concrete compressive strength level. Above that strength, level neoprene caps will require qualification testing. Qualification testing is required for all elastomeric materials other than neoprene regardless of the concrete strength.

A1.2 Unbonded caps are not to be used for acceptance testing of concrete with compressive strength below 1500 psi (10 MPa) or above 12,000 psi (85 MPa).

A1.3 The values stated in either inch-pound or SI units shall be regarded as standard. SI units are shown in brackets. That values stated in each system may not be exact equivalents. Therefore, each system must be used independently of the other, without combining the values in any way.

A1.4 This standard does not purport to address all of the safety concerns, if any, associated with its use. It is the responsibility of the user of this standard to establish appropriate safety and health practices and determine the applicability of regulatory limitations prior to use. For a specific hazard statement, see Note 4.

A2. Referenced Documents

A2.1 ASTM Standards

C 31/C 31M – Practice for Making and Curing Concrete Test Specimens in the Field[2]

C 39 – Test Method for Compressive Strength of Cylindrical Concrete Specimens[2]

C 192/C 192M – Practice for Making and Curing Concrete Test Specimens in the Laboratory[2]

C 617 – Practice for Capping Cylindrical Concrete Specimens[2]

D 2000 – Classification System for Rubber Products in Automotive Applications[3]

D 2240 – Test Method for Rubber Property—Durometer Hardness[4]

A3. Terminology

A3.1 Definitions of Terms Specific to This Standard

A3.1.1 pad, n – An unbonded elastomeric pad.

A3.1.2 unbonded cap, n – A metal retainer and an elastomeric pad.

A4. Significance and Use

A4.1 This practice provides for using an unbonded capping system in testing hardened concrete cylinders made in accordance with Practices C 31/C 31M or C 192/C 192M in lieu of the capping systems described in Practice C 617.

A4.2 The elastomeric pads deform in initial loading to conform to the contour of the ends of the cylinder and are restrained from excessive lateral spreading by plates and metal rings to provide a uniform distribution of load from the bearing blocks of the testing machine to the ends of the concrete or mortar cylinders.

A5. Materials and Apparatus

A5.1 Materials and equipment necessary to produce ends of the reference cylinders that conform to planeness requirements of Test Method C 39 and the requirements of Practice C 617. This may include grinding equipment or capping materials and equipment to produce neat cement paste, high strength gypsum plaster, or sulfur mortar caps.

A5.2 Elastomeric Pads

A5.2.1 Pads shall be ½ ± 1⁄16 in (13 ± 2 mm) thick and the diameter shall not be more than 1⁄16 in (2 mm) smaller than the inside diameter of the retaining ring.

[1]This practice is under the jurisdiction of ASTM Committee C09 on Concrete and Concrete Aggregate sand is the direct responsibility of Subcommittee C09.61 on Testing Concrete for Strength. Current edition approved January 2000. Published April 2000. Originally published as C 1231-93. Last previous edition C 1231-99.

[2]Annual Book of ASTM Standards, Volume 04.02.

[3]Annual Book of ASTM Standards, Volume 09.02.

[4]Annual Book of ASTM Standards, Volume 09.01.

A5.2.2 Pads shall be made from polychloroprene (neoprene) meeting the requirements of Classification D 2000 as follows:

Shore A Durometer	Classification D 2000 Line Call-Out
50	M2BC514
60	M2BC614
70	M2BC714

The tolerance on Shore A durometer hardness is ± 5. Table 1 provides requirements for use of caps made from material meeting the requirements of Classification D 2000, above.

A5.2.3 Other elastomeric materials that meet the performance requirements of qualification tests in Section 8 are permitted.

A5.2.4 Elastomeric pads shall be supplied with the following information:

A5.2.4.1 The manufacturer's or supplier's name.

A5.2.4.2 The Shore A hardness.

A5.2.4.3 The applicable range of concrete compressive strength from Table 1 or from qualification testing.

A5.2.5 The user shall maintain a record indicating the date the pads are placed in service, the pad durometer, and the number of uses to which they have been subjected.

A5.3 Retainers shall be made of metal that will prove durable in repeated use (Note 1). The cavity in the metal retainers shall have a depth at least twice the thickness of the pad. The inside diameter of the retaining rings shall not be less than 102 percent or greater than 107 percent of the diameter of the cylinder. The surfaces of the metal retainer which contact the bearing blocks of the testing machine shall be plane to within 0.002 in (0.05 mm).

The bearing surfaces of the retainers shall not have gouges, grooves, or indentations greater than 0.010 in (0.25 mm) deep or greater than 0.05 in^2 (32 $mm^{2)}$ in surface area.

Note 1: Retainers made from steel and some aluminum alloys have been found acceptable. Steel retaining rings that have been used successfully with ½ in (13 mm) neoprene pads are shown in Figure 1. Retainer design and metals used are subject to the performance and acceptance requirements of Section 8.

A6. Test Specimens

A6.1 The specimens shall be either 6 by 12 in (150 by 300 mm) or 4 by 8 in (100 by 200 mm) cylinders made in accordance with Practices C 31/C 31M or C 192/C 192M.

Neither end of a cylinder shall depart from perpendicularity to the axis by more than 0.5° (approximately equivalent to ⅛ in in 12 in (3 mm in 300 mm). No individual diameter of a cylinder may differ from any other diameter by more than 2 percent.

Note 2: One method of measuring the perpendicularly of ends of cylinders is to place a try square across any diameter and measure the departure of the longer blade from an element of the cylindrical surface. An alternative method is to place the end of the cylinder on a plane surface and support the try square on that surface.

A6.2 Depressions under a straight edge measured with a round wire gage across any diameter shall not exceed 0.20 in (5 mm). If cylinder ends do not meet this tolerance, the cylinder shall not be tested unless irregularities are corrected by sawing or grinding.

Cylinder Compressive Strength, psi (MPa)	Shore A Durometer Hardness	Qualification Tests Required	Maximum Reuses[A]
1500 to 6000 (10 to 40)	50	None	100
2500 to 7000 (17 to 50)	60	None	100
4000 to 7000 (28 to 50)	70	None	100
7000 to 12000 (50 to 80)	70	Required	50
Greater than 12000 (80)		Not Permitted	

[A]Maximum number of reuses. Will be less if pads wear, crack or split (Note 6).

Requirements for Use of Polychloroprene (Neoprene) Pads
Table 1

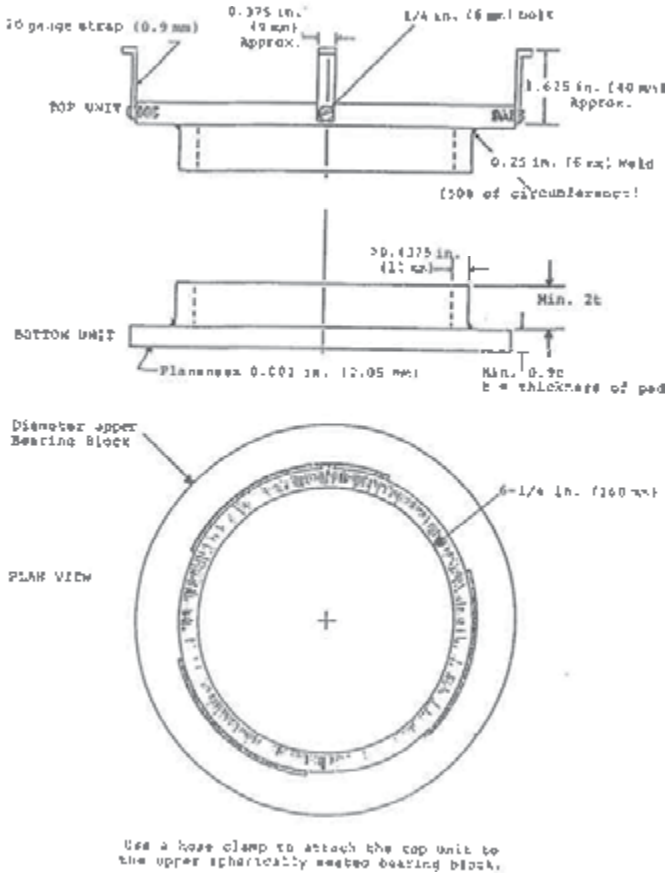

Example of Steel Retaining Rings for 6 by 12 in (150 by 300 mm) Cylinders (Nonmandatory)
Figure 1

A7 Procedure

A7.1 Unbonded caps are permitted to be used on one or both ends of a cylinder in lieu of a cap or caps meeting Practice C 617, provided they meet the requirements of Section 5.

A7.2 Examine the pads for excessive wear or damage (Note 6). Replace pads which have cracks or splits exceeding ⅜ in (10 mm) in length regardless of depth. Insert the pads in the retainers before they are placed on the cylinder (Note 3).

Note 3: Some manufacturers recommend dusting the pads and the ends of the cylinders with corn starch or talcum powder prior to testing.

Note 4: Caution: Concrete cylinders tested with unbonded caps rupture more violently than comparable cylinders tested with bonded caps. As a safety precaution, the cylinder testing machine must be equipped with a protective cage. In addition, some users have reported damage to testing machines from the sudden release of energy stored in the elastomeric pads.

A7.3 Center the unbonded cap or caps on the cylinder and place the cylinder on the lower bearing block of the testing machine. Carefully align the axis of the cylinder with the center of thrust of the testing machine by centering the upper retaining ring on the spherically seated bearing block. As the spherically seated block is brought to bear on the upper retaining ring, rotate its movable portion gently by hand so that uniform seating is obtained. After application of load, but before reaching 10 percent of the anticipated specimen strength, check to see that the axis of the cylinder is vertical within a tolerance of ⅛ in in 12 in (3.2 mm in 300 mm) and that the ends of the cylinder are centered within the retaining rings. If the cylinder alignment does not meet these requirements, release the load, check compliance with Section 6.1, and carefully recenter the specimen. Reapply load and recheck specimen centering and alignment. A pause in load application to check cylinder alignment is permissible.

A7.4 Complete the load application, testing, calculation, and reporting of results in accordance with Test Method C 39.

Note 5: Because of the violent release of energy stored in pads, the broken cylinder rarely exhibits conical fracture typical of capped cylinders and the sketches of types of fracture in Test Method C 39 are not descriptive. Occasionally, unbonded capped cylinders may develop early cracking, but continue to carry increasing load. For this reason, cylinders must be tested to complete failure.

Performance Exam Checklist

Compressive Strength of Cylindrical Concrete Specimens
FOP for AASHTO T 22

Participant Name _____ Exam Date _____

Procedure Element	**Yes**	**No**
1. The tester has a copy of the current procedure on hand?	☐	☐
2. All equipment is functioning according to the test procedure, and if required, has the current calibration/verification tags present?	☐	☐
3. Is the diameter of the cylinder reported to the nearest 0.01 inch by averaging two diameters taken at about mid-height?	☐	☐
4. Is the length of the cylinder reported to the nearest 0.01 inches?	☐	☐
5. Is the mass of the cylinder reported to the nearest 0.1 lbs or better?	☐	☐
6. Ends of cylinders checked for perpendicularity to axis?	☐	☐
7. Ends of cylinders checked for depressions greater than 0.2 inch?	☐	☐
8. Ends of cylinders checked for plane?	☐	☐
9. If ends did not meet plane, was correct method chosen to correct plane?	☐	☐
10. Are lower and upper bearing surface wiped clean?	☐	☐
11. Is the axis of the cylinder aligned with center of the spherical block?	☐	☐
12. Is the spherical block rotated prior to it contacts with the cylinder?	☐	☐
13. Is the load applied continuously and without shock?	☐	☐
14. Is the load applied at the specified rate and maintain for the latter half of the anticipated load.	☐	☐
15. Is no rate adjustment made while the cylinder is yielding?	☐	☐
16. Is the maximum load recorded?	☐	☐
17. Are cylinders tested to failure and the type of fracture recorded?	☐	☐
18. Breaking Cylinders at 28 days + 20 hours?	☐	☐
19. All calculations performed correctly?	☐	☐
Unbonded Caps – AASHTO 22 Appendix A		
1. Pads examined for splits or cracks?	☐	☐
2. Cylinders centered in retaining rings?	☐	☐
3. Is cylinders checked for alignment with a small load applied?	☐	☐

First Attempt: Pass ☐ Fail ☐ Second Attempt: Pass ☐ Fail ☐

Signature of Examiner _____

Comments:

WSDOT FOP for WAQTC/AASHTO T 27/T 11[1]

Sieve Analysis of Fine and Coarse Aggregates

Significance

Sieve analyses are performed on aggregates used in roadway bases and in portland cement and asphalt cement concretes. Sieve analyses reveal the size makeup of aggregate particles – from the largest to the smallest. A gradation curve or chart showing how evenly or unevenly the sizes are distributed between largest and smallest is created in this test. How an aggregate is graded has a major impact on the strength of the base or on the properties and performance of concrete. In portland cement concrete (PCC), for example, gradation influences shrinkage and shrinkage cracking, pumpability, finishability, permeability, and other characteristics.

Scope

This procedure covers sieve analysis in accordance with AASHTO T 27 and materials finer than No. 200 (75 µm) in accordance with AASHTO T 11. The procedure combines the two test methods.

Sieve analyses determines the gradation or distribution of aggregate particles within a given sample in order to determine compliance with design and production standards.

Accurate determination of material smaller than No. 200 (75 µm) cannot be made with AASHTO T 27 alone. If quantifying this material is required, it is recommended that AASHTO T 27 be used in conjunction with AASHTO T 11. Following AASHTO T 11, the sample is washed through a No. 200 (75 µm) sieve. The amount of material passing this sieve is determined by comparing dry sample masses before and after the washing process.

This procedure covers sieve analysis in accordance with AASHTO T 27 and materials finer than No. 200 (75 µm) in accordance with AASHTO T 11. The procedure includes two method choices, A and B.

Note: All Field Operating Procedures (FOPs) referred to in this procedure are WSDOT FOPs.

Apparatus

- Balance or Scale – Capacity sufficient for the masses shown in Table 2, accurate to 0.1 percent of the sample mass or better and conform to the requirements of AASHTO M 231.
- Sieves – Meeting the requirements of AASHTO M 92.
- Mechanical Sieve Shaker – Meeting the requirements of AASHTO T 27.
- Suitable Drying Equipment – See FOP for AASHTO T 255.
- Containers and Utensils – A pan or vessel of a size sufficient to contain the sample covered with water and to permit vigorous agitation without loss of any part of the sample or water.
- Optional mechanical washing device.

[1]This FOP is based on WAQTC FOP for AASHTO T 27/T 11 and has been modified per WSDOT standards. To view the redline modifications, contact the WSDOT Quality Systems Manager at 360-709-5497.

Sample Sieving

In all procedures, it is required to shake the sample over nested sieves. Sieves are selected to furnish information required by specification. The sieves are nested in order of decreasing size from the top to the bottom and the sample, or a portion of the sample, is placed on the top sieve. The sample may also be sieved in increments.

Sieves are shaken in a mechanical shaker for the minimum time determined to provide complete separation for the sieve shaker being used.

Time Evaluation

WSDOT has deleted this section.

Overload Determination

Additional sieves may be necessary to provide other information, such as fineness modulus, or to keep from overloading sieves. The sample may also be sieved in increments.

For sieves with openings smaller than No. 4 (4.75 mm), the mass retained on any sieve shall not exceed 4 g/in^2 (7 kg/m^2) of sieving surface. For sieves with openings No. 4 (4.75 mm) and larger, the mass, in grams shall not exceed the product of 2.5 × (sieve opening in mm) × (effective sieving area). See Table 1.

Sieve Size in (mm)		8 φ (203)	12 φ (305)	12 × 12 (305 × 305)	14 × 14 (350 × 350)	16 × 24 (372 × 580)
		Sieving Area m^2				
		0.0285	0.0670	0.0929	0.1225	0.2158
3½	(90)	*	15.1	20.9	27.6	48.5
3	(75)	*	12.6	17.4	23.0	40.5
2½	(63)	*	10.6	14.6	19.3	34.0
2	(50)	3.6	8.4	11.6	15.3	27.0
1½	(37.5)	2.7	6.3	8.7	11.5	20.2
1	(25.0)	1.8	4.2	5.8	7.7	13.5
¾	(19.0)	1.4	3.2	4.4	5.8	10.2
⅝	(16.0)	1.1	2.7	3.7	4.9	8.6
½	(12.5)	0.89	2.1	2.9	3.8	6.7
⅜	(9.5)	0.67	1.6	2.2	2.9	5.1
¼	(6.3)	0.44	1.1	1.5	1.9	3.4
No. 4	(4.75)	0.33	0.80	1.1	1.5	2.6
Less than	(No. 4)	0.20	0.47	0.65	0.86	1.5

Sample sizes above are in kilograms. To covert to grams, multiple by 1,000. To convert to pounds, multiple by 2.2.

Maximum Allowable Mass of Material Retained On a Sieve (kg)
Table 1

Sample Preparation

Obtain samples in accordance with FOP for AASHTO T 2 and reduce to the size shown in Table 2 in accordance with FOP for AASHTO T 248. If the gradation sample is obtained from FOP for AASHTO T 308, the Ignition Furnace, proceed to Procedure Method A, Step 2.

Nominal Maximum Size* in (mm)		Minimum Dry Mass lb (kg)	
US No. 4	(4.75)	1	(0.5)
¼	(6.3)	2	(1)
⅜	(9.5)	2	(1)
½	(12.5)	5	(2)
⅝	(16.0)	5	(2)
¾	(19.0)	7	(3)
1	(25.0)	13	(6)
1¼	(31.5)	17	(7.5)
1½	(37.5)	20	(9)
2	(50)	22	(10)
2½	(63)	27	(12)
3	(75)	33	(15)
3½	(90)	44	(20)

*For aggregate, the nominal maximum size sieve is the largest standard sieve opening listed in the applicable specification upon which more than 1 percent of the material is permitted to be retained. For concrete aggregate, the nominal maximum size sieve is the smallest standard sieve opening through which the entire amount of aggregate is permitted to pass.

Sample Sizes for Aggregate Gradation Test
Table 2

Note: For an aggregate specification having a generally unrestrictive gradation (i.e., wide range of permissible upper sizes), where the source consistently fully passes a screen substantially smaller than the maximum specified size, the nominal maximum size, for the purpose of defining sampling and test specimen size requirements may be adjusted to the screen, found by experience to retain no more than 5 percent of the materials.

WSDOT Note 1: These sample sizes are standard for aggregate testing but, due to equipment restraints, samples may need to be partitioned into several "subsamples" (see Method A).

Overview

Method A – This method is the preferred method of sieve analysis for HMA aggregate.

- Determine dry mass of original sample.
- Wash through a No. 200 (75 µm) sieve.
- Determine dry mass of washed sample.
- Sieve material.

Method B

- Determine dry mass of original sample.
- Wash through a No. 200 (75 µm) sieve.
- Determine dry mass of washed sample.
- Sieve coarse material.
- Determine mass of fine material.
- Reduce fine portion.
- Determine mass of reduced portion.
- Sieve fine portion.

Procedure Method A

1. Dry the sample in accordance with FOP for AASHTO T 255, and record to the nearest 0.1 percent of total mass or better.

2. When the specification requires that the amount of material finer than No. 200 (75 µm) be determined, do Step 3 through Step 9. Otherwise, skip to Step 10.

   WSDOT Note 2: If the applicable specification requires that the amount passing the No. 200 (75 µm) sieve be determined on a portion of the sample passing a sieve smaller than the nominal maximum size of the aggregate, separate the sample on the designated sieve and determine the mass of the material passing that sieve to 0.1 percent of the mass of this portion of the test sample. Use the mass as the original dry mass of the test sample.

3. Nest a sieve, any sieve ranging from a No. 8 (2.36 mm) to a No. 16 (1.18 mm) may be used, above the No. 200 (75 µm) sieve.

4. Place the test sample in a container and add sufficient water to cover it.

   WSDOT requires the use of a detergent, dispersing agent, or other wetting solution when washing a sample from FOP for AASHTO T 308, an ignition furnace sample.

   WSDOT Note 3: A detergent, dispensing agent, or other wetting solution may be added to the water to assure a thorough separation of the material finer than the No. 200 (75 µm) sieve from the coarser particles. There should be enough wetting agent to produce a small amount of suds when the sample is agitated. Excessive suds may overflow the sieves and carry material away with them.

5. Agitate vigorously to ensure complete separation of the material finer than No. 200 (75 µm) from coarser particles and bring the fine material into suspension above the coarser material. When using a mechanical washing device, exercise caution to not degrade the sample.

6. Immediately pour the wash water containing the suspended and dissolved solids over the nested sieves, being careful not to pour out the coarser particles.

7. Add a second change of water to the sample remaining in the container, agitate, and repeat Step 6. Repeat the operation until the wash water is reasonably clear.

8. Return all material retained on the nested sieves to the container by flushing into the washed sample.

   WSDOT Note 4: A suction device may be used to extract excess water from the washed sample container. Caution will be used to avoid removing any material greater than the No. 200.

9. Dry the washed aggregate in accordance with FOP for AASHTO T 255, and then cool prior to sieving. Record the cooled dry mass.

10. Select sieves to furnish information required by the specifications. Nest the sieves in order of decreasing size from top to bottom and place the sample, or a portion of the sample, on the top sieve.

11. Place sieves in mechanical shaker and shake for a minimum of 10 minutes, or the minimum time determined to provide complete separation if this time is greater than 10 minutes for the sieve shaker being used.

12. Determine the individual or cumulative mass retained on each sieve and the pan to the nearest 0.1 percent or 0.1 g.

    WSDOT Note 5: Use coarse wire brushes to clean the No. 40 (425 µm) and larger sieves and soft bristle brushes for smaller sieves.

Calculations

The total mass of material after sieving should be verified with the mass before sieving. If performing T 11 with T 27, this would be the dry mass after wash. If performing just T 27, this would be the original dry mass. When the masses before and after sieving differ by more than 0.3 percent, do not use the results for acceptance purposes. When performing the gradation from HMA using T 308, the masses before and after sieving shall not differ by more than 0.2 percent.

Calculate the total percentages passing, individual or cumulative percentages retained, or percentages in various size fractions to the nearest 0.1 percent by dividing the masses for Method A, or adjusted masses for Methods B and C, on the individual sieves by the total mass of the initial dry sample. If the same test sample was first tested by T 11, use the total dry sample mass prior to washing in T 11 as the basis for calculating all percentages. Report percent passing as indicated in the "Report" section at the end of this FOP.

Percent Retained:

$$\mathrm{IPR} = \frac{\mathrm{IMR}}{\mathrm{M}} \times 100 \text{ or } \mathrm{CPR} = \frac{\mathrm{CMR}}{\mathrm{M}} \times 100$$

Where:

IPR = Individual Percent Retained
CPR = Cumulative Percent Retained
M = Total Dry Sample mass before washing
IMR = Individual Mass Retained OR Adjusted Individual mass from Methods B or C
CMR = Cumulative Mass Retained OR Adjusted Individual mass from Methods B or C

OR

Percent Passing (Calculated):

$$\mathrm{PP} = \mathrm{PPP} - \mathrm{IPR} \text{ or } \mathrm{PP} = 100 - \mathrm{CPR}$$

Where:

PP = Percent Passing
PPP = Previous Percent Passing

Calculate cumulative percent retained on and passing each sieve on the basis of the dry mass of total sample, before washing. This will include any material finer than No. 200 (75 µm) that was washed out.

Divide the cumulative masses, or the corrected masses, on the individual sieves by the total mass of the initial dry sample (prior to washing) to determine the percent retained on and passing each sieve. Calculate the percent retained on and passing each sieve. Report percent passing as indicated in the "Report" section at the end of this FOP.

Example:

Dry mass of total sample, before washing: 3214.0 g

Dry mass of sample, after washing out the No. 200 (75 µm) minus: 3085.1 g

For the ½″ sieve:

Cumulative Mass retained on ½″ sieve = 161.0 g

$$\text{Cumulative \% retained} = \frac{161.0}{3214.0} \times 100 = 5.0\% \text{ retained}$$

% passing = 100-5.0 = 95% passing ½″ sieve

Sieve Size in (mm)		Cumulative Mass Retained (g)	Cumulative Percent Retained	Reported Percent Passing*
¾	(19.0)	0	0	100
½	(12.5)	161.0	5.0	95
⅜	(9.5)	642.0	20.0	80
No. 4	(4.75)	1118.3	34.8	65
**No. 6	(3.35)	1515.2		
No. 10	(2.0)	1914.7	59.6	40
No. 40	(0.425)	2631.6	81.9	18
No. 80	(0.210)	2862.7	89.1	11
No. 200	(0.075)	3051.1	94.9	5.1
Pan		3086.4		

*Report No. 200 (75 µm) sieve to 0.1 percent. Report all others to 1 percent.

**Intermediate sieve used to prevent overloading the U.S. No. 10 sieve.

Gradation On All Screens

Test Validation: (3086.4 – 3085.1)/3085.1 x 100 = 0.04% which is within the 0.3 percent requirement and the results can be used for acceptance purposes.

Procedure Method B

1. Perform steps 1 through 9 from the Procedure Method A, then continue as follows:
2. Select sieves to furnish information required by the specifications. Nest the sieves in order of decreasing size from top to bottom through the No. 4 (4.75 mm) with a pan at the bottom to retain the minus No. 4 (4.75 mm). See Table 1.
3. Place sieves in mechanical shaker and shake for a minimum of 10 minutes, or the minimum time determined to provide complete separation if this time is greater than 10 minutes for the sieve shaker being used.
4. Determine the individual or cumulative mass retained on each sieve and the pan to the nearest 0.1 percent or 0.1 g. Ensure that all material trapped in the openings of the sieve are cleaned out and included in the mass retained (see Note 5).
5. Determine the mass retained on each sieve to the nearest 0.1 percent of the total mass or better.
6. Determine the mass of the material in the pan (minus No. 4 (4.75 mm)).
7. Reduce the minus No. 4 (4.75 mm) using a mechanical splitter in accordance with FOP for AASHTO T 248 to produce a sample with a mass of 500 g minimum. Determine and record the mass of the minus No. 4 (4.75 mm) split.
8. Select sieves to furnish information required by the specifications. Nest the sieves in order of decreasing size from top to bottom through the No. 200 (75 µm) with a pan at the bottom to retain the minus No. 200 (75 µm).
9. Place sieves in mechanical shaker and shake for a minimum of 10 minutes, or the minimum time determined to provide complete separation if this time is greater than 10 minutes for the sieve shaker being used.
10. Determine the individual or cumulative mass retained on each sieve and the pan to the nearest 0.1 percent or 0.1 g. Ensure that all material trapped in the openings of the sieve are cleaned out and included in the mass retained (see Note 5).

Calculations

Compute the “Adjusted Cumulative Mass Retained” of the size increment of the original sample as follows when determining “Cumulative Mass Retained”:

Divide the cumulative masses, or the corrected masses, on the individual sieves by the total mass of the initial dry sample (prior to washing) to determine the percent retained on and passing each sieve. Calculate the percent retained on and passing each sieve. Report percent passing as indicated in the “Report” section at the end of this FOP.

When material passing the No. 4 (4.75 mm) sieve is split and only a portion of that is tested, the proportionate share of the amount passing the No. 200 (75 µm) sieve must be added to the sample mass to obtain a corrected test mass. This corrected test mass is used to calculate the gradation of the material passing the No. 4 (4.75 mm) sieve.

$$C = \left(\frac{M_1}{M_2} \times B\right) + D$$

Where:

C = Total cumulative mass retained of the size increment based on a total sample
M_1 = Mass of fraction finer than No. 4 (4.75 mm) sieve in total sample
M_2 = Mass of reduced portion of material finer than No. 4 (4.75 mm) sieve actually sieved
B = Cumulative mass of the size increment in the reduced portion sieved
D = Cumulative mass of plus No. 4 (4.75 mm) portion of sample

Example:

Dry mass of total sample, before washing: 3214.0 g

Dry mass of sample, after washing out the No. 200 (75 µm) minus: 3085.1 g

Sieve Size in (mm)		Cumulative Mass Retained (g)	Cumulative Percent Retained	Reported Percent Passing
¾	(19.0)	0	0	100
½	(12.5)	161.0	5.0	95
⅜	(9.50)	642.0	20.0	80
No. 4	(4.75)	1118.3	34.8	65

Gradation On Coarse Screens

Pan = 1968.0

Test Validation: (1118.3 + 1968.0 – 3085.1)/3085.1 x 100 = 0.04% which is within the 0.3 percent requirement and the results can be used for acceptance purposes.

The actual mass of material passing the No. 4 (4.75 mm) sieve and retained in the pan is 1968.0 g. This is M_1.

The pan (1968.0 grams) was reduced in accordance with the FOP for AASHTO T 248, so that at least 500 g are available. In this case, the mass determined was 512.8 g. This is M_2.

Sieve Size in (mm)		Cumulative Mass Retained (g)
No. 4	(4.75)	0
No. 10	(2.00)	207.5
No. 40	(0.425)	394.3
No. 80	(0.210)	454.5
No. 200	(0.075)	503.6
Pan		512.8

Gradation On Fine Screens

Test Validation: (512.8 – 512.8)/512.8 = 0.0% which is within the 0.3 percent requirement and the results can be used for acceptance purposes.

For the No. 10 sieve:

M_1 = 1968.0g
M_2 = 512.8g
B = 207.5g
D = 1118.3g

$$C = \frac{M_1}{M_2} \times B + D = \frac{1968.0g}{512.8g} \times 207.5g + 1118.3g = 1914.7g$$

$$\%\ \text{retained}\ \frac{1914.7g}{3214.0g} = 59.6\%$$

$$\%\ \text{passing} = 100 - 59.6 = 40.4\%, \text{reported as } 40\%$$

Sieve Size in (mm)		Cumulative Mass Retained (g)	Adjusted Cumulative Mass Retained (g)	Cum. Percent Retained	Reported Percent Passing*
¾	(19.0)	0	0	0	100.0
½	(12.5)	161.1	161.1	5.0	95
⅜	(9.5)	642.5	642.5	20.0	80
No. 4	(4.75)	1118.3	1118.3	34.8	65
No. 10	(2.0)	207.5 × 3.838 + 1118.3	1914.7	59.6	40
No. 40	(0.425)	394.3 × 3.838 + 1118.3	2631.6	81.6	18
No. 80	(0.210)	454.5 × 3.838 + 1118.3	2862.7	89.1	11
No. 200	(0.075)	503.6 × 3.838 + 1118.3	3051.1	94.9	5.1
Pan		512.8 × 3.838 + 1118.3	3086.4		

*Report No. 200 (75 µm) sieve to 0.1 percent. Report all others to 1 percent.

Final Gradation On All Screens

Alternative Method B

As an alternate method to account for the fact that only a portion of the minus No. 4 (4.75 mm) material was sieved, multiply the fine screen "Percent Passing" values by the percent passing the No. 4 (4.75 mm) sieve obtained in the coarse screen procedure, 65 percent in this case.

The mass retained in the pan must be corrected to include the proper percent of No. 200 (.075 mm) minus material washed out.

Divide the cumulative masses, or the corrected masses, on the individual sieves by the corrected pan mass of the initial dry sample (prior to washing) to determine the percent retained on and passing each sieve. Calculate the percent retained on and passing each sieve. Report percent passing as indicated in the "Report" section at the end of this FOP.

Dry mass of total sample, before washing: 3214.0 g

Dry mass of sample, after washing out the No. 200 (75 µm) minus: 3085.1 g

Amount of No. 200 (75 µm) minus washed out: 3214.0 g – 3085.1 g = 128.9 g

Sieve Size in (mm)		Cumulative Mass Retained (g)	Cumulative Percent Retained	Reported Percent Passing
¾	(19.0)	0	0	100
½	(12.5)	161.0	5.0	95
⅜	(9.50)	642.0	20.0	80
No. 4	(4.75)	1118.3	34.8	65

Gradation On Coarse Screens

Pan = 1968.0

Test validation: $\frac{1118.3 + 1968.0 - 3085.1}{3085.1} \times 100 = 0.04\%$

which is within the 0.3 percent requirement and the results can be used for acceptance purposes.

The actual mass of material passing the No. 4 (4.75 mm) sieve and retained in the pan is 1968.0 g. This is M_3.

The pan (1968.0 grams) was reduced in accordance with FOP for AASHTO T 248, so that at least 500 g are available. In this case, the mass determined was 512.8 g. This is M_4.

$$\text{Corrected pan mass} = M_4 + \frac{(M_4)(C_1)}{M_3}$$

Where:

M_4 = Mass retained in the pan from the split of the No. 4 (4.75 mm) minus

M_3 = Mass of the No. 4 (4.75 mm) minus of entire sample, not including No. 200 (.075 mm) minus washed out

C_1 = Mass of No. 200 (.075 mm) minus washed out

Sieve Size in (mm)		Cumulative Mass Retained (g)	Cumulative Percent Retained	Percent Passing
No. 4	(4.75)	0	0	100.0
No. 10	(2.00)	207.5	38.0	62.0
No. 40	(0.425)	394.3	72.2	27.8
No. 80	(0.210)	454.5	83.2	16.8
No. 200	(0.075)	503.6	92.2	7.8
Pan		512.8		

The corrected pan mass is the mass used to calculate the percent retained for the fine grading.

Example:

M_4 = 512.8g

M_3 = 1968.0g

C_1 = 128.9g

Corrected pan mass $= 512.8\text{g} + \frac{(512.8\text{g})(128.9\text{g})}{1968.0\text{g}} = 546.4\text{g}$

For the No. 10 sieve:

Mass of No. 10 sieve = 207.5g

Corrected Pan Mass = 546.4g

Cumulative % retained $= \frac{207.5\text{g}}{546.4\text{g}} = 38\%$

% passing = 100-38.0 = 62.0%

Adjusted % passing No. 10 = % passing No. 10 × % No. 4 = 62.0 × 0.65 = 40%

Sieve Size in (mm)		Adjustment	Reported Percent Passing*
¾	(19.0)		100
½	(12.5)		95
⅜	(9.5)		80
No. 4	(4.75)	100 × .65 =	65
No. 10	(2.00)	62.0 × .65 =	40
No. 40	(0.425)	27.8 × .65 =	18
No. 80	(0.210)	16.8 × .65 =	11
No. 200	(0.075)	7.8 × .65 =	5.1

*Report No. 200 (75 µm) sieve to 0.1 percent. Report all others to 1 percent.

Final Gradation On All Screens

Sample Calculation for Fineness Modulus

Fineness Modulus (FM) is used in determining the degree of uniformity of aggregate gradation in PCC mix designs. It is an empirical number relating to the fineness of the aggregate. The higher the FM, the coarser the aggregate. Values of 2.40 to 3.00 are common for FA in PCC.

The FM is the sum of the percentages retained on specified sieves, for PCC fine aggregate they are: No. 4 (4.75 mm), No. 8 (2.36 mm), No. 16 (1.18 mm), No. 30 (0.60 mm), No. 50 (0.30 mm), and No. 100 0.15 mm) divided by 100 gives the FM.

The following example is for WSDOT Class 2 Sand:

Sieve Size in (mm)		Percent Passing	Percent Retained	Percent Retained on Specified Sieves
No. 4	4.75 mm	100	0	0
No. 8	2.36 mm	87	13	13
No. 16	1.18 mm	69	31	31
No. 30	0.60 mm	44	56	56
No. 50	0.30 mm	18	82	82
No. 100	0.15 mm	4	96	96
				= 278
				FM = 2.78

Report

Results shall be reported on standard forms approved for use by the agency. Depending on the agency, this may include:

- Cumulative mass retained on each sieve.
- Cumulative percent retained on each sieve.
- Percent passing and retained on each sieve shall be reported to the nearest 1 percent except for the percent passing the U.S. No. 200 (75 µm) sieve, which shall be reported to the nearest 0.1 percent.
- FM to the nearest 0.01 percent for WSDOT Class 2 Sand.

Report the results using one or more of the following:

- Materials Testing System (MATS)
- DOT Forms 422-020, 422-020A, or 422-020B
- Form approved in writing by the State Materials Engineer

Performance Exam Checklist

WAQTC FOP for AASHTO T 27/T 11
Sieve Analysis of Fine And Coarse Aggregates

Participant Name _____ Exam Date _____

Procedure Element	Yes	No
1. The tester has a copy of the current procedure on hand?	☐	☐
2. All equipment is functioning according to the test procedure, and if required, has the current calibration/verification tags present?	☐	☐
3. Minimum sample mass meets requirement of Table 1 or from FOP for AASHTO T 308?	☐	☐
4. Test sample dried to a constant mass by FOP for AASHTO T 255?	☐	☐
5. Test sample cooled and mass determined to nearest 0.1 percent of mass?	☐	☐
6. Sample placed in container and covered with water? (If specification requires that the amount of material finer than the No. 200 sieve is to be determined.)	☐	☐
7. Dispersing Agent used for HMA?	☐	☐
8. Contents of the container vigorously agitated?	☐	☐
9. Complete separation of coarse and fine particles achieved?	☐	☐
10. Wash water poured through required nested sieves?	☐	☐
11. Operation continued until wash water is reasonably clear?	☐	☐
12. Material retained on sieves returned to washed sample?	☐	☐
13. Washed aggregate dried to a constant mass by FOP for AASHTO T 255?	☐	☐
14. Washed aggregate cooled and mass determined to nearest 0.1 percent of mass?	☐	☐
15. Sample placed in nest of sieves specified? (Additional sieves may be used to prevent overloading as allowed in FOP.)	☐	☐
16. Material sieved in verified mechanical shaker for minimum of 10 minutes or for the minimum verified time whichever is longer?	☐	☐
17. Mass of residue on each sieve determined to 0.1 percent of mass?	☐	☐
18. Total mass of material after sieving agrees with mass before sieving to within 0.3 percent, or 0.2 percent for HMA (per FOP for AASHTO T 308)?	☐	☐
19. Percentages calculated to the nearest 0.1 percent and reported to the nearest whole number, except No. 200 - reported to the nearest 0.1 percent?	☐	☐
20. Percentage calculations based on original dry sample mass?	☐	☐
21. Calculations performed properly? If material passing No. 4 sieve is split and only a portion is tested, calculation as noted in FOP performed properly?	☐	☐

First Attempt: Pass ☐ Fail ☐ Second Attempt: Pass ☐ Fail ☐

Signature of Examiner _____

Comments:

WSDOT FOP for WAQTC T 152[1]

Air Content of Freshly Mixed Concrete by the Pressure Method

Significance

Concrete is not a solid, but rather a solid with void spaces. The voids may contain gas such as air, or liquid such as water. All concrete contains air voids, and the amount can be increased by the addition of an air entraining agent to the mix. When such an agent is used, the size of the voids drastically decreases and the number of voids greatly increases, providing a much greater dispersal of voids.

Air entrainment is necessary in concrete that will be saturated and exposed to cycles of freezing and thawing and to deicing chemicals. The microscopic entrained air voids provide a site for relief of internal pressure that develops as water freezes and thaws inside the concrete. Without the proper entrained-air content, normal concrete that is saturated and is exposed to cycles of freezing and thawing can fail prematurely by scaling, spalling, or cracking.

Care must be taken, however, not to have too much entrained air. As the air content increases, there will be a corresponding reduction in the strength and other desirable properties of the concrete. Typically, this strength reduction will be on the order of 3 to 5 percent for each 1 percent of air content. A concrete mix design proportioned for 5 percent air, for example, will be approximately 15 to 25 percent lower in strength if the air content were to double.

Scope

This procedure covers determination of the air content in freshly mixed portland cement concrete containing dense aggregates in accordance with AASHTO T 152 (Type B meter). It is not for use with lightweight or highly porous aggregates. This procedure includes calibration of the "Type B" air meter gauge and two methods for calibrating the gauge are presented. Concrete containing aggregate that would be retained on the 2 in (50 mm) sieve must be wet sieved. Sieve a sufficient amount of the sample over the 1½ in (37.5 mm) sieve in accordance with the FOP for WAQTC TM 2.

Apparatus

- Air Meter – Type B, as described in AASHTO T 152.
- Balance or Scale – Accurate to 0.3 percent of the test load at any point within the range of use (for Method 1 calibration only).
- Verified external or internal calibration vessel of known volume (usually 5 percent ± of the volume of the meter base).
- Tamping Rod – ⅝ in (16 mm) diameter and approximately 24 in (600 mm) long, having a hemispherical tip. (Hemispherical means half a sphere; the tip is rounded like half of a ball.)
- Vibrator – 7,000 vibrations per minute, 0.75 to 1.50 in (19 to 38 mm) in diameter, at least 3 in (75 mm) longer than the section being vibrated for use with low slump concrete.
- Scoop.
- Container for Water – Rubber syringe (may also be a squeeze bottle).

[1]This FOP is based on WAQTC T 152 and has been modified per WSDOT standards. To view the redline modifications, contact the WSDOT Quality Systems Manager at 360-709-5412.

- Strike-Off Bar – Approximately 12 in × ¾ in × ⅛ in (300 mm × 22 mm × 3 mm).
- Strike-Off Plate – A flat rectangular metal plate at least ¼ in (6 mm) thick or a glass or acrylic plate at least ½ in (12 mm) thick, with a length and width at least 2 in (50 mm) greater than the diameter of the measure with which it is to be used. The edges of the plate shall be straight and smooth within tolerance of 1⁄16 in (1.5 mm).

  Note 1: Use either the strike-off bar or strike-off plate; both are not required. Unit weight requires the use of a strike-off plate.
- Mallet – With a rubber or rawhide head having a mass of 1.25 ± 0.5 lb (0.57 ± 0.23 kg).

Calibration of Air Meter Gauge

Note 2: There are two methods for calibrating the air meter, mass, or volume.

1. Screw the short piece of straight tubing into the threaded petcock hole on the underside of the cover. Determine the mass of the dry, empty air meter base and cover assembly (Mass Method only).
2. Fill the base nearly full with water.
3. Clamp the cover on the base with the tube extending down into the water. Mark the petcock with the tube attached for future reference.
4. Add water through the petcock having the pipe extension below until all air is forced out the other petcock. Rock the meter slightly until all air is expelled through the petcock.
5. Wipe off the air meter base and cover assembly and determine the mass of the filled unit (Mass Method only).
6. Pump up the air pressure to a little beyond the predetermined initial pressure indicated on the gauge. Wait a few seconds for the compressed air to cool and then stabilize the gauge hand at the proper initial pressure by pumping up or relieving pressure, as needed.
7. Close both petcocks and immediately open the main air valve exhausting air into the base. Wait a few seconds until the meter needle stabilizes. The gauge should now read 0 percent. If two or more tests show a consistent variation from 0 percent in the result, change the initial pressure line to compensate for the variation and use the newly established initial pressure line for subsequent tests.
8. Determine which petcock has the straight tube attached to it. Attach the curved tube to external portion of the same petcock.
9. Pump air into the air chamber. Open the petcock with the curved tube attached to it. Open the main air valve for short periods of time until 5 percent of water by mass or volume has been removed from the air meter. Remember to open both petcocks to release the pressure in the base and drain the water in the curved tube back into the base. To determine the mass of the water to be removed, subtract the mass found in Step 1 from the mass found in Step 5. Multiply this value by 0.05. This is the mass of the water that must be removed. To remove 5 percent by volume, remove water until the external calibrating vessel is level full.

Note 3: Many air meters are supplied with a calibration vessel(s) of known volume that are used for this purpose. Calibration vessels must be protected from damage that would change their volume.

If an external or internal calibration vessel is used, confirm what percentage volume it represents for the air meter being used. Vessels commonly represent 5 percent volume, but they are for specific size meters. This should be confirmed by mass.

10. Remove the curved tube. Pump up the air pressure to a little beyond the predetermined initial pressure indicated on the gauge. Wait a few seconds for the compressed air to cool and then stabilize the gauge hand at the proper initial pressure by pumping up or relieving pressure, as needed.

11. Close both petcocks and immediately open the main air valve exhausting air into the base. Wait a few seconds until the meter needle is stabilized. The gauge should now read 5.0 ± 0.2 percent. If the gauge is outside that range, the meter needs adjustment (consult the Regional Materials Laboratory). The adjustment could involve adjusting the starting point so that the gauge reads 5.0 ± 0.2 percent when this calibration is run, or could involve moving the gauge needle to read 5.0 percent. Any adjustment should comply with the manufacturer's recommendations.

    Note 4: Calibration shall be performed per agency standards, prior to field use, and weekly during construction use. Record the date of the calibration, the calibration results, and the name of the technician performing the calibration in the log book kept with each air meter.

    WSDOT Note: Air meter calibration standard for WSDOT:

    Regional Laboratory – Required to calibrate air meter yearly.

    Project Office – Required to calibrate air meter as follows:

    1. First Time Use Calibration – Calibrate air meter prior to first time use in the field each construction season or when the air meter has not been used for more than a month during the construction season.

    2. Construction Use Calibration – After "First Time Use Calibration," calibrate the air meter once a week when used during construction.

12. When the gauge hand reads correctly at 5.0 percent, additional water may be withdrawn in the same manner to check the results at other values such as 10 percent or 15 percent.

    Note 5: Remove the extension tubing from threaded petcock hole in the underside of the cover before starting the test procedure.

    An internal calibration vessel of known volume, usually 5 percent of the volume of the bucket, may be employed as a quick method to verify the calibration of the air meter during construction use. To employ this vessel proceed as follows.

13. Fill the base nearly full with water and place the internal calibration vessel into the base. Place the cover back on the base and gently add water through the petcock until all the air has been expelled. Do not disturb the meter to such an extent as to knock the calibration vessel from an upright position. Do not install either of the threaded tubes into the petcock when using the calibration vessels.

14. Pump up the air pressure to a little beyond the predetermined initial pressure indicated in the calibration record log book. Wait a few seconds for the compressed air to cool and then stabilize the gauge hand at the proper initial pressure by pumping up or relieving pressure, as needed.

15. Close both petcocks and immediately open the main air valve exhausting air into the base. Wait a few seconds and gently tap the back of the gauge until the meter needle stabilizes. The gauge should now read 5.0 ± 0.2 percent or ± 0.2 percent of the volume indicated in the calibration vessel. If the gauge is outside of that range, follow step 1 through step 12 of the calibration procedure to recalibrate the air meter. If further adjustment is required, consult the Regional Materials Laboratory.

16. If necessary, additional vessels may be placed into the base to verify the calibration of the air meter at 10 percent volume and 15 percent volume or the sum of the volumes indicated on the individual calibration vessels.

17. Record the date that the calibration of the air meter was verified in the calibration log book.

18. Gently release the air pressure in the base by opening one of the petcocks, then remove and drain any water from within the calibration vessel and store it in a safe location. The air meter is now ready for use.

Procedure Selection

There are two methods of consolidating the concrete – rodding and vibration. If the slump is greater than 3 in (75 mm), consolidation is by rodding. When the slump is 1 to 3 in (25 to 75 mm), internal vibration or rodding can be used to consolidate the sample, but the method used must be that required by the agency in order to obtain consistent, comparable results. For slumps less than 1 in (25 mm), consolidate the sample by internal vibration.

Procedure – Rodding

1. Obtain the sample in accordance with the FOP for WAQTC TM 2. If the concrete contains coarse aggregate particles that would be retained on a 2-in (50-mm) sieve, wet-sieve a sufficient amount of the representative sample over a 1½-in (37.5-mm) sieve, in accordance with the Wet Sieving portion of the FOP for WAQTC TM 2. Contact the Materials Laboratory for directions.

   Note 7: Testing shall begin within five minutes of obtaining the sample.

2. Dampen the inside of the air meter base and place on a firm, level surface.

3. Fill the base approximately ⅓ full with concrete.

4. Consolidate the layer with 25 strokes of the tamping rod, using the rounded end. Distribute the strokes evenly over the entire cross section of the concrete. Rod throughout its depth without hitting the bottom too hard.

5. Tap the sides of the base smartly 10 to 15 times with the mallet to close voids and release trapped air.

6. Add the second layer, filling the base about ⅔ full.

7. Consolidate this layer with 25 strokes of the tamping rod, penetrating about 1 in (25 mm) into the bottom layer.

8. Tap the sides of the base 10 to 15 times with the mallet.
9. Add the final layer, slightly overfilling the base.
10. Consolidate this layer with 25 strokes of the tamping rod, penetrating about 1 in (25 mm) into the second layer.
11. Tap the sides of the base smartly 10 to 15 times with the mallet.

    Note 8: The base should be slightly over full, about ⅛ in (3 mm) above the rim. If there is a great excess of concrete, remove a portion with the trowel or scoop. If the base is under full, add a small quantity. This adjustment may be done only after consolidating the final layer and before striking off the surface of the concrete.

12. Strike off the surface of the concrete and finish it smoothly with a sawing action of the strike-off bar or plate, using great care to leave the base just full. The surface should be smooth and free of voids as much as possible.
13. Clean the top flange of the base to ensure a proper seal.
14. Moisten the inside of the cover and check to see that both petcocks are open and the main air valve is closed.
15. Clamp the cover on the base.
16. Inject water into one petcock until water emerges from the second petcock. (***Note:*** Water is injected into only one petcock during the entire procedure.)
17. Rock the air meter gently until no air bubbles appear to be coming out of the second petcock. The petcock expelling water should be higher than the petcock where water is being injected. Return the air meter to a level position and verify that water is present in both petcocks.
18. Close the air bleeder valve and pump air into the air chamber until the needle goes past the initial pressure line. Allow a few seconds for the compressed air to cool.
19. Tap the gauge gently with one hand while slowly opening the air bleeder valve until the needle rests on the initial pressure line. Close the air bleeder valve.
20. Close both petcocks.
21. Open the main air chamber valve.
22. Tap the sides of the base smartly with the mallet.
23. With the main air chamber valve open, lightly tap the gauge to settle the needle, and then read the air content to the nearest 0.1 percent, while the air chamber valve is open.
24. Release or close the main air chamber valve.
25. Open both petcocks to release pressure, remove the concrete, and thoroughly clean the cover and base with clean water.
26. Open the main air valve to relieve the pressure in the air chamber.

Procedure – Internal Vibration

1. Obtain the sample in accordance with FOP for WAQTC TM 2. If any aggregate larger than 2 in (50 mm) is present, the larger aggregate must be removed. Sieve a sufficient amount of the sample over the 1½ in (37.5 mm) sieve in accordance with the wet sieving portion of FOP for WAQTC TM 2. Contact the Materials Laboratory for directions.

2. Dampen the inside of the air meter bowl and place on a firm level surface.

3. Fill the base approximately half full.

4. Insert the vibrator at three different points. Do not let the vibrator touch the bottom or sides of the base.

   Note 9: Remove the vibrator slowly so that no air pockets are left in the material.

   Note 10: Continue vibration only long enough to achieve proper consolidation of the concrete. Over vibration may cause segregation and loss of appreciable quantities of intentionally entrained air.

5. Fill the base a bit over full.

6. Insert the vibrator as in Step 3. Do not let the vibrator touch the sides of the base and penetrate the first layer approximately 1 in (25 mm).

7. Return to Step 12 of the rodding procedure and continue.

Report

Results shall be reported on standard forms approved for use by the agency. Record the percent of air to the nearest 0.1 percent.

Report results on concrete delivery ticket (i.e., Certificate of Compliance).

The name of the tester who performed the field acceptance test is required on concrete delivery tickets containing test results.

Performance Exam Checklist

WSDOT FOP for WAQTC T 152
Air Content of Freshly Mixed Concrete by the Pressure Method

Participant Name _____ Exam Date _____

Procedure Element	**Yes**	**No**
1. The tester has a copy of the current procedure on hand?	☐	☐
2. All equipment is functioning according to the test procedure, and if required, has the current calibration/verification tags present?	☐	☐
3. Container filled in three equal layers, slightly overfilling the last layer?	☐	☐
4. Correct consolidation procedure chosen?	☐	☐
5. Rodding		
a. Each layer rodded throughout its depth 25 times with hemispherical end of rod, uniformly distributing strokes?	☐	☐
b. Bottom layer rodded throughout its depth, without forcibly striking the bottom of the container?	☐	☐
c. Middle and top layers rodded, each throughout their depths and penetrating 1 in (25 mm) into the underlying layer?	☐	☐
d. Sides of the container tapped 10 to 15 times with the mallet after rodding each layer?	☐	☐
6. Internal Vibration		
a. Aggregate larger than 1½ removed?	☐	☐
b. Inside of air meter dampened?	☐	☐
c. Base filled to approximately half full for first lift?	☐	☐
d. Vibrator inserted in three different locations without touching sides or base?	☐	☐
e. Vibrator removed slowly and concrete not over vibrated?	☐	☐
f. Base filled to just overfull?	☐	☐
g. Vibrator inserted approximately 1 in into first layer in three different locations without touching sides?	☐	☐
Finishing		
7. Concrete struck off level with top of container and rim cleaned?	☐	☐

Using a Type B Meter	Yes	No
8. Both petcocks open?	☐	☐
9. Air valve closed between air chamber and the bowl?	☐	☐
10. Inside of cover cleaned and moistened before clamping to base?	☐	☐
11. Water injected through petcock until it flows out the other petcock?	☐	☐
12. Water injection into the petcock continued while tipping the meter to ensure all air is expelled?	☐	☐
13. Air pumped up to initial pressure line?	☐	☐
14. A few seconds allowed for the compressed air to stabilize?	☐	☐
15. Gauge adjusted to the initial pressure?	☐	☐
16. Both petcocks closed?	☐	☐
17. Air valve opened between chamber and bowl?	☐	☐
18. Sides of bowl tapped with the mallet?	☐	☐
19. With air valve open, Air percentage read after lightly tapping the gauge to stabilize the hand?	☐	☐
20. Air valve closed and then petcocks opened to release pressure before removing the cover?	☐	☐
21. Air content recorded to 0.1 percent?	☐	☐
22. All calculations performed correctly?	☐	☐

First Attempt: Pass ☐ Fail ☐ Second Attempt: Pass ☐ Fail ☐

Signature of Examiner _____

Comments:

WSDOT FOP for WAQTC/AASHTO T 168[1]

Sampling of Hot Mix Asphalt Paving Mixtures
FOP for WAQTC T 168

Significance

Testing bituminous paving mixtures in the field begins with obtaining and preparing the sample to be tested. Standardized procedures for obtaining a representative sample have been established. Producing strong, durable, reliable pavement in roadways requires careful sampling and accurate testing.

Technicians must be patient and follow these procedures. If one considers that the specifications require quality tests to be made on only a small portion of the total material placed, the need for a truly representative sample is apparent. For this reason, every precaution must be taken to obtain a sample that is truly representative of the entire batch and then to protect that sample from contamination and physical damage.

Scope

This procedure covers the sampling of bituminous paving mixtures from HMA plants, haul units, and roadways in accordance with AASHTO T 168. Sampling is as important as testing, and every precaution must be taken to obtain a truly representative sample.

Apparatus

- Shovel.
- Sample containers such as cardboard boxes, metal cans, stainless steel bowls, or other agency-approved containers.
- Mechanical sampling device.

Sample Size

Sample size depends on the test methods specified by the agency for acceptance.

WSDOT requires a minimum of four times the amount required for testing. This should be approximately 125 lbs.

Sampling

- **General**

  1. The material shall be tested to determine variations. The supplier/contractor shall sample the HMA mixture in the presence of the engineer. The supplier/contractor shall provide one of the following for safe and appropriate sampling:

     a. A mechanical sampling device approved by the engineer.

     b. Platforms or devices to enable sampling from the hauling vehicle without entering the hauling vehicle for sampling HMA.

[1]This FOP is based on WAQTC T 168 and has been modified per WSDOT standards. To view the redline modifications, contact the WSDOT Quality Systems Manager at 360-709-5412.

2. The supplier/contractor shall place dense graded mixture samples in cardboard boxes or stainless steel bowls or other agency approved containers. Place open graded mixture samples in stainless steel bowls. Do not put open graded mixture samples in boxes until they have cooled to the point that bituminous material will not migrate from the aggregate.

   Note: Care shall be taken to prevent contamination of bituminous mixes by dust or other foreign matter, and to avoid segregation of aggregate and bituminous materials.

   - **Attached Sampling Devices** – Some agencies require mechanical sampling devices for HMA and cold feed aggregate on some projects. These are normally permanently attached devices that allow a sample container to pass perpendicularly through the entire stream of material or divert the entire stream of material into the container. Operation may be hydraulic, pneumatic, or manual and allows the sample container to pass through the stream twice, once in each direction, without overfilling. Special caution is necessary with manually operated systems since a consistent speed is difficult to maintain and nonrepresentative samples may result. Check agency requirements for the specifics of required sampling systems.
   - **Sampling From Truck Transports Haul Units**

     a. Obtain samples in four approximately equal increments from haul units.

     b. Obtain each increment from approximately 12 in (300 mm) below the surface, in each of the four quadrants of the load.

     c. Combine the increments to form a sample of the required size.
   - **Sampling From Roadway Prior to Compaction (Plate Method)**

     WSDOT has deleted this section.

Temperature of Mix

Immediately upon obtaining a sample, using a verified thermometer, check and record temperature of the sample.

Identification and Shipping

1. Identify sample containers as required by the agency.
2. Ship samples in containers that will prevent loss, contamination, or damage.
3. Refer to the sample identification requirements in FOP for WSDOT Test Method 712.

Performance Exam Checklist

WSDOT FOP for WAQTC/AASHTO T 168
Sampling of Hot Mix Asphalt Paving Mixtures

Participant Name _____ Exam Date _____

Procedure Element	Yes	No
1. The tester has a copy of the current procedure on hand?	☐	☐
2. Containers of correct type and ample size available?	☐	☐
3. Sampling	☐	☐
a. Samples from truck transports taken from four quadrants at an approximate depth of 12 inches?	☐	☐
b. Samples taken with approved mechanical sampling device?	☐	☐
4. Temperature of mix checked?	☐	☐
5. Sample size meets agency requirements?	☐	☐
6. Sample identified as required?	☐	☐

First Attempt: Pass ☐ Fail ☐ Second Attempt: Pass ☐ Fail ☐

Signature of Examiner _____

Comments:

Performance Exam Checklist

Air Content of Concrete (Volumetric Method) for AASHTO T 196

Participant Name _____ Exam Date _____

Procedure Element	Yes	No
1. Bowl filled in two equal layers?	☐	☐
2. Each layer rodded 25 times?	☐	☐
3. Bowl tapped (sharply) 10 to 15 times after rodding each layer?	☐	☐
4. Excess concrete removed with strike-off bar or plate?	☐	☐
5. Flange of bowl wiped clean?	☐	☐
6. Using funnel, water added, then alcohol added, then final water added until liquid level appears in neck?	☐	☐
7. Funnel removed & water adjusted to zero mark using rubber syringe?	☐	☐
8. Screw cap is attached and tightened?	☐	☐
Initial Reading		
9. Unit inverted and agitated at 5 second intervals for a minimum of 45 seconds and until concrete is free from base?	☐	☐
10. Unit vigorously rolled ¼ to ½ turn forward and back several times with base at a 45° angle. Then turn base about ⅓ turn and rolling process resumed.	☐	☐
11. Was meter checked for leaking?	☐	☐
a. If leak was found, was test started over with new sample?	☐	☐
12. Apparatus placed upright, top loosened and allowed to stand until air rises to the top?	☐	☐
a. < 0.25 percent change in 2 minutes (without excessive foam), initial reading recorded to the nearest 0.25%?	☐	☐
b. More than 6 minutes to stabilize or excessive foam, was test discarded and new test run?	☐	☐
Confirmation of Initial Meter Reading		
13. 1 minute rolling repeated and liquid level checked?	☐	☐
14. Confirmation reading > 0.25 percent of initial, new reading recorded as new initial reading, repeat 1 minute rolling	☐	☐
15. Level of liquid read < 0.25 percent change, final meter reading recorded to nearest 0.25%?	☐	☐
16. Apparatus disassembled and checked for undisturbed concrete	☐	☐
Calculations		
17. Correction factor from Table 1 subtracted for use of 2.5 pts or more of alcohol?	☐	☐
18. If required, number of calibration cups of water added to air content?	☐	☐
19. Air content reported to the nearest 0.25 percent air?	☐	☐

First Attempt: Pass ☐ Fail ☐ Second Attempt: Pass ☐ Fail ☐

Signature of Examiner _____

Comments:

FOP for AASHTO T 324

Hamburg Wheel-Track Testing of Compacted Hot Mix Asphalt (HMA)

AASHTO T 324 has been adopted by WSDOT with the following changes:

4. Summary of Method

   4.1 A laboratory-compacted specimen of HMA, a saw-cut slab specimen, or a core taken from a compacted pavement is repetitively loaded using a reciprocating steel wheel. The specimen is submerged in a temperature-controlled water bath of 49°C ± 1.0°C. The deformation of the specimen caused by the wheel loading is measured.

5. Apparatus

   5.1 Hamburg Wheel-Tracking Machine – An electronically powered machine capable of moving a 203.2-mm (8-in) diameter, 47-mm (1.85 in) wide steel wheel over a test specimen. The load on the wheel is 705 ± 4.5 N (158 ± 1.0 lb). The wheel shall reciprocate over the specimen, with the position varying sinusoidally over time. The wheel shall make 50 passes across the specimen per minute. The maximum speed of the wheel shall be approximately 0.305 m/s (1 ft/s) and will be reached at the midpoint of the specimen.

Tester Qualification Practical Exam Checklist

Hamburg Wheel-Track Testing of Compacted Hot Mix Asphalt (HMA)
FOP for AASHTO T 324

Participant Name _____ Exam Date _____

Procedure Element	**Yes**	**No**
1. The tester has a copy of the current procedure on hand?	☐	☐
2. All equipment is functioning according to the test procedure, and if required, has the current calibration/verification tags present?	☐	☐
3. Specimen height is 62 ± 1.0 mm (2.44 ± 0.04 in.) or 38.1 mm (1.5 inch) minimum for cores?	☐	☐
4. Specimen meets air void tolerance of 7.0 + 1.0 %?	☐	☐
5. Specimens placed in molds and loaded into trays with a maximum gap of 7.5 mm between molds?	☐	☐
6. Tray mounted in machine and securely fastened?	☐	☐
7. Sample data and testing parameters entered into computer? (e.g., sample name, agg source, wheel speed, maximum rut depth, number of passes, and water temperature)	☐	☐
8. Wheels gently lowered and samples allowed to soak at testing temperature for 30 minutes?	☐	☐
9. Wheel tracking device shut off when test parameters are reached?	☐	☐
10. Test data obtained for charting and analysis?	☐	☐

First Attempt: Pass ☐ Fail ☐ Second Attempt: Pass ☐ Fail ☐

Signature of Examiner

Comments:

Washington State Department of Transportation

WSDOT Test Method T 606

Method of Test for Compaction Control of Granular Materials

1. Scope

   This test method is used to establish the theoretical maximum density of granular materials and non-granular materials with more than 30 percent by weight of the original specimen is retained on the No. 4 sieve or more than 30 percent by weight of the original specimen is retained on the ¾ in sieve.

2. Reference Documents

   2.1 AASHTO Standards

   T 99 – Moisture-Density Relations of Soils Using a 5.5 lb (2.5 kg) Rammer and a 12 in (305 mm) Drop (Method A only)

   M 92 – Standard Specification for Wire-Cloth Sieves for Testing Purposes

   M 231 – Standard Specification for Weighing Devices Used in the Testing of Materials

   2.2 WSDOT Standards

   T 2 – FOP for AASHTO Standard Practice for Sampling Aggregates

   T 248 – FOP for AASHTO Reducing Samples of Aggregate to Testing Size

   T 255 – FOP for AASHTO Total Moisture Content of Aggregate by Drying

3. Definitions

   3.1 Fine Aggregate Portion – Material passing the No. 4 Sieve.

   3.2 Coarse Aggregate Portion – Material retained on the No. 4 Sieve.

4. Significance and Use

   This test method consists of three separate tests which present a method for establishing the proper theoretical maximum density values to be used for controlling the compaction of granular materials. In general, this test method is applicable to granular materials having 30 to 70 percent of the material passing the No. 4 (4.75 mm) sieve. These methods account for variations of maximum obtainable density of a given material for a given compactive effort, due to fluctuations in gradation.

5. Apparatus

   5.1 A vibratory spring-loaded compactor. Information on where to obtain this equipment will be provided by the State Materials Laboratory.

   5.2 Standard mold and base with a piston to fit inside the mold with a maximum 1⁄16 in clearance between piston and mold.

5.3 A ½ ft^3 mold with a piston to fit inside mold having a maximum 1⁄16 in clearance between piston and mold.

5.3.1 The molds and pistons will be constructed of metal of such dimensions as to remain rigid and inflexible under test conditions.

5.4 Spacer blocks of varying heights compatible with the compactor and pistons.

5.5 Measuring device, accurate and readable to 0.01 in with a minimum 6 in length.

5.6 Pycnometer calibrated at the test temperature having a capacity of at least 1 quart (100 ml). Glass pycnometers shall be used to determine the specific gravity of the fine particles. The glass pycnometer shall have a companion glass plate large enough to cover the jar's opening when calibrating or weighing the pycnometer.

5.7 One vacuum pump or aspirator (pressure not to exceed 100 mm mercury).

5.8 One balance accurate to 0.1 g.

5.9 3 in (75 mm), ¾ in (19 mm), and a No. 4 (4.75 mm) sieve conforming to AASHTO M 92 requirements.

5.10 Balance or Scale – Capacity sufficient for the principle sample mass, readable to 0.1 percent or 0.1 g, and meeting the requirements of AASHTO M 231.

5.11 Manually Operated Metal Rammer – As specified in AASHTO T 99, Apparatus.

5.12 Tamping rod of straight steel, ⅝ in (16 mm) in diameter and approximately 24 in (400 mm) long having at least one end rounded to a hemispherical tip.

5.13 Graduated cylinder.

5.14 A stopwatch or timer readable to 1 second.

6. Selection of T 606 Test and Procedure

To select the proper method for determining the maximum density of the fine aggregate portion of the sample, refer to the Fine Aggregate Split of Original Sample section of Table 1.

To select the proper procedure in Test 2 for determining the maximum density of the coarse aggregate portion of the sample, refer to the Coarse Aggregate Split of Original Sample section of Table 1.

Fine Aggregate Split of Original Sample	
Soil Type	**Test Method**
Sandy, non-plastic, permeable soils or non-cohesive soils.	T 606, Test 1
Silt, some plasticity, low permeability.	T 99, Method A
Sandy/silt, some plasticity, permeable.	T 606, Test 1/T 99, Method A (use highest results)
Coarse Aggregate Split of Original Sample	
No more than 15 percent by weight of the original aggregate specimen exceeds ¾ in.	T 606, Test 2, Procedure 1
15 percent or more by weight of the original aggregate specimen is greater than ¾ in (19 mm), but does not exceed 3 in (76 mm).	T 606, Test 2, Procedure 2

Test Selection
Table 1

7. Sampling Material

7.1 Sample the material in accordance with WSDOT FOP for AASHTO T 2.

7.2 Native soils within the contract limits to be used for embankment construction and/or backfill material do not require sampling by a qualified tester.

7.3 For material that requires gradation testing such as but not limited to manufactured aggregates and gravel borrow, sampling shall be performed by a qualified testers.

8. Sample Preparation

8.1 Prepare the field sample by splitting out a representative portion in accordance with WSDOT FOP for AASHTO T 248.

8.2 Dry the compaction sample in accordance with WSDOT FOP for AASHTO T 255.

8.3 Scalp the plus 75 mm (3 in) material from the compaction sample and discard, if not required for other tests.

8.4 Separate the remainder of the compaction sample into coarse and fine aggregate fractions as follows:

8.4.1 Fine Aggregate (No. 4 minus) – Minimum of three portions approximately 13 lb (6 kg) each.

8.4.2 Coarse Aggregate

8.4.2.1 Procedure 1 (Aggregate Size: No. 4 to ¾ in (19 mm) – Separate a representative specimen of 10 to 11 lbs (4.5 to 5 kg) and weigh to 0.01 lbs (5 g) or less if using a balance that is more accurate than 0.1 lbs.

8.4.2.2 Procedure 2 (Aggregate Size: No. 4 to 3 in (76 mm) – Separate a representative specimen of 45 lbs (20 kg) and weigh to 0.1 lbs (50 g) or less if using a balance that is more accurate than 0.1 lbs.

9. Procedure

9.1 Test No. 1 – Compaction Test of the Fine Fraction (No. 4 Minus Material)

9.1.1 Assemble the small mold and determine its mass, along with the piston, to the nearest 0.01 lb (5 g). Record this as the Mass of Mold Assembly.

9.1.2 Using one of the fine aggregate portions, add an amount of water estimated to produce a saturated sample (see Note 1). Mix the water and aggregate until the sample is homogenous.

Note 1: The sample is considered saturated when one to two drops of free water are visible at the base of the mold at the end of the first 2-minute cycle. Do not over saturate the material.

9.1.3 Set the piston aside and place the sample in the mold in three approximately equal layers. Consolidate each lift by 25 strokes of the tamping rod followed by 25 blows of the manually operated metal rammer. The surface of the top lift should be finished as level as possible.

9.1.4 Place the piston on top of the sample and mount the mold on the jack platform in the compactor. Spacers between the load spring and piston must be used to adjust the elevation of the mold so the hammers strike the mold in the center of the lift area.

9.1.5 Elevate the mold until the loading head seats on top of the piston. Apply an initial seating load of approximately 100 lbs on the sample.

9.1.6 Start the compactor hammers and, by elevating the jack, begin the loading procedure. The load is gradually applied over the time stated in the table below.

Load Application Rate	
Load	**Time**
0 to 500 lb	1 minute
500 lb to 1,000 lb	30 sec
1000 lb to 2,000 lb	30 sec

9.1.7 Upon reaching the 2,000 lb load at the end of the 2-minute cycle, stop the hammers, release the load on the jack, return to zero pressure, and check for free water.

Note 2: If dirty water is flooding off the base of the mold or excessive material is pumping around the sides of the top piston, the sample is beyond the saturation point. Stop the test, remove the material from the mold, prepare a new sample at lower moisture content, and begin the test again.

9.1.8 Repeat Steps 9.1.5 through 9.1.7 four additional times (excluding check for free water). After the last run, remove the mold from the compactor.

9.1.9 Measure the height of the compacted sample to the nearest 0.01 in (0.1 mm) and record as the "Depth."

9.1.10 Determine the mass of the specimen in the mold to the nearest 0.01 lb (5 g). Record this as: Mass of Mold + Sample.

9.1.11 Remove the specimen from the mold and determine the moisture content in accordance with WSDOT FOP for AASHTO T 255.

9.1.12 Vertically slice through the center of the specimen, take a representative specimen (at least 1.1 lbs (500 g)) of the materials from one of the cut faces (using the entire specimen is acceptable), weigh immediately, dry in accordance with AASHTO T 255 to determine the moisture content, and record the results.

9.1.13 Calculate and record the dry density of fine fraction.

9.2 Test No. 2 – Compaction Test of the Coarse Fraction

9.2.1 Procedure 1 – ¾ in (19 mm) to No. 4 (4.75 mm) Aggregates

9.2.1.1 Determine the mass of the coarse aggregate to the nearest 0.01 lb (5 g).

9.2.1.2 Add 2.5 percent moisture to the sample, mix thoroughly.

9.2.1.3 Place in 0.1 ft^3 (0.0028 m^3) mold in approximately three equal lifts. Tamp each lift lightly to consolidate material and achieve a level surface. Avoid the loss of any material during placement.

9.2.1.4 Follow steps 9.1.5 through 9.1.8.

9.2.1.5 Measure the height of the compacted sample to the nearest 0.01 in (0.1 mm) and record as the "Depth."

9.2.1.6 Calculate and record the dry density of coarse fraction.

9.2.2 Procedure 2 – 3 in (76 mm) to No. 4 Aggregates

9.2.2.1 Determine the mass of the coarse aggregate to the nearest 0.01 lb (5 g) or better.

9.2.2.2 Divide the sample into five representative, approximately equal portions.

9.2.2.3 Place one of the portions into the ½ ft^3 (0.014 m^3) mold and level the surface.

9.2.2.4 Position the piston on the material, mount the mold in the compactor, and compact as described in steps 9.1.5 through 9.1.7.

Note 3: Spacers may be needed between the load spring and piston to adjust the elevation of the mold to the height of the lift being compacted.

9.2.2.5 Repeat 9.2.2.3 and 9.2.2.4 for the remaining four portions of material.

9.2.2.6 After the final portion is compacted, determine the height of the compacted sample to the nearest 0.01 in (0.1 mm) and record as the "Depth."

9.2.2.7 Calculate and record the dry density of coarse fraction (see Calculations section).

9.3 Test No. 3 – Specific Gravity Determination for Maximum Density Test

9.3.1 Material

9.3.1.1 Fine fraction No. 4 (4.75 mm) minus 1.1 lbs (500 g) minimum.

9.3.1.2 Coarse fraction No. 4 (4.75 mm) plus 2.2 lbs (1,000 g) minimum.

9.3.2 Procedure

9.3.2.1 Place dry materials, either fine or coarse fraction, in pycnometer.

9.3.2.2 Fill the pycnometer approximately ¾ full with 68°F (20°C) water.

9.3.2.3 Connect the pycnometer to the vacuum system. Apply a partial vacuum of 30 ml Hg or less absolute pressure for a period of 20 minutes.

9.3.2.4 Agitate container either continuously by mechanical device or manually by vigorous shaking at 2-minute intervals.

9.3.2.5 Release vacuum and disconnect the hoses.

9.3.2.6 Fill pycnometer with water. Water temperature during test should be maintained as close to 68° ± 1°F (20° ± 0.5°C) as possible.

Note 4: It may be necessary to place the pycnometer in a water bath for 10 minutes, after release of vacuum, to bring the water temperature back to 68° ± 1°F (20° ± 0.5°C).

9.3.2.6.1 Metal Pycnometer (Coarse Specific Gravity Only) – Fill the vessel, according to the manufacturer's instructions, with 68° ± 1°F (20° ± 0.5°C) water. Dry the outside of the vessel and weigh to the nearest 0.1g. Record the weight.

9.3.2.6.2 Glass Pynometer (Fine or Coarse Specific Gravity) – Completely fill the pycnometer with 68° ± 1°F (20° ± 0.5°C) water, then slide the calibrated glass plate over the mouth of the jar making sure air bubbles are not trapped under the glass plate. Dry the outside of the pycnometer and glass plate and weigh to the nearest 0.1g. Record the weight.

Calculations

10. Determine the dry density of each of the fine aggregate points as follows:

10.1 Calculate Specific Gravity as follows:

$$\text{Sp. Gr.} = \frac{a}{(a + b - c)}$$

Where:

a = Weight of dry material, grams
b = Weight of pycnometer + water, grams
c = Weight of pycnometer + material + water, grams

10.2 Calculate the wet sample weight:

$$e = c - d$$

Where:

e = Wet sample weight, g
c = mold and sample weight
d = Tare of mold assembly

10.3 Calculate the wet density by:

$$g = \frac{e \times b}{f}$$

Where:

g = wet density, lb/ft^3
e = wet sample weight
b = mold constant, in/ft^3
f = height of sample, in (height constant-depth)

10.4 Calculate the dry density of each of the fine fraction specimens as follows:

$$h = \frac{g}{1 + n}$$

Where:

h = dry density, lb/ft^3
g = wet density, lb/ft^3
n = moisture content, expressed as a decimal

11. Reports

11.1 Enter information into the WSDOT Materials Testing System (MATS) or other form approved in writing by the State Materials Engineer to obtain the theoretical maximum density curve.

Performance Exam Checklist

Method of Test for Compaction Control of Granular Materials
WSDOT Test Method T 606

Participant Name _____ Exam Date _____

Procedure Element	**Yes**	**No**
1. The tester has a copy of the current procedure on hand?	☐	☐
2. All equipment is functioning according to the test procedure, and if required, has the current calibration/verification tags present?	☐	☐
Fine Fraction – 100% Passing the No. 4 (4.75 mm) Sieve		
Specimen Preparation		
1. Has the specimen been oven-dried?	☐	☐
2. Has the specimen been separated on the No. 4 (4.75 mm) sieve?	☐	☐
3. Is the specimen weight approximately 13 lbs?	☐	☐
Procedure		
1. Is specimen saturated when compacted?	☐	☐
2. Has specimen been placed in three layers, rodded 25, and tamped 25 times, each layer?	☐	☐
3. Is the hammer blow approximately a 12 in free fall to prevent severe displacement of the specimen?	☐	☐
4. The specimen is as level as possible?	☐	☐
5. Has piston been placed on top of the specimen?	☐	☐
6. Has the mold been mounted on the jack in the compactor?	☐	☐
7. Has the mold been elevated until the load-spring retainer sits on top of the piston?	☐	☐
8. Has the initial load been set at 100 lbs?	☐	☐
9. Is the loading rate applied as specified in the test procedure?	☐	☐
10. Has the hammer been stopped, jack released, and pressure returned to zero when 2,000 lbs pressure was reached?	☐	☐
11. Are one to two drops of free water visible at the base of the mold at the end of the first 2-minute cycle?	☐	☐
12. Steps 7 through 10 repeated four additional times?	☐	☐
13. The mold removed from the compactor?	☐	☐
14. Has the height of the specimen been determined?	☐	☐
15. Has specimen been weighed?	☐	☐
16. Has specimen been removed from mold and a representative portion immediately weighted and the moisture percentage determined?	☐	☐
17. Moisture content, dry density determined and entered on the testing sheet?	☐	☐
18. Theoretical maximum density determined by testing fresh specimens, as necessary, at different moisture contents and entered on the testing sheets?	☐	☐

Procedure Element	Yes	No
Aggregate Size: No. 4 to ¾ in (19 mm)		
Specimen Preparation		
1. Has the specimen been oven-dried?	☐	☐
2. Has the specimen been separated on the No. 4 (4.75 mm) sieve?	☐	☐
3. Does more than 85 percent of the material pass the ¾ in (19 mm) sieve?	☐	☐
Procedure		
1. Weight and record specimen weight?	☐	☐
2. Has the specimen been dampened to 2½ percent and placed in three lifts in a 0.1 ft^3 mold?	☐	☐
3. Specimen lightly tamped to archive a level surface?	☐	☐
4. Piston placed on top of specimen and mold mounted on jack in compactor?	☐	☐
5. Mold elevated until the load-spring retainer sits on top of the piston?	☐	☐
6. Initial load of 100 lbs set prior to starting machine?	☐	☐
7. Is the load rate applied as specified in the test procedure?	☐	☐
8. Hammers stopped, jack released, and pressure returned to zero when 2,000 lb load has been reached?	☐	☐
9. Steps 5 through 8 repeated four additional times?	☐	☐
10. The mold removed from the compactor and the height measured?	☐	☐
11. Dry density calculated and entered on the testing sheets?	☐	☐
Aggregate Size: No. 4 to 3 in		
Specimen Preparation		
1. Has the specimen been oven-dried?	☐	☐
2. Has the specimen been separated on the No. 4 (4.75 mm) sieve?	☐	☐
3. Is the specimen weight approximately 45 lbs?	☐	☐
4. Does the specimen contain 15 percent or more ¾ + material?	☐	☐
5. Has material greater than 3 in (76 mm) been removed?	☐	☐
6. Specimen separated into five approximately equal parts?	☐	☐
Procedure		
1. Specimen placed in the mold in five separate lifts?	☐	☐
2. The specimen is as level as possible?	☐	☐
3. After each lift, mold placed in compactor and compacted according to test procedure?	☐	☐
4. After compacting final lift, specimen removed from compactor and volume determined?	☐	☐
5. Dry density determined calculated and entered onto testing sheet?	☐	☐

Procedure Element	**Yes**	**No**
Specific Gravity Determination for Theoretical Maximum Density Test		
Specimen Preparation		
1. Has the specimen been oven-dried?	☐	☐
2. Has the specimen been separated on the No. 4 (4.75 mm) sieve?	☐	☐
3. Weight of fine fraction approximately 500 g?	☐	☐
4. Weight of coarse fraction approximately 1000 g?	☐	☐
Procedure		
1. Material placed in pycnometer and 68°F water added?	☐	☐
2. Vacuum applied for at least 20 minutes?	☐	☐
3. Container and contents agitated manually by shaking at intervals of 2 minutes?	☐	☐
4. Pycnometer filled with water at 68°F?	☐	☐
5. Pycnometer dried, weighted, and recorded on testing sheet?	☐	☐
6. Specific Gravity calculated and entered onto testing sheet?	☐	☐

First Attempt: Pass ☐ Fail ☐ Second Attempt: Pass ☐ Fail ☐

Signature of Examiner _____

Comments:

Washington State
Department of Transportation

WSDOT Standard Operating Procedure SOP 615

Determination of the % Compaction for Embankment & Untreated Surfacing Materials Using the Nuclear Moisture-Density Gauge

1. Scope

   This procedure covers the procedures for determining the in-place density, moisture content, gradation analysis, oversize correction, and determination of maximum density of compacted soils and untreated surfacing materials using a nuclear density device in the direct transmission mode.

2. References

   a. AASHTO T 99 for Method of Test for Moisture-Density Relations of Soils

   b. AASHTO T 180 for Method of Test for Moisture-Density Relations of Soils

   c. AASHTO T 224 for Correction for Coarse Particles in Soil Compaction Test

   d. T 255 – WSDOT FOP for AASHTO for Total Moisture Content of Aggregate by Drying

   e. T 272 – WSDOT FOP for AASHTO for Family of Curves — One Point Method

   f. T 310 – WSDOT FOP for AASHTO for In-Place Densities and Moisture Content of Soils and Soil-Aggregate by Nuclear Methods (Shallow Depth)

   g. WSDOT T 606 Method of Test for Compaction Control of Granular Materials

3. Test Location

   When selecting a test location, the tester shall visually select a site where the least compactive effort has been applied. Select a test location where the gauge will be at least 6 in (150 mm) away from any vertical mass. If closer than 24 in (600 mm) to a vertical mass, such as in a trench, follow gauge manufacturer correction procedures.

   Note 1: When retesting is required due to a failing test; retest within a 10-foot radius of the original station and offset.

4. Nuclear Density Test

   Determine the dry density and moisture content of soils and untreated surfacing materials using the nuclear moisture-density gauge in accordance with WSDOT FOP for AASHTO T 310, and record in the Materials Testing System (MATS), WSDOT Form 350-074, Field Density Test, or other form approved in writing by the State Materials Engineer.

5. Oversize Determination

a. AASHTO T 99 and WSDOT T 606

A sample weighing a minimum of 9 lbs will be taken from beneath the gauge. Care shall be taken to select material that is truly representative of where the moisture density gauge determined the dry density and moisture content.

There are two methods for determining the percentage of material retained on the No. 4 sieve:

Method 1

(1) Dry the sample to SSD conditions (i.e., dried until no visible free moisture is present, material may still appear damp). Allow the sample to cool sufficiently and record mass to the nearest 0.1 percent of the total mass or better.

(2) Shake sample by hand over a verified No. 4 (4.75 mm) sieve. Limit the quantity of material on the sieve so that all particles have the opportunity to reach the sieve openings a number of times during the sieving operation. The mass retained on the No. 4 (4.75 mm) sieve at the completion of the sieving operation shall not exceed 800 grams, 1.8 pounds, for the 12 in sieve, or 340 grams, 0.75 pounds; for the 8 in sieve.

(3) Remove and weigh the material on the No. 4 (4.75 mm) sieve to the nearest 0.1 percent of the total mass or better and record.

Method 2 – Method 2 is recommended for crushed surfacing materials, materials with high clay content, or other granular materials that are at or near the optimum moisture content for compaction.

(1) Determine the mass of the sample to the nearest 0.1 percent of the total mass or better and record.

(2) Charge the material in a suitable container with water, agitate the material to suspend the fines, then slowly decant and screen the material over a verified No. 4 (4.75 mm) sieve. Repeat the process as necessary to remove as much No. 4 (4.75 mm) minus material as possible. DO NOT overload the sieve.

(3) Place the washed sample retained on the No. 4 (4.75 mm) sieve into a tared container. Blot the material to a SSD condition (i.e., no visible free moisture present, material may still appear damp) during this step.

(4) Weigh the mass of the material on the No. 4 (4.75 mm) sieve to the nearest 0.1 percent of the total mass or better and record.

b. AASHTO T 180

Follow either Method 1 or Method 2 in 5 a. with the following exception; sieve the material over a ¾ in (19.0 mm) sieve.

6. Calculations

   a. Calculate the percent retained as follows:

   $$\% \text{ retained (Pc)} = 100 \times \frac{\text{mass retained on sieve}}{\text{original mass}} \text{ (round to nearest percent)}$$

   b. Calculate percent passing as follows:

   % passing = 100 – % retained

   c. Calculate the dry density as follows:

   $$d = \frac{100}{100 + W} (m)$$

   Where:
   - d = dry field density of total sample, pcf
   - m = total field wet density, pcf
   - W = moisture content of total field sample

   d. Calculate the corrected theoretical maximum density as follows:

   $$D_d = \frac{100 \times (D_f) \times (k)}{[(D_f) \times (P_c) + (k) \times (P_f)]}$$

   Where:
   - D_d = corrected dry density of combined fine and oversized particles, expressed as lbs/ft3.
   - D_f = dry density of fine particles expressed as lbs/ft3, determined in lab.
   - P_c = percent of coarse particles, by weight.
   - P_f = percent of fine particles, by weight.
   - k = 62.4 x Bulk Specific Gravity.

   Calculate in-place dry density to the nearest 0.1 lbs/ft3.

   Note 2: If the specific gravity of the coarse particles has been determined, use this value in the calculation for the "k" value. If the specific gravity is unknown then use 2.67. Either AASHTO T 85 or WSDOT T 606 Test 3 may be used to determine the specific gravity of the coarse particles.

   e. Calculate the percent of compaction using the following equation:

   $$\% \text{ compaction} = \frac{\text{Dry Density (lbs/ft}^3)}{\text{corrected theoretical maximum density (lbs/ft}^3)}$$

7. Density Curve Tables

   The Materials Testing System (MATS) Density Curve Tables is the WSDOT preferred method for determining the corrected theoretical maximum density.

   a. MATS calculates the corrected theoretical maximum density in accordance with AASHTO T224 Section 4.2 and reports the results in the Density Curve Table.

   b. To determine the corrected theoretical maximum density using the Density Curves Table enter the Table at the line corresponding to the % passing or % retained (T99 & T 180 requires percent retained, T 606 requires percent passing), read across to the column labeled Max this number is the Corrected Theoretical Maximum Density.

8. Report

   a. Report the results using one or more of the following:
      - Materials Testing System (MATS)
      - WSDOT Form 350-074 and 351-015
      - Form approved in writing by the State Materials Engineer

   b. Report the percent of compaction to the nearest whole number.

Performance Exam Checklist

WSDOT Standard Operating Procedure SOP 615
Determination of the % Compaction for Embankment &
Untreated Surfacing Materials Using the Nuclear Moisture-Density Gauge

Participant Name _____ Exam Date _____

Procedure Element	**Yes**	**No**
1. The tester has a copy of the current procedure on hand?	☐	☐
2. All equipment is functioning according to the test procedure, and if required, has the current calibration/verification tags present?	☐	☐
Gradation Analysis		
3(A) Method 1		
1. Sample Dried to a SSD condition (dried until no visible free moisture present) and mass recorded?	☐	☐
2. Sample allowed to cool sufficiently prior to sieving?	☐	☐
3. Sample was shaken by hand through the appropriate sieve for a sufficient period of time?	☐	☐
4. Recorded mass of material retained on the appropriate sieve?	☐	☐
5. Calculated and recorded percent of material retained and passing the appropriate sieve?	☐	☐
3(B) Method 2		
1. Mass of sample determined prior to washing?	☐	☐
2. Material charged with water in suitable container and agitated to suspend fines?	☐	☐
3. Sample decanted over required sieve for a sufficient amount of time without overloading sieve?	☐	☐
4. Retained material dried to SSD condition and mass determined?	☐	☐
5. Recorded mass of material retained on appropriate sieve?	☐	☐
6. Calculated and recorded percent of material retained and passing appropriate sieve?	☐	☐
Correction for Coarse Particles		
7. Appropriate MATS Density Curve Table used to determine the corrected theoretical maximum density, based on the percent passing or retained on the appropriate sieve?	☐	☐
8. All calculations performed correctly?	☐	☐

First Attempt: Pass ☐ Fail ☐ Second Attempt: Pass ☐ Fail ☐

Signature of Examiner _____

Comments:

Washington State Department of Transportation

WSDOT Test Method T 716

Method of Random Sampling for Locations of Testing and Sampling Sites

A. Scope

1. This method outlines the procedure for selecting sampling and testing sites in accordance with accepted random sampling techniques. It is intended that all testing and sampling locations be selected in an unbiased manner based entirely on chance.

2. Testing and sampling locations and procedures are as important as testing. For test results or measurements to be meaningful, it is necessary that the sampling locations be selected at random, typically by use of a table of random numbers. Other techniques yielding a system of randomly selected locations are also acceptable.

B. Summary of Method for Selecting Random Test Location

- Method A – Determining a Random Location for Hot Mixture Asphalt (HMA) Density Tests
- Method B – Determining Random Test Location for Sampling HMA Mix, Aggregates, and Miscellaneous Materials
- Method C – Determining Random Test Location for Portland Cement Concrete for Placements Greater Than 50 CY
- Appendix A – Hot Mix Asphalt Density (400 Ton Lots)
- Appendix B – Hot Mix Asphalt Density 80 Ton (Milepost)
- Appendix C – Hot Mix Asphalt Density Test Locations for Irregular Paving Areas
- Appendix D – Hot Mix Asphalt Density 400 Ton (Milepost)

C. Procedure for Determining Random Test/Sampling Location

1. Method A – Selection of Random Location for HMA Density

   This method outlines the procedure for determining the random location of HMA Density testing sites for 80 ton sublots. Calculate the linear foot distance for an 80 ton sublot.

   Example:

   Pavement – 12 ft wide, 0.15 ft deep, 80 ton sublot

   $$\text{Tons per linear Foot} = \frac{1.0\text{ ft} \times 12\text{ ft} \times 0.15\text{ ft} \times 2.05\text{ tons}}{27} = 0.137\text{ tons per linear foot}$$

   $$\text{Sublot length} = \frac{80\text{ Tons}}{0.137\text{ tons per linear foot}} = 583.9\text{ lf (round to 584 lf)}$$

   a. Choose a number at random (see Section 2.b) to enter Table 1 to determine the X and Y multiplier. The recommended method for choosing a random number for HMA density is to use the last two digits from the most recent standard count on the nuclear gauge. A new random number is selected at the start of production each day.

b. Determine the test station and offset as follows:

Test Station = (sublot length × "X" multiplier) + beginning station of paving

Offset (from right side of pavement) = (width of pavement × "Y" multiplier)

Note: The values in the table have been set so that no measurements are taken within 0.5 LF of the edge of the lane. When a test falls within an area that is not appropriate for a test location (i.e., a bridge end, track crossing, night joint), move the testing location 25 if ahead or back on stationing, as appropriate.

Example:

Beginning Station = 168 + 75
Width = 12 ft
Sublot length = 584
Ending Station = (Beginning Station + Sublot length) = (16875 + 584) = 174 +59
Standard Count = 2951

Beginning Test Location
Enter table at line (51): "X" multiplier = 0.762, "Y" multiplier = 0.45
Stationing = (584 × 0.762) + 16875 = 173 +20
Offset = (12 × 0.45) = 5.4 ft

c. Determine subsequent testing locations as follows:

Enter the random number table on the next line in sequence (if original table entry 51, next line entry 52, then 53, etc.).

New beginning station = previous ending station
X coordinate = (sublot length × "X" multiplier) + new beginning station
Y coordinate = (width of pavement × "Y" multiplier)

Example:

Second Test Location
New beginning station = 174+59
Enter table at line (52): "X" multiplier =
0.285, "Y" multiplier = 0.88
Test station = (584 × 0.285) + 17459 = 176 +25
Offset = (12 × 0.88) = 10.56 ft from right edge

Y values are selected so that lateral locations are no closer than 0.5 feet (0.15 m) from the edge of a paving lane.											
Sequence	**X**	**Y**	**Sequence**	**X**	**Y**	**Sequence**	**X**	**Y**	**Sequence**	**X**	**Y**
1	0.290	0.17	26	0.657	0.36	51	0.762	0.45	76	0.434	0.68
2	0.119	0.79	27	0.761	0.53	52	0.285	0.88	77	0.832	0.24
3	0.694	0.51	28	0.389	0.17	53	0.347	0.54	78	0.044	0.65
4	0.722	0.26	29	0.751	0.56	54	0.962	0.60	79	0.235	0.48
5	0.784	0.32	30	0.191	0.07	55	0.203	0.84	80	0.271	0.89
6	0.953	0.61	31	0.006	0.50	56	0.803	0.46	81	0.477	0.32
7	0.576	0.08	32	0.456	0.72	57	0.672	0.10	82	0.267	0.69
8	0.069	0.14	33	0.367	0.42	58	0.306	0.36	83	0.933	0.86
9	0.691	0.48	34	0.025	0.30	59	0.223	0.77	84	0.974	0.39
10	0.973	0.26	35	0.299	0.74	60	0.116	0.67	85	0.600	0.39
11	0.328	0.31	36	0.194	0.24	61	0.768	0.15	86	0.591	0.22
12	0.468	0.18	37	0.936	0.70	62	0.893	0.79	87	0.165	0.41
13	0.183	0.53	38	0.231	0.81	63	0.504	0.43	88	0.668	0.88
14	0.669	0.41	39	0.050	0.33	64	0.043	0.33	89	0.327	0.20
15	0.971	0.49	40	0.584	0.40	65	0.284	0.60	90	0.473	0.27
16	0.336	0.68	41	0.172	0.64	66	0.196	0.78	91	0.598	0.61
17	0.314	0.40	42	0.430	0.77	67	0.742	0.34	92	0.373	0.68
18	0.508	0.38	43	0.704	0.92	68	0.941	0.66	93	0.244	0.22
19	0.347	0.74	44	0.009	0.39	69	0.531	0.51	94	0.831	0.68
20	0.877	0.08	45	0.552	0.12	70	0.478	0.32	95	0.178	0.55
21	0.712	0.40	46	0.626	0.80	71	0.228	0.34	96	0.821	0.39
22	0.193	0.16	47	0.144	0.83	72	0.008	0.77	97	0.124	0.20
23	0.976	0.16	48	0.246	0.09	73	0.002	0.76	98	0.580	0.93
24	0.997	0.55	49	0.055	0.51	74	0.330	0.44	99	0.037	0.11
25	0.930	0.42	50	0.678	0.59	75	0.089	0.26	100	0.700	0.54

Random Numbers With X and Y Value
Table 1

2. Method B – Hot Mix Asphalt (HMA) Pavement Mixture or Aggregates

   a. Determine the sublot increment of the material.

   b. Choose a number at random to enter Table 2. The recommended method for choosing a random number for HMA is to choose the last two digits from the first civilian license plate seen that day (do not use vehicles associated with the project site) or use a digital stopwatch or a computer generated random number. A new random number is selected for each new sublot.

      Note: To use the stopwatch method; randomly start and stop the stopwatch 10 or more times, then use the decimal part of the seconds as your entry point.

c. Determine the test location.

d. Calculate the first test location as follows:

Sampling Site = Sublot increment × "X" multiplier (Table 2)

Example:

The car license plane ends in 45. Use 45 as the starting point to enter random number Table 2. "X" = 0.604.

First Test Location
Sublot increment = 800 tons
Beginning tonnage: 0
Sublot increment: 800 × 0.604 = 483
Test tonnage Sample 1: Beginning tonnage + 483 tons = 483 tons

Random sample tonnage may be adjusted per sublot to accommodate field testing. Adjustments to random sample tonnage should be documented.

Determine subsequent test locations by choosing a new random number for each new sublot and using that number to enter Table 2.

Second Test Location
Sampling Site = Sublot increment × "X" multiplier (Table 2)
Beginning tonnage = 800

Example:

The computer generated number was 53. Use 53 as the starting point to enter random number Table 2. "X" = 0.266.

Enter Table 2 at (53) "X" = 0.266

Sublot increment: 800 × 0.266 = 212.8

Testing tonnage Sample 2: 800 + 213 = 1013 tons

Third Test Location
Sampling Site = Sublot increment × "X" multiplier (Table 2)
Beginning tonnage = 1600

Example:

The computer generated number was 12. Use 12 as the starting point to enter random number Table 2. "X" = 0.957.

Enter Table 2 at (12) "X" = 0.957

Sublot increment: 800 × 0.957 = 765.6

Testing tonnage Sample 2: 1600 + 766 = 2366 tons

X	X	X	X	X
(1) 0.186	(21) 0.256	(41) 0.201	(61) 0.508	(81) 0.431
(2) 0.584	(22) 0.753	(42) 0.699	(62) 0.884	(82) 0.509
(3) 0.965	(23) 0.108	(43) 0.785	(63) 0.648	(83) 0.962
(4) 0.044	(24) 0.626	(44) 0.874	(64) 0.398	(84) 0.315
(5) 0.840	(25) 0.885	(45) 0.604	(65) 0.142	(85) 0.721
(6) 0.381	(26) 0.418	(46) 0.087	(66) 0.962	(86) 0.637
(7) 0.756	(27) 0.320	(47) 0.334	(67) 0.516	(87) 0.056
(8) 0.586	(28) 0.098	(48) 0.189	(68) 0.615	(88) 0.905
(9) 0.480	(29) 0.791	(49) 0.777	(69) 0.226	(89) 0.195
(10) 0.101	(30) 0.717	(50) 0.704	(70) 0.881	(90) 0.981
(11) 0.282	(31) 0.868	(51) 0.946	(71) 0.369	(91) 0.600
(12) 0.957	(32) 0.583	(52) 0.426	(72) 0.001	(92) 0.044
(13) 0.377	(33) 0.385	(53) 0.266	(73) 0.744	(93) 0.433
(14) 0.456	(34) 0.465	(54) 0.791	(74) 0.229	(94) 0.762
(15) 0.778	(35) 0.101	(55) 0.711	(75) 0.906	(95) 0.678
(16) 0.243	(36) 0.285	(56) 0.122	(76) 0.413	(96) 0.347
(17) 0.578	(37) 0.829	(57) 0.895	(77) 0.827	(97) 0.274
(18) 0.966	(38) 0.998	(58) 0.371	(78) 0.984	(98) 0.114
(19) 0.373	(39) 0.539	(59) 0.221	(79) 0.641	(99) 0.480
(20) 0.834	(40) 0.060	(60) 0.011	(80) 0.068	(100) 0.685

Random Numbers
Table 2

3. Method C – Portland Cement Concrete (PCC) Placements Greater Than 50 CY

   Sample and test each load until two successive loads meet all applicable acceptance test requirements. Once two successive loads meet all applicable requirements, testing frequency may be decreased to one for every five trucks. The location for the decreased frequency will be determined on a random basis as described below:

   a. Determine the sublot increment for the random test sample. A sublot for PCC is based on a sampling frequency of one in five trucks after two successive trucks within specification.

      Sublot Increment = Cubic Yards per truck × 5 trucks

      Example:
      Each truck carries 10 CY of concrete
      Sublot Increment = 10 CY × 5 trucks = 50 CY

   b. Choose a two-digit number at random to enter Table 2. The recommended method for choosing a random number for Portland Cement Concrete is to choose the last two digits from the first civilian license plate seen that day (do not use vehicles associated with the project site).

      Note: Start each day of concrete placement with an new "X" value determined by chance in order to obtain a random selection.

c. Determine the sample location as follows:

Sampling Location = Sublot Increment × "X" multiplier (Table 2)

Example:

The civilian license plate ends in 37. Use 37 as the starting point to enter random number Table 2 "X"= 0.829.

Sample Location = 50 CY × 0.829 = 41 CY

d. Determine where the first sample will be taken:

Sample Yardage = (CY per truck × 2 (for the first two trucks)) + Sample Location

Example:

First Sample Location
Sample Location = (10 CY × 2) + 41 CY = 61 CY

e. The sample will be taken from the truck containing the 61st CY or in this example the seventh truckload of the pour. Allow approximately ½ CY of concrete to be discharged before sampling the truck.

Example:

(41/10) CY= 4.1 trucks + original 2 truck = 6.1 trucks
Sample is located in the first ⅓ of the 7th truck of the pour.

f. Determine subsequent sampling locations as follows:

Example:

Second Sample Location
Use the next sequential line of the chart after the beginning random number. Original number was 37, use line (38) as the starting point to enter random number Table 2.
"X" = 0.998.
Sample Location = 50 CY × 0.998 = 49.9 CY = 50 CY

g. The second sample will be taken at 120 CY

Example:

20 CY (first two trucks) + 50 (first random sample of 5 trucks) + 50 CY

The sample would come from the last ⅓ of the truck, 12th truck of the pour.

Appendix A

Hot Mix Asphalt Density (400 Ton Lots)

a. Determine the LOT size and number of tests per LOT. The *Standard Specifications* set the size of a density test lot for Hot Mix Asphalt Pavement to no greater than a single day's production or 400 tons, whichever is less, and require five tests per LOT. At the end of a day's production, the final lot may be increased to a maximum of 600 tons.

b. Convert this LOT size to an area segment of the roadway based on the roadway section and depth being constructed for the course being tested. The calculations in Example 1 show how this is performed. Table A1 has been provided to give recommend lot lengths for standard lane widths at various depths. Lot length needs to be determined to the nearest 100 feet.

Example 1
Sample Computation for Lot Length

Using nominal compacted density of 2.05 tons/cy and a 400 ton lot:

$$\text{Tons per linear foot} = \frac{1.0\ \text{(foot)} \times \text{width (feet)} \times \text{depth (feet))} \times 2.05\ \text{tons/cy}}{27}$$

$$\text{Tons per linear foot} = \frac{1.0\ \text{ft} \times 12\ \text{ft} \times 0.15\ \text{ft} \times 2.05\ \text{tons}}{27} = 0.137\ \text{tons per linear foot}$$

$$\text{Lot length} = \frac{400\ \text{tons}}{0.137\ \text{tons per linear foot}} = 2900\ \text{linear feet}$$

Lane Width	Compacted Depth	Computed Lot Length	Recommended Lot Length
12 feet	0.12	3655	3700
	0.15	2924	2900
	0.20	2193	2200
	0.25	1754	1800
11 feet	0.12	3987	4000
	0.15	3189	3200
	0.20	2392	2400
	0.25	1913	1900

Hot Mix Asphalt Density Test Lot Length 400 Ton Lot at 2.05 Tons/Cubic Yard
Table A1

LOT length may also be determined based on Nominal Designated LOT sizes. To utilize this concept, compacted mix volumes equivalent to the designated mix quantity per LOT have been determined using the nominal compacted unit weight of Hot Mix asphalt. These volumes are then converted into Density LOT lengths using the typical lane width and specified compacted depth.

c. Determine the locations of the test (or sampling) sites by using values from the random number table to determine the coordinate location on the roadway. In the table, use the "X" values as decimal fractions of the total length of the lot; use the "Y" values as fractions of the width, customarily measured from the right edge of the pavement. The values in the table have been set so that no measurements are taken within 0.5 LF (0.15 m) of the edge of the pavement. Whenever a test location is determined to fall within such an area (i.e., bridge end, track crossing, or night joint), the test location should be moved ahead or back on stationing, as appropriate, by 25 LF (8 m).

d. In order to determine which "X" and "Y" values should be used, enter the table on a line chosen by chance. Recommended procedure is selection of a line based on the last two digits from the most recent standard count on the nuclear density gage. Subsequent "X" and "Y" values are then taken from the lines that follow. Based on the specified sampling frequency, 20 lots can be accommodated by one cycle through the table. Start each shift with a set of values determined by chance in order to obtain random selection.

e. Example 2 shows the calculations for determining the testing location for asphalt pavement density.

Example 2
Test Location Within the LOT for Hot Mix Asphalt Density

For the lot: (12 ft wide, 0.15 ft deep, starting at station 168 + 75 with paving progressing ahead on station) Lot length was previously determined as 2,900 LF. Using the last two digits of the standard count, as in the example, 2951, assume "X" and "Y" values from line (51) in random number table: X = 0.762, Y = 0.45.

For the first test:
Beginning station: 168 + 75
Sublot length increment: 580 × 0.762 = 442
Width offset: 12 × 0.45 = 5.4 ft (from right edge)
Location is: station: (168+75) + 442 = 173 + 17, 5.4 ft from right edge

For the second test:
Beginning station: (168 + 75) + (580) = 174 + 55
Sublot length increment: 580 × 0.285 = 165
Width offset: 12 × 0.88 = 10.56 ft (from right edge)
Location is: station: (174 + 55) + 165 = (176 + 20), 10.56 ft from right edge

For the third test:
Beginning station: (168 + 75) + 580 + 580 = 180 + 35
Sublot length increment: 580 × 0.347 = 201
Width offset: 12 × 0.54 = 6.5 ft (from right edge)
Location is: station: (180 + 35) + 201 = (182 + 36), 6.5 ft from right edge

Appendix B

Hot Mix Asphalt Density 80 Ton (Milepost)

a. The testing location will be calculated using 80 ton sublots.

b. Convert to tons per mile using the roadway area based on the roadway width and depth. The calculations in Example 1 show how this is done. Table A2 has been provided to give you recommend lot lengths for standard lane widths at various depths. Lot length needs to be determined to the nearest .01 of a mile.

Example 1
Sample Computation for Sublot Length

$$\text{Tons per linear foot} = \text{tons per lf} = \frac{1 \text{ ft x width x depth x } 2.05 \text{ tons/cy}}{27}$$

Tons per mile = tons per lf x 5,280 lf

Sublot length = 80 tons/tons per mile

Lane Width	Compacted Depth	Computed Sublot Length
12 feet	0.12	0.14
	0.15	0.11
	0.20	0.08
	.25	0.07
11 feet	0.12	0.15
	0.15	0.12
	0.20	0.09
	0.25	0.07

Hot Mix Asphalt Density Test Sublot Length for 80 Ton Sublots at 2.05 Tons/Cubic Yard
Table A2

c. Determine the locations of the test (or sampling) sites by using values from the random number table to determine the coordinate location on the roadway. In the table, use the "X" values as decimal fractions of the total length of the lot; use the "Y" values as fractions of the width, customarily measured from the right edge of the pavement. The values in the table have been set so that no measurements are taken within 0.5 LF (0.15 m) of the edge of the pavement. Whenever a test location is determined to fall within such an area (i.e., bridge end, track crossing, or night joint), the test location should be moved ahead or back on milepost, as appropriate, by .01 mile.

d. In order to determine which "X" and "Y" values should be used, enter the table on a line chosen by chance. Recommended procedure is selection of a line based on the last two digits from the most recent standard count on the nuclear density gage. Subsequent "X" and "Y" values are then taken from the lines that follow. Start each shift with a set of values determined by chance in order to obtain random selection.

e. Example 2 shows the calculations for determining the testing location for asphalt pavement density.

Example 2
Test Location for Hot Mix Asphalt Density

For the Lot: (12 ft wide, 0.12 ft deep, starting at Milepost 1.00 with paving progressing ahead on Milepost), sublot length is 0.14 miles. Using the last two digits of the standard count, as in the example, 2951, assume "X" and "Y" values from line (51) in random number table: X = 0.762, Y = 0.45.

For the first test:

Beginning Milepost: 1.00
Sublot length increment: .14 × 0.762 = .11
Width offset: 12 × 0.45 = 5.4 ft (from right edge)
Location is: Milepost: (1.00) + .11 = 1.11, 5.4 ft from right edge

Ending Milepost = 1.00 + .14 = 1.14

For the second test:

New Beginning Milepost: previous ending milepost
Sublot length increment: .14× 0.285 =.04
Width offset: 12 × 0.88 = 10.56 ft (from right edge)
Location is: Milepost: (1.14) + .04 = (1.18), 10.56 ft from right edge

Ending Milepost = 1.14 + .14 = 1.28

For the third test:

Beginning Milepost: previous ending milepost
Sublot length increment: .14 × 0.347 =.05
Width offset: 12 × 0.54 = 6.5 ft (from right edge)
Location is: Milepost: (1.28) + .05 = (1.33), 6.5 ft from right edge

Appendix C

Hot Mix Asphalt Density Test Locations for Irregular Paving Areas

a. Track tonnage placed in the irregular shaped area until 80 tons have been placed, note the stationing.

b. Measure back to the beginning of the paving or end of the previous lot to obtain the length (this is also your beginning station).

c. Choose a random number (see Section 2.b) or use the next random number in sequence to enter the random number table.

d. Multiply the length by the "X" value and add to the beginning station to locate your testing site.

e. Measure the width at the testing station and multiply the width time the "Y" value to determine the offset of the testing site.

f. Make a sketch of the area to document the test location in the event a retest is required.

Example:

Paving began at Station 101 + 00. The tester determined that Station 105 + 75 was the end of the 80 ton lot. The random number was 45.

Calculate Testing Station

Sta 105 + 75 – Sta 101 + 00 = 475 ft
Random # 45 "X" value = 0.552
475 ft × 0.552 = 262 + 101+00=103+62

Calculating Offset

Random # 45 "Y" value = 0.12
Offset = 10.5 × 0.12 = 1.3

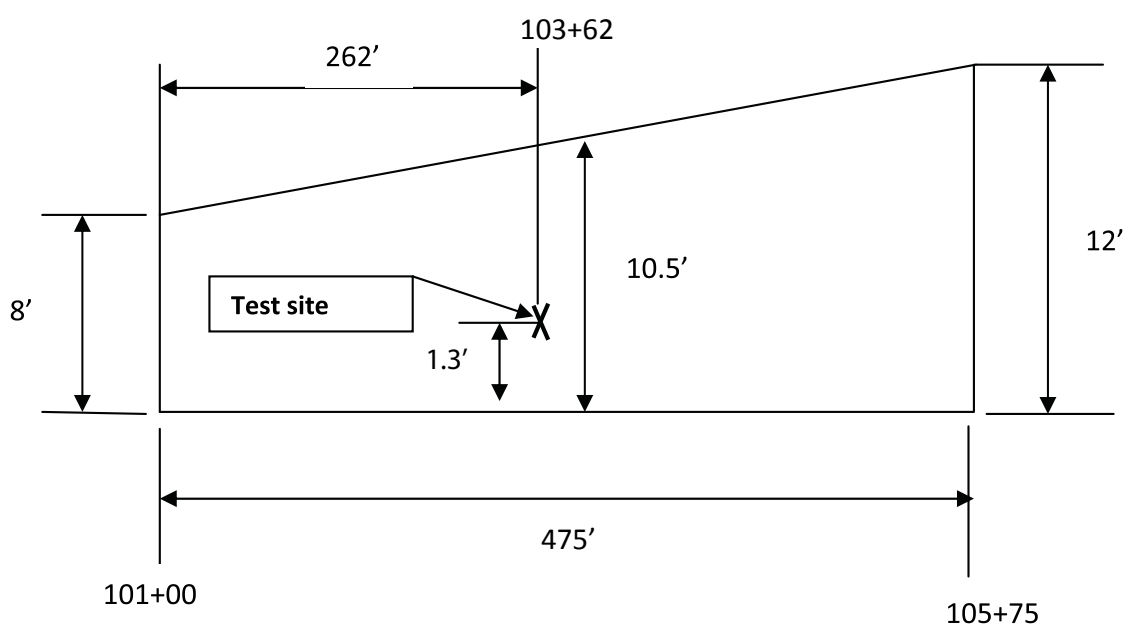

Appendix D

Hot Mix Asphalt Density 400 Ton (Milepost)

a. Determine the LOT size and number of tests per LOT. The *Standard Specifications* set the size of a density test lot for Hot Mix Asphalt Pavement to no greater than a single day's production or 400 tons, whichever is less, and require five tests per LOT. At the end of a day's production, the final lot may be increased to a maximum of 600 tons.

b. Convert this LOT size to an area segment of the roadway based on the roadway section and depth being constructed for the course being tested. The calculations in Example 1 show how this is performed. Table A3 has been provided to give you recommend lot lengths for standard lane widths at various depths. Lot length needs to be determined to the nearest .01 of a mile.

Example 1
Sample Computation for Lot Length

Using nominal compacted density of 2.05 tons/cy and a 400 ton lot:

$$\text{Tons per linear foot} = \frac{1.0\ \text{(foot)} \times \text{width (feet)} \times \text{depth (feet)} \times 2.05\ \text{tons/cy}}{27}$$

$$\text{Tons per linear foot} = \frac{1.0\ \text{ft} \times 12\ \text{ft} \times 0.15\ \text{ft} \times 2.05\ \text{tons}}{27} = 0.137\ \text{tons per linear foot}$$

0.137 tons per lineal foot x 5,280 ft = 723.36 tons per mile

$$\text{Lot length} = \frac{400\ \text{tons}}{723.36\ \text{tons per mile}} = 0.55\ \text{linear miles}$$

Lane Width	Compacted Depth	Computed Lot Length	Recommended Lot Length
12 feet	0.12	0.69	0.69
	0.15	0.55	.55
	0.20	0.42	.42
	.25	0.33	0.34
11 feet	0.12	0.76	0.76
	0.15	0.60	0.61
	0.20	0.45	0.46
	0.25	0.35	0.36

Hot Mix Asphalt Density Test Lot Length 400 Ton Lot at 2.05 Tons/Cubic Yard
Table A3

LOT length may also be determined based on Nominal Designated LOT sizes. To utilize this concept, compacted mix volumes equivalent to the designated mix quantity per LOT have been determined using the nominal compacted unit weight of Hot Mix asphalt. These volumes are then converted into Density LOT lengths using the typical lane width and specified compacted depth. The included tables present the values for LOT Lengths based on mileposts.

c. Determine the locations of the test (or sampling) sites by using values from the random number table to determine the coordinate location on the roadway. In the table, use the "X" values as decimal fractions of the total length of the lot; use the "Y" values as fractions of the width, customarily measured from the right edge of the pavement. The values in the table have been set so that no measurements are taken within 0.5 LF (0.15 m) of the edge of the pavement. Whenever a test location is determined to fall within such an area (i.e., bridge end, track crossing, or night joint) the test location should be moved ahead or back on milepost, as appropriate, by .01 mile.

d. In order to determine which "X" and "Y" values should be used, enter the table on a line chosen by chance. Recommended procedure is selection of a line based on the last two digits from the most recent standard count on the nuclear density gage. Subsequent "X" and "Y" values are then taken from the lines that follow. Based on the specified sampling frequency, 20 lots can be accommodated by one cycle through the table. Start each shift with a set of values determined by chance in order to obtain random selection.

e. Example 2 shows the calculations for determining the testing location for asphalt pavement density.

Example 2
Test Location Within the LOT for Hot Mix Asphalt Density

For the lot: (12 ft wide, 0.15 ft deep, starting at Milepost 1.00 with paving progressing ahead on Milepost) Lot length was previously determined as 0.55 miles. Using the last two digits of the standard count, as in the example, 2951, assume "X" and "Y" values from line (51) in random number table: X = 0.762, Y = 0.45.

For the first test:
Beginning Milepost: 1.00
Sublot length increment: .11 × 0.762 = .08
Width offset: 12 × 0.45 = 5.4 ft (from right edge)
Location is: Milepost: (1.00) + .08 = 1.08, 5.4 ft from right edge

For the second test:
Beginning Milepost: (1.00) + (.11) = 1.11
Sublot length increment: .11 × 0.285 = .03
Width offset: 12 × 0.88 = 10.56 ft (from right edge)
Location is: Milepost: (1.11) + .03 = (1.14), 10.56 ft from right edge

For the third test:
Beginning Milepost: (1.00) + .11 + .11 = 1.22
Sublot length increment: .11 × 0.347 = .04
Width offset: 12 × 0.54 = 6.5 ft (from right edge)
Location is: Milepost: (1.22) + .04 = (1.26), 6.5 ft from right edge

Washington State Department of Transportation

WSDOT SOP 730

Correlation of Nuclear Gauge Densities With Hot Mix Asphalt (HMA) Cores

1. When evaluating HMA compaction:

   1.1 A gauge correlation is required:

   a. For each combination of gauge and HMA Mix Design (initial JMF).

   b. When gauge mode changes (i.e., direct transmission to thin layer).

   c. When wearing course lift thickness changes per Note 1.

   d. When a gauge is recalibrated.

   Note 1: For density determined with the "Thin Layer Mode," a layer thickness change of greater than 0.08 feet requires a new correlation. For density determined with the "Direct Transmission Mode," a layer thickness change of greater than 0.15 feet requires a new gauge correlation.

   1.2 A gauge correlation is not required but may be considered by the Regional Materials Engineer when:

   a. Base material changes from the original correlation base (i.e., from a surfacing base to an asphalt base).

   b. The same gauge HMA Mix Design (Reference Mix Design) combination are used on a different contract within the same construction year.

   c. When JMF has been adjusted in accordance with *Standard Specifications* Section 9-03.8(7)A.

2. Gauge correlation is based on ten in-place HMA densities and ten cores taken at the same location as the in-place density.

   2.1 In-place HMA densities shall be determined in accordance with WSDOT FOP for WAQTC TM 8.

   2.2 Cores should be taken no later than the day following paving and before traffic has been allowed on roadway. Correlation cores are not required to be taken at record density locations. Therefore, a site outside the traveled way should be considered for worker safety, as long as the lift thickness matches that of the plan lift thickness of the record density locations.

   Note 2: If a core becomes damaged, it shall be eliminated from the average.

   Note 3: Cores may be taken sooner than the day after paving if the HMA is cooled to prevent damage during coring and removal of cores. Water, ice, or dry-ice may be used to cool the pavement. Another method of cooling that may be used is substitution of nitrogen gas or CO_2 for drilling fluids.

3. Obtain a pavement core from each of the test sites in accordance with WSDOT SOP 734. The core shall be taken in the nuclear gauge footprint.

   3.1 For "direct transmission mode," locate the core at least 1 in (25 mm) away from the edge of the drive pin hole.

   3.2 For "thin layer mode," locate the core in the approximate center of the nuclear gauge footprint. If the core thickness exceeds the plan pavement thickness by more than 0.04 feet, then the core shall be saw cut to the plan thickness prior to performing density testing. If a core thickness is less than the plan thickness by more than 0.04 feet, it shall be eliminated from the average.

4. Core densities shall be determined in conformance with WSDOT FOP for AASHTO T 166 Bulk Specific Gravity of Compacted Hot Mix Asphalt (HMA) Using Saturated Surface-Dry Specimens.

5. Correlation factor shall be determined to 0.001 using DOT Form 350-112 EF, Correlation Nuclear Gauge to Core Density, or the MATS database.

WSDOT FOP for ASTM D 6931

Standard Test Method for Indirect Tensile (IDT) Strength of Bituminous Mixtures

ASTM D 6931 has been adopted by WSDOT with the following changes:

6. Specimens

   6.1 Laboratory-Molded Specimens – Prepare the 150 mm (5.9 in) laboratory-molded specimens in accordance with WSDOT FOP for AASHTO T 312, to a height of 62 ± 1.0 mm (2.44 ± 0.04 in). A minimum of three replicates shall be prepared for each mixture.

   6.1.1 Air void (Va) of test specimen shall be 7.0 ± 1.0 %.

7. Procedure

   7.1 Section 7.1 shall be deleted in its entirety.

8. Calculation

   8.1 Calculate the IDT strength as follows:

$$S_T = \frac{2F}{3.14\,(hd)}$$

Where:

S_T = Indirect tensile strength (psi)
F = Total applied vertical load at failure (lbs)
h = Height of specimen (inches)
d = Diameter of specimen (inches)

Tester Qualification Practical Exam Checklist

Determining Indirect Tensile Strength of Compacted Bituminous Mixtures
FOP for ASTM D 6931

Participant Name _____ Exam Date _____

Procedure Element	**Yes**	**No**
1. The tester has a copy of the current procedure on hand?	☐	☐
2. All equipment is functioning according to the test procedure, and if required, has the current calibration/verification tags present?	☐	☐
3. Specimen height is 62 ± 1.0 mm (2.44 ± 0.04 in) or 38.1 mm (1.5 in) minimum for cores?	☐	☐
4. Specimen meets air void tolerance of 7.0 + 1.0 %?	☐	☐
5. Specimen placed in water bath at 77 + 2°F (25 + 1°C) for a minimum of 30 minutes but not longer than 120 minutes?	☐	☐
6. Press turned on and operating at a deformation rate of 2 in per minute?	☐	☐
7. Specimen placed on lower loading strip?	☐	☐
8. Upper loading strip lowered onto specimen with light contact?	☐	☐
9. Upper and lower loading strips parallel with each other?	☐	☐
10. Load applied at 2 in per minute?	☐	☐
11. Total applied vertical load recorded?	☐	☐
12. Indirect tensile strength in psi calculated and recorded correctly?	☐	☐

First Attempt: Pass ☐ Fail ☐ Second Attempt: Pass ☐ Fail ☐

Signature of Examiner _____

Comments:

Index

A

Abrasion resistance ..... T 96
Abrasion test:
  Los Angeles..... T 96
Absorption test:
  coarse aggregate.....T 85, T 96
  fine aggregate ..... T 84
Acidity, alkalinity, pH ..... T 200
Aggregate: (see also coarse or fine aggregate)
  degradation..... T 113
  effect on mortar strength..... T 71
  extracted, mechanical analysis..... T 30
  fine aggregate angularity..... T 304
  flat and elongated particles.....D 4791
  fracture ..... T 335
  friable particles..... T 112
  lightweight pieces ..... T 113
  material finer than 0.075 mm sieve..... T 11
  moisture content..... T 255
  organic impurities ..... T 21
  preparation for HMA mix design..... T 724
  reducing to testing size..... T 248
  sampling..... T 2, D 75
  sieve analysis ..... T 27
  splitting ..... T 248
  unit weight ..... T 19/T 19M
Aggregate degradation..... T 96, T 113
Aging, pressure .....R 28
Air content of:
  concrete, gravimetric..... T 121
  portland cement mortar..... T 137
  pressure ..... T 152
  self-compacting concrete ..... T 818
  volumetric ..... T 196
Air permeability fineness ..... T 153
Alkali silica reaction ..... T 303
Aqueous solutions..... T 200
Ash, paper .....D 586
Asphalt: (see bituminous materials)
Asphalt content ..... T 308
Asphalt roofing materials.....T 228, T 229
  specific gravity .....T 228, T 229

B

Bark mulch..... T 123
Beams, concrete .....T 177, T 802, T 808
Bending beam rheometer ..... T 313
Bitumen content ..... T 308, D 4
Bituminous materials:
  ash content ..... T 111
  bending beam rheometer..... T 313
  distillation:
    cut-back asphalt ..... T 78
  ductility .....T 51, T 113
  dynamic shear ..... T 315
  emulsions ..... T 59
  flash and fire points, open cup..... T 48
  flash point:
    tagliabue..... T 79
  flexural creep..... T 313
  float test..... T 50
  inorganic matter ..... T 111
  loss on heating..... T 47
  melting joint and crack sealant .....D 5167
  penetration..... T 49
  percentage in mixtures ..... T 308
  pressure aging .....R 28
  rheological properties.....T 313, T 315
  sampling..... T 40
  sofening point..... T 53
  soluable in organic solvents ..... T 44
  specific gravity .....T 228, T 229, D 1298
  supplier certification.....QC 2
  viscosity:
    absolute ..... T 202
    kinematic..... T 201
    rotational .....D 4402, D 2196
    saybolt..... T 72
Bituminous roofing membranes..... T 53
Bituminous mixtures:
  aging.....R 30
  air voids..... T 269
  asphalt binder content ..... T 308
  coating and stripping..... T 718
  compaction..... T 312
  cores .....T 166, T 720, SOP 730

density:
bulk specific gravity-compacted ..... T 166
cores ..... SOP 730
maximum theoretical ..... T 209
nuclear ..... TM 8, SOP 729
paraffin coated ..... T 275
ramdom testing ..... T 716
effect of water ..... T 718
extraction ..... T 164
ignition furnace ..... T 308
ignition furnace calbration ..... SOP 728
gyratory compaction ..... T 312
long-term aging ..... R 30
maximum specific gravity ..... T 209
mix design:
aggregate preparation ..... T 724
mixing ..... T 726
moisture content ..... T 329
moisture induced damage ..... T 718
nuclear density ..... TM 8, SOP 729
preparation for HMA mix design ..... T 724
random Sampling ..... T 716
recovery of asphalt ..... T 170
reducing to testing size ..... T 712
sampling ..... T 168
short-term aging ..... R 30
specific gravity- compacted HMA ..... T 166
splitting ..... T 712
stripping of ..... T 718
superpave mix design ..... SOP 732
superpave volumertics ..... SOP 731
voids ..... T 269
Bond strength, epoxy ..... C 882
Bond test joint sealants ..... T 412
Burst test ..... D 3786

C

Calcium carbide gas pressure moisture tester ..... T 217
Calibration ..... SOP 728
Capillary rise of soils ..... T 610
California profilograph ..... T 807
Cement, hydraulic:
air content of mortar ..... T 137
chemical analysis ..... T 105
chloride ion ..... T 260
compressive strength ..... T 106, T 813
fineness:
air permeability ..... T 153
grout flow cone ..... C 939
latex compatibility ..... T 313
normal consistency ..... T 129
soundness ..... T 107
specific gravity ..... T 133
supplier certification ..... QC 1
time of setting:
gilore needles ..... T 154
vicat needle ..... T 131
Chemical analysis of hydraulic cement ..... T 105
Chloride permeability of concrete ..... T 277
Chloride, water soluble ..... C 1218
Classification (standards) ..... T 59, D 2487
Clay gel absorption ..... D 2007
Clay lumps in aggregate ..... T 112
Cleveland open cup ..... T 48
Coarse aggregate: ..... T 96
clay lumps ..... T 112
flat and elongated ..... D 4791
fracture ..... T 335
lightweight particles ..... T 113
Los Angeles abrasion test ..... T 96
material finer than 0.075 mm sieve ..... T 11
sampling ..... T 2
sieve analysis ..... T 27, T 601
specific gravity and absorption ..... T 85
unit weight ..... T 19
Coating of bituminous aggregate mixtures:
paraffin for specific gravity test ..... T 275
Coatings ..... T 244
Coating, ferrous base ..... D 1186
Cohesive soil, compressive strength ..... T 208
Cohesive soils ..... T 297
Compacted hot mix asphalt ..... TM 8, T 729
Compaction and density of soil ..... T 99, T 180, T 606
Compaction of bituminous mixtures ..... T 112
Compost ..... T 420
Compressive strength:
cohesive soil ..... T 208
concrete:
molded specimens ..... T 22
specimens taken from hardened concrete T 24
epoxy resins ..... D 695
fine aggregate ..... T 71

hydraulic cement ..... T 106, T 813
unconfirmed cohesive:
rock ..... D 2938
soil ..... T 208
Concrete
air content:
gravimetric ..... T 121
pressure ..... T 152
self-compacting ..... T 818
volumetric ..... T 196
alkali-silica reaction ..... T 303
beams ..... T 177, T 802, T 808
chloride ion, total ..... T 260
chloride ion, water soluble ..... C 1218
chloride permeability ..... T 277
consistency ..... T 119
cores ..... T 810
curing materials ..... T 814
density ..... T 810
flexural strengths:
center point loading ..... T 177
speciment taken from hardened concrete T 24
third point loading ..... T 97, T 177, T 802
joint sealers, hot poured .... D 5329, T 48, T 412
joint sealers, two component rubber ..... T 412
light weight ..... C 495
molded specimens ..... T 22
preparation of specimens:
capping ..... T 231
in the field ..... T 23
in the laboratory ..... T 126
self compacting ..... T 819
rebound hammer determination ..... C 805
slump ..... T 119
sampling ..... T 141, TM 2
self compacting:
air content ..... T 818
cylinder ..... T 819
splitting tensile strength ..... T 198
temperature ..... T 310
time of setting ..... T 197
weight per cubic foot ..... T 121
yield ..... T 121
self consolidating concrete ..... C 1611
J-Ring ..... C 1621
slump flow ..... C 1611
Cone penetration of lubricating grease ..... T 217
Conflict monitor test ..... T 423
Consistency ..... T 49
Consistency, normal, of hydraulic cement ... T 59, T 129
Consolidation ..... T 297
Consolidation properties of soils ..... T 216
Constant head testing ..... T 215
Core:
concrete ..... T 810
HMA ..... T 166, T 720, SOP 730, SOP 734
Cutback asphalts ..... T 78
Cyclic segregation ..... SOP 733
Cylinders, compressive strength of concrete T 22
Curing materials ..... T 814

D

Deformation ..... T 297
Degradation ..... T 113, T 131,
Delivery ..... T 40, T 168
Demulsibility ..... T 59
Density. TM 8, T 228, T 229, T 310, SOP 615, SOP 72
Density and compaction of soil ..... T 99, T 180, T 606
Density:
cores ..... SOP 730
HMA ..... TM 8
randon numbers ..... T 716
Density of paint ..... D 1475
Density of soil in-place:
nuclear soils ..... T 310, SOP 615
Determination of bitumen ..... T 44
Directional reselectance ..... T 314
Displacement method ..... T 229
Distillate fuels ..... T 55
Distillation (general) ..... T 55, T 78
Distillation:
cut-back asphalt ..... T 78
emulsions ..... T 59
Disturbed soil samples, preparation:
dry method ..... T 87
Drainage ..... T 297
Ductility of bituminous materials ..... T 51, T 113
Dynamic shear ..... T 315

E

Elastic recovery ..... CAL 331, CAL 332
Electrical measurements ..... T 200
Electrodes..... T 200
Elongation ..... T 51
Elutriation test of aggregates ..... T 11
Embankment nuclear density..... T 310, SOP 615
Emulsified asphalts, test of ..... T 59
Environmental chamber test ..... T 425
Epoxy resins:
  bond strength..... C 882
  compressive strength..... D 695
Extracted aggregates, mechanical analysis ... T 30

F

Falling weight deflections ..... D 4694
Family of curves ..... T 272
Ferrous base, coating ..... D 1186
Fiber Length..... T 126
Filler, mineral..... T 37
Fine aggregate:
  angularity ..... T 304
  absorption..... T 84
  clay lumps in ..... T 112
  elutriation ..... T 11
  friable particles..... T 112
  lightweight material ..... T 113
  mortar strength ..... T 71
  organic impurities ..... T 21
  sampling ..... T 2
  sieve analysis ..... T 27
  specific gravity ..... T 84
  unit weight T19
Fineness of cement:
  air permeability ..... T 153
Fire point, bituminous materials ..... T 48
Fire testing ..... T 48
Flash point, bituminous materials:
  cleveland open cup..... T 48
  tagliabue..... T 79
Flat and elongated aggregate particles..... D 4791
Flexural creep..... T 313
Flexural strength concrete:
  center-point loading ..... T 177
  specimens taken from hardened concrete .. T 24
  third-point loading ..... T 802
Float test, bituminous materials ..... T 50
Flow, hot melt joint sealant..... D 5329
Fracture ..... T 335
Freezing and thawing:
  bituminous mixture ..... T 718
Friable particles..... T 112
Fuel oils..... T 72
Furol viscosity..... T 72

G

Galvanizing:
  embrittlement ..... A 143
  weight of coating..... T 65
Geotextiles:
  apparent opening size..... D 4571
  burst test ..... D 3786
  conditioning ..... T 915
  deterioration from ultraviolet light..... D 4355
  geosynthestic reinforcement ..... T 925
  grab breaking load..... D 4632
  puncture..... D 4833
  sampling ..... T 914
  sewen seams..... D 1683
  tear strength..... D 4533
  thickness..... T 923
  water permeability ..... D 4491
  wide width breaking load..... D 4595
Geosynthetic reinforcement ..... T 925
  sampling ..... D 4354
Glass electrodes ..... T 200
Glass electrodes for pH determinations ..... T 200
Granular soil..... T 215, T 606
Grab breaking load..... D 4632
Gravel (see coarse aggregate)
Grout cubes ..... T 106, T 813
Grout flow ..... C 939
Gyratory compactor ..... T 312

H

High float ..... T 50
Hydraulic cement (see cement)
Hydromulch ..... T 127
Hot mix (see bituminous mixture)

I

Identification of soils.....D 2488
Illumination:
  instrumental photometric ..... T 257
  photovolt reflectance..... T 314
  retroreslective..... T 257
Impact sampling tests..... T 244
Ignition furnace:
  calibration ..... SOP 728
  fineness.....D 1208
  HMA mixture..... T 308
  loss .....D 1208
Inorganic matter in bituminous materials ... T 111

J

J-Ring (see concrete)
Joint sealants:
  hot poured ..... D 5329, T 48, T 412
  two component rubber ..... T 412
Joint sealants - bond test ..... T 412
Joint sealars for concrete..... T 187
Joint sealant, flow test .....D 5329

K

Kinematic viscosity (general) ..... T 72
Kinematic viscosity of asphalt ..... T 201

L

Lane markers, type 2..... T 427
Latex - cement compatibility ..... T 313
Latex nonvolatile content.....D 4758
Latex paints, pH ..... T 200
Leachate Sample ..... T 127
Length of concrete cores..... T 148
Lightweight concrete .....C 495
Lighweight particles in aggregate..... T 113
Liquid limit ..... T 89
Longitudinal Joint Density..... SOP 735
Long-term aging.....R 30
Loop Amplifying..... T 427
Los Angeles abrasion ..... T 96
Los Angeles test ..... T 96
Loss on heating of asphalt compounds .....D 6

M

Manufacturing processes .....T 40, T 168
Maximum dry density .....T 99, T 180, T 606,
Mechanical analysis:
  aggregate .....T 27/T 11
  extracted aggregate .....T 27/T 11
  mineral filter..... T 37
  soil..... T 88
Mechanical mixing..... T 162
Mechanical properties of steel fasteners ..... T 606
Mechanical testing of steel.....A 370
Melting joint and creack sealant .....D 5167
Membrane, waterproofing..... T 413
Metallic materials:
  impact..... T 244
Mineral filler:
  mechanical analysis ..... T 37
Miscibility ..... T 59
Mixing, mechanical of hydraulic cement.... T 162
Mixtures, bituminous (see bituminous mixtures)
Modulus of soils..... T 307
Moisture analysis ..... T 217
Moisture content HMA ..... T 329
Moisture-density ..... T 310, SOP 615
Moisture-density relations:
  soil:
    5.5 lb rammer ..... T 99
    10 lb rammer ..... T 180
Mortar, cement:
  length change ..... T 168
  mechanical mixing ..... T 162
  water soluable chloride .....C 1218
Mulch, bark .....T 123, T 125

N

Normal consistency of hydraulic cement.... T 129
Nuclear methods:
  density .....T 310, TM 8, SOP 615, SOP 729

O

Oils ..... T 72
Open cup:
  flash and fire points ..... T 48
Organic impurities in sand ..... T 21
Organic matter in soils ..... T 267

P

Package stability ..... T 200
Paint:
condition in container ..... FTMS 3011
density .....D 1475
directional reflectance ..... E 1347
drying time ..... FTMS 4061, D 1640
fineness of dispersion of pigment .....D 1210
hiding power ..... FTMS 4122
infrared identification.....D 2621
loss on ignition.....D 1208
pigment content.....D 3723, D 2371
viscosity .....D 562
volatiles .....D 2369
volume of nonvolatiles.....D 2697
Paraffin, coating of bituminous
aggregate mixture..... T 275
pavement friction ..... T 242
Particle charge test ..... T 59
Parting compound ..... T 816
Paving materials..... T 228
Penetration ..... T 49
Penetration, bituminous materials..... T 49
Permeability ..... T 215
Petroleum products:
water in..... T 55
pH..... T 200
soils .....T 288, T 417
Photovolt reflectance..... T 314
Pitches .....T 228, T 229
Plastic fines in:
aggregates and soils ..... T 176
Plastic limit of soil ..... T 90
Plastic pavement marking tape .....D 4505
Pore-water ..... T 297
Portland cement (see cement)
Pour point..... T 187
Pouring temperature..... T 50
Power interruption test..... T 424
Preparation of concrete specimens:
capping..... T 231
in field ..... T 23
in laboratory ..... T 126
self compacting ..... T 819
Preparation of disturbed soil samples for test:
dry method ..... T 87
Pressure aging .....R 28
Pressure testing ..... T 297
Profilograph, California ..... T 807
Pycnometer .....T 228, T 209

R

Random sampling ..... T 716
Rebound hammer determination.....C 805
Recovery of asphalt.....TP 2
Reflective materials and devices... T 257, D 4956
Residue.....T 59, T 78
Resiliend modulus of soils ..... T 307
Resistance (R valve) of soil ..... T 611
Resistivity of soil .....T 288, T 417
Retroreflectivity ..... T 429
Reverse-flow viscometers ..... T 201
Ring-and-ball apparatus ..... T 53
Ring-and-ball method, bituminous materials T 53
Road oil ..... T 201
Rolling thin film oven ..... T 240
Rotational viscosity..... T 316, D 4402, D 2196

S

Sampling:
aggregate ..... T 2
bituminous materials..... T 40
bituminous mixtures.....T 168, SOP 734
concrete .....TM 2
fresh concrete ..... T 141
gravel..... T 2
geosynthetics.....D 4354
geotextiles, sampling..... T 914
sand ..... T 2
slag ..... T 2
stone ..... T 2
stone block ..... T 2
Sampling concrete/mortar/aggregates..... T 2
Sand (see fine aggregate)
Sand equivalent test ..... T 176
Saybolt-Furol viscometers .....T 59, T 72
Self compacting concrete:
air content..... T 818
cylinders..... T 819
Semi-solid materials..... T 40, T 49, T 168, T 228
Settlement ..... T 59
Sewen seams .....D 1683
Short-term aging .....R 30

Sieve analysis:
aggregate ..... T 27
bark Mulch ..... T 123
extracted aggregate ..... T 30
mineral filler ..... T 37
soil ..... T 88, T 601
Signal controlers ..... T 421, T 422, T 423, T 424, T 425, T 427, T 428, SOP 429
Signs ..... T 257
Skid resistance ..... T 242
Slag (see coarse aggregate)
Slump-self consolidating ..... D 1611
Slump test of concrete ..... T 119
Softening point of bituminous material ..... T 53
Soil permeability ..... T 215
Soils:
capillary rise ..... T 610
classification ..... D 2487
compaction and density correction for coarse particles ..... T 99
consolidation properties ..... T 216
density in place ..... T 310, SOP 615
dry preparation for test ..... T 87
family of curves ..... T 272
identification ..... D 2488
liquid limit ..... T 89
mechanical analysis ..... T 88
moisture:
by calcium carbide method ..... T 217
by laboratory determination ..... T 265
moisture-density relations: 5.5 lb rammer . T 99
moisture-density relations: 10-lb rammer T 180
nuclear ..... T 310, SOP 615
organic matter ..... T 267
permeability ..... T 215
pH ..... T 289
plastic limit ..... T 90
plasticity index ..... T 90
preparation for tests:
dry method ..... T 87
sand equivalent test ..... T 176
specific gravity ..... T 100
unconfined compressive strength ..... T 208
resilient modulus of soils ..... T 307
resistance (r-valve) ..... T 611
resistivity ..... T 288, T 417
Solid phase materials ..... T 40, T 49
Solubility of bituminous materials ..... T 44
Solvita test ..... T 420
Soundness test for:
hydraulic cement ..... T 107
Portland cement ..... T 107
Specific gravity:
bituminous materials ..... T 228, T 229
bituminous mixtures ..... T 166, T 209, T 275
coarse aggregate ..... T 85
fine aggregate ..... T 84
hydraulic cement ..... T 133
maximum, for bituminous paving mixtures ..... T 209
petroleum ..... D 1298
soil ..... T 100
tar ..... T 228
water ..... D 1424
Spike test ..... T 422
Splitting:
aggregate ..... T 248
hot mix asphalt ..... T 712
Steel:
impact ..... T 244
mechanical testing ..... A 370
testing ..... T 244
Stiffness of asphalt ..... T 313
Stone: (see also coarse aggregate)
sampling ..... T 2
Storage stability ..... T 59
Stormer viscosity ..... D 562
Strength of mortar ..... T 106, T 813
Stress ..... T 297
Stripping of bituminous aggregate mixtures ..... T 706, T 718
Superpave mix design ..... SOP 733
Superpave volumertics ..... SOP 731

T

Tar:
specific gravity ..... T 228
Tars ..... T 50
Tear strength, geotextiles ..... D 4533
Temperature tests ..... T 187, T 309
Tension Tensile) properties/tests ..... T 51
Thermoplastic insulation ..... D 2633

Time of setting:
cement, hydraulic:
gillmore needles ..... T 159
vicat needle ..... T 131
concrete ..... T 197
Traffic signal controllers .....T 421, T 422, T 423, T 424, T 425, T 427, T 428, SOP 429
Triaxial compression ..... T 297
Type 2 lane markers ..... T 426

U

Unconsigned compressure strength of soil
rock ..... T 208, D 2938
Uncrushed solid material ..... T 40
Unit weight of aggregate..... T 19

V

Vacuum capillary viscometer ..... T 202
Vicuum testing ..... T 297
Viscometers.....T 59, T 202, D 562
Viscosity.....T 59, T 72, T 202, D 562
Viscosity tests:
absolute ..... T 202
kinematic..... T 201
rotational ..... T 316, D 4402, D 2196
saybolt ..... T 72
stormer .....D 562
Volatile matter content ..... T 78
Voltage spike test ..... T 422
Volumertic properties..... SOP 731

W

Washing test for aggregates ..... T 11
Water content .....T 55, T 59
Water displacement test ..... T 229
Waterproofing membrane..... T 413
Water penetration ..... T 49
Water permeability.....D 4492
Water soluable chloride in concrete .....C 1218
Water, test for:
emulsions ..... T 59
petroleum products..... T 55
specific gravity .....D 1427
Weight per cubic foot:
aggregates ..... T 19
Wire, test for:
cross linked insulation.....D 470
Thermoplastic insulation.....D 2633
weight of coating..... T 65

Z

Zinc coating:
weight..... T 65