Washington State
Department of Transportation

Construction Manual

M 41-01.25

April 2016

Engineering and Regional Operations
State Construction Office

Americans with Disabilities Act (ADA) Information

Materials can be made available in an alternate format by emailing the WSDOT Diversity/ADA Affairs Team at wsdotada@wsdot.wa.gov or by calling toll free, 855-362-4ADA (4232). Persons who are deaf or hard of hearing may make a request by calling the Washington State Relay at 711.

Title VI Notice to the Public

It is Washington State Department of Transportation (WSDOT) policy to ensure no person shall, on the grounds of race, color, national origin, or sex, as provided by Title VI of the Civil Rights Act of 1964, be excluded from participation in, be denied the benefits of, or be otherwise discriminated against under any of its federally funded programs and activities. Any person who believes his/her Title VI protection has been violated may file a complaint with WSDOT's Office of Equal Opportunity (OEO). For Title VI complaint forms and advice, please contact OEO's Title VI Coordinator at 360-705-7082 or 509-324-6018.

To get the latest information on WSDOT publications, sign up for individual email updates at www.wsdot.wa.gov/publications/manuals.

Washington State Department of Transportation
Engineering and Regional Operations
State Construction Office
PO Box 47354
Olympia, WA 98504-7354
www.wsdot.wa.gov/biz/construction/default.cfm

Contents

Chapter 1 Administration 1-1

1-00 Agency Organization and Relations With Other Organizations 1-1
GEN 1-00.1 Purpose and Scope of Manual 1-1
GEN 1-00.2 Definition of Terms 1-1
GEN 1-00.3 WSDOT State Construction Office 1-1
GEN 1-00.3(1) State Construction Engineer 1-2
GEN 1-00.3(2) State Materials Laboratory 1-5
GEN 1-00.4 Region Organization 1-6
GEN 1-00.4(1) Regional Administrator 1-6
GEN 1-00.4(2) Regional Construction Manager 1-6
GEN 1-00.4(3) Regional Administration of the Inspector Certification Program 1-7
GEN 1-00.5 Relationship With Other Agencies 1-10
GEN 1-00.5(1) Federal Highway Administration 1-10
GEN 1-00.5(2) Local Agencies 1-10
GEN 1-00.5(3) Other Federal, State, and Local Agencies 1-10
GEN 1-00.6 Relating to the Public 1-11
GEN 1-00.7 Application of Contract Provisions, Plans, and Specifications 1-11
GEN 1-00.7(1) Construction Contracts Information System (CCIS) . . . 1-11
GEN 1-00.7(2) Order Lists 1-13
GEN 1-00.8 Emergency Work Performed Under the Contract 1-14
GEN 1-00.9 Contractor's Performance Reports 1-14
GEN 1-00.10 Stewardship 1-14

1-02 Bid Procedures and Conditions 1-20
SS 1-02.2 Plans and Specifications 1-20
SS 1-02.4 Examination of Plans, Specifications, and Site of Work 1-20

1-03 Award and Execution of Contract 1-21
SS 1-03.2 Award of Contract 1-21
SS 1-03.3 Execution of Contract 1-21

1-04 Scope of the Work 1-22
SS 1-04.3 Reference Information 1-22
SS 1-04.4 Changes 1-22
SS 1-04.4(1) Minor Changes 1-31
SS 1-04.4(2) Value Engineering Change Proposal (VECP) 1-33
SS 1-04.5 Procedure and Protest by the Contractor 1-34
SS 1-04.6 Variation in Estimated Quantities 1-34
SS 1-04.7 Differing Site Conditions (Changed Conditions) 1-38

1-05 Control of Work 1-39
SS 1-05.1 Authority of the Engineer 1-39
SS 1-05.3 Plans and Working Drawings 1-48
SS 1-05.4 Conformity With and Deviations From Plans and Stakes 1-53
SS 1-05.7 Removal of Defective and Unauthorized Work 1-56
SS 1-05.9 Equipment 1-58
SS 1-05.10 Guarantees. 1-59
SS 1-05.14 Cooperation With Other Contractors 1-59

1-06 Control of Material 1-60
SS 1-06.3 Manufacturer's Certificate of Compliance 1-60
SS 1-06.6 Recycled Materials 1-61
SS 1-06.6(1) Recycling of Construction Aggregate and Concrete Materials 1-61

1-07 Legal Relations and Responsibilities to the Public. 1-62
SS 1-07.1 Laws to be Observed. 1-62
SS 1-07.4 Sanitation 1-68
SS 1-07.4(2) Health Hazards 1-68
SS 1-07.5 Environmental Regulations. 1-69
SS 1-07.9 Wages 1-75
SS 1-07.9(1) General 1-75
SS 1-07.9(2) Posting Notices 1-80
SS 1-07.9(5) Required Documents. 1-81
SS 1-07.11 Requirements for Nondiscrimination 1-84
SS 1-07.11(1) General Application 1-84
SS 1-07.11(2) Contractual Requirements. 1-85
SS 1-07.11(10) Records and Reports 1-95
SS 1-07.12 Federal Agency Inspection 1-99
SS 1-07.13 Contractor's Responsibility for Work 1-101
SS 1-07.13(1) General 1-101
SS 1-07.13(2) Relief of Responsibility for Completed Work 1-101
SS 1-07.13(3) Relief of Responsibility for Damage by Public Traffic 1-102
SS 1-07.1(4) Repair of Damage 1-102
SS 1-07.14 Responsibility for Damage 1-103
SS 1-07.15 Temporary Water Pollution Prevention. 1-103
SS 1-07.15(1) Spill Prevention, Control, and Countermeasures Plan . 1-103
SS 1-07.16 Protection and Restoration of Property. 1-104
SS 1-07.16(1) Private/Public Property 1-104
SS 1-07.16(4) Archaeological and Historical Objects 1-104
SS 1-07.17 Utilities and Similar Facilities 1-107
SS 1-07.18 Public Liability and Property Damage Insurance 1-110
SS 1-07.23 Public Convenience and Safety 1-110
SS 1-07.23(1) Construction Under Traffic 1-110
SS 1-07.23(2) Construction and Maintenance of Detours 1-115

1-08 Prosecution and Progress 1-116
SS 1-08.1 Subcontracting 1-116
SS 1-08.1(1) Prompt Payment, Subcontract Completion and Return of Retainage Withheld. 1-118
SS 1-08.3 Progress Schedules 1-119
SS 1-08.3(1) General Requirements. 1-119
SS 1-08.3(2) Progress Schedule Types. 1-121
SS 1-08.3(3) Schedule Updates 1-124
SS 1-08.4 Prosecution of Work 1-124
SS 1-08.5 Time For Completion 1-125
SS 1-08.6 Suspension of Work 1-128
SS 1-08.8 Extensions of Time 1-129
SS 1-08.9 Liquidated Damages 1-130
SS 1-08.10 Termination of Contract 1-132
SS 1-08.10(2) Termination for Public Convenience 1-133

1-09 Measurement and Payment. 1-134
SS 1-09.4 Equitable Adjustment 1-134
SS 1-09.6 Force Account. 1-136
SS 1-09.8 Payment for Material on Hand 1-145
SS 1-09.9 Payments. 1-146
SS 1-09.9(1) Retainage. 1-157
SS 1-09.10 Payment for Surplus Processed Materials. 1-158
SS 1-09.11 Disputes and Claims 1-158
SS 1-09.12 Audits 1-160

1-10 Temporary Traffic Control 1-162
SS 1-10.1 General 1-162
SS 1-10.2 Traffic Control Management. 1-164
SS 1-10.2(1) General 1-165
SS 1-10.2(2) Traffic Control Plans. 1-166
SS 1-10.2(3) Conformance to Established Standards 1-167
SS 1-10.3 Traffic Control Labor, Procedures, and Devices. 1-168
SS 1-10.3(1) Traffic Control Labor 1-168
SS 1-10.3(2) Traffic Control Procedures 1-169
SS 1-10.3(3) Traffic Control Devices. 1-170
SS 1-10.4 Measurement. 1-171
SS 1-10.5 Payment. 1-173

Chapter 2 Earthwork 2-1

2-01 Clearing, Grubbing, and Roadside Cleanup 2-1
SS 2-01.3 Construction Requirements. 2-1
SS 2-01.3(1) Clearing. 2-1
SS 2-01.3(2) Grubbing 2-1
SS 2-01.3(4) Roadside Cleanup 2-2
SS 2-01.4 Measurement. 2-2

2-02 Removal of Structures and Obstructions 2-3
SS 2-02.3 Construction Requirements. 2-3

2-03 Roadway Excavation and Embankment 2-3
SS 2-03.1 Description 2-3
GEN 2-03.1(1) 2-3
SS 2-03.3 Construction Requirements. 2-7
SS 2-03.3(1) Widening Of Cuts 2-7
SS 2-03.3(2) Rock Cuts 2-8
SS 2-03.3(3) Excavation Below Grade 2-9
SS 2-03.3(5) Slope Treatment 2-9
SS 2-03.3(7) Disposal Of Surplus Material 2-9
SS 2-03.3(11) Slides. 2-10
SS 2-03.3(12) Overbreak 2-11
SS 2-03.3(13) Borrow 2-12
SS 2-03.3(14) Embankment Construction 2-13
GEN 2-03.4/5 Measurement and Payment. 2-20
GEN2-03.4/5(2) Computer Generated Quantities 2-20
GEN 2-03.4/5(3) Use of Photogrammetry Service 2-20

2-04 Haul. 2-21
SS 2-04.4 Measurement. 2-21

2-06 Subgrade Preparation 2-22
SS 2-06.3 Construction Requirements. 2-22

2-07 Watering 2-22
SS 2-7.3 Construction Requirements. 2-22

2-09 Structure Excavation. 2-23
SS 2-09.3 Construction Requirements. 2-23
SS 2-09.3(1) General Requirements. 2-23
SS 2-09.3(2) Classification of Structure Excavation 2-24
SS 2-09.3(3) Construction Requirements, Structure Excavation, Class A 2-24

2-10 Ditch and Channel Excavation 2-27
SS 2-10.3 Construction Requirements. 2-27

2-11 Trimming and Cleanup 2-27
SS 2-11.3 Construction Requirements. 2-27

2-12 Construction Geotextile 2-27
SS 2-12.3 Construction Requirements. 2-27

Chapter 3 Aggregate Production and Acceptance 3-1

3-01 Production From Quarry and Pit Sites 3-1
GEN 3-01.1 General Instructions 3-1
GEN 3-01.2 Outline of Inspector's Duties. 3-1
SS 3-01.2 Material Sources, General Requirements 3-2
SS 3-01.2(2) Preparation of Site. 3-2
SS 3-01.2(4) Production Requirements 3-2
SS 3-01.2(5) Final Cleanup 3-3
SS 3-01.3 State Furnished Material Sources 3-4
SS 3-01.4 Contractor Furnished Material Sources 3-4
SS 3-01.5 Measurement. 3-5

3-02 Stockpiling Aggregates 3-6
SS 3-02.2 General Requirements. 3-6
SS 3-02.2(6) Construction of Stockpiles 3-6
SS 3-02.4 Measurement. 3-7

3-03 Site Reclamation 3-7
GEN 3-03.1 General 3-7
SS 3-03.2 General Requirements. 3-8
SS 3-03.2(1) Contracting Agency-Provided Sources 3-8
SS 3-03.2(2) Contractor Provided Sources 3-8
SS 3-03.3 Reclamation Plans. 3-8

Chapter 4 Bases 4-1

4-02 Gravel Base. 4-1
GEN 4-02.1 General Instructions 4-1
SS 4-02.2 Construction Requirements. 4-1

4-04 Ballast and Crushed Surfacing 4-1
GEN 4-04.1 General Instructions 4-1
GEN 4-04.2 Inspector’s Checklist. 4-2
SS 4-04.3 Construction Requirements. 4-2
SS 4-04.3(2) Subgrade 4-2
SS 4-04.3(3) Mixing. 4-2
SS 4-04.3(4) Placing and Spreading. 4-2
SS 4-04.3(5) Shaping and Compaction 4-3
SS 4-04.3(6) Keystone 4-5
SS 4-04.4 Measurement. 4-5

Chapter 5 Surface Treatments and Pavements 5-1

5-01 Cement Concrete Pavement Rehabilitation 5-1
SS 5-01.1 Description 5-1
SS 5-01.3 Construction Requirements. 5-1
SS 5-01.3(4) Replace Portland Cement Concrete Panel 5-2
SS 5-01.3(5) Partial Depth Spall Repair 5-3
SS 5-01.3(6) Dowel Bar Retrofits 5-3
SS 5-01.3(8) Sealing Existing Transverse and Longitudinal Joints 5-4
SS 5-01.3(9) Portland Cement Concrete Pavement Grinding 5-4

5-02 Bituminous Surface Treatment 5-5
GEN 5-02.1 General Instructions 5-5
GEN 5-02.2 Duties Before Construction. 5-5
GEN 5-02.3 Inspection and Sampling of Materials 5-5
GEN 5-02.4 Miscellaneous Inspection Duties 5-6
GEN 5-02.5 Reports and Records 5-7
SS 5-02.3 Construction Requirements. 5-7
SS 5-02.3(1) Equipment. 5-7
SS 5-02.3(2) Preparation Of Roadway Surface 5-8
SS 5-02.3(3) Application of Emulsified Asphalt and Aggregate 5-9
SS 5-02.3(5) Application of Aggregates 5-10
SS 5-02.3(9) Protection of Structures. 5-11

5-03 Vacant 5-11

5-04 Hot Mix Asphalt 5-11
GEN 5-04.1 General Instructions 5-11
GEN 5-04.2 Inspector Roles and Responsibilities 5-14
GEN 5-04.3 Street Inspection 5-15
GEN 5-04.4 How to 5-19
SS 5-04.3 Construction Requirements. 5-20
SS 5-04.3(1) HMA Mixing Plant 5-20
SS 5-04.3(5) Conditioning of Existing Surface 5-24
SS 5-04.3(7) Preparation of Aggregates. 5-24
SS 5-04.3(9) Spreading and Finishing 5-25

5-05 Cement Concrete Pavement 5-32
GEN 5-05.1 General Instructions 5-32
GEN 5-05.2 Testing Equipment/Reports. 5-33
GEN 5-05.2A Testing Equipment 5-33
GEN 5-05.2B Records 5-33
GEN 5-05.3 Checklists 5-33
GEN 5-05.3A Pre-Pave. 5-33
GEN 5-05.3B Paving 5-34
GEN 5-05.3C Post Pave 5-35

SS 5-05.3 Construction Requirements . . . 5-35
SS 5-05.3(3) Equipment . . . 5-35
SS 5-05.3(5) Mixing Concrete . . . 5-36
SS 5-05.3(6) Subgrade . . . 5-36
SS 5-05.3(7) Placing, Spreading, and Compacting Concrete . . . 5-36
SS 5-05.3(8) Joints . . . 5-38
SS 5-05.3(10) Tie Bars and Dowel Bars . . . 5-40
SS 5-05.3(11) Finishing . . . 5-41
SS 5-05.3(12) Surface Smoothness . . . 5-41
SS 5-05.3(13) Curing . . . 5-42
SS 5-05.3(17) Opening to Traffic . . . 5-43
SS 5-05.3(22) Repair of Defective Pavement Slabs . . . 5-43
SS 5-05.5 Payment . . . 5-43
SS 5-05.5(1) Pavement Thickness . . . 5-43

Chapter 6 Structures . . . 6-1

6-01 General Requirements for Structures . . . 6-1
GEN 6-01.1 Bridge Construction De-Briefing Session . . . 6-1
GEN 6-01.2 General Inspection Procedures . . . 6-1
GEN 6-01.3 Approval of Materials . . . 6-2
GEN 6-01.4 Safety Nets and Staging . . . 6-2
SS 6-01.2 Foundations . . . 6-3
SS 6-01.3 Clearing the Site . . . 6-3
SS 6-01.4 Appearance of Structures . . . 6-4
SS 6-01.6 Load Restrictions on Bridges Under Construction . . . 6-4
SS 6-01.9 Working Drawings . . . 6-4
SS 6-01.12 Final Cleanup . . . 6-5

6-02 Concrete Structures . . . 6-6
GEN 6-02.1 Use of Epoxy Resins . . . 6-6
SS 6-02.3 Construction Requirements . . . 6-7
SS 6-02.3(2) Proportioning Materials . . . 6-7
SS 6-02.3(4) Ready Mix Concrete . . . 6-7
SS 6-02.3(5) Acceptance Concrete . . . 6-8
SS 6-02.3(6) Placing Concrete . . . 6-11
SS 6-02.3(9) Vibration of Concrete . . . 6-16
SS 6-02.3(10) Bridge Decks and Bridge Approach Slabs . . . 6-17
SS 6-02.3(11) Curing Concrete . . . 6-18
SS 6-02.3(12) Construction Joints . . . 6-19
SS 6-02.3(14) Finishing Concrete Surfaces . . . 6-20
SS 6-02.3(17) Forms and Falsework . . . 6-21
SS 6-02.3(24) Reinforcement . . . 6-24
SS 6-02.3(25) Prestressed Concrete Girders . . . 6-27
SS 6-02.3(26) Cast-In-Place Prestressed Concrete . . . 6-30
SS 6-02.4/5 Measurement and Payment . . . 6-35

6-03 Steel Structures 6-37
SS 6-03.3(7) Shop Plans. 6-37
SS 6-03.3(9) Handling, Storing and Shipping of Materials 6-38
SS 6-03.3(10) Straightening Bent Material 6-39
SS 6-03.3(25) Welding and Repair Welding 6-39
SS 6-03.3(30) Painting 6-39
SS 6-03.3(32) Assembling and Bolting 6-39
SS 6-03.3(33) Bolted Connections. 6-40
SS 6-03.3(33)B Bolting Inspection. 6-43
SS 6-03.3(35) Setting Anchor Bolts. 6-45
SS 6-03.3(36) Setting and Grouting Masonry Plates 6-45
SS 6-03.3(39) Swinging the Span 6-46
SS 6-03.4/5 Measurement and Payment. 6-46

6-04 Timber Structures 6-47
SS 6-04.3(3) Construction Requirements. 6-47
SS 6-04.3(1) Storage and Handling Material 6-47
SS 6-04.3(3) Shop Details 6-47
SS 6-04.3(4) Field Treatment of Cut Surfaces, Bolt Holes, and Contact Surfaces 6-47
SS 6-04.3(18) Painting 6-47
SS 6-04.4/5 Measurement and Payment. 6-47

6-05 Piling. 6-48
GEN 6-05.1 Vibration Monitoring during Pile Driving 6-48
GEN 6-05.2 Pile Driving Records. 6-48
SS 6-05.3 Construction Requirements. 6-48
SS 6-05.3(2) Ordering Piling 6-48
SS 6-05.3(3) Manufacture of Precast Concrete Piling 6-49
SS 6-05.3(6) Splicing Steel Casings and Steel Piles 6-49
SS 6-05.3(7) Storage and Handling 6-49
SS 6-05.3(9) Pile Driving Equipment 6-50
SS 6-05.3(10) Test Piles 6-52
SS 6-05.3(11) Driving Piles 6-53
SS 6-05.3(13) Treatment of Timber Pile Heads 6-55
SS 6-05.3(15) Completion of Cast-In-Place Concrete Piles 6-55
SS 6-05.4/5 Measurement and Payment. 6-55

6-06 Bridge Railings 6-56
GEN 6-06.1 Railing Alignment. 6-56
SS 6-06.4/5 Measurement and Payment. 6-56

6-07 Painting 6-56
GEN 6-07.1 General 6-56
SS 6-07.3(9) Painting New Steel Structures 6-57
SS 6-07.3(10) Painting Existing Steel Structures. 6-58

6-08 Waterproofing 6-59
GEN 6-08.1 General 6-59

6-10 Concrete Barrier 6-59
SS 6-10.3 Construction Requirements. 6-59
SS 6-10.3(2) Cast-In-Place Concrete Barrier 6-59

6-19 Shafts. 6-61
SS 6-19 Shafts. 6-61

Chapter 7 Drainage Structures, Storm Sewers, Sanitary Sewers, Water Mains, and Conduits 7-1

7-01 Drains 7-1
GEN 7-01.1 Roadway Subdrainage 7-1

7-02 Culverts. 7-1
GEN 7-02.1 General Instructions 7-1
GEN 7-02.2 Roadway Surface Drainage. 7-2
GEN 7-02.3 Design of Culverts 7-2
SS 7-02.3(1) Placing Culvert Pipe - General 7-3
SS 7-02.5 Payment. 7-6

7-03 Structural Plate Pipe, Pipe Arch, Arch, and Underpass 7-6
GEN 7-03.1 General Instructions 7-6
SS 7-03.3(2) Assembling 7-6

7-04 Storm Sewers 7-7
GEN 7-04.1 General Instructions 7-7
SS 7-04.3 Construction Requirements. 7-7
SS 7-04.5 Payment. 7-7

Chapter 8 Miscellaneous Construction 8-1

8-01 Erosion Control and Water Pollution Control. 8-1
GEN 8-01.1 Introduction. 8-1
GEN 8-01.2 Record Keeping and Reporting. 8-2
SS 8-01.3 Construction Requirements. 8-3
SS 8-01.3(1) General 8-3
SS 8-01.3(2) Seeding, Fertilizing, and Mulching. 8-8

8-02 Roadside Restoration 8-10
GEN 8-02.1 General 8-10
GEN 8-02.2 Landscape Terminology 8-12
GEN 8-02.3 Reference Reading 8-15
SS 8-02.2 Materials 8-15
SS 8-02.3 Construction Requirements. 8-16
SS 8-02.3(2) Roadside Work Plan 8-16
SS 8-02.3(5) Planting Area Preparation 8-17
SS 8-02.3(7) Layout of Planting. 8-18
SS 8-02.3(8) Planting 8-18
SS 8-02.3(9) Pruning, Staking, Guying, and Wrapping 8-25
SS 8-02.3(12) Completion of Initial Planting 8-25
SS 8-02.3(13) Plant Establishment. 8-25
SS 8-02.5 Payment. 8-27

8-03 Irrigation System 8-27
GEN 8-03.1 General 8-27
GEN 8-03.2 Inspection 8-27
SS 8-03.2 Materials 8-28
8-03.3 Construction Requirements 8-28
8-03.3(1) Layout of Irrigation System 8-28
SS 8-03.3(5) Installation 8-28
SS 8-03.3(6) Electrical Wire Installation 8-29
SS 8-03.3(10) As-Built Plans 8-30
SS 8-03.3(12) Cross-connection Control Device Installation 8-30
SS 8-03.3(13) Irrigation Water Service 8-31
SS 8-03.3(14) Irrigation Electrical Service 8-31

8-04 Curbs, Gutters, Spillways, and Inlets 8-31
SS 8-04.3 Construction Requirements 8-31
SS 8-04.3(1) Cement Concrete Curbs, Gutters, and Spillways 8-31

8-11 Guardrail 8-32
GEN 8-11.1 General Instructions 8-32
SS 8-11.3 Construction Requirements 8-32
SS 8-11.3(1) Beam Guardrail 8-32

8-12 Chain Link Fence and Wire Fence 8-33
SS 8-12.3 Construction Requirements 8-33

8-14 Cement Concrete Sidewalks 8-33
SS 8-14.3 Construction Requirements 8-33
SS 8-14.3(2) Forms 8-33
SS 8-14.3(3) Placing and Finishing Concrete 8-33

8-20 Illumination, Traffic Signal Systems, and Electrical 8-34
GEN 8-20.1 General 8-34
GEN 8-20.2 Inspection 8-34
SS 8-20.2 Materials 8-35
SS 8-20.2(1) Equipment List and Drawings 8-35
SS 8-20.3 Construction Requirements 8-37
SS 8-20.3(4) Foundations 8-37
SS 8-20.3(5) Conduit 8-37
SS 8-20.3(6) Junction Boxes, Cable Vaults, and Pull Boxes 8-39
SS 8-20.3(8) Wiring 8-39
SS 8-20.3(9) Bonding, Grounding 8-39
SS 8-20.3(10) Service, Transformer, and Intelligent Transportation System (ITS) Cabinets 8-39
SS 8-20.3(11) Testing 8-40
SS 8-20.3(13) Illumination Systems 8-40
SS 8-20.3(14) Signal Systems 8-41
SS 8-20.3(17) ”As-Built” Plans 8-41

8-21 Permanent Signing 8-44
GEN 8-21.1 General 8-44
SS 8-21.2 Materials 8-44
SS 8-21.3 Construction Requirements. 8-44
SS 8-21.3(1) Location of Signs 8-44
SS 8-21.3(2) Placement of Signs 8-45
SS 8-21.3(9) Sign Structures 8-45
SS 8-21.3(12) Steel Sign Posts and Structures. 8-46

Chapter 9 Materials 9-1

9-1 General 9-1
9-1.1 PE Authority for Materials Approval and Acceptance 9-1
9-1.1A Sampling and Testing for Small Quantities of Materials . 9-2
9-1.1B Reducing Frequency of Testing 9-3
9-1.1C Project Engineer Discretionary Materials Approval/ Acceptance 9-4
9-1.1D Optional Approval/Acceptance for Materials 9-5
9-1.2 Control of Materials 9-8
9-1.2A Materials Management Computer Programs 9-9
9-1.2B Materials Forms 9-9
9-1.2C Record of Materials (ROM) 9-10
9-1.2D Materials Tracking Program, MTP 9-11
9-1.2E Certification of Materials Origin. 9-12
9-1.2F Project Material Certification 9-15
9-1.3 Approval of Materials. 9-17
9-1.3A Aggregate Source Approval and the Qualified Products List 9-17
9-1.3B Request for Approval of Material – Submittal 9-18
9-1.3C Low Risk Materials. 9-22
9-1.4 Acceptance Methods for Materials 9-24
9-1.4A Testing. 9-24
9-1.4B Fabricated Items 9-26
9-1.4C Visual Acceptance. 9-27
9-1.4D Manufacturer's Certificate of Compliance 9-27
9-1.4E Miscellaneous Certificate of Compliances 9-28
9-1.4F Shop Drawings 9-28
9-1.4G Catalog Cuts 9-28
9-1.5 Field Verification of Materials 9-29

9-2 Materials Fabrication Inspection Office – Inspected Items Acceptance. 9-29
9-2.1 General 9-29
9-2.1A Acceptance of Fabricated Items 9-30
9-2.2 Inspected Items, Stamps, and Tagging Identification 9-30
9-2.2A Inspected Stamp Identification 9-30
9-2.2B Inspected Stamp and Tag Identification 9-31
9-2.2C Inspected Tag Identification 9-32
9-2.2D Inspected Casting Stamp Identification 9-32

9-2.3 Permanent Sign Inspection 9-33
9-2.3A Sign Inspection by WSDOT Materials Fabrication Inspection Office 9-33
9-2.3B Sign Inspection by the WSDOT Project Engineer 9-34
9-2.4 Pipe Acceptance Report 9-34

9-3 Guidelines for Job Site Control of Materials 9-34
9-3.1 General 9-34
9-3.2 Sample Types 9-35
9-3.2A Preliminary Samples and Tests 9-35
9-3.2B Acceptance Samples and Tests 9-35
9-3.2C Verification Samples and Tests 9-36
9-3.3 Test Numbering 9-36
9-3.4 Point of Acceptance 9-36
9-3.4A State Owned Source 9-36
9-3.4B Contractor's Source 9-36
9-3.5 Basis for Acceptance 9-36
9-3.5A Basis for Acceptance – Statistical Evaluation 9-37
9-3.5B Basis for Acceptance – Non-Statistical Evaluation 9-37
9-3.5C Basis for Acceptance – Performance Graded Asphalt Binder and Emulsified Asphalt 9-39
9-3.6 Tolerance Limits 9-39
9-3.7 Acceptance Sampling and Testing Frequency Guide 9-43

9-4 Specific Requirements for Each Material 9-46
9-4.1 Portland Cement, Blended Hydraulic Cement, Fly Ash, and Other Cementitious Materials 9-48
9-4.2 Bituminous Materials 9-49
9-4.3 Pavement Marker Adhesive 9-50
9-4.4 Concrete Aggregates 9-50
9-4.5 Aggregates for Bituminous Surface Treatment, Ballast, Permeable Ballast, Crushed Surfacing Base and Top Course, Maintenance Rock, and Gravel Backfill for Foundations Class A 9-51
9-4.6 Aggregates for Hot Mix Asphalt (HMA) 9-52
9-4.7 Hot Mix Asphalt (HMA) 9-52
9-4.8 Mineral Filler 9-53
9-4.9 Aggregate Materials for Walls (Gravel Backfill for Wall and Gravel Borrow for Structural Earth Walls) 9-53
9-4.10 Miscellaneous Aggregates: Gravel Base, Gravel Backfill for Foundation Class B, Gravel Backfill for Pipe Zone Bedding, Gravel Backfill for Drains, Gravel Backfill for Drywells, Backfill for Sand Drains, Sand Drainage Blanket, Gravel Borrow, Select Borrow, Common Borrow, Native Materials for Trench Backfill, Foundation Material Class A, B, and C, and Bank Run Gravel for Trench Backfill 9-54
9-4.11 Vacant 9-55
9-4.12 Premolded Joint Filler for Expansion Joints 9-55
9-4.13 Elastomeric Expansion Joint Seals 9-55

9-4.14 Poured Rubber Joint Sealer – Two Component 9-56
9-4.15 Hot Poured Joint Sealant and Crack Sealing – Rubberized Asphalt. 9-56
9-4.16 Concrete Drain, Perforated Underdrain, Culvert, and Storm Sewer Pipe . 9-57
9-4.17 Corrugated Galvanized Steel, Aluminized Steel, Aluminum: Drain, Perforated Underdrain, Culvert Pipe Arch, and Storm Sewer Pipe 9-59
9-4.18 Polyvinyl Chloride (PVC) and Corrugated Polyethylene (PE) Drain, Perforated Underdrain, Culvert, and Storm Sewer Pipe. 9-60
9-4.19 Structural Plate Pipe, Pipe Arch, Arch, and Underpass 9-60
9-4.20 Steel, Gray-Iron, and Ductile-Iron Castings: Manhole Rings and Covers; Metal Frame, Grate, and Solid Metal Cover for Catch Basins or Inlets; Cast Metal Inlets; Frame (Ring), Grate, and Cover for Drywells. 9-61
9-4.21 Sanitary Sewers. 9-62
9-4.22 Structural Steel for Bridges. 9-63
9-4.23 Unfinished Bolts (Ordinary Machine Bolts), Nuts, and Washers 9-64
9-4.24 High Strength Bolts, Nuts, and Washers 9-65
9-4.25 Anchor Bolts, Nuts, and Washers 9-66
9-4.26 Reinforcing Bars for Concrete (Uncoated and Epoxy Coated Rebar) 9-67
9-4.27 Vacant 9-69
9-4.28 Mechanical Splices 9-69
9-4.29 Rebar Chairs, Mortar Blocks (Dobies), and Spacers 9-70
9-4.30 Dowels and Tie Bars for Concrete Pavement 9-70
9-4.31 Wire Reinforcement for Concrete. 9-72
9-4.32 Bridge Approach Slab Anchors. 9-73
9-4.33 Prestressing/Post Tensioning Reinforcement – Strand 9-73
9-4.34 Prestressing/Post Tensioning Reinforcement – Bar 9-74
9-4.35 Painting, Paints, Coating, and Related Materials 9-75
9-4.36 Timber and Lumber 9-76
9-4.37 Vacant 9-77
9-4.38 Piling – All Types 9-77
9-4.39 Vacant 9-79
9-4.40 Vacant 9-79
9-4.41 Precast Concrete Manholes, Catch Basins, Inlets, Drywells, and Risers . . 9-79
9-4.42 Riprap, Rock for Erosion and Scour Protection, Quarry Spalls, Rock for Rock Wall and Chinking Material, Backfill for Rock Wall, and Stone for Gabions 9-80
9-4.43 Semi-Open Slope Protection. 9-81
9-4.44 Plant Material 9-81
9-4.45 Topsoil. 9-82
9-4.46 Seed. 9-82
9-4.47 Fertilizer 9-83
9-4.48 Mulch 9-84
9-4.49 Irrigation System. 9-86
9-4.50 Fencing and Gates. 9-87
9-4.51 Beam Guardrail and Guardrail Anchors 9-88
9-4.52 Guardrail Posts and Blocks. 9-89

9-4.53 Miscellaneous Precast Concrete Products (Block Traffic Curb, Precast Traffic Curb) 9-90
9-4.54 Prestressed Concrete Girders 9-90
9-4.55 Pavement Marking Materials 9-91
9-4.56 Signing Materials and Mounting Hardware 9-92
9-4.57 Liquid Concrete Curing Compound 9-95
9-4.58 Admixtures for Concrete. 9-95
9-4.59 Plastic Waterstop. 9-96
9-4.60 Epoxy Systems 9-96
9-4.61 Resin Bonded Anchors 9-97
9-4.62 Gabion Cribbing, Hardware, and Stone 9-98
9-4.63 Steel Sign Structures – Cantilever, Sign Bridge, Bridge Mounted, Roadside 9-99
9-4.64 Conduit 9-100
9-4.65 Fiber Optic Cable, Electrical Conductors, and Cable. 9-101
9-4.66 Steel Poles – ITS, Pedestrian, Light, Signal Standards, and High Mast Light Poles 9-101
9-4.67 Vacant 9-103
9-4.68 Luminaires, Lamps, and Light Emitting Diodes (LED) 9-103
9-4.69 Water Distribution System 9-104
9-4.70 Elastomeric Pads. 9-105
9-4.71 Bridge Bearings – Cylindrical, Disc, Fabric Pad, Pin, Spherical 9-106
9-4.72 Precast Concrete Barrier 9-107
9-4.73 Vacant 9-108
9-4.74 Metal Bridge Rail 9-108
9-4.75 Construction Geosynthetics (Geotextiles and Geogrids) 9-109
9-4.76 Concrete 9-110
9-4.77 Water for Concrete 9-111
9-4.78 Expansion Joints 9-111
9-4.79 Traffic Signal Controller Assembly 9-112
9-4.80 Erosion Control Devices. 9-114
9-4.81 Concrete Patching Material, Grout and Mortar 9-115
9-4.82 Streambed Aggregates 9-117
9-4.83 Temporary Traffic Control Materials 9-117
9-4.84 Modular Expansion Joint 9-119
9-4.85 Junction Boxes, Cable Vaults, and Pull Boxes 9-120
9-4.86 Precast Bridge Deck Panels, Floor Panels, Marine Pier Deck Panels, Noise Barrier Walls, Pier Caps, Retaining Walls, Roof Panels, Structural Earth Walls, Wall Panels, and Wall Stem Panels 9-122
9-4.87 Precast Reinforced Concrete Three Sided Structures 9-122
9-4.88 Precast Concrete Vaults (Utility, Drainage, etc.) and Box Culverts 9-123
9-4.89 Fabricated/Welded Miscellaneous Metal Drainage Items: Grate Inlets and Drop Inlets 9-124
9-4.90 Miscellaneous Steel Structures (Cattle Guards, Handrail, Retrofit Guardrail Posts With Welded Base Plate, Seismic Retrofit Earthquake Restrainers, Column Jackets) 9-125

9-4.91 Miscellaneous Welded Structural Steel 9-125
9-4.92 Wood Bridges 9-126
9-4.93 Electrical Service Cabinets 9-127
9-4.94 Monument Case, Cover, and Riser 9-127
9-4.95 Steel Bollards 9-128
9-4.96 Metal Trash Racks, Debris Cages, and Safety Bars for Culvert Pipe and Other Drainage Items 9-128
9-4.97 Flow Restrictors and Oil Separators 9-129
9-4.98 Concrete Blocks 9-130
9-4.99 Vacant 9-130
9-4.100 Intelligent Transportation Systems (ITS)/System Operations Management (SOM) Materials 9-131
9-4.101 Media Filter Drain Mix 9-133

9-5 Quality Assurance Program 9-134
9-5.1 General 9-134
9-5.2 Quality Assurance Program Structure and Responsibilities 9-134
9-5.3 Qualified Tester Program 9-136
9-5.3A Types of Qualifications 9-136
9-5.3B Qualification Process 9-136
9-5.3C Initial Qualification Examination Requirements 9-138
9-5.3D Documentation of Initial Qualification 9-140
9-5.3E Failure of Examination 9-140
9-5.4 Requalification of Testing Personnel 9-140
9-5.4A Requalification Examination 9-141
9-5.5 Lapse in Qualification 9-141
9-5.6 Suspension of Qualification 9-141
9-5.7 Report of Deviation from Specified Sampling and Testing Procedures . . 9-142
9-5.8 Calibration/Standardization/Check of Equipment 9-142
9-5.9 Qualified Laboratories 9-142
9-5.9A Qualification of Region or Other Subordinate Laboratories 9-142
9-5.9B Qualification of Private Laboratories 9-143
9-5.10 Independent Assurance Program (IAP) 9-143
9-5.10A Comparison Evaluation of the Independent Assurance Sample 9-144
9-5.10B Assurance and Acceptance Test Results 9-145
9-5.10C Independent Assurance Report 9-146

9-6 Radioactive Testing Devices 9-146
9-6.1 Administration and Safety 9-146
9-6.2 Radiation Administration Officer (Region Materials Engineer) 9-149
9-6.3 Radiation Safety Officer 9-150
9-6.4 Authorized Operators 9-151
9-6.5 Authorized Transporters 9-151

9-7 WSDOT Testing Methods and Field Operating Procedures Included in This Manual . . . 9-152

Chapter 10 Documentation 10-1

10-1 General 10-1
10-1.1 Introduction 10-1
10-1.2 Requirements for Notes 10-2
10-1.3 Source Documents 10-3

10-2 Measurement of Items of Work 10-4
10-2.1 General 10-4
10-2.1A Introduction 10-4
10-2.1B Quantity Details 10-4
10-2.1C Item Quantity Ticket 10-4
10-2.1D Conversion Factors 10-6
10-2.2 Items Measured by Weight 10-6
10-2.2A General Instructions 10-6
10-2.2B Weighing of Small Quantities 10-7
10-2.2C Weighing Equipment 10-8
10-2.3 Items Measured by Volume 10-8
10-2.3A Truck Measure 10-8
10-2.3B Cross-Sections 10-9
10-2.3C Neat Line Measurement 10-10
10-2.4 Items Measured by Hour/Day 10-10
10-2.5 Items Measured by Lump Sum 10-10
10-2.6 Items Measured by Other Units 10-11
10-2.6A Linear Measurement 10-11
10-2.6B Area Measurement 10-11
10-2.6C Per Each Measurement 10-11
10-2.7 Items Bid at “No Charge” 10-11

10-3 Final Records for Projects Constructed by Contract 10-12
10-3.1 Records 10-12
10-3.1A Permanent Records 10-12
10-3.1B Temporary Final Records 10-13
10-3.1C Electronic Documents Filed With Temporary/ Permanent Records 10-14
10-3.2 Contracts 10-14
10-3.3 Change Orders 10-14
10-3.4 Contract Estimate Payments 10-15
10-3.5 Final Record Book No. 1 10-15
10-3.6 Diary Records 10-16
10-3.6A Project Engineer’s Diary 10-16
10-3.6B Inspector’s Daily Report 10-17
10-3.7 Record of Collisions and Traffic Control 10-19
10-3.7A Record of Collisions and Traffic Surveillance 10-19
10-3.7B Contractor’s Daily Report of Traffic Control 10-19
10-3.8 Pile Driving Records 10-19
10-3.9 Post Tensioning Records 10-19

10-3.10 Miscellaneous Records 10-20
10-3.11 As-Built Plans and Shop Drawings. 10-20
10-3.11A Preparing As-Built Plans. 10-20
10-3.12 Final Record Field Notebooks 10-23
10-3.13 Electronically Produced Documents. 10-24
10-3.14 Photographs. 10-25
10-3.15 Pre-Estimate Reports 10-25
10-3.16 Estimate Reports 10-25

10-4 Project Ledger System 10-26
10-4.1 General 10-26
10-4.2 Source Documents 10-27
10-4.3 Source Document Filing Systems. 10-28

10-5 Region Project Documentation Reviews 10-28
10-5.1 General 10-28
10-5.2 Review Procedures for Final Estimates and Final Records 10-29

Chapter 11 Forms 11-1

11-1 Introduction. 11-1

11-2 General Instructions 11-1
11-2A Project Office 11-2
11-2B Regional Office 11-4
11-2C Fabrication Inspector 11-4
11-2D State Construction Office 11-4
11-2E Materials Laboratory (State or Region) 11-4
11-2F Contractor 11-5

Foreword

This manual is provided for our construction engineering personnel as instruction for fulfilling the objectives, procedures, and methods for construction administration of Washington State transportation projects. This manual contains two kinds of instructions depending on the subject matter and the nature of the work. In one case, where the activity is the inspection of contract work that is critical from a structural or operational viewpoint, the instructions prescribe detailed methods and procedures, or detailed performance measures, designed to assure the objective of a safe and adequate finished product. In other cases, typically in the areas of documentation and payment, the instructions are limited to describing the necessary objectives of the work without specifying the methods or procedures. The *Construction Manual* is intended as a reference book that is consistent with the language and intent of the *Standard Specifications*. In order to use this reference effectively, it is essential that the user has a thorough understanding of the contract, contract plans, contract provisions, and the *Standard Specifications,* as well as this manual.

Where specific methods and procedures are not included, the intent of this manual is to provide the project staff with a statement of the outcomes required and to allow the Region Construction Management and the Project Engineer to devise procedures accordingly. This manual provides basic instruction for identifying policies or laws that affect the construction administration work, however, the manual generally does not interpret these policies or laws. Compliance with policies, laws, and regulations is the duty of the Project Engineer, who may call on others, especially those authorized to enforce laws and regulations, at any time for assistance. In order to respond to the many situations that may arise on different contracts with different types of work, the instruction provided by this manual is general in character and is not to be construed as replacing, modifying, or superseding any of the provisions of the contract, contract plans, contract provisions, or *Standard Specifications*.

Decisions to deviate from the instruction provided in this manual must be based on engineering judgment and supportable as representing the best interests of the public and are to be made by the individual with appropriate authority.

Comments about the manual are always welcome and will be considered in future updates.

Robert E. Christopher III, P.E.
Director of Construction Division
State Construction Engineer

Chapter 1 Administration

1-00 Agency Organization and Relations With Other Organizations

GEN 1-00.1 Purpose and Scope of Manual

This manual is published by the State Construction Office as a resource for construction engineering personnel. It provides instruction for administering Washington State transportation projects, recognizes established standards and describes accepted engineering practices. The instruction provided by this manual identifies desired results, establishes standardized requirements, and provides statewide uniformity in the administration and construction of transportation related contracts.

Chapters 1 – 8 of the *Construction Manual* are organized with two types of content. General information that isn't tied to any specific section of the WSDOT *Standard Specifications* is prefaced by "GEN" in the section number. Information that is intended to complement and expand on sections of the WSDOT Standard Specifications is prefaced by a "SS" in the section number. Not all sections of the *Standard Specifications* are addressed in the *Construction Manual*.

Construction engineering staff should be familiar with the guidance and instructions included in this manual. The guidance presented by this manual complements the requirements of the *Standard Specifications for Road, Bridge, and Municipal Construction* M 41-10 and the contract provisions and promotes uniformity of results among all Regions of the Washington State Department of Transportation (WSDOT).

Suggestions for corrections, additions, or improvements to this manual and to the *Standard Specifications* or *General Special Provisions* are welcomed and should be submitted to the State Construction Office in the form of a Word document in "track changes" format.

GEN 1-00.2 Definition of Terms

Definitions of words or terms should be the same as set forth under "Definitions and Terms" in *Standard Specifications* Section 1-01. If a conflict should occur between the guidance or instructions offered by this manual and the specifications or provisions identified in the contract, the latter should always prevail.

GEN 1-00.3 WSDOT State Construction Office

The State Construction Office strives for consistent, cost-effective, quality construction through direct support of WSDOT's Regional construction program. The Construction Office coordinates the development of policies and standards, provides training, guidance, oversight, technical expertise and advocacy, introduces innovation, and coordinates and shares information on construction issues.

GEN 1-00.3(1) State Construction Engineer

The Director of the Construction Division is the State Construction Engineer and reports to the Chief Engineer, Assistant Secretary Engineering and Regional Operations. The State Construction Engineer is responsible for all WSDOT contract construction projects, except those contracts executed by the Director of Washington State Ferries Division. The State Construction Engineer is responsible for all matters pertaining to contract administration and represents the Chief Engineer in managing the performance of these contracts. In addition, the State Construction Engineer acts for the Chief Engineer in approving increases or decreases of work, changes in the work or in materials incorporated into the work, authority to accomplish work by force account, extensions of time, and the assessment of any liquidated damages. The State Construction Engineer is responsible for providing guidance and direction to the Regions and State Construction Office personnel who are investigating construction claims and is responsible for the approval of all claim settlements. The State Construction Engineer establishes WSDOT policy relative to inspection and documentation and ensures uniform interpretation and enforcement of the *Standard Specifications* and contract provisions throughout the State. The State Construction Engineer is assisted by the Deputy State Construction Engineer, the Construction Engineer, Roadway, the Construction Engineer, Bridge, and the Assistant Construction Engineers.

GEN 1-00.3(1)A Deputy State Construction Engineer

The Deputy State Construction Engineer reports to the State Construction Engineer. The Deputy State Construction Engineer is delegated the authority to execute documents concerning the following:

- Advertising, award, and execution of contracts;
- Federal Aid project documentation;
- Contract change orders of a value not to exceed $10 million and/or un-limited time;
- Extensions of time;
- Reduction in pre-qualification;
- Certification of materials to FHWA;
- Claims on contracts;
- Final Acceptance

GEN 1-00.3(1)B Construction Engineer, Roadway

The Construction Engineer, Roadway represents the State Construction Engineer by formulating policy in the following areas:

- *Standard Specifications*
  - Division 1 General Requirements
  - Division 3 Aggregate Production and Acceptance
  - Division 4 Bases
  - Division 5 Surface Treatments and Pavements
  - Division 8 Miscellaneous Construction

- *Construction Manual*
  - Chapter 1 Administration
  - Chapter 3 Aggregate Production and Acceptance
  - Chapter 4 Bases
  - Chapter 5 Surface Treatments and Pavements
  - Chapter 8 Miscellaneous Construction

Additionally, the Construction Engineer, Roadway is the lead within the State Construction Office for Environmental Coordination.

The Construction Engineer, Roadway is delegated authority to execute contract documents concerning:

- Force account rates;
- Interpretation of contract provisions;
- Specification and contract requirements;
- Policy related to inspection and documentation;
- Contract change orders of a value not to exceed one million dollars and/or changes in contract time not to exceed 60 days

GEN 1-00.3(1)C Construction Engineer, Bridge

The Construction Engineer, Bridge reports to the Deputy State Construction Engineer and represents the State Construction Engineer by formulating policy in the following areas:

- *Standard Specification*
  - Division 2 Earthwork
  - Division 6 Structures
  - Division 7 Drainage Structures, Storm Sewers, Sanitary Sewers. Water Mains and Culverts
- *Construction Manual*
  - Chapter 2 Earthwork
  - Chapter 6 Structures
  - Chapter 7 Drainage Structures, Storm Sewers, Sanitary Sewers, Water Mains, and Culverts
- General Contractor/Construction Manager (GC/CM

The Construction Engineer, Bridge is delegated authority to execute contract documents concerning:

- Force account rates;
- Interpretation of contract provisions;
- Specification and contract requirements;
- Policy related to inspection and documentation;
- Contract change orders of a value not to exceed one million dollars and/or changes in contract time not to exceed 60 days

GEN 1-00.3(1)D Assistant State Construction Engineers

Assistant State Construction Engineers report to the Deputy State Construction Engineer and are assigned as the State Construction Office point of contact for specific Project Engineer Offices or programs. Assistant State Construction Engineers also assist the Construction Engineers in the development of policy and are assigned responsibility for specific sections of the *Standard Specifications* and the *Construction Manual*.

Assistant State Construction Engineers are delegated the authority to execute:

- Contract change orders of a value not to exceed one million dollars and/or changes in contract time not to exceed 60 days

GEN 1-00.3(1)D1 Assistant State Construction Engineer, Administration

The Assistant State Construction Engineer, Administration, reports to the Deputy State Construction Engineer and supports the Construction Engineers in setting requirements for contracting, policy, and responding to questions from the regions on all issues pertaining to *Standard Specifications* Division 1 and *Construction Manual* Chapters 1. The Assistant State Construction Engineer, Administration is responsible for such areas as:

- *Construction Manual*
  - Chapter 10 Documentation
  - Chapter 11 Forms

The-responsibilities of the Assistant State Construction Engineer, Administration include, but are not limited to, time extensions, external civil rights contract changes, prevailing wage issues, documentation, and claims resolution. The Construction Engineer, Administration, also represents WSDOT on task forces with contractor organizations, other public agencies, and at the legislature regarding public contracting issues.

The Assistant State Construction Engineer, Administration, is assisted by:

- **Documentation Engineer** – Provides guidance for contract documentation and contract payments, as well as providing support to Region Documentation Engineers. The Documentation Engineer resolves issues of material documentation deficiencies for all federal aid projects, is responsible for prevailing wage issues, and is also responsible for evaluating the contract for Acceptance. The Documentation Engineer assists the Materials Laboratory with Quality Audits as well as audits performed by FHWA and the State Auditor's Office.
- **Construction Administration Specialist** – Is the CCIS System Manager/ Administrator, the Construction Office Liaison to Management Information Systems (MIS), supports the Region and Project Engineer offices by providing guidance in the use of CCIS, and the IBM Cognos reporting tool used to report from the Construction Data Mart. This position also maintains contact with the publishers of the *Equipment Rental Rate Blue Book*, and is the point of contact for requesting equipment rental rates.
- **Construction Analyst** – Helps with analysis and reporting. The Construction Analyst also monitors the Apprentices Utilization program and provides additional support for the Cognos reporting tool.

GEN 1-00.3(2) State Materials Laboratory

The State Materials Engineer reports to the Director of the Construction Division and represents the Director of the Construction Division by directing the materials acceptance and quality assurance program used on WSDOT projects. The State Materials Engineer directs operating methods to be followed in providing soils and materials analysis and testing; furnishes counsel and technical assistance to the Regional Construction Managers in conducting required materials tests and analysis and provides for periodic review of these test methods and procedures to ensure their conformance to established policies, procedures, and methods.

The State Materials Engineer represents the Director of the Construction Division by formulating policy in the following areas:

- *Standard Specification*
  - Division 9 Materials
- *Construction Manual*
  - Chapter 9 Materials
- *Materials Manual*
  - All Sections
- Design Build Request for Proposal
  - Section 2.25 and 2.28

The State Materials Engineer is delegated the authority to execute documents concerning:

- Reports on soil and test results;
- Approving material sources;
- Approving material for the Qualified Products List and New Products List
- Establishing policy related to construction inspection, materials testing and documentation;
- Interpretation and meaning of contract provisions
- Construction Quality Audits

The State Materials Engineer is assisted by a staff of professional engineers, administrative personnel, engineers and technicians.

GEN 1-00.3(2)B State Pavements Engineer

The State Pavements Engineer reports to the Director of the Construction Division by directing the pavement design and pavement management sections. The State Pavement Engineer establishes statewide pavement policy and provides technical support for pavement design and construction. The State Pavement Engineer approves design changes and material substitutions for pavement design related changes.

The State Pavement Engineer is assisted by a staff of professional engineers, administrative personnel engineers and technicians.

GEN 1-00.3(2)C State Geotechnical Engineer

The State Geotechnical Engineer reports to the Director of the Construction Division, and represents the Director of the Construction Division by formulating and implementing geotechnical design and construction policy, primarily through the Geotechnical Design Manual, but also through Standard Plans, General Special Provisions, and portions of the *Standard Specifications*. The State Geotechnical Engineer or his representatives, develop, and/or review and approve, the following types of documents:

- Summary of Geotechnical Conditions
- Boring logs and associated geotechnical test data
- Blasting plan submittals
- Geotechnical aspects of shoring and excavation submittals
- Other geotechnical construction submittals
- For design-build projects, portions of the RFP (primarily Section 2.6), geotechnical baseline reports, geotechnical data reports, and related geotechnical reports

The State Geotechnical Engineer, or his representatives, develop and/or approve geotechnical reports that provide the design basis for construction projects statewide. The State Geotechnical Engineer, or his representatives, provide geotechnical expertise and support for evaluation of construction and changed condition claims to region construction managers and HQ construction staff.

GEN *1-00.4 Region Organization*

GEN 1-00.4(1) Regional Administrator

The Regional Administrator, or those delegated Regional Administrator authority, represents the Assistant Secretary in a geographic area, organizes and supervises a staff of personnel which perform administrative duties and supervise location, design, construction administration, and maintenance of the transportation system within the region.

The Regional Administrator is delegated the authority to execute:

- Change orders as Specified in *Construction Manual* SS 1-04.4, Delegation of Execution Authority;
- Approval of subcontractors and agents

GEN 1-00.4(2) Regional Construction Manager

In supervision of construction, the Regional Administrator is assisted by a Regional Construction Manager. The Regional Construction Manager, or those delegated Regional Construction Manager authority, assigns Project Engineers with appropriate supporting personnel and provides training and guidance to the Project Engineers. It is the responsibility of the Regional Construction Manager to ensure that sufficient personnel are provided on all projects at all times to ensure adequate inspection, documentation, and quality controls.

GEN 1-00.4(3) Regional Administration of the Inspector Certification Program

Goal – The purpose of the Inspector Certification Program is to provide training and resources for Construction Inspectors and to provide examinations to confirm the Inspectors' knowledge. This will ensure consistent administration of highway construction contracts. The monitoring of construction activities by Certified Inspectors will help to ensure that only quality materials and workmanship are employed on WSDOT construction projects.

Definitions

Director of the Construction Division (Director) – This is the individual delegated authority from the Secretary of Transportation to administer the Department's Construction Program.

Region Inspector Certification Manager (RICM) – This is the individual designated by the Director of the Construction Division to coordinate all construction training and Inspector Certification in that Region.

Region Inspector Certification Official (RICO) – This is the appointing authority for Region Construction Project Engineers or an individual delegated this responsibility by the appointing authority.

Department – Washington State Department of Transportation.

There are two types of Inspectors, Interim Inspectors and those enrolled in the Inspector Certification Program (ICP). There are two different levels of certification, General and Subdivisional.

An Interim Inspector is a person assigned to work under the supervision of a WSDOT Certified Inspector. This person may be a Temporary employee, Seasonal employee or Permanent employee within the Washington State Department of Transportation. Interim Inspectors should be considered for inclusion within the Inspector Certification Program. Interim Inspectors at the Transportation Technician 2 level and below may serve as Interim Inspectors for up to two years before being required to obtain certification as a General Inspector. Interim Inspectors at the Transportation Technician 3 level and above may only serve as Interim Inspectors for six months before being required to obtain certification as a General Inspector.

An Inspector is entered into the ICP through the Learning Management System (LMS). The employee's supervisor will contact the Region Trainer who will assign the employee a General Inspector Learning Plan the Learning Management System (LMS).

The Inspector will become certified as a General Inspector once they have successfully demonstrated proficiency by achieving a passing score of 75% on each open book examination for the following subjects:

- Technical Mathematics
- Contract Plans Reading
- Basic Surveying
- Composing an Inspector's Daily Report
- Force Account Documentation and Payment
- Materials Documentation
- Inspector's Role for Change Order Work
- Inspector Safety
- Utilizing Resources
- Environmental

The Inspector may either take the courses first and then take the examination or take the examination without taking the course. If the Inspector does not achieve a passing score on an examination, they may retake that examination after waiting three days. If they fail an examination a second time, the Inspector will be required to successfully complete the course before attempting another examination for that subject matter. Certification as a General Inspector shall not expire. The General Inspector may be required to successfully complete additional courses to maintain their General Inspector certification should the Department change its work methods or standards, pertaining to the subject matter covered in the General Inspector Certification.

The purpose of the General Inspector Certification phase is to broaden the Construction Inspectors' knowledge base through additional instruction and inspection experience.

The next phase of the Inspector Certification Program includes modules for Subdivision Certifications as shown below. Once the Inspector becomes a Certified General Inspector, their Learning Plan will be updated to include training and certification focus in at least one of the following Subdivisions as they become available. A Subdivision certification will include modules of training and exams for a particular item of work. As modules are developed, the availability throughout the Agency will be announced.

Division 2	Earthwork
Division 5	Surface Treatments and Pavements Hot Mix Asphalt Cement Concrete Pavements & Rehabilitation
Division 6	Structures Cast-in-Place Concrete Foundations Concrete Bridges Steel Bridges Structural Earth Walls Tieback Walls Concrete Walls
Division 7	Drainage
Division 8	Guardrail Signing Illumination, Signal System, Electrical & ITS

The Certified General Inspector will be certified in the Subdivisions listed above when they have successfully demonstrated proficiency by achieving a passing score of 80% on the examinations. After completion of the stated requirements, the individual will be granted the title of Certified Inspector in that Subdivision. At this level, the Inspector would be expected to operate independently with limited supervision in that Subdivision.

Each year, the Construction Project Engineers should ensure that Inspectors assigned to them are afforded the opportunity to take additional courses to broaden their knowledge and certifications.

All Certification requirements may be completed by either successful completion of the required training courses and then passing the examinations or the examinations may be taken without completing the training courses. If an exam is failed the RICM will notify the Project Engineer. The Inspector must take an on-line or Instructor Led course for the affected subject prior to re-taking the exam. The exam may be retaken with a minimum of a three day waiting period from the date the original test was failed.

If an exam is failed for a second time, the RICM will notify the Project Engineer and RICO. The Project Engineer and RICO will develop an action plan for training and mentoring on the subject. A period of 30 days minimum is required for the action plan to be completed, and then the Project Engineer will notify the RICM the Inspector is ready to retake the examination.

An Inspector's Subdivision certification will be valid for a period of 4 years from the date of certification, after which they will be required to complete a recertification course and/or examination.

Certification Revocation Based on Lack of Proficiency

If it is determined that a Certified Inspector has demonstrated a lack of proficiency, the RICO will work with the inspector's Project Engineer to develop an action plan to correct the lack of proficiency. The action plan will include successfully completing course work identified and achieving a passing score on course examinations. If the inspector fails to successfully complete the action plan, the RICO will revoke the Inspector's Certification and inform the Director of the Construction Division.

The RICM will maintain a database of all certified Inspectors, in what areas they are certified, and any who have had their certification revoked.

The RICO will initiate notification that a certification has been revoked. Notification shall be in writing and shall be mailed ("return receipt requested") to the affected Inspector. A copy of the notification shall be sent to the employee's supervisor.

Prior to having the certification reinstated, the inspector must meet all requirements stated in their revocation letter and pass any applicable proficiency examination(s).

Reporting

Once each year the RICM will report actions taken under the Inspector Certification Program. The report shall include as a minimum the number of certified inspectors, the Inspector's names, what certifications they hold, and any certification revocations, taken under the Inspector Certification Program. The report will be due to the Director by the last working day in January.

GEN 1-00.5 Relationship With Other Agencies

GEN 1-00.5(1) Federal Highway Administration

The Federal Government provides transportation funding to Washington State through the Federal Highway Administration (FHWA), a division of the U.S. Department of Transportation. These funds are subject to applicable Federal law, Executive Orders, regulations, and agreements.

The WSDOT contact with FHWA for Construction Administration matters is the State Construction Office. In preparing and approving *Standard Specifications*, general special provisions, and this manual, the Construction Office seeks the review and approval of FHWA. Use of approved provisions and meeting the required outcomes described in the manual become the basis of federal reimbursement.

FHWA provides oversight of WSDOT work on some projects and has delegated that responsibility to WSDOT on others. A full discussion of WSDOT responsibilities under Stewardship is included in Section 1-00.10.

GEN 1-00.5(2) Local Agencies

Cities, counties, and other municipalities within the state may also perform work funded with federal dollars. When this happens, the money is passed through the Department of Transportation and we will have entered into agreements with the local agencies to provide services. For example, WSDOT will allow the use of testing facilities by a local agency.

GEN 1-00.5(2)A Project Engineer Administering Local Agency Project

Occasionally, a WSDOT Project Engineer may be assigned to provide engineering and inspection services on a local agency project. The duties of the Project Engineer will be determined by the actual contract provisions and by any specific agreement made between the Region administration and the local agency. The provisions of this manual may or may not apply, depending on the situation.

GEN 1-00.5(2)B Local Agency Administering Its Project on State Right of Way

In some cases, WSDOT may grant approval for a local agency to construct a facility on State Right of Way using local agency staff and contractors. (For example, a city funded overpass of an interstate). When this happens, a Project Engineer will be assigned to provide oversight of the local agency work. The Project Engineer is expected to assure that the local agency provides the same level of engineering and inspection that State employees would accomplish. While the Local Agency may have different administrative provisions with respect to risk-sharing and submittal requirements, all of the technical aspects of the *Standard Specifications* and this manual must be met.

GEN 1-00.5(3) Other Federal, State, and Local Agencies

The design and construction of transportation improvements often incorporates locations and features that fall within the jurisdiction of other agencies. It is the policy of WSDOT to cooperate with all agencies as partners in the completion of each project, recognizing and complying with each agency's legal requirements. The Project Engineer shall cooperate with local authorities to help ensure that the contractor

complies with local laws, ordinances, and regulations. However, unless specifically allowed in the statutes or the contract documents, no WSDOT employee shall engage in any kind of enforcement of laws, rules, regulations, or ordinances which are the responsibility of other agencies. WSDOT needs to maintain the confidence and build trust with resource agencies and the public, so it is critical that we take the proper actions when we are aware of an issue. When WSDOT employees observe something which is questionable or appears to not be in compliance with local laws, ordinances, and regulations, it shall be brought to the Project Engineer's attention. The Project Engineer is responsible for bringing it to the Contractor's attention for proper action. Rely on the Regional and Headquarters expertise and the appropriate agencies when dealing with complex issues such as environmental compliance, safety, or hazardous materials.

GEN *1-00.5(3)A Highways over National Forest Lands*

WSDOT has entered into a Memorandum of Understanding (MOU) with the United States Forest Service (USFS) and the Project Engineer is required to do the following when performing work on National Forest Service Lands:

1. Represent the department in all matters pertaining to the project.
2. Confirm that the USFS has been notified of the project advertisement and award.
3. Notify and obtain approval from the USFS for any changes in the project that will affect National Forest System Lands, beyond that of the original contract.
4. Notify the USFS when the project nears completion, at which time the USFS will indicate if they choose to participate in the final review of the project.

GEN 1-00.6 Relating to the Public

Public confidence is enhanced by WSDOT personnel being responsive to reasonable requests for information, providing timely advanced notice of possible impacts, and reducing inconvenience to traffic while maintaining worker safety. When possible, the Project Engineer should rely on resources such as Regional Public Information Officers and the State Office of Communications and Public Involvement. If there is concern or reason to question the confidentiality or sensitivity of the information requested, consult with your supervisor or seek the advice of the Attorney General's office.

GEN 1-00.7 Application of Contract Provisions, Plans, and Specifications

GEN 1-00.7(1) Construction Contracts Information System (CCIS)

The CCIS system is a mainframe application designed to track contract information and generate reports for all WSDOT administered construction projects. The initial setup of contract information into CCIS is done automatically by using information in CAPS or other systems. However, after the contract has been executed, the project offices must enter the majority of the contract information into the CCIS system. The Project Engineer shall verify that the initial contract information in CCIS is correct, or shall correct the information. The data entered is then maintained and stored on the mainframe.

Among other things, CCIS generates the Weekly Statement of Working Days and Change Orders, and tracks this information. The system creates the forms for these reports so a preprinted form is not needed. Following is a list of data that needs to be entered into the CCIS database over the life of the project:

1. **Contract Information** – This part of CCIS will contain general contract information, including but not limited to:
   - Region administering contract
   - Region the contract is located in
   - Regional Administrator
   - Operations Engineer
   - Project Engineer/PE Org code
   - Description of Work
   - SR Number(s)
   - Begin and End mile post
   - County
   - Prime Contractor's local address, if applicable
   - Prime Contractor contact person
   - Prime Contractor D/M/WBE type if applicable
   - Prime Contractor ethnic code if applicable
   - Date of Statement of Intent to Pay Wages – Prime
   - Date of Contractor and Subcontractor/Agent Cert. for F.A. Projects
   - Date of Affidavit of Wages Paid – Prime
   - Date of Preconstruction Meeting Minutes
   - Date time started
   - Date work started
   - Date Orig. Progress Schedule approved
   - Date Last Supplemental Progress Schedule approved (if applicable)
   - Date of Substantial Completion (if no Substantial Completion granted, use Physical Completion date)
   - Date of Physical Completion
   - Final Estimate to Contractor
   - Date of Completion
   - Final Estimate to State Construction Office (filled in by Region office)
   - Contract time – Original Authorized Working Days
2. **Contractor Information** – This part of CCIS tracks information about Request to Sublet and Affidavits of Amounts Paid.
   - Request to Sublet
   - Affidavit of Amounts Paid

3. **ECR Tracking** – This part of CCIS tracks the Contractor's training program, trainees, and MWDBE reviews.
   - Training Program
   - Apprentice/Trainee Approval Request
   - DMWBE and EEO reviews
4. **Change Orders** – Change orders are created, printed, and tracked in this part of CCIS. It is very important to keep the information current to facilitate correct tracking and reporting.
   - Approval (to proceed when granted).
   - VECP Amount (if the change order is a VECP).
   - A brief description of the change order (if the change order is a VECP).
   - Date sent to Contractor.
   - Date received from Contractor.
   - Is there Surety consent.
   - Date of Surety consent.
   - Dates of approval and execution (***Note:*** *Line 4 "Date Executed" should only be used by Region or the State Construction Office)*.
   - Change Order Voided (if applicable).
5. **Weekly Statement of Working Days** – The "*Weekly Statement of Working Days*" is a report generated by CCIS, based on information entered into the system by the project office. This report details the number of workable/unworkable days charged to a project, the reason a day is charged as unworkable, daily weather codes, the current status of contract days, and a summary or the week's construction activity. The Project Engineer must ensure that the appropriate information is entered into CCIS on a weekly basis, a "*Weekly Statement of Working Days*" is generated, and a copy of the report is sent to the Contractor. Weekly statements shall cease when physical completion is granted, or when substantial completion is granted and all working days are expended.

   Refer to the *CCIS Users Guide* for details on using the system. This guide is available on the Construction Office Sharepoint site in the *Shared Documents* folder.

GEN 1-00.7(2) Order Lists

Contract language requiring an order list can be found in *Standard Specifications* Section 6-05.3(2), which addresses piling other than cast in place concrete and steel piles, and in Section 8-21.3, which addresses the determination of lengths of wood and steel sign posts. In other types of work, such as drainage, guardrail, etc., the actual layout will often result in quantities and lengths that vary from the plan estimates. A project engineer could choose to communicate this information in several ways, one of which could be the development of a formal order list. If an order list is used, extra care should be taken to ensure its accuracy. An alternate method of notice could also be a walk through with the contractor representative after staking.

GEN 1-00.8 Emergency Work Performed Under the Contract

When a natural disaster impacting a wide area strikes, WSDOT may utilize an existing construction Contract in order to restore essential travel, minimize damage or protect remaining facilities. RCW 47.28.170(2) allows WSDOT to contract this work on a negotiated basis provided (a) the cost does not exceed force account rates for the work performed and (b) the contract does not exceed thirty working days. There must be an emergency declaration by the appropriate authority, the Project Engineer must complete a Detailed Damage Inspection Report (DDIR) and the Project Engineer must contact the Regional Program Manager, since this work will initially be funded by state funds. The Project Engineer should follow the guidance provided in the WSDOT *Emergency Relief Procedures Manual* M 3014.

Emergency repair work, when performed by the Contractor under an existing Federal-Aid Contract, may be eligible for Emergency Relief funding. In order to qualify for Emergency Relief funding, the repair work must be the result of a natural disaster over a wide area, such as a flood, an unusually severe storm or a landslide. The work must be demonstrated to be beyond the Contractor's responsibility and not work that has already been scheduled for repair or replacement of deficient structures. Only the work required to protect and open the roadway is eligible for Emergency Relief funding.

Adding emergency work to a State funded contract would require the addition of all Federal-Aid specifications, and is not practicable. It is however acceptable to hire the existing contractor to perform emergency work at the same location under a separate emergency force account contract which would include all the Federal requirements.

GEN 1-00.9 Contractor's Performance Reports

The procedures for completing and submitting the Prime Contractor's Performance Report are included with the report DOT Form 421-010 and the *Prime Contractor's Performance Report Manual* M 41-40. The requirement for this report and other direction can also be found in WAC 468-16-150 and WAC 468-16-160.

Should the Contractor's typical performance on a contract become below standard, the Project Engineer should immediately notify the Regional Construction Manager of the facts in the matter, seeking assistance and advice.

GEN 1-00.10 Stewardship

Webster defines "steward" as "one who acts as a supervisor or administrator, as of finances and property, for another or others." The designated steward of all federal highway funds is the United States Department of Transportation, acting through the Federal Highway Administration. In Washington State, FHWA is represented by its Washington Division. Washington Division has delegated a portion of its stewardship responsibility (and the corresponding authority) to the Washington State Department of Transportation through the Federal-Aid Highway Program Stewardship and Oversight Agreement, signed on February 19, 2008.

This section describes further agreement between FHWA and WSDOT concerning the details of the part of the stewardship agreement that applies to construction (Section V c. Construction and Contract Administration and VII Appendix B Construction Monitoring Plan). The subject matter of this sub-agreement is monitoring of construction performed on behalf of WSDOT by independent contractors.

Scope of Construction Monitoring Plan – This plan deals specifically with federally-financed construction performed under contracts with WSDOT and administered through the WSDOT State Construction Office. It is not intended to be all-encompassing. WSDOT Ferries Division contracts for construction of vessels and facilities are not included. Contracts for work through local agencies are not included. Federally-financed utility agreements are not included. Emergency Relief work performed by contractors and administered by WSDOT Maintenance is not included.

Project Responsibility – FHWA, Washington Division, has delegated to WSDOT (and through the WSDOT delegation of authority to the State Construction Office) stewardship responsibility and authority for all federally-funded construction except new construction and re-construction on the Interstate system and certain specially-selected areas of high interest. The special selections are made by FHWA and include significant demonstration projects, special funding agreements, and projects of very high national interest. Projects with full FHWA oversight are listed on the State Construction Office web page at www.wsdot.wa.gov/Business/Construction/AccountabilityAndPerformance.htm.

The Construction Office has further delegated the stewardship reporting responsibility for projects with a contract value less than $6.0 Million to the various WSDOT Regions. The delegation of stewardship authority from the State Construction Office to the Regions is through the *Construction Manual*.

FHWA has also delegated to WSDOT the authority to accept projects on the Interstate system that are not new construction or re-construction. This authority has been further sub-delegated to the Regions for projects with a contract value less than $6.0 Million.

FHWA Review/Approval Actions and Related Processes – With the pre-approval of specifications and processes and the extensive delegation of stewardship authority, there are relatively few approval actions needed from FHWA during actual construction.

For new construction and re-construction on the Interstate system, FHWA has retained the oversight role of interim, or project, inspections, final inspections and acceptance, and the approval of certain high-value change orders.

The following processes will apply:

For project inspections, the WSDOT Project Engineer and the FHWA Area Engineer shall agree on the timing of such inspections. Typically, project inspections will take place quarterly; however, the Area Engineer may select other frequencies. The Project Engineer will advise the Area Engineer when agreed milestones or completion stages have been accomplished and the Area Engineer will schedule the review and prepare the report. (A similar process will be followed between the Project Engineer and the State Construction Office representative for delegated projects when the delegation has been retained at the State Construction Office. Regions will develop processes for those jobs delegated to them.)

For final inspections and acceptance, the review will be conducted in two parts. The first part will be a field review of the work and will be conducted at about the time of physical completion, when the contractor is still available to make corrections or changes identified during the review. The second part of the process will be the final

acceptance review. This will be conducted after WSDOT has accepted the contract and has assembled all cost and materials documents. The second part of the review (acceptance) may be conducted with an exchange of documents and without a physical visit to the site. The Project Engineer will notify the Area Engineer when these times have arrived and the Area Engineer will schedule the reviews and will prepare one final report summarizing both reviews. (A similar process will be followed between the Project Engineer and the State Construction Office representative for delegated projects when the delegation has been retained at the State Construction Office. Regions will develop processes for those jobs delegated to them.)

Change orders on FHWA stewardship projects (for which FHWA has not delegated stewardship responsibility to WSDOT) may be approved by WSDOT unless they alter the termini, character or scope of work of the contract, they have a net value of more than $200,000, or they change contract time by more than 30 days.

Note: Changes that adjust quantities without changing the work may be approved by WSDOT regardless of value. FHWA approval will normally be a written formal response, but may be verbal if the public interest is served by the more timely action. In all cases, the FHWA approval of a change order shall be obtained through the State Construction Office.

The FHWA Area Engineer may also choose to accompany the WSDOT reviewer during the review of any federal-aid project. Such participation will be random and will be initiated by the Area Engineer. This participation by the FHWA will not change any delegation of oversight responsibility or authority in any way. When the Area Engineer has participated in a review, a copy of the summary report will be provided directly to the Area Engineer.

Stewardship Summary Reports – It is important to note the difference between a steward and a stewardship reviewer/reporter. Stewardship on WSDOT federal-aid projects is provided by a wide cross-section of employees who make stewardship decisions according to the requirements of the *Construction Manual* and their own delegated responsibilities and authorities. From the field inspector who observes contract work and prepares pay instructions, to the Project Engineer who reviews and approves a monthly progress payment, to the Region Construction Manager who executes a change order, to the State Construction Engineer who negotiates and approves a claim settlement, all are acting as stewards in their own job descriptions and assignments.

The stewardship reviewer/reporter, on the other hand, is acting as an overseer, observing and collecting information about all of the stewardship activities, evaluating that information, making recommendations concerning the qualification of the covered work for federal funding and preparing reports to summarize the activities. Reviewers may be FHWA Area Engineers, State Construction Engineers, Region Managers or subordinate Region specialists in documentation or contract administration. For the reports that it prepares, WSDOT may assign any person of the classification of Transportation Engineer 3 or above to this duty. The only restrictions are that the reviewer must not have been involved in the project-level administration and the report must be signed by someone with supervisory authority over the Project Engineer or management responsibility over the contract itself.

- **Types of Reports** – Interim Reports (also known as Project Reports) are intermediate summaries of stewardship activities on an uncompleted project. These will be performed on multi-season jobs at least annually. Interim reports may be submitted at a greater frequency or for a special purpose at any time, at the discretion of the stewardship reviewer. Interim reports may be submitted on single-season projects for special purposes, again at the discretion of the reviewer.

  Abbreviated Final Inspection/Acceptance Reports are single page closeout reports for projects between $1.00 and $500,000 that summarizes the project in more of a checklist format with opportunity for comments. It will still be necessary for the Stewardship reviewer to evaluate the project documentation and procedures, but the reporting will not be to the same level of detail as a Final Inspection and Acceptance of Federal Aid Project for a project over $500,001. Final Inspection/ Acceptance Reports are single close-out reports that summarize the results of reviews conducted in two parts at the completion of all projects. The first part is a review of the field work conducted at a time when the contractor is still available to perform additional work or corrective work. The second part is after acceptance, when the final cost figures are known and the materials certification is available. For FHWA-retained projects, the final inspection and acceptance will be conducted by the FHWA Area Engineer. For delegated projects with a greater value than $6.0 Million, the final inspection and acceptance will be conducted by a representative of the State Construction Office. For projects further delegated to a Region, the final inspection and acceptance will be conducted by a Region representative. The final acceptance portion of the final review may be done without a site visit, working from documents and computer data only.
- **Timing of Reports** – At least once per year, the State Construction Office will publish a list of all projects that have been started and not closed out for federal funding. The list will be divided to show the responsibility for stewardship reporting for each project. In the past a Final Inspection and Acceptance of federal-aid project report was required for each project financed in part or in whole with federal dollars. In an effort to expedite contract closure and move unused obligated funds back into the various highway programs sooner, stewardship reporting will take the following course:
  - For projects with values between $1 and $500,000: 25 percent of the projects will be selected from each project office from each Region and an abbreviated Final Inspection and Acceptance of Federal-Aid Project will be required.
  - For projects with values between $500,001 and $6,000,000: 50 percent of the projects will be selected from each project office from each Region and a Final Inspection and Acceptance for Federal-Aid Project DOT Form 422-101 will be required.
  - For projects with values greater than $6,000,000: 50 percent of the projects will require a Final Inspection and Acceptance of Federal-Aid Project form.

  Interim reports will be performed at times that are appropriate for the nature and progress of the work and the seasonality of the project. These times will be determined through the judgment of the reviewer. The objective for all reviewers will be to prepare and submit interim reports within 30 calendar days after the field review.

For Abbreviated Final Inspection/Acceptance Reports, final inspection will be conducted around the time of physical completion, while the contractor is still mobilized and able to perform corrective or added tasks. Final acceptance review of the project will be conducted after the State Construction Engineer's final acceptance of the contract itself and after receipt of the Region's Materials Certification. The objective for all reviewers will be to prepare and submit the Abbreviated Inspection/Acceptance Report within 30 calendar days after project final acceptance. Final inspections for projects over $500,001 will be conducted around the time of physical completion, while the contractor is still mobilized and able to perform corrective or added tasks. The Project Engineer is in the best position to identify this time and shall advise the reviewer that a final inspection is needed. Final acceptance reviews will be conducted after the State Construction Engineer's final acceptance of the contract itself and after receipt of the Region's Materials Certification. The objective for all reviewers will be to prepare and submit the final inspection/acceptance report within 60 calendar days after project final acceptance.

Copies of reports prepared by FHWA will be sent to the State Construction Office. Copies of reports prepared by any WSDOT reviewer will be collected by the State Construction Office and forwarded to FHWA.

- **Content of Reports** – Stewardship reports provide a high-level overview for those who may not know the project intimately, but may need to be aware of the more significant details of the contract. Communicating those details in a concise and comprehensive manner is a critical aspect of the report. Any individual reading the report should be able to have a reasonable idea of how the project proceeded.

  In addition to providing an objective view of the project, a stewardship report should clearly identify what is unique to that project and what circumstances made it unique. Most of our projects are routine and the stewardship reports will reflect that. However, when a project has conditions that are out of the ordinary, the stewardship report should explain what occurred on the project to make those conditions significant.

  The ability to write a practical report in a clear and concise manner is a mark of a good engineer.

  Job Description – A description of the major elements of the work. Include a narrative about the job. Include the contractor's name, the award date and the amount of the bid.

  Time and Damages – On an interim report, discuss the present status of time and its relationship to the completion status. If behind, describe what is being done to catch up. Describe any suspensions or time extensions. On a final report, discuss the final time result. If overrun, discuss liquidated damages. Subjectively, comment on the amount of time set up. If working days are extended by 10 percent of the original contract amount, describe the cause(s) that warranted the increase.

Change Orders – Confirm that each change was approved according to the checklist before the work started. Evaluate the preparation of the change order and the justification. For all changes, include a statement of federal participation eligibility. Include more detailed discussions of major or significant changes (e.g., Scope Change, Claim Settlements, Significant Actions, and Changes over $100,000).

Cost – List the final payment, the original amount, the net effect of change orders and the mathematical calculation of net overruns/underruns. Obtain and include a general explanation of the overs and unders.

Materials – On an interim report, review a process in progress by checking for submittals and approvals of RAMs, any drawing or catalog submittals, the testing method and frequency, adjustments to the ROM, observe field tests and include a summary report. Comment on the overall status of materials testing, documentation and adequacy. On a final report, review the Region Materials Certification, comment on any missing items and mention the resolution of the certification for participation purposes. If material deficiencies warrant withholding of Federal participation, define the deficiencies and the amount of Federal participation being withheld. Refer to the following section, "Quality Improvement and Accountability," in the Stewardship and Oversight Agreement, for a discussion on selection of processes for review.

Disputes, Claims – On an interim report, note any claims or major disputes presently underway. Note how previous issues have been resolved. On a final report, note any exceptions to the final voucher certification and describe the issue.

Traffic Control – Comment on the adequacy of the traffic control plans. Discuss the project's use of flagging, devices, pilot cars, etc. And any unusual events during the project.

Training – On an interim report, determine that a plan has been submitted and approved. Also, note the comparison between accomplished training and the completion status. Report any efforts to recover if behind. On the final report, list the amount of training originally included, any changes made to this requirement and the total amount of training accomplished.

Subcontracting – Discuss the level and nature of subcontracted work. Note any DBE requirements and any change orders modifying these requirements by deleting, adding or substituting DBE commitments. Make reference to any Condition of Award requirements. Assure that mandatory DBE contracting did happen and that the DBEs performed a commercially useful function (review the On-Site reports). Review on-site reports for any DBE firm utilized, whether or not its utilization was mandatory.

Other – Talk to the Project Engineer. Look for special notes. If there was an experimental specification or process, discuss it. If there was an unusual event or happenstance, discuss that. Describe the overall impression of the contractual relationship. Describe any evidence of successful collaboration between the parties. Include any other information of interest.

Note: As a significant part of any review, the reviewer must visit the jobsite and confirm that a project of approximately the nature and magnitude of that shown on the plans actually does exist. This is true for all stewardship reporting.

Communication – Much of the day-to-day communication between WSDOT and FHWA is informal in nature. Verbal discussions, telephone consultations and email notices (including digital photos when needed for clarity) are used extensively. Except where formal written notices are specifically required, staff from both agencies will attempt to utilize the simplest form of communication that accomplishes the needed communication in the least time. All reports and correspondence related to a project shall bear both the WSDOT contract number and the FHWA project number as identifiers.

1-02 Bid Procedures and Conditions

SS 1-02.2 Plans and Specifications

When the design phase of a project is completed and funding has been secured, the public is then notified that WSDOT is ready to accept bids for completion of the work involved. This notice is accomplished by publishing an advertisement for the project, along with an invitation to bid the work, in the "*Daily Journal of Commerce.*" The advertisement includes a specific date and time for the opening of bids along with the necessary information for obtaining plans, specifications, and bid documents. Once advertised, these plans and specifications are then made available to all contractors who wish to study the project. Contract proposal forms or bid documents are also furnished, but only to those prospective contractors who have been prequalified to bid on the types and quantities of work involved. Once bids have been opened, an announcement in the "*Daily Journal of Commerce*" will also be made identifying the "Apparent Low Bidder." Specific information regarding the advertisement phase and bidding procedures can be found in the *Advertisement and Award Manual* M 27-02.

SS 1-02.4 Examination of Plans, Specifications, and Site of Work

If the Project Engineer determines that prospective bidders may have difficulty locating the project or determining the project limits, the Project Engineer may choose to post the project limits.

Standard Specifications Section 1-02.4 requires that all requests for explanation or interpretation of the contract documents be submitted, and be answered, in writing. Any answers that may interpret, clarify, or change the Contract shall do so by means of an addendum. Acceptable answers to pre-bid questions are:

1. Your question will be addressed by addendum
2. Refer to the contract documents – Page/sheet #XXX
3. Bid in accordance with the Contract

Anytime the answer to a question from a prospective bidder might be perceived as interpreting, clarifying, or changing the Contract, the Project Engineer should immediately contact the Region Construction Manager or Region Plans Office to facilitate the preparation of an Addendum. Answers to such questions must be provided to all bidders in the same manner.

All questions from prospective bidders regarding an advertised project should be referred to the Project Engineer listed in the "Notice to All Planholders" for a complete response. The Project Engineer will coordinate the effort to determine if any requested

information needs to be addressed by an addendum. If no addendum is required, the response will be posted on the Contract Ad & Award web page. The Project Engineer shall send the response to: ContractAd&Award@wsdot.wa.gov for posting to the web page.

When questions arise regarding the Transfer of Coverage (TOC) for the Construction Stormwater General Permit, the Project Engineer should go to the Environmental Office's Erosion Control page on the internet for guidance.

1-03 Award and Execution of Contract

SS 1-03.2 Award of Contract

Bids for the contract are opened at a public meeting where each prospective bidder's proposal is read and the Apparent Low Bidder is announced. Within 45 calendar days of bid opening, the proposals will be closely reviewed and the contract will be awarded to the lowest bidder deemed responsive. In accordance with *Standard Specifications* Section 1-03, the successful bidder is then allowed 20 calendar days to return the signed documents that are necessary to enter into a contract with WSDOT. The Contract Administration and Payment System (CAPS) Unit of Accountability and Financial Services (AFS) sends the awarded contract to the Contractor for execution within 3 days of award. Additional copies go to the Region, State Construction Office, Bridge and Structures Office, other internal WSDOT divisions and railroads as needed.

SS 1-03.3 Execution of Contract

After these documents are returned to WSDOT, the contract must be approved and executed. No proposal submitted by a Contractor is binding upon WSDOT prior to the date of execution by WSDOT. No work is to be performed within the project limits or WSDOT furnished sites prior to the execution of the contract by WSDOT. Any work that is performed by the Contractor outside of these areas, or any material that is ordered prior to WSDOT execution, is done so solely at the risk of the Contractor.

In order to ensure timely notification to the Contractor regarding execution of the contract and authority to proceed, the following procedure is used:

1. Immediately after execution of the contract documents by WSDOT, the CAPS Unit of AFS or (for Region Ad and Award projects) the Region Plans Office will email notification to the office administering the contract (the Regional Construction Manager's Office, the Director of Terminal Engineering, or the Architecture Office). The CAPS Unit of AFS also notifies, by memorandum, the National Association of Credit Management, and internal interested parties that the contract has been executed and/or the work may proceed.
2. The Regional Construction Manager or a representative should contact the Project Engineer's office as soon as notification is received. The Project Engineer should then contact the Contractor and provide notification of the execution date. The date, time, and method of notification in all instances should be recorded in the project diary.
3. Following the initial contact, the CAPS Unit of AFS will return fully executed copies of the contract to the Contractor.

1-04 Scope of the Work

SS 1-04.3 Reference Information

Reference Information is information provided to the Contractor that is not part of the Contract. Reference Information often includes design files, CAD files, engineering calculations, survey information, geotechnical reports, bridge condition reports, etc. Because the Reference Information is not part of the Contract, any construction requirements described in the Reference Information will need to be captured in the Contract documents (for example, the plans or special provisions).

Reference Information for most WSDOT projects should be linked through the Contract Ad and Award web site – "View Project Information" - under the Reference Information section of the specific project page.

SS 1-04.4 Changes

WSDOT reserves the right, under *Standard Specifications* 1-04.4, to make changes to the work, work methods, working days, or quantities, as necessary to satisfactorily complete the project as originally intended.

Adding work beyond the original scope is, in essence, entering into a contract to perform work without the benefit of a competitive bid. There is a statutory (RCW 47.28.050) exception from the competitive bid requirement for work up to a value of $7,500. If the value of the work is in excess of $7,500 it is necessary to go through the competitive bidding process.

Change order work may impact the design criteria used to develop the project. The Project Engineer must be alert to this, and ensure that the Design Documentation Package is revised to reflect any such changes. The Project Engineer must contact the Region Project Development staff to obtain approval for the change, and for guidance in documenting and incorporating the change into the Design Documentation Package.

Types of Changes

There are several categories of changes that may occur during the course of the work. A change may warrant additional payment to the contractor, a credit to the contracting agency or be a no cost change order. A change may also warrant an increase or decrease in the working days. Every situation is different. The *Standard Specifications* are very specific on what additional costs are eligible for adjustment. The balance of this discussion of types of changes is intended to help describe and explain the various categories of changes. The Project Engineer should also employ the guidance supplied by the WSDOT *Construction Change Order Process Guide*, which is available on the State Construction Office Sharepoint site.

Deletion of Items

A. **Authority to Delete** – As provided in *Standard Specifications* Section 1-04.4 and 1-08.10(2), WSDOT may cancel all or portions of work included in a contract. When deleting work that is condition of award (COA), be sure to also delete that work from the COA requirements by completing the condition of award portion of the change order in CCIS. An adjustment in working days may also be appropriate.

B. **Payment for Remaining Work** – There are some limitations to payment that should be noted under *Standard Specifications* Section 1-09.5. When work is decreased or deleted by the contracting agency, payment will only be for the costs actually incurred for partially completed work. No profit will be allowed for work that was not completed. Consequential damages are also not allowed. Consequential damages may include such things as: loss of credit, loss of bonding capacity, loss of other jobs, loss of business reputation, loss of job opportunities, etc. In the case of a portion of a lump sum item or partially completed unit items, the value of this work will need to be determined. It may also be necessary to negotiate a price adjustment for the work that was performed and paid using a contract unit price if there is a material difference in the nature of the accomplished work when compared to the nature of the overall planned work. Under certain circumstances when the contractor says "you eliminated all the easy work and left the difficult," there may be entitlement to an adjustment.

   In the event that the deletion impacts the critical path for the project, an adjustment in working days may also be appropriate.

C. **Payment for Materials** – When work is deleted from the project and the contractor has already ordered acceptable materials for such work, *Standard Specifications* Section 1-09.5 controls.

   1. **Contractor Restocks** – The first and best method for disposing of the materials is to request that the contractor attempt to return the materials to the supplier at cost or subject to a reasonable restocking charge. If the materials are restocked then, in accordance with *Standard Specifications* Section 1-09, the contractor's actual costs incurred in handling the materials may be paid.

   2. **Contractor Purchases** – If WSDOT cannot utilize the materials, the contractor may elect to retain them for other work. Once again, in accordance with *Standard Specifications* Section 1-09, the contractor's actual costs incurred to handle the materials may be paid.

   3. **State Purchases and Disposes** – As a last resort, if the materials can not be disposed of at a reasonable cost to WSDOT, the Department may choose to purchase the materials from the contractor. There are some limitations that come with the use of federal funds that may require that the materials be purchased with state funds depending on the situation. The State construction office may be contacted for advice. If possible, such materials may be provided to a future contractor (work with Design) or to Maintenance (work with the Regional Maintenance Office). If the materials cannot be used, they shall be disposed of as described in the WSDOT *Disposal of Personal Property Manual* M 72-91. Once again, in accordance with *Standard Specifications* Section 1-09, the contractor's actual costs incurred in handling the materials may be paid.

Contract Modifications

Changes in Materials, Work Method, or Work Sequence may or may not be a change to the contract. The determining factor is if the change is a modification of a specific contract requirement. If the contract includes language such as "recommends," "suggested," or "approved equal" associated with the item or allows the engineer to approve changes, then a change order is probably not required. In essence, this would not be a violation of the contract and therefore, does not require a change to the contract. A common situation is when the contractor proposes a change to a submitted manufacturer's recommendation, drawing or plan such as a falsework drawing or erection plan. Changes to those drawings/plans may be made by the same authority that approved them the first time. Once again, it is not a change to the contract.

Contractor Endorsement/Unilateral Execution

In order to facilitate timely processing of all change orders, once the terms of the change have been agreed to by both parties, the *Standard Specifications* require the contractor to endorse or respond to a change order within 14 calendar days of delivery from WSDOT. A contractor signature or separate written approval is required for change orders. Requests for extensions of time for contractor endorsement may be granted with sound justification from the contractor but should be the exception. Items to consider for granting such requests are size, risk and complexity of the change, whether or not terms have been agreed to prior to sending the change order for signature, prompt payment and if surety consent is required.

The PE office should consult the region construction engineer prior to approving a time extension request for endorsement of a change order.

Approval of Changes/Checklist

In addition to noting who can execute a change order, the Change Order Checklist (DOT Form 422-003) further indicates who must approve the change prior to execution. The completed checklist will be a part of the change record and shall accompany the change order when it is transmitted to the State Construction Office, and represents the minimum information required to process the change order. Written approval constitutes agreeing with the general nature of the change and can be granted by memorandum or email. The checklist works as follows: for any item marked "yes," approval from the State Construction Office must be obtained if indicated by the column with the "Xs." The Project Engineer and the Region Construction Office have the authority to decide not to proceed with the change. This approval does not constitute authority to proceed with the work. That authority must come from the person who will execute the change order (see approval to proceed). In an emergency; the Region Construction Manager may authorize work to begin on any change order if the assigned ASCE or other State Construction Office representative cannot be contacted for the required approvals and the work must proceed.

Approval to Proceed

All change orders shall be executed prior to the work being performed unless otherwise approved as an exception. In all cases, approval requests (per the C.O. checklist) should occur immediately after the need for a change is identified and include at a minimum, why the change is necessary, general terms of the change, estimated cost (range of cost acceptable) and the change in contract time. If it is determined to be necessary to proceed with the change work prior to execution of the change order, this exception requires approval per the checklist and approval from the executing authority prior to beginning work. Such an approval to proceed might be warranted if it will provide a cost/time benefit to WSDOT or minimize a cost/time disadvantage to the contractor. In the event that the Project Engineer determines that it is in the State's best interest to proceed with the work prior to having a signed change order, the permission of the executing authority and approval per the checklist to proceed with the change under these circumstances must be documented in the file.

A. **FHWA Approval** – On Projects of Division Interest (PoDI) or Projects of Corporate Interest (PoCI), written FHWA approval, or other less formal prior approval if the public interest is served by the more timely action, is required prior to beginning work on change orders that will:

- Alter the termini, character, or scope of work.
- Increase or decrease the project cost by more than $200,000 (except for changes prepared in accordance with *Standard Specifications* Section 1-04.6).
- Add more than 30 days to contract time.

Who does what? – The Region will formally submit this type of change order to FHWA for approval if it is within Region approval authority. If it is outside Region approval authority, the State Construction Office will submit the change order to FHWA for approval.

B. **State Materials Lab**

Areas of Responsibility – *Standard Specifications* Division 9 (see Section 1-00.3(2)) The State Materials Laboratory also advises the State Construction Office and Regions regarding an alternate material's capability to perform the same function as a required material. However, the State Construction Office makes the final approval based on application of the material, maintenance concerns, etc., as to whether an alternate material is capable of performing.

C. **Bridge Technical Advisor (BTA)**

Assignment of BTA – After the contract has been awarded, the Project Engineer may send a written request to the Bridge Construction Engineer in the State Construction Office for the assignment of a BTA. Projects that could benefit from BTA support generally have the following attributes:

- Contract uses Design-Bid-Build or General Contractor/Construction Manager delivery.
- Includes work on major structures (e.g. bridges or tunnels).
- Structures are of moderate or high complexity.
- At least one of the major structures in the contract was designed by the WSDOT Bridge and Structures Office.

The State Construction Office will evaluate the request with the Region to determine if BTA assignment is appropriate or necessary for the specific contract under discussion.

Area of Responsibility – The BTA provides on-call support to the Project Engineer during contract work. The BTA is the subject matter expert who speaks on behalf of the structural Engineer of Record. BTA's may be consulted for questions relating to structures design, inconsistencies or clarifications of structural plans, and for recommendations on minor structural issues that are identified during construction.– "Minor" structural issues can generally be addressed by the BTA quickly and with little or no need for calculations or analysis. When there is any doubt about whether a structural issue is "minor", the Assistant State Construction Engineer (ASCE) should be contacted. Items that should be referred to the ASCE rather than the BTA include:

- Changes involving specifications or materials
- Work method changes
- Repairs
- Structural issues which are not "minor" in scope.
- Value Engineering Change Proposals
- Contract administration issues such as payment or determining the existence of a change to the contract
- Questions regarding geotechnical or hydraulics issues

Executing Authority if a BTA is Assigned – When a BTA has been assigned, the Project Engineer may consult directly with the BTA on items that fall within the BTA's area of responsibility. If the work of the BTA will result in a change to the Contract, approval for this change must come from the State Construction Office. The Project Engineer is encouraged to engage the ASCE as soon as the need for a change to the contract is identified.

BTA Guidelines –

- Develop the most economical solutions while considering the Contractor's means and methods.
- Structural concurrence and recommendations for "minor" structural changes should be made in writing to the Project Engineer and the State Construction Office and should include a cost estimate of the change work and written documentation to support the recommendation for changes.
- Keep a project diary of all activities and recommendations.
- Refer contract administration issues or questions to the Project Engineer and the ASCE.
- Conform to the field safety requirements of the Region and the Contractor.
- Give the project priority but be prudent in the use of time and expense charges.
- Copy the ASCE on all written correspondence and recommendations sent to the Project Engineer.
- Avoid direct communications with the Contractor without coordinating through the Project Engineer.

The above guidelines are generally representative of the scope of services to be provided by the BTA. Once a BTA has been assigned, the Project Engineer shall set up a meeting between the Project Office, BTA and ASCE to discuss project roles/ responsibilities and communication protocols. The BTA's immediate administrative support on-site will be provided by the Project Engineer. The BTA's technical responsibility will be to the BTA's supervisor in the Bridge and Structures Office. Overall determination and monitoring of the assignments will be made by the State Bridge and Structures Engineer.

Delegation of Execution Authority

Highway Construction

The Change Order Checklist (DOT Form 422-003), in addition to describing the approval requirements previously described, also outlines who has authority to execute a change order.

The State Construction Engineer (or designee) executes the change order:

- If any one of 1, 2, 3, or 4 is true (checklist item # 1, 2, 3, or 4 is yes).

The Region (Regional Administrator (and those designated Regional Administrator authority) may execute a change order provided:

- 1, 2, 3, and 4 are not true of the change (checklist item # 1, 2, 3, and 4 are no).

The Regional Administrator's authority to execute change orders may be:

- Delegated to the Regional Construction Manager.
- Further delegated to the assistant to the Regional Construction Manager.
- Further delegated to the Project Engineer.

Limits of Execution Authority

Executing Authority	Dollar Limit	Time Limit
State Construction Engineer	$1,000,000 and Greater	60 days and Greater
Assistant State Construction Engineers	not to exceed $1,000,000	not to exceed 60 days
Region Administrator (and those designated Regional Administrator authority) or Designee	not to exceed $500,000	not to exceed 30 days

Local Agency Projects

When the project being administered includes local agency participation, the project engineer should coordinate with the Regional Local Programs Engineer and the local agency to establish an approval process acceptable to all the parties. Any funding constraints and timelines for reviews and approvals should be established per an agreement and specified in the contract, if appropriate. Absent an agreement, changes that affect permanent work incorporated within WSDOT right-of-way with use of local agency funds (regardless of which agency is administering the contract) will require following the WSDOT approval process and execution authorities.

Documentation

State Construction Office Role

The State Construction Office will review Region executed change orders and provide appropriate feedback.

Project Files

A. **CCIS Input** – The Project Engineer shall ensure that the following information is input into CCIS accurately and in a timely manner:

- **Page 1**
  - Contract No.: (in 6-digit format)
  - Proposed By: C(Contractor), E(Engineer), or B(Both)
  - Order Date: Date change order entered into CCIS
  - Unilateral Change: Y/N
  - PE Stamp required: Y/N
  - Short Description: Descriptive title for change order
  - Is this a MINOR CHANGE?: Y/N
- **Page 2** – (Use only if approval to proceed is requested)
  - Approval Date: The date approval given
  - Requested By: Who requested approval
  - Approved By: Who gave approval
  - Estimated Amount: The estimated dollar amount of the change order
  - Narrative: Description of why approval is needed
- **Page 3** – (Use only if this change order is a VECP)
  - VECP Amount
  - Commentary on VECP
- **Page 4**
  - Sent To Contr: The date the change order was sent to the contractor for signature/concurrence
  - Rec'd From Contr: The date the change order was returned from the contractor
  - Surety Consent: Was surety consent obtained
  - Surety Date: Date Surety consent obtained
  - PE Recom: Is PE recommending approval by Region or the State Construction Office
  - Exec: Initials of PE if executing change order
  - Date: Date that PE executed or recommended execution (***Note:*** the date field on line 4 is for Region or State Construction Office use only)
  - By Whom: Who voided change order (if applicable)
  - Date: Date change order was voided (if applicable)

- **Page 5**
  - Phase: Contract phase affected by change order (if days added/deleted)
  - Description: Phase description (if days added/deleted)
  - Net Change: Number of days added/deleted by change order
- **Page 6**
  - Description: Change order text (uploaded from MS Word)
- **Page 7**
  - What Section of contract changed?
  - Describe the Detail Change:
  - What created the need or caused the change?
  - What is the purpose of this change order?

If new items are created, contract items modified, or Condition of Award is modified by the change order, this information must be input into CCIS as well.

It is important that CCIS input be accurate and timely. CCIS is used by internal and external customers to monitor project changes and costs. Information on change orders (*including minor changes*) is readily accessible through a numbering process and must be adequate so that everyone involved will understand the need for the change. Some key items to remember are as follows:

- Is there a clear description of the work?
- Is the origin and purpose of the change being entered using at least two of the reasons listed in the system?
- Was there an order, other than a signed change order, by the engineer for the contractor to proceed?
- Is there a reference to any key documents in the change order file?
- Are any increases or decreases in contract time associated with the change order entered in the appropriate field enabling the *Weekly Statement of Working Days* to be automatically updated?
- For condition of award change orders, are the appropriate fields filled in to generate the change order and automatically update the condition of award items?
- Are any disclaimers included in the change order and are any agreed upon disclaimers included in the text?
- Are all the appropriate dates entered?

B. **Change Record (DOT Form 422-002)** – The change record must accompany the change order describing the change in sufficient detail so that everyone involved will understand the need for the change, will see that the price is appropriate and that appropriate checks and consultations have been made. The following is a list of items to include in the change record accompanying the change order:

1. **Evolution & Description of the Change**
   - What is required by contract?
   - What is the change?
   - How does it solve the problem?

- Reason for entitlement/why is this not paid under the contract?
- Is there time associated with the change?
- Did the contractor concur/if not why?
- Is FHWA participation appropriate?
- Does the change affect COA?

2. **Basis of Cost & Justification**
   - Any increase or decrease in cost
   - How it was established (see equitable adjustment)
   - Force account must include estimate
3. **Contract Time**
   - Does the change impact the critical path?
   - How was any change in working days established?
   - Note if a change in contract time affects the amount of liquidated damages
4. **Prior Approval**
   - Was the change order executed by the appropriate WSDOT authority prior to proceeding with the work?
   - If not, prior approval by whom and when
5. **List Attachments**
   - Checklist
   - Documentation of approval to proceed
   - Any supporting documentation needed for understanding

C. **Distribution**

1. **Region-Executed** – When the Region (PE or Region Construction Office) has executed a change, copies should be sent via e-mail to the Contractor and the CAPS Unit of Accountability and Financial Services, (if necessary, the CAPS Unit of Accountability and Financial Services creates and coordinates new groups in "CAPS" and "TRAINS"). A copy of the original signed change order- and the change record shall be sent to the State Construction Office via e-mail, with the original signed hard copy to follow by mail. If the change order requires FHWA approval per Section SS 1-04.4, the Region will request approval from the FHWA representative at the time change approval is requested. If the change order utilizes the "Minor Change" process, the two page document substitutes for the change record and CCIS change order print out. The original two page "Minor Change" document shall be sent to the State Construction Office (up to 3 revised/new plan sheets allowed with minor change).
2. **State Construction Office-Executed** – If the change is required to be executed at the State Construction Office, a copy of the original signed change order and the change record shall be sent to the State Construction Office via e-mail (flagged as high priority) with the signed original hard copy following via mail. The original hard copy sent by mail should be flagged with a colored cover sheet (Labeled "State Construction Office Executed Change") to differentiate

them from change orders executed by the region. Copies of the executed change order will be sent via email by the State Construction Office to the region, the CAPS Unit of Accountability and Financial Services, (if necessary, the CAPS Unit of Accountability and Financial Services creates new groups and/or items) and, if appropriate, to the State Bridge Office, Design and the Materials Lab. The Region shall provide a copy of the executed change order to the Contractor. If the change order requires FHWA approval per Section Section SS 1-04.4, the Assistant Construction Engineer will request approval from the FHWA representative at the time the initial approval is granted.

3. **Protecting the Interest of the Surety** – One area for the Project Engineer to watch is the interests of the bonding company. Consent of Surety should be required on any change order that expands the scope of the contract. It is also appropriate on any change of large value or risk. Failure to obtain consent of surety could weaken the State's protection under the bond.
4. **Requiring FHWA Approval** – Upon receipt of the written approval by the FHWA representative, the State Documentation Engineer will route a copy via e-mail to the State Construction Office files, the Region, and the change order final records file.

D. **Change Order Tracking**

In order to provide current status and communication of contract changes Region project offices need to maintain an active change order log. For consistency, a tracking template has been developed and can be found on the State Construction Office web page: www.wsdot.wa.gov/business/construction

SS 1-04.4(1) Minor Changes

All contracts will have a standard item for "Minor Changes." This item will be established in every group as a calculated lump sum. Credits, debits, changes in working days and no cost changes may all be processed under the minor change method subject to the listed criteria.

Criteria for Use

Keep in mind that although the change meets the criteria for using the minor change process, the Project Engineer may decide that this process is not appropriate. The use of this item is at the Region's and the Project Engineer's discretion. Also keep in mind that the limitations and approvals required by the change order checklist still apply as well as all other change order criteria not modified by this *Minor Changes* section. Use of the minor change process is limited to changes that satisfy all of the following criteria:

- The value of the change (credit or debit) is estimated at $25,000 or less.
- Any change in working days not greater than ten days.
- The proposed change can be fully described and explained on page 1 (change order page) and with no more than 3 revised/new plan sheets.

Endorsement

In the interest of being timely, the change order should be a tool to document agreement and not a negotiation tool back and forth. The Contractor's authorized signature on the change order is desirable but not mandatory. A phone call or a verbal agreement with the project superintendent may be appropriate when payment is to be made under the item "Minor Changes." This may be a good discussion item at preconstruction meetings. The Project Engineer should determine when the Contractor's signature is required based on when it is in the State's best interest to document agreement prior to proceeding with a change order. Some situations that may warrant the Contractor's signature are as follows:

- The contract includes substantial incentives.
- There are mutual benefits associated with the change.
- The change might include impacts to time or other work.
- The change is proposed by the Contractor.
- The change is a claim settlement.

In any case, a copy of page 1 (Change Order Page) of the Minor Change form must be sent to the Contractor. If the Contractor does not agree with the terms or conditions of any change order and has not endorsed the change, then the Contractor is required to follow the procedure outlined in *Standard Specifications* Section 1-04.5. This orders the work to proceed and puts the decision to continue negotiations in the Contractor's hands as detailed in that section. The Contractor is obligated to endorse, write a separate acceptance or protest as described in the specification, and a timeline is provided for these actions.

Execution

Due to the criteria for the application of minor changes, the Project Engineer has the authority to execute these change orders, after obtaining all approvals required by the change order checklist. Approval is required prior to performing the work.

Payment by LUMP SUM

The negotiation of prices for payment under the item "Minor Changes" is intended to be the same as any other change order. The focus, as always, should be forward pricing such that the Contractor controls the work and assumes the risk. However, situations occur where it makes sense to measure portions of the work in a variety of ways such as units, force account and/or lump sum. The method for establishing, measuring and monitoring the total may be by any combination of methods however, the payment will only be by a lump sum under the item "Minor Changes."

Project Files

A. **CCIS Input** – "Minor Change" change orders must be entered into CCIS; however the required input is slightly abbreviated. Since a formal change order document as described in Section SS 1-04.4 is not processed, the *Work Description* section in CCIS requiring a detailed upload of text is not required. However, the *Short Description* is required and should provide enough detail to identify the content of the "Minor Change" change order. All other information requested by CCIS, including changes to working days, is required.

B. **Transmittal** – Under the minor change process Change Order – Minor Changes DOT Form 421-005A) substitutes for the transmittal included in the more formal process described above. The information on the Minor Changes form should at a minimum briefly document three key items:
   - A description of the change.
   - Reason for entitlement/why is this not paid by bid items.
   - Any increase or decrease in cost and time and briefly how it was established.

C. **Distribution** – When utilizing the Minor Change process, the minor change form is substituted for the change order document and the change record. Backup documentation shall be kept in the project file at the Project Office, with a copy of the completed Minor Change form. The original, signed Minor Change form, change approval documentation, and the original, completed change order checklist shall be submitted to the State Construction Office. The Minor Change shall be fully documented on DOT Form 421-005A, which is limited to pages 1 (Change Order Page) and 2 (Change Record Page). A copy of the form may be used to document the payment.

SS 1-04.4(2) Value Engineering Change Proposal (VECP)

It is the policy of WSDOT to encourage our contractors to be innovative in planning and performing the work when a cost savings can be realized. When a contractor identifies such a savings and provides a significant portion of the efforts needed to develop the proposal, WSDOT will share the resulting savings with the contractor. This policy is carried out through change orders containing Value Engineering Incentive Payments. The Project Engineer should encourage VECPs and seriously consider the mutual benefits of these proposals brought forth by the contractor as a partner in the contract.

A VECP must meet all the requirements enumerated in *Standard Specifications* Section 1-04.4(2)A, General.

SS 1-04.4(2)B VECP Savings

VECP savings are calculated as defined in *Standard Specifications* Section 1-04.4(2)B1, Proposal Savings and *Standard Specifications* Section 1-04.4(2)B2, Added Cost to Achieve Time Savings.

SS 1-04.4(2)C VECP Approval

There are two separate approvals for a VECP. The first is approval of the concept as described in *Standard Specifications* Section 1-04.2(2)C1, Concept Approval and the second approval is described in *Standard Specifications* Section 1-04.4(2)C2, Formal Approval.

SS 1-04.5 Procedure and Protest by the Contractor

Protested Work

Occasions may arise where the contract may not have fully or clearly defined a work activity or financial responsibility. In these cases, the Project Engineer may determine that, in order to avoid delay of other critical work, protect the traveling public, or other critical circumstances, it may be necessary to direct the Contractor to proceed immediately to complete the work. In some instances, this order may be against the Contractor's wishes. While acknowledging the Contractor's verbal protest, the Project Engineer should again direct the contractor to proceed with the work in accordance with *Standard Specifications* Section 1-04.5. The Contractor should also be advised that, as a separate action, they should follow the guidance in this same section for protest and protest resolution. While these provisions require the Contractor to keep accurate records for completing the protested work, it is not advisable for the Project Engineer to rely on these records to determine what may have taken place when trying to verify costs for protested work many months later. In order to help document the Contractor's work, the form Report of Protested Work DOT Form 422-007 was developed as a tool for the Project Engineer's use.

Disagreement, Dispute, Protest

During the course of a contract, differences of opinion may arise over decisions and plan interpretations that benefit one party at the expense of the other. It is the policy of WSDOT to pursue resolution of these differences at the earliest possible time and to fully recognize all of the contractual rights of the Contractor during the resolution process.

Disagreements, disputes, and protests are the responsibility of the Project Engineer until a formal claim is filed in accordance with *Standard Specifications* Section 1-09.11(2). Contact the State Construction Office for concurrence before taking any issue to a Disputes Review Board. The Project Engineer may employ a variety of techniques and procedures to pursue resolution of these issues. With the high potential for cost impact, it is strongly recommended that all disagreements be identified and tracked.

SS 1-04.6 Variation in Estimated Quantities

Contracts are set up with estimated quantities. Contractors provide unit prices and actual measured quantities are paid using those unit prices. What happens when the actual measured quantity varies from the estimated proposal quantity? *Standard Specifications* Section 1-04.6 require that variations of less than 25 percent be performed without changes in the bid price, but that variations greater than 25 percent may qualify for a payment adjustment of the contract bid. This distribution of estimating risk is a policy of WSDOT and is also a Federal requirement for any project with Federal funds.

Variations may occur because field conditions cause a different quantity for the planned work than was envisioned during the estimating. Other variations may occur when work is added or deleted by change order and original contract unit items are included as the method of pricing the change order. Finally, quantity variations occur when work is added, deleted, or revised without a formal change order (constructive change)

and units with unit prices are the only measure of the revision. The work represented by a constructive change order is in fact work not anticipated at the time the contract was bid and executed, and as such would be outside of the requirements of *Standard Specifications* Section 1-04.6. In other words, you cannot deny a payment adjustment based solely on the fact that the accepted quantity of a bid item is within 25 percent of the original proposal quantity.

As discussed below, quantities included in formal change orders are excluded from consideration of quantity variations. The project engineer who allows constructive changes without formal documentation may find an additional negotiation waiting when final adjusted quantities are calculated and compared with the original proposal quantity.

A unit bid price consists of four different parts. First, and most obvious, are the costs of labor, equipment, materials and services needed to accomplish the work. These are the "direct costs" involved and they vary directly with the amount of work. Second are the variable overhead costs, such as field supervision, field support items (phones, computer rental, payroll clerks, sanicans, etc) whose amounts will vary along with the direct costs. Third, and more difficult to assess, are unavoidable, distributed, fixed overhead costs. These are typically long term and exist whether the quantity varies or not. They include things like home office costs, field trailer setup, long term equipment rentals and other fixed costs. These are typically distributed to the project by allocating them to the plan quantity. Fourth, and finally, the unit price will include some amount for profit.

A. ***Standard Specifications* Section 1-04.6** – The standard contract provision calls for the calculation of an adjusted final quantity. This is the method of revising the final measured quantity to allow for proposal item quantities included in agreed change orders. Unit prices as originally bid will be utilized if the adjusted final quantity is more than 75 percent of the original proposal quantity and not more than 25 percent greater than the original proposal quantity.

   If the final adjusted quantity is outside these limits, then either party to the contract may initiate a renegotiation. If neither party does so, then unit prices will apply to the entire measured quantity of the item. Neither of these actions would be a change to the contract, as the provisions already allow a price change. A formal change order document might well be initiated to show the agreement, however, and would be the mechanism to create new prices.

   If a negotiation is initiated, the provision calls for a new price for the quantity in excess of the 25 percent overrun or a contract price adjustment to compensate for costs and losses associated with an excessive underrun. The renegotiated price for the overrun portion is not an equitable adjustment and this is an important distinction. The new price is based upon actual costs experienced and is completely unrelated to the old bid price. The typical discussion about "what's different from the bid work and what number should be used to modify the bid price?" does not apply in this type of negotiation. The underrun compensation is an equitable adjustment, however, and much of the negotiation is related to the bid price and discussions of the actual work costs as opposed to the planned costs.

Other features of the provision include an exclusion of force account items and other items where an amount has been entered solely to provide a common proposal for the bidders. Consequential damages and lost profits are specifically excluded. The effect of any unbalanced allocation of overhead costs is also excluded from compensation under the provision.

Force accounts and calculated quantities are already taking actual costs into account for overruns. Because of the nature of these items, contractors are unable to allocate unavoidable fixed costs to them except as a share of the allowed markup. The contractor is aware of this provision at the time of bid and knows that this item will not be eligible for renegotiation in the case of an underrun.

Consequential damages are those which are separated from the project and which might be presented as part of a negotiation. "Because of your overrun, I was unable to start work on my other project and had to do that other work in the wintertime." This *consequence* of the quantity variation is not compensable because of the wording of the provision. Similarly, the profit that the contractor might have made on some other work but for the need to perform the extra work in an overrun is also not compensable.

Unbalanced bidding might result in a significantly higher or lower price for an item than normal. It means that too much or too little of allocated overhead or other costs is assigned to the item. This is not a problem in a low bid situation when all items come in at plan quantity. The problem would arise if an unbalanced item were to be involved in an excessive underrun. This provision allows the project engineer to evaluate this possibility during an underrun negotiation (remember that the overrun pricing takes care of the problem automatically by assessing cost and ignoring the bid price.)

Contract time may be affected by the first unit of overrun or underrun. It may be appropriate to add or delete working days; depending on how the quantity variation affects critical activities, as shown on the Contractor's approved progress schedule.

B. **Negotiation Guidelines**

1. **Adjusted Final Quantity** – The *Standard Specifications* language is quite clear on this subject. Start with the final measured quantity, the number that would be included in the final estimate for the item. Review all change orders that have been approved and have been accepted by the Contractor (see *Standard Specifications* Section 1-04.5 for a definition of contractor acceptance of change orders.) Identify change order increases in the item and subtract these from the final measured quantity. Identify change order decreases in the item and add these to the result of the previous subtraction. The result of these calculations is defined as the Adjusted Final Quantity.

   Compare the Adjusted Final Quantity to the original proposal quantity. If the Adjusted Final Quantity is greater than 1.25 times the original proposal quantity, then the item is eligible for an overrun renegotiation. If the Adjusted Final Quantity is less than 0.75 times the original proposal quantity, then the item is eligible for negotiation of an equitable adjustment due to underrun.

2. **Renegotiation for Overruns** – The first analysis should be to determine, if possible, where and when the overrun took place. This is not necessarily the work done after the quantity of 1.25 times proposal was reached. In many cases, a review of the work will disclose which part of the project actually experienced the low estimate and the resulting extra quantity. This is more common in physical items that are visible and can be measured by weight or physical dimensions (Roadway Excavation, Culvert Pipe, Select Borrow, etc.) These are often detailed in the plans to the extent that actual work can be compared with the relevant portion of the proposal quantity. When actual overrun work can be identified and when records exist showing the resources utilized for that work, then those records can form the basis for the revised payment amount. In other cases, the item is a support function, often measured by time, where the plan segments cannot be separated for analysis. This is common in Flagging, Pollution Control items, etc. To analyze these, the only choice is often to look at the actual work that occurred after the threshold was reached and price it. A third method, where records are adequate, is to evaluate the actual costs for the entire item, and apply those only to the overrun units.

   Regardless of method of determining direct cost, markups will be allowed. A good place to start would be the force account percentages described in *Standard Specifications* Section 1-09.6. If the contractor is providing other records for overhead and profit, these can be used, if they are reasonable. Any overhead items that are unavoidable, distributed fixed costs should be excluded. Remember that the Contractor has already been compensated for these one and a quarter times over.

   The revised price will apply only to the units measured in excess of 1.25 times the original proposal quantity. The overrun units between the proposal quantity and the threshold will be paid, according to the terms of the contract, at the bid price.

3. **Equitable Adjustment for Underruns** – The adjustment for an underrun is limited by the contract terms to three factors. The first of these is an adjustment for any increase or decrease in direct costs that result solely from the reduction in quantity. The most common example of this type of cost is the learning curve. “By the time my crew learned how to do this work at this site with these specifications, we were done. They should have been able to apply these skills to an additional 30, 40, or 50 percent of the plan quantity. I experienced the least efficient units and missed out on the most efficient.” in negotiation, this might be demonstrated by production rates, by inspectors’ reports or by the agreed judgment of the negotiators. If such a condition did exist, then an agreed amount for inefficiency during the learning curve could be included in the adjustment.

   The second factor has to do with the nature of the work actually done, when compared with the work shown in the plans. The most common manifestation of this is “You deleted the easiest units and left me with the most difficult,” or “You added units that were much more difficult than those shown in the plan.” Compensable, if true. Logic dictates that, if all of the work shown in the plans was performed and, if no work was added except by formal change

order, then this factor can have no value. The work that was performed was what was shown in the plans and was what the Contractor bid. If, on the other hand, the project engineer has allowed constructive changes without formal documentation, then this factor could well come into play.

Finally, the negotiation should include a look at reallocation of undistributed unavoidable fixed overhead costs. The contractor has allocated these to 100 percent of the proposal amount. The bid price is firm as long as 75 percent of the units are measured and paid. If the final adjusted quantity is less than 75 percent, then the anticipated contribution of the units not performed (up to 75 percent) can be identified, negotiated and included in the equitable adjustment.

One Final Aspect of Underruns – There is a reality that, if more units were paid up to the 75 percent threshold, then there would be no eligibility for negotiation. Because of this, there is a limit to the equitable adjustment. The total paid for the item, including units actually performed and the equitable adjustment cannot exceed 75 percent of the original proposal quantity, multiplied by the unit bid price.

SS 1-04.7 Differing Site Conditions (Changed Conditions)

There are two types of changed conditions. The first (Type I) is a hidden condition that is different from that indicated by the contract (the borings do not show this rock). The second (Type II) is a hidden condition that is not shown differently in the contract, but is unusual and different from what a reasonably prudent contractor would expect (I've never seen this before and nobody else has ever seen it, either). In either case, to qualify for renegotiation, the condition must have a "material" affect on the cost of doing work. In other words, there must be a definable difference in the way the work will now be done and that difference must be significant.

The contractual rules included in *Standard Specifications* Section 1-04.7 are related to fair notice and to giving the State an opportunity to examine the condition and, perhaps, order a different approach to the work. If the contractor takes away this opportunity, then there may be grounds for denying compensation for the different approach to the work. In some cases, the changed situation is not recognized until much or all of the work has been done. In that case, the determining factor for notice is the time when the Contractor knew or should have known of the condition. Whenever notice is served, it must be written.

In a perfect world, a changed condition will be recognized, notice will be given, and work will be stopped until all the interested parties can reach agreement on how to proceed. In the real world, we are often faced with traffic closures and safety issues. Contractors work on tight schedules with one activity interdependent on others and it is not in the public interest to stop work while a changed condition discussion takes place. As soon as possible, to the extent possible, and in any manner which accomplishes the intent, the Project Engineer is expected to consult with the Region Construction Manager and the State Construction Office to obtain the approval before agreeing that a changed condition exists or before entering negotiations for price adjustments.

The Department response to a contractor's assertion of changed conditions, whether agreement or denial, must be written. The Project Engineer must keep accurate time and material records whether the response was negative or positive.

1-05 Control of Work

SS 1-05.1 Authority of the Engineer

The Project Engineer is designated as the Contracting Agency's representative who directly supervises the engineering and administration of the construction Contract. This provides considerable authority to enforce the provisions of the contract under *Standard Specifications* Section 1-05.1. This authority is tempered by WSDOT's policies and delegation of authority from State Construction the Engineer to the Project Engineer. Accordingly, considerable care and professional judgment must be exercised by the Project Engineer in order to avoid exceeding the authority as delegated and to avoid decisions or actions that may be contrary to WSDOT policy. Should there be any doubts as to the limits of authority; the Project Engineer should consult the Regional Construction Manager.

In many cases the courts have held that where the Project Engineer has exceeded their delegated authority their actions are binding upon Contracting Agency. Because of this, it is important that the Project Engineer make no instructions, verbally or by written memoranda, that are outside of their authority.

Project Engineer's Relationship and Responsibilities

The Region will appoint a Project Engineer to act as the authorized representative of the Secretary of Transportation for each contracted project. After the contract has been executed by WSDOT, the Region may provide the Contractor with written confirmation of the name and address of the Project Engineer assigned. (The Region may rely on the special provisions and forego this letter, unless a change is made.) If a letter is sent, the Contractor should be reminded to send all correspondence and forms regarding the project to the Project Engineer.

The Project Engineer is then responsible for enforcement of the contract specifications and provisions and the completion of all work according to the plans. The Project Engineer supervises the work of WSDOT personnel assigned to the project and ensures that they perform their work in accordance with the Plans, specifications and all applicable WSDOT policies. The Project Engineer is responsible for keeping complete and accurate records of all construction data and work progress, preparing progress and final estimates, and preparing other records necessary for a complete documentation of the project, including a performance evaluation of the Contractor (see Section 1-00.9).

Changes made to the project or substitutions for work detailed in the contract plans or specifications, must be made in accordance with the requirements of *Standard Specifications* Section 1-04 and the guidance provided by Section SS 1-04.4. The Project Engineer should review the project on a regular basis with the Regional Maintenance personnel so they have an opportunity to present any maintenance problems that may arise.

The Project Engineer must, at all times, stay aware of the design implications of actions taken during construction. Change orders and undocumented field adjustments can affect the design standards utilized. If change orders or field adjustments affect the project design criteria, the changes must be documented, approved, and incorporated into the Design Documentation Package. The Project Engineer shall contact the Region Project Development staff for guidance in documenting these design criteria changes. The Project Engineer should also consult with Region Environmental Permit Coordinators to make sure proposed design changes comply with environmental requirements.

Responsibility as a Public Official

The Project Engineer is responsible for a project that is affected by Federal, State, Tribal, and local laws, ordinances, and regulations. While no one could be familiar with every requirement, the Project Engineer should seek to understand as much as possible. Beyond that, the prudent Project Engineer will look for guidance and seek information related to whatever current issue is at hand. Legal requirements could affect State employees, those employed by the Contractor in performing the work, the materials to be incorporated, the equipment that is used on the project, or could otherwise affect the conduct of work.

If the Project Engineer discovers that any provision of the contract, plans, or specifications appears to be inconsistent with a law, ordinance, or regulation, the inconsistency should be investigated and, if appropriate, referred to the Region Construction Manager. The Project Engineer should, at all times, strive to comply with all laws, ordinances, and regulations.

Relationship With the Contractor

The Project Engineer must be familiar with the conditions of the contract, special provisions, and specifications for the work. The Project Engineer must attend to any reasonable request of the Contractor, i.e., furnishing grades, stakes, plans, whenever necessary and within reason. In general, the Project Engineer should do all things necessary to enable the Contractor to work to advantage and without delay. The Project Engineer should not set any stakes or furnish to the Contractor any plans which are the responsibility of the Contractor to set or provide. The Project Engineer must ensure that the Contractor performs the work in accordance with the contract provisions, plans, and specifications.

Integrity on the part of all employees is essential. The attitude of the Project Engineer and staff toward the Contractor and the Contractor's personnel should be one of cooperation, consistent with the requirements of the specifications. It should be recognized that both the State and the Contractor have explicit rights under the contract and that both parties must respect those rights. The Contractor is generally trying to fulfill the contract honestly, and errors or difficulties, which may arise are usually due to a lack of information or a misunderstanding. If conflict should occur, the Project Engineer should make every effort to determine the cause of the conflict and make appropriate corrections.

Relationship With Other Government Agencies

Other agencies responsible for such things as flood control, land development, resource protection, stream navigation, or pollution may be affected by the work. The Project Engineer must ensure that the contractor follows the contract pertaining to these and other related issues. The Project Engineer is encouraged to obtain a copy of commitments from the project design file or other sources, like the Commitment Tracking System. This should be available from a region or project design office. This file should contain environmental permits/agreements, real estate commitments, utility commitments, design deviations, and other important information. When the Contractor is specifically required by the contract to obtain an approval document from other agencies, the Project Engineer must confirm that the document was received. Other approvals required of the contractor, but not mentioned in the contract documents should be confirmed to the extent that the requirements are known and the confirmation is possible. If a representative of an agency visits the project, the Project Engineer or an inspector should accompany the representative on the visit.

In carrying out construction work in forested areas, the Project Engineer should encourage the Contractor to comply with all Federal and State forest rules and regulations governing the protection of forests and the prosecution of the work within both national and State forests. The Contractor must take all precautions necessary to prevent and suppress forest fires. The Project Engineer shall report to the nearest forest fire warden at the earliest possible moment, the location and extent of any fire and shall take immediate steps to control the fire if practicable.

Construction work in or near streams, rivers, or other bodies of water may require a permit from state and federal agencies, including but not limited to the State Department of Fish and Wildlife, Washington State Department of Ecology, or the U.S. Army Corps of Engineers. The Project Engineer is encouraged to coordinate closely with these (and other) agencies during permit acquisition to ensure the permits don't contain conflicting conditions. Also, be sure to consult across agencies if one of these agencies request modifications to the project that may affect other permits. The Project Engineer should ensure that the provisions of environmental permits are rigidly enforced. If the Contractor's method of operations, weather conditions, design changes, or other factors affect waters of the state in ways not anticipated or represented in the permit, the Project Engineer will work with the Region Environmental Office and the Contractor (if necessary) to modify the existing permit(s) or obtain a new or revised one(s) as appropriate.

The U.S. Department of Labor, Mine Safety and Health Administration (MSHA) has jurisdiction over and inspects mine sites. A pit, quarry, or other aggregate production facilities may be considered a mine site and under the jurisdiction of MSHA. Testing facilities, personnel and equipment located within a mine site are subject to Title 30 Code of Federal Regulations Parts 46 Training and Retraining of Miners engaged in shell dredging or employed at sand, gravel, surface stone, surface clay, colloidal phosphate, or surface limestone mines and Part 56 Safety and Health Standards – Surface Metal and Nonmetal Mines. When possible, WSDOT-owned testing facilities should be located outside the fenced area of the mine. If testing facilities are located on mine property, they should be placed where other mine administrative offices are located.

Before entering a mine site, contact the operator of the site and request site-specific hazard-awareness training which should include what personal protective equipment is required. This training is required by Title 30 CFR for facilities under MSHA jurisdiction. WSDOT employees are not considered miners and therefore must be escorted to/through the mine site by a Trained Miner when obtaining samples, as required by Title 30 CFR Part 46.

The U.S. Department of Labor, Mine Safety and Health Administration, Metal and Non-Metal Mine Health and Safety Division, 3633 136th Place SE, Suite No. 206, Bellevue, WA 98006, 206-553-7037, must be notified at the beginning and closing of all mining operations. This includes surface mining, such as our normal pit site operations. Notification is required for all crusher operations and for all pits and quarries, including borrow pits, which are separated from the roadway under construction. The owner, operator, or person in charge of the mine site is responsible for notification to MSHA for all mining operations; including those taking place in WSDOT furnished pits and must submit the required report as soon as the date of opening or closing can reasonably be determined.

Whenever construction work is performed in navigable waterways, it is necessary to obtain a construction permit from the Coast Guard. One of the requirements of the construction permit is regular submission of Bridge Construction Progress Reports. Two copies of the report should be prepared by the Project Engineer sufficiently in advance of the first working day of the month and transmitted to the State Bridge and Structures Engineer. When a Coast Guard permit modification is proposed (by the Contractor or WSDOT), it shall be submitted to the Bridge and Structures Engineer for processing through the Coast Guard. The time required for approval/disapproval of the proposed permit modification is variable and depends on the nature and significance of the modification. Up to six months may be required. When all construction obstructions to navigation have been removed, the Project Engineer shall report that fact immediately to the Bridge and Structures Engineer indicating the date removal was completed. Upon completion of all permitted bridge work, a final report indicating the date of completion and certifying that the bridge has been constructed in compliance with the Coast Guard Bridge Permit shall be submitted by the Project Engineer to the State Bridge and Structures Engineer.

Preconstruction Meetings, Discussions

The Project Engineer is required to communicate with the Contractor for the purpose of discussing the project and exchanging a variety of information. Depending upon the complexity of the project, this information can be exchanged in any combination of the following methods:

- Information packets provided to the Contractor.
- Letters transmitting information.
- Informal meetings.
- A single multipurpose formal meeting.
- Several formal meetings with different purposes.

If the Project Engineer decides that a formal meeting is necessary in order to successfully begin work on the project, a meeting should be arranged as soon as practical after the contract is awarded and the Contractor has organized for the work.

In the case of a project that includes utilities to be adjusted, relocated, replaced or constructed by a utility, or their contractor, during the performance of the contract, the Project Engineer shall facilitate a mandatory utility preconstruction meeting with the Contractor, all affected utility owners and their contractors prior to any on-site work. The Project Engineer should request assistance from the Region Utilities Engineer for help in getting utilities to attend this meeting. This meeting should include a discussion of all utility work schedules, in order to enable the utilities and the Contractor to coordinate their work, resolve schedule conflicts, and eliminate delays.

The Revised Code of Washington (RCW 47.01.300) requires that projects with environmental considerations be reviewed during the preconstruction meetings held with the contractor. More information about discussing environmental topics at the preconstruction meeting is found in the Chapter 610 of the *Environmental Manual*. A procedure is available (PRO610-b) to help the Project Engineer prepare environmental topics to discuss at the preconstruction meeting. Verification of the Contractor's Certified Erosion and Sediment Control Lead (CESCL) is required when the project has obtained a NPDES Construction Stormwater General Permit. A procedure is available (PRO610-c) that allows the Project Engineer to verify the Contractor's CESCL credentials are valid.

All information exchanged should be documented in the project records, by formal meeting minutes, by file copies of letters, or by diary entries.

The nature, amounts, and methods of communication with the Contractor are left to the Project Engineer. As a minimum, the following subject areas should be covered during the preconstruction time period:

- **Contractor WSDOT Relationships** – The Project Engineer should begin to develop a positive and effective relationship with the Contractor as soon as the contract is awarded. This is also a good time to introduce the concept of "Partnering" if it has not already been introduced on the project. The Project Engineer should strive to create an environment that encourages a cooperative approach to completing the project. This can be helped by beginning the development of a team consisting of both the Contractor's and WSDOT's project people. The level of authority delegated to each member of the Project Engineer's staff should be discussed with the Contractor. The level of authority of each member of the Contractor's staff, in particular regarding change orders, should be discussed. In addition the methods of establishing the Contractor's Performance ratings can be reviewed (see Section 1-00.9 for additional information).
  The Contractor should also be informed that there is an opportunity to evaluate the WSDOT construction process as well.

  Especially on projects with Contractor surveying, it is strongly advised to invite the Region Survey Committee member or their representative to discuss the requirements for removing, disturbing, or re-establishing survey monuments.

- **Environmental Commitments** – Almost every project will have environmental commitments resulting from, but not limited to: 1) environmental processes like the National Environmental Policy Act or the Washington State Environmental Policy Act; 2) consultations with federal agencies concerning endangered species; 3) obtaining federal, state, and local permits; or 4) existing inter agency agreements. WSDOT uses the Commitment Tracking System (CTS) to store project specific environmental commitments and to organize them by ownership; Contractor, WSDOT, or both.

  It is WSDOT policy to incorporate all contract-relevant environmental commitments into the contract. As a result, the Special Provisions and the Plans should contain all the contract-relevant environmental commitments not covered by the *Standard Specifications*. The Project Engineer is encouraged to review the Special Provisions and Plans with the Contractor at the preconstruction meeting. The Project Engineer should consider using relevant information from the environmental compliance binder (PRO610-a) during the preconstruction meeting.

  The Contractor's responsibility to obtain any local agency permits should also be discussed. For example if a rock crusher is required for a project, the State Department of Ecology registration requirements should be discussed (WAC 173-400). In addition, a written record of this discussion should be sent to the regional office of the State Department of Ecology so that they are aware of the timing and location of the rock crushing operation.
- **Order of Work and Time Schedules** – The Project Engineer needs to know the Contractor's schedule of work in order to set up the crews, arrange for any special inspections, or provide timely reviews of submittals. The contract requirements for progress schedule or time for completion in accordance with Section 1-08, or as amended by the special provisions, can also be discussed. When shown in the Plans, the first order of work shall be the installation of high visibility fencing to delineate all areas for protection or restoration. The Project Engineer should review the Plans at the preconstruction meeting to ensure these resources are not disturbed during clearing and grading activities. A procedure exists (PRO610-d) for the Project Engineer to ensure the clearing limits are properly marked in the field to protect sensitive areas..
- **Subcontractors and Lower-Tier Subcontractors** – In accordance with *Standard Specifications* Section 1-08.1, the Project Engineer needs to become aware of the Contractor's plans to delegate portions of the work to subcontractors. These plans must conform to the condition of award, if any, related to disadvantaged business enterprise participation. The Project Engineer should explain the requirements and process involved for subcontractor and lower-tier subcontractor approval, including the prevailing wage rate requirements outlined in the contract documents (see Section SS 1-07.9(1)), the requirement to verify that each subcontractor meets the responsibility criteria outline in 39.04 RCW and possesses any license required by 19.28 RCW or 70.87 RCW, and the requirement that all subcontracts (of whatever tier) on Federal Aid contracts must include FHWA-1273 and Amendments to FHWA-1273. WSDOT/Contractor/Subcontractor relationships should also be discussed. The Project Engineer should remind the Contractor that there is no contractual relationship between WSDOT and the subcontractors. All subcontractor correspondence with WSDOT should pass through the Contractor for submittal to

WSDOT or vice versa. Contractor representation should also be discussed. It will be necessary for the Contractor to be represented at the job site at all times, even when there is only subcontractor work in progress.

- **Utilities, Railroads, and Other Third Parties** – If the project affects or is affected by third party organizations, the Project Engineer must advise the Contractor about the relationships with the third parties and the expectations they hold regarding the actions of both WSDOT and the Contractor. The Project Engineer may wish to arrange face-to-face meetings with representatives of affected third parties. In the case of utilities, reference should be made to the underground locator services and the requirements to utilize them (see RCW 19.122). If WSDOT has agreed to notification time limits, these should be communicated to the Contractor. If special insurance is required by any agreements with third parties, then these requirements should be pointed out to the Contractor.

  If utilities are to be adjusted, relocated, repaired or constructed by the utility during the performance of the contract, the Project Engineer shall facilitate a separate, mandatory, utility preconstruction meeting with the Contractor, the utility, and their contractors.

- **Safety and Traffic Control** – The Contractor's safety program should be discussed as outlined in Section SS 1-07.1. WSDOT has an interest in safe operations on the job and the Project Engineer should make clear that this interest will be protected. As part of a discussion of specific safety requirements of the particular work, safety considerations for workers and WSDOT personnel, such as safety zone requirements, vehicle intrusion protection, fall prevention, closed spaces, hazardous materials, work around heavy equipment, etc., should be addressed. The need for control of speed on all construction equipment should be emphasized.

  The Project Engineer should describe WSDOT's traffic requirements. The Contractor's Traffic Control Manager (TCM), Traffic Control Supervisor (TCS) and WSDOT's traffic control contact person should be identified and their responsibilities and authorities clearly stated. Any traffic control requirements that are unique or restrictive should be emphasized and addressed by the Contractor with respect to construction operations. Unacceptable delays to traffic should also be discussed.

  The MUTCD, as adopted by WSDOT, is the legal standard for all signing, traffic control devices and traffic control plan requirements on the project. These standards have been incorporated into the project Traffic Control Plans (TCPs.) If the Contractor chooses to use these TCPs, they must be formally adopted in writing as required in *Standard Specifications* Section 1-10.2(2). If the Contractor wishes to use some other traffic control scheme, then that plan must be submitted and approved in advance.

  Flaggers and their intended locations must be included in the plans. When Flaggers are utilized, they must have a current flagging card and shall be equipped with hard hats, vests, and standard stop/slow paddles as required in *Standard Specifications* Section 1-07.8 and 1-10.3. Overuse of flaggers is not appropriate as "catch all" traffic control and should be discouraged. Safety of flaggers, through use of physical protection devices where practical, proper flagging methods and formulating an emergency escape plan, should be emphasized.

The Contractor and the Project Engineer should establish communication with the Washington State Patrol (WSP) and local law enforcement agencies. Law enforcement advice about traffic control should be considered. Arrangements for all law enforcement agencies to notify the project office about accidents near, or in, the construction area should be established, if possible. If WSP traffic control assistance is to be used, a general discussion of strategy and responsibilities should be included.

Off-site hauling can pose a safety hazard to the public. WSDOT will cooperate with law enforcement agencies in the enforcement of legal load limit requirements and the covered load regulations. The Project Engineer should discuss this with the Contractor before any hauling begins.

The Contractor should be reminded of *Standard Specifications* Section 1-07.1, requiring the Contractor to comply with all Federal, State, tribal or local laws, ordinances, and regulation that affect Work under the contract.

Particular mention should be made of observance of Industrial Fire Precaution Levels (IFPL) when performing work on or adjacent to forest land under the purview of the Department of Natural Resources (DNR). The Contractor is required to comply with all fire regulation including, but not limited to, fire shutdowns, fire fighting tools required, notifications, etc. Information regarding IFPLs may be found on the DNR webpage listed: www.dnr.wa.gov/RecreationEducation/Topics/FireBurningRegulations/Pages/rp_fire_ifpl.aspx.aspx

- **Control of Materials** – The Contractor should be reminded of *Standard Specifications* Section 1-06.1, requiring the Engineer's approval of all materials prior to their use. In order to expedite these approvals, the Contractor should be encouraged to make these requests as early as possible. The Project Engineer should provide the Contractor with a current copy of the Record of Materials (ROM) for the project. The Project Engineer should discuss the ROM with the Contractor, covering the various requirements for sampling, catalog cuts, shop drawings, certification requirements, etc., which may be needed for approval of materials prior to their use. If the project includes Federal funds, the Project Engineer should discuss the requirements of "Buy America" and DOT Form 350-109, Certification of Materials Origin. The requirements of *Standard Specifications* Section 1-06.2 for ongoing acceptance of approved materials prior to their being incorporated into the work, should also be discussed. The Project Engineer should discuss with the Contractor who should have access to the Statistical Acceptance of Material (SAM) program. If fabricated items will be needed, the inspection process for fabricated materials, including shop drawing approvals and notification requirements for fabrication inspectors, should also be outlined. The requirements of *Standard Specifications* Section 1-06.3 that require manufacturer certifications prior to use of the materials should also be reviewed.

  The Contractor should be reminded that, in order to avoid deferred progress payments for portions of work not completed, all necessary documentation for approval of materials and required certifications must be received and accepted prior to their use. A method of notification of intent to defer payment should be discussed with the Contractor, and an agreed upon method documented in the project files.

- **Other Submittals** – Discuss any other submittals that may be needed during the course of the contract. This may include Falsework and Forming Plans, Traffic Control Plans, Temporary Erosion and Sediment Control Plans, Spill Prevention Control and Countermeasures Plans, Schedules, Installation or Operating Procedures, or other Contractor initiated items requiring WSDOT review and/or approval. There are requirements for a number of submittals which, if not satisfied in a timely manner, could delay the initial progress payment. These include the Statement of Intent to Pay Prevailing Wages, the Progress Schedule, and the Training Plan. There may be others depending on the work to be done and as required by the contract provisions. The Project Engineer should identify and remind the Contractor of these requirements and the potential for deferred payments.
- **DBE Participation/EEO/Training** – The Project Engineer should briefly discuss and answer any questions the contractor may have with regard to the efforts, reports, and monitoring necessary to ensure successful performance for DBE *Participation, EEO, Apprentice Utilization, and Training*. Section SS 1-07.11(2) of this manual provides a breakdown of these various programs and the general requirements each contains. However, the specific requirements and contractor performance information are included in the *Standard Specifications*, the Amendments included in the contract, as well as the contract specific special provisions titled *Equal Employment Opportunity Responsibilities*. If additional assistance or information is necessary, the Project Engineer could also request assistance from the Region EEO Officer, the State Office of Equal Opportunity, or the State Construction Engineer's Office.

  The Contractor should be ready to discuss how utilizing the services of the Department of Employment Security's Work Source will be incorporated into their recruitment program when filling new jobs on the project.
- **Wage Rate Administration** – Advise the Contractor of the requirement to pay prevailing wage rates as identified in the Contract. Advise the Contractor that it is their responsibility to work directly with Washington State Department of Labor and Industries (L&I) for approval of the Statement of Intent to Pay Prevailing Wages (SI) and Affidavit of Wages Paid (AWP) and that:
  - The SI and AWP will be on forms provided by L&I.
  - The forms will be obtained from L&I or can be filed electronically with L&I online at www.lni.wa.gov/tradeslicensing/prevwage/default.asp, if the contractor is registered by L&I to file electronically.
  - The contractors, subcontractors, lower-tier subcontractors, suppliers, manufacturers, and fabricators that are required to submit SI and AWP will pay the approval fee directly to L&I.
  - The Contractor will provide the Project Engineer a copy of the approved forms (SI, before any payment can be made for the work performed and all AWP, before the contract will be accepted). If payrolls are required, establish submittal deadlines in accordance with *Standard Specifications* Section 1-07.9(5). Describe the wage rate interview process. Describe the required and/or recommended job site posters and provide them to the Contractor (see Section SS 1-07.9(2)). On all Federal-Aid contracts, the Project

Engineer must remind the Contractor that the work falls under the guidance of Davis-Bacon and Related Acts and the Contract Work Hours and Safety Standards Acts. As indicated in Section SS 1-07.9(1), the U.S. Department of Labor may conduct investigations to ensure compliance with these Acts.

- **Forms** – The Project Engineer should provide the Contractor a description of all required forms, giving the Contractor an initial supply of each. Additional forms required by the Contractor over the course of the work should be provided by the Project Engineer upon request by the Contractor. Remind the Contractor that all form submittals, including those of subcontractors, lower-tier subcontractors, and suppliers, should be routed through the Prime Contractor for submittal to WSDOT.
- **Summary** – While these issues are to be discussed with the Contractor in some manner at the beginning of each contract, the Project Engineer is free to select the most effective method of doing so. A formal preconstruction conference may or may not be the best solution. Perhaps a single meeting is adequate or several meetings may be required. The entire preconstruction communication may also be covered in a short meeting between the Project Engineer and the Contractor. The Project Engineer is responsible to address these subjects, inform the Contractor in some manner and maintain a written summary of the preconstruction meetings or discussions for the contract files.

  The Contractor and Project Engineer may be knowledgeable about those normal requirements listed above. In this situation, some items need only be listed in a mailing as a convenience to the Contractor's staff. Unique features, constructability, and third party coordination should be focused on with as many of the interested parties as can be assembled.

  The key is effective communication, getting the right message to the necessary people. Additional meetings may be required as people change, as new facets of the work become imminent, or as the project goes into a second or third season. In order to assist this process, a checklist has been developed as a tool for the project office's use. It can be used to help identify the issues and track them for completion through the various preconstruction communications.

SS 1-05.3 Plans and Working Drawings

Working Drawings submitted by the Contractor should be checked for conformance to contract requirements. A Change Order is required for any deviation from contract requirements. Any conflicts with the contract plans that have been detected or revisions that may be desired by the Project Engineer should be noted on the copy being forwarded to Headquarters. If Change Orders to cover any deviations from the contract plans have been issued, or are being processed, those changes should also be noted.

Figure 1-1 is a list of the most common Working Drawings and includes references to the specifications that require them and the section of this manual that covers the procedures for processing them. The WSDOT Review Groups column identifies the groups within WSDOT that need to review the various Working Drawings. All review by State groups (Bridge and Structures Engineer, Bridge and Structures Architect, Geotechnical Engineer, Materials Lab and State Construction Engineer) identified in Figure 1-1 is coordinated by the Bridge and Structures Engineer. The Project Engineer should use DOT Form 410-025 to transmit the Working Drawings with State review

requirements to the Bridge and Structures Engineer. The Bridge and Structures Engineer will then send a response back to the Project Engineer that incorporates comments from all State review groups.

The Project Engineer should maintain a log of all shop plans or other drawings received for each contract. Shop plans for items that conform to the contract plans or a standard plan, except those listed in Figure 1-1, should be reviewed by the Project Engineer.

Beginning in August 2014, *Standard Specifications* Section 1-05.3 was rewritten to change how Working Drawings are classified. These changes classify Working Drawings as Type 1, 2 or 3 with Types 2 and 3 having the option to be classified as 2E or 3E when the submittal is required to be prepared by a Professional Engineer. Type 1 Working Drawings are generally informational in nature and are often used to provide the Project Engineer a description of work to be completed and allow the Project Engineer an opportunity to prepare for the inspection of this work. A Type 1 Working Drawing does not require a response to the Contractor. Should the Project Engineer determine the work proposed by the Contractor does not comply with the contract, a response should be sent to the Contractor. Type 2 and 2E Working Drawings are required for work that is more complex or specialized than what would be required for a Type 1 Working Drawing. A Type 2 Working Drawing is submitted to the Project Engineer for review and comment and will often be reviewed by support offices that specializes in the type of work. The Project Engineer is allowed up to 20 calendar days for review and the Contractor is not allowed to begin work until the Project Engineer has provided review comments. It is important that the Project Engineer complete the review and return comments, even if the plan is acceptable, to prevent a delay to the Contractor. Type 3 and 3E Working Drawings require WSDOT's approval prior to the Contractor beginning work and the Project Engineer is allowed 30 calendar days to complete their review. For Type 3 and 3E Working Drawings it is important that the Project Engineer complete the review and reply to the Contractor within the allowed 30 calendar days. Should the Project Engineer fail to complete the review and respond to the Contractor within the allowable time for the Type 2 or 3 Working Drawings, the Contractor may be entitled to compensation for impacts due to the delay.

At this time, not all sections of the *Standard Specifications* and Special Provisions have been updated to reflect the revisions to Section 1-05.3. There will still be some sections that reference different requirements for the submittal and review of Working Drawings. The Project Engineer should review the Contract to confirm the proper Working Drawing requirements are being followed.

Comments on Working Drawings should be related only to conformance of the Working Drawing to the contractual requirements. Possible responses to Working Drawings include:

- Approved (only use for Working Drawings that require WSDOT approval)
- No exceptions taken
- Make corrections noted
- Revise and resubmit
- Rejected

Working Drawings that conform to the requirements of the contract will generally be returned as approved for Type 3 or no exceptions taken for Type 2. Working Drawings that don't comply with the contract will be returned with one of the other responses depending on the nature and severity of the contractual compliance issues.

Working Drawing, Shop Plan, or Submittal Type	Construction Manual Ref.	Standard Spec. or Other References	WSDOT Review Groups	PE Distribution of Drawings	Notes
Working Drawings (Shop Plans for Contract or Standard Plan Item)	SS 1-05.3	1-01.3	Project Engineer	Contractor Fabrication Inspector	
Calculations for Overload of Structure	None	1-07.7(2) 6-01.6	Project Engineer Bridge and Structures Engineer	Contractor	PE stamp is required.
Mfg. Specification for Portable Temporary Traffic Control Signal	None	1-10.3(3)K	Project Engineer	Contractor	
Prefabricated Vertical Drainage Wick Submittals	None	2-03.3(14)H	Project Engineer	Contractor	
Calculation for Backfilling Abutment Prior to Superstructure Placement	None	2-03.3(14)I	Project Engineer Bridge and Structures Engineer Geotechnical Engineer	Contractor	PE stamp is required.
Blasting Plan	None	2-03.3(2)	Project Engineer	Contractor	
Excavation Slope Working Drawings and Calculations	None	2-09.3(3)B	Project Engineer Geotechnical Engineer	Contractor	PE stamp is required for Temporary Slopes Greater than 20 ft in Height
Cofferdams, Shoring, Cribs, and Trench Boxes	6-1.5	2-09.3(3)D 2-09.3(4) 6-02.3(16)	Project Engineer Bridge and Structures Engineer Geotechnical Engineer	Contractor Region Construction	PE stamp is required.
Falsework, Forming, and Bracing Plans (including design calculations)	6-1.5	6-02.3(16) 6-02.3(17)F	Project Engineer Bridge and Structures Engineer	Contractor Region Construction	PE stamp is required.
3-Sided Structures	None	7-02.3(6)	Project Engineer Bridge and Structures Engineer Geotechnical. Engineer	Contractor Fabrication Inspection	PE stamp is required.
Project Specific Powder Coating Plan and Materials Submittals	None	6-07.3(11)B	Project Engineer State Materials Engineer (Fabrication Inspection) Bridge and Structures Engineer	Contractor Fabrication Inspection	
Bridge Demolition Plans	None	2-02.3(2)A	Project Engineer Bridge and Structures Engineer State Construction Engineer	Contractor Region Construction	PE stamp is required.

Working Drawings, Shop Plans or Submittal Type
Figure 1-1

Working Drawing, Shop Plan, or Submittal Type	Construction Manual Ref.	Standard Spec. or Other References	WSDOT Review Groups	PE Distribution of Drawings	Notes
Shaft Installation Plan and Construction Experience for Bridges and Permanent Signing Structures	None	6-19.3(2)	Project Engineer Bridge and Structures Engineer Geotechnical Engineer State Construction Engineer	Contractor	
Precast Vaults	None	See Special Provisions	Project Engineer Bridge and Structures Engineer Geotechnical Engineer	Contractor Fabrication Inspection	PE stamp is required
.Pipe Jacking Plans	None	See Special Provisions	Project Engineer Bridge and Structures Engineer Geotechnical Engineer	Contractor	
Soil Nail Walls	None	6-15.3(3)	Project Engineer Bridge and Structures Engineer Geotechnical Engineer	Contractor	Include State Const. Engr. if shotcrete facing is permanent (6-18.3(1)) Experience criteria to be verified by Project Engineer
Soldier Pile Walls	None	6-16.3(2)	Project Engineer Bridge and Structures Engineer Geotechnical Engineer	Contractor	PE stamp is required for concrete fascia panel forming plans only.
Permanent Ground Anchor Submittals	None	6-17.3(3)	Project Engineer Bridge and Structures Engineer Geotechnical Engineer	Contractor	
Roadside Plant/Weed and Pest Control Plan	None	8-02.3(2)	Project Engineer	Contractor Region Construction	Signed by Licensed Chemical Pest Control Consultant
Shop Plans for Light Standard and Traffic Signal Standards	8-20.2B	8-20.2(1)	Project Engineer Bridge and Structures Engineer	Contractor Fabrication Inspection Maintenance	Shop drawings are required for all signal standards and for those light standards without pre-reviewed plans. (per Std. Spec)
Shop Plans for Sign Structures	8-21.3	8-21.3(9) A refers to Section 6-03.	Project Engineer Bridge and Structures Engineer	Contractor Fabrication Inspection	
Column Jacket Shop Drawings and Installation Plans	None	GSP 6-02.3.OPT8(C). GB6 and 6-02.3.OPT8(D). GB6	Project Engineer Bridge and Structures Engineer Geotechnical Engineer	Contractor Fabrication Inspection Maintenance	PE stamp is required on column jacket installation plan

Working Drawings, Shop Plans or Submittal Type
Figure 1-1

Working Drawing, Shop Plan, or Submittal Type	Construction Manual Ref.	Standard Spec. or Other References	WSDOT Review Groups	PE Distribution of Drawings	Notes
Form Liners (Various patterns per GSP)	None	6-02.3(14)D	Project Engineer Bridge and Structures Architect	Region Construction Contractor	Include 2ft × 2ft sample with drawing to Bridge and Struct. Architect
Welding Steel Piling	6-5.6	6-05.3(6) 6-03.3(25)	Project Engineer Bridge and Structures Engineer	Contractor Fabrication Inspection	Weld splices of steel casing for cast-in-place conc. Piles shall be the Contractor's responsibility
Pile Driving Equipment Adequacy Submittals		6-05.3(9)	Project Engineer Bridge and Structures Engineer Geotechnical Engineer State Construction Engineer	Contractor	PE stamp is required on wave equation analysis
Painting Plan	None	6-07.3(2)	Project Engineer Bridge and Structures Engineer State Construction Engineer	Contractor	
Modified Concrete Overlays (Mix Design, Equipment Specifications and Procedures)	None	6-09.3(2)	Project Engineer State Construction Engineer	Contractor	
Shaft Installation Plan for Noise Walls, Soldier Pile Walls, Signal Standard Foundations, and Luminaire Bases	6-2.3E	6-12.3(1) 6-16.3(2)	Project Engineer Bridge and Structures Engineer Geotechnical Engineer State Construction Engineer	Contractor	
Structural Earth Wall Submittals	None	6-13.3(2)	Project Engineer Bridge and Structures Engineer Geotechnical Engineer	Contractor	PE stamp is required.
Geosynthetic Retaining Wall Plans (Includes Std. Plan Type 1-6 Walls)	None	6-14.3(2)	Project Engineer Bridge and Structures Engineer Geotechnical Engineer	Contractor	
Girder Erection Plans (Including falsework and stress calculations)	None	6-02.3(16) 6-02.3(25)N 6-03.3(7)A	Project Engineer Bridge and Structures Engineer	Contractor Region Construction	PE stamp is required.
Welding Reinforcing Steel	6-2.6D	6-02.3(24)E	Project Engineer Bridge and Structures Engineer	Contractor Fabrication Inspection	
Shop Detail Plans of Prestressed Concrete Girders, Prestressed Structures, Prestressed and Precast Conc Piles	6-2.7A	6-02.3(25)A None for Piles	Project Engineer Bridge and Structures Engineer	Contractor Fabrication Inspection	6-02.3(16)B is for the formwork plans for preapproval

Working Drawings, Shop Plans or Submittal Type
Figure 1-1

Working Drawing, Shop Plan, or Submittal Type	Construction Manual Ref.	Standard Spec. or Other References	WSDOT Review Groups	PE Distribution of Drawings	Notes
Post-Tension Shop Drawings	6-2.8	6-02.3(26)A	Project Engineer Bridge and Structures Engineer State Construction Engineer	State Construction Engr. Contractor Region Construction	PE stamp required
Precast Concrete Panels	None	6-02.3(28)A 6-12.3(1)	Project Engineer Bridge and Structures Engineer	State Construction Engr. Contractor Fabrication Inspection	
Welding Structural Steel (Submitted with Shop Drawings)	6-3.6C	6-03.3(25)	Project Engineer Bridge and Structures Engineer	Region Construction State Materials Lab Contractor	
Shop Plans for Structural Steel for Bridges (Expansion Joints, Metal Bridge Rails, Bridge Drains, Etc.)	6-3.1	6-03.3(7) 6-06.3(2) Special Provisions	Project Engineer Bridge and Structures Engineer	Region Construction State Materials Lab Contractor	
Treated Timber Structures	6-4.1	6-04.3(3)	Project Engineer Bridge and Structures Engineer	Contractor Fabrication Inspection	

Working Drawings, Shop Plans or Submittal Type
Figure 1-1

SS 1-05.4 Conformity With and Deviations From Plans and Stakes

Permanent Monuments

Most permanent monuments which are in the construction zone are relocated by the establishing agency. Normally these monuments are relocated prior to beginning of construction, but if monuments are found within the construction zone, they must be preserved until they can be moved. If the urgency of construction does not allow time for the relocation of the monument, it must be properly referenced so it may be reset or relocated at a later time. When a monument is found within the construction area, the proper agency shall be notified promptly and requested to relocate the monument.

Property Corner Monuments and Markers

It is imperative that land plats and property corners be preserved. The 1973 Legislature enacted a Survey Recording Act, RCW 58.09, to provide a method for preserving evidence of land surveys by establishing standards and procedures for monuments and for recording surveys as a public record. When a general land office corner, plat survey corner, or property line corner exists in the construction zone, it is necessary to properly reference it and reset it after the construction work has been done. RCW 58.09.040 requires that, for all monuments that are set or reset, a record of the monument be filed on a Monumentation Map with the County Engineer in the county in which the corner exists and the original sent to the State Right of Way Plans Branch, who will forward a copy to DNR for their records.

Alignment Monumentation

During construction, alignment monumentation may be altered to fit field conditions. Such changes may include:

- Normally all PCs and PTs are to be monumented. Additional point on tangent (POT) monuments are necessary where line of sight is, or may in the future be obstructed by the horizontal or vertical alignment, buildings, or other barriers.
- When the right of way and the construction alignment do not coincide, the monumentation shall be such that the exact right of way as acquired can be positioned in the field. This will generally require, as a minimum, that the right of way alignment be monumented.
- When safety of the survey crew or survival of the monuments is an issue, monuments may be offset from the true alignment. An extra effort in accuracy must be made when setting offset monuments to ensure an accurate reestablishment of the true alignment. The monumentation, including monument locations, reference distances, stations, and bearings, is to be shown on the as built plans.

Surveying Provided by the State

Unless the contract states otherwise, the Project Engineer is responsible for providing all surveying needed to locate and define the contract work. The staking done in construction surveying must assure that the work will conform to the plans and must also conform to the Contractor's approach to the work. There are numerous survey techniques that will accomplish these objectives. Prior to each phase of the work, the Project Engineer must reach agreement with the Contractor concerning the method, location, and timing of construction staking. Once this agreement is reached, it must be shared with all WSDOT, Contractor, and subcontractor personnel who place or use construction stakes.

Contractor Surveying

If the contract requires the Contractor to provide some or all of the construction surveying, the Project Engineer is required to provide only the primary control points staked, marked, and verified in the field and the coordinate information for the main alignment points in the plans. The plan alignment and the field control points must be referenced to the same grid coordinate system.

The provisions for contractor surveying are intended to provide the stakes needed to inspect the work, as well as the primary function of locating and defining the work. If the survey stakes required by the contract do not provide the reference data needed for inspection, then the Project Engineer will have to provide additional survey work that is needed. As an alternative, a change could be negotiated with the Contractor to perform the added work.

The Contractor's survey work is a contract item, just like all other contract items. It must be inspected for adequacy and conformance with the contract. Once it is performed and inspected, it must be paid for.

The wise Project Engineer will inspect the survey efforts and check as much of the contractor's work as is practical. Any errors should be brought to the Contractor's attention for corrective action. The inclusion of contractor surveying in a project transfers the risk of survey errors to the Contractor. The Project Engineer must assure that the survey work of the Contracting Agency does not relieve the Contractor of that risk.

Subgrade Grade Control Tolerance

The finish required on roadway subgrades shall ensure a final grade in as close conformity to the planned grade and cross-section as is practicable, consistent with the type of material being placed. Subgrade blue tops shall be set 0.05 ft below subgrade elevation and be accurate to + or – 0.01 ft. The finished subgrade surface shall not deviate from the plan subgrade elevation by more than +0.00 to -0.05 ft. Where excessively rocky materials are being placed, deviations in excess of the above may be accepted where, in the opinion of the Engineer, closer conformance cannot be achieved by normal procedures and with a reasonable amount of effort and care on the part of the Contractor. Conformance to grade shall be checked by rod and level, straight-edging, or other appropriate engineering method as selected by the Engineer.

Surfacing Grade Control Tolerance

Red and Yellow tops for surfacing materials shall be set accurate to + or -0.01 ft. The finish of the compacted materials shall conform to the grade established by the blue tops as closely as is practicable and in general, should not deviate from the established grade in excess of the following: ballast and base course, + or – 0.05 ft; top course for bituminous surface treatment, + or – 0.03 ft; top course for asphalt concrete, + or – 0.02 ft; surfacing under treated base course, + or – 0.03 ft; treated base under Portland cement concrete pavement, + 0.00 to – 0/02 ft.

Conformance should be checked by use of rod and levels from blue tops and/or by string-line or straight edge methods as determined appropriate by the Engineer. The above schedule refers to conformance both longitudinally and transversely to the traveled way. The outer shoulder line finished grades shall not exceed double the deviations outlined for the traveled way.

In the event that additional blue tops are not set for setting grade of surfacing courses, the grade of the surfacing shall be referenced to the earthwork subgrade blue tops and adequate controls shall be used to ensure the placement of the required thickness of surfacing and a final surface meeting the requirements outlined above.

Inspection of Course Thicknesses

Tabulated below are the permissible deviations in measured thickness for specified depths of surfacing and paving. While these are the maximum deviations that can be allowed, the Project Engineer may impose tighter requirements for conforming to the plan dimensions where there is a reason to do so.

Material	Specified Depth	Max. Allowable Deviation at Any One Point	Average Depth Deviation for Entire Project
Untreated Surfacing	0 – 0.25′	-0.05′	-0.025′
	0.26 – 0.50′	-0.06′	-0.03′
	0.51 – 0.75′	-0.07′	-0.035′
	0.76 – 1.0′	-0.08′	-0.04′
	Over 1.0′	-8%	-4%
Hot Mix Asphalt (HMA) (single-lift) (multi-lift)	0.08 – 0.15′	-0.045′	-0.015′
	0.00 – 0.25′	-0.03′	-0.01′
	0.26 – 0.50′	-0.045′	-0.015′
	0.51 – 0.75′	-0.06′	-0.02′
	Over 0.75′	-0.075′	-0.025′

For HMA overlays with a specified depth of less than 0.08 ft, it will be the responsibility of the Project Engineer to ascertain the adequacy of the overlay depth in conformance to the plan.

SS 1-05.7 Removal of Defective and Unauthorized Work

Contract Final Acceptance for all work completed on a project is made solely by the Secretary of Transportation acting through the State Construction Engineer. However, the Engineer relies heavily on the actions and professional opinions of others, involved throughout the course of work, in determining acceptability. Because of this, it is expected that the Project Engineer, working with the assistance of the Regional Construction Manager, as well as making full use of the many resources available at both the Regional and State level, particularly the office of the State Construction Engineer, will ensure that sufficient inspection is conducted in order to determine that the work performed or the materials utilized to construct the project comply with the requirements included in the contract plans and specifications. When inspections or tests are performed that indicate substandard work or materials, the Project Engineer should immediately notify the Contractor, rejecting the unsatisfactory work or material. When a review of the Contractor's work or materials used indicate questionable acceptability with regard to the specifications, the Contractor should be notified as quickly as possible so that changes in materials or work methods can be made in order to avoid materials or work being rejected.

Defective Materials

The contract plans and specifications for construction of a project require that specific materials and/or work practices be utilized in completing the work. The Project Engineer may reject any materials not conforming to the requirements of the specifications. The rejected materials, whether in place or not, are to be immediately removed from the site of the work unless the following guidelines for acceptance of non-specification materials are followed:

Material Not in Place

1. Nonconforming materials that are within the defined tolerance limits noted in Section 9-3.6 may be accepted for use on the project in accordance with the guidance in Section 9-3.5.
2. There may be situations where WSDOT determines the use of nonconforming materials is acceptable. This requires prior approval of the State Construction Engineer and a change order modifying the project specifications.

Except for 1 and 2 above, materials that are known in advance as failing to comply with the specifications are not to be incorporated into the work.

Material in Place

1. Price adjustments have been developed and are referenced in the contract for acceptance of certain materials whose properties cannot be determined until they are in place. Items this policy applies to include: concrete compressive strength, Portland cement concrete pavement thickness, hot mix asphalt mixture and density, and pavement smoothness.
2. Material incorporated into the work that is subsequently found to be in nonconformance with the specifications and for which price adjustments for acceptance are not included in the contract, must be reviewed to determine acceptability. The determination of acceptability should be made only when, in the Project Engineer's judgment, there is a possible service or benefit to be obtained from its use. If it is determined that no benefit or service is obtained from the material's use, the Project Engineer may direct that the material be immediately removed and replaced at no cost to WSDOT.

The Project Engineer may consult the State Construction Office, State Materials Laboratory, the State Bridge and Structures Office, or other design organizations for assistance in determining the usefulness of the nonconforming material. If consulted, these offices will offer technical advice to the extent that information is available. It is not intended to enter into extensive research to assess material which could be removed and replaced under the contract terms.

If the material is acceptable for continued use, a determination shall by made by the Project Engineer of the possible reduced service life caused by the material substitution and the resulting credit assessed by change order.

This determination of acceptability and the resulting credit must meet with the Region Construction Manager's approval for execution of the change order. In addition, prior review and approval must be obtained from the State Construction Engineer with a recommendation from the State Materials Engineer for the intended application of

the material. With this determination for acceptance of non-specification material, discussions should be initiated with the Contractor and a change order completed.

If it is determined that the specification violation will not compromise the performance of the material and the nature of the violation is considered to be more of a technical infraction of the specification, the material may be accepted with a change order, possibly including a price reduction. If there is sufficient data and if the nature of the material makes analysis feasible, a pay factor may be determined using QC/QA methods similar to those described in *Standard Specifications* Section 1-06.2(2). If QC/QA cannot be applied, the Project Engineer may determine an adjustment subjectively, using whatever information is available. This assessment or price adjustment is typically based on the unit bid price and may vary from no price adjustment up to the total contract unit bid price for the item involved. If it is determined that the violation is serious enough that the material cannot be accepted for use on the project, the Project Engineer may direct its complete removal and replacement at no cost to WSDOT.

All change orders for acceptance of nonconforming materials are Contractor proposed and WSDOT is under no obligation to accept or approve any of them.

Unauthorized or Defective Work

The following types of activities will be considered unauthorized work and will be completed solely at the risk and expense of the Contractor:

- Work performed contrary to, or regardless of, the instructions of the Project Engineer.
- Work and materials that do not conform to the contract requirements.
- Work done beyond the lines and grades set by the plans or the Engineer.
- Any deviation made from the plans and specifications without written authority of the Project Engineer.

Until all issues of material acceptance and conformity to the contract plans and specifications can be resolved, unauthorized work will not be measured and paid for by WSDOT. The Project Engineer may direct that all unauthorized or defective work be immediately remedied, removed, replaced, or disposed of. In correcting unauthorized or defective work, the Contractor will be responsible to bear all costs in order to comply with the Engineer's order.

For additional guidance, see *Standard Specifications* Section 1-05.7. If the Contractor fails or refuses to carry out the orders of the Engineer or to perform work in accordance with the contract requirements, the Project Engineer should immediately notify the Regional Construction Manager of the facts in the matter, seeking assistance and advice.

SS 1-05.9 Equipment

The Contractor is required to furnish adequate equipment for the intended use. The Contractor's equipment must also be maintained in good working condition. Prior to the start of work, the Project Engineer should ensure, by inspection, that the Contractor's plant, equipment, and tools comply with the specifications.

Whenever the specifications contain specific equipment requirements, the Project Engineer should verify that the equipment provided meets these specifications. This should be documented in project records such as the Inspector's Daily Report. The Contractor is required to furnish, upon request, any manuals, data, or specialized tools necessary to check the equipment.

It is most important that the operation of automatically controlled equipment be checked carefully and that the Contractor be advised immediately whenever the equipment is not performing properly.

The Contractor's supervisory personnel must be experienced, and able to properly execute the work at hand. If, in the Project Engineer's opinion, the Contractor's supervisory personnel are not fully competent, the Project Engineer should immediately notify the Regional Construction Manager of the facts in the matter, seeking assistance and advice.

It is expected that, consistent with WSDOT's policies and delegated authority, the Project Engineer will assist the Contractor in every way possible to accomplish the work under the contract. However, the Project Engineer must not undertake, in any way, to direct the method or manner of performing the work. Contrary to popular legend, this statement is true of force account work as well. Should the Contractor select a method of operation that results in substandard quality of work, non-specification results, a rate of progress insufficient to meet the contract schedule, or that otherwise violates the contract specifications or provisions, the Contractor should be ordered to discontinue that method or make changes in order to comply with the contract requirements. Where cooperation cannot be achieved, the Project Engineer should notify the Regional Construction Manager of the facts in the matter, seeking assistance and advice.

SS 1-05.10 Guarantees

Standard Specifications Section 1-05.10 and 1-06.5 specifies the Contractor shall provide to the Project Engineer all guarantees, warranties, or manuals furnished as a customary trade practice, for material or equipment incorporated into the project. The Project Engineer should transmit the originals of any such guarantees/warranties or manuals to the organization that will be maintaining the items covered by the guarantee/warranty or manuals. The Project office should maintain a copy of the guarantee/warranty, and a letter of transmittal for manuals, with the materials documentation file for the project.

SS 1-05.14 Cooperation With Other Contractors

When two or more Contractors, including any utility or their contractor, are working in the same area, *Standard Specifications* Section 1-05.14 will apply. The Contractor shall not cause any unnecessary delay or hindrance to the other contractors on the work, but shall cooperate with other contractors to the fullest extent. Progress schedules and plans for all contractors involved should be reviewed by the Project Engineer to detect possible conflicts which might be resolved before a delay of work is experienced or extra costs are incurred as a result. If an adjacent project requiring coordination is known prior to holding a pre-construction meeting, it would be beneficial to invite principals from that project to the meeting.

1-06 Control of Material

SS 1-06.3 Manufacturer's Certificate of Compliance

All material is to be accepted for use on the project based on satisfactory test results that demonstrate compliance with the contract plans and specifications. All work demonstrating compliance is to be completed prior to the material's incorporation into the work. In many cases, this testing has already been completed in advance by the manufacturer. A Manufacturer's Certificate of Compliance provides a means to utilize this testing in lieu of job testing performed prior to each use of the product. This provides for a timely use of the material upon arrival to the job site without a delay in waiting for the return of test results. The project office is required to complete and file a Manufacturer's Certificate of Compliance Check List (DOT Form 350-572). This must be done in a timely manner and is necessary to ensure that the material meets all the requirements of the contract.

Standard Specifications Section 1-06.3 describes the procedures for acceptance of materials based upon the Manufacturer's Certificate of Compliance. *Standard Specifications* Division 9 describes those materials that may be accepted on the basis of these certificates. Since a certificate is a substitute for prior testing, it is intended that all certificates be furnished to the Project Engineer prior to use or installation of the material.

However, there are some circumstances where the Contractor may request, in writing, the Project Engineer's approval to install materials prior to receipt and submittal of the required certificate. The Project Engineer's approval of this request must be conditioned upon withholding payment for the entire item of work until an acceptable Manufacturer's Certificate of Compliance is received. Examples of materials that *shall not* be approved by the Project Engineer for installation prior to the Contractor's submittal of an acceptable certificate are: materials encased in concrete (i.e., rebar, bridge drains); materials under succeeding items where the later work cannot be reasonably removed (i.e., culvert under a ramp to be opened to traffic); etc. The Project Engineer's approval or denial shall be in writing to the Contractor, stating the circumstances that determined the decision. If the requirements of this provision are followed, including the written request by the Contractor and the written approval by the Project Engineer, then the remedy for failure to provide the Certificate is the withholding of 100 percent of the cost of the material and the cost of the work associated with the installation of the material.

At the conclusion of the contract, there may still be some items that are lacking the required certificates. These items must be assessed as to their usefulness for the installation, prior to payment of the Final Estimate and subsequent Materials Certification of the contract. The review of these items may include:

- Comparison with the suitability of other shipments to the project or other current projects.
- If possible, sampling and testing of the items involved or residual material from the particular lot or shipment.
- Independent inspection on site of the completed installation.

If it is determined that the uncertified material is not usable or is inappropriate for the completed work that incorporates the material, the Contractor should be directed to immediately remove the material, replacing it with other certified materials. If the material is found to be usable and is not detrimental to the installation it was incorporated into, it may be left in place but, if the provisions of *Standard Specifications* Section 1-06.3 were followed, with a reduction to no pay. The reduction in pay will be the entire cost of the work (i.e., unit contract price, portion of lump sum) rather than only the material cost. The Contractor should continue to have the option of removing and replacing the uncertified material in order to regain contract payment for the installation. If the provisions of *Standard Specifications* Section 1-06.3 were not followed, then there can be no withholding beyond the value of the missing work itself (the preparation and submittal of the Certificate.)

SS 1-06.6 Recycled Materials

SS 1-06.6(1) Recycling of Construction Aggregate and Concrete Materials

Engrossed Substitute House Bill 1695 requires the use of recycled concrete aggregate in the amount of 25 percent on all WSDOT projects. However; this requirement only applies to those materials included in the Contract that are listed in table in Section 9-03.21 and allow the use of recycled concrete aggregate.

Recycled concrete is hardened concrete that is crushed and may contain coarse and fine mineral aggregate with Portland cement. The *Standard Specifications* encourage the use of recycled aggregates and require that recycled concrete aggregates be incorporated into the work by the Contractor.

Because it is important that the Contractor have a plan for using recycled materials at the beginning of the Contract, the *Standard Specifications* require the Contractor to submit a plan detailing how they will use recycled materials in the work on the Contract. The Contractor's Recycled Materials Utilization Plan is to be submitted as a Type 1 Working Drawing within 30 calendar days of execution of the contract.

The Recycled Material Utilization Plan is the Contractor's initial plan for including recycled aggregate in the work detailing how they will meet the 25 percent requirement for recycled concrete aggregate. The details of the plan are not required to be static as the Contractor should be actively managing their use of recycled materials throughout the Contract. Therefore, the Contractor may alter the plan at their discretion throughout the Contract without submitting a new plan. Should the Contractor alter their plan, the Project Engineer may choose to review with the Contractor their updated plan for meeting the recycling requirement.

At the end of the Contract, prior to Physical Completion, the Contractor is required to submit the Recycled Materials Reporting form (DOT Form 350-075) to the Project Engineer. The Recycled Materials Reporting form will include the quantities of all materials, both recycled and virgin, for aggregates and concretes that were used on the project for the items listed. The Project Engineer should review the quantities submitted on the form. If the final tally of recycled concrete aggregate does not meet the 25 percent requirement the Contractor is required to attach cost estimates, both with and without the use of recycled concrete aggregate, for each material used on the Contract that is listed in Section 9-03.23(1)E that allows recycled concrete

aggregate. The Project Engineer should review the cost estimate for reasonableness; an independent verification of detailed costs is not required as the Contractor certifies the accuracy of the information.

A copy of Recycled Materials Reporting form is required to be sent to the Documentation Engineer at the State Construction Office. This will be used by the State Construction Office in the annual report to be submitted to the legislature.

1-07 Legal Relations and Responsibilities to the Public

SS 1-07.1 Laws to be Observed

Safety

Safety is not optional in WSDOT. No employee will be permitted to disregard applicable safety and health standards of the State Department of Labor and Industries or other regulatory agencies.

The Secretary of Transportation's Executive Order E 1033 provides direction to all WSDOT employees to adhere to the following basic safety provisions in every work activity:

- Participate in your work group safety plan (or Safety Management System for WSDOT Ferries Division employees).
- Look for ways to prevent accidents.
- Immediately identify hazards and safety concerns.
- Always use personal protective equipment.
- Promptly report all injuries.

The Order also states that all employees at WSDOT Ferries Division are already covered and shall continue to be covered by the existing Ferries Division Safety Management System. Therefore:

- All Ferries Division employees will refresh their knowledge of existing Safety Management System procedures and shall follow them accordingly.
- A concerted effort will be made to address existing and new Safety Management System safety reports in a timely manner.
- All Ferries Division employees shall address issues of concern with existing safety procedures using the existing Safety Management System reporting program.

All other WSDOT employees are covered and continue to be covered by the policies and procedures in the *Safety Procedures and Guidelines Manual* M 75-01, and other related policy documents. Therefore, a pre-activity safety plan is required prior to performing any new field work. Office staff will conduct a hazard assessment and mitigation plan for all office environments.

Since WSDOT employees on transportation construction projects are routinely exposed to a variety of hazards, they must take adequate safety precautions at all times. The following items represent common activities that workers or work crews may encounter, and should be addressed in pre-activity safety plans as needed.

- The employee shall ensure that an area is safe before entering it for the purpose of inspection. For example, a deep trench must be adequately shored and braced before entering it.
- Aggregate production and material processing plants should be inspected for safety hazards. Corrective measures should be called to the attention of the Contractor or producer. Corrections must be completed before WSDOT personnel will be permitted to proceed with entry or work upon the premises.
- The employee must, at all times, watch for backing trucks and not depend upon hearing alone for warning. The noise of plants and other equipment often make it impossible to hear trucks approaching and the truck driver's vision area is restricted when backing a truck.
- Parking WSDOT vehicles too close to the path of construction equipment, behind standing equipment, or in other hazardous locations is not permitted.
- Where traffic is maintained in work zones, care must be taken to avoid approaching traffic when it is necessary for inspectors and others to step onto or cross the traveled portion of the roadway. Whenever possible, work activities, ingress and egress, should be conducted within the relative safety of the work zone.
- WSDOT employees working on foot in the highway right of way and other areas exposed to vehicular traffic must comply with the high visibility clothing requirements of the WSDOT *Safety Procedures and Guidelines Manual* M 75-01 Section 4.2, Chapter 3.
- Where the engineering crew is working adjacent to traffic, without positive barriers, the work area should be marked with proper signs and traffic control devices as shown on the appropriate Traffic Control Plan (TCP). The crew may be protected by a certified flagger as needed.
- When the engineering crew is working under the protection of the Contractor's flaggers and signs, other signs may not be needed, but a "STOP"/"SLOW" paddle should be available for use in special situations. Good communication with the Contractor and Flagger is needed to ensure that they are aware of crew activities within the work zone.
- A survey crew is typically exposed to traffic hazards and should conduct survey work under approved TCPs from the *Work Zone Traffic Control Guidelines* M 5444. The Region Traffic Office will assist survey crews with TCPs for situations not covered in this publication.
- During blasting operations, employees are instructed to seek cover at least 500 ft from the location of the blasting.

In addition to the above requirements for workers and work crews, supervisors also have the following responsibilities:

- Each supervisory employee is charged with the responsibility of providing safety leadership at all times and safety enforcement when necessary.
- Supervisors shall give thorough instructions to employees under their jurisdiction on the safe use of tools, materials, and equipment and the safe prosecution of work on construction projects.

- The Division of Occupational Safety and Health requires that every foreman, supervisor, or other person in charge of a crew have a valid first aid card.
- When employees are injured on the job to the extent that the services of a doctor are required, the Regional Safety Officer shall be notified immediately.
- When traffic control measures are necessary, approved Traffic Control Plans (TCPs) should be used in conformance with the *Manual on Uniform Traffic Control Devices* (MUTCD), as adopted by WSDOT. Supervisors should ensure that the appropriate TCP is used and that the necessary signs, devices and equipment are available. Contact Region Traffic Office for assistance.

Responsibility for Enforcement of Safety and Health Requirements

All contractors doing work for WSDOT must provide safety controls for the protection of life and health of the Contractor's employees and other persons, for the prevention of property damage, and for the avoidance of interruptions in the performance of the work under the contract. As the owner contracting agency, WSDOT has the responsibility for enforcement of the provisions of the contract, however, provisions and regulations which are by law the fundamental responsibility of other agencies, both from the standpoint of interpretation and enforcement, should be monitored by WSDOT, but with full recognition as to the responsibilities and authorities of those agencies. The Project Engineer will cooperate fully with the responsible agency.

Any violations noticed by the Project Engineer will be brought to the attention of the Contractor for correction. The Project Engineer will also notify the responsible agency (if that action is deemed necessary by the Region Construction Manager) and utilize such sanctions as are consistent with contract terms in assisting the responsible agency in enforcing laws, rules, and regulations.

The Contractor is obligated by law to comply with both State and Federal safety regulations. State regulations are administered by the Washington State Department of Labor and Industries under the Washington Industrial Safety and Health Act (WISHA). Federal regulations are administered by the Occupational Safety and Health Administration (OSHA) and the Mine Safety and Health Administration (MSHA) of the U.S. Department of Labor, which has jurisdiction over federal safety requirements for pit and quarry operations up to the point where materials leave the quarry area or go into a batch plant. Inspectors from any or all of these agencies may review the Contractor's operations at any time. (See *Standard Specifications* Section 1-07.1.) In order to fulfill WSDOT obligations to monitor contract operations in accordance with the above, the following procedures should be followed on both Federal-aid and non Federal-aid contracts.

Precontract Preparation

- The Project Engineer shall obtain the WISHA manuals, particularly Safety Standards for Construction Work WAC 296-155, General Safety and Health Standards WAC 296-24, and General Occupational Health Standards WAC 296-62, and shall review them with the key field WSDOT inspectors to ensure reasonable familiarity to the extent that they can recognize important requirements.
- The Contract Plans and contract provisions should be reviewed to identify those aspects of the work meriting special attention from the standpoint of potentially dangerous types of work and hazard elimination.

- The project site should be reviewed to identify those aspects of the location that present hazards such as limited sight distance, confined spaces, difficult terrain, extreme temperatures, illegal encampments, or exposure to biological and physical hazards associated with animals or humans.

Preconstruction Duties

As part of the Preconstruction Meetings and Discussions (see Section SS 1-05.1), the Contractor's safety program should be discussed. Some of the things that the Project Engineer may want to consider are:

- The contractual obligation of the Contractor for complying with State and Federal construction safety standards (see *Standard Specifications* Section 1-07.1).
- The availability of the safety standards that apply to the contract.
- The accident prevention program of the Contractor – organization, staff, names of responsible individuals, meetings, training, reports, etc. A review of specific areas for which plans are required (especially those also affecting WSDOT personnel). These might include Fall Protection, Confined Spaces, Respirators, Hearing, and Hazardous Materials plans. Implementing a mechanism for employees to report "near misses" and/or work zone accidents.
- The Contractor's responsibility for seeing that subcontractors comply with safety regulations.
- The Contractor's plans for meeting specific safety requirements and for eliminating potentially critical hazards on the project for all Contractor employees, Contracting Agency employees, and the public.
- The Contractor's responsibility to meet the requirements of WAC 296-800, which requires employers to provide a safe workplace. Particular mention must be made to WAC 296-800-11025, which prohibits alcohol and narcotics from the workplace.

The PE's Role in Safety on the Project

It is difficult to generalize about safety. It's a judgment call which is dependent on risk, knowledge, authority to direct corrections, etc. As people, professionals and representatives of the State, Project Engineers have an obligation to take action if they become aware of a situation that presents an immediate threat. Project Engineers should advise their employees on what the lines of communication are and what the procedures are for alerting the responsible agencies with regard to serious safety hazards.

Employees should be made aware that the Contractor is obligated to make the work-site safe, to their satisfaction, for inspection activities. Anyone who is uncomfortable with access for inspection should inform their supervisor of the situation and expect resolution. Project personnel should also be made aware of project specific hazards and be trained in specific areas as the project warrants. For example; fall protection, confined space requirements, respirator training, lead paint hazards, hazardous material training, and exposure to medical waste (sharps). It is suggested that the expertise of the Regional Safety Officers or Headquarters Safety Office be utilized as appropriate.

Be aware that the construction contract requires the contractor to perform any measures or actions the Engineer may deem necessary to protect the public, and that the Engineer may suspend work if the Contractor fails to correct unsafe conditions.

Project staff should continuously monitor the Contractors' work activities for potential violations of legal safety requirements, and for any condition that poses an immediate threat to the health of any person. Immediately notify the Contractor upon becoming aware of any such condition.

Additional information, such as safety regulations and Department of Labor and Industries (L&I) contacts are available on the internet at www.wa.gov/lni. Keep in mind that many WSDOT employees are not trained to interpret and apply safety regulations; however, employees need to have a reasonable understanding of what hazards may be encountered on a project. Many, but not all, of the requirements are listed under WAC 296-155 Safety standards for construction work under the various "Parts a through V."

State L&I offers consultation service (advise is given) and enforcement (assessment of a violation would result in a citation being issued). A listing of the various L&I field offices is as follows:

- **Region 1**

Bellingham Field Services Location	360-647-7300
Everett Field Services Location	425-290-1300
Mount Vernon Field Services Location	360-416-3000

- **Region 2**

Bellevue Field Services Location	425-990-1400
Seattle Field Services Location	206-515-2800
Tukwila Field Services Location	206-835-1000

- **Region 3**

Bremerton Field Services Location	360-415-4000
Port Angeles Field Services Location	360-417-2700
Tacoma Field Services Location	253-596-3800

- **Region 4**

Aberdeen Field Services Location	360-533-8200
Kelso Field Services Location	360-575-6900
Tumwater Field Services Location	360-902-5799
Vancouver Field Services Location	360-896-2300

- **Region 5**

East Wenatchee Field Services Location	509-886-6500
Kennewick Field Services Location	509-735-0100
Moses Lake Field Services Location	509-764-6900
Yakima Field Services Location	509-454-3700

- **Region 6**

Pullman Field Services Location	509-334-5296
Spokane Field Services Location	509-324-2600

American Recovery and Reinvestment Act (ARRA) Projects

Projects that are funded in whole or in part by the American Recovery and Reinvestment Act (ARRA) are subject to the same requirements that apply to other federally funded projects. ARRA funded projects also have specified employment reporting requirements that are in addition to the reporting required on all Federal Aid projects.

ARRA Employment Reports shall be submitted by the Contractor to the Project Engineer on Form FHWA-1589. The report shall be completed according to the specifications and coding instructions provided with the report form, and shall contain project specific information as to the numbers, hours worked, and wages paid by the Contractor and all subcontractors for all of their employees. This report shall include all those employees of the Prime Contractor and of all subcontractors working on the ARRA project at the jobsite, in the project office, in the home office, or teleworking from home or an alternative office; and all engineering personnel, inspectors, sampling and testing technicians, and lab technicians who are actively performing work directly in support of the ARRA project.

Within 30-days of execution of the contract, the Contractor shall submit to the Project Engineer an initial report for each ARRA project awarded to the Contractor. Each month thereafter, the Contractor shall submit a monthly report for each ARRA project, submitted no later than the 10th day of each month, reporting employment information for the previous month. In those cases where there is no active work on the project for a specific month, the report will be submitted with "zeros" reported for number of employees, hours and wages.

Do not confuse Employment Reporting with Federal Wage Administration, as they are not the same. WSDOT is not provided with data that would allow for verification, nor is WSDOT required to verify employment data. Because certified payrolls are not required to include the salaried employees, owner-operators, or professional services that are required to be included in the employment report, there is no way to verify the employment data through comparison with certified payrolls. Because employment reports are required to include contractors' home-office and telework employees, there is no way to verify employment data through field observations. Accordingly, ARRA Employment Reports should be checked only to verify that they are reasonably complete (all subs observed to be active on the project are reported).

Failure on the part of the Contractor to submit these reports by the due date may result in the withholding of all progress payments to the Contractor until reports are received, as provided in *Standard Specifications* Section 1-09.9. If the report is not received by the due date, the Project Engineer shall notify the Contractor of intent to defer payment within eight (8) calendar days of the report due date. When payments must be withheld, the Project Engineer must ensure that the Region Construction Manager/ Construction Engineer and the State Construction Office are notified.

The original initial report and subsequent monthly reports should be placed in the project file and maintained with the temporary final records for the project. The Project Office will submit copies of the ARRA reports to the Region Construction Office and to the State Construction Office, and must be received by the 15th day of each month. The Project Office may utilize the State Construction Office Sharepoint site for purposes of submitting the monthly Contractor reports to the State Construction Office. The State Construction Office will submit this information to the FHWA Division Office and to FHWA headquarters.

WSDOT is required to report on WSDOT employees, hours and wages for each ARRA funded project. This will be handled using the reporting tool available at: https://remoteapps.wsdot.wa.gov/Mapsdata/tools/DBEParticipation.

SS 1-07.4 Sanitation

SS 1-07.4(2) Health Hazards

Site Cleanup – Some contracts contain specifications for site cleanup. This may include the removal of illegal encampments, unauthorized pedestrians, personal property, refuse, and other biological and physical hazards from the work area. The Contractor is required to perform all necessary work, and to take precautions to maintain the health and safety of all workers and the public, who may be in the work area. It is the responsibility of the Project Engineer to inspect the Contractor's work and ensure compliance with the contract requirements and with all applicable laws. Each Project Engineer should appoint a contact for encampment removal issues.

The Contractor is required to have a Health and Safety Plan, and to submit the plan to the Project Engineer prior to commencing any cleanup work. The Project Engineer should ensure that the plan is prepared in accordance with contract provisions.

The Contractor will furnish and install "No Trespassing" signs in all areas where pedestrians may be encountered, except where pedestrians are legally allowed. "No Trespassing" signs must be posted no less than 72 hours prior to beginning site cleanup work or any other potentially hazardous work. If the site contains encampments, the signs should be posted at each encampment. The Project Engineer should conduct a site visit in order to verify that the signs are posted correctly and meet the requirements of the contract.

At the time the signs are posted the Contractor should provide written notification to the Project Engineer and local jurisdictions. When the work includes removal of encampments the Contractor should also notify local advocacy groups that site cleanup and removal is scheduled.

After the initial removal of encampments, the Contractor should revisit the area at regular intervals, and if encampments persist, permanently post the area with "No Trespassing" signs and proceed with removal activities.

Immediately prior to commencing cleanup and removal, brush clearing, or other potentially hazardous work, and periodically throughout the day, the Contractor should visually inspect the area to ensure that no unauthorized pedestrians are present. The Project Engineer should verify that the site is cleared of pedestrians and that periodic area checks are being done. Special attention should be given to areas hidden from view, such as in dumpsters or equipment, or under blankets. The Project Engineer may consider the use of non-invasive detection aids, such as infrared detectors, to ensure that no unauthorized persons are present.

Removal, Storage, and Return of Personal Property – Personal property that is not refuse will be removed from the work area, by the Contractor. Items should be placed in large transparent plastic bags, labeled, and stored for return to the property owner. The Project Engineer should ensure that personal property is handled and stored in accordance with the requirements of the contract and all applicable laws.

SS 1-07.5 Environmental Regulations

The following procedure pertains to WSDOT personnel on all WSDOT contracts and contains duties and activities by persons other than the project staff, but all of which are related to construction contracts and affect the Project Engineer to one degree or another. The Project Engineer must stay aware of this procedure and follow it as written.

Environmental Compliance Assurance Procedure

The purpose of the Environmental Compliance Assurance Procedure (ECAP) is to recognize and rectify environmental non-compliance events during the construction phase on WSDOT construction sites, and to ensure prompt notification to WSDOT management and agencies. For purposes of this procedure, non-compliance events are defined as actions that are not in compliance with environmental standards, permits, agreements, or laws.

When any action (Notification Trigger) below occurs, the Project Engineer (PE) shall initiate the Notification and Resolution process. The Regional Environmental Manager (REM) will serve as a resource to the PE and give priority to addressing the actions, activities, or situations that stem from notification triggers. The PE and REM will work together on an appropriate response to the notification trigger to avoid or minimize environmental damage.

Notification Triggers

Notification Triggers (listed below) means an action, activity, or situation that requires the Project Engineer to implement the Environmental Compliance Assurance Procedure.

1. Verbal or written notice from an environmental regulatory agency or tribe that a violation has occurred.
2. Any action that may violate environmental permit conditions, agreements, or approvals for the project; or other environmental laws, ordinances, or regulations.
3. Any unauthorized work, activity, or fill in wetlands, shorelines, creek beds (including dry channels), other waters of the state, or critical habitat.
4. Any emergency protection activity that involves unauthorized placement of fill in wetlands, shorelines, creek beds (including dry channels) or waters of the state or for bank stabilization activities where fill or structures are placed on the bank.
5. Any action or project revision requested by an agency after a site inspection that is in conflict with other permits.
6. Any spill, or release of hazardous materials, petroleum products, or chemicals to:
   - water or areas that have the potential to enter waters of the state (i.e., stormwater conveyances, ditches, swales, ground water).
   - land, when the spill or release is an immediate threat to human health or the environment (i.e., dangerously toxic, explosive or flammable situations that result in severe or substantial consequences).1

[1]All spills need to be contained and disposed of and reported properly. Follow the procedures outlined in the project specific Spill Prevention, Control and Countermeasures Plan (SPCC).

7. Encountering an unknown underground storage tank.
8. Any situation that results in a fish kill, or if dead or dying fish are discovered in the vicinity of the project.
9. Activities that construction monitoring shows are out of compliance.
10. Failure to implement the Unanticipated Discovery Plan or commitments associated with cultural resource monitoring.

Notification and Resolution Process

In the event of a notification trigger, the following steps shall be taken:

1. If a notification trigger is observed, immediately notify the Project Engineer.
2. The Project Engineer must:

   Step 1 – Immediately notify the Contractor of the situation, suspend all non-conforming work on the site, and implement emergency response procedures.

   Step 2 – Immediately notify the Regional Environmental Manager (REM) or designee. In consultation with the REM, determine the regulatory agencies having jurisdiction and who will notify them. Ensure timely notification to appropriate regulatory agencies. Consult with the REM regarding response actions taken and any additional remediation actions that may be necessary.

   Step 3 – In consultation with REM, determine if the activity constitutes a violation of a permit condition or environmental regulation and if so, assemble the following information:

   - The activities that triggered the notification and why they occurred.
   - The permit condition or environmental regulation that has been violated.
   - Location(s) of the work.
   - Potential solutions to the problem, or if additional investigation is needed, the agreed upon course of action.
   - Any related site constraints or safety issues.
   - Urgency of the issue.
   - Which regulatory agencies and staff were notified and any tracking numbers provided.

   Step 4 – Notify the Assistant Region Administrator for Construction (also known as the Region Construction Engineer) and the assigned Assistant State Construction Engineer (ASCE). The ASCE should be notified via e-mail or by telephone and will notify the State Construction Engineer, if warranted.

   Step 5 – If warranted by the severity of the issue, notify the Region Administrator and State Construction Engineer. This step is mandatory when the non-compliance event: (1) results in agency enforcement staff coming on site to conduct enforcement review; and/or (2) there is a high likelihood the event will result in a Notice of Violation or a monetary penalty. (***Note:*** Notices of Violation are formal written or verbal notices from a regulatory agency that a violation has occurred, including but not limited to Corrections Required Notices.)

Step 6 – Document all actions, conversations and activities.

3. The Regional Environmental Manager, or their designee, must immediately:

   Step 1 – If warranted by the severity of the issue, notify the Director of Environmental Services. This step is mandatory when the non-compliance event: (1) results in agency enforcement staff coming on site to conduct enforcement review; and/or (2) there is a high likelihood the event will result in a Notice of Violation or a monetary penalty. (***Note:*** Notices of Violation are formal written or verbal notices from a regulatory agency that a violation has occurred, including but not limited to Corrections Required Notices.)

   Step 2 – Notify his or her immediate supervisor.

   Step 3 – Work with the Project Engineer to resolve the issue that caused the notification trigger.

   Step 4 – In consultation with the Project Engineer, identify and obtain permits or permit revisions, if required.

   Step 5 – Document all actions, conversations, and activities. Communicate issues and send appropriate documentation to Regulatory and/or Resource Agencies.

   Step 6 – Document non-complying event in WSDOT's Commitment Tracking System. ***Note:*** If the activity is found not to be in violation of a permit condition or environmental regulation, it should not be entered into the Commitment Tracking System.

4. The Director of Environmental Services must:

   Step 1 – Notify Compliance Branch Manager and any other ESO Program Managers associated with the resource issue.

   Step 2 – If warranted by the severity of the issue, notify the Chief Engineer for Engineering and Regional Operations.

5. The Regional Administrator will:

   Step 1 – If warranted by the severity of the issue, coordinate with the Director of Environmental Services to contact the Chief Engineer for Engineering and Regional Operations advising him or her of the situation, and provide updates as needed on the situation.

   Step 2 – Ensure that the Project Engineer and the Regional Environmental Manager have the necessary resources, authority and organizational support to successfully resolve the non-complying activity.

Timing

Due to costs of project delays, or risk of not acting quickly during emergency situations, the REM shall provide a 24 hour contact person for environmental consultation.

Documentation

1. The Project Engineer shall document the details of the notification and non-complying activity resolution in the contract records.
2. The Regional Environmental Manager shall maintain a record of all regional noncompliance events. REMs shall collect and maintain, at a minimum, the following data on all non-compliance events:
   - Project name and location.
   - Project Engineer and Contractor.
   - Incident date.
   - Incident description.
   - Permit/regulation or agreement violated.
   - Resource agency(s) notified and date of notification.
   - Whether or not resource agency staff conducted site review in response to notification.
   - Record of Notice of Violation and/or penalties issued.

   The REM shall document the non-compliant event in the WSDOT Commitment Tracking System for purposes of annual reporting and review of compliance performance. ***Note:*** Only non-compliant events need to be documented in WSDOT's Commitment Tracking System. If the REM determines that an event does not violate environmental permit conditions, agreements, or approvals for the project; or other environmental laws, ordinances, or regulations, then it does not need to be documented in WSDOT's Commitment Tracking System.
3. The Project Engineer and the Regional Environmental Manager shall coordinate and prepare the appropriate response to the regulatory and/or resource agency. The response shall include documentation about the non-compliance event and how it was resolved, including any preliminary mitigation solutions.

Roles and Responsibilities

Project Engineer – Is the person responsible for the project and administration of the construction contract. This responsibility may be delegated to a subordinate employee on site, but the ultimate responsibility for making sure these procedures are followed will be with the Project Engineer. The Project Engineer shall have a thorough knowledge of all of the environmental permit conditions and design requirements for the project, and have such certifications and other qualifications as may be required.

Regional Environmental Manager – Is the person responsible for administering the regional environmental program. This responsibility may be delegated to a subordinate employee with knowledge of environmental permitting and procedures, but the ultimate responsibility for setting and interpreting regional environmental policy will be with the Regional Environmental Manager. Due to costs of project delays, or risk of not acting quickly during emergency situations, the REM shall provide a 24-hour contact person for environmental consultation.

Contractor – Is as defined in *Standard Specifications* Section 1-01.3.

Working in Water

When working in water, the Project Engineer shall ensure the Contractor complies with the environmental and navigation provisions of the contract. If the contract requires the Contractor to obtain special permits, the permits shall be obtained before the work covered by them is begun. Project work occurring in water must meet state water quality standards. Monitoring is required to verify the work achieves compliance with state water quality standards. WSDOT is required by law to report noncompliance with water quality standards to the Department of Ecology. Please follow the Environmental Compliance Assurance Procedures if standards are not achieved (see Section SS 1-07.5).

(I) Monitoring Water Quality

WSDOT is responsible for monitoring water quality during the Contractor's work in the water. Information is available that helps the Project Engineer successfully apply WSDOT's *Monitoring Guidance for In-Water Work* and collect a representative sample.

The Project Engineer may need to prepare a Water Quality Monitoring and Protection Plan (WQMPP) if required as a condition of a permit. Check the permits early and prepare the plan in advance to prevent delays in the Contractor conducting the work. A procedure exists (PRO610-e) that helps the Project Engineer develop the WQMPP.

Note that water quality monitoring of work occurring in water is different than monitoring construction stormwater discharging from a construction site. Refer to Section 8-1.3 for information about monitoring stormwater discharges from construction sites.

(II) Work Area Isolation/Stream Diversions

The Project Engineer should review project permits to determine whether WSDOT is required to isolate the work from or divert the water around work occurring below the ordinary high water line (or mean higher high-water line). WSDOT may provide plans for conducting the work. If not, the Contractor's work area isolation or stream diversion should be reviewed and approved by the Project Engineer. Check the Contractor's plan for consistency with the JARPA. A stream diversion template exists for Contractors to use in case WSDOT does not provide one in the Plans.

(III) Fish Moving Protocols and Standards

The Project Engineer should check project permits to determine whether WSDOT is required to isolate and remove fish from the work area in advance of the Contractor's work. The Project Engineer must coordinate these activities with the WSDOT biologist. Refer to the WSDOT *Fish Exclusion Protocols and Standards* to learn about the roles and responsibilities for these activities.

(IV) Reporting Monitoring Data

The Project Engineer is responsible for ensuring any monitoring data is submitted to the Washington State Department of Ecology's Federal Permit Coordinator. The Project Engineer should coordinate with Region Environmental Staff to ensure that reporting is done correctly.

(V) Reporting Spills to Water

Work that results in a spill to water generates multiple reporting obligations. At a minimum, the Project Engineer must follow the Environmental Compliance Assurance Procedure (see Section SS 1-07.5) of this manual) to start WSDOT's internal spill response. Also, the Project Engineer must ensure the Contractor enacts the spill response section of their Spill Prevention, Control, and Countermeasures Plan.

Infiltration of Slurry

In accordance with 8-01.3(1)C, some classifications of shaft drilling slurry wastewater may be disposed of on-site by using upland infiltration. If the Contractor plans to infiltrate these types of slurry wastewater on-site, they must submit a Shaft Drilling Slurry Wastewater Management and Infiltration plan in accordance with Section 8-01.3(1)C. Project specific site conditions, such as a high water table or contaminated soil, may exclude the use of on-site infiltration as a slurry disposal option. The Project Engineer shall review and accept the plan prior to any on-site slurry wastewater infiltration.

Guidelines for reviewing and accepting Contractor plans are as follows:

1. The classification of slurry wastewater to be infiltrated and the Contractor's Shaft Drilling Slurry Wastewater and Infiltration plan both meet the specified requirements in Section 8-01.3(1)C.
2. The proposed best management practices (BMPs), controls, or other methods included in the plan are adequate to prevent surface wastewater runoff from leaving the infiltration location. What is "adequate" is site specific and dependent on how much water is being infiltrated and where, some examples may include:
   - The basis for the selection of an infiltration location (e.g., subsurface conditions, soil type, estimated infiltration rate, location of surface water)
   - Barrier BMPs (e.g., sandbags, berms, water bladders, silt fence) used to prevent surface wastewater runoff from leaving the infiltration area.
   - Interceptor BMPs (e.g., trenches, traps, pipe drain to containment area) used to capture wastewater surface runoff before it leaves the infiltration area.
   - A metering device that can be adjusted to discharge water to the ground at a rate that will prevent surface runoff from developing.
   - Digging a temporary infiltration containment area to hold a specific volume of wastewater. Keep in mind that digging will diminish the layer of unsaturated soil (prior to infiltration occurring, there must be a minimum of 5 feet of unsaturated soil between the soil surface where the infiltration will occur and the saturated soil). In addition, using heavy equipment to dig the infiltration containment area may cause soil compaction at the location, thereby lowering the effective infiltration rate.
3. The Contractor's plan includes an adequate level of detail to demonstrate that the planned controls and methods will prevent potential impacts to receiving waters of the State, including groundwater, for example:
   - Containment strategy for wastewater prior to infiltration.
   - Strategy for managing wastewater pH neutralization prior to infiltration.
   - Monitoring strategy to ensure infiltration activity is in compliance.

4. The Contractor's plan identifies a contingency plan that will be implemented immediately if it becomes evident that the controls and methods in place are not adequate to meet the requirements in Section 8-01.3(1)C. Contingency plans must be capable of being implemented immediately, such as:
   - Identifying procedures for rectifying plan deficiencies.
   - Having additional BMP materials on hand.
   - Eliminating the discharge to the ground (stopping infiltration activity).

Responsibility for Environmental Considerations

During the precontract period, the Project Engineer should obtain copies of the final environmental documents and permits related to the project. The Project Engineer should review all contract commitments in the WSDOT Commitment Files and participate in any Environmental Commitment Meetings. It is important that all key personnel become familiar with the environmental decisions considered during the design process. The contract documents should include any necessary provisions for protection of the environment and cultural resources, including requirements that the Contractor secure all permits as required by the contract and abide by regulations of appropriate Federal, State, and local agencies. Any changes in contract work that may become necessary must also be reviewed to ensure conformance with the requirements, and commitments established during the environmental design of the project.
For more information on Environmental Commitment Meetings please reference Project Delivery Memo #09-01 – Incorporating Environmental Commitments Into WSDOT Contracts.

SS 1-07.9 Wages

SS 1-07.9(1) General

The payment of predetermined minimum wages on Federal-aid contracts is derived from the Davis-Bacon Act of 1931 and is prescribed by 23 USC 113. The payment of predetermined minimum wages on State funded contracts is partly modeled after the federal Davis-Bacon Act and was enacted into law in 1945 under the Washington State Prevailing Wages on Public Works Act, RCW 39.12. Both Acts are intended to protect the employees of contractors who are performing public works construction from substandard earnings and to preserve local wage standards.

The guidance provided herein is intended to help those project offices administering construction contracts understand the laws, regulations and contractual obligations regarding prevailed wages. It is not meant to be a substitute for reading and understanding federal and state laws and it is not intended to be legal advice. If a labor issue arises and cannot be resolved at the project office level, it will be elevated to the Region Construction office and if necessary, the State Construction Office.

Enforcement of Federal Prevailing Wage Provisions

In addition to the requirements of *Standard Specifications* Section 1-07.9*,* all contracts financed with Federal-aid funds include the *Required Contract Provisions for Federal-aid Construction Contracts* (FHWA-1273). These provisions identify federal wage requirements. The federal prevailing wage requirements included in these provisions are also commonly referred to as Davis Bacon and Related Acts (DBRA). It is the

responsibility of the Project Engineer to both monitor and enforce these provisions to the degree necessary to ensure full compliance. In order to comply with these requirements, the Contractor must:

- Submit weekly certified payrolls to the Project Engineer for themselves, each subcontractor, and each agent or lower-tier subcontractor. These consist of copies of weekly payrolls along with a signed Statement of Compliance.
- Post wage rate posters.
- Post the wage determinations of the United States Secretary of Labor. These determinations consist of the listing of Federal Wages that are included in the provisions of each contract.
- Allow interviews of employees during working hours by authorized representatives of WSDOT, the Federal Highway Administration, and the U.S. Department of Labor.

The prime Contractor is ultimately responsible for all subcontractor, agent, or lower-tier subcontractor compliance with the requirements for federal prevailing wages.

When the project is subject to both State and Federal hourly minimum rates, the Contractor is required to pay the higher of the two rates unless specifically preempted by federal law.

Owner-Operators of Trucks and Other Hauling Equipment

The FHWA neither defines the term "owner-operator" nor uses it in regulation. The FHWA regulates "employers" and "drivers." An owner-operator may act as both an employer and a driver at certain times or as a driver for another employer at other times depending on contractual arrangements and operational structure (Federal Register/Vol. 62, No. 65/Friday, April 4, 1997/Rules and Regulations).

Bona fide owner-operators of trucks and similar construction hauling equipment, who are ***independent contractors***, are not subject to enforcement of contract labor standard provisions of the Davis Bacon Act and/or RCW 39.12. Owner-operators of other non-hauling type equipment (dozers, scrapers, backhoes, etc.) are considered a sub-contractor, a lower tier subcontractor or an employee of the Prime Contractor or of a sub-contractor. If they are an employee of the Prime Contractor or a sub-contractor, they must appear on that contractor's payroll as an employee, not as an "owneroperator."

A ruling by the U.S. Department of Labor (DOL) states in effect that:

Because owner-operators usually work under payment arrangements based on a unit price (e.g., so much per cubic yard hauled) rather than on an actual truck or equipment rental rate plus the driver's (or operator's) rate, and, because of difficulties that have arisen with respect to securing adequate data on rental arrangements in order to determine whether contract minimum rates are being paid, therefore, as a matter of administrative policy, the provisions of Davis-Bacon and related acts will not be applied to bona fide owner-operators of trucks or other similar construction equipment used exclusively for hauling and who are ***independent contractors***.

"Certified Payrolls" for owner-operators shall be in accordance with the *Required Contract Provisions for Federal-aid Construction Contracts* (FHWA-1273) and shall include the names of such bona fide owner-operators. The certified payroll need not show hours worked nor rates allegedly paid, but only operator's name and the notation "owner-operator." In this way, such individuals may be recognized as bona fide ***independent contractors***, who are NOT subject to contract labor standard provisions and can be distinguished from equipment operators, who ARE subject to such provisions. This position does not apply to owner-operators of other equipment such as bulldozers, backhoes, cranes, welding machines, etc. These other owner-operators are considered to be operators and subject to labor standard provisions.

A ruling by the Chief Counsel for the Federal Highway Administration requires that data for each driver employee of truck owner-operators, regardless of number of trucks owned, must be shown the same as for any other laborer or mechanic. This means all such employees shall be listed on the payroll with a complete breakdown of hours worked, hourly rate paid, and all other required information according to the FHWA-1273. During a multi-shift operation when an owner may hire a driver for a subsequent shift, a complete breakdown of information relative to daily hours worked, hourly rate paid, etc., must be shown on the payroll for "employee of owner-operator." This same procedure shall be followed if owners have several trucks for which they hire drivers. The only exception to showing a complete breakdown of information is when "owner operators" physically drive their own trucks.

Though owner-operators who drive their own trucks may not be subject to prevailed wages as defined in the Davis Bacon Act and RCW 39.12, they are required under State statute to submit *Statement of Intent to Pay Prevailed Wages* and *Affidavit of Wages Paid*. There is no exception to this requirement.

References, but not limited to:

- *Required Contract Provisions* FHWA-1273
- RCW 39.04
- RCW 39.12
- U.S. Department of Labor Davis-Bacon Resource Book 11/2002
- Davis-Bacon Manual on Labor Standards for Federal and Federally Assisted Construction, Copyright © August 1993 by The Associated General Contractors of America

Employee Interviews

The Project Engineer must conduct periodic employee interviews. The purpose of these spot interviews is to establish, with reasonable certainty, that the provisions for federal prevailing minimum wages are being complied with and that there is no misclassification of workers or disproportionate employment of laborers, helpers, or apprentices. The occupation description must be shown on the form used for the employee interview noted under current duties. The occupation description is noted in the wage listing included in the contract provisions.

Some employees may refuse to reveal their rate of pay. This is acceptable and should be noted in the remarks column. Many employees do not know or may guess at the rate. If possible, a determination of the accuracy of the stated rate should be made,

and any uncertainty noted in the remarks column to reduce the need for follow up interviews. If either the stated rate (from the employee) or the record rate (from the certified payroll) is below the minimum rate (from the contract wage listing), an investigation by the Project Engineer must be conducted. The investigation may be as simple as a follow up interview with the employee or a more in depth investigation may result in a requirement for a supplemental payroll. In any event, the matter must be resolved so that the employee interview report describes what corrective action was taken to ensure that the employee has been paid the minimum prevailing wage rate. This corrective action is to be reported under remarks on the form or by attached memo if more space is needed. All discrepancies found must be resolved.

The frequency and extent of these interviews should be sufficient to ensure a representative sampling has been made for all classes of workers employed on the contract. A minimum sampling should include employees of the Contractor and all major (30 percent or more of the contract dollars) subcontractors. The interviews should be made with such frequency as may be necessary to ensure compliance. An Employee Interview Report DOT Form 424-003 is used to record and report interviews.

Complaints

Any complaints regarding violations of minimum wage rate regulations that are referred to the Project Engineer by employees of the Contractor, subcontractor, or lower-tier subcontractors should be treated as confidential, and should be promptly investigated by the Project Engineer. If there are questions regarding complaints and the application or interpretation of the federal prevailing wage provisions, the Project Engineer should consider referring the issue to the Region Construction Manager or contacting the State Construction Office for further assistance.

Federal Prevailing Wage Violations

In the event the Project Engineer identifies or receives a complaint from any employee of the Contractor regarding improper application or nonpayment of federal prevailing wages, improper application of overtime pay, or any other requirement noted in the *Required Contract Provisions for Federal-aid Construction Contracts* (FHWA-1273), the Project Engineer should immediately notify the Contractor requesting prompt corrective action. All issues of noncompliance involving either the Contractor, subcontractor, and any lower-tier subcontractors are to be addressed through the prime contractor for resolution.

If the Project Engineer determines the Contractor is in violation of the provision noted in the FHWA-1273 or *Standard Specifications* Section 1-07.9, the Contractor should be immediately informed and requested to make the necessary corrective actions. Once the Contractor has been informed that an apparent violation has occurred, it is expected that a satisfactory correction or explanation will be made within a reasonable period of time. If this does not happen, the Project Engineer should withhold an appropriate portion of payment (see Section SS 1-09.9). If the failure to act continues, the Project Engineer should refer the issue to the Region Construction Manager.

Department of Labor Investigation

The U.S. Department of Labor may investigate compliance with the DBRA and the Contract Work Hours and Safety Standard Act (CWHSSA) when conducting any investigations relative to compliance with the Fair Labor Standards Act or any other acts under its enforcement authority. Investigative action taken by the U.S. Department of Labor with respect to DBRA and CWHSSA do not, in any way, change the degree of authority or responsibility of WSDOT for enforcement of these Acts. Any actions taken by the U.S. Department of Labor should be considered as services we may use to assist us in our enforcement activities but, should not be considered to relieve us of our basic responsibility to investigate fully all potential violations and to apply such sanctions as are deemed applicable under our enforcement authority to ensure compliance.

Request For Authorization of Additional Classification and Rate

The U.S. Department of Labor (DOL) issues wage determinations under the Davis-Bacon Act (DBA) using available statistical data on prevailing wages and benefits paid in a specific locality. On occasion, the data does not contain sufficient information to issue rates for a particular classification of worker needed in the performance of the contract. Because of this, DBA provisions contain a conformance procedure for the purpose of establishing an enforceable wage and benefit rate for the missing classification (*Standard Specifications* Section 1-07.9(1) and FHWA-1273).

Contractors are responsible for determining the appropriate staffing necessary to perform the contract work. Contractors are also responsible for complying with the minimum wage and benefits requirements for each classification performing work on the contract. If a classification considered necessary by the contractor for performance of the work is not listed on the applicable wage determination, the contractor must initiate a request for approval of an additional classification along with the proposed wage and benefit rates for that classification.

The Contractor initiates the request by preparing form SF1444, Request for Authorization of Additional Classification and Rate, at the time of employment of the unlisted classification. (Reference FAR 22.406-3 and 52.222-6(b), and Title 29 CFR Part 5, Section 5.5(a)). The Contractor completes blocks 2 through 15 on the form. Standard Form 1444 is readily available via the internet and is accessible by going to www.gsa.gov/portal/forms/type/sf, and searching by the form number.

The Contractor submits the request to the State Construction Office via the Project Engineer's office. The Project Engineer's office will need to review the request and if applicable, provide backup data showing that the requested classification(s) have been prevailed in other counties within the state. The project office will also need to describe the work being performed and verify that the duties performed, as described in the request, are not covered by any other classification(s). This documentation, along with the request, will be forwarded under cover letter from the Project Engineer's office, through the Region Documentation office, to the State Construction Office.

The State Construction Office reviews the request for completeness and signs the form designating the contracting agency's concurrence or disagreement with the Contractor's proposal. If the Project Engineer or the State Construction Office indicates disagreement with the Contractor's proposal, a statement must be attached supporting a recommendation for different rates. The State Construction Office then submits the

proposal with all attachments to DOL for approval. The Contractor is obligated to pay the proposed wage and benefit rates during the request for determination and pending a formal response from DOL.

When a determination has been received from DOL, the Contractor is obligated to pay that determined wage and benefits. If the Contractor has underpaid the employee(s), they are required to make back payment and re-submit corrected certified payrolls.

SS 1-07.9(2) Posting Notices

A combination of both State and Federal laws require that on all WSDOT administered contracts some or all of the posters listed below are to be posted at the place of employment such that all employees have ready and free access to inspect their contents. The Project Engineer must ensure that the Contractor complies with these requirements.

- WH 1321 – Employee Rights Under the Davis-Bacon Act (Project Engineer to fill-in contact information on the form prior to supplying to the Contractor)
- FHWA-1022 – NOTICE Federal Aid Project (Project Engineer to fill-in contact information on the form prior to supplying to the Contractor)
- EEOC-P/E-1 – Equal Employment Opportunity IS THE Law
- Whistleblower (ARRA projects only)
- WHD Publication 1088 – Employee Rights Under the Fair Labor Standards Act
- WHD Publication 1420 – Employee Rights And Responsibilities Under The Family And Medical Leave Act
- WHD 1462 –Employee Polygraph Protection Act
- WISHA F416-081-909 – Job Safety and Health Law
- F242-191-909 – Notice to Employees (L&I)
- F700-074-909 – Your Rights as a Worker in Washington State
- EMS 9874 – Unemployment Benefits
- Copy of approved Statement of Intent to Pay Prevailing Wages for the Prime Contractor and each subcontractor and lower-tier subcontractor in accordance with RCW 39.12.020
- Copy of company EEO policy for the Prime Contractor and on Federal-Aid contracts, for each subcontractor and lower-tier subcontractor
- Copy of prevailing wage rates from the contract provisions
- Emergency phone numbers for Safety and EEO officers for the Prime Contractor and each subcontractor and lower-tier contractor.

If Federal funds are involved, all of these posters are required, except that the "Whistleblower" poster is required only for ARRA funded projects. If only State funds are involved, the first four do not apply. After contract execution and before work begins, the Contractor should be given a package containing the appropriate required job site posters. There are links to these posters on the State Construction Office website. This package should also be accompanied by either a written or verbal explanation of the contents and include notification that on all contract the Contractor, each subcontractor, and each lower-tier subcontractor will have to post a copy of the State L&I approved Statement of Intent to Pay Prevailing wages. This action shall be specifically noted in the project records.

Fraud Notice Poster

Fraud Notice, FHWA-1022, Title 18 USC 1020, must be displayed on all Federal-aid projects during the course of the work. This notice points out the consequences of any impropriety on the part of any contractor or WSDOT employee working on the project.

Federal Prevailing Wage Rates

The Contractor must post the federal wage determination, consisting of the wage listing included in the contract provisions, in a prominent place where it can easily be seen by workers. Standard posters (form WH 1321) are also to be posted and are available to the Region from the Support Services Supervisor, FHWA, Olympia, Washington.

SS 1-07.9(5) Required Documents

The requirements for the Contractor's compliance with State prevailing wages are noted in *Standard Specifications* Section 1-07.9. Specific wage rate determinations for State prevailing wages are noted in the contract itself. Though certified payrolls can be requested regardless of the contract's source of funds, these are a specific requirement for enforcement of federal wage laws only and are not routinely used for monitoring of State prevailing wage issues.

Requirements for State prevailing wages include:

- *Standard Specifications* Section 1-07.9 requires that the Contractor submit a *Statement* of *Intent* to *Pay Prevailing Wages* (SI) prepared on the State L&I form and approved by that agency. Statements are required for the Contractor and for each subcontractor, agent and lower-tier subcontractor. The specification requires that no progress payments be released to the Contractor for work completed by the Contractor, or for portions of work completed by subcontractors, agents or lower-tier subcontractors prior to the Project Engineer's receipt of the approved statement for the entity performing the work. State L&I will approve the statements and further certify that the documents meet the requirements of State laws.
- Prior to the project being granted Completion by WSDOT, the Contractor, all subcontractors, and all lower-tier subcontractors must submit an *Affidavit of Wages Paid* (AWP) prepared on the State L&I form and approved by that agency. (The form may be submitted earlier by a subcontractor or lower-tier subcontractor should that firm's work be completed prior to completion of the contract.) It is the Contractor's responsibility to obtain and provide all AWP to the Project Engineer for all subcontractor and lower-tier subcontractors performing work on the project. In the event a subcontractor or lower-tier subcontractor cannot or will not provide a completed AWP form, the Contractor should consult with State L&I to seek assistance in filing an affidavit "On Behalf Of" these subcontractors. Failure to provide all required AWP for all contractors who worked on the project will result in the withholding of Contract Completion and release of retainage or bond.
- A contractor or subcontractor may enter into an agreement with his or her employees to work 10 hours per day without having to pay overtime. This is provided that no employee work more than 4 calendar days a week.

- State L&I has also defined "Contractor" to include some fabricators or manufacturers who produce nonstandard items specifically for use on the public works project. Additionally some companies who may contract with the Contractor, subcontractors, or lower-tier subcontractors for the production and/or delivery of gravel, concrete, asphalt, or similar materials may perform activities that cause employees of these firms to be covered by state prevailing wage laws.

  Specific circumstances that may cause employees of these firms to be covered by State prevailing wage laws are described in State L&I publications. These publications are included in the provisions of each contract adjacent to the State Prevailing Wage listings. Where these firms are covered by State prevailing wage laws, an approved *Statement of Intent to Pay Prevailing Wages and Affidavit of Wages Paid* must be submitted to the Project Engineer on State L&I forms.

The Project Engineer should monitor the Contractor's efforts in regards to state prevailing wages by:

- Monitoring to ensure an approved Statement of Intent is received prior to releasing any progress payments for work completed by the Contractor, subcontractor or lower-tier subcontractors as well as any fabricators or suppliers of materials whom L&I may also determine as being covered.
- Monitoring to ensure that Affidavits of Wages Paid have been received for the Contractor as well as each subcontractor or lower-tier subcontractor who performed work on the contract. In addition, AWP are also required of each fabricator or supplier who was also covered by state prevailing wages. Ensure that the company name on the Affidavit of Wages Paid matches the company name on the Statement of Intent to Pay Prevailing Wages. If this is not the case, the Affidavit is not acceptable; unless the Contractor or subcontractor can supply a copy of their business license showing both names (i.e., Company Name and Trade Name).
- Monitoring by observing concerns of employees of the Contractor, subcontractors, or lower-tier subcontractors. In particular, the Project Engineer should note any employee complaints regarding specific state prevailing wage violations by the employer.

In the event the Project Engineer identifies or receives a complaint from any employee of the Contractor regarding improper application or nonpayment of state prevailing wages, or improper application of overtime pay, the Project Engineer should immediately notify the Contractor requesting prompt corrective action. All issues of noncompliance involving either the Contractor, subcontractor, and any lower-tier subcontractors are to be addressed through the Prime Contractor for resolution.

Once the Contractor has been informed that an apparent violation of state prevailing wages has occurred, it is expected that a satisfactory correction or explanation will be made within a reasonable period of time. If this does not happen, the Project Engineer should inform the Contractor that the matter may be referred to the Washington State Department of Labor and Industries (L&I) for further action. If the failure to act continues, the Project Engineer should refer the issue to the Region Construction Manager.

Except as noted for missing Statements of Intent, routine monthly progress payments made to the Contractor for work completed should not be deferred for enforcement

of state prevailing wage laws. The State Construction Office will refer the matter to State L&I for further investigation that may be appropriate. Should State L&I choose to investigate, L&I will establish the amount of any unpaid wages due employees of the contractor. In order to recover these wages for employees, L&I may choose to file a claim against the Contractor's retainage held under the contract. State L&I may also choose to recover unpaid wages by requesting that the Project Engineer withhold funds from monthly progress estimates for work completed by the Contractor.

Certified Payroll Inspection

The "Contract Provisions for Federal-Aid Construction Contracts" (FHWA-1273) require the Contractor, subcontractors, agents or lower-tier subcontractors to submit certified payrolls. These are to be checked by the Project Engineer to ensure the required information has been included and is correct. The Project Engineer should accomplish this by making a complete check of the first payroll submitted on the project by the Contractor, each subcontractor, and each lower-tier subcontractor. Once satisfied that these first payrolls are correctly prepared, subsequent payrolls for that project may be accepted by a random spot checking of approximately 10 percent of the payrolls submitted. If errors are found during any spot-checking of the payrolls, a more complete or thorough check should occur until the Project Engineer has determined that the errors detected have been corrected and monitoring can be returned to a spot checking basis. The *Contract Provisions for Federal-Aid Construction Contracts* (FHWA-1273) identify the required items to be included in certified payrolls. A complete payroll inspection by the Project Engineer should confirm that the following items are present:

- The contract number and contract name noted on the payroll form, together with the payroll number and payroll period. The name of the employer, identifying the Contractor, subcontractor, or lower-tier subcontractor, must be shown.
- A specific minimum wage rate is to be identified for each worker. The *Standard Specifications* require the Contractor to use word descriptions for the labor classifications that are included in the contract provisions identifying federal wage rates, and are to be used on all payrolls. *Standard Specifications* Section 1-07.9 permits the Contractor to use an alternative method to identify or correlate the labor descriptions used, if approved by the Engineer, in order that they may be compared to the contract provisions.
- Each employee's unique identification number (i.e., last four digits of the employee's Social Security number). The payroll shall not include the full Social Security number or home address of the employee; however the contractor or subcontractor shall maintain this information on file and provide this information upon request by the Agency.
- Payroll deductions must conform to Section IV of the *Required Contract Provisions for Federal-aid Construction Contracts* (FHWA-1273). If payroll deductions are questionable, contact the State Construction Office for assistance.
- Every laborer or mechanic working on the contract must be classified for the proper minimum prevailing wage in accordance with the designated wage determination. If a classification of worker is used that does not appear in the contract special provisions, *Standard Specifications* Section 1 07.9 makes it the Contractor's responsibility to contact the U.S. Department of Labor (through the Project

Engineer) for a determination of the proper wage rate. The *Required Contract Provisions for Federal-aid Construction Contracts* (FHWA-1273) provides a method for resolving this.

- The Contractor can submit weekly payroll information in any form desired; however Optional Form WH-347 is available for this purpose from the Wage and Hour Division Web site at http://www.dol.gov/whd/forms/wh347instr.htm
- Each payroll submitted shall be accompanied by a "Statement of Compliance", signed by the contractor or subcontractor or his or her agent who pays or supervises the payment of the persons employed under the contract certifying the requirements listed in item (2), under part *3. Payrolls and basic records, of Section IV of the Required Contract Provisions Federal-aid Construction Contracts* (FHWA-1273). The reverse side of Optional Form WH-347 satisfies the requirements for submission of the "Statement of Compliance" required in the FHWA-1273.

Subcontractors and lower-tier subcontractors are required to submit payrolls through the Prime Contractor to the Project Engineer. Any payrolls which do not comply fully with the requirements outlined above must be corrected by a supplemental payroll.

SS 1-07.11 Requirements for Nondiscrimination

SS 1-07.11(1) General Application

EEO, D/M/WBE, and Training

Differences between State and Federal laws require a variety of guiding requirements. As a result individual contracts may have different guiding requirements depending on what laws were in place at the time the contract was executed and how the project is funded. The special provisions, *Standard Specifications*, and amendments determine the specific requirements for each project. The *Construction Manual* is one of many resources available for general information on the obligations and policy of WSDOT with regard to external civil rights. Other resources include:

1. **Office of Equal Opportunity (OEO)** – OEO monitors, maintains, and updates WSDOT Equal Employment Opportunity (EEO) policies and commitments to FHWA. As part of that effort they maintain the following documents which are available through the OEO homepage:
   - Equal Employment Opportunity Compliance Program (EEO and on-the-Job Training)
   - Disadvantaged Business Enterprise Participation Plan (contract goals, if included in a project, will be mandatory)
   - Title VI Plan (nondiscrimination)
2. *Standard Specifications*, as follows, apply to all projects:
   - 1-07.11 Requirements for Nondiscrimination
   - 1-08.1 Subcontract Completion and Return of Retainage Withheld

3. General Special Provisions (GSPs) which may be included in the contract include:
   - Voluntary Minority, Small, Veterans and Women's Business Enterprise (MSVWBE) Participation (included in projects funded with only State funds)
   - Requirement for Affirmative Action to Ensure Equal Employment Opportunity (included in projects with FHWA participation)
   - Disadvantaged Business Enterprise Participation (included in projects with FHWA participation)
   - Special Training Provisions (included in projects with FHWA participation and only if the contract is selected for training)
   - Indian Preference and Tribal Ordinances (TEROs) (only if the project includes work on the reservation and only if the ordinances exist)
   - Federal Small Business Enterprise (SBE) "Voluntary Goal" Participation (included in all projects with FHWA participation and no COA goal). Federal Small Businesses will be designated as FBE on the "Request to Sublet Work" (DOT Form 421-012), and in CCIS in order to differentiate them from businesses participating in the State Small Businesses Program, which will be designated as SBE on DOT Form 421-012 and in CCIS.

While some requirements and provisions apply to all projects, others apply to projects with State funds only and others yet apply to projects that are partially or fully financed with Federal funding.

SS 1-07.11(2) Contractual Requirements

Voluntary Minority, Small, Veterans and Women Owned Business Enterprise (MSV, WBE)

MBE, SBE, VBE or WBE are the designations for holding State certification as a minority, small, veteran or women owned business enterprise. The State Office of Minority and Women's Owned Business Enterprises (OMWBE) certifies businesses as either a minority owned business (MBE), a small business (SBE), a women owned business (WBE), or a combination of both Minority and Women Owned Business (M/WBE). The Department of Veteran Affairs certifies a business as a Veteran Owned Business. On projects funded in whole with State funds, and containing no Federal funds, the contract provisions will include the MSVWBE special provision. This provision requires that the Prime Contractor submit an MSVWBE Inclusion Plan, except for those projects with an estimated value of $250,000 or less. The provision also includes suggested methods for encouraging MSVWBE participation. As noted, these requirements are indeed voluntary and there are neither preferences for accomplishment nor sanctions for noncompliance. When the Project Engineer's Office receives the Prime Contractor's MSVWBE Inclusion Plan, it should be reviewed for completeness. Incomplete plans will be returned for correction and resubmittal. When an MSVWBE is employed on any project, a Monthly Report of Amounts Paid to MSVWBEs shall be submitted to the Engineer each month between execution and physical completion of the contract using the tool available at: https://remoteapps.wsdot.wa.gov/Mapsdata/tools/DBEParticipation.

Disadvantaged Business Enterprise (DBE)

As a condition of receiving federal financial assistance, WSDOT has given assurance to FHWA that it will comply with Title 49 CFR Part 26. WSDOT divisions and offices are committed to provide contracting opportunities for DBE businesses by achieving the agency programmatic goal for DBE participation at both the project and program level. For the projects under the authorities of regions and the State Construction office, all contractual matters relating to DBE must follow the same path as any other contract matters. The OEO DBE Liaison Officer (DBELO) has the agency program level authority for the regular dealer status, pre award and post execution contract specific approval of Good Faith Effort (GFE), pre award clearing of DBE Commitments, approval of changes to condition of award DBEs, Commercially Useful Function reviews, and applicable sanctions. However, any contractual DBE issues, including those listed above must be elevated through the State Construction office and they will seek concurrence and approval of the DBELO.

The State OMWBE certifies DBEs and maintains the certified DBE directory. Each DBE is certified for the work identified in the Description of Work. Only the amounts paid to DBE for the certified work is reported and applied towards the Contract DBE participation. North American Industry Classification System (NACIS) codes listed on the certification directory is for the purpose of the business size standards as it applies towards the DBE graduation from the program. Federally funded projects will contain DBE requirements as specified by the GSPs. These GSPs may include:

Requirements for Affirmative Action to Ensure Equal Employment Opportunity

This General Special Provision will be in all federally funded projects exceeding a contract cost of $100,000. The GSP draws the bidder's attention to the Equal Employment Opportunity requirements of the contract.

Disadvantaged Business Enterprise (DBE) Participation

When *No Condition of Award (COA) Goal* is specified, the contractor is encouraged to take actions that promote DBE participation. The GSP is intended to draw the attention of bidders to the opportunity to subcontract with DBE's. However, these requirements are indeed voluntary and there are neither preferences for accomplishment nor sanctions for non-compliance. They do contribute to the overall goal established by the Department. It is therefore important that the Department capture the work that is being performed. Payments made to non-COA DBE Subcontractors will be counted as race neutral participation if the subcontractor is performing work for which they are OMWBE certified and the payments are reported using the application available at: https://remoteapps.wsdot.wa.gov/Mapsdata/tools/DBEParticipation.

Disadvantaged Business Enterprise (DBE) Condition of Award Participation

When a *Condition of Award (COA) Goal* is specified, the Contractor is required to employ DBE participation to at least the extent identified in the GSP. This is a condition of awarding the contract to the Contractor and a project cannot be considered successful unless the Contractor meets the COA DBE Commitment. The Contractor's DBE Commitment as identified in the Contract Utilization Certification form, as further detailed in the post award bid item breakout information provided by the Contractor, and as verified/entered into CCIS. The Contractor may demonstrate that

a good faith effort was made to deliver on the Condition of Award for full or partial DBE participation.

The project DBE goal is also applied towards increased costs to a project via changes. Remember, the Contractor is obligated to meet the Contract DBE Commitment and the Project Engineer is responsible for the additional DBE participation, if any, as the result of changes that increases the Contract amounts paid. The project DBE participation to these changes is managed by the Project Engineer while working closely with the Contractor. The Project Engineer must look for the additional DBE participation necessary to meet the overall project DBE goal as it is applied to the total amounts paid on a project. Project engineer must do so by asking the Contractor for quotes from DBEs, review the status of non-COA DBEs participation, or demonstrate a good faith effort. Depending on the type of changes, where in the project schedule the change occurs, and the availability of DBEs, it is possible the change work with the additional DBE participation can cost more as compared to a quote from non DBE subcontractors. The determination of the reasonableness of the additional cost of DBE participation must be approved by the State Construction office. These specifications are placed in contracts as a condition of continued Federal Funding for the Department.

- As a *Condition of Award*, the Contractor must commit to, and follow through on, subcontracting at least the work and the amount identified by the COA to certified DBE firms or make a good faith effort to do so.
- Measurement of attainment is not simply the payments made to the DBE. Attainment is measured in accordance with the provisions of the "DBE Participation" section of the contract special provisions.
- Changes to the amounts specified for COA must be made in accordance with the procedures outlined in this section.
- All amounts paid for certified work to non-COA DBEs shall be reported by the Contractor. All non-COA DBE amounts reported on the project can be used for COA DBE substitution, applied towards the DBE participation on changes that increase the Contract amounts, or be applied towards overall agency DBE goal as race conscious DBE participation.
- When a DBE is the Contractor, the total project DBE participation is reported as race neutral, and all of the certified work completed by the DBE Contractor is reported as well as any other DBE subcontractor's work as long as it meets the Contract DBE requirements.

Federal Small Business Enterprise (SBE - Designated in CCIS as FBE)

The Federal Small Business Enterprise (SBE) Program is an element of the Disadvantaged Business Enterprise (DBE) Program. For purposes of tracking and reporting, a Federal Small Business will be designated as FBE on the "Request to Sublet Work" (DOT Form 421-012) and in CCIS. This is in order to differentiate from a State Small Business which will be designated on DOT Form 421-012 and in CCIS as SBE. Affirmative efforts to utilize SBE certified firms are required, and a voluntary goal of ten percent of the contract bid amount has been established, for all federally funded contracts that do not contain a DBE Condition of Award goal.

The contract special provisions require the Contractor to submit an SBE Participation Plan to the Project Engineer prior to commencing any work on the project. The Project Engineer will transmit the plan to the Region Equal Employment Opportunity (EEO) Officer for review. The EEO Officer will review the plan for compliance with the examples shown on the Office of Equal Opportunity (OEO) web site, and if appropriate will provide feedback to assist the Contractor in formulating a plan and administering an SBE program.

The EEO Officer will transmit a copy of the submitted plan to Headquarters Office of Equal Opportunity (OEO) for review.

Reporting of payments made to SBEs will be by means of the application available at: https://remoteapps.wsdot.wa.gov/Mapsdata/tools/DBEParticipation.

Additional Execution Documents

Prior to execution of the contract, successful bidders are required to provide bid item break out information for the COA DBE work and a "Bidders List" to the Department. This information is used to verify the COA DBEs planned work as related to the list of bid items along with the amounts for each COA DBE. This information is entered in to CCIS for the monitoring/tracking purpose. The bidders list is to include the names and addresses of every firm that submitted a bid or quotation to the Prime, whether or not that bid was used as part of the overall proposal. The bidder is also required to submit a complete list of all DBE firms shown on the DBE Utilization Certification and all the Bid Items, along with unit prices and extensions, assigned to each DBE firm. The Contractor is directed to send the bid item breakout information and the bidders list directly to the WSDOT Office of Equal Opportunity in Olympia and normally the Project Engineer will have no involvement.

On Site Reviews

The Project Engineer shall ensure that an on-site review is conducted on each DBE Subcontractor, Regular Dealer, or Manufacturer performing work or supplying materials for each Federal-aid contract. The Project Engineer shall also ensure that this information is entered into the Construction Contract Information System (CCIS). On-site reviews shall be conducted at periodic intervals—when the DBE begins work, during the peak period of the DBE's work, and any time there is a change in the nature or methods of the DBE's work. An on-site review must also be conducted when there is a change in the DBE performing the work (substitution of a DBE firm). These on-site reviews shall be performed for all DBE's performing work on the project, whether Condition of Award work or other work. On multi-year projects a new review will be performed for each DBE performing work on the contract each year. An on-site review is a "snapshot in time" and should record personal observations, documentation reviews and personnel interviews, as applicable. Once completed, the information from each on-site review shall be entered into CCIS by the Project Office. A copy of the completed on-site review DOT Form 272-052 should be forwarded to WSDOT's Office of Equal Opportunity (OEO).

One of the requirements of the overall DBE Program is that all DBE firms working on Federal aid project are in control of their specific items of work and are performing a "Commercially Useful Function" (CUF), as described by the specification. An on-site review may lead to a more in-depth CUF review, conducted by the OEO.

These in-depth CUF reviews may be a result of concerns identified during the initial on-site review, or the OEO may select DBE firms on a periodic basis for a more in-depth review. The OEO uses these in-depth reviews to stay abreast of the DBE firm's capabilities. The OEO will contact the Project Office directly to schedule these reviews. The fact that the OEO is going to conduct a review shall be kept in confidence in order to ensure that the review truly reflects a sampling of the typical work of the DBE firm. The CUF review will include observations of the work, as well as interviews with key staff of all parties on the contract, in addition to the DBE firm.

On those projects containing a COA goal, the COA letter requires that the identified DBE firms perform specific items of work for the estimated dollar amounts included in the proposal. The COA letter also identifies whether the DBE firm will be performing as a "subcontractor," "manufacturer," or "regular dealer (supplier)." Regular dealers must be approved for each individual contract in order to be counted. Any issues regarding DBE compliance should be brought to the attention of the appropriate Assistant State Construction Engineer (ASCE).

In order for WSDOT to take credit for DBE participation (as reflected by the monthly on-line reports), WSDOT must ensure that all DBE firms perform a "Commercially Useful Function." Determination of whether or not a firm is performing a "Commercially Useful Function" requires on-site monitoring. The Project Office plays a key role in this monitoring by acting as the Departments "eyes and ears" in the field.

Changes to the Condition of Award (COA)

The Contractor is required to utilize the COA subcontractors, manufacturers, etc., to perform the work as committed in the DBE Utilization Certification and the bid item breakout as provided by the Contractor.

This COA is a Contract requirement and any Contractor initiated changes that reduce the DBE Commitment amount requires prior approval to terminate (whole or partial) COA work with a good cause and substitution is required to fulfill the COA Commitment amount. Substitution of COA DBE cannot occur without termination. Project Engineer should be discussing the Contractor's plan for substitution as part of the discussion of the termination approval process.

Exceptions to the substitution requirement may be allowed under any of the following circumstances:

- WSDOT deletes the COA firm's intended work.
- The Contractor can show substantial financial loss if a substitution is required.
- The work has progressed to the point where no other work remains to be subcontracted.
- The DBE subcontractor has taken the positive step of graduating from the DBE program.

The State Construction Office must approve any substitution with concurrence from the Office of Equal Opportunity.

Substitution

Substitutions must meet the following requirements:

- Substitution is a part of the whole/partial COA DBE subcontract termination; hence the DBE termination with a good cause must exist for any DBE substitution requests.
- The new firm must do an equal dollar value of work on the contract.
- The change order does not increase the dollar amount of the original DBE Commitment. WSDOT may request DBE participation as part of the change order when necessary.

Condition of Award (COA) Change Orders

Changes to the contract COA DBE Subcontractors or decreases to the COA DBE commitment amounts must be made through a change order executed by the State Construction Office. Approval is granted by the appropriate ASCE. This approval shall be obtained and documented prior to the changed work, and any related work, being performed. Types of COA change orders may include:

- **Substitution** – Contractor requests to substitute for a COA DBE Subcontractor. The COA change order will include a DBE termination for the DBE Subcontractor being replaced and assigning an equal amount of COA work to another DBE Subcontractor.
- **Change to Allocated Dollars** – Contractor requests to change the allocation of dollar amounts of work assigned to a COA DBE Subcontractor as shown on the Bid Item Breakdown. The COA change order will include the removal or reduction of some bid items and increase of other bid items of work for the COA DBE Subcontractor.
- **Using COA DBE for Bid Item Not Listed** – Contractor requests to use COA DBE Subcontractor for a bid item that is not listed on the Bid Item Breakdown. In order to be counted toward the COA Goal amount, a COA change order must add this bid item work to the COA items for the COA DBE Subcontractor. The COA DBE Subcontractor must be OMWBE certified to perform this work.
- **Change Due to Contractor Initiated Change** – Contractor proposes a change that deletes or reduces work to be performed by a COA DBE Subcontractor. A change order is require for all changes to the contract. The Contractor should find substitute work to replace this COA work. If the Contractor cannot guarantee COA DBE participation the requested change order may be denied.
- **Change Due to Owner Initiated Change** – Owner initiates a change that deletes or reduces COA DBE work. The ASCE should negotiate inclusion of additional COA DBE work (may include paying a premium) or GFE to be included in the change order.

The amounts shown in the COA change order should be limited to the credit necessary to accomplish the original contract DBE commitment amount. The request for approval and the change order as well as the change order package needs to contain the following information:

- An explanation of why the change is necessary.
- Identification of all deleted work and all added work.

- Revised subtotals for all affected COA DBE firms. The change order only needs to address each affected DBE firm, not all COA DBE firms.
- Revised total attainment for DBE participation.
- Documentation of a good faith effort to substitute should go in the change order file (if required, see Section SS 1-07.11).

Consulting With the Office of Equal Opportunity

The Department's DBE program is managed by the External Civil Rights Branch of the Office of Equal Opportunity (OEO) at Headquarters. For day-to-day issues that may arise, the Project Engineer should communicate with the ASCE assigned responsibility for that Project Office about any aspect of the DBE activities on the project. Any questions received from the Contractor or subcontractor about DBE provisions or enforcement should be answered only with full knowledge of the opinions and directions of the State Construction Office and with the OEO. When appropriate, the ASCE will consult with the Office of Equal Opportunity.

The Office of Equal Opportunity is also required to approve DBE firms that are manufacturers and regular dealers (suppliers) on a contract by contract basis.

The State Construction Office must execute any change orders that revise the COA commitment. When preparing the change order in CCIS pending CO's menu use option 3, "Condition of Award Items." Include the first three items listed above in the change order document. When submitting the change order to the Contractor for signature, the Project Engineer should also send copies to the affected DBE firms as notification of the change and should advise the Contractor that this has been done.

On-the-Job Training (OJT)

On-the-Job Training Special Provisions – General

The requirements for training are made a part of the contract by the special provision, Special Training Provisions. The amount of training is set by the WSDOT Office of Equal Opportunity based on the opportunities presented by the work and the needs in the geographical area involved. The requirements for trainee, training plan approval, and trainee payment are all specified in the contract special provisions.

Payment for "Training"

At progress estimate cutoff time, the Contractor shall submit a certified invoice requesting payment for training. The invoice must provide the following information for each trainee:

- The related weekly payroll number
- Name of trainee
- Total hours trained under the program
- Previously paid hours under the contract
- Hours due for current estimate
- Dollar amount due for current updated estimate

Retroactive payment may be allowed provided:

- The Training Program is approved
- There are no outstanding issues or circumstances that would have prevented approval of the apprentice/trainee

  Increases in training hours are allowable and may be approved on a case by case basis by the Project Engineer in consultation with the Regional EEO Officer.

Apprentice Participation

Apprentice Participation Special Provision – General

The requirements for apprentice utilization are made a part of the contract by the General Special Provision (GSP) "*Apprentice Utilization*." The use of this provision and the apprentice participation goal will be:

- 15% – On contracts estimated to cost $3 million dollars or greater.

Only apprentices enrolled in an apprenticeship program approved by the Washington State Apprenticeship Council may be counted toward attainment of the apprentice utilization requirement. The Contractor may attain the apprentice utilization requirement as part of their work activities, or through the work activities of subcontractors or lower-tier subcontractors. Attainment of the requirement will be calculated by comparing the total labor hours worked by all the enrolled apprentices performing work for the Contractor and any subcontractors, in all trades, with the total labor hours performed on the project, in all trades.

It is important to note that the Apprentice Utilization Requirement is a separate program from the Federal Training requirements included in all contracts which contain federal monies. The two programs are not mutually exclusive. The intent of the federal program is to increase the availability of women and minorities within the construction trades; whereas as the Apprentice Utilization Requirement (state program) is promoting the use of apprentices in general. A female or minority apprentice enrolled in a program approved by the Washington State Apprenticeship Council meets both requirements.

Apprentice Utilization Plan

The Contractor is required to submit an apprentice utilization plan, using the application available at: https://remoteapps.wsdot.wa.gov/Construction/Training/Apprenticeship/ , to the Project Engineer within 30 days of execution of the contract. This plan is not submitted for approval; but to inform the Project Engineer as to how the Contractor will attain the utilization requirement. The intent of the plan is to provide the Project Engineer with enough information to track the Contractor's progress in the utilization requirements. If the plan indicates that the Contractor will not attain the requirement, a revised plan should be requested and/or the Contractor should be notified that "Good Faith" documentation will be required, by the physical completion date as specified.

"Good Faith" Procedures

"Good Faith" is the action taken by the Contractor to meet the Apprentice Utilization requirement. Documentation of the Contractor's "Good Faith" efforts is only required if the Contractor fails to attain the requirement. "Good Faith" documentation may arrive with the monthly report or at the completion of the contract. The need to provide "Good Faith" documentation should be stressed prior to physical completion if it is determined that the monthly reports show a level of attainment that significantly differs from that in the Apprentice Utilization Plan. If this should occur, the Project Engineer should request a revised Apprentice Utilization Plan and/or "Good Faith" documentation from the Contractor. "Good Faith" documentation should demonstrate that the Contractor took the following steps:

1. Solicit Apprentice(s) from State-approved Apprenticeship Training Program(s).
2. Document the solicitation and, in the event that Apprentice(s) are not available, obtain supporting documentation from the solicited program(s).
3. Demonstrate that the plan was updated as required elsewhere in this section.
4. Provide documentation demonstrating what efforts the Contractor has taken to require subcontractors to solicit and employ Apprentice(s).

The Contractor may also provide supplemental narrative about other factors that prevented them from meeting the apprenticeship requirement, past apprentice utilization and company-wide efforts. The narrative does not substitute for the above listed items, but is addition to them. In unusual circumstances, it is possible that the Contractor would not be able to meet the apprenticeship requirement for a reason that does not fall into the above "Good Faith" process. Some examples of other circumstances that may prevent the Contractor from meeting the apprenticeship requirement are listed below, and should be documented in the "Good Faith" submittal.

- A large amount of rock-scaling or other work specified in the contract where the use of experienced worker is part of the contract requirements.
- A large amount of work in occupations that are not apprentice-able or have few apprentice opportunities, such as flagging.
- Conflicting TERO requirements.
- Competing Federal requirements.
- The use of specialty equipment that no apprentices were able to operate.
- Added or deleted work that significantly altered a Contractor's workforce and apprentice utilization plan.
- Small crew sizes and the ration of apprentices to journeymen allowed by the apprentice program did not allow a Contractor to meet the requirement.

Any "Good Faith" documentation should be reviewed by the Project Engineer, who will determine if the Contractor met the requirement through "Good Faith." Their determination and a copy of the "Good Faith" documentation should be submitted to the State Construction Office through the Region. If the Contractor fails to meet the apprenticeship requirement and does not submit a "Good Faith" effort, the Project Engineer shall reflect this in the Contractor's Performance Evaluation. Failure to comply with the apprentice utilization requirement may result in reduction or revocation of prequalification as allowed by WAC 468-16-190.

SS 1-07.11(2)A Equal Employment Opportunity (EEO) Responsibilities

EEO (Federally Funded Projects)

WSDOT has committed to FHWA to perform comprehensive construction compliance reviews to ensure that the requirements of *Standard Specifications* Section 1-07.11 have been adhered to. This review is performed by the WSDOT Office of Equal Opportunity (OEO) on a selected number of FHWA funded projects and may take place at any point during the life of the project or after the project has been completed. A Contractor that is found in violation of the contractually required affirmative action good faith efforts will be invited to a compliance conference to develop a corrective action plan. Failure to accept and comply with a corrective action plan may result in sanctions. The records that have been maintained at the Contractor's office will be utilized for these reviews. The FHWA also retains the authority to review the Contractor's records for EEO compliance. These reviews do not normally involve the project office other than notification of their occurrence and the resulting findings.

Contract compliance reviews include an on-site review, and interviews of contractor employees, while the contractor is actively engaged in performing work associated with the contract. If interviews cannot be conducted during the site review, such interviews may be conducted off-site, at other locations, or at a later time. The WSDOT Office of Equal Opportunity (OEO) may also interview WSDOT personnel associated with the project. FHWA has established narrow time frames during the execution of the project that maximize the potential for obtaining the information required for an on-site review. OEO will contact the Region EEO Officer or project staff to facilitate the timing of the review. Federal regulations for projects having federal-aid dollars as part of their funding source require the full cooperation of any contractor who performs work on the project.

Prompt Return of Retainage to All Subcontractors

As a condition of receiving Federal funding, WSDOT is required to ensure prompt payment to all subcontractors on all contracts regardless of funding. State Statutes (Revised Code of Washington) pertaining to prompt pay require that the contracting agency make prompt payment to the prime contractor and that the prime contractor, in turn, pass these payments on to subcontractors in a timely manner.

Return of the subcontractor's retainage held by the prime contractor is required by the Contract Special Provision. This is a race neutral effort intended to support all small businesses in their efforts to participate in WSDOT contracts. Therefore, in accordance with the contract provisions, the prime contractor is required to release any and all retainage to the subcontractor within a designated time period after subcontract completion. The Project Engineer has no role in this process other than to respond to allegations of non-compliance with this contract requirement as with any other. We need to keep in mind that our contract is with the prime contractor, and we are not a party to the prime contractor's subcontract documents. We should avoid becoming involved in a prime's relationship with their subcontractors.

In the prime contractor's effort to determine completion of subcontract work, as required by the contract provisions, the Project Engineer may be asked to determine completion of a portion of the work. While we need to work with the Contractor to comply with the requirements of the specification, we should also take specific care to not issue partial punch lists or to place ourselves in a position of "accepting" portions of the work. In some cases we may provide the Contractor relief under certain conditions as described in *Standard Specifications* Section 1-07.13, Contractor's Responsibility for the Work.

EEO (State Funded Projects)

The Contractor is required to comply with the EEO requirements detailed in *Standard Specifications* Section 1-07.11, Requirements for Nondiscrimination. In general, these requirements include having an EEO Officer, developing, maintaining, making known, and utilizing an EEO program. The Project Engineer should be alert for and respond to any indications or accusations of discrimination. If the Project Engineer, or any other WSDOT personnel, becomes aware of any indications or accusations of discrimination, they should immediately notify the Region EEO Officer, who will in turn immediately notify WSDOT OEO. WSDOT OEO will handle any investigation that is warranted. The Office of Equal Opportunity and your regional OEO staff are available for guidance and assistance in these types of situations.

EEO (Federally Assisted Projects)

The requirements for EEO and nondiscrimination for federally assisted contracts are similar to those required for State funded projects. However, additional monitoring, reporting, and authority are mandated by Federal laws as noted in the Federal contract requirements known as the FHWA-1273. The FHWA-1273 is included in every Federally-assisted contract. These requirements are reiterated in *Standard Specifications* Section 1-07.11, Requirements for Nondiscrimination.

SS 1-07.11(10) Records and Reports

EEO Reporting and Records Retention

- Federal-Aid Highway Construction Contractors Annual EEO Report, Form FHWA-1391 – This form is required for all Federally assisted projects provided the prime contract is equal to or greater than $10,000 and for every associated subcontract equal to or greater than $10,000. Each contract requires separate reports be filed for the prime contractor and each subcontractor (subject to the above noted criteria.) These forms are to be submitted to the Project Engineer, and are due by August 25th each year in which work was performed in the month of July.

  The payroll period to be reflected in the report is the last payroll period in July in which work was performed. A contractor who works on more than one Federally assisted contract in July is required to file a separate report for each of those contracts. For multi-year projects, a report is required to be submitted each year work was performed during the month of July throughout the duration of the contract. A responsible official of the company must sign the completed report.

Upon receipt, the Project Engineer will forward the annual report to the Region's EEO Officer by September 5th. The Region EEO staff at the direction of the OEO will compile and report the information noted on the forms. The figures reported must reflect the number of employees, not hours, in each category, with subtotals broken out for women and minorities and grand totals for the category. Tables a through E reflect both apprentices and on the job trainees that were also utilized within each trade. The form must also include the corresponding subtotals in each category, a through E, broken out by both women and ethnicity.

- Summary of Employment Data Report, Form FHWA-1392 – As a part of the WSDOT OEO Equal Employment Opportunity Contractor Compliance Program, WSDOT is required to submit a summary of employment data to FHWA for each Federal fiscal year. This Summary of Employment Data Report, FHWA-1392, is prepared from forms FHWA-1391 (project specific annual reports) that have been submitted to the Region by the Project Engineer's offices. This summary is prepared by the Region EEO lead or other Region designee for each Federally assisted project. This report also includes Local Agency projects administered through the Region's Highways and Local Programs offices. The completed FHWA-1392 summary reports, including all forms FHWA-1391, are then submitted by the Region EEO lead to the WSDOT Office of Equal Opportunity by September 15th each year.
- Monthly Employment Utilization Reports, DOT Form 820-010 – This form, or approved substitute, is required for all federally assisted projects if the prime contract is equal to or greater than $10,000 and for every associated subcontract equal to or greater than $10,000. This report includes the total work hours for each employee classification as well as the total number of employees, broken out by ethnicity, in each trade, for each WSDOT project. Instructions for completing the form can be found on the back of the form itself. These monthly reports are to be maintained by the Contractor in the respective prime or subcontractor's records for a period of three years from acceptance of the contract, and available to WSDOT and/or Federal reviewers upon request.

  The information required by DOT Form 820-010 may be accepted in an alternate format provided that format contains all of the data required by and is completed in accordance with the instructions for DOT Form 820-010. The Region EEO staff should be consulted regarding the acceptability of any alternate format proposed by the Contractor.

The Contractor is required to maintain all project records, including the aforementioned EEO records, for three years following completion of the contract.

DBE Reporting

The contract special provisions require the Contractor to submit to the Project Engineer a Monthly Report of Amounts Credited as DBE contractor Participation for each month between execution of the contract and completion of the contract and upon completion of the project. This report will be submitted utilizing the application available at: https://remoteapps.wsdot.wa.gov/mapsdata/tools/dbeparticipation/. Again, the measurement is not simply the payments made to the DBEs, rather it is in accordance with the "DBE Participation" section of the contract special provisions. This report should contain all DBEs utilized on the contract not just the COA DBEs.

The information is used to track the Departments attainment of our overall goal and it is important to insure that they are received and processed in accordance with the contract provision.

MSVWBE Reporting

- The Prime Contractor is required to submit a Monthly Report of Amounts Paid to MSVWBEs to the Project Engineer each month between execution of the contract and physical completion of the contract regardless of whether payments were made or work occurred. This report is due twenty (20) calendar days following the end of the month for each month and shall be submitted using the application and instructions available at: https://remoteapps.wsdot.wa.gov/mapsdata/tools/dbeparticipation.

On-the-Job-Training Required Reports

The contract provisions allow the Contractor to accomplish training as part of their work activities, or through the activities of their subcontractors or lower-tier subcontractors. However the prime contractor is designated as being solely responsible for the completion of the training requirements as they are outlined in the contract provisions.

- **Training Program DOT Form 272-049** – A training program is to be completed by the Contractor. The program must be submitted to the Engineer for approval prior to commencing contract work. The Project Engineer's office may approve Office of Apprenticeship, Training, Employer and Labor Services (OATELS) or Washington the State Apprentice and Training Council (WSATC) programs provided they meet the requirements specified in the contract provisions. The Region will review any non-OATELS/WATC training plans submitted under section III of the form for compliance. If the plan appears to be in compliance, the Region will sign it, check "Approval Recommended," and submit it to the WSDOT Office of Equal Opportunity (OEO) for concurrence. If concurrence is granted, OEO will note this on the plan and will submit the plan to FHWA for approval.
- **Apprentice/Trainee Approval Request DOT Form 272-050** – Approval of an individual trainee cannot be authorized until an approved Training Program is filed with the Region. This form is to be submitted by the Contractor for each trainee to be trained on the project. When an OATELS/WSATC apprentice/trainee is first enrolled, a copy of the apprentice/trainee's certificate showing apprenticeship/training registration must accompany the Trainee Approval Request. Trainees are approved by the Project Engineer's office based on the criteria in the special provisions. If the contractor submits a request for approval of trainee who is neither female, nor a minority, the region must obtain concurrence from the WSDOT Region EEO Officer or the WSDOT Office of Equal Opportunity prior to approval of the requested trainee.
- **Trainee Interview Questionnaire DOT Form 226-012** – One trainee interview is to be conducted for each craft designated on an approved training program for contracts which have 600 or more training hours or on projects otherwise designated by the Region EEO. The Region EEO shall designate additional contracts on which trainee interviews are to be completed in conjunction with those that meet the criteria above to insure that trainee interviews are conducted on

at least one fourth of all the contracts that have training hours established for any given construction season. The intent of these training interviews is to document that the trainees are working and receiving proper training consistent with their approved programs. DOT Form 226-012 should be used to document these spot checks.

- **Federal-aid Highway Construction Annual Training Report DOT Form 272-060** – This report is to be completed annually by the Project Engineer summarizing the training accomplished by the individual trainees during the reporting period beginning January 1 and ending December 31 of the calendar year. This report is due at the Regional EEO Office by December 20th of the same calendar year as the reporting period. The "gap" between the reporting deadline (December 20) and the end of the reporting period (December 31) is not significant enough to adversely affect the data, and should not be a source of concern for the project staff.

Apprentice Reporting

For each contract with an apprentice utilization requirement, the Contractor is required to submit a monthly Statement of Apprentice/Journey Participation using the application available at: https://remoteapps.wsdot.wa.gov/construction/training/apprenticeship to the Project Engineer. This report shall be a consolidated report, and include data from the Contractor's work activities, as well as from the work activities of all subcontractors. This report will include the total hours and number of apprentices and journeymen working on the contract during the reporting period. The report will list the apprentices by name, registration number, and craft or trade; as well as the name of the Contractor or subcontractor for whom the apprentice is working. The Project Engineer should verify that the report is reasonable and is a complete account of all workers receiving an hourly wage who are directly employed on the project site for both the Contractor and all subcontractors. The hours reported do not need to be checked against payrolls. Instead the Project Engineer should review the report to determine if the number of workers, the contractors listed, and the occupations reported are a fair representation of the work that was performed. The reports do not need to include hours performed by foremen, superintendents, owners, and workers who are not subject to prevailing wage requirements. The reports should include off-site workers involved in fabrication or plant operations and truck drivers. Do not confuse apprenticeship reporting with Federal Wage Administration or the Special Training Provisions. The reporting period starts on the first day of the month and runs through the last day of the month, and will be reported on the last working day of the following month. During periods of no work, the Project Engineer may suspend the reporting requirement. Notification of this suspension may be accomplished through the Suspension of Work letter to the Contractor. The Project Office should use the monthly reports and the apprentice utilization plan to measure the Contractor's progress toward attainment of the utilization requirement. If apprentices are not being reported on the project when the plan shows that they should be working, the Project Engineer should contact the Contractor and request a revised plan. If it appears that the Contractor may no longer be able to meet the apprenticeship requirement the Project Engineer should notify the Contractor that "Good Faith" documentation will be required by the date of physical completion, as specified. The Project Engineer is responsible for reviewing the report in the application. Reports should be revised and resubmitted if is determined that they are incomplete.

SS 1-07.12 Federal Agency Inspection

Construction Work in International Boundary Strip

The International Boundary Commission of Washington, D.C., by treaty with Canada, has the exclusive jurisdiction of the 20-ft boundary strip, 10 ft on each side of the International Boundary. Any construction work within this strip must be with the exclusive permission of the International Boundary Commission (IBC). Boundary monuments are not to be moved or disturbed in any manner without the expressed approval of the IBC. It is expected that permission for all work within the boundary strip will be obtained from the IBC during the design stage of a project. However, it is the Project Engineer's responsibility to ascertain that permission has, in fact, been obtained from the IBC for all work performed within the boundary strip. The Region shall be immediately notified if, upon construction, it is found that permission has not been obtained to relocate boundary markers or perform construction work in the 20 ft boundary strip.

Responsibilities When Working on Tribal Lands

Indian nations have the political distinction of being sovereign. This is different from being designated as having protected group status based on racial classifications. Being sovereign, tribes have the ability to create and enforce tribal ordinances such as Tribal Employment Rights Ordinances (TERO). These are legal requirements pertaining to work within the boundaries of the reservation which are enforced by the respective tribes. When a contract includes work on a reservation, the project should include a general special provision "Indian Preference and Tribal Ordinances" that alerts the contractor to the possibility that TERO requirements may apply and provides a contact person for the tribe. The provision also reminds the contractor to bid any costs associated with TERO compliance into associated items of work. TERO requirements may take a variety of forms, some of which are listed in the noted provision. The provision also notes that complying with TERO requirements shall not be a violation of the contract equal employment opportunity requirements. The end result is that the contractor is expected to comply with TERO requirements as they would any other legal obligations. The underlying intent is to reduce Indian unemployment and most tribes are willing to work with contractors to best meet this goal. We want to avoid creating any contractual requirements that interfere with their ability to do so. Our role is to assist in communication but not become involved in determining or paying the tax.

Cargo Preference Act (CPA) 46 CFR Part 381

The Contract Provisions for federal-aid construction contracts (FHWA 1273) requires the implementation of the Cargo Preference Act (CPA) of 1954. The regulations for the Act are given in 46 CFR Part 381, and require that at least 50 percent of any equipment, materials or commodities procured, contracted for or otherwise obtained with funds granted, guaranteed, loaned, or advanced by the U.S. Government, and are transported by ocean vessel, shall be transported on privately owned United States-flag commercial vessels, if available. A listing of United States-flag commercial vessels is maintained by MARAD at: www.marad.dot.gov/wp-content/uploads/pdf/MAR620.US_.Flag_.Vessels.pdf

The Federal Highway Administration has stated that Part 381.7 (a)-(b), shown below, are the appropriate clauses for use in the Federal-aid highway program.

(a) Agreement Clauses. "Use of United States-flag vessels:

"(1) Pursuant to Pub. L. 664 (43 U.S.C. 1241(b)) at least 50 percent of any equipment, materials or commodities procured, contracted for or otherwise obtained with funds granted, guaranteed, loaned, or advanced by the U.S. Government under this agreement, and which may be transported by ocean vessel, shall be transported on privately owned United States-flag commercial vessels, if available.

"(2) Within 20 days following the date of loading for shipments originating within the United States or within 30 working days following the date of loading for shipments originating outside the United States, a legible copy of a rated, 'on-board' commercial ocean bill-of-lading in English for each shipment of cargo described in paragraph (a)(1) of this section shall be furnished to both the Contracting Officer (through the prime contractor in the case of subcontractor bills-of-lading) and to the Division of National Cargo, Office of Market Development, Maritime Administration, Washington, DC 20590."

(b) Contractor and Subcontractor Clauses. "Use of United States-flag vessels: The contractor agrees-

"(1) To utilize privately owned United States-flag commercial vessels to ship at least 50 percent of the gross tonnage (computed separately for dry bulk carriers, dry cargo liners, and tankers) involved, whenever shipping any equipment, material, or commodities pursuant to this contract, to the extent such vessels are available at fair and reasonable rates for United States-flag commercial vessels.

"(2) To furnish within 20 days following the date of loading for shipments originating within the United States or within 30 working days following the date of loading for shipments originating outside the United State of cargo described in paragraph (b) (1) of this section to both the Contracting Officer (through the prime contractor in the case of subcontractor bills-of-lading) and to the Division of National Cargo, Office of Market Development, Maritime Administration, Washington, DC 20590.tes, a legible copy of a rated, 'on-board' commercial ocean bill-of-lading in English for each shipment

The CPA requirements would be appropriate for oceanic shipments of materials or equipment that is intended for use on a specific Federal-aid project, such as a precast concrete structural members, fabricated structural steel, tunnel boring machines, or large-capacity cranes.

The CPA requirements are not applicable for goods or materials that come into inventories independent of an FHWA funded-contract. For example, the requirements would not apply to shipments of Portland cement, asphalt cement, or aggregates, as industry suppliers and contractors use these materials to replenish existing inventories. In general, most of the materials used for highway construction originate from existing inventories and are not acquired solely for a specific Federal-aid project.

A test for whether CPA requirements apply or do not apply to shipped goods or materials would be if the goods or materials are what one would consider to be

common inventory supplies for highway construction contractor, then CPA would **not apply**. If the materials or goods are considered to be supplies one would consider to be not common supplies of a highway construction contractor then CPA would **apply**.

When the CPA requirements apply, the Contractor must furnish within 20 days following the date of loading for shipments originating within the United States or within 30 working days following the date of loading for shipments originating outside the United States, a legible copy of a rated, 'on-board' commercial ocean bill-of-lading in English for each shipment of cargo as described in 46 CFR Part 381.7 (b) (1). Copies shall be provided to the Contracting Agency (Engineer) by the Contractor (through the prime contractor in the case of subcontractor bills-of-lading), and also to the Division of National Cargo, Office of Market Development, Maritime Administration, Washington, DC 20590.

SS 1-07.13 Contractor's Responsibility for Work

SS 1-07.13(1) General

Standard Specifications Section 1-07.13(1) specifically designates the Contractor as being solely responsible for the completed work or material until the entire improvement has been completed. All work and material, including change order work, is at the sole risk of the contractor and when damaged must be rebuilt, repaired, or restored. When these damages occur to either the permanent or temporary work, and have occurred prior to the contract Completion Date, the costs for these repairs shall be entirely at the Contractor's expense. However, the specification does provide the contractor exceptions for causes that are generally beyond the contractor's control.

While the Contractor is fully responsible for the work and materials, the section does provide the contractor some options for relief. Relief is broken into 2 categories. The first category is relief of maintenance and protection for portions of works that have been completed. The second category is for relief of damage caused by the public when it is necessary that the public use the facility during construction. Both options for relief have specific criteria in order to exercise them. While a brief explanation of each option is provided, the Project Engineer should review the entire *Standard Specifications* Section 1-07.13 to ensure that the extent of responsibilities are understood and that any relief from responsibility is granted in accordance with those provisions.

SS 1-07.13(2) Relief of Responsibility for Completed Work

Standard Specifications Section 1-07.13(2) provides relief to the Contractor from maintaining and protecting specific portions of contract work as they are completed. The Contractor must submit a written request for relief to the Project Engineer. Before granting any relief, the Project Engineer will review the request to ensure that the items of work noted conform to the requirements and limitations outlined in *Standard Specifications* Section 1-07.13(2) and have been fully completed in all respects of the contract. The Regional Construction Manager or designee may approve these requests for relief. Relief may be granted for several specific items, for example: "Item 17, Beam Guardrail, Type l; Item 18, Beam Guardrail Anchor Type l; etc." Relief may also be granted for all work except certain items, for example: "All work except Item 38, Electrical." the approval of the Contractor's request must be in writing.

SS 1-07.13(3) Relief of Responsibility for Damage by Public Traffic

When it is necessary for public traffic to utilize a highway facility during construction, *Standard Specifications* Section 1-07.13(3) provides relief of responsibility to the Contractor for damage caused to the permanent work by the public traffic. When the conditions specified in this section are met, the Contractor is automatically relieved of this responsibility. However, this section may not provide relief for damage caused by vandalism or other causes. The Contractor will resume full responsibility for both temporary and permanent work if traffic is relocated to another section of roadway. This responsibility will again continue until contract completion unless the section is reopened to public traffic or the Contractor is granted relief under *Standard Specifications* 1-07.13(2).

The first paragraph of *Standard Specifications* Section 1-07.13(3) refers to damage to "permanent work." This refers to work included in the contract that is being constructed in accordance with the requirements noted in the plans and specifications and is damaged. The intent is to exclude equipment, temporary facilities and temporary materials such as formwork and falsework and "Temporary Traffic Control Devices."

SS 1-07.1(4) Repair of Damage

Section SS 1-07.13(4) details when WSDOT assumes responsibility and pays for third party damages. The WSDOT *Risk Management Manual* M 72-01, provides detailed guidance on procedures, including lines of communication. Payment should be made under the item "Reimbursement for Third Party Damages." This item is only intended to be used for costs that are the responsibility of the contracting agency. If this item was not included in the contract, it may be added by change order using a separate group for each Control Section (as shown in the Plans) in which an incident occurs.

Risk Management has created a form that is to be used to report each new occurrence of Third Party Damages, "DOT Form 350-013". The form is available from Forms Management. Any supporting documents should be attached to the form and submitted as well. The form should be filled out and submitted per the routing listed on the bottom of the form. This routing includes:

- AFS – Contract Payments
- Enterprise Risk Management
  - For AFS and Risk Management use thirdpartydamage@wsdot.wa.gov
- Region Construction Office

Region Construction may need to send to Region Program Management and to Region Financial Services if additional funds are required. If this item was not included in the contract, it may be added by change order using a new group for the Control Section (as shown in the Plans) in which an incident occurred. Once the item has been added to the contract, use DOT Form 350-013 when establishing the group for the occurrence. This group will be used for only one occurrence. A new group will be required for each new occurrence.

If the item is included in the contract and a new occurrence of Third Party Damage occurs, use DOT Form 350-013 to add a group for each new occurrence. You will need a group for each occurrence of Damage.

If additional information (responsible party, police reports, Field Notes, paynotes, etc.) becomes available after the initial report form has been submitted, you may send an updated form to the same routing. Be sure to indicate that this is a revised form by selecting the "Revised Report" radio button.

SS 1-07.14 Responsibility for Damage

Claims Against the Contractor – Damage

The Department has a claims office, now known as the WSDOT Risk Management Office (RMO). All receptionist job descriptions, all Region operations manuals, and all telephone training is set up to refer citizens with damage claims related to construction to the RMO and to provide the toll free number (1-800-737-0615). The RMO will react to the call, issuing claims forms, contacting the contractor, and following up on the actions taken. The Project Engineer's role is to appropriately advise the RMO, if needed. There may be confusion about which contract is involved. Field office knowledge about the incident and the surrounding circumstances may be solicited. The contractor's insurance and the insurance provided by the Contractor for the State may be involved and information about the policy will, most likely, be requested.

If, in spite of the Department process, the claimant contacts the field office directly, the Project Engineer should refer the claimant to the State Risk Management Office (1-800-737-0615).

Claims Against the Contractor – Money

Claims received by the Region for money owed by the Contractor should be referred to the Contractor. A claimant should be advised of the legal right to file a lien against the retained percentage or performance bond for claims involving labor, equipment, or materials used on the project and be referred to the State Accounting Services Office for obtaining the necessary lien forms.

Claims Against Officials and Employees

The statutes provide that claims may be filed against the State of Washington, State officers and employees, for damages resulting from their conduct and prescribes the manner in which the action must be taken. Whenever this occurs, the state will furnish the legal defense and pay any judgments if the act which caused the alleged damage was within the scope of the person's duties, was in good faith, and without negligence.

SS 1-07.15 Temporary Water Pollution Prevention

SS 1-07.15(1) Spill Prevention, Control, and Countermeasures Plan

Spill Prevention, Control, and Countermeasures (SPCC) Plans are written by the Contractor to prevent, respond to, and report hazardous material spills in a safe and effective manner. All WSDOT projects should have a project specific SPCC Plan and the plan must be submitted to the Project Engineer prior to starting any on-site work. The plan should be reviewed by the Project Office for compliance with the WSDOT *Temporary Erosion and Sediment Control Manual* M 3109. WSDOT personnel who review SPCC Plans are required to take the Spill Plan Reviewer and Preparedness Training class available through the Learning Management System (LMS).

SPCC Plans should include information regarding the project site and contractor activities as they relate to spill prevention, control, and response activities. Additionally, SPCC Plans should identify possible sources of hazardous materials, methods to prevent and control spills, and spill response procedures. SPCC Plans are written and maintained by the Contractor and are required on all WSDOT projects, regardless of the size or duration of construction activities.

SPCC Plans are applied to the life of a construction project and may need to be amended over time with changing conditions. Periodic inspections will ensure that the required preparation and preventative steps identified in the SPCC Plan have been taken to keep the site in compliance throughout the life of the project.

The *Standard Specifications* provide the complete list of required contents for the Contractors SPCC Plan in Section 1-07.15(1).

SS 1-07.16 Protection and Restoration of Property

SS 1-07.16(1) Private/Public Property

Standard Specifications Section 1-07.16(1) restricts the contractor from using Contracting Agency owned or controlled property other than property directly affected by the contract work without the approval of the Engineer. The Engineer has the authority to allow the use of Contracting Agency owned or controlled property within the project limits and any other property specifically listed for use in the contract. The use of any other Contracting Agency owned or controlled property would require a lease agreement as detailed in WSDOT *Right of Way Manual* M 26-01 Chapter 11.

In many cases the courts have held that where the Project Engineer has exceeded their delegated authority their actions are binding upon Contracting Agency. Because of this, it is important that the Project Engineer make no instructions, verbally or by written memoranda, that are outside of their authority.

SS 1-07.16(4) Archaeological and Historical Objects

It is both National and State policy to preserve historical or prehistorical objects and ruins. These objects and ruins may include sites, buildings, artifacts, fossils, or other objects of antiquity that may have particular significance from a historical, cultural, or scientific standpoint.

If provisions for archaeological and historical salvage have not been made in the contract and it appears that significant historic or prehistoric objects or ruins have been or are about to be encountered, the Project Engineer should immediately take steps to preserve and protect the objects or ruins. Once the objects or ruins have been sufficiently protected, the Project Engineer should immediately notify the Region Construction Manager, who will provide any necessary initial assistance to the Project Engineer. Where the Region determines appropriate, the Project Engineer will contact and inform through existing Region environmental staff, the cultural resources consultant, the State Historic Preservation Officer (SHPO), FHWA, and affected tribes of the discovery. The Project Engineer will also help facilitate any on-site meetings for the appropriate parties should either FHWA, SHPO, or the cultural resources consultant believes it necessary.

Cultural Resource Monitoring

When cultural resource monitoring is necessary for a project, the Project Engineer will invite the Cultural Resource Specialist to the preconstruction meetings to review and explain project specific cultural monitoring requirements.

The Project Engineer will coordinate with the Contractor to ensure that notice is provided to the Region Environmental Office seven (7) calendar days prior to the beginning of any ground disturbing activities in any area designated as requiring monitoring.

The Project Engineer will coordinate with the Region Environmental Office to ensure that a monitor will be present on-site prior to the Contractor beginning any ground disturbing activities in any area designated as requiring monitoring.

On any project that has Cultural Resource Monitoring commitments, the Project Engineer will coordinate with the Region Environmental Office to ensure that a monitor is present and the appropriate notifications are made prior to the Contractor beginning any ground disturbing activities in any area designated as requiring monitoring.

Responsibilities Following Unanticipated Discovery of Cultural Resources

Given the wealth of historical and archeological resources found in Washington, the Project Engineer should be familiar with the requirements of the National Historic Preservation Act (NHPA), *Standard Specifications* Section 1-07.16(4), and any contract specifications regarding the discovery of cultural resources. The Project Engineer should discuss these requirements with the Contractor and WSDOT staff at the PreConstruction Conference. These resources include, but are not limited to:

- Human skeletal remains
- Anthropogenic soil horizons (areas showing the influence of humans on nature), occupational surfaces (areas showing evidence of human activity or habitation), midden (refuse heap), etc.
- Areas of charcoal or charcoal-stained soil and stones.
- Stone tools or waste flakes (i.e., arrowheads or stone chips).
- Bones, burned rocks, or other food related materials in association with stone tools or flakes.
- Clusters of tin cans or bottles.
- Logging or agricultural equipment more than 50 years old.

The Project Engineer will include a project-specific unanticipated discovery plan (UDP) in the project provisions for use by the Contractor. A sample of a UDP may be found at www.wsdot.wa.gov/Environment/CulRes/Compliance.htm. The Cultural Resources Office, at the Headquarters Environmental Services Office, will assist with completing the plan.

Discovery of Human Skeletal Remains

The following guidance is given to assist the Project Engineer when construction activities cause disturbance to human skeletal remains. All human skeletal remains, which may be discovered, shall at all times be treated with dignity and respect.

Should any WSDOT employee, contractor, or subcontractor believe that he or she has discovered human skeletal remains; the following steps shall be initiated:

1. Ensure that all work adjacent to the discovery has ceased. The area of work stoppage shall be adequate to provide for the total security and protection of the integrity of the human skeletal remains.
2. The Project Engineer shall:
   a. Notify the Region Construction Manager.
   b. Immediately notify the local coroner and the local sheriff, or other appropriate law enforcement official, requesting that a person who is competent and qualified to identify human skeletal remains be present. Do not call 911 or the media.
      - No persons other than the coroner or proper law enforcement personnel, WSDOT Cultural Resources staff, SHPO (State Historical Preservation Officer), and DAHP (Department of Archeological and Historic Preservation) staff will be authorized direct access to the discovery location. This access must comply with all safety and security procedures.
      - The coroner will make a determination as to whether the human skeletal remains are forensic (evidence of a possible crime) or non-forensic (historical). If the human skeletal remains are determined to be forensic, the coroner will retain control of the human skeletal remains and the discovery site will be treated as a crime scene. If the human skeletal remains are determined to be non-forensic, the coroner will notify DAHP.
      - The DAHP state physical anthropologist will make the initial determination as to whether the human skeletal remains are of Native American ancestry. If the human skeletal remains are determined to be of Native American ancestry, DAHP will notify the affected tribe(s).
   c. Notify the WSDOT Cultural Resource Manager at HQ Environmental Services, who will notify:
      - FHWA Area Engineer or Environmental Program Manager.
      - State Historic Preservation Officer (SHPO).
      - WSDOT Tribal Liaison Office. The WSDOT Tribal Liaison Office will contact the affected tribe(s) and notify them of the unanticipated discovery.
      - Region Environmental Manager.
3. If the human skeletal remains are determine to be of Native American ancestry, tribal access will be allowed to the designated representative(s) of the affected tribe(s). WSDOT and FHWA will make a good faith effort to accommodate requests from affected tribe(s) to be present, prior to implementation of mitigation measures. The Project Engineer, WSDOT Cultural Resources, SHPO, and the affected tribe(s), in consultation, will determine what treatment is appropriate.

If disinterment of Native American remains becomes necessary, FHWA, WSDOT, SHPO, and the affected tribe(s) will jointly determine the final custodian of the human skeletal remains for re-interment.

Discovery of Other Cultural Resources

The following guidance is given to assist the Project Engineer when construction activities cause the disturbance of cultural resources, other than human skeletal remains.

Should any WSDOT employee, contractor, or subcontractor believe that he or she has uncovered a cultural resource, at any point in the project, the following steps should be initiated:

1. Ensure that all work adjacent to the discovery has ceased.
2. Immediately notify the Project Engineer. The Project Engineer shall immediately notify:
   a. The Regional Construction Manager
   b. The WSDOT Cultural Resource Manager at HQ Environmental Services who will notify:
      - FHWA Area Engineer or Environmental Program Manager
      - State Historic Preservation Officer (SHPO)
      - WSDOT Tribal Liaison Office
      - Region Environmental Manager
3. Ensure that the area of work stoppage is adequate to provide total security and protection of the integrity of the resource. Vehicles, equipment and unauthorized personnel will not be permitted to traverse the site, nor will work resume, until treatment of the cultural resource is completed.
4. All archeological deposits discovered during construction are to be treated as if they are eligible for inclusion in the National Register of Historical Places (NRHP). Intentional disturbance of archeological sites without a permit from DAHP is prohibited by RCW 27.53. Disturbance of Indian burials, cairns and glyphs is prohibited by RCW 27.44.
5. If cultural resources are discovered, but additional project effects to the resource are not anticipated, project construction may resume, away from the site of the discovery, while documentation and assessment of the resource proceeds.

SS 1-07.17 Utilities and Similar Facilities

Relationship With Public and Private Utilities

In some cases, utility adjustments will be completed prior to contract work. In other cases, adjustments are to be made concurrently with the work. The Project Engineer and the Contractor should meet with the public utility companies, individuals, and others owning or maintaining utility features within the limits of the highway right of way and confirm the relationship, the terms of the relocation agreements, and the relocation work schedule. Where the feature will require adjustment during

construction, notice should be provided far enough in advance to allow the utility to perform the adjustment without affecting the Contractor's work schedule.

Utilities should have been given prints of the preliminary plans, prior to awarding of the contract, showing grade lines and right of way to enable them to prepare plans and estimates for making the necessary changes to their facilities in as timely a manner as possible. The Project Engineer should determine that plans for the work have been made, that the relocated facilities will be clear of the construction, and that the utilities coordinate with the Contractor's operations to the fullest extent possible.

When utilities are known to exist within the limits of the project and are not planned for relocation but may be affected by the Contractor's construction activities, the Project Engineer and the Contractor should become familiar with the requirements of RCW 19.122, Underground Utilities. The Project Engineer may wish to obtain copies of the RCW for review at Preconstruction Meetings.

The approximate locations of most existing underground utilities are shown on the contract plans. However, the existence of some underground utilities may not have been known or detected during design. If a one number locator service is available, the Contractor must utilize it in an attempt to locate all affected utility features. If no one number locator service is available, notice shall be provided individually to those owners of underground facilities known to have or suspected of having underground facilities within the area of proposed excavation. Even areas covered by a one number service may contain utilities not included in the service. If the Contractor discovers underground facilities which are not identified, the Contractor shall cease excavating in the vicinity of the facility and immediately notify the owner or operator of such facilities, or the one number locator service.

Work Performed Under Utility Agreements

Utility agreement work associated with a contract exists in two categories. The first is work done for a utility by WSDOT that is included in the contract and performed by the WSDOT contractor. The second is work done, either by the utility or the utility's contractor, that is associated with and done near the WSDOT project.

If the utility work is included in the contract, the plans will show the work and will include pay items exactly as if the work was part of the transportation improvement. The responsibility of the Project Engineer is to treat this work the same way that "normal" work is handled. There will be a necessity for communication with the utility itself, inviting comments and joint reviews and inspection of the work. In many cases, the utility will provide materials or equipment to be incorporated into the work. The utility will also provide certification that provided material meets the requirements of the contract. If problems arise and changes are considered, there are additional paperwork demands. The Project Engineer should consult with the Utility and the Region Utility Engineer.

If the work is associated with the project, or if unrelated work is being done nearby, and the utility or its contractor is performing the work, the Project Engineer should treat the neighboring work in the same manner that adjacent WSDOT work would be treated (see *Standard Specifications* Section 1-05.14 and Section SS 1-07.17.)

Responsibility for Coordination of Railroad Agreements

When railroads are involved within the project limits, an agreement covering the work involved is usually entered into between WSDOT and the Railroad Company. Upon identifying that the contract involves work or involvement by a railroad, the Project Engineer should immediately obtain a copy of the Railroad Agreement or contact the Region Utilities Engineer to determine the status of the agreement and to make sure it contains all elements needed to accommodate the construction of the project. If an agreement has not been made with the railroad, the Project Engineer should coordinate and monitor the development and processing of the agreement through the Region Construction and Region Utilities Engineers. Where notices are required, The Project Engineer should ensure that proper notice is provided to the railroad company and that such notice is acknowledged by them. The Project Engineer should work with the Region Construction Manager and Utilities Engineer to resolve any conflicts with the Railroad Company and prevent delays to the Contractor's operations.

Work Performed Under Railroad Agreements

Railroad work associated with a contract exists in three categories. The first is work done for a railroad by WSDOT that is included in the contract and performed by the WSDOT contractor. The second is work done, either by the railroad or the railroad's contractor, that is associated with and done near the WSDOT project. The third category is railroad protective services. Protective services, such as flagging, are typically provided by the railroad.

If the railroad work is included in the contract, the plans will show the work and will include pay items exactly as if the work was part of the transportation improvement. The responsibility of the Project Engineer is to treat this work the same way that "normal" work is handled. There will be a necessity for communication with the railroad itself, inviting comments and joint reviews and inspection of the work. In many cases, the railroad will provide materials or equipment to be incorporated into the work. The railroad will also provide certification that provided material meets the requirements of the contract. If problems arise and changes are considered, there are additional paperwork demands. The Project Engineer should consult with the Railroad Company and the Region Utility Engineer.

If the work is associated with the project, or if unrelated work is being done nearby, and the railroad or its contractor is performing the work, the Project Engineer should treat the neighboring work in the same manner that adjacent WSDOT work would be treated (see *Standard Specifications* Section 1-05.14 and Section SS 1-07.17.)

Protective services may be called for when the Contractor is performing work on railroad facilities (first category above) or when the Contractor's work is conflicting or adjacent to a railroad facility that is not being changed. Typically, the railroad will determine the need for service, provide the protective services, and send the bill to WSDOT. There may be an agreement in place, or the railroad's actions may be unilateral. On all projects including railroad flagging, the Project Engineer will notify the Railroad Company when all work involving the railroad is physically complete.

The addition or revision of agreements with the railroad can be lengthy processes. The Project Engineer should stay alert for possible changes and the need for revisions to the agreement. When these arise, the Railroad Company and the Region Utility Engineer should be contacted early and often.

Railroad Flagging

All dollar amounts actually incurred by the Railroad Company for railroad flagging, under the terms of the typical railroad agreement, will be paid by WSDOT. The Contractor will incur no costs for railroad flagging unless the flagging is for the Contractor's benefit and convenience. In this case, the Project Engineer will deduct this cost on monthly progress estimates as a below the line item in the Contract Administration and Payment System.

SS 1-07.18 Public Liability and Property Damage Insurance

Projects which include work on railroad right of way generally require special insurance protection. Pay particular attention to the Contract Special Provisions for project requirements because they vary from project to project. It is the responsibility of the Project Engineer to enforce the provisions. The required insurance documents are to be furnished by the Contractor (usually through the Project Engineer) to the State Accounting Services Office who will (a) review the documents and (b) obtain approval of the insuring documents from the railroad company. Written notification of approval by the railroad company will be furnished to the Project Engineer by the State Accounting Services Office as soon as approval is obtained.

No work shall be started on railroad property until the necessary approvals have been obtained. The railroad insurance must be maintained until the date of physical completion of the project unless otherwise stated. However, the Contractor may make a written request to be relieved of the responsibility to continue all or part of the railroad protective liability insurance before the completion date under certain conditions. The details and conditions for this relief are specifically set forth in the special provisions of the contract. If the Contractor should make a request for relief, the Project Engineer should contact the Region Construction Manager and Utilities Engineer for guidance and assistance in coordinating this effort with the railroad.

SS 1-07.23 Public Convenience and Safety

SS 1-07.23(1) Construction Under Traffic

General

Under the many special conditions encountered where traffic must be moved through or around construction operations, serious problems of traffic control can occur. Most conditions are temporary and are, therefore, dangerous and difficult to deal with because they are unexpected and not in accordance with the normal pattern of highway traffic. *Standard Specifications* Section 1-07.23(1) requires the Contractor to conduct all operations with the least possible obstruction and inconvenience to the public and to provide adequate safeguards, safety devices, protective equipment, and any other needed actions to protect the life, health, safety, and property of the public. The responsibility to comply with these requirements is the Contractor's. It is the Project Engineer's responsibility to ensure that the Contractor complies.

Work Zone Clear Zone (WZCZ)

When a project requires traffic control, a Work Zone Clear Zone (WZCZ) shall be established and will apply during both working and non-working hours. During non-working hours no equipment or materials shall be within the WZCZ, unless it is protected by permanent guardrail or temporary concrete barrier (location and installation to be approved by the Project Engineer). During working hours, unless protected as stated for non-working hours, only materials or equipment absolutely necessary to construction shall be allowed in the WZCZ or allowed to park on the shoulder of the roadway.

The minimum clear zone distance, measured from the edge of traveled way, shall be based on the posted speed as follows:

Posted Speed	Distance From Traveled Way
35 mph or less	10 ft
40 mph	15 ft
45 to 55 mph	20 ft
60 mph or greater	30 ft

Any deviation from these requirements shall only be allowed if the Contractor has requested the deviation in writing and the Engineer has provided written approval. The Region Traffic Office should be contacted to help evaluate the deviation and determine if the requested deviation is approvable.

Speed Reductions

If speed reductions are considered, the Project Engineer shall follow Executive Order E 1060 and the guidance found in *Traffic Manual* M 51-02 Chapter 5, Appendix 5B.

Temporary Breaks in Limited Access for Construction

The Federal Highway Administration (FHWA) cannot delegate its approval authority to add access points to existing limited access controlled Interstate facilities through the WSDOT-FHWA Stewardship Agreement. The FHWA has granted approval to break limited access in order to gain access to the worksite from adjacent properties. This approval was granted through the FHWA approval of *Standard Specifications* Section 1-07.16. This approval does not extend to allowing the contractor to use this access to merge construction vehicles and equipment with public traffic in the traveled way, auxiliary lanes, or shoulders. It is therefore necessary to seek approval from the FHWA when proposing to break limited access and merge construction vehicles with public traffic in the traveled way, auxiliary lanes, or shoulders.

Standard Specifications Section 1-07.16 allows the contractor to access the worksite from adjacent properties but does not allow the contractor to merge construction vehicles or equipment (including contractor workforce vehicles of any type) from that access with public traffic. *Standard Specifications* Section 1-07.23 allows the Interstate highway system to be accessed through existing facilities or through access points allowed within the contract only. These access points allowed in the contract will either be in the form of site specific traffic control plans or by contract provisions included in the contract documents.

If the contractor proposes to merge construction vehicles with public traffic in the traveled way, auxiliary lanes or shoulders and the contract contains the General Special Provision (GSP) that allows this access, then the contractor shall submit a site-specific plan for traffic control in accordance with the MUTCD Part VI. The Region Traffic Engineer should review this plan and it should be submitted to FHWA.

During construction on Interstate projects the Project Engineer will notify the appropriate Assistant State Construction Engineer (ASCE) who will forward the information to the FHWA Area Engineer and the WSDOT Access Manager by sending them a copy of the approved vicinity map showing the location of the access break and site-specific traffic control plan. FHWA approval of a PS&E containing this GSP constitutes approval of access from adjacent properties to the traveled way, auxiliary lanes or shoulders. Consultation with Region and Headquarters Design offices and approval by FHWA must occur prior to deciding to include this GSP in a contract on Interstate facilities.

While some contracts may not contain provisions for breaking limited access for construction and for merging of construction vehicles with mainline and/or interchange ramp traffic, the contractor may request one. If the Region agrees and the project is on limited access controlled Interstate, the Project Engineer shall contact the appropriate ASCE who will forward the request to the FHWA Area Engineer for approval. The ASCE will cc the Access Manager when forwarding the request to FHWA. The contractor shall submit a vicinity map showing the location of the access break, a site-specific plan for traffic control in accordance with the MUTCD Part VI, and the duration for which the accesses will be in operation. On non-interstate limited access controlled facilities, approval will be required by the Region. If approval is granted and the facility is a limited access facility, the GSP will be added to the contract by change order. On managed access roadways the Project Engineer, with Region concurrence, has approval authority to grant the contractor temporary access, in accordance with the *Standard Specifications*.

Public Information and Customer Focus

Most drivers still have the expectation of proceeding to their destination with little or no delay even though traffic conditions on many of our highways are deteriorating, primarily due to increased traffic volume. This increased volume may create congestion, delays, accidents, and aggressive driving during normal daily operation. Highway construction will usually require a more restricted roadway to accommodate work zones and can further reduce traffic mobility and safety. Even some of our lower volume rural highways can present a challenge due to factors such as drivers not expecting construction work and seasonal/recreational traffic increases. Construction and user delays present significant costs in addition to costs associated with crashes and worker safety. These delays and costs can be minimized by implementing a traffic control strategy based on traffic conditions and construction requirements, and which includes public information and customer focus considerations.

Our goal on every highway construction project should be to provide the best overall balance of work zone safety and traffic mobility while constructing quality highway projects. Much of our effort is directed at engineering responses to safety and mobility issues and is generally included in the contract requirements. Recent customer focused highway construction studies have shown that accurate and timely project information

is a valuable element in an overall traffic control strategy. Advance planning and coordination between the project engineer and contractor is necessary to ensure that there is an opportunity to provide public information for all phases of the project that impact traffic. Proper use of public information and customer focused techniques will provide safety and mobility benefits that would not otherwise be gained, as listed below:

- Alert drivers to potential delays by advance notice through project signing and the news media that would allow drivers to take alternate routes, adjust scheduled trips and have better awareness of traffic impacts and how to avoid them.
- Provide benefits to the Contractor from reduced traffic volume and better driver awareness through fewer crashes, less material delivery delay, better worker safety, fewer complaints and overall public acceptance of the project.
- Achieve better driver acceptance, reduced aggressive driving and improved work zone credibility by minimizing delays and providing accurate and timely information.
- Consider innovative construction techniques and shorter term intense work stages with more severe traffic restrictions, such as weekend closures, if possible.
- Closely monitor traffic conditions when traffic is restricted to determine the need for any traffic control or work hour adjustments that would improve traffic flow. Specified working hours and the accompanying traffic restrictions are critical elements of the project traffic control strategy and should not be adjusted without proper traffic analysis.
- Maintain ongoing communication during the life of the project with local law enforcement, emergency services, local agencies, transit groups, affected local businesses, etc.
- Continue use of innovative devices such as portable, changeable message signs, project information signs with information phone number and highway advisory radio systems.

The Regional Construction Manager, Traffic Engineer, and Public Information Officer should be involved in the project traffic control strategy and may be able to offer assistance.

Road/Ramp Closures and Use Restrictions

When it is necessary to close a road, street, or ramp, the Project Engineer shall submit a request that includes the appropriate closure/detour plan to the Region Traffic Engineer in advance of the need. Per RCW 47.48.010, the Regional Administrator may close a road, street, or ramp.

With proper planning and implementation, road/ramp closures can be an effective and safe method of traffic control. As required by RCW, notice of the closure shall be published in one issue of a newspaper in the area in which the closure is to take place. Signs indicating dates and times of the closure shall be placed at each end of the section to be closed on or before publishing the notice in the newspaper. Publishing the notice and placing of the signs shall be a minimum of three days in advance of the closure. Advance notice using local radio, portable changeable message signs or HAR may be effective in diverting traffic from the closed or impacted locations.

Coordinate with the Region Public Information Officer for assistance with public notification.

In cases of emergency, or closures of 12 hours or less, the road, street, or ramp may be closed without prior notice to the public. If possible, a notice should be posted one working day in advance of the closure.

When planning to close or restrict use for more than 12 hours on one or both directions of mainline on Interstate systems, system to system ramps or Federal-aid Primary Routes, FHWA must be notified as shown in the table below. Use restrictions are defined as any limitation on the vehicle type, load or function of the facility. These notification requirements apply even to projects with onsite or offsite detours in place. Federal-aid Primary Routes are US routes 2, 12, 97, 101, 395 and State Routes 16, 18, 99, 167, 520, 522. FHWA notification shall be made to the following email address: washington.fhwa@dot.gov

WORK ACTIVITY	WSDOT ACTION
Interstate closures or use restrictions of 7 or more consecutive days	Send notification to FHWA 60 days in advance of potential closure and provide updates as available
Federal-aid Primary Routes closures or use restrictions of 7 or more consecutive days	Send notification to FHWA 14 days in advance and provide updates as available
Interstate closures or use restrictions between 48 hours and 7 consecutive days	Send notification to FHWA 14 days in advance and provide updates as available
Interstate closures or use restrictions between 12 hours and 48 consecutive hours	Send notification to FHWA 7 days in advance and provide updates as available

Pedestrian Safety

When the work area encroaches upon a sidewalk, crosswalk, or other areas that are near an area utilized by pedestrians or bicyclists, special consideration should be given to their accommodation and safety. Pedestrians are more susceptible to personal injury in work areas than are motorists. Visibility and recognition of hazards is an important requirement for the safety of pedestrians and bicyclists.

Protective barricades, fencing, handrails, and bridges, together with warning and guidance devices, should be used so that pathways for pedestrians, bicyclists, equestrians, and other non-motorists are safe and well defined. Where walks are closed by construction or maintenance, an alternate walkway should be provided where feasible. Where it is necessary to divert pedestrians into the parking lane of a street, barricades and delineation should be provided to separate the pedestrian walkway from the adjacent traffic lane. Pedestrians should not be diverted into a portion of the street used by vehicular traffic. At locations where adjacent alternate walkways cannot be provided, pedestrians can be diverted across the street by placing appropriate signs at the construction limits and at the nearest crosswalk or intersection. When hazardous work conditions exist overhead, it may be necessary to install a fixed pedestrian walkway of the fence or canopy type to protect and control pedestrians. In such cases, wood and chain link fencing can be used with warning lights and illumination to warn and guide both pedestrians and motorists. These accommodations for pedestrians and bicycles should be included in Traffic Control Plans.

Fences around a construction area are often necessary and may be a requirement of the local jurisdiction building code. They are often constructed in conjunction with a special pedestrian walkway or when there are deep excavations or when pedestrian access to the job site is not desirable. Installation of such fencing must take into account relocation of existing control devices and facilities such as traffic signals, pedestrian signals, traffic signs, and parking meters. The use of chain link fencing which can be seen through may be needed at intersections to provide adequate sight distance.

Relocating a walkway without unreasonable inconvenience to pedestrians, residents, or commercial interest, is the safest practice of all. Remember, however, that pedestrians like to "see what's going on." Simply denying them access does not, of itself, prevent their encroachment onto the worksite. Sometimes it is advisable to design and construct a pedestrian observation area for this purpose.

SS 1-07.23(2) Construction and Maintenance of Detours

Construction zone detours will normally be detailed in the plans. When detours not shown in the plans are required, the design will likely be done by the construction office under the direction of the Project Engineer and requirements of the MUTCD. If the detour is a full-fledged roadway, design and traffic reviewers should check the design. Short-term minor detours may be installed and operated without formal review, but the Project Engineer must be satisfied that the facility is suitable and safe for traffic use.

Existing pavement markings on asphalt pavement shall never be merely blacked out with oil or paint; this is not allowed by the MUTCD. Rather, the striped and adjacent areas should be hydroblasted, or ground in a pattern different from the original marking until the marking is no longer visible. This change in pattern minimizes the possibility that the original marking will still be visible to drivers, especially at night or in rainy weather when covered-over stripes have a tendency to shine in contrast to the pavement. Temporary pavement marking tape, either for temporary lane marking or masking of existing markings may offer another option and approved removable tapes are listed on the QPL. Existing conflicting markings should never be allowed to remain in place. When markings remains from an alignment shift or the marking goes under a device (like barrier), the existing marking must be removed in order to eliminate confusion to the motorist.

Temporary concrete barrier should be part of the plan design for positive protection of the work area. Barrier is not to be used as primary delineation to guide traffic. A combination of pavement markings and temporary channelization devices are to be used along with the barrier. Temporary barrier delineators must be maintained, and kept clean. When delineators become covered with grime or are damaged, they become ineffective. The condition and positioning of these devices should be checked daily.

1-08 Prosecution and Progress

SS 1-08.1 Subcontracting

Requests by the Contractor to sublet work are submitted to the Project Engineer on a Request to Sublet Work DOT Form 421-012 and are to be approved by the Regional construction manager or designee. The request will not be approved if the contractor is debarred from bidding on or performing work on a public works contract (search Debarred Contractors on the Labor & Industries webpage). The request must be reviewed in order to ensure that the proposed subcontractor meets the requirements of WAC 296.127.10.

On Federal-aid projects, the request may indicate that the subcontractor is a Disadvantaged Business Enterprise (DBE), a Federal Small Business (designated on DOT Form 421-012 and in CCIS as FBE), Minority Business Enterprise (MBE), or a Women Owned Business Enterprise (WBE). Upon receipt of the request, the project office should verify that the subcontractor is indeed certified by the Office of Minority and Women Business Enterprises (OMWBE) using the links at: www.wsdot.wa.gov/equalopportunity/bddirectory.html.

On projects funded wholly by the State, the request may indicate that the subcontractor is a Minority Business Enterprise (MBE), Small Business (designated on DOT Form 421-012 and in CCIS as SBE), Veteran Business (VBE) or a Women Business Enterprise (WBE). Upon receipt of the request, the project office should verify that the subcontractor is certified by using the links at: www.wsdot.wa.gov/equalopportunity/bddirectory.html.

Once the request has been verified and approved, this information should be entered into CCIS to enable tracking and reporting. DOT Form 421-012 allows the Contractor to indicate more than one type of certification for subcontractors, however only one type may be entered into CCIS.

The request must be approved by signature prior to the performance of any work on the project by either the subcontractor or a lower-tier sub. A copy of the Statement of Intent to Pay Prevailing Wages (SOI), executed by the subcontractor or lower-tier sub and approved by Washington State L&I, must be provided to the Project Engineer by the Contractor prior to payment for any work performed by that subcontractor or lower-tier sub. An SOI will be required for each subcontract or lower-tier subcontract executed on the project, even if the subcontractor has already submitted an SOI for work under another subcontract. In addition, for Federal-aid projects, a Contractor and Subcontractor or Lower-Tier Subcontractor Certification for Federal-Aid Projects DOT Form 420-004 must be submitted with the Request to Sublet.

Standard Specifications Section 1-08.1 defines what is not considered to be subcontracting. By default, any entity performing bid item work on the project is a subcontractor, unless: (1) they are the Prime Contractor, (2) an Owner furnished resource (such as WSP, utility owner or its contractor or consultant), or (3) they are specifically excluded from consideration as a subcontractor in *Standard Specifications* Section 1-08.1. Do not be confused by the distinction between Professional Services and Subcontractors in the markups for force account work described in *Standard Specifications* Section 1-09.6. Those provisions apply only to how the markup for

overhead and profit is applied to force account work, and they have no relationship to the requirement for a Request to Sublet.

If a subcontractor wishes to further sublet a portion of its work to a lower-tier firm, the Contractor must submit the name of the lower-tier firm along with the request to sublet the work to the subcontractor. If more than one subcontractor on a project wants to utilize the same firm as a lower-tier subcontractor, separate requests are required. *Standard Specifications* Section 1-08.1 sets limitations on the amount of work a lower-tier sub may perform for each subcontractor. *Standard Specifications* Section 1-08.1 also sets forth the procedure for subletting portions of the project, and the percentage of the contract which may be sublet. The dollar value to be used for determining the amount of work that must be performed by the Prime Contractor is the total original contract amount less the amount of any specialty items which have been subcontracted. In order to ensure proper tracking and reporting of sublet information, the Project Office shall enter data from each request to sublet into the CCIS database. When the Project Office is in a situation where the CCIS database is not utilized during the administration of a project (i.e., Emergency Contracts, State Aid Contracts), and requires the "hand calculation" of the percentage of amount sublet, the percentage will be calculated for all items except specialty items, using the amount shown on the Request to Sublet or the bid amount whichever is smaller.

A contractor withholding payment from a subcontractor must notify the subcontractor and the Contracting Agency identifying the reason for the withholding and providing remedy for the release of payment. The Contractor is also required to submit a Monthly Payment Summary as described in section 1-08.1. Upon receipt of the Summary the Project Engineer should ensure that if any payments are withheld a copy of the notice provided to the subcontractor is attached, containing a clear description of the required remedy for release of payment is included. If the issue is not resolved prior to the next progress estimate, the Project Engineer should withhold from payment the same amounts as were withheld from the subcontractor.

When Condition of Award items are sublet, ensure that the total amount is equal to or greater than the amount in the Condition of Award letter and that the Condition of Award items will be sublet to the proper Condition of Award subcontractor. If a bid item shown on the Condition of Award letter is not sublet to the proper D/M/WBE, then the request cannot be approved until the contract is changed.

Owner-Operators of Trucks and Other Hauling Equipment

Bona fide owner-operators of trucks and similar construction hauling equipment, who are ***independent contractors*** performing bid item Work, are considered to be subcontractors and shall adhere to all requirements of *Standard Specifications* Section 1-08.1 and FHWA-1273.

WSDOT has received requests from Prime Contractors to use a sub-contracted owner-operator to "broker" or "rustle-up" other owner-operators to perform contract Work. From a business standpoint, this may be practical. However, in order to comply with 23 CFR 633, 23 CFR 635.116 and *Standard Specifications* Section 1-08.1, a Prime Contractor or a subcontractor shall perform a defined percentage of the Work with their own organization.

A "broker" is identified as "one who acts as an intermediary in a sale or other business transaction between two parties." An approved subcontracted owner-operator may act as a "broker" and can certainly "rustle-up" additional owner-operators to perform portions of the Work, however, those other owner-operators can only be one of three entities: (1) a lower tiered subcontractor to the original sub-contracted owner-operator, (2) another subcontractor to the Prime Contractor, or (3) an employee to the Prime or the original owner-operator subcontractor. All required contractual obligations would be the same depending upon the relationship. A true "broker" may not own tools and equipment and therefore would not be considered a subcontractor since they would not be performing any portion of the Work other than the required documentation.

Individual owner-operators operating leased trucks can be considered owner-operators if they provide evidence, satisfactory to the Project Engineer, that they have a bona fide lease agreement. If the vehicle is being leased, ask to see the lease agreement. Existence of a bona fide lease agreement depends on evidence that the individual claiming to be an owner-operator is independently established in his/her own trucking business and that he/she bears ultimate responsibility for operation of the unit and is wholly responsible for cost items such as:

- Maintenance
- Insurance (Comprehensive, collision, liability, etc.)
- Permits, base plates, licenses and taxes
- Fuel
- Oil
- Major and minor repairs
- Ferry charges and tolls
- Other Driver's remuneration

It also must be demonstrated that there is no close or continued supervision of the operation of the truck by the company leasing the truck. This means that the owner-operator may not work on a project upon which the lessor is a Prime or subcontractor.

SS 1-08.1(1) Prompt Payment, Subcontract Completion and Return of Retainage Withheld

The Project Engineer will ensure that the Contractor and all subcontractors make payment to all subcontractors in accordance with the requirements of RCW 39.04.250.

Each payment period the Contractor will submit a completed copy of "Subcontractor Monthly Payment Summary" to the Project Engineer. This form (supplied by the Project Office) shall list:

- Each subcontractor;
- Payment Date;
- Whether Payment was withheld;
- Withheld Amount;
- Payment Amount;
- Whether the Work is completed; and
- If retainage was released.

The Project Engineer shall also ensure that if a contractor withholds payment from a subcontractor they follow the procedures a described in Section 1-08.1(1).

If the withholding is not resolved prior to the next progress estimate payment to the Contractor, the Project Engineer will withhold an amount equal to the amount withheld from the subcontractor from the next progress estimate payment to the Contractor.

SS 1-08.3 Progress Schedules

SS 1-08.3(1) General Requirements

The requirements for progress schedules are specified in *Standard Specifications* Section 1-08.3. A copy of the specified reference, *Construction Planning and Scheduling, Second Edition*, published by the Associated General Contractors of America, has been sent to each Project Office and each Region Construction Office. One of three progress schedules will be specified in the contract. Two types of progress schedules are identified in the *Standard Specifications*, Type A and Type B. A third type may be inserted in the contract as a General Special Provision specifying a Type C Progress Schedule. The three types of progress schedules represent levels of job complexity. Type A being the simplest and easiest to produce and Type C being the most complex. Application is such that the complexity of the project (whether it be timing, coordination or the work itself) will be reflected in the complexity of the schedule.

In addition, a preliminary schedule is required on contracts requiring Type B or C Progress Schedules. Preliminary progress schedules show the work to be accomplished within the first 60 working days. As always the contract provisions may contain requirements that add to, or supersede, all or parts of *Standard Specifications* Section 1-08.3 to allow for special circumstances.

There are four basic reasons that we ask for a schedule:

- To better understand the contractor's plan to deliver the project within the time allowed.
- To plan our work force and other resource requirements.
- To advise the public and executive staff of major milestones.
- And to enable us to actively manage impacts to the contract.

Progress schedules should have sufficient detail such that the progress of the work can be evaluated accurately at any time during the performance of the contract. The owner is obligated by contract to return the schedule for correction or approve it within 15 calendar days of receipt. Approval requires that the schedule complies not only with *Standard Specifications* Section 1-08.3 but it demonstrates compliance with other contract requirements such as interim completions, staged work, order of work, etc. Periodically as warranted by progress, delays, or changes, the Project Engineer should review the schedule for accuracy and progress of work. If it is determined that the current schedule does not provide the required information or is no longer accurate, a Type B supplemental schedule update may be requested from the Contractor. Monthly updates are required when Type C progress schedules are specified, and the cost of the updates is included in the Lump Sum price of the bid item.

The cost of Type B schedule updates is not included in the Lump Sum price of the bid item. When work is added to the project or the work method is changed at the request of the contracting agency, the respective cost to update the Type B progress schedule should be included in the change order. Type B schedule updates driven by the contractor's actions shall be provided to the contracting agency and are considered incidental to other work. No payment is made for Type a Progress Schedules or Type a schedule updates. Type B and C Progress Schedules are paid as a lump sum. Eighty percent of the lump sum payment is paid upon approval of the initial schedule. The remaining portion is paid when eighty percent of the original work is completed, provided updates have been provided as requested. Weekly look-ahead schedules are considered incidental to other items of work in the contract and therefore are not paid for separately.

When the Contractor has failed to provide a required schedule, the Engineer may:

- Withhold payment for the Type B or Type C schedule if it is not received (but not for other conforming work).
- Withhold all progress payments for failure to comply with the terms of the contract as specified in *Standard Specifications* Section 1-09.9 (this should be a rare event).
- Suspend work and continue to charge each day as workable (this should only be implemented when the Agency is harmed by lack of knowledge of the contractor's intended approach to the work).

In extreme cases, the Agency may determine that the Contractor is in breach of contract according to *Standard Specifications* Section 1-08.10 (usually accompanied by other serious breaches).

When lacking a progress schedule, the Engineer must base progress on the information available and their best judgment. According to *Standard Specifications* Section 1-08.5, the Contractor may protest working day charges, but must support the protest in sufficient detail to enable the Engineer to ascertain the basis and amount of time disputed. This provides another opportunity for the PE to communicate our need for a progress schedule.

Review and Approval of Progress Schedules

It is the responsibility of the Project Engineer to insure that the Contractor submits a correct and complete progress schedule in the time specified. Progress schedules must meet the general as well as type specific criteria. Once it is determined that the progress schedule submitted is of the type specified by the contract, the Project Engineer should evaluate the schedule to determine if it meets the requirements of *Standard Specifications* Section 1-08, the Special Provisions and the Contract.

- The progress schedule must include all activities necessary to physically complete the project. By definition, activities consume time and usually consume resources. Activities like concrete curing time and slope staking earthwork may be rolled-up into the overall duration of the activity.
- The progress schedule must show the planned order of work in logical sequence, and in compliance with any requirements of the contract. The reviewer should remember that some work is sequenced by factors inherent in the work, but the Contractor may sequence the work by their preference as long as the project is completed within the authorized time and in conformance to the contract.

- The progress schedule must show durations of work activities in working days. Except for defining nonworking days, the calendar has no relationship to administering contract time. An activity may be stalled by unsuitable weather for days or weeks and remain "on schedule."
- The progress schedule must show activities in durations that are reasonable for the intended work. Since durations of work are a function of resource allocation, the Project Engineer may be required to estimate production rates using estimating manuals, experience or other resources, or to ask the Contractor to explain their planned resource allocation to support the duration.
- The progress schedule must define activities in sufficient detail that progress of individual activities may be evaluated on a daily basis. The reviewer should keep in mind that the level of detail required in a progress schedule is driven by the amount of precision required to perform and monitor the work. For example a single activity that represents several miles of grading may not provide adequate detail, and may need to be subdivided into smaller activities described by station limits.
- The progress schedule must show the physical completion of all contract work within the authorized contract time.

WSDOT may accept a Progress Schedule indicating an early physical completion date but cannot guarantee that WSDOT's resources will be available to meet an accelerated schedule.

If the progress schedule does not provide the required information, it should be returned to the Contractor for correction and resubmittal. Because the *Standard Specifications* do not specify timelines for resubmittal, the Engineer should provide a reasonable amount of time for the Contractor to revise and resubmit the schedule, and advise the Contractor of the expected date of resubmittal.

SS 1-08.3(2) Progress Schedule Types

Type C Progress Schedule

Type C Progress Schedules are required for all projects that include the bid item for Type C Progress Schedule. The Contractor is required five copies of a preliminary Type C Progress Schedule to the Engineer no later than the first working day (as defined in *Standard Specifications* Section 1-08.5). The preliminary schedule must meet all requirements of a Type C Progress Schedule and of *Standard Specifications* Section 1-08.3(1) except that it may be limited to activities occurring within the first 60 working days.

The Contractor is required to submit five printed copies of a Type C Progress Schedule no later than 60 calendar days after the contract is executed. If the Contractor can demonstrate that they are unable to determine resource availability, and that this lack of information prevents them from preparing a reasonable schedule, the Engineer may allow an additional 30 calendar day for schedule submittal.

Each time that a preliminary schedule, Progress Schedule, or Schedule Update is submitted, the Contractor is required to provide the Engineer with an electronic copy of that schedule, on CD-ROM in Primavera Project Planner Enterprise Version, P3e/c or P3 format.

Type C Progress Schedules must contain all of the information required of a Type B schedule, and the following additional information:

- A timed scale logic diagram.
- Activities for traffic detours and closures.
- Milestones for required delivery of State furnished materials (if any)
- Activities for State furnished traffic controller resources (if any).
- Activities for fabrication of materials with longer than 120 calendar days lead time.
- Fixed constraints shall be identified on the activity listing and be supplemented with a written narrative describing why the constraint exists.
- Monthly schedule updates.

If requested by the Engineer, the Contractor shall provide a written narrative describing assumed production rates and planned resource allocation to support activity durations.

SS 1-08.3(2)A Type A Progress Schedule

Type A Progress Schedules are required for any projects that do not include the bid item for Type B Progress Schedule or Type C Progress Schedule. The Contractor is required to submit five copies of Type A Progress Schedules to the Engineer no later than the first working day of the project. This may be a critical path method (CPM) schedule, a bar chart, or other standard schedule format, such as fenced bar charts, linear schedules, PERT networks and others. These scheduling methods are described in detail in the benchmark document "Construction Planning and Scheduling, Second Edition," a copy of which has been provided to each Project Office and each Region Construction Office. The Contractor is required to identify the critical path of the project, because a bar chart schedule does not rely on network calculations to determine the critical path.

The Engineer will evaluate this schedule and approve or return it for correction within 15 calendar days of receiving the submittal.

SS 1-08.3(2)B Type B Progress Schedule

Type B Progress Schedules are required for all projects containing the bid item for Type B Progress Schedule.

The Contractor is required to submit a preliminary schedule to the Engineer no later than five calendar days after the date the contract is executed. Preliminary schedules must meet all requirements of a Type B Progress Schedule except that they may be limited to activities occurring in the first 60 days of the project.

The Contractor is required to submit five copies of the Type B Progress Schedule to the Engineer no later than 30 calendar days from the date that the contract is executed. This schedule must be a critical path method (CPM) schedule developed by the Precedence Diagramming Method and may employ restrains provided the restraints do not alter the network logic or critical path. As a minimum the Type B Progress Schedule must show:

- The Contract Number and Title
- Construction Start Date
- Critical Path

- Activity Description
- Milestone Description
- Activity Duration
- Predecessor Activities
- Successors Activities
- Early Start and Early Finish for each activity
- Late Start and Late Finish for each activity
- Total Float and Free Float for each activity
- Physical Completion Date
- Data Date

(Many of these terms are defined in "Construction Planning and Scheduling.)

The reviewer should watch for fixed date constraints that override network logic and force activities to become critical. Specific work windows or "open to traffic" milestones may legitimately influence sequence and duration of related activities. Resource constraints (such as availability of a large crane) may be preferential and may be explained by the Contractor if necessary. Fixed completion milestones for work that is susceptible to unsuitable weather are inappropriate because completion may be extended by the determination of unworkable days.

It is not unusual to see dual critical paths on a CPM schedule, nor is it prohibited. Multiple critical paths are generally very short in duration. Lengthy occurrences of parallel critical activities should be cause for careful scrutiny of activity durations and sequencing.

The Engineer will evaluate this schedule to insure that all required information is included in the schedule, check the network calculations, and approve or return it for correction within 15 calendar days of receiving the submittal.

SS 1-08.3(2)D Weekly Look-Ahead Schedule

Weekly Look-Ahead Schedules are required for all projects. The Contractor is required to submit a Weekly Look-Ahead Schedule, for each week that work is to be performed on the project, showing Contractor and all subcontractor activities for the next two weeks. The Weekly Look-Ahead Schedule must show:

- Description of the work.
- Duration of the work.
- Sequence of the work.
- Planned hours of work.

The specification requires that Look-Ahead Schedules show the contractor's planned hours of work. This information is necessary to evaluate the results of unsuitable weather on the critical path and to assess working days charges correctly.

This schedule is to be submitted by mid-week of the week preceding the scheduled work, or other mutually agreed upon submittal time.

SS 1-08.3(3) Schedule Updates

Schedule Updates are required for all projects. The Engineer may request schedule updates when any of the following events occur:

- A change that affects the critical path.
- The sequence of work is changed from that in the approved schedule.
- The project is significantly delayed (10 days or 10 percent of the original contract time, whichever is greater).
- An extension of contract time is requested.

It is important to note that schedule updates are only required when they are requested by the Project Engineer, when a contractor submits a request for a time extension, or monthly in the case of a Type C Progress Schedule. The Project Engineer may request an update when any of the triggers occurs, but may choose to forego the update if the impacts to the schedule are readily evident.

The Contractor is required to submit five copies of the Schedule Update for approval within 15 calendar days of a written request, or when an update is required by contract provisions.

In addition to all other requirements, a Schedule Update must show:

- Actual duration and sequence of as-constructed work activities, including changed work.
- Approved time extensions.
- Construction delays or other conditions that affect the progress of work.
- Modifications to sequence or duration of remaining work.
- Physical completion of all remaining work within the remaining time authorized.

It is important to know the difference between an as-planned schedule and an as-constructed schedule. All updates must show the as-constructed sequence and actual durations of all activities prior to the status date.

When the need for a schedule update is triggered by an event that is the contractor's doing, they are responsible for the cost. When WSDOT causes an event or requests an update for their need, payment will be made as part of an equitable adjustment. When WSDOT is adding work or time by means of a change order, the price of the schedule update can be included as part of the work.

Any unresolved request for time extension must be shown by assuming that no time extension will be granted, and by showing the effects to follow-on activities necessary to physically complete the project within the currently authorized time for completion.

SS 1-08.4 Prosecution of Work

The first working day will be established in accordance with *Standard Specifications* Section 1-08.4 or such other date as prescribed by the contract provisions. *Standard Specifications* Section 1-08.4 indicates that time may start at a time different from that specified if "otherwise approved in writing." Such other approval is intended only for very unusual circumstances, usually associated with mis-handling of contract documents. It will only be granted in consultation with the State Construction Office. Time associated with each phase of work established in the contract is to be shown on

the Weekly Statement of Working Days. The Project Engineer is to furnish a weekly statement advising the Contractor of the current status of working day charges against the contract. Weekly Statements are generated by the CCIS computer system. This statement is to be issued in accordance with *Standard Specifications* Section 1-08.5. The purpose of this statement is to advise the Contractor about the Project Engineer's decision for each passing day. The questions to be answered when determining if a day is chargeable are; is it a nonworking day (holiday or a day the contract does not allow critical work to advance)? was it a chargeable working day (critical work progressed uninhibited)? or was it an unworkable day (critical work delayed by weather or conditions caused by the weather)? in evaluating each day, the Project Engineer should take into consideration the following conditions:

1. The effect of inclement weather on critical activities.
2. The effect of conditions caused by inclement weather on critical activities.
3. Critical work restrictions imposed by the contract or the Project Engineer.

If any of the above conditions prevent work or reduce the Contractor's efficiency on critical activities on the project, working day charges shall be adjusted accordingly. If the Contractor is able to continue work on critical activities but the efficiency is significantly reduced, a half day may be charged. When determining unworkable days the Project Engineer shall take into consideration the prolonged effects of weather events. If the contractor is required to divert resources from working on critical path activities due to the lasting effects of a weather event the Project Engineer may determine a half day, the whole day or several days as unworkable.

If the contract does not specifically define a working day, a working day will be considered a 24 hour period. The contractor establishes the hours of work in the Weekly-Look Ahead Schedule and the start of the day should be by mutual agreement. The contractor shall be charged for one day during the defined 24 hour period regardless of how many shifts are worked.

SS 1-08.5 Time For Completion

General

Standard Specifications Section 1-08.5 grants the Contractor the right to protest working day determinations and working day charges determined by the Engineer. In the event the Contractor submits the required written protest within 10 calendar days following the date of the statement, the Project Engineer will analyze the information provided, and respond to the Contractor by either denying the protest or revising the Weekly Statement of Working Days.

The Project Engineer will complete Weekly Statements of Working Days throughout the course of the project, showing workable , nonworking and unworkable days as they occur. These statements will continue to be completed until the project has reached Substantial Completion and the Working Days assigned to the contract have been exhausted. Following are the three possible scenarios:

- The working days are exhausted prior to reaching Substantial Completion. Weekly Statements of Working Days continue until Substantial Completion.

- The working days are exhausted on the day Substantial Completion is achieved. Weekly Statements of Working Days cease upon Substantial Completion.
- The working days are not exhausted upon reaching Substantial Completion. Weekly Statements of Working Days continue until the working days are exhausted or until physical completion.

Upon Substantial Completion the Project Engineer will ensure that the date is entered into CCIS and is noted in the remaining Weekly Statements of Working Days. After Weekly Statements have stopped, comments concerning weather and other events beyond the Contractor's control should be entered into the project diary. The effect of these conditions on remaining work and on the scheduled completion should also be noted.

If contract time is expressed in calendar days, then *Standard Specifications* Section 1-08.5 becomes difficult to interpret and the contract special provisions will provide guidance for the charging of contract time.

The contract duration specified for physically completing the contract is stated in the contract provisions normally under the general special provision "Time For Completion." Although there are exceptions, the guidance in this chapter pertains to contracts in which time is accounted for in terms of working days.

The Contractor may begin work as soon as the contract is executed and shall prosecute the work diligently until physical completion has been reached.

The Region will be notified by telephone on the day the contract is executed by WSDOT. Because it can take several days for the executed contract to reach the Contractor, the Region should immediately provide the Contractor with verbal notification of the date of execution so that the Contractor may order materials and prepare to mobilize onto the project and begin work. The date the contractor actually begins work on the project is to be noted and entered into CCIS.

Between the execution of the contract and the acceptance by the State Construction Engineer, the Project Engineer will likely encounter time-related issues. These will be documented through Weekly Statements of Working Days (*Standard Specifications* Section 1-08.5), Suspensions of Work (*Standard Specifications* Section 1-08.6), Protested Work (*Standard Specifications* Section 1-04.5), and Time Extensions (*Standard Specifications* Section 1-08.8).

Contract Completion Milestones – There are two milestones that establish the end of contract time. They are defined *Standard Specifications* Section 1-01.3 as Substantial Completion and Physical Completion. These two milestones are discussed in greater detail later in this chapter.

Substantial Completion

Substantial Completion may be granted when only minor, incidental items of work, replacement of temporary facilities or correction remain in order to physically complete the contract. In determining Substantial Completion, the Project Engineer should consider whether or not:

- The public has full use and benefit of the facility.
- Major safety features are installed and functional, including guardrail, striping, and delineation.

- Illumination, if required, is installed or a temporary system with equal functional capabilities is operating.
- Signals, if required, are installed or a temporary system with equal functional capabilities is operating.
- The need for temporary traffic control on a regular basis has ceased. Only minor traffic restrictions will be needed for the remaining work.
- The traffic is operating in its permanent configuration.

The Project Engineer is responsible for determining the Substantial Completion date. When this has been done, the Contractor will be notified by letter, specifically noting the date on which Substantial Completion was achieved. Per *Standard Specifications* 1-07.18, Substantial Completion is tied to the contract insurance requirements and the Contract Administration and Payment System (CAPS) Unit of Accountability and Financial Service (AFS) must also be notified of the substantial completion date (email to caps@wsdot.wa.gov). In order to be in concurrence, the project engineer will also provide notification of Substantial Completion to the State Materials Laboratory Documentation Section and to the State Construction Office (email to DOTconstruction@wsdot.wa.gov).

Physical Completion

The date on which the Project Engineer determines that all physical work has been completed is noted and then established as the date of Physical Completion. The Project Engineer will immediately notify the Contractor by letter of the date determined for Physical Completion. Copies of the letter will be sent to:

- The Railroad companies, if applicable.
- The Contract Administration and Payment System (CAPS) Unit of Accountability and Financial Services (AFS) by means of a copy of the letter sent by email to caps@wsdot.wa.gov.
- The Regional Local Programs Engineer on all city and county projects.
- The GIS and Roadway Data Office (GRDO) Roadway Geometrics Office (email to roadway@wsdot.wa.gov).
- The State Construction Office, (email to DOTconstruction@wsdot.wa.gov).
- Any other distribution that the Region deems appropriate.

Actions the Project Engineer should consider taking once Physical Completion has occurred include:

- Initiate a discussion of contract time.
- Identify any unresolved disputes and initiate discussions.
- Initiate a full review of item quantities, seeking contractor concurrence.
- Initiate a final review of materials documentation.
- On Federal-aid projects, initiate a Stewardship Final Inspection and Acceptance.
- Compile a list of all approved subcontractors performing work on the project and transmit to Contractor, who will review the list for completeness and return the list annotated with each subcontractor Universal Business Identifier (UBI).

Assembly of Delinquent Records

Immediately after the Physical Completion date has been established, the Project Engineer is to notify the Contractor of all outstanding documents that are required in order to establish a project Completion Date. Once all the obligations of the contract have been performed by the Contractor, the Project Engineer will provide the Contractor written notice of project completion, identifying the Completion Date established for the contract.

In order for the project Completion Date to be established, all the physical work on the project must be completed, and the Contractor must have furnished all documentation required by the contract. This includes all approved Affidavits of Wages Paid, and the signed Final Contract Voucher Certification. (***Note:*** Establish the Completion Date as soon as the last item of paper work is received.) The notice to the Contractor should be prepared and mailed on the same day that is designated as the completion date. A copy of the completion letter, with attached completed Subcontractor List, must be emailed to caps@wsdot.wa.gov on the day the letter is written. The completed Subcontractor List must include the UBI number and Affidavit of Wages Paid ID number for the Prime Contractor and all subcontractors.

If the Contractor refuses, or is unable to return, a signed FCVC or any of the required documents, the Project Engineer, the Region and the State Construction Office can work together to move the project towards closure by establishing a unilateral completion date allowing WSDOT Acceptance of the contract. See Section SS 1-09.9 for Unilateral Acceptance procedures.

SS 1-08.6 Suspension of Work

When, in the judgment of the Project Engineer, it is in the best interest of the public; or inclement weather, or conditions caused by inclement weather, make it impracticable to achieve satisfactory results on a critical item of work, an order should be issued to suspend the affected portions of the contract work or the entire project. If at all possible, suspensions for weather should be made with the concurrence of the Contractor. If the Contractor does not agree to a weather suspension, the Project Engineer should consult with the Region Construction Manager before issuing a unilateral suspension.

During suspensions of long duration, for example a winter shutdown, the publication of Weekly Statements may be suspended. Notices to suspend or resume work should be written. DOT Forms 421-006 and 421-007 have been developed for this purpose. A letter may accomplish the same purpose. If it is determined that some items of noncritical work on the project could be continued unaffected by weather conditions, those items may be excluded from the order to suspend work. The prime consideration for unworkable days or suspensions is always the ability to work on critical items.

In the event that a suspension of work for weather is necessary for an extended period of time, the Project Engineer may recommend that the Contractor be relieved of routine maintenance during the period of suspension. Before WSDOT will assume the responsibility for maintenance, the Contractor must have taken all necessary actions to control erosion, pollution, and runoff prior to, and during, the shutdown period. The extent of the project area that will be maintained by WSDOT is the subject for

a three party negotiation and agreement among the Project Engineer, the Maintenance Superintendent and the Contractor.

The suspensions described above as related to weather apply only to critical work items and, therefore, always result in a determination of an unworkable day. If the Engineer and the Contractor agree to stop working on a noncritical item for one of these causes but to continue critical work, then the agreement should be noted in the records and weekly statements should be issued in the normal fashion.

The contract also gives the Engineer the right to suspend work on any part of the project when the Contractor is not complying with the contract's terms or the orders of the Engineer. This would be a significant action and, except in an emergency situation, should not be undertaken without the full and informed consent of the Region Construction Manager and the State Construction Office. If work is suspended under this contract provision, then weekly statements and the charging of workable days will continue in the normal fashion.

SS 1-08.8 Extensions of Time

In general time extensions are appropriate whenever the critical work is delayed due to an action or inaction of the contracting agency, or by a cause that is not the responsibility of the Contractor. *Standard Specifications* Section 1-08.8 includes a list of reasons that entitle the Contractor to a time extension, and a list of reasons for which no time extension will be granted. In all cases, the change or delay must delay critical work or an extension is not appropriate.

The contract requires the Contractor to identify a delay within 10 working days. If a delay is readily identifiable, the Project Engineer should enforce this provision. If the delay is not immediately apparent the time extension discussion should take place as soon as the delay is recognized. Before discussing a potential delay for which adequate notice was not given, the Project Engineer should discuss the situation with the Region Construction Manager to seek guidance. The Contractor should be encouraged to identify delays and bring them to the State's attention at the earliest opportunity. This allows the contracting agency to mitigate the delay by adding time, modifying the work or recovering the schedule. In the interest of actively managing a delay the project engineer may act unilaterally to address time if the contractor avoids the discussion.

If possible, all time associated with work added by change order should be addressed as part of the change order. If you are unable to come to agreement on the number of working days to add, the Region Construction Manager should be consulted concerning the need to unilaterally add time to the contract. Deferring the discussion of time in a change order to a later date should be a last resort. If the contractor is not granted time for an item, they are required to complete the contract in the number of working days that remain. This may require that the contractor to accelerate their efforts, by adding additional crews, equipment or working longer hours or extra days. If these actions are taken as a result of the contracting agency not granting time extensions when the contractor is entitled to them, the cost for these items would be paid by the contracting agency. If you do choose to defer the time discussion to later, set a time frame during in which the decision will be made.

The State has a responsibility to inform the Contractor's surety whenever increased time is being considered and the current extension, combined with previous extensions, would exceed 20 percent of the original allotted time in the contract. This information could be represented by the Surety's signature on the change order that adds time, by a separate letter from the Surety, or by a notice letter direct to the Surety office. Such notice and surety consent is a legal requirement and will help maintain the State's rights to be protected by the performance bond.

Standard Specifications Section 1-08.6 provides under what circumstances the Contractor may be entitled to compensation. Anytime that a project is delayed for any cause, the Project Engineer and the Contractor should consider methods of mitigating the delay damage. A common approach is to pursue schedule recovery by allocating additional resources to the work to get the project back on schedule. When the Project Engineer suspects that the State may be responsible for the delay, then compensation for the mitigation efforts may be proposed.

Any time extension will be documented either in a change order with approval levels defined in Section SS 1-04.4 or in a letter to the Contractor from the State Construction Office.

SS 1-08.9 Liquidated Damages

Liquidated Damages and Direct Engineering, or other related charges, are to be addressed as described in the contract specifications, *Standard Specifications* Section 1-08.9. Direct Engineering charges are a form of Liquidated Damages and must be listed on the monthly progress estimates on the line for Liquidated Damages. Traffic related damages as described in Section SS 1-08.9 are to be listed under Miscellaneous Deductions. The Project Engineer must evaluate potential Liquidated Damages that have accrued as a result of the expiration of contract time before the damages are withheld from moneys due the Contractor. The work and circumstances that have occurred over the course of the project should be reviewed to determine if there is potential entitlement for granting additional contract time. Liquidated Damages that have accrued should be adjusted for this evaluation. Liquidated Damages deemed chargeable should then be withheld from moneys due the Contractor each monthly progress estimate as Liquidated Damages accrue. While the Project Engineer takes the action to withhold damages as the work progresses, only the State Construction Office may actually assess those damages.

Liquidated Damages must be resolved before the final estimate can be completed and processed. Guidance for assessing Liquidated Damages can be found in *Standard Specifications* Section 1-08, and in some cases in the contract provisions.

Any withholding or assessment made against the Contractor's payments, is to be preceded by a fair notice written communication to the contractor. For those issues that could be remedied with actions taken or initiated by the Contractor, this notice should also include a reasonable period of time that will allow the contractor to take action to mitigate or completely avoid the withholding or assessment.

The term "withhold" refers to a temporary deduction shown on a progress estimate. The term "assess" refers to a permanent deduction that could be shown on a progress estimate, but will be shown on the final estimate. Liquidated damages fall into two categories – one deals with contract time and the other deals with miscellaneous provisions such as ramp or lane closures. These two categories are described below.

Contract Time Liquidated Damages

Standard Specifications Section 1-08.9 (and, at times, the contract provisions) establishes the amount of Liquidated Damages to be assessed the Contractor for overruns in contract time. These assessments are either: (1) the formula calculated liquidated damages, or the liquidated damages prescribed by the contract provisions; or (2) the direct engineering and related costs. All temporary withholding or final assessment of these Liquidated Damages are to be shown as a below the line "Liquidated Damages" deduction on progress estimates and the final estimate.

The State Construction Engineer has not subdelegated to the Region the authority to assess time related damages on progress estimates or the final estimate. However, the authority to withhold below the line "Liquidated Damages" on progress estimates has been subdelegated to the Regions, and may be further subdelegated to the Project Engineer. Liquidated Damages should be addressed whenever it is apparent that the number of working days provided in the contract will be used before Substantial Completion. It is emphasized once again that fair notice and communication is necessary as a legal requirement.

In some cases, there are legitimate reasons for time extensions which would preclude withholding liquidated damages on progress estimates. If the Project Engineer is aware of or anticipates a possible time extension that would preclude withholding liquidated damages on progress estimates, the Region and/or the State Construction Office should be consulted for guidance. If the Project Engineer determines that withholding of liquidated damages on progress estimates would not be appropriate, the reasons for not withholding are to be documented by a memorandum to the files. The following describes the procedures for addressing contract time related liquidated damages in the various stages or phases of the project:

- **Phases (Interim Physical Completion Dates)** – Liquidated damages for phases will be shown in the special provisions. When the contract includes additional phases, and the time for physical completion of a phase has overrun, the overrun should be resolved as it occurs. This involves the Contractor either being granted an extension of time or being assessed liquidated damages by the State Construction Office.
- **After Substantial Completion Date of the Contract** – If substantial completion is granted after the expiration of contract time the formula for liquidated damages in *Standard Specifications* Section 1-08.9 will be assessed for that period of time between the expiration of contract time and the substantial completion date. Liquidated damages assessed after the date of substantial completion will be only those costs identified as Direct Engineering and related costs that have been incurred by WSDOT. The direct engineering and related costs are defined as field engineering and inspection time charges plus any vehicle, travel pay, per diem, or other charges connected with the delayed contract physical completion. Engineering costs such as computing grades, quantities, etc. which would have

been incurred by WSDOT under normal conditions should not be included in the determination of direct engineering and related costs. If substantial completion is granted on or prior to the expiration of contract time, direct engineering costs will only be assessed for that period of time between the date contract time expired and the physical completion date.

- **Before Physical Completion** – If Substantial Completion has not been established, the formula for Liquidated Damages in accordance with *Standard Specifications* Section 1-08.9, will be assessed for that period of time between the expiration of contract time and the Physical Completion date.

Working days added to the contract by time extensions when time has overrun shall only apply to the days on which Liquidated Damages or Direct Engineering have been charged, such as:

- If Substantial Completion has been granted prior to all of the authorized working days being used, then the number of days in the time extension will eliminate an equal number of days on which Direct Engineering charges have accrued.
- If the Substantial completion date is established after all of the authorized working days have been used, then the number of days in the time extension will eliminate an equal number of days on which Liquidated Damages or Direct Engineering charges have accrued.

Miscellaneous Liquidated Damages

The contract provisions may provide for assessment of other liquidated damages not connected to contract working days. These liquidated damages may include, but are not limited to, failure to open traffic lanes or ramps within the prescribed time, fabrication inspection costs, or the cost of challenge tests that do not show a passing result. Any temporary withholding or final assessment of these liquidated damages shall be shown as a below the line “miscellaneous” deduction on progress estimates and the final estimates. The State Construction Office has subdelegated the authority to the Regions to withhold and assess these types of liquidated damages on progress estimates and the final estimate. The Project Engineer shall notify the Contractor in writing when these types of liquidated damages are to be assessed. The Project Engineer shall include an explanation of miscellaneous liquidated damages with the Final Estimate package when it is submitted to the State Construction Office.

SS 1-08.10 Termination of Contract

Contract termination is divided into two major categories, termination for default and termination for public convenience. *Standard Specifications* Section 1-08.10(1) defines the situations when a contract may be terminated for default (doesn’t happen very often.) *Standard Specifications* Section 1-08.10(2) defines the situations when a contract may be terminated for public convenience.

Keep in mind that the conditions of the termination may be negotiated in the event that the termination is in the best interest of both parties. An example would be if a major change is beyond the abilities of the contractor. Negotiations with regard to conditions of the termination may include pricing partially completed items, mobilization payment, or the State taking possession of fabricated/purchased materials.

In both categories, if federal funds are involved, FHWA needs to be notified and informed of the situation early in the process. Specifically, Federal participation eligibility should be discussed prior to making a decision on termination. Formal notification and discussion should use normal channels through the Region to the State Construction Office. Authority to terminate a contract rests with the same position that had authority to execute the contract.

SS 1-08.10(2) Termination for Public Convenience

A. **Authority to Terminate** – As provided in *Standard Specifications* Section 1-08.10(2), WSDOT may cancel all or portions of the Work included in a contract. If the project is to be terminated in whole and contains Federal funds, FHWA must be notified and a discussion of Federal participation eligibility should take place prior to the decision to terminate is finalized. The authority to terminate a contract resides in the same position that is authorized to execute the project. Change order approvals, per the Change Order Checklist, are required for termination change orders.

B. **Cost Associated With Deleted Work** – The Contractor must submit a request for payment of costs associated with termination of the contract no later than 90-calendar days from the effective date of the termination. There are some limitations to payment that should be noted under *Standard Specifications* Section 1-09.5. When Work is deleted by the termination of a contract by the contracting agency, payment will only be for the costs actually associated with the termination. No profit will be allowed for Work that was not completed. Consequential damages are also not allowed. Consequential damages may include such things as loss of credit, loss of bonding capacity, loss of other jobs, loss of business reputation, loss of job opportunities, etc.

C. **Payment for Materials** – When Work is deleted from the project by termination and the contractor has already ordered acceptable materials for such Work, payment for these materials may be negotiated in accordance with *Standard Specifications* Section 1-09.5.

D. **Deletion of Contract Items** – Since a termination change order is deleting work from the contract, uncompleted and unused contract items, if they are to remain uncompleted, must be deleted from the contract by the change order. "Zeroing out" these items assists in releasing funding from the project. When terminating a contract that contains work that is condition of award (COA), be sure to delete that work from the COA requirements by completing the condition of award portion of the change order in CCIS. Due to limited character space in CCIS, it may be necessary to create more than one change order to complete the termination change order. Be sure these multiple change orders are concurrent.

E. **Physical Completion** – If the Contractor is not required to complete any contract Work after execution of the change order, the execution date of the change order should be established by the Project Engineer, and entered into CCIS, as the Physical Completion date for the contract. If the Contractor must complete some items of the Work, Physical Completion will be granted by the Project Engineer upon satisfactory completion of the Work (*Standard Specifications* Division 1-03). This date assists the CAPS unit of AFS to know if insurance must be maintained on the project.

F. **Time** – The change order should contain a time statement, just like any other change order.

G. **Waiver** – The change order should contain waiver language similar to that found in Section SS 1-04.4.

1-09 Measurement and Payment

SS 1-09.4 Equitable Adjustment

Pricing

Standard Specifications Section 1-04.4 specifies that an equitable adjustment (EA) in accordance with *Standard Specifications* Section 1-09.4 will be made when changes cause an increase or decrease in the cost of performing work on the contract. The basic theory of an EA is to leave the parties to the contract in the same position cost wise and profit wise as they would have been without the change, preserving to each as nearly as possible the advantages and disadvantages of their agreement. Although the contractor is entitled to profit on the changed work, the profit (or loss) on the unchanged work should remain unaffected by the equitable adjustment.

- This is an important point, *for unchanged work*, the contractor is entitled to the profit bid or a windfall, if the work turns out to be easier than expected.
- On the other hand, *for unchanged work*, the contracting agency is not obligated to make the contractor well for an under bid item.

Consequential damages are never allowed as part of a negotiated equitable adjustment. Consequential damages may include such things as: loss of credit, loss of bonding capacity, loss of other jobs, loss of business reputation, loss of job opportunities, impacts to another project, etc.

A. **Unit Prices** – An appropriate price may be established using average unit bid prices, citing similar unit bid prices, a determination of market value, by estimating the cost to perform the work, or a combination of these methods. Unit bid price is one indication of an equitable price; however the contracting agency should be prepared to support the price by other means.

B. **Force Account** – When added work is paid by force account, a change order shall be prepared detailing the added work to be performed and the estimated cost. Standard Item Number 7715 is to be used for all force account items that do not have an assigned standard item number. Force account should be a last resort used only if the work can't be clearly defined.

C. **Overhead** – There are two basic types of overhead as follows:

- **Distributed Fixed Costs** – Offsite "home office overhead" is the cost of running a company. These costs are assumed to be distributed among all the projects performed by the company. Onsite overhead is incurred as a function of time needed to accomplish the project. Onsite costs are assumed to be evenly distributed among contract items. This category of overhead is eligible under an equitable adjustment if working days are added to the contract as part of the adjustment.

- **Variable Fixed Costs** – these costs are directly associated with performing an item of work on the project and therefore vary with the quantity, the contractor is entitled to recover these costs as a part of an equitable adjustment.

Forward Pricing and Risk

The first and best option for an equitable adjustment is agreement in advance between the contractor and WSDOT on the increased or decreased cost and time for performance of the changed work. The Project Engineer should expend every effort possible to obtain a satisfactory negotiated equitable adjustment prior to submitting the change order to the contractor for endorsement. The Project Engineer must remember that the contractor is a full participant in the contract and retains all the rights and privileges during a negotiation. When bidding a job, the contractor must be optimistic and take appropriate risks. When negotiating, it is understandable and acceptable for the contractor to be pessimistic and avoid risk, unless compensated. Some key points to remember are:

- A negotiated price will likely be higher than a competitive bid price.
- A proposal which assigns extensive risk to the contractor will likely be more costly yet.
- The contractor may be willing to take on this risk if the price is a bit higher
- The significant advantage of reaching a price agreement before the work is started (forward pricing) is that the contractor assumes the risk of the accuracy of the pricing assumptions and predicted duration for performing the work.
- (when forward pricing) the Project Engineer may utilize the high end of the estimating range in justification.
- (when forward pricing) an audited overhead rate may be substituted for the markups described in *Standard Specifications* Section 1-09.6. Contractors can usually provide an estimated home office overhead rate which may be checked by an annual audit, if warranted.

Pricing After Fact

When establishing prices after the work has been performed, actual costs should be used to the extent they are available. The following are key points to keep in mind:

- Costs for equipment cannot exceed the rates established by the AGC/WSDOT *Equipment Rental Agreement* for an equitable adjustment.
- When pricing after the fact, the markups described in *Standard Specifications* Section 1-09.6 are appropriate for measuring time and materials because there is no risk involved in after the fact pricing.

Unilateral Pricing

In the interest of being timely, the change order should be a tool to document agreement and not a negotiation tool back and forth. Ideally we will have agreement with the contractor when pricing the work. On occasion, however, due to time constraints and difference of opinion, we can't always come to agreement. The difference of opinion may be for only a small portion of the work. *Standard Specifications* Section 1-09.4(2) provides, "If the parties cannot agree, the price will be determined by the Engineer using unit prices, or other means to establish costs."

This is not to say that the contractor is obligated to honor unit bid prices for work that qualifies for an equitable adjustment. This allows us to proceed with changed work prior to reaching an agreement on the price. In the interest of being timely, and provided the Project Engineer is comfortable that the included price can be supported, there's nothing wrong with issuing a change order to the contractor unilaterally. This orders the work to proceed, establishes the State's position on cost, and puts the decision to continue negotiations in the contractor's hands as detailed under *Standard Specifications* Section 1-04.5. The contractor is obligated to endorse, write a separate acceptance, or protest as described in the specification and a timeline is provided for these actions.

Time

The completed equitable adjustment should include provisions for any increases or decreases in contract time based on impacts to overall contract duration. The decision on time should be supported by an analysis of the project schedule. Analyzing time in advance encourages communication between the parties allowing the contracting agency to make an informed decision on the true costs. It also enables the contracting agency to mitigate time impacts if that is in the agency's best interest.

SS 1-09.6 Force Account

General

When it is difficult to provide adequate measurement or to estimate the cost for certain items of work, force account may be used in order to pay the Contractor for performing the work. Some contract items may be set up to be paid by force account. Some change orders may require payment by force account. *Standard Specifications* Section 1-09.6 describes the boundaries for payment of work performed by the force account method. In any case, the purpose of force account is to fully reimburse the Contractor for costs incurred on the work. These costs may also include indirect segments, such as travel, per diem, safety training, industrial safety measures, overhead, profit and other hidden costs. The objective is to minimize the inclusion of any "contingencies" included in the contract bid in anticipation of costs that may be incurred during force account work and not reimbursed.

When work is added to the contract and is to be paid by force account, a change order will have been prepared describing the added work to be performed. The change order package will also contain an independent estimate of the cost to perform the added work. All non-standard force account items are assigned the Standard Item Number 7715.

Force account payments are typically not authorized for employees engaged in management or general supervisory work. The cost for this type of activity is presumed to be included in the Contractor's markups for overhead and profit. However a foreman or, in some cases, a dedicated superintendent devoting full time to the force account work is eligible for payment on the force account.

On projects that require the Contractor to employ trainees, these employees may be utilized in force account work.

In the case of some Emergency Contracts (see the WSDOT *Emergency Relief Procedures Manual* M 3014) which will be measured and paid by Force Account, it is appropriate for the Engineer to consider payment for mobilization of equipment to the site of the emergency, including all staff time employed to procure and coordinate the mobilization. It may also be appropriate to include the labor payment for a dedicated superintendent and foremen employed solely to oversee the emergency work. On emergency contracts the mark ups may not be enough to cover the cost of performance bonds; the Project Engineer may consider payment for performance bond costs when making payment under emergency force account contracts.

The Project Engineer should consider a decision to direct force account work with the same degree of caution that would be applied to directing any other work on the contract. The Contractor should have the expertise to schedule the work and determine what equipment is required. In most cases, it is best that we allow the Contractor to propose the method and approach to the work. Our most effective role would be to concur or approve of the Contractor's proposal or suggest modifications to it. Before any work is performed by the Contractor on a force account basis, the inspectors should review and agree with the Contractor upon:

1. **Labor** – The classification and approximate number of workers to be used, the wage rate to be paid those workers, whether or not travel allowance and subsistence is applicable to those workers, and what foreman, if any, will be paid for by force account. This agreement will be closely tied to the development of the Labor List.
2. **Materials** – The material to be used, including the cost and any freight charges whether the material is purchased specifically for the project or comes from the Contractor's own supply. For materials representing a significant cost, or where the industry experiences fluctuations in price, the contract allows for shopping and the Contractor may be directed to obtain quotations.
3. **Equipment** – The equipment to be used including the size, rating, capacity, or any other information requested by the Engineer. Whether the equipment to be used is owned by the Contractor or is to be rented. The cost per hour for the equipment to be used. In the case of rented equipment, the Engineer may ask for competitive quotations, provided the request is made in advance and there is time to obtain them.

Payment for force account work should be made on the same timely basis as any other item of work. When money is being withheld from a progress estimate, the criteria for withholding should apply equally to all items of work, not just to force account work, because of its method of payment.

The procedure for record keeping and payment of force account work on change orders shall be the same as for contract items to be paid by force account. Separate records are to be kept for each force account whether it is an item in the original contract or established as a result of a change order.

Payment Procedures for Force Account Work

1. **Labor** – The specifications require the Contractor to prepare and submit a "Labor List" in advance of force account work. Once approved by the Project Engineer, this list provides the hourly rate for force account calculations until a new list is approved. New lists will not be approved retroactively and calculations previously made from an approved list will not be changed when a new list is approved. If the Contractor fails to submit a list before the first force account calculations are made, then the Project Engineer will determine the rates from the best data available (payrolls on this job, payrolls on other jobs, prevailing wage requirements, union information, etc). Labor list rates will include all the pieces of wage expense – base rates, benefits, assessments, travel, with allocations shown where necessary. Examples of Labor List entries might be:

Generic Laborer (Straight Time)		John Doe, Teamster (Overtime)	
Basic Wage/hr	$21.36	Basic OT Wage/hr	$32.81
FICA (7.65%)		FICA (7.65%)	
FUTA (0.80%)		FUTA (0.80%)	
SUTA (5.42%) Total =	2.96	SUTA (5.42%) Total =	4.55
Indust Ins $1.01/hr	1.01	Indust Ins $1.01/hr	1.01
Benefits/Hr	5.45	Benefits/Hr	8.00
Subtotal	$30.78/hr	Subtotal	$46.37/hr
Travel Expense		Travel Expense	
$250/40 hrs	6.25/hr	$250/40 hrs	$6.25/hr
Total	$37.03/hr	Total	$52.62/hr
Use	$37per hr	Use	$53per hr

These examples show the rate rounded to the nearest dollar, which is permissible. If either party would prefer to use the unrounded amount, that is also acceptable. When deciding how many hours require compensation, the specification allows all hours that are a contractual obligation or are customary payments made to all employees. This means that, if a labor contract calls for 4 hours of pay for any call out, then that is a contractual obligation and the 4 hours would be eligible for reimbursement. (As always, the Contractor is expected to reassign the employees, if possible, to avoid the penalty.). In the same vein, a non-Union contractor, who has made call out payments to all employees for years, would be eligible for reimbursement for similar payments in a force account.

2. **Materials** – Materials also work from a list, but the list is generated in a different fashion. The Project Engineer provides the basic list of materials observed by the inspector. This is done in a timely manner (daily, unless the Contractor agrees otherwise). The Contractor adds prices to the list and attaches invoices or affidavits to support the prices. Once the list is returned and checked, payment can be made.

   If a shipment of material is only partially consumed during the force account reporting period, the inspector may choose to include the entire amount in the first report or to estimate the amount consumed during each reporting period. The decision should be based upon the amount of the shipment, the nature and cost of the shipment and the security of the stockpile. A case of empty sandbags to be utilized throughout the winter for pollution control would adapt well to

a single report, while a stockpile of galvanized conduit should probably be reported piecemeal as it is used in the work. The Contractor may use copies of the original invoice when the material is reported incrementally. If the Contractor has to restock unused material, restock charges can be reimbursed if the original order was reasonable for the work planned.

Along with supplying prices and invoices, the Contractor may suggest additions or corrections to the Materials List. These suggestions will be reviewed by the Project Engineer and, if appropriate, added before payment is made.

If the Contractor does not have an invoice, as in the case of stockpiles or some warehouse stock, then an affidavit will suffice. The Engineer may review the affidavit and, if it is an unreasonable price that cannot be supported, the Engineer may substitute another price, utilizing the best data available. The reasonableness of the price must consider the circumstances of the purchase and all costs associated with obtaining material from another source.

The specifications allow the Engineer to require competitive quotations, if this is done before the work is started and sufficient time is available. If the Contractor has to divert an employee to obtain the quotations, then that employee may be included in the labor reimbursement for the force account.

3. **Equipment** – The Project Engineer should review and comply with the rules governing payment for equipment as outlined in the most current AGC/WSDOT Equipment Rental Agreement. This agreement was developed as a supplement of the specifications and is relatively self explanatory.

   There are three methods of acquiring equipment for use on a force account. "Owned" means that the Contractor controls and operates the equipment. A long term lease arrangement would be the same as ownership. Owned equipment is priced according to the Blue Book. "Rented to Operate" means that the Contractor has obtained a piece of equipment through a short term rental and will operate that equipment with its own employees. Rented to Operate equipment is priced according to the invoice from the rental agency. "Rented Operated" means that the Contractor has obtained a service from an individual or a company to provide a piece of equipment with an operator. An operated rental is not paid as equipment, but rather as a Service. In some cases, the Service will be reclassified as an entity performing in the manner of a subcontractor (see below).

   Damage waivers are compensable. The Engineer has the discretion to reimburse for a damage waiver when it makes good business sense. Upon request, the Contractor should be able to demonstrate that the purchase of the damage waiver is consistent with their standard business practice. Consideration should be given to the potential risk of damage to the equipment versus the cost of paying for the damage waiver. In most cases, the cost of the waiver is minimal. The damage waiver does not cover damage caused by operator negligence, nor should the Department reimburse the Contractor for repair of any damage caused by operator negligence.

   Normal wear and tear on equipment is included in the Blue Book rental rates. The ownership rates include major overhaul of the equipment. The Blue Book defines major overhaul as the periodic rebuilding of the engine, transmission, undercarriage, and other major equipment components. The operating rates

include the cost of daily servicing of the equipment, including the replacement of small components such as pumps, carburetors, injectors, filters, belts, gaskets and worn lines. The operating rates also include the cost of expendables such as fuel, lubricants, filters, tires, and ground engaging components, such as pads, blades bucket teeth, etc.

The costs of extraordinary operating expendables are not covered in the operating rates due to their highly variable wear patterns. These extraordinary operating expendables may include certain ground engaging components, such as hammer and drill bits, drill steel, augers, saw blades, and tooth-bits. The cost for these items will normally be recovered separately, based upon invoices for their cost.

Repair of damage is considered a risk of providing equipment. The cost of this risk is assumed to be in the markup for overhead and profit. Costs for repair of damage should not be included in the force account direct charges. A common event is the offer of a Damage Claim Waiver by a renting agency. If such a charge appears on an invoice, it may be considered for inclusion when payment is calculated.

As with Materials, the Engineer may require competitive bids for equipment rentals. Normally, this requirement must be made in advance, before the work is started. However, if the rental is not made in an "arm's length" transaction, for example when the contractor rents the equipment to himself through some sort of business structure, then after the fact quotations may be obtained from independent rental agencies and the lowest such quotation may be used in place of the rental invoice.

Finally, as a special insertion into this manual, there is a separate method of paying for Pavement Routers for Crack Sealing. WSDOT has agreed to set aside the Blue Book rate for this equipment and to pay $20 per hour for the operated router.

4. **Services** – Services billed by invoice will be compensated according to the invoice if that is the typical method in standard industry practice. Typical industry practice might include specialized technical services, such as Testing Labs and Environmental Cleanup firms. Also included might be unit price invoices, such as Sweeping per mile or Concrete Pumping per cubic yard, or lump sum quotation invoices, such as Remove Danger Tree or Pump Septic Tanks.

   The markup for services depends on the nature of the firm's activities on the project. If the firm is clearly an uninvolved supplier, then the Service markup will apply. If the firm is acting as a subcontractor, then the markup will be made under the subcontractor provisions described below, with the underlying (subcontractor's) overhead and profit assumed to be embedded in the invoice.

   It should be noted that payment of force account work through an invoice does not excuse the Contractor from other requirements of the contract. Wage rate rules, subcontractor approvals and other provisions are still contract requirements and must be enforced. Such enforcement, however, is independent of the administration of force accounts and force account payment will not ordinarily be withheld to aid in the enforcement. Note that the statutes associated with some provision requirements do involve the withholding of payment for associated work.

As with materials and equipment rentals, the Engineer may require competitive bids for invoiced services. Normally, this requirement must be made in advance, before the work is started. However, if the service is not obtained in an "arm's length" transaction, for example when the invoice comes from a subcontractor without sufficient effort to find competitive prices, then after the fact quotations may be obtained from independent service providers and the lowest such quotation may be used in place of the service invoice.

5. **Mobilization** – Mobilization and demobilization are reimbursable expenses for assembling equipment, materials, supplies and tools for any force account item and then returning those items to the previous location when the work is finished. Demobilization can include restocking costs for materials not utilized. Force account mobilization applies to original bid item force accounts as well as force accounts added through change orders. The standard bid item "Mobilization" is assumed to not include mobilization activities for force account work.

   Mobilization may occur within the project limits if special efforts are required to assemble needed items to the force account location. For example, if a lowboy is required to move a bulldozer from one end of a project to the other, then that mobilization effort would be reimbursed.

   If off site preparation work is needed, the Contractor must notify the Engineer in a timely enough manner that the work can be observed, if that is desired. Without such notice, that preparation work will not be reimbursed.

   The AGC Agreement allows for pro-rating mobilization costs for equipment that will be used in both force account and bid item work. This will be done by negotiation and agreement. For example, if the Project Engineer and Superintendent agree that a mobilized backhoe will be used three hours on regular work for each hour on force account, then 25 percent of the mobilization costs would be paid on the force account.

   All mobilization activities can be categorized as Labor, Equipment, Materials, or Services and will be listed under those categories for payment.

6. **Other Payments**
   - **Permits or Fees** – When a force account requires the Contractor to pay for permits or fees (hazardous waste dumping, etc.) that would fall outside the scope of overhead, these costs are reimbursable and may be included in the "Services" section of the force account payment.
   - **Retail Sales and Use Tax** – How retail sales tax and use tax is handled on the overall project depends on the ownership of the property upon which it rests. The retail sales tax consequences related to construction projects and land owned by the state of Washington or privately is addressed by WAC 458-20-170 ("Rule 170"), while the retail sales tax consequences related to construction projects and land owned by a municipal corporation, political subdivision of the state of Washington, or by the United States is addressed by WAC 458-20-171 ("Rule 171").

     With respect to Rule 171, ownership refers to ownership for the street, place, road, highway, easement, right of way, etc. being constructed and not the underlying real property. See RCW 82.04.050(10); Rule 170; and Rule 171.

Thus, for instance if WSDOT has an easement with respect to a road subject to a construction project, then Rule 171 treatment will not apply even if the underlying real property were owned by the United States, Indian tribe, or municipal entity.

The Contractor's books may be audited by the Department of Revenue upon completion of each project to ensure compliance.

– **State and Local Tax: WAC 458-20-170 – Retail Sales and Use Tax** – Item quantities listed in the summary of quantities under *Standard Specifications* Section 1-07.2(2) require retail sales tax on the item to be paid by the Contracting Agency; therefore; Contractor would not include the tax in their bids. The Contracting Agency provides this tax payment to the Contractor on the total cost summation of the bid items listed under Section 1-07.2(2). Contractor remits this retail sales tax through to Department of Revenue. Under state tax law project Work requires remittance of retail sales tax on the full contract price.

- **Resale Items –** Materials purchased for incorporation into the permanent project.
- **Use of Reseller Permits** – Generally, purchases of tangible personal property by persons without a valid reseller permit are subject to retail sales tax. See WAC 458-20-102. For example, a Contractor's purchases of materials incorporated permanently into the structure being built or improved as part of the project Work (including but not limited to cement concrete, lumber, finished hardware, asphalt concrete pavement) are treated as a retail sale at the point of purchase unless the contractor has a valid reseller permit. If the contractor has a valid reseller permit, the Contractor can provide it to their vendors to purchase these materials permanently incorporated into a structure being built or improved under a project without paying retail sales tax. These materials if purchased with a reseller permit are considered to be purchased for "resale".
- **Tax Paid at Sourced Deduction** – If the contractor does not have a valid reseller permit when purchasing materials permanently incorporated into a structure being built or improved as a part of the project Work, the contractor must pay retail sales tax at point of purchase and then may take the appropriate deduction (tax paid at source) when filing its Washington state excise tax return. The Contracting Agency pays retail sales tax to the Contractor when the material is incorporated into the permanent work of the project.
- **Consumables Items** – There may be items that the contractor **is required** to pay retail sales tax on at the point of purchase because they are consumed by the Contractor rather than resold ("consumables"). For example, tools, machinery and equipment, and supplies consumed (including but not limited to concrete forms, fuel or tools, equipment purchased or rented) during the performance of the project work are "consumables", which are a part of the overall cost of doing business for the Contractor. The Contractor is required to pay retail sales tax at

the point of purchase/rental for these items or use tax if retail sales tax is not paid. These costs are bid as a part of the associated bid items.

The contractor is considered the "consumer" when renting equipment for use in Washington State and must pay sales tax on the total charge. This is no different than purchasing a tool the contractor must have in order to perform its services and passing the cost on to the customer. The sales tax paid by the contractor to the rental company is a cost of doing business and, if it is passed on to the customer, it is considered to be part of the gross contract price that is subject to sales tax.

When calculating or estimating the cost of force account or change order work, retail sales tax will always be applied and paid by the Contracting Agency on the whole summation of daily force account cost including labor, equipment and material costs, which can in the case of "consumable" items include paying retail tax on a tax..

– **State and Local Tax: WAC 458-20-171 – Retail Sales and Use Tax** – For item quantities listed in the summary of quantities under *Standard Specifications* Section 1-07.2(1) retail sales tax **is not required** on the item.

However, the Contractor **is required** to pay retail sales tax on all of its own retail sales taxable purchases regardless of use ("consumable" or not) or use tax if retail sales tax is not paid. For contract work, this expense is incidental and therefore included in the individual contract items as a part of the bid amount.

- **Ownership By Covered Persons** – Rule 171 applies where the operative public road construction is owned by a municipal corporation, political subdivision of the state of Washington, the United States, or an Indian or Indian tribe in Indian country. RCW 82.04.050(10); Rule 171, and WAC 458-20-192.
- **WSDOT Not A Covered Person** – WSDOT is not a municipal corporation, political subdivision of the state of Washington, the United States, or an Indian or Indian tribe. Therefore, where the operative public road construction is owned by WSDOT, the construction is subject to retail sales tax consistent with Rule 170 above.
- **WSDOT Easements** – Washington Excise Tax Advisory (ETA) 3068.2009 explains that where "title to the land upon which the highway, street, place, or road is being constructed vests in the state of Washington, the construction contract is a retail sale." ETA 3068.2009 further makes clear that this vesting provision refers to the street, place, road, highway, easement, right of way, etc. being constructed and not the underlying real property. Thus, for instance if WSDOT has an easement with respect to a road subject to a construction project, then Rule 171 treatment will not apply regardless of whether the underlying real property is owned by another party.

When calculating or estimating the cost of force account or change order work, sales tax should be included on all invoices. As stated previously, the fact that taxes are shown or not shown on invoices is not a reliable indication of what the contractor is obligated to pay. The contractor may

receive reimbursement later or be required to pay additional taxes when the contract is complete.

- **Exceptions** – Consistent with Rule 171, construction of the following facilities has been specifically exempted. Work on these facilities falls under Rule 170 even if they are on non state owned land:
  - Water mains.
  - Telephone, telegraph, electrical power, or other conduits or lines in or above streets and roads, unless such power lines become a part of a street or road lighting system.
  - Construction of sewage disposal facilities.
  - The installing of sewer pipes for sanitation, unless the installation thereof is within, and a part of, a street or road drainage system.
- **Conclusion** – Most of the time, retail sales tax on invoices is required. In turn, we need to reimburse the contractor for the tax (paid or deferred) on force account invoices and include the costs when estimating the value of change order work.

  The one exception is "resale" items if the contract falls under Department of Revenue rule 170 where retail tax sales need not be paid at the point of purchase.

  These rules should be adhered to regardless of whether retail sales tax is shown on the invoice.
- **Subcontractor Markup** – If work is being performed by a subcontractor (or by a service supplier acting in the manner of a subcontractor), then a supplemental markup will be added. This supplement will be added one time for each payment, even if a lower-tier subcontractor is doing the work. The markup is a graduated step down rate, which gets smaller for each force account item as the amount of work increases.

The amounts on which the rate is determined will be tracked separately for each subcontractor on each force account item included in the original contract or added by change order. If two subcontractors work on the same force account, then the accumulated total will be tracked for each, and markup for work done by each will be according to the respective total. If a single subcontractor works on two force accounts, then there will be a running total of work done by that subcontractor on each account and the markup rate for the same sub on different force accounts could be different.

Records and Source Documents

Accurate daily time records should always be kept when performing force account work. A Daily Report of Force Account Worked DOT Form 422-008 is provided for the Project Engineer's use to help facilitate timely, accurate, and complete records of the daily force account activities. Whatever method of record keeping is used, it is recommended that the document be signed by both the Inspector and a representative of the Contractor agreeing on the materials used and the hours noted for labor and equipment. A copy of the daily report must be provided to the Contractor. When the work is performed by a subcontractor, a copy should also be provided to the subcontractor.

The costs for force account work should be determined and entered into the CAPS system in as timely a manner as possible.

All calculations for determining force account costs should be checked, initialed, and dated. After the cost of the work has been computed in the office, a copy of calculations shall be furnished to the Contractor.

Summary

To summarize, the purpose of force account is to fully reimburse the Contractor for costs incurred on the work. The objective of force account administration is to minimize the inclusion of any "contingencies" included in the contract bid in anticipation of costs that may be incurred during force account work and not reimbursed.

Items which are bid or negotiated with a unit price or a lump sum agreement will not be converted to force account unless a change (as defined in *Standard Specifications* Section 1-04.4) has occurred. On the other hand, any work to be done or the remaining portion of work underway on a force account basis may be converted to unit prices or a lump sum at any time the parties can reach an agreement. Such a conversion is highly desirable and should always be a goal of the Project Engineer.

SS 1-09.8 Payment for Material on Hand

Payment for material on hand (MOH) may be considered for materials intended to be incorporated into the permanent work. The requirements for payment of MOH are noted in *Standard Specifications* Section 1-09.8. Payments for MOH are made under the 900 series of item numbers as ledger entries and need to be backed out as items are utilized such that 900 series entries are zeroed at close out of the contract. Therefore logically payment for MOH shall not exceed the value of the corresponding bid item. It is the responsibility of the project engineer to devise procedures that assure this is done correctly.

Payments may be made provided the contractor submits documentation verifying the amounts requested, the materials meet the requirements of the contract and the materials are delivered to a specified storage site or stored at the suppliers/fabricators as approved by the project engineer. Materials shall be segregated, identified and reserved for use on a specific contract or project. Payments commensurate with the percentage of completion may be paid for partially fabricated items.

All materials paid for as MOH must be readily available for inspection by the owner. Steel materials must be available for inspection but this availability need not be immediate. Reasonable notice should be given to allow the contractor to locate and make the material available for inspection. The project engineer may accept a higher level of risk that steel material may not be reserved for our use. The contractor's obligation to perform the work and the surety's guarantee of this obligation serve to offset the risk that reserved materials are diverted to other projects.

When materials paid for as MOH are stored in areas outside the general area the region shall make arrangements for inspection as deemed necessary prior to making payment. The region may utilize other regions or the State Materials Laboratory in doing so.

When contracts are estimated to cost more than $2 million and require more than 120 working days to complete, a General Special Provision (GSP) will be included in the contract provisions, requiring documentation from the contractor as the basis for MOH payments and deductions. When this GSP is included in the contract provisions, the following procedure is used to determine how much of the MOH payment should be deducted from an estimate:

- Each month, no later than the estimate due date, the contractor will submit a document and the necessary backup to the Project Engineer that clearly states:
  - The dollar amount previously paid for MOH,
  - The dollar amount of the previously paid MOH incorporated into the various work items during the month, and
  - The dollar amount that should continue to be retained in MOH items.

  If work is performed on the items and the contractor does not submit a document, all previous associated MOH payments may be deducted on the next progress estimate.

SS 1-09.9 Payments

General

Payment for work performed by the Contractor and for materials on hand must be made in accordance with *Standard Specifications* Section 1-09. To facilitate payments to the Contractor and ensure proper documentation, WSDOT utilizes an automated computer system to record project progress in terms of bid item quantity accomplishment. This is then used to pay the Contractor for actual work performed during each designated pay period or for materials on hand. The automated system that completes this task is called the Contract Administration and Payment System (CAPS). CAPS utilizes an electronic tie between each project office's computer system and the mainframe computer. This system provides access to a large volume of corporate data and facilitates the maintenance of this data by different groups in different locations. Some of these different activities include:

- **Contract Initiation** – A Headquarters action whereby new contracts are created and stored in a computer file. The information consists of the names of the Contractor and the Project Engineer, project descriptive data, accounting identifier numbers, preliminary estimate, proposal date, bid opening date, award date, execution date, accounting groups and distributions, and an electronic ledger.
- **Project Ledger** – An updating process by the Project Office which keeps track of work performed on the contract as it is completed.
- **Estimate Payments** – A Project Office action whereby progress estimates and Regional final estimates are processed directly from the Project Office. The Headquarters Final Estimate process activates the Region Final when all the required paperwork is in place. Supplemental final estimates are processed by Headquarters only. Complete instructions for use of the CAPS computer system are included in WSDOT *Contract Administration and Payment System* M 13-01.

Progress Estimates

Progress estimates are normally processed on the 5th of the month for odd numbered contracts and on the 20th of the month for even numbered contracts. Where the Project Engineer deems it appropriate, estimates may also be run on other dates.

Estimates may also be run on other dates if the progress estimate or parts of the progress estimate were withheld to encourage compliance with some provision of the contract and the Contractor resolves the issue that caused the withholding. These estimates should be paid immediately upon resolution by the Contractor.

Within the CAPS system, the basis for making any estimate payment is information from the project ledger. Every entry in the ledger is marked by the computer as paid, deferred, or eligible for payment. Before an estimate can be paid, a Ledger Pre-Estimate Report (RAKD300C-PE) must be produced. In constructing this report, the CAPS system gathers all the ledger entries that are identified as eligible for payment, prints them on the report summarized by item, and shows the total amount completed to date for that item but not yet paid for by progress estimate. The report also shows any deferred entries or exceptions if they exist and includes a signature block for the Project Engineer's approval.

If there are errors or omissions in this report, the ledger must be changed to reflect the correct data. After corrections are made, the Ledger Pre-Estimate Report must be run again in order to get the corrections into the report and made available for payment by progress estimate. Once the Ledger Pre-Estimate Report is correct, an actual estimate can be paid. The report containing the Project Engineer's signature should be retained in the project files.

The estimate process is then accomplished with a few keystrokes in option 2, estimate payments, in the CAPS main menu. At this point, the CAPS system will automatically calculate mobilization, retainage (on projects containing no Federal funds), and the sales tax. The warrant will be produced, signed, and sent to the Contractor along with the Contract Estimate Payment Advice Report and two different sales tax summary reports. Copies of these reports will also be sent to the Project Office. When the Project Office receives their copy of the Contract Estimate Payment Advice Report, the total amount paid for contract items should be checked against the Pre-Estimate Report. This helps to verify that the amount paid was what the Project Engineer intended to pay. In addition, the ledger records that produced the estimate will now be marked by the CAPS system as being paid.

Once the estimate is paid, the Project Engineer should ensure that estimate payment information is available to all subcontractors and any other interested parties who request the information. This may be accomplished by posting to a project specific web-page, a Region Construction web-page, email, or other means as determined by the Project Engineer and the Region Construction Office.

Up to the point of actually producing the warrant, the entire process for making a progress estimate payment is initiated and controlled by the Project Office.

Particular attention should be given to the comparison of the plan quantities and the estimate quantities for the various groups on the project as shown on the Ledger

PreEstimate Report. Overpayments on intermediate progress estimates are sometimes difficult to resolve with the Contractor at the conclusion of the project.

New groups which do not change the termini of the original contract or changes in groups should be accomplished by memorandum from the Region to the State Accounting Services Office.

An additional estimate may be prepared if considerable work has been done between the date of the last progress estimate and the date of physical completion when the Engineer anticipates delays in preparing the final estimate. Should this circumstance occur, the additional estimate should show the work done to date no later than the day before the date of physical completion.

Payment for Lump Sum Items

The Contractor is required to submit a detailed Lump Sum price breakdown for those items specified as Lump Sum for which there is no specified payment described in the payment clause of the applicable specification. Estimate payments for items specified as Lump Sum will be a percentage of the price in the Proposal, based on the Project Engineer's determination of the amount of work performed. Consideration will be given to, but payment will not be based solely on, the Contractor's Lump Sum breakdown. The Project Engineer should verify that the price breakdown is based upon a reasonable proportioning of the work, and detailed enough to allow a determination of the work performed on a monthly basis.

Payment of the first 80 percent of the Lump Sum price for Type B Progress Schedules will be made on the next progress estimate following the submittal and approval of the Type B Progress Schedule. The payment will be increased to 100 percent of the Lump Sum price when the Contractor has attained 80 percent of the Original Contract Award amount, as shown on the CAPS Pre-Estimate Report (inclusive of payments made for Material on Hand).

On WSDOT contracts for which payment is made through CAPS (Contract Administration and Payment System), payment for mobilization is calculated and paid automatically by the system. On contracts that do not use CAPS, the Project Office must calculate, and make payment for, the Contract item "Mobilization." Payment will be made in accordance with *Standard Specifications* Section 1-09.7. Based on the lump sum Contract price for "Mobilization," partial payment will be made as follows:

1. When 5 percent of the original Contract amount has been earned from other Contract items, excluding any amounts paid for materials on hand, the Contractor is also entitled to a partial payment of the Bid item "Mobilization." This payment, which is in addition to payment for contract work performed, will be calculated as 50-percent of the amount bid for "Mobilization" or 5 percent of the original Contract amount, whichever is the least.
2. When 10 percent of the original Contract amount has been earned from other Contract items, excluding any amounts paid for materials on hand, the Contractor will be paid 100 percent of the amount bid for "Mobilization" or 10 percent of the original Contract amount, whichever is the least. This payment is in addition to payment for contract work performed.

3. When the Substantial Completion date has been established for the project, payment of any remaining portion of the lump sum item "Mobilization" will be made.

Payment for Falsework

On those projects which include a lump sum item for bridge superstructure, payment may be made on request by the Contractor for falsework as a prorated percentage of the lump sum item as the work is accomplished. The Project Engineer may require the Contractor to furnish a breakdown of the costs to substantiate falsework costs. For any given payment request, the Contractor may be required to furnish invoices for materials used and substantiation for equipment and labor costs.

Payment for Shoring or Extra Excavation

When Shoring or Extra Excavation Class A is included as a bid item, payment must be made as the work under the bid item is accomplished, the same as for any other lump sum bid item. When Shoring or Extra Excavation Class B is included as a bid item, measurement and payment shall be made in accordance with *Standard Specifications* Section 2-09.4 and 2-09.5. RCW 39.04 provides that the costs of trench safety systems shall not be considered as incidental to any other contract item, and any attempt to include the trench safety systems as an incidental cost is prohibited. Accordingly, when no bid item is provided for either Shoring or Extra Excavation Class A or Shoring or Extra Excavation Class B and the Engineer deems that work to be necessary, payment will be made in accordance with *Standard Specifications* Section 1-04.4.

Payment for Asphalt, CRS-2P, Steel, and Fuel Cost Adjustment

Some projects may include the specifications for Asphalt Cost Adjustment, CRS-2P Cost Adjustment, Steel Cost Adjustment, or Fuel Cost Adjustment (one or more) as a General Special Provision. Not all projects will contain these provisions, since their use depends on the type of work, the duration of the contract, and Region preference. For those contracts containing one or more of the cost adjustment bid items, an adjustment (payment or credit) will be calculated monthly for qualifying changes in the index price of the commodity. No adjustment (payment or credit) shall be made if the 'Current Reference Cost' is within the percentage of the 'Base Cost' specified in the contract, and only those items that are included in the provision are eligible for adjustment. Worksheets are available, in the "Shared Documents" folder of the State Construction Office Sharepoint site (http://sharedot/rp/hqconstr/default.aspx), to assist the Project office in computing these price adjustments, and on the Construction Office web page (www.wsdot.wa.gov/business/construction/default.html) to assist the Contractor and local agencies.

It is important to understand that the adjustments provided by these provisions are not a guarantee of full compensation for changes in the contractors cost, and that they are intended only to absorb some of the risk of severe cost escalation during contract performance. Because of this, the method of computing the adjustment has been simplified to eliminate tedious considerations that would otherwise be required to provide precise reimbursement of actual costs.

Payment for "Asphalt Cost Price Adjustment," "CRS-2P Cost Adjustment," and "Fuel Cost Adjustment" is based on quantities of the eligible material(s) incorporated during the period covered, as demonstrated by pay notes for those items. Payment for "Steel Cost Adjustment" is based on the quantity of eligible steel items incorporated or paid as Materials on Hand for the period covered. The Contractor is required to provide documentation of the quantities and the date shipped from the producing mill to the manufacturer. If the Contractor fails to provide the required documentation, any adjustment credit will be unilaterally computed by the Project Office using a shipment date determined by the Engineer. If the Contractor wishes to protest this adjustment, it must be done in accordance with *Standard Specifications* Section 1-04.5.

The provisions for these items are prescriptive, and should result in the correct adjustment if they are followed to the letter. Regardless of whether the estimate cutoff is the 5th of the month or the 20th of the month, any adjustment will apply the most current reference cost to the entire current quantity of each eligible item paid (or deferred) in the current estimate. When a portion of the payment for an eligible item is deferred, a similar portion of the price adjustment for that item should be deferred.

The provisions for these cost adjustments are silent in regard to changed work because there are other contract clauses that address how the Department will pay for changed work. Should changes occur in bid items that are eligible for adjustment, equitable adjustments should adhere to the guidance provided in Section SS 1-04.4. Under no circumstances should eligible items that were not included in the specifications at the time of bid be added by change order after award and execution of the contract. Likewise, these provisions should not be added by change order. FHWA will not participate in the cost of retroactive price adjustments.

Credits

Dollar amounts may be deducted as a "Below the Line Miscellaneous Deduction" from progress or final estimates when WSDOT is due a credit from the Contractor. Routine credits from the Contractor to WSDOT include, but are not limited to, the following items:

- Engineering labor costs when due to Contractor error or negligence, additional engineering time is required to correct a problem. This includes the costs of any necessary replacement of stakes and marks which are carelessly or willfully destroyed or damaged by the Contractor's operation.
- Lost and/or damaged construction signs furnished to the Contractor by WSDOT. The Contractor should be given the opportunity to return the signs or replace them in kind prior to making the deductions.
- Assessment to WSDOT from a third party that is the result of the Contractor's operations causing damage to a third party, for example, damage to a city fire plug. Actual costs will be deducted from the estimate.
- Other work by WSDOT forces or WSDOT materials when the Contractor cannot or will not repair damages that are the responsibility of the Contractor under the contract.
- Liquidated damages not associated with contract time, i.e., ramp closures, lane closures (see Section SS 1-10).

- As provided for in the specifications, specific costs or credits owed WSDOT for unsuccessful contractor challenged samples and testing.

The authority to withhold and assess routine "Below the Line Miscellaneous Deduction" on progress and final estimates has been delegated to the Regional Construction Manager, and may be further subdelegated to the Project Engineer. The Project Engineer must give written documentation to the Contractor describing the deduction and provide sufficient notice of the impending assessment.

Credit items which are specifically provided for by the *Standard Specifications* or contract provisions, such as non-specification density, non-specification materials, etc. may be taken through the contract items established for those purposes. A change order is required for credit items which are not specifically provided for by the contract provisions.

Occasionally a Contractor will send a check directly to a Project Office for payment of money due WSDOT. (The Project Office should not request payment.) Whenever a Project Office or WSDOT employee receives a check or cash directly from a Contractor, it is very important that the guidance found in the WSDOT *Accounting Manual* M 13-82, Section 2-1, Control of Cash Receipts, be followed.

Withholding of Payments

Withholding payments for work the Contractor has performed and completed in accordance with the contract should not be done casually. There must be clear contract language supporting the action. The authority to withhold progress payments is subdelegated to the Regions. Further delegation to the Project Engineers is at the discretion of each Region.

There are very few occasions when it would be appropriate to withhold the total amount of a payment for completed work. If a minor amount of cleanup remains, if a portion of the associated paperwork has not been submitted, or if minor corrective measures are needed, then the correct action is to pay for the work and defer an amount commensurate with the needed remaining effort.

The concept of "allowing the Contractor to proceed at his own risk" and then withholding payment is not often supported by the contract. There is a contractual obligation to finish the work correctly, there would certainly be a "moral obligation" on the part of the Contractor to live up to the bargain, but there is no contract language that allows such an action. Specific exceptions to this rule are listed below.

Once a decision to withhold any part of the monthly payment has been reached, then it is imperative that the Contractor receive fair notice of this action. The method of this notice can be negotiated with the Contractor and could be a listing at the time of estimate cutoff, a copy of the pre-estimate report or other mechanism. Once notice has been provided, then it is also necessary to allow a reasonable time for corrections to be made.

No Payment for the Work – *Standard Specifications* Section 1-06.3 is unique in that this is a situation, specified as part of the contract, where the contractor may request permission to assume the risk for no certificate and end up never being paid for the related work.

Progress Payment Deferral – In the following situations, the contract specifies that the contracting agency has the authority to defer the entire progress payment:

- The contracting agency may not make any payments for work performed by a Prime/Subcontractor until the contractor performing the work has submitted a Statement of Intent to Pay Prevailing Wages approved by Labor and Industries (RCW 39.12.040).
- Failure to submit the "*required reports*" by their due dates (*Standard Specifications* Section 1-07.11(10)B).

Wage Administration in General – The administration of wages and payment for the work are separate issues. Holding a force account payment for certified payrolls is not appropriate. Withholding payments on the contract is suggested as a method to achieve compliance under *Standard Specifications* Section 1-07.9(1) pertaining to wages. This remedy should not be used without approval of the State Construction Office. Routine enforcement of wage requirements should be done on their own merits utilizing the sanctions specified as follows:

State Wage Administration – Labor and Industries is the enforcement agency for state prevailing wage administration. The State (WSDOT) is protected under the contract from wage claims by reserving 5 percent of the moneys earned as retained percentage. This 5 percent is made available for unpaid or underpaid wages liens among other claims. Contract payments should not be deferred due to a contractor's failure to pay the State minimum prevailing wage.

Federal Wage Administration – FHWA-1273 specifies that the State Highway Administration (SHA) is in the enforcement role for federal prevailing wage administration. Under Section IV "*Payment of Predetermined Minimum Wage*" subsection 6., "*Withholding,*" the State Highway Administration (contracting agency) is authorized to withhold an amount deemed necessary to make up any shortfalls in meeting Davis Bacon prevailing wage requirements. It goes on to authorize the deferral of all payments, under certain conditions, until such violations have ceased. This is only for federal wage requirements and the amount "deemed necessary" must be based on the amount of the underpayment.

Application of the *Standard Specifications* – *Standard Specifications* Section 1-05.1 reads in part as follows: "If the Contractor fails to respond promptly to the requirements of the contract or orders from the Engineer: …. 2. The Contracting Agency will not be obligated to pay the Contractor, and …."

Standard Specifications Section 1-09.9 reads in part as follows: "Failure to perform any of the obligations under the contract by the Contractor may be decreed by the Contracting Agency to be adequate reason for withholding any payments until compliance is achieved."

Sounds good and we can do so, but withholding of payments owed the contractor must not be done on an arbitrary basis. Other than the previously noted exceptions, money is normally withheld because work/work methods are not in accordance with contract specifications. Also, the amount withheld must have a logical basis. We cannot penalize the contractor by withholding more than the out of compliance work is worth.

Withholding payments should not be used routinely as a tool for forcing compliance on general contract administration requirements. The State is protected against nonperformance by requiring a performance bond. In the event that lack of contract compliance puts the State at substantial risk monetarily or safety wise, it may be appropriate to inform the contractor of the compliance problem and suspend work under *Standard Specifications* Section 1-05.1 until corrections are made.

When withholding money, remember that delaying the contractor's cash flow may damage the contractor's ability to perform work. Before doing so, the State should be able to demonstrate:

- Specifically what was not in accordance with the contract and where the requirement is specified in the documents.
- That the amount withheld is commensurate with the amount of the unauthorized, uncompleted or defective work.
- That the contractor was notified in a timely manner (within eight days per prompt pay laws) and given a chance to make corrections.
- That the State has worked with the contractor to mitigate corrections to non-specification work in order to minimize the cost.

The State is required to pay the contractor in a prompt manner within 30 days after receipt of the work or after recognition of entitlement to additional compensation. The Project Engineer must keep an eye on the calendar when scheduling monthly estimate payments.

Regions are not authorized to withhold amounts that are greater than the estimated cost of the missing or incorrect portion of the work. Any such excess withholding must be approved by the State Construction Office.

Delinquent Contractor Submittals

Missing submittals is a principal source of delays in closing out the project and processing the final estimate. As the project proceeds toward completion, the Project Engineer and the Contractor should attempt to obtain all submittals as the need arises. These might include such things as materials certificates, certified payrolls, extension of time requests, or any other item or document that might delay processing the final estimate. Attention is needed to assure the receipt of these items from subcontractors as they complete their work.

Final Estimates – Regions

The final estimate for a project is processed in the same manner as a routine monthly progress estimate. The *Work Done to Date* entry on a final estimate is the physical completion date. When the Region final estimate is completed and is run in CAPS at the Region, it will not generate a warrant for the Contractor. Instead, the Region final estimate will produce several reports: a final Comparison of Quantities; the Contract Estimate Payment Advice; the Contract Estimate Payment Total; and the Sales Tax Summary.

These reports should be carefully checked to verify the accuracy of items, quantities posted, and the costs that have accumulated through various progress estimates during the life of the contract. Where necessary, corrections can be made to the ledger and

the Region final estimate rerun as many times as it takes to make it correct before proceeding with the final estimate process.

If the final estimate shows an overpayment has been made to the Contractor, the estimate should still be processed in the same manner as a normal final estimate. If this occurs, the Contract Estimate Payment Totals report will show a minus amount due the Contractor. When the State Accounting Services Office receives the accepted final estimate package, that office will request any reimbursement due from the Contractor. The Project Engineer should not request reimbursement from the Contractor.

Once the Project Engineer has validated the final estimate amounts, a copy of the Comparison of Quantities Report, the Contract Estimate Payment Advice Report, and the Contract Estimate Payment Totals Report should be forwarded to the Contractor along with the Final Contract Voucher Certification. The Project Engineer might remind the Contractor that the person signing the Final Contact Voucher Certification must be authorized to do so. Authorized signatures are submitted by the contractor at the beginning of each contract.

Once the project has been physically completed, the final estimate package described above should be submitted to the Contractor for signature as soon as is reasonably possible. The final estimate package and request for the Contractor's signature should be transmitted to the Contractor formally. The effort to prepare the final estimate package will vary in nature and magnitude, depending on the project. In some cases, this work will conflict with field work on other projects. It is expected that final estimate preparation will be scheduled and accomplished as soon as possible, but not later than six months after physical completion.

Once the signatures and all necessary documents have been obtained, the final estimate package should be assembled by the Region and, for those contracts not executed by the Region, submitted to the State Construction Office. If any needed recommendations for assessment of liquidated damages associated with contract time have not already been submitted, this submittal should include them. The State Construction Office must resolve all issues of liquidated damages before the final estimate can be accepted and submitted to the State Accounting Services Office.

Final Estimates – Contract Acceptance

The final estimate package consists of the following:

- **Project Status Report** – the Project Status Report should address:
  - Contract time and recommendations for liquidated damages related to contract time.
  - Amount of railroad flagging used if any.
  - Miscellaneous Deductions identified.
  - Explanation of any Monies Due WSDOT as indicated in the Contract Estimate Payment Totals.
  - Identification of overruns/underruns in contract quantities and a brief explanation of resolution.

  - In addition, the report should indicate whether or not all Affidavits of Wages Paid have been received for the Contractor, and all subcontractors, agents or lower-tier subcontractors. List all Contractors, subcontractors, etc. for whom an Affidavit has not been received.
- **Final Contract Voucher Certification** – DOT Form 134-146, original only.
- If an assessment of liquidated damages has been made previously, include a copy of the letter from the State Construction Engineer to the Contractor assessing these.
- If an assessment of miscellaneous damages or liquidated damages resulting from causes other than time, include copies of letters from the Region to the Contractor for assessment of these.
- **Contract Estimate Payment Totals** – RAKC300F-EA.

The final estimate package for contracts executed by the Region will be reviewed by Region Construction and the Final Contract Voucher Certificate will be signed by the Region Administrator (as Designee) accepting the contract. The date on which the Region Administrator signs the Final Contract Voucher Certificate becomes the final acceptance date for the contract. The final estimate package is then submitted to the Division of Accounting and Financial Services.

When the final estimate package is reviewed by the State Construction Office, and submitted to the State Construction Engineer for acceptance of the contract, the date on which the State Construction Engineer signs the Final Contract Voucher Certification becomes the final acceptance date for the contract. The final estimate package is then submitted to the Division of Accounting and Financial Services.

Final Estimate Claim Reservations

Should the Contractor indicate a claim reservation on the Final Contract Voucher Certification, it must be accompanied by all of the requirements of *Standard Specifications* Section 1-09.11(2) (provided these have not been met in a previous claim submittal). The Project Engineer must assure that the requirements have been met prior to submitting the final estimate package to the State Construction Office. If the claim package is incomplete, return the voucher to the Contractor with notice of the missing parts.

Unilateral Acceptance of Final Estimates

The Project Engineer cannot establish a completion date for the contract if the Contractor is unwilling or unable to submit one or more of the required documents noted in *Standard Specifications* Section 1-08.5. However, the Region can request that the State Construction Engineer accept the contract by signing the Final Contract Voucher Certification (FCVC) in spite of the missing documents.

If the Contractor has not signed the FCVC, the Region can request that the State Construction Engineer accept the contract without the Contractor's signature. The Region is responsible for notifying the Contractor before such a request is made. The State Construction Office will generate the certified letter notice mentioned in *Standard Specifications* Section 1-09.9. The date of the State Construction Engineer's signature of the FCVC becomes both the acceptance date and the completion date of the contract, both established unilaterally.

Supplemental Final Estimates

A Supplemental Final Estimate is a payment adjustment made to a contract after the Final Estimate has been processed and the project has been accepted by the State Construction Engineer. A Supplemental Final Estimate may be necessary to correct an inadvertent under payment or where a claim settlement may require additional payment be made to the Contractor. In order to complete a Supplemental Final Estimate, the Project Engineer should complete and assemble the following items, routing them through the Region to the State Construction Office for review and further processing:

1. Complete any corrections or additional postings necessary in CAPS, including any postings to change order items added to CAPS for the settlement of a claim. (Please note, where additional CAPS postings are necessary after the Physical Completion date has been established, the *"Work Done To"* date in CAPS must be entered as the Physical Completion date or prior.)
2. Complete a Pre-Estimate report including the Project Engineer's recommendation for payment.
3. Assemble the backup information supporting the necessity and substantiating the cost of the changes to be made.
4. *Send 2 and 3 above via e-mail or campus mail to the State Construction Office.*

After review, the Pre-Estimate report will be signed by the State Construction Engineer authorizing payment to proceed.

While postings and corrections to CAPS may continue, once the Completion date has been established for a contract, CAPS will no longer allow the Project Engineer or the Region to process further payments to the Contractor. As a result, payment of the Supplemental Final Estimate will need to be completed for the Project Engineer by the WSDOT HQ Accountability and Financial Services Office/Vendor Payments & Receipts – contract payments section.

If this process requires a more timely response, the above documentation may be scanned and emailed to the State Construction Office and CAPS; and the contract payments section can be requested to print out the pre-estimate report to be taken to the State Construction Engineer for signature prior to processing the supplemental final estimate. Once the supplemental payment is completed, the signed and executed Pre-Estimate report will be returned to the Project Engineer where it can be maintained as a part of the project payment files and made a part of the Region Temporary Final Records.

The above process will also be used when there has been an inadvertent over payment to the Contractor, the Final Estimate has been processed, and the project has been accepted by the State Construction Engineer. In this case, the Project Engineer must work with the Region, the contract payments section of the WSDOT Accountability and Financial Services Office, and the State Construction Office to make the correction.

If WSDOT Accountability and Financial Services Office requires a supplemental Final Contract Voucher to reflect the new cost of the contract due to the supplemental estimate, the new voucher will not be signed by the Construction Engineer as that would reestablish the final acceptance date and restart the 30 day period to file claims

against the bond (RCW 39.08.030) and restart the 180 day period for Contractor to file suit (Section 1-09.3(11). The original acceptance dates will not change from the dates the Construction Engineer signed the original Final Contract Voucher Certificate.

SS 1-09.9(1) Retainage

Retained percentage withholding is based upon RCW 60.28, which provides that:

- A sum not to exceed 5 percent of the money earned by the Contractor on estimates for projects containing no Federal funds is to be retained by the Contracting Agency.
- The Contractor may submit a bond for all or any portion of the amount of funds retained by WSDOT.

  When a contract is awarded, the Division of Accountability and Financial Services (AFS)/Contract Administration and Payments System (CAPS) unit or the Region Plans Office sends a package of contract documents to the Contractor.

  This package of contract documents also includes the necessary instructions for the Contractor to make application for a bond to replace all or any portion of the retainage. The bond form will be processed by AFS/CAPS without involvement from Project Engineer's Office, although the payment system will not allow them to process a payment until some form of retainage is in place.

  The Contractor, at any time during the life of the contract, may make a request to the Project Engineer for the release of all or any portion of the amount of funds retained. This request does not need consent of surety since the retainage bond form, for this purpose, requires their consent. The Region must forward this request by transmittal letter to AFS/CAPS, which will furnish the appropriate bond form to the Contractor for execution. The Contractor may return the executed bond form directly to AFS/CAPS for final approval and signature by WSDOT.
- Effective June 27, 2011, for projects containing no Federal funds that include landscaping work the Contractor may request that, 30 days after completion of all contract work other than landscaping work, WSDOT release and pay in full the amount of funds retained during the life of the contract for all work except landscaping. In order to initiate this release of funds, DOT Form 421-009 should be completed by the Contractor and submitted to the Project Engineer. In signing the request, the Project Engineer will confirm that all work, except landscaping work, is in fact physically completed. For any landscaping work that may have been completed, the Project Engineer will designate the amount of landscaping moneys, if any, that have been earned to date by the contractor. In the space designated for remarks the Project Engineer will identify the landscaping or plant establishment work that remains to be completed and its approximate value. Except for landscaping work, the Project Engineer will determine if all Statements of Intent and Affidavit of Wages Paid have been received for the work that has been physically completed. The Project Engineer will transmit to the Contractor a list of all subcontractors, including UBI numbers, believed to have performed work on the project. The Contractor will verify which subcontractors did work on the project and that the UBI number listed is correct for each subcontractor. DOT Form 421-009 will not be transmitted to AFS/CAPS until the Contractor has verified the subcontractors and UBI numbers. WSDOT will continue to withhold a 5 percent retainage of any moneys earned for landscaping work that may have

been completed to date and will continue to retain 5 percent of the moneys that are to be earned for landscaping that is yet to be completed. A bond is not required.

The completed request along with the Project Engineer's cover memo confirming receipt of Statement of Intent and Affidavit of Wages Paid for the Contractor, subcontractor, and any lower-tier subcontractors, who were involved in the completed work, is then forwarded to the State Construction Office, through the Region Construction Office, for approval. Once approved, the Construction office will submit the request to AFS/CAPS for further processing. If there are no claims against the retainage still in place and releases have been received from Revenue and Employment Security within the designated 60 day period, AFS/CAPS will release the appropriate portion of retainage to the Contractor.

SS 1-09.10 Payment for Surplus Processed Materials

When excess aggregate is produced by the Contractor from a WSDOT furnished source, the Contractor will be reimbursed actual production costs if the excess materials meet the requirements of *Standard Specifications* Section 1-09.10. If more than one type of aggregate is involved, the provisions of *Standard Specifications* Section 1-09.10 apply to each type.

If WSDOT has a need for the excess aggregate for either maintenance or future construction contracts, the material may be purchased into the appropriate inventory account. The Project Engineer should contact Region Maintenance and Accounting for guidance. If aggregates are to be disposed of as surplus, the Project Engineer should contact the State Administrative Services Office, Purchasing and Inventory Section, for additional assistance.

SS 1-09.11 Disputes and Claims

Claims By the Contractor

When a protest occurs during a contract, the Contractor shall pursue resolution through the Project Engineer as outlined in *Standard Specifications* Section 1-04.5. The Specification contains specific requirements which, if not followed, may result in a waiver of the Contractor's claim. The Project Engineer should monitor whether the Contractor is meeting these requirements. If all of the requirements have been met, the Project Engineer shall evaluate the merits of the protest and take whatever appropriate action is needed to resolve the issue. If it appears that the Contractor has failed to meet any of the requirements set forth in *Standard Specifications* Section 1-04.5, the Project Engineer should advise the State Construction Office and request guidance. Pending such guidance, the Project Engineer may continue to discuss the protest with the Contractor with the qualification that no final evaluation of the protest will be made until permission is received from the State Construction Office.

Claims

If the Contractor has pursued and exhausted all the means provided in *Standard Specifications* Section 1-04.5 to resolve a dispute, the Contractor may file a formal claim. A formal claim, filed in accordance with *Standard Specifications* Section 1-09.11(2), is a much more structured device and demands a high level of conformance with the contract requirements. The objective is to utilize the rights

that WSDOT has under the contract to identify the issues, obtain a sufficient level of information from the Contractor and limit the discussion to a defined subject matter. To accomplish this, and to maintain the Department's rights in a situation that may lead to court action and expensive lawsuits, the Project Engineer must insist on rigid conformance with the requirements of the provision. In fact, the first evaluation must not be of the claim's merit, but rather of the claim's structure and content. If the package fails the specification requirements in any way, it should be returned to the Contractor immediately with a written explanation. Conversely, if the package meets the contract requirements, then the Project Engineer must comply with the demands for WSDOT actions that are included in the same specification.

The existence of a formal claim does not diminish the responsibility of the Project Engineer to pursue resolution. The only difference is that State Construction Office final approval of a proposed settlement is required. The change order settling a formal claim must include waiver language similar to the following:

> "The Contractor, (company name), by the signing of this change order agrees and certifies that:
>
> Upon payment of this change order in the amount of $_____, any and all claims set forth in the letter(s) to the Department of Transportation, dated _____ and signed by _____ of (company name) in the approximate amount of $_____, have been satisfied in full and the State of Washington is released and discharged from any such claims or extra compensation."

If the settlement is intended to close out all dispute discussions for the contract, use language similar to:

> "The Contractor, (company name), by the signing of this change order agrees and certifies that:
>
> Upon payment of this change order in the amount of $_____, any and all claims in any manner arising out of, or pertaining to, Contract No. _____, (including but not limited to those certain claims set forth in the letter(s) to the Department of
>
> Transportation, dated _____and signed by _____ of (company name) in the approximate amount of $_____, have been satisfied in full and the State of Washington is released and discharged from any such claims or extra compensation in any manner arising out of Contract No. _____."

Legal Filing

Once the Contractor has submitted a formal claim in acceptable form and the State has either denied the claim or failed to respond in the time allowed, the Contractor is free to seek judicial action by filing a lawsuit or, in some cases, demanding binding arbitration. Note that the Contractor must fully comply with the provisions of *Standard Specifications* Section 1-09.11 before it can seek judicial relief. Once any legal action has been started, the Project Engineer may only continue with settlement efforts if the Attorney General's office has given specific permission to do so. Such permission may be sought through the State Construction Office. Settlements of claims which have resulted in a judicial filing need review and approval by the Attorney General's office and different waiver language similar to the following:

"The Contractor, (company name), by the signing of this change order agrees and certifies that:

Upon payment of this change order in the amount of $_____, any and all claims in any manner arising out of, or pertaining to, Contract No. _____, (including but not limited to those certain claims set forth in the complaint filed under Thurston County Cause No._____ (Contractor's name) vs. State of Washington), have been satisfied in full and the State of Washington is released and discharged from any such claims or extra compensation in any manner arising out of Contract No. _____."

Final Contract Voucher Certification

In some cases, of course, the Contractor will not have been so cooperative as to participate in resolution efforts. After a protest has been disallowed, there may have been no formal claim filed and the Project Engineer really doesn't know if there is a continuing problem. The way to resolve this after the project is physically complete is to assemble the final estimate and send it to the Contractor with a Final Contract Voucher Certification (FCVC). The FCVC is the Contractor's last chance to formally file a claim. If there is no exception above the Contractor's signature on the FCVC, there is no claim. The contract will be over as soon as the State Construction Engineer accepts it. If the Contractor does not return the FCVC in a reasonable time, WSDOT may unilaterally set the completion date and process the final estimate without the Contractor's signature. Proposals to unilaterally accept a contract should be discussed with Region managers before any action is initiated.

SS 1-09.12 Audits

The Project Engineer is responsible for preparing all necessary records in order to document the work performed on the contract. Detailed instructions on the records required and methods of preparing them are covered in Chapter 10.

Construction Quality Audits

Construction Quality Audits will be performed by the Construction Division - State Materials Laboratory to document conformance of project records to DBE compliance, construction administration and materials certification standards.

The construction quality audit consists of documentation review and may include a field review. The documentation review will normally be conducted at the Project Engineer office unless arrangements are made for it to be conducted elsewhere.

The goal is to perform a construction quality audit on at least one project per Project Engineer office every three years. Construction quality audits may be conducted more frequently at the discretion of the Construction Division. Projects will be selected with consideration given to project size and complexity.

Audits will be performed during the active life of the project; generally, 20% to 80% complete. Construction quality audits are performed to validate the performance level achieved in adhering to construction inspection, contract administration and materials documentation standards; as well as contract compliance.

Records reviewed will include those maintained and developed by the Project Engineer for DBE compliance, inspection requirements, approval, acceptance and field verification of materials placed and paid for on the contract.

Upon completion of the audit, the findings will be discussed with the Project Engineer and/or their representative. A copy of the final report will be sent to the Region Documentation Engineer, Region Construction Engineer, State Construction Office, and the FHWA Division Office.

The Project Engineer will address any deficiencies found by the audit with the Assistant State Construction Engineer assigned to the Region, documenting the correction, deviation or change that resolved the deficiency. Deficiencies not rectified or meeting the requirements of Section 9-1.2F shall be noted during the Materials Certification. The Project Engineer is responsible developing and implementing a corrective action plan for ensuring that repeated deficiencies are avoided on future audits.

All contract documentation shall be available for review by the Audit Team. The following items of documentation will be requested by the Audit Team:

1. Request to Sublet Work Form 421-012
2. DOT Form 420-004
3. DBE On-Site Review Form 272-052
4. Record of Materials, as revised and amended by the Project Engineer office (see Section 9-1.2C)
5. Approval Documents
   a. Request for Approval of Material (see Section 9-1.3B)
   b. *Qualified Products List* pages (see Section 9-1.3A)
6. Acceptance Documents
   a. Test Results
      - Acceptance Test Reports
      - Assurance Test Reports (where applicable)
      - Independent Assurance Test Reports (where applicable)
      - Verification Test Reports (Cement and Liquid Asphalt)
   b. Manufacturer's Certificate of Compliance (see Section 9-1.4D)
   c. Miscellaneous Certificates of Compliance (see Section 9-1.4E)
      - Lumber Grading Certificate
      - Certification of Cement Shipment
      - Notice of Asphalt Shipment or Certified Bill of Lading
      - Any other certificates required by the contract documents
   d. WSDOT Fabrications Inspected Items (see Section 9-1.4B)
   e. Concrete Pipe Acceptance Report (see Section 9-1.4B(3))
   f. Catalog Cuts (see Section 9-1.4G)

g. Proprietary or Agency Supplied Items (see Sections 9-1.3B(1)(IV) and 9-1.3B(1)(V))

h. Visual Acceptance Items (see Section 9-1.4C)

i. Reduced Acceptance Criteria Checklist (see Section 9-1.1)

7. Field Verification Documentation (see Section 9-1.5)

   a. Inspectors Daily Reports

   b. Field Note Records

8. Inspectors Daily Reports

9. Field Note Records

10. Comparison/Summary of Quantities

11. List of Change Orders

12. Project Engineer office Signature/Initial List

1-10 Temporary Traffic Control

SS 1-10.1 General

Work Zone Traffic Control

The primary function of work zone traffic control is to move vehicles and pedestrians safely through or around work zones while protecting on-site workers and accommodating the contractor's construction operations.

All work is to be performed by the contractor under the contractor's control and supervision. All resources are to be provided by the contractor unless the Special Provisions of the contract specifically states that the department will provide some resource(s), what those resources will be and how they are to be utilized. Such provided resources will be placed in the contractor's control to be used in the contractor's operation. Any additional resources provided to the contractor during the project should be accompanied by a change order to the contract and, where appropriate, a price reduction.

The "General" requirements for traffic control (*Standard Specifications* Section 1-10.1) address the responsibility to provide adequate traffic control measures at work zones as follows:

- No work shall be done until all necessary signs and traffic control devices are in place and/or conflicting and confusing signs are covered.
- If the Contractor does not provide necessary traffic control, WSDOT may do it and deduct the cost from the Contractor's payments.
- The Contractor is responsible regardless of whether or not WSDOT orders, furnishes, or pays for necessary traffic control.

It is important for the Project Engineer to ensure that the Contractor has an approved traffic control plan in place and implemented providing all necessary signs and other traffic control devices so that the traveling public is aware of all deviations from the normal traffic conditions and is furnished adequate direction and guidance to permit safe travel through the construction area.

Washington State Patrol (WSP) Traffic Control Assistance

Washington State Patrol (WSP) troopers may fulfill two roles on a construction project. In the first case, troopers may be dispatched to participate in the Contractor's traffic control activity, perhaps as Flaggers, or to perform rolling slowdowns. The WSP role will be defined in the contract provisions.

WSDOT has an agreement, GC5080, with the Washington State Patrol (WSP) for that agency to provide troopers and vehicles to help with traffic control on construction projects. WSP traffic control assistance is considered an enhancement to the required work zone traffic control and should be reserved for those work zones that have unusual hazards or a high degree of worker exposure to traffic, which cannot be addressed by traditional traffic control means.

The Project Engineer should ensure that good communication is maintained with WSP troopers assigned to the project and that the appropriate traffic control strategy is applied. On each shift of WSP traffic control assistance, DOT Form 421-045, WSP Field Check List, shall be filled out. WSDOT will fill out the top portion of the form and give it to the WSP trooper on the project to complete. At the end of the officer's shift, the completed form shall be returned to WSDOT.

The Contractor shall direct the activities of the WSP troopers assigned as a labor resource provided by the State. Instructions for WSP assistance are in *Traffic Manual* M 51-02 Appendix 5A.

The second case of WSP involvement is in the area of enforcement. In this case, the troopers are not considered to be a State-provided resource and do not participate in the Contractor's traffic control work. When this situation occurs, WSP is present (at WSDOT expense) to provide enhanced, increased and visible enforcement of all traffic regulations, including those installed by the Contractor in the course of the work.

Enforcement officers are simply doing more of what they usually do. Their presence or lack of presence is due to administrative decisions by the department and WSP that are completely independent of the contract. They are not to be considered a provided resource, there shall be no entitlement to their services and neither the Contractor nor the Project Engineer shall direct their activities.

As stated above, a mid-project decision to provide troopers would be a change order. To be fair to unsuccessful bidders, such a change would need a price adjustment if nothing else had changed.

Records of Construction Signing, Collisions, and Surveillance

Due to the increased damages being awarded by the courts for improper signing, it has become more important that detailed records of signing and delineation be continuously maintained on every project on sections of highway within the construction limits under traffic. The following are recommended procedures and methods of recording the signing on the project:

- Use extensive photographic, digital or videotape records.
- The Contractor's signing must adhere to the TCP, and the records must confirm that the sign installation is checked against that plan. The Regional Traffic Engineer should only be involved in significant changes to TCPs and need not be involved in minor adjustments.

- Documentation of the Contractor's activity for traffic control, including signing, should be completed by the Contractor's Traffic Control Supervisor (TCS). In accordance with the *Standard Specifications*, the TCS must maintain a daily project traffic control diary. DOT Form 421-040A Contractor's Daily Report of Traffic Control – Summary, and 421-040B Contractor's Daily Report of Traffic Control – Traffic Control Log, are provided to the Contractor for this purpose.

  The Summary report will typically contain a brief description of the daily activities of the TCS with expanded details of any important happening such as traffic collisions, meetings, decisions, or rapidly deteriorating conditions of traffic or weather. The Summary report is usually sufficient to verify the location and status of Class A signs once they are installed.
- The Traffic Control Log report is used to specifically identify all details of each Class B work zone setup. This includes identification of specific signs used, location of the signs, location of flaggers, location of the work zone, the time it was set up, and the time it was removed. Additional information includes cone layout, if used, comments about piloted traffic, and comments about the relationship of the setup to an approved traffic control plan.

The Project Engineer should make an effort to become aware of any traffic collisions that occurs within the project area. Thorough records should be maintained about the collision, including site conditions and the status of signing and other traffic control measures. When an incident is investigated by the WSP, do not move signs until released to do so by the trooper. When inspections are made of the work zone, either by project or region personnel, the documentation of these inspections should be maintained in the project files along with responses to any action items that resulted from the inspection.

Work Zone Safety and Mobility

In keeping with the above recommendations, the Project Engineer should utilize the information obtained from traffic control reports, collision reports, and other field observation in order to better manage Work Zone impacts. This will allow the Project Engineer to implement any necessary changes to traffic control in order to increase safety and to enhance mobility through the work zone.

At the completion of each project, the Project Engineer should review the traffic control used on the project in order to identify trends, etc. that may be used to improve Work Zone practices or strategies. This information should be summarized and provided to the Region Traffic Office for inclusion in annual reports.

SS 1-10.2 Traffic Control Management

Standard Specifications Section 1-10.2 addresses the requirements and duties of the Contractor's management personnel responsible for traffic and the Traffic Control Supervisor (TCS). The Contractor has the responsibility for managing traffic control and providing safe traffic control measures that are appropriate for the type of work and consistent with the requirements of the contract plans and specifications. The Contractor's traffic control work is a contract activity. Just like other contract activities, it is associated with pay items. The activity must be inspected for adequacy and conformance with the contract. Once it is performed and inspected, associated

contract items must be measured and paid. Traffic management actions affect not only the Contractor's work operations, but also those of subcontractors. The process for coordinating and approving those actions must be well defined and consistent with the contract requirements.

Contractor management and the TCS work together with the Project Engineer and WSDOT's traffic control contact person to address traffic control issues as the work progresses. Planning and coordination of the Contractor's work efforts with appropriate traffic control measures are the primary responsibilities of contractor management. It is also the responsibility of management to ensure that any adopted State-provided or approved Contractor-proposed Traffic Control Plans (TCPs) needed to implement the contract work operations are provided to the TCS and that any necessary resources to implement the TCP are available.

SS 1-10.2(1) General

SS 1-10.2(1)B Traffic Control Supervisor

The TCS ensures that the traffic control measures shown on the approved traffic control plans (TCPs) are properly implemented, operating, and documented on the project. The Contractor's TCS may not be required full time on the project, but is required to perform all the duties required by the specifications. When the Contractor is working multiple shifts, it may be necessary to have more than one person assigned to the role.

In addition to the Contractor's responsibility to designate a Traffic Control Supervisor, WSDOT may designate a DOT employee who is qualified, but not necessarily certified, to serve as the State's traffic control contact. It is intended to have qualified, trained representatives from both the Contractor and WSDOT work together to achieve safe traffic control operations on the project.

Among the duties of the Project Engineer in the area of Traffic Control are the following:

- **Communication** – About the planned work, traffic control needed and adjustments to the approved Traffic Control Plan. During the work, to stay aware of changes, events and issues.
- **Monitoring** – The activities of the Contractor TCS and traffic control workers. The status of signs and control devices. Conformance with specifications and requirements.
- **Documentation** – Obtaining and reviewing daily reports. Handling Traffic Control Plans and their approvals.
- **Coordination** – With adjacent projects, with DOT Traffic offices, notices to the media.

The Project Engineer may assign these duties in any manner. It would make sense to include the State's traffic representative in these activities.

When reference is made to the Traffic Control Supervisor (TCS) in these provisions or in the *Standard Specifications*, it shall mean the Contractor's Traffic Control Supervisor unless stated otherwise.

SS 1-10.2(2) Traffic Control Plans

Standard Specifications Section 1-10.2(2) addresses the requirements of Traffic Control Plans (TCPs). The Contractor must either adopt the TCPs appearing in the contract or propose modified TCPs to be used for the project. The Contractor must submit proposed modifications to plan TCPs or alternate plans at least ten calendar days in advance of the time the traffic control will be required. Approval of these plans must be obtained before the work can begin.

The possibility of alternate plans is covered by the contract. No change order will be needed because of that reason. However, if a price adjustment is needed then a change order will be necessary to accomplish that. We would allow additional payment, either through added units or revised lump sums, only if the original contract TCP was shown to be inadequate or in the case of traffic control needed for another change in the work. If the proposal is only for contractor convenience or preference, then a discussion of no pay for added traffic control or a credit for less traffic control would be appropriate. If the contractor should balk at this, the response could be "build according to plan."

Minor modifications to the TCP may be made by the Traffic Control Supervisor to accommodate site conditions. Modifications or adjustments to the plan must maintain the original intent of the plan. When there is a change in the intent and/or substantial revisions are needed, a revised TCP shall be submitted for approval through the TCM to the Project Engineer. The Regional Traffic Office should be consulted when this situation occurs. Again, changes may call for a formal change order.

Traffic Control Plans should not only address all work zones and standard devices and signs but should also address issues such as:

- Conflicting or temporary pavement markings.
- Maintaining existing operational signs and covering conflicting signs.
- Staging requirements.
- Temporary vertical or lateral clearance restrictions.
- Temporary work zone illumination.
- Consistency with any existing work hour restrictions.
- Position of positive barriers for traffic hazards or worker protection.
- Vertical drop-offs.
- Work zone access.
- Intersection or access control (traffic signals, road approaches).
- Pedestrians and bicycles.
- Work zone capacity and related mobility impacts.

If the Contractor's method of operation or the work area conditions require other than minor modification of the specific TCP appearing in the contract or any of the TCP's previously designated and adopted by the Contractor, the Contractor shall submit a proposed modification of the TCP for approval. If the Contractor's proposed modifications comply with the MUTCD requirements and are consistent with contract requirements as well as State and Region policy, the Project Engineer may approve these proposed modifications (perhaps utilizing a change order, if appropriate.) If the

Contractor's proposed modifications do not comply with the MUTCD requirements, the Project Engineer should consult with the Region Traffic Engineer.

Any Contractor proposed TCP or modifications to an existing TCP should be evaluated for their effects on work zone safety and mobility. The Project Engineer should refer to the guidance in the *Design Manual* M 22-01 Chapter 1010 when evaluating how the new TCP works within the projects overall Transportation Management Plan (TMP).

On heavily used freight routes (I-5, I-205, I-405, I-90, I-82, I-182, SR 18, SR 167, and US 395-Tri-cities to Spokane), the contract may require that the Contractor provide the Engineer 30 calendar days of notice before implementing a TCP that reduces the travelled way to a single lane with a clear width of less than 16 feet for more than 4 calendar days. The request from the Contractor will include a schedule showing the dates of the width reduction, details of the limits and amount of the width reduction, description of available detour routes and a plan to provide unrestricted travel windows through the work zone when possible. The Engineer must provide 21 days of advance notice to Commercial Vehicle Services (CVS) at CVSPermits@wsdot.wa.gov. The Engineer should provide details of the width reduction to CVS and provide updates if there are any changes or adjustments in the schedule for the width reduction.

If there is any doubt that the proposed TCP complies with the MUTCD or provides for the safe movement of traffic, the Project Engineer shall consult with the Region Traffic Engineer or the Region Construction Manager.

SS 1-10.2(3) Conformance to Established Standards

Standard Specifications Section 1-10.2(3) addresses the requirements for standards and condition of signs and all other traffic control devices. In addition to standards established in the latest adopted edition of the MUTCD and/or as specified in the contract plans, all traffic control devices shall meet the crashworthiness standards of the "National Cooperative Highway Research Project, 350" (NCHRP 350) or the AASHTO Manual for Assessing Safety Hardware (MASH). There are four categories of traffic control devices. Category 1 devices consist of small lightweight devices that generally do not present a hazard. Typical Category 1 devices are cones, tubular markers, and plastic drums with no attachments. The Contractor is required to keep the manufacturer's certification document on file and available for inspection if needed. Inspection of certification documents by WSDOT is not routinely required but should be considered if operational or safety issues are observed.

Category 2 contains devices that are more hazardous due to their rigid construction, such as barricades, portable sign stands, and drums with lights. The collision test certification rules apply to all Category 2 devices. The Inspector should verify, and document, that all portable sign stands have an identifying label affixed. The label will display the FHWA approval letter designation and will appear similar to the image below.

Category 3 devices are fixed or substantial in mass and could cause significant damage to a vehicle or its occupants. Devices such as barriers, fixed sign supports, and TMAs are included in this category. WSDOT maintains a list of approved devices in this category on the QPL. Barrier is to be included in the contract plans to ensure that it meets WSDOT design standards.

Category 4 devices are typically trailer or truck mounted devices such as arrow boards, PCMS, portable signals, and portable lighting units. Crash testing is not required for these devices but care must be given to their placement to ensure that they do not pose an undue hazard to drivers, and that they meet the requirements of Section SS 1-10.3(3).

Resources for Traffic Control and Work Zone Safety

The following information may provide additional guidance and more specific detail. Also, this list includes the staff, reference documents, and manuals mentioned throughout Section SS 1-10.2(3).

- *Work Zone Traffic Control Guidelines* M 54-44
- *Traffic Manual* M 51-02 Chapter 5
- MUTCD Part VI
- Work Zone Safety Task Force Recommendations
- Quality Guidelines for Temporary Traffic Control Devices (ATSSA)
- Work Zone Traffic Control Supervisor's Notebook
- Highway Work Zone Reviews, 1997 (Work Zone Safety Task Force)
- Planning and Scheduling Work Zone Traffic Control (FHWA-IP-81-6)
- Executive Order E 1060 *Speed Limit Reductions in Work Zones*
- *Traffic Manual* M 51-02 Appendix 5A Work Zone Traffic Control
- Traffic Control Supervisor Evaluation – Final Report
- Region Construction or Traffic Office (Traffic Engineer or Work Zone Traffic Control Specialist) and Public Information Officer
- State Traffic Office (Mobility and Safety Manager or the State Traffic Control Engineer)

SS 1-10.3 Traffic Control Labor, Procedures, and Devices

SS 1-10.3(1) Traffic Control Labor

All traffic control labor must be trained to ensure safety in the work zone. Flaggers have additional requirements concerning flagging cards and apparel.

All flaggers working on WSDOT construction projects must have a valid State of Washington flagging card or a flagging card issued by the states of Oregon, Montana, or Idaho. Flaggers and all other personnel performing the Work described in *Standard Specifications* Section 1-10, are required to wear high visibility apparel as specified in *Standard Specifications* Section 1-07.8. Other workers may certainly use this type of clothing, but doing so is not a contract requirement, unless they are performing work on foot within the work zone of a Federal-Aid highway.

SS 1-10.3(1)A Flaggers and Spotters

Typically, flaggers have the highest exposure to traffic hazards and are more frequently injured or killed than other workers. Flaggers should only be used when all other forms of traffic control are inadequate to control traffic. When flaggers are used, flagging stations must be shown on the TCP along with the required illumination, warning signs and devices. Flagger stations should be protected with a positive barrier, if possible.

The flagger must also have in mind an "escape plan" to avoid errant vehicles. It is not allowed to use flaggers at locations, such as freeways, where their primary function of warning or directing traffic is ineffective or not intended. Use of flaggers to exclusively display the "SLOW" message is also not recommended and is, in fact, not required by the contract. The provisions call for a flagger with intermittent responsibilities to direct traffic to step back from the flagging station between tasks. Additional guidance on the use of flaggers is located in the *Traffic Manual* M 51-02 and the *Work Zone Traffic Control Guidelines* M 54-44.

SS 1-10.3(1)B Other Traffic Control Labor

For some projects, labor in addition to the assigned Flaggers is needed for a variety of traffic-related tasks. Some of these tasks are listed in the provisions. Hours for this item are measured only for work on certain defined tasks (see *Standard Specifications* Section 1-10.4(2)).

SS 1-10.3(2) Traffic Control Procedures

SS 1-10.3(2)A One-Way Traffic Control

The major points to note in *Standard Specifications* Section 1-10.3(2)A are:

- The provision does not limit one-way traffic control to treated bases, surface treatments, and pavements. This type of configuration can be used in other operations, such as grading, when appropriate.
- Line of sight is important in coordination of side roads and approaches with the limits of the one-way operation.
- When the contract does not stipulate a pilot car operation (i.e., bid proposal does not include such an item), a new item can be established by change order if the Engineer deems that method of traffic control to be most appropriate; and
  - Contractor vehicles and equipment may utilize the closed lane in any manner. The one-way controlled open lane is for public traffic and, should the contractor use that lane, all rules and procedures applicable to public traffic will apply to the contractor. There will be no "wrong-way" travel in the open lane, no heavy equipment will join the public traffic and any additional traffic control will be performed according to approved plans only.
  - The contractor is required to plan and conduct operations so that the roadway can be reopened to two-way traffic at the end of the shift. If the nature of the work prevents this or if the work area is left in a condition unsafe for public two-way traffic, then the contractor must continue the one-way operation throughout the off-shift hours.

SS 1-10.3(2)B Rolling Slowdown

This can be a useful method of creating gaps in traffic for specific, very short-term non-repetitive activities such as sign bridge removal or utility wire crossing. Rolling slowdown traffic control operations are not to be used for routine work that can be addressed by standard lane or shoulder closure traffic control. The Contractor may implement a rolling slowdown on a multilane roadway, as part of an approved traffic control plan per *Standard Specifications* Section 1-10.3(2)B. The key is planning and communication. If all goes well, the gap will arrive at the site and be of long enough

duration that the activity can be completed. If this breaks down, the contractor must undertake the most expeditious method of restoring the open roadway. If demobilizing and pulling off is faster than finishing the task, then demobilizing is the path that will be followed, without regard to cost, efficiency, or schedule.

SS 1-10.3(2)C Lane Closure Setup/Takedown

The use of truck-mounted attenuators (TMA) with arrow boards is required by the provisions. This combination is to be used during the transition from open lane to closed lane. Once a lane is closed, the TMA may be removed, leaving the arrow board alone.

SS 1-10.3(2)D Mobile Operations

The key to this operation is to keep the traffic control equipment effectively close to the work and moving to match the work operation. Two traffic protection devices are used. One is a TMA/Arrow Board combination upstream of the work. The primary purpose of this device is to protect the errant vehicle from fixed object collisions. The second device (preferably a TMA) is immediately adjacent to the work area. Its purpose is to protect the workers from the errant vehicle.

SS 1-10.3(2)E Patrol and Maintain Traffic Control Measures

This activity is to observe, repair and maintain traffic control devices and layout. The provisions require an hourly visit to each device and layout. Depending on the extent of the control measures, more than one patroller may be required.

SS 1-10.3(3) Traffic Control Devices

SS 1-10.3(3)A Construction Signs

The standard of these provisions is that the contractor provides all signs, posts and supports. If the special provisions do not promise that some or all of these will be furnished by the State, then the contract requires the contractor to do it all. All signs shall be constructed from either aluminum or aluminum composite materials.

"Do Not Pass" and "Pass With Care" signs are the responsibility of the Contractor. The provisions explain how to determine the number of these and that determination is to be made by the Contractor as well.

Construction Signs (*Standard Specifications* Section 1-10.3(3)) divides construction signs into two categories, Class A and Class B, and lists the work required for the Contractor.

At no time should signs be left in traffic control position during periods when they are not necessary to traffic safety. Indiscriminate use of traffic control signs soon destroys public confidence and respect for the signs. Unnecessary traffic restriction and inconvenience tends to reduce the effectiveness of all signing and causes difficulty in enforcement by authorities. The Project Engineer should ensure that signs are removed or completely covered per *Standard Specifications* Section 8-21.3(3) during the hours they are not needed, either before or after working hours and on nonworking holidays or nonworking weekends. Tripod-mounted signs in place more than 3-days in any one location, unless approved by the Project Engineer, shall be required to be post mounted to improve visibility, and to keep useable shoulders clear.

Signing for nighttime traffic is more difficult than that required for daylight hours. A review of the project signing should be made and recorded during the hours of darkness.

Signs and other traffic control devices should be shown on the traffic control plan (either State-provided or contractor-submitted) approved and in use and should be installed with adjustments for work zone and traffic conditions. The Contractor and WSDOT should ensure proper use and placement of signs and devices. For situations not addressed by the TCPs, the Project Engineer will determine who is responsible for preparing a revised TCP. Refer to the Work Zone Traffic Control Guidelines Book, MUTCD, or seek assistance from the Region Traffic Engineer for appropriate TCP revisions. A modified or new TCP may be needed if adjustments to signs and devices do not adequately address existing hazards or resolve observed traffic problems or accidents.

Judgment will be required when a traffic control plan is changed. The project engineer must determine if the change has arisen because of a flaw in the original plans or because of the contractor's activities or preferences. In the first case, a change order, perhaps with compensation, may well be needed.

The remaining devices listed in the provisions are the following:

- Sequential Arrow Signs
- Portable Changeable Message Sign
- Barricades
- Traffic Safety Drums
- Traffic Cones
- Tubular Markers
- Warning Lights and Flashers
- Truck-Mounted Attenuator
- Tall Channelization Devices
- Portable Temporary Traffic Control Signal

The specifications for these devices should be sufficient to explain their use and requirements.

SS 1-10.4 Measurement

Measurement is the key element of the new provisions, which now contain lump sum bid items. The provisions will define one of several pay item strategies, which will determine the measurements to be made.

First, the "normal" project with these provisions will contain items. The items are different from previous contracts and are non-standard, although several have very similar item names. Each of these is described below.

Instead of items, the project may be designated as a "Total Project Lump Sum." This will be the case if the item "Project Temporary Traffic Control, Lump Sum" is included in the proposal. If this is the strategy of the project, then all measurement and payment provisions for all other pay items are deleted from the contract. When this occurs, then all temporary traffic control costs of whatever nature (everything defined in Section 1-10) are included in the lump sum.

The project may be a lump sum hybrid. In this case, the Total Project Lump Sum item will be present, but the provisions will reinstate one or more of the deleted standard items. If that happens, the measurement and payment of the reinstated item(s) will be separate from and not included in the lump sum.

These are the items and a discussion of the features of the measurement spec for each:

- **Traffic Control Supervisor (Lump Sum)** – Previously paid by the hour, this item is now a fixed cost. Overtime is not considered, a second TCS for a night shift makes no difference. This lump sum status will likely cause TCS to become a part of change order negotiations. If the change does, in fact, require additional TCS work, then there would be entitlement. This will also apply to extended contract duration, as the TCS can be considered part of on-site overhead.
- **Flaggers (Per Hour)** – This contract activity is separated from other kinds of traffic control labor. It is measured according to the hours that an approved flagging station is manned. We will not count minutes and seconds; time will be rounded up to the half hour as specified in *Standard Specifications* Section 1-09.1. If a station is manned, but full-time presence of the flagger is not necessary (trucks entering roadway, equipment crossing) then the flagger is expected to step back out of harm's way until the next event. No deduction will be made for this stepping back, provided the flagger cannot be assigned to other duties while waiting. In measuring flagging, disregard overtime, split shifts, union rules for show-up time, the trade classification of the flagger and any other payroll issues. The flagging is a service that is provided and paid by the hour. It is only peripherally related to the flagger's paycheck.
- **Other Traffic Control Labor (Per Hour)** – There are other duties for traffic control labor besides flagging and spotting. Some of them are included in this item for separate measurement. If one of the activities listed in the provision is provided, then measurement of that activity is appropriate. Only the hours that the activity is performed will be measured. Again, this is not a payroll measurement.

  Note the limit under patrolling and maintaining. No matter how many people are involved in this activity, measure only one hour for each hour that each approved route is operated.

  Another little feature shows up under the last bullet (Installing and removing devices). Time spent ahead of the setup marking layout points on the shoulder or getting signs ready in the yard will be measured under this item.

  Do not succumb to pressures to add other hours to this item. As the payment spec for "Other Temporary Traffic Control" states, all costs not compensated by other items are covered there.

  Construction Signs, Class A (per sq ft) to qualify for payment under this item, the sign must be designated as Class A on an approved TCP or be directed installed by the Engineer and designated as Class A at the time of direction. After-the-fact re-designations of signs that have been originally thought to be Class B should not be considered.

- **Other Unit Price Items** – The traffic control provisions limit unit items to major devices. These include Sequential Arrows, Changeable Message Signs, Portable Signal and Transportable Attenuators. The measurement and payment requirements for these are similar or identical to those which have been in use for some time and are relatively straightforward.

One point to make is with the force account item for Repair Transportable Attenuator. Because this is a temporary installation and not a part of the permanent work, the Third Party Damage item does not apply and that is why a separate force account is established. If the damage was caused by a third party, the department may well be able to recover the costs paid to the Contractor under this item. The Project Engineer should take steps to protect the department's interest and involve the Maintenance, Accounting and Risk Management offices to initiate the efforts to recover costs.

SS 1-10.5 Payment

The payment provisions of the new specifications are intended to provide a mechanism that accounts for all of the Contractor's costs for temporary traffic control. The total project lump sum item is self-explanatory. There is no additional payment unless there is a change order.

If the job contains items, the pay definition for each describes the limited portion of the Contractor's costs that are covered by each item. The summary lump sum item (Other Temporary Traffic Control) is written to be a catchall cleanup that lets nothing escape for "additional compensation" discussions.

Watch out for change orders. A principal concern over lump sum items is that work will be added that is not required by the original contract and no mechanism exists to increase traffic control payment. This can be straightforward in identified changes, merely becoming an additional aspect of the negotiation. More troubling are constructive changes, which are not written, but which do end up in negotiation. An "overrun" of asphalt pavement to add a few driveways may be a convenient way to do field decisions, but may also create a dispute over the related traffic control costs (not to mention the dispute about the changed nature of the paving.).

Chapter 2 Earthwork

2-01 Clearing, Grubbing, and Roadside Cleanup

SS 2-01.3 Construction Requirements

SS 2-01.3(1) Clearing

Before starting grading operations, it is necessary to prepare the work area by removing all trees, brush, buildings, and other objectionable material and obstructions that may interfere with the construction of the roadway. From the standpoint of roadside appearance and control of erosion on the right of way, it is advantageous to preserve natural growth where possible. When shown in the Plans, the first order of work shall be the installation of high visibility fencing (HVF) to delineate all areas for protection or restoration. The Project Engineer should double check the placement of the HVF and ensure it matches the locations indicated on the Joint Aquatic Resource Permit Application. In addition, the Project Engineer should discuss with the Landscape Architect the preservation of natural growth which will not interfere with roadway and drainage construction before starting clearing operations. If vegetation outside the clearing limits is damaged during the clearing or grubbing operations, or if pruning is required, the Landscape Architect or State Horticulturist may be contacted for assistance. Areas to be omitted from clearing or extra areas to be cleared should be determined before starting work and an accurate record made during staking operations.

Staking

Clearing stakes at least 4 ft long and marked “Clearing” should be set at the proper offset marking the limits of the area to be cleared. These stakes normally should be set at 100-ft intervals on tangents and at shorter intervals on curves, depending on the sharpness of the curve. Where slope treatment is provided, clearing normally should be staked to a distance of 10 ft beyond the limits of the slope treatment with a distance of 5 ft being considered the absolute minimum distance required. Normally, grading stakes should not be set until clearing and grubbing work in a given area is completed. The method of measurement used at interchange areas should be such as to preclude the possibility of duplication or overlapping of measured areas.

SS 2-01.3(2) Grubbing

Grubbing provides for additional preparation of the work area by removal of remaining stumps, roots, and other obstructions which exist on or in the ground in all areas designated for grubbing. It should be noted that complete grubbing is not required under embankments where the fill height above natural ground, as measured to subgrade or embankment slope elevation, exceeds 5 ft. This exception does not apply to any area where a structure must be built, subdrainage trenches are to be excavated, unsuitable material is to be removed, or where hillsides or existing embankments are to be terraced. Grubbing is important to the structural quality of the roadway and every effort should be made to obtain a thorough job. Grubbing should be completed at least 1,000 ft in advance of grading operations.

The Contractor may accomplish clearing and grubbing in one operation. Complete grubbing under fill heights in excess of 5 ft is not required unless the contract provisions specifically modify *Standard Specifications* Section 2-01.3(2).

Staking

Grubbing stakes shall be set at the limits of the slopes as specified. Where slope treatment is required, grubbing shall be extended to the limits of the slope treatment. Accurate records of grubbed areas need to be kept in the form of sketches and measurements.

SS 2-01.3(4) Roadside Cleanup

This work consists of cleaning up, dressing, and shaping the roadside area outside the limits of construction. In advance of completion of other work on the project, the Project Engineer and the Contractor need to determine the work to be done, the equipment and labor necessary, and estimate of the cost of the work. Do not use this item for any work to be paid under "Trimming and Cleanup," or any other item.

Any trees or snags outside the limits of areas to be cleared which may endanger traffic on the roadway itself should be removed under this work. Before removing danger trees outside of the right of way, the matter should be referred to the Regional Office for negotiations with the property owners. If, however, an emergency arises, which endangers traffic, the danger trees may be removed immediately and the Project Engineer shall notify the Region as soon as possible.

The work required in shaping the ends of cuts and fills so they appear natural with the adjacent terrain will be greatly reduced if proper warping of the cut and fill slopes has been accomplished during the grading operations.

SS 2-01.4 Measurement

When the contract provides for measuring clearing and grubbing by the acre, it is the intent of the specifications to measure all areas actually cleared and grubbed. Minor uncleared areas within the clearing limits may be included in the quantity if they are less than 50 ft long, measured parallel to the centerline and contain an area less than 2,500 sq ft.

Small, isolated areas to be cleared, located between areas excluded from measurement and which contain less than 2,500 sq ft, shall be measured as containing 2,500 sq ft. Where isolated areas occur intermittently, the sum of the areas allowed by this method of measurement shall not exceed the total area (containing the several isolated areas) when measured as continuous clearing. This condition can occur when clearing narrow strips less than 25 ft in width.

2-02 Removal of Structures and Obstructions

SS 2-02.3 Construction Requirements

Buildings, foundations, structures, fences, and other obstructions which are on the right of way and are not designated to remain, shall be removed and disposed of in accordance with the *Standard Specifications*. All salvageable materials designated to remain the property of the Washington State Department of Transportation (WSDOT) shall be removed carefully and stored in accordance with the special provisions. Foundations shall be removed to the designated depth and basement floors shall be broken to provide drainage of water. Basements or cavities left by their removal shall be backfilled as specified, and if the areas are within the roadway prism, care shall be taken to see that the backfill is properly compacted.

When water wells or septic tanks are encountered, the project office needs to ensure they are meeting all the required environmental considerations for leaving in place or abandonment. Contacting the Regional Office for guidance is suggested. Wells having artesian characteristics will require special consideration to avoid water entrapment.

Care shall be taken to see that pavements or other objects which are to remain are not damaged during this operation.

2-03 Roadway Excavation and Embankment

SS 2-03.1 Description

Roadway excavation is specified in accordance with *Standard Specifications* Section 2-03.1 and shall include all materials within the roadway prism, side borrow areas, and side ditches. Borrow, unsuitable excavation, ditches and channels outside the roadway section, and structure excavation are separately designated. Area designations shall not be construed to imply classification based on the type of material involved.

GEN 2-03.1(1)

GEN 2-03.1(1)A General Instructions

Present day earth-moving equipment and practices have accelerated grading operations to the point where the Project Engineer must make every effort to plan ahead and foresee conditions which may require changes in plans, special construction procedures, or specific coordination with subcontractors or other contractors. Delays in work progress are costly both to the Department and to the Contractor, and must be avoided whenever possible.

The Project Engineer needs to become familiar with the soil report and soil profile if they are provided and compare the preliminary soil data with the actual findings. This will allow for adjustments in the work, such as changes in haul to make best usage of better materials, changes in surfacing depth, variations in drainage, or a determination of same or changed conditions from what was expected.

The Project Engineer's Office should examine each newly exposed cut as soon as possible after it is opened in order that necessary changes may be made before excavating equipment has been moved away. This will necessitate an inspection of the cut slopes and the ditch cuts to locate any objectionable foundation materials or faulty

drainage conditions which should be corrected. Objectionable materials are those having characteristics which may cause an unstable subgrade. Among the conditions the Project Engineer must watch are soil moisture contents which are so high as to render the subgrade unstable under the designed surfacing, high water table and soils where frost heaving may be serious, such as silts and very fine sands having high capillary attraction. In the event such conditions are discovered, the Project Engineer needs to contact the Regional Materials Engineer for assistance in determining corrective action to ensure a stable subgrade is achieved.

Standard Specifications Section 2-03.3(10) provides for selecting excavation material for special uses as directed by the Project Engineer. Judicious application of this provision should be made whenever the project will be benefited.

GEN 2-03.1(1)B Staking

See Section 1-5 for listed tolerance and the *Highway Surveying Manual* M 22-97.

GEN 2-03.1(1)C Contaminated Media

Discovery of contaminated media (i.e., soil and water) is usually identified during pre-construction investigations and Special Provisions are subsequently developed for its handling and disposal. Occasionally, however, contamination is discovered during excavation and/or dewatering activities where it was not expected through observations such as soil staining, oily sheens in water, and chemical odors.

When physical evidence indicates discovery of contamination, a series of response activities must begin to ensure that appropriate actions are initiated to minimize project delays, additional project costs, and WSDOT liability. Section 1-2.2K provides the appropriate notification and corrective action procedures to follow when unanticipated contamination is discovered. Upon proper notification, WSDOT can direct characterization, removal, and disposal of the contaminated media through one of its On-Call Environmental Consultants or, if preferred, through the Contractor if they have the necessary equipment and certifications. Regardless of who performs the work, the WSDOT Hazardous Materials Program should be notified in order to provide guidance for proper management of the contaminated media.

Discovery of contaminated media will be considered a change as outlined in *Standard Specifications* Section 1-04.4 and work associated with removal and disposal of discovered contaminated media will be compensable.

GEN 2-03.1(1)D Temporary Water Pollution/Erosion Control

Standard Specifications 1-07.15 and all of Section 8-01 covers the requirements for controlling erosion and water pollution on the project. These provisions limit the area of erodible earth material which may be exposed at one time and provide that the Contractor will be paid for construction of water pollution/erosion control work.

During the project development phase, WSDOT creates a Temporary Erosion and Sediment Control (TESC) plan for the project (refer to Chapter 8 for more details). The Contractor shall adopt it as shown and provide a schedule for implementation, or request modifications to the plan. Any preconstruction modifications to the plan shall be submitted, reviewed, and approved as specified in *Standard Specifications* Section 8-01.3(1)A, prior to the beginning of work. This modified plan should be reviewed to

see that the Contractor anticipated all the erosion and water pollution risks in light of the construction approach and that the plan will adequately minimize the risks. If the plan appears to be adequate, acceptance shall be given by the Project Engineer after receiving concurrence from the Regional Environmental Office. Once construction begins, the TESC plan becomes a working document that must be kept on-site and be adapted and updated as needed based on site conditions and site inspections. Adaptive management of the TESC plan must be documented in the Site Log Book, including best management practice (BMP) installation, repair and maintenance. Refer to the WSDOT *Temporary Erosion and Sediment Control Manual* M 3109 for TESC plan adaptive management during construction.

Preplanned or obviously required temporary water pollution/erosion control measures should be included in the required progress schedule and updated as necessary to cover each phase of the project as the work progresses. Where appropriate, they should be keyed to project schedule activities. Temporary and permanent erosion control shall be implemented at the earliest time practical and shown in the required progress schedule for the project. At a minimum, perimeter and sediment control BMPs shall be installed prior to any earthwork in an area.

Since the Contractor and WSDOT are responsible for any erosion or pollution damage which may occur on the project, both parties must work together to proactively manage erosion and pollution problems and propose methods to take care of the problems. Any reasonable proposed method should be carefully reviewed and implemented as needed to prevent erosion damage or pollution from occurring. Temporary water pollution/ erosion control needs or potential risks that cannot be predicted may be identified and procedures may be outlined for use if such conditions develop.

To meet the requirements of the specifications at the beginning of the project while the Contractor is preparing a CPM project schedule, the Contractor may submit a letter covering the erosion control implementation and schedule for the initial phase of the construction. The following are some of the features that should be covered in the Contractor's proposal:

- Time period initial earthwork is to be accomplished (by date).
- Station limits of earthwork related items.
- Mobilization effort and scheduling of adequate personnel, equipment, and material.
- Outline of basic earthwork construction features.
- Outline of specific problem areas and methods to take care of them.
- Applicable contract plan sheets marked in red.

On smaller projects, this letter schedule may be adequate in fulfilling the contract requirements.

Where erosion is likely to be a problem, the specifications limit the area of erodible earth material that may be exposed at one time by clearing and grubbing to the area, time frame and location described in *Standard Specifications* Section 8-01.3(1), without the approval of the Engineer. If clearing is done separately from the grubbing work, erosion may not be a problem and therefore, the area of clearing would not have to be limited, but the area of grubbing would if the area is erodible. If the Contractor feels that the area limitation for grubbing is too restrictive to accommodate the grading

operations, a request should be submitted for approval to open a larger area and outline the proposed plan and schedule for all temporary or permanent pollution/erosion control that may be necessary.

Evaluation of the Contractor's request for increased areas should be done in consultation with Region Environmental staff. It should be recognized that the job progress is of critical importance and should not be impeded except when clear probability of detrimental erosion potential exists or where permit constraints may be violated.

The area of excavation, borrow, and embankment operations in progress is also limited by the specifications to the area, time frame and location. Erodible soil not being worked, whether at final grade or not, shall be covered within the limitations outlined in *Standard Specifications* Section 8-01.3(1). Approval to extend clearing and coverage limitations may be granted by the Engineer if weather and site conditions permit. Sites with soils more resistant to erosion that do not drain to surface waters may be eligible. Approval should only be granted if the Contractor can demonstrate that WSDOT will not be exposed to unacceptable risk of erosion problems and that the contractor can stabilize the site prior to a storm event if weather forecasts change. Consult Region Environmental, and in some cases Ecology, to ensure that permit requirements are not violated. The limitations must also be commensurate with the Contractor's capability and progress in keeping the finish grading, seeding, mulching, and other erosion control measures in accordance with the approved schedule.

In the Fall months, prior to the "rainy season" or a winter shutdown, the Project Engineer must schedule an on-site review of the project with the Contractor for the specific purpose of identifying appropriate erosion prevention measures that can be taken, such as constructing temporary ditches, sumps, pipes, ditch lining, slope cover, etc., which will reduce and minimize the potential for erosion during the winter months. Inactive projects or project in winter shutdown must be temporarily stabilized but all requirements in the NPDES Construction Stormwater General Permit (CSWGP) apply, including weekly discharge sampling, until construction is complete and the project is permanently stabilized and the CSWGP has been terminated. The only exception is the weekly site inspection reports done by the Contractor's ESC Lead, these reports may be reduced to monthly on inactive or winter shutdown projects. Refer to the WSDOT *Temporary Erosion and Sediment Control Manual* M 3109.

Any pollution/erosion control work provided in the plans, shall be paid as specified in the contract. Other water pollution/erosion control work performed in accordance with the approved plan or ordered by the Engineer will be paid for as detailed below:

1. WSDOT Provided Haul Roads, WSDOT Provided Sources, and Haul Roads for WSDOT Provided Sources.

   Such water pollution/erosion control work which does not differ materially from specified contract work shall be measured and paid for at unit contract prices.

   Such water pollution/erosion control work not covered by contract items will be paid for on a force account basis in accordance with *Standard Specifications* Section 1-09.6.

2. Contractor Provided Equipment Storage Sites, Contractor Provided Sources, and Haul Roads for Contractor Provided Sources.

   All temporary water pollution/erosion control requirements as detailed in the specifications will apply.

   All work will be performed by the Contractor and will not be measured for payment.

3. Commercial Sources.

   The exception to Contractor provided sources will be commercial sources. All water pollution control requirements are the responsibility of the owner and/or operator of any commercial sources.

To further clarify areas of payment and nonpayment, the following examples are listed:

1. Operational expenses incurred on water pollution control facilities will be paid for by force account. This shall include servicing and cleaning settling basins, diversion ditches, and temporary culverts.
2. Maintaining settlement ponds constructed for control of pollution while dewatering of excavations or cofferdams is eligible for payment. Constructing these settling ponds may also be eligible for payment unless the construction of the pond is paid for by a bid item included in the contract. Temporary water pollution control measures required as a result of stream diversion to allow construction of permanent facilities are also eligible for payment.
3. Any temporary erosion and water pollution control work that is required due to the Contractor's negligence, carelessness, or failure to install permanent controls as part of the work as scheduled, shall be constructed by the Contractor at no expense to WSDOT.

These are but a few examples and it is realized that isolated circumstances will arise that are not described above. Any questions should be referred to the Regional Operations/Construction Engineer and if necessary, to the State Construction Office.

SS 2-03.3 Construction Requirements

SS 2-03.3(1) Widening Of Cuts

Normally, excavation will be made to the neat lines of the roadway section as indicated on the plans. When material shortages occur, additional quantities may be obtained either from borrow sources or from an enlargement of the regular cuttings as designated by the Engineer. Early determination of additional needs is desirable so that necessary enlargement can be made during the original excavation. Should it be necessary to return to a completed cut for additional material, effort should be made to cause no change in the Contractor's normal method of excavation. If the original excavation was dressed to proper slopes, it will be necessary to pay for sloping the second time in accordance with *Standard Specifications* Section 2-03.3(1).

SS 2-03.3(2) Rock Cuts

Most projects involving solid rock cuts will provide for controlled blasting of the faces of the rock slopes to minimize blast damage of the face and overbreak. It is the responsibility of the Engineer to decide which rock faces should be formed by controlled blasting and which ones do not require it. Usually this determination is made at the design stage, but formations may be encountered during the construction which were not anticipated during the design. The Project Engineer should advise the Regional Materials Engineer when rock excavation is in progress so that the Regional Materials Engineer may monitor the progress of the work and check to see that the slopes are suitable for the rock as revealed. The Project Engineer should also contact the Regional Operations/Construction Engineer and Materials Engineer when for any operational reason it appears desirable to change the method proposed.

It is the responsibility of the Contractor to determine the method of controlled blasting to use, but is required to drill and shoot short test sections to see that the method used is producing a satisfactory face and to develop the best methods for the particular rock formation encountered. The Engineer shall check on the results being obtained to see that they are satisfactory, and if they are not, to require the Contractor to make necessary changes in procedures to produce satisfactory results.

Most rock faces will be formed by the preshear method consisting of drilling and blasting a line of holes on the face of the cut ahead of any other blasting. The cushion blasting method consists of blasting and removing the main part of the cut prior to blasting the line of holes on the face of the cut. It is quite important that the blasting for the main part of the rock does not shatter the rock back of the face of the cut. With either method, proper hole alignment is very important. The depth of lifts of rock excavation is dependent upon the depth that the holes can be drilled and maintain proper hole alignment. A setback of about 1 ft minimum is required for each lift of rock since it is impossible to position the drill flush to the wall of the upper bench slope.

The results obtained are dependent not only on the properties of the rock but upon the hole size, spacing, amount and type of explosive, spacing of the explosive in the hole, stemming and the timing of the blast. It is desirable that the Project Engineer keep a record of these procedures used by the Contractor, especially in the early phases of the work while the best methods are being sought.

After excavating the rock cuts, the slopes shall be scaled and dressed to a safe, stable condition by removing all loose spalls and rocks not firmly keyed to the rock slope. Mechanical scaling using dozers, front end loader, etc., as the face is developed, is desirable. Any rock exposures which are felt to be a potential hazard to project personnel should be called to the attention of the Contractor. Loose spalls and rocks lying outside the slope stakes which constitute a hazard to the roadway shall be removed and payment made for their removal in accordance with *Standard Specifications* Section 2-03.3(2). Controlled blasting of rock faces may be measured by running a true profile over the top of the rock at each drill hole and quantities computed using cutoff elevations established for the bottom of the drill hole.

SS 2-03.3(3) Excavation Below Grade

Where excavation is in solid rock, the excavation shall be completed full width of the roadway to a depth of 0.5 ft below subgrade. Particular attention is directed to the provisions of the specifications regarding drainage of pockets below subgrade in solid rock cuts. Pockets formed by blasting operations must be drained by ditching to the side ditches, and then backfilled with fragmentary rock, gravel, or other suitable material. Silty or clayey soils should not be used.

Should soft areas exist in the subgrade of a completed earth cut, excavation below grade and replacement shall be accomplished in accordance with *Standard Specifications* Section 2-03.3(3). Particular attention should be given to areas of transition between cut and fill. Top soil and other organic or unsuitable material should be removed from these areas and replaced with material suitable for subgrade in accordance with *Standard Specifications* Section 2-03.3(14).

The subgrade of cut sections must be checked for density as it is required and necessary that the entire roadway subgrade meet the compaction requirements specified for the project and set forth in *Standard Specifications* Section 2-03.3(14). Density tests shall be taken for each 500 ft or fraction for each roadway. If the density of the subgrade is less than the required density, the subgrade material shall be removed, replaced, and compacted in accordance with *Standard Specifications* Section 2-03.3(3).

SS 2-03.3(5) Slope Treatment

Earth cuts, soft or decomposed rock cuts, and overburden in all rock cuts shall have the tops of the slope rounded in accordance with *Standard Plan* for Slope Treatment to produce an aesthetic and pleasing appearance. The slope treatment shall be constructed at the time of excavation so the material resulting from the rounding of the slopes may be disposed of along with the excavation from the cut.

The Project Engineer should go over the slope treatment procedure with the Contractor at the beginning of the excavation operation to ascertain that proper rounding is being constructed and reduce extensive reworking.

SS 2-03.3(7) Disposal Of Surplus Material

When there is a surplus of material which cannot be handled by changing grade or alignment, it shall be disposed of in accordance with *Standard Specifications* Section 2-03.3(7). If the surplus is wasted by widening the embankments, care must be taken to avoid creating a condition conducive to embankment erosion. If possible, the widening should be made in conjunction with the original embankment and placed in accordance with Method A embankment compaction specifications. If this is not possible, it is preferable to waste along low embankments where Method A compaction can be accomplished. Dumping of loose material on high embankment slopes must be avoided.

When the foundation investigation report from the Materials Laboratory indicates settlement is anticipated in embankments at bridge ends, surplus material shall not be wasted by widening embankments or by building up the adjacent ground line near the structure. Wasting material in this manner adjacent to a structure can result in unanticipated and adverse settlement of the structure even if the structure is founded on piling.

In areas where an overload is required, any required contour grading must be done at the time the overload is constructed. When the overload is removed, the material must be removed entirely from the area and not placed on slopes or wasted in the adjacent area.

Wasting excavation material and borrowing may be necessary, however, such operations must be kept to an absolute minimum. Carelessness in this respect is expensive and leads to an unsightly job. Careful planning of work and proper selection and mixing of available materials often will eliminate the need to waste and borrow.

SS 2-03.3(11) Slides

The Project Engineer's attention is directed to *Standard Specifications* Section 2-03.3(11), providing for the removal of slides in cut slopes and in embankment slopes. Any slides coming into the roadway after the slopes have been finished by the Contractor shall be removed by the Contractor at the unit contract price per cubic yard for the excavation involved. If the Project Engineer orders the slope to be refinished, payment for refinishing would be eligible for an equitable adjustment as defined in *Standard Specifications* Section 1-09.4.

In case of slides in embankment slopes, the Contractor shall replace the embankment material from sources designated by the Project Engineer at the unit contract prices for the excavation involved.

In the event the slide repair is such that quantities cannot be measured accurately, or if the Contractor must use a different type of equipment for removal than that available on the project, payment may be made as provided in *Standard Specifications* Section 1-09.4.

The Project Engineer's attention is directed to *Standard Specifications* Section 1-07.14, providing for the Contractor's responsibility for sloughing and erosion of cut and embankment slopes. The ordinary sloughing and erosion of cut and embankment slopes shall not be considered as slides, and the Contractor is responsible for providing temporary control facilities to prevent this.

The following guidelines are provided to assist in determining responsibility for repairs to eroded areas:

a. **Slides** – Slide repair costs will be borne by WSDOT, where there is no evidence of neglect by the Contractor.

b. **Erosion of Slopes**

   i. In places where water has run over the edge of the roadway and where the Contractor has neglected to provide adequate protection, the Contractor must assume the costs of repair.

   ii. Where rain on cut and embankment slopes cause rivulets and wash, the Contractor must assume the cost of repairs except as noted hereinafter.

   iii. Where erosion of cut or embankment slopes occur from ground water seepage, WSDOT must assume the cost of repairs.

c. **Repairs**

i. In b.ii., the Contractor must, at no expense to WSDOT, remove eroded material from the toe of slope, ditches, and culverts and restore the eroded areas with this material where practicable. If additional top and/or embankment material is needed or different materials are ordered by the Engineer, it will be furnished and placed by the Contractor at unit contract prices.

ii. In b.i. and b.ii. where erosion has occurred and repairs are the Contractor's responsibility, the Contractor must restore the area at no expense to WSDOT, including the seeding, mulching and fertilizing.

iii. In a. and b.iii. where seeding, mulching, and fertilizing have been damaged, payment will be made for restoring same at the unit contract price for seeding, mulching and fertilizing.

SS 2-03.3(12) Overbreak

Overbreak, as defined in the *Standard Specifications,* is that portion of the material which is excavated, displaced, or loosened outside of and beyond the slopes or grade as staked or reestablished, excepting such material which occurs as slides, regardless of whether any such overbreak is due to blasting, to the inherent character of any formation encountered, or to any other cause. All overbreak so defined shall be removed by the Contractor at no expense to WSDOT, except as hereinafter described.

Overbreak, as such, should not be paid for in any manner except when the planned roadway excavation is not sufficient to complete the embankment and borrow excavation has not been included in the proposal. With the approval of the Engineer, overbreak material may then be used to complete the embankment and payment made at the unit contract prices for Roadway Excavation and Haul.

When approved by the Engineer, available overbreak material may be used in accordance with *Standard Specifications* Section 2-03.3(12).

In the event that conditions causing the overbreak justify reestablishing the slopes to include part or all of the overbreak section, the material reverts to roadway excavation material and shall be so paid for. Justifiable reason for reestablishing the slopes may be uncontrollable overbreak resulting from the existence of natural cleavage or faults in rock formations, planned slopes resulting in an unsafe and unstable condition, or other such reason. Overbreak may be expected on unstable slope projects involving rock cuts if the reason for the project is the rock cut is unstable. When a question occurs as to justification for reestablishing slopes because of overbreak, the Project Engineer shall consult with the Regional Construction Engineer.

When overbreak is surplus material and reestablishment of slopes is not justified, the materials shall be removed and wasted as provided for "Surplus Materials" under *Standard Specifications* Section 2-03.3(7) except that the work shall be at the Contractor's expense, including the cost of hauling and wasting.

Where pay quantities of material are wasted and overbreak is used in lieu thereof, no allowance will be made for such overbreak. Haul in this case will be paid upon the basis of the pay quantities of excavation.

SS 2-03.3(13) Borrow

The material in borrow pits must be satisfactory for the use it is intended. If the character of the materials is not readily visible, adequate sampling and testing should be done to verify the quality and the quantity of material available. The Project Engineer should check the records to see that this determination has been made, and if any doubt exists to the adequacy of the source, the Regional Materials Engineer should be contacted to see if further testing is indicated. This detail could save considerable time, expense, and future problems if it is determined that a pit is unsatisfactory before extensive work is performed in opening the pit and then discovering that the material is not acceptable.

Standard Specifications Sections 2-03.3(14)K, 9-03.20, and 9-03.21 provide for the use of select and common borrow for use in construction of embankments. Materials which meet these specifications are intended for use where it is not necessary to strictly control the strength properties of the borrow. Select or common borrow materials should not be used as backfill for mechanically stabilized earth walls, to backfill unsuitable material excavation below groundwater, or as foundation material for any structure, unless specifically approved for use by the State Geotechnical Engineer. The material requirements for select and common borrow will not ensure that the materials will be workable and able to be compacted under inclement weather conditions. Because select or common borrow materials may be subject to moisture sensitivity as described above and in Section 2-3.2A5, compaction of these materials may require control as specified in *Standard Specifications* Section 2-03.3(14)D.

Common borrow, as specified by *Standard Specifications* Section 9-03.14(3), may be virtually any soil or aggregate, either naturally occurring or processed, which is substantially free of organics or other deleterious material, and is nonplastic. The specification allows for the use of more plastic (clayey) common borrow when approved by the Engineer. The use of more plastic (clayey) material may require approval of the Regional Materials Engineer or the State Materials Lab. The 3 percent maximum organic material requirement for common borrow may be determined visually, or, as necessary, by one of the following test methods: AASHTO T 194 (Organic Content by the Wet Combustion Method) or AASHTO T 267 (Organic Content by Loss on Ignition). The correct test method is determined based on the type of organic material present in the soil sample. The Regional Materials Engineer should be consulted as to the appropriate test method. The sample may be field determined to be nonplastic if the fraction of the material which passes the U.S. No. 40 sieve cannot be rolled into a thread at any moisture content using that portion of AASHTO Test Method T 90 (Determination of the Plastic Limit of Soils) which describes rolling the thread.

The requirements of *Standard Specifications* Section 2-03.3(13) must be observed in the operation and cleanup of borrow pits. With the requirement for reclamation of all pits, a plan must be developed to meet the requirements of the specifications and special provisions and approved before the start of pit operations. See Section 3-03.

SS 2-03.3(14) Embankment Construction

It is expected that the Contractor will construct roadway embankments in accordance with the plans and specifications using construction methods and equipment considered suitable for the type of work involved. All operations must be directed toward constructing a uniform, well-compacted embankment true to grade and cross-section.

It is sometimes necessary to construct an embankment across wet and swampy ground which will not support the weight of heavy construction equipment. It is the responsibility of the Contractor to select a method of construction and type of equipment which will least disturb the soft foundation. It is permissible to start the embankment by dumping and spreading the first layer to a thickness capable of supporting construction equipment across the soft ground, however, this initial lift should be held to the minimum thickness required for equipment selected in conformance with the above. The remainder of the embankment shall be constructed in layers and compacted as specified. Compaction will be required on initial embankment lifts wherever conditions will permit placement and compaction as specified.

Where embankments are built on hillsides or existing embankment slopes, the existing surface soil may form a plane of weakness, unless the slope is terraced or stepped by plowing deeply to key the new embankment to the slope. Keying the embankment to the slope is also important when constructing an embankment across a rather steep draw. This operation is a standard requirement for embankment construction as specified in *Standard Specifications* Section 2-03.3(14).

Settlement indicating devices are occasionally called for on the contract plan and special provisions when it becomes necessary to determine the extent and rate of embankment settlement. Settlement data is necessary for establishing construction schedules for adjoining or adjacent structures where the downward movement of the embankment and its foundation will influence the stability of the structure.

There are several types of settlement indicating devices in current use. The principals of each type and the instructions for installation and monitoring must be understood by all involved project personnel. The Regional Materials Engineer or the State Materials Laboratory personnel should be consulted in these cases.

SS 2-03.3(14)A Rock Embankment Construction

As established compaction tests cannot be applied to coarse granular material with any degree of accuracy, embankment construction has been divided into two classes: rock embankments and earth embankments, as defined in *Standard Specifications* Section 2-03.3(14). It should be noted that this designation is made for the fundamental purpose of determining the method of embankment construction and compaction control to be used, and that it depends only upon the gradation of the excavation material. It is not necessary that an embankment be built entirely of rock material to be designated as rock embankment. Rock embankment is defined as “all, or any part, of an embankment in which the material contains 25 percent or more by volume of gravel or stone 4 in or greater in diameter.” The Inspector shall make visual inspection of the embankment material to ascertain whether it contains 25 percent or more of material 4 in or greater in diameter. For rock embankment, in lieu of controlling compaction by performing tests, a given amount of compactive effort is specified in *Standard Specifications* Section 2-03.3(14)A. Where the stability of a rock embankment is

in question, moisture and density control as specified in *Standard Specifications* Section 2-03.3(14)B and C shall pertain. It is considered that uniform compaction to the full width of the embankment normally will not be achieved by routing hauling equipment over the roadway. Rolling equipment shall be required as specified whenever it is possible to operate such equipment on the material being placed. Decision to require or delete the use of rollers as specified shall be based on feasibility of operation rather than on an arbitrary estimate of benefits achieved, as this factor is very difficult to evaluate without conducting extensive and expensive tests.

SS 2-03.3(14)B Earth Embankment Construction

Procedures for constructing earth embankments are described in *Standard Specifications* Section 2-03.3(14)B. Compaction in accordance with one of three methods designated as Method A, Method B, or Method C as specified in *Standard Specifications* Section 2-03.3(14)C shall be utilized. Unless otherwise specified in the special provisions, Method B will apply. The basic requirements of all three methods are the same in that each requires lift construction, uniform compaction throughout the embankment width and depth, control of moisture content to not more than 3 percent above optimum, and the addition of moisture should it be necessary for proper compaction. The difference between the three methods lies in the thickness of lifts specified, the degree and control of compaction required, and the degree of control of moisture below optimum. The use of suitable compaction units is required for Method B and Method C, although routing of hauling units may be used to obtain partial compaction.

Method A normally will not be specified for state highway work, but may be applied on county or city projects or on certain secondary state highway projects. Embankment lifts up to 2 ft in thickness may be placed, and compaction is achieved by routing the hauling equipment over the entire width of the embankment. Inspection should determine that the routing schedule is such that all parts of the fill receive the same amount of compaction, including the outer edges of the fill. Drying of soil or addition of moisture may be required, if necessary.

Method B will be used on all state highway projects except where other methods are specified. This method requires that the embankment be constructed in lifts not exceeding 8 in in loose thickness except that lifts in the upper 2 ft shall not exceed 4 in in loose thickness. Ninety percent of maximum density is required throughout the embankment except that 95 percent of maximum density is required in the upper 2 ft. Control density tests must be performed to verify compliance with specifications. The Contractor shall be required to dry soil or add moisture as necessary to ensure proper, uniform compaction. The selection of compaction equipment or methods is the responsibility of the Contractor; however, the use of any method or equipment that does not achieve the required density within a reasonable time may be ordered discontinued. The entire embankment, including the side slopes, shall be compacted to specification requirements.

Method C will be required when it is considered essential to the structural quality of the embankment that the entire fill be compacted to a high density. This method differs from Method B in that the entire embankment must be compacted to 95 percent of maximum density. Also, a limit is specified for minimum moisture content in addition to the maximum to ensure moisture content uniformity. In all other respects, the two methods are the same, and each requires a high standard of compaction control.

SS 2-03.3(14)C Compacting Earth Embankments

Proper compaction of roadway embankments and embankment slopes is of vital importance to the structural quality of the final roadway and strict adherence to specification requirements is essential. The type and thickness of the final surfacing and pavement is designed on the basis of the strength of the underlying materials, and the strength of these materials is affected greatly by their state of compaction, therefore, it is essential that the specified density be obtained. To enable the Project Engineer to determine that embankments are being compacted properly, control test procedures and density standards have been developed for use during construction. It is expected that these aids will be utilized to the fullest extent necessary to determine that all embankments are constructed in accordance with specifications. Complete instructions for making maximum density and optimum moisture content determinations for soils and for making field density control tests are furnished with the appropriate testing equipment and in Chapter 9.

The Project Engineer and the Inspector should understand thoroughly the elements of the compaction process and compaction control procedures. The following brief resume should be supplemented by study of appropriate publications on this subject and by consultation with the Regional Materials Engineer. In general, it can be stated that each soil has a maximum density to which it can be compacted with a given compactive effort. For this compactive effort, the maximum density will be obtained only at one moisture content. Increases or decreases in moisture cause a reduction in the density obtainable with the given compactive effort. When the moisture content is lower than optimum, additional compactive effort is necessary to achieve the specified density. When the moisture content is above optimum, low densities will result, and a soft, spongy condition may develop during the compaction process. In most cases, the moisture content of the material should be less than optimum when the material is covered, due to the fact that frequently materials are over-compacted by the heavy construction equipment now in use. Once the material is covered with another layer of material, it is very unlikely that the moisture content of the material will decrease.

Certain soils, primarily fine grained soils having high silt content, may become unstable by virtue of being over compacted even at moisture contents at or slightly above optimum but within specification limits. When working with these soils, the moisture content should be reduced below the maximum allowed if at all feasible, this may require aeration. Specifications provide for payment for this work. Also the Contractor should be requested to compact only to the minimum requirements; however, this is difficult to control. With modern heavy hauling and compacting units, over-compaction occurs with increasing frequency. When high fills are involved, not only may the subgrade be unstable, but the overall stability of the fill may be reduced to the point that slump failure will occur. When such soil and moisture conditions are encountered, the Project Engineer should recognize the potential danger and notify the Regional Operations/Construction Engineer. Should corrective measures be necessary, one or more of several procedures may be used. When low fills are involved, increasing the surfacing depth, mixing with granular materials available, or allowing the fill to set undisturbed for a period of time may prove satisfactory. When a high fill is to be built, sandwiching layers of free-draining material, incorporating a system of trench drains, or mixing with other materials may prove satisfactory. In all cases, the correction must be aimed at neutralizing the excess pore-water pressure or changing

the character of the material. *Standard Specifications* Section 2-03.3(14)J provides for the use of gravel borrow material for this type of work.

The gravel borrow may be mixed with the embankment material by placing a layer of the embankment material on a layer of gravel borrow and mixing the two materials using aeration equipment. The materials shall be mixed and the moisture content reduced to a satisfactory level. During drying weather, the gravel borrow material will tend to speed the reduction in moisture of the embankment material. After the moisture has been reduced to a satisfactory level, the layer of material must be compacted to the required density before another layer of material is placed. It is quite important that the moisture be reduced to a satisfactory level or the advantage of mixing with the gravel borrow will be lost.

An alternate method is to intersperse layers of gravel borrow throughout the embankment to reduce the pumping action of the soil and provide drainage for excess moisture. This method is preferred over mixing. The embankment material must be uniformly graded and sloped to the outside of the embankment so any excess moisture will have a chance to drain off. Care must be taken in placing the layer of gravel borrow so ruts or pockets are not formed in the embankment material which will trap moisture and prevent its draining off. The depth of the layers of embankment materials that will maintain the desired embankment stability shall be determined by field tests.

Drainage problems occur quite frequently when an existing embankment is widened, if there is moisture present in the existing embankment, through capillary action, subterranean drainage, or otherwise. If the new embankment traps the water in the existing embankment, usually the moisture saturates the embankment to a point that slump failure occurs. Whenever an existing embankment that could receive moisture is to be widened, drainage must be provided through the new embankment area. If the new embankment material is not free draining, one method of providing drainage is to layer the new embankment with gravel borrow layers at approximately 10-ft intervals vertically. Where seepage is noted, the Regional Materials Engineer should be consulted so that an adequate drainage system is provided.

When it is anticipated that certain cuts or borrow areas will contain considerable amounts of material with moisture content in excess of the optimum for proper compaction of embankments, aeration equipment may be included in the proposal for the project.

The inclusion of aeration equipment in the proposal will not relieve the Contractor of the responsibility of employing sound and workmanlike procedures in the prosecution of the work which are effective in constructing embankments with wet materials. Ditches to remove surface or subterranean drainage should be constructed whenever they can be effective and preferably in advance of excavation, thus permitting time for drainage.

The function of aeration equipment is to provide thin, loose layers of material from which moisture can evaporate. Most soils tend to form a crust which retards the evaporation of moisture. Unless this material is worked to break up this crust, evaporation is quite slow. During good drying weather, a sheepsfoot roller is quite effective in certain soils in breaking up the surface of the soil and, in thin lifts of material, leaves large surface areas of soil exposed to the air. However, no separate

payment for a sheepsfoot roller will be made and the costs of same are incidental to embankment compaction.

If the material has a considerable amount of moisture above the optimum for proper compaction of embankments, it may be necessary to operate aeration equipment in the excavation areas as well as the embankment areas to increase the amount of material exposed for evaporation. The amount of moisture that will evaporate from the material is dependent on the prevailing weather conditions, the surface area of material exposed and the length of time the material is exposed to the air.

It must be kept in mind that thin, loose layers of material will also soak up large amounts of moisture if it rains, so the surface of the materials must be sealed and sloped to drain off moisture whenever rain is imminent. It is the responsibility of the Contractor to seal the material against rain and in many cases this will have to be done at the end of work each day to protect against sudden, unexpected storms.

SS 2-03.3(14)D Compaction and Moisture Control Tests

The maximum density and optimum moisture content for a soil are determined by testing the soil in accordance with WSDOT Test Method No. 606 or AASHTO T 99 Method A as prescribed in *Standard Specifications* Section 2-03.3(14)D and described in Chapter 9. This data is used to establish the density required by specifications. Each different soil may, and probably will, have a different maximum density and optimum moisture content, and it is necessary that tests be performed in the field for each different soil encountered. As each of the materials is being tested, a representative sample should be taken and placed in a sealed sample jar to serve as a future reference for identifying the materials on the grade during construction. It is the responsibility of the Project Engineer to arrange for all field testing necessary to supplement data furnished with the soils report.

Noncohesive sandy and gravelly soils and surfacing aggregate cannot be tested by the above-noted test method. Samples of these materials must be sent to the Regional Materials Engineer with a request for maximum density determination. This test method is described in Chapter 9. A gradation vs. density curve will be established for use by the Inspector during construction.

To determine if the embankments are being compacted properly, in-place density tests must be taken at frequent intervals. Results of these tests are compared to the density standard established for the soil (noncohesive granular material) being compacted, and are used as the basis for accepting or rejecting the work of the Contractor. Each lift of embankment should be tested before subsequent lifts are placed. When loose free draining sandy material is used for embankment construction, the Inspector should dig down 1 ft and run a density test on the undisturbed material. In selecting an area to be tested, the Inspector should choose sites where the least compactive effort has been applied. A continuous record of the Contractor's method of compaction should be kept and compared to test results to assist in selecting a routine procedure which will yield required results. Compaction is required to the neat lines of the embankment, which include the shoulders and slopes. Proper compaction of embankment slopes will tend to minimize slope surface erosion which occurs often on newly constructed embankments.

Care must be taken to see that uniform density is obtained throughout each fill rather than to have some areas compacted greatly in excess of the density requirements, while other areas are below requirements. In order to achieve uniform density, it is essential that the water content be uniform since the density obtainable with a given soil is a function of the water content for any one compactive effort. In most cases, the required density can be obtained with the least effort if the water content is very close to, but less than, the optimum established by standard moisture-density test. Noncohesive granular soils usually compact most easily when wetted to near saturation. The Contractor should be encouraged to establish a definite routine for compaction that will result in uniform compactive effort. When a considerable amount of grading equipment is concentrated in a small embankment area, it is difficult to maintain uniform compaction methods on each lift and the Inspector must be especially alert. When the size of the embankment area can be increased, uniform compaction methods can be more readily established, thinner lifts of material can be placed and moisture content can be better controlled.

The Speedy Moisture Tester is a good tool for the Inspector to use to check the moisture content of the material while it is being worked in the embankment. This will quickly tell the Inspector whether moisture must be removed or added before the layer is covered with additional material. The Inspector must be cautioned that due to the small amount of material used in the speedy moisture tester, it is essential that the sample used is actually representative of the material being worked. If the moisture content of the material being worked is quite uniform, this does not present too much of a problem.

When embankment construction is first started, the Inspector should give particular attention to the compaction methods and take more than the minimum number of density tests to determine the most advantageous compaction pattern that will give the desired compaction results. After a satisfactory compaction pattern has been established for the type of material being placed, the density testing may be reduced to the minimum rate specified.

Where it is necessary to add water for compacting, this may be done either in the cut (or borrow pit) or on the fill. Water must not be added to material obtained from a borrow pit before weighing when payment is by weight. Addition of water in the cut allows the scrapers and hauling equipment to mix the water into the soil so that rolling can proceed immediately after spreading. Sprinkling should be done on a rough loose surface rather than on one which is smooth and tight because the water will not be so apt to run off or form ponds.

Daily compaction reports shall be submitted on DOT Form 351-015. If there are questions concerning operational procedure on moisture-density tests, in-place tests, and reporting of results on the above form, consult the Regional Materials Engineer for advice and assistance.

Special attention shall be given to compaction around structures and bridge ends, where rollers cannot operate. Mechanical tampers or other approved compactors are to be used in these areas. Sufficient density tests shall be taken to ensure that compaction is continued on each lift until the specified density is attained. Failure to do so can result in settlement near the structure.

SS 2-03.3(14)E Unsuitable Foundation Excavation

The natural ground upon which an embankment is to be constructed may be such that it will impair the stability of the completed roadway. Such conditions must be corrected prior to starting embankment construction. Unsuitable ground such as peat, soft organic clay, and silts must be removed or otherwise stabilized to prevent unequal or excessive roadway settlement or embankment failure. Areas requiring special foundation treatment will be shown in the plans and/or specified in the special provisions with the exception that possible detrimental soil at the transition between cut and fill and under shallow embankments may not be indicated. Particular attention should be given to these areas and in the event that highly compressible or unstable top soil or other undesirable material exists, it should be removed in accordance with *Standard Specifications* Section 2-03.3(14).

Where specified in the contract plans and/or the special provisions, unsuitable foundation materials shall be removed or otherwise stabilized as required. When removal is required, inspection should determine that the removal is complete to solid foundation.

Where backfilling must be done under water, granular material should be used, and special care must be taken to avoid trapping unsuitable material in the backfilled area.

SS 2-03.3(14)F Displacement of Unsuitable Foundation Materials

In the event that other unsuitable foundation material exists and is not indicated in the contract and is beyond the limits as described in *Standard Specifications* Section 2-03.3(14), the State Construction Office should be contacted through the Region for assistance in reaching a resolution.

Removal of unsuitable foundation material by displacement with or without the use of explosives should be attempted only where specified, or where recommended by the State Materials Engineer and approved by the State Construction Office.

SS 2-03.3(14)G Backfilling

Where water exists in the excavation areas, it should be drained, if possible, by ditching so that excavation and backfilling can be accomplished in the dry.

SS 2-03.3(14)H Prefabricated Vertical Drains

Embankment settlement can be accelerated by the use of overloads, vertical sand drains, or by vacuum pumping to lower the water table. These treatments should not be attempted unless specified by the contract provisions or recommended by the State Materials Engineer and approved by the State Construction Office.

GEN 2-03.4/5 Measurement and Payment

GEN2-03.4/5(2) Computer Generated Quantities

Utilizing the current programs available through the department, the personal computer (PC) may be used to determine earthwork quantities, finished roadway or subgrade elevations, slope stake data, and haul quantities.

The type and size of the project and the amount of time that can be saved will be considerations in how much information should be generated by the use of the PC.

All applicable records of computed data shall be kept and become a part of the final records. If the computer was not used in the design stage of the project, it may still be convenient and economical to prepare data to submit for construction quantities.

GEN 2-03.4/5(3) Use of Photogrammetry Service

The photogrammetry service may be used to create a 3D Digital Terrain Model (DTM) files for use with the department's current design software in order to produce cross sections, contours, and quantity information. Photogrammetry can also provide Digital Ortho Photos as a by product instead of the DTM files. The Ortho Photo has the same accuracy characteristics as a map but without the elevation data. The type and size of the project and the amount of time that can be saved will be considerations in the selection of the method of obtaining the ground line cross-sections. The Project Engineer must also ascertain that the work schedule of the Photogrammetry Section will permit them to provide the DTM files and Digital Ortho Photos by the time they are required. If proper ground control was established on the project during the design stage, considerable savings in time may be realized by using this service.

It is recommended that the State Photogrammetry Office be contacted at the earliest possible date when it is determined that this service may be needed, since the process requires significant time and the weather and position of the sun (angle of the sun's rays) in Washington can affect Photogrammetric mapping schedules by weeks or even months.

The 3D DTM files and Ortho Photos are obtained from aerial photographs and will show the ground as it existed at the time the photographs were taken. This data is measured in the Stereo plotter and transferred to computer files. The State Photogrammetry Office will design each photo mission and mapping process to best fit the needs of the project as defined by the Project Engineer. The State Photogrammetry Office maintains an active archive of each new project's files and all DTM data produced since 1989. It is easily accessible via WSDOT LAN on a file server type computer. Contact the State Photogrammetry Office for specific information on past projects and archived data.

2-04 Haul

SS 2-04.4 Measurement

The measurement of haul is expressed as a unit of one hundred cubic yards hauled 100 ft.

Haul quantities can be computed using the PC and associated programs on all earthwork projects and the limits of each segment of haul and the "Haul" units can be identified.

Haul shall be calculated and included in the section from which the material is hauled. Haul on roadway quantities, including borrow obtained by the widening of cuts and including waste deposited along roadway embankment slopes, will be computed on the basis of transporting material along the centerline or base line of the highway.

Haul on Borrow or Waste

Quantities of material hauled from a borrow site to the roadway or from the roadway to a waste site are computed normal to the long axis of the borrow or waste site. When computing the amount of haul, determination of the direction of movement of the mass and the distance it is transported requires good, practical judgment by the Engineer. The size and shape of a borrow pit and egress from the pit to the highway improvement must be considered in the proper determination of the amount of haul. The same conditions are true in the case of waste sites. Instructions herein for computing haul from borrow pits shall be applicable to computing haul to waste sites.

The long axis of the borrow pit should be used for the base line of the cross-section which, theoretically, would pass through the centers of gravity of the sections; however, the base line may approximate the centers of gravity of the sections. Borrow pits which are provided by widening of the roadway cuts would be an exception to this since the *Standard Specifications* define them as "Roadway Excavation" and not "Borrow."

The measurement of the distance from the pit to the center line of the roadway should originate at the center of mass as measured in the pit and be computed via the most direct and feasible route to the nearest practical point on the center line of the roadway.

The route of haul will be indicated on the plans, and, where possible, will be via existing roads. If no road exists, provision will be made in the plans for constructing a haul road and for rights therefor.

If the Contractor chooses to haul over a route shorter than the computed or designated route, payment for haul will be based on the length of the actual haul route. If the Contractor chooses to haul over a longer route than the computed or designated route, payment for haul will be based on the length of the computed or designated route.

2-06 Subgrade Preparation

SS 2-06.3 Construction Requirements

The subgrade shall be constructed in accordance with the lines, grades, and typical sections shown on the plans or as established by the Engineer and the *Standard Specifications*.

The entire subgrade should be uniformly compacted to the density specified. The subgrade shall meet the tolerance in Section 1-6. On some separate grading projects where the surfacing Contractor will be required to or elects to trim the subgrade with an automatically controlled mechanical trimmer, the tolerances for the subgrade must be changed to provide material for the subgrade trimmer to trim, but the trimmed subgrade must meet the tolerance stated above.

After the subgrade is prepared, the Contractor shall maintain it in the required condition until the next course of work is performed.

2-07 Watering

SS 2-7.3 Construction Requirements

Water shall be applied as ordered by the Engineer, in accordance with the specifications, uniformly to the material so that all of the material will have approximately the same moisture content. It is more economical and effective to apply water at night or in the early morning hours when loss from evaporation is lower. In many instances, this is the only time that it is possible to increase the moisture content to that required.

The Inspector should be alert to see that the subgrade is not damaged from too much water being applied or that more water is being applied than is necessary. Usually light applications applied more frequently are more advantageous than heavy applications. The water should not be applied on surfacing materials with such force that it will wash the fine particles off the coarser ones causing segregation.

If water is a pay item, the Project Engineer shall verify the size of the water truck by measuring or weighing and if gauges are used, he should also verify the accuracy of the gauge. A record of measurements or weights, and calculations must be made for future references.

A Daily Delivery Record (DOT Form 422-024) showing the time of each load and where it was placed should be maintained on the project. The Inspector will issue a ticket for the amount of water used.

2-09 Structure Excavation

SS 2-09.3 Construction Requirements

SS 2-09.3(1) General Requirements

SS 2-09.3(1)A Staking, Cross-Sectioning, And Inspecting

Before starting structure excavation, stakes should be set to locate the structure and cross-sections should be taken to determine the quantities of material involved.

SS 2-09.3(1)B Depth Of Excavation

Excavations shall be carried to the elevation shown on the plans or as established by the Engineer. The Project Engineer should take into consideration the fact that when a clamshell bucket is used, it is very difficult to clean the hole to an exact given elevation. For direct-bearing footings, the corners and sides of the excavation should be cleaned out as well as possible and there should not be an excess of loose material left in the bottom. If the character of the material found at plan elevation is questionable, consult the Regional Materials Engineer.

When the excavation for the footing has been completed, elevations to establish the footing elevation shall be taken in the corners of any footing and recorded in the project records.

SS 2-09.3(1)C Removal Of Unstable Base Material

During the progress of excavation, the character of material being removed and exposed should be examined to determine if it is suitable for use as backfill and to ensure that acceptable foundation conditions exist. This should be done especially on streams subject to high velocity flood water and which carry drift.

Open pit excavation or “glory holes” are not allowed without permission. This specification is of special importance in application to the construction of foundations in or adjacent to running streams, where the approval of the State Construction Office should be secured.

SS 2-09.3(1)D Disposal Of Excavated Material

Material obtained from structure excavation may be used for backfilling over and around the structures, for building embankments, or it may be wasted. When this material is stockpiled for backfilling, the Contractor is required to protect it from contamination and the elements. If not properly protected, the Contractor must replace the lost material with acceptable backfill material at no expense to WSDOT.

SS 2-09.3(1)E Backfilling

The backfilling of openings made for structures must be made with acceptable material from the excavation, other acceptable backfill materials indicated in the plans and special provisions, or as specified in *Standard Specifications* Section 2-09.3(1)E.

When specified in the Contract or approved by the Engineer, acceptable material may include Controlled Density Fill (CDF) – also known as Controlled Low-Strength Material (CLSM).

Before the CDF is placed, the Contractor is required to develop a mix design in accordance with *Standard Specifications* Section 2-09.3(1)E and to submit the CDF mix design in writing to the Project Engineer on DOT Form 350-040. *Standard Specifications* Section 2-09.3(1)E requires the Contractor to utilize ACI 229 and testing methods ASTM D 4832, ASTM D 6023, and WSDOT FOP for AASHTO T 119 in developing the CDF mix design. The ASTM and AASHTO tests required in *Standard Specifications* Section 2-09.3(1)E are for use by the Contractor in developing the CDF mix design, and with the exception of providing the 28-day compressive strength test results on DOT Form 350-040, the test results are not required as part of the CDF mix design submittal. The Project Engineer must review the mix design before placement of the CDF will be allowed.

The Inspector should verify and document that each truckload of CDF is accompanied by the producer supplied Certificate of Compliance, meeting the requirements of *Standard Specifications* Section 6-02.3(5)B. The Inspector should also verify that the components, as listed on the Certificate of Compliance, conform to the mix design per *Standard Specifications* Section 6-02.3(5)C. Acceptance of the CDF will be based upon an acceptable Certificate of Compliance. In accordance with *Standard Specifications* Section 1-05.2, the Inspector may reject any load of CDF that does not conform to the mix design.

When water is encountered in the excavation area, it must be removed before backfilling. Cost for accomplishing this is considered incidental and is done at the Contractor's expense unless otherwise provided for in the contract.

SS 2-09.3(2) Classification of Structure Excavation

Structure excavation is classified into two classes. The excavation necessary for the construction of bridge footings, pile caps, seals, wing walls, and retaining walls is classified as Structure Excavation Class A. All other Structure Excavation is classified as Structure Excavation Class B. See *Standard Specifications* Sections 2-09.3(2), 2-09.3(3), and 2-09.3(4).

SS 2-09.3(3) Construction Requirements, Structure Excavation, Class A

SS 2-09.3(3)D Shoring And Cofferdams

All excavation 4 ft or more in depth shall be shored, or protected by cofferdams or shall meet the open-pit requirements of *Standard Specifications* Section 2-09.3(3)B.

The Contractor must submit his shoring plans in accordance with *Standard Specifications* Section 2-09.3(3)D. The shoring design shall be in compliance with the WSDOT *Geotechnical Design Manual* M 46-03, and be designed for site specific conditions, which must be shown and described in the working drawings. These drawings must be approved before construction begins. WSDOT's approval, however, does not relieve the Contractor of responsibility of satisfactory results.

The contractor shall submit working drawings and calculations for open-pit excavation, showing the geometry and construction sequencing of the proposed excavation slopes in accordance with *Standard Specifications* Section 2-09.3(3)B. The excavation stability design shall be conducted in accordance with the WSDOT *Geotechnical Design Manual* M 46-03 and must be designed for site specific conditions, which must

be shown and described in the working drawings. These drawings must be approved before construction begins.

The Contractor shall submit detailed plans of cofferdams for approval per *Standard Specifications* Section 2-09.3(3)D when their use is required. This requirement shall be strictly followed. When a cofferdam is required on a railroad right of way, excavation must not be commenced before the plans have been approved by the railroad company. The Contractor should be notified of this requirement well in advance of starting such work, as it usually takes several weeks to get plans approved by the railroads. See Section 6-1.5 for the number of copies to submit and distribution of approved plans.

Cofferdams, in general, must be removed to the bed of the stream, or to below the low water mark. In some cases, it may be advisable to leave the cofferdam in place. The Cofferdam is, however, the property of the Contractor.

Sheet piling, designed in accordance with the USS Steel *Sheet Piling Design Manuals*, may be used for shoring walls that do not support other structures and that are 15 ft in height or less. When sheet piles are used for cofferdams, the Project Engineer shall see that the sheets are held tightly together during driving and placing, so that no cracks or holes are left, through which water can flow. If timbers are used in the cofferdam, the use of wood preservatives needs to be monitored to be sure that all environmental constraints are met. Cofferdams should be built slightly larger than the neat size shown on the plans. This is to allow for inaccuracy of driving sheet piles.

Where bearing piles are to be driven, the excavation should be carried deeper to allow for upheaval of soil due to pile driving. This extra depth will depend on the character of the material. Usually in sand and gravel from 6 in to 1 ft and in a river or tide mud from 1 ft to 1.5 ft is sufficient. Such over-excavation is the Contractor's responsibility. Over-excavation shall be backfilled with gravel backfill to the footing elevation if the upheaval is less than anticipated.

In soft mud, when the driving of piles tends to liquefy the foundation material, it is sometimes necessary to excavate below plan grade and backfill with gravel before concrete is placed. When the Engineer considers this to be necessary and approval of the State Construction Office has been secured, the additional excavation shall be paid for at the unit contract price for structure excavation and the gravel backfill shall be paid for on force account basis or at an agreed price.

The material on which spread footings are to be constructed must be adequate to support the design soil pressure per square foot shown in the plans. The Regional Materials Engineer should be consulted to review the foundation conditions if the bottom of the footing is materially different than what is identified in the contract plans. If a change of design or the lowering of a footing appears to be advisable, the State Construction Office must be advised.

Occasionally, foundations adjacent to large piers are founded at a higher elevation than the large pier foundation. In these cases, the Contractor must carry on operations so that the foundation at the higher elevation will not be disturbed when excavation is made for the lower pier.

Backfilling holes made for piers and column bents up to the surface of the surrounding ground may be done at any time after the forms are removed, providing the backfilling is brought up evenly on all sides of the pier or column.

Backfilling around piers and bents in streams shall be done carefully with material suitable to resist scour, and be brought up to a height not less than the original bed of the stream. Embankment backfill against abutments, piers, walls, culverts, or other structures shall not be placed until the concrete has attained 90 percent of its design strength and has cured for at least 14 days or as otherwise specified in the contract.

It is very important that drainage be provided in back of retaining walls, tunnels, and structures having wing walls or abutments to eliminate excessive soil pressure. Weep holes shall be placed as shown on the plans and as low as possible. Gravel backfill for walls or other suitable materials shall be placed directly behind the structure. If drainage is a major problem, it may be necessary to also construct perforated drain pipe or French drains behind the structure.

The construction of embankments and backfill around bridge ends shall be in accordance with *Standard Specifications* Section 2-03.3(14)I. The fill around bridge ends shall be brought up equally on all sides of the bracing, columns, and bulkheads to avoid distortion and displacement of these members.

In addition, *Standard Specifications* Section 2-03.3(14)I requires that the superstructure be in place before the backfill behind an abutment can be placed. It further states that this requirement can be waived by the Engineer provided the Contractor submits abutment stability calculations to back up their proposal. When designing the bridge, the designers check the abutment stability using the final condition which includes the dead load of the superstructure. This superstructure dead load increases the resistance to sliding and reduces the overturning moment of the abutment. Since placement of the backfill prior to placement of the superstructure is a condition not analyzed by our designers, we require that stability calculations be submitted for each bridge by the Contractor to reflect this unchecked condition. These stability calculations need to include a surcharge load of at least 2 ft to account for the live loading due to the backfill equipment weight.

Around structures and bridge ends, where rollers cannot operate, compaction shall be obtained by the use of mechanical tampers. Density tests shall be taken frequently enough to ensure that compaction is continued on each lift until the specified density is attained.

2-10 Ditch and Channel Excavation

SS 2-10.3 Construction Requirements

Areas where open ditches are to be constructed shall be cleared and grubbed the same as areas for roadway excavation.

The excavated material may be used for the construction of dikes, berms, or otherwise disposed of as shown on the plans or as directed by the Engineer. The materials should not be placed in embankments unless it is suitable for embankment construction.

2-11 Trimming and Cleanup

SS 2-11.3 Construction Requirements

This work shall consist of dressing and trimming the entire roadway or roadways improved under the contract. The shoulders, ditches, and back slopes shall be trimmed to the specified cross-section to produce a neat and pleasing appearance. All channels, ditches, and gutters shall be opened up and cleaned to ensure designed drainage. This includes existing drainage within the project limits specified in the contract.

2-12 Construction Geotextile

SS 2-12.3 Construction Requirements

Construction geotextile fabric needs to be fully covered at all times until placement. It should be stored in a protected area off the ground and away from items that can cause damage such as sunlight, heat, precipitation, chemicals flames including welding sparks and any other environmental condition that may damage the physical properties of the fabric.

The area to be covered should be graded to a smooth, uniform condition free from ruts, holes, and protruding objects such as rocks and sticks. The fabric needs to be placed immediately ahead of the covering operation with as few wrinkles as possible. The material should not be dragged through the mud nor over sharp or protruding objects which could damage the material.

The cover material is to be placed in front of the placing equipment. This equipment should be sized to minimize the rutting that may occur during the placement. Turning of vehicles on the first lift of material may cause damage to the fabric and should not be allowed.

Sewing of seams is described in *Standard Specifications* Section 2-12.3.

Fabric damaged during placement needs to be repaired as soon as possible. The backfill material needs to be removed and the fabric repaired either as recommended by the manufacture or as listed in the contract. Visible evidence of damaged material may include subgrade pumping, intrusion of subgrade, or roadbed distortion.

Placement

Standard Specifications Section 2-12.3 lists the required placing and lapping requirements for each type of use of construction geotextile. Following is a short explanation for the placement types.

- **Underground Drainage** – The fabric is used as a wrap around the drain rock and the pipe to not only separate the backfill material from the drainage material but also to act as a filter of fine sands and silts. This prevents the fines from flowing into the drain rock and clogging the drainage system.
- **Separation** – The fabric is placed directly on a subgrade that contains a large amount of fine sand and silts. Normally the subgrade can be constructed during fair weather, however, almost any amount of moisture can make working on the grade impossible.
- **Soil Stabilization** – Soft subgrade that cannot support the weight of equipment constructing the roadbed, is usually removed, a fabric placed and covered with backfill. This allows a stable enough surface to continue construction. Here the fabric not only separates the two materials but also adds strength to the roadbed.
- **Permanent Erosion Control and Ditch Lining** – The fabric is utilized to reduce or minimize the ground surface's exposure to erosion. The material is placed directly on the surface to be protected and then backfill is placed over the fabric. Rock surfacing should not be placed in a lined ditch under the fabric as this would allow the water to erode the ground under the fabric thus eliminating its effectiveness.
- **Temporary Silt Fences** – As the title states, the fabric is used to trap silt and other fine particles from continuing from the project site to open water.

Chapter 3 Aggregate Production and Acceptance

3-01 Production From Quarry and Pit Sites

GEN 3-01.1 General Instructions

In the production of crushed and screened materials, continuous and effective inspection throughout all phases of the work is essential in order for the Washington State Department of Transportation (WSDOT) to obtain the best possible product from the available material. The Project Engineer is responsible for the enforcement of all specifications governing pit operations, crushing and screening procedures, and handling and placing of the product, as well as the various specifications governing gradation and quality.

The Project Engineer and Region Materials Office provides the Inspectors with the proper tools to test and inspect the production of materials. They also ensure that facilities are available at the plant site to enable the Inspector to carry out the work in the proper manner and obtain test results which are accurate and complete. The Project Engineer makes certain that the Inspector understands the nature of the work to be performed and is acquainted thoroughly with the applicable specifications and that the Inspector is proficient in the various testing techniques.

The Inspector needs to be familiar with the methods and procedures involved in crushing and screening operations so that the Inspector can appraise the causes of troubles when they occur. The Engineer or Inspector must never attempt to tell the Contractor how to conduct their operations (except where required by the specifications), but a good working relationship with the Contractor, based on a mutual respect for each other's knowledge and ability, will do much to ensure an efficient operation and a good product.

GEN 3-01.2 Outline of Inspector's Duties

Some of the most important duties of inspection are listed below:

- Check special provisions for special requirements in pit operation (area to be excavated, depth of excavation, etc.).
- See that overburden is stripped from pit in proper manner.
- Watch for radical changes in the character of material in pit.
- When required, see that washing and/or scalping are conducted in a proper manner.
- See that the plant, belts and loaders operate at a constant rhythm.
- Watch for evidence of segregation of the material. Advise the Contractor to take steps to correct any segregation.
- All sampling and testing of the product(s) is to be performed by a Qualified Tester.
- Keep complete records of field tests.
- See that the prime Contractor is informed of test results.
- When required, submit samples for mix design. Be sure to allow ample time for testing.
- Submit samples for determination of standard density.

SS 3-01.2 Material Sources, General Requirements

SS 3-01.2(2) Preparation of Site

The portion of the pit or quarry site to be used is prepared in accordance with the requirements of *Standard Specifications* Section 3-01. The strippings from the pit are stockpiled or disposed of in accordance with the reclamation plan as covered in Section 3-03. Care is taken in this operation so that usable material is not fouled or lost. In most cases, the manner in which the site is worked will determine how much work will be required to dress it up in accordance with the reclamation plan.

SS 3-01.2(4) Production Requirements

Prior to sampling and testing the material produced by the contractor, the Inspector is required to satisfactorily complete the Construction Tester Qualification Program in Chapter 9 for the tests to be performed.

It is imperative that the Engineer keep the Contractor informed of test results at all times. If the material being produced does not meet the requirements of the specifications, the Contractor must be informed immediately that the material is unacceptable so that corrections may be made. The Inspector's Record of Field Tests is used to record the test results completed by the Inspector. The Contractor Foreman's copy of the test results should be delivered as soon as practical after completion of each test to the foreman in charge of producing the material. When the test results show the material fails to meet specification requirements, the Inspector shall explain in the remarks section on the test form what action was taken to correct the deficiency. This form has the twofold purpose of providing a record of the test results and of keeping the Contractor informed of the quality and gradation of the material being produced.

Several field control tests may be required by the specifications for the type of material involved. These tests must be performed by a Qualified Tester and may include:

- Screen analysis for gradation.
- Sand equivalent test for detrimental fines.
- Examination of the material to determine percentage of fractured pieces.
- Moisture determination test.
- Organic matter content test.

The Inspector shall conduct these tests as often as necessary following the instructions for sampling and test methods described in Chapter 9. When production is first started, and until the production has resulted in a uniform product well within specification requirements, tests need to be taken more frequently than the minimum specified. Special care must be exercised to ensure that the sample taken for testing is representative of the material being produced.

Samples are taken and forwarded to the Region Materials Laboratory or State Materials Laboratory in the amounts and at the intervals specified in Chapter 9. Job site samples shall be obtained, tested, and recorded in accordance with the *Standard Specifications*, the contract special provisions, and Sections 9-5 and 10-3.

Samples of aggregate for bituminous mixtures are submitted to the State Materials Laboratory for determination of a mix design. These samples must be representative of the average grading of separate materials produced and information concerning the proportions of coarse and fine aggregates produced shall be included in the letter of transmittal. If blending sand may be required, a sample of this material shall be included in the shipment.

Ample time for testing of the materials must be allowed. A minimum time of one to two weeks is required by the laboratory to complete the tests and advise the Project Engineer of the recommended mix design. The *Standard Specifications* require allowance of 15 working days for mix design work after receipt of material and data in Tumwater.

Pit Operations

The Inspector must be alert to detect changes in test results, and look for evidence of changes in the character of the pit, or changes in crushing or screening procedures, as possible causes of variations. The use of production control charts provides an excellent visual means of detecting changes in the material being produced. Use of these charts is recommended for any significant production operation. Some quarries and pits contain pockets or areas of unsuitable material. The Inspector should keep familiar with the condition of the site so if areas of unsuitable material do appear, steps can be taken to bypass these materials. The inspector should also be aware of the tempo of the plant operations. A steady operation in all phases is desired. In particular, the plant should not run faster after a sample has been taken than it was prior to sampling.

Many quarries and pits require scalping to remove a portion of the fine material. When scalping is required, it is necessary for the Inspector to check to be sure the scalping screen does not become coated or plugged and allow the fine material to be incorporated into the finished product. When a scalping screen of a certain size is required in the special provisions, the Inspector shall check to see that it is of sufficient size and capacity that most of the material finer than the specified size is removed.

The Inspector must watch for evidence of segregation of the material on conveyor belts, in bunkers, or in discharging material into trucks. If any evidence of segregation is found at any stage of manufacture or handling, corrective devices, such as baffles, mixing chutes, rock ladders, etc., must be required.

SS 3-01.2(5) Final Cleanup

When the Contractor has completed work in a WSDOT furnished material source, the Project Engineer shall prepare a pit evaluation report on WSDOT Form 350-023. The information contained in these reports is needed to determine the future use of the pit. Also the information is very helpful in preparing plans for future projects in estimating stripping or special requirements that may be necessary to produce satisfactory products.

SS 3-01.3 State Furnished Material Sources

WSDOT furnished material sources normally are to be used on future projects as well as the present one so it is necessary that the material be removed in such a manner that the future usefulness of the pit is not impaired. *Standard Specifications* Section 3-01.3(1) requires the Contractor to submit a work plan for approval of the proposed operations in the pit before starting work in the pit so that it can be ascertained that the Contractor will not impair the future usefulness of the site.

In addition to the source containing sufficient material for the project, there should also be adequate area for the plant setup. If the project includes treated materials, consideration should also be given to provide sufficient area for the temporary stockpiling of the aggregates for the treated material and the mixing plant.

Disposal of strippings and scalpings in the site is of utmost importance if satisfactory reclamation of the site is to be accomplished with the minimum amount of work. This material should be placed where it will not interfere with future development of the site.

Surplus material accumulated during the production of specified materials will remain the property of WSDOT and must be stockpiled in the pit area where directed by the Engineer in accordance with the specifications for stockpiling material. The Contractor may be eligible for reimbursement of the production costs of the surplus material up to 110 percent of plan quantity or as specified by the Engineer.

If more than one source is provided in the special provisions, the Contractor may obtain the material from any of the sources. If the Contractor sets up in a site, and it is found that the quantity of raw materials from that site, when the site is exhausted, is less than that specified by WSDOT, then WSDOT may pay for moving the crushing plant in accordance with the provisions of *Standard Specifications* Section 3-01.3(5). If the new source of material necessitates a longer haul of the materials, WSDOT may also pay for the additional haul as specified.

SS 3-01.4 Contractor Furnished Material Sources

If the Contractor is required to furnish a source of materials or elects to use materials from a source different from those provided by WSDOT, the Contractor shall make arrangements for obtaining the materials and testing the source at no expense to WSDOT. The contractor shall submit Request for Approval of Material, WSDOT Form 350-071, identifying the source. If sampling is required, the contractor is responsible for providing the preliminary samples which are taken at locations designated and witnessed by the Region Materials Engineer or a designated representative. Use of the materials from the Contractor's source will not be permitted until after the materials have been tested, the source approved, and authority granted for the use of it. Acceptance of the materials will be based on their meeting the requirements of the specifications at the point of acceptance in Section 9-5.3.

If the Contractor has elected to use a source listed in the Aggregate Source Approval (ASA) Data Base, and the material has been approved for the intended use, the Project Engineer can approve the Contractor's request. If the Contractor has selected a source not in the ASA Data Base, WSDOT may sample and test the material for a specified use on a project. All cost associated with this sampling and testing will

be the responsibility of the Contractor. The Project Engineer can approve the request based on test results showing the material meets the specifications for which its use is intended.

Before preliminary samples of the materials are taken, the Contractor is required to have done enough testing of the source to ensure the quantity of material available so samples can be obtained which are representative of the material available from the source. The material in the Contractor's source must be of a quality equal to or better than that of the WSDOT provided source if test values are listed in the special provisions; otherwise they must meet the minimum specification requirements. Any surplus screening accumulated during the manufacture of specified material will remain the property of the Contractor.

When measurement is by weight and the specific gravity of the material in the Contractor's source is greater than in the specified source, *Standard Specifications* Section 3-01.4(1) require that any additional material required to construct the minimum specified surfacing depth shall be furnished by the Contractor at no cost to WSDOT. The following procedures shall be used to administer the specification:

When the Contractor's source of material has a specific gravity greater than the WSDOT provided source, a variation up to and including 0.05 above the specified source will be considered within the limit of working variation and will not affect course depths by a measurable amount. A variation in specific gravity greater than 0.05 will require a correction item for a credit deduction in treated and untreated items to compensate for the heavier materials. The credit deduction will be based on the following formula.

$$T\ x\ \ = D$$

Where:

T = Gross Weight of Product Furnished in Tons
C = Specific Gravity of Contractor's Source
S = Specific Gravity of WSDOT Furnished Source
D = Credit Weight to be Deducted in Tons

Payment under the item will be made for:

$$T - D = \text{Net Tons}$$

The preparation, production, and cleanup of the Contractor's material sources shall conform to the requirements of *Standard Specifications* Section 3-01.4. Clearing, grubbing, and stripping are not to be paid for on contractor's sources.

SS 3-01.5 Measurement

The area to be used to obtain material, for plant setup and any necessary stockpiles, shall be staked and measured for clearing and grubbing as specified in Section 2-01. The area to be stripped must be staked and final ground measurements taken to determine the volume of material excavated. It is important that an area be stripped which is slightly larger than the area required for the material. This will permit stripping additional area without leaving some material to contaminate the pit and it will also prevent working the pit to the edge of the strippings.

3-02 Stockpiling Aggregates

SS 3-02.2 General Requirements

SS 3-02.2(6) Construction of Stockpiles

Stockpiles shall be constructed in conformity with the provisions of the *Standard Specifications*. The area upon which the material is to be stockpiled is prepared carefully by removing all vegetation and constructing a uniform, flat ground surface. Preparation of a good base for the stockpile will minimize wastage of material, and will prevent contamination of the material when removing it from the stockpile.

The Engineer indicates to the Contractor the location of each proposed stockpile by placing marked stakes at each corner of the area to be used. If the material is to be stockpiled for later use by the Contractor, as in the case of aggregates for bituminous mixtures, the Engineer must consult with the Contractor and locate these stockpiles to conform with Contractor's plans for erecting the mixing plant, etc.

Stockpiles shall be located to ensure easy access by trucks and loading equipment and care must be exercised to see that a sufficient distance is maintained between the various stockpiles so there will be no possibility of mixing the various classes of materials. For all stockpiles, the maximum height is 24 ft. For stockpiles in excess of 200 cubic yards, the material shall be placed in the stockpile in layers not to exceed 4 ft in height, and in such a manner that segregation of the fine and coarse portions of the material does not occur. The Inspector must be watchful to see that segregation is held to a minimum. End dumping, dozing material over the side of the stockpile, or allowing material to roll down the slope is not permitted as severe segregation will occur as a result of such procedures.

After completion of each lift of material during the construction of a stockpile, it is common practice to use a pneumatic dozer to level the top of the lift before placing the next layer. This practice may be permitted but the Inspector must see that the operation of the dozer is limited to the minimum amount of work required to level the top of the layer, as excessive operation of the dozer on the pile can result in serious degradation of the material. If it is known that the stone is rather soft and subject to severe degradation under abrasion, the use of dozers on the pile must be prohibited and the pile leveled by hand or other methods which will eliminate the possibility of excessive degradation of product.

It is important to protect stockpiles from becoming contaminated with mud or other material tracked onto the stockpile. If the surrounding ground is wet and soft, or for any reason contaminates are carried onto the stockpile, the Contractor shall provide a means of preventing the contaminates from contaminating the stockpile. This may be by the placement of granular material on the haul routes to keep the equipment tires clean.

When the Contractor is stockpiling two or more classes of materials at the same time, the Inspector must be alert to see that the materials are placed in the proper stockpiles. A few loads of fine screenings inadvertently placed in a stockpile of coarse screenings can destroy or greatly reduce the quality of a large amount of material.

The Inspector is cautioned to be especially alert when stockpiling is being done during hours of darkness to see that all phases of the work are carried out in accordance with the specifications. In many instances, when difficulties are encountered in the use of stockpile material, it is found that the trouble occurred during the night shift when inspection and testing work are very difficult to accomplish in the proper manner. If the Contractor elects to stockpile aggregates prior to use in the immediate work, the requirements of *Standard Specifications* Section 3-02.2(4) must be complied with. The Project Engineer's attention is directed to *Standard Specifications* Section 3-02.3 for additional requirements for stockpiling certain aggregates.

Some of the important duties of the inspector are listed below:

- See that stockpile area is prepared properly.
- Stake each corner of proposed area for piles.
- Watch to see that material is placed in the stockpile in an approved manner.
- Watch for evidence of degradation or segregation of the material in the pile.
- See that piles are kept separate and are neatly finished.

SS 3-02.4 Measurement

The area to be used for stockpiles shall be staked and measured for clearing and grubbing as specified in Section 2-01.

3-03 Site Reclamation

GEN 3-03.1 General

All surface mines are to be reclaimed in accordance with RCW 78.44 *Surface mining* and the Contract Reclamation Plan. *Standard Specifications* Section 3-03 covers the requirements for site reclamation.

The intent of site reclamation is to develop an area that remains useful and aesthetically pleasing in appearance after the materials are removed from the site.

Costs involved in complying with the requirements and restrictions imposed by WSDOT, the Department of Natural Resources (DNR), or other agencies in order to comply with the Surface Mining Act do not constitute a basis for additional compensation. Any request for an extension of time resulting from plan approval delays will be considered only if complete and adequate plans were submitted in a timely manner.

To permit positive identification of the pit sites when the various surface mining forms are filled out, the pit site number should be included in the description box in the upper right hand corner of the forms.

SS 3-03.2 General Requirements

SS 3-03.2(1) Contracting Agency-Provided Sources

Contract reclamation plans for sources furnished by WSDOT will normally be included in the contract plans. When this is not done, or when a change to another state source is required, a new plan shall be prepared by the Project Engineer and submitted to the Region Materials Office for review. The Region Materials Office will review the contract reclamation plan to verify that it is in compliance with the DNR Reclamation Permit. The Project Engineer prepares the plan and related papers in accordance with the instructions issued by the Environmental and Engineering Programs Division. These instructions are located in Section 460.05 of the *Plans Preparation Manual* M 22-31.

SS 3-03.2(2) Contractor Provided Sources

Sites operating under a valid reclamation permit issued by DNR will not require a plan to be submitted to the Engineer, nor the DNR form, since the Contractor will be corresponding directly with DNR. Evidence of the permit and the conditions contained therein shall be furnished by the Contractor to the Project Engineer. DNR shall perform the inspection and administration of these sites.

Sites with less than 3 acres of newly disturbed land or with walls less than 30 ft in height and one to one or flatter slopes, waste sites, and stockpile sites are not surface mines and do not come under the provisions of the Surface Mining Act but must be reclaimed in accordance with the contract plans.

SS 3-03.3 Reclamation Plans

Reclamation plans are not required for stockpile or waste sites. However, all stockpile and waste sites are to be graded to the extent necessary to control erosion and provide satisfactory appearance consistent with anticipated future use.

Compliance with the State Environmental Policy Act (SEPA) is required for sites on WSDOT right of way involving more than 100 cubic yards of excavation or landfill throughout the lifetime of the site. For waste sites not on WSDOT right of way, the contractor must comply with the SEPA regulation adopted by the local jurisdiction. Sites involving more than 500 cubic yards of excavation or landfill throughout the lifetime of the site always require compliance with SEPA.

As an assurance of compliance, it is recommended that a site plan for reclaiming stockpile and waste sites be agreed upon by the Region and the Contractor.

In areas where local City or County ordinances exercise control of stockpile or waste sites, the Contractor shall submit copies of the governing agency's permit and evidence of approval by the property owner to the Project Engineer.

In all cases, the Region will be expected to inspect the sites, devoting special attention to aesthetics and ensuring that any diversion of drainage waters due to the wasting or stockpiling operations will not produce any adverse conditions.

4-02 Gravel Base

GEN 4-02.1 General Instructions

Gravel Base is typically used in the construction of the roadway section and provides support for the pavement. For the pavement to provide a long life, it is important the gravel base be placed uniformly and compacted properly.

SS 4-02.2 Construction Requirements

When gravel base is specified in the contract, the Contractor may request, in writing, that gravel borrow be used in lieu of gravel base. When gravel borrow is substituted for gravel base, the top 0.10 ft of gravel borrow shall be replaced with 0.10 ft of crushed surfacing top course (CSTC). Testing and sampling frequencies will be as required for the material actually placed. The CSTC and gravel borrow used in lieu of the gravel base is measured and paid for as gravel base and not as CSTC or gravel borrow. The inspector should note on the item quantity ticket that the CSTC or gravel borrow is being used in lieu of gravel base. The as-built plans will identify sections where gravel borrow and CSTC were substituted for gravel base.

4-04 Ballast and Crushed Surfacing

GEN 4-04.1 General Instructions

Ballast and crushed surfacing is used in the construction of the roadway section and provides support for the pavement. Ballast may be naturally occurring or manufactured, crushed surfacing is a manufactured material. Careful inspection during the manufacturing process is required to verify that the material meets the contract specifications. This is important so the material will have the properties needed to provide support to the pavement and drain water from beneath it. For the pavement to provide a long life, it is important that ballast or crushed surfacing be placed uniformly to the line, grade, and cross section specified in the plans and compacted properly.

Staking

See Section 1-05 for listed tolerance and the *Highway Surveying Manual* M 22-97 for additional instruction concerning staking.

GEN 4-04.2 Inspector's Checklist

Inspection duties include but are not limited to:

1. Watch for segregation of material on roadway. Make sure each course of surfacing is properly prepared and meets density specifications before allowing the next course to be placed.
3. When applying water to a surfacing course, see that it is distributed evenly over the entire course. Avoid over-watering which may cause soft spots in subgrade.
4. Make frequent checks of yield to see that the specified quantity of material is placed.
5. See that surfacing courses are completed and compacted true to profile and section. See that humps and sags in the profile are removed.
6. See that surfacing is maintained properly. Should irregularities develop in any surfacing the contractor shall repair the defects prior to placement of the next course.
7. Make depth checks to ensure conformance with the roadway section.
8. Make daily moisture checks on material paid for by the ton when excess moisture is present.
9. Make sure that adequate survey hubs are used in order to verify that the grade will be smooth and uniform.

SS 4-04.3 Construction Requirements

SS 4-04.3(2) Subgrade

Subgrade for ballast or crushed surfacing is prepared in accordance with the appropriate specifications. Any soft or spongy areas shall be removed or stabilized before the ballast or surfacing material is placed over it.

SS 4-04.3(3) Mixing

The *Standard Specifications* require the material to be mixed by the Central Plant Mix Method, the Road Mix Method, or a combination of the two methods. On some projects, the Central Plant Mix Method is the required method.

SS 4-04.3(4) Placing and Spreading

Ballast and crushed surfacing materials shall be hauled and placed on the roadway with the equipment and in accordance with the *Standard Specifications*.

It is imperative that the Inspector watch for segregation of materials during all stages of hauling and placement. The design of the roadway section is based on all materials meeting all requirements of the specifications, including gradation requirements. If crushed surfacing materials are deposited on the roadway in a segregated condition, the only corrective measure available is processing of the material on the roadway, using motor graders or other mixing equipment. Excessive processing of material on the roadway is a poor substitute for placement of material in the proper condition in the first place. Therefore, it is very important that every effort be made to ensure correct handling of the materials at all stages of surfacing operations.

Various types of equipment have been developed in order to facilitate placing the required amount of material with a minimum of segregation to the correct cross-section. When the material is mixed with water in a central plant before placing on the roadway with a spreading machine, it can be compacted and shaped to the proper grade and cross-section with a minimum of handling and shaping on the roadway. Some equipment operates from grade control wires to ensure the material is placed at the proper elevation and transverse slope. If this type of operation is proposed to be used by the Contractor, the Inspector should become familiar with the operation and intricacies of the equipment.

Before each course of surfacing is placed, the Inspector should verify that the underlying course is uniformly graded and compacted properly. The Inspector should also see that each course is finished to a true, smooth profile with no humps or hollows. A good way to locate irregularities in the roadway profile or crown is by careful visual inspection. Viewing the grade from a prone position or using stringlines between hubs may be helpful. In this way, additional material can be spot-placed to eliminate low and irregular areas, and the material graded and compacted to a true, smooth surface.

It is important the Contractor place the courses of surfacing material in such a manner as to minimize any deleterious effect on the quality of the material already placed. One of the best ways to minimize damage to the previously placed materials is to reduce the amount of hauling equipment traveling over each course. The placement of the surfacing should begin at the extreme end of the haul and proceed toward the point of loading. In this way, the least amount of hauling over completed courses will be required.

SS 4-04.3(5) Shaping and Compaction

Prior to placing any surfacing material, the Project Engineer submits representative samples of each surfacing material to be used on the project to the Regional Materials Engineer sufficiently in advance of the time of its intended use to permit completion of the compaction control test. For each surfacing material, the Project Engineer will receive a Maximum Density Curve worksheet from either the Regional Materials Laboratory or State Materials Laboratory. This worksheet shows the standard density for all gradations of the tested material as related to the percent passing the U.S. No. 4 sieve.

Each layer of surfacing material placed, including gravel base, is to be compacted with approved compaction equipment and checked for compliance with density specifications before the next layer of material is placed. When individual layers are placed to a depth of less than 1 in, testing of two layers at one time is permissible. Field in-place density tests are performed in accordance with the test procedures and testing frequencies outlined in Chapter 9. A minimum of 95 percent of the standard density as determined by the compaction control test for granular materials is typically required before the next layer of material is placed.

During processing and compaction, the moisture content of the material should be maintained at the optimum water content. The optimum water content is determined by the State Materials Laboratory and is listed on the Maximum Density Curve worksheet. Frequent light applications of water rather than periodic heavy applications are preferable as light applications tend to avoid saturation of the surfacing material below the surface. Some projects, typically ones with a large quantity of crushed surfacing, will require the water be added to the surfacing by the central mix plant method. With this method, the amount of water added can be closely controlled and mixed thoroughly with the aggregate. This will result in a material that is uniform both in gradation and water content which will be easier to compact.

If the special provisions require that the surfacing courses be trimmed with an automatically controlled trimming machine, the top of each course of different surfacing courses shall be trimmed to grade and cross-section. The cutting of the surfacing by the trimming machine is controlled by wire lines setup along each side of the roadway. It is therefore important that frequent checks of the wire be made both at the initial setup of the wire and during the trimming operation. This is necessary to verify that the wire has not been disturbed and that the grade will be trimmed correctly. The Project Engineer should be aware that the trimming machines now in use only trim the top surface and do not move material longitudinally from high spots to low areas. The Project Engineer shall see that the materials are placed in reasonably correct amounts and slightly higher than the finished elevations. After completion of the trimming and compaction of the surfacing the finished grade should be checked. Most of the existing trimming machines do a good job of trimming if they are cutting a nominal amount and they tend to chatter and leave an unacceptable washboard surface when operating over a surface that is at or below the finished grade elevation or very hard. On some projects subsequent operations such as concrete paving will also require wire lines and the contractor will typically use the same wire for both operations. The wires for these cases will need to be set far enough out to allow for the operation of the paving equipment. An alternative to requiring trimming machines for some projects is to use motor graders with automatic controls.

Maintenance of Surfacing

Upon completion of the surfacing courses, the Contractor is required to maintain and water the surface if any traffic is allowed to travel upon the roadway. When traffic is heavy, considerable damage can result if maintenance is not performed daily. It is much better to perform frequent light maintenance on a surfacing course than to wait until considerable rutting, pot-holing, and segregation occur in which event heavy processing and blading will be required. Testing for density in the top surfacing course shall be deferred until just prior to commencing paving operations.

The specifications provide that WSDOT may perform routine maintenance of a traveled roadway only in the event of a suspension of work for an extended period, as in the case of a shutdown for the winter.

SS 4-04.3(6) Keystone

Keystone may be used as needed to provide a tight surface for ballast, gravel base, crushed surfacing base course, or any other surfacing. If the Contractor's operation are such that a considerable amount of coarse rock accumulates on the surface of the completed course that will not compact tightly, keystone may be constructed in accordance with the requirements specified in *Standard Specifications* Section 4-04.3(6). If the contract includes crushed surfacing top course, the Engineer may order the construction of keystone and include the quantity in the measurement and payment of crushed surfacing top course. If the contract does not include the item crushed surfacing top course, approval for adding the item to the contract is required before it may be used. Keystone placed for the convenience of the contractor is paid for at the lower unit contract price for either the base material being keyed or the crushed surfacing top course.

The specifications require that when keystone is necessary that it be placed each day on the course prepared that day. This requirement is especially important when traffic is being carried through the project to protect the course just completed and also to maintain a satisfactory roadway for the traffic. In areas where the pavement is subject to freeze thaw conditions, the use of crushed surfacing top course may not be appropriate if the crushed surfacing top course is frost susceptible. The Regional Materials Engineer should be contacted prior to using crushed surfacing top course in freeze thaw locations.

SS 4-04.4 Measurement

The *Standard Specifications* require that surfacing materials be weighed and paid for by the ton or measured by the cubic yard in the hauling vehicle at the point of receiving the material.

For surfacing materials paid for by the ton, water in excess of the maximum permissible amounts, as specified in *Standard Specifications* Section 3-01.5, will be deducted from the weight of material to be paid for on a daily basis. The deduction will be determined by the following formula:

$$T(M - A) \text{ Based on dry weight: } D = 100 + M$$

Where:

D = daily tonnage deduction for excess moisture
T = total daily tonnage over the scales
M = percent of moisture
A = allowable moisture

Measurement by the Ton

Refer to Section 10-2.2 for instructions for measuring materials by the ton.

The following is a list of the scaleman's duties:

1. Keep the Scaleman's Daily Report continually through the day.
2. Check scale for zero at least twice during a day.
3. Tare each truck at least twice a day and enter on tare sheet.
4. Check the scales often and enter in diary.
5. Fill in appropriate spaces on each ticket.

Measurement by the Cubic Yard

Refer to Section 10-2.3A for instructions for measuring materials by volume, truck measure.

5-01 Cement Concrete Pavement Rehabilitation

SS 5-01.1 Description

Rehabilitation of Portland Cement Concrete Pavement is undertaken in order to repair damage to the roadway, extend the life of the pavement, prevent further damage to the pavement, and to provide a smoother ride to the traveling public. The various types of rehabilitation each have specific methods and requirements for performing the work. The Project Engineer and the inspection team must be familiar with the specifications, contract requirements, and techniques to be employed to accomplish the work. In addition, all personnel must be familiar with and adhere to the traffic control plans.

Prior to beginning work, the Project Engineer must ensure that the project personnel are properly qualified in the test procedures to be employed and familiar with the testing requirements; and that the equipment is calibrated and available.

When saw cutting or diamond grinding is required, pay special attention to environmental requirements for the removal and disposal of concrete slurry.

In addition to the requirements of *Standard Specifications for Road, Bridge, and Municipal Construction* M 41-01 Section 5-05.3(3), equipment used in PCCP rehabilitation must meet the requirements of *Standard Specifications* Section 5-01.3(1)B.

SS 5-01.3 Construction Requirements

SS 5-01.3(1)A Concrete Mix Designs

SS 5-01.3(1)A1 Concrete Patching Materials

Pre-Packaged Concrete Patching Materials – The Contractor may use patching materials for panel replacement.

Materials – The Contractor shall use concrete patching materials meeting the requirements of *Standard Specifications* Section 9-20. The Inspector should inspect and document all prepackaged cementitious materials to ensure that they are properly labeled and that the Contractor mixes them to the correct proportions, as specified by the manufacturer.

SS 5-01.3(1)A2 Portland Cement Concrete

Ready Mix Concrete – Portland Cement Concrete mixes used in concrete panel replacement have to meet the following additional requirements:

- The mix design is required to have a minimum flexural strength of 650 psi at 14 days and,
- The concrete must have obtained a compressive strength of 2,500 psi before the panel can be opened to traffic.

The Inspector should ensure that the mix design has been accepted prior to use. Visually verify that the concrete delivery ticket has all required information and that the concrete is in compliance with the mix design. Acceptance of the mix is verified on the grade by testing the air content and taking 28-day compressive strength cylinders for testing. Acceptance testing for air content and compressive strength should be performed once per shift. The rapid compressive strength gain of some proprietary concrete mixes makes taking air content and slump test difficult and these field tests may be waived at the Project Engineer's discretion.

SS 5-01.3(1)B Equipment

The Inspector should verify that all equipment used is in good working order and can produce a panel to the correct grade and in compliance with the Contract specifications.

SS 5-01.3(4) Replace Portland Cement Concrete Panel

When a PCCP panel is damage too severely, the only repair possible is replacement of all or a portion of the panel. This is accomplished by saw cutting and removing the PCCP panel and placing new PCCP, dowel bars and tie bars.

The Inspector must ensure that panels to be removed are laid out according to the plan or as designated by the Engineer. All saw cuts must be full depth. In order to prevent damage to adjacent slabs that are to remain, a second full depth relief cut is required 12 to 18 in inside the panel in both the transverse and longitudinal directions. If these full depth relief cuts are not made the energy imparted lifting out and or break up the panel may be transmitted to the adjacent panels that are to remain and cause damage.

Once the panel has been removed, the Inspector should inspect the subgrade material and the adjacent panels for any damage. The subgrade should be compacted to grade prior to placement of new concrete. Crushed surface base course or hot mix asphalt may be needed to provide a level and firm surface. This is already included in the standard bid price of the work. If the material is not compactable remove it, place a geotextile and place crushed surfacing base course as detailed in *Standard Specifications* Section 5-01.3(4). Should the material need to be removed, this work, as detailed in items 1 through 5 of the *Standard Specifications*, is to be paid by force account.

The Inspector should ensure that dowel bars and tie bars are placed in accordance with the plan, and meet the requirements of *Standard Specifications* Sections 9-07.5 and 9-07.6. The Inspector should collect Manufacturer's Certificate of Compliance documentation (and Certificates of Materials Origin on federally funded projects) for all dowel bars and tie bars prior to use on the project.

If new concrete pavement is to be placed against existing concrete pavement, epoxy-coated dowel bars shall be drilled and grouted into the existing concrete pavement. Tie bars are required whenever <u>four</u> or more concrete pavement panels in a row are placed next to existing pavement. Corrosion Resistant Dowel bars may be used in place of epoxy-coated dowel bars in panel replacements described in *Standard Specification* Section 5-01. The Inspector should verify that placement and tolerances of dowel bars and tie bars are in accordance with *Standard Specifications* Section 5-01.3(4).

SS 5-01.3(5) Partial Depth Spall Repair

This work consists of removing and replacing a relatively small portion of a concrete panel.

The Inspector must ensure that removal of existing pavement does not cause damage to any pavement that is to remain. Make sure that a saw cut to a minimum depth of 2 in is made around the area to be removed. The pavement shall be removed to a depth of 2 in or to sound concrete as determined by the Engineer.

Materials – The Contractor shall use concrete patching materials meeting the requirements of *Standard Specifications* Section 9-20. The Inspector should inspect and document all prepackaged cementitious materials to ensure that they are properly labeled and that the Contractor mixes them to the correct proportions, as specified by the manufacturer.

Equipment – The Inspector should verify that all equipment used is in good working order, and meets the requirements of the contract. The Inspector should verify that jackhammers weigh no more than 30 pounds and chipping hammers weigh no more than 15 pounds.

SS 5-01.3(6) Dowel Bar Retrofits

Dowel bar retrofitting is employed to insure the transfer of loads between adjacent roadway panels and is combined with pavement grinding to extent the service life of the pavement. This increases the stability of the roadway by restricting differential movement of the panels and reducing vertical movement. Dowel bar retrofits are accomplished by cutting slots in the pavement, placing dowel bars, and filling with concrete patching material.

The Inspector should verify that the slots are located in accordance with the plan and cut parallel to the centerline of the roadway and to each other, and that they are centered over the transverse joint. All exposed surfaces and cracks in the slot must be sand blasted to a clean concrete surface. All grout residue and debris must be removed from the slot, using either an air compressor or, if allowed, a high pressure water blast.

The Inspector should ensure that dowel bars are as specified and are placed in accordance with the plan. Foam core inserts shall be placed at the middle of the dowel, in line with the transverse joint, and must fit tightly to the sides and bottom of the slot. The foam core inserts should extend to the top of the existing pavement. It is important that the foam core inserts are place perpendicular to the bars and line up with the transverse joints. The top of the foam core insert will be removed when the joint is saw cut through the section.

Concrete patching material shall be placed in the slots in a manner that does not disturb the dowel bar and to a level slightly above the level of the surrounding roadway.

Within 10 working days of placement of the concrete patching material, diamond grinding of the roadway surface should be done in order to provide a smooth surface.

Materials – The Contractor shall use concrete patching materials meeting the requirements of *Standard Specifications* Section 9-20. The Inspector should inspect and document all prepackaged cementitious materials to ensure that they are properly labeled and that the Contractor mixes them to the correct proportions, and follows any placement restrictions, listed on the packages.

Ensure that dowel bars and tie bars are placed in accordance with the plan, and meet the requirements of *Standard Specifications* Section 9-07.5(1) and 9-07.6. The Inspector should collect Manufacturer's Certificate of Compliance documentation (and Certificates of Materials Origin on federally funded projects) for all dowel bars and tie bars prior to use on the project.

Equipment – The Inspector should verify that all equipment used is in good working order, and meets the requirements of the contract. Ensure that air compressors are of sufficient size and capacity to perform the work.

SS 5-01.3(8) Sealing Existing Transverse and Longitudinal Joints

Sealing existing transverse and longitudinal joints in a PCCP panel helps restrict the infiltration of water into the subgrade beneath the panel.

Transverse and longitudinal joints are sealed by removing all old sealant material with a diamond blade saw, cleaning the joint and sealing with an accepted joint sealant material.

When sealing transverse and longitudinal joints, the Inspector must verify that the proper depth of the old sealant has been removed from the joint. Immediately prior to sealing, all joints shall be blown clean with dry oil-free compressed air. Sealant materials shall be placed in conformance with the manufacturer's recommendations and in accordance with *Standard Specifications* Section 5-05.3(8)B.

Materials – Joint sealant shall meet the requirements of *Standard Specifications* Section 9-04.2.

Equipment – The Inspector should verify that all equipment used is in good working order, and meets the requirements of the contract. Ensure that air compressors are of sufficient size and capacity to perform the work.

SS 5-01.3(9) Portland Cement Concrete Pavement Grinding

Diamond grinding of PCCP panels is employed to increase ride smoothness and to reduce bumps following dowel bar retrofitting and will increase the PCCP pavements life.

The Inspector should ensure that grinding begins within 10 working days of dowel bar placement and once begun is a continuous operation until completed. Pavement shall be ground in a longitudinal direction removing a minimum of ⅛ in from 95 percent of the surface to be ground.

If new cement concrete pavement is to be placed adjacent to rehabilitated cement concrete pavement, one pass should be ground along the edge of the rehabilitated pavement adjacent to where the new pavement will be placed. This will assure a smooth surface on which the paving screed will ride.

Equipment – The Inspector should verify that all equipment used is in good working order, and meets the requirements of the contract. Ensure that only diamond grinders of sufficient size and capacity are used to perform the work.

5-02 Bituminous Surface Treatment

GEN 5-02.1 General Instructions

Refer to Section 5-4.1 for a general discussion of responsibilities and attitude of the Inspector on bituminous paving work.

It is very important that the Inspector on construction of a Bituminous Surface Treatment be entirely familiar with the specifications and methods applicable to the work, as construction of these types of surfaces proceeds very rapidly. If the work begins without proper preparation and planning, it is entirely possible that a major portion of the job will be completed before correction of any improper methods or procedures can be made. Project inspectors should thoroughly review *Standard Specifications* Section 5-02, the contract plans and the contract special provisions well in advance of Bituminous Surface Treatment construction.

Careful review of *Standard Specifications* Section 5-02.3(10) concerning unfavorable weather and calendar cutoff dates should be made well in advance of any bituminous paving work. In no case should bituminous surface treatments be placed before May 1 or after August 31 of any year except upon written order of the Project Engineer.

To correct the volume of the material to 60°F, the Inspector may use 240 gallon per ton at 60°F for all grades of emulsified asphalt.

When payment for asphaltic materials is by the ton, they should be measured by weighing. When it is impractical to weigh the materials, the quantity of asphaltic material used may be measured by the gallon and the number of gallons converted to tons with the appropriate temperature volume correction.

GEN 5-02.2 Duties Before Construction

See Section 5-4 for preliminary duties of the Inspector.

Traffic Control – Refer to Section 1-2.3 and 5-4 for instructions concerning preliminary arrangements to be made for control of traffic.

GEN 5-02.3 Inspection and Sampling of Materials

Emulsified Asphalt – Each shipment of emulsified asphalt arriving on the job by tank truck shall be inspected by the Inspector. Each shipment must be accompanied by a Certification of Shipment. The tank must be inspected after it is unloaded to see that no emulsified asphalt remains in the tank.

The Inspector must check and record the temperature of each load of emulsified asphalt as it is delivered to the roadway for spreading.

Samples of the emulsified asphalt shall be taken as required in Section 9-4.2, and shall be submitted to the State Materials Laboratory for Testing.

Aggregates – No aggregate shall be used without the acceptance of the State Materials Laboratory. If any question arises concerning quality of the material, a sample shall be sent to the State Materials Laboratory for testing before use and preferably during plan preparation.

GEN 5-02.4 Miscellaneous Inspection Duties

Control of Traffic – Frequent checks should be made of traffic control operations to see that traffic is being conducted through the job in a safe, orderly manner. When spreading emulsified asphalt, traffic should not be allowed to travel past the distributor. Control of the speed of traffic is very important, especially during the early curing stage of the asphalt, to ensure the aggregate covering the asphalt is disturbed as little as possible. Control of traffic must be maintained as long as required to prevent excessive loss of the aggregate. The Inspector must ensure that all warning signs are properly in place throughout construction. See Section 1-2.3 for further instructions on construction signing.

Maintenance and Finishing Roadway – The Inspector shall see that the newly completed roadway is properly maintained until brooming is completed. The Contractor shall be required to keep sufficient equipment on the job to adequately handle any situation that may develop, including application of a fog seal if a fog seal is deemed necessary by the Engineer. Before the work is accepted, the Contractor shall be required to finish the roadway and clean up any debris resulting from their operations, as required in the *Standard Specifications*.

Measurement of Stockpiles – Before construction begins, the stockpiles from which materials are to be removed shall be measured and quantities computed. Upon completion of the work, the Contractor shall be required to leave the remaining materials in neat, presentable stockpiles. The stockpiles shall again be measured and quantities determined. The difference in quantities obtained by this procedure will aid in checking pay quantities determined by truck volumes. It will also serve as an accurate basis for reporting quantities withdrawn from stockpiles. Measurement of stockpiles will not be necessary on projects where the aggregate is furnished by the contractor.

Notice to Maintenance Superintendent – The Project Engineer should keep the area Maintenance Superintendent informed of the Contractor's proposed progress schedule so that maintenance operations can be coordinated to accommodate the construction work. The Project Engineer must also notify the Maintenance Superintendent of the date when the Contractor's maintenance period will expire so that maintenance of the roadway may be taken over by WSDOT and maintained without interruption. These notices should be given sufficiently in advance to enable the Maintenance Superintendent to provide equipment and organize the work.

GEN 5-02.5 Reports and Records

A Daily Report of BST Operations (DOT Form 422-644) shall be made at the end of each day's work, showing type of work, areas treated, quantities used, etc. This report shall be submitted in duplicate for the Project Engineer and Region.

Records of quantities of emulsified asphalt and aggregate used shall be kept in the Inspector's Daily Report, and shall be checked daily against quantities shown on tickets issued to the Contractor. Accurate, neat records are invaluable to the Project Engineer in preparing estimates and final records. See Section 10-2 for instructions concerning quality control procedures.

The Inspector shall enter in the Inspector's Daily Report all pertinent information concerning each day's work.

SS 5-02.3 Construction Requirements

SS 5-02.3(1) Equipment

Inspection Tools and Equipment – Before construction begins, the Inspector shall secure from the Project Engineer all equipment necessary to carry out the inspection duties. This equipment shall include air and asphalt thermometers, a device to measure surface temperature, wind gage, sieves and scale, tapes and rules, canvas sample sacks, containers for sampling asphalt, notebooks, ticket books and diary book.

Inspection of Contractor's Equipment – Prior to construction of the bituminous surface, the Inspector shall make an inspection of the Contractor's equipment. The Inspector shall check to see that all required equipment is available, in good condition, and is properly adjusted.

A careful check of the asphalt distributor shall be made to ensure that it meets the requirements of the specifications. The Inspector shall verify the capacity of the distributor, and ensure that the volume gauge is calibrated to correctly indicate quantities in the tank.

Special attention should be given to the condition and adjustments of the asphalt pump, spray bar and spray nozzles. The nozzles should be set uniformly at the proper angle from the axis of the spray bar, normally 15 to 30 degrees, to eliminate interference of the sprayed material from one nozzle with that from an adjoining nozzle. Each nozzle should be set at the same angle. The height of the spray bar must be checked to see that the correct overlap of the spray from each nozzle is obtained. This can be accomplished by plugging alternate nozzles and adjusting the height of the spray bar until the edges of the spray fans from the unplugged nozzles just meet at the roadway surface. When all nozzles are spraying, an exact coverage of emulsified asphalt will be obtained, resulting in an application of emulsified asphalt free from longitudinal streaking.

The asphalt pump must be checked to ensure that the manufacturer's required pressure can be maintained uniformly.

The Inspector must check the motor patrol graders, rollers, spreader boxes, etc., to ensure that they are in good operating condition. The Inspector should see that the motor patrols are equipped with the required moldboard brooms. The capacity of hauling trucks and water tanks must be determined, by the Inspector, from measurement obtained on the job, the results being recorded for future reference.

SS 5-02.3(2) Preparation Of Roadway Surface

SS 5-02.3(2)A New Construction

The roadway surface shall be shaped and compacted to a smooth, uniform grade and cross-section before application of the emulsified asphalt. If possible when setting grade, do not place stakes, hubs, etc. in the roadway, as this may cause faults in the finished surface. If stakes or hubs must be placed in the roadway in order to set the grade, these stakes or hubs must be removed and the void filled and compacted prior to placement of the surface treatment. No traffic will be allowed on the prepared surface until the first application of asphalt emulsion and aggregate is applied. It is essential that the grading of the surfacing material be uniform over the area to be treated to allow uniform penetration of the emulsified asphalt. This is different work than that associated with shaping and compacting of crushed surfacing as required in *Standard Specifications* Section 4-04.3(5). The quality and smoothness of the finished roadway depends to a great extent on the quality of the work done in preparing the roadway. Careful inspection during this operation will lay the groundwork for a smooth riding and uniform appearing finished project.

In many instances, the surfacing course upon which the bituminous surface treatment is to be placed will be segregated, rutted and pot-holed by traffic using the roadway prior to oiling. Such a surface must be completely processed to the depth of the ruts or potholes, and re-laid. Do not allow the Contractor to merely lightly blade the surfacing course, filling the holes with loose, segregated material. Such procedures are sure to result in a rough uneven pavement, due to differential compaction and penetration.

The surfacing must be damp, bladed, and thoroughly rolled to obtain a dense, unyielding base for the bituminous surface treatment. If additional water is required, it shall be applied in the amount and at the locations designated by the Project Inspector. The final coverage must be with a steel-wheeled roller to produce a smooth surface upon which to apply the first application of emulsified asphalt. The blading and rolling of the surfacing shall be coordinated so the emulsified asphalt will be applied while the surfacing material is still damp. If the surfacing material compacts to a very tight surface, the emulsified asphalt will not penetrate as much as if the material is more open. If this is the case, the inspector should be careful to not apply too heavy a coat of emulsified asphalt.

SS 5-02.3(2)B Seal Coats

- **New Construction** – The surfacing needs to be dampened, trimmed, and rolled to provide a uniform grade and cross section according to the plans. Surface soft spots need to be excavated and repaired with the same type of surfacing material. The amount of water applied needs to be the optimum amount necessary to tighten the surfacing enough to minimize its porosity and absorption of the first application of emulsified asphalt. Traffic should not be allowed on the prepared finished surfacing.
- **Existing Roadway** – Prior to the first application of emulsified asphalt, the Inspector shall ensure that the existing surface is broomed clean and that holes and breaks are patched as required. The Inspector should inspect the existing surface carefully over the length of the job, noting the surface characteristics of the roadway, so that the rate of application of emulsified asphalt best suited to

the conditions can be determined. The Inspector should make note of varying conditions and plan to vary the application of emulsified asphalt accordingly.

Any areas of the roadway showing failure caused by soft subgrade or poor drainage must be removed and the cause of the failure corrected.

If any open or porous paved surfaces, particularly on recently constructed bituminous pavements, are found in the area to be treated, the Inspector shall require the application of a fog seal to be applied before construction of the seal coat. If this fog seal is not shown on the plans, the Inspector will inform the Project Engineer of the situation, so that a supplemental agreement may be reached with the Contractor.

The Inspector is responsible to see that a newly constructed bituminous surface be allowed the required time for curing before allowing construction of the seal coat over the affected area.

SS 5-02.3(3) Application of Emulsified Asphalt and Aggregate

When beginning a BST section, the Inspector shall require that the Contractor provide a minimum 1,000-ft test strip. This test strip will be used to verify that the Contractor's equipment is functioning according to specification.

Building paper shall be placed at the joint, each time the distributor starts, in a manner that assures a uniform asphalt emulsion spread across the area of the joint.

During the application of the emulsified asphalt, the Inspector shall maintain a close inspection of the roadway to see that the emulsified asphalt is applied in a uniform manner. Longitudinal joints will be allowed only at the centerline of the roadway, the center of the driving lanes, or the edge of the driving lanes. If any evidence of improper application is apparent, the operation must be stopped at once and required corrections be made to eliminate the trouble. The Inspector must check to see that the asphalt pump pressure and the speed of the distributor are maintained at uniform rates to ensure even application of the emulsified asphalt. A record shall be made of each distributor load applied, showing area treated, gallons spread, temperature of emulsified asphalt, etc. The Inspector should compute the yield of each spread in gallons per square yard depending on diluted or undiluted emulsified asphalt.

Part of the first application of emulsified asphalt applied to the surfacing penetrates the material and the rest remains on the surface and surrounds the aggregate, usually ½ inch screenings. Constant checking is necessary to ensure that enough emulsified asphalt is applied to fill the voids and adhere to the aggregate. Conditions may change during the day due to weather or the preparation crew's efforts to stay ahead of the oiling crew. Some bleed can be tolerated on the first application as it can be corrected on the second application if uniform in nature. The final mat will be thicker and better if the optimum amount of emulsified asphalt is used, without excessive bleed, on the first application. Succeeding applications are placed as described in Chapter 5-2.4.

Stockpiled aggregate shall be inspected to ensure that the grading of the material meets specification, and to verify that it is damp at the time of loading onto trucks for hauling to the roadway. If dry or dusty, the material in the stockpile must be watered to produce a surface damp condition. The emulsified asphalt does not readily coat a dry dusty surface. During warm weather, the moisture on the surface of the aggregate will quickly evaporate after the aggregate is spread and the emulsified asphalt is applied to the roadway.

The Inspector must frequently check the truckloads of aggregate at the point of delivery, to see that the trucks are completely loaded and that the material is damp. Tickets shall be issued for each load of material received or a receiving report record made as the loads of material are received. A record shall be made of the quantities of material used on each section.

Following the application of emulsified asphalt, the Inspector is responsible for ensuring that the aggregate is applied in accordance with the specifications. The aggregate needs to be applied at the correct rate within the allotted time limit. The roadway shall be inspected for signs of skips or omissions in the application of the aggregate. Any omissions shall be immediately covered by re-spreading with the chip spreader or by hand-spotting methods. The Inspector must not allow excessive amounts of aggregate to be applied, as this will result in waste of the material and require harmful excessive brooming.

Careful inspection and control of the rolling operation must be made to ensure that the requirements of the specifications are met. It is important that rolling be conducted as soon as possible following application of the aggregate in order to properly imbed the aggregate in the asphalt. Adequate rollers should be present to provide required complete coverage without excessive speeding and abrupt starting and stopping motions.

Chips are broomed once the emulsified asphalt cures enough to adhere the chips to the roadway. Brooming is necessary to prevent wheel tracking promoted by loose aggregate on the roadway. Areas of severe bleeding will need to be blotted with ¼-inch material during the cure period. Emulsified Asphalts do not really cure except for water evaporation when they break. The constructed area will be tender, although probably ready for the next construction step.

When the asphalt has set, adhesion has developed and the chances of bleeding are remote.

The excess aggregate on the edge of the roadway shall be broomed off as it is a hazard to traffic and reduces the usable width of the roadway.

SS 5-02.3(5) Application of Aggregates

Construction of Seal Coat – Refer to Section 5-2.3 for instructions covering inspection duties during application of emulsified asphalt and screenings or cover stone.

In the construction of a seal coat, the quantity of emulsified asphalt spread is very critical due to the thinness of the layer of aggregate placed on the emulsified asphalt. Constant checking is required to ensure that embedment of the major stone in the asphalt is 50 to 70 percent. Where ½-in to No. 4 chips are used on routes with moderate traffic volumes, choke stone may be used either ahead of or immediately behind the main rollers. Some bleed is inevitable at intersections, on steep hills, and at severe horizontal or vertical curves. This is less objectionable than losing rock on long sections in between, due to insufficient emulsified asphalt being placed.

The Inspector must maintain continual inspection of the aggregate application on the freshly spread emulsified asphalt, to ensure that the material is placed within the

time allotted. The Inspector must make certain that the spread of emulsified asphalt is not extended beyond the area which the Contractor is capable of covering.

Omissions or skips in the spreading of aggregates must be immediately covered by re-spreading with the chip spreader or by the hand spotting crew.

The best seal coats are obtained on those jobs where the time elapsed between spreading of asphalt and application of aggregates is held to the time allotted.

The Inspector must ensure that the rolling operation is not allowed to lag far behind the spreading of aggregates. It is important that the particles of aggregate be rolled into the asphalt film as soon as possible following application.

Spreading Choke Stone – When constructing Bituminous Surface Treatment Seal Coats, the specifications may require application of choke stone following the spreading and rolling of the coarse aggregates. The Inspector must exercise judgment in determining the time for applying the choke stone. When using emulsified asphalt, the choke stone should be applied immediately, sometimes even before initial rolling.

Choke stone, applied at the proper time, will key the gaps between the particles of coarse aggregate and provide a smoother riding surface, as well as absorb any free asphalt which might bleed to the surface of the coarse particles.

By observing conditions and results carefully, the experienced inspector will determine the procedure which produces the best results under any particular condition.

If the sealed roadway is rained on before the asphalt has cured and the asphalt starts to emulsify under the traffic, the roadway can usually be saved from damage by applying choke stone on the roadway to prevent the traffic from picking up the asphalt. The spill prevention control and countermeasures plan (SPCC plan) should be referred to for guidance on using Best Management Practices (BMPs) to protect the environment.

SS 5-02.3(9) Protection of Structures

When spreading emulsified asphalt or aggregate near curbs, bridge rails, drainage inlets, monument covers or other structures, adequate protection must be provided to prevent damage to the structures. The Inspector shall see that any emulsified asphalt sprayed, or aggregate spread, on or in a structure is satisfactorily removed by the Contractor.

5-03 Vacant

5-04 Hot Mix Asphalt

GEN 5-04.1 General Instructions

The technology of asphalt materials and mixes is continuously changing. It is imperative to study contract documents and specifications prior to the start of any paving contract. There also are many excellent handbooks that can be obtained to assist paving inspectors and testers. It is recommended that the Project Engineer obtain copies of these handbooks as a resource for their office. Recommended books include “Hot Mix Asphalt Materials, Mixture Design and Construction” by the National Center for Asphalt Technology and “Hot-Mix Asphalt Paving Handbook” by the U.S. Army Corps of Engineers.

Good work and a successfully completed job depend on good equipment, skillful operation of the equipment, competent, knowledgeable supervision and inspection, and open lines of communications. Maintaining open lines of communication through informal daily meetings between the project inspector and contractor, can greatly improve the success of any job. Hot mix asphalt (HMA) projects, are not always built as originally scheduled. Changes may occur because of material supply, equipment breakdown, Contractor and subcontractor schedules, and weather conditions. Informal meetings on a regular basis provide a forum for the exchange of information and discussion of problems. To begin the communication process a prepaving meeting is recommended. The Project Engineer, paving inspectors and testers together with Contractor superintendents, foremen, screed operators, rakers, roller operators and plant operators should be present to go over all activities and plan the entire operation. It is also advisable to include traffic control personnel. The following checklist may be used as an outline for the prepaving meeting:

Prepaving Checklist

1. Review the HMA contract requirements with the Contractor. This will include the class of HMA, grade of asphalt binder, evaluation and acceptance procedures, mix design submittal and test section (HMA mixture and only if requested). If warm mix asphalt is proposed, the Contractor is required to submit the request (*Standard Specifications* Section 5-04.2).
2. Go over procedures in *Standard Specifications* Section 5-04.3(7)A1 for modifying the job mix formula.
3. Discuss construction of HMA mixture test section (*Standard Specifications* Section 5-04.3(8)A7).
4. Discuss the communication procedure to be used for weather shut downs, use of mix in trucks and silos, and other potential construction problems.
5. Review what type of material transfer equipment (vehicle or device) the Contractor plans on using?
6. Discuss testing for low cyclic density (*Standard Specifications* Section 5-04.3(10) B2) and what to do if segregation of the mix is occurring.
7. Discuss the preparation of the existing surface (*Standard Specifications* Section 5-04.3(5)A) including cleaning the pavement, application of tack, pickup problems and weather limitations (*Standard Specifications* Section 5-04.3(16).
8. Go over the procedure and timing in obtaining density gauge correlation factors.
9. Go over asphalt densities: Who, When, and How, notification of results, request for cores, and utilization of core results.
10. Mixture sampling and testing: Who, When, and How, notification of results, composite pay factors (CPF) available after three sublots through WSDOT website, and Contractor request for a sublot to be retested.
11. Review sampling of the asphalt binder, the maximum recommended temperature for heating the asphalt binder and the maximum allowable temperature for discharge of the HMA (*Standard Specifications* Section 5-04.3(1) item 3 and 5-04.3(8) respectively) for the type(s) of asphalt binder being used on the

project. The Contractor will supply the information from the manufacturer of the asphalt binder.

12. Traffic control procedures and lines of communication including allowable times for lane closures.
13. Other factors specific to Contract or of concern by those attending.

In the construction of HMA, it is extremely important that the material meets all requirements of the specifications. It should be remembered that specifications are not arbitrarily arrived at, but have evolved through the years as a result of experience and research.

Experience has shown that pavements that do not meet all specifications will not perform satisfactorily, resulting in high maintenance costs. The responsibility for obtaining a mixture in close conformance with the project mix design and meeting the specification requirements rests with the Contractor. The importance of this cannot be overemphasized, since the best possible construction at the lowest cost to WSDOT cannot be obtained unless the mixture produced at the plant is uniform and of good quality. The key word used to describe quality production of HMA is UNIFORMITY.

- The aggregate in the stockpile must be of UNIFORM quality and gradation.
- Aggregate must be fed into the plant in a UNIFORM, controlled manner.
- The heating and drying of the aggregate must be UNIFORM.
- The separation of the aggregate in the bins must be UNIFORMLY controlled.
- The aggregates and asphalt must be combined and mixed in a UNIFORM, consistent manner.

In order to achieve this uniformity of quality, it is necessary that the entire operation be conducted so that each phase of the production operation is in balance with all other phases. To accomplish this most Contractors have a Quality Control (QC) program.

With the advent of Quality Assurance (QA) specifications and statistical evaluation of HMA, the role of inspection has evolved from one that was highly involved in the operation of the asphalt plant to one that is involved in verification that the material the Contractor produces is in conformance with the job mix formula and in accord with the specifications.

Various testing procedures are available to ensure that the component materials and the completed mixture meet the requirements of the specifications. However, since only relatively small samples of each day's production can be tested, inspection duties and responsibilities involve more than merely performing the required tests. Inspectors and testers must be familiar with the working of the asphalt plant and be observant during the production of the HMA for any changes that may occur in the Contractor's production of HMA. The Contractor is responsible for the uniform production of HMA so that the end product is of uniform quality. Only when the product is uniform can samples be considered representative of the material produced. The Inspector, through communications and observations of plant operation, can work with the Contractor to assure that the mix is being produced uniformly. If problems are observed, the plant foreman should be notified as the foreman is responsible for making the necessary corrections. If violations or misunderstanding of the specifications arise that cannot be promptly settled, the Project Engineer must be notified immediately.

Instructions in all cases shall be issued to the Contractor's designated representative rather than the workers. A diary must be kept, showing all instructions received from the Project Engineer and instructions issued to the Contractor.

Careful review of *Standard Specifications* Section 5-04.3(16) concerning weather limitations and calendar cutoff dates should be made in advance of any HMA paving work so that paving can be planned and completed prior to any unfavorable weather. Pavement performance is highly dependent on the weather conditions in the first weeks and months following paving. Invariably, when these specifications are not closely adhered to, early pavement performance problems occur. Therefore, beginning October 1 of any year through March 31 of the following year, no wearing course is to be placed without written authorization of the Project Engineer. The Project Engineer will review this decision with the Region Headquarters prior to allowing any paving outside these dates.

In addition, use of a pneumatic tired roller is required from October 1 through March 31. It has been shown that during warmer weather, traffic will knead the HMA providing a more durable pavement. To duplicate this benefit for late season paving, use of pneumatic tired rollers is part of the specifications. Placement of dense graded mixes of 0.10 ft or less is not recommended between September 1 and April 1. Heat loss in thin lifts is very quick and in most cases inadequate time is available for placement or to achieve needed compaction.

GEN 5-04.2 Inspector Roles and Responsibilities

Testing Equipment – Before the production of HMA commences, the Inspector needs to ensure that all of the necessary equipment needed to accomplish all of the test procedures has been obtained. In addition, qualified testers using calibrated or verified equipment are required. The Inspector needs to make sure that this equipment is in good working order and has a current calibrated or verified sticker on it, and that all tester qualifications are current.

The Inspector is charged with responsibility for care and safekeeping of all testing equipment that is issued. The equipment must be maintained in a clean and proper operating condition to ensure accuracy of test results. Special care must be exercised in the use and maintenance of sieves to see that they do not become clogged or damaged. Thermometers must be handled carefully to avoid breakage.

Electronic scales are expensive, desirable, and delicate equipment. Particular care should be taken to protect them from theft or voltage spikes.

The ignition furnace is a high temperature oven, care must be exercised in its operation and testers must be qualified in its use.

Given reasonable care, HMA testing equipment will give long and satisfactory service.

Required Tests – The Project Inspector is responsible to the Project Engineer for the required field tests as well as for submission of required samples to the State Materials Laboratory for testing. Testers must be qualified in the "Asphalt Module" or for the particular method of sampling and testing they will be performing. It is the intent of QA specifications that the Contractor is made totally responsible for the maintenance and operation of equipment and the production of the HMA. It is the Inspector's role to sample and test the material to assure that WSDOT is getting a uniform

and specification product. However, it is not possible or desirable for the WSDOT Inspector to take a "hands off" approach to the production of HMA. If the Inspector notices anything at all that affects the quality of the HMA, this information should be brought to the Contractor's attention in a cooperative manner so that the situation can be corrected.

GEN 5-04.3 Street Inspection

General – In the construction of HMA pavements, it is the responsibility of the Street Inspector to see that construction methods and equipment used, as well as the finished pavement, meet the requirements of the specifications. In order that the Inspector may properly discharge this responsibility, it is necessary that the Inspector thoroughly understand the *Standard Specifications*, the special provisions of the contract, and the instructions set forth herein. The Inspector must also have a good working knowledge of methods and equipment involved in the construction.

A means of communication between the Street Inspector and the Plant Inspector must be established, and the Street Inspector shall keep the Plant Inspector informed of any difficulties encountered in the laying of the mixture or of any faulty mixture received at the paving site.

Street Inspector's Checklist – Some of the most important details of inspection on HMA paving are listed below:

1. Check condition and adjustment of paving machines and rollers.
2. Has width of spread in successive layers been determined?
3. See that traffic control is organized and functioning properly; make sure required signs are in place and document it.
4. Check application of tack coat; do not allow tacking of more base than will be paved each day. Be sure that the pavement is swept and clean ahead of the tack application (*Standard Specifications* Section 5-04.3(5)A).
5. Examine pavement base, see that required patching and/or pre-leveling is done. Do not be afraid to get the front of your shirt dirty; do a lot of "belly-grading." Make a check of surfacing depths before paving begins.
6. See that paver guidelines are set and adhered to (*Standard Specifications* Section 5-04.3(3)).
7. Check transverse joint for smoothness and appearance (a straightedge should be used).
8. Watch trucks dumping into paver hopper for adverse effect on paver operation. Pay particular attention to constant uniform paver speed and minimum operation of the hopper wings.
9. Check temperature of HMA occasionally and watch for evidence of incomplete mixing.
10. Maintain constant inspection of mat behind paver for signs of roughness or non-uniformity of mixture.
11. See that longitudinal joint is raked and compacted properly.

12. Make frequent checks of yield and depth.
13. Watch rolling operation and verify that the rollers are operated in accordance with the manufacturers recommendations (*Standard Specifications* Section 5-04.3(4)). See that nuclear density readings are maintained. Check internal temperature of mix to verify that static rolling is used below 175°F.
14. Keep record of truckloads used each day; check with Plant Inspector concerning masses.
15. Make sure the job is in good shape before you leave at the end of the day, that the transverse night joint is properly constructed (*Standard Specifications* Section 5-04.3(12)A), and that any excess paper is trimmed from the transverse night joint.

Duties Before Paving Begins

The Street Inspector is a key participant in the prepaving meeting and typically oversees all aspects of the operation at the jobsite. The street inspector should be knowledgeable as to the project limits, hours of operations, the direction in which paving is to proceed, methods of performing any unusual features of work peculiar to the project, proposed traffic control methods, etc. The plan of operation agreed upon at the prepaving meeting should be followed faithfully whenever possible.

Traffic Control – The Contractor shall conform to the requirements of *Standard Specifications* Section 1-07.23. The Project Engineer and the responsible inspector must work closely with the Regional Traffic Engineer and the Contractor to ensure that the proper signs are placed in the best possible manner. All applicable signs shall be installed on the job before paving begins. Section 1-2.3 includes additional sign installation details.

Inspection Tools – Before paving work begins, the Street Inspector must see that all tools and equipment necessary for the inspection work are available. These would include such things as surface and probe thermometers, tape measure, depth gauge, tire pressure gauge, 10 ft straightedge, notebooks, diary, report forms, etc.

Inspection of Paving Equipment – It is the duty of the Street Inspector to inspect the Contractor's paving equipment to verify the equipment meets the contract specifications. In order that the best possible surface finish will be obtained, it is essential that all machines are in good condition and all parts are in proper adjustment. All equipment, including trucks, should be observed for hydraulic and fuel leaks when systems are under pressure.

Listed below are some of the most important details the Inspector should check during the inspection of paving equipment:

(a) **Paving Machines** – Several types and makes of paving machines are in use in this State, all of which are capable of producing satisfactory surface finishes. The differences between types of paving machines are primarily in the methods used in striking off, compacting, and smoothing the mixture. The Inspector should be familiar with the mechanical features of the type of paver to be used on each job. Handbooks of operating instructions are available from each manufacturer, in which the various adjustments and operating details are shown.

The Inspector should obtain copies of these instructions from the Contractor or the manufacturer. The requirements for paving machines are in *Standard Specifications* Section 5-04.3(3). The inspector must be familiar with the specifications

Extensions may be added to the paving machine to allow the Contractor to pave a wider section. When the extensions are used in the traveled way they are required to have augers and screeds that vibrate and are heated. Most newer paving machines will be equipped with automatic screed extensions.

On all track paving machines, correct adjustment of the track linkage is essential for smooth operation. A poorly adjusted track, or a badly worn one, can produce an uneven, lurching movement in the travel of the machine which will be reflected in an uneven, "choppy" pavement surface. Observation of the machine in motion will usually show up any defects in the track or drive mechanisms.

Some pavers are suspended on rubber-tired wheels. For proper operation of this type of paving machines all tires must be inflated to the correct pressure and the drive system must not have any slack.

The paving machine is required to be equipped with the most current equipment available for the prevention of segregation and the Contractor is required to provide a certification that it properly equipped.

(b) **Rollers** – The proper operation of the roller is a key factor in quality pavement. When done properly the HMA will be compacted to a dense uniform mat free of defects. Improper operation produces a poor quality mat that may include tears, roughness and low or uneven compaction. All of these will result in a reduced life of the HMA and increased cost.

Steel-wheeled rollers must be inspected to determine that the wheels are capable of rolling a true plane and are in good condition. The Inspector should be especially watchful for flat spots on the wheels. The steering and driving mechanisms must be free of excessive play or backlash. Observation of the roller in motion and reversing direction will disclose any deficiencies in the drive and clutch mechanisms. The manufacturer of the roller provides the maximum rate of travel.

Pneumatic-tired rollers, to function properly, must have tires of equal size and in good condition. All tires must be equally inflated, so that all exert equal unit pressure on the pavement. Tire pressures may be varied to suit conditions on the job, but, in general, should be such that ground contact pressures range between 40 and 80 psi. The Inspector should observe the roller in motion to see that all wheels are rolling true, without wobble or creep. Pneumatic tired rollers should have full skirts as the tires must be warm to prevent "picking." (When the cool tires roll over the hot HMA mix, the mix tends to stick to the tires, and is "picked" up from the mat onto the tires.)

(c) **Other Items** – The Inspector should be satisfied that the Contractor is properly equipped with portable barricades, cones, or other means of protecting the freshly laid pavement from damage by traffic.

Upon completion of the check of the paving equipment, the Street Inspector should call any deficiencies of equipment to the attention of the Contractor, so that correction can be made.

Preleveling – The Engineer must give careful consideration to the use of a preleveling course over areas of unusual roughness, wheel ruts, or sags in the profile of the pavement base. The Contractor should be given as much advance notice as is possible of the intent to place a preleveling course. The areas that need prelevel should be marked out and reviewed with the contractor prior to the pre-pave meeting. The extent of prelevel and the methods to be used should be discussed at the pre-pave meeting.

There are several methods the contractor is allowed to use for preleveling. One method used for preleveling may be using a motor patrol grader. A paving machine may be used when the Engineer has determined that better results can be obtained by this method and particularly where long undulations occur. When conditions warrant, a reference line may be erected for preleveling and a long multi-footed ski-type reference should be used for placement of subsequent pavement courses. Ruts can be economically preleveled by dragging a paver screed. Because of the possible detrimental effect on the equipment, it should only be done with the consent of the Contractor or if required by the plans. In order to outline areas and amount of preleveling, the Contractor should be encouraged to erect a single reference line along the crown point for the first pass. The practice of directly marking depths and limits of preleveling required on the pavement surface is considered beneficial. When the area is small or irregular the Contractor may choose to use hand methods to prelevel.

The nominal compacted depth of any layer of any course, including preleveling lifts, shall not exceed the depths outlined in the *Standard Specifications* for the class of mix being used. The purpose of this requirement is to reduce the differential compaction that takes place and to ensure adequate compaction of thick lifts between two humps. Compaction should be accomplished with a pneumatic roller.

To produce a satisfactory riding surface, preleveling, in theory, should continue regardless of quantities until a uniform lift of HMA can be placed by paving machines with the multi-footed ski-type reference. If it appears that the plan quantity of prelevel must be exceeded due to the condition of the existing pavement, the situation should be immediately brought to the attention of the Project Engineer, and the Region Construction staff. The Engineer must take care to clearly distinguish between preleveling operations and paving operations, especially leveling courses.

Duties During Paving Operations

Prior to beginning of paving work each day the Inspector shall see that guidelines are set for the day's work, that the base is properly prepared, and that the tack coat has been applied through the area to be paved during the day. It is not a good practice to apply the tack coat over more area than can be paved in a day or an hour or two if the weather appears to be questionable. Traffic conditions may also dictate how far the tack coat should be placed ahead of the paving operation.

Miscellaneous Duties of the Street Inspector

When constructing plant-mixed pavement adjoining gutters, curbs, cold pavement joints, manhole castings, etc., the Inspector shall see that all contact surfaces are painted with an accepted asphalt material before placing the adjoining pavement.

A detailed Inspector's Daily Report (DOT Form 422-004, 422-004A, and 422-004B) shall be kept by the Inspector, noting all unusual occurrences, orders received from the Project Engineer, orders issued to the Contractor, and other pertinent information.

The Hot Mix Asphalt Compaction Report (DOT Form 350-092) shall be prepared by the Density Inspector and distributed as shown on the form.

Multiple Asphalt Plants

When two or more asphalt plants are used on one project, the mix from each plant must be placed with separate paving machines and compaction equipment. This is necessary because of the required adjustments on each paving operation to accommodate the different mixes and the various rolling patterns that may be necessary.

GEN 5-04.4 How to ...

Calculate Approximate Paver Speed for Continuous Operation – To assist in working with the Contractor to determine paver speeds, the following formula can be used to calculate approximate speeds required to handle various production rates at varying depths. When the paving machine is operated at a uniform speed consistent with the plant production rate and compaction train capacity, a smooth, *continuous* paving operation will be obtained.

$$S = [(T \div 0.076) \div (W * D)] \div 60$$

Where:

T = Tons per hour
W = Width in ft
D = Depth in ft
S = Paver speed in ft per minute

Based on 2.052 tons per c.y. = 0.076 tons per c.f.

Compute Yield – During the paving operation, a careful record shall be kept, showing truckloads, the weight of each truckload and other pertinent data. Periodically, the Inspector shall compute the quantity of mix placed per square yard, and shall compare the yield against the proposed quantities. Overruns or underruns in quantities may be avoided by making a constant check of quantities placed.

HMA pavements are designed on a weight/volume relationship of 137 pounds for one square yard of pavement at a compacted depth of 0.10 ft. It is the intention in the construction of the pavement to spread the mixture according to an average yield in pounds per square yard.

Remember that the minimum compacted depth of pavement must also be met. If the aggregates are heavier than anticipated when the quantities were computed, or if the surface that the pavement is being constructed on is not true, the average yield can be attained without meeting the minimum thickness requirement.

Weigh tickets shall be collected and a daily total weight of mixture received shall be obtained and entered on the daily report for submission to the Project Engineer. To eliminate possible errors, totals as recorded by the Plant Inspector shall be compared against the total obtained by the Street Inspector. Careful attention given to those details may save argument with the Contractor concerning pay quantities.

Determining Minimum Lift Thickness – On occasion, the thickness of an individual lift of HMA is not specifically indicated on the roadway sections, or a contractor requests permission to place the HMA in more than one lift. Although maximum lift thickness is specified in the *Standard Specifications*, there is no guidance as to the minimum.

Lift thickness is governed by aggregate size. Adequate lift thickness ensures proper aggregate alignment during compaction, so that density and an impermeable mat can be achieved. Lifts placed too thin can lead to aggregate segregation, tearing, more rapid cooling and it is generally more difficult to achieve proper density and pavement smoothness. As a guide, the following table may be used to determine the minimum lift thickness for the various classes of mix.

HMA Class	Minimum Lift Thickness (ft)
⅜"	0.08
½"	0.12
¾"	0.20
1"	0.25

SS 5-04.3 Construction Requirements

SS 5-04.3(1) HMA Mixing Plant

Plant Inspector's Checklist – Some of the most important details of inspection on asphalt plants are listed below:

1. See that testing tools, equipment, and samples are on hand at the plant site and in good condition. Make sure you understand all tests.
2. Inspect all components of the asphalt plant; make sure all deficiencies are corrected *before* production is begun.
3. Verify that the truck scales are currently certified in accordance with *Standard Specifications* Section 1-09.
4. Post mix designs, including all revisions to the job mix formula. When a reference mix design is accepted the Inspector should verify if any changes to the mix design were accepted on another contract.
7. Watch for evidence (dark smoke from plant exhaust and oily coating of aggregate) of incomplete combustion of burner fuel.
8. Check frequently the temperature of the asphalt and volume accumulation from flow meter.
9. Observe plant operator occasionally to see that correct weights and proportions are obtained, including asphalt content.
10. Make frequent visual inspections of mix leaving plant for evidence of non-uniformity or incomplete mixing.
11. Check temperature of mix frequently.
12. Inspect truck beds before loading; see that bed is free of congealed chunks of mix and excess bed release agent.

13. Check frequently with Street Inspector concerning workability and uniformity of mix at the paving machine and density test results.
14. Take samples of mix for field tests and submission to laboratory.
15. Make accurate, complete record of all test results, asphalt used, and other pertinent data.
16. Have copies of all test reports available for review.
17. Fill out the required daily reports.
18. Keep in constant communication with the plant foreman and the street inspector and give immediate notification regarding any problems.

Field Tests – On all projects involving HMA, job site samples shall be obtained, tested, and recorded in accordance with the *Standard Specifications*, the contract special provisions, and Chapter 9 and Section 10-3.5. A split of the field sample will be retained by the field tester for further testing if necessary. This sample may be used when the Contractor requests a sublot be retested in accordance with *Standard Specifications* Section 5-04.3(8)A5. Asphalt content of the mix shall be determined by use of the Ignition Furnace in accordance with AASHTO T308, and gradation determined in accordance with WAQTC FOP for AASHTO T 27/T 11.

Samples Required by Materials Laboratory – When taking a sample of the mixture for mix design confirmation, a sufficient quantity of the mix should be obtained so that two representative quarters of the same sample may be submitted to the State Materials Laboratory for testing. Samples shall be taken as provided in Chapter 9 and forwarded to the State Materials Laboratory in the amounts and at intervals therein specified.

Sampling Methods – Samples of the complete asphalt mixture should be taken from the hauling conveyance in accordance with the current test method and reduced down to the desired size for testing. Remember that the value of material quality testing is dependent on exact parallel tests of identical splits from representative samples.

Verification of the Ignition Furnace Calibration Factor – The Project Engineer shall verify that the "Ignition Furnace Calibration Factor" shown on the asphalt mix design is valid. The verification of the "Ignition Furnace Calibration Factor" shall be determined in accordance with current test methods and should be done prior to beginning the production of any paving mixture using initial mix design. The verification shall be done using the furnace that will be used for acceptance testing. In some circumstances it may be necessary to use production data to verify acceptance results but should be only utilized when all verification procedures have been used and validated.

Inspection of Mixing Plant

Project Inspectors should familiarize themselves with plant operations prior to beginning of paving. A visit to the plant will do this and additionally provide an opportunity to inspect the plant for conformance to WSDOT specifications. Specification violations should be brought to the attention of Contractor so they may be corrected prior to beginning paving.

When doing plant inspection, particular attention should be given to examination of gates, feeders, drier and dust collector, screens and bins, pugmill, and all thermometers, pyrometers, and weighing scales. To assist in this inspection, one of the previously recommended hot mix asphalt paving handbooks will provide excellent guidance. In addition, the manual from the WSDOT Asphalt Concrete Testing Procedures training class provides an excellent resource.

With the increased emphasis on aggregate structure and void content, it may be necessary for the Contractor to use multiple stockpiles.

Allowable methods of heating the asphalt are stated very clearly in the specifications, and the limits of the range of application temperatures are also specified. An asphalt thermometer is required to be installed in the asphalt line. This thermometer should be checked for accuracy before work starts. Close control of variations in temperature of the asphalt binder is very important, as overheating of asphalt oils will cause hardening and may cause substantial decrease in pavement life. When using modified Performance Graded (PG) asphalt, the asphalt manufacturer may recommend a higher mixing temperature. The Project Engineer may allow increasing the mixing temperature, in accordance with the manufacturer's recommendation, as allowed in the *Standard Specifications*.

Standard Specifications Section 5-04.3(1) item 1 requires that a valve be placed in either the asphalt supply line to the mixer or the storage tank for sampling the asphalt binder. This valve should provide a safe method of obtaining samples of the asphalt binder that are representative of the material being incorporated in the mixture. All samples must be taken by the Contractor in the Inspector's presence. If for any reason the asphalt binder is suspected to have become mixed or contaminated in the storage tank, additional samples from the asphalt supply line should be taken and noted on sample submittals.

During the preliminary inspection of the asphalt mixing plant, the Inspector should note any violation of safety rules concerning machinery safeguards, such as lack of guards on belts, sprockets and the like. The Inspector should call to the attention of the Contractor any such violations and request that corrections be made. If the violations directly affect the safety of the engineers and inspectors, the Project Engineer should refuse to allow mixing to begin until conditions are safe for sampling, inspecting, etc., *Standard Specifications* Section 1-05.6 requires the Contractor to provide safe facilities for inspection of the plant and the work.

Inspection During Mixing Operations

After the mixing begins and throughout the day, the Project Inspector working with the qualified tester shall make the required tests of the mixture. It is very important, however, that the Project Inspectors and testers spend some of the time observing the operation of the plant and the condition of the mixture being produced. Changes in the mixture can quickly be detected by observing changes in appearance or color of the mixture.

Periodic checks of the temperature of the liquid asphalt, as well as the mixture produced must be made to ensure that maximum allowable temperatures are not exceeded and a uniform material production is being produced. The Contractor will choose the desired temperature of the mixture within specification limits, depending on weather conditions, length of haul, and other factors. Project inspectors should watch for excessive variation in temperatures, and notify the contractor of any variation that occurs. Variable temperatures of the mix may cause compaction and segregation problems and close monitoring of temperatures is an essential part of HMA paving.

When stockpiled, aggregates may contain a high percentage of moisture. With excess moisture in the aggregate difficulty may be encountered in heating the material to the proper temperature. In some cases, the contractor may try to correct this condition by increasing the amount of fuel oil fed to the burner. This can be done satisfactorily until incomplete combustion of the fuel oil occurs. Black smoke coming from the exhaust stack is an indication that incomplete combustion is occurring. Black smoke is also a sure sign that air quality standards are being violated. The Inspector should watch for this condition, as the unburned fuel will deposit a sooty, oily film on the aggregate particles that is detrimental to proper coating of the material with the asphalt film. A reduction in the amount of aggregate fed to the drier will usually correct the situation and allow proper heating and drying of the material.

Frequent inspections of the condition of the mixture leaving the plant should be made, noting the consistency of the mix, the distribution of asphalt and aggregate throughout the mixture, and the temperature of the mixture. Trucks should be loaded by multiple dumps of three or more as recommended by the National Asphalt Pavement Association (NAPA). If the quality of the mixture varies from truck to truck, an immediate check should be made to locate the source of trouble. Uniform distribution of the asphalt throughout the mix is extremely important. If portions of each truckload vary from rich to lean, the Inspector shall advise the Contractor to correct the problem. It may be necessary to increase the mixing time to correct this situation. By examining the mixture in bright light, the experienced Inspector can quickly detect non-uniformity in the mixture.

Miscellaneous Duties of the Plant Inspector

One of the duties of the Plant Inspector may be to oversee the work of the scale person on truck weighing scales at the plant, and see that the required tests of the scales are performed. The Inspector must see that tickets are properly made out and issued for each truckload of mixture delivered, and shall also see that daily totals are promptly obtained and entered on the daily report. When HMA is produced using a warm mix asphalt (WMA) process the tickets are required to identify the mixture as WMA.

Before trucks are allowed to be loaded at the plant, a check shall be made to see that the truck beds are properly lubricated as required in the specifications. No pools of bed release agent shall be allowed to remain in the truck bed following this operation. The truck bed should be raised to allow any excess material to be drained off.

When the Contractor is using a site furnished by WSDOT, the inspector should see that the Contractor shapes up any remaining aggregate into neat stockpiles, and removes all debris from the plant site when the project is complete.

SS 5-04.3(3)A Material Transfer Devise/Vehicle

At the Contractor's request the Project Engineer may approve paving without a Material Transfer Device/Vehicle (MTD/V). It is intended that these request be approved for work at intersections, etc. These requests will not be approved if they reflect work on mainline paving. The Project Engineer should evaluate these requests for equitable adjustments in monies or time.

SS 5-04.3(5) Conditioning of Existing Surface

The specifications require an application of tack coat that is uniform and free of streaks and bare spots. The application rate will depend on several factors and include the condition of the existing pavement, the Contractor's equipment, the type of asphalt used, if it has been diluted with water and the application temperature. Tack coat is always applied prior to the placement of HMA including projects that have multiple lifts of HMA. For many pavements an application rate of approximately 0.05 gallons per square yard of residual asphalt is adequate. When paving a second lift of HMA a lower application rate is typically applied. Thin lifts of pavement require heavier applications of tack coat to prevent raveling, spalling, and delamination. As a guide, existing surfaces that are coarse, dry or milled require a higher application rate of tack coat than surfaces that appear rich or bleeding.

SS 5-04.3(5)B Preparation of Untreated Roadway

When the roadway is carrying traffic, public or construction, it may be necessary to construct the prime coat treatment to maintain the roadway to the desired line, grade and cross-section until the first course of pavement is constructed. When a prime coat is required it will be designated in the plans. If there is no traffic problem, it may be desirable to eliminate the construction of the prime coat treatment.

Weather conditions must be satisfactory for construction of the prime coat treatment and the prime coat must be allowed to cure for a minimum of 5 days before proceeding with paving. When the weather limitations cannot be met or the minimum curing period would present a hardship and it is desirable to pave the roadway, elimination of the prime coat should be considered.

SS 5-04.3(5)D Soil Residual Herbicide

Weeds cause considerable damage to thin asphalt pavements such as sidewalks, shoulder overlays, and asphalt lined ditches. It is typically recommended that chemical weed control be used under all asphalt pavements less than 0.35 ft in depth unless a full depth base preparation was included in the construction. Check the contract requirements to see if soil residual herbicide is required.

SS 5-04.3(7) Preparation of Aggregates

SS 5-04.3(7)A Mix Design

Establishing Mix Proportions – The Contractor is required to develop a mix design for the HMA in the contract. When the contractor has completed a mix design, it is submitted to the Project Engineer on WSDOT Form 350-042 along with representative samples of the mineral materials that will be used for HMA production. The mix design documentation and representative samples are shipped to the State Materials Laboratory in Tumwater for determination of anti-strip requirements.

During production it may be necessary to make adjustments in aggregate gradation and asphalt content on the job to fit field requirements such as workability, compactibility, and volumetric properties (Va, VMA and VFA). *Standard Specifications* Section 9-03.8(7) provides the limits of change, both for the aggregate and the asphalt binder content, that can be accepted by the Project Engineer. These changes can be made at the request of the contractor provided the change will produce material of equal or better quality. The Project Engineer may order a change in the asphalt binder content.

Adjustments for asphalt binder content greater than ± 0.3 percent may be allowed by the State Materials Laboratory or the State Construction Office. Based on past experience in the Region, the Regional Administrator or the Regional Construction Engineer may wish to change the asphalt content beyond the ± 0.3 percent. To accomplish this, the Region may direct the Project Engineer to increase or decrease the asphalt content by notifying the Project Engineer in writing, or by e-mail, and sending a copy of this direction to the State Materials Laboratory. It is intended that this action include consultation with the State Materials Laboratory or the State Construction Office to provide the best asphalt paving material possible.

During construction, guidance for adjustments is provided through the use and interpretation of the compaction control and mixture test results.

The Contractor's plant operator shall be advised of all results of sampling and testing performed.

Anti-Stripping Additive – For HMA accepted by statistical and non-statistical evaluation the Project Engineer shall not make adjustments to the anti-stripping additive without the prior concurrence of the Engineer or the State Materials laboratory.

For HMA accepted by commercial evaluation, the Project Engineer should consult with the State Materials Laboratory prior to providing the required percent of anti-stripping additive to the Contractor.

SS 5-04.3(9) Spreading and Finishing

In the construction of HMA pavements, it is extremely important that the paving machine be in good adjustment and that the machine and screed operators be experienced and capable. The Inspector should be quick to note operational practices that have an adverse effect on the work, and *request* the Contractor to make immediate corrections.

Compaction procedures will be as specified in *Standard Specifications* Section 5-04.3(10).

During the paving operation, constant inspection must be maintained to see that the machine is producing a smooth pavement having the required characteristics of texture and uniformity. The Inspector must require immediate action be taken to correct any trouble that may develop and should attempt to assist the Contractor in locating the source of the trouble.

Listed below are some common difficulties encountered on HMA paving work, together with the most common causes of the difficulty:

- **Wavy Surface (short, choppy waves) –** Worn or poorly adjusted tracks or drive train; truck driver setting brakes too tightly; excessive paving machine speed.
- **Wavy Surface (long waves) –** Excessive variation in amount of mix carried in auger box ahead of screed; over-controlling screed; roller operating too fast.
- **Excessively Open Surface Texture** – Improper adjustment of strike off; screed plate rough or galled; excessive paving machine speed.
- **Varying Surface Texture** – Insufficient mixing; trucks being loaded improperly at the plant; segregation of mix in trucks; poor gradation control at mixer; screed not uniform across paving machine.
- **Streaked Surface Texture** – Insufficient mixing; segregation of mix in trucks; worn or damaged screed plate.
- **Bleeding Patches on Surface** – HMA not uniformly mixed; excessive moisture in mix.
- **Irregular Rough Spots on Pavement** – Roller standing on fresh surface; abrupt reversing of roller; trucks backing into paver; poor workmanship at transverse joints.
- **Cyclic Open Texture (that usually matches up with the distance that each truck load of material covers)** – This may be caused by a couple of problems. One is the result of thermal segregation. In this case, the differential temperatures in the HMA result in inconsistent compaction and a cyclic open texture. The use of a mass transfer vehicle (MTV) or mass transfer device (MTD) will reduce or eliminate thermal segregation. Secondly, the machine operator may be allowing the head of material to fall below the top of the augers or by dumping the wings of the paver when the hopper is low on material. Hopper wings should be operated only occasionally and then with some load in the hopper.
- **Crooked or Irregular Longitudinal Joint Lines** – Careless machine operation or no guide string placed for the machine operator to follow.

Some paving machine operators have a tendency to operate the paver at speeds in excess of that required to handle the quantity being produced at the plant, resulting in a jerky, stop and go operation. *This must not be allowed.* Generally, when the paver is operated consistent with plant production and roller capacity, the finished surface will be smoother. The ideal speed of the paver will be that which will result in a smooth, nearly continuous process with a minimum of stops required in waiting for trucks and/or the compaction equipment. If the production rate of the mixing plant is very high, requiring excessive speed of the paver, the Contractor will be required to correct the situation by slowing his production or using additional paving machines and generally, additional compaction equipment. Delivery must be adjusted to match production and uniform lay down. A formula is provided in Section 5-4.2C to help determine the approximate paver speed for continuous operation.

The Inspector should periodically check for difficulties while dumping truckloads of mixture into the hopper of the paving machine. Trucks must not be allowed to back into the paver in such a manner that they bump the paver, nor shall trucks that bear against any part of the machine other than the pushing rollers be permitted to dump

into the paver. Any mix spilled onto the pavement in front of the paving machine must be shoveled into the hopper of the machine or back into the truck before paving is resumed. The Inspector should be especially watchful to see that mix spilled in the paths of the tracks or wheels of the machine is removed.

Checks should be made of the crown adjustment of the screed, to ensure that the finished surface will conform to the required section.

Particular attention must be given to the construction of the longitudinal joint when paving adjacent to a previously laid lane. The Inspector must insist that hand raking be held to a minimum, by adjusting the screed so that the freshly laid pavement is of the proper depth, allowing for compaction, to meet the grade of the previously laid lane. The uncompacted mixture immediately adjacent to the joint should be left slightly high so that the roller can compact the mixture thoroughly at this point. The rakers must not be permitted to cast excess mixture over the uncompacted, freshly spread lane. The Inspector must insist that segregated coarse particles of mix remaining after making the joint be removed and wasted, to avoid construction of a coarse, porous joint.

SS 5-04.3(10) Compaction

SS 5-04.3(10)A General

Compaction of the HMA is very important in the construction of a durable pavement. When good compaction is coupled with the proper mix design, extended service life of the pavement can reasonably be expected.

The importance of thorough, compaction of HMA cannot be over stressed. Two major factors are working simultaneously in a well-designed mixture to resist good compaction: (A) the stability of the mix in place increases with each pass of the roller, and (B) the viscosity of the asphalt increases as the temperature drops. A temperature-viscosity curve for the type of asphalt used in the mix is a useful tool in determining the ideal compaction temperature of the mix.

Although densities for some HMA may be increased at temperatures below 175°F, vibratory rollers may damage the mat internally in ways that cannot be seen at the time of compaction. To prevent this damage, compaction with static rollers is required when the internal temperature of the mix is below the minimum specification of 175°F. When paving in air temperatures over 90°F, some or all of the compactive effort may have to be delayed, but in no case should it be delayed below 175°F mat temperature.

The desirable end product of a properly compacted HMA is a dense and nearly impermeable mat. Acceptable densities can be obtained if the mix proportions are proper. If not, no reasonable amount of compaction can produce acceptable density. Without proper density, the HMA will be subject to early distress and failure. Some mixes may be difficult to compact because they will move under the roller instead of compact. This is referred to as a tender mix and may result from several causes including gradation, fracture and asphalt binder properties. Mixes that have a gradation that crosses the max density line in the restricted zone or have excessive natural sand are more likely to be tender. Having available the 0.45 power plot of the design and production mixes will help the Inspector know what to expect in terms of compaction difficulty.

The asphalt binder content in a mix is based on several factors including traffic levels, aggregate structure and asphalt binder properties. The contractor develops the mix design to meet specific volumetric properties. Changes in the mix design asphalt content should only be allowed after careful consideration of all of the impacts. The maximum adjustment the Project Engineer may allow may not exceed 0.3 percent from the accepted mix design (*Standard Specifications* Section 9-03.8(7)). The Region Materials Laboratory is a good resource when considering changes in the asphalt binder content. Increasing the asphalt binder content on high traffic volume routes carries more long term performance risk than on low volume roads.

The use of thicker lifts of pavement permits more time for compacting and will increase the effectiveness of the equipment. With careful organization and planning, the production of over 400 tons per hour may be compacted by as few as three rollers on deeper lifts. It is also apparent that high production rates with thin lifts might require twice as many rollers or more. It is the Contractor's responsibility to determine how many rollers are needed to match the asphalt plants production rate.

Usually the Contractor has a companion group of rollers, pavers, and production equipment for use together on paving projects that have been proven to be compatible. By consulting with the Region Staff, it may be determined if the full complement is present or just what past experience has been. Before production begins, the Regional Materials Engineer should be notified to arrange for the coring of the pavement to correlate nuclear densities to core densities for calculation of a gauge correlation factor.

In general, compacting should begin on the outer edge of the course and progress toward the center of the pavement except on superelevated sections where the initial effort shall be on the lower side with the progressive compaction toward the higher side.

The type of rollers and their relative position in the compaction sequence shall generally be at the Contractor's option provided specification densities are attained and it's not specified otherwise in the contract provisions. An exception is that the pneumatic tired roller is required for compaction of the wearing course from October 1 through March 31. Coverage with a vibratory or steel roller may precede pneumatic tired rolling. The maximum speed of rollers shall not exceed the recommendations of the manufacturer of the roller for the compaction of HMA. When requested by the Project Engineer, the Contractor is required to provide a copy of the manufacturer's recommendations. When the roller reverses direction the vibrators must be turned off momentarily.

The vibratory roller is generally used for the primary compaction on HMA mixes and sometimes for finish rolling in a static mode. Two terms frequently used with vibratory rollers are frequency and amplitude. Frequency is how often the impacts are applied and is normally stated in cycles per second. Amplitude is the greatest vertical movement, up or down, of the drum during a cycle.

Vibratory rollers achieve their compaction effect from the kinetic energy produced by the vibrating components of the roller. Vibratory rollers usually work best when operated with high frequency and low amplitude on dense graded leveling and wearing courses. On hills, it usually works best to operate the vibrators only while traveling uphill. Over vibrating can cause decompaction. Operated in the static mode, despite their apparent bulk, they are less effective than even intermediate size conventional steel wheel rollers due to their lower mass.

Vibratory rollers may not be practical in areas where there are mortar joint concrete or certain other vintage pipe used for utilities or irrigation. In locations with this type of pipe the special provisions will restrict the compaction to static rolling.

With pneumatic roller breakdown it will be necessary to hold in about 6 in from unsupported edges to avoid lateral displacement. A narrow overlap of successive trips is desirable and the roller should be kept in constant motion. During the initial compaction, the rollers direction should be such that the powered wheel passes over the uncompacted mix first. Breakdown tiller wheels will be turned the least possible amount in the uncompacted area and thereby avoid pushing and shoving the hot mat in a local area. Avoid stopping the roller in the same place. Continue pneumatic breakdown rolling until deep tire tracks are ironed out as much as possible and the roller walks out to the top of the mat, and then move ahead. The most desirable arrangement is to have two similar pneumatic rollers about 6 ft wide with the "air-on-the-run" feature and posi-traction type differential followed by a tandem steel wheel roller. The steel wheel roller should follow closely behind the pneumatic roller to compact the centerline joint and the edge of the pavement as well as iron out the pneumatic tire marks. The steel wheel roller will exert extra pressure on the uncompacted edge and should have no difficulty in properly compacting this edge if the roller is close behind the pneumatic rollers. Cold rubber tires usually "pick" the mat. Every effort should be made to warm the tires before compacting the mat. Sending the rollers for a drive before the work is fully organized prior to paving will help with the tires.

The axles of the roller are weighted by the use of iron pigs, chain, rivets or other concentrated loading in addition to the usual water and aggregate tank loading to control the total roller weight. Ground contact pressure is determined by the tire inflation pressure, a ground contact pressure of 70 psi is a reasonable pressure to start with. Variation in the mixture and tire pressures will soon determine the most desirable combination of mixture, temperature, contact pressures and number of applications.

Steel wheel rolling is generally used for finish rolling; however, it is sometimes used for breakdown and primary compaction. It is important that vibratory roller operation on pavement with temperatures below 175°F not be permitted. Over-rolling by the steel wheel roller may damage the pavement more than under-rolling.

Preferably, rolling equipment should be wide enough so that a uniform application of compactive effort can be distributed over the entire course without creating hard streaks or leaving narrow porous strips. Breakdown and intermediate rolling should be completed while the mixture is above 185°F with the finish rolling completed above 150°F. With lower temperature mixes and thin lift applications it becomes obvious that the rollers must be kept up close to the paver.

SS 5-04.3(10)B Control

Compaction is controlled by testing with the nuclear density gauge for all classes of HMA where the paving is in the traffic lanes and compacted course thickness is greater than 0.10 ft. The nuclear gauge testing shall be conducted in accordance with current test methods. The specification requirements shall be a quality level of 1.00 or greater referenced to a minimum density of 91 percent of the maximum density (Rice density) as determined by WSDOT FOP for AASHTO T 729 when using the nuclear density gauge and WSDOT SOP 736 when using cores.

Four inch diameter roadway cores for densities may be obtained either by the Contracting Agency or by the Contractor and tested by the Contracting Agency in accordance with WSDOT FOP for AASHTO T 166.

Compaction lots not meeting the prescribed minimum CPF of 0.75 will need to be evaluated for removal and replacement with satisfactory material.

For preleveling mix, the compaction control shall be to the satisfaction of the Engineer. A pneumatic tired roller is required for compacting HMA that is used for preleveling wheel rutting.

Compaction control for longitudinal joints is controlled by testing with the nuclear density gauge in accordance with WSDOT SOP 735. The specification requirements shall be a minimum density of 90.0 percent of the maximum density as determined by WSDOT FOP for AASHTO T 209.

For all other conditions, the Contractor shall construct a test point in accordance with instructions from the Engineer. The number and timing of passes with an accepted compaction train that will yield maximum density with the nuclear gauge in the test section shall be used on all succeeding paving. The Inspector should make sure the Contractor is making the required number of passes and reconstruct a test section if conditions change.

SS 5-04.3(12) Joints

SS 5-04.3(12)A Transverse Joints

The *Standard Specifications* provide that transverse joints, also called butt joints, be constructed. The use of heavy paper is recommended to form the butt joint at the end of the day's work, with a temporary ramp laid on the paper beyond the joint to assist traffic over the change in elevation. Paper protruding above the pavement shall be carefully trimmed flush with the pavement so that there will not be an illusion of a hazard at night. When the ramp and paper are removed prior to beginning the succeeding day's paving, a well-constructed joint will require a minimum of cutting back to form the required butt joint. When hand raking is performed on a joint, all segregated coarse aggregate shall be removed, to avoid a coarse, porous surface at the joint.

If the roadway is open to traffic, the transverse joint must be feathered to provide a smooth transition for the traveling public and joints between successive lifts in each lane should not be less than 100 ft apart. The higher the speed on the roadway, the longer the taper on the joint must be to provide an acceptable transition. The required slope ratios is 1 vertical to 50 horizontal or flatter.

This slope will usually require use of more than one width of paper. Sufficient material must be temporarily placed in front of the paver to prevent a deformation from occurring in the permanent ACP behind the joint. Care should be taken to construct a straight line taper without humping.

The open longitudinal joint resulting from any day's operation should be abutted by paving the adjacent lane on the next day.

At the beginning of the day's work, special care must be exercised in the construction of the transverse joint joining the freshly laid mixture with the previous day's work. The paver should be allowed to proceed at a low rate of speed (creep) ahead of the joint, until hand finishing of the joint is completed. The paver should not come to a full stop or the screed may settle and cause a dip at that point. The Inspector should check this work closely, using the 10-ft straightedge to see that the requirement for surface smoothness is met.

SS 5-04.3(12)B Longitudinal Joints

The long term performance of longitudinal joints is highly dependent on the quality of construction. Improperly and poorly constructed joints can fail prematurely; raveling and cracking are common problems with these joints. Proper joint construction includes the following:

- The joint is constructed at the lane line or an edge line of the Travelled Way;
- When multiple lifts of asphalt are placed a joint is offset from the joint below from 2-6 inches;
- Tack coat is applied to the joint, including the vertical face of the joint, to bind and seal the joint;
- Industry standards for compaction of the joint are followed to achieve density; and
- For a wearing course where new pavement abuts new pavement a notched wedge joint is required (unless otherwise approved by the Engineer).

A notched wedge joint has benefits by the shape of the joint in that there is a better bond, with tack, between the pavements and the density may be improved. This method of joint construction should be used in all locations where possible; not using a notched wedge joint should be an exception and only allowed where the specific project conditions do not allow for this method of joint construction. A notched wedge is not required when new HMA is placed against existing HMA such as at the edge line of a grind and inlay project.

When a roller is compacting HMA adjacent to a longitudinal joint the goal is to confine and densify the material at the joint. The sequence that is recommended by research on longitudinal joint construction is for the first pass of the roller that is adjacent to the joint to be approximately 6 inches from the joint on the "hot" side. This roller pass compacts and provides confinement for the HMA at the joint. This is followed with a roller pass that overlaps to the "cold" side of the pavement and the 6 inch strip of HMA is densified in the joint area. Other methods of joint compaction have been demonstrated to push the HMA away from the joint resulting in lower density and poorer joint performance.

When HMA is placed adjacent to cement concrete pavement the joint is required to be sawed and filled with a joint sealant to prevent the intrusion of water.

SS 5-04.3(13) Surface Smoothness

When a leveling course is being constructed, an attempt must be made to remove all depressions and sags in the grade line by adjusting the depth of the course. The Inspector should work closely with the screed operator to accomplish this result by pointing out irregularities in the base far enough ahead of the machine to allow proper adjustment of the screed to eliminate the irregularity. The objective to be

attained during construction of the leveling course is the complete elimination of all irregularities, so that the placing of the wearing course can be accomplished with a minimum of screed adjustments. If the base is excessively rough, pre-leveling should be done prior to construction of the leveling course.

Standard Specifications Section 5-04.3(3) require the use of automatic screed controls on the paver. It must be remembered that as the equipment becomes more sophisticated, it also becomes more necessary that it be properly adjusted and operated or satisfactory results will not be achieved. With proper operation, this equipment will give excellent performance.

When reference lines are required, or the Contractor elects to use reference lines, particular attention must be given to see that the line is properly set and tensioned. If the line is offset too far from the paving machine, vibrations of the machine may affect the operation of the automatic controls, which in turn affect the smoothness of the pavement. The reference line for asphalt paving machines normally will not be used when the roadway is under traffic. The specifications provide that if the course that the pavement is to be placed on is superior to established smoothness requirements, the paver may operate from a mat referencing device such as a "multi footed ski" instead of the wire. The inspector must ascertain that smoothness of the pavement continues to be superior to the requirements of the specifications.

Normally, when the surface for paving is properly constructed using a reference line or the first course of pavement is constructed using a reference line, subsequent courses of pavement may be constructed using a mat referencing device with continued improvement in the surface smoothness.

Manual operation of the screed controls will be permitted in the construction of irregular shaped and minor areas, such as gore areas, road approaches, left turn channelization, and tapers.

Surface smoothness and good riding qualities of a pavement are secured only by hard work and strict attention to small details. The Inspector should continually study the conditions peculiar to the job, and strive to obtain the smoothest surface possible. A smooth riding pavement costs no more than an unsightly, poor surface, but it does require constant, careful inspection of all details of construction to obtain the desired results.

Standard Specifications Section 5-04.3(13) outlines the smoothness requirements using a 10 ft straight edge oriented in both the longitudinal and transverse directions. Smoothness checks should be made at the starting point of paving, at transverse "night joints," whenever the paver is stopped for any length of time, or wherever the inspector suspects a smoothness problem.

5-05 Cement Concrete Pavement

GEN 5-05.1 General Instructions

Concrete paving is a highly complex, mechanized operation and proper organization and planning of the work is essential on the part of both Contractors and WSDOT. Cement concrete pavement has a relatively high initial cost and WSDOT expects many years of satisfactory service from this type of pavement. It is imperative that

the Project Engineer and Inspectors are thoroughly familiar with the specifications and techniques applying to the work, if this objective is to be attained.

Before construction begins, the Project Engineer should review all phases of the work, and see that all members of the crew are familiar with the duties to which they are to be assigned. Advance planning and organization of the engineering and inspection teams will do much to eliminate the confusion and improper construction sometimes found during the first day's work. All inspection equipment and testing tools should be on hand, and properly calibrated or certified, in advance of beginning of paving, and WSDOT materials testers properly qualified to perform the necessary concrete testing.

The Project Engineer should make certain that all Inspectors are instructed in the proper methods of keeping notes, records and diaries. Accurate records of construction progress and test results are absolutely essential in evaluating pavement performance through the years.

The contract may contain the GSP, *Just in Time Training*. The purpose of this training is to bring all the parties to the table, and to raise understanding about the means and methods the contractor is proposing in order to comply with the contract.

GEN 5-05.2 Testing Equipment/Reports

GEN 5-05.2A Testing Equipment

- Specified screens, sieves, and scales.
- Air meter.
- Straightedges and stringlines.
- Thermometers.
- Cylinder molds for casting concrete test specimens.
- Stop watch.
- Flashlights.

GEN 5-05.2B Records

The Project Engineer is responsible for the keeping of proper records that must include the following information:

- Record of cement received and used.
- Screen analysis of aggregates (see Chapter 9).
- Air-entraining agent used, and air meter test results.
- Rate of application of curing compound.
- Inspector's diaries.

GEN 5-05.3 Checklists

For the convenience of the Inspector, some of the most important inspection duties on concrete paving work are listed below:

GEN 5-05.3A Pre-Pave

1. Review contract requirements (plans, standard specifications, amendment to the standard specifications, and special provisions).

2. See that all testing tools and equipment are on hand and in good condition. Working with the Contractor, determine location(s) for the Contractor provided curing box(es) used for initially curing concrete test cylinders (*Standard Specifications* Section 5-05.3(4)A).
3. Check preparation of subgrade; watch for soft spots. Check subgrade elevations to ensure there are no high or low spots (*Standard Specifications* Section 5-05.3(6)). If HMA pavement placed on subgrade prior to PCCP, refer to *Standard Specifications* Section 5-04 for HMA requirements.
4. Check that forms are in good condition and are set securely, true to line and grade (*Standard Specifications* Section 5-05.3(7)B). If a slip form paver is used, check position of wire, string line across the wire and check the depth to subgrade or HMA pavement in at least three locations across the proposed paving area at each pin location.
5. Check that subgrade or HMA is moist before the concrete is placed (*Standard Specifications* Section 5-05.3(6)).

GEN 5-05.3B Paving

6. Watch for variations in slump of mixed concrete batches (*Standard Specifications* Section 5-05.3(2)). In the case of slip-form paving, make frequent checks of the condition of the wire and edge slump (*Standard Specifications* Section 5-05.3(11)).
7. Make tests of air content, temperature, compressive test cylinders, and make complete, accurate records of test results and computations (*Standard Specifications* Section 5-05.3(4)A, 5-05.3(5)A, and Chapter 9). If maturity meters are used, document locations and periodically check output against maturity curve
8. Check tie bars and dowel bars for rust and defects, that they are installed properly, and secured to the grade if placed in baskets. Ensure that dowel bars receive a bond breaker if they are not precoated (*Standard Specifications* Section 5-05.3(10)).
9. Watch for excessive movement of forms under weight of concrete paving equipment.
10. Check frequently to see that vibrators are operating properly (*Standard Specifications* Section 5-05.3(7)). If a dowel bar inserter is used, check spacing and alignment of dowel bars. Ensure that PCCP is consolidated after the bar is inserted and that slurry does not fill the insertion point.
11. Watch finishing operations to make sure excessive amount of water is not added to surface; allow fine spray only to be used (Section 5-5.3B).
12. Check the surface texturing operation to see that proper, uniformly textured surface is obtained (*Standard Specifications* Section 5-05.3(11)).
13. See that curing compound is placed uniformly, at the required rate, and at the proper time. The curing compound needs to completely coat the surface of the concrete (*Standard Specifications* Section 5-05.3(13)A). Note other curing methods are allowed in *Standard Specifications*.
14. See that concrete is consolidated properly at night headers (*Standard Specifications* Section 5-05.3(8)C).

GEN 5-05.3C Post Pave

15. Inspect joint sawing operation to see that required depth is cut, and that the best possible saw cuts are obtained (*Standard Specifications* Section 5-05.3(8)A).
16. Watch removal of forms; see that damage to pavement does not occur; require curing compound to be applied on edge of slab immediately following form removal (*Standard Specifications* Section 5-05.3(7)B).
17. See that additional curing compound is applied over areas scuffed by ft traffic.
18. Check that pavement is protected from traffic with necessary barricades, lights, etc. (*Standard Specifications* Section 5-05.3(16)).
19. Check that sawed contraction joints are sealed properly with joint sealant filler. Fill to between ¼ in and ⅝ in below the surface of the concrete and minimize any overflow (*Standard Specifications* Section 5-05.3(8)B).
20. Review surface smoothness tests each day (*Standard Specifications* Section 5-05.3(12)).

SS 5-05.3 Construction Requirements

SS 5-05.3(3) Equipment

A very important factor in obtaining a superior product with slip form paving is uniformity of operation. The Engineer should ensure that the plant, mixing facilities and hauling units are in quality and quantity balance to supply the paver with an adequate quantity of concrete for continuous operation at the recommended speed, without sacrificing uniform slump. Considerable pavement roughness can be attributed to spasmodic operation, and this should be held to a minimum.

SS 5-05.3(3)B Mixing Equipment

Nonagitating trucks are permitted to haul plant mixed concrete provided the concrete is delivered and discharged within 45 minutes after the introduction of mixing water to cement and aggregates, and the concrete is in a workable condition when placed Paver.

SS 5-05.3(3)C Finishing Equipment

The slip form paving equipment must be self-propelled and capable of placing, spreading, consolidating, screeding, and finishing the freshly placed concrete to the proper pavement elevation and cross-section within the specified tolerances. Sliding forms on the paver must be rigid to prevent spreading of the forms. The paving equipment must finish the surface in a manner which will minimize hand finishing.

Slip form pavers contain various combinations of all or some of the following components: auger spreader, spud vibrators, oscillating screeds, tamping bars, and pan floats. The equipment should be checked for calibration and satisfactory operation in accordance with the manufacturer's manual before paving is allowed to proceed.

If it is necessary to stop the forward movement of the paver, the vibratory and tamping elements should also be immediately stopped. No tractive force should be applied to the machine except that which is controlled from the machine.

SS 5-05.3(5) Mixing Concrete

It is very important that uniform consistency of the concrete be maintained with the water/cementitious ratio not exceeding 0.44 and the edge slump not exceeding ¼-in. The *Standard Specifications* requirements for the water/cementitious ration is in Section 5-05.3(2) and the edge slump requirement is in Section 5-05.3(11). The current requirements for water/cementitious ratio and edge slump are intended to control consistency.

SS 5-05.3(6) Subgrade

Ahead of the paving operation, the subgrade must be properly prepared with some type of "fixed" control template to accommodate the width of the paver. The subgrade must be properly dampened so as to have no water demand from the mix, but, also, the concrete must not be placed on subgrade on which pools of water have formed. If concrete is delivered by trucks on the grade, subgrade disturbance should be kept at a minimum.

The subgrade should be shaped and thoroughly compacted. Special attention should be directed to see that all parts of the subgrade are firm and unyielding. Soft spots should be removed and backfilled with suitable material. *Standard Specifications* Section 5-05.3(6) requires that the subgrade be prepared and compacted a minimum of 3 ft beyond each edge of the area to receive the concrete pavement in order to accommodate the width of the slip form paving equipment. The 3-ft extensions on each side of the subgrade are tracklines that the slip form paving machines tracks will follow, and the smoothness of the tracklines directly affects the smoothness of the concrete pavement.

The subgrade must be trimmed to the proper subgrade elevation and shape. After trimming, the subgrade shall be thoroughly wetted and compacted to achieve a dense unyielding surface. The subgrade must be kept in this condition until the concrete is placed.

The elevation of the subgrade should be checked either by stretching a stringline between the control wires and measuring down to the surface or by another method that provides for a satisfactory check. Extra checks should be made through crown and super transitions to be sure proper adjustments were made in the machine through this area and that no high spots exist.

Controls

If control stakes have not been set for previous operations, they need to be installed at this time. If the control stakes have previously been set, the installation of the wire shall be checked to verify that it is set to the proper line and grade. This is especially important if the wire is offset from its original position.

SS 5-05.3(7) Placing, Spreading, and Compacting Concrete

As paving progresses, the Inspector should be alert to the wire position just ahead of the machine, since the most precisely set control can be disturbed by workers or equipment hitting it. If you notice anyone or anything bumping, touching, leaning on or otherwise in contact with the control wire, notify the Contractor immediately. It is

much easier to correct a misaligned control wire than repair the pavement after it has been placed.

The unconsolidated concrete in front of the paver should be kept well distributed by spreading or by dumping. As the truck or mixer discharges the mix onto the grade in front of the paver, the forces delivered to the machine should be held to a minimum, with all systems functioning as designed. If the paver is not moving, the vibration should be off. When vibration is in progress, it is important that the concrete becomes uniformly plastic for the full slab width as it passes through the vibration area. A lack of consolidation at one position on the machine could cause a potential fracture line parallel to the direction of movement and also a rough and uneven finished surface. The head of material in front of the paving machine should always be in accordance with the manufacturer's recommendation.

It is possible that experimentation may be necessary at the beginning of paving. To start, no trailing forms should be used on the machine and all finishing equipment should be engaged. This could then be modified if problems occur. One of the prime contributors to edge slump is high slump concrete. This should not be tolerated. Another is tie bar insertion for abutting lanes, which should be installed ahead of the final finishing.

Edge slump of the unsupported sides behind the paver is one of the major problems to be combated on slip form paving. The surface should be immediately straight edged by the Contractor and methods corrected to deliver a consistently true edge. Trailing forms can be used to give support beyond the length of the paver, but this may not be the answer. It is possible that more damage than good is done by trailing forms in some cases, by drag resistance pulling down the edge, or by mechanical vibration transmitted through the paver linkage to the form. This comment is also applicable to a trailing finisher. Remember that the concrete is between the moving forms only a few minutes and does not take its initial set until long after the forms leave it.

If water is added to the surface from a spray bar at the rear of the machine it should be in the form of a fine fog spray to avoid washing of the surface and extreme care must be exercised to see that the amount of water added is held to a bare minimum. Addition of excessive amounts of water during finishing will weaken the surface of the concrete and may result in hair checking or scaling of the pavement surface at an early date. If a considerable amount of water is continually required to finish the concrete, it may be better to add more water to the concrete mix to reduce the need for spraying water on the surface. Rain on a green unformed slab can cause disastrous edge slump and erosion. The Contractor should be encouraged to halt operations previous to this circumstance, and should be prepared to protect the pavement at all times.

Soon after the paving starts, and periodically thereafter, the slab template should be checked to insure that the "dry" template has not changed. This is done by stretching a line over the transverse wires and measuring down. This check should also be made through curves and transitions to ensure that the proper section adjustments are being made.

The slip form paver behaves similarly to an asphalt paver with the front probe approximately 3⁄16-in higher than the rear. This will probably vary with the machine, due to mass distribution, etc.

Slope of less than this produces an unstable characteristic and an undulating profile, slopes in excess of the correct one cause the machine to repeatedly build up and then slump down. If the symptoms occur, this is one place to check. The machine also has about ¾-in convergence in the sides, to encourage stability. Hand finishing, water adding, and other surface manipulation should be kept at a minimum.

SS 5-05.3(7)B Stationary Side Form Construction

Metal side forms or other forms accepted by the Engineer, conforming to the requirements of *Standard Specifications* Section 5-05.3(7)B, shall be used for the construction of cement concrete pavement when a slipform paving machine is not used unless the Contractor requests to use an accepted slip form machine.

It is essential that the base of the forms used have full, equal bearing upon the subgrade throughout their length and width. The forms should be set true to alignment and grade and firmly staked with steel pins to avoid movement. The forms must never be set on blocks or pedestals. After the forms are firmly staked in place, a final inspection of line and grade should be made by sighting along the tops of the forms. Minor adjustments in grade can be accomplished by tamping additional subgrade material under the form base by an accepted mechanical form tamper or by inserting small leveling wedges under the forms. It is important that the leveling wedges do not protrude into the cement concrete pavement so as to prevent uncontrolled cracking in the concrete pavement at the locations of the wedges. A small amount of concrete may seep under the forms and this concrete needs to be removed flush with the vertical face of the existing concrete pavement prior to placing new cement concrete pavement next to existing concrete pavement.

If major changes in alignment or grade are required, the forms should be removed and the subgrade reshaped to the proper elevation and recompacted before resetting the forms.

SS 5-05.3(8) Joints

Isolation Joints – Drainage features and manholes placed within the concrete pavement are likely to cause a crack to develop in the concrete and need to be isolated from the rest of the concrete pavement by some type of premolded joint filler. Consult the contract plans and or Standard Plans for details. If no details are found contact the State Construction Office for guidance.

SS 5-05.3(8)A Contraction Joints

Longitudinal and transverse contraction joints shall be provided by saw cutting the surface in accordance with *Standard Specifications* Section 5-05.3(8) to the depth specified in *Standard Plan* A-40.10. The joints shall match transverse joints on adjacent concrete pavement and be at 15-ft intervals transversely on other areas.

As concrete cures and hardens, a change in volume occurs due to loss of moisture and cooling. This shrinkage results in tensile stresses being set up in the pavement, causing cracks to develop. History has shown that transverse cracks will develop at about 15-ft intervals along the length of a slab, and that a slab wider than 15 ft may crack longitudinally. The spacing for transverse contraction joints is a maximum of 15 ft; see *Standard Plans* A-40.10-00 for more information on spacing of transverse joints.

The purpose of contraction joints is to control the cracking of the concrete, thereby preventing ragged random cracks that spall and require expensive maintenance. Good construction of these joints is of the utmost importance, and inspection of this work is one of the most important phases of the Engineer's duties.

Contraction joints are weakened planes that collect the cracking into a controlled joint. These joints are made by sawing and pouring a hot or cold filler into the joint. The purpose is to create a maintainable joint in the slab and cause the crack to form along the plane of the joint.

This type of joint is constructed by sawing a groove in the hardened concrete to create a plane of weakness along which the crack will form. The saw cuts are made with the circular saw blades edged with diamonds. On full width construction, a gang sawing machine using several blades simultaneously is generally used to saw the transverse joints. When the gang sawing machine is used, the Inspector must see that the individual blades are properly aligned and set to cut the required depth.

It is necessary to control the time of sawing transverse joints very carefully, so that sawing may be done when concrete has hardened as much as possible without delaying so long as to allow development of random cracks. It is impossible to state a sawing schedule that will be ideal for every job, since curing conditions vary a great deal from job to job. Some generalizations can be made concerning sawing, but the Contractor on each job must determine from experience the most suitable schedule for that job.

It is desirable to delay sawing as long as possible to allow the concrete to gain enough strength to resist raveling adjacent to the saw cut. Sawing green concrete produces excessive wear on the saw blades, and causes washing, raveling, and other structural damages to the concrete near the joint. However, it may be necessary to make some early cuts to control cracking.

In general, a program of sawing control joints should be followed, sawing every fifth joint, not to exceed 64 ft, as soon as the concrete hardens sufficiently to resist excessive raveling. The beginning of sawing may vary depending on the type of base, concrete mix characteristics and weather. Sawing of the intermediate joints should follow the sawing of the control joints. It will usually be found possible to delay sawing the rest of the joints until the day following placement of the concrete (see *Standard Plan* A-40.10-00 for more information).

By observing the frequency of cracking and opening of joints the next day, it will be possible to lay out a sawing schedule that will give best results. If only the control joints are cracked, the sawing of the intermediate joints can be delayed further, given fairly constant weather conditions.

The Contractor should mark off the locations of the transverse joints and the inspector should check the spacing and frequently check to see that the specified depth of cut is sawed. The locations of the dowel bar baskets need to be marked on the grade prior to the dowel bar baskets being covered by the concrete pavement in order to correctly locate the transverse joint saw cut in the middle of the dowel bars. Since much of the sawing will be done at night, the Inspector should be equipped with a good flashlight to properly examine the condition of saw cuts and to watch for random cracks.

When paving a lane adjacent to a previously paved slab, an early morning examination of joints in the existing lane will show the joints that are open and working. These locations should be marked for sawing control joints in the second lane. Friction at the construction joint and the tie bars will transmit stresses to the new slab and may cause random cracking to occur. For the same reason, uncontrolled cracks in the first lane should be matched with a control joint in the second. In addition, when cement concrete pavement is placed adjacent to existing cement concrete pavement, the vertical face of all existing working joints shall be covered with a bond breaker, such as polyethylene film, roofing paper or other material as accepted by the Engineer to prevent uncontrolled migration of the crack into the adjacent slab (*Standard Specifications* Section 5-05.3(8)A). If the Contractor proposes to use material other than polyethylene film or roofing paper as a bond breaker, the Project Engineer shall consult with the State Construction Office on the suitability of the proposed bond breaking material.

SS 5-05.3(8)B Sealing Sawed Contraction Joints

Prior to opening of the pavement to traffic, sawed joints must be sealed with an accepted type of filler material. Before application of the filler material, the joints must be thoroughly clean and dry. The saw shall be free of dirt and dust and may be cleaned with a jet of compressed air. It is important that the saw cut be completely filled to within ¼ in to ⅝ in below the top of the concrete surface with the joint filler material. The Inspector can check this by probing the joint after sealing with a stiff wire and watching for sagging of the filler below the top of the joint.

SS 5-05.3(8)C Construction Joints

A construction joint shall be made at the end of each day's paving by placing a header board transversely across the pavement. Uncapped dowel bars should be installed in the joint, seeing that the dowels are parallel with the centerline and profile of the pavement. The ends of the dowels projecting from the header should be protected so that they will not be disturbed or moved from their correct positions.

Prior to beginning paving the following day, any broken curing seal on the end of the previous day's work must be re-sprayed with curing compound, and exposed dowel bars shall be coated with a parting compound, such as curing compound or grease to allow for future slab movement.

SS 5-05.3(10) Tie Bars and Dowel Bars

Tie/dowel bars must be installed where specified in the *Standard Plans* M 21-01 (see Standard Plan Series A-40 and A-60). Tie bars must be placed so that equal lengths of the bars project into the two lanes of adjoining pavement. When paving two or more lanes at a time, the tie bars are placed at the juncture of the lanes by mechanical means. The Inspector must be alert to see that the bars are set at the proper spacing and depth and are properly centered between the two lanes.

When placing tie/dowel bars in the edge of a slab, the ends of the bars projecting from the forms should be protected against disturbance that might destroy the bond between the concrete and steel. The bars already in place shall be bent to lie close to the slab to permit preparation of the subgrade of the adjoining lane, and carefully straightened to their proper position before placement of concrete.

SS 5-05.3(11) Finishing

After the concrete has been given the preliminary finish by the paving machine, minimal hand finishing may be required before the Contractor checks the surface with a straightedge device not less than 10 ft in length. High and low areas indicated by the straightedge shall be corrected. The requirements of checking the surface with the straightedge may be waived if it is demonstrated that other means will consistently produce a surface that meets the requirements for surface smoothness.

The pavement shall be given a final finish by texturing with a wire comb parallel to the center line of the pavement. The tining on small or irregular areas may be either parallel or perpendicular to centerline. It is important that the comb be used when the concrete is at the proper consistency. If the concrete is too soft, it will not retain the proper texture obtained by the comb, and if the concrete is too hard, the proper texture will not be achieved. The comb should be set up and ready to use well in advance of the time it will be required.

SS 5-05.3(12) Surface Smoothness

In general, the paving contractor is responsible only for the pavement placed by them. This includes the smoothness of the pavement on both sides of any and all joints constructed. On the other hand, the Contractor would not be responsible for pavement placed by another contractor or if the work abuts a bridge or approach slab constructed on a separate contract. When leaving or approaching such joints, the center of the profiler will be started or stopped on the pavement to be profiled at a point approximately 15 ft from the joint. The remaining areas that are unprofiled would be checked for smoothness with the 10 ft straightedge in accordance with current practices used on bridge decks.

Since the primary goal is to obtain a smooth pavement, it would be advisable to run the profiler over the joints at the beginning and end of the project, as well as any intermediate joints as described above, and exclude these readings from the profile index. Should these areas meet straightedge tolerances, but not that for the profiler, consideration should be given to grinding which would be performed at WSDOT's expense.

Standard Specifications Section 5-05.3(12) requires that the pavement smoothness be checked with equipment furnished and operated by the contractor, in the presence of the Engineer, within 48 hours following placement of the concrete to determine whether the equipment and methods used by the contractor are producing a pavement meeting the smoothness required by the specifications. A computerized recording profiler meeting the requirements of *Standard Specifications* Section 5-05.3(3)E is required to be used. For the purposes of determining the "daily profile index," two or more profiles may be averaged together (see example in WSDOT Test Method 807). The "daily profile index" may also be used to identify those areas having high points in excess of 0.3 in which must be reduced by abrasive means until reruns of the profiler indicate the area does not exceed the allowable deviation. The longitudinal "profile index" of the pavement is based on the elevation of any point on the pavement relative to the elevation of points 12.5 ft ahead of and behind the point. This is measured by a 12-wheeled vehicle having a 25-ft wheelbase and a reference wheel, free to move in a vertical direction, suspended midway between the outer wheels. The

vehicle is calibrated to record longitudinal travel and vertical variations in elevation on a continuous strip chart as it traverses a section of pavement. The "profile index," which is determined from the recorded chart of each 0.1 mile section, is defined as the cumulative total of recorded elevation extremes above or below a standard variation of ±0.1 in.

For example, if the chart for a 0.1-mile section showed all elevation extremes to be within the +0.1 in standard, except for 2 points which measured +0.2 in and +0.3 in respectively, the "profile index" would be 0.3 in per 0.1 mile, or 3 in per mile.

The "daily profile index" may be used for acceptance purposes should the various individual indexes used to determine the "daily profile index" not exceed 0.7 in per any 0.1-mile section or 7 in per mile.

Grinding depths should be limited to ⅜ in. If the specifications cannot be met with this, the section should be removed. Low areas which grinding cannot feasibly remedy shall be sandblasted, filled with epoxy bonded mortar and textured by grinding. The epoxy bonding agent shall meet *Standard Specifications* Section 9-26.1(1)B for Type II epoxy. Areas which exhibit improperly finished surfaces and would require extensive patching should be removed at the Engineer's discretion.

SS 5-05.3(13) Curing

Immediately following final finishing of the concrete or after free water leaves the surfaces, the curing compound should be applied. The purpose of curing, whatever method is used, is to prevent the loss of moisture required to hydrate the cement so that the concrete will gain its proper strength and durability. It is essential that a complete coverage of curing compound be applied to seal the exposed surface of the pavement.

On most paving work, specifications will call for machine application of the curing compound. It should be seen that the spray nozzle is adequately protected from the wind by shielding so that the compound is not blown off the pavement surface. The Inspector shall check to see that the specified rate of coverage is obtained.

The efficiency of the curing compound in preventing escape of moisture from the concrete is dependent upon the thickness of the membrane. For this reason, it is essential that the compound be evenly applied over the exposed surface at a rate of 1 gallon to not more than 150 square ft. Refer to *Standard Specifications* Section 5-05.3(13) for additional requirements for curing.

The curing membrane must be protected from damage by foot traffic or equipment. There is a certain amount of foot traffic required in sawing joints, operating the profiler and other operations. This traffic should be held to a minimum, and if damage from undue scuffing or other causes does occur, the area shall be re-sprayed with the required amount of curing compound. Care must be exercised so that curing compound is not sprayed into saw cuts, as the joint sealing compound will not adhere to the concrete in the joints if the curing compound is present.

When pavement is being constructed in early spring or late fall, the Engineer must be alert to predictions of freezing weather, and see that the Contractor is prepared to protect the fresh concrete from freezing, as required in *Standard Specifications* Section 5-05.3(14).

When special protection against freezing is required, the protective earth or straw covering must be placed against the sides of steel forms, if used, as well as on the surface of the pavement, since steel offers poor insulation to the change in temperature.

SS 5-05.3(17) Opening to Traffic

Standard Specifications Section 5-05.3(17) covers the requirements for opening cement concrete pavement to traffic. During the curing period designated for the concrete mix, the pavement must be properly barricaded to close it to all traffic. If necessary, the Contractor may be required to furnish a person to prevent traffic from using the pavement.

When the pavement has developed a compressive strength of 2500 psi, as determined from cylinders made at the time of placement, it may be opened to traffic. The pavement should be cleaned either by brooming or a pickup sweeper prior to opening.

SS 5-05.3(22) Repair of Defective Pavement Slabs

Broken slabs, slabs with random cracks, nonworking joints near cracks, edge slumping and spalls along joints and cracks must be replaced or repaired prior to completion of joint sealing. Areas of concrete pavement that are identified as needing replacement or repair need to be reviewed by the Project Engineer to determine if a repair or replacement of the concrete is most appropriate in accordance with *Standard Specifications* Section 5-05.3(22). There are times that small defects or spalls in the concrete should not be repaired as the repair is worse than leaving small defects or spall alone. The Project Engineer shall consult with the State Construction Office in making the determination on which areas should be repaired, replaced or leaving small spalls or defects alone.

SS 5-05.5 Payment

SS 5-05.5(1) Pavement Thickness

Standard Specifications Section 5-05.5(1) outlines procedures for thickness determinations and provides penalties when prescribed tolerances are exceeded. Before final payment, the pavement thickness will have to be determined in order to calculate the quantities.

6-01 General Requirements for Structures

GEN 6-01.1 Bridge Construction De-Briefing Session

In an attempt to continually improve the quality of bridge contract plans, specifications and estimates and to obtain feedback on engineering and construction practices, the Bridge and Structures Office is available to assist in conducting post construction De Briefing Sessions for "Capturing Lessons Learned." The purpose of these De Briefing Sessions is to provide designers with feedback on positive things that worked well and things that could be improved.

The Project Engineer, Bridge Technical Advisor, or Bridge Design Unit Manager should consider initiating a De-Briefing Session on those projects where they feel feedback to the designers would benefit the quality of future construction plans. Suggested projects include Bridge Rehabilitation Projects, Bridges with complex staging, substructure conditions, or new material applications. Suggested attendees at these sessions should include Region Project Office Staff, State Construction Office, Bridge and Structures Office, Design Consultants, and the Contractor involved in the structural work.

The Bridge and Structures Office will assist the Project Engineer in organizing and facilitating the De-Briefing Session once it is agreed to go forward with a De-Briefing Session. The Project Engineer will be responsible for making all contacts with Contractor personnel.

The Project Engineer should determine the timing of the De-Brief session with respect to the contract work. Scheduling the session too long after the contract work is complete may diminish the Contractor's willingness to participate or recall of the issues for discussion. Scheduling a session too soon before completion of all contract related activities may cloud issues currently under discussion. The Project Engineer should exercise caution in selecting the proper timeframe for this session.

More information on these sessions, including De-Brief Meeting guidelines, typical agenda, and De-Brief report outline, are available on the Bridge and Structures Office's homepage at www.wsdot.wa.gov/eesc/bridge/cecw/index.cfm.

GEN 6-01.2 General Inspection Procedures

The intent of the contracting agency inspection is to provide Quality Assurance (Q/A) for the work performed. Often times this task creeps into the Quality Control (Q/C) function which is the contractor's responsibility. There is usually no need for an inspector to observe the entire construction operation unless identified in the table below or there are other compelling reasons. The following Q/A inspection shall be performed by one inspector representing the contracting agency:

Because of the wide variety of types and designs of structures, the Inspector should be thoroughly familiar with all of the contract documents as they provide the specific materials requirements, dimensions, and other details that make each structure unique. The Inspector should examine the contract documents extensively by:

Thoroughly reviewing *all* contract documents, including:

- The plans and special provisions for the project.
- The appropriate *Standard Specifications*, supplemental specifications, and standard drawings that apply.
- Any contractor-provided documents, such as traffic control plans, falsework and forming plans, shoring plans, and shop drawings for prefabricated items.
- Check with the Region's Environmental Section to verify that all necessary environmental documentation has been obtained for the project and is current.
- Special care needs to be taken over streams that are subject to the Endangered Species Act (ESA) as the requirements and the regulations are constantly changing and may change during the life of the contract.

Checking and verifying all:

- Plan dimensions.
- Elevations.
- Materials quantities.

List any discrepancies that are discovered and report them to a supervisor (along with any items that may require clarification).

Set up part of the inspection documentation records in advance so that the actual dates, dimensions, quantities, and other values can be more easily filled in as the work progresses.

When inspectors cannot participate directly in a preconstruction meeting, they should check with the Project Engineer after the meeting to identify any areas of special concern.

GEN 6-01.3 Approval of Materials

The Project Engineer shall notify the Contractor that approval of all materials used in permanent structures is required. Contractors frequently list only the local suppliers and not the material. This should be discussed with the Contractor at a preconstruction meeting. Particular care should be used to see that this requirement is met in regard to minor parts and materials such as drains, bearings, expansion dams, bolts, pins, and paints. It should also be impressed on the Contractor that inspection of all materials is required before they are used and that the best time for inspection is generally before the materials are shipped. Contact the State Materials Lab for inspection services.

Prefabricated materials, such as structural steel and cast steel, are fabricated in accordance with shop plans submitted by the Contractor and reviewed by the Bridge and Structures Engineer.

GEN 6-01.4 Safety Nets and Staging

Fall arrest and protection shall be provided. Reference WAC 296-155-24510 *Fall restraint, fall arrest systems*. A Fall Protection Work Plan shall be on site.

Standard Specifications Section 1-05.6 requires the Contractor to furnish sufficient, safe, and proper facilities such as walkways, railings, ladders, and platforms for inspection of the work. The Project Engineer should insist that the Contractor provide safe facilities and should not permit WSDOT personnel on the project when it is not safe for them.

SS 6-01.2 Foundations

Elevations of bottoms of footings, as shown in the plans are determined from information secured from test holes or borings or other sources. The Project Engineer shall observe the character of the materials removed to confirm the material is similar to that identified in the test borings. If the material is similar, they shall note the elevation of such material and approve the footing elevation. If the material differs from the test borings, the State Construction Office shall be consulted for an evaluation. Except in solid rock foundations, it is necessary to carry all footings well below any possible line of scour. Footings in streams are often carried to greater depths when hard material exists than they would be in the same material where danger of scour exists. Footings on solid rock shall be well keyed into the rock to prevent sliding of the structure. Keys should not be less than 1 ft deep and the rock surface should be rough so it has more value as a key. Arch abutments may be designed with bottoms on an inclined plane. Care must be taken that the rock or other material is cut as nearly as possible to the plane shown. If this cannot be done, the material should be removed to a satisfactory foundation, cross-sections taken and the State Construction Office should be advised and requested to secure a new design of the abutment. Material at the heel, or back of the abutment, shall be carefully removed and all loose material removed. In placing concrete in arch abutments, the concrete is placed directly against the undisturbed foundation material at the back of the abutment for the reason that an arch abutment is subject to very high vertical and horizontal loads. Footings in hard material are sometimes sloped or stepped. Steps must be carefully made and if the material is not hard enough to stand vertically the steps shall be inclined or beveled. The slope shall not be steeper than the angle of repose. Backfilling to level up foundations or to fill holes will not be allowed except by permission of the State Construction Office. Under certain conditions, permission will be granted to fill a hole with a lean concrete mix. If the design soil pressure is low, unsuitable material may be replaced by granular material compacted to 95 percent density. If there is no contract unit price for the replacement material, an agreed unit price must be secured by change order. Just prior to placing concrete, all loose material shall be removed and, if in the dry, shall be well sprinkled with water before concrete is placed.

SS 6-01.3 Clearing the Site

The Contractor shall clear the site of the proposed structure of all trees, brush, stumps and debris for the full width as required and in the manner specified in *Standard Specifications* Section 2-01. Existing bridges, buildings or obstructions shall be removed as provided in the contract or the *Standard Specifications*.

Payment for clearing and grubbing and removing structures and obstructions shall be as provided in the contract. If no specific payment is provided, this work is considered to be incidental to the construction.

The removal or relocation of public or private utilities encountered on the site will be as provided for under the terms of *Standard Specifications* Section 1-07.16.

The Project Engineer shall make a thorough study of the various public utilities involved with respect to the construction of the new work, noting the clearances required for all power and telephone lines and poles, sewer and water lines; tracks, trolley lines, ditches, signals, etc., on railroad grade separations; and possible

interference with or inconvenience to adjoining property. The Project Engineer shall ascertain from the Regional Utilities Engineer if notification has been given to utilities for required movement of lines so that the construction is not delayed.

SS 6-01.4 Appearance of Structures

Bridge traffic barriers, curbs, bridge railings and rail bases shall be carefully aligned to give a pleasing appearance. See Section 6-06 for further instructions.

SS 6-01.6 Load Restrictions on Bridges Under Construction

Bridges under construction shall remain closed to all traffic, including construction equipment, until the Substructure and the Superstructure, through the bridge deck, are complete for the entire Structure, except as provided herein. Completion includes release of all falsework, removal of all forms, and attainment of the minimum design concrete strength and specified age of the concrete in accordance with these Specifications. Once the Structure is complete, Section 1-07.7 shall govern all traffic loading, including construction traffic (equipment).

SS 6-01.9 Working Drawings

The Contractor is required to submit for review detailed plans for falsework, concrete forms, cofferdams, shoring, and cribbing. These plans must comply with the requirements of the contract plans and specifications and shall be designed under the supervision of or by a Washington State licensed professional engineer and shall bear their seal and signature.

The Project Engineer should review the submittal, when appropriate, for the following content:

1. Ground line at time of construction when falsework, shoring, and cribbing are involved.
2. Horizontal clearances to adjacent roadways, existing structures, and railroads when shoring and cribbing are involved.

A change order is required for any deviation from the contract. Deviation from a working drawing requires Headquarter's review and concurrence. Review of these submittals must be completed before the Contractor starts construction of the structure.

If a project has a large number of working drawings associated with it the Project Engineer should talk to the contractor about prioritizing his submittals. The project engineer should share this information with the State Bridge and Structures Engineer so that the review process can be accomplished in the most efficient manner for the contractor.

The Contractor shall submit drawings per the contract and Section SS 1-05.3 of this manual.

The Project Engineer will review the plans to see that they comply with the submittal requirements of the contract and send any comments to the State Bridge and Structures Engineer (or Terminal Design Engineer) about any field conditions or contract deficiencies that would affect the checking of the plans.

When pre-contract reviewed formwork plans are used, the Contractor shall submit a copy of the plans to the Project Engineer. The Project Engineer must then advise the Contractor that construction may proceed unless a field condition needs to be resolved before doing so.

Forms for concrete deck on steel or prestressed concrete girder spans shall be fully supported on the girders. They shall in no case extend to the ground unless the steel girders are also supported on piles or posts.

The Project Engineer shall see that the falsework and forms are constructed in accordance with the submitted plans. If it becomes necessary, or the Contractor desires to deviate from the submitted plans, a revised plan for review shall be submitted and the Contractor shall not start construction in accordance with the revised plan until the review is complete. All revisions to the plan shall be reviewed by the State Bridge and Structures Engineer (or Terminal Design Engineer) to ensure the structural integrity of the falsework and formwork.

SS 6-01.12 Final Cleanup

When the structure is completed, the Contractor shall clean up the site and remove all materials and debris. The decks of the structures shall be swept and washed clean. The Contractor shall level off and fine grade all excavated material not used for backfill, and fine grade around all piers, bents, abutments, and on slopes so that the entire site and structure is left in a clean and presentable condition.

Unless environmental permits require otherwise, remove all falsework piling, cofferdams, shoring, curbs, and test piles to a minimum of 2 ft below the finished ground line. Removal limits within a stream or channel are described in *Standard Specifications* Section 2-09.3(3)D.

After a permanent or temporary bridge or a bridge modification is complete and preferably before opened to traffic, the State Bridge and Structures Office's Bridge Preservation Section needs to perform an inventory inspection. The purpose of this inspection is to field verify certain contract plan details, to provide a base-line condition assessment of the bridge, and to identify any potential problem features.

When the bridge is nearing completion, two to four weeks before completion, the Project Engineer should notify the State Bridge Preservation Engineer of the anticipated completion date. The Bridge Preservation Engineer will make arrangements with the Project Engineer for an inventory inspection.

6-02 Concrete Structures

GEN 6-02.1 Use of Epoxy Resins

Quite frequently, the use of epoxy resin systems on our projects is considered; either at the design stage or during the progress of a contract. Generally this use is in connection with repair of distressed concrete or in setting rebar.

Epoxy resins are quite versatile materials and are capable of providing the answer to numerous bonding or grouting problems. However, like a number of products, there is a tendency to treat them as a universal cure-all and they occasionally are applied without proper consideration of inherent limitations.

Epoxy systems are capable of providing many different properties through the formulation of their various components. To a certain extent, the systems can be tailored to fit the particular need and conditions of time, temperature, humidity, etc., that will prevail. Use of a material under conditions beyond those for which it was formulated can result in considerable trouble rather than benefit. Probably the greatest potential for trouble exists in the use of epoxies at temperatures below which a normal reaction can occur. Generally speaking, unless a specially formulated epoxy is being used, trouble can occur when application is attempted below 50°F.

The State Materials Engineer is available as a technical resource on the use of such systems, in the resolution of pertinent problems should they occur during preliminary design considerations, or as a result of problems during construction. It is strongly recommended that any contemplated use of epoxy resin systems at application temperatures below 50°F be checked with the State Chemical Materials Engineer to forestall potential difficulties.

If epoxy resin is used, the following elements need to be carefully checked by the Inspector:

- Proper mixing and curing of the epoxy resin.
- Temperature and/or moisture limitations of the epoxy being used.
- That the areas are clean and prepared in accordance with the manufacturers recommendations.
- That the epoxy covers the entire repair area.
- That the epoxy fills the entire space between bar and the hole (if bars are being set with epoxy resin).
- That the epoxy is still tacky (not set) when it is being used to bond two structural elements together (just before elements are put together).

For setting rebar or anchors, it is best to determine the volume required to be filled by the epoxy and measure the epoxy being used. A method of measurement should be agreed to with the Contractor for inspection purposes. Also, occasional samples should be taken of the epoxy resin being placed to be sure it is setting up properly. If there is any question of filling the void or adequacy of the epoxy resin, the Inspector shall advise the Contractor, document the discussion, and report it to the Project Engineer.

SS 6-02.3 Construction Requirements

SS 6-02.3(2) Proportioning Materials

Mix design, proportioning, and mixing concrete is the responsibility of the Contractor. General information regarding proportioning and mixing concrete is provided in Appendix A at the end of this chapter to provide a better understanding of the variables involved.

SS 6-02.3(2)A Mix Designs

The *Standard Specifications* require the Contractor to provide a mix design for all classes of concrete specified in the Plans except for those accepted based on a Certificate of Compliance. The mix design should be submitted on Proposed Mix Design (DOT Form 350-040). The Project Engineer should review all Contractor proposed mix designs for conformance to the contract. Specific items to look for are:

1. There is at least the minimum cement content specified in *Standard Specifications* Section 6-02.
2. The minimum amount of fly ash (if called for).
3. The amount of fly ash (if used) does not exceed 35 percent.
4. The amount of ground granulated blast furnace slag (if used) does not exceed 25 percent, or the combination of slag and fly ash does not exceed 35 percent.
5. The aggregate conforms to *Standard Specifications* Section 9-03.
6. Air entrainment is included if required.

Type III portland cement shall not be allowed in any concrete structure unless called for in the plans or specifically approved by the State Construction Office. The use of Type III cement in structures is not desired because it is believed to reduce the resistance of the finished surface to weathering, particularly to freezing and thawing cycles and is more subject to plastic and shrinkage cracking.

Air-entrained concrete is required in all structural concrete above ground. The use of air entrained concrete below the finished ground line is optional with the Contractor.

SS 6-02.3(4) Ready Mix Concrete

SS 6-02.3(4)A Qualification of Concrete Suppliers

All concrete production facilities which produce concrete other than commercial concrete or lean concrete will be prequalified. Commercial concrete and lean concrete may be batched in production facilities which are not prequalified. The concrete production facility prequalification requires certification by the National Ready Mix Concrete Association (NRMCA). Information concerning NRMCA certification may be obtained from the NRMCA at 900 Spring Street, Silver Springs, MD 20910 or online at www.nrmca.org. The NRMCA certification shall be valid for a two year period from the date of certification.

The Contractor is required to submit Request for Approval of Materials Source (Form 350-071) listing the name and location of the plant which will supply the concrete and also the source of the cement, aggregates, and admixtures that will be used in the concrete. Concrete from the plant shall not be used until the plant has been approved. The Project Engineer shall take approval action based upon the batch plant

prequalification submittal meeting the requirements of the Standard the Approved Source of Material Listing. If the batch plant prequalification submittal indicates that the scale certification has expired the Project Engineer shall confirm that the scales have been recertified or the source will not be approved.

Whenever ready mix concrete is used on the project, the Inspector shall be alert to the condition of the trucks being used for delivery. All trucks used for delivery of concrete (other than commercial concrete or lean concrete) must be preapproved prior to use on the project. Preapproval of delivery trucks is a part of the plant approval process described in Section 6-2.2A. Approved trucks will be identified on an NRMCA truck list for plant manager inspected facilities. Approved trucks will be identified by an NRMCA sticker (for the years of approval) for NRMCA approved facilities. In some cases an approved truck may not have yet received an NRMCA sticker. In these cases, the ready-mix producer shall notify the Project Engineer in writing that the truck has passed NRMCA inspection, and is approved for use. The Inspector should verify that all delivery trucks meet the requirements of Standard All delivery must have operational revolution counters and a device to measure the amount of water added at the site. All trucks are required to be operated within the rated capacity stated on the manufacturer's data plate. The Inspector needs to check the concrete as it is being discharged down the chute to ensure that the concrete is uniformly mixed. If the concrete does not appear uniformly mixed, the Inspector can request that the concrete producer re-inspect the truck. If the concrete delivery truck cannot deliver uniformly mixed concrete, the delivery truck needs to be rejected.

When necessary, the Project Office shall make an inspection of the batch plant to confirm: the accuracy of the batching process; that the scales have current certifications; the accuracy of the water metering devices; and to sample the coarse aggregate and fine aggregate.

SS 6-02.3(5) Acceptance Concrete

The Contractor is required to provide a certificate of compliance for each load of concrete delivered to the job. Based on who is supplying the mix, the format of the certification may vary. All certifications must contain the information required by the *Standard Specifications*. If a Contractor Certification sheet is not provided by the Contractor, the form provided by WSDOT may be used. Example forms are available as follows:

- Manufacturer's Certificate of Compliance for Ready Mix Concrete (DOT Form 450-001)
- Proposed Mix Design (DOT Form 350-040)

A Certificate of Compliance is all that will be required for acceptance of commercial and lean concrete. It is advised that as inspectors are collecting the Certificate of Compliance (batch ticket), they do a visual inspection of the concrete. Visual inspection should verify that the items listed on the batch ticket are included in the mix. If the concrete does not appear satisfactory for its intended use, it should be rejected.

Prior to Placement

It is the responsibility of the Inspector to compare the actual batch weights on the concrete delivery ticket to the proposed mix design weights. The cement, coarse and fine aggregate weights are required to meet the following tolerances:

Concrete batch volumes less than or equal to 4 cubic yards:

Cement	+5% and -1%
Aggregate	+10% and -2%

Concrete batch volumes greater than 4 cubic yards:

Cement	+5% and -1%
Aggregate	+2% and -2%

If the total cementitious material weight is made up of different components, the component weights shall be within the following tolerances of the amount specified in the mix design:

Portland cement weight	+5% and -1%
Fly ash weight	+5% and -5%
Microsilica weight	+10% and -10%

For all mix designs the water weight shall not exceed the maximum water specified in the mix design. These batching tolerances apply to all mixes.

Acceptance testing will be performed by WSDOT in accordance with WSDOT standard test methods and Field Operating Procedures. Lean concrete and commercial concrete will be accepted based on a Certificate of Compliance, provided by the supplier as described in *Standard Specifications* Section 6-02.3(5)B. All other concrete will be accepted based on conformance to the requirements for temperature, slump, air content for concrete placed above finished ground line, and the specified compressive strength at 28 days.

The Inspector must be familiar with the type of concrete mix and who is responsible for the mix. The Contractor is responsible for the mix design and is responsible for 28 day strength.

The Inspector must be prepared to test materials for conformance. The Inspector must also be prepared to deal with nonconformance.

Preparation as a concrete testing inspector requires knowledge of concrete properties and construction procedures. Knowledge of how to use testing equipment and understanding the reliability of testing is also important. A continual evaluation of the testing equipment is needed to be sure it is operating and performing as required. Care and caution are recommended when transporting testing equipment and handling test materials, i.e., cylinders, molds, fresh concrete cylinders, and other samples).

Slump Acceptance

The maximum slump for vibrated and nonvibrated concrete is listed in *Standard Specifications* Section 6-02.3(4)C.

When a high range water reducer (super plasticizer) is used, the maximum slump limit may be increased an additional 2 in while the concrete is affected by the admixture.

Air Content Acceptance

All cast-in-place concrete above the finished ground line shall be air entrained. The air content shall be a minimum of 4.5 percent and a maximum of 7.5 percent, unless otherwise specified.

When commercial concrete is placed in sidewalks, curbs, and gutters, air content is very important. It is recommended that the inspector perform air content testing sufficient to ensure that the concrete has between 4.5 and 7.5 percent air entrainment.

The Contractor may elect to use air entrained concrete below finished ground line. If so, the 28-day compressive strength shall meet the requirements for the class of concrete specified.

Placement Time

It is the Inspector's job to ensure that:

- The concrete is placed in the forms as soon as possible after mixing, but no later than 1½ hours after cement is added to the mix.
- The concrete is always plastic and workable while being placed.
- The concrete is placed continuously with interruptions no longer than 30 minutes.
- Each layer of concrete is placed and consolidated before the preceding layer takes initial set. Initial set has begun if the vibrator will not penetrate the preceding layer under its own weight while being operated.

The discharge time may be extended to 1¾ hours if the temperature of the concrete being placed is less than 75°F. With the approval of the Project Engineer, this may be extended to two hours, if the temperature of the concrete being placed is less than 75°F. If it is apparent that the 30-minute time limit will be exceeded for a continuous pour, a construction joint should be established. The State Construction Office shall be contacted when this occurs. A vibrator can be used to determine if initial set has taken place when evaluating the need for a construction joint as described previously.

In certain instances, it may be difficult to meet the above criteria due to long transit times. The *Standard Specifications* allow the Contractor the option of requesting in writing to extend the time for discharge. The extension of time will be considered on a case by case basis and requires the use of specific retardation admixtures and coordination with the State Construction Office.

Point of Acceptance

Acceptance tests for specification compliance are to be determined from samples taken at the discharge of the placement system for bridge decks, overlays, bridge approach slabs, and barriers, and at the truck discharge for all other placement. For bridge decks, overlays, bridge roadway slabs, bridge approach slabs, and barriers, acceptance samples should be taken as close to the point of deposition as possible. (e.g., taking a sample from the end of a pump down below the bridge instead of up on the deck is not acceptable as it may have substantially different characteristics.)

If a pump is used as a placement system, the initial acceptance test must be delayed until the pump has been cleared of all initial priming slurry. Do not allow placement of pump slurry in the forms.

The Inspector should arrive in advance of the concrete placement and prepare the testing location. It is the Contractor's responsibility to provide adequate and representative samples of the fresh concrete to a location designated by the Engineer. Above all, the equipment must be in good working condition with records of the last calibrations for the air meter and scales. The Inspector should have all the information, including the mix design, and all the forms needed for documentation of the placement operation.

Test Cylinders

Concrete test cylinders shall be molded in forms conforming to the requirements for single use molds as detailed in ASTM M 205. Cardboard test cylinder molds shall not be used.

See Chapter 9 for instructions for making, curing, and shipping concrete test cylinders and for the number of test cylinders to be made.

Extra cylinders that are tested for early removal of forms and falsework shall be the responsibility of the Contractor. Early cylinders are cylinders tested in advance of the design age of 28 days. Their purpose is to determine the in place strength of concrete in a structure prior to applying loads or stresses. The Contractor shall retain an independent testing laboratory to perform this work. This lab shall be approved by the Engineer.

The cylinders shall be cured in accordance with WSDOT FOP for AASHTO T 23. Special cure boxes to enhance cylinder strength will not be allowed. The number of early cylinder breaks shall be in accordance with the Contractors need and as approved by the Engineer.

Prior to the removal of any forms, the Contractor is required to furnish the Engineer with all test results. Forms shall not be removed without approval of the Engineer.

If set retarders are used in a mix, the State Materials Lab should be consulted for curing, handling, and storage instructions prior to use.

Retesting Concrete

Once the Contractor has turned over the concrete for acceptance testing, no more mix adjustment will be allowed. The concrete will either be accepted or rejected.

Multiple Placements from One Concrete Truck

Only one set of acceptance tests are required per concrete truck.

SS 6-02.3(6) Placing Concrete

A Concrete Placement Checklist was developed as an inspection aid and is available on the Construction Manual Resources website.

If it is necessary or desirable to place structural concrete in service prior to the time stated in the *Standard Specifications*, authority must be obtained from the State Construction Office. In such cases, test cylinders from each pour are taken and tested by the Contractor to determine the early break strength.

All sawdust, nails, dirt, and other foreign material, including ponded water, must be removed from within the forms and the forms shall be inspected and approved before placing any concrete.

The bottom of footings and forms must be thoroughly soaked with water prior to placing the concrete so they do not absorb water from the concrete mix. Care must be taken to be sure there is no ponded water when placing the concrete.

Concrete in all reinforced footings shall be placed in the dry. All reinforcing, including vertical wall or shaft bars and dowels, shall be securely fastened in place before placing of concrete begins. Driving of dowel bars into concrete must not be permitted, except in seal concrete when the seal is also the footing block, but they must be placed immediately after the concrete is placed. The placing and spacing of footing reinforcing steel is as important as in any other part of the structure.

Care must be exercised in placing reinforcing steel in the columns where it splices with the dowel bars into the footings. In many instances, if the dowel bars and column bars are not carefully placed, there is not enough space between the steel bars for proper placement of concrete. Considerable care must be taken in placing and vibrating the concrete in the columns so that no rock pockets are formed. Column details must be strictly adhered to since they are critical to the earthquake resistance of the bridge.

Care must be taken in placing and vibrating the concrete of sloping walls or columns to get proper consolidation and to avoid rock pockets.

Vacant
Figure 6-1

Concrete shall be placed in one continuous operation from top of footing to bottom of pier cap or crossbeam unless construction joints are shown in the plans or preapproved by the State Construction Office. Concrete shall be placed at the rate for which the formwork is designed. This rate, in ft of height per hour along with the concrete temperature, should be stated on the falsework plans. Spacing of studs, wales and form ties shall be as shown on the falsework plans. Rails, barriers, and parapets on retaining walls shall not be placed until all backfilling is completed. Vibrators shall be used at all times when placing concrete, unless otherwise specified.

SS 6-02.3(6)A Weather and Temperature Limits to Protect Concrete

Concrete may not be placed when rain is hard enough to:

- Cause a muddy foundation.
- Wash or flow the concrete.

The temperature of the concrete for cast-in-place concrete must be between 55°F and 90°F during placement. The temperature for precast concrete that is heat cured must be between 50°F and 90°F.

The air temperature must be at least 35°F during and for seven days after placement (unless the contractor has a cold weather plan in place).

The temperature measuring device shall be capable of measuring the temperature of freshly mixed concrete to ±1°F with a range of 0°F to 130°F.

SS 6-02.3(6)A1 Hot Weather Protection

- Cool the component materials of the mix, transport and placement equipment, and the contact surfaces at the site.
- Methods shall be reviewed prior to implementation.

When the concrete is being placed in the bridge deck during hot weather, additional precautions must be taken in order to prevent surface evaporation. See *Standard Specifications* Section 6-02.3(6)A for estimated evaporation rates.

The temperature of the concrete at the time it is placed in the forms must be kept under 90°F. Concrete with high temperature looses slump rapidly and is difficult to place and finish. This temperature can be controlled by shading the concrete trucks while loading and unloading and shading the conveyors or pump lines used in placing the concrete. The forms and reinforcing steel should be cooled prior to placing the concrete. This can be done by covering them with damp burlap and then spraying them with cool water immediately prior to placing the concrete. Care must be taken to see there is no standing water in the forms when the concrete is placed.

Water reducing retarder admixture should be used in the concrete so the water-cement ratio and slump of the concrete can be maintained within the specification limits. The mixing time of the concrete should be held to the minimum. The concrete must be placed and finished as soon as possible. If there is a delay in applying the curing compound after the concrete has been finished, a fog spray should be applied to reduce the moisture loss due to evaporation. If plastic cracks form and the concrete is still in a plastic state, they can be eliminated by revibrating the concrete and refinishing. Care must be taken to not revibrate the concrete after initial set has been obtained.

The requirements for curing the concrete shall be enforced. As soon as the visible bleed water has evaporated from the finished deck, the curing compound should be applied. The curing compound should be applied in two applications to ensure full coverage of the concrete. The second coat should be applied in a direction perpendicular to that of the first application. The amount of curing compound applied in the two applications should meet the minimum amount specified. Immediately after application of the curing compound and initial set, the concrete deck should be covered in accordance with *Standard Specifications* Section 6-02.3(11).

In summary, the difficulties arising from hot weather concreting may usually be minimized by:

1. Using cool mixing water.
2. Keeping the aggregate temperature as low as is economically feasible.
3. Reducing the length of mixing time.
4. Placing the concrete as soon as possible after mixing and with a minimum of handling.
5. Keeping the surfaces shaded during placing.
6. Placing curing compound as soon as possible.

SS 6-02.3(6)A2 Cold Weather Protection

- Concrete shall not be placed against any frozen or ice-coated foundation, forms, or reinforcement.
- A plan for cold weather placement and curing is required, if temperatures are below 35°F or anticipated to be below 35°F in the next seven days.
- Heat aggregate and/or water to maintain mix temperatures above 55°F.
- Control temperature and humidity after placement by:
  - Enclosing concrete.
  - Heating to 50°F to 90°F for seven days.
  - Add moisture for six days (discontinue 24 hours before heat is stopped).
  - An accurate recording thermometer is required.
  - Corners and edges require special attention to prevent freezing.

When heating water and aggregates, the approximate resulting temperature for a batch of concrete can be estimated from the following formula:

$$X = \frac{Wt + 0.22W't}{W + 0.22W'}$$

Where

X	=	temperature of the batch
W	=	weight of the water
W′	=	weight of the aggregates and cement
t	=	temperature of the water in degrees F
t′	=	temperature of the aggregates and cement

Several precautions must be taken when placing concrete in cold weather. If temperatures below 35°F are anticipated within seven days following placing the concrete, the Contractor will normally be required to enclose the structure and provide heat and moisture so the concrete will obtain its initial strength without freezing. The addition of moisture should be discontinued 24 hours before discontinuing the heat so there will not be an excess of moisture on the surface of the concrete to form ice in case of cold weather following the seven-day protection. If the temperature is below 35°F when placing the concrete, the concrete must be heated to at least 60°F by heating the aggregate and/or water in accordance with the *Standard Specifications*. The temperature of the concrete, as well as the slump, must be consistent from batch to batch.

When heating water and aggregates, the resulting temperature for a batch of concrete can be computed from the formula in Section 6-2.3A(1).

SS 6-02.3(6)B Placing Concrete in Foundation Seals

When constructing foundations in streams and other locations below water, it is usually necessary to place a concrete seal in the cofferdam so that the cofferdams may be dewatered. The weight of the concrete seal resists the buoyant force on the cofferdam when it is dewatered. Seal concrete is placed underwater by means of a tremie. Concrete pumps may be used.

Handling of the tremie requires the use of a crane to raise and lower it into place. Hand winches are sometimes used in small seals but they must be equipped with a brake and drum for quick release and stop.

The tremie pipe shall be at least 10 inch in diameter, made of heavy steel pipe, with flange or sleeve connections. Sleeve connections are preferable for seals placed in pile foundations. Flanges sometimes hang up on tops of piles and the concrete charge is lost. The tremie pipe must be absolutely water tight, at the joints as well as at the connections to the hopper. The hopper should be of at least, one-half cubic yard capacity.

Before any concrete is placed, the bottom of the tremie pipe shall be sealed with a plug. A satisfactory plug can be made with a 2-inch board slightly larger in diameter than the tremie pipe; on top of this board fasten a ¾-inch round piece cut to the neat size of the inside of the pipe. Place a piece of cloth or burlap over the end of the pipe and drive the plug in place. Lower the tremie until the plug rests on the bottom, then fill the tremie pipe with concrete. When the tremie is raised the weight of the concrete will push out the plug. The plug can be salvaged by fastening a piece of wire to it before it is lowered into the water.

Further details for handling a tremie are found in *Standard Specifications* Section 6-02.3(6)B.

The thickness of seals without piling are generally not less than 0.43 times the height of high water above the bottom of seal. Seals in footing with piling require special design. The thickness of the seal is computed for the water elevation shown in the plans. The cofferdams must be designed and vented for this elevation. The design and vent elevations are noted in the plans. If concrete is placed in the seal during a period of high water, the dewatering of the cofferdam will have to be delayed until the water level drops to the vented elevation. No change in the vent elevation shown in the plans shall be allowed without approval from the State Construction Office. Such approval should be obtained before the cofferdam is designed. All cofferdams must be vented at the elevation used for computing the seal thickness in order to prevent an unsafe hydrostatic pressure on the seal. Cofferdams shall not be dewatered before the concrete has been placed and cured.

The vertical sheathing of the cofferdam or shoring shall extend below the bottom of the excavation in accordance with the working drawings. Sheet piles in cofferdams shall be placed tightly together so that there will be no flow of water through the cofferdams while seal concrete is being placed.

The tops of seals should slope slightly toward one end. At that end, provision shall be made for a sump for the pump intake. Cofferdams should be tightly constructed so that a minimum of pumping is required after the cofferdam has been dewatered. Space for water courses shall be provided on top of the seal and around the footing block, between the footing block and the walls of the cofferdam.

Before starting to place seal concrete, all equipment should be checked to see that it is in good working order. It is necessary that concrete in a seal be placed continuously until completion, with the end of the tremie always extending into the fresh concrete.

It is not desirable to leave cofferdam struts and waling in the seal concrete but it is sometimes necessary to do so, especially in soft foundation material, when a set of struts and waling is required near the bottom of the cofferdam. The concrete displaced by such struts and waling is not deducted from the Contractor's pay items.

After the cofferdam is dewatered, a film of scum or laitance will usually be found on top of the seal. This must be cleaned off before the footing concrete is placed. If the seal is designed as a footing, the laitance will have to be removed only from the areas that will support pier shafts, columns, or walls.

SS 6-02.3(9) Vibration of Concrete

Vibrators are usually specified to be used when placing concrete. Their use is important for the purpose of consolidating the concrete in the forms, thus producing a dense uniform concrete.

Adequate vibration is necessary for placing concrete in difficult places, such as under and around closely spaced reinforcement. When steel forms are used for curbs, traffic barriers, or rail bases, external vibration may be required to eliminate voids at the surface caused by entrapped air. It is desirable to have the Contractor designate one person to operate the vibrator. This person could then be instructed in its use and an effort could be made to have that person kept on the same work whenever it is required.

The quantity of mixing water to be used shall be the minimum amount possible to produce the required workability. Vibrators shall be used only in freshly placed concrete. As soon as the concrete is dumped it should be spread out and vibrated by inserting the vibrator torpedo directly into the fresh concrete. However, it should be kept in one place only long enough to make the concrete uniformly plastic. Dependence should not be placed on the vibrator to work the concrete into corners and along the faces of the forms. Metal or wooden spades should be used to whatever extent is necessary in places where the vibrator cannot be satisfactorily employed, however, spades should be used only to accomplish complete filling of the forms and not for the purpose of puddling the concrete.

In regard to the desired consistency of concrete and the use of vibrators, the *Standard Specifications* should be carefully studied and followed. Every effort should be made to see that the specifications are followed.

Concrete shall be placed in accordance with the requirements of *Standard Specifications* Section 6-02.3(6). The Inspector should be alert to see that any method of placing concrete that causes segregation of the concrete mix be discontinued. Some of the conveyor belt systems tend to cause segregation of the mix after several exchanges from one belt to another. The Inspector shall see that the length of conveyor belt is limited so segregation does not occur. Aluminum pipe or sheeting shall not be used in contact with fresh concrete.

In heavily reinforced sections, the maximum concrete slump may be increased 2 in with the use of a high range water reducer, as discussed in *Standard Specifications* Section 6-02.3(4)C. It is anticipated that possible candidates for this increase of concrete slump may be columns, cross-beams, and post-tensioned box girder web walls and other heavily reinforced members.

SS 6-02.3(10) Bridge Decks and Bridge Approach Slabs

Bridge deck construction is critical because this part of the structure receives the most abuse from traffic and the environment. Construction of maintenance-free bridge decks requires close attention to details. One or two weeks before placing the concrete in the deck, a placement conference should be held to go over the procedures to be used and to emphasize the critical areas of construction. As a minimum, this should include a discussion of the rate of placement, personnel and equipment and backup equipment to be used, type of finish, and curing details. The rate of placement should normally provide for at least 20 ft of finished deck per hour.

The position of the reinforcing steel is very important because of the thin concrete section. Adequate blocking and ties are necessary to hold the steel in place. If foot traffic on the reinforcing steel causes it to deflect, the spacing of the chair supports is not adequate. A pre-check of the screed setting for proper elevations and clearances to the reinforcing steel is essential prior to any concrete placement. The finishing machine should be run the full length of the placement after the screed is adjusted to check deck thickness and cover of the reinforcing steel, this check should also continue over all bulkheads and expansion joints to verify their clearances. The finishing machine should not be adjusted while it is finishing concrete to clear bulkheads and expansion joints. These adjustments must be made prior to the concrete placement. During the placement, frequent checks should be made of the actual cover obtained directly behind the finishing machine and recorded in the Inspector's Daily Report.

Quality concrete is required, particularly in the bridge deck. Uniform consistency of the concrete should be maintained throughout the placement. The water-cement ratio is very important. It should be the minimum possible to produce the required workability and not exceed the specification limit. To keep the water-cement ratio as low as possible, the specifications require the use of a water reducing additive for all bridge deck concrete. Frequent checks of the free water contained in the aggregates is necessary to determine the amount of water actually contained in the concrete mix.

SS 6-02.3(10)A Preconstruction Meeting

Construction of crack-free and maintenance-free bridge decks requires close attention to details during concrete placement and curing. One or two weeks before placing the concrete in the deck, a pre-deck pour meeting should be held to go over the procedures to be used and to emphasize the critical areas of construction. Points of discussion should include concrete delivery and sampling, placement rates, personnel and equipment to be used, finishing, and curing details. The rate of placement should normally provide for at least 20 ft of finished deck per hour. Attendance at the pre-deck pour meeting should include:

1. Representing the Contractor, the superintendent, foremen in charge of placing and finishing concrete, a representative from the concrete supplier and the pump truck operator.
2. Representing WSDOT, the Project Engineer, Chief Inspector and key inspection and testing personnel. A representative from the State Construction Office should be invited.

A sample pre-deck pour meeting agenda for use by the Project Office can be found on the Construction Manual Resources website.

SS 6-02.3(10)D Concrete Placement, Finishing and Texturing

Finishing of roadway slab and bridge approach slab surfaces shall be as outlined in *Standard Specifications* Section 6-02.3(10). The principal objectives to be attained are a good wearing surface and a smooth riding roadway. The Engineer should ensure that adequate preparation has been made to do a good job in accordance with the specifications. The Engineer should insist that a float be available. When a good strike-off and finish has been obtained by a finishing machine, floating may be, and should be, kept to a minimum because excess floating can be detrimental. A light aluminum float carefully and sparingly used will not harm a well finished deck, but will expose poor adjustment and misuse of a good machine. It will also smooth out mortar ridges left by the finishing machine and seal the surface. **The Contractor is required to check the deck with a 10-ft straightedge immediately after it is floated.**

Low and high spots can possibly be corrected by operating the finishing machine over the area (if the concrete is still plastic).

The Engineer should be cautioned that hard floating of the concrete surface with aluminum floats may cause a chemical reaction between the aluminum and the fresh concrete which could decrease the strength of the concrete at the surface of the concrete. Excessive wear or pitting of the aluminum float could be an indication that chemical reaction is taking place between the float and the concrete.

It is important that the texturing comb be used when the concrete is at the proper consistency. If the concrete is too soft, it will not retain the proper texture obtained by the comb and, if the concrete is too hard, the proper texture will not be achieved. The comb should be set up and ready to use well in advance of the time it will be required. Surface texturing is normally done with a comb except when an overlay is required.

The finished and cured deck slabs must be checked with a 10-ft straightedge and corrected by cutting down the high spots and building up low spots until the entire surface comes within the specified tolerance.

Sidewalks shall be finished smooth with a wood float and then brushed with a fine bristle brush. Use an edger tool at all joints and edges. Block lines on sidewalk surfaces are not desired on structures.

SS 6-02.3(11) Curing Concrete

Proper curing of concrete is important to securing strong, good wearing concrete and in reducing cracking. Curing periods and methods specified should be strictly observed.

The last step in ensuring a good concrete job is to provide proper curing. Concrete begins to cure from the time cement and water are added in the mixing chamber and continues for many years after. Concrete is very susceptible to damage during initial curing, if proper steps are not taken. Three of the most important factors are:

1. Surface drying (evaporation).
2. Rapid temperature changes between segments of the concrete as it is curing.
3. Stresses or loads applied before the concrete has reached adequate strength.

All of the specifications regarding curing, form removal, hot and cold weather concreting, etc., are designed to provide protection for the concrete during this critical stage. For example: If the surface begins to dry, the surface will begin to shrink and

cracking can occur. To prevent this, the Inspector should be aware that fog misting, curing compounds, wet blankets, plastic sheeting, etc., are designed to be applied before surface drying begins to prevent loss of surface moisture. Some concrete mixes such as microsilica and latex are very susceptible to surface drying and require closer attention due to the effects of thin lift application.

Note: Curing compounds are not chemicals that cure concrete. They prevent water loss by forming a waterproof membrane.

Like most materials, concrete expands when heated and contracts when cooled. Therefore, the concrete should not be subjected to extreme temperature changes as hardening takes place.

Hardening of concrete is also slowed down by cooler weather. Concrete must not be exposed to freezing conditions to avoid permanent damage.

Concrete (as it hardens) contains a high percentage of moisture and could crack if the water in the mix freezes and expands. Air entrainment will not protect the concrete from damage during the initial curing period.

Summary

1. Prevent surface moisture loss.
2. Maintain constant temperature (no freezing).
3. Prevent stress loads.

SS 6-02.3(12) Construction Joints

The specifications require that construction joints shall be located and constructed as shown in the plans. Approval to add, move, or delete construction joints must be obtained from the State Construction Office. *Standard Specifications* Section 6-02.3(12) requires that shear keys shall be provided at all construction joints unless a roughened surface is shown in the plans, and where the size of keys is not shown in the plans, they shall be approximately onethird of the area of the joint and approximately 1½ in deep.

Construction joints are to be either vertical or horizontal. Wire mesh, wire lath, and other similar items can be used for a roughened surface construction joint but shall be removed and the joint cleaned before making the adjacent pour. Construction joints in roadway slabs and approach slabs must be formed vertical and in true alignment. An edger shall not be used on the joint but lips and edgings must be removed before making the adjacent pour. If the joint is properly formed, a good straight edge will be obtained with a minimum amount of lips and edgings to be removed.

Shear keys in construction joints shall be formed with 1½-in thick lumber and shall be constructed the full size shown in the plans. For box girder webs, these shear keys are normally shown in the plans to be full width between stirrups. The specifications require shear key forms to be left in place at least 12 hours after the concrete has been placed. The plans will indicate certain joints to have a roughened surface. These joints shall be finished and prepared for the next pour in accordance with the instructions given in the specifications or as shown in the plans.

Expansion dams or the expansion dam blockout shall be carefully placed before concreting the roadway decks. They shall also be carefully aligned for crown and grade.

Blockouts for expansion joint seals must be carefully formed to the dimensions shown in the plans for proper placement and operation. Be sure to check that the rebar in the blockout does not conflict with the expansion joint anchors. The joint seal must be placed using a lubricant adhesive.

SS 6-02.3(14) Finishing Concrete Surfaces

As soon as possible after the forms are stripped, the concrete surfaces shall be examined and all lips or edgings where form boards have met, shall be removed with a stone or sharp tool. Bolt holes and rock pockets shall be filled with cement mortar and floated to a smooth finish. The mortar patch shall be the same color as the adjoining concrete surfaces. Finishing of concrete surfaces shall be done in accordance with the provisions of the *Standard Specifications* and special provisions.

The amount of work necessary to complete the finishing satisfactorily, depends entirely on the quality of the original concrete work. If the forms have been poorly constructed and the concrete surfaces are rough and uneven, it will be necessary for the Contractor to do sufficient rubbing and finishing after the forms are removed to secure a satisfactory job. Grinding leaves a surface that is off color and should be kept to a minimum.

The primary purposes of finishing formed surfaces are:

- To seal the surface from water and other elements that can rust or corrode metal ties and reinforcement within the concrete.
- To provide a uniform, pleasing appearance for surfaces that will remain visible to the public.

There are two different classes of finish. They are:

Class 1

- All rail bases, curbs, traffic barriers, pedestrian barriers, and ornamental concrete members.
- As designated in the Plans and in accordance with *Standard Specifications* Section 6-02.3(14).

Class 2

- Required for all other surfaces.

See the *Standard Specifications* for additional requirements.

SS 6-02.3(17) Forms and Falsework

Falsework construction is a critical part of the bridge construction process. Generally, the factor of safety used for design of falsework is less than that of permanent construction. Therefore, it is extremely important that the falsework is constructed in accordance with the falsework drawings. Any changes to the falsework drawings must be reviewed by the Bridge and Structures Office.

The forms for the structure shall be constructed in accordance with the falsework and form plans and the requirements of *Standard Specifications* Section 6-02.3(17). In general, the forms used for all concrete surfaces which will be exposed, shall be faced with plywood. All plywood used shall be exterior type except where CDX is allowed by the specifications. All forms have to be strong enough to hold the plastic concrete in place until it has hardened. Forms should be designed to permit easy removal without damage to the concrete. Forms are a critical part of the concrete bridge construction process. Generally, the factor of safety used for design of forms is less than that of permanent construction. Therefore, it is extremely important that the forms are constructed in accordance with the form drawings. Any changes to the form drawings shall be reviewed by the State Bridge and Structures Office.

The Contractor is responsible for designing and constructing the forms and falsework for fixed-form concrete. The Contractor must submit detailed plans (refer to Section 6-1.5):

- For departmental review;
- Except for footings and retaining walls less than 8 ft in height. See *Standard Specifications* Section 6-02.3(16).

Prior to placing concrete, the Inspector should verify that all forms:

- Provide forming faces that are:
  - Smooth and firm.
  - Clean of dirt, laitance, oil, or any other material that would contaminate or discolor the concrete.
  - Treated with an approved form-release agent.
- Are mortar tight to avoid any leakage (including tape or caulking if needed for surfaces that will require Class 2 finish).
- Are constructed in accordance with the forming plans.
- Are adequately rigid and well supported to hold and retain the concrete without distortion or displacement.
- Are set at the locations, dimensions, lines, and grades as specified in the plans.

If wood forms are used, see that plywood is used for the form faces with:

- The joints and grain generally in line with the line of the structure.
- The face grain of the plywood running perpendicular to the supports.
- No offsets or projections that would leave an impression in the concrete surface.

Also verify that:

- Uniform chamfer strips are set at the correct line and grade as required for filleted edges.
- Adequate tie rods, snap-ties, hairpins, studs, walers, and braces are securely placed as needed support.

If metal or fiberglass forms are used, the same basic requirements apply, but particularly check for:

- Any dents or other defects that would harm the uniformity of the concrete surface.
- Any rust or other foreign material that would discolor the concrete surface.
- Countersunk bolts and rivet heads.
- Adequate support clamps, rods, and pins.

Prior to placing any reinforcing or concrete loads on the falsework, verify that:

- The bottom of the falsework is set on a solid foundation, with mudsills, minimum pile diameter, etc., all constructed per plans.
- The upper portion provides firm, uniform support.
- Devices such as screw-jacks and wedges are used to hold the forms at the correct elevation, and that they are free from defects, and undamaged or not bent.
- When wedges are used, they are placed in pairs to provide uniform bearing.
- The falsework construction is in accordance with the falsework plans and the *Standard Specifications*.

Major failures with loss of life have occurred as a result of poor falsework and formwork construction. It is critical that the Inspector check these temporary structural elements very carefully. Any deficiencies must be corrected before construction loads are applied. If there is a question, the State Bridge and Structures, Construction Support Engineer, or the State Construction Office should be contacted.

Suggested acceptance tolerances are as follows:

1. Bridges and similar structures:
   a. Variation from the plumb or the specified batter in the lines and surfaces of columns, piers, walls, and abutments.

Exposed, in 10 ft	½ in
Backfilled, in 10 ft	1 in

   b. Variation from the level or from the grades indicated on the drawings in slabs, beams, horizontal grooves, and railing offsets.

Exposed, in 10 ft	½ in
Backfilled, in 10 ft	1 in

   c. Variation in cross-sectional dimensions of columns, piers, slabs, walls, beams, and similar parts.

Minus	¼ in
Plus	½ in

d. Variation in thickness of bridge slabs.

Minus	⅛ in
Plus	¼ in

e. Footings: Variation in dimensions in plan.

Minus	½ in
Plus	2 in

f. Misplacement or eccentricity 2 percent of the footing width in the direction of misplacement but not more than 2 in.

g. Reduction in thickness.

Minus	5 percent of specified thickness

h. Variation in the sizes and locations of slab and wall openings ½ in

Forms for concrete surfaces which will be exposed shall be treated with a parting compound consisting of a chemical release agent. Form oil or other oils shall not be used. The parting compound shall be applied before the reinforcing steel is placed. The forms shall be thoroughly wetted on both sides in advance of placing the concrete.

The basic requirements for the removal of any forms and falsework are that:

- The curing temperature was above 50°F during the cure period and that strength is adequate.
- No forms or falsework may be removed until authorized by the Engineer.
- All forms and falsework must be removed unless there is no access for removal (i.e., inside a box girder bridge).
- All forms and falsework must be removed in a manner that will not damage the structure.

Timing is a key consideration in the removal of forms and falsework. In terms of curing, the concrete, forms, and falsework must remain until the concrete has sufficient strength to support itself. For finishing purposes, it is generally better to remove the forms as early as possible to finish the surface while it is still green. Therefore, the timing of falsework and form removal depends largely on the type of structure as well as how it is cured and finished.

For example:

- Side forms – not load bearing – at least 24 hours for:
  - Footings, if curing compound applied to complete cure.
  - Steel or dense plywood if: (1) water reducer in mix, (2) low-slump mix, (3) 1,400 psi compressive strength, and (4) wet cure for balance of three days.
  - Otherwise three days minimum.
- Release of falsework – supporting weight of concrete (see *Standard Specifications*).

SS 6-02.3(24) Reinforcement

For most concrete structures, some type of reinforcement is required to resist high tension stresses. Reinforcing materials include:

- Uncoated deformed steel bars, which are most commonly used.
- Other types, such as welded wire mesh, epoxy-coated bars, wire, prestressing cable.

  Note: Epoxy-coated bars require special handling to prevent damage to the coating.
- Wire ties and other devices to securely hold the reinforcement in place.

The Contractor is responsible for determining and ordering quantities from the plans.

As reinforcing steel is delivered and stored at the project site, the Inspector should verify that:

- All positioning, spacing, sizes, lengths, shapes, and splice locations conform with the plans.
- Any field bending is done as specified and any cracked or split bars are rejected. If in doubt, reject the bar in question.

The Inspector should verify that the reinforcing placed is:

- Tied at all intersections if bar spacing is 1 ft or more.
- Tied at alternate intersections if spacing is less than 1 ft.
- Supported in accordance with the *Standard Specifications*.
- **Tack welding is not allowed. It can severely damage the reinforcing steel.**
- Check that clearances between the forms and the reinforcement are within ¼ in of those specified in the plans.
- Check that splices are located and constructed only as shown in the plans using either:
  - Lap splicing:
    - Not permitted for No. 14 or No. 18 bars.
  - Welded splices:
    - Special inspection is required (steel fabrication inspector).
    - Advance review of welding procedures.
    - By certified welders (test welds).
  - Mechanical splicing (if allowed in the plans):
    - This type of splice must be approved by the State Materials Lab before use.
    - Check that reinforcement is securely supported and held in place as follows:
  - By preapproved metal or plastic chairs, hangers, support wires, or mortar blocks that are at least as strong as the structure (mortar blocks require manufacturer certification).
  - With such supports having the correct dimensions to provide the required clearances.
- Check that all damaged epoxy-coated rebar is repaired in accordance with the *Standard Specifications*.

See the Bar Identification Guide (Figure 6-2) for proper identification of rebar at the job site.

The ASTM specifications for billet-steel, rail-steel, axle-steel, and low-alloy steel reinforcing bars (A 615M, a 616M, a 617M, and a 706M respectively) require identification marks to be rolled into the surface of one side of the bar to denote the producer's mill designation, bar size, type of steel and minimum yield designation (see Figure 6-2). Grade 60 bars show these marks in the following order:

1st – Producing Mill (usually a letter)

2nd – Bar Size Number (#3 through #18)

3rd – Type Steel:

- S for Billet meeting Supplemental Requirements S1 (A 615M)
- N for New Billet (A 615M)
- R for Rail meeting ASTM a 617M, Grade 60 bend test requirement (A 616M) (per ACI 318-83)
- I for Rail (A 616M)
- A for Axle (A 617M)
- W for Low-Alloy (A 706M)

4th – Minimum Yield Designation

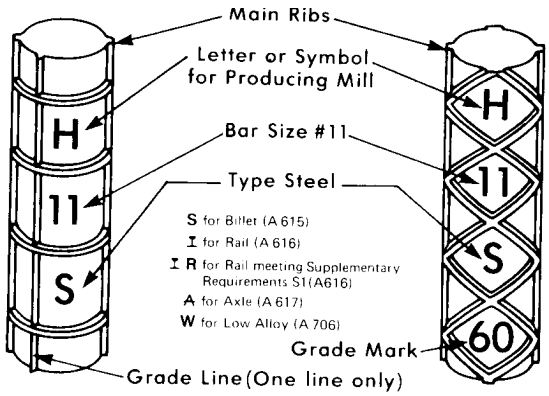

GRADE 60 (400)

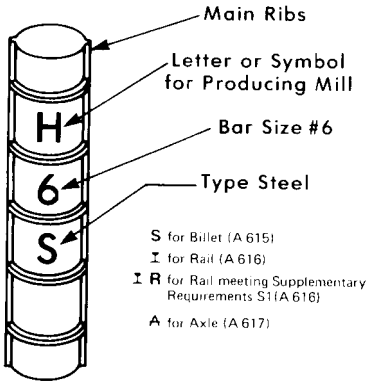

GRADE 40 (300) AND 50 (350)

Figure 6-2

Minimum yield designation is used for Grade 60 bars only and can either be one (1) single longitudinal line (grade line) or the number 60 (grade mark).

A grade line is smaller and between the two main ribs which are on opposite sides of all U.S. made bars. A grade line must be continued at least 5 deformation spaces. A grade mark is the 4th mark on a bar.

Grade 40 and 50 bars are required to have only the first three identification marks (no minimum yield designation).

Bar identification marks may be oriented as illustrated or rotated 90 degrees. Grade mark numbers may be placed within separate consecutive deformation spaces. Grade line may be placed on the side opposite the bar marks.

Reinforcing steel shall be placed in position as shown on the plans and held securely during the placement of the concrete. The strength of a reinforced concrete structure depends not only upon the amount of steel placed but also on its proper location. Improper location of the steel can impair the strength of the structure.

In instances where reinforcing steel is shown in detail in specific relationship to other material and details such as inserts, openings, etc., the Inspector should make sure that this relationship exists when inspecting the placement of the reinforcing steel. If the shown relationship is impossible to maintain or results in a conflict with other details, the State Construction Office shall be consulted to obtain clarification of the details.

The reinforcing steel shall be securely blocked from the forms by means of small mortar blocks, with a groove or tie wire embedded, not more than 2 in square, or by other approved devices. If metal chair supports are used as supports for steel reinforcing bars, all surfaces of the chair supports not covered by at least ½ in of concrete shall be treated in accordance with the requirements of *Standard Specifications* Section 6-02.3(24)C.

Runways for wheelbarrows or concrete buggies used in placing concrete shall not be supported on the steel reinforcing bars.

Steel delivered to the job far in advance of its use should be stored under cover to prevent rust. Mill scale is sometimes present on the reinforcing steel to such an extent that it must be removed. This is especially true with the larger bars. Removal can usually be accomplished by the use of wire brushes or by tapping the bars with hammers. Hardened concrete mortar must be removed from the reinforcing steel before placing the concrete. All reinforcing steel shall be in its proper place before concrete is placed. Driving of dowels, rail bars, etc., into concrete (wet setting) shall not be permitted. See the *Standard Specifications* for further details.

Before concrete is placed, the reinforcing steel shall be inspected to see that it conforms to the plans and that the steel is properly fastened in position. The amount of cover of concrete over the reinforcing steel in bridge roadway slabs and bridge approach slabs is critical. The Inspector must verify compliance with plan dimensions in the slabs by an adequate number of measurements of the steel reinforcing bar locations in the forms before and immediately after placing concrete. These measurements can be taken at the same time checks on the depth of the concrete in the slabs are taken. These measurements shall be recorded as to depth and location and made a part of the project construction documents.

When steel reinforcing bars protruding from columns or walls are exposed to weather for several months, they rust and exposed surfaces below become stained with rust. To prevent this, the bars should be protected to prevent rust. Coatings used for this purpose may prevent adequate bonding of concrete to the steel bars and should be removed from the bars before concrete is placed, except as allowed by the *Standard Specifications*.

SS 6-02.3(24)E Welding Reinforcing Steel

Reinforcing bars shall not be welded unless welding is indicated in the plans or special provisions. If welding is specified, the WSDOT welding inspector must be contacted for purposes of certifying welders and procedures. Reinforcing bars which are to be welded must be furnished of steel which is suitable for welding as specified.

Only operators qualified as specified in *Standard Specifications* Section 6-02.3(24)E shall be allowed to weld reinforcing steel.

AWS specifications require that Low Hydrogen type electrode (welding rod) be used for welding reinforcing steel. Generally, grade E7018 electrodes shall be used for grade 40 reinforcing bars and grade E8018 electrodes shall be used for grade 60 reinforcing bars. If semiautomatic welders are used equivalent grade electrodes shall be used. It is important that moisture be eliminated from the electrode and the steel reinforcing bars. The electrode must be prepared as called for in *Standard Specifications* Section 6-03.3(25). To do this, a drying oven is essential and must be available and used at the site where welding is done.

The recommended procedure for welding steel reinforcing bars is given in *Standard Specifications* Section 6-02.3(24)E. The Contractor shall submit a welding procedure to the Engineer for review. The Project Engineer shall transmit the Contractor's welding procedure to the State Bridge and Structures, Construction Support Engineer for review.

SS 6-02.3(25) Prestressed Concrete Girders

Shop inspection of the manufacturing process of prestressed concrete products will be done by an inspector working under the direction of the State Materials Engineer. The State Materials Laboratory has instituted a procedure of inspecting each prestressed concrete plant in the State on an annual basis. During this inspection, the State Materials Laboratory obtains a list of the sources of the component parts to be used in manufacture of the prestressed concrete members. When the Contractor submits a request for approval of source of prestressed products, the complete member and the prestress plant which will manufacture it need only be listed.

The Inspector prepares a weekly Fabrication Progress Report and Inspectors Daily Report, and submits them to the Project Engineer for information and records. When the prestressed unit is completed, including finishing, the Inspector will attach an Approved for Shipment tag, and/or the girder will be stamped with an "approved for shipment" and a lab I.D. number. The Approved for Shipment tag properly signed and dated or the "approved for shipment" and a lab I.D. number will be the Project Engineer's basis for accepting the product at the job site. The Project Engineer will be required to inspect the item only for any damage which may occur during shipment or after the item arrives at the job site.

Finishing of concrete surfaces of prestressed units shall be in accordance with *Standard Specifications* Sections 6-02.3(14) and 6-02.3(25)H unless specifically changed by the special provisions. The Shop Inspector shall require that the finishing done in the shop is in accordance with the specifications.

Prestressed concrete girders shall be maintained in a plumb, upright position at all times and shall be lifted by means of the lifting strands provided at the ends of the girders. All prestressed girders have been designed for a vertical pickup at the ends as indicated in the contract plans, and any other method will induce stresses which could cause failure of the girder during pickup. Some deviation from the vertical is safe for some girders. If the Contractor wishes to deviate from the vertical pickup, they shall have the proposed method analyzed by their engineers and shall submit the method, with supporting calculations, for review. The Project Engineer submits the calculations to the State Construction Office for review. If the girders are broken or damaged during handling or erection, they will have to be replaced at the Contractor's expense.

The girders shall not be placed on the finished piers or abutments until the concrete in the piers or abutments has obtained at least 80 percent of its design strength. If grout pads are required, they shall be constructed and cured as required by the plans and specifications before placing the girders.The girders must meet the dimensional tolerances listed in *Standard Specifications* Section 6-02.3(25)I.

SS 6-02.3(25)A Shop Drawings

The Contractor is required to submit shop detail plans to the Project Engineer for review. The Project Engineer shall check these plans for compliance with the contract plans and specifications.

Manufacture of these members shall not begin until the Contractor has received comments on the method, materials, and equipment they propose to use in the prestressing operations. Deviations from the shop drawings shall not be permitted.

Welding of the reinforcing bars will not be permitted unless shown in the contract plans.

The State Materials Lab has published a manual entitled "Inspectors Guide for Prestressed Plant Inspection and Quality Control" which contains more detailed instructions for this work.

SS 6.02.3(25)K Girder Deflection

Precast prestressed girders start creeping up immediately after prestressing strands are released in the casting bed. Over time, creeping or girder deflection upward continues. Bridge plans estimate the expected creep at 120 days, from prestress release to deck placement, and designate the letter "D" for this deflection. Theoretical girder camber at mid span vs. Actual girder camber measured in field, after girder erection, should be compared for compliance with *Standard Specifications* Section 6-02.3(25)K.

The camber diagram is a parabolic curve. In order to have a smooth vertical profile the pad dimension on top of girder flange varies through the length of span (see Figure 6-3). This dimension is usually least (depending on the vertical profile curve) at center span and maximum at center line of bearings which bridge plans refer to as "A" dimension. The designation "C" is the amount of camber added to the deck

grade elevations to account for the anticipated downward girder deflection due to all superimposed loads (slab, overlay, sidewalks, utilities and traffic barriers).

Finished roadway grade elevations should be calculated along the center line of the prestressed girders at a minimum of every 10 ft for each span. Camber values at these locations need to be added to the finished roadway grade elevations to compensate for the girder deflection due to superimposed loads. Equation 6-1 calculates the camber at any point along the span.

$Y = C - 4C\,(M - 0.5)^2$ (Equation 6-1)

Where

Y	=	camber at any point along the span length in inches
C	=	deflection due to superimposed dead load at span mid point in inches
M	=	location of span in decimal percent

The following example shows how tenth point span camber can be calculated.

Example:

Calculate camber at 0.20 point span for a prestress girder when girder length (ctr. - ctr. bearing) is 174.2 ft and "C" dimension at mid span given as 3 in (see Figure 6-4).

$Y = 3 - 4(3)\,(0.20 - 0.5)^2$
$Y = 1.92$ in

Once the girders are set in place and before any load is added to the girders, elevations are taken at the tenth point locations (or minimum spacing of 10 ft as determined by the span length) to be used to determine an adjusted "A" dimension. The adjusted "A" dimension is determined by subtracting the as built elevations from the calculated finished roadway grade elevations plus camber to determine the new adjusted "A" dimension at each location. The adjusted "A" dimension is used to string line between two adjacent points to determine soffit location.

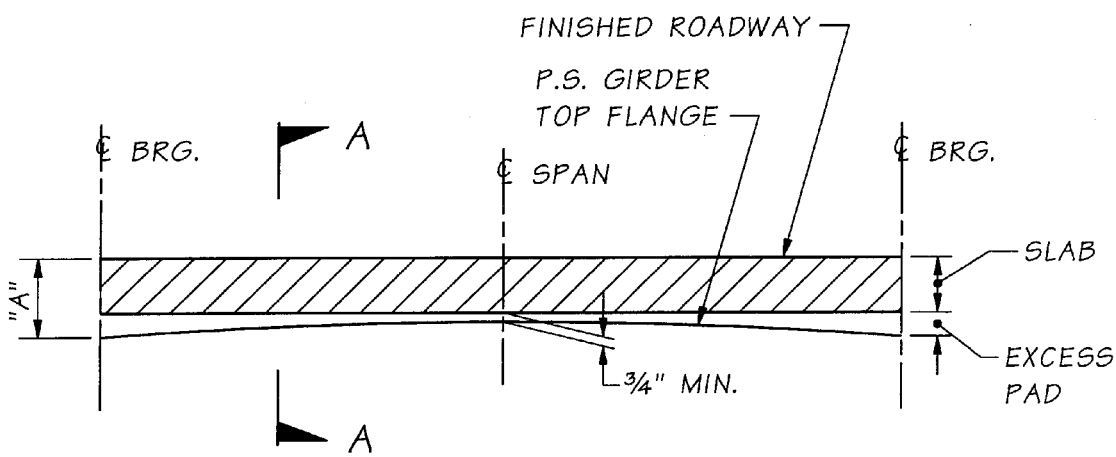

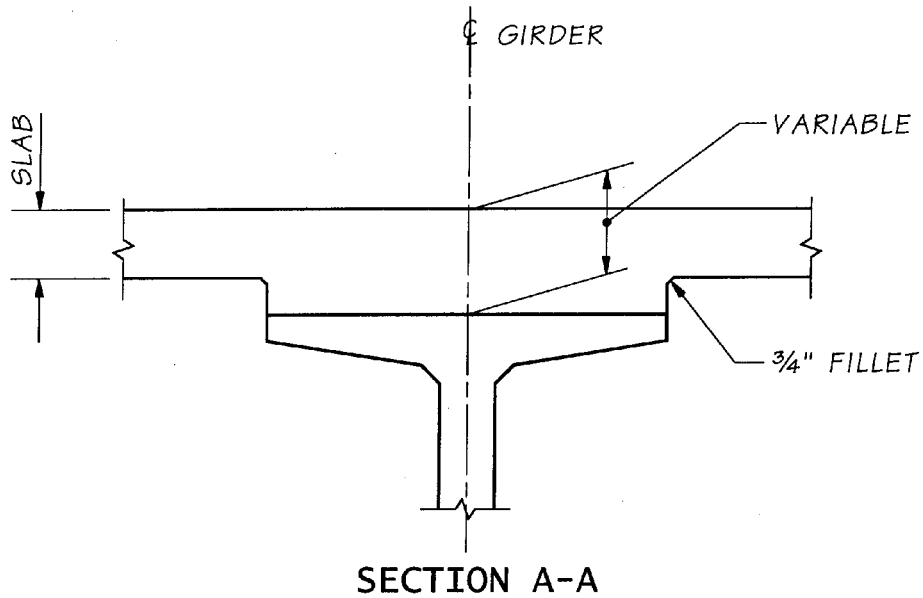

Figure 6-3

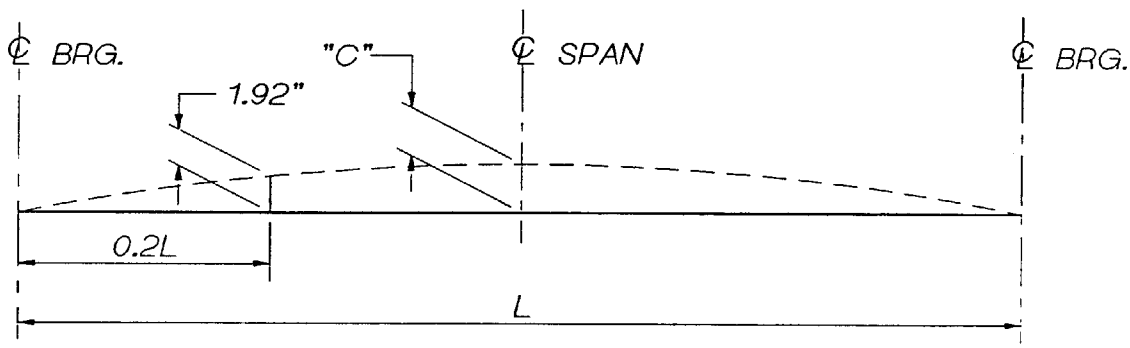

Figure 6-4

SS 6-02.3(26) Cast-In-Place Prestressed Concrete

The construction of cast-in-place post-tensioned bridges requires considerable attention to details of construction by the Contractor and Inspectors. **The State Construction Office is available to present job-specific training on post-tensioned bridges.** They should be contacted after the post-tensioning shop drawings have been reviewed and before post-tensioning ducts and anchors are to be placed.

In addition to the falsework and form plans for the structure being reviewed by the Bridge and Structures Engineer, post-tension detail plans shall be submitted for review as shown in the Shop Plans and Working Drawings Table in Section 1-2.4H. Included in these details will be the anchoring details, jacking forces, lift off forces, tendon profile, elongation of the tendons, and the tendon stressing sequence. In many structures, the dead load of the structure is increased at the jacking ends during the jacking operation. In these cases, the falsework at the jacking ends must be designed to carry the additional dead load.

The installation of the post-tension system begins with the placing of assemblies consisting of bearing plate, transition cone or trumpet and grout inlet. Duct sections consisting of rigid conduit are assembled with couplers and are tied to the stirrups. Anchorages and bearing plates are securely fastened to the forms to prevent movement and loss of mortar during concreting. Connections between trumpets and ducts, ducts and couplers, and ducts and vent saddles are taped with a durable and waterproof tape to prevent intrusion of mortar.

It is necessary that the ducts be located in the position shown in the post-tension details in order for the structure to function as designed. A misaligned duct will cause increased friction and localized stress which can result in failure of the member during the stressing operation. The Inspector must check to see that the ducts are properly located and securely fastened in place to prevent movement during concreting.

On continuous structures, vents must be placed at the high and low points of the tendon and grout inlets at the ends of the tendon.

At the completion of the duct installation and prior to placement of concrete in the top slab, a device of slightly smaller diameter than the inside diameter of the duct shall be blown through the ducts to ensure no undetected damage or blockage has occurred (see *Standard Specifications* Section 6-02.3(26)E.

The prestressing reinforcement strand is delivered to the site in sealed reel-less packs or reels containing desiccant to prevent corrosion. It is necessary that the prestressing reinforcement is free of rust and kept clean while it is assembled, stressed, and grouted. Normally, the grouting shall take place within 10 days of the time the strand is removed from the packs to prevent the accumulation of rust. The Inspector should check the reels of strand intended for use and reject those which show damage to the strand or visible rust. See *Standard Specifications* Section 6-02.3(26)F for further requirements.

Some projects may be designed for the use of high strength steel rods instead of the strand. These rods come in various sizes to give the required steel area for the tendon in one bar instead of bundling several strands in the tendon.

Jacking operations shall not be started until the concrete in the structure has cured for the specified time or reached the specified strength. Jacking shall be carried out in the sequence shown on the post tension details to minimize the amount of eccentric loading on the structure. **During the jacking operations, no person should be directly behind either end of the tendon.** Occasionally a tendon will let go, resulting in a very dangerous situation.

Each jack used to stress tendons shall be equipped with either a pressure gauge or a load cell along with certified calibration charts for determining the jacking force.

Gauging devices should be re-calibrated at intervals of not more than 180 days; however, if during the progress of the work, any gauging system appears to be giving erratic results, or if gauge readings and elongation measurements indicate materially different stresses, the jack and the gauges shall be re-calibrated.

A starting load, usually 20 percent of the jacking load, as shown in the post tensioning schedule, is applied to the tendon. The purpose of this starting load is to take up the slack in the tendon so that an accurate elongation measurement may be made. This load is applied by hydraulic jacks and measured by the jack gauges. During the stressing operation, the tendons shall be jacked to the specified load and the jacking load and elongation shall be recorded. Also the elongation after seating must be measured and recorded (see Figure 6-5).

In the event of discrepancies between measured elongations and calculated elongations (see Stress Acceptance Criteria), the entire operation should be carefully checked and the source of error determined and corrected before proceeding further. A discrepancy between the elongation and the jacking force usually indicates that the gauge on the jack is not correctly calibrated, there is undue friction between the duct and the tendon, or the tendons are not properly anchored.

Stress Acceptance Criteria

Strand Tendon (lengths 50 ft and less):

1. The tendon may be accepted provided: The measured elongation is equal to or exceeds 93 percent of the calculated elongation.
2. A force verification lift-off is performed: The verification lift-off force is between -5 percent and +5 percent of the calculated force.

Strand Tendon (lengths greater than 50 ft and less than 150 ft):

1. If the measured elongation is between -7 percent and +7 percent of the calculated elongation, the tendon can be accepted.
2. If the measured elongation exceeds 107 percent of the calculated elongation, confirm the jack/gauge calibration, and then perform a force verification lift-off:
   a. If a force verification lift-off is performed on one end of the tendon only and the lift-off force is between -1 percent and +5 percent of the calculated force, the tendon can be accepted.
   b. If a force verification lift-off is performed on both ends of the tendon (jacking end and anchor end) and the lift-off forces are between -5 percent and +5 percent of the calculated force, the tendon can be accepted.

Strand Tendon (lengths 150 ft and greater):

1. If the measured elongation is between -7 percent and +7 percent of the calculated elongation, the tendon can be accepted.
2. If the measured elongation exceeds 107 percent of the calculated elongation, confirm the jack/gauge calibration, and then perform a force verification lift-off.
   a. If a force verification lift-off is performed on one end of the tendon only and the lift-off force is not less than 99 percent of the calculated force nor more than 0.7 f’s As, the tendon can be accepted.
   b. If a force verification lift-off is performed on both ends of the tendon (jacking end and anchor end) and the lift-off forces are not less than 95 percent of the calculated force nor more than 0.7 f’s As, the tendon can be accepted.

Singularly Jacked Four-Strand Transverse Deck Tendon:

The tendon may be accepted provided:

1. The measured elongation of an individual strand is between -10 percent and +10 percent of the calculated elongations.
2. The average of all four individual strand percent elongations is between -7 percent and +7 percent of the calculated elongation.

Bar Tendon:

1. The tendon may be accepted provided: The measured elongation is equal to or exceeds 93 percent of the calculated elongation, and
2. Perform a force verification lift-off: The verification lift-off force is between -5 percent and +5 percent of the calculated force.

If acceptance tolerances are exceeded, notify the State Construction Office.

f's = specified minimum ultimate tensile strength of prestressing steel (270 ksi for strands and 150 ksi for bars.)

As = cross-section area of the tendon (0.153 sq in for ½-in diameter strand, 0.217 sq in for 0.6-in diameter strand.)

The grout used is fluid and quite different from the mortar we usually associate with the term grout. The component materials of the grout mix must be accurately measured. **The maximum amount of water specified must not be exceeded.** The grout should be screened after it has been mixed and before it is added to the grout equipment to remove lumps which might cause clogging of the ducts.

Immediately, prior to grouting, the ducts shall be blown out with oil free compressed air. Grout is applied continuously by pumping under moderate pressure at the lower end of the duct toward an open vent at the upper end until all entrapped air is forced out the open vents. The open vents are closed under pressure of issuing grout after a steady solid stream of grout is discharging. The grouting pressure is gradually increased to a minimum of 100 psi and 200 psi maximum and held at this pressure for a minimum of 10 seconds. The grouting entrance is then closed.

After grouting of the tendons, the recesses for the anchorages are cast solid with concrete.

A complete record must be kept of the stressing operations.

An example of the Post-Tensioning Record (DOT Form 450-005) is shown in Figure 6-5. The following explanations will help in completing the record:

A. Required jacking force for the tendon is obtained from the post-tensioning details.

B. Gauge pressure is obtained from the certified calibration chart for the jack to obtain the required jacking force listed in "A" above.

C. Gauge pressure for the initial force to take up the slack in the tendon and is usually 20 percent of the force obtained in "B" above.

D. The designed elongation is obtained from the post-tensioning details, however the stress strain curves prepared by the steel manufacturer shall be used to determine the modulus of elasticity for adjusting the designed elongation based on the average value of all strands to be incorporated in the tendon.

E. This required seating take up is obtained from the post-tensioning details. This is usually ¼ in to ⅜ in.

F. & G.
The elongation must be measured at the initial force of 20 percent of the required jacking force, at the specified jacking force, and again at the 20 percent loading.

H. The difference in the elongation measured at full force and the elongation measured at the initial force of 20 percent (minus any dead end slip). This elongation should be reasonably close (see Stress Acceptance Criteria) to the required elongation in "D" above.

I. Seating take-up is the difference in the elongation measured at full force and the elongation measured after the tendon has been seated and the jacking force reduced to the initial force of 20 percent of full force. However, since the elongations are measured at the end of the jack, the elongation of the tendon from the wedges to the measuring point must be accounted for to obtain the true seating takeup. After finding the difference between the full jacking force elongation and the 20 percent of full jacking force, (I1) the elongation of the tendon inside the jack must be subtracted from the difference to obtain the true seating take-up. (I2) The elongation of the tendon inside the jack is approximately 1/16 in per ft. This seating take-up should be the same as the required take-up in "E" above. It is important that the specified seating take-up be obtained as it has an appreciable effect on the stress in the tendon.

J. Percent elongation per tendon is a comparison of the calculated elongation and the measured elongation. If the elongation obtained at full jacking force is not reasonably close to the required elongation, the following conditions are usually indicated:
   - There is more (or less) friction in the tendon than was anticipated in the calculations of the post-tension details.
   - The gauging devices on the jack are not properly calibrated.
   - The strands of a tendon are not properly anchored.

If tendon stressing is performed at an air temperature below 60°F, the Contractor should not be allowed to use jack pressure gauges that utilize oil or glycerin. This will ensure accurate jack pressure readings. The reason for this is that these gauges tend to react slowly at lower temperatures. What can happen with these gauges is the jack operator will bring jack up to the required gauge pressure and shut the jack off. Since the gauge is slow in reacting, it will continue to rise until it "catches" up, resulting in over stressing the tendon. Once this occurs, the tendon will usually need to be replaced.

J. Percent elongation per tendon is a comparison of the calculated elongation and the measured elongation. If the elongation obtained at full jacking force is not reasonably close to the required elongation, the following conditions are usually indicated:
   - There is more (or less) friction in the tendon than was anticipated in the calculations of the post-tension details.
   - The gauging devices on the jack are not properly calibrated.
   - The strands of a tendon are not properly anchored.

If tendon stressing is performed at an air temperature below 60°F, the Contractor should not be allowed to use jack pressure gauges that utilize oil or glycerin. This will ensure accurate jack pressure readings. The reason for this is that these gauges tend to react slowly at lower temperatures. What can happen with these gauges is the jack operator will bring jack up to the required gauge pressure and shut the jack off. Since the gauge is slow in reacting, it will continue to rise until it "catches" up, resulting in over stressing the tendon. Once this occurs, the tendon will usually need to be replaced.

SS 6-02.4/5 Measurement and Payment

Measurement and payment instructions are covered in *Standard Specifications* Sections 6-02.4 and 6-02.5.

Washington State Department of Transportation

Contract No.	Page No
Section	
Structure	
Project Engineer	Inspector

Post-Tensioning Record

Date	Gir. No.	Tendon No.	Jack No.	Jack Location	Req'd. Jacking Force Per Tendon (Kips)	Strands Per Tendon	Gauge @ 20% Jacking Force (p.s.i.)	Gauge @ Req'd. Jacking Force (p.s.i.)	Gauge @ Actual Jacking Force (p.s.i.)	Actual Elong (in.)	(A) 100% Actual Elong. - 20% Actual Elong. (in.)	(B) Calc. 80% Elong. (in.)	% Elong. Per Tendon	100% Actual Elong. - Seated Elong. (in.) = (c)	(c) - Jack Elong. = Seating Take-up (in.)	Req'd. Seating Take-up (in.)
1-2-96	A	1	6	PIER 1	372	12	1400	7000	1400	4 1/4						
									7000	23 1/2	19 1/4	19 1/8				
									1400	22 7/8				5/8	7/16	3/8
							DEAD	END	SLIP		(-) 1/8					
											19 1/8			5/8 - 3/16		
														3 FOOT JACK X 1/16 IN/FT.		
1-2-96	A	1	6	PIER 3	372	12	1400	7000	1400	Ø						
									7000	1 3/4	1 3/4	2				
									1400	1 1/4				1/2	5/16	3/8
											20 7/8	21 1/8	99			
					A		C	B	F	G	H	D	J	I_1	I_2	E

Distribution: Final Records
State Construction Office

Note: %Elong. = The sum of columns "A" for both ends of the tendon divided by the sum of columns "B" for both ends of the tendon X 100.
% Elong. shall be between 93% minimum and 107% maximum.

DOT Form 450-005 EF
Revised 3/2002

Post-Tensioning Record (DOT Form 450-005)
Figure 6-5

6-03 Steel Structures

SS 6-03.3(7) Shop Plans

The Contractor shall submit shop plans of all steel fabrication for review. Fabrication of the steel shall not be started until the shop plans have been reviewed by the Bridge and Structures Engineer (or Terminal Design Engineer for the Ferries Division projects) and the materials source and fabricator have been given approval by the State Materials Engineer. The State Materials Engineer shall advise the State Bridge and Structures Engineer (or Terminal Design Engineer) when the materials source or fabricator has been approved. The plans will not be returned to either the Contractor or the fabricator by the Project Engineer until the approval of source has been given by the State Materials Engineer. WSDOT reviews the shop plans for sufficiency of the materials and connections and not for the correctness of dimensions. Some details of the design drawings may, with the approval of the State Bridge and Structures Engineer (or Terminal Design Engineer), be changed to suit the erection methods the Contractor desires to use. These revisions may require a change order.

The Contractor shall submit eight sets of all shop detail plans required for fabrication of the steel directly to the State Bridge and Structures Engineer and two sets to the Project Engineer. For the Ferries Division projects, all ten sets shall be submitted to the Terminal Design Engineer. If a railroad is involved, four additional sets are required for each railroad involved. See the shop plans and working drawings table in Section 1-2.4H. The Project Engineer should advise the State Bridge and Structures Engineer of any conditions that would affect the checking and review of the drawings. These comments should be shown with a green color marker on the Project Engineer's copy.

Shop inspection is performed either by inspectors or representatives of the State Materials Laboratory. Material Acceptance Reports are obtained by these inspectors and provided to the Project Engineer upon completion of the shop fabrication. Erection plan sheets generally accompany the shop plans.

Prior to completion of the project, the Contractor is required to furnish shop drawings on mylar or equivalent, which will be sent to the State Bridge and Structures Office for their permanent file. These drawings must be suitable for reproducing by microfilming.

SS 6-03.3(7)A Erection Methods

Falsework and erection plans for structural steel structures shall be submitted for review in the same manner as for concrete structures.

Camber diagrams are normally shown in the contract plans. It is the Fabricator's responsibility to fabricate the members to the prescribed camber shown in the plans. The Fabrication Inspector should verify that the members are fabricated in accordance with the shop drawings.

The use of heavy equipment for erection purposes requires the review of the State Bridge and Structures Engineer. See *Standard Specifications* Section 6-01.6.

Laying out work for structural steel spans requires greater accuracy than for other structures. Use precise instruments, standardized tapes, scales and thermometer when making layout. Spacing of piers, bents, and anchor bolts shall be as shown in the plans, providing the span after fabrication in the shop is the correct length.

The fabrication shop is required to furnish a sketch showing the length of span and amounts of camber measured in the shop at the time the spans are assembled. The Project Engineer should have a copy of this sketch before erection is begun. The lengths as measured in the shop seldom vary more than ¼ in to ⅜ in from the design drawings, and there is sufficient play in the anchor bolt sleeves for this tolerance.

Allowance will be made on the design drawings for stretch of the span due to loss of camber. The Project Engineer shall compute camber elevations from the shop camber measurements taken by the shop. Elevations shall be set above the falsework at each panel point for the camber blocking. Most erectors set the camber blocks high to allow for settlement of the falsework. The amount of allowance for settlement should be decided by the erector. The Project Engineer shall give the exact elevations for the finished camber. Elevations shall be given and carefully checked as an error means that an unnecessary amount of jacking and adjusting may be required.

The adjustment of spans is often a source of argument between erectors and engineers. Accurate work on the part of the Engineer will do much to avoid such arguments. Elevations set on the falsework before the load is applied may not be correct after the load is applied. It is the responsibility of the Contractor to determine the allowance that may be necessary to compensate for settlement in the falsework. It is easier to lower the span than to raise it.

SS 6-03.3(9) Handling, Storing and Shipping of Materials

Structural steel members shall be handled carefully to prevent twisting, bending, or scraping the member. The material shall be supported on suitable skids or platforms to keep it off the ground or out of water and it shall be protected from deterioration by rust.

Structural steel members should not be unloaded and stored on adjoining concrete approach spans. If the Contractor proposes to use the concrete approach spans to support the structural steel members, the proposal must be submitted in writing to the Bridge and Structures Office for review. This proposal shall include drawings describing the support locations, loads, and supporting stress calculations. The structural steel members shall be placed on timber blocking, spaced so that the weight will be carried on the girders (load carrying members) and not on the comparatively thin concrete deck slab. Bridge decks are designed for carrying traffic and not as storage or dock space. This is especially true for concrete sidewalk slabs. Sidewalk concrete slabs shall not be overloaded by loads such as building material, tool sheds, or paint sheds.

SS 6-03.3(10) Straightening Bent Material

Methods for straightening of plates, angles, other shapes, and built-up members shall not produce fracture or other injury to the metal, and shall be reviewed by the State Construction Office. Distorted members shall be straightened by mechanical means or by the carefully planned and supervised application of a limited amount of localized heat. The temperature of the heated area shall not exceed 1,100°F (a dull red) and shall be controlled by temperature indicating crayons, liquids or bimetal thermometers.

Following the straightening of a bend or buckle, the surface of the metal shall be tested for evidence of fracture.

SS 6-03.3(25) Welding and Repair Welding

Welding of structural steel shall be in accordance with the requirements in *Standard Specifications* Section 6-03.3(25). Welding will not be accepted as a substitute for bolting and should be done only where indicated in the plans. Adding even small welds not shown in the plans can induce high stresses in the members. This could seriously impair the strength and structural capability of the structure involved. The structure has been designed assuming that no additional welding will be done. The approval of the Assistant State Construction Engineer, Bridges, is required before doing any welding not shown in the plans.

Good workmanship and proper materials are essential. Welding operators should be qualified for the type of welding they are required to do. Welding procedures shall be reviewed by the Bridge Engineer before starting to weld on the structure.

Welding defects should be corrected as indicated in the *Standard Specifications*.

Low hydrogen type electrodes must be dry when used. The care and use of these electrodes as given in the *Standard Specifications* should be completely observed. No relaxation of these requirements can be tolerated.

SS 6-03.3(30) Painting

Steel structures shall be painted in accordance with the requirements in *Standard Specifications* Section 6-07.

SS 6-03.3(32) Assembling and Bolting

Before erection of the steel is commenced, the structural steel members shall be inspected for damage during shipping and handling. Any members that have been damaged must be repaired or replaced before being erected.

All members should have been match-marked and shall be assembled in accordance with the erection drawings from the Contractor. As the erection progresses, the Inspector should compare assembled members against the erection plans to see that proper members are in correct positions.

If during assembling, it is discovered that various members do not fit together, do not allow undue force to be applied to make them fit. The application of such a force can introduce stresses in several components of the structure. These stresses can be of a magnitude high enough to cause serious structural problems. The structure has not been designed to take these stresses. In such cases, the Assistant State Construction Engineer, Bridges, shall be informed.

Structural steel members that are improperly fabricated, or do not fit, shall be rejected and either repaired or replaced with new. If the Contractor elects to repair the structural member, the proposed repair procedure shall be reviewed by the Assistant State Construction Engineer, Bridges, prior to any repair work.

Unless otherwise shown or specified, structural steel connections shall be bolted. Simple truss spans shall be completely erected with all field-bolted connections and/or splices held in place with the minimum number of drift pins and bolts as specified in *Standard Specifications* Section 6-03.3(32). Once the minimum number of drift pins and bolts are installed in all the connections, final adjustments for span length and camber shall be made prior to completion of bolting and release of falsework. The assembly and bolting sequence for all structural steel structures shall strictly follow the erection plan. Erection and bolting sequences, especially cantilever and arch spans, are usually detailed in the contract documents.

Field connections shall be pinned and bolted in accordance with the requirements of *Standard Specifications* Section 6-03.3(32). This section applies to connections and splices made in the field. Connections are when one structural steel member is bolted directly to another structural steel member; such as, cross-members and braces. Splices utilize structural steel plates to connect two structural steel members; such as, a plate girder. It also requires all connections and splices be securely drift-pinned and bolted before the weight of the member can be released or the next member is added. The field erection drawings must specify pinning and bolting requirements. *Standard Specifications* Section 6-03.3(32) then specifies the required minimum number of pins and bolts for field connections and splices.

Steel railings may be erected in place at the same time the trusses are erected but they shall not be finally aligned or bolted until after the concrete deck is placed. Railings shall be true to line, and for single spans shall show the camber of the span. For two or more spans the railing shall show a uniform camber over all of the spans; that is, the individual camber of each span shall not be carried in the railing.

SS 6-03.3(33) Bolted Connections

All bolted connections are designed by WSDOT to be friction connections. A friction connection transfers the stress by friction between surfaces in contact and does not depend on shear or bearing between members and bolts. The friction is provided when the connection or splice members are compressed through tension on the bolts (measured by turn of- nut or direct-tension-indicator method). To develop design contact surface friction, all bolts in a bolted connection must be properly tightened to the minimum specified tension. The *Standard Specifications* recognize that final design loads are not present during erection of the structural steel members. Therefore, during erection, all the bolts are not needed in order to develop the friction necessary in the connection or splice for erection loads. The *Standard Specifications* recognize this and require a minimum percentage of the holes to be filled during erection; for instance, 50 percent for normal structures and 75 percent for cantilevered structures. These holes are filled with a combination of drift pins and bolts. Drift pins are required to properly align the members since bolts are usually smaller in diameter than the holes. Bolts are required to develop the minimum friction required to transfer erection loading. The minimum friction or load-carrying capacity is not developed until the bolts are tightened to the specified minimum tension.

Once the member is released from its support (support falsework or crane), the *Standard Specifications* specify the procedure required to complete bolting of each connection.

Sometimes fabricators will temporarily bolt-splice plates to the appropriate member. The fabricator will usually use the minimal number of bolts to secure the splice plate during shipping and handling. These temporary bolts shall be removed and replaced with high-strength bolts.

Structural steel field connections are made with high tensile strength bolts conforming to the requirements of *Standard Specifications* Section 9-06.5(3) and the special provisions. A special heat treatment gives these bolts a high tensile strength.

WSDOT designed bolted connections generally operate by a transfer of stresses by friction between surfaces in contact and do not depend on shear or bearing between the members and the bolts. Therefore, it is imperative that the contact surfaces of the metal shall be properly cleaned and the required minimum tension be obtained in the bolts.

The required tension in the bolts may be obtained by using either the Turn-of-Nut method or the Direct Tension Indicator (DTI) Method unless the specifications for the project state otherwise. If required because of bolt-entering and wrench operation, tightening by either procedure may be done by turning the bolt while the nut is prevented from rotating. *Standard Specifications* Section 6-03.3(33) requires a hardened washer under the turned element. Therefore, if the bolt is turned, a hardened washer is required under the bolt head. A hardened washer is also required with the DTI Method.

Bolted parts shall fit solidly together when assembled. Where an outer face of the bolted parts has a slope greater than 1:20, with respect to a plane normal to the bolt axis, a beveled washer shall be used to compensate for the lack of parallelism. See Figure 6-6. Bolts shall be tightened beginning from the center of each connection towards the edges of the connection. All joint surfaces, including those adjacent to the bolt heads, nuts or washers, shall be free of scale, except tight mill scale, and shall also be free of burrs, dirt, and other foreign material that would prevent solid seating of the parts.

	AASHTO M 164	AASHTO M 253
Type 1	A 325	A 490
	8S	10S
Type 2	A 325	A 490
	8S	10S
Type 3*	A 325	A 490
	8S3	10S3

*At the manufacturer's option, Type 3 bolts may have additional distinguishing marks to indicate the bolt is atmospheric corrosion resistant and of weathering type.

Figure 6-6

AASHTO specifications require that bolts bear specific identification marks. The following identification is marked on the top of the bolt heads:

Nuts of all classes, in nominal diameter M5 and larger, shall be marked with the property class designation (5, 9, 10, 12, 8S, 10S, 8S3, 10S3) on the top or bearing surface, on the top of flange, or on one of the wrenching flats. Additionally, nuts of Classes 10, 12, 8S, 8S3, 10S, and 10S3 shall be marked with a symbol to identify the manufacturer. For Classes 8S3 and 10S3 nuts, the manufacturer may add other distinguishing marks to indicate the nut is atmospheric corrosion resistant and of a weathering grade of steel.

Type 3 bolts must be used when the structure is not being painted (WSDOT rarely utilizes unpainted structural steel for new structures). Nuts and washers used with Type 3 bolts must also have weathering characteristics.

Each fastener shall be tightened to provide, when all fasteners in the joint are tight, at least the minimum tension shown in the *Standard Specifications* for the size and grade of fastener used.

Turn-of-Nut Method

When the turn-of-nut method is used to provide the specified bolt tension, all of the required minimum number of bolts within a bolted connection or splice shall be brought to a "snug tight" condition. The bolts shall be tightened to "snug tight" in a systematical order to ensure that all parts of the joint are brought into full contact with each other. This usually requires that the bolts located near the center of the connection or splice be tightened first. Then all remaining bolts shall be tightened from the center progressing toward the outer edges. "Snug tight" is defined as the tightness attained by (1) a few blows from an impact wrench, or (2) the full effort of a man using an ordinary spud wrench. The "snug tight" requirement also establishes the starting point for full tensioning by the turn-of-nut method.

Once the bolts are snug tight, the outer face of the nut and protruding part of each bolt shall be match-marked with crayon or paint. The match-marking provides the control to both ensure the bolt does not rotate during tightening and measure the nut rotation. The required minimum nut rotation is listed in Table 4 of *Standard Specifications* Section 6-03.3(33). During this tightening operation, there shall be no rotation of the part not turned by the wrench.

Contractors often suggest a tightening method that eliminates marking the bolt as required in the turn-of-nut method. This suggested method requires calibration of the air impact wrench(es) and the inspection torque wrench. After calibration, the Contractor wants to snug tighten each bolt, then tighten to minimum tension using the air impact wrench without marking the nut and bolt. This method is heavily dependent upon the torque wrench test and is not accepted by WSDOT.

Direct Tension Indicator Method (DTI)

When the direct tension indicator method is used to provide the specified bolt tension, all of the required minimum number of bolts within a bolted connection or splice shall be brought to a "snug tight" condition. The bolts shall be tightened to "snug tight" in a systematic order to ensure that all parts of the joint are brought into full contact with each other. This usually requires that the bolts located near the center of the connection

or splice be tightened first. Then all remaining bolts shall be tightened from the center progressing toward the outer edges. "Snug tight" is defined as the tightness attained by (1) a few blows from an impact wrench, or (2) the full effort of a man using an ordinary spud wrench.

This method uses a direct-tension-indicator washer that has formed protrusions on one face, leaving a gap. As the bolt is tensioned, the formed gap is reduced. The measurement of this gap verifies the bolt tension. *Standard Specifications* Section 6-03.3(33) addresses the maximum gap opening for direct tension indicators.

WSDOT has two concerns associated with the use of direct-tension-indicator washers. These concerns are (1) potential corrosion within the washer gap and (2) undetected bolt loosening as bolt tightening of a connection or splice proceeds. Following is a brief discussion of each item:

1. **Potential Corrosion** – The Specifications address this potential corrosion problem by limiting the maximum gap opening for painted and unpainted structures. These gap opening limits are governed by both tension requirement and required corrosion protection. The direct tension indicator manufacturers address only the minimum bolt tension requirement. It is, therefore, very important that the Inspector be aware of this additional concern of potential corrosion.
2. **Undetected Bolt Loosening** – The manufacturers of the direct-tension-indicator washers emphasize the ease and reliability of their product. They claim, and it is true, that if the gap is reduced to the specified maximum opening, the respective bolt is properly tensioned. The concern we have is that through the process of tightening all the bolts in a connection or splice, a warped plate may be progressively flattened, potentially loosening the initially tightened bolts. If this happens, the indicator washer still indicates the bolt(s) are fully tensioned. For this reason, WSDOT requires that bolt tension inspection, usually with a calibrated torque wrench, be performed. The Inspector should be aware of this potential problem and observe the tightening procedure with this in mind.

SS 6-03.3(33)B Bolting Inspection

The Inspector shall determine that the requirements of the *Standard Specifications* are met in the work. The Inspector shall observe the installation and tightening of bolts to determine that the selected tightening procedure is properly used and shall determine that all bolts are tightened and, in the case of the direct-tension-indicator method, that the correct indication of tension (gap) has been achieved. Bolts may reach tensions substantially higher than the value in Table 3 of *Standard Specifications* Section 6-03.3(33), but this is not cause for rejection.

The condition of the bolts is critical to the bolt-up operation and inspection. Bolts to be installed in the structure shall be lubricated in accordance with the *Standard Specifications*. A good check is a nut that is easily turned on the entire threaded portion of the bolt.

The following inspection procedure shall be observed for:

1. **Bolts tightened Using the Turn-of-Nut Method** – The Contractor, in the presence of the Engineer, shall use an inspection wrench which may be a torque wrench. Calibration of the inspection torque wrench is explained in a following section.

Bolts that have been tightened using the turn-of-nut method shall be inspected by applying, in the tightening direction, the inspecting wrench and its job-inspecting torque to 10 percent of the bolts, but not less than two bolts, selected at random in each connection. If no nut or bolt head is turned by this application of the job inspection torque, the connection hall be accepted as properly tightened. If any nut or bolt head is turned by the application of the job inspecting torque, this torque shall be applied to all bolts in the connection, and all bolts whose nut or head is turned by the job inspecting torque shall be tightened and re-inspected. As an alternate, the Contractor may retighten all of the bolts in the connection, and then resubmit the connection for the specified inspection.

2. **Bolts Tightened Using the Direct-Tension-Indicator Method** –The Contractor, in the presence of the Engineer, shall use a feeler gauge to verify that each bolt has been properly tensioned to the maximum specified gap.

   If a bolt that has had its direct-tension-indicator washer brought to full load loosens during the course of bolting the connection, the bolt shall have a new direct-tension indicator washer installed and be re-tensioned. Reuse of the bolt and nut are subject to the provisions in the *Standard Specifications*.

Calibration of Inspection Torque Wrench

Five bolts of the same grade, size, and condition as those under inspection shall be placed individually in a calibration device capable of indicating bolt tension at least once each working day. There shall be a washer under the part turned in tightening each bolt. Each bolt shall be tightened in the calibration device by any convenient means to the specified minimum tension. The inspecting wrench then shall be applied to the tightened bolt and the torque necessary to turn the nut or head 5 degrees (approximately 1 in) at a 12-in radius) in the tightening direction shall be determined. The job-inspection torque shall be taken as the average of three values, thus determined after rejecting the high and low values.

If the bolts to be installed are not long enough to fit in the tension calibrator, five bolts of the same grade, size, and condition as those under inspection shall be tested using Direct-Tension-Indicator (DTI) to measure bolt tension. This tension measurement test shall be done at least once each inspection day. The DTI shall be placed under the bolt head. A washer shall be placed under the nut, which shall be the element turned during the performance of this tension measurement test. Each bolt shall be tightened by any convenient means to the specified minimum tension as indicated by the DTI. The inspecting wrench shall then be applied to the tightened bolt and the torque necessary to turn the nut 5 degrees (approximately 1 in) at a 12-in radius) in the tightening direction shall be determined. The job-inspection torque shall be taken as the average of three values, thus determined after rejecting the high and low values.

Figure 6-7 shows the operator calibrating a hand-indicator torque wrench. The bolt is brought to the proper tension by either method described above. The dial on the wrench was set at “zero” and sufficient torque applied to rotate the nut 5 degrees in the tightening direction. At this point, the wrench dial shows the kips required to further rotate the nut or bolt head. The torque wrenches used by inspectors of both the Contractor and WSDOT should be tested and compared at the same time for purposes of uniformity.

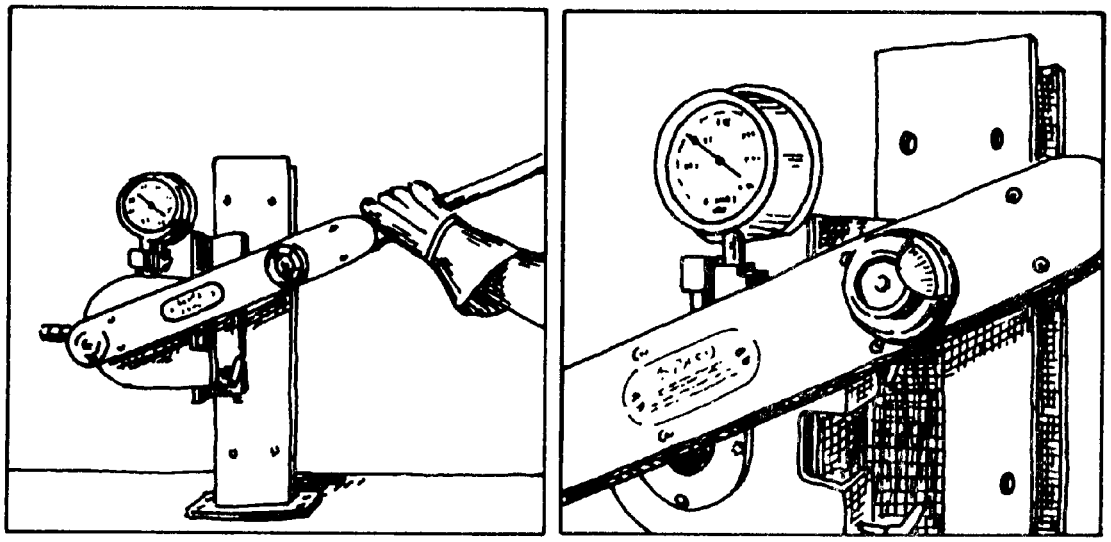

Figure 6-7

SS 6-03.3(35) Setting Anchor Bolts

Anchor bolts are usually plain round bolts with the head and plate washer on the lower end and the thread and nut at the top end. These bolts are set in pipe sleeves to allow room for adjustment of the span. Location of anchor bolt sleeves is very critical and must be verified by the inspector. Also, the exposed length of anchor bolts should be checked to ensure enough thread is exposed out of the pier cap to tie down the lower bearing assembly.

Anchor bolt sleeves, when anchor bolts will not be grouted until after freezing weather, must be protected against damage from expanded ice by filling the sleeves with ad nonevaporating antifreeze solution. Without exception, when piers and superstructures are constructed under separate contracts, the anchor bolt sleeves shall be filled with a nonevaporating antifreeze solution by the substructure Contractor. Before the bolts are grouted, the antifreeze solution shall be removed, the space well cleaned and the holes then filled with grout. The antifreeze solution shall be diluted with water and completely removed from the sleeves or it will have a detrimental effect on the filler grout. See *Standard Specifications* Section 6-02.3(18).

SS 6-03.3(36) Setting and Grouting Masonry Plates

It is important to set bearings level on all piers. Bridge plan bearing details usually show a leveling method. Bearings shall be set so that they are at zero movement at 64°F after the total load is applied and the span is released. The amount of offset varies with the length of the span and the temperature at time of erection.

Anchor bolt holes and the void underneath masonry plates shall be grouted, after all structural steel is erected and adjusted for length and camber, and at least seven days before the deck concrete is placed. Portland cement shall be used for grouting and the procedure should be as outlined in *Standard Specifications* Section 6-03.3(36).

Do not grout underneath masonry plates with dry mortar unless specifically shown in the plans. The Contractor shall build forms around the masonry plate about 4 in high and pour grout in the form from one side until the whole area is well filled. Use a wire or steel band to keep the grout flowing. After the grout has taken its initial set, remove the form and cut the edges of the grout with a trowel to about a 45 degree bevel from the bottom of the shoe to top of the pier. Do not allow the finished grout to extend above the bottom of the masonry plate.

SS 6-03.3(39) Swinging the Span

As required in *Standard Specifications* Section 6-03.3(39), the masonry plates shall be grouted and steel work, except railing, completely bolted and released from the falsework before forming for the roadway slab begins. Expansion dams shall not be bolted down until after the span is released from the falsework.

The camber diagram shown in the plans, especially for welded steel plate girders, quantifies the calculated deflection of the steel girder weight and the deflection of the girders due to the concrete slab weight. The camber diagram for the weight of the steel girders only is utilized by the girder fabricator.

Once all the temporary girder supports are removed, it is important that elevation control points on the top of the flanges of the girders or floor beams be established and permanently marked before any external load, such as form lumber, reinforcing steel, etc., is applied. These control points should be located at proper intervals to establish elevations for formwork and finished roadway slab grades. These control points should be at the span tenth points or at cross-frame locations (panel points).

Once these control point elevations are established, fills at each of these control points shall be calculated utilizing the camber diagram for the weight of the roadway slab and the profile grade. These control point fill values shall be used from that point on because it is extremely difficult, if not impossible, to calculate the deflection of the girders as formwork and reinforcing steel are added. These control point fill values will be used for the final adjustment of the roadway slab finish machine.

A pouring sequence for the roadway slab may be shown in the plans to reduce the size of the concrete pours, control deflection, and minimize tension cracking of the concrete slab during construction. Placing and finishing the concrete in the roadway slab shall be the same as for Concrete Structures covered in Section 6-2.

SS 6-03.4/5 Measurement and Payment

Measurement and payment instructions are covered in *Standard Specifications* Sections 6-03.4 and 6-03.5.

6-04 Timber Structures

SS 6-04.3(3) Construction Requirements

SS 6-04.3(1) Storage and Handling Material

Timber and lumber shall be stored off the ground and piled to shed water and prevent warping. Treated timber shall be handled carefully to prevent breaking of the outer fibers and rope or chain slings shall be used. Pike poles and peaveys are not to be used in handling treated timber.

All cutting, framing and boring of treated timbers shall be done before treatment insofar as is practicable. Framing shall be done in accordance with the requirements of *Standard Specifications* Section 6-04.3.

SS 6-04.3(3) Shop Details

Framing plans and details for treated timber structures shall be furnished by the Contractor and reviewed by the Project Engineer. After review of the framing details, one set shall be returned to the Contractor and one set furnished the shop inspector. Inspection of shop framing and treating of timber is performed by shop inspectors of the Materials Lab. Inspection reports showing details of treatment and lists of materials shipped will be mailed to the Project Engineer. Representative pieces of each shipment will be stamped by the shop inspector.

Untreated timber may be accepted on the basis of an inspection certificate in accordance with *Standard Specifications* Section 9-09.2(3).

SS 6-04.3(4) Field Treatment of Cut Surfaces, Bolt Holes, and Contact Surfaces

When field framing cannot be avoided, the cuts and holes shall be treated as required in the *Standard Specifications*. Timber for field treatment must be dry before applying the required treatment. Holes shall be bored for all bolts, drift bolts, boat spikes, dowels and truss rods using augers of the size specified in *Standard Specifications* Section 6-04.3(5).

After removal of temporary scaffolding and formwork, the nail and bolt holes in treated timber shall be repaired in accordance with the *Standard Specifications*.

Field treatment for structures of untreated timber shall be in accordance with the requirements in *Standard Specifications* Section 6-04.3(4).

SS 6-04.3(18) Painting

Painting of timber structures shall be in accordance with the requirements in *Standard Specifications* Section 6-07.

SS 6-04.4/5 Measurement and Payment

Measurement and payment instructions are covered in *Standard Specifications* Sections 6-04.4 and 6-04.5.

6-05 Piling

GEN 6-05.1 Vibration Monitoring during Pile Driving

On some projects, pile driving vibrations will be monitored for potential damage to adjacent structures or buildings. When that monitoring indicates a potential for damage, the Project Engineer should ensure that the minimum size hammer specified for the piling being driven is actually being used. If so, and vibrations are still potentially damaging, the State Construction Office should be notified to determine if preboring or jetting should be used to reduce vibrations. Should preboring or jetting, or other methods be determined necessary, such work shall be considered a change in accordance with *Standard Specifications* Section 1-04.4.

GEN 6-05.2 Pile Driving Records

Pile driving records are to be kept in the Pile Driving Record Book (DOT Form 450-004) or on the Pile Driving Log (Form 450-004A), which becomes part of the project final records. This book has sufficient room for a condensed pile driving history, pile layout, and miscellaneous notes in addition to the driving log for each pile. Number the piles on the sketch in the pile layout and use these for the Pile No. on the pile driving log.

The pile driving record book contains instructions for completing the driving log. In order for this log to furnish complete information on the pile driving work, it is imperative that it be filled out completely in accordance with the instructions in the book. If more space is necessary, use more than one page for the pile. Items in the heading which are the same for several piling, may be marked "Same as Pile No. ___."

The piling should be marked every foot of their lengths with crayon or paint unless there is some other method of determining when each foot of the pile has been driven. Count and record the number of blows per foot and hammer energy as the pile approaches bearing.

SS 6-05.3 Construction Requirements

SS 6-05.3(2) Ordering Piling

Piling shall conform to the requirements of *Standard Specifications* Section 9-10. When piling is received on the project, it shall be inspected and a notation made in the section of Miscellaneous Notes in the Pile Record book. Untreated timber piles will be inspected in the field and accepted for use there. All other piling, except concrete piles cast on the job, will be inspected by Fabrication Inspectors before delivery.

The lengths of piling required are determined by driving test piles or by other information which may be available. The Project Engineer provides the Contractor with an order list for timber and precast concrete piles. This list must show the length of piles required below cutoff (the top of the pile within the footing). The Contractor should be informed that the lengths shown on the order list should be increased, at their expense, the necessary amount to provide for fresh heading and to reach from the cutoff elevation up to the position of the driving equipment. Payment for piling will be made for the number of feet shown on the order lists except that if greater lengths are driven, with the concurrence of the Project Engineer, payment will be made for the lengths actually driven below cutoff. Itemized lists for cast-in-place piles or steel piles will not be furnished by the Engineer.

SS 6-05.3(3) Manufacture of Precast Concrete Piling

SS 6-05.3(3)A Casting and Stressing

Curing beds for steam cured concrete piles shall not rest directly on the floor but shall be elevated enough to permit the complete circulation of steam around the piles.

Lifting loops shall be removed to ½ in below the surface of the concrete and the hole filled with mortar.

Concrete piles shall be handled as described in the *Standard Specifications*, the *Standard Plans*, or as shown in the plans in order to avoid excessive deflections and strains.

SS 6-05.3(6) Splicing Steel Casings and Steel Piles

When steel piles must be spliced and splicing details are not shown in the plans, the splice should be made with a single V-butt weld over the whole cross-sectional area of the pile. Welding shall be done with specified welding rod and suitable equipment in accordance with American Welding Society Specifications and good industry practice. A qualified welder is required. See *Standard Specifications* Section 6-05.3(6).

No Engineer's order list will be given for steel piling.

SS 6-05.3(7) Storage and Handling

SS 6-05.3(7)A Timber Piles

Chain slings will be permitted in handling treated timber piles. Treated timber piling shall be furnished and driven full length, i.e., without splices. The entire length shall be pressure treated. Therefore, the pile tip shall not be cut after treatment. If splices become necessary and the order length furnished by the Engineer is insufficient, the State Construction Office should be contacted for direction. However a splice probably will not be considered if it cannot be located below the permanent water table elevation.

SS 6-05.3(7)B Preast Concrete Piles

Precast concrete piles require special care in storage and handling, especially when raising them into the leads. The general method of attaching slings for handling is described in the *Standard Specifications*. Long piles must be supported at the ends and at intermediate points to prevent undue bending and cracking of the concrete. In special cases the plans may show the method for lifting long piles. Some pile driving crews lack experience with concrete piles and handle them as they are accustomed to doing with timber piles. Such handling will probably result in damage to the concrete piles and must not be allowed.

SS 6-5.3(7)C Steel Casings and Steel Piles

Steel piling shall be handled in such manner as to prevent bending of the flanges, and when stacked they shall be supported in such a manner that the piles will not bend.

No Engineer's order list will be given for cast-in-place concrete piling.

SS 6-05.3(9) Pile Driving Equipment

SS 6-05.3(9)A Pile Driving Equipment

The type and size of hammers to be used to drive piling are specified in *Standard Specifications* Section 6-05.3(9)B. The Project Engineer shall require the Contractor to furnish full information on any hammer proposed for use so it can be determined whether or not the hammer meets the requirements of the specifications and that the bearing capacity of driven piles may be computed. It is very important to verify that the drop of the ram is in accordance with the submitted data. Otherwise, the pile bearing calculations will not be correct. A useful formula to determine the drop of a single acting diesel hammer determined from measuring the blows per minute is:

Stroke Formula (ft of drop) = (4.01((60/BPM)2)-0.3)

Where BPM is the blows per minute of the hammer.

This drop can then be used in the bearing equation shown in *Standard Specifications* Section 6-05.3(12) to determine the bearing of the piling.

This formula calculates the drop from the rate of blows per minute that the hammer is hitting at and makes it no longer necessary to watch the top of the hammer and estimate the distance that hammer is coming out of the casing. Since the rate the hammer runs at is dependent on the drop of the hammer, and this hammer drop is accelerated at a constant by gravity, the distance the ram travels can be determined from the formula.

SS 6-05.3(9)B Pile Driving Equipment Minimum Requirements

Standard Specifications Section 6-05.3(9)B and the special provisions, govern the hammer size by specifying the minimum ram weight and the minimum energy required for each type of pile, required bearing, and hammer. The most commonly used hammers are air, hydraulic, or diesel activated. The hammer energy output is simply the weight of the ram times the distance the ram falls. This energy determination is a simple matter with a drop, hydraulic, or air/steam activated hammer. The measurement of the energy output of a diesel activated hammer is more complex. The minimum energy required by the specifications is the energy output of the hammer at the point of impact at the required pile bearing. The hammer needs to operate at or above the required minimum energy level in order to achieve the specified pile bearing capacity.

The Project Engineer may concur with the Contractor's proposed hammer if it meets the criteria of the *Standard Specifications* and the special provisions. During field operations, the pile driving hammer must be capable of delivering at least the required minimum energy at the required pile bearing value. The State Construction Office should be consulted for any other hammer submittals or insufficient performance in the field.

Drop hammers, which are rarely used, must be weighed, in accordance with *Standard Specifications* Section 6-05.3(9)B, before any piles are driven. The drop hammer stroke should be carefully measured. This can be done by taping a piece of rope or rag around the hammer line at the height above the hammer for the drop desired. The hammer operator can then gauge the drop with reasonable accuracy. The stroke (drop) of the hammer ram must be consistent with the required minimum energy.

Air or steam activated hammers lift the ram by either air or steam pressure to a predetermined distance and release the ram. The energy is produced by the falling ram. These hammers usually operate at 50 to 60 blows per minute depending on the hammer manufacturer. A count of the actual blows per minute will provide verification that the hammer is operating properly. If the blows per minute exceed the published manufacturer's data sheet for the specified minimum energy, and the Contractor is not able to find and rectify the problem, the State Construction Office shall be notified. No additional piling are to be driven until the problem is resolved.

Hydraulic activated hammers lift the ram by hydraulic fluid pressure to a predetermined distance and then release the ram. The energy is produced by the falling ram. There are two types of hydraulic activated hammers, single and double acting. The hydraulic activating systems for both of these types of hammers are totally enclosed using a vegetable oil medium, rendering them environmentally friendly. The method for measuring the energy output is different for each type of hydraulic activated hammer. The energy output for each type can be varied by using simple adjustment procedures. Again, the respective hammer must be operating at or above the specific minimum energy when the required pile bearing capacity is reached.

Diesel activated hammers lift the ram by energy produced when diesel fuel is ignited. The energy produced is a combination of the fuel explosion and the drop of the ram. There are two types of diesel activated hammers, single and double acting. The method for measuring the energy output is different for each type of diesel activated hammer. Diesel hammers produce a variable energy. The variable energy output of a diesel hammer is dependent on a number of factors, which include fuel quality, fuel setting, soil conditions, and resistance from the pile being driven. As the pile resistance increases, the energy output of a diesel hammer usually increases. The manufacturer's maximum energy value for each diesel hammer is measured in the laboratory using a hammer in tip top shape. For this reason, it is a good idea to have a hammer on the project with a maximum rated energy higher than the contract minimum required energy. A good rule of thumb when selecting a diesel hammer is that, if 80 percent of the maximum energy of a hammer equals the contract minimum required energy, the diesel hammer will produce sufficient energy to meet the contract energy requirements.

A single acting diesel activated hammer is open at the top, and at the top of the ram stroke a portion of the ram is usually visible. The bearing value of the pile being driven is determined by the number of blows per foot at a blows per minute rate. The energy output of a single acting diesel hammer is determined by the blows per minute of the running hammer. The manufacturer is required to submit this energy data. The rate (blows per minute) is dependent on how high the ram raises up (stroke) due to the diesel fuel combustion. Thus, the longer the stroke, the greater the energy and the longer it takes. In other words, as the rate (blows per minute) decreases, the energy output increases.

A double acting diesel activated hammer is closed at the top. This closed top acts as a pressure chamber driving the ram back down where the diesel fuel explosion occurs. The bearing value of the pile being driven is determined by the number of blows per foot at a measured pressure within the top bounce chamber. The energy output of a double acting diesel hammer is determined by the measured bounce chamber pressure while the hammer is operating. The manufacturer is required to submit this energy data. Each double acting diesel hammer comes with a hose running from the

bounce chamber to a box containing a pressure gauge. There is usually a button on this pressure gauge box. When the button is depressed the gauge is activated with the bounce chamber pressure. If this button is depressed continuously, the hammer efficiency decreases because of the pressure bleed off created by the pressure gauge operation. The button should only be depressed periodically when an energy reading is required. The pressure reading and corresponding energy shall meet the minimum energy at the required pile bearing value.

The contract allows the use of vibratory hammers to initially set piles. As of yet, there is no reliable means of determining the actual bearing capacity of a pile driven by a vibratory hammer. Often, the contractor wants to initially set piles with vibratory hammers if the soils and/or limited access are such that impact hammer operation would be difficult. The contract allows this but requires that an impact hammer be used to acquire the bearing capacity. Since static friction is usually much higher than dynamic friction, the actual bearing capacity is determined while the pile is in motion. This requirement is governed by the contract requirement that the pile must be driven at least an additional 2 ft using an impact hammer with the blow count (blows per in) constant or increasing. If the contractor uses a vibratory hammer to initially set the piles, there must be a comprehensive procedure to ensure proper location an plumbness of each pile. This is usually accomplished by providing a rigid steel template and using good conscientious control while setting and initially driving each pile.

SS 6-05.3(9)C Pile Driving Leads

Pile driving leads shall be fixed at the top and bottom as discussed in *Standard Specifications* Section 6-05.3(9)C, to ensure that the piling can be accurately driven both as to position and batter.

SS 6-05.3(10) Test Piles

A careful study should be made of the foundation exploration data shown in the plans and/or included in the Geotechnical Report before driving any test piles. Care should be taken that the test piles are not stopped on a relatively thin hard layer overlaying softer material. After the test piles have been driven, an effort should be made to correlate the results with the foundation data before ordering the permanent piles. The results from driving the test piles should be discussed with the Regional Operations/ Construction Engineer if they do not correlate with the foundation data.

Test piles shall be driven to at least 15 percent more than the ultimate bearing capacity required for the permanent piles, except where pile driving criteria is determined by the wave equation. When pile driving criteria is specified to be determined by the wave equation, the test piles shall be driven to the same ultimate bearing capacity as the production piles. Test piles shall penetrate at least to any minimum tip elevation specified in the Contract. If no minimum tip elevation is specified, test piles shall extend at least 10 ft below the bottom of the concrete footing or groundline, and 16 ft below the bottom of the concrete seal.

Preboring, jetting, or other means may be used to secure minimum penetration with the test pile if such means is necessary and will be used for the permanent piles. The reason for driving the test pile is to obtain information for ordering the permanent piles, and to obtain additional information relative to driving the permanent piles.

It is the responsibility of the Contractor to supply test piles of sufficient lengths to provide for variation in soil conditions. If the piles furnished are not long enough, or are unsuitable in other ways, it will be necessary for the Contractor to supply acceptable piles. Followers will not be permitted in driving test piles. A follower is a member interposed between a pile hammer and a pile to transmit blows while pile head is below the reach of the hammer (pile head below the bottom of leads).

The State Construction Office should be notified of the date test piles will be driven.

Test piles shall also be recorded in the pile driving record book. In addition, following the driving of each test pile, the Test Pile Record form shall be completed and sent to the appropriate offices the following day. This form should be filled in completely, including the rate/pressure of the hammer. Record the bearing value of the test pile for each foot as it is driven.

SS 6-05.3(11) Driving Piles

It is suggested that the State Construction Office be contacted before any piling are driven.

SS 6-05.3(11)A Tolerances

Foundation piles must be driven true to line and in their proper position so that full bearing and lateral support is secured for each pile. Each pile has been definitively positioned in the design, and piles should be driven as nearly as practicable to the position shown. Any variation of 6 in or more from the plan shall be reported to the State Construction Office before accepting the pile. The tolerance for all types of battered piles is ¼ in in 12 in. Any deviation exceeding this tolerance shall be reported to the State Construction Office for evaluation.

Care shall be taken in driving steel H piles to ensure that the driven pile is oriented as close as possible to that shown in the plans. Pile design usually involves horizontal forces due to temperature, concrete shrinkage, earthquake, and wind as well as axial forces, and if a driven pile is not aligned as shown in the plans, the pile may become overstressed due to excessive bending stresses. Any deviation of more than 20 degrees from the pile axis or more than 6 in from the position shown in the plans shall be reported to the State Construction Office for evaluation and acceptance.

Large diameter prestressed concrete cylinder piles are not completely covered in the *Standard Specifications*. The requirements of the special provisions must be observed. Accuracy of placing and driving is most important. Every effort should be made to prevent these piles from drifting out of line or out of plumb during driving, but care must be taken to avoid applying excessive lateral force which may crack the pile. These piles do not have to be very far out of plumb before excessive overstress occurs. When a driven pile is found to be cracked or is out of plumb, it should be referred to the State Construction Office for a decision regarding corrective action to be taken.

SS 6-05.3(11)D Achieving Minimum Tip Elevation and Bearing

Piling shall be driven to develop the bearing value as shown in the plans or in the *Standard Specifications*. The penetration of the piles under the last few blows must be carefully gauged and the bearing value computed by use of the formula shown in the *Standard Specifications*. Pile driving specifications should be administered with a great deal of common sense. There is no substitute for experience and good judgment.

Often the foundation reports contain two pile tip elevations, “estimated tip” and “minimum tip” elevations. The estimated tip elevation is simply the elevation that the tip is estimated to be driven to and is utilized to determine driving length quantities in the bid item for furnishing piling. Minimum tip elevations are often specified in the contract plans. These are usually to ensure that piles do not hang up on logs, a thin hard soil layer and other obstructions, or to achieve a minimum pile penetration (e.g., uplift and/or lateral load capacity). Minimum tip elevations are also specified where resistance to uplift is taken into consideration in the design of the foundation seal thickness. The minimum tip elevations should be higher than the estimated tip elevations. The Project Engineer should always review the tip elevations in the plans and compare them to the foundation report recommendations. Any discrepancies should be reported to the State Construction Office.

The minimum tip elevations is a design parameter that may come from the geotechnical design or the structural design. A pile tip elevation that is less than minimum cannot be accepted in the field, it must be reviewed by the State Bridge and Structures Office, the State Bridge Construction Office, and the State Geotechnical Engineer. If, during the initial pile driving operations, minimum tip is not being achieved, no additional piling should be driven until concurrence is obtained to change the minimum tip elevation, or the contractor will have to change his method of installation so that the minimum tip elevation can be achieved.

The use of water jets may be required for driving piles, especially for concrete piles. The piles must be driven at least 6 in after the jet is removed, or to the required bearing. Do not allow the nozzle of the jet to penetrate below the tip of piling previously driven. Mark the jet pipe in such manner that the operator and Inspector can determine the depth required. The State Construction Office should be notified if water jets are proposed for use.

Preboring may also be used to secure the minimum specified penetration. Usually the prebored hole should be slightly smaller in diameter than the pile and the depth of preboring should be less than the minimum specified penetration. However, conditions may exist which make it necessary that a larger hole be prebored and the space around the pile be filled with sand while the pile is being driven to the specified bearing. Unless water-jetting, preboring, or other means of securing minimum penetration is specified and payment is provided for in the contract provisions, this work will be at the Contractor’s choice and expense. However, the procedure used must be reviewed by the Engineer and shall result in a satisfactory pile and will not damage the integrity of the structure, roadway, adjacent structures, or utilities. Any damage done must be repaired to the satisfaction of the Engineer at the Contractor’s expense.

Where the specified minimum tip elevations cannot be reached the State Construction Office shall be notified.

SS 6-05.3(11)F Pile Damage

Rejected piles shall be removed or cut off 2 ft below the bottom of the footing. Rejected casings for cast in place piles that are left in place shall be filled with sand.

In driving precast concrete piles, several layers of plywood or a 3½-in wood block should be placed between the top of the pile and the steel driving head of the hammer. Care should be taken to prevent crushing of the pile head before the desired penetration

is reached. Where crushing occurs, the top of the pile should be checked to determine if the end is square with the body of the pile; also, the hammer should be checked to determine if a fairly flat blow is being delivered to the pile. In driving concrete piles, it may be advisable, in order to prevent crushing of the head and to obtain the required penetration, to operate a hammer at less than full throttle until just before completing the driving, after which the throttle should be fully opened in order to obtain the true bearing value of the pile.

SS 6-05.3(13) Treatment of Timber Pile Heads

The handling and driving of treated piling require special care. Heads of piles should always be freshly cut, and rings or wire mesh screens placed on top during driving. In wet weather the final cutoff should be at least 1 ft long and the creosote, pitch and fabric cover placed immediately after the pile is cut. Do not make a cutoff and then wait until the next day to place the cover. Fabric covers should be well tacked to the pile and neatly trimmed to within 3 in of the top of the pile so that the fabric will not have ragged edges. A follower driving cap should be used on treated piles. This is to help hold the pile in line to minimize the use of chocks in the leads during driving. Timber piles must be strapped in accordance with the requirements of *Standard Specifications* Section 9-10.1 before they are driven.

SS 6-05.3(15) Completion of Cast-In-Place Concrete Piles

The casings for piles cast in place shall be carefully checked after driving, for water tightness and deformation of the casing due to the driving of adjacent piles. A mirror for reflecting light into the casing is the most common method for this check. On cloudy days, a flashlight may be lowered into the casing.

Immediately after driving, the pile casing shall be covered to prevent dirt and water falling into it. All debris and water shall be removed from the casing prior to placing the reinforcing steel cage. No water will be permitted in the casing when concrete is placed.

Due to the ever increasing loading from earthquake activity, most cast in place piling require reinforcement for the full depth of the pile. This full depth reinforcement presents extreme difficulty in placing concrete with a rigid conduit the full depth, especially if the pile is battered. For this reason, Class 4000P concrete is required. This class of concrete has small aggregate and fly ash making the mix rather sticky and cohesive, which reduces the likelihood of segregation during placement. This concrete shall be placed continuously through at 5-ft rigid conduit directing the concrete down the center of the pile casing, ensuring that every part of the pile is filled and the concrete is worked around the reinforcement. The top 5 ft of concrete shall be placed with the tip of the conduit below the top of fresh concrete. The Contractor shall vibrate, as a minimum, the top 10 ft of concrete. In all cases, the concrete shall be vibrated to a point at least 5 ft below the original ground line.

SS 6-05.4/5 Measurement and Payment

Measurement and payment instructions are covered in *Standard Specifications* Sections 6-05.4 and 6-05.5.

6-06 Bridge Railings

GEN 6-06.1 Railing Alignment

Railings shall be carefully aligned, both horizontally and vertically, to give a pleasing appearance. On multiple span bridges, the rail and wheel guard or curb heights at the ends of each span should be varied a sufficient amount to produce a uniform camber or grade from end to end of the bridge.

At the beginning and ends of horizontal curves and through vertical curves, the height of curbs may need to be varied so that the rail heights will be uniform above the curb. On any structure on which occurs a break in grade, horizontal curve with superelevation, vertical curve, or a combination of the three, the Project Engineer should plot to a large scale, the profiles of the roadway grades at the curb lines. From these profiles the grades for the tops of the curbs and railings can be properly determined. A slight hump in the rail over the whole structure is usually not objectionable, but a hump and then a sag is not permissible.

SS 6-06.4/5 Measurement and Payment

Measurement and payment instructions are covered in *Standard Specifications* Sections 6-06.4 and 6-06.5.

6-07 Painting

GEN 6-07.1 General

When inspecting bridge painting for steel structures, the Inspector should prepare a plan for the structure they will be inspecting. This plan will enable the Inspector to locate sections of the structure where painting activities occurred.

An Inspector's Daily Report should be filled out after every work day with the activities performed and related to the Inspector's bridge plan. In the daily report, the Inspector should identify the activities such as cleaning, blasting, and applying the base, intermediate, and finish coats. These daily reports should accurately represent the work accomplished and any noted deficiencies.

The Inspector should become familiar with the latest safety requirements. Contract environmental requirements should be reviewed as well.

Manufacture and shop mixing of paint materials are controlled from the State Materials Laboratory. Each container in each shipment of paint should bear a lot number, date of manufacture, type of paint and manufacturer's name.

When quantities of paint required for a particular job are 20 gallons or less, they may be manufactured and shipped without inspection and testing by the laboratory. A certificate of compliance with specifications signed by the manufacturer shall be presented to the Project Engineer by the Contractor at the time the paint is brought to the project site.

All paint shall be thoroughly mixed before using. Paint may be mixed by stirring with hand paddles or by using power stirrers.

All paints bearing dates of manufacture over one year old should be sampled on the basis of one sample per batch. Paint showing appreciable deviation from normal should be sampled and set aside until checked and released by the State Materials Laboratory.

The paint should be capable of application at the required thickness without any sags or runs. If it is not possible to do this, the State Materials Laboratory should be contacted for necessary steps to be taken.

SS 6-07.3(9) Painting New Steel Structures

SS 6-07.3(9)I Application of Field Coatings

New steel, shop coated before erection, shall have all erection and transportation scars, rivet heads, and welds cleaned and spot coated. If a dirt film has accumulated on the steel during the erection period this must be removed by flushing. All concrete residue must be removed from the floor system after the deck pour is completed. Generally, this may be accomplished by flushing before the residue has set up and while the pour is in progress.

All coatings shall be applied per the manufacturers recommendations.

Brushes and spray equipment should be in good condition. An intermediate stripe coat should be applied to the metal edges, inside angles, welds, bolt heads, nuts and rivets prior to the application of the full intermediate coat of paint. The use of inspection mirrors is required for reflecting light into the interior of boxed sections or members for locating painting defects.

The Inspector must check to see that the proper film thickness of paint is applied. Wet film thickness is to be measured immediately after the paint is applied and the dry film thickness is to be measured after the paint has become thoroughly dry and hard. It is difficult to measure the dry film thickness of paint on galvanized metal so it is necessary to measure the wet film thickness for each coat of paint as it is applied.

When an Inspector finds an area where the painting does not meet the specifications, they should mark the area with contrasting brightly colored alkyd paint from an aerosol can. A light coat of this spray paint will not adversely affect the paint job and it will effectively mark the area to tell whether correction work was performed on the area. Marking the area with spray paint provides the Inspector with an easy method of marking deficient areas and provides the Contractor a ready method of locating the areas that require additional work. This will also free the Inspector to concentrate on areas of serious deficiencies without losing control over those requiring minor corrections. When marking the final coat, be careful to mark only the area to be reworked.

Adequate staging, scaffolding, ladders, and fall protection are required to be provided by the Contractor to ensure safety to workmen, room for good workmanship, and adequate facilities for proper inspection.

Technical assistance and equipment are available at the State Materials Lab, and on request can be provided at the job site to ensure a good paint job.

SS 6-07.3(10) Painting Existing Steel Structures

SS 6-07.3(10)A Containment

Containment systems are required by the Contract. Containment systems are required during the cleaning and painting of the bridge. These systems are necessary to prevent contaminants from entering state waters.

SS 6-07.3(10)D Surface Preparation Prior to Overcoat Painting

Cleaning for removal of rust or corrosion spots in repainting and cleaning of new steel shall mean "commercial" abrasive blasting as defined in the *Standard Specifications* or the special provisions.

Wire brushing and scraping shall normally be limited to removal of dirt and loose paint where corrosion is not involved.

All rust which cannot be removed by abrasive blasting shall be removed with chisels, hammers or other effective means as directed by the Engineer.

When called for in the *Standard Specifications* or the special provisions, the entire structure shall be pressure flushed with water from the top down before other cleaning or painting is started. The nozzle should not be more than 9 in from the surface being cleaned. A biodegradable detergent may be added to the water jet to remove oil and grease. Biodegradable detergents shall be reviewed by the State Materials Laboratory and precautions taken to avoid harmful residue on the steel.

In addition to the initial pressure flushing, all abrasive blasting residue must be removed after blasting and spotting and before application of additional paint. Pressure flushing may be required for this purpose if the Project Engineer deems it necessary.

On repainting projects, the Engineer or Inspector should observe and report to the State Bridge and Structures Engineer any spot or area where corrosion or other deficiencies are of such extent as to threaten the strength of the steel member. They should also observe areas where water becomes trapped to ultimately endanger the steel through corrosive action, and advise the Regional Operations/Construction Engineer, so the condition may be corrected.

SS 6-07.3(10)F Collecting, Testing, and Disposal of Containment Waste

During the preparation and painting of steel bridges, it is very important that the Inspector be aware of the potential impact to the surrounding environment. The air, water, and land quality are of major concern. WSDOT and environmental agencies are working together to establish guidelines for bridge painting. Policies and procedures involving environmental concerns will be addressed in the contract. Compliance to these specifications should be closely monitored.

Many bridges that are being repainted have been previously painted with lead based paint. When this is the case, the Contractor must submit a "Lead Health Protection Program" (WAC 296-155-176). The waste generated from cleaning the bridge (bird guano, paint chips, etc.) must be tested as outlined in the contract provisions. Handling and disposal of this wasted must be as prescribed by current state law. Contact your Regional Environmental Office regarding disposal of lead paint waste.

The protection of the structure, traffic, and property from splatters and airborne paint spray is the responsibility of the Contractor. Since WSDOT may be criticized because of damage from paint, the Engineer must enforce the provisions of the contract to ensure protection therefrom.

6-08 Waterproofing

GEN 6-08.1 General

The instructions for this work are quite complete in *Standard Specifications* Section 6-08.

6-10 Concrete Barrier

SS 6-10.3 Construction Requirements

SS 6-10.3(2) Cast-In-Place Concrete Barrier

On some projects, the Contractor has the option of using slipform techniques in addition to the usual fixed forms as specified in *Standard Specifications* Sections 6-02.3(6), 6-02.3(11)A, 6-02.3(24)C, 6-10.3(2), and 9-03.1(2)B.

In either method, barriers and rail bases should be carefully aligned both horizontally and vertically to give a pleasing appearance; refer to *Standard Specifications* Section 6-01.4. The vertical adjustment for the pleasing appearance is intended for localized camber and deck profile variables. This adjustment is not intended to eliminate grade breaks, such as vertical curves and superelevation transitions. The Project Engineer should plot to a large scale the profiles of the roadway grades at the curb lines. From these profiles, the grades for the tops of traffic barriers, pedestrian barriers, and rail bases can be properly determined. A slight hump in the barriers or rail base over the whole bridge is not usually objectionable.

On the safety-shape traffic barriers, some of the height variation may be accommodated in the vertical face at the base. Any height variation shall maintain the 2-ft 8-in total height. The vertical toe face at the base is usually 3 in unless the structure is receiving an immediate overlay. To accommodate the overlay, the vertical face at the base is increased to 3 in plus overlay thickness. The front face geometry of the safety-shape traffic barrier is critical and should not be varied except as noted herein. Ideally, all height adjustment required to provide a pleasing appearance should be accomplished by modifying the total height of the traffic barrier by varying the vertical toe face at the base, i.e., 2-in minimum. The front and back faces of the traffic barrier are parallel on the upper part to accommodate all height adjustment necessary. The 7-in height of the intermediate sloping face shall be maintained. To ensure proper alignment, carefully check the top of forms or the Contractor's control wire prior to placing concrete.

On slipformed traffic barriers and pedestrian barriers, the same cross-section as shown for fixed-form construction shall be used, except the top chamfer may be shaped to a ¾-in radius. Although slipforming may be allowed in the contract, the reinforcing steel bars may not be sufficient to resist the forces during the concrete placement operations. The contractor should evaluate the stiffness of the reinforcing and, if necessary,

provide additional reinforcing steel crossbracing, both longitudinally and transversely. Slipformed concrete is usually placed with a slump of 1¼ in plus or minus ¼ in. This slump is critical and should be carefully controlled by the Contractor. It is not unusual to encounter conditions which produce sections of unsatisfactory barrier or rail base due to slump, finish, alignment or other problems. When this occurs, do not hesitate to have the unsatisfactory sections removed. Occasional removal is inherent in slipform construction.

Placement of the reinforcing steel bar cage to ensure adequate concrete cover and proper reinforcing bar location is very important and difficult to check for slipformed traffic barrier, pedestrian barrier, and rail bases. When fixed forms are used, final adjustment of the reinforcing steel bar cage can be accomplished after the forms are set prior to concrete placement. The slipform method does not present this opportunity. For that reason, *Standard Specifications* Section 6-02.3(24)C requires that the Contractor check reinforcing steel bar clearances and placement prior to slipform concrete placement. This check can be accomplished by either the use of a template or by operating the slipform machine over the entire length of the barrier. The final grade control must be set prior to the check. All reinforcing steel deficiencies must be corrected by the Contractor.

6-19 Shafts

SS 6-19 Shafts

Drilled shaft foundation construction is often very technical and is always critical because the shafts are supporting the structure. Any shaft foundation malfunction will be devastating both economically and safety wise. Construction of maintenance free bridges requires close attention to details during the construction of drilled shaft foundations.

Training on shaft construction is available through the State Construction Office. The training covers specifications, equipment, site geological conditions, and general questions.

At least 5 working days before any drilled shaft foundation work begins, a conference should be held to go over the procedures and equipment to be used and to emphasize the critical areas of construction. As a minimum, this meeting should include a discussion of the contractor's shaft installation plan and order of work. In addition to this discussion, both WSDOT personnel and the Contractor's personnel should discuss specifics of the project; such as, Crosshole Sonic Log Testing (CSL Testing), site subsurface conditions, site access, traffic control, staging areas, excavation disposal, slurry storage and transfer, slurry disposal, and environmental protection.

Meeting attendees should include key personnel from WSDOT, the Prime Contractor, and the shaft drilling Contractor. The WSDOT personnel should include the Project Engineer, key inspection personnel, and representatives from the Geotechnical Division, the State Materials Laboratory, and a representative of the State Construction Office.

Scheduling for CSL Testing

Once the shaft has been successfully poured, call the Materials and Fabrication Office at 360-709-5407 to schedule CSL testing.

Submittals for Mechanical/Electrical Contracts

The flowcharts in Figure 6-9 are intended to provide a guide to the Project Engineer for the bridge electrical/mechanical contracts.

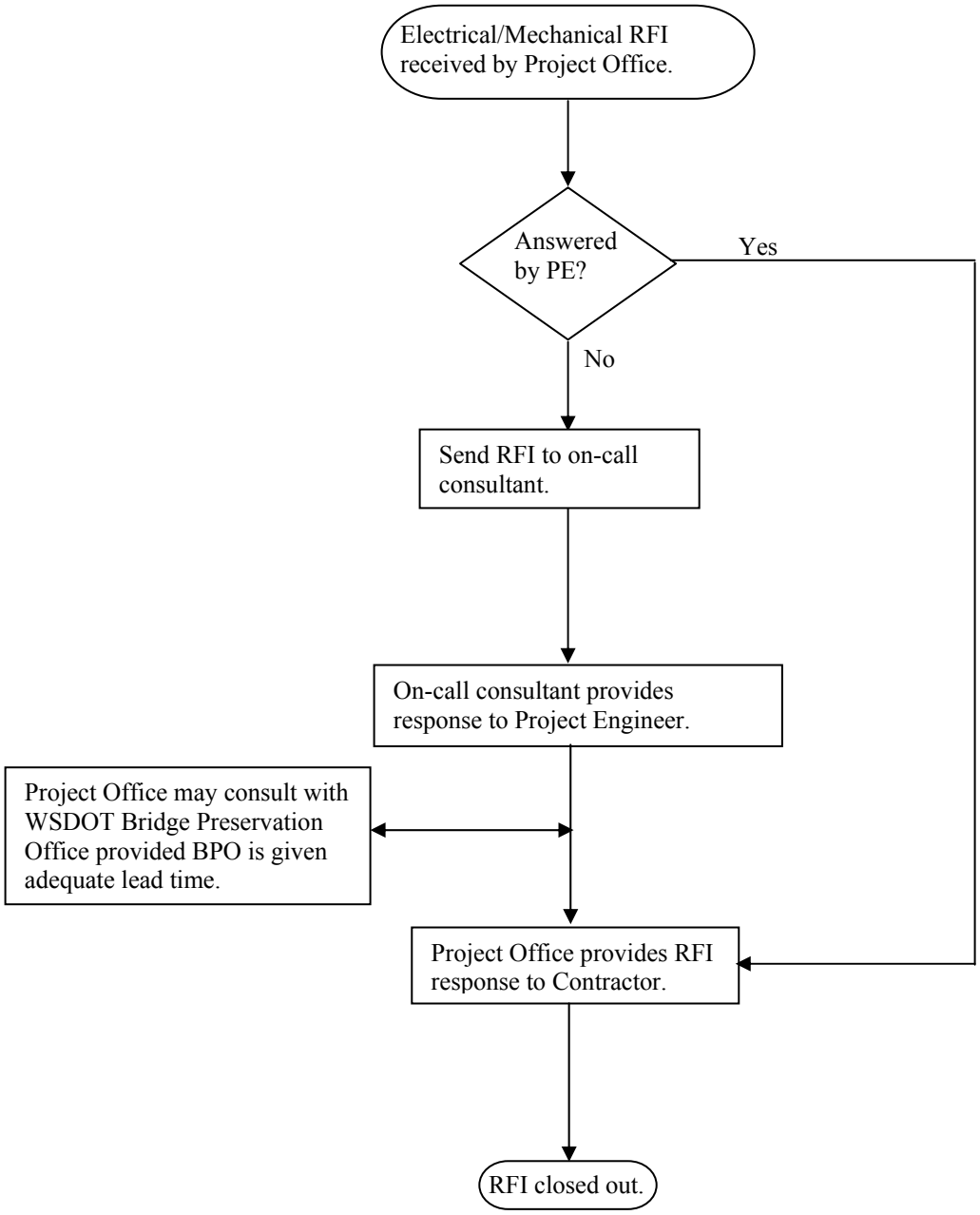

Mechanical/Electrical Request-For-Information Process
Figure 6-9 (1 of 3)

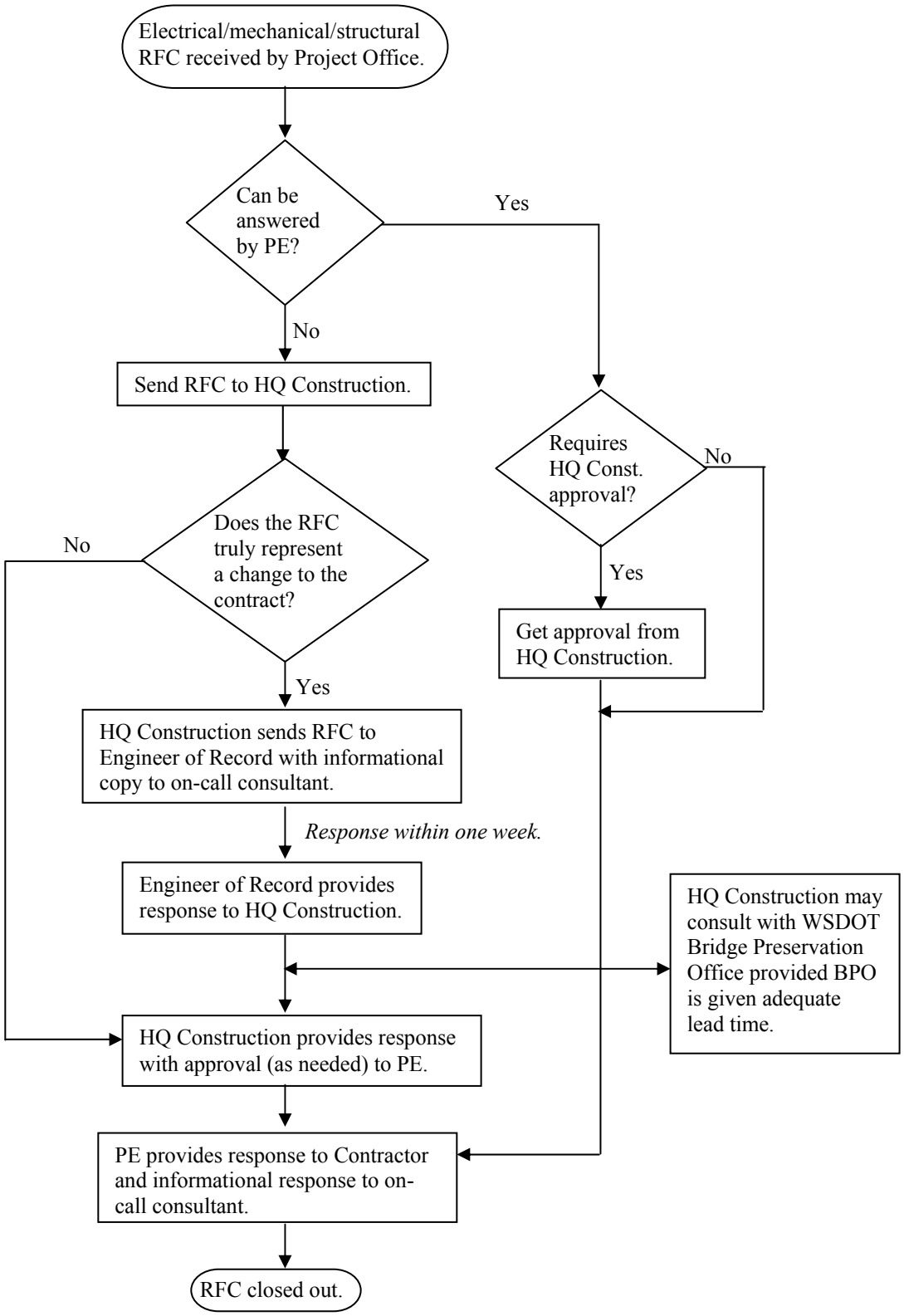

Electrical/Mechanical/Structural Request-For-Change Process
Figure 6-9 (2 of 3)

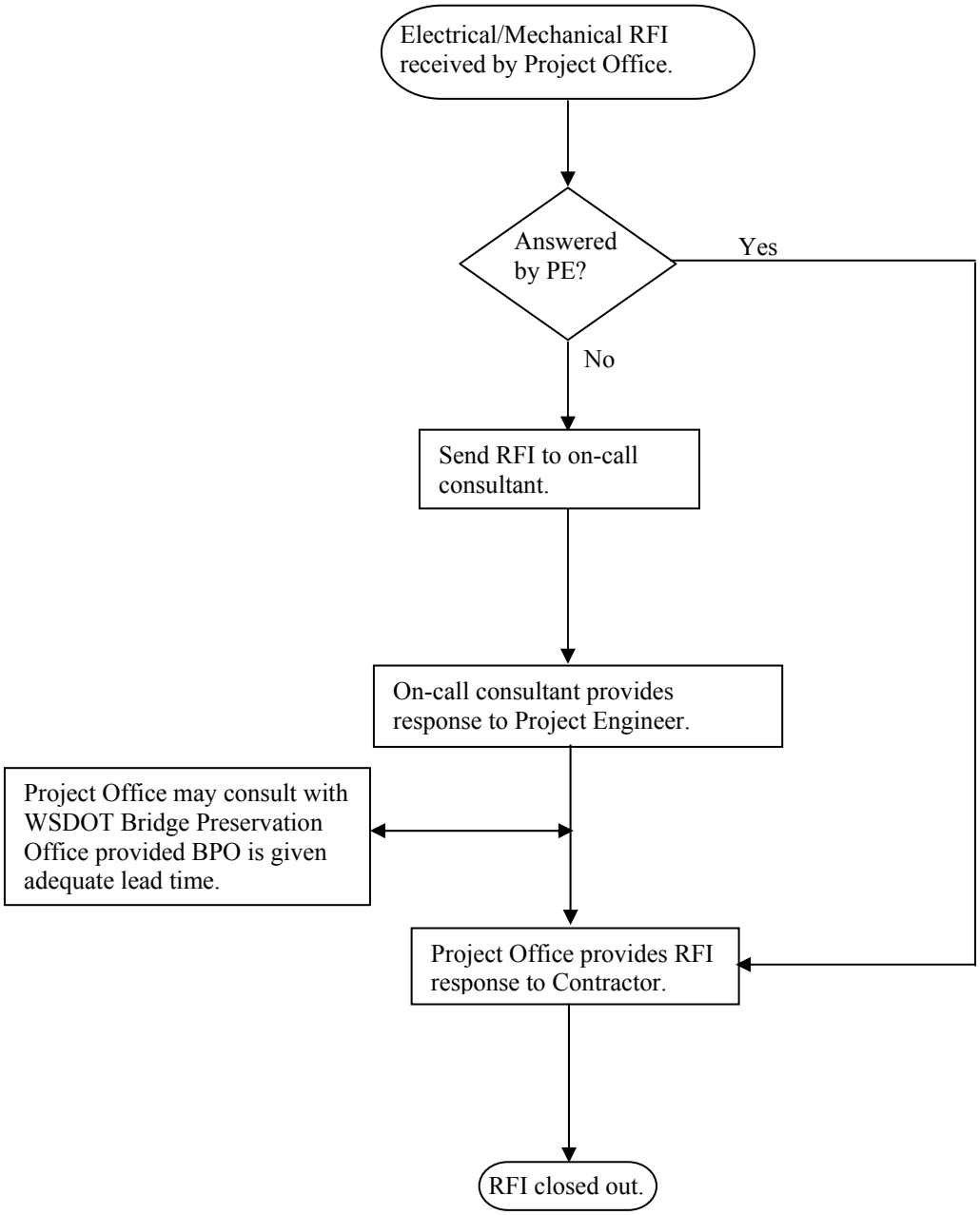

Electrical/Mechanical Working Drawing Review Process
Figure 6-9 (3 of 3)

Chapter 7 Drainage Structures, Storm Sewers, Sanitary Sewers, Water Mains, and Conduits

7-01 Drains

GEN 7-01.1 Roadway Subdrainage

Underground streams and seepage zones which require installation of water collection systems may be encountered in roadway excavation. The gradation of gravel used in water interception channels is of prime importance. Gravel backfill for drains has been developed for this use. This drain material is an open graded gravel which will become plugged with infiltered fines if not protected with a filter. It should always be used with a filter cloth which has proven effective in inhibiting the infiltration of fines.

When installing perforated drain pipe, the perforations should be in the lower half of the pipe. This will minimize infiltration of fine material and ensure longer service.

Where a subdrain installation is intended to pick up flow from intermittent seepage zones, nonperforated pipe should be used between the seepage areas to avoid possible loss of water into otherwise dry areas. In some cases, it may be necessary to supplement the pickup system with a carrier pipe system.

The Project Engineer's attention is directed to the fact that control of water during construction is the responsibility of the Contractor. See Section 2-03.4 for temporary water pollution/erosion control.

7-02 Culverts

GEN 7-02.1 General Instructions

The life of the roadway depends largely upon proper drainage, and it is essential to give diligent attention to adequacy as well as to quality of construction. In addition to providing for the passage of existing natural drainage channels through the project, a highway drainage system must provide for the collection and disposal to natural drainage channels of all rainfall on the right of way and of all ground water flow that may be intercepted during roadway construction.

It is attempted during location and planning to provide for necessary drainage systems, however, particularly with respect to underground water flow, it is impossible to foresee all drainage problems that may result from the construction of the highway. It is the responsibility of the Project Engineer to evaluate the sufficiency of the provided drainage systems and to initiate action for changes or additions where necessary.

The Project Engineer should carefully review all provisions of the applicable Environmental Impact Statement, right of way agreements, and other commitments made by the Washington State Department of Transportation (WSDOT) which have direct bearing on the project. Many of these commitments involve drainage matters. Although such elements should have been incorporated into the design, in some cases, they have been overlooked or require revision. Such a lack of oversight which directly affects adjacent property or individuals is sure to trigger an immediate negative response reflecting on WSDOT integrity.

The Project Engineer should go over the project, particularly during severe storms, closely observing the quantity and action of the storm water runoff to determine the sufficiency of openings and ditches or the need for larger openings and ditches than those contemplated, reporting the results of this observation to the Regional Office. Any changes made in the size of drainage openings must be approved by the Regional Office before the Contractor is advised of the change.

Tables showing the allowable heights of embankments over the various types of pipes are in the *Standard Specifications* and the *Hydraulics Manual*. Quite often, upon locating culverts to fit the drainage conditions, the height of embankment is more than was anticipated during the location work. After the culverts are staked, a check should be made to see that the allowable embankment height for the particular type of pipe is not exceeded.

Pipe arches shall not be constructed until the site has been investigated by the Regional Materials Engineer and the materials and methods for the construction have been approved by the Regional Materials Engineer.

GEN 7-02.2 Roadway Surface Drainage

Curb and gutter systems must be constructed in such a manner that water will not pond on the roadway or flow at random over fill slopes. Manholes, catch basins, and spillways should be checked for location, size, and number to ensure efficient removal of collected water. Controlled drainage should be carried to a point beyond the roadway to where damage to the roadway cannot occur.

Water pockets are very apt to be formed in superelevation transitions and roadway width transitions, especially where the roadway grade line is quite flat. It is necessary that the Project Engineer investigate these areas to be sure that proper drainage is installed.

In placing the grates for catch basins and gutter inlets, it is imperative that they are placed at the proper elevation. If they are placed too low, they constitute a traffic hazard and if they are placed too high, they will not intercept the water. In keeping with design safety requirements, many culvert entrance structures utilize catch basins or grate inlet facilities. Such installations are particularly susceptible to deciduous debris and roadside trash. Grate opening size allowing passage of such debris is very critical in rural and mountainous locations.

Surface ditches may be necessary above cut slopes to prevent water from flowing over the cut face. Roadside ditches at the ends of cut sections should be diverted well away from the adjacent embankment to avoid erosion of the fill material.

GEN 7-02.3 Design of Culverts

Present standard design practice permits the Contractor to select the type of culvert and drain pipe to be installed except in those instances where a specific type is called for in the plans. Approved types are detailed in the contract plans and specifications.

When changes or additions are determined necessary by the Project Engineer, consideration must be given to the type of pipe being furnished to the project. Specific types should be required only when engineering considerations substantiate that preference should be given to one type or another.

Corrugated metal pipe arches fill a need where headroom above the invert is restricted and where more capacity and wider clearance for discharge of debris is required than would be afforded by a multiple pipe installation. Due to the method of forming the pipe arches, it is usually more difficult to obtain a well-fitting joint. The construction of the joints must receive careful attention when the installation is in material susceptible to erosion.

SS 7-02.3(1) Placing Culvert Pipe - General

The ability of the culvert to withstand the height of cover as shown in the tables is based on the culvert being constructed in accordance with the *Standard Specifications* and the *Standard Plans*. All phases of culvert installation should receive thorough attention and inspection to achieve that end.

Grade and Flow Line

Unless shown otherwise in the plans, the flow line grade of a culvert should match the stream channel which it replaces. Where the flow line grade of a culvert is relatively steep, debris and sediments tend to pass more easily through the culvert, but increased abrasion in the invert and increased erosion potential at the outlet can be expected. Where the flow line grade is relatively flat, sediment deposition within the culvert can become a problem. This is especially true with culverts that are placed on a flatter grade than the existing stream channel.

When necessary to construct an inlet channel to the culvert, the channel shall provide a smooth transition into the culvert without constricting the flow.

The destruction of vegetation, and rip rap resulting from the modification of culverts will lead to an increase in erosion around the culvert. The outlet side of the culvert is particularly susceptible to increased damage, even under normal flow. If you disturb or change either the culvert inlets or outlets during construction, consideration needs to be given to providing protection. This protection should extend upstream or downstream as needed. At the completion of the work all culvert inlets, outlets, and the channels leading to and from them shall present a neat and workmanlike appearance. At the completion of the contract, they shall be open and ready for operation.

Foundation

Care must be taken to ensure that the ground upon which pipes are to be laid has sufficient stability to support the pipe without excessive or nonuniform settlement. Where the underlying soil is soft or spongy, or subject to excessive consolidation under load, adequate support shall be obtained by excavating and removing the unstable soil and replacing it with satisfactory (usually granular) material, provided this procedure is feasible. In some cases, installation of the pipe should also be laid with a slight camber to overcome anticipated settlement. Where the unstable foundation soil is of such depth that the above procedure is not practical, other means must be used. This may involve the use of partial backfill of granular material to spread the load, placement of a timber or brush mat, the construction of a pile and timber cradle, or other such means. Before selecting a method, the Regional Materials Engineer should be consulted.

Uniformity of support is essential to successful installations. Where transition is made from foundation soils that may consolidate to firm, unyielding ground, special consideration should be given to the transition zone.

Bedding

Where pipe is laid on existing ground, care must be taken to ensure full, uniform support along the barrel of the pipe. Hand shaping and checking with a template may be necessary. When placing concrete pipe with bell-type joints, depressions must be constructed to receive the bell so that full barrel support is achieved. Isolated stones or boulders which may cause point bearing must be removed.

When granular bedding material is used (as is usually the case in trench construction or where rock soils exist), workers sometimes become careless on the assumption that the bedding material will in itself ensure adequate support. Inspection should ensure that proper depth is used and that the pipe is seated in the bedding material to provide full, uniform barrel support.

Care must be exercised in placing pipe in rock fills or where solid rock, hardpan, or cemented gravel is encountered. Pipe installed on these hard materials must be bedded on a cushion of suitable earth, fine gravel, or sand at least 6 in in depth to eliminate concentrated points of loading.

Gravel having sizes larger than 1 in should not be used for bedding material. The importance of good quality material and good installation practices cannot be overstressed. The load supporting capacity of the pipe is directly affected by the quality of the bedding.

When suitable material is not readily available on the project for bedding the pipe, Gravel Backfill for Pipe Zone Bedding should be used. Normally, this material is to be used only from 6 in below the pipe to the limits shown on the *Standard Plans*. In areas of rock embankment, where there is only fragmentary rock material available on the jobsite to backfill the pipe installation, gravel backfill for pipe zone bedding should be used for the backfill within 12 in of the sides and top of the pipe. If it is necessary to remove the material under the pipe excavation zone to produce a firm foundation, this void should be backfilled with Gravel Backfill for Foundations which is more stable than Gravel Backfill for Pipe Zone Bedding.

If the Engineer deems it desirable or necessary to construct part of the embankment prior to construction of the culvert, the embankment shall be constructed at least 5 diameters of the culvert each side of the installation and compacted to 95 percent of the maximum density of the material. The embankment shall be constructed to a minimum height above the pipe invert elevation of at least one half the diameter of the pipe, more if equipment is to be routed over the pipe installation. No tractors or other heavy equipment shall be operated over the top of the pipe until the backfill has reached a height of 2 ft above the top of the pipe. If the Contractor elects to construct the embankment to final grade, shoring will be required for embankments more than 4 ft in height above the bottom of the trench. The upper limit for measurement of structure excavation is a maximum of 4 ft above the invert of the pipe as specified in *Standard Specifications* Section 2-09.4.

Concrete pipe must be laid with the bell or groove end up grade. Metal pipe with riveted or resistance spot welded seams must be laid with the outside laps of circumferential joints pointing up grade and with the longitudinal laps positioned other than in the invert.

It is important that concrete pipe with elliptical reinforcement, fabricated to form an elliptical section, be installed with the "top" or "bottom" position as marked on the pipe exactly on the vertical axis. There are special cases, such as on side-hill installations, where the imposed load will be at some angle other than vertical. In these cases, the pipe should be tilted to meet the direction of load. Theoretically, a small departure from the correct position does not greatly affect the supporting strength of the pipe, as the reinforcement cages may not be shaped to true ellipses, or they may not remain in the true shape during placing of the concrete. Practically, the steel may be in such a position that a large percentage of its effectiveness is lost a short distance away from the vertical axis. Elliptically reinforced concrete pipe is manufactured with lift holes in the top of the pipe or is clearly marked to simplify true positioning. Many culvert pipe failures have resulted because of carelessness in installation with respect to position of the vertical axis.

Backfill

The load supporting strength of any pipe is directly affected by the condition of the material around and above the pipe as well as the bedding material under the pipe. In general, the higher the degree of compaction of the fill or backfill under the haunches and along the sides of the pipe, the less the pipe will deform under load. Also, the higher the compaction, the less the material along side the pipe will consolidate. Consolidation can result in an increased transfer of embankment load onto the pipe. For these reasons, the backfill or embankment material adjacent to the pipe should be selected material free from large rocks and lumps, containing sufficient fines so that it will compact to a relatively impervious mass and it must be compacted to a density and width not less than that required by the *Standard Specifications* or *Standard Plans*.

Care must be taken to obtain proper compaction under the haunches of the pipe and to place and compact the backfill uniformly on both sides of the culvert. Firm support must be obtained. Caution shall be used to avoid over-tamping to the extent that the pipe is lifted out of position.

Many failures of culvert pipe in the past could have been avoided by proper backfilling. No type of pipe can withstand heavy embankment loads unless the backfilling is performed in strict accordance with the *Standard Plans* for Pipe Zone Bedding and Backfill and the *Standard Specifications*.

Placement of Fill Over Culverts

The load that will be imposed on a culvert pipe is affected largely by the manner in which the embankment around and above the culvert is constructed. The maximum height of fill allowable over various sizes and types of pipe and pipe arch culvert is dependent upon backfilling and constructing the embankment over the culvert in strict compliance with the *Standard Plans* and the *Standard Specifications*. Careful attention shall be given to constructing pipe installations in accordance with the appropriate standard except as modified by special provisions.

Equipment shall not be permitted to operate across the culvert until the embankment has been constructed 2 ft above the culvert. The operation of equipment over the culvert installation shall be in accordance with *Standard Specifications* Section 1-07.7.

Mitered ends of metal and thermoplastic culverts may require some type of weighted protection to keep the end of the culvert from floating due to hydrostatic pressure. Usually concrete headwalls are specified for this purpose. Concrete headwalls must be constructed as soon as the embankment is constructed to the height of the headwall so the mitered ends of the culvert will be protected when the first storm is encountered.

SS 7-02.5 Payment

There is no specific payment for any bedding or backfill material placed in the pipe zone, as covered in *Standard Specifications* Sections 7-08.4 and 7-08.5. All costs associated with furnishing and installing the bedding and backfill material within the pipe zone are included in the unit contract price for the pipe.

It should be noted that if the Contractor constructs pipe in excess of the length designated by the Engineer, the excess length will not be measured or paid for. It is quite often undesirable to have culvert pipe constructed in excess of the necessary length from both hydraulic and aesthetic considerations thus the Engineer should have the excess removed at the contractor's expense when this occurs.

7-03 Structural Plate Pipe, Pipe Arch, Arch, and Underpass

GEN 7-03.1 General Instructions

Most of the instructions for the construction of culverts covered in Section 7-02 are equally applicable to the construction of structural plate pipes, pipe arches, arches, and underpasses.

In the construction of multi-plate structures, it is quite important that the bottom plates be correctly positioned for alignment and grade of their edges before the other plates of the section are bolted up so the completed structure will be in proper alignment. Manufacturers of multi-plate structures normally supply detailed assembly instructions with their multi-plates, which should be closely followed, as they will prevent creep or spiral. If the structure starts to creep or spiral, the only way to correct this condition is to remove the plates to where it is in correct alignment and reconstruct the structure.

SS 7-03.3(2) Assembling

High-strength bolts are used in bolting the plates together. In order for the connections to function as designed, the bolts must be tightened to the specified tension. Section 6-03.6B covers the instructions for construction and inspection of high tensile strength bolts. Impact wrenches must be calibrated as specified since overtightening may overstress the bolts and under-tightening will not give the connection the required strength. If more than one crew is assembling the structure, the impact wrenches must be calibrated to tighten the bolts to the same torque.

7-04 Storm Sewers

GEN 7-04.1 General Instructions

Most of the instructions for the construction of culverts covered in Section 7-02 are equally applicable to the construction of storm sewers.

The grade line that storm sewers are constructed on is rather critical since the capacity of the pipe is dependent on its flow line grade. The storm sewer system has been designed to carry the anticipated flow if it is constructed on the grade lines shown in the plans. It is quite important that the effect on the capacity of the pipe be checked whenever it becomes necessary to vary the flow line grade to avoid obstacles that may be encountered on construction.

Careful attention must be paid to the construction of the joints or the storm sewer line may not meet the tests that may be required in the contract.

SS 7-04.3 Construction Requirements

Trenches shall be constructed as specified in *Standard Specifications* Section 7-08.3(1)A.

If the trench is 4 ft or more in depth, Shoring and Cribbing shall be constructed or the sides of the trench sloped as necessary to protect the workers in the trench. See *Standard Specifications* Section 2-09.3(4) and Section 2-09.1.

Backfilling will be in accordance with *Standard Specifications* Section 7-08.3(3).

SS 7-04.5 Payment

There is no specific payment for any bedding or backfill material placed in the pipe zone, as covered in *Standard Specifications* Sections 7-08.4 and 7-08.5. All costs associated with furnishing and installing the bedding and backfill material within the pipe zone are included in the unit contract price for the pipe.

8-01 Erosion Control and Water Pollution Control

GEN 8-01.1 Introduction

Although many items of construction in this chapter are specialized; the procedures for sampling materials, documenting construction, and requiring that work be done in accordance with the specifications is not different from other types of highway construction work. Wherever feasible, plan the work so there is a smooth transition between temporary erosion and sediment control (TESC) best management practices (BMPs) and permanent stabilization that uses soil amendments and plant material.

Federal, state, and local water quality regulations prohibit sediment and other pollutants associated with construction activity from impacting air and water quality. All projects must comply with these laws and the required permits. WSDOT creates a Temporary Erosion and Sediment Control (TESC) plan and a Roadside Work Plan and Weed and Pest Control Plan to prevent erosion, and protect adjacent properties and the environment. *Standard Specifications* Section 8-01 and 9-14 covers the requirements for controlling erosion, water pollution, and stabilizing roadside areas. Applicable provisions are included in the contract and must be enforced by construction staff to ensure effective erosion prevention and water quality protection.

The National Pollutant Discharge Elimination System (NPDES) Construction Stormwater General Permit (CSWGP) is one of the most common permits on WSDOT projects. It requires specific actions prior to and during construction. Projects must obtain coverage under the CSWGP when over an acre of soil will be disturbed and a stormwater discharge from project boundaries may occur. Refer to WSDOTs TESC Manual M 3109.01 for detailed information about TESC planning procedures and CSWGP requirements during construction.

It is WSDOT policy to attach all permits to the contract as appendices; the CSWGP will be included there. Within a permit may be site specific requirements. If the CSWGP includes site specific requirements they will typically be specified on the permit coverage letter from Ecology, or in and Administrative Order issued in conjunction with the CSWGP. The contract-relevant permit conditions should be included in the contract, but review the CSWGP related documents and the contract to ensure that all environmental commitments made during the permitting process were incorporated into the contract. For example, additional environmental commitments may have been made as a result of existing site contamination or outfalls into impaired receiving waters.

Since the CSWGP is reissued by Ecology every five years the requirements change over-time. Because the CSWGP is usually obtained sometime after the main design work was done, it is important to verify that the final TESC plan meets the conditions in the TESC Manual for the permitted project before construction starts.

Project Delivery Memo #15-01 directs all projects to transfer the CSWGP to the Contractor unless the Assistant State Construction Engineer (ASCE) authorizes the project to forgo transferring coverage. If ownership of the CSWGP has been

transferred to the Contractor, the Contract includes General Special Provisions (GSPs) associated with transferring the CSWGP. Additional guidance about the transfer of coverage process can be found on WSDOT's internal Erosion Control webpage, always use the Transfer of Coverage (TOC) guidance document to ensure Ecology's TOC form is filled out, routed, and submitted properly.

It is important to partner with environmental agencies during construction. Early, open communication sets up a good working relationship that may prove invaluable later if problems occur. Permit requirements normally require notification to environmental agencies prior to conducting construction activities. On some projects it may be advisable to invite representatives from regulatory agencies to participate in the preconstruction meeting when environmental issues are discussed.

GEN 8-01.2 Record Keeping and Reporting

All projects covered by a CSWGP must collect weekly discharge samples, or confirm that no discharge occurred, and report the data in a monthly Discharge Monitoring Report (DMR) to the Department of Ecology (Ecology). Ecology requires that all discharge samples be collected by a Certified Erosion and Sediment Control Lead (CESCL). Monthly DMR reporting must begin as soon as the CSWGP is issued, even if construction has not started yet or no discharge has occurred. Monthly reporting continues until the CSWGP has been terminated. Failure to report DMRs as required is a permit violation.

If WSDOT is the permittee, the Region or project office must enter their discharge data into the Construction Water Quality Monitoring (CWQM) database. The HQ Erosion Control program uses CWQM to review data and electronically submit DMRs reports to Ecology. If the project is required to do additional sampling due to outfalls in impaired waters or site contamination they will need to report their DMR data directly into Ecology's WebDMR system instead of CWQM. Refer to Chapter 4 of the TESC Manual for more information about CSWGP monthly reporting requirements and procedures.

When WSDOT submits a Transfer of Coverage (TOC) form, the Contractor becomes the permittee on the effective transfer date listed on the TOC form. Most transfer effective dates are mid-month, complicating the monthly DMR submittal; work with the Erosion Control program to ensure DMRs are submitted correctly for the transfer month. Once the Contractor is the permittee for an entire month the DMR submittal responsibility is fully theirs. Discharge sample data collected by the Contractor should not be entered into the CWQM database. Contractors must use Ecology's WebDMR system to submit their monthly DMRs directly. Project staff can verify the Contractor is submitting their monthly DMRs by using Ecology's Permit and Reporting Information System (PARIS). Additional guidance about reporting procedures when the Contractor owns the CSWGP can be found in Project Delivery Memo #15-01 and on WSDOT's intranet page for Erosion Control.

The CSWGP requires a site log book be maintained on-site. The site log book must contain the following:

- Proof of permit coverage (permit coverage letter or a Transfer of Coverage form),

- A record of the implementation of the TESC plan which includes; an updated version of the TESC and SPCC plan,
- Copies of all site inspection reports, discharge sampling data, CESCL contact information, and information pertaining to installation and maintenance of BMPs (documentation of BMP adaptive management).

The site log book should also contain any project specific permit related documentation such as information about:

- An active chemical treatment system,
- Additional planning or sampling requirements related to outfalls in impaired waters or site contamination, or
- Administrative Orders issued with the CSWGP.

Refer to Chapter 4 of the TESC Manual for more information about maintaining the site log book.

Project offices must retain documentation of compliance with permit requirements during the life of the contract and for a minimum of three years following the termination of the contract. This includes the site log book, discharge sampling data, site inspection reports, TESC plans and other permit related documentation.

SS 8-01.3 Construction Requirements

SS 8-01.3(1) General

SS 8-01.3(1)A Submittals

All projects covered by a CSWGP are required do stormwater pollution prevention planning prior to and throughout construction. WSDOT uses the TESC plan and the Spill Prevention, Control, and Countermeasures (SPCC) plan to meet this planning requirement. The SPCC plan is created by the Contractor to ensure compliance with the "Control Pollutants" stormwater pollution prevention planning element in the CSWGP. The Contractor may bring material on-site that can be hazardous. The Contractor must develop and submit the SPCC plan to the PE in accordance with *Standard Specifications.* Additional information about SPCC plans can be found in Chapter 3 of the TESC Manual or on the Hazardous Materials and Solid Waste webpage.

A TESC plan consists of both a narrative section and plan sheets. The narrative document must include a project specific analysis of erosion risk, a strategy for managing risk, and a list of best management practices (BMPs) that may be used to manage the risk. The plan sheets must show the locations of BMPs and other features such as topography and location of sensitive areas. TESC plans must show locations of the high visibility fence (HVF). High visibility fencing protects sensitive areas and their buffers where impacts are not permitted. Procedures on marking clearing limits and protecting sensitive areas can be found on the Environmental Compliance Guidance for Construction webpage. All TESC plans must meet the conditions in the TESC Manual.

Projects with under an acre of soil disturbance that do not trigger CSWGP coverage must also take measures to prevent discharges where feasible. If discharges cannot be prevented, BMPs shall be used to ensure compliance with all Federal, State, tribal, or local laws, ordinances, and regulations that affect Work under the Contract to prevent impacts to surface waters of the state. These projects should have an abbreviated TESC plan to discuss how surface waters will be protected. An abbreviated TESC plan will be required by the local jurisdiction if there is potential to discharge into a municipal separate storm sewer system (MS4) covered by a Municipal Stormwater Permit (Phase I or II). Refer to Chapter 4 of the TESC Manual for more information or contact Region Environmental for more information.

Although TESC plan designers try, it is difficult to account for all erosion risks that may occur during construction. This known difficulty is why the CSWGP requires the stormwater pollution prevention plans (TESC and SPCC plans) be implemented using adaptive management, meaning the plans must be updated throughout construction to manage changing site conditions as needed to minimize erosion related risks and the discharge of pollutants.

There may be times when it is necessary to exceed the maximum acreage exposure limits allowed by *Standard Specifications* Section 8-01.3(1). If the Engineer grants the Contractor's request to exceed these limits, the Contractor must provide to the Engineer a revised plan, commensurate with the scope and risk of the variance proposed, stating what measures will be used to protect the project from erosion damage, how water quality and sensitive areas will be protected, and include the schedule of methods employed to regain adherence to *Standard Specifications* Section 8-01.3(1). The CSWGP prohibits the Engineer from increasing the time periods required in *Standard Specifications* Section 8-01.3(1) for covering erodible soil that is not being worked.

The Contractor can either adopt or modify WSDOT's TESC plan per *Standard Specifications* Section 8-01.3(1)A. When the CSWGP is transferred to the Contractor the GSP pertaining to the TESC plan submittal requires the Contractor to either: adopt and modify the agency provided TESC plan, or develop a new TESC plan in accordance with the TESC Manual. Prior to construction, determine whether any TESC plan changes are necessary. It is important to clearly understand the TESC plans prior to work beginning. The actual site conditions may not match those described in the original plan due to development in the area, changed construction dates, and inaccuracies in the original plan. Newly paved areas or housing developments located up gradient from the project site may increase surface water flows to the site. Also consider that the original TESC plan may have missed a potential risk. For example, sources of offsite water should be identified so they can be managed in accordance with Standard Specification 8-01.3(1)C. Permanent sources of off-site water may require permanent design solutions. Any offsite water run-on that comes into contact with the construction area becomes the responsibility of the permitted project. An accurate evaluation of current site conditions is essential for preventing erosion.

When conducting an initial evaluation, the inspector should walk through the site with the TESC plan. Any needed changes are marked on the plan sheets so that necessary changes can later be shown to the contractor. It is important when the CSWGP is transferred to the Contractor that the instructions to the Contractor are to comply

with the contract and permit requirements and that the inspector does not direct the Contractor's work methods. Some of the most important factors leading to erosion control problems include: offsite run-on, groundwater seeps, unstable slopes, soils that are vulnerable to erosion or long suspension time, and exposing too much soil during the wet season. Construction staff responsiveness to problem areas and changing site conditions are the most important determining factors in whether or not the TESC plan is effective.

Knowledge of soil types, climate patterns, and hydrology in the project area are of particular importance for TESC planning. If erodible soils are present, special consideration must be given to reducing erosion when these materials are encountered in cuts or used in embankment construction on the project. If problems are encountered during construction, contact Region Environmental or Materials Lab staff for assistance.

Infiltration can often be used when other BMPs fail to treat stormwater runoff and to reduce stormwater volumes. Vegetation should be preserved to the maximum degree practicable and infiltration should be considered whenever conditions allow. On sites with highly permeable soils and large undisturbed areas, infiltration should be used as one of the main stormwater management BMPs.

Should an environmental non-compliance event occur, i.e. an action not in compliance with environmental standards, permits, or laws during construction refer to Section SS 1-07.5 for the appropriate internal notification and corrective action procedures. If a noncompliance event may cause a threat to human health or the environment, or if a discharge exceeds the numeric effluent limit for an impaired receiving water, Ecology must be notified immediately and immediate actions must be taken to correct or stop the noncompliance. In addition a detailed written report may be required by the permit to be submitted to Ecology that includes the date, time, and location of the event, a description of what happened and how it was (or will be) corrected to prevent reoccurrence. Failure to notify Ecology when required is a permit violation.

The Contractor may be required to submit additional plans to the PE for review. For example *Standard Specification* Section 8-01.3(1)C requires a submittal if the Contractor plans to infiltrate certain types of shaft drilling slurry.

Additional erosion control guidance is available on WSDOT Environmental Office web pages.

SS 8-01.3(1)B Erosion and Sediment Control (ESC) Lead

The CSWGP requires that site inspections be performed on active construction projects a minimum of once a week and within 24 hours of a discharge rain event. Site inspection frequency may be reduced to once a month on temporarily stabilized inactive sites (e.g., projects in winter shut down). Site inspections must include all areas disturbed by construction activity, BMPs, and discharge points. The individual performing the site inspection must be a Certified Erosion and Sediment Control Lead (CESCL).

Contractors shall perform site inspections in accordance with *Standard Specifications* Section 8-01.3(1)B. The contractor must identify their Erosion and Sediment Control (ESC) Lead for the project and include the ESC Lead on the Emergency Contact List.

The ESC Lead must have, for the life of the contract, a current CESCL from a course approved by the Washington State Department of Ecology. Information on approved training can be obtained at www.ecy.wa.gov/programs/wq/stormwater/construction/index.html.

WSDOT staff should verify the Contractor is performing the site inspections, and maintaining the TESC plan in accordance with *Standard Specifications* Section 8-01.3(1)B . A copy of all ESC Lead site inspection reports must be kept on-site in the site log book. Chapter 4 of the TESC Manual has additional guidance about site inspections, documenting BMP adaptive management, and maintaining the site log book.

If WSDOT can identify potential erosion-prone areas early, we can prevent problems such as stop work orders and fines, construction delays, and unfavorable publicity. Site inspections help verify that the Contractor is implementing the TESC and SPCC plans and that BMPs are working as required. Projects should not accept site inspection reports that are incomplete, inaccurate, or misleading. WSDOT inspectors should walk through the site to verify site inspection report findings or to ensure BMPs are installed, maintained, and repaired as required. WSDOT inspectors should work with the Contractor's ESC Lead when TESC issues are identified.

Whenever feasible, WSDOT inspectors should be present during BMP installation to ensure proper methods and materials are used. Improperly installed BMPs will not be effective and can contribute to an erosion or noncompliance event. Some temporary products have materials requirements in the *Standard Specifications* Section 9-14. The permit requires that BMP effectiveness be evaluated in the field (through site inspections and discharge sampling). If installed BMPs are ineffective they must be improved or replaced (BMP adaptive management) to control erosion and prevent turbid discharges. BMP adaptive management and maintenance must be documented in the site log book or drawn onto the TESC plan sheets. The on-site TESC plan (narrative or plan sheets) should be updated as needed to reflect current site conditions and BMPs. Chapter 4 of the TESC Manual has additional guidance on BMP adaptive management and site documentation requirements. When the CSWGP has been transferred, compliance becomes a contract enforcement issue. Project Delivery Memo #15-01 provides guidelines for how projects can enforce contract requirements related to CSWGP compliance.

SS 8-01.3(1)C Water Management

Water quality monitoring is a permit requirement on many WSDOT construction projects, whether work is being done in the water or on land. Sampling frequency and location, compliance triggers, planning and reporting requirements vary depending on the type of permit or certification issued.

Turbidity and pH are the two most common measurements for pollutants used during construction activity. Turbidity is measured in nephelometric turbidity units (NTUs) and is a measurement for the clarity of water and is the most common pollutant sampled during construction. The second most common pollutant is acidic and alkaline water. The acidity or alkalinity of a water sample is measured in terms of its pH with lower numbers indicating acidity and higher numbers indicating alkalinity. Water that is too acidic or alkaline (outside the range of pH 6.5 – 8.5) can kill fish and cannot be

discharged to surface waters under the CSWGP. Discharge samples must be evaluated for pH when a project will use a significant amount (1,000 cubic yards or more) of fresh or recycled concrete, or other substances such as engineered or amended soils that could modify the pH of the water.

WSDOT has developed detailed protocols in the TESC Manual to comply with the CSWGP discharge sampling and monthly reporting requirements. Discharge samples must be collected weekly to verify that on-site BMPs are working as required. Discharge sample values must be compared to the benchmark and phone reporting trigger values for turbidity (and pH if a significant amount of concrete or pH modifying substance is used), to determine if BMPs need to be adapted or maintained. If discharge samples exceed benchmark or phone reporting trigger values, several follow-up actions become required. It is a violation of the CSWGP if any of the follow-up actions are not performed.

If a discharge of 250 NTU or higher occurs the Department of Ecology must be notified with 24 hours via their regional Environmental Report Tracking System (ERTS). Failure to notify Ecology as required is a permit violation. Follow the procedures in Chapter 4 of the TESC Manual to ensure the sampling, BMP adaptive management, and notification requirements in the CSWGP are met.

The CSWGP authorizes uncontaminated stormwater discharges (and some non-stormwater discharges such as uncontaminated dewatering) from construction areas to surface waters of the state. If the project determines that active chemical treatment, such as chitosan enhanced sand filtration (CESF) will be needed to prevent the discharge of pollutants, contact Region Environmental or the HQ Erosion Control program to ensure all requirements are met prior to construction. The Department of Ecology has design, operational and chemical usage requirements for active chemical treatment systems that must be followed. Ecology also requires a Request for Chemical Treatment form to be filled out and submitted by the permittee prior to any discharge from an active chemical treatment system. Additional information on active chemical treatment can be found on the Erosion Control internal webpage.

The CSWGP allows high pH stormwater (stormwater that has come into contact with a pH modifying substance) to be neutralized using approved methods prior to discharge (refer to BMP 5-1.1.17 - High pH Stormwater Neutralization in Chapter 5 of the TESC Manual).

The CSWGP prohibits specific discharges including: concrete slurry from grinding operations, wastewaters, fuels, chemicals, soaps, solvents, and other contaminated discharges. Process wastewater generated on-site as part of a construction process, including shaft drilling wastewater, tire wash water, and concrete washout, cannot be discharged to surface waters under the CSWGP. If groundwater or stormwater is used as part of a construction process, it becomes process wastewater, and cannot be discharged to surface waters. Under certain conditions some types of process wastewaters may be infiltrated. Infiltration of process wastewater shall be in accordance with the CSWGP, the *Standard Specifications*, and the TESC Manual. As standard practices for dealing with different sources of process wastewater continue to evolve, contact Region Environmental or Headquarters Environmental Services to determine if infiltration is an acceptable treatment option.

Sometimes neighboring sites or projects cause increases in turbidity that can be falsely blamed on WSDOT. It is important to document such events or report them so that we are not unfairly blamed for other people's impacts to water quality.

Projects that involve in-water work may be issued a Hydraulic Project Approval (HPA), a Letter of Verification (LOV), or a 401 Individual Water Quality Certification. Compliance for in-water work is evaluated differently than it is on land based construction covered by a CSWGP. In-stream sampling (e.g., upstream and downstream) is different than discharge sampling for a CSWGP. Refer to Chapter 1 of this manual for additional information about in-water work monitoring.

The permittee is required by law to report any water quality exceedance or permit violation to the Department of Ecology. WSDOT has developed Environmental Compliance Assurance Procedures (ECAP) that must be implemented immediately to report any permit non-compliance when we own the permit. These procedures are contained in SS1-07.5.

It is important that environmental agencies hear about a problem from us as soon as it happens rather than from the public or by discovering it themselves. Self-reporting sends a message that we are making a good faith effort and have nothing to hide. Not reporting suggests that we are covering up a problem or simply do not care.

As part of ECAP, all Contractor ESC Leads must notify the Project Engineer upon discovery of a water quality standard exceedance or situation that may lead to a permit violation such as an exceedance of the CSWGP phone reporting trigger value (250 NTU). Nevertheless, it is our responsibility to be watching ourselves. If a problem is identified, WSDOT inspectors should notify the Project Engineer and immediately take all measures possible to reduce impacts of the problem.

SS 8-01.3(2) Seeding, Fertilizing, and Mulching

The CSWGP makes an important distinction between temporary stabilization (e.g., inactive over winter sites stabilized with temporary BMPs) and final stabilization. The CSWGP cannot be terminated until a project has reached final stabilization and the Contract Work is physically complete, all temporary BMPs have been removed unless approved by the Project Engineer to remain, and all exposed soil areas have been fully stabilized with permanent BMPs such as vegetation, rock, or equivalent permanent stabilization measures. Failure to remove non-biodegradable BMPs and permanently stabilize soil prior to submitting the Notice of Termination form is a permit violation. All permit requirements must be performed until the CSWGP has been terminated. Refer to Chapter 4 of the TESC Manual for more information about terminating a CSWGP.

Upon final stabilization, all temporary BMPs must be removed in accordance with Standard Specification Section 8-01.3(16). Per Section 8-01.3(16) the contractor must remove temporary BMPs in a way that minimizes soil disturbance, but it is the responsibility of the inspector to ensure this is done and soil stabilization is maintained. Some projects may choose to leave sediment control BMPs such as silt fence in place until permanent vegetation has established, even if the duration extends beyond contract completion. If the silt fence is left in place, the permit cannot be terminated and all of the CSWGP requirements still apply, including the monthly reporting requirements (refer to chapter 4 of the TESC Manual). The Project Engineer may need

to coordinate with State Maintenance forces to arrange for silt fence or other BMP removal occurring after the contract is completed.

The permanent protection of earth cut and fill slopes should be accomplished as soon as possible. When provided in the contract, compost blanket should be evenly placed on the slopes to a depth specified, prior to seeding or other planting. The timing and scheduling of the compost application may occur as early as possible for erosion control purposes and not necessarily immediately prior to seeding and planting operations. If compost is applied days or weeks before seeding and mulching, or in arid and/or windy climates, the soil or compost needs to have a tackifier applied to prevent the compost from blowing away.

When provided in the contract, topsoil should be evenly placed on the slopes at the specified depth for areas to be seeded. After placement of top soil, large clods, hard lumps, rocks 2 inches in diameter or larger, and litter shall be raked up, removed, and disposed of by the Contractor. Refer to *Standard Specifications* Section 8-02.3(4) for more information.

Areas to be seeded are to be prepared after final grading so that the soil surface is rough and loose, with ridges and furrows (narrow depressions) perpendicular to the slope or to the natural flow of water. This will slow the water velocity, increase water detention and infiltration, decrease runoff, and promote grass growth. This can be done through catwalking, the use of a cleated roller, crawler tractor, or similar equipment. Refer to *Standard Specifications* Section 8-01.3(2)A for more information.

Seed and fertilizer are to be uniformly applied on the slopes at the rate and mixture specified in the contract. Application shall be by hydro-seeder, blowing equipment, properly equipped helicopters, or power drawn drills or seeders. Where areas are inaccessible for this equipment, or when specified, approved hand seeding will be permitted.

In order for the Contractor to order the proper amount of materials for the project and to provide the Inspector a method of checking the rate of application of the seed and fertilizer, the Project Engineer should measure the areas to be seeded and fertilized as soon as they can be determined and inform the Contractor of the anticipated acreage. If, in the opinion of the Engineer, the seeding and fertilizing areas can be accurately determined using digital terrain modeling or other design data, the Engineer has the option of using this data in lieu of field measuring. During the seeding and fertilizing operation, the Inspector shall see that the material is placed at a uniform rate and compare the amount of seed and fertilizer applied, by counting the number of bags of material, with the area covered to verify that the proper rate of application is being placed.

The seed and fertilizer may be applied in one application provided the seed and fertilizer are not mixed more than 1 hour prior to application. Mixing more than 1 hour prior to application will damage the seed. Otherwise, the seed shall be applied in a separate application prior to fertilizing and mulching. Lime, if specified should be applied separately from the seed and mulch.

Seed on soil is not considered adequate erosion control until a stabilizing cover vegetation is established. For this reason, mulch is often applied with seeding to provide immediate coverage. Straw, wood strand mulch, and compost often get used with seeding application, as do a variety of hydraulically-applied erosion control products (HECPs).

West of the summit of the Cascade Mountain Range, HECPs may be applied with seed and fertilizer. Each pass must be applied from a different direction to get complete coverage of the soil.

East of the summit of the Cascade Mountain Range, the seed and fertilizer must be applied in a first pass. Short-term mulch may be added as a tracer. Consult with the Region Landscape Architect or the HQ Design Landscape Architect if assistance is needed.

Mulch is uniformly applied to the seeded areas within 48 hours after seeding. Straw mulch is to be applied with a forced air spreader. Straw mulch may not be practical in windy areas or in areas of concentrated flow. HECP is normally applied with a hydroseeder. Checks are necessary to determine that the mulch is applied uniformly and at the required rate. HECP should completely cover the ground surface with no gaps. In areas that cannot be reached by a mulch spreader, hand methods resulting in uniform application may be used.

If using an active chemical treatment system, such as chitosan enhanced sand filtration (CESF), minimize the potential for chemical products such as tackifiers or polyacrylamide (PAM) as it may impact treatment system performance. Organics from mulch products, especially compost and straw, may also impact treatment performance.

In order to control the possible erosion resulting from fast runoff on steep slopes, biodegradable erosion control blankets are often used (see Chapter 5 of the TESC Manual). Blankets also get used on flatter slopes where erodible soils are encountered. Using biodegradable erosion control blankets can provide a quick temporary protection until the grass has grown enough to be permanent protection for the soil, but the blanket cannot be expected to hold up to concentrated flows, so top of slope protections should be made to prevent such flows from developing and hitting the slope. Ditching, drains or dispersion BMPs such as compost socks should control drainage from above or beyond the raw slope. Every effort should be made to ensure that this kind of runoff is diverted away from the slope. In some cases, as determined by geotechnical analysis, permanent erosion control blankets or turf reinforcement mats (not biodegradable) may be needed to stabilize a slope.

8-02 Roadside Restoration

GEN 8-02.1 General

Inspection of all roadside plants and planting areas should be performed by trained and experienced personnel. This section is written to provide a unified source of information for project personnel, including the landscape architect. It is not intended as a substitute for professional assistance. In most cases, the assistance of the region landscape architect should be engaged to provide this expertise. The *Roadside Manual* M 25-30, and in particular Sections 700, 710, 720, 800, and 820, provide additional

information on restoration related topics. When questions of adequacy of roadside restoration materials and procedures are encountered, or when differences of opinion concerning the acceptance or rejection of materials occur and the answers are not readily found in this section, the Region Landscape Architect or HQ Landscape Architect can provide assistance. In cases where insect damage and diseases are suspected, the services of an entomologist or plant pathologist may be required.

The Roadside Policy Manual requires vegetation to be saved and protected to the maximum extent possible. Construction activities, especially clearing, grubbing, and excavation, may result in damage to existing trees and shrubs that are designated to remain. If this happens, or if pruning of live vegetation is needed, the Inspector may contact the Region Landscape Architect or HQ Design Landscape Architect for assistance. Early identification and remediation of the damage will minimize shock to the vegetation.

Plants require a different understanding for construction. Drying out, excessive heat and cold, and other environmental stresses can be extremely detrimental to a restoration effort. The planting plan was developed to respond to the contract impacts, but the quality and treatment of the materials on the site will be of the utmost importance to ensure success.

Besides being used for environmental or aesthetic reasons, plants may also be used during construction in soil bioengineering. Soil bioengineering may be used as a BMP to stabilize and revegetate slopes and stream banks when changes in condition require adaptation to control sediment and erosion. For more information on the uses of soil bioengineering, see the *Roadside Manual* M 25-30 Chapter 740, and the Roadside and Site Development website.

Before planting begins, a meeting with the Project Engineer, the inspectors, and the Landscape Architect is recommended. The agenda for the meeting scheduled by the Project Engineer should include but not be limited to the following:

- The locations of planting areas with respect to the project as a whole.
- Construction issues such as mixing of soil amendments into the soil and compaction requirements. High levels of compaction are detrimental to roadside planting success. The ideal soil for plant growth is a loose soil with the right balance of organic matter, microorganisms, and minerals. Soils for plant establishment typically require a density less than 80 percent.
- Discuss the need for Maintenance involvement later in the project. At the initial layout stage, maintenance personnel may be better able to discuss plant layout and weed control coordination than may have been possible during the design phase.
- Discuss proposed modifications to the grading or planting plans with the Landscape Architect.

Ongoing coordination is needed between the Project Engineer, Inspectors, and Landscape Architects to assist in the successful completion of the Project and a successful hand-off to Maintenance at the end of plant establishment.

GEN 8-02.2 Landscape Terminology

Acid Soil/Alkaline Soil – The acidity or alkalinity of a soil is measured in terms of its pH. Various plants respond differently to pH variations. Generally, the soil west of the Cascades is acidic, while east of the Cascades is more basic. The pH scale ranges from 0 to 14. A pH measurement of 7 indicates a neutral soil; a pH measurement below 7 indicates an acidic soil; and a pH measurement above 7 indicates an alkaline soil or basic soil. Generally, plants are selected for a particular area based on their ability to survive without a need to change the pH of the soil.

Balled and Burlapped (B&B) – Plants are prepared for transplanting by digging them so that the soil immediately around the larger, central roots remains undisturbed. The ball of earth and root is then bound in burlap or similar mesh fabrics. An acceptable B&B root ball should contain 90 percent (visual estimate of volume) of the earth material held together with root system when removed from the burlap. The soil must remain moist, but not fully saturated, before planting.

Bare Root (BR) – Most deciduous plants are dug when dormant. The roots are cleaned, pruned, and usually stored in moist material. Roots must remain moist and not allowed to dry out.

Botanical Name – The botanical, or scientific name is the plant name, written in Latin, which is used universally. The common name is the name used in a local area, and is not necessarily the same name used in other areas. The correct botanical name is usually found in "Standardized Plant Names" and is available from the Landscape Architect. The botanical name usually consists of two names, Genus and Species, but may include additional names.

Genus:	1st word
Species:	2nd word
Variety:	3rd word (if appropriate)
Example:	Sambucus racemosa melanocarpa
Genus:	Sambucus
Species:	Racemosa
Variety:	Melanocarpa

Branch – An offshoot from a trunk or main stem. It could be also called a bough or a portion of a main stem.

Bud – A small protuberance on a stem, branch, or cutting containing an undeveloped shoot, leaves or flowers.

Caliper – The diameter of the trunk of a deciduous tree is measured 6 inch above ground level, up to 4 inch caliper size. If greater caliper than 4 inch, it is measured at 4.5 feet above ground level. The measurement at 4.5 feet is commonly referred to as diameter at breast height (dbh).

Cambium – A thin layer of generative tissue lying between the bark and the wood of a stem, most active in woody plants. The cambium produces new layers of phloem on the outside and of xylem (wood) on the inside, thus increasing the diameter of the stem. Healthy cambium is green in color.

Cane – A primary stem which starts from the ground of a shrub or at a point not higher than ¼ the height of the plant. A cane generally only refers to growth on particular plant material, such as roses, etc.

Clumps – Plants with at least double the number of canes required for standard material; trees with three or more main stems starting from the ground. Vine maples are sometimes sold by the clump.

Collected Material – Trees, shrubs, or other plant material collected from native stands, including Christmas tree stock and plants from native stands or forest plantings. After one growing season at the nursery, they are no longer considered collected material.

Compost – Stable, mature, decomposed organic solid waste that is the result of the accelerated aerobic biodegradation and stabilization under controlled conditions. The result has a uniform, dark, soil like appearance that smells like rich earth. Any ammonia smell indicates the compost is immature and a Solvita test should be run on the material.

Container Grown – Plants grown and delivered to the job site in plastic pots or other containers. Container grown plant should not be allowed to dry out while in the container. Usually, plants grown in containers are in a very free draining soil mixture made up of nutrient free components. Container grown plants have a tendency to dry out and decline in vigor when not under the care of the nursery.

Container grown material should have a firm root ball which will hold 90 percent (visual estimate of volume) of the ball material when removed from the container. Good container grown materials will hold virtually all of the soil in the root zone when a good growing medium is used. Some root growth should be visible in the outer edges of the ball. Excessive roots at the bottom of the ball indicate lack of proper root pruning. Excessive roots at the side or bottom of the container could indicate a root bound condition.

Cuttings – Cuttings are detached leaf buds or portions of branches which under favorable circumstances are capable of producing roots when placed in a growing medium. Common species used as cuttings are willow, cottonwood, and red osier dogwood.

DBH – Diameter at breast height. This is a standard measurement of a standing tree trunk and is measured at a height of 4.5 feet.

Fertilizer – Any natural or artificial material added to the soil or directly to the leaves to supply one or more plant nutrients. Generally, a complete fertilizer refers to a fertilizer that contains nitrogen, phosphorous, and potassium (NPK). Occasionally, sulfur (S) is used, especially in alkaline soils to lower the pH. Indications on a container are usually numerical 10-8-6 or 20-10-5, etc. These numbers indicate the percentage of actual nutrient element available, i.e., 10 percent nitrogen, 8 percent phosphorous, and 6 percent potassium (10-8-6). Other minor nutrients are sometimes added to NPK such as magnesium, manganese, boron, iron, zinc, calcium, etc.

Applying the wrong type of fertilizer can harm or kill plants. Consult with the Regional Landscape Architect or HQ Design Landscape Architect before applying fertilizers not specified in contract. In addition, approval by the State Construction Office may be required and approval by the Project Engineer and Regional Construction/Operations Engineer's Office is required (see the Change Order Check list).

Heeling In – A method of temporarily storing plants by covering roots with moist sawdust, mulch, soil, or a mixture of other materials capable of good moisture retention, to keep the roots from drying out.

Herbicide – An herbicide is a pesticide chemically formulated to control or destroy weeds. Herbicides are broken down into two main groups: Postemergence Herbicide and Preemergence Herbicide. Postemergence herbicide is a plant killing material that acts on the active growing surface of a plant after the plant has emerged from the soil. It is usually most effective during the rapid growth of the plant. Preemergence herbicide is a plant killing herbicide which acts to prevent the seeds, bulbs, tubers, stolons, etc., from sprouting (before-emergence).

Inoculated Seed – Seeds of the legume family that have been treated with nitrogen-fixing bacteria to enable them to make use of nitrogen from the soil atmosphere.

Mulch – Mulch is any loose material placed over soil, usually to retain moisture, reduce or prevent weed growth, insulate soil, or improve the general appearance of the plant bed. Additional fertilizer is sometimes necessary in order to offset the loss of plant nutrients used by the microorganisms that break down the mulch, especially when using non-native stock.

Mycorrhiza – A beneficial group of fibrous fungi that attach to the roots and absorb water and nutrients in solution and transfer this solution to the roots of plants. In effect, they multiply the plants' root systems many times. These can be seen as fine white netting on moist compost or bark mulch. This is a good thing and not something to be concerned about.

Node – A small protuberance on a stem, branch or cutting containing an undeveloped shoot, leaves or flowers.

Pesticide – A pesticide is any substance or mixture of substances intended to control insects, rodents, fungi, weeds, or other forms of plants or animal life that are considered to be pests.

Root Ball – Ball of earth encompassing the roots of a plant. Generally, the root ball will have a good portion made up of root networks. A "manufactured-root ball" is one where the root system is not adequate to hold the soil in place. Manufactured root balls should not be accepted, since the root system is not developed sufficiently.

Rootbound (Pot Bound) – The condition of a potted or container plant whose roots have become densely matted and most often encircle the outer edges of the container. Generally, this condition is a result of holding the plant in the container for too long a period. Root bound plants should be rejected. See *Standard Specifications* Section 9-14.6(2). Circling roots will eventually kill the plant.

Root Collar (Plant Crown) – Root Collar is the line of junction between the root of the plant and its stem, also known as the plant crown. The plant needs to be planted so the root collar is at or within an inch above the soil surface.

Runner – A long, slender, trailing stem that puts out roots along the ground. Where the nodes make contact with the ground, a new plant is produced. (For example: Kinnikinnick or wild strawberry.)

Soil Bioengineering – Soil bioengineering combines the use of live plants or cuttings, dead plant material, and inert structural members to produce living, functioning land stabilization systems.

Soil Amendment – A mixture of a growing medium, such as compost with the native top soil.

Vigorous – Plants that demonstrate vigorous growth have bright green cambium, strong stems and healthy leaves with no indication of stress (discoloration of leaves, insect damage, or wilt). Plants growing in a vigorous condition also have a well formed and healthy full crown with plump, firm and moist roots that have light growing tips during the growing season. A vigorous stand of grass has a lush, rich-green appearance with no dead patches or major gaps of growth within the established area. A stand of grass that displays rusting, wilting, stunted growth, diseased grass, or browning and yellowing of leaves is not considered vigorous.

Watering-in – Watering-in is a process used to settle the soil with water by eliminating air pockets during the planting process. This is also known as “puddling”.

WSNLA – Washington State Nursery and Landscape Association.

GEN 8-02.3 Reference Reading

It is recommended that each office administering roadside planting, view point development, and rest area contracts, obtain and maintain a library of books and reference materials listed under Additional Sources of Information in Section 800 of the *Roadside Manual* M 25-30, before the Contractor commences work. Another resource is the *Inspection Guide for Landscape Planting* published by AASHTO.

SS 8-02.2 Materials

Materials for roadside restoration include many items besides plant material, such as compost, topsoil, bark or wood chip mulch, soil amendment, pesticides, fertilizer, seed, hydromulch, staking and tying material, irrigation/electrical material (pipe, pumps, sprinklers, backflow control devices, valves, etc.). Drainage and surfacing materials are covered in their respective sections of the manual.

SS 8-02.3 Construction Requirements

SS 8-02.3(2) Roadside Work Plan

Before starting any work in Sections 8-01, 8-02, and 8-03 that disturbs the earth, forward the Roadside Work Plan to the Region Landscape Architect or the HQ Design Landscape Architect for review and approval recommendation. The Plant Establishment Plan should be approved prior to initial planting acceptance.

Ensure the progress schedule is attached for approval. The Contractor's progress schedule should show the order in which the Contractor proposes to perform the work within the contract time. It should show the beginning and completion times for the work necessary to provide all Contract requirements covered in accordance with Sections 8-01, 8-02 and 8-03 as well as several prominent features of the work provided in the contract. Upon request of the Project Engineer, the Contractor will submit supplementary progress schedules in the form required by the Project Engineer. In the case of material to be grown, the progress schedule shall, in detail, specify planting and propagation times. Materials must be grown outside of greenhouses for a minimum of two weeks to ensure hardening off prior to placing them in the field.

The Roadside Work plan indicates the proposed timing to perform the work and should include (but is not limited to) the following activities :

- Site and Vegetation Protection
- Clearing, Grubbing, or Pruning
- Herbicide Application
- Wetland excavation
- Grading
- Soil preparation
- Planting and Seeding Preparation
- Compost placement and incorporation
- Bark Mulch Placement
- Planting and Seeding Operations
- Irrigation or watering methods

The Weed and Pest Control plan must be reviewed and approved before starting work on the project. Items that should be covered in the Plan include, but are not limited to:

- Unwanted Vegetation or Target Weeds
- Weed and Pest Control methods
- Chemicals proposed for use
- Dates of Weed and Pest Control operations
- The correct timing for herbicides, fertilizing, mulching, pruning and all other phases must be specified in relationship of one event to another.

- Supervisor/Responsible Contractor Contact Information
- Pesticide Applicator Contact Information and Pesticide Applicator's License Number. All pesticide applicators must be licensed.

Plant establishment begins when plants are planted and the planting has been accepted. The Plant Establishment Plan must show the scheduling, frequency, dates, materials and equipment utilized, whichever may apply, for all plant establishment activities including, but not limited to, the following:

- Weed Control for Target Weeds within Planting Areas
  - Chemical Applications (post and pre-emergent)
  - Hand weeding and removal
- Fertilizing
- Watering
- Litter and Debris Removal
- Pruning
- Insect and Disease Control
- Erosion Control Methods and Procedures
- Plant Replacement
- Irrigation system (if applicable)
  - Winterization and Procedure
  - Spring Start-up and Procedure
  - Cross-Connection Control Device – Annual Testing and Inspection for Complete Operation

SS 8-02.3(5) Planting Area Preparation

Complete preparation steps prior to installation of plant materials according to the requirements of the contract plans and specifications:

- Weeds are controlled throughout the entire planting and seeding areas, as called for by the contract specifications. Inspect weed root systems to ensure complete weed eradication. The interior color of dead or dying roots is usually tan or brown, whereas healthy roots are usually white. If the weed's root systems are still alive, delay planting until they can be killed. Perennial weeds with extensive root systems such as Canada thistle, Japanese and Bohemian knotweed, horsetail, wild pea, field bindweed, and quack grass (see *Common Weeds of the United States* – United States Department of Agriculture) should only be controlled with herbicides by a licensed applicator, to avoid the spread of live plant parts that might produce further weed patches with manual removal.
- Planting holes, pockets, or beds are excavated to the required size and depth, and spaced as shown on plans.
- The backfill mixture is prepared and stockpiled according to contract specifications.
- The planting holes are excavated to the sizes indicated in the Contract Plans. The *Standard Plans* contain minimum planting hole diameters.

SS 8-02.3(7) Layout of Planting

The layout of planting areas in wetlands or stormwater facilities is critically important to the wetland's success. Many plants have exact water requirements and will not thrive or even survive if planted in water too deep or too shallow. Changed conditions happen frequently during the grading phase. Work with the Landscape Architect to ensure the hydrology of the grades are finished to the necessary elevations before planting. Close coordination with the designer during the grading and plant layout phases can identify potential problems and fix them before they become costly mistakes.

Tree locations might need to be adjusted to anticipate the size of the tree when fully grown for:

- Minimum clearance to roadways
- Mowing edge setbacks
- Sight lines
- Existing utilities
- Signs
- Structures
- Drains

Planting areas might also need to be adjusted to align with the plans and the disturbed areas, and the edge should create a "flowing" outline that is aesthetically pleasing and mowable. It is important that sufficient stakes are used to clearly outline the planting areas. Again, the Landscape Architect should be consulted to ensure proper planting area placement.

- Review the plan sheets, quantities, details, specifications, and other provisions in the contract with the Contractor Questions or interpretations can be answered or problems resolved through discussion with the Region Landscape Architect.
- All materials that have specification requirements shall have an approval of source prior to incorporation or use on the project. The Contractor is required to submit samples of materials to verify that the materials adhere to the specifications. See Chapter 9 for further instructions and Section 8-2.6 for examples.
- The Inspector should check and accept the stakeout of all planting areas and planting hole locations prior to excavation. Minor relocation of planting areas and holes can be done at this time to avoid utility lines, rock outcrops, drainage ditches, signs, obstructions, or impervious or wet soil conditions. If minor relocation of plantings is not possible, the Inspector should contact the Landscape Architect to adjust the design requirements or quantities.

SS 8-02.3(8) Planting

Plant Material

Inspection at the Nursery – Upon Contractor request, inspections may be done at the nursery. However, acceptance is only given once on-site inspection determines the adequacy of the material to meet the specifications. The Region Landscape Architect or HQ Landscape Architect should perform this inspection and make recommendations to the PEO to be communicated to the Contractor.

Inspection at the nursery or other source of supply should include the following:

1. Review the general condition of the plant in the block from which the stock is to be taken:
   a. **Uniformity of Leaf Coloration** – Yellowing or other leaf discoloration could indicate poor drainage, fertilizer deficiency, herbicide damage, insect damage, or disease, and may not meet specifications.
   b. **Bud Development** – During dormant periods of the growth cycle, plants should have buds that are firm, moist, and uniformly spaced. A slight cut into the bark may be made to determine that the cambium, or growing layer just beneath the bark, is moist and green.
   c. **Uniformity of Growth** – Acceptable plants in any given block should exhibit uniform vigor and health.
   d. **Spacing of Plants in the Nursery Row** – Sufficient spacing is needed to permit vigorous development of the individual plant.
   e. **Soil** – Plants to be balled and burlapped must be grown from soil that will hold a firm ball. Reject broken or loose balls due to the potential for damage to the hair roots.
   f. **Presence of Weeds** – Reject containers with an abundance of weeds in the containers. An overgrown, weed-infested nursery block indicates lack of care and the plants growing in it may be in a poor state of vigor.
2. Check individual plants for freedom from defects such as:
   a. **Decay** – Reject trees with spots of decayed tissue on the trunk and branches.
   b. **Sunscald or Sunburn** – Plants with damage to cambium tissue and bark due to sun scald on the south or southwest side are unacceptable due to the potential for secondary insect and/or disease infestation.
   c. **Abrasions of the Bark** – Abrasions severe enough to damage the cambium tissue may be sufficient for rejection.
   d. **Girdling Roots** – Roots that grow around another root or a stem are cause for rejection.
   e. **Improper Pruning** – Pruning cuts should be made just outside the branch collar and close to the trunk or supporting branch. When a cut is made to encourage branching, it should be made back to a bud. Improperly pruned stubs that have died back are a significant point of entry for disease organisms.
   f. **Frost Cracks** – Long vertical splits in the bark and/or wood may occur on the south and southwest sides of young and thin-barked trees. Such cracks may be invaded by canker or decay-producing fungi and bacteria.
   g. **Signs of Injury** – Dead leaves, dry buds; dieback of twigs and branches; blackened sapwood and sudden, discolored patches of bark (sunscald) on the trunk or limbs.

h. **Diseases** – Look for abnormal growth of leaves, twigs, fruits, discoloration of leaves and bark, unusual discharges of sap through the bark, etc. Reject plants showing evidence of disease.

i. **Insects** – Look for insect eggs, spider webs, or evidence of damage from insect feeding on leaves, twigs, buds, or other plant parts. Examine the trunks of trees for borer holes which appear as tunnels drilled into the bark and inward into the wood of the trunk. Reject trees with evidence of borers or other insect damage. Often sawdust-like material can be found below bore holes.

3. Check individual plants for proper habit of growth as follows:

   a. If a particular habit, i.e., single stem, multiple stem, has been specified, plants must conform to this requirement.

   b. If no particular growth habit has been specified, then the current *American Standard for Nursery Stock, Z60.1* as published by the American Association of Nurserymen should be used as a guide.

   c. Top growth on shade and flowering trees should be symmetrically balanced, have a single leader, and well-developed branching characteristic of the species.

   d. Evergreen trees should be uniformly dense. Sheared plants, such as Douglas fir sheared for Christmas trees, are not allowed, unless specified.

   e. Shrubs should be well branched in a manner characteristic of the species. If not specified in the contract, the standards for size and number of branches by species listed in the current *American Standard for Nursery Stock, Z60.1* applies.

4. Remove a random sampling of plants from their containers to verify that the root system is healthy. Reject root-bound plants and plants that have insufficiently developed root systems to hold the soil together. Healthy roots will hold the soil mass together yet not be crowded around the outside perimeter of the container.

5. Tag planting stock meeting the above criteria with seals placed on all plants or representative samples at the nursery to assist in future inspection of these plants when delivered on the job site. Seals placed on planting stock for later identification do not imply acceptance on the construction site.

Inspection at the Construction Site – Acceptance of stock may only be given at the construction site according to the *Standard Specifications*. It ensures that the plants delivered are from an accepted source, are in a healthy and undamaged condition, and conform to sizes, quantities, and standards called for in the specifications. Plant inspection lots should be established and a representative number of plants should be inspected in accordance with Section 9-4.44.

Inspect the condition of the plant and verify that proper handling procedures have been followed from the time of initial inspection to delivery at the construction site. If there are questions about the following checklist, consult with the Landscape Architect for clarification.

Inspect plants delivered to the construction site for the following:

1. All planting stock are of the genus, species, variety, and sizes specified and conform to the contract specifications for the particular species, or variety, regarding straightness of trunk, branching structure, proportion, and size of material.
2. Individual plant measurements meet the contract specifications. If a particular detail of measurement has not been specified, the current edition of *American Standard for Nursery Stock, Z60.1* shall be used.
3. Use judgment and selectivity to sample plant materials. Inspect the entire lot for the same criteria as in the nursery inspection. Ensure each shipment of plants is free of disease and insect pests, and meets all applicable State and Federal certification requirements. All necessary quarantine or State nursery inspection certificates accompany each shipment.
4. All trees and a representative sample of shrubs are legibly tagged with the correct botanical name, common name, and size to agree with the specifications and plant list. Bare-root plants have been shipped in bundles with each bundle properly tagged.
5. Inspect planting stock as the material is being unloaded, or immediately thereafter, so that plants that are obviously unacceptable can be set aside for removal from the project site.
   a. It is sometimes helpful to mark the pots of unacceptable plants with a dot of spray paint to ensure they are set aside to return to the supplier.
   b. Set plants in blocks of 10, 25, 50, or 100 containers for ease of counting plants – block size is dependent on the scale of the project.
6. Large root stubs on nursery grown balled or bare-root stock are indicative of lack of proper care and root pruning, and sufficient grounds for rejection of such plants. Root stubs frequently characterize "collected" stock and precautions should be taken to ensure that root systems are adequate
7. Damage to plant material caused by improper operation of mechanical diggers may be sufficient cause for rejection at the construction site. Plants dug with equipment leave a cone-shaped ball; these should be carefully checked to make sure that an excessive portion of the root system has not been cut away. Feeder roots are the newly formed roots, usually white in color.

8. Bare Root Plants:
   a. Where root formation is irregular on bare-root plants, measure the average spread of the roots, considering all sides of the plant, rather than the maximum root spread. The Inspector may allow moderate deviations (±10 percent) from exact measurements in the case of plants which normally have irregular root systems. Example: Vine Maple.
   b. Bare root plants must be dormant when gathered and prepared for shipping. The normal test for dormancy is observation; if the plant has been subjected to cooling environment and the majority of the leaves have fallen naturally it is a good indication of dormancy. Expert advice from the Landscape Architect should be obtained in all other cases. Bare-rooted plants meeting the quality expectation have adequate live, damp, fibrous roots, free of rot and mold. Earth balls should be unbroken and of specified size.
   c. Precautions should be taken to prevent the drying of root systems in all shipments of plants to ensure arrival in good condition. During transport, plants must have been protected by a covering such as canvas or plastic sheeting. Bare-root plants should have been protected by moist burlap, sawdust and surrounded by plastic, etc. Under no conditions should the roots system have been allowed to dry out. All plants must exhibit normal health and vigor.
   d. Reject plants with roots that have dark brown tips, are shriveled, dried up, soft, slimy, smelly, or moldy.
   e. Reject plants with dull green, streaked, or brown cambium. The inspector is authorized to examine cambium on randomly selected woody plants by removing a thin scraping of bark with a fingernail, small knife, or other tool.
   f. Following completion of inspection, all plants accepted should be carefully stored as required below until planted.
9. Quality – The size and quality of planting stock are standardized as much as is practicable considering that the materials are live and may vary due to growing conditions. Judgment should be exercised and allowances made for reasonable variation in growth and appearance.

Planting Media – Various additives are sometimes used to improve the root growing environment of the soil that exists on a site. Generally, soil amendment consists of compost. Additives may be either used as a blanket or incorporated into the existing soil. Check the planting (growing) media material against the specification.

Pesticides – The person applying the pesticides must be a licensed applicator. The licensed applicator is responsible to only apply according to the label to ensure the proper material is used on the specific target, and with an appropriate timing of application. The pesticide label will give instructions such as intended use of the product, directions for use, and warnings. The Pesticide Application Record (WSDOT Form 540-509) is required to be completed daily by the Licensed Applicator with a copy given to the Project Engineer. The Project Engineer is to distribute a copy of this record daily to the Region Operations or Maintenance Engineer and to the Roadside Maintenance Section at the HQ Maintenance and Operations Office in Olympia. Only herbicides listed at the Roadside Vegetation Management website shall be used.

Fertilizers – Apply fertilizers in accordance with the specifications. Cross check the label on the bag or container with the specifications. When water soluble nitrogen fertilizers are used, particularly in lawn areas, adequate moisture is needed to prevent fertilizer burn of the grass.

Seed – Seed mixes are chosen specifically to meet different functions that include erosion and weed control, aesthetics, and permit obligations. Applying the incorrect seed mix to an area can lead to costly erosion and weed control problems.

- Collect seed labels from *each* bag and check them against the Specification.
- Verify all the applicable licenses, endorsements, and seed test certification from a certified seed testing laboratory as stated in the Specifications.

Compost – Compost is used for multiple functions on projects. It serves as a soil amendment, may be a component of topsoil, and is used as an erosion control BMP when applied as a blanket over soil.

- Prior to placement review the compost for physical contaminants (plastics, concrete, ceramics, metal, etc.) and ammonia odor.

Inspection During Planting – Planting stock on hand and ready for planting at the construction site should have been inspected upon delivery, in accordance with the checklist under "Inspection at the Construction Site".

Interim Care of Planting Stock – Plants not planted on the day of arrival at the site should be stored and handled as follows:

- Outside storage should be shaded and protected from the wind.
- Plants stored on the project should be heeled-in to protect them from drying out at all times by covering the bare root or balls with moist sawdust, wood chips, shredded bark, peat moss, or other accepted mulching material. Plants, including those in containers, should be kept in a moist condition until planted by using a fine mist spray or soaker hose, instead of a heavy stream which may cause damage.
- Avoid damaging plants being moved from the storage area to the planting site. Balled and Burlapped (B&B) plants should be protected against drying and handled carefully to avoid cracking or breaking the earth ball. Plants should not be handled by the trunk or stems.
- Bare-root plants should be watered when removed from the heeling-in bed to protect the roots from drying and they must be planted quickly.
- Should damage occur, or be found at this time, the plants should be rejected and removed from the site.
- At the time of planting, the Inspector should be alert for any damaged soil balls, leaders, major branches, or roots. Pruning is permitted to remove minor damaged branches, if it will not affect the characteristic shape of the plant (see Western Garden Book – Pruning Techniques). All rejected plants should be replaced during the current planting season. All broken, torn, or damaged roots should be pruned, leaving a clean cut surface to help prevent rot and disease.
- In order to ensure against reuse of discarded plants, seals should be removed and the trunk or stems above the root crowns should be marked with a small spot of paint or dye. Since discarded plants are the property of the Contractor, they should not be marked or mistreated in such a way as to make them unfit for other uses.

Planting Operation – The contract specifications identify the work necessary to accomplish the planting. The following is a checklist of horticultural practices that may be used by the Inspector.

- Plantings should be performed only during the specified planting season according to the specifications.
- Check for proper positioning of the plants and the spread of the root system in the planting hole. For example, on live stakes, the buds must point up, see Standard Plan H-10-15-00.
- When laying out shrub and ground cover beds, define the perimeter by placing plants in a flowing line that clearly outlines the bed border. The interior should then be staked in accordance with the plant pattern and spacing.
- Before B&B plants are set into the planting hole, burlap, twine, and all other foreign materials shall be completely removed.
- Check for correct depth of the root collar. Tree root collars should be above the soil but roots must be completely covered by soil. Occasionally, contractors leave a portion of the rootball above the soil on the assumption that the mulch will cover it up. This is not an acceptable practice. Plants should not be planted deeper than the root collar – this is the point where the roots begin to spread from the trunk. In some cases, trees may have been planted too deeply at the nursery so make sure root collars are visible above the soil surface before planting.
- Before backfilling, especially in drilled holes, the sides and bottoms must be scratched and loosened to break all "glazing." This promotes moisture transfer between different soils (existing and backfill).
- Place accepted backfill material around plant roots or plant balls, being careful not to damage the ball or the fine root system of bare-rooted plants. Do not allow backfill which is frozen or saturated.
- Eliminate air pockets in the backfill by filling, tamping, and watering. It is required in the *Standard Specifications* to water the plants thoroughly before the backfilling of the pit is completed. Container plants should be moist at the time of planting.
- When the above operations have been completed, unless otherwise specified, the *Standard Plans* planting detail H-10-10-00 requires a berm of soil to be formed from soil around the perimeter of the pit to form a basin or saucer to facilitate watering and retention of rain or irrigation water. When planting on slopes, the berm should be on the downhill side only. This allows the plant to catch runoff from up slope.
- Plants should be mulched to the specified depth with accepted mulch material. The *Standard Plans* require mulch to be feathered away from tree root collars. When mulching ground covers, ensure the plants are not buried in mulch.
- Excessive moisture in a planting area is defined as visible water in an area not designated as a wetland, and may require elimination or adjustment of planting in that area. Consult with the Region Landscape Architect when excessive moisture is encountered. Mounding may be considered when it is necessary to raise the bed above the water table. Planting in saturated soil often kills the plant because the water keeps oxygen from reaching the plant roots.

SS 8-02.3(9) Pruning, Staking, Guying, and Wrapping

Plants should be wrapped and staked only if specified. Details for staking are shown in Standard Plan H-10-10-00.

- Trees normally should not be pruned except for broken branches, unless otherwise specified or directed.
- All staking and tying shall be removed at the end of the first year of plant establishment to prevent damage to the plant.

SS 8-02.3(12) Completion of Initial Planting

The planting is complete when:

- 100% of plants are installed and watered-in. Watering is required by Standard Specification 8-02.3(8) as a part of plant installation
- The planting areas are completely cleaned up.
- All repairs to irrigation systems have been completed, mulch is applied, and weeds are completely controlled.

SS 8-02.3(13) Plant Establishment

Plant establishment begins at Initial Planting Acceptance. The major items included in plant establishment are watering, weed control, litter pickup, start up and shut down of irrigation systems, and replanting. Weather and soil conditions dictate the need for watering. Over-watering is as harmful as under-watering. Plant establishment work is needed to ensure the survival and ongoing vigor of the plants.

Inspection During the Plant Establishment Period

Plants may be planted in any given area a considerable period of time prior to the granting of initial planting acceptance. During the interim between when plants are installed and initial planting acceptance the Contractor is responsible for the upkeep of planting areas and continued growth of plants.

Although planting stock has been properly selected, delivered to the planting site in a vigorous, healthy condition, and planted in accordance with good horticultural practices, survival and normal growth depend to a large degree upon appropriate care during the establishment period. A well rounded program of horticultural practices used during the establishment period may include watering, fertilizing, pruning, insect, disease, and weed control, and replacement of unsatisfactory plants in accordance with the specifications.

When plant establishment starts the area should be inspected to make sure that all plants are in place and healthy. Monthly inspections of the planting areas should take place with the Contractor on or near the first of each month during the Plant Establishment Period to spot any potential problems to which the Contractor needs to attend.

If differences of opinion concerning the need for a particular procedure occur, and the answers are not readily found in this guide, the Inspector should consult with the Region or HQ Landscape Architect.

The project specifications should clearly indicate the length of the establishment period, which may vary from one area of the state to another, depending on the local conditions, project commitments, climate, and the type of plant materials utilized. The default period for plant establishment in the *Standard Specifications* is a minimum of one year.

A. **Inspection Checklist** – The following inspection checklist includes the primary items which should be observed periodically during establishment.
   - The project areas are weeded.
   - Plants that have sagged, fallen over, or are otherwise not situated in a natural growing position, as appropriate for the species, may require repositioning.
   - Firmly embed stakes or reinstall as necessary.
   - Protect the root mass to avoid disturbance to the root mass. Replace topsoil as required if soil has subsided.
   - Staked trees are straight. Adjustment of stakes may be needed. Where used, protective wrapping on trunks or stems is secure.
   - Damage due to vandalism, vehicles, or fire is noted and corrective action taken.
   - Record damage caused by animals (i.e., deer, rodents) and seek advice on protective measures.
   - Report infestations of insects and disease to the Landscape Architect for corrective action.
   - Broken branches have been pruned just above the break.
   - Where discoloration of foliage occurs, especially in evergreen material, seek advice on corrective measures. Once evergreen foliage is brown recovery is not possible.
   - Dead and severely damaged plants are removed immediately and replaced during the next appropriate planting period.
   - Mulch is to the correct overall depth. Add or replace as required.
   - Berms and water basins (constructed for the purpose of retaining water) are functioning properly. Repair and rebuild as necessary.
   - If natural rainfall during the establishment period is insufficient for normal plant growth, supplemental water has been supplied.
   - Supplemental fertilizers have been applied if required by the Contract Specification.

B. **Inspection at the End of the Plant Establishment Period** – Conduct a plans-in-hand review of each planting area or bed to determine that the arrangement, number, and species of healthy plants called for on the Planting Plans are present.

   This inspection is of major importance to the ultimate success of the project; include a Landscape Architect, the Inspector, and Contractor on the inspection team.

   Remove all plants rejected during the inspection and replace with new plants that meet all of the requirements of the contract and the *Standard Specifications*.

   The final acceptance of the project is not complete until all plant establishment requirements have been satisfactorily made.

SS 8-02.5 Payment

The Project Engineer shall make an inspection of the planting areas before payment is made, to determine if the required work has been accomplished and the number and species of plants shown on the Planting Plans are in a healthy condition. No payments shall be made for plants that are not in a healthy condition, although partial payment may have been made following a previous inspection.

8-03 Irrigation System

GEN 8-03.1 General

The objective of irrigation on WSDOT contracts is to help ensure plant survival by supplementing natural precipitation during dry periods. This can often be accomplished with far less water than that required to obtain maximum growth and yields. Application rates of irrigation systems are, therefore, designed from the standpoint of minimum moisture requirements of the plants.

A properly designed and installed irrigation system will distribute water uniformly over the intended planting area at a predetermined precipitation rate, or by irrigating within the root zone of plants by bubblers or a drip system. Many factors influence the efficiency of a system's operation and must be taken into consideration during the design stage. In addition, care must be taken when inspecting installation of the irrigation system to ensure that the system not only follows the designer's intent, but also fully conforms to the *Standard Specifications*, project plans and provisions, and the manufacturer's requirements and recommendations.

The most efficient and economical irrigation design is only as good as its installation, and this depends upon careful and thorough inspections.

GEN 8-03.2 Inspection

Thorough inspections, carefully conducted during construction, are of utmost importance to help ensure proper installation. To be adequately prepared for inspecting the installation of irrigation systems, it is of great benefit for the Inspector to have previous knowledge, preferably some experience, in at least one of the various aspects of irrigation design, installation, and maintenance. This not always being possible, it becomes necessary for the Inspector to first familiarize themselves with those portions *Standard Specifications* Sections 8-03 and 9-15 and contract documents that pertain to inspection and irrigation systems before attempting the necessary inspections. In addition, since irrigation inspection requires such varied and versatile knowledge and experience, it is advisable for the Inspector to obtain additional advice and/or assistance from WSDOT personnel having the expertise in these specialty areas.

An inspection shall be conducted on all irrigation system components delivered to the project site to determine acceptance or rejection. If at any time, until the system is completed and turned over to WSDOT, components are found that are damaged, defective, or not formally accepted for use on the project, they shall be rejected. Information indicating acceptance or rejection of components shall be properly documented and maintained by the Inspector at all times.

SS 8-03.2 Materials

All components intended for use in an irrigation system must receive acceptance prior to their incorporation into the project as required in chapter 9-49.9.

Acceptance of items is determined from information supplied on the Request for Approval of Material (RAM) (WSDOT Form 350-071) and accompanying catalog cuts. Items selected off the *Qualified Products List* are already accepted for use and do not require the submittal of a RAM. All components of the irrigation system shall be listed and identified by their corresponding bid item number where applicable. Sufficient information must be included to positively identify each item listed. Each item shall be identified by size, catalog number, and the name of the manufacturer.

If samples are requested for preliminary evaluation, it will be the Contractor's responsibility to obtain and submit the designated items to the Project Engineer for testing. Unless destructive testing is required, all items will be returned to the Contractor upon completion of testing, at which time accepted items may be incorporated into the project.

8-03.3 Construction Requirements

8-03.3(1) Layout of Irrigation System

Irrigation is installed before planting. The outlines for turf areas and planting beds shall be designated prior to staking the irrigation system. If adjustments to a head-to-head irrigation system are required, they must produce a system which will provide a uniform spray pattern without leaving dry areas.

Spray heads to be located adjacent to the perimeter of planting beds should be laid out first to approximate as closely as possible the designed or accepted revised configuration of the planting area. The remainder of the planting area should then be filled with the spacing between heads not to exceed that which is shown on the plans or recommended by the manufacturer.

Review all layouts and measure the distance between adjacent heads to ensure that full coverage of water will be attained. If the pattern is not uniform in coverage, or if the distance between heads exceeds that recommended by the manufacturer, the layout will need to be adjusted.

Unless otherwise specified in the project provisions, all irrigation systems shall be completed, tested, accepted, and properly backfilled before planting can begin.

Advise the Regional Landscape Architect when the irrigation system has been staked in the field.

SS 8-03.3(5) Installation

Once the irrigation system layout has been staked and accepted by the Project Engineer, the Contractor may commence excavation.

Trench bottoms shall be relatively smooth to provide support along the entire length of pipes to be installed. In addition, and as specified in *Standard Specifications* Section 8-03.3(2), trench bottoms shall be of sand or other suitable material free from rocks, stones, or any material which might damage the pipe.

All system components shall be installed in accordance with the project plans and documents, using methods or techniques recommended by the respective component manufacturers.

Solvent welding is a technique used to bond PVC pipe and fittings together. The solvent cement used in this type of installation is, as its name implies, a solvent which dissolves those portions of the pipe and fittings surfaces to which it is applied, to form a continuous bond between the mating surfaces. During the construction of PVC solvent weld joints, excess cement is forced out by the insertion of the pipe into the fitting socket. This excess cement, if not immediately removed, will dissolve the surface of the pipe at its point of accumulation and will result in a permanently weakened spot. It is necessary, therefore, that this excess cement be wiped at the time the joint is made and that the Inspector check to ensure that it has been done.

Plastic pipe is subject to considerable expansion and contraction with temperature changes. To provide for this, pipe should be snaked from side-to-side in the trench.

Care shall be taken during the installation of the pipe to ensure that rock, dirt or other debris is not allowed to enter the open ends of the pipe.

Protection from freezing must be provided as specified in the project documents. Either a three-way valve with compressed air fitting for blowing water out of the lines, or drain valves placed at the low point of each lateral must be used. If the three-way valve and air fitting is to be used, it must comply with one of the designed installations accepted for use by the Washington State Department of Health. If drain valves are used, care must be taken to ensure that the lateral lines are properly sloped to provide complete drainage. When handles are included as an integral part of the valves, the Contractor shall remove the handles and give them to the Engineer for ultimate distribution to the Maintenance Division.

SS 8-03.3(6) Electrical Wire Installation

Electrical control wire between the automatic controller and the automatic control valves, shall be bundled together at 10-ft intervals and snaked from side-to-side in the trench, either adjacent to or beneath the irrigation pipe. Snaking of the wire helps eliminate wire stressing or breakage caused by expansion or contraction of the earth due to variations in moisture content or extreme seasonal temperature fluctuations. Placement of the wires adjacent to or beneath the irrigation pipe is for protection against damage from possible future excavation. After partial backfilling of the irrigation trench, detectable marking tape shall be placed above the irrigation and wiring lines to facilitate future location of the lines. This is shown in the Plans.

Electrical splices shall be permitted only in valve boxes, junction boxes, pole bases, or at control equipment. No direct burial splices shall be allowed. Types of electrical splices allowed in WSDOT irrigation projects shall be only those accepted for use by the State Materials Laboratory. Accepted electrical splices are listed in the *Qualified Products List* or may be accepted through the use of a RAM.

SS 8-03.3(10) As-Built Plans

The Project Engineer is required to submit As-Built Plans in accordance with Section 10-3.11.

Accurate As-Built Plans are a valuable and necessary aid in designing and constructing future projects for the area, and for maintenance and repair of the irrigation system. Therefore, it is imperative that these As-Built Plans show the true location, size, and quantity of components installed.

Standard Specifications Sections 1-05.3 and 8-03.3(10) state that the Contractor is responsible for supplying working drawings, corrected shop drawings, schematic circuit diagrams or other drawings necessary for the Engineer to prepare corrected plans to show the work as constructed. To help ensure accuracy of this information requires that the Contractor or field representative record each change as it is completed. In addition, the Inspector shall inspect and verify this information prior to the commencement of backfilling. Upon completion of this, all working drawings and pertinent information shall be submitted for the Project Engineer's acceptance and use in preparing the As-Built Plans.

The Contractor may also be required to conduct a training and orientation session for WSDOT personnel covering the operation, adjustment, and maintenance of the irrigation system. The Project Engineer shall arrange to have the maintenance personnel who will be involved with the irrigation system attend this orientation session. The As-Built Plans shall be available so they can be reviewed and all features explained. One copy of the As-Built Plans shall be presented to the maintenance personnel at that time, along with parts lists, keys to vaults, and service manuals for all equipment.

SS 8-03.3(12) Cross-connection Control Device Installation

A cross-connection is any actual or potential connection between a potable water supply and a source of contamination or pollution.

Backflow is the unwanted reverse flow of liquids in piping system and is the major means by which contamination of potable water can occur. Backflow is the result of either back pressure or back-siphonage. Backflow from back pressure can occur any time pressure produced in the non-potable piping system is greater than that existing in the potable side. Backflow from back-siphonage is the result of a negative or subatmospheric pressure within a potable water system, causing contaminants from the non-potable side to be suctioned in.

Irrigation systems supplied by domestic potable water systems are potential pollution hazards to the potable water. Such cross-connections require protection to prevent the possibility of backflow.

A backflow prevention or cross-connection control device is any device, method, or type of construction used to prevent backflow into a potable water system.

An accepted backflow prevention or cross-connection control device is one that has been investigated and accepted by an appropriate regulatory agency. The approving or regulatory agency for backflow prevention, cross-connection control devices for the state of Washington is the Department of Environmental Health. This agency

periodically publishes a list of accepted cross-connection control devices. The HQ Design Landscape Architect will maintain a copy of this list to assist the regions.

The local water purveyor determines the type of backflow prevention device to be used to protect domestic water supply systems under their jurisdiction. This determination is based upon the water purveyor's estimation of the probability of backflow occurring and the degree of hazard created if it should. Once the type of device to be used has been determined, the device shall be selected from the Department of Environmental Health current list of accepted cross-connection control devices.

Installation of cross-connection control devices shall conform to the *Standard Specifications*, the project plans and documents, the manufacturer's recommendations, and the "Accepted Procedure and Practice in Cross-Connection Control Manual." In all cases, the backflow prevention device shall be tested by a certified inspector prior to activating the system. Additionally DOT Form 540-020 shall be filled out and the appropriate distribution made.

SS 8-03.3(13) Irrigation Water Service

The Project Engineer shall contact the serving water utility as soon as the Contractor's schedule is known, to arrange for the actual service connections, and to ensure that all agreements are completed and billing procedures are established.

SS 8-03.3(14) Irrigation Electrical Service

The Project Engineer shall contact the serving electrical utility as soon as the Contractor's schedule is known, to arrange for the actual service connections, and to ensure that all agreements are completed and billing procedures are established.

8-04 Curbs, Gutters, Spillways, and Inlets

SS 8-04.3 Construction Requirements

SS 8-04.3(1) Cement Concrete Curbs, Gutters, and Spillways

The *Standard Specifications* specify the class of concrete to use when constructing the various items. Quite often the Contractor places the concrete for these miscellaneous items at the same time of placing concrete for other work. When this is the case, it is usually more convenient for the Contractor to use the same class of concrete for all the work during the day. At the Contractor's request, the Project Engineer may accept a higher class of concrete in lieu of the class specified at no increased cost to WSDOT. This substitution should be documented in the diary, Inspector's daily report, or other records.

8-11 Guardrail

GEN 8-11.1 General Instructions

Since guardrail is expensive to construct and requires continual maintenance, it should be constructed only where hazardous conditions justify its use. During construction, the Project Engineer should investigate eliminating the need for guardrail by flattening the slopes, or otherwise removing, relocating, or modifying the hazard whenever possible. The final evaluation of the need for guardrail should be made in the field after the embankment has been constructed. Even though the fill has been widened for guardrail, it should not be constructed if it is determined at this time that guardrail is not needed.

See *Design Manual* Chapter 1610 and other pertinent instructions for design criteria for guardrail.

For safety reasons, the guardrail shall have the ends flared away from the roadway and anchored in accordance with the appropriate *Standard Plans*. The construction inspector should pay particular attention to make sure that the rail washers are consistent with the current *Standard Plans*.

SS 8-11.3 Construction Requirements

SS 8-11.3(1) Beam Guardrail

SS 8-11.3(1)A Erection of Posts

The posts shall be set to the true line and grade of the highway and spaced as shown on the *Standard Plans*. Post may be placed in dug or drilled holes. Ramming or driving will be permitted only if allowed by the Engineer and if no damage to the pavement, shoulders and adjacent slopes results therefrom. The post holes shall be of sufficient dimensions to allow placement and thorough compaction of selected backfill material completely around the post.

SS 8-11.3(1)C Terminal and Anchor Installation

Installation of guardrail terminals listed in the *Qualified Products List* shall be by an installer, that has been trained and certified by the manufacturer or is supervised by a representative of the manufacturer. The inspector should request to see the certification. The date on the certification must not be prior to the latest accepted effective date for the device. A listing of the latest accepted effective dates will be sent to each Project Engineer's Office when changes are made or can be requested from the Design Office.

8-12 Chain Link Fence and Wire Fence

SS 8-12.3 Construction Requirements

Since preservation of natural growth is being stressed, clearing will have to be performed specifically for the fence construction on many projects. In these cases, only the width necessary to accommodate the fence construction should be cleared. Some grading is usually necessary to prevent short and abrupt breaks in the ground contour that will affect the aesthetic appearance of the top of the fence. Care needs to be exercised to prevent clogging natural drainage channels while grading the fence line.

8-14 Cement Concrete Sidewalks

SS 8-14.3 Construction Requirements

SS 8-14.3(2) Forms

Forms may be of wood or metal and full depth of the sidewalk. The forms should be straight or uniformly curved and in good condition.

In rest areas and park areas where the sidewalks are normally laid out in a winding pattern rather than in straight lines, care must be taken in setting the forms so that the sidewalk will present a pleasing appearance with no kinks or angle breaks. The forms must be braced and staked sufficiently to maintain them to grade and alignment. Usually, spreaders are necessary to properly space the forms and hold them in position until the concrete is placed. If the Contractor uses thin strips of form material for winding sidewalks, more than one thickness with staggered joints should be used to obtain the smooth flowing lines. In forested areas, all roots should be removed or cut back.

After the forms have been set, the foundation shall be brought to the required grade, compacted and well dampened. Prior to placement of concrete, the inspector shall verify that the forms are set to line and grade, and shall check the forms for cross-slope and grade of the sidewalks and ramps, for conformance with the Plans, and to ensure that the requirements of the Americans with Disabilities Act (ADA) are met. If there are junction boxes, cable vaults, manholes or other utilities present in the sidewalk or ramp surface, they must be flush with the sidewalk or ramp surface.

SS 8-14.3(3) Placing and Finishing Concrete

Air entrained concrete Class 3000 (or Commercial Concrete) shall be used for construction of sidewalks. After the concrete is placed, it should be struck off with a straightedge. The concrete should be troweled smooth with a steel trowel and then lightly brushed in a transverse direction with a soft brush. On grades of over 4 percent, the surface shall be finished with a stipple brush or as the Engineer may direct. Following brushing of the surface, the concrete shall be edged and jointed as shown in the plans or the *Standard Plans*. In areas adjacent to existing sidewalks, the jointing pattern should be similar to the existing pattern. Consideration should be given to placing crack control joints adjacent to cracks in the existing sidewalk if they are not going to be repaired. If the cracks in the existing sidewalk are full depth, they may cause reflective cracking in the new adjacent sidewalk.

Expansion joints shall be constructed at the locations and of the sizes as detailed in the plans or in the *Standard Plans*.

All concrete sidewalks shall be properly cured. During this curing period, all traffic, both pedestrian and vehicular, shall be excluded. Vehicular traffic should be discouraged and by no means allowed until the concrete has reached its design strength. There is a risk that the sidewalk can be damaged as it was not designed to take these loads. Before any decision to allow vehicles on a sidewalk there should be a clear agreement that any damage will be repaired and who will pay for it.

8-20 Illumination, Traffic Signal Systems, and Electrical

GEN 8-20.1 General

Illumination and traffic signal systems, due to the very nature of the work, are a highly specialized type of installation. In designing these systems, every effort is made to avoid problems for construction, maintenance, and the utility company. If problems arise, the Engineer should contact those responsible for the design and operations for help in solving them.

GEN 8-20.2 Inspection

Inspection on electrical projects involves two aspects of work. The first of these is the physical aspect wherein conformance to the plan requirements relative to the materials used and general construction techniques must be the criterion for judgment. An Inspector who is thoroughly familiar with the requirements of *Standard Specifications* Section 8-20 and with normal construction techniques should be assigned the inspection responsibility for this portion of any signal or illumination project. The Fabrication Inspector shall be consulted if lighting or traffic signal standards arrive on the jobsite without prior inspection.

The second aspect of electrical work involves the conformance by the Contractor with the contract requirements in addition to the requirements of the State electrical construction codes and the National Electric Code. This aspect of inspection must be performed by an electrical Inspector. A further consideration within this aspect of work involves any changes authorized in the contract plans as it may affect circuit stability, circuit adequacy, and the ability of related electrical control devices to properly function through any such change of plans. The performance testing of the system is part of the second aspect of the electrical work.

Electrical work is a specialized field of endeavor within WSDOT; therefore the Project Engineer must arrange for the assistance of an electrical Inspector from the Regional office. The electrical Inspector shall make periodic inspections throughout the course of construction of all electrical projects and shall advise the Project Engineer of appropriate times to enable the Project Engineer to occasion the required field tests of electrical circuits, as discussed in *Standard Specifications* Section 8-20, at such times that cause a minimum interference of the work scheduled by the Contractor. Should any question arise on a project pertaining to the technical nature of the work, the Project Engineer shall consult with the electrical Inspector or with the Regional Traffic Engineer, if necessary.

Our plans and specifications are designed generally to conform with existing national electrical codes. There are instances when the Department permits methods of construction that are considered equivalent to state and national codes.

Generally, local inspection authorities do not inspect highway work that is within the state highway right of way. From time to time, however, the Department of Labor and Industries or local electrical inspectors may visit a project to inspect or review the Contractor's work. They should be treated courteously and their judgment respected. The Department does have authority to permit alternate methods when equivalent objectives can be met if the work is within the State right of way. Should any question arise over a conflict between our plans and their opinions, the matter should be referred to the State Construction Office for advice.

SS 8-20.2 Materials

SS 8-20.2(1) Equipment List and Drawings

All materials for installation on illumination and traffic signal projects shall be selected off the *Qualified Products List* (QPL) or be listed on a Request for Approval of Material (RAM). Items not selected off the QPL shall be submitted to the State Materials Laboratory for appropriate action on a RAM. This list shall be complete and cover all materials which are identified on the plans or in the specifications. The list shall include the source of supply, name of manufacturer, size and catalog number of the units, and shall be supplemented by such other data as may be required including catalog cuts, detailed scale drawings, wiring diagrams of any nonstandard or special equipment. All supplemental data shall be submitted in six copies.

The Record of Materials (ROM) from the State Materials laboratory will list items for which preliminary samples or data are required. Preliminary and acceptance samples shall be submitted as required by the ROM, received from the State Materials Laboratory at the beginning of the project or as noted on the RAM. See Section 9-4 for material specific acceptance requirements.

Working Drawings for Illumination and Signal Standards

The Contractor is required to submit working drawings for all types of signal standards and for light standards without pre-approved plans. Pre-approved plans are listed in the Contract Provisions and on the Bridge and Structures website. If light standards with pre-approved plans are proposed, a working drawing submittal is not required. There are two different approval procedures for shop drawings. They are the State Bridge and Structures office approval, and Project Engineer approval only. In either case, the Contractor is required to submit one set of drawings as a Type 2E Working Drawing per instructions in Standard Specification 1-05.3. The two approval procedures include the following:

A. **Bridge and Structures Office Approval**

- Light standards without pre-approved plans.
- Types II, III, IV, V signal standards without pre-approved plans.
- Type SD (Special Design) signal standards.

B. **Project Engineer Approval Only**

- Types PPB, PS, I, RM and FB signal standards.
- Types II, III, IV, V signal standards with pre-approved plans.

After the Contractor has submitted working drawings, the Engineer shall make a field check of both contract plans and working drawings. The Project Engineer is responsible for checking the geometric features of these items. Specific items that should be checked include the following:

- Foundation locations.
- Light source to base dimension (H1), if required in the special provisions and clearance to overhead utility wires.
- Mast arm lengths. If foundation offsets are changed, mast arm lengths must be adjusted.
- Horizontal dimensions from single standard pole centerline to signal head attachment points.
- Vertical dimensions from signal standard base plate to signal mast arm connection points. Assistance is available from the Traffic Design office in estimating mast arm deflection to ensure vertical clearance requirements are met.
- Orientations of mast arms and all pole-mounted appurtenances.
- Signal head mounting details.
- Hand hole location and orientation.
- Base treatment for lighting standards (fixed, or slip, or breakaway).

If there are no changes to dimensions or orientations, the Project Engineer shall mark the drawings with a statement that all standards shall be fabricated according to dimensions and orientations shown in the Contract.

If there are corrections, the Project Engineer shall note all corrections on one set of shop drawings, with green markings only, and attach copies of signal standard chart and/or luminaire schedule from contract, noting any dimension changes in green. Or the Project Engineer may note the changes in a list form and submit it with the PDF within the email.

The State Bridge and Structures office will conduct a structural review, and make comments in red, incorporating the Project Engineer's geometric review comments.

The working drawings for supports without pre-approval shall be submitted to the State Bridge and Structures office, which will coordinate approval with the State Materials Laboratory as necessary. After approval, the State Bridge and Structures office will retain one set and forward the approved PDF file to the Project Office. The Project Engineer will forward the approved PDF file to the Fabrication Inspector, the Region Signal Superintendent (or designate), and the Contractor, who will forward to the Fabricator. See the Shop Plans and Working Drawings Table in Section SS 1-05.3.

If pre-approved shop plans have been submitted, a structural review by the State

Bridge and Structures office is not required. The Project Engineer shall mark all changes in red on the PDF file. The Project Engineer will then forward to the Regional Operations/Construction Engineer, the Fabrication Inspector, the Region Signal

Superintendent, and the Contractor, who will forward to the Fabricator. See the Shop Plans and Working Drawings Table in Section SS1-05.3.

All drawings shall be clearly marked (See SS 1-05.3) before returned to the Contractor, whether reviewed and checked by the Project Engineer or the Bridge and Structures Office.

SS 8-20.3 Construction Requirements

SS 8-20.3(4) Foundations

The foundations shall be located and constructed as detailed on the plans wherever possible. When foundations cannot be constructed as detailed, due to rock, bridge footings, drainage structures, or other obstructions, an effective foundation will have to be developed for the conditions encountered and acceptance obtained. The location of lighting standards or signal standards shall not be moved without discussing the problem with the Regional Operations/Construction Engineer and the Regional Traffic Engineer.

Foundations located on fills, especially those adjacent to bridge abutments, shall be deepened to provide stability as provided for in *Standard Specifications* Section 8-20.3(4).

SS 8-20.3(5) Conduit

Generally, conduit runs should be located on the outer shoulder areas, well away from the position where signs, delineators, guardrails and other facilities will be placed.

On new construction, all conduit located under paved surfaces shall be placed prior to construction of base course and pavement. It shall be the responsibility of the Project Engineer to see that all contractors on any project coordinate their work to this end.

Sufficient cover must be provided to protect the conduit from damage as provided in *Standard Specifications* Section 8-20.3(5).

At locations where plastic conduit is allowed and hard rock is encountered within the minimum depth required, steel conduit should be substituted for the affected runs, and the depth adjusted as necessary.

SS 8-20.3(5)B Conduit Type

SS 8-20.3(5)B1 Rigid Metal Conduit

Installation of conduit should be supervised to ensure against physical abrasion of the conduit or for rust on threads which would destroy the integrity of the galvanizing.

Electrically caused corrosion of metallic conduit is easy to avoid by proper construction supervision. If the causes of this type of corrosion are not properly inspected and controlled, the extent of electrically caused corrosion is commonly far more severe than the chemically caused corrosion.

In any metallic conduit system, the metallic conduit itself serves an electrical function. This function is to provide a low resistance return path for electricity which may leak out of an electrical conductor due to scraped insulation, cracks, or other causes. A point at which electricity can leak or escape from an electrical wire is called a “fault”. When

electricity flows through any non-insulated path (conduit), it can establish an electrical phenomenon called electrolysis. Electrolysis results in the transfer of metal from one location to metal at another location. Through this means, the metal that was used to make the metallic conduit may be transferred to other locations on the same conduit run or to other metallic appurtenances. With the ultimate degeneration of conduit at any point, the return path for the electricity through the conduit system itself is destroyed. In the event that a portion of a conduit was destroyed in this means and with the subsequent damage or failure of electrical conductors beyond that point, electricity would not have the ability to complete the circuit from the wire through the conduit system and return to service enclosure which would, in turn, cause a fuse to blow or a circuit breaker to trip. Hence, the protection offered by our electrical overload equipment is totally nullified.

To prevent this type of ultimate failure of the electrical system, all conduit joints should be carefully inspected to ensure that they are physically tight and that a good electrical bond does exist from one piece of conduit through the nipple to each adjoining piece of conduit. Additionally, conduit threads should be painted with an accepted corrosion inhibiting conduit paint. Any loose or improper union between conduit sections or conduit and junction boxes is a point of high resistance to the flow of electricity. When such a condition exists and with the faulting of an electrical conductor within the system, electricity does not have an easy return to its point of service. Electricity then takes alternate routes through the earth, structures, etc. This, in particular, establishes the condition of electrolysis and results in even greater failure of the physical system. The physical system failure attributed to this may present itself from two to five years after construction.

The seriousness of this matter cannot be overstressed in electrical construction. It is so important that if one factor, and only one factor, was to be examined on each electrical project, it would be the search for conditions that would result in electrolysis and the sloppy workmanship that causes them.

Additionally, to prevent electrical damage to the conduit system and, in particular, during the time of project construction, the conduit shall not be used as a temporary neutral return nor shall the conduit be used for the ground of construction equipment, i.e., welders, hand tools.

SS 8-20.3(5)B2 Conduit Plowing

Prior to installation, conduit shall be inspected for damage and deformities. For High Density Polyethylene (HDPE) conduit, this shall be done while the conduit is still on the reel. The inspector also needs to verify that HDPE conduit meets the thickness requirements in the Contract (examples: Schedule 80; SDR 9).

The inspector should verify that the plow shoe is marked as required by Standard Specification Section 8-20.3(5)E2. The inspector should monitor the plow operation to ensure that the mark remains below ground for the entire run. Should the mark come above ground, required actions are defined in *Standard Specifications* Section 8-20.3(5) E2. Spot checks of conduit depth are recommended. The most effective method for verifying conduit depth is continuous monitoring of the plow shoe during the plowing operation. The plow trench tends to cave in behind the plow, making measurement after placement difficult.

SS 8-20.3(6) Junction Boxes, Cable Vaults, and Pull Boxes

In most designs, precast concrete junction boxes are being used. These boxes are simple to install. A sump is excavated and partially filled with gravel. The open-bottom box is then seated by working it into the gravel until the required grade is reached. Care must be taken in junction box location to provide for drainage. Junction boxes and conduit should be placed away from areas that water is funneled to prevent it from entering into the conduits. For example, the bottom of ditches, sag vertical curves should be avoided or other low spots where water is likely to collect.

SS 8-20.3(8) Wiring

An electrical system is only as good as its conductors, terminals and splices, and it is important that the requirements of *Standard Specifications* Section 8-20.3(8) be strictly adhered to. If there is any doubt concerning the adequacy of a connector, the advice of the Regional Electrical Inspector should be obtained.

Practically all wiring for traffic signal and illumination systems is exposed to the elements, and it is very important that all splices be insulated with waterproof material, as prescribed in *Standard Specifications* Section 8-20.3(8) and 9-29.12.

SS 8-20.3(9) Bonding, Grounding

Because of the hazards of electrical shock, all grounds and ground bonds referred to in the plans and in the special provisions should be given special attention to ensure their effectiveness and completeness. See *Standard Specifications* Section 8-20.3(9) and *Standard Plan for* Typical Grounding Detail.

SS 8-20.3(10) Service, Transformer, and Intelligent Transportation System (ITS) Cabinets

Generally, Type “B,” “C,” “D,” and “E” service cabinets etc., will be factory assembled from drawings submitted with the material lists. Type “A” service equipment will be assembled in the field. Care shall be taken to ensure compliance with all provisions of the plans and specifications, and to determine that all bonds and grounds are complete.

Relations With the Serving Utility

Generally, during the design of an illumination or traffic signal system, the serving utility is consulted concerning the availability of power, the voltage needed, the location of the most convenient point of service, and agreements are prepared prior to the awarding of the contract. The Project Engineer should review all utility agreements and contact the serving utility as soon as the Contractor commences work to arrange for the actual service connections and other work which may have been agreed upon. The matter is important since, in many cases, the utility will have to extend lines, install transformers, and do other related work. Upon completion of the contract, the Project Engineer will instruct the serving utility to direct all future billings to the appropriate maintenance division.

Electrical Safety Tags

Commencing at the time that the serving utility makes the power drop to WSDOT electrical service cabinets, electrical safety tags shall be used. Any electrician working on any main or branch circuit shall cause that circuit to be de-energized and shall place an electrical safety tag at the point that the circuit is open. The electrician shall sign the electrical safety tag and only that electrician may make subsequent circuit alterations or remove the tag.

If the circuit that the electrician de-energized to work on is serving traffic, the electrician shall arrange the work so the circuit may be energized for nighttime operation. The electrician shall remove the safety tag and energize the circuit before leaving the jobsite and upon returning to work on the circuit, shall de-energize it again and place an electrical safety tag back on the circuit.

SS 8-20.3(11) Testing

All illumination and traffic signal systems shall be tested as outlined in *Standard Specifications* Sections 8-20.3(11) and 8-20.3(14)D. Particular care shall be taken in the performance of test No. 3. The Project Engineer shall insure that readings of the megohmmeter taken on every electrical circuit are furnished to the Regional Electrical Inspector. Caution must be exercised in the performance of this test to protect control mechanisms from damage due to the nature of the test voltages used. Also, the records made of this series of tests must identify the readings observed with each branch of the electrical circuit involved. Representative sampling of the Contractor's test readings may be made by the Electrical Inspector using State test equipment.

Field Test No. 4 of *Standard Specifications* Section 8-20.3(11) is to be performed on all illumination and signal projects. It is especially important that the Project Engineer obtain the consultation of the Regional Traffic Engineer in this portion of the field test when the tests are being performed in a traffic signal controller. Since the mechanism in these controllers is so interrelated and complex, only persons thoroughly schooled in such control mechanisms are qualified to determine when particular timing circuits and sequences are functioning properly. The simple turning on of an electrical switch and watching a light come on is not an acceptable electrical test.

SS 8-20.3(13) Illumination Systems

SS 8-20.3(13)A Light Standards

In erecting lighting standards or signal standards, rope or fabric slings should be used to reduce the danger of damage to galvanized or finished aluminum surfaces.

Existing Illumination Systems

Where existing illumination or traffic signal systems are to be removed, and the material stockpiled at the site of the work for delivery to WSDOT, it will be advantageous if prior arrangements are made to have Department personnel meet the contractor at the delivery storage site. These arrangements should be made with either the Regional Maintenance Engineer or the Regional Traffic Engineer.

Existing Communication Conduit Repair

When existing communication conduits are likely to be encountered during construction, the contractor should be prepared to immediately restore any communication conduit and cables damaged by the contractor's activities. This includes all types of conduit, including those with innerduct, and electrical and/or fiber optic cables.

When existing communication conduits are present within the project work area, the Engineer should coordinate a meeting between the contractor and WSDOT Maintenance personnel to develop a pre-approve repair procedure for damaged communication conduits and cables. This plan should include the method of repair, how long the repair would take, and the availability and type of repair kit to be used.

Communication conduit damaged during the work shall be repaired with an approved manufactured repair kit appropriate for the size and type of conduit. The repair kit shall be provided by the contractor.

Replacement communication conduit and cable shall be subject to the acceptance requirements of the appropriate *Standard Specifications*.

Damaged communication conduit and communication cables shall be repaired and the communication system shall be fully operational within 24 hours of being damaged. Temporary splices or repairs may be accepted in order to restore operation; however any temporary repairs that do not meet the requirements of the *Standard Specifications* shall be removed and replaced with permanent repairs in accordance with the *Standard Specifications*.

SS 8-20.3(14) Signal Systems

Traffic signal systems are a very specialized type of work. All work shall be done in strict accordance with the plans, the special provisions, and the *Standard Specifications*. The Regional Traffic Engineer will be responsible for the proper timing of each signal installation and will assist the Engineer in any way needed to ensure the proper completion of the work. The checklist (Figure 8-1) is provided to assist the Project Engineer in identifying the specific tasks that must be completed prior to signal turn-on. This checklist is a guide, and line items may be added or deleted as necessary to fit each specific signal installation.

SS 8-20.3(17) "As-Built" Plans

The Project Engineer is required to submit As-Built Plans in accordance with Section 10-3.7. For proper maintenance and repair of the electrical system, it is imperative that the location of all conduits and the diagram of all circuits be properly shown on the AsBuilt Plans.

Normally, the conduits should be constructed in the locations shown on the contract plans. Many times these conduits are positioned in a particular place to eliminate conflict with future construction.

Standard Specifications Section 8-20.3(17) requires the Contractor to submit any corrected shop drawings, schematic circuit diagrams or other drawings necessary to prepare the corrected as-built plans.

Contract #	Location	
Project Engineer		Date
Proposed* turn-on date	Proposed* test date	
Point of contact		Phone #

This checklist highlights the critical items of work that are to be complete before the signal system can be placed into operation.

*The Project Engineer has the authority to reschedule the test date or signal turn-on at their discretion.

	Applicable to project	Complete
Signing		
1. Advance warning “Signal Ahead/W3-3” signs (permanent)		
2. “New Signal” or “Signal Revision” signs (temporary)		
3. “Left Turn Must Yield on Green Ball” sign		
4. Lane control signs		
5. Street name signs		
Striping (Installed or Scheduled)		
6. Stop Bar(s)		
7. Crosswalk stripes		
8. Channelization		
9. Channelization aligns with signal heads		
Signal Display System		
10. All vehicle displays are connected and tested		
11. All pedestrian displays are connected and tested		
12. Restrictive left turn display is over left turn lane		
13. Combination of restrictive/permissive left turn display is over the gore stripe.		
14. Optically programmed displays are properly programmed for the intended movement.		
15. Vertical clearances are met.		
Signal Detection System		
16. All vehicle detection (temporary and permanent) is tested.		
17. If staging is required, all side street stop bar detection is tested as a minimum for semi actuated operation.		
18. All pedestrian detection (push buttons) are tested.		
19. All emergency vehicle preemption detection are tested.		
20. Railroad preemption is tested.		
Signal Control System		
21. Controller is tested and available		
22. Cabinet is installed, wired and ready for controller hookup.		
23. Interconnect is tested.		
24. Permanent power source is supplied to the system.		

WSDOT *Construction Manual* *M 41-01*, Figure 8-1 Page 1 of 2
August 2015

Traffic Signal Turn-on Checklist Revised 1/10/00 (Page 1 of 2)
Figure 8-1

	Applicable to project	Complete
Contractor Contact Responsibilities		
25. Controller manufacturer representative (not required if state supplied controller)		
26. Uniformed Police/State Patrol for Traffic Control		
Electrical Inspector Contact Responsibilities (Five (5) days prior to proposed* signal test date):		
27. Signal Maintenance		
28. Signal Operations		
Project Engineer Contact Responsibilities (Five (5) days prior to proposed* signal test date)		
29. Local Agencies (City, County, State Patrol, Fire District, etc.)		

Comments:

WSDOT *Construction Manual M 41-01*, Figure 8-1
August 2015

Page 2 of 2

Traffic Signal Turn-on Checklist Revised 1/10/00 (Page 2 of 2)
Figure 8-1

8-21 Permanent Signing

GEN 8-21.1 General

The complex design of today's freeway facilities has created an increased demand on signing. Signing is one of the features a layperson readily can evaluate on a new facility. Improper or inadequate signing detracts from the quality of the basic construction features of the project. Misplaced or irregular usage of signs on interchanges creates a critical hazard to traffic and hinders the proper operation of the facility.

Today's destination sign has increased in size to the extent that it is no longer a minor installation and the amount of time required to install an average freeway sign project has been extended to the point that close cooperation between all forces on highway construction projects is vital so that the facility is signed properly when opened to traffic.

Any sign that is erected on a section of roadway carrying traffic ahead of the time the message on the sign will be applicable to the traffic shall be covered in accordance with *Standard Specifications* Section 8-21.3(3) until the appropriate time for uncovering it. It is essential that signs with conflicting messages not be displayed.

SS 8-21.2 Materials

All materials for installation on permanent signing projects should be selected off the *Qualified Products List* (QPL) or listed on the Request for Approval of Materials (RAM). Materials listed on RAM which are not listed on the QPL shall be submitted to the State Materials Laboratory for appropriate action as soon as possible. This list shall be complete and cover all materials which are identified on the plans or in the specifications. The list shall include the source of supply, name of manufacturer, size and catalog number of the units, and shall be supplemented by such other data as may be required including catalog cuts, detailed scale drawings, wiring diagrams of any nonstandard or special equipment. All supplemental data shall be submitted in accordance with Section 1-05.3.

SS 8-21.3 Construction Requirements

SS 8-21.3(1) Location of Signs

Since it is impossible to visualize the actual physical features of final grade elevations, vertical curves, trees, and other factors that affect proper sign placement in the initial sign plan stage, it becomes necessary to make adjustments in sign location just prior to installation. The Project Engineer and Regional Traffic Engineer should coordinate a study of each location to determine that each sign will be in the most efficient location for visibility and nighttime reflectivity. Advance Destination signs may be moved up to 500 ft in either direction if severe ground or slope conditions are encountered. If the sign must be moved more than 500 ft, consideration should be given to revising the distance on the sign. All sign locations shall be staked by the Engineer prior to installation by the Contractor.

Following staking of the signs, the Project Engineer should furnish the Contractor with the list of post lengths for steel posts. For wooden posts, the Contractor should be able to order posts in commercial lengths from the approximate lengths shown in the plans. Final lengths of timber posts will be determined or verified by the Engineer at the request of the Contractor prior to fabrication.

SS 8-21.3(2) Placement of Signs

A "fabrication approval" decal dated and signed by the Sign Fabrication Inspector shall appear on the back of all permanent signs that are received on the project. Signs without such indicated acceptance shall not be permitted on the project. Damaged signs shall be rejected at the project site.

At the completion of a sign installation, the Project Engineer shall request the Regional Traffic Engineer to assist in making a final inspection.

SS 8-21.3(9) Sign Structures

SS 8-21.3(9)A Shop Drawings for Sign Structures

Working drawings of sign structures shall be reviewed by the Project Engineer for conformance with the *Standard Plans* Section G. The Project Engineer approves plans in conformance with the standard plans. Any request to deviate from standard plans should be reviewed by the State Bridge and Structures Office.

The working drawings of special design sign structures and/or special sign fittings shall be submitted to the State Bridge and Structures office, which will coordinate approval with the State Materials Laboratory. After approval, the State Bridge and Structures office will retain one set and forward the approved PDF file to the Project Office., The Project Engineer will forward the approved PDF file to the Fabrication Inspector, the Region Signal Superintendent (or designate), and the Contractor, who will forward to the Fabricator.

If a structural review is not required by the State Bridge and Structures office, the Project Engineer shall mark all changes in red on a PDF and distribute In accordance with the Working Drawings, Shop Plans, or Submittal Type in Section SS 1-05.3.

All drawings shall be clearly marked (See SS 1-05.3) before returned to the Contractor, whether reviewed and checked by the Project Engineer or the State Bridge and Structures Office. The Project Engineer is responsible for checking the geometric features of these items. Specific items that should be checked include the following:

- Foundation Location
- Handrail fitup with VMS Door Opening

The special provisions of the contract deal to a great extent with the proper fabrication of the signs to be installed and the manufacturing process requiring the use of approved application equipment. It is necessary, therefore, that the firm who actually makes the signs be approved as a source of supply. Such approval is made by the State Materials Laboratory.

SS 8-21.3(9)G Sign Structure Identification Information

Anytime an existing bridge mounted sign bracket, cantilever sign structure, or sign bridge structure is removed from service, the Contractor shall remove any existing sign structure identification plate and give it to the Project Engineer. The Project Engineer will return the identification plate to the State Bridge Preservation Office so the sign structure can be removed from the inventory.

SS 8-21.3(12) Steel Sign Posts and Structures

It is important to ensure the proper torque is applied to bolts connecting the bases when installing *Standard Plan* G-24.10.00 through G-24.60.00 Sign Structures. Procedures for assembling and inspecting high strength bolts are covered in Section 6-3.6B.
All base assemblies shall be checked with a torque wrench. This can be accomplished either by observing the Contractor's torquing or by the Inspector utilizing the Region's torque wrench. Documentation of the torquing method used should be accomplished by proper entries in the Inspector's Daily Reports.

Chapter 9 Materials

9-1 General

The quality of materials used on the project will be evaluated and accepted in various ways, whether by testing of samples, visual inspection, or certification of compliance. This chapter details the manner in which these materials can be accepted. Requirements for materials are described in *Standard Specifications for Road, Bridge, and Municipal Construction* M 41-10 Section 1-06 and Division 9.

The State Materials Engineer is responsible for the state's materials approval and acceptance program, and the Quality Assurance Program. Any changes or deviations to the approval or acceptance of materials, or the Quality Assurance Program beyond what is allowed in this chapter will require approval from the State Materials Engineer or the Assistant State Materials Engineer.

It is the Project Engineer's responsibility to accept materials in accordance with this chapter. For materials that do not meet specification requirements, the Project Engineer shall contact the State Construction Office which will coordinate with the State Materials Laboratory to determine the appropriate action.

9-1.1 PE Authority for Materials Approval and Acceptance

This chapter covers the Project Engineer's authority to approve and modify the acceptance of certain materials while maintaining normal approval and acceptance by the State Materials Laboratory and Region. The use of these processes mentioned within this section are to be implemented prior to work being performed and not to retroactively justify deficiencies discovered after the completion of work, with the exception that Reducing Frequency of Testing is implemented during the work. It is recommended that the Project Engineer office review the original Record of Materials to determine if items can be modified within the guidelines of this section. The Record of Material should be actively maintained per Section 9-1.2C. Materials accepted in accordance with these options shall be identified in the Project Engineer's preparation of the Certification of Materials under Section SS 1-09.12, Audits.

The options that are available to the Project Engineer for approving and modifying the acceptance of materials are the following sections:

- Section 9-1.1A Sampling and Testing for Small Quantities of Materials
- Section 9-1.1B Reducing Frequency of Testing
- Section 9-1.1C Project Engineer Discretionary Materials Approval/Acceptance
- Section 9-1.1D Optional Approval/Acceptance for Materials

The Reduced Acceptance Criteria Checklist DOT Form 350-120 shall be completed and retained in the materials file when Reducing Frequency of Testing, Sampling and Testing for Small Quantities of Materials and Project Engineer Discretionary Materials Approval/Acceptance are invoked. All information requested on the checklist shall be filled in completely. Any items that do not require approval from the State Materials Laboratory and the State Construction Office may be approved at the Project Engineer level.

For approval of changes beyond the Project Engineer's authority (items marked with a "yes" and an "x" on DOT Form 350-120), a request must be transmitted to the State Materials Laboratory and may require approval from the State Construction Office as well. The completed checklist shall accompany the request and represents the minimum information required to process the modification. The State Materials Laboratory and the State Construction Office have final authority to approve or reject any request for modification. Written approval by the State Materials Laboratory and State Construction Office constitutes agreement with the proposal. The signed checklist and all supporting documentation are to be placed in the project Materials File.

For approval contact the following:

- **State Materials Laboratory** – Areas of responsibility: All changes to materials approval and acceptance, and to *Standard Specifications* Division 9. Initial contact: Materials Quality Assurance Engineer
- **State Construction Office** – Areas of responsibility: *Standard Specifications* Divisions 1, 2, 3, 4, 5, 6, 7, 8, 10, and 11.

9-1.1A Sampling and Testing for Small Quantities of Materials

The Project Engineer may elect to accept small quantities of materials without meeting minimum sampling and testing frequencies using the following criteria. The use of this process is to be implemented prior to work being performed and not to retroactively justify deficiencies discovered after the completion of work.

An item can be accepted as a small quantity if the proposed quantity for a specific material is less than the minimum required testing frequency

Materials that will not be considered under the small quantity definition are:

- Concrete with a 28-day compressive strength of 4000 psi or greater.

Some issues that the Project Engineer may consider prior to use of small quantity acceptance are:

- Has the material been previously approved?
- Is the material certified?
- Do we have a mix design or reference mix design?
- Has it been recently tested with satisfactory results?
- Is the material structurally significant?

Small quantity acceptance could be visual, by certification, or other methods and the basis of acceptance shall be documented on DOT Form 350-120. For visual documentation, an entry should be made in the project records as to the basis of acceptance of the material, and the approximate quantity involved.

The small quantity acceptance may be used for any quantity of the following:

- Curbs and sidewalks
- Driveways and road approaches
- Paved ditches and slopes

Where jobsite mixing of concrete occurs in accordance with *Standard Specifications* Section 6-02.3(4)B small quantity acceptance can be used for acceptance of packaged concrete meeting the requirements of ASTM C 387. The packaged concrete bag must state that the concrete meets the requirements of ASTM C 387.

9-1.1B Reducing Frequency of Testing

Reducing the frequency of testing of materials is intended for WSDOT projects with a high volume of materials. In instances of uniform material production where the statistical acceptance testing data shows the material is running well within specification limits deviations from the testing frequency schedule may be instituted. Sampling frequency reduction may be considered only after ten consecutive samples taken at the normal testing frequency indicate full conformance with the specifications. The sampling and testing frequency will revert back to the normal frequency if there are any failing tests. The use of this process is to be implemented prior to work being performed and not to retroactively justify deficiencies discovered after the completion of work.

The Statistical Analysis of Materials (SAM) program will be utilized to develop and support approvals to reduce testing frequency and/or to eliminate selected test properties. Testing on selective materials may be reduced or eliminated without statistical data on select material, for example selective relief would be reduction/elimination of fracture determinations and sand equivalent testing for production from quarry sources.

All deviations from the testing frequency must be documented in the project records, and fully explained by the Project Engineer. Lack of personnel, equipment, and facilities will not be considered sufficient reasons for such deviation.

The authority given below to approve deviations to testing frequencies shall not be subdelegated within the regions.

- The Project Engineer, licensed as a Professional Engineer in the State of Washington, may initiate and approve up to 10 percent deviations from the testing frequency schedule. The Project Engineer does not have the authority to reduce sampling frequencies for the following materials: Hot Mix Asphalt, Warm Mix Asphalt, Structural Concrete and Cement Concrete Pavement.

- The Region Materials Engineer, licensed as a Professional Engineer in the State of Washington, may approve requests from project engineers for an additional 10 percent deviation from the testing frequency schedule. The Region Materials Engineer does not have the authority to reduce sampling frequencies for the following materials: Hot Mix Asphalt, Warm Mix Asphalt, Structural Concrete and Cement Concrete Pavement.
- Elimination of fracture and/or SE from a Quarry Site requires approval from the Region Materials Engineer. Elimination of any other testing will require approval of State Materials Engineer or the Assistant State Materials Engineer.
- Request for sampling frequency deviations exceeding the Project Engineer and Region Materials Engineer reduction authority requires approval from the State Materials Engineer or the Assistant State Materials Engineer.
- Request for sampling frequency deviations for Hot Mix Asphalt, Warm Mix Asphalt, Structural Concrete and Cement Concrete Pavement require approval from the State Materials Engineer or the Assistant State Materials Engineer.

A copy of all testing frequency deviations with substantiating data approved by the Project Engineer and/or the Region Materials Engineer will be sent to the State Materials Engineer.

9-1.1C Project Engineer Discretionary Materials Approval/Acceptance

In advance of or during the course of the project, in the interest of economy and efficiency, noncritical items of work may be identified for which the Project Engineer is allowed to approve the Request for Approval of Material (RAM), and may choose to modify the normal inspection or testing procedures. In taking these actions, the Project Engineer is acting under the professional responsibility inherent in all actions as a representative of the department and as a Licensed Professional Engineer. Full accountability of such actions is expected. The scope of such actions should not exceed $20,000 for a single bid item, nor exceed $50,000 for an entire project. Approval above these dollar amounts requires approval from the State Materials Laboratory and the State Construction Office. The use of this process is to be implemented prior to work being performed and not to retroactively justify deficiencies discovered after the completion of work.

The nature of the work to be accepted in this manner will generally be limited to minor and isolated items. Acceptance would typically involve dimensional conformance to the plans and a visual determination that the materials are suitable; however, the Project Engineer may require some testing or other means to support a decision. In such an action, the Project Engineer should be guided by the principle of achieving the intent of the contract, attaining reasonable expectations of service life proportional to cost, and protection of public safety. The changes in acceptance procedures will only be made to work occurring outside of vertical lines through the horizontal limits of the traveled way. Consideration should be given to the consequences of subsequent failure, ease of replacement, whether or not there is a high variability in the quality of similar work, or any other pertinent facts. Actions taken in accepting such materials should be identified in the project records with acknowledgment by signature of the Project Engineer, licensed as a Professional Engineer in the State of Washington.

9-1.1D Optional Approval/Acceptance for Materials

The materials listed in Table 9-1 may be accepted by visual acceptance at the option of the Project Engineer. The Project Engineer's Office can test or require additional documentation for any of the materials in this section if quality appears to be in question per *Standard Specifications* Section 1-06.1. Visual Acceptance requires Field Verification per Section 9-1.5, unless additional documentation is stipulated in the Contract Documents. The use of this process is to be implemented prior to work being performed and not to retroactively justify deficiencies discovered after the completion of work.

The Project Engineer is allowed to approve the Request for Approval of Material (RAM). If there is a question on the quality or ability of the material to perform its intended use, it is the responsibility of the Project Engineer to determine if it is appropriate to accept the materials by visual acceptance or if additional acceptance testing or certification is required. This includes contacting the Headquarters or Region Subject Matter Expert for assistance in assessing whether additional acceptance testing or certification is required for a material. Other items can be considered for addition to this list. Suggestions are encouraged and may be made to the State Construction Office or the State Materials Laboratory.

The "Buy America" requirements apply to all federally funded projects.

Washington State Department of Transportation

Reduced Acceptance Criteria Checklist

This checklist is required to be filled out for individual materials and be put in the Materials File.

If the material is listed in the CM Section 9-1.3C - 'Low Risk Materials' or this material qualifies for Visual Acceptance per 9-1.4C, then **you do not need to proceed with this form.**

Contract Number	Contract Title		Date
Bid Item Number	Plan Quantity	Material Description	

Description of Change to Materials Acceptance: Explain the work being performed and the proposed changes to the normal materials acceptance, and/or inspection criteria. Explain why this is being proposed, what is the justification for the change, is this a 'critical' item of work and has proper approval (RAM/QPL) been performed?

Acceptance Criteria per RAM/QPL	Proposed Acceptance Criteria

R = Region Materials Engineer M = State Materials Laboratory C = State Construction Office	Yes	No	Required Approvals
I. Sampling and Testing for Small Quantities of Material (CM 9-1.1A)			
Is the proposed quantity greater than the minimum required frequency?	☐	☐	STOP If 'Yes'
For concrete, is the concrete Cl 4000 psi or greater?	☐	☐	STOP If 'Yes'
Is the material structurally 'significant'?	☐	☐	M C
II. Reduce Frequency of Testing: (CM 9-1.1B)			
Is the material running well within specification limits?	☐	☐	STOP If 'No'
Have ten consecutive samples been taken at normal frequency that indicate complete conformance within specification requirements?	☐	☐	STOP If 'No'
Is the proposal for deviation greater than 10% and less than 20%?	☐	☐	R
Is the proposal for deviation greater than 20% or elimintion of test?	☐	☐	M
For Quarry Sites, is 'fracture' being eliminated?	☐	☐	R
III. Project Engineer Discretionary Materials Acceptance (CM 9-1.1C)			
Is the work 'within' the vertical limits of the roadway?	☐	☐	M C
Is the dollar amount over $20,000 for this Bid Item? $ _____	☐	☐	M C
Is the total dollar amount over $50,000 for the entire project? $ _____	☐	☐	M C

State Materials Laboratory and Headquarters Construction concurrence documentation must be attached.

Approvals

Project Engineer Approval By: _____ Date _____

Region Materials Laboratory: Date of Concurrence _____

State Materials Laboratory: Date of Concurrence _____

State Construction Office: Date of Concurrence _____

DOT Form 350-120 EF 10/09 Distribution: ☐ Region Materials Lab ☐ State Materials Lab ☐ State Construction Office

Reduced Acceptance Criteria Checklist DOT Form 350-120

Figure A-1

Material	Standard Specifications Reference	Construction Manual Section 9-4
Access Control Gates	Std Plan L-70.10 and L70.20	
Adhesive for Girder Stop Pads	Special Provision	
Air Relief Valve	9-15.16	9-4.49
Asphalt Primer & Adhesive for Deck Seal Membrane	Special Provision	
Automatic Control Valves	9-15.7(2)	9-4.49
Automatic Control Valves With Pressure Regulator	9-15.7(3)	9-4.49
Automatic Controller	9-15.3	9-4.49
Bark or Wood Chips	9-14.4(3)	9-4.48
Barrier Delineator Adhesive	Special Provision	
Biodegradable Erosion Control Blanket	9-14.5(2)	9-4.80
Bollard Type 1 and 2	See Std. Plans for Bollards	9-4.95
Chain Link Gates	9-16.1(1)E	9-4.50
Check Dams	9-14.5(4)	9-4.80
Check Valves	9-15.12	9-4.49
Chemical Pesticides	8-02.3(2)A	
Clear Plastic Covering	9-14.5(3)	9-4.80
Coir Log	9-14.5(7)	9-4.80
Compost	9-14.4(8)	9-4.48
Compost Sock	9-14.5(6)	9-4.80
Concrete	9-16.1(1)F & 9-16.2(1)J	9-4.76
Concrete Block for Manholes and Catch Basins	9-12.1	9-4.48
Concrete Brick	9-12.2	9-4.98
Detectable Marking Tape	9-15.18	9-4.49
Detectable Underground Warning Tape	9-29.1(6)	
Drain Grate for Soil Nail Walls	Plan Sheet	
Drain Valves	9-15.9	9-4.49
Drip Tubing	9-15.2	9-4.49
Electrical Wire and Splices	9-15.17	9-4.49
Expanded Polystyrene	9-04.6	
Fertilizer	9-14.3	9-4.47
Fittings and Hardware	9-16.1(1)D	9-4.50
Foam Backer Rod	9-08.8	
Flow Control Valves	9-15.15	9-4.49

Material	Standard Specifications Reference	Construction Manual Section 9-4
Galvanized Pipe and Fittings (Irrigation System)	9-15.1(1)	9-4.49
Galvanizing Repair Paint (Fence)	9-08.1(2)B	9-4.35
Gate Valves	9-15.6	9-4.49
Gypsum	9-14.4(6)	
High Visibility Silt Fence and all components	9-14.5(9)	9-4.80
Hose Bibs	9-15.10	9-4.49
Hydraulically Applied Erosion Control Products (HECPs)	9-14.4(2)	9-4.48
Inlet Protection	8-01.3(9)D	9-4.80
Irrigation Heads	9-15.4	9-4.49
Lime	9-14.4(5)	
Loop Sealant for Induction Loop	Special Provision	
Mailbox Support Type 3	Std Plan H-70.30	
Manual Control Valves	9-15.7(1)	9-4.49
Miscellaneous Fence Hardware	9-16.2(1)H	9-4.50
Mortar Blocks (Dobies)	6-02.3(24)C	9-4.29
Pipe, Tubing, and Fittings (Irrigation System)	9-15.1	9-4.49
Media Filter Drain Mix	Special Provision	9-4.101
Polyacrylamide (PAM)	9-14.5(1)	9-4.80
Polyethylene Pipe (Irrigation System)	9-15.1(3)	9-4.49
Polyvinyl Chloride Pipe and Fittings (Irrigation System)	9-15.1(2)	9-4.49
Prepackage Concrete	6-02.3(4)B	9-4.76
Prepackage Mortar Type 2	9-20.4(3)	9-4.81
Premolded Joint Filler	9-04.1(1)	9-4.12
Polyurethane Sealant	9-04.2(3)	9-4.42
Pressure Regulating Valves	9-15.13	9-4.49
Quick Coupling Equipment	9-15.8	9-4.49
Rebar Chairs & Spacers	6-02.3(24)C	9-4.29
Riprap and Quarry Spalls for Stabilized Construction Entrances	8-01.3(7)	9-4.42
Rock and Aggregate Material for Landscape Features	9-03 & 9-13	
Rust Penetrating Caulk	6-07.3(10)G	

Optional Approval/Acceptance for Materials
Table 9-1

Material	Standard Specifications Reference	Construction Manual Section 9-4
Semi-Open Concrete Masonry Units Slope Protection	9-13.5(1)	9-4.43
Silt Fence and All Components	8-01.3(9)A	9-4.80
Site Furnishings (benches, trash, recycling, and ash receptacles, bike security stations and planters)	Special Provision	
Sod	9-14.6(8)	
Stakes, Guys, and Wrapping	9-14.7	9-4.49
Staples and Wire Clamps	9-16.2(1)D	9-4.50
Straw	9-14.4(1)	9-4.48
Tackifier	9-14.4(7)	9-4.48
Temporary Curb	8-01.3(13)	
Temporary Pipe Slope Drain	8-01.3(14)	

Material	Standard Specifications Reference	Construction Manual Section 9-4
Three-Way Valves	9-15.14	9-4.49
Topsoil Type A	9-14.1(1)	9-4.45
Topsoil Type B	9-14.1(2)	9-4.45
Topsoil Type C	9-14.1(3)	9-4.45
Valve Boxes and Protective Sleeves	9-15.5	9-4.49
Vertical Cinch Stays	9-16.2(1)G	9-4.50
Wattles	9-14.5(5)	9-4.80
Weed Control (Herbicides)	8-02.3(2)B	
Wire Fence and Gates	9-16.2	9-4.50 & 9-4.36
Wye Strainers	9-15.19	9-4.49

Optional Approval/Acceptance for Materials (continued)
Table 9-1

9-1.2 Control of Materials

The succeeding parts of this chapter outline the detailed method to be used in the control of materials. The expenditure made for materials is a large portion of construction costs. If faulty materials are permitted to be incorporated into the project, the cost of replacement may exceed the original cost.

Section 9-2 Materials Fabrication Inspection Office – Inspected Items Acceptance explains the process for the acceptance of fabricated items, and the types of Fabrication acceptance markings used to identify approved fabrication items.

Section 9-3 Guidelines for Job Site Control of Materials provides the engineer with additional information to assist in determination of the point of acceptance for materials from WSDOT and Contractor sources, the basis of acceptance, verification sampling and testing, tolerance limits, and the sampling and testing frequency guide.

Section 9-4 Specific Requirements for each Material provides specific requirements about each material that includes the following information:

1. Approval of Material
2. Preliminary Samples
3. Acceptance or Acceptance/ Verification
4. Field Inspection
5. Specification Requirements
6. Other Requirements

Section 9-5 Quality Assurance Program defines the requirements for the materials tester to become qualified. The requirements for the Independent Assurance Program are also included.

Section 9-6 Radioactive Testing Devices explains policy on the administration of radioactive testing devices.

Section 9-7 WSDOT Test Methods/Field Operating Procedures defines the testing procedures and lists the equipment that are used in the field.

9-1.2A Materials Management Computer Programs

There is a series of material management computer programs that have been developed to aid the Project Engineer office's in tracking, approving, accepting, and testing materials.

- **Record of Materials (ROM)** – A listing of the construction items generated by the State Materials Laboratory that has been identified from the plans and specifications for each project. The ROM identifies the kinds and quantities of materials, the standard Acceptance Methods and the number of acceptance and verification samples required for each material that will be used on the project. It also lists the acceptance requirements for materials requiring other actions, such as fabrication inspection, manufacturer's certificate of compliance, shop drawings or catalog cuts.
- **Materials Tracking Program (MTP)** – A program to provide a process for the Project Offices to maintain the ROM and the bid item list. It also provides for a standardized material document tracking process with an electronic centralized data management storage system, to manage the approvals, acceptance and other material documentation associated with WSDOT construction contracts.
- **Aggregate Source Approval (ASA)** – A program that tracks aggregate sources, approvals and expiration dates for the different aggregate material types that could be used on a construction project. This application is designed to allow the user to query the database for the intended source of aggregate to be used, determine if it is approved, and print the ASA report.
- **Qualified Product List (QPL)** – A program that lists products that have been found capable of meeting the requirements of the *Standard Specifications* or General Special Provisions under which they are listed and, therefore, have been "*Approved*." These may be "*Accepted*" in the field by fulfilling the requirements of the Acceptance Code and any notes that apply to the product.
- **Statistical Analysis of Materials (SAM)** – A program that is used for the statistical acceptance of materials according to *Standard Specifications* Section 1-06. The testing data will be kept electronically for quality and compliance audits and for historical references. The program will generate the reports showing the composite pay factors and project totals.
- **Materials Testing System (MATS)** – A testing program where all materials testing will be recorded. This includes the testing performed at the State Materials Laboratory, the Region Materials Laboratory, and the project office acceptance testing. The program will generate the transmittal, provide for tracking the samples throughout the testing process, and automatically bills for the testing performed. The program will also provide a report detailing the test results, and distribute the reports according to the established distribution list.

9-1.2B Materials Forms

A number of form letters have been prepared as an aid to the Project Engineer in transmitting information to the State Materials Laboratory. In order to minimize delays to completion of material testing, transmittal letters should include all the information that is pertinent to the sample in question. In order to assist the State Materials Laboratory, copies of the transmittal letters should be retained in the Project Engineers

Office. The following is a list of the forms that may be used for transmittal of samples and/or information to the State Materials Laboratory:

350-016 Asphalt Emulsion Sample Label
350-023 Pit Evaluation Report
350-040 Concrete Mix Design
350-041 Request for Reference HMA Mix Design
350-042 HMA Mix Design Submittal
350-067 Thickness Measurements Pavement and Treated Base Cores Transmittal/Report
350-071 Request for Approval of Material
350-072 Transmittal of Catalog Cuts
350-073 Hot Mix Asphalt Test Point Evaluation Report
350-074 Field Density Test
350-092 Hot Mix Asphalt Compaction Report
350-114 Summary Report of Acceptance Sampling and Testing
350-115 Contract Materials Checklist
350-572 Manufacturer Certification of Compliance Check List
351-015 Daily Compaction Test Report
410-025 Project Engineer Transmittal

9-1.2C Record of Materials (ROM)

A Record of Materials (ROM) listing of all major construction items is provided by the State Materials Laboratory for each project. For these major construction items, the ROM identifies the kinds and quantities for all materials deemed to require quality assurance testing. It further identifies the minimum number of acceptance and verification samples that would be required for acceptance of those materials. The minimum number of acceptance tests is based on the planned quantities for the project and should be adjusted on the project ROM for the actual quantities used. Also listed are those materials requiring other actions, such as Fabrication Inspection, Manufacturer's Certificate of Compliance, Miscellaneous Certificates of Compliance, Shop Drawings, Catalog Cuts and Field Acceptance.

The acceptance action and/or numbers of samples listed are the minimum requirements for the Project Engineer's acceptance of those materials and the minimum requirements necessary for the Region's certification for the materials used on that project. The State Materials Laboratory will forward the Record of Materials electronically to the Region Materials Engineer, and Project Engineer shortly after the contract is awarded. The copy submitted to the Project Engineer is intended as a tool to assist the project office in tracking the materials approved, samples tested, Manufacturer's Certificate of Compliance, Shop Drawings, Catalog Cuts received, Field Acceptance, Field Verification and other pertinent data necessary for the Project Engineer's and the Region's certification of materials.

The acceptance requirements shown on the Record of Material may be modified by the Contractor's specific Requests for Approval of Material or submitted *Qualified Products List* page. In addition the ROM is based on the State Material Laboratory's review of the major items of construction identified by the contract Summary of Quantities. Reviewing the contract plans and provisions may identify additional materials documentation requirements as well as major construction items that require

additional materials not accounted for in the State Material Laboratory's initial review of the project. These additional materials documentation requirements should be added to the project ROM and tracked for completion throughout the course of the project work.

The accuracy of the ROM and Certification of Materials is largely the responsibility of the Project Engineer.

Where the ROM is not clear or there appear to be opportunities to adjust the acceptance requirements that have been identified, the Project Engineer is encouraged to contact the Region Materials Engineer or the State Materials Laboratory Documentation Section for assistance.

In order to ensure clarity upon completion of the work and to allow for easy certification of the project by both the Project Engineer and the Region, it is important that the project ROM (maintained in the Materials Tracking Program) be accurately and actively maintained throughout the course of the project. Any changes to the acceptance requirements, additional materials used other than stated on the original Summary of Quantities or any additional materials added to the project by Change Order should be accurately documented and tracked in the project Record of Materials.

9-1.2D Materials Tracking Program, MTP

The Project Engineer office shall use the Materials Tracking Program (MTP) to maintain the materials documentation information for each State Contract that is administered by that office.

The MTP is a program that is an electronic filing cabinet to assist the Project Engineer office in managing and tracking required documentation. This will allow for easy certification of the project by both the Project Engineer and the Region.

The MTP is organized by Bid Item – Sub item as generated by the original Record of Materials. Materials documentation such as approval, acceptance, field verification, CMO and other documentation for each item is required to be maintained for each permanently incorporated material. The Project Engineer office is expected to keep up to date entries for accurate tracking of materials placed on the jobsite and update the MTP to reflect the actual materials and quantities placed. The program also tracks deficiencies and has various reports available for tracking documentation.

The program is located at http://webprod2.wsdot.wa.gov/materials/tracking.

9-1.2E Certification of Materials Origin

For Contracts Advertised Prior to January 11, 2016

Projects that include Federal funding, or any project defined in the Federal Record of Decision under the National Environmental Policy Act (NEPA), must meet the requirements of "Buy America" (23 CFR 635.410, 23 USC 313). This provision, incorporated into the contract by General Special Provision, applies to all products containing steel or iron permanently incorporated into the project. The Contractor may choose to utilize minor quantities of foreign steel or iron, as described in the General Special Provision. Minor amounts of foreign steel and iron may be used in the project provided the cost of the foreign material used does not exceed one-tenth of one percent of the total contract cost or $2,500.00, whichever is greater. Included in this amount is state supplied materials, Proprietary items and Contractor provided materials.

The "Buy America" provision applies to products that are manufactured predominately of steel and iron if the product consists of at least 90 percent steel or iron content when it is delivered to the jobsite for installation. The 90 percent is a percentage of the total monetary value of the manufactured product.

To determine the 90 percent value, divide the raw steel or iron costs by the total manufactured product costs (without taxes, shipping, handling, or other fees applied), and if the percentage is equal to or greater than 90 percent of the final manufactured product costs, then the "Buy America" provision applies.

Determining whether a product is a steel or iron manufactured product, the jobsite includes the locations where any precast concrete products are manufactured. For example, in the specific case of "precast concrete products," the casting yard/facility is considered part of the "jobsite." Therefore, the iron and steel materials delivered to the precast yard/facility are subject to the "Buy America" provision.

The Contractor shall provide the completed and signed Certification of Materials Origin (CMO) to the Project Engineer prior to such items being incorporated into the permanent work. This certification may be supplied using DOT Form 350-109 or another form containing all the same information as required by DOT Form 350-109. It is the responsibility of the Project Engineer to ensure the CMO is on file prior to placing or paying for products that are made of steel or iron. CMOs for domestic steel or iron from fabricated inspected items will be retained by the fabrication inspection office. The exception is 30 inch diameter or less concrete pipe (see Sections 9-4.16 and 9-4.21). The Project Engineer is required to ensure these CMOs are on file prior to placement and payment.

In all cases, Certification of Materials Origin (CMO) must be completed and signed prior to incorporation of the steel or iron materials into the project. It is the responsibility of the Project Office to ensure that the CMO is on file prior to placing or paying for steel or iron materials, as defined below.

Fabricated Items

- WSDOT Fabrications Inspection Offices will review the supporting documentation, i.e., Mill Certificates and CMOs prior to inspecting and Stamping/Tagging the fabricated material. The Fabricator/plant is required to supply the Fabrications Inspector the DOT Form 350-109 completed and signed with each item prior to inspection.

- The project field inspector is required to document in the IDR, QPL Contractor Product Information Page, or Field Note Record (FNR) prior to placement that the fabricated material is identified with a "D" – Domestic or "F" – Foreign per Section 9-1.5. Fabricated items bearing an "F" or not bearing any Stamp when delivered to the job site requires that the Project Engineer office obtain the DOT Form 350-109 from the Contractor and retain this form in the project records.

Non-Fabricated Items

- The Project Office is required to obtain, and place in the materials file, a completed Certification of Materials Origin for any materials containing iron or steel. This certification may be supplied using DOT Form 350-109 or another form containing all the same information as required by DOT Form 350-109.

In summary, if a CMO is required, the Project Office is responsible for obtaining and filing the CMO prior to placement of or payment for the material unless the material is a fabricated item with a "D" stamp documented in the file.

Examples of products that are subject to "Buy America" provision include, but are not limited to the following:

- Steel or iron products used in pavements, bridges, tunnels or other structures, which include, but are not limited to the following: fabricated structural steel, reinforcing steel, piling, high strength bolts, anchor bolts, dowel bars, permanently incorporated sheet piling, bridge bearing, cable wire/strand, pre-stressing/post-tensioning wire, motor/machinery brakes and other equipment for moveable structures.
- Guardrail, guardrail posts, end sections, terminals, cable guardrail.
- Steel fencing material (fabric), fence post.
- Steel or iron pipe, conduit, grates, manhole covers, risers.
- Mast arms, poles, standards, trusses, or supporting structural members for signs, luminaires, or traffic control systems.
- Steel or iron components of precast concrete products, such as reinforcing steel, wire mesh and pre-stressing or post-tensioning strands or cables.

The miscellaneous steel or iron components, subcomponents and hardware necessary to encase, assemble and construct the above products (or manufactured products that are not predominantly steel or iron) are not subject to the "Buy America" provision. Examples include, but are not limited to the following:

- Materials listed under Section 9-1.3C – Low Risk Materials
- Anchor Ferrules
- Architecture miscellaneous items – doors, hinges, fixtures, faucets, shelves, etc.
- Bollard and Components
- Non-High Strength Bolts, Washers, and Nuts
- Clamps
- Dobie/Mortar Blocks
- Construction Aides – lifting hooks and inserts
- Electrical Miscellaneous Fittings
- Erosion Control Miscellaneous Hardware

- Fence Miscellaneous Hardware
- Gate Hardware (except for fabric and poles)
- Gabion Miscellaneous Hardware (except for twisted and welded fabric)
- Irrigation System Components and Hardware (except for steel or iron pipes and conduit)
- Pipe Sleeves
- Precast Concrete Traffic Barrier Pins
- Rebar chair and Spacers
- Screws
- Shims
- Slope Protection Miscellaneous Hardware
- Utility Inserts
- Welding Rods and Welding Wire
- Weld Splices for Precast Concrete Girders

For Contracts Advertised On or After January 11, 2016

Projects that include Federal funding, or any project defined in the Federal Record of Decision under the National Environmental Policy Act (NEPA), must meet the requirements of "Buy America" (23 CFR 635.410, 23 USC 313). This provision, incorporated into the contract by General Special Provision, applies to all products containing steel or iron permanently incorporated into the project. The Contractor may choose to utilize minor quantities of foreign steel or iron, as described in the General Special Provision. Minor amounts of foreign steel and iron may be used in the project provided the cost of the foreign material used does not exceed one-tenth of one percent of the total contract cost or $2,500.00, whichever is greater. Included in this amount is state supplied materials, Proprietary items and Contractor provided materials.

The Contractor shall provide the completed and signed Certification of Materials Origin (CMO) to the Project Engineer prior to such items being incorporated into the permanent work. This certification may be supplied using DOT Form 350-109 or another form containing all the same information as required by DOT Form 350-109. It is the responsibility of the Project Engineer to ensure the CMO is on file prior to placing or paying for products that are made of steel or iron. CMOs for domestic steel or iron from fabricated inspected items will be retained by the fabrication inspection office. The exception is 30 inch diameter or less concrete pipe (see Sections 9-4.16 and 9-4.21). The Project Engineer is required to ensure these CMOs are on file prior to placement and payment.

In all cases, Certification of Materials Origin (CMO) must be completed and signed prior to incorporation of the steel or iron materials into the project. It is the responsibility of the Project Office to ensure that the CMO is on file prior to placing or paying for steel or iron materials, as defined below.

Fabricated Items

- WSDOT Fabrications Inspection Offices will review the supporting documentation, i.e., Mill Certificates and CMOs prior to inspecting and Stamping/Tagging the fabricated material. The Fabricator/plant is required to supply the Fabrications Inspector the DOT Form 350-109 completed and signed with each item prior to inspection.
- The project field inspector is required to document in the IDR, QPL Contractor Product Information Page, or Field Note Record (FNR) prior to placement that the fabricated material is identified with a "D" – Domestic or "F" – Foreign per Section 9-1.5. Fabricated items bearing an "F" or not bearing any Stamp when delivered to the job site requires that the Project Engineer office obtain the DOT Form 350-109 from the Contractor and retain this form in the project records.

Non-Fabricated Items

- The Project Office is required to obtain, and place in the materials file, a completed Certification of Materials Origin for any materials containing iron or steel. This certification may be supplied using DOT Form 350-109 or another form containing all the same information as required by DOT Form 350-109.

In summary, if a CMO is required, the Project Office is responsible for obtaining and filing the CMO prior to placement of or payment for the material unless the material is a fabricated item with a "D" stamp documented in the file.

9-1.2F Project Material Certification

The Project Engineer is responsible for obtaining all required materials documentation or otherwise ensuring that all required materials testing is completed, all with satisfactory results, prior to the materials being incorporated into the project. The Project Engineer is also responsible for maintaining a comprehensive accounting for the materials incorporated into the project in order to support the Region's Certification of Materials. Managing and accounting for materials used in the construction of a project are to be administered in the same manner regardless of its funding source; Federal, State, or a combination of both.

The Region is responsible for periodic reviews of each project's materials documentation at the Project Engineer's Office. Upon completion of the project the Region will prepare a Region Materials Certification letter listing all variances that were identified and their resolution. On projects that involve Federal participation where material deficiencies are documented, these deficiencies must be resolved with the State Construction Office through the Region before the Region Certification of Materials can be completed. On projects that involve State Funds only, documented deficiencies must be resolved with the Region prior to the Region Certification of Materials. The Regional Administrator or their designee is responsible for signing and distributing the certification letter.

The State Materials Laboratory will also perform Construction Quality Audits on a sampling of active projects statewide where the materials have yet to be certified.

9-1.2F(1) Definitions

(I) Certification

A Region Materials Certification based on a documented evaluation of the project's materials inspection, sampling, testing, and other materials acceptance activities for their conformance to the contract documents, *Standard Specifications*, and this manual. The certification reflects the project's conformance with the Record of Materials as adjusted by the Project Engineer for:

1. Actual project quantities utilized.
2. Acceptance practices as provided for in this chapter.
3. Adjusted sampling/testing frequencies as provided for in Section 9-3.
4. Work added by Change Order.

(II) Variance

An identified difference between the materials acceptance requirements noted in this manual, the contract documents, the *Standard Specifications*, and a review of the completed projects Record of Materials. All variances must be noted. Such notations must include the basis by which the material was accepted and how the requirements for that material were met. Any variance between the recognized acceptance requirements and the Project Engineer's use of the material must be resolved with the Region, State Construction Office, and/or State Materials Laboratory, as appropriate.

9-1.2F(2) Project Material Certification Process

(I) Environmental and Engineering Programs Division (EEPD)

1. State Materials Laboratory (Documentation Section)
   a. Prepare the initial Record of Material for all major items of materials listed in the contract.
   b. Provide technical support, certification guidelines, format, and suggested documents. See Figure 9-1 for Contract Materials Checklist DOT Form 350-115. See Figure 9-2 for examples of the Region Materials Certification letter and its distribution.
   c. Conduct Construction Quality Audits on a sampling of projects in progress statewide where the Region has yet to certify the materials.
2. State Construction Office (Documentation Engineer)
   a. Receives variances for federal aid projects identified during the Region's materials certification review.
   b. Coordinates with FHWA and Region to determine funding eligibility for variances.
   c. Prepares response to Region identifying degree of participation (Letter of Resolution).

9-1.3 Approval of Materials

Prior to use, the Contractor must notify the engineer of all proposed materials to be permanently incorporated into the project in accordance with *Standard Specifications* Section 1-06.1. Some temporary items may require approval if required by the Contract Documents. This may be accomplished by a Qualified Product List (QPL) submittal or by submitting a Request for Approval of Material (RAM) DOT Form 350-071.

When materials are approved, it does not necessarily constitute acceptance of the materials for incorporation into the work. All additional acceptance actions, as noted by the code on the RAM or QPL must be completed prior to the materials being used in the work.

9-1.3A Aggregate Source Approval and the Qualified Products List

9-1.3A(1) Aggregate Source Approval

The State Materials Engineer establishes requirements for aggregate source sampling, testing and approval of aggregate sources in the Aggregate Source Approval (ASA) database. The ASA engineer at the State Materials Laboratory maintains and updates the ASA computer database, records source approvals, and coordinates with source owners and the Region materials engineers on sampling and testing for source approvals.

The Region Materials Engineer, licensed as a Professional Engineer in the State of Washington, may initiate and approve up to a 3 month extension of an aggregate source on a project-by-project basis for a WSDOT construction project as long as the extension is approved prior to the aggregate source/material expiration date. The Region materials engineer may approve infrequently used state owned aggregate sources that have expired in the ASA database without additional testing. In all cases the Region materials engineers shall base their decisions on testing data, source history, proposed material use, and other engineering information that supports extending approval duration or approving a state owned source. The Region Materials Engineer's decision must be documented and submitted to the State ASA Engineer for inclusion in the ASA Database. Lack of personnel, equipment, facilities, cost of testing and construction project deadlines will not be considered sufficient reasons for extending aggregate source approval dates.

Once the approval duration for a privately owned or leased aggregate source expires a re-evaluation of the aggregate source is required prior to approval unless the State Materials Engineer approves an extension. The Region materials engineer may request an aggregate source approval extension for an expired aggregate source by submitting the documentation noted above along with their recommended time extension to the ASA engineer. The State Materials Engineer will review the Region Materials Engineer's recommendation and determine if an extension or re-evaluation of the aggregate source is warranted.

For aggregate sources having variable quality, the Region Materials Engineer may have remarks added to the ASA database indicating that the aggregate source approval is on a stockpile basis. The Region Materials Engineer may approve these aggregate sources by either a stockpile(s) or on a project-by-project basis provided the aggregate source approval duration has not expired.

9-1.3A(2) Qualified Products List (QPL)

Products listed in the QPL have been found capable of meeting the requirements of the *Standard Specifications*, General Special Provision, Bridge Special Provision. and *Standard Plans* under which they are listed and, therefore, have been "Approved." These products may be "Accepted" by fulfilling the requirements of the Acceptance Code and any notes that apply to the product. If the Contractor elects to use the QPL, the most current list available at the time the product is proposed for use, shall be used. During the life of the contract, acceptance methods for materials in the QPL may change, becoming more stringent or less stringent. The acceptance method detailed on the originally submitted QPL page will continue to be the acceptance method for the life of the contract, unless the Contractor submits a new QPL page for the material. This is the case regardless of whether the acceptance method becomes more stringent or less stringent. Instructions are given in the QPL for processing QPL submittals. Contractors and Project Engineer offices are encouraged to use the QPL database for submittals. The QPL database is constantly updated with additions and/or deletions and can be accessed at www.wsdot.wa.gov/biz/mats/qpl/qpl.cfm.

The d shall review the material submittal for consistency with the Bid Item and shall promptly notify the Contractor of any concerns, working with the Contractor toward resolving these issues. QPL submittals inconsistent with the intended use for the Bid Item should be marked "unacceptable for intended use" and returned to the Contractor. Copies of QPL pages for materials that are to carry a WSDOT Fabrication Inspection "Stamp/Tag" or Sign Inspection "Decal" shall be forwarded to the WSDOT Headquarters Fabrication Inspection Office.

9-1.3B Request for Approval of Material – Submittal

The Contractor shall submit all Request for Approval of Materials (RAM) to the Project Engineer office using the WSDOT RAM form DOT Form 350-071.

If a RAM is submitted with a material found on the QPL, the project engineers office may code the RAM as defined in Section 9-1.3B(1).

If a RAM is submitted with a material not identified under the "Project Engineer's Office Approval Coding" (Section 9-1.3B(1)), the Project Engineer's Office shall submit the RAM to the State Materials Laboratory Documentation Section for coding.

The coding of the RAM is to determine if the proposed material on the RAM is capable of meeting the established standards and defining the acceptance method. Acceptance determines if the material being placed on the contract does meet the established standards.

When unable to approve a RAM as outlined below, the Project Engineer or delegated representative will sign, date, and code the items with a "7" –"Approval Pending" and forward it to the State Materials Laboratory Documentation Section. If the RAM is not filled out correctly it will be returned to the Project Engineer's Office prior to any action being taken. It is recommended that the RAM be submitted in a timely manner. The RAM may be forwarded by mailing, electronically transferring or faxing. A copy should also be returned to the Contractor at this point to inform them that the RAM has been sent to the State Materials Laboratory for approval. Submit any additional documentation, including appropriate transmittals that may assist the RAM engineer

in approving the proposed material; such as Test Reports, Catalog Cuts, Manufacturer's Certificate of Compliance, etc. The page number of the Special Provision or Plan Sheet will also aid in expediting the approval process.

The State Materials Laboratory Documentation Section may elect to delegate approval of some specialty items.

All RAMs shall be signed and dated by the engineer. Copies of all RAM's processed through the Project Engineer's Office shall be sent to the State Materials Laboratory Documentation Section. Copies shall be distributed as indicated at the bottom of the RAM form. Acceptance requirements should be noted on the maintained ROM and/or Materials Tracking Program (MTP). This is especially important since the maintained ROM and/or MTP will be used for auditing purposes.

9-1.3B(1) Project Engineer's Office Approval Coding

(I) QPL Reference Materials

The engineer may code the RAM if the product listed on the RAM is identified in the QPL by make, model, batch, color, size, part no., etc. The product must also be listed in the QPL under the appropriate *Standard Specifications* for the intended use as indicated by the Bid Item and Specification Reference shown on the RAM. The RAM should be coded with the 4-digit QPL acceptance code and any notes and/or restrictions restated as "Remarks" on the RAM.

(II) Aggregates

Aggregate Sources will be approved by consulting the Aggregate Source Approval database for the use intended. The Project Engineer shall approve the RAM, coding when there is a sampling frequency in Section 9-3.7 with a "1" – "Conditionally Approved: Acceptance based upon Satisfactory Test Report." Aggregates that do not have a sampling frequency should be coded per requirements of the ASA database. Print the ASA Report and attach it to the approved RAM.

The Region Materials Engineer may have added remarks to the ASA database for aggregate sources having variable quality. Contact the Region Materials Engineer prior to use. It has been demonstrated that some of these sources can provide quality material through diligent production and stockpile management. The Region Materials Engineer may approve these aggregate sources by the stockpile(s) or on a project-by-project basis.

Review the approval date on the ASA Report to verify that the approval of the aggregate source has not expired or will not expire before the end of your contract. If the aggregate source is approved at the beginning of your project, it does not mean that it is approved for the duration of the project. If the aggregate source requires evaluation, contact the Region materials office for further direction. If samples are required, the Region materials office will coordinate with the ASA engineer to obtain the necessary samples in accordance with SOP 128.

The remarks in the ASA Report also need to be reviewed to make sure that there are no additional requirements or restrictions on the material that you intend to use. If you are using concrete aggregate, review the ASR values to see if ASR mitigation is required for the concrete mix design.

(III) Optional Approval/Acceptance

The Project Engineer may elect to approve some materials by invoking Section 9-1.1D. This process allows the Project Engineer to approve the RAM. The PE needs to verify the material being approved meets the requirements listed and is for the same specifications as the material listed in Section 9-1.1D. After verifying concurrence with Section 9-1.1D, the Project Engineer shall approve the RAM, coding with an "8 – Approved per CM Section 9-1.1D."

(IV) Proprietary Materials

Where the Contract Documents state "shall be…" and list products by specific name and model, the Contractor needs only to complete the RAM indicating to the engineer the intended choice. The engineer shall approve the RAM, coding with an "8" – "Source Approved" and note the page number where it is listed in the Contract Documents as a proprietary product. Occasionally proprietary materials will have additional acceptance criteria and these criteria need to be noted on the RAM. On occasion the Subject Matter Expert for the material being placed may ask for additional documentation.

The "Buy America" requirements apply to Proprietary materials used on all federally funded projects. The "Buy America" requirements should be addressed by the Designer prior to including the material into the Contract Special Provisions. Ultimately it is the responsibility of the Project Engineer to verify that the requirements are met.

(V) Agency Supplied Materials

An approved RAM is not required for Agency Supplied Materials. If a RAM is submitted to the PEO, the engineer shall approve the RAM, coding with an "8" – "Source Approved" and note the page number where it is listed in the Contract Documents as an Agency Supplied Material. Additional acceptance criteria may be required by the Contract Special Provisions or Plans.

The "Buy America" requirements apply to Agency Supplied materials used on all federally funded projects. The "Buy America" requirements should be addressed by the Designer prior to including the material into the Contract Special Provisions. Ultimately it is the responsibility of the Project Engineer to verify that the requirements are met.

(VI) Concrete and Asphalt Batch Plants

For Concrete Batch Plants, the Project Engineer office shall ensure requirements of *Standard Specifications* Section 6-02.3(4)A are met prior to approving the RAM.

For Asphalt Mixing Plants, the Project Engineer office shall ensure requirement of *Standard Specifications* Section 5-04.3(1) are met. There is no approval on the RAM required for Asphalt Mixing Plants, however coding the RAM with an "8" – "Source Approved" would be appropriate.

(VII) Recycle Materials for Aggregate

Requirements for recycled materials in aggregates are described in *Standard Specifications* Section 9-03.21 which applies to recycled hot mix asphalt, recycled concrete aggregate, glass aggregates and steel furnace slag. The Project Engineer is required to verify that recycled material imported to the job site is not classified as a Dangerous Waste per the Dangerous Waste Regulations WAC 173-303. Recycled materials obtained from the Contracting Agency's roadways will not require testing and certification for toxicity testing or certification for toxicity characteristics.

The Project Engineer needs to do the following in order to determine and document the recycled material is not classified as a Dangerous Waste and is acceptable for use on a WSDOT project:

- Have the Contractor provide documentation identifying what recycled materials the Contractor is proposing to use and sampling documentation.
- Have the Contractor provide testing information from representative samples of the recycled material and check to ensure the recycled material is below the Maximum Concentration of Contaminates for the Toxicity Characteristics in the Toxicity Characteristics List in WAC 173-303-090.
- Have the Contractor certify that the recycled material is not a Washington State Dangerous Waste per WAC 173-303.

The Project Engineer can contact the WSDOT Hazardous Materials Program to help evaluate sample approach, lab results, help in determining if changes in the recycled material warrant additional testing, or other assistance as needed. The Hazardous Material Program can be reached at 360-570-6656.

The Contractor is required to do sampling and testing for toxicity of the recycled material at the frequency specified in *Standard Specifications* Secction 9-03.21(1) prior to combining with other materials and not less than one sample and test from any single source. If the Project Engineer suspects the recycled material may be contaminated based on a change in odor, appearance, or knowledge of the source of material, the WSDOT Hazardous Materials Program should be contacted to determine if a verification sample should be tested for toxicity. Sample results are expected to exhibit the average properties of the stockpile of material being proposed for use. The final blended product shall meet the acceptance requirements for the specified type of aggregate.

The RAM should be coded an "8" and noted as "certification and approval testing per *Standard Specifications* Section 9-03.21" in the remarks field.

(VIII) Preliminary Evaluation Samples

The Project Engineer may elect to approve some materials by submitting samples for testing by coding the RAM with a "9" –"Submit Samples for Preliminary Evaluation." This authority is applicable only to the materials that the State Materials Laboratory is capable of testing. The Project Office shall review the established specifications and contract documents for compliance prior to submitting the sample for testing.

The Project Engineer can contact the State Materials Laboratory if assistance is needed to determine their testing capabilities. The State Materials Laboratory can be reached at 360-709-5400.

Upon receipt of a satisfactory test report from the State Materials Laboratory, the Project Engineer shall approve the RAM, coding it with an "8" – Source Approved.

The "Buy America" requirements apply to material approved under this authority that is used on all federally funded projects. The "Buy America" requirements should be addressed by the Designer prior to including the material into the Contract Special Provisions. Ultimately it is the responsibility of the Project Engineer to verify that the requirements are met.

(IX) Region Special Provisions

The Project Engineer is allowed to approve the Request for Approval of Material (RAM) for material specified in the Region Special Provisions. In taking these actions, the Project Engineer is acting under the professional responsibility inherent in all actions as a representative of the department and as a Licensed Professional Engineer. Full accountability of such actions is expected. It is the responsibility of the Project Engineer to determine the appropriate acceptance criteria for the material; which may require testing or other means to support a decision. This includes contacting the Region or Headquarters Subject Matter Expert if assistance is needed.

The "Buy America" requirements apply to material approved under this authority that is used on all federally funded projects. The "Buy America" requirements should be addressed by the Designer prior to including the material into the

Contract Special Provisions. Ultimately it is the responsibility of the Project Engineer to verify that the requirements are met.

9-1.3C Low Risk Materials

There are low risk materials that may be used in the project without contractor identification per *Standard Specifications* Section 1-06 or any other documentation unless stipulated in the Contract Documents. The "Buy America" requirements apply to all federally funded projects. Table 9-2 is a listing of these materials. Other items can be considered for addition to this list. Suggestions are encouraged and may be made to the State Construction Office or the State Materials Laboratory.

- Adhesive for Butyl Rubber Sheeting
- Asphaltic felt for bridge approach slabs and pavement seats
- Backer Rod for Induction Loop Vehicle Detectors
- Bond breaking material for cement concrete pavement
- Butyl Rubber Sheeting
- Clear plastic covering
- Coloidal copper compound
- Concrete Drain Tile with Cover for Ground Rods
- CSL Access Tubes and Caps
- Duct tape for bridge approach slab anchors
- Electrical pull string
- Electrical tape
- Expanded polystyrene for bridge approach slab anchors
- Friction tape, and moisture proof varnish for friction tape
- Fasteners for Mailbox Supports (bolts, nuts, and washers)
- Galvanized wire mesh and hardware for screens on sign bridges and cantilever sign structure bases
- Grout for cosmetic purposes
- High Visibility Fence including hardware and stakes
- Locknuts for terminating conduit
- Log Weirs and Root Wads with associated hardware
- Loose Woody Debris with associated hardware
- Material for Painting/Coating preparation (abrasive blast media, bird guano treatment, fungicide treatment, filter fabric, foam backer rod)
- Mailbox Support Type 1
- Metal Form For Light Standard Foundation
- Nails
- Oxide Inhibitors for Aluminum Conductors
- Parting Compound for Concrete Forms
- Pea gravel for decorative purposes
- Pipe wrap and spacers for electrical conduit
- Polypropylene rope for induction loop centralizers
- Premolded joint filler for expansion joints in sidewalks, curbs, and gutters
- PVC pipe for bridge approach slab anchors
- PVC Pipe for Weep Holes through Bridge Abutment Pier Walls, Reinforced Concrete Retaining Wall Stem Walls, and Concrete Fascia Panels
- PVC solvent cement
- Rebar tie wire (plain and epoxy-coated)
- Shims for Concrete Barrier
- Signal Foundation Identification Tag and Epoxy adhesive to attache them
- Silicone sealant for electrical service cabinets
- Spacers for electrical conduit duct bank
- Spacers for rebar columns
- Steel Reinforcing Bar Centralizers
- Weed-free straw bales not used as mulch or check dams

Low Risk Materials
Table 9-2

9-1.4 Acceptance Methods for Materials

Materials acceptance is accomplished by several different methods. Once a material is approved and has demonstrated the ability to meet the applicable specification, a proper method of acceptance is determined for that type of product. The approved Request for Approval of Material or submitted Qualified Product List page will state the acceptance method.

Types of Acceptance methods are Sampling and Testing, WSDOT Fabrications Inspection, Manufacturer's Certificate of Compliance, Miscellaneous Certificates of Compliance, Shop Drawings, Catalog Cuts, Optional Approval/Acceptance for Materials, Visual Acceptance or Reduced Acceptance Criteria. Sampling and testing is the highest level of acceptance method showing conformance to the requirements. All designated acceptance documentation is to be approved and retained prior to material being placed except for verification samples and Manufacturer's Certificate of Compliance within the restraints of *Standard Specifications* Section 1-06.3.

9-1.4A Testing

Project Engineer offices are responsible for tracking the acceptance/verification tests performed on their contracts. Refer to *Standard Specifications* Section 1-06.2(1) and this chapter for testing criteria and frequency information. This chapter also includes a large variety of test procedures that may be performed in the field office lab or at the jobsite by a qualified tester. All testers shall be qualified to perform sampling/testing for those acceptance tests found in the *Construction Manual* M 41-01.

9-1.4A(1) Reference Test Report

When a Satisfactory Test Report is required, a Reference Test Report may be used if allowed in Section 9-4 for that specific material. A Reference Test Report as listed below will not be allowed for HMA Mix Designs or other materials unless allowed per Section 9-4.

A Reference Test Report shall consist of a printed copy of the current electronic QPL database page showing "referenced" lots previously tested during the current calendar year. The lot number in the QPL must match the lot number of the material used. The information will be listed in the "description" field for specific materials in the QPL. The QPL page used as the "Reference Test Report" shall be within the same calendar year that the material is used on the project. The QPL page must reflect the same specification as the material to be used and be received prior to installation of the intended material.

The use of a test report from another contract is no longer acceptable as a Reference Test Report.

9-1.4A(2) Statistical Acceptance With SAM

The Statistical Analysis of Materials program (SAM) has been developed to calculate the percent within limits of materials being statistically accepted per *Standard Specifications* Section 1-06.2(2). When the test results for at least three samples has been entered, the program will calculate the percent within limits based on the upper and lower acceptance limits, calculate the pay factor for each, and calculate the composite pay factor (CPF) for the material being evaluated.

(I) Initial Material Set-up

When a contract requires statistical analysis to be used, the "lot" acceptance criteria for the material needs to be entered into SAM. A lot is defined as 15 sublots; the final lot may be increased to 25 sublots. All samples from a material type, i.e., gravel backfill for walls, mineral aggregate, concrete aggregate, or CSBC shall be evaluated collectively. For paving concrete, each class of mix shall be evaluated collectively. For hot mix asphalt, each job mix formula, and all changes to that job mix formula shall be evaluated collectively.

Make sure that this information is correct. Once test data has been entered, the lot acceptance criteria can not be altered. There are three ways to establish the lot acceptance criteria:

1. Select the material. The appropriate specifications will be automatically retrieved.
2. For HMA, you can enter the mix design number, and the JMF, the acceptance specifications, the tolerances, price adjustment factors, and the upper and lower acceptance limits will be automatically retrieved.
3. Pick User Define and you will be able to add new requirements, or edit existing requirements. For HMA, make sure that you calculate the upper and lower acceptance criteria based on the tolerance limits.

If there is a change to the HMA job mix formula, (JMF), the program allows you to copy existing lots. The original mix design and a "-1, -2, -3…" number is added, and you are allowed to edit the JMF. These JMF's will be evaluated collectively.

It is important to delete lots that are not used from the program. The statistical acceptance results are used by other programs to evaluate the material.

(II) Inputting Test Results

Once the testing has been completed, the test results need to be entered into the program for the material being tested as soon as possible. Once the office starts using the Materials Testing Program for the field testing, the test results will be retrieved into the statistical program.

(III) Review Work

As with all materials documentation, this information entered into the statistical program needs to be reviewed regularly to make sure that there are no mistakes. If an error has been found in the test data, the original data can be revised. If an error has been found in the lot acceptance criteria, all of the test data will have to be deleted and re-entered under the new lot.

(IV) Contractor Access

The PEO documentation engineer will give the contractor access to the statistical program. This will allow the contractor access to the statistical program for the work order they are working on to view the acceptance results. They will not be able to change the lot acceptance criteria or any test results. They will be able to access the acceptance portion of the program, and view the gradation report, the compaction report, and the contract detail report.

9-1.4B Fabricated Items

9-1.4B(1) Stamp/Tag

Items that are inspected and found to meet contract document requirements by the WSDOT Materials Fabrication Inspection Office are identified by a Stamp or Tag. This type of inspection is generally performed at the manufacturing or fabrication plants. There are various types of Stamps or Tags used for acceptance of inspected items, which attest that the item was in full conformance with the specifications at the time of inspection. The inspected items, along with the type of Stamp or Tag designation, are covered under Section 9-2.

It is the responsibility of the Project Engineer office to notify the WSDOT Materials Fabrication Inspection Office when their inspection services are needed by sending a 'cc' of the approved RAM or submitted QPL page to WSDOT Fabrications at fabinspect@wsdot.wa.gov. The Contractor or the Fabricator may also contact the WSDOT Materials Fabrication Inspection Office for needed inspection.

To schedule a fabrication inspection contact:

Fabrication Inspection – 360-709-5407

Mail Stop to send hardcopy documents – MS 47365 Attn: Fabrication Inspection

E-mail Address: fabinspect@wsdot.wa.gov

Physical Address: 1655 S 2nd Ave. SW, Tumwater, WA 98504-7365

WSDOT Materials Fabrication Inspection Office can be contacted at:

- State Materials Laboratory (Tumwater) 360-709-5407
- Seattle Inspection 206-464-7770
- Vancouver Inspection 360-905-2230
- Online at wwwi.wsdot.wa.gov/maintops/mats/construction/fabrication.htm

If there are no Stamps or Tags present, inform the Contractor that the item is not acceptable and contact the Materials Fabrication Inspection Office to determine the status of the inspection. Items lacking Stamps or Tags and those items damaged during shipping should be rejected and the material tagged or marked appropriately.

9-1.4B(2) Signing Decal

Signing items that are inspected and found to meet contract document requirements by the WSDOT Materials Fabrication Inspection Office are identified by a Decal. This type of inspection is performed at the sign fabrications plant. The Decal present attests that the item was in full conformance with the specifications at the time of inspection. The Decal designation is covered under Section 9-2.

It is the responsibility of the Project Engineer office to notify the WSDOT Materials Fabrication Inspection Office when their inspection services are needed by sending a 'cc' of the approved RAM or submitted QPL page to WSDOT Fabrications at fabinspect@wsdot.wa.gov. The Contractor or the Fabricator may also contact WSDOT Materials Fabrication Inspection Office as listed in Section 9-1.4B(1) for needed inspection.

9-1.4B(3) Concrete Pipe Acceptance Report

Concrete Pipe less than 30 in in diameter that are inspected and found to meet contract document requirements by the WSDOT Materials Fabrication Inspection Office are identified by a Concrete Pipe Acceptance Report.

The Concrete Pipe Acceptance Report will indicate the date and original test results as performed by the Fabrication Inspector and will bear the appropriate certification from the fabricator.

It is the responsibility of the Project Engineer office field inspector to verify material delivered to the jobsite is represented by the Concrete Pipe Acceptance Report delivered with the pipe. The Concrete Pipe Acceptance Report is only valid for a 90 day period starting from the manufacturing date of the tested pipe.

The field inspector is required to verify the following:

- Manufacturing date of the pipe is within the 90-day window on the report.
- Pipe is at the age of the specified days or older as stated on the concrete pipe acceptance report.

Note: Concrete Pipe greater than 30 in require different acceptance per Section 9-4.

The WSDOT Materials Fabrication Inspection Office can be contacted as listed in Section 9-1.4B(1).

9-1.4C Visual Acceptance

Visual Acceptance is appropriate for material that has the lowest risk and consequence of failure. The field inspector is required to verify that proper "Approval" has been performed per Section 9-1.3. No further documentation is required for acceptance unless the Contract Documents mandate additional information.

9-1.4D Manufacturer's Certificate of Compliance

As designated by the specifications and contract special provisions, certain materials may be accepted on the basis of a Manufacturer's Certificate of Compliance. This acceptance is an alternative to job site sampling and testing. The submitted *Qualified Products List* page or approved Request for Approval of Material shall stipulate the items for which a compliance certification is an acceptable basis of acceptance. The Manufacturer's Certificate of Compliance is required prior to permanent installation of the material. See Section 1-2.8C(3) for guidance on allowing material to be placed without certification.

The form of the Manufacturer's Certificate of Compliance will vary considerably based on both the material and the origin, and may take the form of standard certificate form, individual letter from manufacturers, or overstamp on bill of lading. Certain information is required and is designated by the specifications. This information includes the identity of the manufacturer, the type and quantity of material being certified, the applicable specifications being affirmed, and the signature of a responsible representative of the manufacturer. Supporting mill tests or documents may also be required. A Manufacturer's Certificate of Compliance is required for each delivery of material to the project and the lot number, where lot numbers apply, of material being certified shall be identified.

Upon receipt of the Manufacturer's Certificate of Compliance at the project office, it shall be reviewed for compliance with the specification requirements using the preceding guidelines and the checklist for Transmittal of Manufacturer's Certificate of Compliance Check List DOT Form 350-572. The manufacturer of the material must make the certification. A supplier certificate is not acceptable except as evidence for lot number and quantity shipped and can only be accepted when accompanied by a certificate from the manufacturer, which meets the requirements of *Standard Specifications* Section 1-06.3. The Project Engineer's Office is required to retain the signed and dated Manufacturer's Certificate of Compliance Check List for each submittal.

9-1.4E Miscellaneous Certificate of Compliances

As designated by the specifications and contract special provisions, certain materials may be accepted on the basis of a Certificate of Compliance. Various Certificates of Compliance, such as a Lumber Grading Certificate, Lumber Grading Stamp, Certificate of Treatment, Bag Label, Concrete Delivery Ticket, Asphalt Certification of Shipment (BOL), Supplier's Certificate and Contactor's Certificate, may be required for acceptance on different types of materials.

Standard Specifications, Contract Provisions, and Chapter 9 may require written verification or retention of the Certificate of Compliances by the Project Engineer office Field Inspector.

9-1.4F Shop Drawings

As designated by the specifications and contract special provisions, certain materials may be accepted on the basis of a Shop Drawing. Shop drawings are generally manufacturer's or fabricator's drawings that show details about an item being built for a specific job. Approval of Shop Plans and Working Drawings is per Section 1-2.4H and Figure 1-1.

The Shop Drawing shall be retained and placed in the Materials Files for acceptance.

9-1.4G Catalog Cuts

As designated by the contract documents, certain materials may require the acceptance method be based on a Catalog Cut. A Catalog Cut may also be required in support of approving a Request for Approval of Materials (RAM) per Section 9-1.3B. The approved Catalog Cut is required prior to installation of the material.

Upon receipt of the Catalog Cut information at the project office, an initial review for compliance with the established specifications and contract documents should be performed. All information shall be accompanied by the "Transmittal of Catalog Cuts" form generated with the Record of Materials. The project office shall follow the directions on the Transmittal of Catalog Cuts DOT Form 350-072 and submit the package to the State Materials Lab Documentation Section for approval, or as per the original Record of Material. The Transmittal of Catalog Cuts form and catalog cuts for those materials listed in *Standard Specifications* Section 9-14 and 9-15, and accepted based on approved catalog cuts, should be submitted to the Region or State Roadside and Site Development Office for approval.

The Catalog Cut may be forwarded by mailing, electronically transferring or faxing.

9-1.5 Field Verification of Materials

All material permanently incorporated into a contract shall be field verified by the inspector. Field Verification shall occur prior to or during placement of the material. When the field inspector signs/initials a Field Note Record (FNR) for payment, they are affirming that items requiring field verification have been checked and have been found to be acceptable.

The field inspector shall inspect the product, material and construction processes for conformity to the contract requirements. The field inspector shall also inspect the product or material for shipment and handling damage.

The field inspector is required to verify that the material being placed is the same material that was submitted on the *Qualified Products List* (QPL) page or as listed on the approved Request for Approval of Material (RAM). The field inspector is also required to verify that the material being installed is the same lot/heat number/roll of material that was tested or certified for acceptance.

For WSDOT Fabrications Inspected items, the field inspector shall document in either the Inspector's Daily Report (IDR), QPL Contractor Product Information Page, or FNR the quantity, WSDOT Tag/Stamp/Decal and Material Origin Foreign or Domestic (F or D) designation.

If the placement of the materials has occurred prior to approval or acceptance, the field inspector is required to document in either the FNR or IDR all information that can be gathered such as Quantity, Manufacturer, Lot, Heat Number, Model or Type. The note in the FNR or IDR will link what was placed once the Approval and Acceptance documents have been received. The field inspector should immediately notify the Project Engineer office documentation person of the deficiency to ensure missing documentation is obtained.

Photos with dates are good supporting documentation and are highly recommended for all permanently placed materials.

9-2 Materials Fabrication Inspection Office – Inspected Items Acceptance

9-2.1 General

All fabrication inspection of construction materials is performed by the WSDOT Materials Fabrication Inspection Office, unless otherwise delegated by the State Materials Engineer.

Items that are inspected and found to meet contract requirements by the WSDOT Materials Fabrication Inspection Office are identified by a tag or stamp. This type of inspection is generally performed at the manufacturing or fabrication plants; however there are items that are inspected at the job site as identified in Section 9-4. There are various types of Stamps or Tags used for acceptance of inspected items, which attest that the item was in full conformance with the specifications at the time of inspection. The inspected item along with the type of stamp designation is covered under Section 9-2.2.

9-2.1A Acceptance of Fabricated Items

The following is the process for the acceptance of inspected items.

1. The manufacturing or fabrication plant must be approved via the "Request for Approval of Material," (RAM) or the *Qualified Products List* (QPL)
2. The Materials Fabrication Inspection Office Inspector will obtain the necessary mill certifications, Certificate of Material Origin, or other documentation from the manufacturer. After assuring the inspected item and documentation meets contract provisions the inspector will identify approved material by applying a stamp or tag shown in Figure 9-3 through 9-7.

Items containing Foreign steel and iron, and coating or other processes performed outside the USA will be stamped with an "F" identifier, and items containing steel that has been determined to be of domestic origin will be stamped with a "D" identifier. See Figure 3A and 3B. This stamp is in addition to the appropriate acceptance tag or stamp in Figure 9-3, 9-4, 9-5, and 9-7. The "F" or "D" identifier will be stamped next to the acceptance stamp. For those items with an acceptance tag, the "F" or "D" stamp will be stamped on the back of the Tag.

D		F

Domestic or Foreign Identifier Stamp
Figure 3A and 3B

For projects with the Buy America requirement, the Project Engineer office is required to obtain the Certificate of Materials Origin for foreign steel from the Contractor, track the quantity and retain these documents in the project records.

9-2.2 Inspected Items, Stamps, and Tagging Identification

The following are examples of the types of Stamps and Tags used by the WSDOT Materials Fabrication Inspection Office. The letter or letter number combination on the Stamp or Tag represents the inspector who performed the inspection. In Figure 9-3, the inspector identification is denoted "M" and "G." In Figure 9-4, the inspector identification is denoted "N," and the "001234" is the inspection identification number.

9-2.2A Inspected Stamp Identification

The Stamp shown in Figure 9-3 identifies inspection and the inspector of the following items:

- Expansion Joints (Excluding Modular Expansion Joints)
- Precast Concrete Barrier
- Precast Concrete Catch Basins
- Precast Concrete Drywell
- Precast Concrete Inlets
- Precast Concrete Junction Boxes Type 1, 2, and 8
- Precast Concrete Manholes
- Precast Concrete risers and adjustment sections 4 in and above
- Signing Hardware
- Steel Culvert Pipe and Pipe Arch (Treated)
- Other items per the contact

All documentation associated with the Stamp in Figure 9-3 will be reviewed and approved by the WSDOT Materials Fabrication Inspection Office and kept at the point of Manufacture. Quantities of foreign steel used on the project will not be tracked by the WSDOT Materials Fabrication Inspection Office.

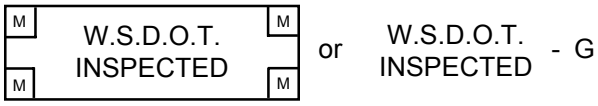

Stamps
Figure 9-3

9-2.2B Inspected Stamp and Tag Identification

The Stamp shown in Figure 9-4 or Tag shown in Figure 9-5 identifies inspection and the inspector of the following items:

- Anchor Bolts (ASTM A449 and ASTM F1554)
- Bridge Bearings (Disc, Spherical, Cylindrical, and Fabric Pad)
- Cattle guard
- Coated Steel Piling
- Concrete Drain, Perforated Underdrain, Culvert, and Storm Sewer Pipe (30″ and above in diameter)
- Concrete Sanitary Sewer Pipe (30″ and above in diameter)
- Epoxy Coated Steel Reinforcing Bars
- Grates (Grate Inlets and Drop Inlets)
- Handrail
- High Mast Light Poles (Contract Provisions)
- High Strength Bolts (shop provided)
- Light and Signal Standards
- Metal Bridge Railing (Steel and Aluminum)
- Miscellaneous Welded Shop Items
- Modular Expansion Joint
- Piles (Structural and Soldier)
- Precast Concrete Block Walls
- Precast Concrete Bridge Deck Panels
- Precast Concrete Box Culvert
- Precast Concrete Cable Vault's
- Precast Concrete Floor Panels
- Precast Concrete Junction Boxes Type 4, 5, and 6
- Precast Concrete Marine Pier Deck Panels
- Precast Concrete Noise Barrier Walls
- Precast Concrete Pier Caps
- Precast Concrete Pull Boxes
- Precast Concrete Retaining Walls
- Precast Concrete Roof Panels
- Precast Concrete Structural Earth Walls
- Precast Concrete Vaults (Utility, Drainage, etc.)
- Precast Concrete Wall Panels
- Precast Concrete Wall Stem Panels
- Precast Reinforced Concrete Three Sided Structures
- Prestressed Concrete Girders
- Prestressed Concrete Piles
- Seismic Retro Fit Guardrail Posts (Welded base plates)
- Seismic Retro Fit Earthquake Restrainers
- Sign Structures
- Steel for Bridges
- Steel Column Jackets
- Structural Steel for State Ferry System
- Wood Bridges
- Other items per the contact

All documentation associated with the Stamp in Figure 9-4 or the tag in Figure 9-5 will be reviewed and approved by the WSDOT Materials Fabrication Inspection Office and kept at the WSDOT Materials Fabrication Inspection Office. Quantities of foreign steel used on the project will not be tracked by the WSDOT Materials Fabrication Inspection Office.

APPROVED FOR SHIPMENT

APPROVED
FOR SHIPMENT
WASH. DEPT. TRANSP.

N001234

Stamp
Figure 9-4

_____ Date _____
Inspector, Washington State Department of Transportation

DOT 350-021
Revised 11/03

Tag
Figure 9-5

9-2.2C Inspected Tag Identification

The Tag in Figure 9-6 identifies inspection and the inspector of Treated Timber, Piling and Poles.

All documentation associated with the tag in Figure 9-6 will be reviewed and approved by the WSDOT Materials Fabrication Inspection Office and kept at the WSDOT Materials Fabrication Inspection Office.

Approved For Shipment

Washington State Department of Transportation

Materials ID Number

DOT Form 350-020 Revised 01/2007

Tag
Figure 9-6

9-2.2D Inspected Casting Stamp Identification

The Stamp shown in Figure 9-7 identifies inspection and the inspector of the following items:

- Gray-Iron Castings
- Steel Castings
- Ductile-Iron Castings (Catch Basin Frame and Grates, Manhole Ring and Covers, etc.)
- Other items per the contact

WSDOT-A

Stamp
Figure 9-7

For Rectangular Frames and Grates, each set shall be stamped aligning the adjacent mating surfaces to each other. This alignment is critical as the leveling pads are ground to prevent rocking of the grates in the frames.

All documentation associated with the Stamp in Figure 9-7 will be reviewed and approved by the WSDOT Materials Fabrication Inspection Office and kept at the WSDOT Materials Fabrication Inspection Office. Quantities of foreign steel used on the project will not be tracked by the WSDOT Materials Fabrication Inspection Office.

(This Stamp is impressed on the casting and will be circled with spray paint for ease of visibility of the Stamp.)

9-2.3 Permanent Sign Inspection

All permanent signs are required to be inspected prior to installation. The Project Engineer office has the option of inspecting the project signs as detailed in Section 9-2.3B prior to installation or can contact the WSDOT Fabrication office to inspect the permanent signs per Section 9-2.3A at the fabrication facility prior to shipment to the project. The difference is a matter of convenience to the Project Engineer and the choice is up the Project Engineer.

9-2.3A Sign Inspection by WSDOT Materials Fabrication Inspection Office

The Project Engineer Office will need to contact the WSDOT Fabrication Inspection Office to schedule the inspection. The WSDOT Materials Fabrication Inspection Office inspects permanent signs at the fabrication facility. Construction and temporary signs are not inspected by the WSDOT Materials Fabrication Inspection Office. The Materials Fabrication Inspector will verify that signs meet the requirements of the contract. The Fabrication inspector will attach a “Fabrication Approved” decal (see Figure 9-8) to all approved signs prior to shipment of the sign to the job site (except double sided signs). Sign mounting hardware provided by the Sign Fabricator will be inspected and approved by the Materials Fabrication Inspector prior to shipment to the job site. The inspector will stamp each box of hardware “WSDOT INSPECTED” (see Figure 9-3).

Figure 9-8

Pre-approval of the Sign Fabricator by Traffic Operations and the WSDOT Materials Fabrication Inspection Office is required.

9-2.3B Sign Inspection by the WSDOT Project Engineer

If the Project Engineer elects to inspect the signs, the Project Engineer is responsible for inspection of permanent Signs detailed in the Contract Plans. The Project Engineer will verify that signs meet the requirements of the contract. The Project Engineer will attach a "PEO Approved" decal (see Figure 9-9) to all approved signs (except double sided signs, construction, and temporary signs). PEO Approved Decals will be provided to the Project Engineer by WSDOT Materials and Fabrication Inspection Office. Sign mounting hardware provided by the Sign Fabricator will be inspected and approved by the Project Engineer at the job site.

Figure 9-9

9-2.4 Pipe Acceptance Report

The WSDOT Materials Fabrication inspection Office periodically inspects and witnesses testing of concrete pipe less than 30 in in diameter at approved fabricators. During this inspection, samples of each type, size, and class of pipe are inspected and tested to verify compliance with the *Standard Specifications*.

For a 90-day period from the date of manufacture, concrete pipe less than 30 in in diameter may be shipped and accepted based on "Concrete Pipe Acceptance Reports." The concrete pipe that ships must be at the age or older than the concrete pipe tested and represented by the Concrete Pipe Acceptance Report. This report is prepared by the Materials Fabrication Inspector and copies are thereafter supplied by the fabricator to accompany each shipment of pipe.

9-3 Guidelines for Job Site Control of Materials

9-3.1 General

The intent of sampling and testing is to ensure that the material provided to the project conforms to the specifications. The frequency schedule in Section 9-3.7 covers the minimum requirements for sampling and testing at the project level. The Project Engineer is responsible for obtaining the number of samples necessary to ensure adequate control of the material being produced under the circumstances and conditions of the particular project. There may be cases where production is just getting under way, where source material is variable or marginal in quality. Also operations from commercial sources when small lots of material are being sampled (as for barge loads of aggregate) or when stockpiles are built and depleted may require more frequent sampling and testing. A minimum of one acceptance test is required unless the Project Engineer reduces materials acceptance per Section 9-1.1.

When in doubt as to sampling requirements, refer to Record of Materials (ROM), Request for Approval of Material (RAM), and Section 9-4.

In some instances, items usually sampled by project engineers representative may be sampled and tested by representatives of the State Materials Laboratory or other representatives. Such items as shown in this chapter, when properly identified with an "APPROVED FOR SHIPMENT" Tag, may be accepted for use by the Project Engineer without any further sampling or testing.

9-3.2 Sample Types

9-3.2A Preliminary Samples and Tests

Preliminary samples are intended to show the general character of the materials available or proposed for use. The sample may be taken from a natural deposit, the general stock of a dealer, or elsewhere. The material sampled may require further treatment before it will meet the specification requirements. Preliminary samples are a basis for approving which aggregate site or brand of material will be considered for use. Deliveries cannot be accepted on the basis of preliminary samples unless the samples represent an identified lot of materials.

Unless specified for a particular purpose, preliminary sampling and testing of materials from a potential source are not mandatory functions. It is to be performed when requested by the Project Engineer, Region Materials Engineer or the State Materials Laboratory on the Request for Approval of Material DOT Form 350-071.

9-3.2A(1) Sampling and Testing for Aggregate Source Approval

A pit or quarry source owner may contact the State ASA Engineer directly to request an ASA source approval and will pay all sampling and testing charges. If the Region or project offices elect to sample a pit or quarry for source approval for a project and this is paid by project funds, the samples will have to be obtained by the Region Materials Engineer's designated representative according to WSDOT SOP 128 and include all of the required documentation.

9-3.2A(2) Sampling and Testing for Preliminary Hot Mix Asphalt Mix Design

These samples are used to determine if the aggregate source is capable of meeting the mix design specification requirements. Preliminary samples shall be taken in accordance with WSDOT FOP for AASHTO T2 and consist of a minimum of 200 pounds of mineral material. Contact the Region materials office if preliminary samples are required. Give full details of type of construction proposed.

9-3.2B Acceptance Samples and Tests

Acceptance samples and tests are defined as those samples tested for determining the quality, acceptability, and workmanship of the materials prior to incorporating the materials into the project. The results of these tests are used to determine conformance to the contract requirements. The minimum frequency for sampling and testing of acceptance samples is detailed in Section 9-3.7.

The Code of Federal Regulations, 49 CFR, has listed certain materials to be hazardous. When shipping hazardous materials using a common carrier, i.e. UPS or Fed Ex, the USDOT and the carrier have special requirements that need to be followed. The following is a list of hazardous materials that we commonly sample and test on our projects; paint, epoxy part B, pigmented sealer, form release oil, and polyester resin. When these materials or other hazardous materials need to be sent for testing, contact the Region Materials Laboratory for shipping instructions. The Region Materials Laboratory needs to contact the shipper for proper shipping requirements.

9-3.2C Verification Samples and Tests

Verification samples and tests are used for verifying the reliability of a manufacturers test results when acceptance of the material is based upon a Manufacturer's Certificate of Compliance. In the event of a failing verification test, the Project Engineer office will be notified by the State Materials Laboratory or the State Construction Office. The Project Office needs to verify whether the material has been used. If the material was used, the Project Engineer office shall contact the State Construction Office which will coordinate with the State Materials Laboratory to determine the appropriate action.

9-3.3 Test Numbering

A separate series of numbers, starting with "No. 1" in each instance, shall be used for acceptance, independent assurance, and verification samples for each type of material for which there is a separate bid item. Verification samples shall be referenced to the corresponding Manufacturer's Certificate of Compliance.

9-3.4 Point of Acceptance

9-3.4A State Owned Source

Material produced from a State owned source may be accepted either as it is placed into stockpile or as it is placed in hauling vehicles for delivery to the roadway. The sampling and testing frequency during stockpiling shall be in conformance with Section 9-3.7.

In the event sample testing during stockpiling shows the material to be outside of specification limits, but within the tolerance limits, acceptance testing will be performed as the material is being used.

9-3.4B Contractor's Source

If stockpiled material is set aside exclusively for use on WSDOT projects it may be accepted the same as a state-owned source. If stockpiles are constructed for general use, materials for WSDOT projects shall be tested for acceptance from samples taken by the Project Engineer representative in accordance with WSDOT FOP for AASHTO T 2. The engineer will determine the exact point of acceptance. If an existing stockpile was built without acceptance testing during material production, and later set aside exclusively for use on state projects, the material may be accepted with satisfactory test results from samples taken by the Project Engineer representative in accordance with WSDOT FOP for AASHTO T 2. The sampling and testing frequency shall conform to Section 9-3.7.

9-3.5 Basis for Acceptance

The basis of acceptance of Hot Mix Asphalt and aggregates may be either by statistical evaluation or non-statistical evaluation methods. The method to be used is specified in *Standard Specifications* or Contract Documents.

The testing tolerances shown in Section 9-3.6 apply exclusively to the appropriate specifications as listed in the *Standard Specifications*.

9-3.5A Basis for Acceptance – Statistical Evaluation

For materials being accepted using statistical evaluation procedures, random samples will be evaluated to determine quality level within a defined tolerance band. Acceptance, bonus, and disincentive procedures are defined in the contract documents.

Test results with acknowledged errors or equipment deficiencies are to be immediately discarded without recourse and another sample run.

9-3.5A(1) Contractor HMA Retest

Test results for Hot Mix Asphalt may be retested at the request of the Contractor, as defined in the *Standard Specifications* Section 5-04.3(8)A. This specification allows the Contractor to request a retest of any sublot, provided the request is submitted in writing and within seven calendar days after the specified test results have been posted to a WSDOT website.

A split of the original acceptance sample must be tested utilizing different equipment and a different qualified tester. It is therefore necessary that a split of every field sample (i.e., opposite quarter from acceptance test) be saved in a secure area, accurately marked, and be available for retesting if necessary. The specification requires that the retesting be performed in the Region Materials Laboratory or the State Materials Laboratory. When the Contractor requests a retest, it is expected that the split sample be sent and tested as quickly as possible. This will require that testing of these samples be prioritized. By expediting the retest, problems that may exist in testing or with the material being produced can be identified and corrected, lessening the impact to both the Contractor and WSDOT.

9-3.5B Basis for Acceptance – Non-Statistical Evaluation

If statistical acceptance procedures are not specified non-statistical acceptance method will be used.

9-3.5B(1) Hot Mix Asphalt

When the test results for Hot Mix Asphalt fall outside the tolerance limits according to *Standard Specifications* Section 9-03.8(7), the material will be statistically evaluated according to the *Standard Specifications* Section 5-04.5(1)A.

9-3.5B(2) Aggregate

When the test results for aggregate fall outside the specification limits, the aggregate will be statistically evaluated according to the *Standard Specifications* Section 3-04.3(5).

The following sections (I) and (II) and Section 9-3.6 only apply to projects awarded prior to 2012, and that are not statistically accepted.

(I) Prior to Completion of Placement

During the production and placement of aggregate materials and when an acceptance test indicates the material is outside specification limits, the following actions shall occur:

1. Take the following actions any time a sample falls outside the specification limits, but within tolerance bands:
   a. Immediately take two separate additional samples representing current production in accordance with Section 9-4.
   b. Production will be accepted until the second sample is checked for properties that were out of specification in the first sample.
   c. Do not accept any additional material if the second sample is also out of specification.
   d. If the second sample is within specification, immediately check the third sample. Do not accept any additional material if the third sample is out of specification.
   e. No further material will be accepted after the time of rejection until corrections are made in the operations. This will be confirmed by new tests within specification limits.
   f. Basis for acceptance after this correction will be in conformity with the procedure outlined above. All tests of material outside the specification limits must be listed and justified on the materials certification as required by SS Section 1-09.12.
2. The acceptance of material shall cease with any of the following conditions:
   a. When a sample falls outside of the applicable tolerance bands.
   b. When any two out of three consecutive samples are within tolerance bands, but outside specification limits.
   c. When any sample has a gradation that falls within both the high and low tolerance bands.
   d. When any sample of the material is outside the specification limits, but within the tolerance bands, in any two of the following properties:
      - Gradation
      - Fracture
      - Sand Equivalent
      - Flat and Elongated
      - Uncompacted Void Content of Fine Aggregate (Fine Aggregate Angularity)

(II) After Completion of Placement

Tolerance limits do not apply when all of the material has been placed on the project prior to completion of the testing. For materials that do not meet specifications, the Project Engineer office shall contact the State Construction Office which will coordinate with the State Materials Laboratory to determine the appropriate action.

9-3.5C Basis for Acceptance – Performance Graded Asphalt Binder and Emulsified Asphalt

The basis for acceptance of asphalt binder and emulsified asphalts is compliance with existing specifications as modified to include the tolerance as follows:

1. If a binder or emulsified asphalt sample fails to meet the required specifications, the binder or emulsified asphalt samples prior to and subsequent to the failed sample will be tested. Samples of asphalt binder or emulsified asphalt will continue to be tested until samples taken both prior to and subsequent to the failing samples meet the specifications.
2. If a binder or emulsified asphalt sample does not meet the specifications but is not more than 10 percent outside the specification limits and the binder or emulsified asphalt sample prior to and subsequent to the out of specification binder or emulsified asphalt both meet the specifications, there will be no price adjustment.
3. If the binder or emulsified asphalt sample is more than 10 percent out of specification or if the binder or emulsified asphalt sample is less than 10 percent out of specification and the binder or emulsified asphalt sample prior to or subsequent to the out of specification sample does not meet the specifications, the HMA or emulsified asphalt will be rejected.

9-3.6 Tolerance Limits

Crushed Screenings ¾" – ½" for New Construction B.S.T.	Specification Limits	Tolerance Limits
% Passing 1″	99-100	95-100
% Passing ¾″	95-100	90-100
% Passing ½″	0-20	0-25
% Passing ⅜″	0-5	0-10
% Passing No. 200	0-1.5	0-2.0
Fracture	90% Min.	85% Min.

Crushed Screenings ⅝" – No. 4 for Seal Coat B.S.T.	Specification Limits	Tolerance Limits
% Passing ¾″	99-100	95-100
% Passing ⅝″	95-100	90-100
% Passing No. 4	0-10	0-15
% Passing No. 10	0-3	0-7
% Passing No. 200	0-1.5	0-2.0
Fracture	90% Min.	85% min.

Crushed Screenings ½" – No. 4 for New Construction and Seal Coat B.S.T.	Specification Limits	Tolerance Limits
% Passing ⅝″	99-100	95-100
% Passing ½″	90-100	85-100
% Passing ⅜″	60-85	55-90
% Passing No. 4	0-3	0-8
% Passing No. 200	0-1.5	0-2.0
Fracture	90% Min.	85% Min

Crushed Screenings ⅜″ – US No. 4 for Seal Coat	Specification Limits	Tolerance Limits
% Passing ½″	99-100	95-100
% Passing ⅜″	70-90	65-95
% Passing No. 4	0-5	0-10
% Passing No. 200	0-1.5	0-2.0
Fracture	90% Min.	85% Min

Permeable Ballast	Specification Limits	Tolerance Limits
% Passing 2½″	99-100	95-100
% Passing 2″	65-100	60-100
% Passing ¾″	40-80	35-85
% Passing No. 4	0-5 Max.	0-6 Max.
% Passing No. 100	0-2.0	0-2.9
Fracture	75% Min.	70% Min.

Crushed Surfacing Base Course	Specification Limits	Tolerance Limits
% Passing 1¼″	99-100	95-100
% Passing 1″	80-100	75-100
% Passing ⅝″	50-80	45-85
% Passing No. 4	25-45	20-50
% Passing No. 40	3-18	3-20
% Passing No. 200	7.5 Max.	9.0 Max.
Sand Equivalent	40 Min.	35 Min.
Fracture	75% Min.	70% Min.

Streambed Sediment	Specification Limits	Tolerance Limits
% Passing 2½″	99-100	95-100
% Passing 2″	65-95	60-100
% Passing 1″	50-85	45-85
% Passing No. 4	26-44	21-49
% Passing No. 40	16 max.	18 max.
% Passing No. 200	5.0-9.0	3.0-10.0.

Crushed Surfacing Top Course	Specification Limits	Tolerance Limits
% Passing ¾″	99-100	95-100
% Passing ½″	80-100	75-100
% Passing No. 4	46-66	41-71
% Passing No. 40	8-24	5-27
% Passing No. 200	10.0 Max.	11.0 Max.
Sand Equivalent	40 Min.	35 Min.
Fracture	75% Min.	70% Min.

Maintenance Rock	Specification Limits	Tolerance Limits
% Passing ⅝″	99-100	95-100
% Passing ½″	90-100	85-100
% Passing No. 4	45-66	40-71
% Passing No. 40	10-25	8-30
% Passing No. 200	7.0 Max.	8.0 Max.
Sand Equivalent	40 Min.	35 Min.
Fracture	75% Min.	70% Min.

Gravel Backfill for Walls	Specification Limits	Tolerance Limits
% Passing 4″	99-100	95-100
% Passing 2″	75-100	70-100
% Passing No. 4	22-66	17-71
% Passing No. 200	5.0 Max.	6.0 Max.
Sand Equivalent	60 Min.	55 Min.
Dust Ratio	⅔ Max.	

Gravel Backfill for Pipe Zone Bedding	Specification Limits	Tolerance Limits
% Passing 1½″	99-100	95-100
% Passing 1″	75-100	70-100
% Passing ⅝″	50-100	45-100
%Passing No. 4	20-80	15-85
% Passing No. 40	3-24	2-29
% Passing No. 200	10.0 Max.	11.0 Max.
Sand Equivalent	35 Min.	30 Min.

Gravel Backfill for Drains	Specification Limits	Tolerance Limits
% Passing 1″	99-100	95-100
% Passing ¾″	80-100	75-100
% Passing ⅜″	0-40	0-45
% Passing No. 4	0-4	0-5
% Passing No. 200	0-2	0-2.5

Gravel Backfill for Drywells	Specification Limits	Tolerance Limits
% Passing 1½″	99-100	95-100
% Passing 1″	50-100	45-100
% Passing ¾″	0-20	0-25
% Passing ⅜″	0-2	0-3
% Passing No. 200	0-1.5	0-2.0

Backfill for Sand Drains	Specification Limits	Tolerance Limits
% Passing ½″	90-100	85-100
% Passing No. 4	57-100	52-100
% Passing No. 10	40-100	35-100
% Passing No. 50	3-30	2-35
% Passing No. 100	0-4	0-5
% Passing No. 200	0-3.0	0-3.9

Sand Drainage Blanket	Specification Limits	Tolerance Limits
% Passing 2½″	90-100	85-100
% Passing No. 4	24-100	18-100
% Passing No. 10	14-100	9-100
% Passing No. 50	0-30	0-35
% Passing No. 100	0-7	0-8
% Passing No. 200	0-3.0	0-3.9

Gravel Borrow	Specification Limits	Tolerance Limits
% Passing 4″	99-100	95-100
% Passing 2″	75-100	70-100
% Passing No. 4	50-80	45-85
% Passing No. 40	30 Max.	33 Max.
% Passing No. 200	7.0 Max.	9.0 Max.
Sand Equivalent	50 Min.	45 Min.

Select Borrow	Specification Limits	Tolerance Limits
% Passing 6″	99-100	95-100
% Passing 3″	75-100	70-100
% Passing No. 40	50 Max.	55 Max.
% Passing No. 200	10.0 Max.	12.0 Max.
Sand Equivalent	30 Min.	25 Min.

Foundation Material Class A	Specification Limits	Tolerance Limits
% Passing 2½″	98-100	93-100
% Passing 2″	92-100	87-100
% Passing 1½″	72-87	67-92
% Passing 1¼″	58-75	53-80
% Passing ¾″	27-47	22-52
% Passing ⅜″	3-14	2-16
% Passing No. 4	0-1	0-2

Foundation Material Class B	Specification Limits	Tolerance Limits
% Passing 2½″	95-100	90-100
% Passing 2″	75-100	70-100
% Passing 1½″	30-60	25-65
% Passing 1¼″	0-15	0-17
% Passing ¾″	0-1	0-2

Hot Mix Asphalt	Specification Limits	Tolerance Limits
Asphalt Binder-Performance Grade (PG)	AASHTO M320	±10% of spec
Fracture	90% min.	85% min.
Uncompacted Void Content of Fine Aggregate < 3 million ESAL's ≥ 3 million ESAL's	 40% min 44% min	 35% min 39% min
Sand Equivalent	45 min.	40 min.

9-3.7 Acceptance Sampling and Testing Frequency Guide

Item	Test	Acceptance Sample
Gravel Borrow	Grading & SE	1 – 4000 Ton
Select Borrow	Grading & SE	1 – 4000 Ton
Gravel Borrow for Structural Earth Wall See Note 7	Grading & SE	1 – 4000 Ton
Sand Drainage Blanket	Grading	1 – 4000 Ton
Gravel Base	Grading, SE & Dust Ratio	1 – 4000 Ton
CSTC	Grading, SE & Fracture	1 – 2000 Ton
CSBC	Grading, SE & Fracture	1 – 2000 Ton
Streambed Sediment	Grading	1 – 500 tons
Maintenance Rock	Grading, SE & Fracture	1 – 2000 Ton
Ballast	Grading, SE & Dust Ratio	1 – 2000 Ton
Permeable Ballast	Grading & Fracture	1 – 2000 Ton
Backfill for Sand Drains	Grading	1 – 2000 Ton
Crushed Coverstone	Grading, SE & Fracture	1 – 1000 Ton
Crushed Screening		
⅝ – No. 4	Grading & Fracture	1 – 1000 Ton
½ – No. 4	Grading & Fracture	1 – 1000 Ton
No. 4 – 0	Grading & Fracture	1 – 1000 Ton
Gravel Backfill for		
Foundations	Grading & SE	1 – 1000 Ton
Walls	Grading, SE & Dust Ratio	1 – 1000 Ton
Pipe Zone Bedding	Grading & SE	1 – 1000 Ton
Drains	Grading	1 – 500 Ton
Dry Wells	Grading	1 – 500 Ton
Concrete Patching Material		
Cylinder (3 hour and 24 hour)	Compressive Strength	1 per Shift
Air Content	Air	1 per Shift
Grout Type 2		
Cube molds (7 day)	Compressive Strength	1 per bridge pier or 1 per Shift
Grout Type 3		
Cube molds (3 hour, 1 day, 7 day)	Compressive Strength	1 per bridge pier or 1 per Shift

Item	Test	Acceptance Sample
Grout Type 4 (Structural Applications)		
Cube mold/cylinder (7 day)	Compressive Strength	1 per bridge pier or 1 per Shift
Mortar Type 3		
Cube molds (7 day)	Compressive Strength	1 per day
PCC Paving		
Coarse Aggregate See Note 4	Grading	1 – 2000 CY
Fine Aggregate See Note 4	Grading	1 – 2000 CY
Combined Aggregate See Note 4	Grading	1 – 2000 CY
Air Content	Air	1 – 500 CY
Cylinders (28-day)	Compressive Strength	1 – 500 CY
Core	Density	1 – 500 CY
	Thickness	1 – 500 CY
Cement See Note 2	Chemical & Physical Certification	
PCC Structures		
Coarse Aggregate See Note 4	Grading	1 – 1000 CY
Fine Aggregate See Note 4	Grading	1 – 1000 CY
Combined Aggregate See Note 4	Grading	1 – 1000 CY
Consistency	Slump	1 for every 10 trucks, See Note 5
Air Content	Air	1 for every 10 trucks, See Note 5
Cylinders (28-day)	Compressive Strength	1 for every 10 trucks, See Note 5
Cement	Chemical & Physical Certification	
Grouts See Note 2	Compressive Strength	1 set per day
Hot Mix Asphalt		
Completed Mix, See Note 1		
<20,000 Tons	Grading & Asphalt Content	1 – 1,000 Tons
20,000 to 30,000 Tons	Grading & Asphalt Content	1 – 1,100 Tons
>30,000 Tons	Grading & Asphalt Content	1 – 2,000 Tons
<20,000 Tons	Compaction	1 – 100 Ton
20,000 to 30,000 Tons	Compaction	1 – 150 Ton
>30,000 Tons	Compaction	1 – 200 Ton
Hot Mix Asphalt Aggregate		
Aggregate	SE, Fracture, Uncompacted Void Content of Fine Aggregate	1 – 2,000 Ton
Mineral Filler	Sp. G & PI	Certificate

Asphalt Materials		Certification	
Asphalt Binder (PG, Etc.)	Verification:	2-1 quart	Every other mix acceptance sample, see Note 3
Emulsified Asphalt for Bituminous Surface Treatment (BST)	Verification:	2-1 quart	Every other shipment
Emulsified Asphalt for Fog Seal	Verification:	None Required	
Emulsified Asphalt for HMA Tack Coat	Verification:	2-1 quart	1 sample per project (Statistically Evaluated Projects Only

Compaction See Note 6	
Embankment	1 – 2500 CY
Cut Section	1 – 500 LF
Surfacing	1 – 1,000 LF (per layer)
Backfill	1 – 500 CY

Note 1 Mix design confirmation samples shall be submitted to the State Materials Laboratory Bituminous Materials Section. For all projects, beginning with the first Acceptance sample, submit one sample (two representative quarters) every 10,000 mix tons (One conformation sample for every ten Acceptance samples). The conformation samples should be taken in conjunction with and be representative quarters of the acceptance samples taken for the project as described in WSDOT Test Method 712.

Note 2 The first sample of asphalt binder will be taken with the second Hot Mix Asphalt (HMA) mix sample. For nonstatistical HMA, take one sample for every 2,000 tons of mixture.

Note 3 The frequency for fine, course, and combined concrete aggregate samples for PCC Paving and PCC Structures shall be based on the cubic yard (CY) of concrete.

Note 4 Sample the first truck, and each load until two successive loads meet specifications, and then randomly test one load for every ten loads. If at any time one load fails to meet specifications, continue testing every load until two successive loads meet specifications, and then randomly test one load for every ten loads.

Note 5 For materials placed in a non-structural application outside the roadway prism such as slope flattening or shoulder dressing, acceptance for compaction may be based on visual inspection to the satisfaction of the engineer.

Note 6 The gravel borrow for structural earth walls shall be tested for Los Angeles Wear and Degradation prior to placement and the test data may come from an approved source in the aggregate source approval database. For geosynthetic reinforcement, the gravel borrow shall be tested for pH prior to placement. For metallic reinforcement, the gravel borrow shall be tested for pH, resistivity, chlorides, and sulfates prior to placement. If the resistivity of the backfill material equals or exceeds 5,000 ohm-cm, the specified chloride and sulfate limits may be waived. If the aggregate source has variable quality, additional testing may be required. Contact the Regional Materials Engineer or the State Geotechnical Engineer for direction.

Note 7 The following concrete applications shall be accepted based on a Certificate of Compliance in accordance with Standard Specification Section 6-02.3(5)B and sampling and testing of the aggregate is not required;

- Lean Concrete
- Commercial Concrete
- Class 4000P concrete for Roadside Steel Sign Support Foundations.
- Class 4000P concrete for Type II, III, and CCTV Signal Standard Foundations that are 12’-0” or less in depth.
- Class 4000P concrete for Type IV and V Strain Pole Foundations that are 12’-0” or less in depth.
- Class 4000P concrete for Steel Light Standard Foundations Types A & B.

Note 8 Sampling and testing of HMA will be at the option of the Engineer in accordance with *Standard Specifications* Section 5-04.3(8)A1 for the following applications; Commercial HMA, sidewalks, road approaches, ditches, slopes, paths, trails, gores, pre-level, temporary pavement, pavement repair, and other non-structural applications approved by the Engineer.

9-4 Specific Requirements for Each Material

Section Number	Specific Requirements for Each Material Alphabetical Listing	Page Number
9-4.58	Admixtures for Concrete	9-95
9-4.5	Aggregates for Bituminous Surface Treatment, Ballast, Permeable Ballast, Crushed Surfacing Base and Top Course, Maintenance Rock, and Gravel Backfill for Foundations Class A	9-51
9-4.6	Aggregates for Hot Mix Asphalt (HMA)	9-52
9-4.25	Anchor Bolts, Nuts, and Washers	9-66
9-4.51	Beam Guardrail and Guardrail Anchors	9-88
9-4.2	Bituminous Materials	9-49
9-4.32	Bridge Approach Slab Anchors	9-73
9-4.71	Bridge Bearings – Cylindrical, Disc, Fabric Pad, Pin, Spherical	9-106
9-4.76	Concrete	9-110
9-4.4	Concrete Aggregates	9-50
9-4.98	Concrete Blocks	9-130
9-4.16	Concrete Drain, Perforated Underdrain, Culvert, and Storm Sewer Pipe	9-57
9-4.81	Concrete Patching Material, Grout and Mortar	9-115
9-4.64	Conduit	9-100
9-4.75	Construction Geosynthetics (Geotextiles and Geogrids)	9-109
9-4.17	Corrugated Galvanized Steel, Aluminized Steel, Aluminum: Drain, Perforated Underdrain, Culvert Pipe Arch, and Storm Sewer Pipe	9-59
9-4.30	Dowels and Tiebars for Concrete Pavement, Incl. Epoxy Coated	9-70
9-4.70	Elastomeric Pads	9-104
9-4.13	Elastomeric Expansion Joint Seals	9-55
9-4.65	Fiber Optic Cable, Electrical Conductors, and Cable	9-101
9-4.93	Electrical Service Cabinets	9-127
9-4.27	Epoxy Coated Reinforcing Steel Bars for Concrete	9-69
9-4.60	Epoxy Systems	9-96
9-4.80	Erosion Control Devices	9-114
9-4.78	Expansion Joints	9-111
9-4.89	Fabricated/Welded Miscellaneous Metal Drainage Items: Grate Inlets and Drop Inlets	9-124
9-4.50	Fencing and Gates	9-87
9-4.47	Fertilizer	9-83
9-4.97	Flow Restrictors and Oil Separators	9-129
9-4.62	Gabion Cribbing, Hardware, and Stone	9-97
9-4.9	Aggregate Materials for Walls (Gravel Backfill for Wall and Gravel Borrow for Structural Earth Walls)	9-53
9-4.52	Guardrail Posts and Blocks	9-89
9-4.24	High Strength Bolts, Nuts, and Washers	9-65
9-4.7	Hot Mix Asphalt (HMA)	9-52
9-4.15	Hot Poured Joint Sealant and Crack Sealing – Rubberized Asphalt	9-56
9-4.100	Intelligent Transportation Systems (ITS)/System Operations Management (SOM) Materials	9-131
9-4.49	Irrigation System	9-86
9-4.85	Junction Boxes, Cable Vaults, and Pull Boxes	9-120
9-4.57	Liquid Concrete Curing Compound	9-95
9-4.68	Luminaires, Lamps, and Light Emitting Diodes (LED)	9-103
9-4.28	Mechanical Splices	9-69
9-4.101	Media Filter Drain Mix	9-133
9-4.74	Metal Bridge Rail	9-108
9-4.96	Metal Trash Racks, Debris Cages, and Safety Bars for Culvert Pipe and Other Drainage Items	9-128
9-4.8	Mineral Filler	9-53
9-4.10	Miscellaneous Aggregates: Gravel Base, Gravel Backfill for Foundation Class B, Gravel Backfill for Pipe Zone Bedding, Gravel Backfill for Drains, Gravel Backfill for Drywells, Backfill for Sand Drains, Sand Drainage Blanket, Gravel Borrow, Select Borrow, Common Borrow, Native Materials for Trench Backfill, Foundation Material Class A, B, and C, and Bank Run Gravel for Trench Backfill	9-54
9-4.53	Miscellaneous Precast Concrete Products (Block Traffic Curb, Precast Traffic Curb)	9-90
9-4.90	Miscellaneous Steel Structures (Cattle Guards, Handrail, Retrofit Guardrail Posts With Welded Base Plate, Seismic Retrofit Earthquake Restrainers, Column Jackets)	9-125
9-4.91	Miscellaneous Welded Structural Steel	9-125
9-4.84	Modular Expansion Joint	9-119
9-4.94	Monument Case, Cover, and Riser	9-127
9-4.48	Mulch	9-84

Section Number	Specific Requirements for Each Material Alphabetical Listing	Page Number
9-4.35	Painting, Paints, Coating, and Related Materials	9-75
9-4.3	Pavement Marker Adhesive	9-50
9-4.55	Pavement Marking Materials	9-91
9-4.38	Piling – All Types	9-77
9-4.44	Plant Material	9-81
9-4.59	Plastic Waterstop	9-96
9-4.18	Polyvinyl Chloride (PVC) and Corrugated Polyethylene (PE) Drain, Perforated Underdrain, Culvert, and Storm Sewer Pipe	9-60
9-4.1	Portland Cement, Blended Hydraulic Cement, Fly Ash, and Other Cementitious Materials	9-48
9-4.14	Poured Rubber Joint Sealer – Two Component	9-56
9-4.86	Precast Bridge Deck Panels, Floor Panels, Marine Pier Deck Panels, Noise Barrier Walls, Pier Caps, Retaining Walls, Roof Panels, Structural Earth Walls, Wall Panels, and Wall Stem Panels	9-122
9-4.72	Precast Concrete Barrier	9-107
9-4.41	Precast Concrete Manholes, Catch Basins, Inlets, Drywells, and Risers	9-79
9-4.88	Precast Concrete Vaults (Utility, Drainage, etc.) and Box Culverts	9-123
9-4.87	Precast Reinforced Concrete Three Sided Structures	9-122
9-4.12	Premolded Joint Filler for Expansion Joints	9-55
9-4.54	Prestressed Concrete Girders	9-90
9-4.34	Prestressing/Post Tensioning Reinforcement – Bar	9-74
9-4.33	Prestressing/Post Tensioning Reinforcement – Strand	9-73
9-4.29	Rebar Chairs, Mortar Blocks (Dobies), and Spacers	9-70
9-4.26	Reinforcing Bars for Concrete	9-67
9-4.61	Resin Bonded Anchors	9-97
9-4.42	Riprap, Rock for Erosion and Scour Protection, Quarry Spalls, Rock for Rock Wall and Chinking Material, Backfill for Rock Wall, and Stone for Gabions	9-80
9-4.21	Sanitary Sewers	9-62
9-4.46	Seed	9-82
9-4.43	Semi-Open Slope Protection	9-81
9-4.56	Signing Materials and Mounting Hardware	9-92
9-4.95	Steel Bollards	9-128
9-4.20	Steel, Gray-Iron, and Ductile-Iron Castings: Manhole Rings and Covers; Metal Frame, Grate, and Solid Metal Cover for Catch Basins or Inlets; Cast Metal Inlets; Frame (Ring), Grate, and Cover for Drywells	9-61
9-4.66	Steel Poles – ITS, Pedestrian, Light, Signal Standards, and High Mast Light Poles	9-101
9-4.63	Steel Sign Structures – Cantilever, Sign Bridge, Bridge Mounted, Roadside	9-99
9-4.84	Modular Expansion Joint	9-119
9-4.82	Streambed Aggregates	9-117
9-4.19	Structural Plate Pipe, Pipe Arch, Arch, and Underpass	9-60
9-4.22	Structural Steel for Bridges	9-63
9-4.83	Temporary Traffic Control Materials	9-117
9-4.36	Timber and Lumber	9-76
9-4.45	Topsoil	9-82
9-4.79	Traffic Signal Controller Assembly	9-112
9-4.23	Unfinished Bolts (Ordinary Machine Bolts), Nuts, and Washers	9-64
9-4.69	Water Distribution System	9-104
9-4.77	Water for Concrete	9-111
9-4.31	Wire Reinforcement for Concrete	9-72
9-4.92	Wood Bridges	9-126
9-4.11	Vacant	9-55
9-4.37	Vacant	9-77
9-4.39	Vacant	9-79
9-4.40	Vacant	9-78
9-4.67	Vacant	9-103
9-4.73	Vacant	9-108
9-4.99	Vacant	9-130

9-4.1 Portland Cement, Blended Hydraulic Cement, Fly Ash, and Other Cementitious Materials

1. **Approval of Material** – Approval of materials is required prior to use. Materials will be approved by the *Qualified Products List* or Request for Approval of Material DOT Form 350-071. Be certain to verify that the product is in fact qualified for its intended use and the product is listed under the appropriate specification.
2. **Preliminary Samples** – Preliminary samples will be required only if coded on the Request for Approval of Material DOT Form 350-071.
3. **Acceptance/Verification**
   a. **Acceptance**
      i. **Bulk Cement** – Acceptance shall be by receipt of a Manufacturer's Mill Test Report. The Mill Test Report Number shall be reported on each certified concrete delivery ticket.
      ii. **Bagged Cement**
         - **Less than 400 Bags** – Visual Acceptance per Section 9-1.4C. Verify each Bag is labeled meeting the requirements of AASHTO M 85 or ASTM C150.
         - **400 Bags and Greater** – Acceptance shall be by "Satisfactory" test reports from the State Materials Laboratory. Obtain a 10-pound sample from one of every 400 bags and ship to the State Materials Laboratory for testing.
      iii. **Fly Ash** – Acceptance shall be by receipt of a Manufacturer's Mill Test Report submitted with Mix Design.
      iv. **Ground Granulated Blast Furnace Slag** – Acceptance shall be by receipt of a Manufacturer's Mill Test Report submitted with Mix Design.
      v. **Microsilica Fume** – Acceptance shall be by receipt of a Manufacturer's Mill Test Report submitted with Mix Design.
   b. **Verification** – Cement producers, importers/distributors, and suppliers that certify Portland cement or blended cement will provide samples directly to the State Materials Laboratory on a quarterly basis for comparison with the manufacturer's mill test report per WSDOT Standard Practice QC-1. The Project Engineer office will be notified in the event of a failing test report. The PEO will be required to check Concrete Delivery Tickets for failing mill test numbers to ensure that the failing cement from that mill test was not placed.
4. **Field Inspection** – Field verify per Section 9-1.5. For Bagged cement, verify each Bag is labeled meeting the requirements of AASHTO M 85 or ASTM C 150.

5. **Specification Requirements** – See *Standard Specifications* Section 9-01, 9-23.9, 9-23.10, and 9-23.11. Review contract documents to determine if supplemental specifications apply.
6. **Other Requirements** – Allow a minimum of 14 days from receipt of the sample at the Laboratory for testing. DO NOT permit the use of bagged cement until a "Satisfactory" test report has been received from the State Materials Laboratory.

9-4.2 Bituminous Materials

1. **Approval of Material** – Approval of materials is required prior to use. Materials will be approved by the *Qualified Products List* or Request for Approval of Material DOT Form 350-071. Be certain to verify that the product is in fact qualified for its intended use and the product is listed under the appropriate specification.
2. **Preliminary Samples** – A preliminary sample of the material will be required only if coded on the Request for Approval of Material DOT Form 350-071.
3. **Acceptance/Verification**
   a. **Acceptance** – Acceptance shall be by the Asphalt Supplier's Certification of Compliance incorporated in their Bill of Lading with the information required by *Standard Specifications* Section 9-02.
   b. **Verification** – Samples for verification conformance will be taken based on the frequencies stated in Section 9-3.7. Because the entire sample may be used in testing, it is necessary to take a backup for each sample. The samples shall be taken and labeled in duplicate by the engineer with both samples forwarded promptly to the State Materials Laboratory. Consult the FOP for AASHTO T 40 for detailed sampling procedures.

      Enter complete data on gummed label DOT Form 350-016 and attach to each of the two cans. Complete a Sample Transmittal DOT Form 350-056 and attach it, in its envelope, to the container. If tape is used to attach envelope to container, or the containers together, be sure the tape is not contacting the label(s).

      The Project Engineer office will be notified in the event of a failing test report. The PEO shall refer to Section 9-3.5C and contact WSDOT Roadway Construction Office for possible price adjustment.
4. **Field Inspection** – Field verify per Section 9-1.5. Check the "Bill of Lading" to confirm that the liquid asphalt delivered complies with the requirements of the mix design verification report.
5. **Specification Requirements** – See *Standard Specifications* Section 9-02. Review contract documents to determine if supplemental specifications apply.
6. **Other Requirements** – None.

9-4.3 Pavement Marker Adhesive

1. **Approval of Material** – Approval of materials is required prior to use. Materials will be approved by the *Qualified Products List* or Request for Approval of Material DOT Form 350-071. Be certain to verify that the product is in fact qualified for its intended use and the product is listed under the appropriate specification.
2. **Preliminary Samples** – A preliminary sample of the material will be required only if coded on the Request for Approval of Material DOT Form 350-071. Submit Manufacturers Certificate of Compliance meeting the requirements of *Standard Specifications* Section 1-06.3, including supporting tests reports to State Materials Laboratory for evaluation.
3. **Acceptance**
   a. **Flexible Bituminous Pavement Marker Adhesive** – If the lot is listed on the QPL, it may be used without testing on current projects per Section 9-1.4A(1). If the lot is not on the QPL, submit a sample taken by, or in the presence of, an agency representative for each lot. Samples must be submitted for testing 10 days prior to use of adhesive. Samples submitted shall be accepted on receipt of "Satisfactory" test reports from the State Materials Laboratory.
   b. **Epoxy Adhesive** – Acceptance shall be by the Manufacturer's Certificate of Compliance per Section 9-1.4D.
4. **Field Inspection** – Field Verify per Section 9-1.5.
   a. **Flexible Bituminous Pavement Marker Adhesive** – Verify correct heating of product per manufacturer's recommendations.
   b. **Epoxy Adhesive** – Check for set and hardness prior to opening to traffic. Epoxies shall be mixed and applied in conformance to manufacturer's written instructions unless otherwise modified in writing by the manufacturer's agent.
5. **Specification Requirements** – See *Standard Specifications* Section 9-02.1(8) and 9-26.2. Review contract documents to determine if supplemental specifications apply.
6. **Other Requirements** – There may be special shipping requirements for adhesive. These samples shall be transported to the Region Materials Laboratory for proper shipping.

9-4.4 Concrete Aggregates

1. **Approval of Material** – In accordance with *Standard Specifications* Section 1-06, approval of materials is required prior to use. Consult the Aggregate Source Approval (ASA) database for approval status of the material for each source. If the ASA database indicates the aggregate source has expired or will expire before the end of the project, a source evaluation will be required. Contact the Region Materials Office for further direction. If samples are required, the Region Materials Office will coordinate with the ASA Engineer to obtain the necessary samples in accordance with SOP 128.

Source approval is not required for aggregates used for Commercial Concrete, as described in *Standard Specifications* Section 6-02.3(2)B.

2. **Preliminary Samples** – A preliminary sample of the material will be required only if coded on the Request for Approval of Material DOT Form 350-071.
3. **Acceptance** – Acceptance shall be administered in accordance with *Standard Specifications* Section 3-04. Acceptance samples shall be obtained, tested, and recorded in accordance with the contract documents, and Sections 9-3.7 and 9-7.
4. **Field Inspection** – Field verify per Section 9-1.5.
5. **Specification Requirements** – See *Standard Specifications* Section 3-02,3-04, 6-02.3(2)B, 9-03.1, and 9-03.2. Review contract documents to determine if supplemental specifications apply.
6. **Other Requirements** – Consult the ASA database to see if Alkali Silica Reactive (ASR) mitigation is required. ASR mitigation is not required for Commercial Concrete as identified in *Standard Specifications* Section 6-02.3(B).

9-4.5 Aggregates for Bituminous Surface Treatment, Ballast, Permeable Ballast, Crushed Surfacing Base and Top Course, Maintenance Rock, and Gravel Backfill for Foundations Class A

1. **Approval of Material** – In accordance with *Standard Specifications* Section 1-06, approval of materials is required prior to use. Consult the Aggregate Source Approval (ASA) database for approval status of the material for each source. If the ASA database indicates that the aggregate source has expired, or will expire before the end of the project, a source evaluation may be required. Contact the Region Materials Office for further direction. If samples are required, the Region Materials Office will coordinate with the ASA Engineer to obtain the necessary samples according to SOP 128.
2. **Preliminary Samples** – A preliminary sample of the material will be required only if coded on the Request for Approval of Material DOT Form 350-071.
3. **Acceptance** – Acceptance shall be administered in accordance with *Standard Specifications* Section 3-04. Acceptance samples shall be obtained, tested, and recorded in accordance with the contract documents, and Sections 9-3.7 and 9-7.
4. **Field Inspection** – Field verify per Section 9-1.5.
5. **Specification Requirements** – See *Standard Specifications* Section 3-02, 3-04, 9-03.4, 9-03.9, and 9-03.12(1)A. Review contract documents to determine if supplemental specifications apply.
6. **Other Requirements** – Refer to *Standard Specifications* Section 9-03.21 to see if recycled materials are permitted.

9-4.6 Aggregates for Hot Mix Asphalt (HMA)

1. **Approval of Material** – In accordance with *Standard Specifications* Section 1-06, approval of materials is required prior to use. Consult the Aggregate Source Approval (ASA) database for approval status of the material for each source. If the ASA database indicates that the aggregate source has expired, or will expire before the end of the project, a source evaluation may be required. Contact the Region Materials Office for further direction. If samples are required, the Region Materials Office will coordinate with the ASA Engineer to obtain the necessary samples according to SOP 128.
2. **Preliminary Samples** – A preliminary sample of the material will be required only if coded on the Request for Approval of Material DOT Form 350-071.
3. **Acceptance** – Acceptance shall be administered in accordance with contract documents and *Standard Specifications* Sections 3-04 and 5-04.3(8)2. Acceptance samples shall be obtained, tested, and recorded in accordance with the contract documents, and Sections 9-3.7 and 9-7.

   The requirements for fracture, sand equivalent and uncompacted void content of fine aggregate shall apply at the time of its introduction to the cold feed of the mixing plant. Acceptance of the aggregate for gradation shall be in accordance with Section 9-4.7.
4. **Field Inspection** – Field verify per Section 9-1.5.
5. **Specification Requirements** – See *Standard Specifications* Sections 3-02, 3-04, 5-04, and 9-03.8. Review contract documents to determine if supplemental specifications apply.
6. **Other Requirements** – Refer to *Standard Specifications* Section 9-03.21 and contract provisions to see if recycled materials are permitted.

9-4.7 Hot Mix Asphalt (HMA)

1. **Approval of Material** – Approval of materials is required prior to use. Materials will be approved by the ASA Database and *Qualified Products List* or Request for Approval of Material DOT Form 350-071. Be certain to verify that the product is in fact qualified for its intended use and the product is listed under the appropriate specification.
2. **Preliminary Samples** – Not required.
3. **Acceptance** – Acceptance samples shall be obtained, tested, and recorded in accordance with the *Standard Specifications*, the contract special provisions, and Section 9-3 and 9-7.
   a. **Statistical** – Acceptance shall be administered under *Standard Specifications* Section 5-04.
   b. **Non-statistical** – Acceptance shall be administered under *Standard Specifications* Section 5-04.
   c. **Commercial** – Acceptance shall be at the option of the Project Engineer.
4. **Field Inspection** – Field verify per Section 9-1.5.

5. **Specification Requirements** – See *Standard Specifications* Section 5-04 and 9-03.8. Review contract documents to determine if supplemental specifications apply.
6. **Other Requirements** – The Project Engineer should perform a plant inspection prior to production. Contact the Region materials office for assistance with this inspection.

9-4.8 Mineral Filler

1. **Approval of Material** – Approval of materials is required prior to use. Materials will be approved by the *Qualified Products List* or Request for Approval of Material DOT Form 350-071. Be certain to verify that the product is in fact qualified for its intended use and the product is listed under the appropriate specification.
2. **Preliminary Sample** – A preliminary sample of the material will be required only if coded on the Request for Approval of Material DOT Form 350-071. If required, ship 3 pounds in a polyethylene bag.
3. **Acceptance** – Acceptance of mineral filler (commercial stone dust) shall be based on "Satisfactory" laboratory tests only for each lot of 50 tons or less. Portland cement may be accepted without test if it is furnished in original factory sacks and is not lumpy.
4. **Field Inspection** – Field verify per Section 9-1.5. Verify that the mineral filler does not contain foreign material or lumps.
5. **Specification Requirements** – See *Standard Specifications* Section 9-03.8(5). Review contract documents to determine if supplemental specifications apply.
6. **Other Requirements** – None.

9-4.9 Aggregate Materials for Walls (Gravel Backfill for Wall and Gravel Borrow for Structural Earth Walls)

1. **Approval of Material** – In accordance with *Standard Specifications* Section 1-06 approval of materials is required prior to use. Consult the Aggregate Source Approval (ASA) database for approval status of the material for each source. If the ASA database indicates that the aggregate source has expired, or will expire before the end of the project, a source evaluation may be required. Contact the Region materials office for further direction. If samples are required, the Region materials office will coordinate with the ASA engineer to obtain the necessary samples according to SOP 128.
2. **Preliminary Samples** – A preliminary sample of the material will be required only if coded on the Request for Approval of Material DOT Form 350-071.
   a. **Gravel Borrow for Structural Earth Walls** – Shall be tested for Los Angeles Wear and Degradation prior to placement. If the source has current testing and listed in the ASA database, then the Los Angeles Wear and Degradation value can be used for approval. If the material does not have a current listing in the ASA database, a sample will have to be tested for Los Angeles Wear and Degradation.

i. **Geosynthetic Reinforcement** – Prior to delivery of the material to the project a preliminary sample of material will be required to be tested for pH to determine if the material in fact meets specification requirements for the intended use.

ii. **Metallic Reinforcement** – Prior to delivery of the material to the project a preliminary sample of material will be required to be tested for pH, Resistivity, Chlorides, and Sulfates to determine if the material in fact meet specification requirements for the intended use. If the Resistivity equals or exceeds 5,000 ohm-cm, the specified Chlorides and Sulfates limits may be waived.

3. **Acceptance** – Acceptance shall be administered in accordance with *Standard Specifications* Section 3-04. Acceptance samples shall be obtained, tested, and recorded in accordance with contract documents and Sections 9-3.7 and 9-7.
4. **Field Inspection** – Field verify per Section 9-1.5.
5. **Specification Requirements** – See *Standard Specifications* Sections 3-02, 3-04, 9-03.12(2), and 9-03.14(4). Review contract documents to determine if supplemental specifications apply.
6. **Other Requirements** – Refer to *Standard Specifications* Section 9-03.21 to see if recycled materials are permitted. Gravel Borrow for Structural Earth Walls, refer to *Standard Specifications* Section 9-03.14(4) if recycled materials are permitted.

9-4.10 Miscellaneous Aggregates: Gravel Base, Gravel Backfill for Foundation Class B, Gravel Backfill for Pipe Zone Bedding, Gravel Backfill for Drains, Gravel Backfill for Drywells, Backfill for Sand Drains, Sand Drainage Blanket, Gravel Borrow, Select Borrow, Common Borrow, Native Materials for Trench Backfill, Foundation Material Class A, B, and C, and Bank Run Gravel for Trench Backfill

1. **Approval of Material** – Approval is not required.
2. **Preliminary Samples** – A preliminary sample of the materials will be required only if coded on the Request for Approval of Material DOT Form 350-071.

   a. **Common Borrow** – Prior to delivery of the materials consult with the Region Materials Engineer to determine if a preliminary sample is required to determine if the material meets the requirements of *Standard Specifications* Section 9-03.14(3).

3. **Acceptance**

   a. **Aggregate for Gravel Base, Gravel Backfill for Foundations Class B, Gravel Backfill for Pipe Zone Bedding, Gravel Backfill for Drains, Gravel Backfill for Drywells, Backfill for Sand Drains, Gravel Borrow, Select Borrow, Foundation Material Class A, B, and C, and Bank Run Gravel for Trench Backfill** – Acceptance shall be administered in accordance with *Standard Specifications* Section 3-04. Acceptance samples shall be obtained, tested, and recorded in accordance with the contract documents, and Sections 9-3.7 and 9-7.

b. **Native Material for Trench Backfill** – Visual Acceptance per Section 9-1.4C. Verify that trench backfill is free of wood waste, debris, clods or rock greater than 6 inches in any dimension.

c. **Common Borrow** – Visual Acceptance per Section 9-1.4C. Verify that common borrow is free of deleterious materials such as wood, organic waste, coal, charcoal, or any other extraneous or objectionable material.

4. **Field Inspection** – Field verify per Section 9-1.5.
5. **Specification Requirements** – See *Standard Specifications* Section 3-02, 3-04 and 9-03. Review contract documents to determine if supplemental specifications apply.
6. **Other Requirements** – Refer to *Standard Specifications* Section 9-03.21 to see if recycled materials are permitted.

9-4.11 Vacant

9-4.12 Premolded Joint Filler for Expansion Joints

1. **Approval of Material** – Approval of materials is required prior to use. Materials will be approved by the *Qualified Products List* or Request for Approval of Material DOT Form 350-071. Be certain to verify that the product is in fact qualified for its intended use and the product is listed under the appropriate specification.
2. **Preliminary Samples** – A preliminary sample of the material will be required only if coded on the Request for Approval of Material DOT Form 350-071. When a preliminary sample is required, it shall consist of a 1 square foot section of the proposed material. Submit sample to the State Materials laboratory for testing.
3. **Acceptance** – Visual Acceptance per Section 9-1.4C.
4. **Field Inspection** – Field verify per Section 9-1.5. Check for accuracy in cutting, stapling, and care in handling.
5. **Specification Requirements** – See *Standard Specifications* Section 9-04.1(2). Review contract documents to determine if supplemental specifications apply.
6. **Other Requirements** – None.

9-4.13 Elastomeric Expansion Joint Seals

1. **Approval of Material** – Approval of materials is required prior to use. Materials will be approved by the *Qualified Products List* or Request for Approval of Material DOT Form 350-071. Be certain to verify that the product is in fact qualified for its intended use and the product is listed under the appropriate specification.
2. **Preliminary Samples** – A preliminary sample of the material will be required only if coded on the Request for Approval of Material DOT Form 350-071. When a preliminary sample is required, it shall consist of a 2 feet section from each lot of material used. Submit sample to the State Materials Laboratory for testing.

3. **Acceptance** – If the lot is listed on the QPL, it may be used without testing on current projects per Section 9-1.4A(1). If the lot is not on the QPL, submit a sample taken by, or in the presence of, an agency representative for each lot. Samples must be submitted for testing 10 days prior to use of joint seal. Samples submitted shall be accepted on receipt of "Satisfactory" test reports from the State Materials Laboratory.

   Sample – The sample shall consist of a 2 feet section from each lot of material used.

4. **Field Inspection** – Field verify per Section 9-1.5.
5. **Specification Requirements** – See *Standard Specifications* Section 9-04.1(4). Review contract documents to determine if supplemental specifications apply.
6. **Other Requirements** – None.

9-4.14 Poured Rubber Joint Sealer – Two Component

1. **Approval of Material** – Approval of materials is required prior to use. Materials will be approved by the *Qualified Products List* or Request for Approval of Material DOT Form 350-071. Be certain to verify that the product is in fact qualified for its intended use and the product is listed under the appropriate specification.
2. **Preliminary Samples** – A preliminary sample of the material will be required only if coded on the Request for Approval of Material DOT Form 350-071.
3. **Acceptance** – If the lot is listed on the QPL, it may be used without testing on current projects per Section 9-1.4A(1). If the lot is not on the QPL, submit a sample taken by, or in the presence of, an agency representative for each lot. Samples must be submitted for testing 10 days prior to use of joint sealer. Samples submitted shall be accepted on receipt of "Satisfactory" test reports from the State Materials Laboratory.

   Sample: The sample shall consist of an unopened container of each component (kit) from each lot, mixing instructions, and MSDS sheets. Submit sample to the State Materials Laboratory for testing.

4. **Field Inspection** – Field verify per Section 9-1.5. Make certain that application is in accordance with requirements of *Standard Specifications* and manufacturer's written recommendations. In order to obtain satisfactory adhesion of the sealer, joints must be thoroughly cleaned before the sealer is applied.
5. **Specification Requirements** – See *Standard Specifications* Section 9-04.2(2). Review contract documents to determine if supplemental specifications apply.
6. **Other Requirements** – None.

9-4.15 Hot Poured Joint Sealant and Crack Sealing – Rubberized Asphalt

1. **Approval of Material** – Approval of materials is required prior to use. Materials will be approved by the *Qualified Products List* or Request for Approval of Material DOT Form 350-071. Be certain to verify that the product is in fact qualified for its intended use and the product is listed under the appropriate specification.

2. **Preliminary Samples** – A preliminary sample of the material will be required only if coded on the Request for Approval of Material DOT Form 350-071.
3. **Acceptance** – If the lot is listed on the QPL, it may be used without testing on current projects per Section 9-1.4A(1). If the lot is not on the QPL, submit a sample taken by, or in the presence of, an agency representative for each lot. Samples must be submitted for testing 10 days prior to use of joint sealant. Samples submitted shall be accepted on receipt of "Satisfactory" test reports from the State Materials Laboratory.

   Sample – When a sample is required, submit a one box sample to the State Materials Laboratory for testing.
4. **Field Inspection** – Field verify per Section 9-1.5. Ensure that application is in accordance with requirements of *Standard Specifications* Section 5-04.3(5C), 5-05.3(8)B, and the manufacturer's recommendation.
5. **Specification Requirements** – See *Standard Specifications* Section 9-04.2(1) for joint sealant and 9-04.10 for crack sealing – rubberized asphalt. Review contract documents to determine if supplemental specifications apply.
6. **Other Requirements** – None.

9-4.16 Concrete Drain, Perforated Underdrain, Culvert, and Storm Sewer Pipe

1. **Approval of Material** – Approval of the Fabricator is required prior to fabrication. The Fabricator will be approved by the *Qualified Products List* or Request for Approval of Material DOT Form 350-071. Be certain to verify that the product is in fact qualified for its intended use, and the product is listed under the appropriate specification. Materials used within the fabricated item do not require approval through the Project Engineer office. Provide the WSDOT Materials Fabrication Inspection Office with a copy of the Qualified Products Page or Request for Approval of Material listing the Fabricator. Review of the Contract Special Provisions is necessary to determine if special qualifications or testing is required for approval of the fabricator.
2. **Preliminary Samples** – A preliminary sample of the material will be required only if coded on the Request for Approval of Material DOT Form 350-071.
3. **Acceptance**
   a. Concrete pipe less than 30 inch in diameter is accepted based on "Concrete Pipe Acceptance Reports" which shall accompany the pipe to the job site.
   b. Concrete pipe 30 inch in diameter and larger are individually inspected and stamped for approval by the Materials Fabrication Inspector at the fabrication facility prior to shipment. Acceptance is based on "APPROVED FOR SHIPMENT" Stamp (Figure 9-4). An "F" or "D" will be stamped to indicate the steel or iron is of foreign or domestic origin.
4. **Field Inspection**
   a. **Concrete pipe less than 30 inch in diameter:**
      i. Verify that the "Concrete Pipe Acceptance Report" is current and covers the diameter, quantity and class of pipe delivered.

ii. Inspect the manufacture date marked on each pipe to verify that it was made within the period covered by the "Concrete Pipe Acceptance Report." Also verify the pipe is at the age or older than the test pipe represented on the "Concrete Pipe Acceptance Report."

iii. Verify that the pipe is free from handling and shipping damage.

iv. Concrete sewer pipe requires testing after installation in conformance with the *Standard Specifications* Section 7-04.3.

v. Complete the upper portion of the "Concrete Pipe Acceptance Report" and forward to the contract files.

b. **Concrete pipe 30 inch in diameter and larger:**

i. Verify that each pipe in the shipment is stamped "APPROVED FOR SHIPMENT."

ii. Check that "APPROVED FOR SHIPMENT" Stamp (Figure 9-4) exhibits the "F" or "D" Stamp for foreign or domestic steel and document it.

iii. Verify that pipe is free from handling and shipping damage.

iv. Concrete sewer pipe requires testing after installation in conformance with the *Standard Specifications* Section 7-04.

5. **Specification Requirements** – See *Standard Specifications* Section 9-05. Review contract documents to determine if supplemental specifications apply.

6. **Other Requirements**

a. **Materials Fabrication Inspected CMO (30 inch in Diameter and larger)** – Certification of Material Origin will be the responsibility of the Materials Fabrication Inspector as defined in Section 9-2.1A.

For projects with the Buy America provision refer to Section 9-1.2E to determine if a Certification of Materials Origin is required. If the Buy America requirement applies, the Contractor is required to submit to the Project Engineer a Certification of Materials Origin for all foreign steel or iron materials. The Project Engineer will track the quantity of the materials and retain these documents in the project records.

b. **Non-Fabrication Inspected CMO (less than 30 inch in Diameter)** – For projects with the Buy America provision refer to Section 9-1.2E to determine if a Certification of Materials Origin is required. If the Buy America requirement applies, the Contractor is required to submit to the Project Engineer a Certification of Materials Origin for all steel or iron materials. The Project Engineer will track the quantity of the materials and retain these documents in the project records.

9-4.17 Corrugated Galvanized Steel, Aluminized Steel, Aluminum: Drain, Perforated Underdrain, Culvert Pipe Arch, and Storm Sewer Pipe

1. **Approval of Material** – Approval of materials is required prior to use. Materials will be approved by the *Qualified Products List* or Request for Approval of Material DOT Form 350-071. An on-site inspection of the fabricating facilities prior to approval will be required only if a new manufacture is requested on the Request for Approval of Material DOT Form 350-071. Be certain to verify that the product is in fact qualified for its intended use and the product is listed under the appropriate specification.
2. **Preliminary Samples** – A preliminary sample of the material will be required only if coded on the Request for Approval of Material DOT Form 350-071.
3. **Acceptance**
   a. **Treated** – Acceptance shall be by the Manufacturer's Certificate of Compliance with supporting Mill Certification per Section 9-1.4D.

      The Project Office is required to inspect treated culvert pipe for uniformity of coating, no hanging treatment drips inside the pipe or other problems with the coating. Upon request the State Materials Laboratory Fabrication Inspection office can come inspect the treated metal culvert pipe at the jobsite if there are concerns about the thickness of the treatment, and uniformity of the coating. WSDOT Fabrication inspectors are able to measure the thickness using non-destructive testing.

   b. **Untreated** – Acceptance shall be by Visual Acceptance per Section 9-1.4C. Verify that the appropriate AASHTO specification for the steel sheet, gauge thickness, and heat number is stamped on the pipe. Pipe not bearing this stamp shall not be installed. Any pipe, which is damaged in any way from shipping or handling, should not be accepted. If the manufacturer of the pipe delivered to the job site can not be identified, a Bill of Lading showing the manufacturer should be requested prior to accepting or installing the pipe.
4. **Field Inspection** – Field verify per Section 9-1.5. Check each delivery for fabrication details and quality of workmanship. Check for shipping damage and ensure that the galvanized coating is intact. Obtain documentation for all pipes not accepted under provisions established in the QPL.
5. **Specification Requirements** – See *Standard Specifications* Section 9-05. Review contract documents to determine if supplemental specifications apply.
6. **Other Requirements** – For projects with the Buy America provision refer to Section 9-1.2E to determine if Certification of Materials Origin is required. If the Buy America requirement applies, the Contractor is required to submit to the Project Engineer a Certification of Materials Origin for all steel or iron materials. The Project Engineer will track the quantity of the materials and retain these documents in the project records.

9-4.18 Polyvinyl Chloride (PVC) and Corrugated Polyethylene (PE) Drain, Perforated Underdrain, Culvert, and Storm Sewer Pipe

1. **Approval of Material** – Approval of materials is required prior to use. Materials will be approved by the *Qualified Products List* or Request for Approval of Material DOT Form 350-071. Be certain to verify that the product is in fact qualified for its intended use and the product is listed under the appropriate specification.
2. **Preliminary Samples** – A preliminary sample of the material will be required only if coded on the Request for Approval of Material DOT Form 350-071.
3. **Acceptance**
   a. **Drain Pipe, Perforated Underdrain Pipe, Solid Wall PVC Culvert and Storm Sewer Pipe** – Visual Acceptance per Section 9-1.4C.
   b. **Profile Wall PVC Culvert and Storm Sewer Pipe, Corrugated PE Culvert and Storm Sewer Pipe** – Acceptance shall be by the Manufacturer's Certificate of Compliance per Section 9-1.4D, shall accompany materials delivered to the project and shall include production lots for all materials represented.
4. **Field Inspection** – Field verify per Section 9-1.5.
5. **Specification Requirements** – See *Standard Specifications* Section 9-05. Review contract documents to determine if supplemental specifications apply.
6. **Other Requirements** – None.

9-4.19 Structural Plate Pipe, Pipe Arch, Arch, and Underpass

1. **Approval of Material** – Approval of materials is required prior to use. Materials will be approved by the *Qualified Products List* or Request for Approval of Material DOT Form 350-071. Approval of fabrication facility as well as the base metal must be obtained. An on-site inspection by the WSDOT Materials Fabrication Inspection Office of the fabricating facilities prior to approval will be required only if a new manufacture is requested on the Request for Approval of Material DOT Form 350-071. Be certain to verify that the product is in fact qualified for its intended use and the product is listed under the appropriate specification.
2. **Preliminary Samples** – A preliminary sample of the material will be required only if coded on the Request for Approval of Material DOT Form 350-071.
3. **Acceptance** – Acceptance shall be on the basis of Manufacturer's Certificate of Compliance, with accompanying mill test reports per Section 9-1.4D. The mass of zinc coating for each heat number in the shipment must be present on the "Manufacturer's Certificate of Compliance." The mill test report will contain both chemical and physical analysis of the base metal.

   All suppliers of structural plate pipe, arches and underpass are to transmit four copies of the certification to the Project Engineer. At least one copy must accompany the shipment; the others may be forwarded through the Contractor. Two copies of the certification are to be retained in the Project Engineer's files.

4. **Field Inspection** – Field verify per Section 9-1.5. Check for breaks of the galvanized or asphalt coating and for damage from shipment. Material in the shipment must be properly identified as to heat number.
5. **Specification Requirements** – See *Standard Specifications* Section 9-05.6. Review contract documents to determine if supplemental specifications apply.
6. **Other Requirements** – For projects with the Buy America provision refer to Section 9-1.2E to determine if Certification of Materials Origin is required. If the Buy America requirement applies, the Contractor is required to submit to the Project Engineer a Certification of Materials Origin for all steel or iron materials. The Project Engineer will track the quantity of the materials and retain these documents in the project records.

9-4.20 Steel, Gray-Iron, and Ductile-Iron Castings: Manhole Rings and Covers; Metal Frame, Grate, and Solid Metal Cover for Catch Basins or Inlets; Cast Metal Inlets; Frame (Ring), Grate, and Cover for Drywells

1. **Approval of Material** – Approval of the Fabricator is required prior to fabrication. The Fabricator will be approved by the *Qualified Products List* or Request for Approval of Material DOT Form 350-071. Be certain to verify that the product is in fact qualified for its intended use, and the product is listed under the appropriate specification. Materials used within the fabricated item do not require approval through the Project Engineer office. Provide the Fabrication Inspection Office with a copy of the Qualified Products Page or Request for Approval of Material listing the fabricator.
2. **Preliminary Samples** – A preliminary sample of the material will be required only if coded on the Request for Approval of Material DOT Form 350-071.
3. **Acceptance** – Acceptance is based on "WSDOT-A" (Figure 9-7) Stamp impressed stamped into all castings. In Figure 9-7, the "A" is an inspector identifier, and will be different for each individual inspector. An "F" or "D" will be stamped to indicate the steel or iron is of foreign or domestic origin. Only properly stamped castings may be accepted.
   a. For Rectangular Frames and Grates, the frame and grate will each be stamped in such a fashion as to align adjacent mating surfaces to each other. This alignment is critical as the leveling pads are ground to prevent rocking of the grates in the frames.
4. **Field Inspection** – Field verify per Section 9-1.5. Check for "WSDOT-A" Stamp (Figure 9-7) and the "F" or "D" Stamp for foreign or domestic steel and document it. Check for damage caused by shipping and handling.
5. **Specification Requirements** – See *Standard Specifications* Section 9-05.15. Review contract documents to determine if supplemental specifications apply.
6. **Other Requirements** – Certification of Material Origin will be the responsibility of the Materials Fabrication Inspector as defined in Section 9-2.1A.

   For projects with the Buy America The Project Engineer will provision; refer to Section 9-1.2E to determine if a Certification of Materials Origin is required. If the Buy America requirement applies, the Contractor is required to submit to

the Project Engineer a Certification of Materials Origin for all foreign steel or iron materials. The Project Engineer will track the quantity of the materials and retain these documents in the project records.

9-4.21 Sanitary Sewers

1. **Approval of Material** – Approval of materials and or the Fabricator is required prior to use or fabrication depending on the method of acceptance detailed below. The materials or Fabricator will be approved by the *Qualified Products List* or Request for Approval of Material DOT Form 350-071. If approval is by the QPL, be certain to verify that the product is in fact qualified for its intended use, and the product is listed under the appropriate specification. Materials used within the fabricated item do not require approval through the Project Engineer office. Provide the WSDOT Materials Fabrication Inspection Office with a copy of the Qualified Products Page or Request for Approval of Material listing the fabricator.
2. **Preliminary Samples** – A preliminary sample of the material will be required only if coded on the Request for Approval of Material DOT Form 350-071.
3. **Acceptance** – Material may be accepted upon receipt of an "Approved" document in lieu of sampling as shown below:
   a. **Concrete Pipe Less Than 30 inch in Diameter** – Acceptance shall be based on "Concrete Pipe Acceptance Reports" which shall accompany the pipe to the job site.
   b. **Concrete Pipe 30 inch in Diameter and Larger** – Acceptance is based on "APPROVED FOR SHIPMENT" Stamp (Figure 9-4). An "F" or "D" will be stamped to indicate the steel or iron is of foreign or domestic origin. Pipes are individually inspected and stamped for approval by the Materials Fabrication Inspector at the fabrication facility prior to shipment.
   c. **Vitrified Clay Sewer Pipe and Ductile Iron Sewer Pipe** – Acceptance shall be by the Manufacturer's Certificate of Compliance per Section 9-1.4D.
   d. **PVC Sewer Pipe and ABS Composite Sewer Pipe** – Visual Acceptance per Section 9-1.4C.
4. **Field Inspection**
   a. **Non-Concrete Pipe**
      i. Field verify per Section 9-1.5. Check material delivered to the project for damage, and conformance to the contract documents.
   b. **Concrete Pipe Less Than 30 inch in Diameter**
      i. Verify that the "Concrete Pipe Acceptance Report" is current and covers the diameter, quantity and class of pipe delivered.
      ii. Inspect the manufacture date marked on each pipe to verify that it was made within the period covered by the "Concrete Pipe Acceptance Report." Also verify the pipe is at the age or older than the test pipe represented on the "Concrete Pipe Acceptance Report."

iii. Verify that the pipe is free from handling and shipping damage.

iv. Concrete sewer pipe requires testing after installation in conformance with the *Standard Specifications* Section 7-04.3.

v. Complete the upper portion of the "Concrete Pipe Acceptance Report" and forward to the contract files.

c. **Concrete Pipe 30 inch in Diameter and Larger**

i. Verify that each pipe in the shipment is stamped "APPROVED FOR SHIPMENT."

ii. Check for "APPROVED FOR SHIPMENT" Stamp (Figure 9-5) and the "F" or "D" Stamp for foreign or domestic steel and document it.

iii. Verify that pipe is free from damage caused by shipping and handling.

iv. Concrete sewer pipe requires testing after installation in conformance with the *Standard Specifications* Section 7-04.

5. **Specification Requirements** – See *Standard Specifications* Section 7-17. Review contract documents to determine if supplemental specifications apply.

6. **Other Requirements**

a. **Materials Fabrication Inspected CMO** – Certification of Material Origin will be the responsibility of the Materials Fabrication Inspector as defined in Section 9-2.1A.

For projects with the Buy America provision refer to Section 9-1.2E to determine if a Certification of Materials Origin is required. If the Buy America requirement applies, the Contractor is required to submit to the Project Engineer a Certification of Materials Origin for all foreign steel or iron materials. The Project Engineer will track the quantity of the materials and retain these documents in the project records.

b. **Non-Fabrication Inspected CMO** – For projects with the Buy America provision refer to Section 9-1.2E to determine if a Certification of Materials Origin is required. If the Buy America requirement applies, the Contractor is required to submit to the Project Engineer a Certification of Materials Origin for all steel or iron materials. The Project Engineer will track the quantity of the materials and retain these documents in the project records.

9-4.22 Structural Steel for Bridges

1. **Approval of Material** – Approval of the Fabricator is required prior to the start of fabrication. The Fabricator will be approved by the *Qualified Products List* or Request for Approval of Material DOT Form 350-071. Be certain to verify that the product is in fact qualified for its intended use, and the product is listed under the appropriate specification. Approval of material sources through the QPL or RAM process for materials used by the Fabricator is not required. Provide the WSDOT Materials Fabrication Inspection Office with a copy of the Qualified Products Page or Request for Approval of Material listing the fabricator.

2. **Preliminary Samples** – A preliminary sample of the material will be required only if coded on the Request for Approval of Material DOT Form 350-071.

3. **Acceptance** – Acceptance is based on "APPROVED FOR SHIPMENT" Stamp and/or Tag (Figure 9-4 or 9-5). An "F" or "D" will be stamped to indicate the steel or iron is of foreign or domestic origin.

   The Materials Fabrication Inspector will provide a weekly Fabrication Progress Report to the Project Engineer while the structural steel is being fabricated.

4. **Field Inspection** – Field verify per Section 9-1.5. Check for "APPROVED FOR SHIPMENT" Tag or Stamp (Figure 9-4 or 9-5) and the "F" or "D" Stamp for foreign or domestic steel and document it. Check for shipping and handling damage.

5. **Specification Requirements** – See *Standard Specifications* Section 6-03 and 9-06. Review contract documents to determine if supplemental specifications apply.

6. **Other Requirements**

   a. **Materials Fabrication Inspected CMO** – Certification of Materials Origin will be the responsibility of the Materials Fabrication Inspector as defined in Section 9-2.1A.

      For projects with the Buy America provision refer to Section 9-1.2E to determine if Certification of Materials Origin is required. If the Buy America requirement applies, the Contractor is required to submit to the Project Engineer a Certification of Materials Origin for all foreign steel or iron materials from the Contractor, track the quantity, and retain these documents in the project records.

   b. **Non-Fabrication Inspected CMO** – For projects with the Buy America provision refer to Section 9-1.2E to determine if Certification of Materials Origin is required. If the Buy America requirement applies, the Contractor is required to submit to the Project Engineer a Certification of Materials Origin for all steel or iron materials. The Project Engineer will track the quantity of the materials and retain these documents in the project records.

9-4.23 Unfinished Bolts (Ordinary Machine Bolts), Nuts, and Washers

1. **Approval of Material** – Approval of materials is required prior to use. Materials will be approved by the *Qualified Products List* or Request for Approval of Material DOT Form 350-071. Be certain to verify that the product is in fact qualified for its intended use and the product is listed under the appropriate specification.

2. **Preliminary Samples** – A preliminary sample of the material will be required only if coded on the Request for Approval of Material DOT Form 350-071.

3. **Acceptance** – Acceptance of unfinished bolts, nuts, and washers shall be by the Manufacturer's Certificate of Compliance per Section 9-1.4D.

4. **Field Inspection** – Field verify per Section 9-1.5.

5. **Specification Requirements** – See *Standard Specifications* Section 9-06.5(1). Review contract documents to determine if supplemental specifications apply.

6. **Other Requirements** – For projects with the Buy America provision refer to Section 9-1.2E to determine if Certification of Materials Origin is required. If the Buy America requirement applies, the Contractor is required to submit to the Project Engineer a Certification of Materials Origin for all steel or iron materials. The Project Engineer will track the quantity of the materials and retain these documents in the project records.

9-4.24 High Strength Bolts, Nuts, and Washers

1. **Approval of Material** – Approval of materials is required prior to use. Materials will be approved by the *Qualified Products List* or Request for Approval of Material DOT Form 350-071. If approval is by QPL, be certain to verify that the product is in fact qualified for its intended use, and the product is listed under the appropriate specification.
2. **Preliminary Samples** – A preliminary sample of the material will be required only if coded on the Request for Approval of Material DOT Form 350-071.
3. **Acceptance**
   a. **Materials Fabrication Inspected Item** – Acceptance for high strength bolts, nuts, and washers associated with items receiving Materials Fabrication Inspection shall be an "APPROVED FOR SHIPMENT" Stamp and/or Tag (Figure 9-4 or 9-5) stamped on the container of bolts, nuts and washers. The Materials Fabrication Inspector will inspect hardware if it is available at the time of inspection at the point of manufacture. High strength bolts, nuts and washers not present during Materials Fabrication Inspection and delivered to the job site without an approval stamp shall be accepted by "Non-Fabrication Inspected Items" (see below). An "F" or "D" will be stamped to indicate the steel or iron is of foreign or domestic origin.
   b. **Non-Fabrication Inspected Items:**
      i. **Fabrication Inspection Sampled** – Acceptance shall be by the Manufacturer's Certificate of Compliance for each heat number or manufacturing lot per Section 9-1.4D. When the materials are received on the job site stamped "WSDOT Sampled," the material shall also be accepted by the PEO on receipt of "Satisfactory" test reports from the State Materials Laboratory.
      ii. **PEO Sampled** – Acceptance shall be by the Manufacturer's Certificate of Compliance per Section 9-1.4D for each heat number or manufacturing lot. Acceptance shall also be by a "Satisfactory" test report from the State Materials Laboratory when samples are required for each consignment lot as defined by *Standard Specifications* Section 9-06.5(3). A separate transmittal and materials certification shall accompany each sample of bolts, nuts, and washers.
4. **Field Inspection** – Field verify per Section 9-1.5. Check for "APPROVED FOR SHIPMENT" Stamp and/or Tag (Figure 9-4 or 9-5) and the "F" or "D" Stamp for foreign or domestic steel and document it.

5. **Specification Requirements** – See *Standard Specifications* Section 9-06.5(3). Review contract documents to determine if supplemental specifications apply.
6. **Other Requirements**
   a. **Materials Fabrication Inspected CMO** – Certification of Materials Origin will be the responsibility of the Materials Fabrication Inspector as defined in Section 9-2.1A.

      For projects with the Buy America provision refer to Section 9-1.2E to determine if Certification of Materials Origin is required. If the Buy America requirement applies, the Contractor is required to submit to the Project Engineer a Certification of Materials Origin for all foreign steel or iron materials. The Project engineer will track the quantity of the materials and retain these documents in the project records.

   b. **Non-Fabrication Inspected CMO** – For projects with the Buy America provision refer to Section 9-1.2E to determine if Certification of Materials Origin is required. If the Buy America requirement applies, the Contractor is required to submit to the Project Engineer a Certification of Materials Origin for all steel or iron materials. The Project Engineer will track the quantity of the materials and retain these documents in the project records.

9-4.25 Anchor Bolts, Nuts, and Washers

1. **Approval of Material** – Approval of the Fabricator is required prior to the start of fabrication. The Fabricator will be approved by the *Qualified Products List* or Request for Approval of Material DOT Form 350-071. Be certain to verify that the product is in fact qualified for its intended use, and the product is listed under the appropriate specification. Approval of material sources through the QPL or RAM process for materials used by the Fabricator is not required. Provide the WSDOT Materials Fabrication Inspection Office with a copy of the Qualified Products Page or Request for Approval of Material listing the fabricator.
2. **Preliminary Samples** – A preliminary sample of the material will be required only if coded on the Request for Approval of Material DOT Form 350-071.
3. **Acceptance**
   a. **Materials Fabrication Inspected Item** – Acceptance for ASTM a 449 and ASTM F 1554 Grade 105 anchor bolts and associated nuts and washers receiving Materials Fabrication Inspection shall be an "APPROVED FOR SHIPMENT" Stamp and/or Tag (Figure 9-4 or 9-5) on each bundle and the Materials Fabrication Inspectors inspection ID number randomly stamped on a representative number of anchor bolts. An "F" or "D" will be stamped to indicate the steel or iron is of foreign or domestic origin.

   b. **Non-Fabrication Inspected Items** – Acceptance for ASTM a 307 and ASTM F 1554 Grade 36 and Grade 55 anchor bolts, nuts and washers shall be based on receipt of Manufacturer's Certificate of Compliance.

      Nuts and washers for ASTM a 449 and ASTM F 1554 Grade 105 anchor bolts not containing an "APPROVED FOR SHIPMENT" Tag and/or Stamp shall be accepted by a Manufacturer's Certificates of Compliance per Section 9-1.4D

and it will be the responsibility of the Contractor to supply the certifications to the Project Engineer's Office prior to use.

4. **Field Inspection** – Field verify per Section 9-1.5. Check for "APPROVED FOR SHIPMENT" Tag (Figure 9-4) on bundles, the anchor bolts will be randomly stamped with an inspection ID number, and the "F" or "D" Stamp for foreign or domestic steel and document it. Check for damage due to shipping and handling.
5. **Specification Requirements** – See *Standard Specifications* Section 9-06.5(4), 9-28.14(2), and 9-29.6(5). Review contract documents to determine if supplemental specifications apply.
6. **Other Requirements**
   a. **Materials Fabrication Inspected CMO** – Certification of Materials Origin will be the responsibility of the Materials Fabrication Inspector as defined in Section 9-2.1A.

      For projects with the Buy America provision refer to Section 9-1.2E to determine if Certification of Materials Origin is required. If the Buy America requirement applies, the Contractor is required to submit to the Project Engineer a Certification of Materials Origin for all foreign steel or iron materials. The Project engineer will track the quantity of the materials and retain these documents in the project records.

   b. **Non-Fabrication Inspected CMO** – For projects with the Buy America provision refer to Section 9-1.2E to determine if Certification of Materials Origin is required. If the Buy America requirement applies, the Contractor is required to submit to the Project Engineer a Certification of Materials Origin for all steel or iron materials. The Project Engineer will track the quantity of the materials and retain these documents in the project records.

9-4.26 Reinforcing Bars for Concrete (Uncoated and Epoxy Coated Rebar)

1. **Approval of Material** – In accordance with *Standard Specification* Section 1-06, approval of materials, bender cutter, and the coating facility is required prior to use.

   Materials, bender cutter, and the coating facility will be approved by the *Qualified Products List* or Request for Approval of Material DOT Form 350-071. An on-site inspection by WSDOT State Materials Laboratory's Fabrication Office of the bender cutter and the coating facility prior to approval will be required only if a new bender cutter and coating facility is requested on the Request for Approval of Materials DOT Form 350-071. Be certain to verify that the product is in fact qualified for its intended use and the product is listed under the appropriate specification. Materials used within the fabricated item do not require approval through the Project Engineer office. Provide the WSDOT State Materials Laboratory Fabrication Office with a copy of the Qualified Products Page or Request for Approval of Material list the bender cutter, and/or coating facility. Review of the Contract Special Provisions is necessary to determine if special qualifications or testing is required for approval of the bender cutter and the coating facility.

RAM Submittal:

a. **Reinforcing Steel Rebar (Deformed and Plain Steel Bar)** – Submit documentation or a web link that demonstrates the Steel Reinforcing Bar Manufacturer is listed and compliant with the NTPEP audit program for Reinforcing Steel (rebar) Manufacturer as required in Standard Specification Section 9-07.1(1)A.

b. **Bender cutter and Coating Facility** – Submit the following information; Name of Facility, Contact Person, phone number, email address, and facility address.

2. **Preliminary Samples** – A preliminary sample of the material will be required only if coded on the Request for Approval of Material DOT Form 350-071.

3. **Acceptance**

a. **Reinforcing Steel Rebar (Uncoated)**

1. **Acceptance** – Shall be by the Manufacturer's Certification of Compliance and Certified Mill Test Reports that will accompany each shipment per Section 9-1.4D.

2. **Verification** – A representative of the State Materials Laboratory Fabrication Office may take random samples at the point of manufacture or fabrication for testing. The Project Engineer office will be notified in the event of a failing test report. The PEO will be required to check reinforcing bars for failing heat numbers to ensure that the failing reinforcing bars from that heat number was not installed.

Note: If Mill Test reports are not available, do not permanently incorporate steel into the project i.e. reinforcing steel being cast in concrete.

b. **Epoxy-Coated Steel Reinforcing Bar** – Acceptance shall be by an "APPROVED FOR SHIPMENT" Tag (Figure 9-5) attached to a representative number of bundles of epoxy coated reinforcing steel bars. An "F" or "D" will be stamped to indicate the steel or iron is of foreign or domestic steel.

4. **Field Inspection** – Field verify per Section 9-1.5. Check for the removal of excess rust and mill scale before using. Check steel fabrication and bends for compliance with contract documents.

5. **Specification Requirements** – See *Standard Specifications* Section 9-07. Review contract documents to determine if supplemental specifications apply.

6. **Other Requirements** –

a. **Materials Fabrication Inspected CMO** – Certification of Materials Origin will be the responsibility of the Materials Fabrication Inspector as defined in Section 9-2.1A.

For projects with the Buy America provision refer to Section 9-1.2E to determine if Certification of Materials Origin is required. If the Buy America requirement applies, the Contractor is required to submit to the Project Engineer a Certification of Materials Origin for all foreign steel or iron materials. The Project Engineer will track the quantity and retain these documents in the project records.

b. **Non-Fabricated Inspected CMO** – For projects with the Buy America provision refer to Section 9-1.2E to determine if Certification of Materials Origin is required. If the Buy America requirement applies, the Contractor is required to submit to the Project Engineer a Certification of Materials Origin for all steel or iron materials. The Project Engineer will track the quantity of the materials and retain these documents in the project records.

9-4.27 Vacant

9-4.28 Mechanical Splices

1. **Approval of Material** – Approval of materials is required prior to use. Materials will be approved by the *Qualified Products List* or Request for Approval of Material DOT Form 350-071. Be certain to verify that the product is in fact qualified for its intended use and the product is listed under the appropriate specification.
2. **Preliminary Sample** – A preliminary sample of the material will be required only if coded on the Request for Approval of Material DOT Form 350-071. Required preliminary samples shall include a made up splice for each size bar to be used and the manufacturer's product information. The overall length of the sample shall be 6 feet plus the length of the splice.
3. **Acceptance** – Materials shall be accepted on receipt of "Satisfactory" test reports from the State Materials Laboratory. The sample shall be from Contractor's assembled samples (see Note) taken from the project. A Manufacturer's Certificate of Compliance and other technical data MUST be submitted with the samples. The overall length of the sample shall be 6 feet plus the length of the splice, and shall consist of one made up splice for each size bar to be used.

   Note: This is a test of the Contractor's ability to properly assemble the splice as much as it is a test of the quality of the materials. For this reason the spliced bars must be assembled by the contractor's personnel, witnessed by the inspector and transmitted intact to the State Material Lab for testing.
4. **Field Inspection** – Field verify per Section 9-1.5. The PEO inspector shall verify that the splice is assembled per the Manufacturer's Instructions.
5. **Specification Requirements** – See *Standard Specifications* Section 6-02.3(24)F and G. Review contract documents to determine if supplemental specifications apply.
6. **Other Requirements** – For projects with the Buy America provision refer to Section 9-1.2E to determine if Certification of Materials Origin is required. If the Buy America requirement applies, the Contractor is required to submit to the Project Engineer a Certification of Materials Origin for all steel or iron materials. The Project Engineer will track the quantity of the materials and retain these documents in the project records.

9-4.29 Rebar Chairs, Mortar Blocks (Dobies), and Spacers

1. **Approval of Material** – Approval of materials is required prior to use. Materials will be approved by the *Qualified Products List* or Request for Approval of Material DOT Form 350-071. Be certain to verify that the product is in fact qualified for its intended use and the product is listed under the appropriate specification.

   RAM Submittal

   a. **Mortar Blocks (Dobies)** – If approval action is being requested via the RAM process, attach the Manufacturer's Certificate of Compliance per Section 9-1.4D to assist in the approval process.

   b. **Rebar Chairs and Spacers** – Submit sample of each size and type with the Request for Approval of Material.

2. **Preliminary Sample** – A preliminary sample of the material will be required only if coded on the Request for Approval of Material DOT Form 350-071.

3. **Acceptance**

   a. **Mortar Blocks (Dobies)** – Acceptance shall be by the Manufacturer's Certificate of Compliance per Section 9-1.4D.

   b. **Rebar Chairs and Spacers** – Visual Acceptance per Section 9-1.4C.

4. **Field Inspection** – Field verify per Section 9-1.5.

5. **Specification Requirements** – See *Standard Specifications* Section 6-02.3(24)C. Review contract documents to determine if supplemental specifications apply.

6. **Other Requirements** – For projects with the Buy America provision refer to Section 9-1.2E to determine if Certification of Materials Origin is required. If the Buy America requirement applies, the Contractor is required to submit to the Project Engineer a Certification of Materials Origin for all steel or iron materials. The Project Engineer will track the quantity of the materials and retain these documents in the project records.

9-4.30 Dowels and Tie Bars for Concrete Pavement

1. **Approval of Material** – In accordance with *Standard Specification* 1-06 approval of materials and coating facility are required prior to use. The materials and coating facility will be approved by the Qualified Products List or Request for Approval of Material (DOT Form 350-071EF). Be certain to verify that the product is in fact qualified for its intended use and the product is listed under the appropriate specification.

   RAM Submittal

   a. **Epoxy-Coated Dowel Bars (for Cement Concrete Pavement Rehabilitation)** – Submit the following;

      i. Identification of the epoxy coater and,

      ii. Identification of the dowel bar fabricator and,

iii. Manufacturer's Certification of Compliance and supporting certified mill tests for chemical composition and mechanical properties of current or previous productions for the steel dowel bar and epoxy coating material. Mill tests shall be less than 2 years old.

b. **Corrosion Resistant Dowel Bars (for Cement Concrete Pavement)**

i. **Stainless Steel Clad Dowel Bars and Zinc Clad Dowel Bars – Submit the following;**

1. Identification of the dowel bar fabricator and,
2. Manufacturer's Certification of Compliance and supporting certified mill tests for chemical composition and mechanical properties of current or previous production for the steel dowel bar and the clad. Mill tests shall be less than 2 years old.

ii. **Stainless Steel Tube Dowel Bars – Submit the following;**

1. Identification of the dowel bar fabricator and,
2. Manufacturer's Certification of Compliance and supporting certified mill tests for chemical composition and mechanical properties of current or previous production for the steel dowel bar and stainless steel tube. Mill tests shall be less than 2 years old.

iii. **Stainless Steel Solid Dowel Bars and Corrosion-Resistant Low Carbon Chromium Plain Steel Bars** – Submit the following;

1. Identification of the stainless steel dowel bar fabricator and,
2. Manufacturer's Certification of Compliance and supporting certified mill tests for chemical composition and mechanical properties of current or previous production for the steel dowel bar. Mill test shall be less than 2 years old.

c. **Tie Bars (for Cement Concrete Pavement)**

i. **Epoxy Coated (AASHTO M 284) Tie Bars** – Submit the following;

1. Identification of the epoxy coater and,
2. Identification of the tie bar fabricator and,
3. Manufacturer's Certification of Compliance and supporting certified mill tests for chemical composition and mechanical properties of current or previous production for the steel tie bar and the epoxy coating material. Mill tests shall be less than 2 years old.

ii. **Corrosion-Resistant Tie Bars** – Submit the following;

1. Identification of the tie bar fabricator and;
2. Manufacturer's Certification of Compliance and supporting certified mill tests for chemical composition and mechanical properties of current or previous production for the tie bar. Mill tests shall be less than 2 years old.

2. **Preliminary Sample** – A preliminary sample of the material will be required only if coded on the Request for Approval of Material (DOT Form 350-071).
3. **Acceptance** – Acceptance shall be by the Manufacturer's Certificate of Compliance and Certified Mill Test Report for both steel and coating process that will accompany each shipment per Section 9-1.4D.
4. **Field Inspection** – Field verify per Section 9-1.5. Check for dimensional conformance and ensure that proper mill test certificates have been provided. Check epoxy coating for damage and uniformity. Check stainless steel clad and tube dowel bar ends are sealed with a patching material used for epoxy coated reinforcing steel, see *Standard Specification* 9-07.6. Verify that epoxy-coated dowel bars are not being installed where corrosion resistant dowel bars are required.
5. **Specification Requirements** – See *Standard Specifications* Sections 9-07.5 and 9-07.6. Review contract documents to determine if supplemental specifications apply.
6. **Other Requirements** – For projects with the Buy America provision refer Section 9-1.2E to determine if Certification of Materials Origin is required. If the Buy America requirement applies, the Contractor is required to submit to the Project Engineer a Certification of Materials Origin for all steel or iron materials. The Project Engineer will track the quantity of the material and retain these documents in the project records.

9-4.31 Wire Reinforcement for Concrete

Approval of Material – Approval of materials is required prior to use. Materials will be approved by the *Qualified Products List* or Request for Approval of Material DOT Form 350-071. Be certain to verify that the product is in fact qualified for its intended use and the product is listed under the appropriate specification.

Preliminary Samples – A preliminary sample of the material will be required only if coded on the Request for Approval of Material DOT Form 350-071.

Acceptance – Acceptance shall be by the Manufacturer's Certificate of Compliance and Certified Mill Test Reports that will accompany each shipment per Section 9-1.4D.

Field Inspection – Field verify per Section 9-1.5. Check for excessive rust on wire, and check the spacing of the wires and weight per square yard.

Specification Requirements – See *Standard Specifications* Section 9-07.7, 9-07.8, and 9-07.9. Review contract documents to determine if supplemental specifications apply.

Other Requirements – For projects with the Buy America provision refer to Section 9-1.2E to determine if Certification of Materials Origin is required. If the Buy America requirement applies, the Contractor is required to submit to the Project Engineer a Certification of Materials Origin for all steel or iron materials. The Project Engineer will track the quantity of the materials and retain these documents in the project records.

9-4.32 Bridge Approach Slab Anchors

1. **Approval of Material** – Approval of materials is required prior to use. Materials will be approved by the *Qualified Products List* or Request for Approval of Material DOT Form 350-071. Be certain to verify that the product is in fact qualified for its intended use and the product is listed under the appropriate specification.
2. **Preliminary Sample** – A preliminary sample of the material will be required only if coded on the Request for Approval of Material DOT Form 350-071.
3. **Acceptance**
   a. **Anchors Type A** – Acceptance for the Steel Rod and Plate shall be by the Manufacturer's Certificate of Compliance per Section 9-1.4D.
   b. **Anchors Type B** – Acceptance for the Threaded Steel Rod and Steel Plate shall be by the Manufacturer's Certificate of Compliance per Section 9-1.4D.
   c. **Other Anchor Rod materials** – Plastic pipe, polystyrene, and duct tape are identified as Low Risk Materials per Section 9-1.3C.
4. **Field Inspection** – Field verify per Section 9-1.5.
5. **Specification Requirements** – See *Standard Plans* A-40.50.00 and *Standard Specifications* Section 6-02.3(10). Review contract documents to determine if supplemental specifications apply.
6. **Other Requirements** – For projects with the Buy America provision refer to Section 9-1.2E to determine if Certification of Materials Origin is required. If the Buy America requirement applies, the Contractor is required to submit to the Project Engineer a Certification of Materials Origin for all steel or iron materials. The Project Engineer will track the quantity of the materials and retain these documents in the project records.

9-4.33 Prestressing/Post Tensioning Reinforcement – Strand

1. **Approval of Material** – Approval of materials is required prior to use. Materials will be approved by the *Qualified Products List* or Request for Approval of Material DOT Form 350-071. Be certain to verify that the product is in fact qualified for its intended use and the product is listed under the appropriate specification.
2. **Preliminary Samples** – A preliminary sample of the material will be required only if coded on the Request for Approval of Material DOT Form 350-071.
3. **Acceptance/Verification**
   a. **Acceptance** – Acceptance shall be by the Manufacturer's Certificate of Compliance, Certified Mill Test Reports and the stress/strain curve that will accompany each shipment.
   b. **Verification** – The strand shall be tested for verification prior to placement. Samples for verification of conformance will be taken randomly at a frequency of 1 sample for every 5 reels. Sample per AASHTO M203. The samples shall be 6 to 7 feet in length. All samples must include the Manufacturer's Certificate

of Compliance, a mill certificate with supporting test report, and the stress/strain curve.

Submit 1 sample for each 5 reels to the State Materials Laboratory for testing. A copy of the Manufacturer's Certificate of Compliance, a mill certificate with supporting test report, and the stress/strain curve MUST accompany each sample submitted for testing. If the submitted sample fails the testing, submit two additional samples from the same heat number for additional testing.

4. **Field Inspection** – Field verify per Section 9-1.5. Check the strand for dirt, grease or rust.
5. **Specification Requirements** – See *Standard Specifications* Section 9-07.10. Review contract documents to determine if supplemental specifications apply.
6. **Other Requirements** – For projects with the Buy America provision refer to Section 9-1.2E to determine if Certification of Materials Origin is required. If the Buy America requirement applies, the Contractor is required to submit to the Project Engineer a Certification of Materials Origin for all steel or iron materials. The Project Engineer will track the quantity of the materials and retain these documents in the project records.

9-4.34 Prestressing/Post Tensioning Reinforcement – Bar

1. **Approval of Material** – Approval of materials is required prior to use. Materials will be approved by the *Qualified Products List* or Request for Approval of Material DOT Form 350-071. Be certain to verify that the product is in fact qualified for its intended use and the product is listed under the appropriate specification.
2. **Preliminary Samples** – A preliminary sample of the material will be required only if coded on the Request for Approval of Material DOT Form 350-071.
3. **Acceptance** – Materials shall be accepted on receipt of "Satisfactory" test reports from the State Materials Laboratory. Send two samples from each heat number. If supplemental requirements apply, send additional samples of two bars from each heat number. See contract documents. Sample per AASHTO T244. The samples must be a minimum of 6 feet in length. A copy of the Manufacturer's Certificate of Compliance and Certified Mill Test Reports shall accompany each heat number of reinforcing bar.
4. **Field Inspection** – Field verify per Section 9-1.5.
5. **Specification Requirements** – Review contract documents to determine specification requirements.
6. **Other Requirements** – For projects with the Buy America provision refer to Section 9-1.2E to determine if Certification of Materials Origin is required. If the Buy America requirement applies, the Contractor is required to submit to the Project Engineer a Certification of Materials Origin for all steel or iron materials. The Project Engineer will track the quantity of the materials and retain these documents in the project records.

9-4.35 Painting, Paints, Coating, and Related Materials

1. **Approval of Material** – Approval of the materials and painting/coating facility is required prior to the application of the paint/coating. The materials and painting/coating facility will be approved by the *Qualified Products List* or Request for Approval of Material DOT Form 350-071. Be certain to verify that the product is in fact qualified for its intended use and the product is listed under the appropriate specification. Materials/coating facility(s) used to produce the fabricated item do not require approval through the Project Engineer office. Provide the WSDOT Materials Fabrication Inspection Office with a copy of the Qualified Products Page or Request for Approval of Materials listing for the painting/coating facility.

   - Materials for Painting/Coating preparation (i.e., Abrasive blast media, bird guano treatment, fungicide treatment, filter fabric, foam backer rod) do not require approval documentation. It is within the inspector's authority to ask for additional documentation if the products are not performing satisfactorily.

   RAM Submittal – Vinyl Pretreatment, Inorganic Zinc-Rich Primer, Organic Zinc-Rich Primer, Epoxy Polyamide, Rust-Penetrating Sealer, Black Enamel, Orange Equipment Enamel, Exterior Acrylic Latex Paint-White, Single-Component Urethane Sealant, and Galvanizing Repair Paint (High Zinc Dust Content): Attach Catalog Cut showing conformance with the Contract Documents to assist in approving the RAM.

2. **Preliminary Samples** – Preliminary Samples will be required only if coded on the Request for Approval of Material DOT Form 350-071.

3. **Acceptance**

   a. **Shop/Fabrications Coated Materials for Items Delivered to the Jobsite** – Acceptance is based on "APPROVED FOR SHIPMENT" Stamp and/or Tag (Figure 9-4 or 9-5). See Section 9-4 for individual materials acceptance.

   b. **Jobsite Coated Materials**

      i. **Primer Zinc Filled Single Component Moisture** – Cured Polyurethane, Intermediate and Stripe Coat Single Component Moisture-Cured Polyurethane, Top Coat Single-Component Moisture-Cured Polyurethane:

         - **20 gallons or Less** – Acceptance shall be by the Manufacturer's Certificate of Compliance per Section 9-1.4D. The Manufacturer's Certificate of Compliance shall include a list of materials and quantities used.

         - **Greater than 20 Gallons** – If the lot is listed on the QPL, it may be used without testing on current projects per Section 9-1.4A(1). If the lot is not on the QPL, a one-quart sample for each lot is required. The WSDOT Fabrication Inspection Office will pick up the sample from the Manufacturer/Distributor. Samples must be submitted for testing 10 days prior to use. Materials shall be accepted on receipt of "Satisfactory" test reports from the State Materials Laboratory.

ii. **Vinyl Pretreatment, Inorganic Zinc** – Rich Primer, Organic Zinc-Rich Primer, Epoxy Polyamide, Rust-Penetrating Sealer, Black Enamel, Orange Equipment Enamel, and Exterior Acrylic Latex Paint-White: Visual Acceptance per Section 9-1.4C.

iii. **Pigment ed Sealer Materials for Coating of Concrete Surfaces** – If the lot is listed on the QPL, it may be used without testing on current projects per Section 9-1.4A(1). If the lot is not on the QPL, submit a one-quart sample taken by, or in the presence of, an agency representative for each lot. Samples must be submitted for testing 10 days prior to use. Materials shall be accepted on receipt of "Satisfactory" test reports from the State Materials Laboratory.

iv. **Single-Component Urethane Sealant** – Visual Acceptance per Section 9-1.4C.

v. **Repair material for Powder Coated Items** – Visual Acceptance per Section 9-1.4C that the repair material is per Contract Documents and is as specified in the Contractor's powder coating plan as specified by the engineer.

vi. **Galvanizing Repair Paint (High Zinc Dust Content)** – Visual acceptance per Section 9-1.4C that the spray can label states that the material meets "Federal Specification MIL-P-21035."

4. **Field Inspection** – Field verify per Section 9-1.5.

   See that paint is not caked in the container; it is free from skins and is well stirred before withdrawing portions for use.

5. **Specification Requirements** – See *Standard Specifications* Section 9-08. Review contract documents to determine if supplemental specifications apply.

6. **Other Requirements** – There may be special shipping requirements for paints and coatings. These samples shall be transported to the Region Materials Laboratory for proper shipping.

9-4.36 Timber and Lumber

1. **Approval of Material** – Approval of the Treatment Facility for treated lumber 6 in by 6 in and larger is required prior to the start of treatment. The Treatment Facility will be approved by the *Qualified Products List* or Request for Approval of Material DOT Form 350-071. Be certain to verify that the product is in fact qualified for its intended use and the product is listed under the appropriate specification. Materials used within the Treatment Facility do not require approval through the Project Engineer office. Review of the Contract Special Provisions is necessary to determine if special qualifications or testing is required for approval of the Treatment Facility.

   The Project Engineer is responsible for obtaining the approval for all untreated lumber and treated lumber less than 6 in by 6 in prior to use. Materials will be approved by the *Qualified Products List* or Request for Approval of Material DOT Form 350-071. Be certain to verify that the product is in fact qualified for its intended use and the product is listed under the appropriate specification.

2. **Preliminary Samples** – A preliminary sample of the material will be required only if coded on the Request for Approval of Material DOT Form 350-071.
3. **Acceptance**
   a. **Untreated** – Acceptance shall be by a Lumber Grading Stamp or Grading Certificate for Timber and Lumber. The Grading Certificate will be issued by the grading bureau whose authorized stamp is being used, or by the mill grading the timber or lumber under the supervision of one of the following lumber grading agencies: West Coast Lumber Inspection Bureau (WCLIB), Western Wood Products Association (WWPA), or the Pacific Lumber Inspection Bureau (PLIB). Check that all lumber and timber has the proper lumber grade stamps.

      Typically Lumber Grade Stamps, as used by the various inspection agencies are shown in the QPL, Appendix B:

   b. **Treated**
      i. Acceptance for Treated Timber and Lumber 6 in × 6 in and greater shall be an "APPROVED FOR SHIPMENT" Stamp and/or Tag (Figure 9-4 or 9-5).
      ii. Acceptance for Treated Timber and Lumber less than 6 in × 6 in shall be by a Lumber Grading Stamp or Grading Certificate and Certificate of Treatment.
4. **Field Inspection** – Field verify per Section 9-1.5.
5. **Specification Requirements** – See *Standard Specifications* Section 9-09, 9-16.2, 9-28.14, and 9-32.4. Review contract documents to determine if supplemental specifications apply.
6. **Other Requirements** – Aquatic use requires additional documentation per *Standard Specifications* Section 9-09.3.

9-4.37 Vacant

9-4.38 Piling – All Types

1. **Approval of Material** – In accordance with Section 1-06 approval of the Fabricator, coating facility and treatment facility is required prior to the start of fabrication. The Fabricator or treatment facility will be approved by the *Qualified Products List* or Request for Approval of Material DOT Form 350-071. Be certain to verify that the product is in fact qualified for its intended use and the product is listed under the appropriate specification. Materials used within the fabricated item do not require approval through the Project Engineer office. Provide the WSDOT Materials Fabrication Inspection Office with a copy of the Qualified Products Page or Request for Approval of Material listing the Fabricator. Review of the Contract Special Provisions is necessary to determine if special qualifications or testing is required for approval of the fabricator.

The Project Engineer is responsible for obtaining the approval of materials prior to use. Materials listed as "Project Engineer Office accepted" will be approved by the Qualified Products List or Request for Approval of Material DOT Form 350-071. Be certain to verify that the product is in fact qualified for its intended use and the product is listed under the appropriate specification.

2. **Preliminary Samples** – A preliminary sample of the material will be required only if coded on the Request for Approval of Material DOT Form 350-071.

3. **Acceptance**

   a. **WSDOT Fabricated Inspected**

      i. **Treated Wood Piling** – Acceptance shall be by an "APPROVED FOR SHIPMENT" Tag (Figure 9-6). Aquatic use requires additional documentation per *Standard Specifications* Section 9-09.3.

      ii. **Timber Composite Piling** – Acceptance shall be an "APPROVED FOR SHIPMENT" Tag (Figure 9-6). Aquatic use requires additional documentation per *Standard Specifications* Section 9-09.3.

      iii. **Coated Steel Piling** – Acceptance shall be by an "APPROVED FOR SHIPMENT" Stamp (Figure 9-4). An "F" or "D" will be stamped to indicate the steel or iron is of foreign or domestic origin.

      iv. **Prestressed Concrete Piling** – Acceptance shall be by an "APPROVED FOR SHIPMENT" Stamp (Figure 9-4). An "F" or "D" will be stamped to indicate the steel or iron is of foreign or domestic origin.

      v. **Structural Steel Piling (open-ended and close-ended pipe piles), H-pile, and Soldier Pile** – Acceptance shall be by an "APPROVED FOR SHIPMENT" Stamp (Figure 9-4). An "F" or "D" will be stamped to indicate the steel or iron is of foreign or domestic origin.

      vi. **Steel Pipe Piles for Concrete-Flled Steel Tubes (CFST)** – Acceptance shall be by an "APPROVED FOR SHIPMENT" Stamp (Figure 9-4). An "F" or "D" will stamped to indicate the steel or iron is of foreign or domestic origin.

   b. **Project Engineer Office Accepted**

      i. **Untreated Wood Piling** – Visual Acceptance per Section 9-1.4C and by field inspection per *Standard Specifications* Section 9-10.1(1).

      ii. **Steel Casing** – Acceptance shall be by the Manufacturer's Certificate of Compliance and Certified Mill Test Reports that will accompany each shipment per Section 9-1.4D.

      iii. **Steel Pile Tips, Shoes, and Pile Strapping** – Acceptance shall be by the Manufacturer's Certificate of Compliance and Certified Mill Test Reports that will accompany each shipment per Section 9-1.4D.

      iv. **Micropiles (Casing)** – Acceptance shall be by the Manufacturer's Certificate of Compliance and Certified Mill Test reports that accompany each shipment per Section 9-1.4D.

4. **Field Inspection** – Field verify per Section 9-1.5.
5. **Specification Requirements** – See *Standard Specifications* Sections 9-10.1(1) and 9-19.1. Review contract documents to determine if supplemental specifications apply.
6. **Other Requirements**
   a. **Materials Fabrication Inspected CMO** – Certification of Materials Origin for domestic steel will be the responsibility of the WSDOT Materials Fabrication Inspector as defined in Section 9-2.1A.

      For projects with the Buy America provision refer to Section 9-1.2E to determine if Certification of Materials Origin is required. If the Buy America requirement applies, the Contractor is required to submit to the Project Engineer a Certification of Materials Origin for all foreign steel or iron. The Project Engineer will track the quantity of the materials and retain these documents in the project records.

   b. **Non-Fabrication Inspected CMO** – For projects with the Buy America provision refer to Section 9-1.2E to determine if Certification of Materials Origin is required. If the Buy America requirement applies, the Contractor is required to submit to the Project Engineer a Certification of Materials Origin for all steel or iron materials. The Project Engineer will track the quantity of the materials and retain these documents in the project records.

9-4.39 Vacant

9-4.40 Vacant

9-4.41 Precast Concrete Manholes, Catch Basins, Inlets, Drywells, and Risers

1. **Approval of Material** – Approval of the Fabricator is required prior to the start of fabrication. The Fabricator will be approved by the *Qualified Products List* or Request for Approval of Material DOT Form 350-071. Be certain to verify that the product is in fact qualified for its intended use and the product is listed under the appropriate specification. Materials used within the fabricated item do not require approval through the Project Engineer office. Provide the Fabrication Inspection Office with a copy of the Qualified Products Page or Request for Approval of Material listing the Fabricator. Review of the Contract Special Provisions is necessary to determine if special qualifications or testing is required for approval of the fabricator.
2. **Preliminary Samples** – A preliminary sample of the material will be required only if coded on the Request for Approval of Material DOT Form 350-071.
3. **Acceptance** – Acceptance shall be a “WSDOT INSPECTED” Stamp (Figure 9-3). An “F” or “D” will be stamped to indicate the steel or iron is of foreign or domestic origin.
4. **Field Inspection** – Field verify per Section 9-1.5. Check for “WSDOT INSPECTED” Stamp (Figure 9-3) and the “F” or “D” Stamp for foreign or domestic steel and document it.

5. **Specification Requirements** – See *Standard Specifications* Section 7-05 and 9-05.50(2), 9-05.50(3), 9-05.50(4), and 9-05.50(5). Review contract documents to determine if supplemental specifications apply.

6. **Other Requirements** – Certification of Material Origin will be the responsibility of the Materials Fabrication Inspector as defined in Section 9-2.1A.

   For projects with the Buy America provision refer to Section 9-1.2E to determine if Certification of Materials Origin is required. If the Buy America requirement applies, the Contractor is required to submit to the Project Engineer a Certification of Materials Origin for all foreign steel or iron materials. The Project Engineer will track the quantity of the materials and retain these documents in the project records.

9-4.42 Riprap, Rock for Erosion and Scour Protection, Quarry Spalls, Rock for Rock Wall and Chinking Material, Backfill for Rock Wall, and Stone for Gabions

1. **Approval of Material** – In accordance with *Standard Specifications* Section 1-06, approval of materials is required prior to use. Consult the Aggregate Source Approval (ASA) database for approval status of the material for each source. If the ASA database indicated that the aggregate source has expired, or will expire before the end of the project, a source evaluation may be required. Contact the Region Materials Office for further direction. If samples are required, the Region Materials Office will coordinate with the ASA engineer to obtain the necessary samples according to SOP 128.

   When the usage is for non-structural applications, the Region Materials Engineer may approve the source.

2. **Preliminary Samples** – A preliminary sample of the material will be required only if coded on the Request for Approval of Material DOT Form 350-071.

   a. **Stone for Gabions** – Prior to incorporating the material into the project a preliminary sample of material will be required; Stone for filling gabions shall be dense enough to pass the unit weight test described in *Standard Specifications* Section 8-24.3(3)F.

3. **Acceptance**

   a. Acceptance for quantities less than or equal to 150 cubic yards shall be by a Visual Acceptance per Section 9-1.4C.

   b. Acceptance for quantities that exceed 150 cubic yards, the Project Engineer shall determine and document that the grading is in conformance with the *Standard Specifications* and contract special provisions.

   c. Acceptance for non-structural applications shall be by a Visual Acceptance per Section 9-1.4C.

4. **Field Inspection** – Field verify per Section 9-1.5.

5. **Specification Requirements** – See *Standard Specifications* Sections 9-13 or 9-27.3(6). Review contract documents to determine if supplemental specifications apply.

6. **Other Requirements** – Refer to *Standard Specifications* Sections 9-13 and 9-13.4 to see if recycled materials are permitted.

9-4.43 Semi-Open Slope Protection

1. **Approval of Material** – Approval of materials is required prior to use. Materials will be approved by the *Qualified Products List* or Request for Approval of Material DOT Form 350-071. Be certain to verify that the product is in fact qualified for its intended use and the product is listed under the appropriate specification.

   RAM Submittal – Attach Catalog Cuts using the Catalog Cut Transmittal DOT Form 350-072 to assist in the approval process.

2. **Preliminary Samples** – A preliminary sample of the material will be required only if coded on the Request for Approval of Material DOT Form 350-071.

3. **Acceptance** – Acceptance shall be by the Certificate of Compliance which will accompany each shipment per Section 9-1.4E.

4. **Field Inspection** – Field verify per Section 9-1.5.

5. **Specification Requirements** – See *Standard Specifications* Section 9-13.5(1). See *Standard Plans*. Review contract documents to determine if supplemental specifications apply.

6. **Other Requirements** – None.

9-4.44 Plant Material

1. **Approval of Material** – Approval of the Nursery is required prior to the start of planting. The Nursery will be approved by the *Qualified Products List* or Request for Approval of Material DOT Form 350-071. Be certain to verify that the product is in fact qualified for its intended use and the product is listed under the appropriate specification.

2. **Preliminary Samples** – A preliminary Site Inspection will be required only if coded on the Request for Approval of Material DOT Form 350-071. Contact the Regional Landscape Architect or HQ Design Landscape Architect.

3. **Acceptance** – Visual Acceptance per Section 9-1.4C.

   Check for uniformity of plants within each lot and for representative sample lot based on the following:

   (N = total number of plants in lot) (n = number of plants in sample lot)

Total Number of Plants (N)	Minimum No. of Plants Required to Make Sample Lot (n)
0 – 500	All plants
501 – 1,000	500
1,001 – 5,000	600
5,001 – 30,000	850
Over 30,000	1000

   Should 5 percent or less of the sample lot fail, the entire lot may be accepted. Should over 5 percent of the acceptance sample lot fail to meet nominal specification requirements, the entire lot shall be rejected and removed from the

project. The engineer may accept the plants if there is a large percentage of plants that appears to be exceptionally hearty and vigorous after sorting by the Contractor. If done immediately, the contractor shall be allowed to sort and remove the substandard portion of the plants.

After the contractor has completed sorting, a new sample lot based on the above schedule of the remaining stock will again be selected and inspected. Should 5 percent or less of this sample lot fail, the sorted lot may be accepted.

4. **Field Inspection** – Field verify per Section 9-1.5.
5. **Specification Requirements** – See *Standard Specifications* Section 9-14.6. Review contract documents to determine if supplemental specifications apply.
6. **Other Requirements** – If there is a question on the plant material, contact the Regional Landscape Architect or HQ Design Landscape Architect at 360-705-7245.

9-4.45 Topsoil

1. **Approval of Material** – Approval of materials is required prior to use. Materials will be approved by the Request for Approval of Material DOT Form 350-071. Be certain to verify that the product is in fact qualified for its intended use and the product is listed under the appropriate specification.
2. **Preliminary Samples** – A preliminary sample of the material will be required only if coded on the Request for Approval of Material DOT Form 350-071.
3. **Acceptance**
   - **Type A** – Acceptance shall be as stated in the Contract Documents.
   - **Type B & C** – Visual Acceptance per Section 9-1.4C.
4. **Field Inspection** – Field verify per Section 9-1.5. The material shall be inspected for roots, weeds, subsoil, rocks, and other debris. Topsoil should not contain any manmade physical contaminants, such as concrete, plastic, glass or metal.
5. **Specification Requirements** – See *Standard Specifications* Section 9-14.1. Review contract documents to determine if supplemental specifications apply.
6. **Other Requirements** – If there is a question on the top soil, contact the Regional Landscape Architect or HQ Design Landscape Architect at 360-705-7245.

9-4.46 Seed

1. **Approval of Material** – In accordance with *Standard Specifications* Section 1-06 approval of materials is required prior to use. Materials will be approved by the *Qualified Products List* or Request for Approval of Material DOT Form 350-071. Be certain to verify that the product is in fact qualified for its intended use and the product is listed under the appropriate specification.

   RAM Submittal – Attach business license issued by the supplier's state or provincial Department of Licensing with a "seed dealer" endorsement. The Project Engineer can approve the Request for Approval of Material (RAM). The Region Landscape Architect or the HQ Design Landscape Architect can assist the Project Engineer in evaluating these submittals.

2. **Preliminary Samples** – For native seed mixes, obtain samples from each seed mix. For commercial seed mixes, a preliminary sample of the material will be required only if coded on the Request for Approval of Material (DOT Form 350-071). Coordinate with the Region Landscape Architect or HQ Roadside and Site Development Office to obtain the necessary samples. Random testing will be done on these seed samples which involve forwarding representative samples for laboratory analysis.
3. **Acceptance** – Acceptance shall be by the Certificate of Compliance per Section 9-1.4E. Material shall be accepted on analysis shown on the label meeting contract requirements. For native seed mixes and commercial seed requiring preliminary samples, acceptance is based on "APPROVED FOR WSDOT APPLICATION" Stamp and/or Tag.
4. **Field Inspection** – Field verify per Section 9-1.5. Each individual sack of seed must include a label (tag) as to the contents, demonstrating conformance to all requirements specified in the special provisions for each component of the seed mix. All bags must be unopened prior to use on the project. Retain label and certifications during each placement pay period showing analysis for contract records.
5. **Specification Requirements** – See *Standard Specifications* Section 9-14.2. Review contract documents to determine if supplemental specifications apply.
6. **Other Requirements** – If there is a question on the correct seed for the intended use, or other questions, contact the Region Landscape Architect or HQ Design Landscape Architect at 360-705-7245.

9-4.47 Fertilizer

1. **Approval of Material** – Approval of materials is required prior to use. Materials will be approved by the *Qualified Products List* or Request for Approval of Material DOT Form 350-071. Be certain to verify that the product is in fact qualified for its intended use and the product is listed under the appropriate specification.
2. **Preliminary Samples** – A preliminary sample of the material will be required only if coded on the Request for Approval of Material DOT Form 350-071.
3. **Acceptance**
   a. **Fertilizer for General Use** – Visual Acceptance per Section 9-1.4C. Verify that the material and chemical content shown on container label meets contract requirements.
   b. **Fertilizer for Erosion Control**
      i. **Less than 5 Acres** – Visual Acceptance per Section 9-1.4C. Verify that the material and chemical content shown on container label meets contract requirements.
      ii. **5 Acres and Greater** – Acceptance of fertilizer shall be by receipt of a Manufacturer's Certificate of Compliance (*Standard Specifications* Section 1-06.3) per Section 9-1.4D.

4. **Field Inspection** – Field verify per Section 9-1.5. All bags must be unopened prior to use on the project. Retain label during each placement pay period showing analysis for contract records.
5. **Specification Requirements** – See *Standard Specifications* Section 9-14.3. Review contract documents to determine if supplemental specifications apply.
6. **Other Requirements** – If there is a question on the intended use of the fertilizer, contact the Region or State Roadside and Site Development Office at 360-705-7245.

9-4.48 Mulch

1. **Approval of Material** – Approval of materials is required prior to use. Materials will be approved by the *Qualified Products List* or Request for Approval of Material DOT Form 350-071. Be certain to verify that the product is in fact qualified for its intended use and the product is listed under the appropriate specification.

   RAM Submittal

   a. **Straw** – A certificate of compliance from either North America Weed Management Association (NAWMA) or Washington Wilderness Hay and Mulch (WWHAM) program indicating the straw is weed free or provide certification that the straw is steam or heat treated and is weed free.

   b. **Hydraulically Applied Erosion Control Products (HECP), Long-Term Mulch, Moderate-Term Mulch, and Short-Term Mulch** – Submit the following:
      - Test results dated within three years prior to the date of application from independent laboratory demonstrating compliance with Table 1 of *Standard Specifications* Section 9-14.4(2).
      - If the HECP contains cotton or straw, provide documentation that the material has been steam or heat treated to kill seeds or provide a U.S., Washington, or other State's Department of Agriculture laboratory test reports, dated within 90 days prior to the date of application, showing there are no viable seeds in the mulch.
      - Material Safety Data Sheet (MSDS) that demonstrates that the product is not harmful to plants, animals, and aquatic life.
      - Independent test results from the National Transportation Product Evaluation Program (NTPEP) for ASTM D 6459.

   c. **Wood Strand Mulch** – Submit preliminary sample to the State Materials Laboratory for evaluation.

   d. **Tackifier** – Submit the following:
      - Test results dated within three years prior to the date of application from independent laboratory demonstrating compliance with Table 1 of *Standard Specifications* Section 9-14.4(2).
      - A satisfactory report for viscosity performed in accordance with ASTM D 2364.

- Material Safety Data Sheet (MSDS) that demonstrates that the product is not harmful to plants, animals, and aquatic life.

e. **Compost** – Submit the following:

- A copy of the Solid Waste Handling Permit issued to the manufacturer by the Jurisdictional Health Department in accordance with WAC 173-350.
- Provide laboratory analysis from independent Seal of Testing Assurance (STA) Program certified laboratory that the material complies with the processes, testing, and standards specified in WAC 173-350 and *Standard Specifications* 9-14.4(8).
- A copy of the manufacturer's Seal of Testing Assurance (STA) certification as issued by the U.S. Composting Council.

2. **Preliminary Samples** – A preliminary sample of the material will be required only if coded on the Request for Approval of Material DOT Form 350-071.

3. **Acceptance**

a. **Straw** – Acceptance shall be by Visual Acceptance per Section 9-1.4C.

b. **Hydraulically Applied Erosion Control Products (HECPs), Long-Term Mulch, Moderate-Term Mulch, and Short-Term Mulch** – Acceptance shall be by Visual Acceptance per Section 9-1.4C.

c. **Bark or Wood Chips** – Acceptance shall be by the Certification of Compliance per Section 9-1.4E.

d. **Tackifier** – Acceptance shall be by Visual Acceptance per Section 9-1.4C.

e. **Compost** – Materials shall be accepted on receipt of "Satisfactory" test report from an independent STA program certified laboratory, documentation stating that the compost facility is STA certified, waste handling permit, etc., see contract provisions.

f. **Wood Strand Mulch** – Acceptance shall be by "Satisfactory" test report from the Contractor, performed in accordance with WSDOT Test Method 125 and Material Safety Data Sheet (MSDS) that demonstrates the product is not harmful to plant life.

4. **Field Inspection** – Field verify per Section 9-1.5. A visual inspection shall be made to ensure uniformity of the mulch. Also check for detrimental contamination.

5. **Specification Requirements** – See *Standard Specifications* Section 9-14.4. Review contract documents to determine if supplemental specifications apply.

6. **Other Requirements** – If there is a question on the intended use of mulch, contact the Region Landscape Architect, or State Roadside and Site Development Office at 360-705-7245.

For Compost Only – Samples may be tested using the Solvita Compost Maturity Test by the Contracting Agency at the Engineer's discretion. To purchase Solvita Compost Maturity Test Kits for field office use, contact Woods End Research Laboratory, Inc., Box 297, Mount Vernon, Maine 04352, 207-293-2457, email info@woodsend.org.

Note: If the compost smells like ammonia, the Solvita test should be performed.

9-4.49 Irrigation System

1. **Approval of Material** – Approval of materials is required prior to use. Materials will be approved by the *Qualified Products List* or Request for Approval of Material DOT Form 350-071. Be certain to verify that the product is in fact qualified for its intended use and the product is listed under the appropriate specification.

   RAM Submittal – If approval action is being requested via the RAM process, attach Catalog Cuts or other appropriate documents, using proper transmittal, to assist in the approval process. All Irrigation System materials being requested via RAM process will be sent to the Region or State Roadside and Site Development Office, except for Electrical Wire and Splices, which will be sent to the State Materials Laboratory. Atmospheric vacuum breaker assemblies (AVBA), pressure vacuum breaker assemblies (PVBA), double check valve assemblies (DCVA) and reduced pressure backflow devices (RBFD) shall be of a manufacturer and model approved for use by the Washington State Department of Health. When approved, be certain to verify that the product is in fact qualified for its intended use, and the product is listed under the appropriate specification.

2. **Preliminary Samples** – A preliminary sample of the material will be required only if coded on the Request for Approval of Material DOT Form 350-071.

3. **Acceptance**

   a. **QPL Acceptance**

      i. **PVC Pipe and Fittings, Automatic Controllers, Spray Heads, Valve Boxes and Protective Sleeves, Automatic Control Valves with Pressure Regulator, Quick Coupling Equipment, Electrical Wire and Splices** – Visual Acceptance per Section 9-1.4C.

      ii. **Cross-Connection Control Devices** – Visual Acceptance per Section 9-1.4C. Document that the model number of the device is listed on the current Washington State Department of Health (WSDOH) listing.

   b. **Non-QPL Acceptance**

      i. **PVC Pipe, Polyethylene Pipe, and Detectable Marking Tape** – Visual Acceptance per Section 9-1.4C.

      ii. **Galvanized Iron Pipe** – Manufacturer's Certificate of Compliance per Section 9-1.4D.

      iii. **PVC Pipe Fittings, Drip Tubing, Automatic Controllers, Spray Heads, Valve Boxes and Protective Sleeves, Gate Valves, Manual Control Valves, Automatic Control Valves, Automatic Control Valves with Pressure Regulator, Quick Coupling Equipment, Drain Valves, Hose Bibs, Check Valves, Pressure Regulating Valves, Three-Way Valves, Flow Control Valves, Air Relief Valves, Electrical Wire and Splices, Wye Strainers** – Catalog Cut per Section 9-1.4G.

      iv. **Cross Connection Control Devices** – Manufacturer's Certificate of Compliance per Section 9-1.4D, indicating device is approved by Washington State Department of Health (WSDOH) listing, and Catalog Cut per Section 9-1.4G.

4. **Field Inspection** – Field verify per Section 9-1.5. Check for damage to the galvanized coatings in shipping and handling. See that damaged areas and field cut threads are protected with an approved galvanized repair paint formula, standard formula A-9-73.
5. **Specification Requirements** – See *Standard Specifications* Section 9-15. Review contract documents to determine if supplemental specifications apply.
6. **Other Requirements** – For projects with the Buy America provision refer to Section 9-1.2E to determine if Certification of Materials Origin is required. If the Buy America requirement applies, the Contractor is required to submit to the Project Engineer a Certification of Materials Origin for all steel or iron materials. The Project Engineer will track the quantity of the materials and retain these documents in the project records.

9-4.50 Fencing and Gates

1. **Approval of Material** – Approval of materials is required prior to use. Materials will be approved by the *Qualified Products List* or Request for Approval of Material DOT Form 350-071. Be certain to verify that the product is in fact qualified for its intended use and the product is listed under the appropriate specification.

   RAM Submittal

   a. **Chain Link Fabric** – One sample consisting or three wires across full width of fabric, from one roll.

   b. **Wire Mesh** – One 12-in sample across full width of roll.

   c. **Tension Wire and Barbed Wire** – One 3-foot sample from one roll.

   d. **Grade 1 Post Material**

      i. **Rails and Grade 1 Posts for Chain Link Fence** – Sample to consist of one post and 12-in sample from each end of the rail, where appropriate.

      ii. **Corner Posts or Brace Posts** – One complete post assembly.

      iii. **Wire Fence Line Posts** – One complete post with plate.

   Above samples are to be taken from properly identified lots of material. Be sure samples are numbered and properly identified as to Lot, if applicable, when sent to the Laboratory. If first sample fails, two additional samples are to be submitted from the same lot. Re-samples are to be properly identified as to lot and referenced to the previous Lab No. for the failing sample.

2. **Preliminary Samples** – A preliminary sample of the material will be required only if coded on the Request for Approval of Material DOT Form 350-071.
3. **Acceptance**

   a. The following materials shall be accepted on receipt of an acceptable Manufacturer's Certificate of Compliance per Section 9-1.4D:

      i. Chain Link Fabric and Wire Mesh

      ii. Tension Wire and Barbed Wire

iii. Grade 1 and Grade 2 Post Material

iv. Rails, Corner Posts, and Brace Posts

v. Wire Fence Line Posts

vi. (Coated) Fencing Materials

b. **Gates and Miscellaneous Fence Hardware** – Visual Acceptance per Section 9-1.4C.

Miscellaneous fence hardware includes such items as tie wire, hog rings, galvanized bolts, nuts, washers, fence clips, stays, post caps, tension band and bars, rail end caps, etc.

4. **Field Inspection** – Field verify per Section 9-1.5. Check for damage to zinc or other coating on posts, rails, hardware, etc.

5. **Specification Requirements** – See *Standard Specifications* Section 9-16. Review contract documents to determine if supplemental specifications apply.

6. **Other Requirements** – For projects with the Buy America provision refer to Section 9-1.2E to determine if Certification of Materials Origin is required. If the Buy America requirement applies, the Contractor is required to submit to the Project Engineer a Certification of Materials Origin for all steel or iron materials. The Project Engineer will track the quantity of the materials and retain these documents in the project records.

9-4.51 Beam Guardrail and Guardrail Anchors

1. **Approval of Material** – Approval of materials is required prior to use. Materials will be approved by the *Qualified Products List* or Request for Approval of Material DOT Form 350-071. An on-site inspection by the WSDOT Materials Fabrications Inspection Office of the fabricating facilities prior to approval will be required only if a new manufacture is requested on the Request for Approval of Material DOT Form 350-071. Be certain to verify that the product is in fact qualified for its intended use and the product is listed under the appropriate specification.

2. **Preliminary Samples** – A preliminary sample of the material will be required only if coded on the Request for Approval of Material DOT Form 350-071.

3. **Acceptance**

a. W Beam and Thrie Beam Rail Elements, components and hardware shall be accepted by a Manufacturer's Certificate of Compliance per Section 9-1.4D of this manual.

b. A307 bolts, nuts and washers shall be accepted by Visual Acceptance per Section 9-1.4C.

4. **Field Inspection** – Field verify per Section 9-1.5:

a. W Beam and Thrie Beam Rail Elements are stamped with the same heat number displayed on the Manufacturer's Certificate of Compliance.

b. Bolt heads are stamped 307A.

c. Components and hardware are accepted by an approved Manufacturer's Certificate of Compliance and field verification is not required.

Check material delivered to the project for damage to galvanizing.

5. **Specification Requirements** – See *Standard Specifications* M 41-10, Section 9-16.3 and *Standard Plans* M 21-01.

6. **Other Requirements** – For projects with the Buy America provision refer to Section 9-1.2E to determine if Certification of Materials Origin is required. If the Buy America requirement applies, the Contractor is required to submit to the Project Engineer a Certification of Materials Origin for all steel or iron materials. The Project Engineer will track the quantity of the materials and retain these documents in the project records.

9-4.52 Guardrail Posts and Blocks

1. **Approval of Material** – In accordance with *Standard Specifications* Section 1-06 approval of materials is required prior to use. Materials will be approved by the *Qualified Products List* or Request for Approval of Material DOT Form 350-071. An on-site inspection by the WSDOT Materials Fabrications Inspection Office of the Fabrication and Treatment Facilities prior to approval will be required only if a new manufacture is requested on the Request for Approval of Material DOT Form 350-071. Be certain to verify that the product is in fact qualified for its intended use and the product is listed under the appropriate specification.

2. **Preliminary Samples** – A preliminary sample of the material will be required only if coded on the Request for Approval of Material DOT Form 350-071.

3. **Acceptance**

   a. **Treated Timber Posts and Blocks** – Shall be accepted by a Lumber Grading Stamp or Grading Certificate for Timber and Lumber and Certificate of Treatment.

   b. **Steel Post and Blocks** – Shall be accepted by a Manufacturer's Certificate of Compliance per Section 9-1.4D.

   c. **Alternate Block Material** – Shall be accepted by documentation demonstrating conformance to the requirements of NCHRP Report 350 or the AASHTO Manual for Assessing Safety Hardware (MASH).

4. **Field Inspection** – Field verify per Section 9-1.5.

   a. Treated Timber Posts and Blocks field verified.

   b. Steel Posts and Steel Blocks are accepted by receipt of an approved Manufacturer's Certification of Compliance and field verification is not required. Check Steel Post and Steel Blocks delivered to the project for damage to galvanizing.

   c. Alternate Block Materials must be field verified.

5. **Specification Requirements** – See *Standard Specifications* Section 9-16.3 and *Standard Plans*.

6. **Other Requirements** – For projects with the Buy America provision refer to Section 9-1.2E to determine if Certification of Materials Origin is required. If the Buy America requirement applies, the Contractor is required to submit to the Project Engineer a Certification of Materials Origin for all steel or iron materials. The Project Engineer will track the quantity of the materials and retain these documents in the project records.

9-4.53 Miscellaneous Precast Concrete Products (Block Traffic Curb, Precast Traffic Curb)

1. **Approval of Material** – Approval of materials is required prior to use. Materials will be approved by the *Qualified Products List* or Request for Approval of Material DOT Form 350-071. An on-site inspection by the WSDOT Materials Fabrication Office of the fabricating facilities prior to approval will be required only if a new manufacture is requested on the Request for Approval of Material DOT Form 350-071. Be certain to verify that the product is in fact qualified for its intended use and the product is listed under the appropriate specification.
2. **Preliminary Samples** – A preliminary sample of the material will be required only if coded on the Request for Approval of Material DOT Form 350-071.
3. **Acceptance**
   a. **Precast Traffic Curb** – Visual Acceptance per Section 9-1.4C. Unless the curb sections have been inspected prior to shipping they are to be carefully inspected upon arrival on the project site. Check for surface color and damage, such as cracks, broken corner or edges, contour and alignment. Surface color and texture should match advanced sample provide by the manufacturer. See *Standard Plans* for details.
   b. **Block Traffic Curb** – Visual Acceptance per Section 9-1.4C. Check exposed faces of curb sections for damage such as chips, cracks, and air holes. See *Standard Specifications* Section 9-18.3 for details. Compressive strength may be determined in accordance with the FOP for ASTM C 805.
4. **Field Inspection** – Field verify per Section 9-1.5.
5. **Specification Requirements** – See *Standard Specifications* Section 9-18. Review contract documents to determine if supplemental specifications apply.
6. **Other Requirements** – For projects with the Buy America provision refer to Section 9-1.2E to determine if Certification of Materials Origin is required. If the Buy America requirement applies, the Contractor is required to submit to the Project Engineer a Certification of Materials Origin for all steel or iron materials. The Project Engineer will track the quantity of the materials and retain these documents in the project records.

9-4.54 Prestressed Concrete Girders

1. **Approval of Material** – Approval of the Fabricator is required prior to the start of fabrication. The Fabricator will be approved by the *Qualified Products List* or Request for Approval of Material DOT Form 350-071. Be certain to verify that the product is in fact qualified for its intended use and the product is listed

under the appropriate specification. Materials used within the fabricated item do not require approval through the Project Engineer office. Provide the WSDOT Materials Fabrication Inspection Office with a copy of the Qualified Products Page or Request for Approval of Material listing the Fabricator. Review of the Contract Special Provisions is necessary to determine if special qualifications or testing is required for approval of the Fabricator.

2. **Preliminary Samples** – A preliminary sample of the material will be required only if coded on the Request for Approval of Material DOT Form 350-071.

3. **Acceptance** – Acceptance is based on "APPROVED FOR SHIPMENT" Stamp and/or Tag (Figure 9-4 or 9-5). An "F" or "D" will be stamped to indicate the steel or iron is of foreign or domestic origin.

   The Materials Fabrication Inspector will provide a weekly Fabrication Progress Report to the Project Engineer while the girders are being fabricated.

4. **Field Inspection** – Field verify per Section 9-1.5. Check for "APPROVED FOR SHIPMENT" Stamp and/or Tag (Figure 9-4 or 9-5) and the "F" or "D" Stamp for foreign or domestic steel and document it. Check for damage caused by shipping and handling.

5. **Specification Requirements** – See *Standard Specifications* Section 6-02.3(25), 6-05.3(3), 6-02.3(28), and Section 9-19. Review contract documents to determine if supplemental specifications apply.

6. **Other Requirements** – Certification of Material Origin will be the responsibility of the Materials Fabrication Inspector as defined in Section 9-2.1A.

   For projects with the Buy America provision refer to Section 9-1.2E to determine if Certification of Materials Origin is required. If the Buy America requirement applies, the Contractor is required to submit to the Project Engineer a Certification of Materials Origin for all foreign steel or iron materials. The Project Engineer will track the quantity of the materials and retain these documents in the project records.

9-4.55 Pavement Marking Materials

1. **Approval of Material** – Approval of materials is required prior to use. Materials will be approved by the *Qualified Products List* or Request for Approval of Material DOT Form 350-071. Be certain to verify that the product is in fact qualified for its intended use and the product is listed under the appropriate specification.

   RAM Submittal – Pavement Marking Paint and Plastic that are not listed on the QPL shall provide test data from an independent laboratory and field test documentation from northern NTPEP (National Transportation Product Evaluation Program) or test deck information conducted by other public entities may be considered provided the data is similar to a northern NTPEP Test Deck.

   Raised Pavement Markers that are not listed on the QPL shall provide a sample and test data from an independent laboratory and field test documentation from northern NTPEP (National Transportation Product Evaluation Program) or test deck information conducted by other public entities may be considered provided the data is similar to a northern NTPEP Test Deck.

Glass Beads that are not listed in the QPL shall provide test data from an independent laboratory demonstrating compliance with *Standard Specifications* Section 9-34.4.

2. **Preliminary Samples** – A preliminary sample of the material will be required only if coded on the Request for Approval of Material DOT Form 350-071.
3. **Acceptance** – Visual Acceptance per Section 9-1.4C.
4. **Field Inspection** – Field verify per Section 9-1.5. A visual inspection shall be made to ensure that cracked or damaged lane markers are not incorporated in the work.
5. **Specification Requirements** – See *Standard Specifications* Section 9-21 and 9-34. Review contract documents to determine if supplemental specifications apply.
6. **Other Requirements** – There may be special shipping requirements for epoxy and adhesive. These samples shall be transported to the Region Materials Laboratory for proper shipping.

9-4.56 Signing Materials and Mounting Hardware

1. **Approval of Material** – In accordance with *Standard Specifications* Section 1-06 approval of the Sign Fabricator as well as the manufacturer of the sign blanks, panels and the reflective sheeting is required prior to the start of fabrication. The Fabricator will be approved by the Qualified Products List or Request for Approval of Material DOT Form 350-071. Be certain to verify that the product is in fact qualified for its intended use and the product is listed under the appropriate specification. Materials used within the fabricated item, approved by Materials Fabrication Inspection Office do not require approval through the Project Engineer office (PEO). The PEO has the option of inspecting the project signs prior to installation as detailed in Section 9-2.3B or they can request that the WSDOT Fabrication Office inspect the permanent sign at the fabrication facility prior to shipment to the project per Section 9-2.3A. If the PEO elects to have the signs inspected by the Fabrication Inspection Office they must send a copy of the Qualified Products Page or Request for Approval of Material listing the Fabricator to the WSDOT Materials Fabrication Inspection Office. Review of the Contract Special Provisions is necessary to determine if special qualifications or testing is required for approval of the fabricator.

   A RAM will not be required for sign mounting hardware provided by the Sign Fabricator. Mounting hardware from a source other than the sign fabrication facility will require approval by Request for Approval of Material DOT Form 350-071.
2. **Preliminary Samples** – A preliminary sample of the material may be required only if coded on the Request for Approval of Material DOT Form 350-071, or as requested by the Sign Fabricator Inspector.
3. **Acceptance**
   a. **Materials Fabrication Inspected Items**
      1. **Sign** – Acceptance is based on a “FABRICATION APPROVED” Decal (Figure 9-8).

2. **Sign Mounting Hardware** – Hardware supplied by the Sign Fabricator will have the mounting hardware certifications verified at the sign fabricator's facility by the Materials Fabrication Inspector to ensure the materials meet the contract requirements. These records will be kept at the sign fabrication facility. Fabrication inspectors will verify sign mounting hardware as it is packaged for shipment and stamp it "WSDOT INSPECTED" (Figure 9-3). An "F" or "D" will be stamped to indicate the steel or iron is of foreign or domestic origin.

   Contractor's who purchase sign mounting hardware separately from a source other than a WSDOT approved sign fabrication facility will be required to supply a Manufacturer's Certificates of Compliance per Section 9-1.4D and it will be the responsibility of the Contractor to supply the certifications to the Project Engineer's Office prior to use.

3. **Bolts for Roadside Wood Posts** – Acceptance for A307 bolts, nuts and washers shall be by Visual Acceptance per Section 9-1.4C.

b. **Non-Fabrication Inspected items (Project Engineer Acceptance)**

1. **Sheet Aluminum Signs, Fiberglass Reinforced Plastic Signs, Relective Sheeting, and Hardware (Bolts, U-Bolts, Washers, Nuts, Locknuts, Rivets, Post Clips, Wind Beams, Angles and "Z" Bars, Straps, and Mounting Brackets)** – Acceptance shall be by a Manufacturer's Certificate of Compliance per Section 9-1.4D.

2. **Bolts for Roadside Wood Posts** – Acceptance for A307 bolts, nuts and washers shall be by Visual Acceptance per Section 9-1.4C.

4. **Field Inspection**

a. **Materials Fabrication Inspected Items** – Field verify per Section 9-1.5 that bolt heads are stamped 307A. Check for a "WSDOT INSPECTED" Stamp to the sealed hardware package (Figure 9-3), Document the "F" or "D." Check for "FABRICATION APPROVED" Decal (Figure 9-8) on the back of the sign and document in Inspector's Daily Report. Double-faced signs, which do not receive decals, will be approved on visual inspection at the fabricator's facility and in the field. A list/invoice of all inspected and accepted signs will be kept in the WSDOT Materials Fabrication Inspection Office files. Check that all overhead signs are mounted with stainless steel bolts, u-bolts, washers, nuts, locknuts, mounting brackets and straps. Mounting hardware shall include bolts, nuts, washers, locknuts, rivets, post clips, windbeams, angles, "Z" bar, straps and mounting brackets.

   If there is not a Decal present, inform the Project Engineer. If the sign is installed it should be removed and sent back to the fabrication facility or if not installed just sent back to the fabrication facility. The PEO has the option to proceed with Project Engineer Acceptance as detailed below. Items lacking Decals or Stamps, or which are damaged during shipping, should be rejected and that material tagged or marked appropriately.

b. **Non-Fabrication Inspected Items (Project Engineer Acceptance)** – Field verify the following per Section 9-1.5:

1. **Sheet Aluminum Signs** – Field verify thickness and panels in accordance with *Standard Specifications* Section 9-28.8.
2. **Fiberglass Reinforced Plastic Signs** – Field verify dimension in accordance with *Standard Specifications* Section 9-28.9(2).
3. **Standard Control Signs and Guide Signs** – Field verify the dimensions, spelling, color, borders, letters, numbers, symbols, shields, and arrows conform to the requirements of the WSDOT *Sign Fabrication Manual* M 55-05 and Contract Plans.
4. **Regulatory and Warning Signs** – Field verify corner radius in accordance with *Standard Specifications* Section 9-28.3. Field verify dimensions, spelling, colors, borders, letters, numbers, symbols, shields, and arrows conform to the requirements of the WSDOT *Sign Fabrication Manual* M 55-05 and the Contract Plans.
5. **Reflective Sheeting** – Field verify that correct reflective sheeting is used in accordance with *Standard Specifications* Section 9-28.1 and the reflective sheeting conforms to requirements of *Standard Specifications* Section 9-28.12.
6. **Manufacturer's Identification and Date** – Field verify manufacturer's identification and date in accordance with *Standard Specifications* Section 9-28.
7. **Hardware** – Field verify that all overhead signs are mounted with stainless steel bolts, u-bolts, washers, nuts, locknuts, angles, and mounting straps.
8. Field verify for any damage. Damaged materials should be rejected.

5. **Specification Requirements** – See *Standard Specifications* Section 9-28 and Section 9-1.4B(2). Review contract documents to determine if supplemental specifications apply.

6. **Other Requirements**

a. **Non-Fabrication Inspected Items (Project Engineer Acceptance)** – Once the Project Engineer has confirmed the sign complies with WSDOT specification requirements the Project Engineer shall apply "WSDOT PE APPROVED" decal (Figure 9-10) to the sign.

b. **Buy America Provisions**

a. **Materials Fabrication Inspected CMO** – Certification of Materials Origin will be the responsibility of the Materials Fabrication Inspector as defined in Section 9-2.1A.

For projects with the Buy America provision refer to Section 9-1.2E to determine if Certification of Materials Origin is required. If the Buy America requirement applies, the Contractor is required to submit to the Project Engineer a Certification of Materials Origin for all foreign steel or iron materials. The Project Engineer will track the quantity of the materials and retain these documents in the project records.

b. **Non-Fabrication Inspected CMO** – For projects with the Buy America provision refer to Section 9-1.2E to determine if Certification of Materials Origin is required. If the Buy America requirement applies, the Contractor is required to submit to the Project Engineer a Certification of Materials Origin for all steel or iron materials. The Project Engineer will track the quantity of the materials and retain these documents in the project records.

9-4.57 Liquid Concrete Curing Compound

1. **Approval of Material** – Approval of materials is required prior to use. Materials will be approved by the *Qualified Products List* or Request for Approval of Material DOT Form 350-071. Be certain to verify that the product is in fact qualified for its intended use and the product is listed under the appropriate specification.
2. **Preliminary Samples** – A preliminary sample of the material will be required only if coded on the Request for Approval of Material DOT Form 350-071.
3. **Acceptance** – If the lot is listed on the QPL, it may be used without testing on current projects per Section 9-1.4A(1). If the lot is not on the QPL, submit a one-quart sample taken by, or in the presence of, an agency representative for each lot. Samples must be submitted for testing 10 days prior to use of curing compound. Samples submitted shall be accepted on receipt of "Satisfactory" test reports from the State Materials Laboratory.
4. **Field Inspection** – Field verify per Section 9-1.5.
5. **Specification Requirements** – See *Standard Specifications* Section 9-23. Review contract documents to determine if supplemental specifications apply.
6. **Other Requirements** – None.

9-4.58 Admixtures for Concrete

1. **Approval of Material** – Approval of materials is required prior to use. Materials will be approved by the *Qualified Products List* or Request for Approval of Material DOT Form 350-071. Be certain to verify that the product is in fact qualified for its intended use and the product is listed under the appropriate specification.
2. **Preliminary Samples** – A preliminary sample of the material will be required only if coded on the Request for Approval of Material DOT Form 350-071.
3. **Acceptance** – Materials shall be accepted on the basis of a Certified Concrete Delivery Ticket indicating the product and dosage of the admixture conform to the concrete mix design.
4. **Field Inspection** – Field verify per Section 9-1.5.
5. **Specification Requirements** – See *Standard Specifications* Section 6-02.3(5)B and 9-23. Review contract documents to determine if supplemental specifications apply.
6. **Other Requirements** – Check Concrete Delivery Ticket for proper admixture dosage.

9-4.59 Plastic Waterstop

1. **Approval of Material** – Approval of materials is required prior to use. Materials will be approved by the *Qualified Products List* or Request for Approval of Material DOT Form 350-071. Be certain to verify that the product is in fact qualified for its intended use and the product is listed under the appropriate specification.
2. **Preliminary Samples** – A preliminary sample of the material will be required only if coded on the Request for Approval of Material DOT Form 350-071.
3. **Acceptance** – Material shall be accepted by a Manufacturer's Certificate of Compliance per Section 9-1.4D.
4. **Field Inspection** – Field verify per Section 9-1.5.
5. **Specification Requirements** – See *Standard Specifications* Section 9-24. Review contract documents to determine if supplemental specifications apply.
6. **Other Requirements** – None.

9-4.60 Epoxy Systems

1. **Approval of Material** – Approval of materials is required prior to use. Materials will be approved by the *Qualified Products List* or Request for Approval of Material DOT Form 350-071. Be certain to verify that the product is in fact qualified for its intended use and the product is listed under the appropriate specification.
2. **Preliminary Samples** – A preliminary sample of the material will be required only if coded on the Request for Approval of Material DOT Form 350-071.
3. **Acceptance**
   a. **Epoxy Bonding Agents** – Materials shall be accepted on receipt of "Satisfactory" test reports from the State Materials Laboratory. For epoxy bonding agents, submit mix ratios, intended use and a representative sample of each component with MSDS sheet for each batch or lot number. Samples shall be submitted to the State Materials Laboratory. A period of 21 calendar days should be allowed for testing.

      Sample – A representative sample shall be a minimum of a 1 pint container of each component or a pre-packaged kit. The sample size shall represent the mixing ratio, (for example; 1 pint of a and 2 pints of B, or 1 pint a and 3 pints of B). Containers shall be identified as "Component A" (Epoxy Resin) and "Component B" (Curing Agent) and shall be marked with the name of the manufacturer, the date of manufacture and the lot number.

   b. **Epoxy Grout/Mortar/Concrete** – Materials shall be accepted on receipt of "Satisfactory" test reports from the State Materials Laboratory. For epoxy grout/mortar/concrete, submit mix ratios, intended use and a representative sample of each component for each batch or lot number. Samples shall be submitted to the State Materials Laboratory. A period of 15 working days should be allowed for testing.

Sample – A representative sample shall be a minimum of a 1 pint container of each component or a pre-packaged kit. The sample size shall represent the mixing ratio, (for example; 1 pint of a and 2 pints of B, or 1 pint a and 3 pints of B). Containers shall be identified as "Component A" (Epoxy Resin), "Component B" (Curing Agent), and "Aggregate Component" and shall be marked with the name of the manufacturer, the date of manufacture and the lot number.

Acceptance for aggregate for non-Prepackaged Epoxy Grout/Mortar/Concrete shall be by the Certificate of Compliance per Section 9-1.4E.

4. **Field Inspection** – Field verify per Section 9-1.5. Check for uniformity of color and conformance to required mix proportions. Streaking is an indication of inadequate mixing. Check for set and hardness with your thumbnail. You should not be able to dent the properly mixed and cured material. Epoxies shall be mixed and applied in conformance to manufacturer's written instructions unless otherwise modified in writing by the manufacturer's agent.
5. **Specification Requirements** – See *Standard Specifications* Section 9-26. Review contract documents to determine if supplemental specifications apply.
6. **Other Requirements**
   - Type IV epoxy bonding agent may be substituted for and be tested to the same criteria as Type I when used in the application identified in *Standard Specifications* Section 5-01.3(6) and 5-05.3(10). Ensure that the transmittal states the *Standard Specifications* for which the material is being tested for.
   - Aggregate for non-Prepackaged Epoxy Grout/Mortar/Concrete shall meet the requirements of *Standard Specifications* Section 9-03.1(2).
   - There may be special shipping requirements for epoxy. These samples shall be transported to the Region Materials Laboratory for proper shipping.

9-4.61 Resin Bonded Anchors

1. **Approval of Material** – Approval of materials is required prior to use. Materials will be approved by the *Qualified Products List* or Request for Approval of Material DOT Form 350-071. Be certain to verify that the product is in fact qualified for its intended use and the product is listed under the appropriate specification.

   RAM Submittal – If approval is being requested by the Request for Approval of Material process, submit independent laboratory test report indicating resin bonded anchor system, for the specified size rods, meets specification requirements when tested in accordance with ASTM E 488.
2. **Preliminary Samples** – A preliminary sample of the material will be required only if coded on the Request for Approval of Material DOT Form 350-071.
3. **Acceptance**
   a. **Resin adhesive** – Acceptance shall be by Visual Acceptance per Section 9-1.4C.

b. **Threaded Rod, Nut, and Washer or Other Inserts** – Acceptance shall be by the Manufacturer's Certificate of Compliance per Section 9-1.4D.

4. **Field Inspection** – Field verify per Section 9-1.5. Check for proper embedment depths. Check that holes are properly cleaned. Check that the installation is in accordance with the manufacturers written instructions.
5. **Specification Requirements** – Review contract documents to determine if supplemental specifications apply.
6. **Other Requirements**
   - For projects with the Buy America provision refer to Section 9-1.2E to determine if Certification of Materials Origin is required. If the Buy America requirement applies, the Contractor is required to submit to the Project Engineer a Certification of Materials Origin for all steel or iron materials. The Project Engineer will track the quantity of the materials and retain these documents in the project records.
   - There may be special shipping requirements for resin adhesive. These samples shall be transported to the Region Materials Laboratory for proper shipping.

9-4.62 Gabion Cribbing, Hardware, and Stone

1. **Approval of Material**

   Gabion Cribbing and Hardware – In accordance with *Standard Specifications* Section 1-06, approval of materials is required prior to use. Materials will be approved by the *Qualified Products List* or Request for Approval of Material DOT Form 350-071. Be certain to verify that the product is in fact qualified for its intended use and the product is listed under the appropriate specification.

   Stone – See Section 9-4.42.
2. **Preliminary Samples** – A preliminary sample of the material will be required only if coded on the Request for Approval of Material DOT Form 350-071.
3. **Acceptance**

   Gabion Cribbing and Hardware – Acceptance shall be by the Manufacturer's Certificate of Compliance per Section 9-1.4D.

   Stone – See Section 9-4.42
4. **Field Inspection** – Field verify per Section 9-1.5.
5. **Specification Requirements** – See *Standard Specifications* Section 9-27.3. Review contract documents to determine if supplemental specifications apply.
6. **Other Requirements** – For projects with the Buy America provision refer to Section 9-1.2E to determine if Certification of Materials Origin is required. If the Buy America requirement applies, the Contractor is required to submit to the Project Engineer a Certification of Materials Origin for all steel or iron materials. The Project Engineer will track the quantity of the materials and retain these documents in the project records.

9-4.63 Steel Sign Structures – Cantilever, Sign Bridge, Bridge Mounted, Roadside

1. **Approval of Material** – Approval of the fabricator is required prior to the start of fabrication. The fabricator will be approved by the *Qualified Products List* or Request for Approval of Material DOT Form 350-071. Be certain to verify that the product is in fact qualified for its intended use and the product is listed under the appropriate specification. Materials used within the fabricated item do not require approval through the Project Engineer office. Provide the WSDOT Materials Fabrication Inspection Office with a copy of the Qualified Products Page or Request for Approval of Material listing the fabricator. Review of the Contract Special Provisions is necessary to determine if special qualifications or testing is required for approval of the fabricator.

2. **Preliminary Samples** – A preliminary sample of the material will be required only if coded on the Request for Approval of Material DOT Form 350-071.

3. **Acceptance** – The fabricated sign structure and associated hardware will be accepted on the basis of an "APPROVED FOR SHIPMENT" Stamp and/or Tag (Figure 9-4 or 9-5). An "F" or "D" will be stamped to indicate the steel or iron is of foreign or domestic origin.

   a. **Sign Structure – Cantilever, Sign Bridge, Bridge Mounted, and Roadside Type PLT/PLU** – Acceptance is based on "APPROVED FOR SHIPMENT" Stamp and/or Tag (Figure 9-4 or 9-5). An "F" or "D" will be stamped to indicate the steel or iron is of foreign or domestic origin.

      Note: The Materials Fabrication Inspector will inspect hardware if it is available at the time of inspection at the point of manufacture. Acceptance for Roadside Sign Structure Hardware not present during Materials Fabrication inspection and delivered to the job site without an approval stamp shall be by the Manufacturer's Certificate of Compliance per Section 9-1.4D. High strength bolts, nuts and washers in quantities over 50 require sampling.

   b. **Roadside – Except Type PLT and PLU** – Acceptance for Roadside sign structures except for Types PLT and PLU shall be by the Manufacturer's Certificate of Compliance per Section 9-1.4D.

4. **Field Inspection** – Field verify per Section 9-1.5. Check for "APPROVED FOR SHIPMENT" Stamp and/or Tag (Figure 9-4 or 9-5) on the sign structure and associated hardware. Check for and the "F" or "D" indicator Stamp for foreign or domestic steel and document it.

5. **Specification Requirements** – See *Standard Specifications* Section 9-06.16 and 9-28.14. Review contract documents to determine if supplemental specifications apply.

6. **Other Requirements**

   a. **Materials Fabrication Inspected CMO** – Certification of Materials Origin will be the responsibility of the Materials Fabrication Inspector as defined in Section 9-2.1A.

      For projects with the Buy America provision refer to Section 9-1.2E to determine if Certification of Materials Origin is required. If the Buy

America requirement applies, the Contractor is required to submit to the Project Engineer a Certification of Materials Origin for all foreign steel or iron materials. The Project Engineer will track the quantity of the materials and retain these documents in the project records.

b. **Non-Fabrication Inspected CMO** – For projects with the Buy America provision refer to Section 9-1.2E to determine if Certification of Materials Origin is required. If the Buy America requirement applies, the Contractor is required to submit to the Project Engineer a Certification of Materials Origin for all steel or iron materials. The project Engineer will track the quantity of the materials and retain these documents in the project records.

9-4.64 Conduit

1. **Approval of Material** – Approval of materials is required prior to use. Materials will be approved by the *Qualified Products List* or Request for Approval of Material DOT Form 350-071. Be certain to verify that the product is in fact qualified for its intended use and the product is listed under the appropriate specification.

   RAM Submittal – Attach Catalog Cuts using the Catalog Cut Transmittal DOT Form 350-072 to assist in the approval process.

2. **Preliminary Samples** – A preliminary sample of the material will be required only if coded on the Request for Approval of Material DOT Form 350-071.

3. **Acceptance** – Visual Acceptance per Section 9-1.4C is required for Rigid Galvanized Steel, Aluminum, PVC, PE, HDPE, Fiberglass, and Flexible Metal Conduit including hardware such as (fittings, couplings, spacers, adapters, split internal expansion plugs, duct plugs, connectors, clamps, conduit bodies, and conduit supports), Expansion Fittings, Deflection Fittings, Combination Deflection and Expansion Fittings.

4. **Field Inspection** – Field verify per Section 9-1.5. Check for "Nationally Recognized Testing Laboratories" (NRTL) approval labels. Check for damage to coatings caused by shipping and handling, and see that damaged areas and field cut threads are protected with an approved coating.

5. **Specification Requirements** – See *Standard Specifications* Section 9-29.1. Review contract documents to determine if supplemental specifications apply.

6. **Other Requirements** – For projects with the Buy America provision refer to Section 9-1.2E to determine if Certification of Materials Origin is required. If the Buy America requirement applies, the Contractor is required to submit to the Project Engineer a Certification of Materials Origin for all steel or iron materials. The Project Engineer will track the quantity of the materials and retain these documents in the project records.

9-4.65 Fiber Optic Cable, Electrical Conductors, and Cable

1. **Approval of Material** – In accordance with *Standard Specifications* Section 1-06 approval of materials is required prior to use. Materials will be approved by the *Qualified Products List* or Request for Approval of Material DOT Form 350-071. Be certain to verify that the product is in fact qualified for its intended use and the product is listed under the appropriate specification.

   RAM Submittal – Attach Catalog Cut using DOT Form 350-072 to assist in the approval process. The Project Engineer can approve the Request for Approval of Material (RAM). The Region Traffic Engineer or the State Materials Laboratory can assist the Project Engineer in these evaluations.

2. **Preliminary Samples** – A preliminary sample of the material will be required only if coded on the Request for Approval of Material DOT Form 350-071.

3. **Acceptance** – Visual Acceptance per Section 9-1.4C of this manual.

4. **Field Inspection** – Field verify per Section 9-1.5. A visual inspection shall be made to ensure that no conductors with damaged insulation are incorporated into the project.

5. **Specification Requirements** – See *Standard Specifications* Section 9-29.3. Review Contract Documents to determine if supplemental requirements apply.

6. **Other Requirements** – For projects with the Buy America provision refer to Section 9-1.2E to determine if Certification of Materials Origin is required. If the Buy America requirement applies, the Contractor is required to submit to the Project Engineer a Certification of Materials Origin for all steel and iron materials. The Project Engineer will track the quantity of the materials and retain these documents in the project records.

9-4.66 Steel Poles – ITS, Pedestrian, Light, Signal Standards, and High Mast Light Poles

1. **Approval of Material** – Approval of the fabricator is required prior to the start of fabrication. The fabricator will be approved by the *Qualified Products List* or Request for Approval of Material DOT Form 350-071. Be certain to verify that the product is in fact qualified for its intended use and the product is listed under the appropriate specification. Materials used within the fabricated item do not require approval through the Project Engineer office. Provide the WSDOT Materials Fabrication Inspection Office with a copy of the Qualified Products Page or Request for Approval of Material listing the fabricator. Review of the Contract Special Provisions is necessary to determine if special qualifications or testing is required for approval of the fabricator.

2. **Preliminary Samples** – A preliminary sample of the material will be required only if coded on the Request for Approval of Material DOT Form 350-071.

3. **Acceptance**

a. **Steel Light and Signal Standards Type II – V, ITS, and High Mast Light Poles** – As determined by the Materials Fabrications Inspection Office, Steel Light, Signal Standards and High Mast Light Poles may be inspected at the point of manufacture prior to shipping or at the jobsite by the Materials Fabrication Inspector. Acceptance is based on "APPROVED FOR SHIPMENT" Stamp and/or Tag (Figure 9-4 or 9-5). An "F" or "D" will be stamped to indicate the steel or iron is of foreign or domestic origin.

Steel Light, Signal Standards and High Mast Light Poles delivered to the job site without "APPROVED FOR SHIPMENT" stamps and/or tags require Materials Fabrication Inspection. Contact the WSDOT Materials Fabrication Inspection Office for inspection. Provide the Materials Fabrication Inspector the following documentation for their review prior to their physical inspection of the Steel Light, Signal Standards and High Mast Light Poles.

- Approved shop drawings not listed in Contract General Special Provisions.
- Manufacturer's Certificate of Compliance for all steel and associated hardware identified in the pre-approved plan or approved shop drawing.
- Nondestructive test reports generated by the fabricator for inspection of welds.
- Certificate of Material Origin.

Note: The Materials Fabrication Inspector will inspect hardware if it is available at the time of inspection at the point of manufacture or at the jobsite. Hardware not present during Materials Fabrication inspection and delivered to the job site without an approval stamp may be accepted by the project office based on Manufacturer's Certificate of Compliance with supporting material certifications and Certificate of Material Origin. When high strength bolting materials are received on the job site without Fabrications Inspection Stamp, acceptance shall be by the Manufacturer's Certificate of Compliance per Section 9-1.4D for each heat number or manufacturing lot. Acceptance shall also be by a "Satisfactory" test report from the State Materials Laboratory, when samples are required, for each consignment lot as defined by *Standard Specifications* Section 9-06.5(3). A separate transmittal and materials certification shall accompany each sample of bolts, nuts, and washers.

b. **Standards Type Pedestrian Push Button, Pedestrian Signal, Type I, Ramp Meter & Flashing Beacon** – Acceptance shall be by the Manufacturer's Certificate of Compliance with supporting Mill Certification per Section 9-1.4D and:

- Approved shop drawings not listed in Contract General Special Provisions.
- Manufacturer's Certificate of Compliance for all steel and associated hardware identified in the pre-approved plan or approved shop drawing.
- Nondestructive test reports generated by the Fabricator for inspection of welds.

High strength bolting materials acceptance shall be by the Manufacturer's Certificate of Compliance per Section 9-1.4D for each heat number or manufacturing lot. Acceptance shall also be by a "Satisfactory" test report

from the State Materials Laboratory, when samples are required, for each consignment lot as defined by *Standard Specifications* Section 9-06.5(3). A separate transmittal and materials certification shall accompany each sample of bolts, nuts, and washers.

4. **Field Inspection** – Field verify per Section 9-1.5. Check for "APPROVED FOR SHIPMENT" Stamp and/or Tag (Figure 9-4 or 9-5) and the "F" or "D" Stamp for foreign or domestic steel and document it. Contact WSDOT Materials Fabrication Inspection Office for inspection of Light and Signal Poles delivered to the jobsite without "APPROVED FOR SHIPMENT" Tag and/or Stamp.
5. **Specification Requirements** – See *Standard Specifications* Section 9-06.5(3) and 9-29.6. Review contract documents to determine if supplemental specifications apply.
6. **Other Requirements**
   a. **Materials Fabrication Inspected CMO** – Certification of Materials Origin will be the responsibility of the Materials Fabrication Inspector as defined in Section 9-2.1A.

      For projects with the Buy America provision refer to Section 9-1.2E to determine if Certification of Materials Origin is required. If the Buy America requirement applies, the Contractor is required to submit to the Project Engineer a Certification of Materials Origin for all foreign steel or iron materials. The Project Engineer will track the quantity of the materials and retain these documents in the project records.

   b. **Non-Fabrication Inspected CMO** – For projects with the Buy America provision refer to Section 9-1.2E to determine if Certification of Materials Origin is required. If the Buy America requirement applies, the Contractor is required to submit to the Project Engineer a Certification of Materials Origin for all steel or iron materials. The Project Engineer will track the quantity of the materials and retain these documents in the project records.

9-4.67 Vacant

9-4.68 Luminaires, Lamps, and Light Emitting Diodes (LED)

1. **Approval of Material** – Approval of materials is required prior to use. Materials will be approved by the *Qualified Products List* or Request for Approval of Material DOT Form 350-071. Be certain to verify that the product is in fact qualified for its intended use and the product is listed under the appropriate specification.

   RAM Submittal – Luminaires and Lamps – Attach Catalog Cuts using the Catalog Cut Transmittal DOT Form 350-072 to assist in the approval process.

   LED – Submit Independent Test Report verifying compliance with the Contract Document requirements along with Catalog Cuts using the Catalog Cut Transmittal DOT Form 350-072 to assist in the approval process.
2. **Preliminary Samples** – Preliminary samples will be required only if coded on the Request for Approval of Material DOT Form 350-071.

3. **Acceptance** – Visual Acceptance per Section 9-1.4C.
4. **Field Inspection** – Field verify per Section 9-1.5.
   a. **Luminaires** – A visual inspection shall be made to ensure damaged equipment is not installed and that luminaires are mounted level. Confirm the socket position is the same as that noted on the catalog cut.
   b. **Lamps for Luminaires** – Check that all lamps are of the proper wattage, see contract documents.
   c. **LEDs for Signal Heads** – Check that LEDs are as specified, see contract documents.
5. **Specification Requirements** – See *Standard Specifications* Section 9-29.10. Review contract documents to determine if supplemental specifications apply.
6. **Other Requirements** – For projects with the Buy America provision refer to Section 9-1.2E to determine if Certification of Materials Origin is required. If the Buy America requirement applies, the Contractor is required to submit to the Project Engineer a Certification of Materials Origin for all steel or iron materials. The Project Engineer will track the quantity of the materials and retain these documents in the project records.

9-4.69 Water Distribution System

1. **Approval of Material** – Approval of materials is required prior to use. Materials will be approved by the *Qualified Products List* or Request for Approval of Material DOT Form 350-071. Be certain to verify that the product is in fact qualified for its intended use and the product is listed under the appropriate specification.

   RAM Submittal – Attach Catalog Cuts using the Catalog Cut Transmittal DOT Form 350-072 to assist in the approval process.
2. **Preliminary Samples** – A preliminary sample of the material will be required only if coded on the Request for Approval of Material DOT Form 350-071.
3. **Acceptance**
   a. **QPL Acceptance**
      i. **Ductile Iron Pipe and Fittings, PVC Pipe and Fittings, Restrained Joints, Restrained Flexible Couplings, Gate Valves (3-in to 16-in), Butterfly Valves, Saddles, Corporation Stops** – Visual Acceptance per Section 9-1.4C.
      ii. **Copper Tubing and Polyethylene Tubing** – Manufacturer's Certificate of Compliance per Section 9-1.4D.
   b. **Non-QPL Acceptance**
      i. **Ductile Iron Pipe, Steel Pipe, Polyvinyl Chloride (PVC) Pipe, Polyethylene (PE) Pressure Pipe, Polyethylene Encasement** – Manufacturer's Certificate of Compliance per Section 9-1.4D.

ii. **Fittings for Ductile Iron, Steel, PVC, and PE Pipe. Restrained Joints, Bolted Sleeve-type Couplings for Plain End Pipe, Restrained Flexible Couplings, Grooved and Shoulder Joints, Fabricated Mechanical Slip-type Expansion Joints, Gate Valves (3-in to 16-in), Butterfly Valves, Valve Stem Extensions, Combination Air Release/Vacuum Valves, Tapping Sleeve and Valve Assemblies, Hydrants, End Connections, Hydrant Extensions, Hydrant Restraints, Traffic Flanges, Saddles, Corporation Stops, Copper Tubing, Polyethylene Tubing, Service Fittings, Meter Setters, Bronze Nipples and Fittings, and Meter Boxes** – Catalog Cut per Section 9-1.4G.

iii. **Valve Boxes, Valve Marker Posts, and Guard Posts** – Visual Acceptance per Section 9-1.4C.

4. **Field Inspection** – Field verify per Section 9-1.5. Check material delivered to the project for damage to the galvanized coatings caused by shipping and handling and conformance to the contract documents. See that damaged areas and field cut threads are protected with an approved galvanized repair paint formula, standard formula A-9-73.

5. **Specification Requirements** – See *Standard Specifications* Section 9-30. Review contract documents to determine if supplemental specifications apply.

6. **Other Requirements**

   a. Water distribution pipe requires testing after installation in conformance with the *Standard Specifications* Section 7-09.

   b. For projects with the Buy America provision refer to Section 9-1.2E to determine if Certification of Materials Origin is required. If the Buy America requirement applies, the Contractor is required to submit to the Project Engineer a Certification of Materials Origin for all steel or iron materials. The Project Engineer will track the quantity of the materials and retain these documents in the project records.

9-4.70 Elastomeric Pads

1. **Approval of Material** – In accordance with *Standard Specifications* Section 1-06 approval of materials is required prior to use. Materials will be approved by the *Qualified Products List* or Request for Approval of Material DOT Form 350-071. Be certain to verify that the product is in fact qualified for its intended use and the product is listed under the appropriate specification.

   RAM Submittal

   a. **Load Bearing** – Submit Manufacturer's Certificate of Compliance and supporting tests in accordance with *Standard Specifications* Section 1-06.3, demonstrating compliance with *Standard Specifications* Section 9-3.1.

   b. **Non-Load Bearing; Girder Stop Pads and Seismic Restrainer Pads** – Attach Catalog Cut using Transmittal of Catalog Cut (DOT Form 350-072) to assist in the approval process. The Project Engineer can approve the Request for Approval of Material (RAM).

2. **Preliminary Samples** – A preliminary sample of the material will be required only if coded on the Request for Approval of Material DOT Form 350-071.
3. **Acceptance**
   a. **Load Bearing** – Acceptance shall be by a Manufacturer's Certificate of Compliance per Section 9-1.4D accompanied by a certified test report identifying the specific batch of material and demonstrating conformance to *Standard Specifications* Section 9-31.
   b. **Non-Load Bearing; Girder Stop Pads and Seismic Restrainer Pads** – Visual acceptance per Section 9-1.4C or this manual.
4. **Field Inspection**
   a. **Load Bearing** – Field verify per Section 9-1.5. Make certain that material to be used is from the certified batch.
   b. **Non-Load Bearing; Girder Stop Pads and Seismic Restrainer Pads** – Field verify per Section 9-1.5 of this manual.
5. **Specification Requirements** – See *Standard Specifications* Section 9-31. Review contract documents to determine if supplemental specifications apply.
6. **Other Requirements** – For projects with the Buy America provision refer to Section 9-1.2E to determine if Certification of Materials Origin is required. If the Buy America requirement applies, the Contractor is required to submit to the Project Engineer a Certification of Materials Origin for all steel or iron materials. The Project Engineer will track the quantity of the materials and retain these documents in the project records.

9-4.71 Bridge Bearings – Cylindrical, Disc, Fabric Pad, Pin, Spherical

1. **Approval of Material** – Approval of the Fabricator is required prior to the start of fabrication. The Fabricator will be approved by the *Qualified Products List* or Request for Approval of Material DOT Form 350-071. Be certain to verify that the product is in fact qualified for its intended use and the product is listed under the appropriate specification. Materials used within the fabricated item do not require approval through the Project Engineer office. Provide the WSDOT Materials Fabrication Inspection Office with a copy of the Qualified Products Page or Request for Approval of Material listing the Fabricator. Review of the Contract Special Provisions is necessary to determine if special qualifications or testing is required for approval of the fabricator.
2. **Preliminary Samples** – A preliminary sample of the material will be required only if coded on the Request for Approval of Material DOT Form 350-071.
3. **Acceptance** – As determined by the WSDOT Materials Fabrication Inspection Office, Bridge Bearings may be inspected at the point of manufacture prior to shipping or at the jobsite by the Materials Fabrication Inspector. Contract Provision may provide for job site inspection of the Bridge Bearings by the engineer. Acceptance is based on "APPROVED FOR SHIPMENT" Stamp and/or Tag (Figure 9-4 or 9-5). An "F" or "D" will be stamped to indicate the steel or iron is of foreign or domestic origin.

Bridge Bearings delivered to the job site without "APPROVED FOR SHIPMENT" stamps and/or tags require Materials Fabrication Inspection. Contact the WSDOT Materials Fabrication Inspection Office for inspection and required documentation needed prior to their physical inspection of the Bridge Bearing.

4. **Field Inspection** – Field verify per Section 9-1.5. Check for "APPROVED FOR SHIPMENT" Stamp and/or Tag (Figure 9-4 or 9-5) and the "F" or "D" Stamp for foreign or domestic steel and document it. Contact WSDOT Materials Fabrication Inspection Office for inspection of Bridge Bearings delivered to the jobsite without "APPROVED FOR SHIPMENT" Tag and/or Stamp.
5. **Specification Requirements** – Bearings specifications are currently defined in General Special Provisions and Bridge Special Provisions. Review the contract documents to determine the specification requirements.
6. **Other Requirements** – Certification of Material Origin will be the responsibility of the Materials Fabrication Inspector as defined in Section 9-2.1A.

   For projects with the Buy America provision refer to Section 9-1.2E to determine if Certification of Materials Origin is required. If the Buy America requirement applies, the Contractor is required to submit to the Project Engineer a Certification of Materials Origin for all foreign steel or iron materials. The Project Engineer will track the quantity of the materials and retain these documents in the project records.

9-4.72 Precast Concrete Barrier

1. **Approval of Material** – In accordance with *Standard Specifications* Section 1-06 approval of the Fabricator and materials is required prior to the start of fabrication. The Fabricator will be approved by the *Qualified Products List* or Request for Approval of Material DOT Form 350-071. Be certain to verify that the product is in fact qualified for its intended use and the product is listed under the appropriate specification. Materials used within the fabricated item do not require approval through the Project Engineer office. Provide the WSDOT Materials Fabrication Inspection Office with a copy of the Qualified Products Page or Request for Approval of Material listing the Fabricator. Review of the Contract Special Provisions is necessary to determine if special qualifications or testing is required for approval of the fabricator.
2. **Preliminary Samples** – A preliminary sample of the material will be required only if coded on the Request for Approval of Material DOT Form 350-071.
3. **Acceptance**
   a. **Concrete Barrier** – Acceptance is based on "WSDOT INSPECTED" Stamp (Figure 9-3). An "F" or "D" will be stamped to indicate the steel or iron is of foreign or domestic origin.
   b. **Connecting, Drift, and Steel Pins, and Miscellaneous Hardware** – The acceptance of connection, drift, and steel pins, and miscellaneous hardware is based on Manufacturer's Certificate of Compliance per Section 9-1.4D for each heat number or manufacturing lot.

      Connecting, drift, and steel pins verify the Manufacturer's Certification of Compliance and supporting mill tests comply with *Standard Specification* 6-10.2.

4. **Field Inspection** – Field verify per Section 9-1.5. Check for "WSDOT INSPECTED" Stamp (Figure 9-3) and the "F" or "D" Stamp for foreign or domestic steel and document it.
5. **Specification Requirements** – See *Standard Specifications* Sections 1-06 and 6-10. Review contract documents to determine if supplemental specifications apply.
6. **Other Requirements** – Certification of Materials Origin will be the responsibility of the Materials Fabrication Inspector as defined in Section 9-2.1A.
   a. **Materials Fabrication Inspected CMO** – Certification of Materials Origin will be the responsibility of the Materials Fabrication Inspector as defined in Section 9-2.1A.

      For projects with the Buy America provision refer to Section 9-1.2E to determine if Certification of Materials Origin is required. If the Buy America requirement applies, the Contractor is required to submit to the Project Engineer a Certification of Materials Origin for all foreign steel or iron materials. The Project Engineer will track the quantity of the materials and retain these documents in the project records.

   b. **Non-Fabrication Inspected CMO (Miscellaneous Hardware)** – For projects with the Buy America provision, refer to Section 9-1.2E to determine if Certification of Materials Origin is required. If the Buy America requirement applies, the Contractor is required to submit to the Project Engineer a Certification of Materials Origin for all steel or iron materials. The Project Engineer will track the quantity of the materials and retain these documents in the project records.

9-4.73 Vacant

9-4.74 Metal Bridge Rail

1. **Approval of Material** – Approval of the Fabricator is required prior to the start of fabrication. The Fabricator will be approved by the *Qualified Products List* or Request for Approval of Material DOT Form 350-071. Be certain to verify that the product is in fact qualified for its intended use and the product is listed under the appropriate specification. Materials used within the fabricated item do not require approval through the Project Engineer office. Provide the WSDOT Materials Fabrication Inspection Office with a copy of the Qualified Products Page or Request for Approval of Material listing the Fabricator. Review of the Contract Special Provisions is necessary to determine if special qualifications or testing is required for approval of the fabricator.
2. **Preliminary Samples** – A preliminary sample of the material will be required only if coded on the Request for Approval of Material DOT Form 350-071.
3. **Acceptance** – As determined by the WSDOT Materials and Fabrication Inspection Office, Railing may be inspected at the point of manufacture or at the jobsite by the Materials and Fabrication Inspector. Acceptance is based on "APPROVED FOR SHIPMENT" Stamp and/or Tag (Figure 9-4 or 9-5). An "F" or "D" will be stamped to indicate the steel or iron is of foreign or domestic origin.

4. **Field Inspection** – Field verify per Section 9-1.5. Check for "APPROVED FOR SHIPMENT" Tag or Stamp and the "F" or "D" Stamp for foreign or domestic steel and document it.
5. **Specification Requirements** – See *Standard Specifications* Section 6-06.3(2) and 9-06.18. Review contract documents to determine if supplemental specifications apply.
6. **Other Requirements** – Certification of Material Origin will be the responsibility of the Materials Fabrication Inspector as defined in Section 9-2.1A.

   For projects with the Buy America provision refer to Section 9-1.2E to determine if Certification of Materials Origin is required. If the Buy America requirement applies, the Contractor is required to submit to the Project Engineer a Certification of Materials Origin for all foreign steel or iron materials. The Project Engineer will track the quantity of the materials and retain these documents in the project records.

9-4.75 Construction Geosynthetics (Geotextiles and Geogrids)

1. **Approval of Material** – Approval of materials is required prior to use. Materials will be approved by the *Qualified Products List* or Request for Approval of Material DOT Form 350-071. Be certain to verify that the product is in fact qualified for its intended use and the product is listed under the appropriate specification.

   RAM Approval – Submittal requirements for geogrid and geotextile products proposed for use in permanent geosynthetic retaining walls or reinforced slopes, refer to *Standard Specifications* Section 9-33.4(1).
2. **Preliminary Samples** – A preliminary sample of the material will be required only if coded on the Request for Approval of Material DOT Form 350-071.
3. **Acceptance**

   a. **Underground Drainage**

      i. **Less than** 100 **SY** – Acceptance shall be by the Manufacturer's Certificate of Compliance per Section 9-1.4D.

      ii. 100 **SY and greater** – Materials shall be accepted on receipt of "Satisfactory" test reports from the State Materials Laboratory.

   b. **Temporary or Permanent Geosynthetic Retaining Walls and Reinforced Slopes and Embankments over Soft Ground** – Materials shall be accepted on receipt of "Satisfactory" test reports from the State Materials Laboratory.

   c. **Soil Stabilization and Separation, Permanent Erosion Control, and Prefabricated Drainage Mat** – Acceptance shall be by the Manufacturer's Certificate of Compliance per Section 9-1.4D.

   d. **Temporary Erosion Control Materials** – Visual Acceptance per Section 9-1.4C.
4. **Field Inspection** – Field verify per Section 9-1.5. Check each roll of geotextile fabric for proper identification as shown on either the Manufacturer's Certificate of Compliance or on the State Materials Laboratory test report.

5. **Specification Requirements** – See *Standard Specifications* Section 9-33. Review contract documents to determine if supplemental specifications apply.
6. **Other Requirements** – If seams are sewn in the field, refer to 9-33.4(5) for sampling and testing requirements.

9-4.76 Concrete

1. **Approval of Material** – Approval of all materials is required prior to use. Materials will be approved by the *Qualified Products List* or Request for Approval of Material DOT Form 350-071. Be certain to verify that the product is in fact qualified for its intended use and the product is listed under the appropriate specification.

   Cement – See Section 9-4.1.

   Concrete Aggregate – See Section 9-4.4.

   Admixtures for Concrete – See Section 9-4.58.

   Water – See Section 9-4.77.

   Submittal and approval of the Concrete Mix Design shall be per *Standard Specifications* Section 6-02.3(2) and 9-03.1(1) and Section 6-2.1A. Contractor must submit a concrete mix design on DOT Form 350-040. All concrete except commercial and Lean Concrete must come from a pre-qualified Batch Plant.

   For mix designs proposed for cement concrete pavement the contractor is required to submit flexural and compressive strength test results in accordance with *Standard Specifications* Section 5-05 as part of the concrete mix design.

   Note: If the Aggregate Source Approval (ASA) database Tracking System requires Alkali Silica Reactivity (ASR) mitigation, the concrete mix design submittal may include the use of either a low alkali cement (per *Standard Specifications* Section 9-01.3(3)) or fly ash (*Standard Specifications* Section 9-23.9) as approved by the engineer. The contractor shall provide test results for ASTM C 1567 showing the mitigating measures are effective (see *Standard Specifications* Section 9-03). Contact the State Materials Engineer if the contractor is proposing to use other mitigating measures.
2. **Preliminary Samples** – Not required.
3. **Acceptance**
   a. **Prepackaged Concrete** – Visual Acceptance per Section 9-1.4C that all bags are labeled meeting the requirements of ASTM C387.
   b. **Controlled Density Fill (CDF)** – Check Concrete Delivery Ticket to verify the mix provide is in accordance with the approved Mix Design.
   c. **Commercial and Lean Concrete** – Is accepted based on a Certificate of Compliance to be provided by the supplier as described in *Standard Specifications* Section 6-02.3(5)B.

d. **Cement Concrete Pavement** – Compressive Strength shall be accepted on receipt of "Satisfactory" test reports. Acceptance samples shall be obtained, tested, and recorded in accordance with the contract documents, and Section 9-3 and 9-7. Air Content will be tested at the time of placement and documented on the Concrete Delivery Ticket. Acceptance samples shall be obtained, tested, and recorded in accordance with the contract documents, and this chapter.

e. **Structural Concrete** – Compressive Strength shall be accepted on receipt of "Satisfactory" test reports. Acceptance samples shall be obtained, tested, and recorded in accordance with the contract documents, and Section 9-3 and 9-7. Slump, Air Content and Temperature will be tested at the time of placement and documented on the Concrete Delivery Ticket. Acceptance samples shall be obtained, tested, and recorded in accordance with the contract documents, and this chapter.

4. **Field Inspection** – Field verify per Section 9-1.5. Check Concrete Delivery Ticket to verify the concrete provide conforms to the approved concrete Mix Design.
5. **Specification Requirements** – See *Standard Specifications* Section 2-09.3(1)E, 9-03.1, 5-05, and 6-02.
6. **Other Requirements** – None.

9-4.77 Water for Concrete

1. **Approval of Material** – Not required.
2. **Preliminary Samples** – Not required.
3. **Acceptance** – Acceptance is based on test results provided by the contractor. If the Contractor is using potable water that is clear and apparently clean, then no testing is required.

   a. **Physical Requirements** – Testing will be conducted on a weekly interval for the first four weeks and thereafter on monthly interval.

   b. **Chemical Requirements** – Testing will be conducted on a monthly interval.
4. **Field Inspection** – Field verify per Section 9-1.5.
5. **Specification Requirements** – See *Standard Specifications* Section 9-25.1.
6. **Other Requirements** – None.

9-4.78 Expansion Joints

1. **Approval of Material** – Approval of the Fabricator is required prior to the start of fabrication. The Fabricator will be approved by the *Qualified Products List* or Request for Approval of Material DOT Form 350-071. Be certain to verify that the product is in fact qualified for its intended use and the product is listed under the appropriate specification. Provide the WSDOT Materials Fabrication Inspection Office with a copy of the Qualified Products Page or Request for Approval of Material listing the Fabricator. Review of the Contract Special Provisions is necessary to determine if special qualifications or testing is required for approval of the fabricator.

The Project Engineer is responsible for obtaining the approval of materials prior to use. Materials will be approved by the *Qualified Products List* or Request for Approval of Material DOT Form 350-071. Be certain to verify that the product is in fact qualified for its intended use and the product is listed under the appropriate specification.

2. **Preliminary Samples** – A preliminary sample of the material will be required only if coded on the Request for Approval of Material DOT Form 350-071.
3. **Acceptance** – The Project Engineer shall collect, review and approve all of the documentation from the Fabricator for the various material items used in Manufacturing the expansion joints as listed below.
   a. **Gland Strip** – Acceptance shall be by the Manufacturer's Certificate of Compliance per Section 9-1.4D.
   b. **Steel Plates and Shapes** – Acceptance shall be by the Manufacturer's Certificate of Compliance per Section 9-1.4D.
   c. **Coatings for Steel Parts** – Acceptance shall be by the Manufacturer's Certificate of Compliance per Section 9-1.4D.

   The Materials Fabrications Inspection Office will inspect the workmanship of the Expansion Joint at the jobsite. Acceptance for the expansion joints is based on a "WSDOT INSPECTED" (Figure 9-3) Stamp.
4. **Field Inspection** – Field verify per Section 9-1.5. Contact Materials Fabrication Inspection Office for jobsite inspection.
5. **Specification Requirements** – Review contract documents to determine specification requirements.
6. **Other Requirements** – For projects with the Buy America provision refer to Section 9-1.2E to determine if Certification of Materials Origin is required. If the Buy America requirement applies, the Contractor is required to submit to the Project Engineer a Certification of Materials Origin for all steel or iron materials. The Project Engineer will track the quantity of the materials and retain these documents in the project records.

9-4.79 Traffic Signal Controller Assembly

1. **Approval of Material**

   Signal Controller Assembly – Approval of the Signal Controller Assembly Fabricator is required prior to the start of fabrication. The Fabricator will be approved by the *Qualified Products List* or Request for Approval of Material DOT Form 350-071. Be certain to verify that the product is in fact qualified for its intended use and the product is listed under the appropriate specification. Review of the Contract Special Provisions is necessary to determine if special qualifications or testing is required for approval of the fabricator.

Signal Controller Assembly "Pluggable" Components – The Project Engineer is responsible for obtaining the approval of traffic signal control equipment prior to use. Materials will be approved by the *Qualified Products List* or Request for Approval of Material DOT Form 350-071. Be certain to verify that the product is in fact qualified for its intended use and the product is listed under the appropriate specification.

RAM Submittal – Attach Catalog Cuts for components using the Catalog Cut Transmittal DOT Form 350-072 and fully dimensioned Shop Drawings to assist in the approval process.

2. **Preliminary Samples** – A preliminary sample of the individual components will be required only if coded on the Request for Approval of Material DOT Form 350-071.
3. **Acceptance**
   a. **Traffic Signal Controllers** – Shall be accepted on receipt of "Satisfactory" test reports. A "Satisfactory" test report is defined as acceptable performance in the following tests:
      - WSDOT Test Method 421, Traffic Controller Inspection and Test Procedure
      - WSDOT Test Method 422, Transient Voltage Test (Spike Test) Procedure (Optional)
      - WSDOT Test Method 423, Conflict Monitor Testing
      - WSDOT Test Method 424, Power Interruption Test Procedure (Only for Type 170 and NEMA Controllers)
      - WSDOT Test Method 425, Environmental Chamber Test
      - WSDOT SOP 429, Method for Determining the Acceptability of Traffic Signal Controller Assembly
      - WSDOT Test Method T427, Loop Amplifier Test (Optional)
      - WSDOT Test Method T428, Compliance Inspection and Test Procedure
   b. **Signal Controller Assembly "Pluggable" Components** – Visual Acceptance per Section 9-1.4C. Document functionality of the "pluggable" component at the start up by the Region Traffic Signal Inspector.
4. **Field Inspection** – Field verify per Section 9-1.5. Verify the controller cabinet assembly received on the job site, has satisfactory test report.
5. **Specification Requirements** – See *Standard Specifications* Section 9-29.13. Review contract documents to determine if supplemental specifications apply.
6. **Other Requirements** – For projects with the Buy America provision refer to Section 9-1.2E to determine if Certification of Materials Origin is required. If the Buy America requirement applies, the Contractor is required to submit to the Project Engineer a Certification of Materials Origin for all steel or iron materials. The Project Engineer will track the quantity of the materials and retain these documents in the project records.

9-4.80 Erosion Control Devices

1. **Approval of Material** – Approval of materials is required prior to use. Materials will be approved by the *Qualified Products List* or Request for Approval of Material DOT Form 350-071. Be certain to verify that the product is in fact qualified for its intended use and the product is listed under the appropriate specification.

   RAM Submittal

   a. **Polyacrylamide (Pam), Coir Log Including Wood Stakes and Rope Ties, Clear Plastic Covering, and High Visibility Fencing** – Attached Catalog Cuts using Catalog Cut Transmittal DOT Form 350-072 to assist the approval process.

   b. **Erosion Control Blanket** – Submit the following:
      - Independent test results from the National Transportation Product Evaluation Program (NTPEP).
      - If netting is present, attach Catalog Cut using the Catalog Cut Transmittal DOT Form 350-072) to assist the approval process.

   c. **Check Dams**
      - Biodegradable Check Dams – Submit the following:
        - Refer to the RAM submittal requirements for Wattles, Compost Socks, and Coir Logs
      - Non-biodegradable Check Dams – Submit the following:
        - Geosynthetic material, submit Manufacturer's Certificate of Compliance
        - Attach Catalog Cuts using Catalog Cut Transmittal DOT Form 350-072 to assist the approval process.

   d. **Wattles and Compost Socks** – Submit the following:
      - Attach Catalog Cuts using Catalog Cut Transmittal DOT Form 350-072 to assist the approval process.
      - Compost Fill Material – See the RAM transmittal requirements for compost in Section 9-4.48.

2. **Preliminary Samples** – A preliminary sample of the material will be required only if coded on the Request for Approval of Material DOT Form 350-071.

3. **Acceptance** – Acceptance for all erosion control devices shall be by Visual Acceptance per Section 9-1.4C.

4. **Field Inspection** – Field verify per Section 9-1.5.

5. **Specification Requirements** – See *Standard Specifications* Section 8-01, 9-14, and 9-33.

6. **Other Requirements** – If there is a question on the intended use of erosion control devices, contact the Statewide Erosion Control Program Lead at 360-570-6654.

9-4.81 Concrete Patching Material, Grout and Mortar

1. **Approval of Material** – Approval of materials is required prior to use. Materials will be approved by the *Qualified Products List* or Request for Approval of Material DOT Form 350-071. Be certain to verify that the product is in fact qualified for its intended use and the product is listed under the appropriate specification.

   RAM Submittal – If the product is not listed on the QPL, submit test data from an accredited independent laboratory confirming that the concrete patching material, grout or mortar meets *Standard Specifications* Section 9-20.

2. **Preliminary Samples** – A preliminary sample of the material will be required only if coded on the Request for Approval of Material DOT Form 350-071.

3. **Acceptance**

   a. **Concrete Patching Materials** – Concrete Patching materials shall be accepted on receipt of "Satisfactory" tests report for air content and compressive strength performed once per shift. The Contractor must submit a mix design meeting the requirements of *Standard Specifications* Section 9-20 for the concrete patching material.

   b. **Grout**

      i. **Grout Type 1** – Materials shall be accepted by Visual Acceptance per Section 9-1.4C to verify that the grout has achieved set, is less than 6 months old from date of manufacturer and that the water cement ratio is 0.45 or less. Grout cubes shall be made per WSDOT TM 813 to determine the timeframe needed to achieve 800psi. Changes in the lot number of the grout shall require subsequent testing performed to determine if a timeframe adjustment is needed to achieve 800psi.

      ii. **Grout Type 2** – Materials shall be accepted by receipt of "Satisfactory" test report for compressive strength, testing to be performed once per bridge pier or 1 per day. Acceptance samples shall be obtained, tested, and recorded in accordance with the contract documents and Section 9-3 and 9-7.

      iii. **Grout Type 3** – Materials shall be accepted by receipt of "Satisfactory" test report for compressive strength, testing to be performed once per bridge pier or 1 per day, and shall be by the Manufacturer's Certificate of Compliance per Section 9-1.4D to verify ASTM C 928 Table 1, R2 Concrete or Mortar1requirements. Acceptance samples shall be obtained, tested, and recorded in accordance with the contract documents and Section 9-3 and 9-7.

iv. **Grout Type 4**

- **Structural Applications** – Materials shall be accepted by receipt of "Satisfactory" test report for compressive strength, testing to be performed once per day, and shall be by Visual Acceptance per Section 9-1.4C for conformance to the mix design. Acceptance samples shall be obtained, tested, and recorded in accordance with the contract documents and Section 9-3 and 9-7.
- **Soils Nails and Ground Anchors** – Acceptance shall be by Visual Acceptance per Section 9-1.4C for conformance to the mix design. Samples of the grout shall be obtained by the Contractor once per day in accordance with the contract documents and Section 9-7. These samples shall be retained until all associated verification, performance, and proof testing of the soil nails or ground anchors has been successfully completed. It is the Contractor's option to test the grout cubes.
- **Nonstructural Applications** – Acceptance for column jacket pour back or bridge or retaining wall shaft CSL access tube pour back will be by Visual Acceptance per Section 9-1.4C for conformance to the mix design.

c. **Mortar**

i. **Mortar Type 1 for Finishing Applications** – Visual Acceptance per Section 9-1.4C and will require confirmation of *Standard Specifications* blending ratio.

ii. **Mortar Type 2 for Masonry Applications** – Visual Acceptance per Section 9-1.4C and will require confirmation of *Standard Specifications* blending ratio.

iii. **Mortar Type 3** – Shall be accepted on receipt of "Satisfactory" test report for compressive strength, testing to be performed once per day, and shall be by Visual Acceptance per Section 9-1.4C for conformance to the mix design. Acceptance samples shall be obtained, tested, and recorded in accordance with the contract documents, and Section 9-3 and 9-7.

d. **Aggregate Extender** – Materials shall be accepted on receipt of "Satisfactory" test reports.

4. **Field Inspection** – Field verify per Section 9-1.5. Verify that the amount of added water and aggregate extender complies with the mix design or manufacturers recommendations.

5. **Specification Requirements** – See *Standard Specifications* Section 9-20. Review contract documents to determine if supplemental specifications apply.

6. **Other Requirements** – Grouts extended with coarse aggregate will require 4″ × 8″ test specimens per WSDOT FOP for AASHTO T 23. Grouts extended with fine aggregate will require test specimens per WSDOT TM 813.

9-4.82 Streambed Aggregates

1. **Approval of Material** – In accordance with *Standard Specifications* Section 1-06, approval of materials is required prior to use. Consult the Aggregate Source Approval (ASA) database for approval status of the material for each source. If the ASA database indicated that the aggregate source has expired, or will expire before the end of the project, a source evaluation may be required. Contact the Region materials office for further direction. If samples are required, the Region materials office will coordinate with the ASA engineer to obtain the necessary samples according to SOP 128.
2. **Preliminary Samples** – A preliminary sample of the material will be required only if coded on the Request for Approval of Material DOT Form 350-071.
3. **Acceptance**
   a. **Streambed Sediment** – Acceptance shall be administered in accordance with *Standard Specifications* Section 3-04. Acceptance samples shall be obtained, tested, and recorded in accordance with the contract documents, and Section 9-3 and 9-7.
   b. **Streambed Cobbles, Streambed Boulders and Habitat Boulders** – Visual Acceptance per Section 9-1.4C. Approximate size can be determined per *Standard Specifications* Section 9-03.11.
4. **Field Inspection** – Field verify per Section 9-1.5. Ensure that the gradation for streambed sediment remains constant.
5. **Specification Requirements** – See *Standard Specifications* Sections 3-02, 3-04, and 9-03.11. Review contract documents to determine if supplemental specifications apply.
6. **Other Requirements** – Streambed aggregates shall be naturally occurring water rounded aggregates. Aggregates from quarries, ledge rock, and talus slopes are not permitted.

   Refer to *Standard Specifications* Section 9-03.11 to see if recycled materials are permitted.

9-4.83 Temporary Traffic Control Materials

1. **Approval of Materials and Systems** – In accordance with *Standard Specifications* Section 1-06 approval of materials prior to use is required for:
   a. **Transportable Attenuators** – Materials will be approved by the *Qualified Products List* or Request for Approval of Material DOT Form 350-071. Be certain to verify that the product is in fact qualified for its intended use and the product is listed under the appropriate specification.

      RAM Submittal – The contractor shall provide certification that the unit complies with NCHRP 350 Test Level 3 requirements or the comparable requirement from the AASHTO Manual for Assessing Safety Hardware (MASH) Test Level 3 per Section 1-10.2(3).

b. **Portable Temporary Traffic Control Signal** – Material will be approved per *Standard Specifications* Section 1-10.3(3)K.

c. **Pavement Markings** – Refer to Section 9-4.55.

Prior approval is not required for:

- Barricades
- Construction Signs
- Portable Changeable Message Signs
- Sequential Arrow Signs
- Sign Covering
- Stop/Slow Paddles
- Tall Channelizing Devices
- Traffic Cones
- Traffic Safety Drums
- Tubular Markers
- Warning Lights and Flashers
- Wood Sign Posts

2. **Preliminary Samples** – No preliminary sample required.

3. **Acceptance**

a. **Stop/Slow Paddles, Wood Sign Supports, Sign Covering** – Visual Acceptance per Section 9-1.4C to ensure good condition and conformance to the appropriate *Standard Specifications*.

b. **Construction Signs, Sequential Arrow Signs, Portable Changeable Message Signs, Barricades, Traffic Safety Drums, Traffic Cones, Tubular Markers, Warning Lights and Flashers, Tall Channelizing Devices** – Visual Acceptance per Section 9-1.4C to ensure the signs and traffic control devices are acceptable or marginal as defined in *Quality Guidelines for Temporary Traffic Control Device* and conform to the appropriate *Standard Specifications*.

c. **Portable Temporary Traffic Control Signal** – Visual Acceptance per Section 9-1.4C. All Portable Temporary Traffic Control Signals must be accepted prior to use. Inspect all Portable Temporary Traffic Control Signals to ensure good condition, functionality and conformance to the appropriate *Standard Specifications*.

d. **Transportable Attenuator (TMA)** – Visual Acceptance per Section 9-1.4C and inspected for condition, reflectivity and conformance to the appropriate *Standard Specifications*. No sampling or testing will be done except that deemed necessary to support the visual inspection.

4. **Field Inspection** – Field verify per Section 9-1.5. Field verify all temporary traffic controls devices to ensure good working order, cleanliness, and appropriate reflectivity.

5. **Specification Requirements** – See *Standard Specifications* Sections 1-10, 8-21.3(3), and 9-35. Review contract documents to determine if supplemental specifications apply.
6. **Other Requirements** – None.

9-4.84 Modular Expansion Joint

1. **Approval of Material** – Approval of the Fabricator is required prior to the start of fabrication. The Fabricator will be approved by the *Qualified Products List* or Request for Approval of Material DOT Form 350-071. Be certain to verify that the product is in fact qualified for its intended use and the product is listed under the appropriate specification. Materials used within the fabricated item do not require approval through the Project Engineer office. Provide the WSDOT Materials Fabrication Inspection Office with a copy of the Qualified Products Page or Request for Approval of Material listing the Fabricator. Review of the Contract Special Provisions is necessary to determine if special qualifications or testing is required for approval of the fabricator.
2. **Preliminary Samples** – Preliminary samples of the material will be required by the contract provisions or if coded on the Request for Approval of Material DOT Form 350-071).
3. **Acceptance** – As determined by the WSDOT Materials Fabrication Inspection Office, Modular Expansion Joints may be inspected at the point of manufacture prior to shipping or at the jobsite by the Materials Fabrication Inspector. Contract Provision may provide for job site inspection of the Modular Expansion Joints by the engineer. Acceptance is based on "APPROVED FOR SHIPMENT" Stamp and/or Tag (Figure 9-4 or 9-5). An "F" or "D" will be stamped to indicate the steel or iron is of foreign or domestic origin.

   Modular Expansion Joints delivered to the job site without "APPROVED FOR SHIPMENT" stamps and/or tags require Materials Fabrication Inspection. Contact the WSDOT Materials Fabrication Inspection Office for inspection and required documentation needed prior to their physical inspection of the Modular Expansion Joints.
4. **Field Inspection** – Field verify per Section 9-1.5. Check for "APPROVED FOR SHIPMENT" Stamp and/or Tag (Figure 9-4 or 9-5) and the "F" or "D" Stamp for foreign or domestic steel and document it.
5. **Specification Requirements** – Modular Expansion Joints specifications are currently specified in General Special Provisions. Review the contract documents to determine the specification requirements.
6. **Other Requirements** – Certification of Material Origin will be the responsibility of the Materials Fabrication Inspector as defined in Section 9-2.1A.

   For projects with the Buy America provision refer to Section 9-1.2E to determine if Certification of Materials Origin is required. If the Buy America requirement applies, the Contractor is required to submit to the Project Engineer a Certification of Materials Origin for all foreign steel or iron materials. The Project Engineer will track the quantity of the materials and retain these documents in the project records.

9-4.85 Junction Boxes, Cable Vaults, and Pull Boxes

1. **Approval of Material**

   Fabrication Inspection items – Approval of the Fabricator is required prior to the start of fabrication. The Fabricator will be approved by the *Qualified Products List* or Request for Approval of Material DOT Form 350-071. Be certain to verify that the product is in fact qualified for its intended use and the product is listed under the appropriate specification. Materials used within the fabricated item do not require approval through the Project Engineer office. Provide the WSDOT Materials Fabrication Inspection Office with a copy of the Qualified Products Page or Request for Approval of Material listing the Fabricator. Review of the Contract Special Provisions is necessary to determine if special qualifications or testing is required for approval of the fabricator.

   Note: Approved design/shop drawings are available online at www.wsdot.wa.gov/design/traffic/shop_drawings.htm. Online drawings represent fabricators designs that have passed initial proof load testing for design approval. The Online drawings maintained by the WSDOT Traffic Design Office are used to inspect Concrete Junction Boxes, Cable Vaults and Pull Boxes.

   Non-Fabrication Inspection Items – Approval of the Structure Mounted and Non-Concrete Junction Boxes are required prior to use. The Structure Mounted and Non-Concrete Junction Boxes will be approved by the *Qualified Products List* or Request for Approval of Material DOT Form 350-071. Be certain to verify that the product is in fact qualified for its intended use and the product is listed under the appropriate specification.

   RAM Submittal

   a. **Standard Duty Junction Boxes Types 1,2, and 8** – Submittal and approval of Standard Duty Junction Boxes Types 1, 2, and 8 shall be in accordance with *Standard Specifications* Sections 9-29.2(1), 9-29.2(1)A, and 9-29.2(1)C.

   b. **Heavy Duty Junction Boxes Types 4, 5, and 6** – Submittal and approval of Heavy Duty Junction Boxes Types 4, 5, and 6 shall be in accordance with *Standard Specifications* Sections 9-29.2(1), 9-29.2(1)B and 9-29.2(1)C.

   c. **Standard Duty and Heavy Duty Cable Vaults and Pull Boxes** – Submittal and approval of Standard Duty and Heavy Duty Cable Vaults and Pull Boxes shall be in accordance with *Standard Specifications* Sections 9-29.2(2), 9-29.2(2)A, and 9-29.2(2)B.

   d. **Structure Mounted Junction Boxes** – Attach Catalog Cuts using the Catalog Cut Transmittal DOT Form 350-072 and/or Shop Drawing to the State Materials Laboratory to assist in the approval process.

2. **Preliminary Samples** – A preliminary sample of the material will be required only if coded on the Request for Approval of Material DOT Form 350-071.

3. **Acceptance**

   a. **Type 1, 2, and 8 Junction Boxes**

      - **Concrete** – Acceptance is based on "WSDOT INSPECTED" Stamp (Figure 9-3). An "F" or "D" will be stamped to indicate the steel or iron is of foreign or domestic origin.
      - **Non-Concrete** – Acceptance shall be by the Manufacturer's Certificate of Compliance per Section 9-1.4D including an Independent Test Report from a Nationally Recognized Testing Laboratory.

   b. **Type 4, 5, and 6 Junction Boxes** – Acceptance is based on "APPROVED FOR SHIPMENT" Stamp and/or Tag (Figure 9-4 or 9-5). An "F" or "D" will be stamped to indicate the steel or iron is of foreign or domestic origin.

   c. **Cable Vaults and Pull Boxes** – Acceptance is based on "APPROVED FOR SHIPMENT" Stamp and/or Tag (Figure 9-4 or 9-5). An "F" or "D" will be stamped to indicate the steel or iron is of foreign or domestic origin.

   d. **Structure Mounted Junction Boxes** – Visual Acceptance per Section 9-1.4C.

4. **Field Inspection** – Field verify per Section 9-1.5. Check for appropriate "WSDOT INSPECTED (Figure 9-3) or "APPROVED FOR SHIPMENT" Stamp and/or Tag (Figure 9-4 or 9-5) and the "F" or "D" Stamp for foreign or domestic steel and document it. Junction boxes, cable vaults, and pull boxes with metallic lids Field verify per Section 9-1.5 that lids are marked in accordance with *Standard Specifications* Section 9-29.2(4) and the contract provisions.

5. **Specification Requ**irements – See *Standard Specifications* Section 9-29.2 and *Standard Plans* sheets J-40.10-02, J-40.20-00, J-40.30-02, and J-40.36-00. Review contract documents to determine if supplemental specifications apply.

6. **Other Requirements**

   a. **Materials Fabrication Inspected CMO** – Certification of Materials Origin will be the responsibility of the Materials Fabrication Inspector as defined in Section 9-2.1A.

      For projects with the Buy America provision refer to Section 9-1.2E to determine if Certification of Materials Origin is required. If the Buy America requirement applies, the Contractor is required to submit to the Project Engineer a Certification of Materials Origin for all foreign steel or iron materials. The project Engineer will track the quantity of the materials and retain these documents in the project records.

   b. **Non-Fabrication Inspected CMO** – For projects with the Buy America provision refer to Section 9-1.2E to determine if Certification of Materials Origin is required. If the Buy America requirement applies, the Contractor is required to submit to the Project Engineer a Certification of Materials Origin for all steel or iron materials. The Project Engineer will track the quantity of the materials and retain these documents in the project records.

9-4.86 Precast Bridge Deck Panels, Floor Panels, Marine Pier Deck Panels, Noise Barrier Walls, Pier Caps, Retaining Walls, Roof Panels, Structural Earth Walls, Wall Panels, and Wall Stem Panels

1. **Approval of Material** – Approval of the Fabricator is required prior to the start of fabrication. The Fabricator will be approved by the *Qualified Products List* or Request for Approval of Material DOT Form 350-071. Be certain to verify that the product is in fact qualified for its intended use and the product is listed under the appropriate specification. Materials used within the fabricated item do not require approval through the Project Engineer office. Provide the WSDOT Materials Fabrication Inspection Office with a copy of the Qualified Products Page or Request for Approval of Material listing the Fabricator. Review of the Contract Special Provisions is necessary to determine if special qualifications or testing is required for approval of the fabricator.
2. **Preliminary Samples** – A preliminary sample of the material will be required only if coded on the Request for Approval of Material DOT Form 350-071.
3. **Acceptance** – Acceptance is based on "APPROVED FOR SHIPMENT" Stamp and/or Tag (Figure 9-4 or 9-5). An "F" or "D" will be stamped to indicate the steel or iron is of foreign or domestic origin.
4. **Field Inspection** – Field verify per Section 9-1.5. Check for "APPROVED FOR SHIPMENT" Stamp and/or Tag (Figure 9-4 or 9-5) and the "F" or "D" Stamp for foreign or domestic steel and document it. Check for damage caused by shipping and handling.
5. **Specification Requ**irements – See *Standard Specifications* Section 6-02.3(25), 6-02.3(28), 6-11, 6-12, and 6-13. Review contract documents to determine if supplemental specifications apply.
6. **Other Requirements** – Certification of Material Origin will be the responsibility of the Materials Fabrication Inspector as defined in Section 9-2.1A.

   For projects with the Buy America provision refer to Section 9-1.2E to determine if Certification of Materials Origin is required. If the Buy America requirement applies, the Contractor is required to submit to the Project Engineer a Certification of Materials Origin for all foreign steel or iron materials. The Project Engineer will track the quantity of the materials and retain these documents in the project records.

9-4.87 Precast Reinforced Concrete Three Sided Structures

1. **Approval of Material** – Approval of the Fabricator is required prior to the start of fabrication. The Fabricator will be approved by the *Qualified Products List* or Request for Approval of Material DOT Form 350-071. Be certain to verify that the product is in fact qualified for its intended use and the product is listed under the appropriate specification. Materials used within the fabricated item do not require approval through the Project Engineer office. Provide the WSDOT Materials Fabrication Inspection Office with a copy of the Qualified Products Page or Request for Approval of Material listing the Fabricator. Review of the Contract Special Provisions is necessary to determine if special qualifications or testing is required for approval of the fabricator.

2. **Preliminary Samples** – A preliminary sample of the material will be required only if coded on the Request for Approval of Material DOT Form 350-071.
3. **Acceptance** – Acceptance is based on "APPROVED FOR SHIPMENT" Stamp and/or Tag (Figure 9-4 or 9-5). An "F" or "D" will be stamped to indicate the steel or iron is of foreign or domestic origin.
4. **Field Inspection** – Field verify per Section 9-1.5. Check for "APPROVED FOR SHIPMENT" Stamp and/or Tag (Figure 9-4 or 9-5) and the "F" or "D" Stamp for foreign or domestic steel and document it. Check for damage caused by shipping and handling.
5. **Specification Requirements** – Review the contract documents to determine the specification requirements.
6. **Other Requirements** – Certification of Material Origin will be the responsibility of the Materials Fabrication Inspector as defined in Section 9-2.1A.

   For projects with the Buy America provision refer to Section 9-1.2E to determine if Certification of Materials Origin is required. If the Buy America requirement applies, the Contractor is required to submit to the Project Engineer a Certification of Materials Origin for all foreign steel or iron materials. The Project Engineer will track the quantity of the materials and retain these documents in the project records.

9-4.88 Precast Concrete Vaults (Utility, Drainage, etc.) and Box Culverts

1. **Approval of Material** – Approval of the Fabricator is required prior to the start of fabrication. The Fabricator will be approved by the *Qualified Products List* or Request for Approval of Material DOT Form 350-071. Be certain to verify that the product is in fact qualified for its intended use and the product is listed under the appropriate specification. Materials used within the fabricated item do not require approval through the Project Engineer office. Provide the WSDOT Materials Fabrication Inspection Office with a copy of the Qualified Products Page or Request for Approval of Material listing the Fabricator. Review of the Contract Special Provisions is necessary to determine if special qualifications or testing is required for approval of the fabricator.
2. **Preliminary Samples** – A preliminary sample of the material will be required only if coded on the Request for Approval of Material DOT Form 350-071.
3. **Acceptance** – Acceptance is based on "APPROVED FOR SHIPMENT" Stamp and/or Tag (Figure 9-4 or 9-5). An "F" or "D" will be stamped to indicate the steel or iron is of foreign or domestic origin.
4. **Field Inspection** – Field verify per Section 9-1.5. Check for "APPROVED FOR SHIPMENT" Stamp and/or Tag (Figure 9-4 or 9-5) and the "F" or "D" stamp for foreign or domestic steel and document it. Check for damage caused by shipping and handling.
5. **Specification Requirements** – Review the contract documents to determine the specification requirements.
6. **Other Requirements** – Certification of Material Origin will be the responsibility of the Materials Fabrication Inspector as defined in Section 9-2.1A.

For projects with the Buy America provision refer to Section 9-1.2E to determine if Certification of Materials Origin is required. If the Buy America requirement applies, the Contractor is required to submit to the Project Engineer a Certification of Materials Origin all foreign steel or iron materials. The Project Engineer will track the quantity of the materials and retain these documents in the project records.

9-4.89 Fabricated/Welded Miscellaneous Metal Drainage Items: Grate Inlets and Drop Inlets

1. **Approval of Material** – Approval of the Fabricator is required prior to the start of fabrication. The Fabricator will be approved by the *Qualified Products List* or Request for Approval of Material DOT Form 350-071. Be certain to verify that the product is in fact qualified for its intended use and the product is listed under the appropriate specification. Materials used within the fabricated item do not require approval through the Project Engineer office. Provide the WSDOT Materials Fabrication Inspection Office with a copy of the Qualified Products Page or Request for Approval of Material listing the Fabricator. Review of the Contract Special Provisions is necessary to determine if special qualifications or testing is required for approval of the fabricator.
2. **Preliminary Samples** – A preliminary sample of the material will be required only if coded on the Request for Approval of Material DOT Form 350-071.
3. **Acceptance** – Acceptance is based on "APPROVED FOR SHIPMENT" Stamp and/or Tag (Figure 9-4 or 9-5). An "F" or "D" will be stamped to indicate the steel or iron is of foreign or domestic origin.
4. **Field Inspection** – Field verify per Section 9-1.5. Check for "APPROVED FOR SHIPMENT" Stamp and/or Tag (Figure 9-4 or 9-5) and the "F" or "D" Stamp for foreign or domestic steel and document it. Check for damage caused by shipping and handling.
5. **Specification Requ**irements – See *Standard Specifications* Section 9-05.16. Review contract documents to determine if supplemental specifications apply.
6. **Other Requirements** – Certification of Material Origin will be the responsibility of the Materials Fabrication Inspector as defined in Section 9-2.1A.

   For projects with the Buy America provision refer to Section 9-1.2E to determine if Certification of Materials Origin is required. If the Buy America requirement applies, the Contractor is required to submit to the Project Engineer a Certification of Materials Origin all foreign steel or iron materials. The Project Engineer will track the quantity of the materials and retain these documents in the project records.

9-4.90 Miscellaneous Steel Structures (Cattle Guards, Handrail, Retrofit Guardrail Posts With Welded Base Plate, Seismic Retrofit Earthquake Restrainers, Column Jackets)

1. **Approval of Material** – Approval of the Fabricator is required prior to the start of fabrication. The Fabricator will be approved by the *Qualified Products List* or Request for Approval of Material DOT Form 350-071. Be certain to verify that the product is in fact qualified for its intended use and the product is listed under the appropriate specification. Materials used within the fabricated item do not require approval through the Project Engineer office. Provide the WSDOT Materials Fabrication Inspection Office with a copy of the Qualified Products Page or Request for Approval of Material listing the Fabricator. Review of the Contract Special Provisions is necessary to determine if special qualifications or testing is required for approval of the fabricator.
2. **Preliminary Samples** – A preliminary sample of the material will be required only if coded on the Request for Approval of Material DOT Form 350-071.
3. **Acceptance** – Acceptance is based on "APPROVED FOR SHIPMENT" Stamp and/or Tag (Figure 9-4 or 9-5). An "F" or "D" will be stamped to indicate the steel or iron is of foreign or domestic origin.
4. **Field Inspection** – Field verify per Section 9-1.5. Check for "APPROVED FOR SHIPMENT" Stamp and/or Tag (Figure 9-4 or 9-5) and the "F" or "D" Stamp for foreign or domestic steel and document it. Check for damage caused by shipping and handling.
5. **Specification Requirements** – See *Standard Specifications* Section 6-03. Review contract documents to determine if supplemental specifications apply.
6. **Other Requirements** – Certification of Material Origin will be the responsibility of the Materials Fabrication Inspector as defined in Section 9-2.1A.

   For projects with the Buy America provision refer to Section 9-1.2E to determine if Certification of Materials Origin is required. If the Buy America requirement applies, the Contractor is required to submit to the Project Engineer a Certification of Materials Origin all foreign steel or iron materials. The Project Engineer will track the quantity of the materials and retain these documents in the project records.

9-4.91 Miscellaneous Welded Structural Steel

1. **Approval of Material** – Approval of the Fabricator is required prior to the start of fabrication. The Fabricator will be approved by the *Qualified Products List* or Request for Approval of Material DOT Form 350-071. Be certain to verify that the product is in fact qualified for its intended use and the product is listed under the appropriate specification. Materials used within the fabricated item do not require approval through the Project Engineer office. Provide the WSDOT Materials Fabrication Inspection Office with a copy of the Qualified Products Page or Request for Approval of Material listing the Fabricator. Review of the Contract Special Provisions is necessary to determine if special qualifications or testing is required for approval of the fabricator.

2. **Preliminary Samples** – A preliminary sample of the material will be required only if coded on the Request for Approval of Material DOT Form 350-071.
3. **Acceptance** – Acceptance is based on "APPROVED FOR SHIPMENT" Stamp and/or Tag (Figure 9-4 or 9-5). An "F" or "D" will be stamped to indicate the steel or iron is of foreign or domestic origin.
4. **Field Inspection** – Field verify per Section 9-1.5. Check for "APPROVED FOR SHIPMENT" Stamp and/or Tag (Figure 9-4 or 9-5) and the "F" or "D" Stamp for foreign or domestic steel and document it. Check for damage caused by shipping and handling.
5. **Specification Requ**irements – See *Standard Specifications* Section 6-03. Review contract documents to determine if supplemental specifications apply.
6. **Other Requirements** – Certification of Material Origin will be the responsibility of the Materials Fabrication Inspector as defined in Section 9-2.1A.

   For projects with the Buy America provision refer to Section 9-1.2E to determine if Certification of Materials Origin is required. If the Buy America requirement applies, the Contractor is required to submit to the Project Engineer a Certification of Materials Origin for all foreign steel or iron materials. The Project Engineer will track the quantity of the materials and retain these documents in the project records.

9-4.92 Wood Bridges

1. **Approval of Material** – Approval of the Fabricator is required prior to the start of fabrication. The Fabricator will be approved by the *Qualified Products List* or Request for Approval of Material DOT Form 350-071. Be certain to verify that the product is in fact qualified for its intended use and the product is listed under the appropriate specification. Materials used within the fabricated item do not require approval through the Project Engineer office. Provide the WSDOT Materials Fabrication Inspection Office with a copy of the Qualified Products Page or Request for Approval of Material listing the Fabricator. Review of the Contract Special Provisions is necessary to determine if special qualifications or testing is required for approval of the fabricator.
2. **Preliminary Samples** – A preliminary sample of the material will be required only if coded on the Request for Approval of Material DOT Form 350-071.
3. **Acceptance** – Acceptance is based on "APPROVED FOR SHIPMENT" Stamp and/or Tag (Figure 9-4 or 9-5). An "F" or "D" will be stamped to indicate the steel or iron is of foreign or domestic origin.
4. **Field Inspection** – Field verify per Section 9-1.5. Check for "APPROVED FOR SHIPMENT" Stamp and/or Tag (Figure 9-4 or 9-5) and the "F" or "D" Stamp for foreign or domestic steel and document it. Check for damage caused by shipping and handling.
5. **Specification Requirements** – Review contract documents to determine the specification requirements.

6. **Other Requirements** – Certification of Material Origin for steel components will be the responsibility of the Materials Fabrication Inspector as defined in Section 9-2.1A.

   For projects with the Buy America provision refer to Section 9-1.2E to determine if Certification of Materials Origin is required. If the Buy America requirement applies, the Contractor is required to submit to the Project Engineer a Certification of Materials Origin for all foreign steel or iron materials. The Project Engineer will track the quantity of the materials and retain these documents in the project records.

9-4.93 Electrical Service Cabinets

1. **Approval of Material** – Approval of materials is required prior to use. Materials will be approved by the *Qualified Products List* or Request for Approval of Material DOT Form 350-071. Be certain to verify that the product is in fact qualified for its intended use and the product is listed under the appropriate specification.

   RAM Submittal – Attach Catalog Cuts for components using the Catalog Cut Transmittal DOT Form 350-072) and fully dimensioned Shop Drawings to assist in the approval process.

2. **Preliminary Samples** – A preliminary sample of the material will be required only if coded on the Request for Approval of Material DOT Form 350-071.

3. **Acceptance** – Acceptance shall be by a Manufacture's Quality Check List included with the cabinet and signed by the Region Electrical Inspector.

4. **Field Inspection** – Field verify per Section 9-1.5. Verify the Electrical Service Cabinet assembly received on the job site, has a Manufacture's Quality Check List.

5. **Specification Requ**irements – See *Standard Specifications* Section 9-29.24. Review contract documents to determine if supplemental specifications apply.

6. **Other Requirements** – For projects with the Buy America provision refer to Section 9-1.2E to determine if Certification of Materials Origin is required. If the Buy America requirement applies, the Contractor is required to submit to the Project Engineer a Certification of Materials Origin for all steel or iron materials. The Project Engineer will track the quantity of the materials and retain these documents in the project records.

9-4.94 Monument Case, Cover, and Riser

1. **Approval of Material** – Approval of materials is required prior to use. Materials will be approved by the *Qualified Products List* or Request for Approval of Material DOT Form 350-071. An on-site inspection of the fabricating facilities prior to approval will be required only if a new manufacture is requested on the Request for Approval of Material DOT Form 350-071. Be certain to verify that the product is in fact qualified for its intended use and the product is listed under the appropriate specification.

2. **Preliminary Samples** – A preliminary sample of the material will be required only if coded on the Request for Approval of Material DOT Form 350-071.

3. **Acceptance** – Acceptance shall be by the Manufacturer's Certificate of Compliance with supporting Mill Certification per Section 9-1.4D.
4. **Field Inspection** – Field verify per Section 9-1.5.
5. **Specification Requirements** – See *Standard Specifications* Section 9-22. Review contract documents to determine if supplemental specifications apply.
6. **Other Requirements** – For projects with the Buy America provision refer to Section 9-1.2E to determine if Certification of Materials Origin is required. If the Buy America requirement applies, the Contractor is required to submit to the Project Engineer a Certification of Materials Origin for all steel or iron materials. The Project Engineer will track the quantity of the materials and retain these documents in the project records.

9-4.95 Steel Bollards

1. **Approval of Material** – Approval of materials is required prior to use. Materials will be approved by the *Qualified Products List* or Request for Approval of Material DOT Form 350-071. An on-site inspection by the WSDOT Materials Fabrication Office of the fabricating facilities prior to approval will be required only if a new manufacture is requested on the Request for Approval of Material DOT Form 350-071. Be certain to verify that the product is in fact qualified for its intended use and the product is listed under the appropriate specification.
2. **Preliminary Samples** – A preliminary sample of the material will be required only if coded on the Request for Approval of Material DOT Form 350-071.
3. **Acceptance** – Acceptance shall be by the Manufacturer's Certificate of Compliance with supporting Mill Certification per Section 9-1.4D.
4. **Field Inspection** – Field verify per Section 9-1.5.
5. **Specification Requirements** – Review contract documents to determine the specification requirements.
6. **Other Requirements** – For projects with the Buy America provision refer to Section 9-1.2E to determine if Certification of Materials Origin is required. If the Buy America requirement applies, the Contractor is required to submit to the Project Engineer a Certification of Materials Origin for all steel or iron materials. The Project Engineer will track the quantity of the materials and retain these documents in the project records.

9-4.96 Metal Trash Racks, Debris Cages, and Safety Bars for Culvert Pipe and Other Drainage Items

1. **Approval of Material** – Approval of materials is required prior to use. Materials will be approved by the *Qualified Products List* or Request for Approval of Material DOT Form 350-071. An on-site inspection by the WSDOT Materials Fabrication Office of the fabricating facilities prior to approval will be required only if a new manufacture is requested on the Request for Approval of Material DOT Form 350-071. Be certain to verify that the product is in fact qualified for its intended use and the product is listed under the appropriate specification.

2. **Preliminary Samples** – A preliminary sample of the material will be required only if coded on the Request for Approval of Material DOT Form 350-071.
3. **Acceptance** – Acceptance shall be by the Certificate of Compliance per Section 9-1.4E.
4. **Field Inspection** – Field verify per Section 9-1.5. Field Verify that hardware included is per the Contract Specifications and Plan.
5. **Specification Requirements** – See *Standard Specifications* Section 9-05.18. Review contract documents to determine if supplemental specifications apply.
6. **Other Requirements** – For projects with the Buy America provision refer to Section 9-1.2E to determine if Certification of Materials Origin is required. If the Buy America requirement applies, the Contractor is required to submit to the Project Engineer a Certification of Materials Origin for all steel or iron materials. The Project Engineer will track the quantity of the material and retain these documents in the project records.

9-4.97 Flow Restrictors and Oil Separators

1. **Approval of Material** – Approval of materials is required prior to use. Materials will be approved by the *Qualified Products List* or Request for Approval of Material DOT Form 350-071. An on-site inspection by the WSDOT Materials Fabrication Office of the fabricating facilities prior to approval will be required only if a new manufacture is requested on the Request for Approval of Material DOT Form 350-071. Be certain to verify that the product is in fact qualified for its intended use and the product is listed under the appropriate specification.
2. **Preliminary Samples** – A preliminary sample of the material will be required only if coded on the Request for Approval of Material DOT Form 350-071.
3. **Acceptance** – Acceptance shall be by the Certificate of Compliance per Section 9-1.4E.
4. **Field Inspection** – Field verify per Section 9-1.5. Field Verify that hardware included is per the Contract Specifications and Plan.
5. **Specification Requirements** – Review contract documents to determine the specification requirements.
6. **Other Requirements** – For projects with the Buy America provision refer to Section 9-1.2E to determine if Certification of Materials Origin is required. If the Buy America requirement applies, the Contractor is required to submit to the Project Engineer a Certification of Materials Origin for all steel or iron materials. The Project Engineer will track the quantity of the materials and retain these documents in the project records.

9-4.98 Concrete Blocks

1. **Approval of Material**

   Ecology Blocks – Approval of materials is not required.

   Masonry Units – Approval of materials is required prior to use. Materials will be approved by the *Qualified Products List* or Request for Approval of Material DOT Form 350-071. Be certain to verify that the product is in fact qualified for its intended use and the product is listed under the appropriate specification.

   Precast Concrete Block – Approval of materials is required prior to use. Materials will be approved by the *Qualified Products List* or Request for Approval of Material DOT Form 350-071. An on-site inspection by the WSDOT Materials Fabrication Office of the fabricating facilities prior to approval will be required only if a new manufacture is requested on the Request for Approval of Material DOT Form 350-071. Be certain to verify that the product is in fact qualified for its intended use and the product is listed under the appropriate specification.

2. **Preliminary Samples** – A preliminary sample of the material will be required only if coded on the Request for Approval of Material DOT Form 350-071.

3. **Acceptance**

   a. **Ecology Block** – Visual Acceptance per Section 9-1.4C.

   b. **Masonry Units** – Acceptance shall be by the Certificate of Compliance per Section 9-1.4E.

   c. **Precast Concrete Block** – Acceptance shall be by the Manufacturer's Certificate of Compliance per Section 9-1.4D. A cylinder test report is required for each lot of blocks delivered to the job site. The freeze/thaw report shall be acceptable for a period of two years from the date the block was manufactured.

4. **Field Inspection** – Field verify per Section 9-1.5. The field inspector is required to document in their IDR the "lot" number of the precast concrete block as it is delivered to the job site.

5. **Specification Requ**irements – See *Standard Specifications* Sections 6-13.3(4), 8-24.2, 9-12, and 9-13.5(1). Review contract documents to determine if supplemental specifications apply.

6. **Other Requirements** – Certification of Material Origin will be the responsibility of the Materials Fabrication Inspector as defined in Section 9-2.1A.

   For projects with the Buy America provision refer to Section 9-1.2E to determine if Certification of Materials Origin is required. If the Buy America requirement applies, the Contractor is required to submit to the Project Engineer a Certification of Materials Origin for all foreign steel or iron materials. The Project Engineer will track the quantity of the materials and retain these documents in the project records.

9-4.99 Vacant

9-4.100 Intelligent Transportation Systems (ITS)/System Operations Management (SOM) Materials

1. **Approval of Material** – Approval of materials is required prior to use. Materials will be approved by the *Qualified Products Lists* or Request of Approval of Material DOT Form 350-071. An on-site inspection by the WSDOT Materials Fabrications Inspection Office of the fabricating facilities prior to approval will be required only if a new manufacturer is requested on the Request for Approval of Material DOT Form 350-071. Be certain to verify that the product is in fact qualified for its intended use and the product is listed under the appropriate specification. The Project Engineer is allowed to approve the Request of Approval of Materials (RAM) for ITS/SOM Non-Standard Materials. For ITS/SOM Standard Materials the Project Engineer is required to follow the approval requirements located in Table 9-4.100-1.

2. **RAM Submittal**

   a. **ITS/SOM Non-Standard Materials** – The Project Engineer can approve the Request for Approval of Materials (RAM) for ITS/SOM non-standard materials used in the following applications:

      - Cameras, Closed Circuit Television Systems, and other Surveillance Devices
      - Highway Advisory Radios, Variable and Dynamic Message Signs, and Road/Weather Information Systems
      - ITS Controller Cabinet, Data Station, and Fiber Backbone
      - Electronic Tolling, License Plate Reader and Radar Detectors
      - Weigh-in-Motion Systems and Commercial Vehicle Tag Readers
      - Traffic Data Collectors and Ramp Meters

      Material submittal requirements for these materials shall be determine by the requirements of the contract, and/or consultation with either Region Traffic Engineer or the State Materials Laboratory.

   b. **ITS/SOM Standard Materials** – For ITS/SOM Standard Materials, the Project Engineer is required to follow the approval requirements per the referenced sections listed in Table 9-4.100-1:

2. **Preliminary Samples** – A preliminary sample of the material will be required only if coded on the Request for Approval of Material DOT Form 350-071.

3. **Acceptance**

   a. **ITS/SOM Non-Standard Materials** – Acceptance of ITS/SOM materials shall be determined by the requirements of the contract, and/or consultation with either Region Traffic Engineer or the State Materials Laboratory.

b. **ITS/SOM Standard Materials** – Acceptance requirements for the following standard materials are located in the referenced sections in Table 9-4.100-1.

Material	*Construction Manual* Section
Anchor Bolts, Nuts, and Washers	9-4.25
Concrete	9-4.76
Conduit	9-4.64
Electrical Conductors and Fiber Optic Cable	9-4.65
Electrical Service Cabinets	9-4.93
High Strength Bolts, Nuts, and Washers	9-4.24
Junction Boxes, Cable Vaults, and Pull Boxes	9-4.85
Luminaires, Lamps, and Light Emitting Diodes (LED)	9-4.68
Painting, Paints, Coating, and Related Materials	9-4.35
Precast Concrete Vaults (Utility, Drainage, etc.) and Box Culverts	9-4.88
Resin Bonded Anchors	9-4.61
Signing Materials and Mounting Hardware	9-4.56
Steel Poles – ITS, Pedestrian, Light, Signal Standards, and High Mast Light Poles	9-4.66
Steel Sign Structures – Cantilever, Sign Bridge, Bridge Mounted, Roadside	9-4.63
Timber and Lumber	9-4.36
Traffic Signal Controller Assembly	9-4.79

Table 9-4.100-1

4. **Field Inspection** – Field verify per Section 9-1.5.

5. **Specification Requirements** – See *Standard Specifications* Sections 8-20 and 9-29. Review contract documents to determine if supplemental specifications apply.

6. **Other Requirements** – If there is a question on the intended use of ITS/SOM materials contact the Region Traffic Engineer or the State Materials Laboratory.

   a. If the Contractor submits an ITS/SOM material that is not specifically identified in the contract provisions, and it has been determine by either the Region Traffic Engineer or the State Materials Laboratory as an approved equal, contact with the State Construction Office is required.

   b. **Materials Fabrication Inspected CMO** – Certification of Material Origin will be the responsibility of the Materials Fabrication Inspector as defined in Section 9-2.1A.

   For projects with the Buy America provision refer to Section 9-1.2E to determine if Certification of Materials Origin is required. If the Buy America requirement applies, the Contractor is required to submit to the Project Engineer a Certification of Materials Origin for all steel or iron materials. The Project Engineer will track the quantity of the materials and retain these documents in the project records.

c. **Non-Fabrication Inspected CMO** – For projects with the Buy America provision refer to Section 9-1.2E to determine if Certification of Materials Origin is required. If the Buy America requirement applies, the Contractor is required to submit to the Project Engineer a Certification of Materials Origin for all steel or iron materials. The Project Engineer will track the quantity of the materials and retain these documents in the project records.

9-4.101 Media Filter Drain Mix

1. **Approval of Material** – Approval of materials is required prior to use. Material will be approved by the *Qualified Products List* or Request for Approval of Material DOT Form 350-071. Be certain to verify that the product is in fact qualified for its intended use and the product is listed under the appropriate specification. For the aggregate component, if the ASA database indicates the aggregate source has expired, or will expire before the end of the project, a source evaluation may be required, Contact Region Materials office for further direction. If samples are required, the Region Materials office will coordinate with the ASA engineer to obtain the necessary samples in accordance with SOP 128.
2. **RAM Submittal**
   a. **Horticultural Grade Perlite, Agricultural Grade Dolomite Lime, and Agricultural Grade Gypsum** – Attach Catalog Cut or supply a bag label showing conformance with the contract documents to assist in approving the RAM.
3. **Preliminary Sample** – A preliminary sample of material will be required only if coded on the Request for Approval of Material DOT Form 350-071.
4. **Acceptance**
   a. **Aggregate for Media Filter Drain Mix** – Acceptance shall be administered under *Standard Specifications* Section 3-04 for "Other Materials" based on one sample every 1000 tons. Acceptance samples shall be tested for grading and fracture.
   b. **Horticultural Grade Perlite, Agricultural Grade Dolomite Lime, and Agricultural Grade Gypsum** – Miscellaneous Certificate of Compliance per Section 9-1.4E or Catalog cuts per Section 9-1.4G.
5. **Field Inspection** – Field verify per Section 9-1.5. Ensure that the aggregate gradation remains constant. Ensure that the finish product shall be clean, uniformly mixed, and free from wood, bark, roots, and other deleterious materials.
6. **Specification Requirements** – Review contract documents for specification requirements.
7. **Other Requirements** – If there is a question on the intended use of Media Filter Drain Mix, contact Headquarters Hydraulics Office at 360-705-7260.

9-5 Quality Assurance Program

9-5.1 General

The purpose of the WSDOT Quality Assurance Program (QAP) is to ensure that materials incorporated into any highway construction project are in conformity with the approved plans and specifications, including any approved changes. This program also conforms to the criteria in FHWA regulation for *Quality Assurance Procedures for Construction* (23 CFR 637).

The QAP includes the following:

- Qualified Tester Program
- Equipment Calibration/Standardization/Check and Maintenance Program
- Qualified Laboratory Program
- Independent Assurance (IA) Program

9-5.2 Quality Assurance Program Structure and Responsibilities

Table 9-3 outlines the structure of the quality program for WSDOT.

State Materials Laboratory (SML) Requirements	
State Materials Engineer	Oversees • WSDOT Quality System Program • Accreditation of State Materials Laboratory • Program compliance reports to FHWA
Quality Systems Manager	Management of WSDOT's Quality System Program which includes: • Qualified Testers • Independent Assurance • Qualified Laboratory • Maintaining up-to-date Test Procedures in the *Construction Manual* M 41-01 and the *Materials Manual* M 46-01 • Maintaining Calibration/Standardization/Check Equipment Procedures • Auditing SML and regions compliance to the requirements of the QAP • Supervising Laboratory Review Team • Compiling yearly report for FHWA
SML Laboratory Managers	Management of their laboratory's QAP which includes: • Maintaining qualified testers • Maintaining calibrated/standardized/checked equipment for their department • Maintaining AMRL/CCRL Accreditation

Region Materials Laboratory Requirements	
Region Materials Engineer	Oversees • Region Quality System Program • Qualification of Region Materials Laboratory
Region Laboratory Supervisor	Management of the Region Laboratory Quality System Program which includes: • Maintaining qualified testers • Maintaining calibrated/standardized/checked equipment for the Region Materials Laboratory and field laboratories • Participating in biannual laboratory review
Region Independent Assurance Inspector	Management of the Region's QAP which includes: • Qualified tester – Determining how the program will be implemented in the region within the guidelines of this section – Proctoring written and proficiency examinations – Maintaining documentation of tester qualification • Independent Assurance – Determining frequency of visits – Witnessing IA process in the field – Investigating excessive deviations on split samples and aiding in the review of reports of deviation from specified sampling and testing procedures – Providing yearly report of IA to Quality Systems Manager • Other functions (optional by Region) – Conducting initial training for qualification – Mentoring new or newly qualified testers to enhance efficiency and confidence – Assisting in or conducting testing and inspection training in concert with the Region Construction Trainer – Reviewing materials, test-related records, and forms – Radiation safety officer
Project Engineering Office Requirements	
Project Engineer	Management of the Project Office QAP which includes: • Training of qualifying testers – Providing training opportunities – Providing opportunity for experience in the field – Maintaining qualified testers on projects – Maintaining staff of qualified testers to perform the testing on all projects under the management of the Project Engineer
PE Office Contact (appointed by PE as the office contact to the IAI)	• Tracking qualification of testers • Contacting IAI to schedule tester qualification or requalification • Contacting IAI to schedule an IA visit
Individual Tester Requirements	
Qualified Tester	Management of personal qualification which includes: • Preparing for requalification • Notifying office contact of approaching expiration of qualification; notification should be one month in advance of the expiration of qualification • Notifying office contact to schedule an IA review
Unqualified Tester	Management of personal qualification which includes: • Reading test procedure • Hands-on practice of test procedure • Notifying office contact when ready for written and proficiency examinations

Table 9-3

9-5.3 Qualified Tester Program

This program provides uniform statewide procedures for sampling and testing personnel qualification to ensure that tests required by the specifications are performed according to the prescribed sampling and testing methods. This program is based on AASHTO R 25.

All personnel who perform acceptance testing on materials must be qualified in the test method they are performing or may work under the direct supervision of a tester qualified as a trainee. An individual may only work as a trainee for one year.

It is the responsibility of the Project Engineer to ensure that all personnel sampling or testing materials on a project or in a field laboratory are qualified.

9-5.3A Types of Qualifications

The Qualified Tester Program has two types of qualifications; module qualified testers and method qualified testers.

9-5.3A(1) Module Qualified Tester

A module qualified tester is an individual that has proficiency in one or more testing modules. There are five modules which represent the majority of the acceptance tests performed on highway projects. Each module contains a defined list of test procedures.

To qualify as a module qualified tester, an individual must pass a written and a proficiency examination for each method in the module. These modules are listed in Table 9-4.

9-5.3A(2) Method Qualified Tester

A method qualified tester is an individual that has proficiency in one or more test procedures which may partially encompass methods in the qualification modules.

9-5.3B Qualification Process

All persons responsible for sampling of materials and performing acceptance testing on a project are required to be qualified. To become qualified an individual must pass a proficiency examination or a combination of a proficiency and written examination.

9-5.3B(1) Frequency of Qualification

WSDOT is transitioning to the Western Alliance for Quality Construction (WAQTC) Testing Technician Qualification Program. All WSDOT testers will be required to be WAQTC qualified by January 1, 2018. Testers Qualified in 2015 will have their current Qualifications extended to December 31, 2017.

As of January 1, 2016, materials testers whose qualification were not extended and new testers are required to be qualified in the following program(s) to test materials:

- WAQTC Aggregate and Hot Mix Asphalt Modules
- Washington Density Qualification (WDQ) Module.

The above qualifications will be good for five years from the date of qualification.

As of January 1, 2016, all testers whose qualification were not extended and testers new to the qualification program must be either WAQTC or ACI qualified to test concrete. The WAQTC qualification given by the Region Independent Assurance Inspectors will be good until December 31, 2017 and the ACI qualification will be good for five years from the date of qualification. All concrete testers will be required to be ACI qualified by January 1, 2018.

Materials qualification may not be granted or maintained by Grandfathering, the acceptance of a Professional Engineer or Engineer-in-Training Certificate, or lifetime qualification.

New hires with a current WAQTC Qualification from another state will be given reciprocity into the WSDOT system if they have proof of qualification and are in good standing with the state of origin. The expiration date of the WAQTC qualification will remain the same as their original qualification.

Procedure Number	Test Method
Aggregate Module	
AASHTO T-2	**WSDOT FOP for AASHTO for** the Sampling of Aggregates
AASHTO T-27/T11	**FOP for WAQTC/AASHTO for the Sieve Analysis of Fine & Coarse Aggregates**
AASHTO T-176	**WSDOT FOP for AASHTO for** Determining the Plastic Fines in Graded Aggregate by Use of the Sand Equivalent Test
AASHTO T-248	**WSDOT FOP for AASHTO for** Reducing Field Samples of Aggregates to Testing Size
AASHTO T-255	**WSDOT FOP for AASHTO for** Determining the Total Moisture Content of Aggregate by Drying
AASHTO T-335	FOP for AASHTO for Determining the Percentage of Fracture in Coarse Aggregate
AASHTO T-304	WSDOT FOP for AASHTO Uncompacted Void Content of Fine Aggregates
Hot Mix Asphalt Module	
AASHTO T-168	**FOP for WAQTC/AASHTO for** the Sampling Bituminous Paving Mixtures
AASHTO T-209	**WSDOT FOP for AASHTO for** Determining the Theoretical Maximum Specific Gravity and Density of Bituminous Paving Mixtures
AASHTO T-27/T11	**FOP for WAQTC/AASHTO for** the Sieve Analysis of Fine & Coarse Aggregates
AASHTO T-40	**FOP for WAQTC/AASHTO for** Sampling Bituminous Materials
AASHTO- T 166	WSDOT FOP for AASHTO Bulk Specific Gravity of Compacted Hot Mix Asphalt Using Saturated Surface Dry Specimens
AASHTO T-308	**WSDOT FOP for AASHTO for** Determining Asphalt Content of Hot Mix Asphalt (HMA) by the Ignition Method
AASHTO T-329	FOP for AASHTO Moisture Content of Hot Mix Asphalt (HMA) by Oven Method
WSDOT 712	Standard Method of Reducing Bituminous Paving Mixtures
WSDOT 716	Method of Random Sampling for Location of Testing and Sampling Sites
AASHTO T 312	FOP for AASHTO for Preparing and Determining the Density of Hot-Mix Asphalt (HMA) Specimens by Means of the Superpave Gyratory Compactor

Concrete Module	
AASHTO T-23	**WSDOT FOP for AASHTO for** Making and Curing Concrete test Specimens in the Field
AASHTO T-119	**WSDOT FOP for AASHTO for** Determining the Slump of Hydraulic Cement Concrete
AASHTO T-152	**FOP for WAQTC/AASHTO for** Determining the Air Content of Freshly Mixed Concrete by the Pressure Method
WAQTC TM-2	Sampling Freshly Mixed Concrete
AASHTO T-309	**WSDOT FOP for AASHTO for** Determining the Temperature of Freshly Mixed Portland Cement Concrete
WSDOT 716	Method of Random Sampling for Location of Testing and Sampling Sites
Embankment and Base Density Module	
AASHTO T-310	**WSDOT FOP for AASHTO for** In-Place Density and Moisture Content of Soil and Soil Aggregate by Nuclear Method
WSDOT SOP 615	Determination of the % Compaction for Embankment & Untreated Surfacing Materials Using the Nuclear Moisture-Density Gauge
Hot Mix Asphalt Density Module	
WAQTC TM-8	FOP for WAQTC for In Place Density of Bituminous Mixtures Using the Nuclear Moisture Gauge
WSDOT 716	Method of Random Sampling for Location of Testing and Sampling Sites

Testing Modules
Table 9-4

9-5.3B(2) Preparation for Initial Qualification

Prior to an individual taking either the written exam or the proficiency exam, it is the responsibility of the Project Engineer to make sure the following requirements have been met by the individual:

- Studied and understands the test method(s) for the method or module.
- Has watched the test performed by a qualified tester, attended classroom training or on-line training relevant to the test procedure.
- Has practiced the test procedure under the supervision of a qualified tester.
- Has successfully completed a hands-on demonstration of the test procedure which conforms to test method checklist(s) without coaching.
- Has worked in the field or laboratory under the close supervision of a qualified tester experienced in the test method(s).

These requirements may be waived for individuals with previous testing certification such as WAQTC or ACI.

9-5.3C Initial Qualification Examination Requirements

Qualification examinations will be either a proficiency examination or a combination of proficiency and written examination. Written and proficiency examinations are given to determine if the tester possesses the knowledge and skills necessary to satisfy the established qualification requirements.

Written and proficiency examinations for qualification of testers will be administered by the one or more of the following WSDOT personnel:

- Region independent assurance inspector (IAI)
- Assistant Region IAI, Construction Trainer
- Qualified Region Materials Laboratory staff under the direction of the Region Materials Engineer
- Qualified SML laboratory staff under the direction of the State Materials Engineer

Written examinations and checklists for proficiency examinations will be reviewed and updated yearly, under the direction of the Quality Systems Manager. Updated examinations will be published to the Independent Assurance Inspectors share site each year no later than January 30.

The individual administering any proficiency examination shall document the examination using the appropriate test method checklist from the *Construction Manual* M 41-01, *Materials Manual* M 46-01, AMRL, or CCRL.

9-5.3C(1) Written Examinations

Written examinations are required for Module Qualification and are optional for Method Qualification. Written Module Qualification examinations will consist of a series of written examinations based on each test procedure within the modules listed in Table 9-4.

The written examinations will be closed book and will consist of five or more multiple choice questions.

To successfully pass a written examination the individual must have a score of 60 percent or more on any individual method examination and an overall module score of 70 percent or more.

9-5.3C(2) Proficiency Examinations

Using a test procedure checklist from the *Construction Manual* M 41-01, *Materials Manual* M 46-01, AMRL or CCRL the examiner will document the tester's conformance to the test procedure. The tester is required to have a current copy of the test procedure available during the proficiency examination. Scoring of the proficiency exam will be on a Satisfactory/Unsatisfactory basis.

A satisfactory performance rating will be given for a performance that consists of the following:

1. Performing the key elements of the procedure correctly and in sequential order as established by the Test Method Checklist.

   Note: Incidences of single to several errors as isolated, first-time occurrences, which are acknowledged and corrected on the spot and discussed with the proficiency examination administer may constitute satisfactory performance.

2. Completing the test within the time limit of the test procedure or a reasonable time as defined by the administrator of the test.

3. Performing the calculations correctly.

An unsatisfactory performance rating will be given for a performance that consists of repeated infractions or incorrect performance of individual critical items on the checklist and/or the inability to complete the test method within the designated time limit.

The following items will result in immediate termination of the proficiency examination:

- Observed falsification of test reports.
- Violations of safety, hazardous materials.
- Violations of nuclear materials security standards.
- Failure to provide proper care of equipment.

9-5.3D Documentation of Initial Qualification

The IAI will be responsible for maintenance of the Region's qualified tester information in the Tester Qualification Database and in hard copy files within the Region. Originals of each tester's qualification examination (written examination and checklist) will be kept in the Region files for a minimum of seven years.

The State Materials Laboratory will be responsible for maintaining the Tester Qualification computer program.

9-5.3E Failure of Examination

An individual failing either the written or proficiency examination may request a reexamination. The waiting period for reexamination is as follows:

1. **First Failure** – A minimum of three days waiting period, unless this time limit is waived by the IAI.
2. **Second Failure** – A minimum of a one week waiting period or a minimum of three days waiting period and a letter from the Project Engineer documenting the steps taken to prepare the individual for reexamination.
3. **Three or more consecutive failures** – A minimum of a one month waiting period and a letter from the Project Engineer documenting the steps taken to prepare the individual for reexamination. When an individual fails the proficiency examination more than three times, consecutively, the IAI with the approval of the Region Materials Engineer may determine that the individual is not eligible for qualification.

9-5.4 Requalification of Testing Personnel

Once a tester's qualification expires he/she may no longer perform acceptance testing until a requalification visit has been satisfactorily completed Therefore, to prevent a lapse in qualification the tester should notify the Project Office contact one month in advance of their qualification expiration. Upon notification of the pending qualification expiration the Office contact should get in touch with the IAI to schedule a requalification visit.

Requalification requires the tester to perform a proficiency examination in the presence of one or more of the following WSDOT personnel:

- Region independent assurance inspector (IAI)

- Assistant Region IAI, Construction Trainer
- Qualified Region Materials Laboratory staff under the direction of the Region Materials Engineer or a Qualified SML laboratory staff under the direction of the State Materials Engineer.

If a tester's qualification expires prior to their requalification, the Project Engineer may request a 30 day extension of qualification. The extension must be approved by the Region IAI and the tester must be requalified within the 30-day extension period.

9-5.4A Requalification Examination

The requalification examination will meet the requirement of Section 9-5.3C(2) Proficiency Examinations. Results of the requalification will be reported as either Satisfactory or Unsatisfactory as defined in Section 9-5.3C.

The proficiency examination may be performed on a project site or in a laboratory.

If the tester's performance is satisfactory, the administrator of the proficiency examination shall document the examination using the appropriate test method checklist from the *Construction Manual* M 41-01, *Materials Manual* M 46-01, AMRL, or CCRL. If the requalification is performed in the field, the administrator of the proficiency exam may choose to obtain an Independent Assurance sample in accordance with the section.

If the performance is unsatisfactory the administrator may recommend corrective action.

Unsatisfactory performance constitutes repeated occurrences of previous on-the-spot corrections, incorrect performance of critical steps of the testing procedure. Administrator may also assign unsatisfactory performance based on observed falsification of test reports, violations of safety, hazardous materials or nuclear materials security standards, or failure to provide proper care of equipment.

9-5.5 Lapse in Qualification

A tester missing two consecutive yearly annual evaluations shall be required to qualify in accordance with Section 9-5.3C.

9-5.6 Suspension of Qualification

An IAI may recommend to the Region Materials Engineer that a tester's qualification be suspended for the following items:

1. Repeated failure of proficiency examinations for requalification.
2. Observed falsification of test reports.
3. Violations of safety that may result in injury or death to the individual or coworkers.
4. Violation of hazardous materials or nuclear materials security standards.
5. Failure to provide proper care of equipment.

If an IAI recommends suspension of a tester's qualification, a letter documenting the reason(s) for suspension of qualification will be sent to the tester's Project Engineer. Upon receipt of the letter the Project Engineer will remove the tester from performing the tests related to the suspension of qualification until all issues have been resolved to the satisfaction of the IAI.

In the case of a serious safety issue or a violation of nuclear material security standard, the IAI will notify the Project Engineer of the violation and may request the removal of the tester from the performance of that test procedure(s). The IAI will document the violation. The Region Materials Engineer, with recommendations from the IAI and the Project Engineer, will determine the duration of the suspension of qualification.

9-5.7 Report of Deviation from Specified Sampling and Testing Procedures

A report of a deviation from specified sampling and testing procedures requires following the procedure outlined in *Standard Specifications* Section 1-06.2(1). The Project Engineer should work with the Region IAI to review the test procedure and determine what, if any, deviation occurred during the sampling and testing. After determining if a deviation took place the Project Engineer can respond in writing to the report.

9-5.8 Calibration/Standardization/Check of Equipment

All laboratory equipment will be calibrated/standardized/checked as required by the test procedures, AASHTO R 18 or WSDOT Verification Procedures.

The State Materials Laboratory will calibrate/standardize/check all required equipment every 12 months unless otherwise stated in the test procedure, AASHTO R 18 or the WSDOT Verification Procedures.

Region and field laboratories will calibrate/standardize/check all required equipment once a year unless otherwise specified by the WSDOT Verification Procedures. All calibration/standardization/checks will be completed by April 1st of each year. A tag bearing the year the calibrate/standardize/check expires will be affixed to all calibrated/standardized/checked equipment. The tags will be provided to the regions each year by the Quality Systems Manager.

9-5.9 Qualified Laboratories

All laboratories performing acceptance testing on state or Federal funded construction projects must be qualified.

Qualification of the State Materials Laboratory will be by accreditation through the AASHTO Accreditation Program (AAP).

9-5.9A Qualification of Region or Other Subordinate Laboratories

Qualification of Region or other subordinate laboratories requires the following:

1. Identification of all test methods performed on a regular basis. Methods must conform to those established by WSDOT for materials acceptance.

2. Annually, calibration/standardization/check equipment laboratory and field test equipment, using State Materials Laboratory equipment calibrated/standardized or checked equipment procedure. All calibrated/standardized or checked equipment must have a calibration tag stating the expiration date of the calibration/ standardization/check.
3. Maintain staff qualification for all methods performed in the laboratory. Qualification shall be either by Module Qualified Tester or Individual Method Qualified tester.
4. Each Region laboratory will be reviewed biennially by a team from the State Materials Laboratory. The process of the review will be in accordance with QC3, which is modeled after the AASHTO Materials Reference Laboratory (AMRL) inspection program.

9-5.9B Qualification of Private Laboratories

Qualification of Private Laboratories requires the following:

1. Approval for use by the State Materials Engineer.
2. The private laboratory must have an up-to-date *Laboratory Quality Systems Manual* meeting the requirements of AASHTO R 18.
3. The private laboratory must have documentation of tester training and qualification meeting the requirements of AASHTO R 25.
4. The testing equipment must be labeled with a sticker showing the date of calibration/standardization/check and all equipment calibration/standardization/ check documentation must meet the requirements of AASHTO R 18.
5. The State Materials Laboratory Review team may conduct a yearly on-site review of the laboratory facilities, tester performance and calibration/standardization/ check of the testing equipment in accordance with QC 3.

9-5.10 Independent Assurance Program (IAP)

The IAP shall consist of a system based approach to Independent Assurance (IA). This approach bases the frequency of IA evaluations on time, regardless of the number of tests, quantities of materials, or numbers of projects tested by the active qualified tester. This program is based on AASHTO R 44.

The overall IAP for the Region will be managed by the Region's IAI. Each active qualified tester will have an IA evaluation for each module or method they are qualified in once a year. An active qualified tester is defined as, any qualified tester performing at least one acceptance test per year.The Project Office is responsible for contacting the IAI and scheduling an IA visit when the following testing is occurring on a project:

- Concrete
- Aggregate
- HMA
- Density (HMA or Embankment)

The on-site evaluation of module qualified testers shall include evaluation of all test methods in the applicable qualification module. Method qualified testers will be evaluated in the performance of the individual test method.

IAP evaluations will be performed as follows:

- Concrete and Density test method evaluations will be by observation.
- Hot Mix Asphalt and Aggregate test methods shown in Table 9-5 will be evaluated by observation and split sample. All other Hot Mix Asphalt and Aggregate test methods will be evaluated by observation only.
- The field split of HMA or Aggregate will be tested by the individual who sampled and reduced the material, under the observation of the IAI or a qualified Region laboratory staff member under the direction of the Region Materials Engineer.
- The laboratory split of the IA sample must remain in the custody of the IAI until the sample is logged into the Region Materials Laboratory.
- A qualified tester from the Region Materials Laboratory will perform the testing on the laboratory portion of the split sample. The same tester may not perform both the field and the laboratory testing on an IA sample.
- The same equipment may not be used to test the laboratory and the field portions of the IA split sample.
- All equipment used for testing the split samples will be evaluated for condition and current calibration/standardization/check tags.

A record of the evaluation will be kept by the IAI in the Region Office and provided to the PE upon request. The record should contain the following:

- Name of qualified tester.
- Observations concerning the condition of the testing equipment.
- Observations concerning the performance of the qualified tester including, suggestions or on the-spot corrections for improving the tester's performance.

9-5.10A Comparison Evaluation of the Independent Assurance Sample

The IA split sample will be tested by the Region laboratory except, when the Region laboratory performs the acceptance testing. If the Region Materials Laboratory performs the acceptance testing then, the IA split sample will be tested by the State Materials Laboratory or another Region Materials Laboratory. The tester performing the comparison evaluation of the Independent Assurance sample must be qualified in the procedures being evaluated.

The calibrated/standardized/checked testing equipment used for the comparison must be different equipment than that used by the field during the split sample evaluation.

9-5.10B Assurance and Acceptance Test Results

Independent Assurance split samples will be compared using Table 9-5. Reports of the degree of conformance will be sent to the Project Engineer and the Region IAI by the Region Materials Engineer (RME).

Test	Normal Range of Deviation	Maximum Range of Deviation
Sand Equivalent	± 8 points	± 15 points
Fracture	± 5 percent	± 10 percent
Asphalt Binder Content (HMA)	± 0.3 percent	± 0.6 percent
Sieve Analysis – All Items: No. 4 sieve and larger	± 5 percent	± 8 percent
No. 6 sieve to No. 80 sieve	± 3 percent	± 6 percent
No. 100 sieve to No. 200 sieve	± 2 percent	± 4 percent

Table 9-5

Comments reflecting the degree of conformance will be entered in the remarks section of the report by the Region Materials Engineer. The degree of conformance will be determined according to the deviation ranges noted below. Gradation test results will be compared only on specification screens.

In the table above, "Normal Range" indicates an acceptable range of variation between test results and no action is required. Test results that fall in this category will be so indicated by the wording "*normal deviation*" on the IA reports.

Test results falling outside of the "Normal Range" but within the "Maximum Range," will be indicated by the wording "*questionable deviation*" on the I a reports.

Deviations falling into the questionable category will be reviewed by the Region IAI. The review may include the following:

- Check for calculation errors.
- Review of sampling and splitting procedure.
- Review of test procedure.

Findings of the review will be documented and a copy of the report retained in the Region IAI's file.

Test results exceeding the maximum range will be indicated by the wording "*excessive deviation*." Deviations falling in the excessive category will require a review by the Region IAI. The review will include the items listed under questionable deviations and may require the field tester to pull another IA sample. The IAI will document the findings of the review. If further action is required the IAI will submit a report to the Region Materials Engineer and Project Engineer. If further action is not required a copy of the report will be retained in the IAI's files.

9-5.10C Independent Assurance Report

WSDOT is required by 23 CFR Part 637 to provide an annual report to the FHWA summarizing the results of the IA program. These reports provide a tool for the Region and WSDOT to analyze trends, identify training needs, and make improvements.

Each Region IAI will submit an annual IA report to the Quality Systems Manager. The report will be submitted in January and will summarize the IA results of the previous year. The annual report will include the following:

1. Number or percent of testers evaluated.
2. How often the qualified testers were evaluated.
3. If applicable, include a general statement as to why all qualified testers were not evaluated.
4. What, if any, problems occurred and why.
5. A general statement as to how any problems that were reported were resolved.

The focus of Independent Assurance sampling is based on individual tester's activity and is not intended to provide independent assurance sample reports on all projects or on all materials on any particular project.

9-6 Radioactive Testing Devices

9-6.1 Administration and Safety

This chapter provides guidance for personnel using, transporting, and administering the use of, nuclear density gauges. The instructions included in this chapter will be used throughout the Washington State Department of Transportation for the express purpose of regulating the use of nuclear density gauges containing radioactive materials.

Each Region shall have a Radiation Administration Officer (RAO) and a Radiation Safety Officer (RSO) whose duties are described in Section 9-6.2 and 9-6.3 respectively. All Regional RAO and RSO personnel must have radiation safety training. Only personnel who have successfully completed the WSDOT "Nuclear Gauge Safety and Operations" course are authorized to use or transport the nuclear density gauge. Personnel transporting gauges are also required to have training that satisfies USDOT training requirements of 49 CFR 172, subpart H (HAZMAT). This training can be satisfied by successful completion of the (WSDOT) eLearning course "Hazmat Training for the Portable Nuclear Gauge." Recurrent training is required every three years. Personnel performing acceptance testing with the nuclear density gauge must become a qualified or interim tester in either TM-8, In-Place Density of Bituminous Mixtures Using the Nuclear Moisture Gauge, and or, T-310, In-Place Density and Moisture Content of Soils and Soil-Aggregate by Nuclear Method. The operator's responsibilities for safety and security of the gauges are described in Section 9-6.4.

All personnel using or responsible for the nuclear density gauge shall be:

1. Thoroughly familiar with the safe handling techniques for using radioactive materials.

2. Fully informed of the hazards to health that exists near radioactive materials.
3. Completely familiar and in compliance with the following rules and regulations:
   a. Rules and Regulations for Radiation Protection by the State Department of Health, Division of Radiation Protection, Title 246, WAC.
   b. *Radiation Emergency Handbook* by the State Department of Health.

Copies of the above publications will be kept by the Region Radiation Safety Officer and at the storage location of the gauge. A copy of the *Radiation Emergency Handbook* will also be supplied with each nuclear density gauge. Authorized Operator(s) will read this handbook before using the radioactive testing device for testing.

If an emergency as outlined in the *Radiation Emergency Handbook* occurs, the following people or agencies should be notified by the individual in charge of the nuclear density gauge:

- Radiation safety officer
- Radiation administration officer

The RSO or the RAO will notify the following people or agencies:

- Radiation Control Program, Health Services Division, State Department of Health, Olympia, WA (Phone 206/NUCLEAR).
- Washington State Patrol, if a public hazard exists.
- Radiation Administration Officer or Radiation Safety Officer, at the State Materials Laboratory.

The telephone numbers of these agencies or individuals will be posted at all storage sites and a copy of these numbers shall be kept with each nuclear density gauge.

WSDOT employees that work around or with nuclear gauges need to know the potential health and safety hazards of working with nuclear gauges and their individual rights. Each office that uses or stores nuclear gauges shall have a copy of the latest "*Sealed Source Edition Rules and Regulations for Radiation Protection*" published by the Department of Health. Every employee that uses a nuclear gauge, or works near the storage location of the nuclear gauges, must review the applicable Chapters 246-220 Radiation – General Provisions; 246-221 Radiation Protection Standards; 246-222 Radiation Protection – Worker Rights and sign the "Acknowledgment of the Hazards of Working with Radiation Sources" form which is available through the Radiation Safety Officer.

Any individual using radioactive sources or receiving on the job training with radioactive sources must wear a radiation exposure badge which records exposure the body may receive. Radiation exposure badges are assigned to individuals they are not to be used by any other person. Any individual using radioactive sources or receiving on the job training with radioactive sources must be familiar with the conditions outlined in WAC 246-221-010 and WAC 246-221-055 regarding radiation exposure during pregnancy and dose limits to the embryo/fetus. Personnel with valid safety or health concerns may be released from the operation of nuclear gauges without prejudice to their career opportunities with WSDOT.

The acquisition of radiation exposure badges, as needed by each Region, shall be the responsibility of the Region Radiation Safety Officer or a designated individual with radiation safety training. Three-month TLD (Thermal Luminescent Dosimeter) badges indicating exposure to gamma, beta, x-ray, and neutron radiation will be used as a minimum.

Each nuclear density gauge will be supplied in the manufacture's shipping container with an adequate latch. While transporting and when storing the nuclear density gauge, it must be secured with a minimum of three levels of security using locks:

1. Security level one is considered to be a combination of a lock on the handle of the nuclear density gauge, and a lock on the manufacture's shipping container.
2. Security level two is considered to be the chain and lock combination, or other locking mechanism, used to secure the manufacturers shipping container to the vehicle if in transport or field use, or to a storage bench or locker in an approved storage facility.

   Note: Security level two must prevent the manufacturers shipping container from being opened if the lock is removed.
3. Security level three is considered to be:
   a. If a passenger vehicle is used for transporting, the manufacturers shipping container containing the nuclear density gauge, which is secured and locked in the trunk.
   b. If a station wagon, van, or panel truck is used, the manufacturers shipping container containing the nuclear density gauge, which is secured and locked in the back of the vehicle in such a manner as to prevent it from moving during transport.

      Note: If the manufacture's shipping container can be seen through a window or other opening it must be covered.
   c. If a truck with a utility box is used, the manufacturers shipping container containing the nuclear density gauge must be secured in the utility box with the storage lid locked. The nuclear density gauge shall not be transported in the cab of the truck.
   d. If a truck with a canopy is used, the manufacturer's shipping container containing the nuclear density gauge must be secured to the bed of the truck and the canopy lid locked. The nuclear density gauge shall not be transported in the cab of the truck.
   e. If a licensed storage location, or temporary storage facility approved by the Region RSO is used, the storage facility door must be locked.

   At all times, the key(s) for the security locks will be in the possession of the individual responsible for the nuclear density gauge.

   Every effort shall be made to store and transport nuclear density gauges in a manner that minimizes its view from the general public.

When the nuclear density gauges are not in use or in transit, they must be stored with three levels of security in licensed storage locations, or temporary storage facilities approved by the Region RSO.

Performance audits shall be conducted randomly by the Region Radiation Safety Officer or designee to ensure that each gauge operator and transporter:

1. Understands the security and transportation requirements described above.
2. Has the necessary means available to use three levels of security in each of their transport vehicles.
3. Is actively employing the three levels of security while gauges are out of a licensed storage area.

The Region Radiation Safety Officer shall retain records of performance audits.

9-6.2 Radiation Administration Officer (Region Materials Engineer)

The Radiation Administration Officer (RAO) will be responsible for administering the use of radioactive material within the Region.

The RAO will obtain, revise, and renew the Region's Radioactive Material License issued by the Washington State Department of Health. A license indicates the strength and type of radioactive sources that a Region may possess.

Licenses are issued subject to all the requirements of the Washington Rules and Regulations for Radiation Protection and to the conditions specified in the license. Licenses are also subject to any additional requirements of the Department of Health as stated in letters issued by DOH. Where a letter containing a license condition requirement differs from the Regulations, the letter will supersede the regulations insofar as the license is concerned.

When a change occurs in the radiation program, which would require a change to the current Radioactive Material License, the Licensee (RSO) will notify the Department of Health and request an appropriate amendment.

The Radiation Safety Officer (RSO) must be listed on the license. Individual operators are not required to be listed on the license, but the RAO or RSO must maintain a list of Authorized Operators. This list of Authorized Operators should include the operator's name, type of training, final test score, and a copy of the training certificate. The RAO or RSO will be responsible for the storage of the nuclear density gauge when not in field use and the assignment of nuclear density gauges to the individual project offices. The RAO or RSO will be responsible for maintaining the following records:

1. List of qualified operators within the Region.
2. List of qualified gauge transporters within the Region.
3. Radioactive testing device location records.
4. Radioactive testing device shipping records.

Prior to shipping or transferring a nuclear density gauge from one licensed organization to another, the shipper shall check, and be assured that, the receiver has a valid radioactive material license; and that the shipped or transferred sources do not exceed the limitations of the receiver's license. Shipment to authorized personnel within the

Region is covered by the Region's license. The State Materials Laboratory shall be notified when repairs or calibration are needed for any of WSDOT's nuclear density gauges. When the nuclear density gauges are not in field use, the normal storage will be at the Region office. The Region office shall have an area designated for this purpose. The following information shall be posted on the walls of the storage facility to notify personnel of the existence of radiation:

1. "Caution – Radioactive Materials" sign.
2. DOH Form RHF-3 "Notice to Employees."
3. WAC Chapters 246-220, 246-221, and 246-222 of the Rules and Regulations for Radiation Protection.
4. DOH Form "Notification of a Radiation Emergency."

9-6.3 Radiation Safety Officer

The Radiation Safety Officer (RSO) will be responsible for maintaining the radioactive material license. The RSO will be responsible for maintaining the following records:

1. Leak test records.
2. Medical records.
3. Radiation Exposure Report.
4. Minor testing device maintenance as outlined in the Radioactive Materials License.
5. The Acknowledgment of the Hazards of Working with Radiation Sources form.

Leak testing is required by law and is simply a swabbing of the sealed source to ascertain that no radioactive contamination has occurred from the nuclear source. The Region RSO shall be responsible for having each source leak tested every twelve months. The analysis of leak tests shall be done by a commercial firm licensed to do this work.

The service contract will be obtained by individual regions. Records of leak test results shall be kept in units of micro-curies and maintained for inspection. Any leak test revealing the presence of 1850 Bq or more of removable radioactive material shall be reported to the Department of Health, Division of Radiation Protection, P.O. Box 47827, Olympia, WA 98504-7827, within five days of the test. This report should include a description of the defective source or device, the results of the test, and the corrective action taken.

The RSO will be responsible for radiation exposure reports for personnel in that Region. Exposure records shall be kept on Department of Health Form RFH-5, or in a manner which includes all information required on said form. Each entry shall be for a period of time not exceeding one calendar quarter.

9-6.4 Authorized Operators

The Authorized Operators will be directly responsible to the RAO for the use and storage of the nuclear density gauge in the field and to the RSO for all safety in regard to the nuclear density gauge.

The Authorized Operators shall be responsible for posting the following information at all field storage areas:

1. "Caution – Radioactive Materials" Sign.
2. DOH Form RHF-3 "Notice to Employees."
3. WAC Chapters 246-220, 246-221, and 246-222 of the Rules and Regulations for Radiation Protection.
4. DOH Form Notification of a Radiation Emergency

The Authorized Operator must keep the RAO or RSO informed of the location of the nuclear density gauge at all times. (The State Radiation Control Unit inspectors will want the sources produced or the exact locations given during their periodic inspections.) If the exact location where the nuclear density gauge will be used is known in advance, it should be noted before leaving the Region office, and if unknown, shall be forwarded to the RAO or RSO as soon as it is known.

The operation of the shutter-operating device should be frequently checked, and any malfunction reported to the RAO or RSO immediately. When not in use, the source index handle will be locked and the nuclear density gauge locked in an adequate storage facility. When operating the nuclear gauge (i.e., when the handle is in the "USE" position), unauthorized persons are not to be within 15 feet (5 meters) of the gauge.

9-6.5 Authorized Transporters

It is permissible for employees to be an authorized transporter of nuclear density gauges providing they have the training described in Section 9-6.1. It is not necessary for authorized transporters who are not also authorized operators to be assigned a radiation exposure badge. Authorized transporters will be issued a card stating the employee has "satisfactorily completed Hazmat training for transportation of the portable Nuclear Gauge as described in 49 CFR 172.700." Authorized transporters are subject to performance audits as described in Section 9-6.1.

9-7 WSDOT Testing Methods and Field Operating Procedures Included in This Manual

Procedure Number	Owner	Test Method
T 2	WSDOT	FOP for AASHTO for Sampling of Aggregate
TM 2	WAQTC	FOP for WAQTC for Sampling Freshly Mixed Concrete
TM 8	WAQTC	FOP for WAQTC for In-Place Density of Bituminous Mixes Using the nuclear Moisture-Density Gauge
T 23	WSDOT	FOP for AASHTO for Making and Curing Concrete test Specimens in the Field
T 27/11	WAQTC	FOP for WAQTC/AASHTO for Sieve Analysis of Fine and Coarse Aggregates
T 40	WAQTC	FOP for WAQTC/AASHTO for Sampling Bituminous Materials
T 99	WSDOT	FOP for AASHTO for Moisture-Density Relations of Soils Using a 5.5-lb Rammer and a 12-in Drop
T 119	WSDOT	FOP for AASHTO for Standard Test Method for Slump of Hydraulic-Cement Concrete
T 123	WSDOT	Method of Test for Bark Mulch
T 152	WAQTC	FOP for WAQTC/AASHTO for Air Content of Freshly Mixed Concrete by the Pressure Method
T 166	WSDOT	FOP for AASHTO for Bulk Specific Gravities of Compacted Asphalt Mixtures Using Saturated Surface Dry Specimens
T 168	WAQTC	FOP for WAQTC/AASHTO for Sampling Bituminous Paving Mixtures
T 176	WSDOT	FOP for AASHTO for Plastic Fines in Grade Aggregate by Use of the Sand Equivalent Test
T 209	WSDOT	FOP for AASHTO for Method of Test for Maximum Specific Gravity of Bituminous Paving Mixtures – “Rice Density”
T 217	WSDOT	FOP for AASHTO for Determination of Moisture in Soils by means of a Calcium Carbide Gas Pressure Moisture Tester
T 248	WSDOT	FOP for AASHTO for Reducing Samples of Aggregate to Testing Size
T 255	WSDOT	FOP for AASHTO for Total Moisture Content of Aggregate by Drying
T 272	WSDOT	FOP for AASHTO for Family of Curves – One Point Method
T 304	WSDOT	FOP for AASHTO for Uncompacted Void Content of Fine Aggregate
T 308	WSDOT	FOP for AASHTO for Determining the Asphalt Binder Content of Hot Mix Asphalt (HMA) by the Ignition Method
T 309	WSDOT	FOP for AASHTO for Method for Determination of the Temperature of Freshly Mixed Concrete
T 310	WSDOT	FOP for AASHTO for In-Place Density and Moisture Content of Soil and Soil-Aggregate by Nuclear Methods (Shallow Depth)
T 312	WSDOT	FOP for AASHTO for Preparing and Determining the Density of Hot Mix Asphalt (HMA) Specimens by Means of the Superpave Gyratory Compactor
T 329	WSDOT	FOP for AASHTO Moisture Content of Hot Mix Asphalt (HMA) by Oven Method
T 335	WSDOT	FOP for AASHTO for Determining the Percentage of Fracture in Coarse Aggregate
T 420	WSDOT	FOP for AASHTO for Determining the Maturity of Compost (Solvita Test)
SOP 615	WSDOT	Determination of the % Compaction for Embankment & Untreated Surfacing Materials using the Nuclear Moisture-Density Gauge
T 712	WSDOT	Standard Method of Reducing Bituminous Paving Mixtures
T 716	WSDOT	Method of Random Sampling for Location of Testing and Sampling Sites

Procedure Number	Owner	Test Method
SOP 723	WSDOT	Standard Operating Procedure for Submitting Hot Mix Asphalt (HMA) Mix Design for Verification
T 724	WSDOT	Method for Preparation of Aggregate for ACP Job Mix Design
T 726	WSDOT	Method of Test for Mixing Procedure for Binder and Aggregate
SOP 728	WSDOT	Standard Operating Procedure for Determining the Ignition Furnace Calibration Factor (IFCF) for Hot Mix Asphalt (HMA)
SOP 729	WSDOT	Determination of the Moving Average of Theoretical Maximum Density (TMD) for HMA
SOP 730	WSDOT	Standard Operating Procedure for Correlation of Nuclear Gauge Determined Density with Hot Mix Asphalt Cores
SOP 731	WSDOT	Standard Operating Procedure for Method for Determining Volumetric Properties of Hot Mix Asphalt
SOP 733	WSDOT	Standard Operating Procedure for Determination of Pavement Density Differentials Using the Nuclear Density Gauge
SOP 734	WSDOT	Standard Operating Procedure for Sampling Hot Mix Asphalt (HMA) after Compaction (Obtaining Cores)
SOP 735	WSDOT	Standard Operating Procedure for Longitudinal Joint Density
SOP 736	WSDOT	In-Place Density of Bituminous Mixes Using Cores
C 805	WSDOT	Rebound Hammer Determination of Compressive Strength of Hardened Concrete
T 813	WSDOT	Field Method of Fabrication of 2-in. Cube Specimens for Compressive Strength Testing of Grouts and Mortars
T 818	WSDOT	Air Content of Freshly Mixed Self-Compacting Concrete by the Pressure Method
T 819	WSDOT	Making and Curing Self-Compacting Concrete Test Specimens in the Field
T 914	WSDOT	Practice for Sampling of Geotextiles for Testing
C 939	WSDOT	FOP for ASTM for Flow of Grout for Preplaced-Aggregate Concrete (Flow Cone Method)
C 1611	WSDOT	FOP for ASTM for Slump Flow of Self-Consolidating Concrete
C 1621	WSDOT	FOP for ASTM for Passing Ability of Self-Consolidating Concrete by J-Ring
D 4791	WSDOT	FOP for ASTM for Test Method for Flat Particles, Elongated Particles, or Flat and Elongated Particles in Coarse Aggregate

WSDOT FOP for AASHTO T 2

Standard Practice for Sampling Aggregates

1. Scope

   1.1 This practice covers sampling of coarse and fine aggregates for the following purposes:

   1.1.1 Preliminary investigation of the potential source of supply.

   1.1.2 Control of the product at the source of supply.

   1.1.3 Control of the operations at the site of use.

   1.1.4 Acceptance or rejection of the materials.

   1.2 The values stated in English units are to be regarded as the standard.

   1.3 This standard does not purport to address all of the safety concerns, if any, associated with its use. It is the responsibility of the user of this standard to establish appropriate safety and health practices and determine the applicability of regulatory limitations prior to use.

2. Referenced Documents

   2.1 AASHTO Standards

   T 248 – Reducing Samples of Aggregate to Testing Size

   2.2 ASTM Standards

   C 702 – Practice for Reducing Field Samples of Aggregate to Testing Size

   D 2234 – Test Method for Collection of a Gross Sample of Coal

   D 3665 – Practice for Random Sampling of Construction Materials

   E 105 – Practice for Probability Sampling of Materials

   E 122 – Practice for Choice of Sample Size to Estimate the Average Quality of a Lot or Process

   E 141 – Practice for Acceptance of Evidence Based on the Results of Probability Sampling

3. Significance and Use

   3.1 Sampling is equally as important as the testing, and the sampler shall use every precaution to obtain samples that will show the nature and condition of the materials which they represent.

   3.2 Samples taken for preliminary testing of aggregate sources must be witnessed or taken by a designated representative of the Regional Materials Engineer or the State Materials Laboratory. A qualified tester employed by the contracting agency or their designated qualified representative will take the acceptance samples.

   Note 1: For more comprehensive guidance, on preliminary investigation and sampling of potential aggregate sources see the Appendix 1.

4. General Procedures

4.1 Where practicable, samples to be tested for quality shall be obtained from the finished product.

4.2 Samples of the finished product taken for testing abrasion loss shall not be subject to further crushing or manual reduction in particle size in preparation for the abrasion test unless the size of the finished product is such that it requires further reduction for testing purposes.

4.3 Native soils within the contract limits used for embankment construction and/or backfill material do not require sampling by a qualified tester. For material that requires gradation testing, such as but not limited to manufactured aggregates and Gravel Borrow, a qualified tester shall be required for sampling.

4.4 The number of field samples required depends on the testing required.

4.5 Generally, the sample sizes specified in Table 1 will provide adequate material for routine grading and quality analysis.

4.6 Reduce the field sample to test size in accordance with T 248 or as required by other applicable test methods.

Nominal Maximum Size*in (mm)		Minimum Mass lb (kg)	
US No. 4	(4.75)	5	(2)
¼	(6.3)	10	(4)
⅜	(9.5)	10	(4)
½	(12.5)	20	(8)
⅝	(16.0)	20	(8)
¾	(19.0)	30	(12)
1	(25.0)	55	(25)
1¼	(31.5)	70	(30)
1½	(37.5)	80	(36)
2	(50)	90	(40)
2½	(63)	110	(50)
3	(75)	140	(60)
3½	(90)	180	(80)

*For aggregate, the nominal maximum size sieve is the largest standard sieve opening listed in the applicable specification upon which more than 1 percent of the material is permitted to be retained. For concrete aggregate, the nominal maximum size sieve is the smallest standard sieve opening through which the entire amount of aggregate is permitted to pass.

Size of Samples
Table 1

Note 2: For an aggregate specification having a generally unrestrictive gradation (i.e., wide range of permissible upper sizes), where the source consistently fully passes a screen substantially smaller than the maximum specified size, the nominal maximum size, for the purpose of defining sampling and test specimen size requirements may be adjusted to the screen, found by experience to retain no more than 5 percent of the materials.

5. Procedure

5.1 Sampling From A Flowing Aggregate Stream (Bins or Belt Discharge) – A mechanical, automatic, or semi-automatic sampling device is required for processed materials.

5.1.1 Obtain a field sample with a mass equal to or greater than the minimum recommended mass in Table 1.

5.1.2 Take the sample from the entire cross section of the flowing stream.

5.1.3 Avoid sampling from the beginning or end of the aggregate run due to the potential for segregation.

5.2 Sampling From the Conveyor Belt (Stopped) – Avoid sampling at the beginning or end of the aggregate run due to the potential for segregation.

5.2.1 Select sample by a random method.

5.2.2 Stop the conveyor belt.

5.2.3 Set the sampling template(s) on the belt. The template(s) must have enough space between the sides such that, the material contained between the sides will yield an increment of the required weight.

5.2.4 Carefully scoop all material between the sides of the template(s) into a suitable container being sure to include all fines.

5.2.5 Obtain a minimum of 3 approximately equal increments

5.2.6 Combine increments to form a single sample.

5.3 Sampling From Transportation Units

5.3.1 Visually divide the unit into four quadrants.

5.3.2 Identify one sampling location in each quadrant.

5.3.3 Dig down and remove approximately 0.3 m (1 ft.) of material to avoid surface segregation. Obtain each increment from below this level.

5.3.4 Combine the increments to form a single sample.

5.4 Sampling From Stockpile – Method A – Coarse, Fine, or a Combination of Coarse and Fine Aggregates:

5.4.1 Sampling From a Flat Surface Created by a Loader

5.4.1.1 With a loader form a small sampling pile at the base of the stockpile

5.4.1.2 Create a flat surface by having the loader back drag the small pile.

5.4.1.3 Divide the flat surface into four quadrants.

5.4.1.4 Collect a representative sample from each quadrant by fully inserting the shovel into the flat pile as vertically as possible, take care to exclude the underlying material, roll back the shovel and lift the material slowly out of the pile to avoid material rolling off the shovel.

5.4.1.5 Combine the increments to form a single sample.

5.4.2 Sampling From a Horizontal Surface on The Stockpile Face

5.4.2.1 Create, with a loader if one is available, horizontal surfaces with vertical faces in the top, middle, and bottom third of the stockpile. When no equipment is available a shovel may be used to create the horizontal surfaces with vertical faces.

5.4.2.2 Prevent continued sloughing by shoving a flat board in against the vertical face. Discarded sloughed material to create a horizontal surface.

5.4.2.3 Obtain sample from the horizontal surface as close to the intersection as possible of the horizontal and vertical faces.

5.4.2.4 Obtain at least one increment of equal size from each of the top, middle, and bottom thirds of the pile.

5.4.2.5 Combine the increments to form a single sample.

5.5 Sampling From Stockpiles – Method B – Fine Aggregate (Alternate Tube Method):

5.5.1 Remove the outer layer to avoid potential segregation.

5.5.2 Use a sampling tube to obtain one increment of equal size from a minimum of five random locations on the pile.

5.5.3 Combine the increments to form a single sample.

5.6 Sampling From Roadway (Bases and Subbases) – WSDOT has deleted this section.

6. Shipping Samples

6.1 Transport aggregates in bags or other containers that prevent loss, contamination or damage from mishandling during shipment. The weight limit for each bag of aggregate is 30 pounds maximum.

6.2 Shipping containers for aggregate samples shall have a transmittal or suitable individual identification attached and enclosed so that the sample can be identified when it reaches the laboratory.

6.3 All samples submitted for testing to the Regional or State Materials Laboratories shall be accompanied by a completed sample information report from the Materials Testing System (MATS).

Note 4: Agencies that do not have access to MATS may submit a completed DOT Form 350-056.

Appendices

X1. Exploration of Potential Aggregate Sources

X1.1 Scope

X1.1.1 Sampling for evaluation of potential aggregate sources should be performed by a responsible trained and experienced person. Because of the wide variety of conditions under which sampling may have to be done, it is not possible to describe detailed procedures applicable to all circumstances. This appendix is intended to provide general guidance and list more comprehensive references.

X1.2 Sampling Stone From Quarries of Ledges

X1.2.1 Inspection – The ledge or quarry face should be inspected to determine discernible variations or strata. Differences in color and structure should be recorded.

X1.2.2 Sampling and Size of Sample – Separate samples having a mass of at least 55 lbs (25 kg) should be obtained from each discernible stratum. The sample should not include material weathered to such an extent that it is no longer suitable for the purpose intended. One or more pieces in each sample should be at least 6 × 6 × 4 in (150 × 150 × 100 mm) in size with the bedding plane plainly marked, and this piece should be free of seams or fractures.

X1.2.3 Record – In addition to the general information accompanying all samples, the following information should accompany samples taken from ledges or quarry faces:

X1.2.3.1 Approximate quantity available. (If quantities is very large, this may be recorded as practically unlimited.)

X1.2.3.2 Quantity and character of overburden.

X1.2.3.3 A detailed record showing boundaries and location of material represented by each sample.

Note X1.1: A sketch, plan, and elevation showing the thickness and location of the different layers is recommended for this purpose.

X1.3 Sampling Roadside or Bank Run Sand and Gravel Deposits

X1.3.1 Inspection – Potential sources of bank run sand and gravel may include previously worked pits from which there is an exposed face or potential deposits discovered through air-photo interpretation, geophysical exploration, or other types of terrain investigation.

X1.3.2 Sampling – Samples should be so chosen from each different stratum in the deposit discernible to the sampler. An estimate of the quantity of the different materials should be made. If the deposit is worked as an open-face bank or pit, samples should be taken by channeling the face vertically, bottom to top, so as to represent the materials proposed for use. Overburdened or disturbed material should not be included in the sample. Test holes should be excavated or drilled at numerous locations in the deposit to determine the quality of the material and the extent of the deposit beyond the exposed face, if any. The number and depth of test holes will depend upon the quantity of the material needed, topography of the area, nature of the deposit, character of the material, and potential value of the material in the deposit. If visual inspection indicates that there is considerable variation in the material, individual samples should be selected from the material in each well defined stratum. Each sample should be thoroughly mixed and quartered if necessary so that the field sample thus obtained will be at least 25 lb (12 kg) for sand and 75 lb (35 kg) if the deposit contains an appreciable amount of coarse aggregate.

X1.3.3 Record – In addition to the general information accompanying all samples, the following information should accompany samples of bank run sand and gravel:

X1.3.3.1 Location of supply.

X1.3.3.2 Estimate of approximate quantity available.

X1.3.3.3 Quantity and character of overburden.

X1.3.3.4 Length of haul to proposed site of work.

X1.3.3.5 Character of haul (kind of road, maximum grades, etc.).

X1.3.3.6 Details as to extent and location of material represented by each sample.

Performance Exam Checklist

Sampling of Aggregates
FOP for AASHTO T 2

Participant Name _____ Exam Date _____

Procedure Element	**Yes**	**No**
Preparation		
1. The tester has a copy of the current procedure on hand?	☐	☐
Conveyor Belts – Stopped		
2. Belt stopped?	☐	☐
3. Sampling device set on belt, avoiding intrusion of adjacent material?	☐	☐
4. Sample, including all fines, scooped off?	☐	☐
Flowing Aggregate Sampler		
5. Container passed through full stream of material as it runs off end of belt? (Mechanical, Automatic, or Semi Automatic Sampler Only)	☐	☐
Transport Units		
6. Three or more trenches cut across the unit?	☐	☐
7. Trench bottom level and approximate 1 foot wide and 1 foot below surface of material in unit?	☐	☐
8. Three samples taken at equal spacing along each trench?	☐	☐
Stockpiles	☐	☐
9. Create vertical face, if one does not exist, or use mechanical equipment to build a small sampling pile?	☐	☐
10. At least three increments taken, at various locations?	☐	☐
Procedure Element	☐	☐
11. When sampling sand, outer layer removed and increments taken from a least five locations?	☐	☐
12. Correct sample size?	☐	☐

First Attempt: Pass ☐ Fail ☐ Second Attempt: Pass ☐ Fail ☐

Signature of Examiner _____

Comments:

WSDOT FOP FOR WAQTC TM 2

Sampling Freshly Mixed Concrete

Scope

This method covers procedures for obtaining representative samples of fresh concrete delivered to the project site and on which tests are to be performed to determine compliance with quality requirements of the specifications under which concrete is furnished. The method includes sampling from stationary, paving and truck mixers, and from agitating and non-agitating equipment used to transport central mixed concrete.

This method also covers the procedure for preparing a sample of concrete for further testing where it is necessary to remove aggregate larger than the designated size for the test method being performed. The removal of large aggregate particles is accomplished by wet sieving.

Sampling concrete may involve hazardous materials, operations, and equipment. This standard does not purport to address all of the safety problems associated with its use. It is the responsibility of the user of this standard to establish appropriate safety and health practices.

Warning – Fresh Hydraulic cementitious mixtures are caustic and may cause chemical burns to skin and tissue upon prolonged exposure.

Apparatus

- Wheelbarrow
- Cover for wheelbarrow (plastic, canvas, or burlap)
- Shovel
- 5 gal bucket for water

Procedure

Use every precaution in order to obtain samples representative of the true nature and condition of the concrete being placed being careful not to obtain samples from the very first or very last portions of the batch. The size of the sample will be 1.5 times the volume of concrete required for the specified testing, but not less than 1 ft^3 after wet-sieving, if required.

Note 1: Sampling should normally be performed as the concrete is delivered from the mixer to the conveying vehicle used to transport the concrete to the forms; however, specifications may require other points of sampling, such as at the discharge of a concrete pump.

- **Sampling from stationary mixers, except paving mixers**

  Obtain the sample after a minimum of 1/2 m3 (1/2 yd3) of concrete has been discharged. Perform sampling by passing a receptacle completely through the discharge stream, or by completely diverting the discharge into a sample container. If discharge of the concrete is too rapid to divert the complete discharge stream, discharge the concrete into a container or transportation unit sufficiently large to accommodate the entire batch and then accomplish the sampling in the same manner as given for paving mixers. Take care not to restrict the flow of concrete from the mixer, container, or transportation unit so as to cause segregation. These requirements apply to both tilting and nontilting mixers.

- **Sampling from paving mixers**

  Obtain material from at least five different locations in the pile and combine into one test sample. Avoid contamination with subgrade material or prolonged contact with absorptive subgrade. To preclude contamination or absorption by the subgrade, sample the concrete by placing a shallow

container on the subgrade and discharging the concrete across the container. The container shall be of a size sufficient to provide a sample size that is in agreement with the nominal maximum aggregate size.

- **Sampling from revolving drum truck mixers or agitators**

  Obtain the sample after a minimum of 1/2 m3 (1/2 yd3) of concrete has been discharged. Do not obtain samples until after all of the water has been added to the mixer. Do not obtain samples from the very first or last portions of the batch discharge. Sample by repeatedly passing a receptacle through the entire discharge stream or by completely diverting the discharge into a sample container. Regulate the rate of discharge of the batch by the rate of revolution of the drum and not by the size of the gate opening.

- **Sampling from open-top truck mixers, agitators, non-agitating equipment or other types of open-top containers**

  Sample by whichever of the procedures described above is most applicable under the given conditions.

- **Sampling from pump or conveyor placement systems**

  Obtain sample after a minimum of 1/2 m3 (1/2 yd3) of concrete has been discharged. Do not obtain samples until after all of the pump slurry has been eliminated. Sample by repeatedly passing a receptacle through the entire discharge system or by completely diverting the discharge into a sample container. Do not lower the pump arm from the placement position to ground level for ease of sampling, as it may modify the air content of the concrete being sampled. Do not obtain samples from the very first or last portions of the batch discharge.

Transport samples to the place where fresh concrete tests are to be performed and specimens are to be molded.

Combine and remix the sample minimum amount necessary to ensure uniformity. Protect the sample from direct sunlight, wind, rain, and sources of contamination.

Complete test for temperature and start tests for slump and air content within 5 minutes of obtaining the sample. Complete tests as expeditiously as possible. Start molding specimens for strength tests within 15 minutes of obtaining the sample.

Report results on concrete delivery ticket (i.e., Certificate of Compliance).

The name of the qualified tester who performed the field acceptance test is required on concrete delivery tickets containing test results.

Wet Sieving

When required for slump testing, air content testing or molding test specimens the concrete sample shall be wet-sieved, prior to remixing, by the following:

1. Place the sieve designated by the test procedure over dampened sample container.
2. Pass the concrete over the designated sieve. Do not overload the sieve (one particle thick.)
3. Shake or vibrate the sieve until no more material passes the sieve.
4. Discard oversize material including all adherent mortar.
5. Repeat until sample of sufficient size is obtained.
6. Mortar adhering to the wet-sieving equipment shall be included with the sample.

Note 1: Wet-sieving is not allowed for samples being utilized for density determinations according to the FOP for AASHTO T 121.

Performance Exam

Checklist Sampling Freshly Mixed Concrete
FOP for WAQTC TM 2

Participant Name _____ Exam Date _____

Procedure Element	Yes	No
1. The tester has a copy of the current procedure on hand?	☐	☐
2. Obtain a representative sample:		
a. Sample the concrete after ½ cy discharged?	☐	☐
b. Pass receptacle through entire discharge stream or completely divert discharge stream into sampling container?	☐	☐
c. Transport samples to place of testing?	☐	☐
d. Sample remixed?	☐	☐
e. Sample protected?	☐	☐
f. Correct sample size?	☐	☐
3. Start tests for slump and air within 5 minutes of sample being obtained?	☐	☐
4. Start molding cylinders within 15 minutes of sample being obtained?	☐	☐
5. Protect sample against rapid evaporation and contamination?	☐	☐

First Attempt: Pass ☐ Fail ☐ Second Attempt: Pass ☐ Fail ☐

Signature of Examiner _____

This checklist is derived, in part, from copyrighted material printed in ACI CP-1, published by the American Concrete Institute.

Comments:

WSDOT FOP for AASHTO T 23[1]

Making and Curing Concrete Test Specimens in the Field

1. Scope

   1.1 This method covers procedures for making and curing cylinder specimens from representative samples of fresh concrete for a construction project.

   1.2 The concrete used to make the molded specimens shall be sampled after all on-site adjustments have been made to the mixture proportions, including the addition of mix water and admixtures, except as modified in Section 5.1. This practice is not satisfactory for making specimens from concrete not having measurable slump or requiring other sizes or shapes of specimens.

   1.3 The values stated in English units are to be regarded as the standard.

   1.4 This standard does not purport to address the safety problems associated with its use. It is the responsibility of the user of this standard to establish appropriate safety and health practices and determine the applicability of regulatory limitations prior to use. (***Warning:*** Fresh hydraulic cementitious mixtures are caustic and may cause chemical burns to exposed skin and tissue upon prolonged exposure.)

2. Referenced Documents

   2.1 AASHTO Standards

   T 23 Making and Curing Concrete Test Specimens in the Field

   M 201 Moist Cabinets, Moist Rooms, and Water Storage Tanks Used in the Testing of Hydraulic Cements and Concretes

   M 205 Molds for Forming Concrete Test Cylinders Vertically

   R 39 Making and Curing Concrete Test Specimens in the Laboratory

   T 231 Capping Cylindrical Concrete Specimens

   2.2 ASTM Standards

   C 125 Terminology Related to Concrete and Concrete Aggregates

   2.3 ACI Standards

   309 R Guide for Consolidation of Concrete

   2.4 WSDOT

   FOP for WAQTC TM 2 Sampling Freshly Mixed Concrete

[1]This FOP is based on AASHTO T 23-08.

3. Terminology

For definitions of terms used in this practice, refer to Terminology ASTM C 125.

4. Significance and Use

4.1 This practice provides standardized requirements for making, curing, protecting, and transporting concrete test specimens under field conditions.

4.2 If the specimens are made and standard cured, as stipulated herein, the resulting strength test data where the specimens are tested are able to be used for the following purposes:

4.2.1 Acceptance testing for specified strength.

4.2.2 Checking the adequacy of mixture proportions for strength.

4.2.3 Quality control.

4.3 If the specimens are made and field cured, as stipulated herein, the resulting strength test data when the specimens are tested are able to be used for the following purposes:

4.3.1 Determination of whether a structure is capable of being put in service.

4.3.2 Comparison with test results of standard cured specimens or with test results from various in-place test methods,

4.3.4 Adequacy of curing and protection of concrete in the structure.

4.3.5 Form or shoring removal time requirements.

5. Apparatus

5.1 Molds, General – Refer to AASHTO T 23.

5.2 Cylinder – Molds for casting concrete test specimens shall conform to the requirements of M 205.

5.3 Beam Molds – Refer to WSDOT Test Method T 808.

5.4 Tamping Rod – Two sizes are specified as indicated in Table 1. Each shall be a round, straight steel rod with at least the tamping end rounded to a hemispherical tip of the same diameter as the rod. Both ends may be rounded if preferred.

Diameter of Cylinder (in mm)	Rod Dimensions	
	Diameter (in mm)	Length of Rod (in mm)
4 (100)	⅜ (10)	12 (300)
6 (150)	⅝ (16)	20 (500)

Rod tolerances length ± 4 in (100 mm) and diameter ± 1⁄16 in (2 mm).

Tamping Rod Requirements
Table 1

5.5 Vibrators – Internal vibrators shall be used. The vibrator frequency shall be at least 7,000 vibrations per minute at 117 Hz while the vibrator is operating in the concrete. The diameter of a round vibrator shall be no more than one-fourth the diameter of the cylinder mold or one-fourth the width of the beam mold. Other shaped vibrators shall have a perimeter equivalent to the circumference of an appropriate round vibrator. The combined length of the vibrator shaft and vibrating element shall exceed the depth of the section being vibrated by at least 3 in (75 mm). The vibrator frequency shall be checked periodically.

Note 1: For information on size and frequency of various vibrators and a method to periodically check vibrator frequency, see ACI 309R.

5.6 Mallet – A mallet with a rubber or rawhide head weighing 1.25 ± 0.50 lb (0.57 ± 0.23 kg) shall be used.

5.7 Small Tools – Tools and items that may be required are shovels, pails, trowels, wood float, metal float, blunted trowels, straightedge, feeler gauge, scoops, and rules.

5.8 Sampling and Mixing Receptacle – The receptacle shall be a suitable heavy gage metal pan, wheelbarrow, or flat, clean non-absorbent mixing board of sufficient capacity to allow easy remixing of the entire sample with a shovel or trowel.

5.9 Cure Box – The cure box shall be a commercially manufactured cure box meeting AASHTO T 23 standards and the following requirements:

5.9.1. The interior shall be rustproof with a moisture-proof seal between the lid and the box.

5.9.2. The lid shall lock or have loops for padlocks that allow the box to be locked.

5.9.3. The box shall be equipped with a heating and cooling system. If the system uses a water circulating system, the box shall be equipped with a bottom drain and an overflow port. The cure box shall provide an environment that prevents loss of moisture from the specimens. The curing temperature and moist environment shall be controlled by the use of heating and cooling devices installed in the cure box.

5.10 Temperature Measuring Device – The temperature measuring device shall be capable of reading from 30°F to 120°F (0°C to 50°C) with an accuracy of ± 1.0°F (±0.5°C) and continuously recording the internal temperature of the cure box for a minimum of 24 hrs with an accuracy of ± 1.0 °F (±0.5 °C). During the initial cure, a thermometric recording device shall be used to record the interior temperature of the cure box at intervals of not more than 10 minutes.

6. Testing Requirements

Testing for determining the compressive strength at 28 days shall require a set of two specimens made from the same sample.

6.1 Compressive Strength Specimens – Compressive strength specimens shall be cylinders cast and allowed to set in an upright position. The length shall be twice the diameter. The cylinder diameter shall be at least three times the nominal maximum size of the coarse aggregate. The standard specimen shall be the 4 by 8 in (100 by 200 mm) cylinder when the nominal maximum size of the coarse aggregate does not exceed 1 in (25 mm). When the nominal maximum size of the coarse aggregate exceeds 1 in (25 mm), the specimens shall be made with 6 by 12 in (150 by 300 mm) cylinders. **Mixing of cylinder sizes for a particular concrete mix design is not permitted on a project.** When the nominal maximum size of the coarse aggregate exceeds 2 in (50 mm), the concrete sample shall be treated by wet sieving through a 2 in (50 mm) sieve as described in FOP for WAQTC TM 2. Contact the Materials Laboratory for directions.

Note 2: The nominal maximum size is the smallest standard sieve opening through which the entire amount of aggregate is permitted to pass.

Note 3: When molds in SI units are required and not available, equivalent inch-pound unit size molds should be permitted.

6.2 Flexural Strength Specimens

Refer to WSDOT Test Method T 808.

7. Sampling Concrete

7.1 The samples used to fabricate test specimens under this standard shall be obtained in accordance with FOP for WAQTC TM 2 unless an alternative procedure has been approved.

7.2 Record the identification of the sample with respect to the location of the concrete represented and the time of casting.

7.3 Cylinders shall be made using fresh concrete from the same sample as the slump, air content and temperature tests. Material from the slump, air content, and unit weight tests cannot be reused to construct cylinders.

8. Slump, Air Content, and Temperature

As required, perform the following tests prior to making cylinders:

8.1 Slump – FOP for AASHTO T 119

8.2 Air Content – FOP for WAQTC T 152 or FOP for AASHTO T 196

8.3 Temperature – FOP for AASHTO T 309

8.4 Unit Weight – AASHTO T 121

9. Molding Cylinders

9.1 Place of Molding – Mold cylinders on a level, rigid horizontal surface, free of vibration and other disturbances, at a place as near as practicable to the location where they are to be stored.

9.2 Casting the Concrete – Begin casting cylinders within 15 minutes of obtaining the sample. Prior to molding of the specimens remix the sample the minimum amount necessary to ensure uniformity. Place the concrete in the mold using a scoop, blunted trowel, or shovel. Select each scoopful, trowelful, or shovelful of concrete from the sampling receptacle to ensure that it is representative of the batch. Move the scoop, trowel, or shovel around the perimeter of the mold opening when adding concrete so the concrete is uniformly distributed within each layer with a minimum of segregation. In placing the final layer, the operator shall attempt to add an amount of concrete that will exactly fill the mold after consolidation. Underfilled molds shall be adjusted with representative concrete during consolidation of the top layer. Overfilled molds shall have excess concrete removed.

9.2.1 Number of Layers – Make specimens in layers as indicated in Table 2 or 3.

Cylinders: Diameter, in (mm)	Number of Layers of Approximately Equal Depth	Number of Roddings per Layer
Cylinders: Diameter, in (mm)		
4 (100)	2	25
6 (150)	3	25

Molding Requirements by Rodding
Table 2

Cylinders: Diameter, in (mm)	Number of Layers	Number of Vibrator Insertions per Layer	Approximate Depth of Layer, in (mm)
Cylinders: Diameter, in (mm)			
4 (100)	2	1	one-half depth of specimen
6 (150)	2	2	one-half depth of specimen

Molding Requirements by Vibration
Table 3

9.2.2 Select the proper tamping rod from Section 5.4 and Table 1 or the proper vibrator from Section 5.5. If the method of consolidation is rodding, determine molding requirements from Table 2. If the method of consolidation is vibration, determine molding requirements from Table 3.

9.3 Consolidation

9.3.1 Method of Consolidation – Preparation of satisfactory cylinders require different methods of consolidation. The methods of consolidation are rodding and vibration. Base the selection of the method of consolidation on slump, unless the method is stated in the specifications under which the work is being performed. Rod or vibrate concretes with slumps greater than 1 in (25 mm). Vibrate concretes with slumps less than or equal to 1 in (25 mm). Concretes of such low water content that they cannot be properly consolidated by the method herein, or requiring other sizes and shapes of specimens to represent the product or structure, are not covered by this method. Specimens for such concretes shall be made in accordance with the requirements of R 39 with regards to specimen size and shape and method of consolidation.

9.3.2 Rodding – Place the concrete in the mold in the required number of layers of approximately equal volume. Rod each layer with the rounded end of the rod using the required number of roddings specified in Table 2. Rod the bottom layer throughout its depth. Distribute the strokes uniformly over the cross section of the mold. For each layer, allow the rod to penetrate through the layer being rodded and into the layer below approximately 1 in (25 mm). After each layer is rodded, tap the outsides of the mold lightly 10 to 15 times with the open hand, mallet, or rod to close any holes left by rodding and to release any large air bubbles that may have been trapped.

9.3.3 Vibration – Maintain a uniform time period for duration of vibration for the particular kind of concrete, vibrator, and specimen mold involved. The duration of vibration required will depend upon the workability of the concrete and the effectiveness of the vibrator. Usually, sufficient vibration has been applied as soon as the surface of the concrete has become relatively flat and large air bubbles cease to break through the top surface. Continue vibration only long enough to achieve proper consolidation of the concrete (Note 4). Fill the molds and vibrate in the required number of approximately equal layers. Place all the concrete for each layer in the mold before starting vibration of that layer. Compacting the specimen, insert the vibrator slowly and do not allow it to rest on the bottom or sides of the mold. Slowly withdraw the vibrator so that no large air pockets are left in the specimen. When placing the final layer, avoid overfilling by more than ¼ in (6 mm).

Note 4: Generally, no more than 5 s of vibration should be required for each insertion to adequately consolidate concrete with a slump greater than 3 in (75 mm). Longer times may be required for lower slump concrete, but the vibration time should rarely have to exceed 10 s per insertion.

9.3.3.1 Cylinders – The number of insertions of a vibrator per layer is given in Table 3. When more than one insertion per layer is required, distribute the insertion uniformly within each layer. Allow the vibration to penetrate through the layer being vibrated, and into the layer below, approximately 1 in (25 mm). After each layer is vibrated, tap the outsides of the mold lightly 10 to 15 times with the open hand, mallet, or rod to close any holes left by rodding and to release any large air bubbles that may have been trapped.

9.3.3.2 Beam – Refer to WSDOT Test Method T 808.

9.4 Finishing – After consolidation, strike off excess concrete from the surface. Perform all finishing with the minimum manipulation necessary to produce a flat even surface that is level with the rim or edge of the mold and that has no depressions or projections larger than ⅛ in (3.2 mm). Place lid on cylinder.

9.5 Storage – Immediately after finishing, place the cylinders in a cure box. The supporting surface on which specimens are stored shall be level to within ¼ in/ft (20 mm/m). When moving the cylinders to the cure box, lift and support the cylinders from the bottom of the molds with a large trowel or similar device. If the top surface is marred during movement to cure box, immediately refinish.

10. Curing

10.1 Standard Curing – Standard curing is the curing method used when the specimens are made and cured for the purposes stated in Section 4.2.

10.1.1 Initial Curing – Immediately after molding and finishing, the specimens shall be stored in a cure box for a period up to 48 hours, unless Contractor provides initial curing information for final set. The cure box, at all times during the curing process, shall maintain a temperature between 60 and 80 °F [16 and 27 °C] for concrete mix designs with a specified strength below 6000 psi [40 MPa] and between 68 and 78°F [20 and 26 °C] for concrete mixtures with a specified strength of 6000 psi [40 MPa] or greater.

10.1.2 Transportation of Specimens to Final Cure Location – Prior to transporting, cure and protect specimens as required in Section 10. Specimens shall not be transported until at least 8 h after final set (Note 5). During transporting, protect the specimen with suitable cushioning material to prevent damage from jarring and transport in an upright position. During cold weather, protect the specimens from freezing by transporting in an insulated container. Prevent moisture loss during transportation by use of tight-fitting plastic caps on plastic molds. Transportation time shall not exceed 4 h.

Note 5: If a specimen does not attain final set within 32 hours, it is to remain in place until final set is reached. The time of final set shall be provided by the concrete producer. After final set is reached, it can then be transported.

10.1.3 Final Curing

10.1.3.1 Cylinders – Upon completion of initial curing and within 30 minutes after removing the molds, cure specimens with free water maintained on their surfaces at all times at a temperature of 73 ± 3°F (23 ± 2°C) using water storage tanks or moist rooms complying with the requirements of Specification M 201, except when capping with sulfur mortar capping compound and immediately before testing. When capping with sulfur mortar capping compounds, the ends of the cylinder shall be dry enough to preclude the formation of steam or foam pockets under or in cap larger than ¼ in (6 mm) as described in T 231. For a period not to exceed 3 h immediately prior to test, standard curing temperature is not required provided free moisture is maintained on the cylinders and ambient temperature is between 68 to 80°F (20 and 30°C).

10.1.3.2 Beams – Refer to WSDOT Test Method T 808.

10.2 Field Curing – Field curing is the curing method used for the specimens made for the purposes stated in Section 4.3.

10.2.1 Cylinders – Store cylinders in or on the structure as near to the point of deposit of the concrete represented as possible. Protect all surfaces of the cylinders from the elements in as near as possible the same way as the formed work. Provide the cylinders with the same temperature and moisture environment as the structural work. Test the specimens in the moisture condition resulting from the specified curing treatment. To meet these conditions, specimens made for the purpose of determining when a structure is capable of being put in service shall be removed from the molds at the time of removal of form work.

10.2.2 Beams – Refer to WSDOT Test Method T 808.

11. Report

11.1 Report the following information to the laboratory that will test the specimens:

11.1.1 Identification number.

11.1.2 Location of concrete represented by the samples.

11.1.3 Date, time, and name of individual molding specimens.

11.1.4 Slump, air content, and concrete temperature, test results and results of any other tests on the fresh concrete and any deviations from referenced standard test methods.

11.1.5 High and low temperature of cure box during initial curing.

11.1.6 All other information required by the Materials Testing System (MATS) electronic Concrete Transmittal.

Note: Agencies that do not have access to MATS may use DOT Form 350-009, Concrete Cylinder Transmittal.

Performance Exam Checklist

Making and Curing Concrete Test Specimens in the Field
FOP for AASHTO T 23

Participant Name _____ Exam Date _____

Procedure Element	**Yes**	**No**
1. The tester has a copy of the current procedure on hand?	☐	☐
2. All equipment is functioning according to the test procedure, and if required, has the current calibration/verification tags present?	☐	☐
3. Molds placed on a level, rigid, horizontal surface free of vibration?	☐	☐
4. Making of specimens begun within 15 minutes of sampling?	☐	☐
5. Concrete placed in the mold, moving a scoop or trowel around the perimeter of the mold to evenly distribute the concrete as discharged?	☐	☐
6. Mold filled in correct number of layers, attempting to slightly overfill the mold on the last layer?	☐	☐
7. Correct consolidation procedure chosen?	☐	☐
8. Rodding		
a. Each layer rodded throughout its depth 25 times with hemispherical end of rod, uniformly distributing strokes?	☐	☐
b. Bottom layer rodded throughout its depth?	☐	☐
c. Middle and top layers rodded, each throughout their depths, and penetrate into the underlying layer?	☐	☐
d. Sides of the mold tapped 10 to 15 times after rodding each layer?	☐	☐
9. Internal Vibration	☐	☐
a. All concrete for each layer placed in the mold before starting vibration of that layer.	☐	☐
b. Vibrator inserted slowly and not allowed to rest on the bottom or sides of the mold?	☐	☐
c. The final layer was not overfilled by more than ¼ in?	☐	☐
d. Concrete vibrated at a rate to achieve proper consolidation?	☐	☐
10. Strike off excess concrete and finished the surface with a minimum of manipulation?	☐	☐
11. Specimens covered with nonabsorbent, nonreactive cap or plate?	☐	☐
12. Cure box meets requirements?	☐	☐

First Attempt: Pass ☐ Fail ☐ Second Attempt: Pass ☐ Fail ☐

Signature of Examiner _____

Comments:

WSDOT FOP for WAQTC T 27/T 11

Sieve Analysis of Fine and Coarse Aggregates

Significance

Sieve analyses are performed on aggregates used in roadway bases and in portland cement and asphalt cement concretes. Sieve analyses reveal the size makeup of aggregate particles – from the largest to the smallest. A gradation curve or chart showing how evenly or unevenly the sizes are distributed between largest and smallest is created in this test. How an aggregate is graded has a major impact on the strength of the base or on the properties and performance of concrete. In portland cement concrete (PCC), for example, gradation influences shrinkage and shrinkage cracking, pumpability, finishability, permeability, and other characteristics.

Scope

This procedure covers sieve analysis in accordance with AASHTO T 27 and materials finer than No. 200 (75 µm) in accordance with AASHTO T 11. The procedure combines the two test methods.

Sieve analyses determines the gradation or distribution of aggregate particles within a given sample in order to determine compliance with design and production standards.

Accurate determination of material smaller than No. 200 (75 µm) cannot be made with AASHTO T 27 alone. If quantifying this material is required, it is recommended that AASHTO T 27 be used in conjunction with AASHTO T 11. Following AASHTO T 11, the sample is washed through a No. 200 (75 µm) sieve. The amount of material passing this sieve is determined by comparing dry sample masses before and after the washing process.

This procedure covers sieve analysis in accordance with AASHTO T 27 and materials finer than No. 200 (75 µm) in accordance with AASHTO T 11. The procedure includes two method choices, A and B.

Note: All Field Operating Procedures (FOPs) referred to in this procedure are WSDOT FOPs.

Apparatus

- Balance or Scale – Capacity sufficient for the masses shown in Table 2, accurate to 0.1 percent of the sample mass or better and conform to the requirements of AASHTO M 231.
- Sieves – Meeting the requirements of AASHTO M 92.
- Mechanical Sieve Shaker – Meeting the requirements of AASHTO T 27.
- Suitable Drying Equipment – See FOP for AASHTO T 255.
- Containers and Utensils – A pan or vessel of a size sufficient to contain the sample covered with water and to permit vigorous agitation without loss of any part of the sample or water.
- Optional mechanical washing device.

Sample Sieving

In all procedures, it is required to shake the sample over nested sieves. Sieves are selected to furnish information required by specification. The sieves are nested in order of decreasing size from the top to the bottom and the sample, or a portion of the sample, is placed on the top sieve. The sample may also be sieved in increments.

Sieves are shaken in a mechanical shaker for the minimum time determined to provide complete separation for the sieve shaker being used.

Time Evaluation

WSDOT has deleted this section.

Overload Determination

Additional sieves may be necessary to provide other information, such as fineness modulus, or to keep from overloading sieves. The sample may also be sieved in increments.

For sieves with openings smaller than No. 4 (4.75 mm), the mass retained on any sieve shall not exceed 4 g/in^2 (7 kg/m^2) of sieving surface. For sieves with openings No. 4 (4.75 mm) and larger, the mass, in grams shall not exceed the product of 2.5 × (sieve opening in mm) × (effective sieving area). See Table 1.

Sieve Size in (mm)		8 φ (203)	12 φ (305)	12 × 12 (305 × 305)	14 × 14 (350 × 350)	16 × 24 (372 × 580)
		Sieving Area m^2				
		0.0285	0.0670	0.0929	0.1225	0.2158
3½	(90)	*	15.1	20.9	27.6	48.5
3	(75)	*	12.6	17.4	23.0	40.5
2½	(63)	*	10.6	14.6	19.3	34.0
2	(50)	3.6	8.4	11.6	15.3	27.0
1½	(37.5)	2.7	6.3	8.7	11.5	20.2
1	(25.0)	1.8	4.2	5.8	7.7	13.5
¾	(19.0)	1.4	3.2	4.4	5.8	10.2
⅝	(16.0)	1.1	2.7	3.7	4.9	8.6
½	(12.5)	0.89	2.1	2.9	3.8	6.7
⅜	(9.5)	0.67	1.6	2.2	2.9	5.1
¼	(6.3)	0.44	1.1	1.5	1.9	3.4
No. 4	(4.75)	0.33	0.80	1.1	1.5	2.6
Less than	(No. 4)	0.20	0.47	0.65	0.86	1.5

Sample sizes above are in kilograms. To covert to grams, multiple by 1,000. To convert to pounds, multiple by 2.2.

Maximum Allowable Mass of Material Retained On a Sieve (kg)
Table 1

Sample Preparation

Obtain samples in accordance with FOP for AASHTO T 2 and reduce to the size shown in Table 2 in accordance with FOP for AASHTO T 248. If the gradation sample is obtained from FOP for AASHTO T 308, the Ignition Furnace, proceed to Procedure Method A, Step 2.

Nominal Maximum Size* in (mm)		Minimum Dry Mass lb (kg)	
US No. 4	(4.75)	1	(0.5)
¼	(6.3)	2	(1)
⅜	(9.5)	2	(1)
½	(12.5)	5	(2)
⅝	(16.0)	5	(2)
¾	(19.0)	7	(3)
1	(25.0)	13	(6)
1¼	(31.5)	17	(7.5)
1½	(37.5)	20	(9)
2	(50)	22	(10)
2½	(63)	27	(12)
3	(75)	33	(15)
3½	(90)	44	(20)

*For aggregate, the nominal maximum size sieve is the largest standard sieve opening listed in the applicable specification upon which more than 1 percent of the material is permitted to be retained. For concrete aggregate, the nominal maximum size sieve is the smallest standard sieve opening through which the entire amount of aggregate is permitted to pass.

Sample Sizes for Aggregate Gradation Test
Table 2

Note: For an aggregate specification having a generally unrestrictive gradation (i.e., wide range of permissible upper sizes), where the source consistently fully passes a screen substantially smaller than the maximum specified size, the nominal maximum size, for the purpose of defining sampling and test specimen size requirements may be adjusted to the screen, found by experience to retain no more than 5 percent of the materials.

WSDOT Note 1: These sample sizes are standard for aggregate testing but, due to equipment restraints, samples may need to be partitioned into several "subsamples" (see Method A).

Overview

Method A – This method is the preferred method of sieve analysis for HMA aggregate.

- Determine dry mass of original sample.
- Wash through a No. 200 (75 µm) sieve.
- Determine dry mass of washed sample.
- Sieve material.

Method B

- Determine dry mass of original sample.
- Wash through a No. 200 (75 µm) sieve.
- Determine dry mass of washed sample.
- Sieve coarse material.
- Determine mass of fine material.
- Reduce fine portion.
- Determine mass of reduced portion.
- Sieve fine portion.

Procedure Method A

1. Dry the sample in accordance with FOP for AASHTO T 255, and record to the nearest 0.1 percent of total mass or better.

2. When the specification requires that the amount of material finer than No. 200 (75 µm) be determined, do Step 3 through Step 9. Otherwise, skip to Step 10.

   WSDOT Note 2: If the applicable specification requires that the amount passing the No. 200 (75 µm) sieve be determined on a portion of the sample passing a sieve smaller than the nominal maximum size of the aggregate, separate the sample on the designated sieve and determine the mass of the material passing that sieve to 0.1 percent of the mass of this portion of the test sample. Use the mass as the original dry mass of the test sample.

3. Nest a sieve, any sieve ranging from a No. 8 (2.36 mm) to a No. 16 (1.18 mm) may be used, above the No. 200 (75 µm) sieve.

4. Place the test sample in a container and add sufficient water to cover it.

   WSDOT requires the use of a detergent, dispersing agent, or other wetting solution when washing a sample from FOP for AASHTO T 308, an ignition furnace sample.

   WSDOT Note 3: A detergent, dispensing agent, or other wetting solution may be added to the water to assure a thorough separation of the material finer than the No. 200 (75 µm) sieve from the coarser particles. There should be enough wetting agent to produce a small amount of suds when the sample is agitated. Excessive suds may overflow the sieves and carry material away with them.

5. Agitate vigorously to ensure complete separation of the material finer than No. 200 (75 µm) from coarser particles and bring the fine material into suspension above the coarser material. When using a mechanical washing device, exercise caution to not degrade the sample.

6. Immediately pour the wash water containing the suspended and dissolved solids over the nested sieves, being careful not to pour out the coarser particles.

7. Add a second change of water to the sample remaining in the container, agitate, and repeat Step 6. Repeat the operation until the wash water is reasonably clear.

8. Return all material retained on the nested sieves to the container by flushing into the washed sample.

   WSDOT Note 4: A suction device may be used to extract excess water from the washed sample container. Caution will be used to avoid removing any material greater than the No. 200.

9. Dry the washed aggregate in accordance with FOP for AASHTO T 255, and then cool prior to sieving. Record the cooled dry mass.

10. Select sieves to furnish information required by the specifications. Nest the sieves in order of decreasing size from top to bottom and place the sample, or a portion of the sample, on the top sieve.

11. Place sieves in mechanical shaker and shake for a minimum of 10 minutes, or the minimum time determined to provide complete separation if this time is greater than 10 minutes for the sieve shaker being used.

12. Determine the individual or cumulative mass retained on each sieve and the pan to the nearest 0.1 percent or 0.1 g.

    WSDOT Note 5: Use coarse wire brushes to clean the No. 40 (425 µm) and larger sieves and soft bristle brushes for smaller sieves.

Calculations

The total mass of material after sieving should be verified with the mass before sieving. If performing T 11 with T 27, this would be the dry mass after wash. If performing just T 27, this would be the original dry mass. When the masses before and after sieving differ by more than 0.3 percent, do not use the results for acceptance purposes. When performing the gradation from HMA using T 308, the masses before and after sieving shall not differ by more than 0.2 percent.

Calculate the total percentages passing, individual or cumulative percentages retained, or percentages in various size fractions to the nearest 0.1 percent by dividing the masses for Method A, or adjusted masses for Methods B and C, on the individual sieves by the total mass of the initial dry sample. If the same test sample was first tested by T 11, use the total dry sample mass prior to washing in T 11 as the basis for calculating all percentages. Report percent passing as indicated in the "Report" section at the end of this FOP.

Percent Retained:

$$\mathrm{IPR} = \frac{\mathrm{IMR}}{\mathrm{M}} \times 100 \text{ or } \mathrm{CPR} = \frac{\mathrm{CMR}}{\mathrm{M}} \times 100$$

Where:

IPR = Individual Percent Retained
CPR = Cumulative Percent Retained
M = Total Dry Sample mass before washing
IMR = Individual Mass Retained OR Adjusted Individual mass from Methods B or C
CMR = Cumulative Mass Retained OR Adjusted Individual mass from Methods B or C

OR

Percent Passing (Calculated):

$$\mathrm{PP} = \mathrm{PPP} - \mathrm{IPR} \text{ or } \mathrm{PP} = 100 - \mathrm{CPR}$$

Where:

PP = Percent Passing
PPP = Previous Percent Passing

Calculate cumulative percent retained on and passing each sieve on the basis of the dry mass of total sample, before washing. This will include any material finer than No. 200 (75 µm) that was washed out.

Divide the cumulative masses, or the corrected masses, on the individual sieves by the total mass of the initial dry sample (prior to washing) to determine the percent retained on and passing each sieve. Calculate the percent retained on and passing each sieve. Report percent passing as indicated in the "Report" section at the end of this FOP.

Example:

Dry mass of total sample, before washing: 3214.0 g

Dry mass of sample, after washing out the No. 200 (75 µm) minus: 3085.1 g

For the ½″ sieve:

Cumulative Mass retained on ½″ sieve = 161.0 g

$$\text{Cumulative \% retained} = \frac{161.0}{3214.0} \times 100 = 5.0\% \text{ retained}$$

% passing = 100-5.0 = 95% passing ½″ sieve

Sieve Size in (mm)		Cumulative Mass Retained (g)	Cumulative Percent Retained	Reported Percent Passing*
¾	(19.0)	0	0	100
½	(12.5)	161.0	5.0	95
⅜	(9.5)	642.0	20.0	80
No. 4	(4.75)	1118.3	34.8	65
**No. 6	(3.35)	1515.2		
No. 10	(2.0)	1914.7	59.6	40
No. 40	(0.425)	2631.6	81.9	18
No. 80	(0.210)	2862.7	89.1	11
No. 200	(0.075)	3051.1	94.9	5.1
Pan		3086.4		

*Report No. 200 (75 µm) sieve to 0.1 percent. Report all others to 1 percent.

**Intermediate sieve used to prevent overloading the U.S. No. 10 sieve.

Gradation On All Screens

Test Validation: (3086.4 – 3085.1)/3085.1 x 100 = 0.04% which is within the 0.3 percent requirement and the results can be used for acceptance purposes.

Procedure Method B

1. Perform steps 1 through 9 from the Procedure Method A, then continue as follows:
2. Select sieves to furnish information required by the specifications. Nest the sieves in order of decreasing size from top to bottom through the No. 4 (4.75 mm) with a pan at the bottom to retain the minus No. 4 (4.75 mm). See Table 1.
3. Place sieves in mechanical shaker and shake for a minimum of 10 minutes, or the minimum time determined to provide complete separation if this time is greater than 10 minutes for the sieve shaker being used.
4. Determine the individual or cumulative mass retained on each sieve and the pan to the nearest 0.1 percent or 0.1 g. Ensure that all material trapped in the openings of the sieve are cleaned out and included in the mass retained (see Note 5).
5. Determine the mass retained on each sieve to the nearest 0.1 percent of the total mass or better.
6. Determine the mass of the material in the pan (minus No. 4 (4.75 mm)).
7. Reduce the minus No. 4 (4.75 mm) using a mechanical splitter in accordance with FOP for AASHTO T 248 to produce a sample with a mass of 500 g minimum. Determine and record the mass of the minus No. 4 (4.75 mm) split.
8. Select sieves to furnish information required by the specifications. Nest the sieves in order of decreasing size from top to bottom through the No. 200 (75 µm) with a pan at the bottom to retain the minus No. 200 (75 µm).
9. Place sieves in mechanical shaker and shake for a minimum of 10 minutes, or the minimum time determined to provide complete separation if this time is greater than 10 minutes for the sieve shaker being used.
10. Determine the individual or cumulative mass retained on each sieve and the pan to the nearest 0.1 percent or 0.1 g. Ensure that all material trapped in the openings of the sieve are cleaned out and included in the mass retained (see Note 5).

Calculations

Compute the "Adjusted Cumulative Mass Retained" of the size increment of the original sample as follows when determining "Cumulative Mass Retained":

Divide the cumulative masses, or the corrected masses, on the individual sieves by the total mass of the initial dry sample (prior to washing) to determine the percent retained on and passing each sieve. Calculate the percent retained on and passing each sieve. Report percent passing as indicated in the "Report" section at the end of this FOP.

When material passing the No. 4 (4.75 mm) sieve is split and only a portion of that is tested, the proportionate share of the amount passing the No. 200 (75 µm) sieve must be added to the sample mass to obtain a corrected test mass. This corrected test mass is used to calculate the gradation of the material passing the No. 4 (4.75 mm) sieve.

$$C = \left(\frac{M_1}{M_2} \times B\right) + D$$

Where:

C = Total cumulative mass retained of the size increment based on a total sample
M_1 = Mass of fraction finer than No. 4 (4.75 mm) sieve in total sample
M_2 = Mass of reduced portion of material finer than No. 4 (4.75 mm) sieve actually sieved
B = Cumulative mass of the size increment in the reduced portion sieved
D = Cumulative mass of plus No. 4 (4.75 mm) portion of sample

Example:

Dry mass of total sample, before washing: 3214.0 g

Dry mass of sample, after washing out the No. 200 (75 µm) minus: 3085.1 g

Sieve Size in (mm)		Cumulative Mass Retained (g)	Cumulative Percent Retained	Reported Percent Passing
¾	(19.0)	0	0	100
½	(12.5)	161.0	5.0	95
⅜	(9.50)	642.0	20.0	80
No. 4	(4.75)	1118.3	34.8	65

Gradation On Coarse Screens

Pan = 1968.0

Test Validation: (1118.3 + 1968.0 – 3085.1)/3085.1 x 100 = 0.04% which is within the 0.3 percent requirement and the results can be used for acceptance purposes.

The actual mass of material passing the No. 4 (4.75 mm) sieve and retained in the pan is 1968.0 g. This is M_1.

The pan (1968.0 grams) was reduced in accordance with the FOP for AASHTO T 248, so that at least 500 g are available. In this case, the mass determined was 512.8 g. This is M_2.

Sieve Size in (mm)		Cumulative Mass Retained (g)
No. 4	(4.75)	0
No. 10	(2.00)	207.5
No. 40	(0.425)	394.3
No. 80	(0.210)	454.5
No. 200	(0.075)	503.6
Pan		512.8

Gradation On Fine Screens

Test Validation: (512.8 – 512.8)/512.8 = 0.0% which is within the 0.3 percent requirement and the results can be used for acceptance purposes.

For the No. 10 sieve:

M_1 = 1968.0g
M_2 = 512.8g
B = 207.5g
D = 1118.3g

$$C = \frac{M_1}{M_2} \times B + D = \frac{1968.0g}{512.8g} \times 207.5g + 1118.3g = 1914.7g$$

$$\%\ \text{retained}\ \frac{1914.7g}{3214.0g} = 59.6\%$$

$$\%\ \text{passing} = 100 - 59.6 = 40.4\%, \text{reported as } 40\%$$

Sieve Size in (mm)		Cumulative Mass Retained (g)	Adjusted Cumulative Mass Retained (g)	Cum. Percent Retained	Reported Percent Passing*
¾	(19.0)	0	0	0	100.0
½	(12.5)	161.1	161.1	5.0	95
⅜	(9.5)	642.5	642.5	20.0	80
No. 4	(4.75)	1118.3	1118.3	34.8	65
No. 10	(2.0)	207.5 × 3.838 + 1118.3	1914.7	59.6	40
No. 40	(0.425)	394.3 × 3.838 + 1118.3	2631.6	81.6	18
No. 80	(0.210)	454.5 × 3.838 + 1118.3	2862.7	89.1	11
No. 200	(0.075)	503.6 × 3.838 + 1118.3	3051.1	94.9	5.1
Pan		512.8 × 3.838 + 1118.3	3086.4		

*Report No. 200 (75 µm) sieve to 0.1 percent. Report all others to 1 percent.

Final Gradation On All Screens

Alternative Method B

As an alternate method to account for the fact that only a portion of the minus No. 4 (4.75 mm) material was sieved, multiply the fine screen "Percent Passing" values by the percent passing the No. 4 (4.75 mm) sieve obtained in the coarse screen procedure, 65 percent in this case.

The mass retained in the pan must be corrected to include the proper percent of No. 200 (.075 mm) minus material washed out.

Divide the cumulative masses, or the corrected masses, on the individual sieves by the corrected pan mass of the initial dry sample (prior to washing) to determine the percent retained on and passing each sieve. Calculate the percent retained on and passing each sieve. Report percent passing as indicated in the "Report" section at the end of this FOP.

Dry mass of total sample, before washing: 3214.0 g

Dry mass of sample, after washing out the No. 200 (75 µm) minus: 3085.1 g

Amount of No. 200 (75 µm) minus washed out: 3214.0 g – 3085.1 g = 128.9 g

Sieve Size in (mm)		Cumulative Mass Retained (g)	Cumulative Percent Retained	Reported Percent Passing
¾	(19.0)	0	0	100
½	(12.5)	161.0	5.0	95
⅜	(9.50)	642.0	20.0	80
No. 4	(4.75)	1118.3	34.8	65

Gradation On Coarse Screens

Pan = 1968.0

Test validation: $\frac{1118.3 + 1968.0 - 3085.1}{3085.1} \times 100 = 0.04\%$

which is within the 0.3 percent requirement and the results can be used for acceptance purposes.

The actual mass of material passing the No. 4 (4.75 mm) sieve and retained in the pan is 1968.0 g. This is M_3.

The pan (1968.0 grams) was reduced in accordance with FOP for AASHTO T 248, so that at least 500 g are available. In this case, the mass determined was 512.8 g. This is M_4.

$$\text{Corrected pan mass} = M_4 + \frac{(M_4)(C_1)}{M_3}$$

Where:

M_4 = Mass retained in the pan from the split of the No. 4 (4.75 mm) minus

M_3 = Mass of the No. 4 (4.75 mm) minus of entire sample, not including No. 200 (.075 mm) minus washed out

C_1 = Mass of No. 200 (.075 mm) minus washed out

Sieve Size in (mm)		Cumulative Mass Retained (g)	Cumulative Percent Retained	Percent Passing
No. 4	(4.75)	0	0	100.0
No. 10	(2.00)	207.5	38.0	62.0
No. 40	(0.425)	394.3	72.2	27.8
No. 80	(0.210)	454.5	83.2	16.8
No. 200	(0.075)	503.6	92.2	7.8
Pan		512.8		

The corrected pan mass is the mass used to calculate the percent retained for the fine grading.

Example:

M_4 = 512.8g

M_3 = 1968.0g

C_1 = 128.9g

Corrected pan mass $= 512.8\text{g} + \frac{(512.8\text{g})(128.9\text{g})}{1968.0\text{g}} = 546.4\text{g}$

For the No. 10 sieve:

Mass of No. 10 sieve = 207.5g

Corrected Pan Mass = 546.4g

Cumulative % retained $= \frac{207.5\text{g}}{546.4\text{g}} = 38\%$

% passing = 100-38.0 = 62.0%

Adjusted % passing No. 10 = % passing No. 10 × % No. 4 = 62.0 × 0.65 = 40%

Sieve Size in (mm)		Adjustment	Reported Percent Passing*
¾	(19.0)		100
½	(12.5)		95
⅜	(9.5)		80
No. 4	(4.75)	100 × .65 =	65
No. 10	(2.00)	62.0 × .65 =	40
No. 40	(0.425)	27.8 × .65 =	18
No. 80	(0.210)	16.8 × .65 =	11
No. 200	(0.075)	7.8 × .65 =	5.1

*Report No. 200 (75 µm) sieve to 0.1 percent. Report all others to 1 percent.

Final Gradation On All Screens

Sample Calculation for Fineness Modulus

Fineness Modulus (FM) is used in determining the degree of uniformity of aggregate gradation in PCC mix designs. It is an empirical number relating to the fineness of the aggregate. The higher the FM, the coarser the aggregate. Values of 2.40 to 3.00 are common for FA in PCC.

The FM is the sum of the percentages retained on specified sieves, for PCC fine aggregate they are: No. 4 (4.75 mm), No. 8 (2.36 mm), No. 16 (1.18 mm), No. 30 (0.60 mm), No. 50 (0.30 mm), and No. 100 0.15 mm) divided by 100 gives the FM.

The following example is for WSDOT Class 2 Sand:

Sieve Size in (mm)		Percent Passing	Percent Retained	Percent Retained on Specified Sieves
No. 4	4.75 mm	100	0	0
No. 8	2.36 mm	87	13	13
No. 16	1.18 mm	69	31	31
No. 30	0.60 mm	44	56	56
No. 50	0.30 mm	18	82	82
No. 100	0.15 mm	4	96	96
				= 278
				FM = 2.78

Report

Results shall be reported on standard forms approved for use by the agency. Depending on the agency, this may include:

- Cumulative mass retained on each sieve.
- Cumulative percent retained on each sieve.
- Percent passing and retained on each sieve shall be reported to the nearest 1 percent except for the percent passing the U.S. No. 200 (75 µm) sieve, which shall be reported to the nearest 0.1 percent.
- FM to the nearest 0.01 percent for WSDOT Class 2 Sand.

Report the results using one or more of the following:

- Materials Testing System (MATS)
- DOT Forms 422-020, 422-020A, or 422-020B
- Form approved in writing by the State Materials Engineer

Performance Exam Checklist

WAQTC FOP for AASHTO T 27/T 11
Sieve Analysis of Fine And Coarse Aggregates

Participant Name _____ Exam Date _____

Procedure Element	Yes	No
1. The tester has a copy of the current procedure on hand?	☐	☐
2. All equipment is functioning according to the test procedure, and if required, has the current calibration/verification tags present?	☐	☐
3. Minimum sample mass meets requirement of Table 1 or from FOP for AASHTO T 308?	☐	☐
4. Test sample dried to a constant mass by FOP for AASHTO T 255?	☐	☐
5. Test sample cooled and mass determined to nearest 0.1 percent of mass?	☐	☐
6. Sample placed in container and covered with water? (If specification requires that the amount of material finer than the No. 200 sieve is to be determined.)	☐	☐
7. Dispersing Agent used for HMA?	☐	☐
8. Contents of the container vigorously agitated?	☐	☐
9. Complete separation of coarse and fine particles achieved?	☐	☐
10. Wash water poured through required nested sieves?	☐	☐
11. Operation continued until wash water is reasonably clear?	☐	☐
12. Material retained on sieves returned to washed sample?	☐	☐
13. Washed aggregate dried to a constant mass by FOP for AASHTO T 255?	☐	☐
14. Washed aggregate cooled and mass determined to nearest 0.1 percent of mass?	☐	☐
15. Sample placed in nest of sieves specified? (Additional sieves may be used to prevent overloading as allowed in FOP.)	☐	☐
16. Material sieved in verified mechanical shaker for minimum of 10 minutes or for the minimum verified time whichever is longer?	☐	☐
17. Mass of residue on each sieve determined to 0.1 percent of mass?	☐	☐
18. Total mass of material after sieving agrees with mass before sieving to within 0.3 percent, or 0.2 percent for HMA (per FOP for AASHTO T 308)?	☐	☐
19. Percentages calculated to the nearest 0.1 percent and reported to the nearest whole number, except No. 200 - reported to the nearest 0.1 percent?	☐	☐
20. Percentage calculations based on original dry sample mass?	☐	☐
21. Calculations performed properly? If material passing No. 4 sieve is split and only a portion is tested, calculation as noted in FOP performed properly?	☐	☐

First Attempt: Pass ☐ Fail ☐ Second Attempt: Pass ☐ Fail ☐

Signature of Examiner _____

Comments:

WSDOT FOP for WAQTC/AASHTO T 40

Sampling Bituminous Materials

Significance

Sampling is as important as testing and precautions shall be taken to obtain samples to show the true nature and condition of the materials. Because of the numerous types and grades of bituminous materials that are alternately shipped and stored in the same or similar containers, the opportunity for contaminating these containers with residues, precipitates, or cleaning solvents is ever present. Numerous opportunities also exist for obtaining samples which are not strictly representative of the material or are contaminated after removal. Therefore it is incumbent upon the producer, transporter, user and sampler to exercise continuous precaution in the sampling and handling of these materials.

This standard does not purport to address all of the safety concerns, if any, associated with its use. It is the responsibility of the user of the standard to establish appropriate safety and health practices and determine the applicability of regulatory limitations prior to use.

Scope

This practice applies to the sampling of liquid bituminous materials in accordance with AASHTO T 40. Sampling of solid and semi-solid bituminous materials (included in AASHTO T 40) is not covered here.

Agencies may be more specific on exactly who obtains the samples, where to sample, and what type of sampling device to use.

WSDOT personnel will observe the contractor's personnel obtaining the samples to assure that proper sampling procedures are followed. If proper sampling procedures are not followed the Contractor's personnel shall resample.

Procedure

1. Coordinate sampling with the contractor or supplier.
2. Use appropriate safety equipment and precautions.
3. A minimum of 1 gal (4 L) of the product shall be drawn and discarded or reintroduced to the tank before obtaining samples.
4. Sampling Asphalt Binder – Obtain samples at the asphalt mixing plant from the valve in either the storage tank or in the supply line to the mixer while the plant is in operation.
5. Sampling Emulsified Asphalt – Obtain samples from the distributor spray bar or application device just before or during application.

Containers

Sample containers must be new, and the inside may not be washed or rinsed. The outside may be wiped with a clean, dry cloth.

All samples shall be put in 1 qt (1 L) containers and properly identified on the outside of the container with contract number, date sampled, data sheet number, brand and grade of material, and sample number. Include lot and sublot numbers when appropriate.

All samples shall be protected from freezing.

Note: The filled sample container shall not be submerged in solvent, nor shall it be wiped with a solvent saturated cloth. If cleaning is necessary, use a clean dry cloth.

- **Asphalt Binder** – Use metal cans.
- **Emulsified Asphalt** – Use wide-mouth plastic jars with screw caps. Place tape around the seam of the cap to keep the cap from loosening and spilling the contents.

Standard sample labels (WSDOT Form 350-016) shall be completely filled out and attached to each sample container.

Performance Exam Checklist

Sampling Bituminous Materials
WAQTC FOP for AASHTO T 40

Participant Name _____ Exam Date _____

Procedure Element	**Yes**	**No**
1. The tester has a copy of the current procedure on hand?	❐	❐
2. Appropriate containers used?		
a. Metal cans (all other bituminous liquids).	❐	❐
b. Wide-mouth plastic containers (emulsified).	❐	❐
3. Containers not washed or rinsed on inside?	❐	❐
4. Minimum of 1 gallon allowed to flow before sample taken?	❐	❐
5. Material obtained at correct location?		
a. Line between storage tank and mixing plant or the storage tank (HMA plants).	❐	❐
b. Spray bar or application device, if not diluted (distributors).	❐	❐
c. From delivery vehicle or prior to dilution, if diluted (distributors).	❐	❐

Sample Taken By: Contractor ❐

First Attempt: Pass ❐ Fail ❐ Second Attempt: Pass ❐ Fail ❐

Signature of Examiner _____

Comments:

AASHTO T 99

Moisture-Density Relations of Soils Using a 5.5 lb (2.5 kg) Rammer and a 12 in (305 mm) Drop

AASHTO T 99, Method A, has been adopted by WSDOT.

Tester Qualification Practical Exam Checklist

Moisture-Density Relations of Soils Using a 5.5 lb (2.5 kg) Rammer and a 12 in (305 mm) Drop
FOP for AASHTO T 99

Participant Name _____ Exam Date _____

Procedure Element	**Yes**	**No**
1. The tester has a copy of the current procedure on hand?	❒	❒
2. All equipment is functioning according to the test procedure, and if required, has the current calibration/verification tags present?	❒	❒
Sample Preparation		
1. If damp, sample dried in air or drying apparatus, not exceeding 140°F (60°C)?	❒	❒
2. Sample pulverized and adequate amount sieved over the No. 4 (4.75 mm) sieve?	❒	❒
3. Material retained on the sieve discarded?	❒	❒
4. Sample passing the sieve has appropriate mass?	❒	❒
Procedure		
1. Sample mixed with water to approximately 4 percent below expected optimum moisture content?	❒	❒
2. Layer of soil placed in mold with collar attached?	❒	❒
3. Mold placed on rigid and stable foundation?	❒	❒
4. Lightly tamp soil in mold?	❒	❒
5. Soil compacted with 25 blows?	❒	❒
6. Scrape sides of mold and evenly distributed on top of the layer?	❒	❒
7. Soil placed and compacted in three equal layers?	❒	❒
8. No more than ½ inch of soil above the top of the bottom portion of the mold?	❒	❒
9. Collar removed and soil trimmed to top of mold with straightedge?	❒	❒
10. Mass of mold and contents determined to appropriate precision?	❒	❒
11. Wet mass of specimen multiplied by mold factor to obtain wet density?	❒	❒
12. Soil removed from mold using sample extruder when applicable?	❒	❒
13. Soil sliced vertically through center?	❒	❒
14. Moisture sample removed from the entire face of one of the cut faces?	❒	❒
15. Sample weighed immediately and mass recorded?	❒	❒

16. Moisture sample mass per Table 1? ❒ ❒
17. Sample dried and water content determined according to AASHTO T 255 or T 265? ❒ ❒
18. Remainder of material from mold broken up to about passing sieve size and added to remainder of original test sample? ❒ ❒
19. Water added to increase moisture content in approximately 2 percent increments? ❒ ❒
20. Steps 2 through 15 repeated for each increment of water added? ❒ ❒
21. If soil is plastic (clay types):
    a. Sample mixed with water varying moisture content by approximately 2 percent, bracketing the optimum moisture content? ❒ ❒
    b. Samples placed in covered containers and allowed to stand for at least 12 hours ❒ ❒
22. Process continued until wet density either decreases or stabilizes? ❒ ❒
23. Water content and dry density calculated for each sample? ❒ ❒
24. All calculations performed correctly? ❒ ❒

First Attempt: Pass ❒ Fail ❒ Second Attempt: Pass ❒ Fail ❒

Signature of Examiner _____

Comments:

WSDOT FOP for AASHTO T 119[1]

Standard Test Method for Slump of Hydraulic-Cement Concrete

1. Scope

   1.1 This test method covers determination of slump of concrete, both in the laboratory and in the field.

   1.2 The values stated in either inch-pound units or SI units are to be regarded separately as standard. Within the text, the SI units are shown in brackets. The values stated in each system are not exact equivalents; therefore, each system shall be used independently of the other. Combining values from the two systems may result in nonconformance with the standard.

   1.3 The text of the standard reference notes and footnotes provide explanatory material. These notes and footnotes (excluding those in tables and figures) shall not be considered as requirements of the standard.

   1.4 This standard does not purport to address all of the safety problems associated with its use. It is the responsibility of the user of this standard to establish appropriate safety and health practices and determine the applicability of regulatory limitations prior to use. (***Warning:*** Fresh Hydraulic cementitious mixtures are caustic and may cause chemical burns to skin and tissue upon prolonged exposure.)

2. Referenced Documents

   2.1 AASHTO Standards

   T 141 – Sampling Freshly Mixed Concrete

   2.2 ASTM Standards

   C 172 – Practice for Sampling Freshly Mixed Concrete

3. Summary of Test Method

   3.1 A sample of freshly mixed concrete is placed and compacted by rodding in a mold shaped as the frustum of a cone. The mold is raised and the concrete allowed to subside. The distance between the original and displaced position of the center of the top surface of the concrete is measured and reported as the slump of the concrete.

4. Significance and Use

   4.1 This test method is intended to provide the user with a procedure to determine slump of plastic hydraulic-cement concretes.

   Note 1: This test method was originally developed to provide a technique to monitor the consistency of unhardened concrete. Under laboratory conditions, with strict control of all concrete materials, the slump is generally found to increase proportionally with the water content of a given concrete mixture, and thus to be inversely related to concrete

[1]This FOP is based on AASHTO T 119-11.

strength. Under field conditions, however, such a strength relationship is not clearly and consistently shown. Care should therefore be taken in relating slump results obtained under field conditions to strength.

4.2 This test method is considered applicable to plastic concrete having coarse aggregate up to 1½ in (37.5 mm) in size. If the coarse aggregate is larger than 1½ in (37.5 mm) in size, remove per FOP for WAQTC TM 2.

4.3 This test method is not considered applicable to non-plastic and non-cohesive concrete.

Note 2: Concretes having slumps less than 0.5 in (15 mm) may not be adequately plastic and concretes having slumps greater than about 9 in (230 mm) may not be adequately cohesive for this test to have significance. Caution should be exercised in interpreting such results.

5. Apparatus

5.1 Mold – The test specimen shall be formed in a mold made of metal not readily attacked by the cement paste. The metal shall not be thinner than 0.060 in (1.5 mm) and if formed by the spinning process, there shall be no point on the mold at which the thickness is less than 0.045 in (1.15 mm). The mold shall be in the form of the lateral surface of the frustum of a cone with the base 8 in (200 mm) in diameter, the top 4 in (100 mm) in diameter, and the height 12 in (300 mm). Individual diameters and heights shall be within ± ⅛ in (3.2 mm) of the prescribed dimensions. The base and the top shall be open and parallel to each other and at right angles to the axis of the cone. The mold shall be provided with foot pieces and handles similar to those shown in Figure 1. The mold shall be constructed without a seam. The interior of the mold shall be relatively smooth and free from projections. The mold shall be free from projections. A mold which clamps to a nonabsorbent base plate is acceptable instead of the one illustrated provided the clamping arrangement is such that it can be fully released without movement of the mold and the base is large enough to contain all of the slumped concrete in an acceptable test.

5.1.1 Check and record conformance to the mold's specified dimensions when it is purchased or first placed in service and at least annually thereafter.

5.1.2 Mold With Alternative Materials

5.1.2.1 Molds other than metal are permitted if the following requirements are met: The mold shall meet the shape, height, and internal dimensional requirements of Section 5.1. The mold shall be sufficiently rigid to maintain the specified dimensions and tolerances during use, resistant to impact forces, and shall be nonabsorbent. The mold shall be demonstrated to provide test results comparable to those obtained when using a metal mold meeting the requirements of Section 5.1. Comparability shall be demonstrated on behalf of the manufacturer by an independent testing laboratory. Test for comparability shall consist of not less than 10 consecutive pairs of comparisons performed at each of three different slumps ranging from 50 to 200 mm (2 to 8 in). No individual test results shall vary by more than 15 mm (0.50 in) from that obtained using the metal mold. The average test results of

each slump range obtained using the mold constructed of alternative material shall not vary by more than 0.25 in (6 mm) from the average of test results obtained using the metal mold. Manufacturer comparability test data shall be available to users and laboratory inspection authorities (Note 4). If any changes in material or method of manufacture are made, tests for comparability shall be repeated.

Note 3: The phrase "consecutive pairs of comparisons" does not mean without interruption or all in one day. At a schedule selected by the testing entity, the pairs of tests leading to 10 consecutive pairs may be accomplished in small groups. The word consecutive prevents ignoring pairs of tests which may not meet criteria.

Note 4: Because the slump of concrete decreases with time and higher temperatures, it will be advantageous for the comparability tests to be performed by alternating the use of metal cones and alternative material cones, to utilize several technicians, and to minimize the time between test procedures.

5.1.2.2 If the condition of any individual mold is suspected of being out of tolerance from the as manufactured condition, a single comparative test shall be performed. If the test results differ by more than 0.50 in (15 mm) from that obtained using the metal mold, the mold shall be removed from service.

5.2 Tamping Rod – The tamping rod shall be a round, straight steel rod ⅝ in (16 mm) in diameter and approximately 24 in (600 mm) in length, having the tamping end or both ends rounded to a hemispherical tip, the diameter of which is ⅝ in (16 mm).

5.3 Measuring Device – A ruler, metal roll-up measuring tape, or similar rigid or semi-rigid length measuring instrument marked in increments of 5 mm (¼ in) or smaller. The instrument length shall be at least 300 mm (12 in).

5.4 Torpedo level.

5.5 Base – Flat, nonabsorbent, rigid surface.

6. Sample

6.1 The sample of concrete from which test specimens are made shall be representative of the entire batch. It shall be obtained in accordance with FOP for WAQTC TM 2. With concrete using 1½ in (37.5 mm) or larger aggregate, the aggregate larger than 1½ in (37.5 mm) must be removed per FOP for WAQTC TM 2. Contact the Materials Laboratory for directions.

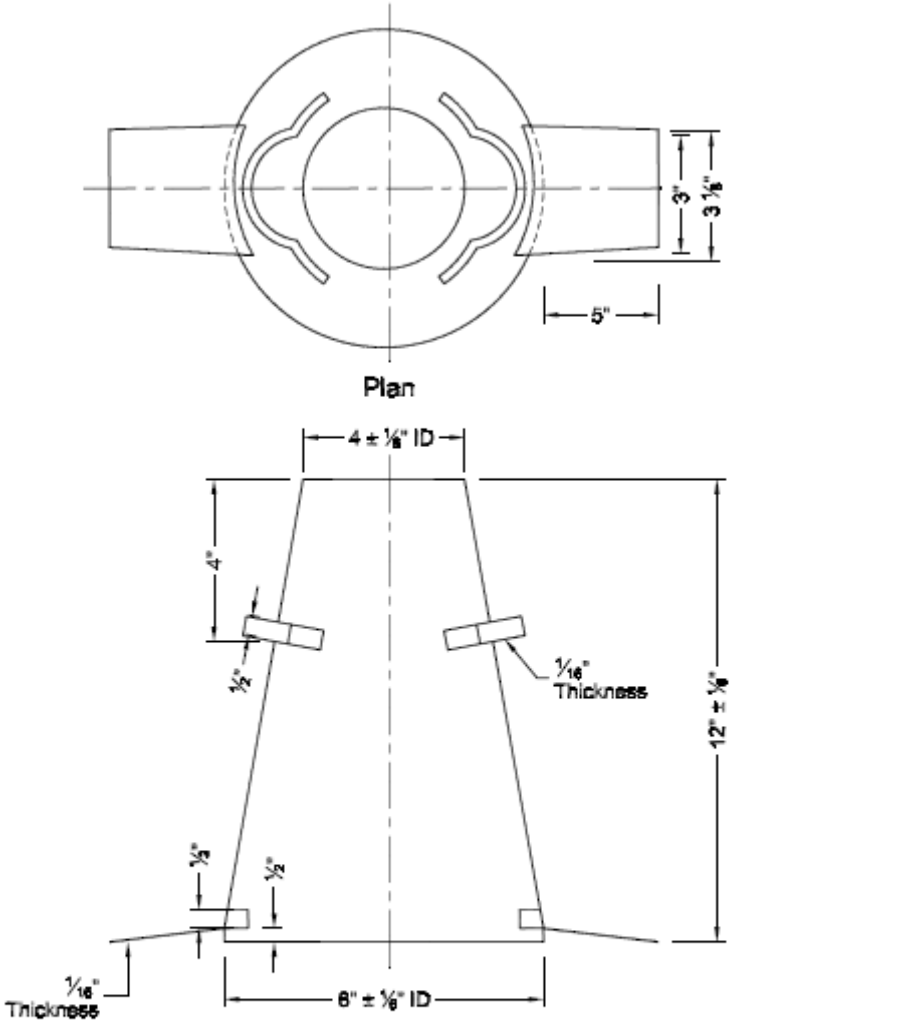

Dimensional Units

mm.	2	3	15	25	75	80	100	200	300
in.	[1/16]	[1/8]	[1/2]	[1]	[3]	[3 1/8]	[4]	[8]	[12]

Mold for Slump Test
Figure 1

7. Procedure

7.1 Dampen the mold and place it on a flat, level, moist, nonabsorbent rigid horizontal surface, free from vibration and other disturbances, such as a pre-moistened concrete floor or a base plate on a rigid surface. It shall be held firmly in place during filling and perimeter cleaning by the operator standing on the two foot pieces, or by clamping arrangements to a base plate as described in Section 5.1. From the sample of concrete obtained in accordance with Section 6, immediately fill the mold in three layers, each approximately one-third the volume of the mold.

Note 5: One-third of the volume of the slump mold fills it to a depth of 2⅝ in (67 mm); two-thirds of the volume fills it to a depth of 6⅛ in (155 mm).

7.2 Rod each layer with 25 strokes of the tamping rod. Uniformly distribute the strokes over the cross section of each layer. For the bottom layer, this will necessitate inclining the rod slightly and making approximately half of the strokes near the perimeter, and then progressing with vertical strokes spirally toward the center. Rod the bottom layer throughout its depth. Rod the second layer and the top layer each throughout its depth, so that the strokes just penetrate into the underlying layer.

7.3 In filling and rodding the top layer, heap the concrete above the mold before rodding is started. If the rodding operation results in subsidence of the concrete below the top edge of the mold, add additional concrete to keep an excess of concrete above the top of the mold at all times. After the top layer has been rodded, strike off the surface of the concrete by means of a screeding and rolling motion of the tamping rod. Continue to hold the mold down firmly and remove concrete from the area surrounding the base of the mold to preclude interface with the movement of slumping concrete.

Remove the mold from the concrete by raising it carefully in a vertical direction. Raise the mold a distance of approximately 12 in (300 mm) in 5 ± 2 seconds by a steady upward lift with no lateral or torsional motion. Complete the entire test from the start of the filling through removal of the mold without interruption and complete it within an elapsed time of 2½ min.

7.4 Immediately measure the slump by determining the vertical difference between the top of the mold and the displaced original center of the top surface of the specimen. If a decided falling away or shearing off of concrete from one side or portion of the mass occurs (Note 6), disregard the test and make a new test on another portion of the sample.

Note 6: If two consecutive tests on a sample of concrete show a falling away or shearing off of a portion of the concrete from the mass of the specimen, the concrete probably lacks necessary plasticity and cohesiveness for the slump test to be applicable. Report material cannot be slumped due to shearing or falling away.

8. Report

8.1 Report the slump in terms of inches (millimeters) to the nearest ¼ in (5 mm) of subsidence of the specimen during the test.

Report results on concrete delivery ticket (i.e., Certificate of Compliance).

The name of the tester who performed the field acceptance test is required on concrete delivery tickets containing test results.

9. Precision and Bias

9.1 Precision – See AASHTO T 119 for precision and bias.

Performance Exam Checklist

Slump of Hydraulic Cement Concrete
FOP for AASHTO T 119

Participant Name _____ Exam Date _____

Procedure Element	Yes	No
1. The tester has a copy of the current procedure on hand?	❒	❒
2. All equipment is functioning according to the test procedure, and if required, has the current calibration/verification tags present?	❒	❒
3. Cone and floor or base plate dampened?	❒	❒
4. Cone held firmly against the base by standing on the two foot pieces? Cone not allowed to move in any way during filling?	❒	❒
5. Representative samples scooped into the cone?	❒	❒
6. Cone filled in three approximately equal layers by volume?	❒	❒
7. Each layer rodded throughout its depth 25 times with hemispherical end of rod, uniformly distributing strokes?	❒	❒
8. Middle and top layers rodded to just penetrate into the underlying layer?	❒	❒
9. When rodding the top layer, excess concrete kept above the mold at all times?	❒	❒
10. Concrete struck off level with top of cone using tamping rod?	❒	❒
11. Excess concrete removed from around the base?	❒	❒
12. Cone lifted upward approximately 12 in (300 mm) in one smooth motion, without twisting the cone, in 5 ± 2 seconds?	❒	❒
13. Slump measured to the nearest ¼ in (5 mm) from the top of the cone to the displaced original center of the top surface of the specimen?	❒	❒
14. Test performed from start to finish within 2½ minutes?	❒	❒

First Attempt: Pass ❒ Fail ❒ Second Attempt: Pass ❒ Fail ❒

Signature of Examiner _____

Comments:

Washington State
Department of Transportation

WSDOT Test Method T 123

Method of Test for Bark Mulch

1. Scope
   a. This method covers a procedure for determining the sieve analysis and material finer than ~~¼ in~~ No. 4 sieve using a loose volume bucket.
2. Equipment
   a. A mechanical sieve shaker.
   b. Sieves — Sieves conforming to the requirements of AASHTO M-92. Breaker sieves may be used.
   c. Volume Bucket — A container calibrated in 1 gal. increments from 1 to 5 gal. A 5-gal. bucket may be used when calibrated as follows:

      On a level surface calibrate the container by gradually filling it with water in 1 gal. increments. Mark the inner wall of the container after the addition of each gallon
3. Procedure
   a. Air dry (140°F max.) the sample for 15 hours, ± 4 hours.
   b. Reduce the sample to testing size per the FOP for AASHTO T 248.
   c. Place the sample in the volume bucket and record the volume as the total volume.
   d. Shake the sample over the ~~1½~~2 in and No. 4 sieves. Using breaker sieves inserted between the two specified sieves so the No. 4 sieve will not be **overloaded**. Use caution to avoid over sieving as the wood material breaks down.
   e. The material retained on the ~~1½~~2 in sieve is measured in the volume bucket and recorded.
   f. The material on the breaker sieves is added to the material retained on the No. 4 sieve and the volume measured in the volume bucket and recorded.
   g. The percent passing is calculated as follows:

$$100 - \frac{(\text{Volume on sieve} \times 100)}{\text{Total Volume}} = \%\ \text{passing}$$

Performance Exam Checklist

Method of Test for Bark Mulch
WSDOT T 123

Participant Name _____ Exam Date _____

Procedure Element	Yes	No
1. The tester has a copy of the current procedure on hand?	❒	❒
2. All equipment is functioning according to the test procedure, and if required, has the current calibration/verification tags present?	❒	❒
3. Bark mulch sample dried for 15 ± 4 hrs @ 140°F?	❒	❒
4. Five (5) gallon bucket calibrated in 1 gal. increments?	❒	❒
5. Sample quartered or split and placed in calibrated bucket?	❒	❒
6. Volume of sample in bucket recorded as total volume?	❒	❒
7. Sample screened in the shaker through 1½ in screen, breaker screens and No. 4 screen?	❒	❒
8. Do not over shake to prevent degrading of sample?	❒	❒
9. Remove 1½ in screen and damp material in calibrated bucket and record volume as volume on 1½ in screen?	❒	❒
10. Place all breaker screen material down to No. 4 screen in bucket and record volume as volume on No. 4 screen?	❒	❒
11. All calculations performed correctly?	❒	❒
12. Report results?	❒	❒

First attempt: Pass ❒ Fail ❒ Second attempt: Pass ❒ Fail ❒

Signature of Examiner _____

Comments:

WSDOT FOP for WAQTC T 152[1]

Air Content of Freshly Mixed Concrete by the Pressure Method

Significance

Concrete is not a solid, but rather a solid with void spaces. The voids may contain gas such as air, or liquid such as water. All concrete contains air voids, and the amount can be increased by the addition of an air entraining agent to the mix. When such an agent is used, the size of the voids drastically decreases and the number of voids greatly increases, providing a much greater dispersal of voids.

Air entrainment is necessary in concrete that will be saturated and exposed to cycles of freezing and thawing and to deicing chemicals. The microscopic entrained air voids provide a site for relief of internal pressure that develops as water freezes and thaws inside the concrete. Without the proper entrained-air content, normal concrete that is saturated and is exposed to cycles of freezing and thawing can fail prematurely by scaling, spalling, or cracking.

Care must be taken, however, not to have too much entrained air. As the air content increases, there will be a corresponding reduction in the strength and other desirable properties of the concrete. Typically, this strength reduction will be on the order of 3 to 5 percent for each 1 percent of air content. A concrete mix design proportioned for 5 percent air, for example, will be approximately 15 to 25 percent lower in strength if the air content were to double.

Scope

This procedure covers determination of the air content in freshly mixed portland cement concrete containing dense aggregates in accordance with AASHTO T 152 (Type B meter). It is not for use with lightweight or highly porous aggregates. This procedure includes calibration of the "Type B" air meter gauge and two methods for calibrating the gauge are presented. Concrete containing aggregate that would be retained on the 2 inch (50 mm) sieve must be wet sieved. Sieve a sufficient amount of the sample over the 1½ in (37.5 mm) sieve in accordance with the FOP for WAQTC TM 2.

Apparatus

- Air Meter – Type B, as described in AASHTO T 152.
- Balance or Scale – Accurate to 0.3 percent of the test load at any point within the range of use (for Method 1 calibration only).
- Verified external or internal calibration vessel of known volume (usually 5 percent ± of the volume of the meter base).
- Tamping Rod – ⅝ inch (16 mm) diameter and approximately 24 inch (600 mm) long, having a hemispherical tip. (Hemispherical means half a sphere; the tip is rounded like half of a ball.)
- Vibrator – 7,000 vibrations per minute, 0.75 to 1.50 inch (19 to 38 mm) in diameter, at least 3 in (75 mm) longer than the section being vibrated for use with low slump concrete.
- Scoop.
- Container for Water – Rubber syringe (may also be a squeeze bottle).

[1]This FOP is based on WAQTC T 152 and has been modified per WSDOT standards. To view the redline modifications, contact the WSDOT Quality Systems Manager at 360-709-5412.

- Strike-Off Bar – Approximately 12 inch × ¾ inch × ⅛ inch (300 mm × 22 mm × 3 mm).
- Strike-Off Plate – A flat rectangular metal plate at least ¼ in (6 mm) thick or a glass or acrylic plate at least ½ in (12 mm) thick, with a length and width at least 2 in (50 mm) greater than the diameter of the measure with which it is to be used. The edges of the plate shall be straight and smooth within tolerance of 1⁄16 inch (1.5 mm).

  Note 1: Use either the strike-off bar or strike-off plate; both are not required. Unit weight requires the use of a strike-off plate.
- Mallet – With a rubber or rawhide head having a mass of 1.25 ± 0.5 lb (0.57 ± 0.23 kg).

Calibration of Air Meter Gauge

Note 2: There are two methods for calibrating the air meter, mass, or volume.

1. Screw the short piece of straight tubing into the threaded petcock hole on the underside of the cover. Determine the mass of the dry, empty air meter base and cover assembly (Mass Method only).
2. Fill the base nearly full with water.
3. Clamp the cover on the base with the tube extending down into the water. Mark the petcock with the tube attached for future reference.
4. Add water through the petcock having the pipe extension below until all air is forced out the other petcock. Rock the meter slightly until all air is expelled through the petcock.
5. Wipe off the air meter base and cover assembly and determine the mass of the filled unit (Mass Method only).
6. Pump up the air pressure to a little beyond the predetermined initial pressure indicated on the gauge. Wait a few seconds for the compressed air to cool and then stabilize the gauge hand at the proper initial pressure by pumping up or relieving pressure, as needed.
7. Close both petcocks and immediately open the main air valve exhausting air into the base. Wait a few seconds until the meter needle stabilizes. The gauge should now read 0 percent. If two or more tests show a consistent variation from 0 percent in the result, change the initial pressure line to compensate for the variation and use the newly established initial pressure line for subsequent tests.
8. Determine which petcock has the straight tube attached to it. Attach the curved tube to external portion of the same petcock.
9. Pump air into the air chamber. Open the petcock with the curved tube attached to it. Open the main air valve for short periods of time until 5 percent of water by mass or volume has been removed from the air meter. Remember to open both petcocks to release the pressure in the base and drain the water in the curved tube back into the base. To determine the mass of the water to be removed, subtract the mass found in Step 1 from the mass found in Step 5. Multiply this value by 0.05. This is the mass of the water that must be removed. To remove 5 percent by volume, remove water until the external calibrating vessel is level full.

Note 3: Many air meters are supplied with a calibration vessel(s) of known volume that are used for this purpose. Calibration vessels must be protected from damage that would change their volume.

If an external or internal calibration vessel is used, confirm what percentage volume it represents for the air meter being used. Vessels commonly represent 5 percent volume, but they are for specific size meters. This should be confirmed by mass.

10. Remove the curved tube. Pump up the air pressure to a little beyond the predetermined initial pressure indicated on the gauge. Wait a few seconds for the compressed air to cool and then stabilize the gauge hand at the proper initial pressure by pumping up or relieving pressure, as needed.

11. Close both petcocks and immediately open the main air valve exhausting air into the base. Wait a few seconds until the meter needle is stabilized. The gauge should now read 5.0 ± 0.2 percent. If the gauge is outside that range, the meter needs adjustment (consult the Regional Materials Laboratory). The adjustment could involve adjusting the starting point so that the gauge reads 5.0 ± 0.2 percent when this calibration is run, or could involve moving the gauge needle to read 5.0 percent. Any adjustment should comply with the manufacturer's recommendations.

    Note 4: Calibration shall be performed per agency standards, prior to field use, and weekly during construction use. Record the date of the calibration, the calibration results, and the name of the technician performing the calibration in the log book kept with each air meter.

    WSDOT Note: Air meter calibration standard for WSDOT:

    Regional Laboratory – Required to calibrate air meter yearly.

    Project Office – Required to calibrate air meter as follows:

    1. First Time Use Calibration – Calibrate air meter prior to first time use in the field each construction season or when the air meter has not been used for more than a month during the construction season.

    2. Construction Use Calibration – After "First Time Use Calibration," calibrate the air meter once a week when used during construction.

12. When the gauge hand reads correctly at 5.0 percent, additional water may be withdrawn in the same manner to check the results at other values such as 10 percent or 15 percent.

    Note 5: Remove the extension tubing from threaded petcock hole in the underside of the cover before starting the test procedure.

    An internal calibration vessel of known volume, usually 5 percent of the volume of the bucket, may be employed as a quick method to verify the calibration of the air meter during construction use. To employ this vessel proceed as follows.

13. Fill the base nearly full with water and place the internal calibration vessel into the base. Place the cover back on the base and gently add water through the petcock until all the air has been expelled. Do not disturb the meter to such an extent as to knock the calibration vessel from an upright position. Do not install either of the threaded tubes into the petcock when using the calibration vessels.

14. Pump up the air pressure to a little beyond the predetermined initial pressure indicated in the calibration record log book. Wait a few seconds for the compressed air to cool and then stabilize the gauge hand at the proper initial pressure by pumping up or relieving pressure, as needed.

15. Close both petcocks and immediately open the main air valve exhausting air into the base. Wait a few seconds and gently tap the back of the gauge until the meter needle stabilizes. The gauge should now read 5.0 ± 0.2 percent or ± 0.2 percent of the volume indicated in the calibration vessel. If the gauge is outside of that range, follow step 1 through step 12 of the calibration procedure to recalibrate the air meter. If further adjustment is required, consult the Regional Materials Laboratory.

16. If necessary, additional vessels may be placed into the base to verify the calibration of the air meter at 10 percent volume and 15 percent volume or the sum of the volumes indicated on the individual calibration vessels.

17. Record the date that the calibration of the air meter was verified in the calibration log book.

18. Gently release the air pressure in the base by opening one of the petcocks, then remove and drain any water from within the calibration vessel and store it in a safe location. The air meter is now ready for use.

Procedure Selection

There are two methods of consolidating the concrete – rodding and vibration. If the slump is greater than 3 in (75 mm), consolidation is by rodding. When the slump is 1 to 3 in (25 to 75 mm), internal vibration or rodding can be used to consolidate the sample, but the method used must be that required by the agency in order to obtain consistent, comparable results. For slumps less than 1 in (25 mm), consolidate the sample by internal vibration.

Procedure – Rodding

1. Obtain the sample in accordance with the FOP for WAQTC TM 2. If the concrete contains coarse aggregate particles that would be retained on a 2-in (50-mm) sieve, wet-sieve a sufficient amount of the representative sample over a 1½-in (37.5-mm) sieve, in accordance with the Wet Sieving portion of the FOP for WAQTC TM 2. Contact the Materials Laboratory for directions.

   Note 6: Testing shall begin within five minutes of obtaining the sample.

2. Dampen the inside of the air meter base and place on a firm, level surface.

3. Fill the base approximately ⅓ full with concrete.

4. Consolidate the layer with 25 strokes of the tamping rod, using the rounded end. Distribute the strokes evenly over the entire cross section of the concrete. Rod throughout its depth without hitting the bottom too hard.

5. Tap the sides of the base smartly 10 to 15 times with the mallet to close voids and release trapped air.

6. Add the second layer, filling the base about ⅔ full.

7. Consolidate this layer with 25 strokes of the tamping rod, penetrating about 1 in (25 mm) into the bottom layer.

8. Tap the sides of the base 10 to 15 times with the mallet.
9. Add the final layer, slightly overfilling the base.
10. Consolidate this layer with 25 strokes of the tamping rod, penetrating about 1 in (25 mm) into the second layer.
11. Tap the sides of the base smartly 10 to 15 times with the mallet.

    Note 7: The base should be slightly over full, about ⅛ inch (3 mm) above the rim. If there is a great excess of concrete, remove a portion with the trowel or scoop. If the base is under full, add a small quantity. This adjustment may be done only after consolidating the final layer and before striking off the surface of the concrete.

12. Strike off the surface of the concrete and finish it smoothly with a sawing action of the strike-off bar or plate, using great care to leave the base just full. The surface should be smooth and free of voids as much as possible.
13. Clean the top flange of the base to ensure a proper seal.
14. Moisten the inside of the cover and check to see that both petcocks are open and the main air valve is closed.
15. Clamp the cover on the base.
16. Inject water into one petcock until water emerges from the second petcock. (***Note:*** Water is injected into only one petcock during the entire procedure.)
17. Rock the air meter gently until no air bubbles appear to be coming out of the second petcock. The petcock expelling water should be higher than the petcock where water is being injected. Return the air meter to a level position and verify that water is present in both petcocks.
18. Close the air bleeder valve and pump air into the air chamber until the needle goes past the initial pressure line. Allow a few seconds for the compressed air to cool.
19. Tap the gauge gently with one hand while slowly opening the air bleeder valve until the needle rests on the initial pressure line. Close the air bleeder valve.
20. Close both petcocks.
21. Open the main air chamber valve.
22. Tap the sides of the base smartly with the mallet.
23. With the main air chamber valve open, lightly tap the gauge to settle the needle, and then read the air content to the nearest 0.1 percent, while the air chamber valve is open.
24. Release or close the main air chamber valve.
25. Open both petcocks to release pressure, remove the concrete, and thoroughly clean the cover and base with clean water.
26. Open the main air valve to relieve the pressure in the air chamber.

Procedure – Internal Vibration

1. Obtain the sample in accordance with FOP for WAQTC TM 2. If any aggregate larger than 2 in (50 mm) is present, the larger aggregate must be removed. Sieve a sufficient amount of the sample over the 1½ in (37.5 mm) sieve in accordance with the wet sieving portion of FOP for WAQTC TM 2. Contact the Materials Laboratory for directions.
2. Dampen the inside of the air meter bowl and place on a firm level surface.
3. Fill the base approximately half full.
4. Insert the vibrator at three different points. Do not let the vibrator touch the bottom or sides of the base.

   Note 8: Remove the vibrator slowly so that no air pockets are left in the material.

   Note 9: Continue vibration only long enough to achieve proper consolidation of the concrete. Over vibration may cause segregation and loss of appreciable quantities of intentionally entrained air.
5. Fill the base a bit over full.
6. Insert the vibrator as in Step 3. Do not let the vibrator touch the sides of the base and penetrate the first layer approximately 1 in (25 mm).
7. Return to Step 12 of the rodding procedure and continue.

Report

Results shall be reported on standard forms approved for use by the agency. Record the percent of air to the nearest 0.1 percent.

Report results on concrete delivery ticket (i.e., Certificate of Compliance).

The name of the tester who performed the field acceptance test is required on concrete delivery tickets containing test results.

Performance Exam Checklist

WSDOT FOP for WAQTC T 152
Air Content of Freshly Mixed Concrete by the Pressure Method

Participant Name _____ Exam Date _____

Procedure Element	**Yes**	**No**
1. The tester has a copy of the current procedure on hand?	☐	☐
2. All equipment is functioning according to the test procedure, and if required, has the current calibration/verification tags present?	☐	☐
3. Container filled in three equal layers, slightly overfilling the last layer?	☐	☐
4. Correct consolidation procedure chosen?	☐	☐
5. Rodding		
a. Each layer rodded throughout its depth 25 times with hemispherical end of rod, uniformly distributing strokes?	☐	☐
b. Bottom layer rodded throughout its depth, without forcibly striking the bottom of the container?	☐	☐
c. Middle and top layers rodded, each throughout their depths and penetrating 1 inch (25 mm) into the underlying layer?	☐	☐
d. Sides of the container tapped 10 to 15 times with the mallet after rodding each layer?	☐	☐
6. Internal Vibration		
a. Aggregate larger than 1½ removed?	☐	☐
b. Inside of air meter dampened?	☐	☐
c. Base filled to approximately half full for first lift?	☐	☐
d. Vibrator inserted in three different locations without touching sides or base?	☐	☐
e. Vibrator removed slowly and concrete not over vibrated?	☐	☐
f. Base filled to just overfull?	☐	☐
g. Vibrator inserted approximately 1 inch into first layer in three different locations without touching sides?	☐	☐
Finishing		
7. Concrete struck off level with top of container and rim cleaned?	☐	☐

Using a Type B Meter	Yes	No
8. Both petcocks open?	☐	☐
9. Air valve closed between air chamber and the bowl?	☐	☐
10. Inside of cover cleaned and moistened before clamping to base?	☐	☐
11. Water injected through petcock until it flows out the other petcock?	☐	☐
12. Water injection into the petcock continued while tipping the meter to ensure all air is expelled?	☐	☐
13. Air pumped up to initial pressure line?	☐	☐
14. A few seconds allowed for the compressed air to stabilize?	☐	☐
15. Gauge adjusted to the initial pressure?	☐	☐
16. Both petcocks closed?	☐	☐
17. Air valve opened between chamber and bowl?	☐	☐
18. Sides of bowl tapped with the mallet?	☐	☐
19. With air valve open, Air percentage read after lightly tapping the gauge to stabilize the hand?	☐	☐
20. Air valve closed and then petcocks opened to release pressure before removing the cover?	☐	☐
21. Air content recorded to 0.1 percent?	☐	☐
22. All calculations performed correctly?	☐	☐

First Attempt: Pass ☐ Fail ☐ Second Attempt: Pass ☐ Fail ☐

Signature of Examiner _____

Comments:

WSDOT FOP for AASHTO T 166[1]

Bulk Specific Gravity of Compacted Hot Mix Asphalt Using Saturated Surface-Dry Specimens

1. Scope

   1.1 This method of test covers the determination of bulk specific gravity of specimens of compacted hot mix asphalt.

   1.2 Definition:

   1.2.1 Bulk specific gravity (of solids) – The ratio of the mass in air of a unit volume of a permeable material (including both permeable and impermeable voids normal to the material) at a stated temperature to the weight in air of equal density of an equal volume of gas-free distilled water at a stated temperature. The form of the expression shall be:

   Bulk specific gravity x/y °C

   Where:
   x = temperature of the material, and
   y = temperature of the water

   1.3 The bulk specific gravity of the compacted hot mix asphalt may be used in calculating the unit mass of the mixture.

   1.4 The values stated in English units are to be regarded as the standard.

   Note: Method A shall be used for laboratory compacted specimens, and field specimens compacted using gyratory compactor.

   Method C shall be used for asphalt pavement cores.

2. Referenced Documents

   2.1 AASHTO Standards

   M 231 – Weighing Devices Used in the Testing of Materials

   PP 75 – Standard Practice for Vacuum Drying Compacted Asphalt Specimens

   T 331 – Bulk Specific Gravity (Gmb) and Density of Compacted Hot Mix Asphalt (HMA) Using Automatic Vacuum Sealing Method

3. Test Specimens

   3.1 Test specimens may be either laboratory-molded HMA mixtures or from HMA pavements. The mixtures may be surface, wearing, leveling or base course materials.

   3.2 Size of Specimens – It is recommended that: (1) the diameter of cylindrically molded or cored specimens, or the length of the sides of sawed specimens, be at least equal to four times the maximum size of the aggregate; and (2) the thickness of specimens be at least one-and-one-half times the maximum size of the aggregate.

[1]This Test Method is based on AASHTO T 166-10.

3.3 Specimens shall be taken from pavements with core drill, diamond or carborundum saw, or by other suitable means.

3.4 Care shall be taken to avoid distortion, bending, or cracking of specimens during and after the removal from pavement or mold. Specimens shall be stored in a safe, cool place.

3.5 Specimens shall be free from foreign materials such as seal coat, tack coat, foundation material, soil, paper, or foil.

3.6 If desired, specimens may be separated from other pavement layers by sawing or other suitable means. Care should be exercised to ensure sawing does not damage the specimens.

Method A

4. Apparatus

4.1 Weighing Device – The weighing device shall have sufficient capacity, be readable to 0.1 percent of the specimen mass, or better, and conform to the requirements of AASHTO M 231. The weighing device shall be equipped with suitable suspension apparatus and holder to permit weighing the specimen while suspended from the center of scale pan of the weighing device.

4.2 Suspension Apparatus – The wire suspending the container shall be the smallest practical size to minimize any possible effects of a variable immersed length. The suspension apparatus shall be constructed to enable the container to be immersed to a depth sufficient to cover it and the specimen during weighing. Care should be exercised to ensure no trapped air bubbles exist under the specimen.

4.3 Water Bath – For immersing the specimen in water while suspended under the weighing device, equipped with an overflow outlet for maintaining a constant water level.

4.4 Thermometric Device – Liquid-in-glass thermometers or other suitable thermometric device, accurate to 1ºF (0.5º C).

5. Procedure

5.1 Dry the specimen to a constant mass (Note 1) at a temperature of 125 ± 5°F (52 ± 3°C). As an alternative to oven drying to constant mass, drying the sample according to PP 75 may be used.

5.2 Cool the specimen to room temperature for a minimum of 15 hours and a maximum of 24 hours at 77 ± 9°F (25 ± 5°C) per SOP 731 and record the dry mass as A (Note 2). Immerse each specimen in water at 77 ± 1.8°F (25 ± 1°C) for 4 ± 1 minute and record the immersed mass as C. Remove the specimen from the water, damp dry the specimen by blotting with a damp towel as quickly as possible (blotting not to exceed 10s), and determine the surface-dry mass as, B (Note 3). Any water that seeps from the specimen during the weighing operation is considered part of the saturated specimen. Each specimen shall be immersed and weighed individually.

Note 1: Constant mass shall be defined as the mass at which further drying does not alter the mass by more than 0.05 percent when weighed at 2-hour intervals when using oven drying or by more than 0.05 percent when weighed after at least two drying cycles of the vacuum-drying apparatus required in AASHTO PP 75. Recently molded laboratory specimens which have not been exposed to moisture do not require drying.

Note 2: If desired, the sequence of testing operations may be changed to expedite the test results. For example, first the immersed mass (C) can be taken, then the surface-dry mass (B), and finally the dry mass (A).

Note 3: Terry cloth has been found to work well for an absorbent cloth. Damp is considered to be when no water can be wrung from towel.

6. Transportation of Warm Specimens

It is not recommended that specimens be transported before they have cooled to room temperature. If however, a specimen must be transported prior to reaching room temperature the following guidelines should be used to transport the specimen:

a. Place the specimen in a container that has a flat bottom surface to prevent deformation of the bottom of the specimen.

Note: A flat piece of wood, rigid aluminum or reinforced cardboard may be used to create a flat surface in an HMA sample box.

b. Make sure the specimen is not deformed in handling.

c. Do not stack anything on top of the specimen container.

d. Transport the container in the cab of the vehicle or secure it in the vehicle bed to prevent movement during transit.

7. Calculation

7.1 Calculate the bulk specific gravity of the specimens as follows (round and report the value to the nearest three decimal places):

$$\text{Bulk Specific Gravity} = \frac{A}{B - C}$$

Where:

A = Mass in grams of specimen in air
B = Mass in grams of surface-dry specimen in air
C = Mass in grams of specimen in water.

7.2 Calculate the percent water absorbed by the specimen (on volume basis) as follows:

$$\text{Percent Water Absorbed by Volume} = \frac{B - A}{B - C} \times 100$$

7.3 If the percent water absorbed by the specimen as calculated in Section 7.2 exceeds 2 percent, use AASHTO T 331 Bulk Specific Gravity (Gmb) and Density of Compacted Hot Mix Asphalt (HMA) Using Automatic Vacuum Sealing Method to determine the bulk specific gravity (G_{mb}).

Method B

WSDOT does not use Method B and has removed this section from the procedure.

Method C

8. Procedure

   8.1 This procedure can be used for testing specimens which contain substantial amount of moisture. Specimens obtained by coring or sawing can be tested the same day by this method.

   8.2 The testing procedure shall be the same as given in Section 5 except for the sequence of operations. The dry mass (A) of the specimen is determined last as follows.

9. Calculations

   9.1 Calculate the bulk specific gravity per Section 7.1.

10. Report

   10.1 The report shall include the following:

      10.1.1 Bulk Specific Gravity reported to the nearest thousandth (0.001).

      10.1.2 Absorption reported to the nearest hundredth (0.01).

11. Precision

   11.1 See AASHTO T 166 for precision statement.

Performance Exam Checklist

WSDOT FOP for AASHTO T 166
Bulk Specific Gravity of Compacted Hot Mix Asphalt Using Saturated Surface Dry Specimens

Participant Name _____ Exam Date _____

Procedure Element	**Yes**	**No**
1. The tester has a copy of the current procedure on hand?	☐	☐
2. All equipment is functioning according to the test procedure, and if required, has the current calibration/verification tags present?	☐	☐
Method A (For use with laboratory compacted specimens.)		
1. Compacted specimen cooled to room temperature (refer to step 5.2), 77 ± 9º F, and record the dry mass.	☐	☐
2. Immerse each specimen in water at 77 ± 1.8°F for 3 to 5 minutes and record the immersed mass to the nearest 0.1 gram?	☐	☐
3. Remove sample from water, surface dry with damp towel and weigh the specimen in air at 77 ± 9º F to the nearest 0.1 gram?	☐	☐
4. Calculated the bulk specific gravity of the specimens per Section 7.1?	☐	☐
Method C (For use with pavement cores and chunks.)		
1. Immerse specimen in water at 77 ± 1.8º F for 3 to 5 minutes and record the immersed weight to the nearest 0.1 gram?	☐	☐
2. Remove sample from water, surface dry by blotting with damp towel and immediately weigh specimen in air at 77 ± 9º F to the nearest 0.1 gram?	☐	☐
3. Dry specimen in vacuum drying apparatus?	☐	☐
4. Place specimen in container (noting the empty container weight), then place in an oven at 125 ± 5º F?	☐	☐
5. Weigh specimen in container?		
6. Return specimen and container to oven until it has reached a constant weight?	☐	☐
7. Remove container and sample from oven and allow to cool to room temperature, 77 ± 9º F?	☐	☐
8. Weigh container with sample and record to nearest 0.1 gram, deducting known weight of container to arrive at oven-dried sample weight?	☐	☐
9. Calculated the bulk specific gravity of the specimen per Section 7.1?	☐	☐

First Attempt: Pass ☐ Fail ☐ Second Attempt: Pass ☐ Fail ☐

Signature of Examiner _____

Comments:

WSDOT FOP for WAQTC T 168

Sampling of Hot Mix Asphalt Paving Mixtures
FOP for WAQTC T 168

Significance

Testing bituminous paving mixtures in the field begins with obtaining and preparing the sample to be tested. Standardized procedures for obtaining a representative sample have been established. Producing strong, durable, reliable pavement in roadways requires careful sampling and accurate testing.

Technicians must be patient and follow these procedures. If one considers that the specifications require quality tests to be made on only a small portion of the total material placed, the need for a truly representative sample is apparent. For this reason, every precaution must be taken to obtain a sample that is truly representative of the entire batch and then to protect that sample from contamination and physical damage.

Scope

This procedure covers the sampling of bituminous paving mixtures from HMA plants, truck transports, and roadways in accordance with AASHTO T 168. Sampling is as important as testing, and every precaution must be taken to obtain a truly representative sample.

Apparatus

- Shovel.
- Sample containers such as cardboard boxes, metal cans, stainless steel bowls, or other agency-approved containers.
- Mechanical sampling device.
- Thermometer- Metal probe or other suitable thermometric device, accurate to 1ºF (0.5º C)

Sample Size

Sample size depends on the test methods specified by the agency for acceptance.

For Acceptance sampling and testing only: WSDOT requires a minimum of two times the amount required for testing. This should be 60 lbs.

For Acceptance and Conformation sampling and testing: WSDOT requires a minimum of four times the amount required for testing. This should be approximately 120 lbs. (See WSDOT *Construction Manua*l Section 9-3.7 for Conformation sampling frequency)

Sampling

- **General**

1. The material shall be tested to determine variations. The supplier/contractor shall sample the HMA mixture in the presence of the Project Engineer. The supplier/contractor shall provide one of the following for safe and representative sampling:

   a. A mechanical sampling device installed between the discharge of the silo and the truck transport that is approved by the Regional Materials Engineer.

   b. Platforms or devices to enable sampling from the truck transport without entering the truck transport for sampling HMA.

2. The supplier/contractor shall place dense graded mixture samples in cardboard boxes or stainless steel bowls or other agency provided containers. The samples shall be delivered to a location designated by the Project Engineer. Place open graded mixture samples in stainless steel bowls. Do not put open graded mixture samples in boxes until they have cooled to the point that bituminous material will not migrate from the aggregate.

   Note: Care shall be taken to prevent contamination of bituminous mixes by dust or other foreign matter, and to avoid segregation of aggregate and bituminous materials.

   - **Attached Sampling Devices** – Some agencies require mechanical sampling devices for HMA and cold feed aggregate on some projects. These are normally permanently attached devices that allow a sample container to pass perpendicularly through the entire stream of material or divert the entire stream of material into the container. Operation may be hydraulic, pneumatic, or manual and allows the sample container to pass through the stream twice, once in each direction, without overfilling. Special caution is necessary with manually operated systems since a consistent speed is difficult to maintain and non-representative samples may result. Check agency requirements for the specifics of required sampling systems.

     WSDOT requires the mechanical sampling device be located between the silo and the truck transport unless otherwise approved by the Region Materials Engineer.

   - **Sampling from Truck Transports Haul Units**

     a. Obtain samples in four approximately equal increments from truck transports.

     b. Obtain each increment from approximately 12 in (300 mm) below the surface, in each of the four quadrants of the load.

     c. Combine the increments to form a sample of the required size.

   - **Sampling from Roadway Prior to Compaction (Plate Method)**

     WSDOT has deleted this section.

Temperature of Mix

Immediately upon obtaining a sample, using a verified thermometer, check and record temperature of the sample.

Identification and Shipping

1. Identify sample containers as required by the agency.
2. Ship samples in containers that will prevent loss, contamination, or damage.
3. Refer to the sample identification requirements in FOP for WSDOT Test Method 712.

Performance Exam Checklist

WSDOT FOP for WAQTC/AASHTO T 168
Sampling of Hot Mix Asphalt Paving Mixtures

Participant Name _____ Exam Date _____

Procedure Element	**Yes**	**No**
1. The tester has a copy of the current procedure on hand?	☐	☐
2. Containers of correct type and ample size available?	☐	☐
3. Sampling	☐	☐
a. Samples from truck transport taken from four quadrants at approximate depth of 12 inches?	☐	☐
b. Samples taken with approved mechanical sampling device?	☐	☐
4. Temperature of mix checked?	☐	☐
5. Sample size meets agency requirements?	☐	☐
6. Sample identified as required?	☐	☐

First Attempt: Pass ☐ Fail ☐ Second Attempt: Pass ☐ Fail ☐

Signature of Examiner _____

Comments:

WSDOT FOP for AASHTO T 176[1]

Plastic Fines in Graded Aggregates and Soils by Use of the Sand Equivalent Test

1. Scope

   1.1 This test is intended to serve as a rapid field test to show the relative proportions of fine dust or claylike material in soils or graded aggregates.

   1.2 The following applies to all specified limits in this standard: For the purpose of determining conformance with these specifications, an observed value or a calculated value shall be rounded off "to the nearest unit" in the last right-hand place of figures used in expressing the limiting value, in accordance with E 29, Using Significant Digits in Test Data to Determine Conformance With Specifications.

   1.3 The values stated in English units are to be regarded as the standard.

   1.4 Refer to R 16 for regulatory information for chemicals.

2. Reference Document

   2.1 AASHTO Standards

   M 92 – Wire-Cloth Sieves for Testing Purposes

   M 231 – Weighing Devices Used in the Testing of Materials

   2.2 ASTM Standards

   E 29 – Using Significant Digits in Test Data to Determine Conformance With Specifications

   2.3 WSDOT Standards

   T2 – FOP for Sampling of Aggregates

   T 248 – FOP for Reducing Samples of Aggregate to Testing Size

3. Significance and Use

   3.1 This test method is used to determine the proportion of detrimental fines in the portion passing the 4.75-mm (No. 4) sieve of soils or graded aggregates.

4. Apparatus

   4.1 A graduated plastic cylinder, rubber stopper, irrigator tube, weighted foot assembly, and siphon assembly, all conforming to their respective specifications and dimensions shown in Figure 1. Fit the siphon assembly to a 1 gal (4L) bottle of working calcium chloride solution (see Section 4.9) placed on a shelf 36 ± 1 in (915 ± 25 mm) above the work surface. In lieu of the specified 1 gal (4L) bottle, a glass or plastic vat having a larger capacity may be used provided the liquid level of the working solution is maintained between 36 and 46 inches (915 and 1170 mm) above the work surface.

[1]This FOP is based on AASHTO T 176-08 and has been modified per WSDOT standards. To view the redline modifications, contact the WSDOT Quality Systems Manager at 360-709-5412.

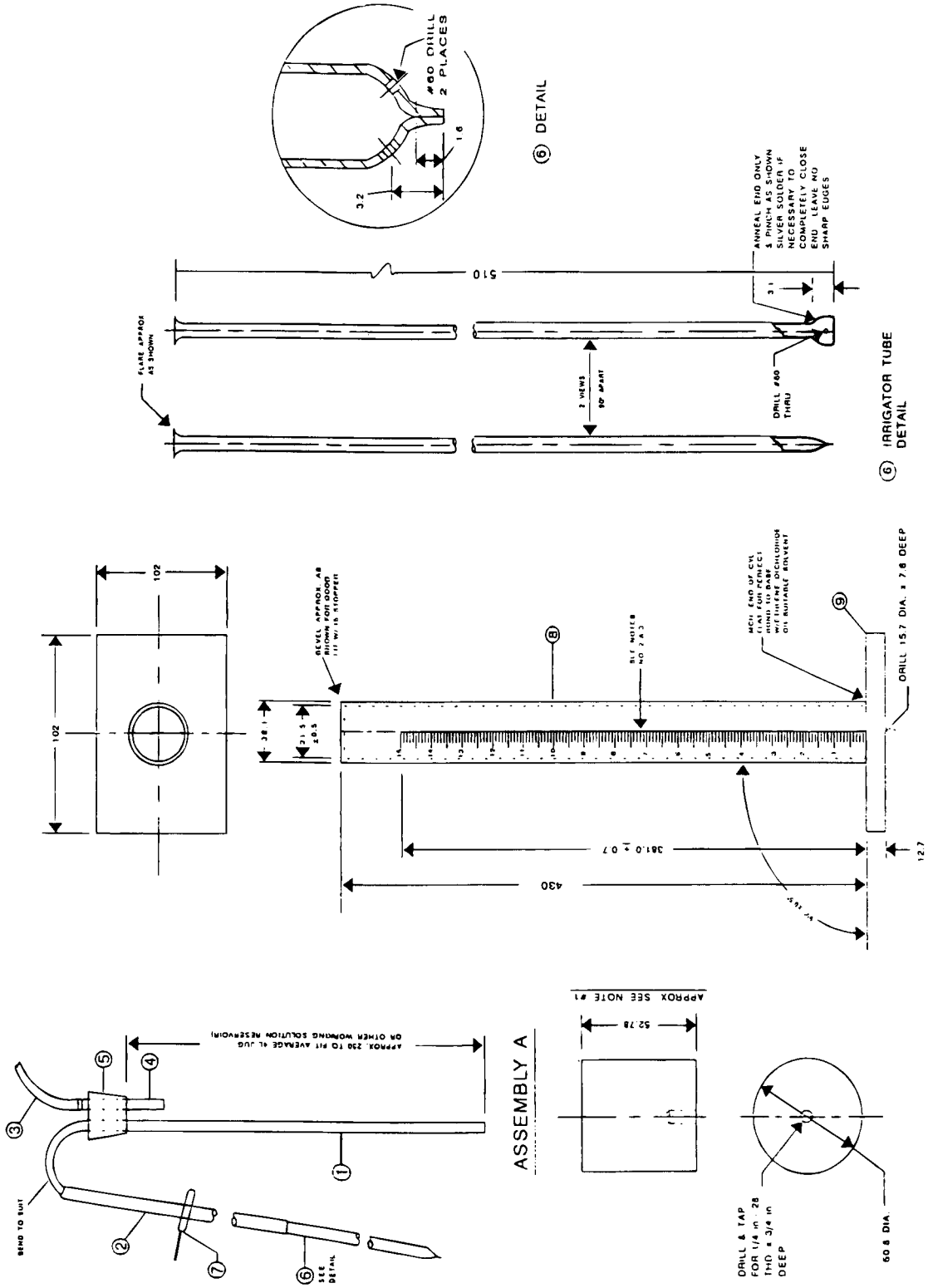

FIGURE 1 Sand Equivalent Apparatus

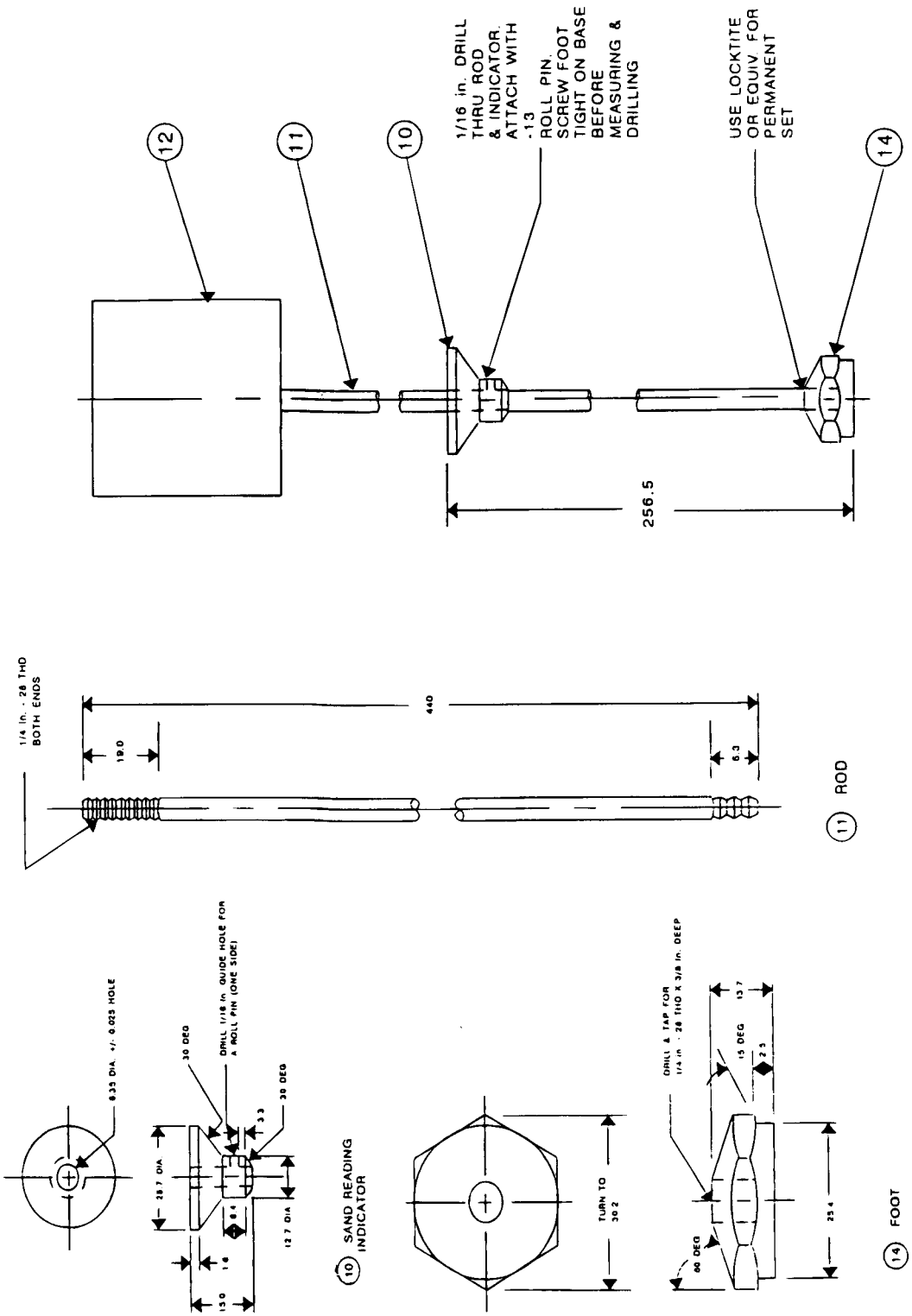

ASSEMBLY C

Note: all dimensions are shown in mm unless otherwise indicated.

FIGURE 1 Sand Equivalent Apparatus (continued)

List of Material					
Assembly	**No. Reg.**	**Description**	**Stock size**	**Material**	**Heat Treatment**
A	**Siphon Assembly**				
	1	Siphon Tube	6.4 dia. × 400		
	2	Siphon Hose	4.6 I.D. × 1220		
	3	Blow Hose	4.8 I.D. × 50.8		
	4	Blow Tube	6.4 dia × 50.8		
	5	Two-Hole Stopper	No. 6		
	6	Irrigator Tube	6.4 O.D. 0.89 Wall × 500 Stainless Steel Tube, Type 316		
	7	Clamp	Pinchcock, Day, BKH No. 21730 or Equiv.		
B	**Graduate Assembly**				
	8	Tube	38.1 Od. × 430	Trans. Acrylic Plastic	
	9	Base	12.7 × 102 × 102	Trans. Acrylic Plastic	
C	**Weighted Foot Assembly**				
	10	Sand Reading Indicator	6.4 dia. × 14.9	Nylon 101 Type 66 Annealed	
	11	Rod	6.4 dia. × 438.2	Brass	
	12	Weight	50.8 dia. × 52.78	C.R. SH.	
	13	Roll Pin	0.16 dia. × 12.7	Steel	
	14	Foot	0.16 dia. × 13.7	Brass	
	15	Solid Stopper	No. 7	Rubber	

Notes

1. "C" Mounted Foot Assembly to weigh 1000 ± 5 g.
2. Graduations of graduate to be 2.54 mm apart and every tenth mark to be numerically designated as shown. Every fifth line should be approximately 9.5 mm long. All other lines should be approximately 5.5 mm long. Depth to be 0.4 mm. Width to be 0.8 mm across the top.
3. Accuracy of scale to be ± 0.25 mm. Error at any point on scale to be ± 0.75 mm of true distance to zero.
4. Glass or stainless steel may be substituted as a material type for the copper siphon and blow tubing.

Sand Equivalent Apparatus
Figure 1

Note 1: An older model of weighted foot assembly has a guide cap that fits over the upper end of the graduated cylinder and centers the rod in the cylinder, and the foot of the assembly has a conical upper surface and three centering screws to center it loosely in the cylinder. The older model does not have the same reading indicator affixed to the rod (Figure 1), but a slot in the centering screws of the weighted foot is used to indicate the sand reading. Apparatus with the sand reading indicator (Figure 2) is preferred for testing clayey materials.

Apparatus
Figure 2

4.2 A tinned measure, having a capacity of 3 oz (85 ± 5 mL), approximately 2.25 in (57 mm) in diameter.

4.3 A balance with sufficient capacity, readable to 0.1 percent of the sample mass, or better, and conforming to the requirements of M 231.

4.4 A wide-mouth funnel approximately 4 in (100 mm) in diameter at the mouth.

4.5 A clock or watch reading in minutes and seconds.

4.6 A mechanical shaker having a throw of 8.00 ± 0.04 in (203.2 ± 1.0 mm) and operating at 175 ± 2 cycles per minute (2.92 ± 0.03 Hz) (Note 2). Prior to use, fasten the mechanical sand equivalent shaker securely to a firm and level mount.

Note 2: The mechanical shaker shall be used when performing referee sand equivalent determinations.

4.7 A manually operated shaker capable of producing an oscillating motion at the rate of 100 complete cycles in 45 ± 5 seconds, with a hand-assisted half stroke length of 5.0 ± 0.2 in (127 ± 5 mm). The shaker shall be fastened securely to a firm and level mount by bolts or clamps.

4.8 Stock Solution

4.8.1 Prepare a calcium chloride stock solution

Ingredients: 454 g (1.0 lb) of technical grade Anhydrous Calcium Chloride
2050 g (4.515 lb) of USP Glycerin

Calcium chloride stock solution: Dissolve the 454 g (1.0 lb) of calcium chloride in 1.89 L (1/2 gal) of distilled water. Cool and filter it through ready pleated rapid filtering paper. Add the 2050 g (4.515 lb) of glycerin to the filtered solution, mix well and dilute to 3.78 L (1 gal).

Note 3: The stock solution can be stored provided the time of storage is not sufficient to promote the growth of fungi.

4.9 Working calcium chloride solution: Prepare the working calcium chloride solution by diluting one measuring tin full 3 oz. (85 ± 5 mL), or from a graduated cylinder of the stock calcium chloride solution to 1 gal (3.8 L) with water. Use distilled or demineralized water for the normal preparation of the working solution. Record the date the working solution was made on the gallon container. Working solutions more than 30 days old shall be discarded.

4.10 A straightedge or spatula, suitable for striking off the excess soil from the tin measure.

4.11 A thermostatically controlled drying oven.

4.12 Quartering or splitting cloth, approximately 2 ft. square, nonabsorbent material such as plastic or oil cloth.

4.13 A No. 4 (4.75-mm) sieve conforming to the requirements of M 92.

4.14 Optional Handle for Irrigation Tube – A 25 mm diameter wooden dowel to aid in pushing the irrigation tube into firm materials. See Figure 1, Assembly B.

5. Temperature Control

5.1 The temperature of the working solution should be maintained at 67–77°F (22 ± 3°C) during the performance of this test. If field conditions preclude the maintenance of the temperature range, frequent reference samples should be submitted to a laboratory where proper temperature control is possible. It is also possible to establish temperature correction curves for each material being tested where proper temperature control is not possible. However, no general correction curve should be utilized for several materials even within a narrow range of sand equivalent values. Samples which meet the minimums and equivalent requirement at a working solution temperature below the recommended range need not be subject to reference testing.

6. Sampling

6.1 Obtain a sample of the material to be tested in accordance with WSDOT FOP for AASHTO T 2.

6.2 Reduce the sample in accordance with WSDOT FOP for AASHTO T 248.

6.3 Sieve the sample over No. 4 (4.75 mm) sieve using a mechanical shaker. (Make sure all large clumps of material are broken up before placing sieves in the mechanical shaker.)

6.3.1 Shake the sample in the mechanical shaker for a minimum of 10 minutes or for the minimum verified shaking time, whichever is greater.

6.3.2 The material shall be at Saturated Surface Dry (Saturated Surface Dry is defined herein as no visible free moisture, but material may still appear damp) or drier prior to sieving.

6.3.2.1 If the "as received" sample requires drying to achieve the required SSD or dryer condition prior to initial sieving, either air dry it or dry it in a thermostatically controlled oven at a temperature not to exceed 350°F.

6.3.3 Sieves may be nested above the No. 4 (4.75 mm) to prevent overloading, as defined in Table 1 of WSDOT FOP for WAQTC/AASHTO T 27/T 11, or the sample may be sieved in increments.

6.3.4 Break up any remaining clumps of fine-grained material and clean the fines from particles retained above the No. 4 (4.75 mm) sieve. Pass this material over the No. 4 (4.75 mm) sieve and include the material that passes in the total material passing the No. 4 (4.75 mm) sieve.

6.4 Split or quarter the material passing the No. 4 (4.75 mm), in accordance with WSDOT FOP for AASHTO T 248, to yield approximately 1,000 g to 1,500 g of material. Use extreme care to obtain a truly representative portion of the original sample (Note 4).

Note 4: Experiments show that as the amount of material being reduced by splitting or quartering is decreased, the accuracy of providing representative portions is decreased. It is imperative that the sample be split or quartered carefully. When it appears necessary, dampen the material before splitting or quartering to avoid segregation or loss of fines.

7. Sample Preparation

7.1 Prepare two test samples by the following method:

7.1.1 The sample must be in the proper moisture condition to achieve reliable results. Condition is determined by tightly squeezing a small portion of the thoroughly mixed sample in the palm of the hand. If the cast that is formed permits careful handling without breaking, the correct moisture range has been obtained. If the material is too dry, the cast will crumble and it will be necessary to add water and remix and retest until the material forms a cast. If the material shows any free water, it is too wet to test and must be drained and air-dried, mixing it frequently to ensure uniformity. This overly wet material will form a good cast when checked initially, so the drying process should continue until a squeeze check on the drying material gives a cast which is more fragile and delicate to handle than the original.

Place the sample on the splitting cloth and mix by alternately lifting each corner of the cloth and pulling it over the sample toward the diagonally opposite corner, causing the material to be rolled. When the material appears homogeneous, finish the mixing with the sample in a pile near the center of the cloth.

7.1.2 Fill the 3 oz (85 mL) tin measure by pushing it through the base of the pile while exerting pressure with the hand against the pile on the side opposite the measure. As the tin is moved though the pile, hold enough pressure with the hand to cause the material to fill the tin to overflowing. Press firmly with the palm of the hand, compacting the material and allowing the maximum amount to be placed in the tin. Strike off the tin measure level full with a spatula or straightedge. For the second determination, remix the sample and fill the tin again.

Dry the test sample in an oven in accordance with FOP for AASHTO T 255. The oven temperature shall not exceed 350°F (177°C). Cool to room temperature before testing. It is acceptable to place the test sample in a larger container to aid drying.

8. Procedure

8.1 Start the siphon by forcing air into the top of the solution bottle through the bent copper, glass, or stainless steel blow tube while the pinch clamp is open. The apparatus is now ready for use.

8.2 Siphon 4.0 ± 0.1 in (101.6 ± 2.5 mm) of working calcium chloride solution into the plastic cylinder. Pour the prepared test sample into the plastic cylinder using the funnel to avoid spillage (see Figure 3). Tap the bottom of the cylinder sharply on the heel of the hand several times to release air bubbles and to promote thorough wetting of the sample.

Tapping Bottom of Cylinder
Figure 3

8.3 Allow the wetted sample to stand undisturbed for 10 ± 1 minute. At the end of the 10-minute soaking period, stopper the cylinder, then loosen the material from the bottom by partially inverting the cylinder and shaking it simultaneously.

8.4 After loosening the material from the bottom of the cylinder, shake the cylinder and contents by any one of the following methods:

8.4.1 Mechanical Shaker Method – Place the stoppered cylinder in the mechanical sand equivalent shaker, set the timer, and allow the machine to shake the cylinder and contents for 45 ± 1 second.

8.4.2 Manual Shaker Method – Secure the stoppered cylinder in the three spring clamps on the carriage of the hand-operated sand equivalent shaker and reset the stroke counter to zero. Stand directly in front of the shaker and force the pointer to the stroke limit marker painted on the backboard by applying an abrupt horizontal thrust to the upper portion of the right hand spring steel strap. Then remove the hand from the strap and allow the spring action of the straps to move the carriage and cylinder in the opposite direction without assistance or hindrance. Apply enough force to the right-hand spring steel strap during the thrust portion of each stroke to move the pointer to the stroke limit marker by pushing against the strap with the ends of the fingers to maintain a smooth oscillating motion. The center of the stroke limit marker is positioned to provide the proper stroke length and its width provides the maximum allowable limits of variation. The proper shaking action is accomplished only when the tip of the point reverses direction within the marker limits. Proper shaking action can best be maintained by using only the forearm and wrist action to propel the shaker. Continue the shaking action for 100 strokes.

Manually-Operated Shaker
Figure 4

8.5 Following the shaking operation, set the cylinder upright on the work table and remove the stopper.

8.6 Irrigation Procedure – Insert the irrigator tube in the cylinder and rinse material from the cylinder walls as the irrigator is lowered. Force the irrigator through the material to the bottom of the cylinder by applying a gentle stabbing and twisting action while the working solution flows from the irrigator tip. This flushes the fine material into suspension above the coarser sand particles (see Figure 5). Continue to apply the stabbing and twisting action while flushing the fines upward until the cylinder is filled to the 15 in (381 mm) mark. Then raise the irrigator slowly without shutting off the flow so that the liquid level is maintained at about 15 in (381 mm) while the irrigator is being withdrawn. Regulate the flow just before the irrigator is entirely withdrawn and adjust the final level to 15 in (381 mm). Final level as judged by the bottom of the meniscus shall be between the top two gradations on the tube but shall not be above the 15 in (381 mm) level.

Irrigation
Figure 5

Note 5: For certain soils, particularly on crushed materials, the stabbing action may not be possible. For these materials, the irrigation technique is as follows: Continue to apply a twisting action as the irrigation tube is slowly withdrawn. As the tube is withdrawn, it is essential that as many fines as possible flushed upward until the cylinder is filled to the 15 in (381 mm) mark.

8.7 Allow the cylinder and contents to stand undisturbed for 20 minutes ± 15 seconds. Start the timing immediately after withdrawing the irrigator tube

8.8 At the end of the 20 minute sedimentation period, read and record the level of the top of the clay suspension. This is referred to as the "clay reading." If no clear line of demarcation has formed at the end of the specified 20 minute sedimentation period, allow the sample to stand undisturbed until a clear reading can be obtained, then immediately read and record the level of the top of the clay suspension and the total sedimentation time. If the total sedimentation time exceeds 30 minutes, it will be rejected.

8.9 After the clay reading has been taken, the "sand reading" shall be obtained by one of the following methods:

8.9.1 When using the weighted foot assembly having the sand indictor on the rod of the assembly, place the assembly over the cylinder and gently lower the assembly toward the sand. Do not allow the indicator to hit the mouth of the cylinder as the assembly is being lowered. As the weighted foot comes to rest on the sand, tip the assembly toward the graduations on the cylinder until the indicator touches the inside of the cylinder. Subtract 10 in (254 mm) from the level indicated by the extreme top edge of the indicator and record this value as the "sand reading" (see Figure 6).

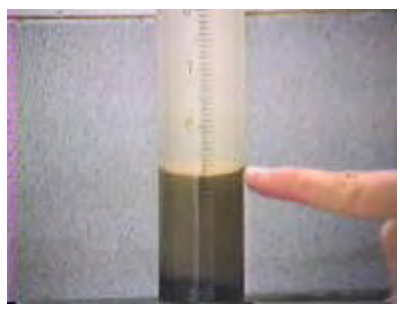

Clay Reading
Figure 6

8.9.2 If an older model weighted foot assembly having centering screws is used, keep one of the centering screws in contact with the cylinder wall near the graduations so that it can be seen at all times while the assembly is being lowered. When the weighted foot has come to rest on the sand, read the level of the centering screw and record this value as the "sand reading."

8.10 If clay or sand readings fall between 0.1 in (2.5 mm) graduations, record the level of the higher graduation as the reading. For example, a clay reading of 7.95 would be recorded as 8.0, and a sand reading of 3.22 would be recorded as 3.3.

9. Calculations

9.1 Calculate the sand equivalent (SE) to the nearest 0.1 using the following formula:

$$SE = \frac{\text{Sand Reading} \times 100}{\text{Clay Reading}}$$

9.2 If the calculated sand equivalent is not a whole number, report it as the next higher whole number, as in the following example:

$$SE = \frac{3.3 \times 100}{8} = 41.25$$

which is reported as 42.

9.3 Average the whole number values determined as described above. If the average of these values is not a whole number, raise it to the next higher whole number, as in the following example:

Calculated SE values: 41.2, 40.9

After raising each to the next higher whole number, they become: 42, 41

The average of these values is then determined:

$$\frac{42 + 41}{2} = 41.5$$

which is reported as 42.

If the two results from the same SE sample vary by more than 8 points, the test shall be invalid and a new test completed.

9.3.1 Since the average value is not a whole number, it is raised to the next higher whole number and the reported averages and equivalent value is reported as 42.

10. Report

10.1 Report the results using one or more of the following:

- Materials Testing System (MATS)
- DOT Form 350-161, 422-022, 422-022A, or 422-022B
- Form approved in writing by the State Materials Engineer

Performance Exam Checklist

Plastic Fines in Graded Aggregates and Soils by the Use of the Sand Equivalent Test FOP for AASHTO T 176

Participant Name _____ Exam Date _____

Procedure Element	**Yes**	**No**
Preparation		
1. The tester has a copy of the current procedure on hand?	☐	☐
2. All equipment is functioning according to the test procedure, and if required, has the current calibration/verification tags present?	☐	☐
3. Sample passed through No. 4 (4.75 mm) sieve?	☐	☐
4. Material in clods broken up and re-screened?	☐	☐
5. No fines lost?	☐	☐
6. Temperature of working solution 72 ± 5°F (22 ± 3°C)?	☐	☐
7. Working calcium chloride solution 36 ± 1 in (915 mm ± 25 mm) above the work surface?	☐	☐
8. 4 ± 0.1 in (101.6 ± 2.5 mm) working calcium chloride solution siphoned into cylinder?	☐	☐
9. Working solution dated?	☐	☐
Sample Preparation		
1. If necessary, sample sprayed with water to prevent loss of fines?	☐	☐
2. Material checked for moisture condition by tightly squeezing small portion in palm of hand and forming a cast?	☐	☐
3. Sample at proper water content?	☐	☐
a. If too dry (cast crumbles easily), water added and remixed?	☐	☐
b. If too wet (shows free water), sample drained, air dried and mixed frequently?	☐	☐
4. Sample placed on splitting cloth and mixed by alternately lifting each corner of the cloth and pulling it over the sample toward diagonally opposite corner, causing material to be rolled?	☐	☐
5. Is material thoroughly mixed?	☐	☐
6. When material appears to be homogeneous, mixing finished with sample in a pile near center of cloth?	☐	☐
7. Fill the 85 mL tin by pushing through base of pile with other hand on opposite side of pile?	☐	☐
8. Material fills tin to overflowing?	☐	☐
9. Material compacted into tin with palm of hand?	☐	☐
10. Tin struck off level full with spatula or straightedge?	☐	☐
11. Test sample dried in an oven at the correct temperature?	☐	☐
12. Sample cooled to room temperature	☐	☐

Procedure

1. Prepared sample funneled into cylinder with no loss of fines? ☐ ☐
2. Bottom of cylinder tapped sharply on heel of hand several times to release air bubbles? ☐ ☐
3. Wetted sample allowed to stand undisturbed for 10 min ± 1 min? ☐ ☐
4. Cylinder stoppered and material loosened from bottom by shaking? ☐ ☐
5. Properly performed shaking method? ☐ ☐
   - Mechanical Shaker Method ☐ ☐
   - Manual Shaker Method ☐ ☐
6. Following shaking, cylinder set vertical on work surface and stopper removed? ☐ ☐
7. Irrigator tube inserted in cylinder and material rinsed from cylinder walls as irrigator is lowered? ☐ ☐
8. Irrigator tube forced through material to bottom of cylinder by gently stabbing and twisting action? ☐ ☐
9. Stabbing and twisting motion applied until cylinder filled to 15 in (381 mm) mark? ☐ ☐
10. Liquid raised and maintained at 15 in (381 mm) mark while irrigator is being withdrawn? ☐ ☐
11. No clear solution at top of column? ☐ ☐
12. Contents let stand 20 minutes ± 15 seconds? ☐ ☐
13. Timing started immediately after withdrawal of irrigator? ☐ ☐
14. No vibration or disturbance of the sample? ☐ ☐
15. Readings taken at 20 minutes or up to 30 minutes, when a definite line appears? ☐ ☐
16. Weighted foot assembly lowered into cylinder without hitting mouth of cylinder? ☐ ☐
17. Calculations made to 0.1 and reported to the next higher whole number? ☐ ☐
18. SE is based on the average results of two samples? ☐ ☐
19. If the two SE values vary by more than 8 points, additional tests run? ☐ ☐
20. All calculations performed correctly? ☐ ☐

First Attempt: Pass ☐ Fail ☐ Second Attempt: Pass ☐ Fail ☐

Signature of Examiner _____

Comments:

WSDOT FOP for AASHTO T 209[1]

Theoretical Maximum Specific Gravity and Density of Hot-Mix Asphalt Paving Mixtures

1. Scope

   1.1 This test method covers the determination of the theoretical maximum specific gravity and density of uncompacted hot-mix asphalt paving mixtures at 77°F (25°C).

   1.2 The values stated in English units are to be regarded as the standard.

   1.3 This standard does not purport to address all of the safety concerns, if any, associated with its use. It is the responsibility of the user of this standard to establish appropriate safety and health practices and determine the applicability of regulatory limitations prior to use.

2. Referenced Documents

   2.1 AASHTO Standards

   M 231 – Weighing Devices Used in the Testing of Materials

   R 61 – Establishing Requirements for and Performing Equipment Standardizations and Checks

   2.2 ASTM Standards

   D 4311 – Practice for Determining Asphalt Volume Correction to a Base Temperature

   C 670 – Preparing Precision and Bias Statements for Test Methods for Construction Materials

   2.3 Other Standards

   T 168 – WAQTC FOP for AASHTO for Sampling Bituminous Paving Mixtures

   T 712 – WSDOT Standard Method of Reducing Hot Mix Asphalt Paving Mixtures

3. Terminology

   3.1 Definitions

   3.1.1 Density, as determined by this test method. The mass of a cubic meter of the material at 77°F (25°C) in English units, or the mass of a cubic foot of the material at 77°F (25°C) in inch-pound units.

   3.1.2 Residual pressure, as employed by this test method. The pressure in a vacuum vessel when vacuum is applied.

   3.1.3 Specific gravity, as determined by this test method. The ratio of a given mass of material at 77°F (25°C) to the mass of an equal volume of water at the same temperature.

[1]This FOP is based on AASHTO T 209 (2011) and has been modified per WSDOT standards. To view the redline modifications, contact the WSDOT Quality Systems Manager at 360-709-5412.

4. Summary of Test Method

4.1 A weighed sample of HMA paving mixture in the loose condition is placed in a tared vacuum vessel. Sufficient water is added to completely submerge the sample. Vacuum is applied for 15 ± 2 min to gradually reduce the residual pressure in the vacuum vessel. At the end of the vacuum period, the vacuum is gradually released. The volume of the sample of paving mixture is obtained by filling the vacuum container level full of water and weighing in air. At the time of weighing, the temperature is measured as well as the mass. From the mass and volume measurements, the specific gravity or density at 77°F (25°C) is calculated. If the temperature employed is different from 77°F (25°C), an appropriate correction is applied.

5. Significance and Use

5.1 The theoretical maximum specific gravities and densities of hot-mix asphalt paving mixtures are intrinsic properties whose values are influenced by the composition of the mixtures in terms of types and amounts of aggregates and asphalt binder materials.

5.1.1 These properties are used to calculate percent air voids in compacted HMA.

5.1.2 These properties provide target values for the compaction of HMA.

5.1.3 These properties are essential when calculating the amount of asphalt binder absorbed by the internal porosity of the individual aggregate particles in HMA.

6. Apparatus

6.1 Follow the procedures for performing equipment standardizations, standardization, and checks found in R 61.

6.2 Vacuum Container

6.2.1 The vacuum containers described must be capable of withstanding the full vacuum applied, and each must be equipped with the fittings and other accessories required by the test procedure being employed. The opening in the container leading to the vacuum pump shall be covered by a piece of No. 200 (75-µm) mesh to minimize the loss of fine material.

6.2.2 The capacity of the vacuum container should be between 2000 and 10,000-mL and depends on the minimum sample size requirements given in Section 7.2. Avoid using a small sample in a large container.

6.2.3 Vacuum Bowl – Either a metal or plastic bowl with a diameter of approximately 7.1 to 10.2 in (180 to 260 mm) and a bowl height of at least 6.3 in (160 mm) equipped with a transparent cover fitted with a rubber gasket and a connection for the vacuum line.

6.2.4 Vacuum Flask for Weighing in Air Only – A thick-walled volumetric glass flask and a rubber stopper with a connection for the vacuum line.

6.2.5 Pycnometer for Weighing in Air Only – A glass, metal, or plastic pycnometer.

6.3 Balance, conforming to the requirements of AASHTO M 231, Class G 2. The balance shall be standardized at least every 12 months.

6.3.1 For the mass determination-in-water method, the balance shall be equipped with a suitable apparatus and holder to permit determining the mass of the sample while suspended below the balance. The wire suspending the holder shall be the smallest practical size to minimize any possible effects of a variable immersed length.

6.4 Vacuum pump or water aspirator, capable of evacuating air from the vacuum container to a residual pressure of 30 mm Hg (4.0 kPa) or less.

6.4.1 When a vacuum pump is used, a suitable trap of one or more filter flasks, or equivalent, shall be installed between the vacuum vessel and vacuum source to reduce the amount of water vapor entering the vacuum pump.

6.5 Absolute pressure gauge or vacuum gauge, used for annual standardization and traceable to NIST (mandatory) to be connected directly to the vacuum vessel and to be capable of measuring residual pressure down to 30 mm Hg (4.0 kPa), or less (preferably to zero). It is to be connected at the end of the vacuum line using an appropriate tube and either a "T" connector on the top of the vessel or by using a separate opening (from the vacuum line) in the top of the vessel to attach the hose.

Note 2: A residual pressure of 30 mm Hg (4.0 kPa) absolute pressure is approximately equivalent to 730 mm Hg (97 kPa) reading on vacuum gauge at sea level.

6.6 Bleeder valve, attached to the vacuum train to facilitate adjustment of the vacuum being applied to the vacuum vessel.

6.7 Thermometric device (mass determination in air), liquid-in-glass thermometers, or other suitable thermometric device, accurate to 1ºF (0.5ºC). The thermometric device shall be standardized at the test temperature at least every 12 months.

6.8 Water bath that can be maintained at a constant temperature between 73 and 82.9°F (22.8 and 28.3°C).

6.9 Protective gloves, used when handling glass equipment under vacuum.

6.10 Mallet, with a rubber or rawhide head.

7. Sampling

7.1 Obtain the sample in accordance with WAQTC FOP for AASHTO T 168 and WSDOT T 712.

7.2 The size of the sample shall conform to the requirements in Table 1. Samples larger than the capacity of the container may be tested a portion at a time.

Nominal Maximum Aggregate Size, in (mm)	Minimum Sample Size, lb (g)
1½ (37.5) or greater	8 (4000)
¾ (19) to 1 (25)	5 (2500)
½ (12.5) or smaller	3 (1500)

Minimum Sample Sizes
Table 1

8. Standardization of Flasks, Bowls, and Pycnometers

This section has been deleted by WSDOT and replaced with the following:

The volumetric flask or metal vacuum pycnometer will be standardized periodically in conformance with established verification procedures or per AASHTO T 209. Standardization shall be done at 77°F.

9. Sample Preparation

9.1 Separate the particles of the HMA sample by hand, taking care to avoid fracturing the aggregate, so that the particles of the fine aggregate portion are not larger than ¼ in (6.3 mm). If an HMA sample is not sufficiently soft to be separated manually, place it in a flat pan, and warm it in an oven until it can be separated as described.

9.2 WSDOT has deleted this section.

9.3 Cool the sample to room temperature and place it in a tared and standardized flask, bowl, or pycnometer. Weigh and designate the net mass of the sample as A. Add sufficient water at a temperature of approximately 25°C (77°F) to cover the sample completely.

Test Method A – Mechanical Agitation

10. Apparatus

10.1 In addition to the apparatus listed in Section 6, the following apparatus is required for Method A.

10.1.1 Mechanical shaker-shaker for removing air from asphalt mix.

11. Procedure

11.1 Remove air trapped in the sample by applying gradually increased vacuum until the absolute pressure gauge or vacuum gauge reads 30 mm HG or less (4.0 kPa or less). Maintain this residual pressure for 15 ± 2 min. Agitate the container and contents using the mechanical device during the vacuum period. Glass vessels should be shaken on a resilient surface such as a rubber or plastic mat, and not on a hard surface, so as to avoid excessive impact while under vacuum. To aid in releasing the trapped air from the metal vacuum pycnometer, tap the sides of the metal vacuum pycnometer 3 to 5 times with the mallet at approximately two-minute intervals.

Note: The release of entrapped air may be facilitated by the addition of a few drops of suitable wetting agent.

11.2 At the end of the vacuum period, release the vacuum within 10 to 15 seconds. Start the 9 to 11 minute time, as described in Section 13.2, immediately upon starting the release of vacuum. Proceed to Section 13.2.

Test Method B – Manual Agitation

12. Procedure

12.1 Remove air trapped in the sample by applying gradually increased vacuum until the absolute pressure gauge or vacuum gauge reads 30 mm HG or less (4.0 kPa or less). Maintain this residual pressure for 15 ± 2 min. Agitate the container and contents during the vacuum period by vigorous shaking at intervals of about 2 minutes. Glass vessels should be shaken on a resilient surface such as a rubber or plastic mat, and not on a hard surface, so as to avoid excessive impact while under vacuum.

12.2 At the end of the vacuum period, release the vacuum within 10 to 15 seconds. Start the 9 to 11 minute time, as described in Section 13.2 immediately upon starting the release of vacuum. Proceed to Section 13.2.

13. Mass Determination

13.1 WSDOT has deleted this section.

13.2 Mass Determination in Air – Fill the flask or any one of the pycnometers with water and adjust the contents to a temperature of 77 ± 2°F (25 ± 1°C) in a constant temperature water bath. Determine the mass of the container (and contents), completely filled, 9 to 11 minutes after starting Section 11.2 or 12.1. Designate this mass as E. Accurate filling may be ensured by the use of a glass cover plate.

In lieu of a constant temperature water bath described above, determine the temperature of the water within the flask or metal vacuum pycnometer and determine the appropriate density correction factor "R" using Table 2.

14. Calculation

14.1 Calculate the theoretical maximum specific gravity of the sample at 77°F (25°C) as follows:

14.1.1 WSDOT has deleted this section.

14.1.2 Weighing Mass Determination in Air

$$\text{Theoretical Maximum Specific Gravity} = \frac{A}{A + D - E}$$

Where:

A = Mass of oven-dry sample in air, g
D = Mass of container filled with water at 77°F (25°C), g
E = Mass of container filled with sample and water at 77°F (25°C), g

14.1.3 If the test temperature differs significantly from 77°F (25°C), correct for thermal effects as follows:

WSDOT has removed the AASHTO calculation and replaced it with the following calculations:

a. Determination using temperature correction:

$$\text{Theoretical Maximum Gravity} = \frac{A}{A + D - E} \times R$$

Where:

A = Mass of oven-dry sample in air, g;
D = Mass of container filled with water at 77°F (25°C), g; and
E = Mass of container filled with sample and water at 77°F (25°C), g.
R = Factor from Table 2 to correct density of water from the test temperature to 77°F (25°C).

Note: The flask standardization is done at 77 ± 0.4°F (25 ± 0.2°C).

C°	F°	"R"	C°	F°	"R"
22.8	73.0	1.00054	25.2	77.4	0.99995
23.0	73.4	1.00050	25.4	77.7	0.99990
23.2	73.8	1.00045	25.6	78.1	0.99984
23.3	73.9	1.00042	25.8	78.4	0.99979
23.4	74.1	1.00040	26.0	78.8	0.99974
23.6	74.5	1.00035	26.1	79.0	0.99971
23.8	74.8	1.00030	26.2	79.2	0.99968
23.9	75.0	1.00028	26.4	79.5	0.99963
24.0	75.2	1.00025	26.6	79.9	0.99958
24.2	75.6	1.00020	26.7	80.1	0.99955
24.4	75.9	1.00015	27.2	81.0	0.99941
24.6	76.3	1.00010	27.3	81.1	0.99938
24.8	76.6	1.00005	27.8	82.0	0.99924
25.0	77.0	1.00000	28.3	82.9	0.99910

Density Correction Factor "R"
Table 2

b. Determination using weighted average:

$$\text{Weighted Average Maximum Specific Gravity} = \frac{(Sp.G_1 \times A_1) + (Sp.G_2 \times A_2)}{(A1 + A2)}$$

Where:

$Sp.G_1$ = Specific gravity of first test segment
$Sp.G_2$ = Specific gravity of second test segment
A_1 and A_2 = Mass of dry sample in air of respective test segments

14.2 Theoretical Maximum Density (Rice) at 77°F (25°C)

14.2.1 Calculate the corresponding theoretical maximum density at 77°F (25°C) as follows:

Theoretical maximum density at 77°F (25°C) = theoretical maximum specific gravity × 62.245 lb/ft3 in inch-pound units (or 997.1 kg/m^3 in SI units).

Where:
The specific gravity of water at 77°F (25°C) = 62.245 in inch-pound units (or 997.1 in SI units).

15. Supplemental Procedure for Mixtures Containing Porous Aggregate

WSDOT has removed this section.

16. Report

16.1 Report the results using one of the following:

- Materials Testing System (MATS)
- DOT Form 350-092 and 350-157
- Form approved in writing by the State Materials Engineer

16.2 Report the Theoretical Maximum Specific Gravity (G_{mm}) to three decimal places. Report the Theoretical Maximum Density to 0.1 lb/ft^3.

17. Precision

See AASHTO T 209 for Precision.

Appendix

(Nonmandatory Information)

A1. Theoretical Maximum Specific Gravity for a Loose-Paving Mixture

WSDOT has removed this section.

Performance Exam Checklist

Theoretical Maximum Specific Gravity and Density of Hot Mix Asphalt Paving Mixtures FOP for AASHTO T 209

Participant Name _____ Exam Date _____

Procedure Element	Yes	No
1. The tester has a copy of the current procedure on hand?	❒	❒
2. All equipment is functioning according to the test procedure, and if required, has the current standardization/verification tags present?	❒	❒
3. Particles of sample separated?	❒	❒
4. Care used not to fracture mineral fragments?	❒	❒
5. After separation, fine HMA particles not larger than ¼ inch?	❒	❒
6. Sample at room temperature?	❒	❒
7. Mass of bowl or flask determined?	❒	❒
8. Mass of sample and bowl or flask determined?	❒	❒
9. Mass of sample determined?	❒	❒
10. Water at approximately 77°F (25°C) added to cover sample?	❒	❒
11. Entrapped air removed using partial vacuum for 15 ± 2 min?	❒	❒
12. Container and contents agitated continuously by mechanical device or manually by vigorous shaking at intervals of about 2 minutes?	❒	❒
13. For metal pycnometer, strike 3 to 5 times with a mallet?	❒	❒
14. Release of entrapped air facilitated by addition of suitable wetting agent (optional)?	❒	❒
15. Vacuum released within 10 to 15 seconds.	❒	❒
16. Flask determination:		
a. Flask filled with water?	❒	❒
1. Flask then placed in constant temperature water bath (optional) or?	❒	❒
2. Temperature of water in flask determined upon completion of 16b?	❒	❒
b. Contents at 77 ± 2°F or density of water corrected using Table 2 in FOP?	❒	❒
c. Mass of filled flask determined 9 to 11 minutes after removal of entrapped air completed?	❒	❒
17. All calculations performed correctly?	❒	❒

First Attempt: Pass ❒ Fail ❒ Second Attempt: Pass ❒ Fail ❒

Signature of Examiner

Comments:

WSDOT FOP for AASHTO T 217[1]

Determination of Moisture in Soils by Means of a Calcium Carbide Gas Pressure Moisture Tester

1. Scope

   1.1 This method of test is intended to determine the moisture content of soils by means of a calcium carbide gas pressure moisture tester. The manufacturer's instructions shall be followed for the proper use of the equipment.

   1.2 The following applies to all specified limits in this standard: For the purposes of determining conformance with these specifications, an observed value or a calculated value shall be rounded off "to the nearest unit" in the last right-hand place of figures used in expressing the limiting value, in accordance with R 11, Recommended Practice for Indicating Which Places of Figures Are to Be Considered Significant in Specified Limiting Values.

   Note 1: This method shall not be used on granular materials having particles large enough to affect the accuracy of the test in general any appreciable amount retained on a No. 4 (4.75 mm) sieve. The super 200 D tester is intended to be used to test aggregate.

   1.3 The values stated in English units are to be regarded as the standard.

   1.4 Refer to R 16 for regulatory information for chemicals.

2. Referenced Document

   2.1 AASHTO Standards:

   R 11, Indicating Which Places of Figures Are to Be Considered Significant in Specified Limiting Values

   T 265, Laboratory Determination of Moisture Content of Soils

3. Apparatus

   3.1 Calcium carbide pressure moisture test – a chamber with attached pressure gage for the water content of specimens having a mass of at least 20 g. (Figure 1).

   Those "Speed Moisture Testers" which use a 20 g sample may be used to test aggregates and soil-aggregate mixtures where the maximum particle size is ¾ in (20 mm) or less.

   3.2 Balance – shall conform to AASHTO M 231, Class G-2.

   3.3 Two 1.25 in (31.75 mm) steel balls

   3.4 Cleaning brush and cloth.

   3.5 Scoop for measuring calcium carbide reagent.

[1] This FOP is based on AASHTO T 217-02

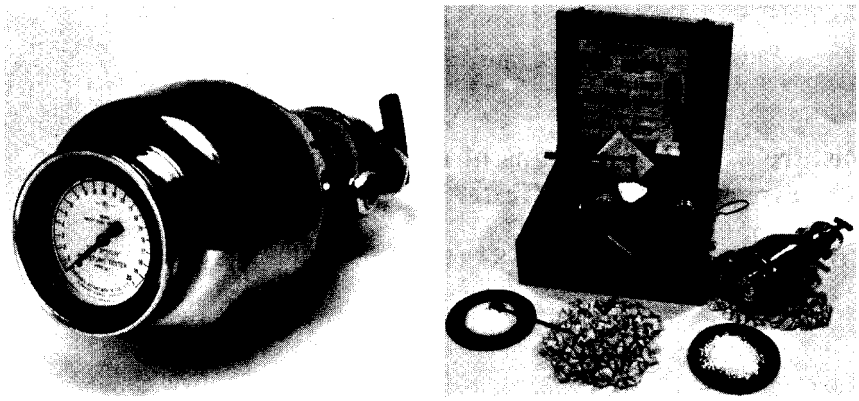

Calcium Carbide Gas Pressure Moisture Meter
Figure 1

4. Material

4.1 Calcium carbide reagent.

Note 2: The calcium carbide must be finely pulverized and should be of a grade capable of producing acetylene gas in the amount of at least 2.25 ft^3/lb (0.14 m^3/kg) of carbide.

Note 3: ~~The "shelf life" of the calcium carbide reagent is limited, so it should be used according to the manufacturer's recommendations.~~ When a can of calcium carbide is opened, it shall be dated. After 3 months of use, or if the can becomes contaminated, it shall be discarded.

5. Procedure

5.1 When using the 20 g or 26 g tester, place three scoops (approximately 24 g) of calcium carbide in the body of the moisture tester (or per the manufacturers recommendations). When using the super 200 D tester to test aggregate, place six scoops (approximately 48 g) of calcium carbide in the body of the moisture tester.

Note 4: Care must be exercised to prevent the calcium carbide from coming into direct contact with water.

5.2 Weigh a sample of the exact mass specified by the manufacturer of the instrument in the balance provided, and place the sample in the cap of the tester. When using the 20-g or 26-g size tester, place two 1.25 in (31.75 mm) steel balls in the body of the tester with the calcium carbide (or per the manufacturers recommendations).

Note 5: Manufacturer's instructions shall be followed for the use of steel balls, particularly when testing sand.

Note 6: If the moisture content of the sample exceeds the limit of the pressure gage (12 percent moisture for aggregate tester to 20-percent moisture for soil tester), a one-half size sample must be used and the dial reading must be multiplied by 2. This proportional method is not directly applicable to the dry mass percent scale on the super 200 D tester.

5.3 With the pressure vessel in an approximately horizontal position, insert the cap in the pressure vessel and seal the unit by tightening the clamp, taking care that no carbide comes in contact with the soil until a complete seal is achieved.

5.4 Raise the moisture tester to a vertical position so that the soil in the cap will fall into the pressure vessel.

5.5 Shake the instrument vigorously so that all lumps will be broken up to permit the calcium carbide to react with all available free moisture. When steel balls are being used in the tester and when using the large tester to test aggregate, the instrument should be shaken with a rotating motion so the steel balls or aggregate will not damage the instrument or cause soil particles to become embedded in the orifice leading to the pressure diaphragm.

Note 7: Shaking should continue for at least 60 seconds with granular soils and for up to 180 seconds for other soils so as to permit complete reaction between the calcium carbide and the free moisture. Time should be permitted to allow dissipation of the heat generated by the chemical reaction.

5.6 When the needle stops moving, read the dial while holding the instrument in a horizontal position at eye level.

5.7 Record the sample mass and the dial reading.

5.8 With the cap of the instrument pointed away from the operator, and away from open flame or source of ignition, slowly release the gas pressure. Empty the pressure vessel and examine the material for lumps. If the sample is not completely pulverized, the test should be repeated using a new sample. Clean the cap thoroughly of all carbide and soil before running another test.

Note 8: When removing the cap, care should be taken to point the instrument away from the operator to avoid breathing the fumes, and away from any potential source of ignition for the acetylene gas.

5.9 The dial reading is the percent of moisture by wet mass and must be converted to dry mass. With the super 200 D tester the dial reading is the percent of moisture by dry mass, and no further calculation is required.

6. Calculation

6.1 The percentage of moisture by dry mass of the soil may be determined from a correction curve similar to Figure 2.

6.2 A correction curve similar to Figure 2 is normally supplied with each moisture tester. ~~Each moisture tester, however, should be checked for the accuracy of its gage, and for the accuracy of its correction curve.~~

~~5.2.1 The accuracy of the moisture tester gage should be checked by using a calibration kit (available from the manufacturer), equipped with a standard gage. In case of discrepancy, the gage on the tester should be adjusted to conform with the standard gage.~~

~~5.2.2 The accuracy of the correction curve should be checked by comparing curve-corrected moisture contents to moisture contents of locally prepared soils determined using T 265. In case of discrepancy, develop a new correction curve based on moisture contents determined from T 265.~~

~~5.2.3 The range of the factory-supplied or laboratory-determined curves may be extended by additional testing.~~

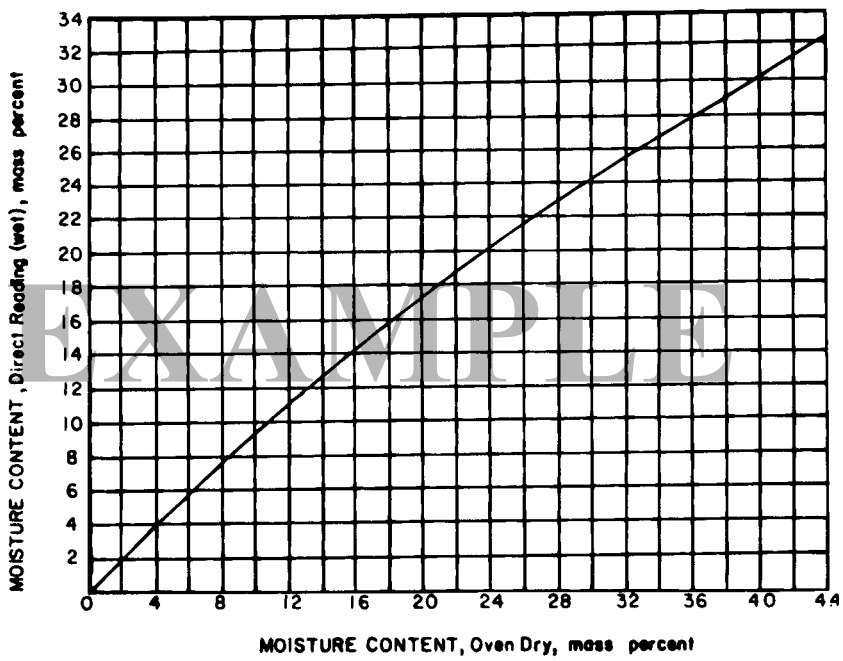

Conversion Curve for Moisture Tester Reading
Figure 2

Figure 2 —Correction Curve for Moisture Tester Reading (Example Only—Use curve provided by the manufacturer with the specific apparatus, or a correction curve calibrated or extended for local soils at known moisture contents determined in accordance with 6.2.)

Note 9: It may be more convenient for field use of the apparatus to prepare a table of moisture tester readings versus oven-dry moisture content for the moisture tester.

6.3 Determine the percentage of moisture to the nearest whole percent.

Performance Exam Checklist

Determination of Moisture in Soils by Means of Calcium Carbide Gas Pressure Moisture Tester
FOP for AASHTO T 217

Participant Name _____ Exam Date _____

Procedure Element		**Yes**	**No**
Preparation			
1.	The tester has a copy of the current procedure on hand?	☐	☐
2.	All equipment is functioning according to the test procedure, and if required, has the current calibration/verification tags present?	☐	☐
3.	Shelf life of calcium carbide reagent checked?	☐	☐
4.	Correct amount of reagent placed in body of tester?	☐	☐
5.	Number and size of steel balls correct?	☐	☐
6.	Correct mass of moist soil placed in cap of tester?	☐	☐
7.	Cap clamped to body with tester in horizontal position?	☐	☐
8.	Shaking done for proper time (60 seconds for granular soils, 180 seconds for other soils)?	☐	☐
9.	Shaking done without steel balls hitting cap or bottom of tester?	☐	☐
10.	Reading taken with tester in horizontal position at eye level?	☐	☐
11.	Reading taken after gauge stops moving?	☐	☐
12.	Gauge reading recorded?	☐	☐
13.	Tester positioned with cap away from user and away from open flame or source of ignition before gas slowly released?	☐	☐
14.	Moisture content on wet mass basis converted to dry mass basis?	☐	☐

First Attempt: Pass ☐ Fail ☐ Second Attempt: Pass ☐ Fail ☐

Signature of Examiner _____

Comments:

WSDOT FOP for AASHTO T 248[1]

Reducing Samples of Aggregate to Testing Size

1. Scope

   1.1 This methods covers for the reduction of large samples of aggregate to the appropriate size for testing employing techniques that are intended to minimize variations in measured characteristics between the test samples so selected and the large sample.

   1.2 The values stated in English units are to be regarded as the standard.

   1.3 *This standard does not purport to address all of the safety concerns, if any, associated with its use. It is the responsibility of the user of this standard to establish appropriate safety and health practices and determine the applicability of regulatory limitations prior to use.*

2. Referenced Documents

   2.1 AASHTO Standards

   T 2 – Sampling of Aggregate
   T 84 – Specific Gravity and Absorption of Coarse Aggregate

   2.2 ASTM Standards

   C 125 – Terminology Relating to Concrete and Concrete Aggregates

3. Terminology

   3.1 Definitions – The terms used in this practice are defined in ASTM C 125.

4. Significance and Use

   4.1 Specifications for aggregates require sampling portions of the material for testing. Other factors being equal, larger samples will tend to be more representative of the total supply. These methods provides for reducing the large sample obtained in the field or produced in the laboratory to a convenient size for conducting a number of tests to describe the material and measure its quality in a manner that the smaller test sample portion is most likely to be a representation of the larger sample, and thus of the total supply. The individual test methods provide for minimum amount of material to be tested.

   4.2 Under certain circumstances, reduction in size of the large sample prior to testing is not recommended. Substantial differences between the selected test samples sometimes cannot be avoided, as for example, in the case of an aggregate having relatively few large size particles in the sample. The laws of chance dictate that these few particles may be unequally distributed among the reduced size test samples. Similarly, if the test sample is being examined for certain contaminants occurring as a few discrete fragments in only small percentages, caution should be used in interpreting results from the reduced size test sample. Chance inclusion or exclusion of only one or two particles in the selected test sample may importantly influence interpretation of the characteristics of the original sample. In these cases, the entire original sample should be tested.

[1]This FOP is based on AASHTO T 248-11.

4.3 Failure to carefully follow the procedures in this practice could result in providing a nonrepresentative sample to be used in subsequent testing.

5. Selection of Method

5.1 Fine Aggregate – Samples of fine aggregate that are at saturated-surface-dry condition or drier (Note 1) may be reduced using a mechanical splitter according to Method A. Samples having free moisture on the particle surfaces may be reduced in size by quartering according to Method B, or by treating as a miniature stockpile as described in Method C.

5.1.1 If the use of Method B or Method C is desired, and the sample does not have free moisture on the particle surfaces, the sample may be moistened to achieve this condition, thoroughly mixed, and then the sample reduction performed.

Note 1: The method of determining the saturated-surface-dry condition is described in Test Method T 84. As a quick approximation, if the fine aggregate will retain its shape when molded in the hand, it may be considered to be wetter than saturated-surface-dry.

5.1.2 If use of Method A is desired and the sample has free moisture on the particle surfaces, the entire sample may be dried to at least the saturated-surface-dry condition, using temperatures that do not exceed those specified for any of the tests contemplated, and then the sample reduction performed. Alternatively, if the moist sample is very large, a preliminary split may be made using a mechanical splitter having wide chute openings of 1½ in (38 mm) or more to reduce the sample to not less than 5000 g. The portion so obtained is then dried, and reduction to test sample size is completed using Method A.

5.2 Mixtures of Coarse and Fine Aggregates

5.2.1 If the sample does not exceed a saturated surface dry condition (there is no visible free water, sample may still appear damp) then the sample may be reduced using Method A.

5.2.2 If the sample exceeds a saturated surface dry condition the sample may be reduced using Method B or dried to a constant mass per WSDOT FOP for T 255 and then reduced using Method A.

5.3 Coarse Aggregates – Reduce the sample using a mechanical splitter in accordance with Method A (preferred method) or by quartering in accordance with Method B. The miniature stockpile Method C is not permitted for coarse aggregates.

5.4 Untreated materials shall be prepared for testing using this procedure. Treated materials (i.e., Hot Mix Asphalt or Asphalt Treated Base) shall be prepared for testing using WSDOT Test Method No. T 712 for reduction of size of samples of Asphalt treated materials.

6. Sampling

6.1 The samples of aggregate obtained in the field shall be taken in accordance with T 2, or as required by individual test methods. When tests for sieve analysis only are contemplated, the size of field sample listed in T 2 is usually adequate. When additional tests are to be

conducted, the user shall determine that the initial size of the field sample is adequate to accomplish all intended tests. Similar procedures shall be used for aggregate production in the laboratory.

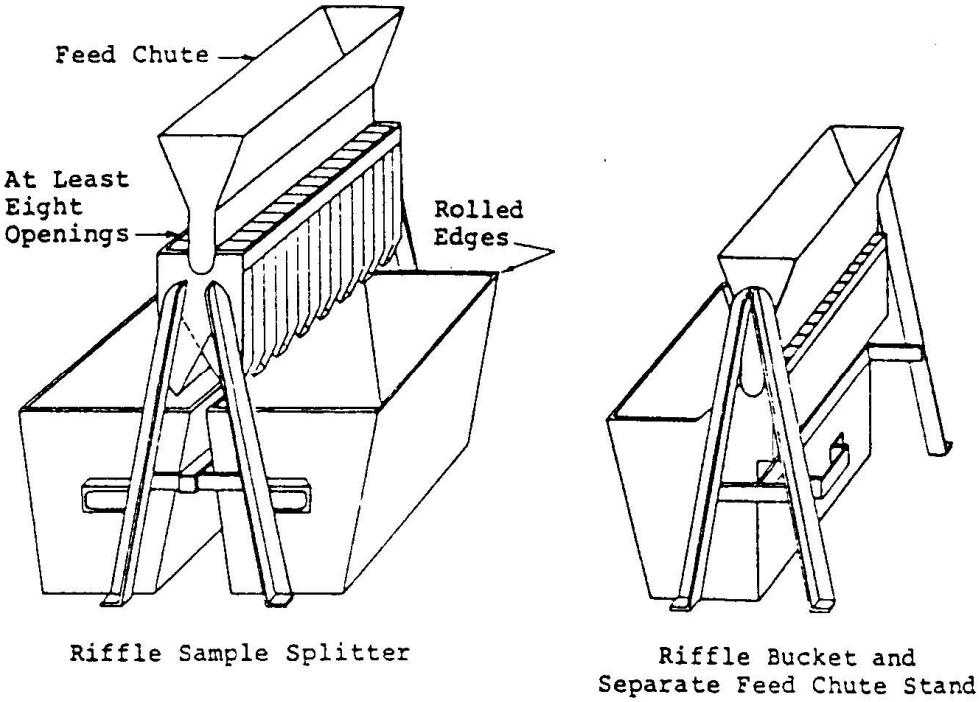

(*a*) Large Riffle Samplers for Coarse Aggregate.

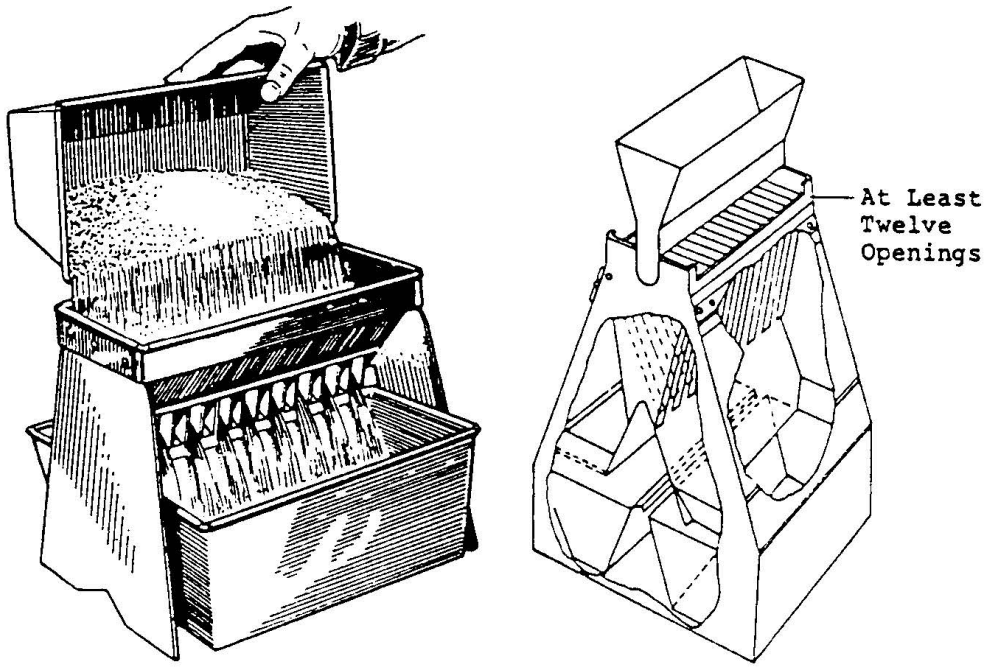

NOTE—May be constructed as either closed or open type. Closed type is preferred.
(*b*) Small Riffle Sampler for Fine Aggregate.

Sample Dividers (Riffles)
Figure 1

Method A – Mechanical Splitter

7. Apparatus

7.1 Sample Splitter – Sample splitters shall have an even number of equal width chutes, but not less than a total of eight for coarse aggregate, or 12 for fine aggregate, which discharge alternately to each side of the splitter, For coarse aggregate and mixed aggregate, the minimum width of the individual chutes shall be approximately 50 percent larger than the largest particles in the sample to be split (Note 2). For dry fine aggregate in which the entire sample will pass the ⅜ in (9.5 mm) sieve, the minimum width of the individual chutes shall be at least 50 percent larger than the largest particles in the sample and the maximum width shall be ¾ in (19 mm). The splitter shall be equipped with two receptacles to hold the two-halves of the sample following splitting. It shall also be equipped with a hopper or straight edge pan which has a width equal to or slightly less than the overall width of the assembly of chutes, by which the sample may be fed at a controlled rate to the chutes. The splitter and accessory equipment shall be so designed that the sample will flow smoothly without restriction or loss of material (Figure 1).

8. Procedure

8.1 Place the original sample in the hopper or pan and uniformly distribute it from edge to edge, so that when it is introduced into the chutes, approximately equal amounts will flow through each chute. The rate at which the sample is introduced shall be such as to allow free flowing through the chutes into the receptacles below. Reintroduce the portion of the sample in one of the receptacles into the splitter as many times as necessary to reduce the sample to the size specified for the intended test. The portion of the material collected in the other receptacle may be reserved for reduction in size for other tests.

Method B – Quartering

9. Apparatus

9.1 Apparatus shall consist of a straightedge, scoop, shovel, or trowel; a broom or brush; and a canvas blanket or tear-resistant tarp approximately 6 by 8 ft (2 by 2.5 m).

10. Procedure

10.1 Use either the procedure described in 10.1.1 or 10.1.2 or a combination of both.

10.1.1 Place the original sample on a hard clean, level surface where there will be neither loss of material nor the accidental addition of foreign material. Mix the material by turning the entire sample over at least three times until the material is thoroughly mixed. With the last turning, form the entire sample into a conical pile by depositing individual lifts on top of the preceding lift. Carefully flatten the conical pile to a uniform thickness and diameter by pressing down the apex with a shovel or trowel so that each quarter sector of the resulting pile will contain the material originally in it. The diameter should be approximately four to eight times the thickness. Divide the flattened mass into four equal quarters with a shovel or trowel and remove two diagonally opposite quarters, including all fine material, and brush the cleared spaces clean. The two unused quarters may be set aside for later use or testing, if desired. Successively mix and quarter the remaining material until the sample is reduced to the desired size (Figure 2).

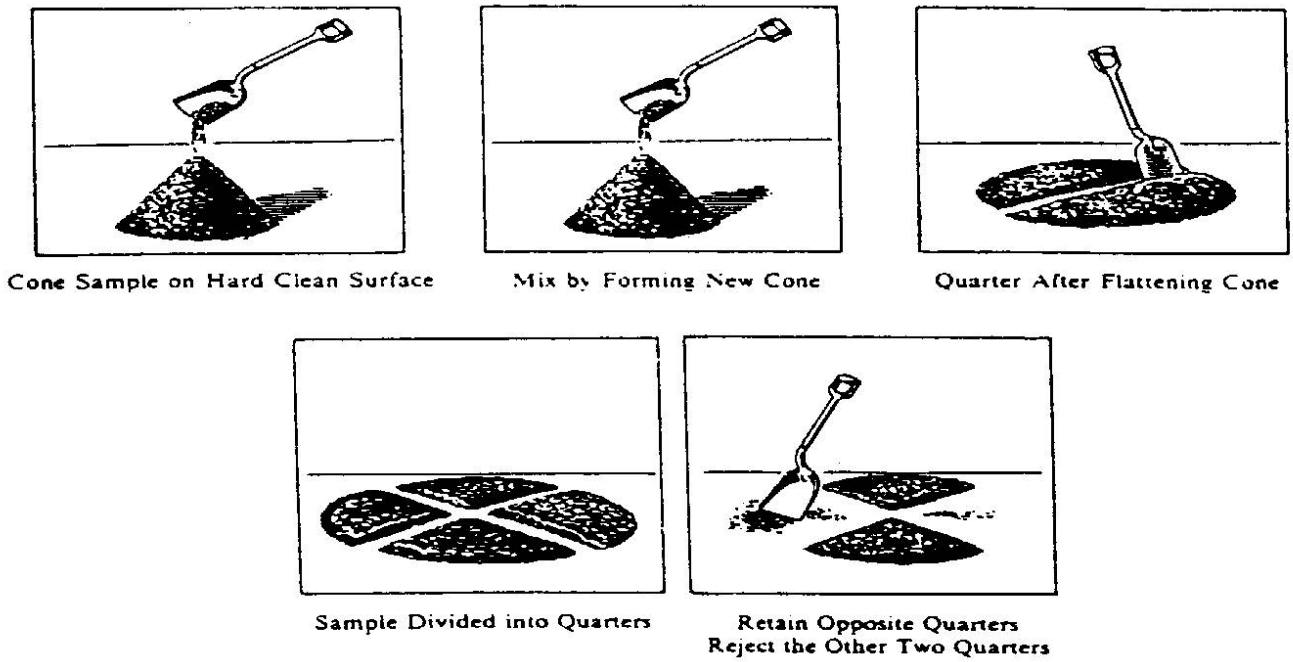

Quartering on a Hard, Clean Level Surface
Figure 2

10.1.2 As an alternative to the procedure in 10.1.1 when the floor surface is uneven, the field sample may be placed on a canvas blanket or tear-resistant tarp and mixed with a shovel or trowel as described in 10.1.1, leaving the sample in a conical pile. As an alternative to mixing with a shovel or trowel, lift each corner of the blanket or tarp and pulling it over the sample toward the diagonally opposite corner causing the material to be rolled. After the material has been rolled a sufficient number of times so that it is thouroughly mixed, pull each corner of the blanket or tarp toward the center of the pile so the material will be left in a conical pile. Flatten the pile as described in 10.1.1. Divide the sample as described in 10.1.1 or insert a stick or pipe beneath the blanket or tarp and under the center of the pile, then lift both ends of the stick, dividing the sample into two equal parts. Remove the stick leaving a fold of the blanket between the divided portions. Insert the stick under the center of the pile at right angles to the first division and again lift both ends of the stick, dividing the sample into four equal parts. Remove two diagonally opposite quarters, being careful to clean the fines from the blanket or tarp. Successively mix and quarter the remaining material until the sample is reduced to the desired size (Figure 3).

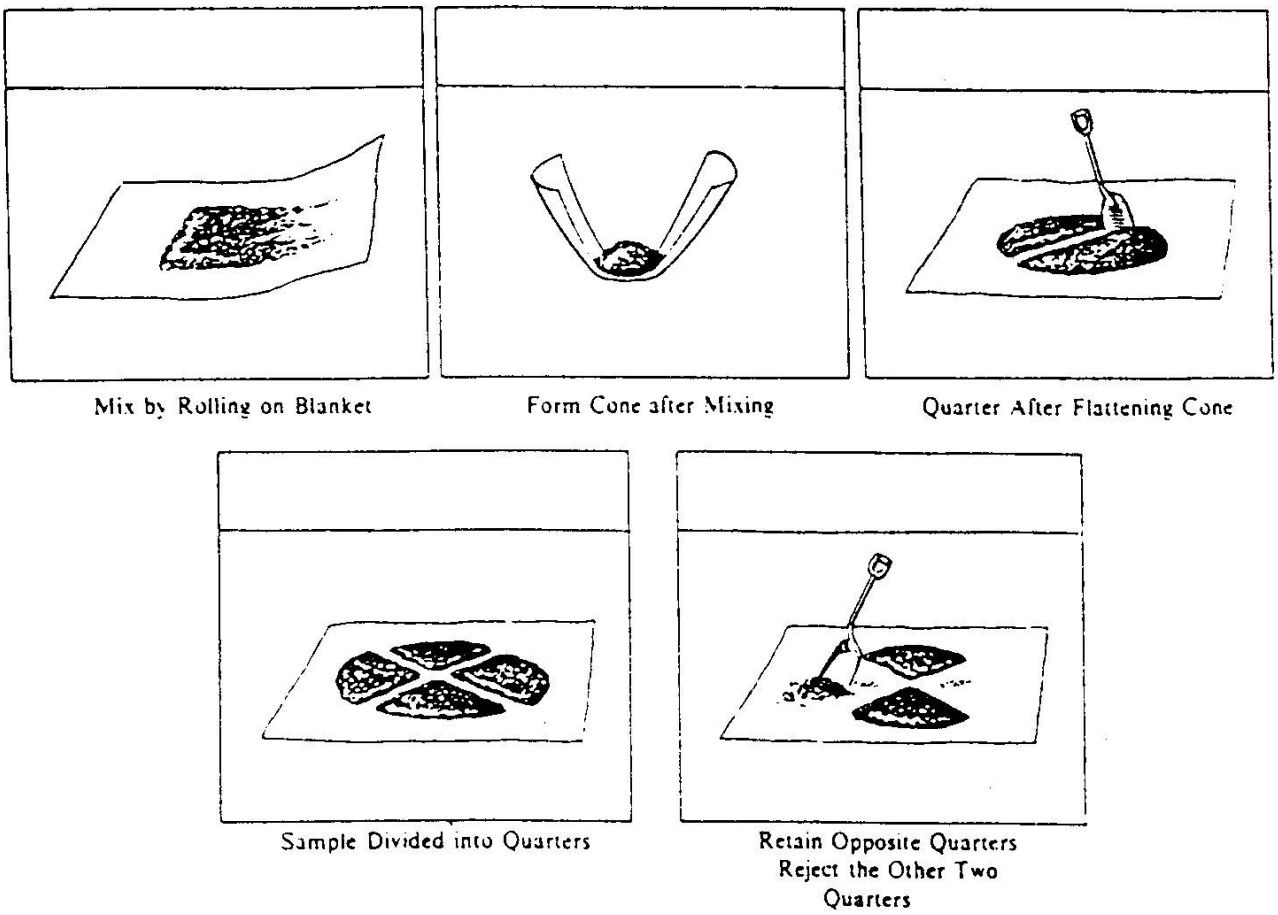

Quartering on a Canvas Blanket or Tear-Resistant Tarp
Figure 3

Method C – Miniature Stockpile Sampling (Damp Fine Aggregate Only)

11. Apparatus

    11.1 Apparatus shall consist of a straight-edged scoop, shovel, or trowel for mixing the aggregate, and either a small sampling thief, small scoop, or spoon for sampling.

12. Procedure

    12.1 Place the original sample of damp fine aggregate on a hard clean, level surface where there will be neither loss of material nor the accidental addition of foreign material. Mix the material by turning the entire sample over at least three times until the material is thoroughly mixed. With the last turning, form the entire sample into a conical pile by depositing individual lifts on top of the preceding lifts. If desired, the conical pile may be flattened to a uniform thickness and diameter by pressing the apex with a shovel or trowel so that each quarter sector of the resulting pile will contain the material originally in it. Obtain a sample for each test by selecting at least five increments of material at random locations from the miniature stockpile, using any of the sampling devices described in 11.1.

Performance Exam Checklist

Reducing Samples of Aggregates to Testing Size
FOP for AASHTO T 248

Participant Name _____ Exam Date _____

Procedure Element	**Yes**	**No**
Preparation		
1. The tester has a copy of the current procedure on hand?	❒	❒
Selection of Method		
1. Fine Aggregate or Mixture of Fine and Coarse Aggregates		
a. Saturated surface dry or drier: Method A (Splitter) used?	❒	❒
b. Free moisture present: Method B (Quartering) used?	❒	❒
2. Coarse Aggregate		
a. Method A used (preferred)?	❒	❒
b. Method B used?	❒	❒
Method A – Splitting		
1. Material spread uniformly on feeder?	❒	❒
2. Rate of feed slow enough so that sample flows freely through chutes?	❒	❒
3. Material in one pan re-split until desired mass is obtained?	❒	❒
4. Chutes are set correctly for material being split?	❒	❒
Method B – Quartering		
1. Sample placed on clean, hard, and level surface?	❒	❒
2. Mixed by turning over three times with shovel or by raising canvas and pulling over pile?	❒	❒
3. Conical pile formed?	❒	❒
4. Diameter equal to about 4 to 8 times thickness?	❒	❒
5. Pile flattened to uniform thickness and diameter?	❒	❒
6. Divided into 4 equal portions with shovel or trowel?	❒	❒
7. Two diagonally opposite quarters, including all fine material, removed?	❒	❒
8. Cleared space between quarters brushed clean?	❒	❒
9. Process continued until desired sample size is obtained when two opposite quarters combined?	❒	❒

The sample may be placed upon a blanket and a stick or pipe may be placed under the blanket to divide the pile into quarters.

First Attempt: Pass ❒ Fail ❒ Second Attempt: Pass ❒ Fail ❒

Signature of Examiner

Comments:

WSDOT FOP for AASHTO T 255[1]

Total Evaporable Moisture Content of Aggregate by Drying

1. Scope

   1.1 This test method covers the determination of the percentage of evaporable moisture in a sample of aggregate by drying, both surface moisture and moisture in the pores of the aggregate. Some aggregate may contain water that is chemically combined with the minerals in the aggregate. Such water is not evaporable and is not included in the percentage determined by this test method.

   1.2 The values stated in English units are to be regarded as the standard. The values stated in parentheses are provided for information only.

   1.3 *This standard does not purport to address all of the safety concerns, if any, associated with its use. It is the responsibility of the user of this standard to establish appropriate safety and health practices and determine the applicability of regulatory limitations prior to use.* For specific precautionary statements, see 5.3.1, 7.2.1, and 7.3.1.

2. Referenced Documents

   2.1 AASHTO Standards

   M 92 – Wire-Cloth Sieves for Testing Purposes

   M 231 – Weighing Devices Used in Testing Materials

   R 16 – Regulatory Information for Chemicals Used in AASHTO Tests

   T 2 – Sampling of Aggregate

   T 19/T 19M – Bulk Density ("Unit Weight") and Voids in Aggregate

   T 84 – Specific Gravity and Absorption of Coarse Aggregate

   T 85 – Specific Gravity and Absorption of Fine Aggregate

   2.2 ASTM Standards

   C 125 – Terminology Relating to Concrete and Concrete Aggregates

   C 670 – Practice for Preparing Precision Statements for Test Methods for Construction Materials

3. Terminology

   3.1 Definitions

   3.1.1 For definitions of terms used in this test method, refer to ASTM C 125.

[1]This FOP is based on AASHTO T 255-00.

4. Significance and Use

4.1 This test method is sufficiently accurate for usual purposes, such as adjusting batch quantities of ingredients for concrete. It will generally measure the moisture in the test sample more reliably than the sample can be made to represent the aggregate supply. In rare cases where the aggregate itself is altered by heat, or where more refined measurement is required, the test should be conducted using a ventilated, controlled temperature oven.

4.2 Large particles of coarse aggregate, especially those larger than 2 in (50 mm), will require greater time for the moisture to travel from the interior of the particle to the surface. The user of this test method should determine by trial if rapid drying methods provide sufficient accuracy for the intended use when drying large size particles.

5. Apparatus

5.1 Balance – The balances shall have sufficient capacity, be readable to 0.1 percent of the sample mass, or better, and conform to the requirements of M 231.

5.2 Source of Heat – A ventilated oven capable of maintaining the temperature surrounding the sample at 110 ± 5°C (230 ± 9°F). Where close control of the temperature is not required (see Section 4.1), other suitable sources of heat may be used, such as an electric or gas hot plate, electric heat lamps, or a ventilated microwave oven.

5.3 Sample Container – A container not affected by the heat, and of sufficient volume to contain the sample without danger of spilling, and of such shape that the depth of sample will not exceed one fifth of the least lateral dimension.

5.3.1 Precaution – When a microwave oven is used, the container shall be nonmetallic.

Note 1: Except for testing large samples, an ordinary frying pan is suitable for use with a hot plate, or any shallow flat-bottomed metal pan is suitable with heat lamps or oven. Note Precaution in Section 5.3.1.

5.4 Stirrer – A metal spoon or spatula of convenient size.

6. Sampling

6.1 Sampling shall generally be accomplished in accordance with FOP for AASHTO T 2, except for the sample size may be as stated in Table 1.

6.2 Secure a sample of the aggregate representative of the moisture content in the supply being tested and having a mass not less than the amount listed in Table 1. Protect the sample against loss of moisture prior to determining the mass.

Nominal Maximum[A]		Minimum Mass[B]	
Size* in	**(mm)**	**lb**	**kg**
US No. 4	(4.75)	1	0.5
¼	(6.3)	2	1
⅜	(9.5)	2	1
½	(12.5)	5	2
⅝	(16.0)	5	2
¾	(19.0)	7	3
1	(25.0)	13	6
1¼	(31.5)	17	7.5
1½	(37.5)	20	9
2	(50)	22	10
2½	(63)	27	12
3	(75)	33	15
3½	(90)	44	20
4	(100)	55	25
6	(150)	110	50

*For aggregate, the nominal maximum size, (NMS) is the largest standard sieve opening listed in the applicable specification, upon which any material is permitted to be retained. For concrete aggregate, NMS is the smallest standard sieve opening through which the entire amount of aggregate is permitted to pass.

Note: For an aggregate specification having a generally unrestrictive gradation (i. e. wide range of permissible upper sizes), where the source consistently fully passes a screen substantially smaller than the maximum specified size, the nominal maximum size, for the purpose of defining sampling and test specimen size requirements may be adjusted to the screen, found by experience to retain no more than 5% of the materials.

Note: When determining moisture content for T 99 samples, use approximately 100 grams, and approximately 500 grams for T 180 samples.

[A]Based on sieves with square openings.

[B]Determine the minimum sample mass for lightweight aggregate by multiplying the value listed by the dry-loose unit mass of the aggregate in kg/m3 (determined using T 19M/T 19) and dividing by 1600.

Sample Size for Aggregate
Table 1

7. Procedure

7.1 Determine the mass of the sample to the nearest 0.1 percent or better of the total sample mass.

7.2 Dry the sample thoroughly in the sample container by means of the selected source of heat, exercising care to avoid loss of any particles. Very rapid heating may cause some particles to explode, resulting in loss of particles. Use a controlled temperature oven when excessive heat may alter the character of the aggregate, or where more precise measurement is required. If a source of heat other than the controlled temperature oven is used, stir the sample during drying to accelerate the operation and avoid localized overheating. When using a microwave oven, stirring of the sample is optional.

7.2.1 Caution – When using a microwave oven, occasionally minerals are present in aggregates that may cause the material to overheat and explode. If this occurs, it can damage the microwave oven.

7.3 When a hot plate is used, drying can be expedited by the following procedure. Add sufficient anhydrous denatured alcohol to cover the moist sample. Stir and allow suspended material to settle. Decant as much of the alcohol as possible without losing any of the sample. Ignite the remaining alcohol and allow it to burn off during drying over the hot plate.

7.3.1 Warning – Exercise care to control the ignition operation to prevent injury or damage from the burning alcohol.

7.4 The sample is thoroughly dry when further heating causes, or would cause, less than 0.1 percent additional loss in mass.

WSDOT Note: When weighing hot samples, use a heat sink to protect the balance.

7.5 Determine the mass of the dried sample to the nearest 0.1 percent or better of the total sample mass after it has to room temperature.

8. Calculation

8.1 Calculate total evaporable moisture content as follows:

$$p = \frac{100\ (W - D)}{D}$$

where:

p = total evaporable moisture content of sample, percent;
W = mass of original sample, g; and
D = mass of dried sample, g

8.2 Surface moisture content is equal to the difference between the total evaporated moisture content and the absorption, with all values based on the mass of a dry sample. Absorption may be determined in accordance with T 85, Test for Specific Gravity and Absorption of Coarse Aggregates, or T 84, Test for Specific Gravity and Absorption of Fine Aggregates

9. Precision and Bias

See AASHTO T 255 for Precision and Bias.

10. Report

Report the results using one or more of the following:

- Materials Testing System (MATS)
- WSDOT Form 422-020, 422-020A, or 422-020B
- Form approved in writing by the State Materials Engineer

Performance Exam Checklist

Total Moisture Content of Aggregate by Drying
FOP for AASHTO T 255

Participant Name _____ Exam Date _____

Procedure Element	Yes	No
1. The tester has a copy of the current procedure on hand?	❒	❒
2. All equipment is functioning according to the test procedure, and if required, has the current calibration/verification tags present?	❒	❒
3. Representative sample of appropriate mass obtained?	❒	❒
4. Mass of clean, dry container determined?	❒	❒
5. Sample placed in container and mass determined?	❒	❒
6. Test sample mass conforms to the required mass?	❒	❒
7. Sample mass determined to 0.1 percent?	❒	❒
8. Loss of moisture avoided prior to mass determination?	❒	❒
9. Sample dried by a suitable heat source?	❒	❒
10. Sample cooled prior to mass determination?	❒	❒
11. If aggregate heated by means other than a controlled oven, is sample stirred to avoid localized overheating?	❒	❒
12. Mass determined and compared to previous mass – showing less than 0.1 percent loss?	❒	❒
13. Calculations performed properly and results reported to the nearest 0.1 percent?	❒	❒

First Attempt: Pass ❒ Fail ❒ Second Attempt: Pass ❒ Fail ❒

Signature of Examiner _____

Comments:

AASHTO T 272

Standard Method of Test for Family of Curves—One Point Method

AASHTO T 272 has been adopted by WSDOT.

Performance Exam Checklist

Family of Curves — One-Point Method
FOP for AASHTO T 272

Participant Name _____ Exam Date _____

Procedure Element	Yes	No
1. The tester has a copy of the current procedure on hand?	❒	❒
2. One-point determination of dry density and corresponding moisture content made in accordance with the FOP for AASHTO T 99, or AASHTO T 180?	❒	❒
a. Correct size mold used?	❒	❒
b. Correct number of blows per layer used (25 or 56)?	❒	❒
c. Correct number of layers used (3, 4, or 5)?	❒	❒
d. Moisture content determined in accordance with FOP for AASHTO T 255/T 265 or AASHTO T 217?	❒	❒
3. One-point plotted on family of curves supplied?	❒	❒
4. One-point falls within 80 to 100 percent of optimum moisture content in order to be valid?	❒	❒
5. If one-point does not fall within 80 to 100 percent of optimum moisture content, another one-point determination with an adjusted water content is made?	❒	❒
6. Maximum dry density and corresponding optimum moisture content correctly estimated?	❒	❒

First Attempt: Pass ❒ Fail ❒ Second Attempt: Pass ❒ Fail ❒

Signature of Examiner _____

Comments:

WSDOT FOP for AASHTO T 304[1]

Uncompacted Void Content of Fine Aggregate

1. Scope

1.1 This method describes the determination of the loose uncompacted void content of a sample of fine aggregate. When measured on any aggregate of a known grading, void content provides an indication of that aggregate's angularity, sphericity, and surface texture compared with other fine aggregates tested in the same grading. When void content is measured on an as-received fine aggregate grading, it can be an indicator of the effect of the fine aggregate on the workability of a mixture in which it may be used.

1.2 Three procedures are included for the measurement of void content. Two use graded fine aggregate (standard grading or as-received grading), and the other uses several individual size fractions for void content determinations:

1.2.1 Standard Graded Sample (Method A) – This method uses a standard fine aggregate grading that is obtained by combining individual sieve fractions from a typical fine aggregate sieve analysis (see Section 9).

Note: WSDOT Specifications require Method A.

1.2.2 See the Section 5 for guidance on the method to be used.

1.3 The values stated in English units shall be regarded as the standard.

1.4 This standard does not purport to address all of the safety problems, if any, associated with its use. It is the responsibility of the user of this standard to establish appropriate safety and health practices and determine the applicability of regulatory limitations prior to use.

2. References Documents

2.1 AASHTO Standards

T 84 – Specific Gravity and Absorption of Fine Aggregate

2.1 WSDOT Standards

T 2 – FOP for AASHTO for the Sampling of Aggregates

T 248 – FOP for AASHTO for Reducing Field Samples of Aggregates to Testing Size

T 27/11 – FOP for WAQTC for the Sieve Analysis of Fine and Coarse Aggregates

[1]This FOP is based on AASHTO T 304-11 and has been modified per WSDOT standards. To view the redline modifications, contact the WSDOT Quality Systems Manager at 360-709-5412.

2.1 ASTM Standards

B 88 – Specification for Seamless Copper Water Tube

B 88M – Specification for Seamless Copper Water Tube (Metric)

C 29/29M – Test Method for Bulk Density ("Unit Weight") and Voids in Aggregate

C 117 – Test Method for Materials Finer than 75-um (No. 200) Sieve in Mineral Aggregates by Washing

C 125 – Terminology Relating to Concrete and Concrete Aggregates

C 128 – Test Method for Specific Gravity and Absorption of Fine Aggregate

C 136 – Test Method for Sieve Analysis of Fine and Coarse Aggregates

C 702 – Practice for Reducing Samples of Aggregate to Testing Size

C 778 – Specification for Standard Sand

D 75 – Practice for Sampling Aggregates

2.2 ACI Document

ACI 116R – Cement and Concrete Terminology[1]

3. Terminology

3.1 Terms used in this standard are defined in ASTM C 125 or ACI 116R.

4. Summary of Test Method

4.1 A nominal 100-mL calibrated cylindrical measure is filled with fine aggregate of prescribed grading by allowing the sample to flow through a funnel from a fixed height into the measure. The fine aggregate is struck off and its mass is determined by weighing. Uncompacted void content is calculated as the difference between the volume of the cylindrical measure and the absolute volume of the fine aggregate collected in the measure. Uncompacted void content is calculated using the bulk dry specific gravity of the fine aggregate. Two runs are made on each sample and the results are averaged.

4.1.1 For a graded sample, the percent void content is determined directly and the average value from two runs is reported.

5. Significance and Use

5.1 Methods A provide percent void content determined under standardized conditions which depend on the particle shape and texture of a fine aggregate. An increase in void content by these procedures indicates greater angularity, less sphericity, or rougher surface texture, or some combination of the three factors. A decrease in void content results is associated with more rounded, spherical, smooth surfaced fine aggregate, or a combination of these factors.

5.2 The standard graded sample (Method A) is most useful as a quick test which indicates the particle shape properties of a graded fine aggregate. Typically, the material used to make up the standard graded sample can be obtained from the remaining size fractions after performing a single sieve analysis of the fine aggregate.

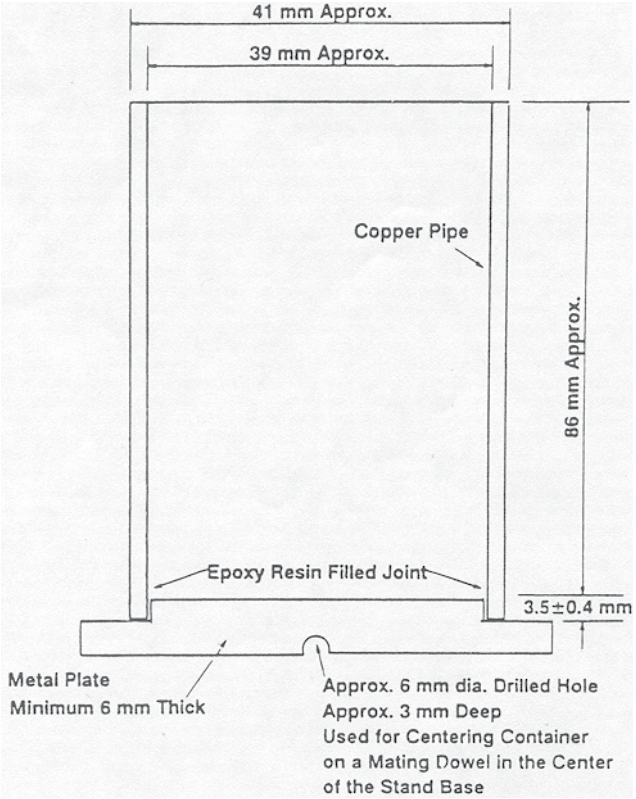

Nominal 100-ml Cylindrical Measure
Figure 1

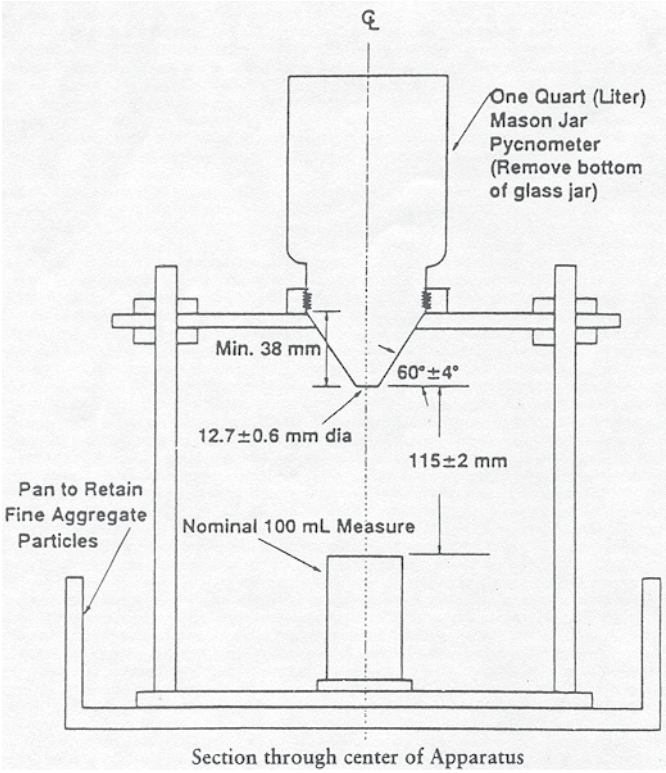

Suitable Funnel Stand Apparatus With Cylindrical Measure in Place
Figure 2

5.3 The bulk dry specific gravity of the fine aggregate is used in calculating the void content. The effectiveness of these methods of determining void content and its relationship to particle shape and texture depends on the bulk specific gravity of the various size fractions being equal, or nearly so. The void content is actually a function of the volume of each size fraction. If the type of rock or minerals, or its porosity, in any of the size fractions varies markedly, it may be necessary to determine the specific gravity of the size fractions used in the test.

5.4 Void content information from Method A will be useful as an indicator of properties such as in bituminous concrete, the effect of the fine aggregate on stability and voids in the mineral aggregate; or the stability of the fine aggregate portion of a base course aggregate.

6. Apparatus

6.1 Cylindrical Measure – A right cylinder of approximately 100 mL capacity having an inside diameter of approximately 39 mm and an inside height of approximately 86 mm made of drawn copper water tube meeting ASTM Specification B 88 Type M, or B 88 M Type C. The bottom of the measure shall be metal at least 6 mm thick, shall be firmly sealed to the tubing, and shall be provided with means for aligning the axis of the cylinder with that of the funnel (see Figure 1).

6.2 Funnel – The lateral surface of the right frustum of a cone sloped 60 ± 4º from the horizontal with an opening of 12.7 ± 0.6 mm diameter. The funnel section shall be a piece of metal, smooth on the inside and at least 38 mm high. It shall have a volume of at least 200 mL or shall be provided with a supplemental glass or metal container to provide the required volume (see Figure 2).

Note 1: Pycnometer top C9455 sold by Hogentogler and Co., Inc., 9515 Gerwig, Columbia, MD 21045, 410-381-2390 is satisfactory for the funnel section, except that the size of the opening has to be enlarged and any burrs or lips that are apparent should be removed by light filing or sanding before use. This pycnometer top must be used with suitable glass jar with the bottom removed (Figure 2).

6.3 Funnel Stand – A three or four legged support capable of holding the funnel firmly in position with the axis of the funnel colinear (within a 4º angle and a displacement of 2 mm) with the axis of the cylindrical measure. The funnel opening shall be 115 ± 2 mm above the top of the cylinder. A suitable arrangement is shown in Figure 2.

6.4 Glass Plate – A square glass plate approximately 60 mm by 60 mm with a minimum 4 mm thickness used to calibrate the cylindrical measure.

6.5 Pan – A metal or plastic pan of sufficient size to contain the funnel stand and to prevent loss of material. The purpose of the pan is to catch and retain fine aggregate particles that overflow the measure during filling and strike off. The pan shall not be warped so as to prevent rocking of the apparatus during testing.

6.6 Metal spatula with a blade approximately 100 mm long, and at least 20 mm wide, with straight edges. The end shall be cut at a right angle to the edges. The straight edge of the spatula blade is used to strike off the fine aggregate.

6.7 Scale or balance accurate and readable to ±0.1 g within the range of use, capable of weighing the cylindrical measure and its contents.

7. Sampling

7.1 The sample(s) used for this test shall be obtained using FOP for AASHTO T 2 and FOP for AASHTO T 248, or from sieve analysis samples used for FOP for WAQTC/AASHTO T 27/11, or from aggregate extracted from a bituminous concrete specimen. For Method A, the sample is washed over a 150-um (No. 100) or 75-um (No. 200) sieve in accordance with FOP for WAQTC/AASHTO T 27/11 and then dried and sieved into separate size fractions according to FOP for WAQTC/AASHTO T 27/11 procedures. Maintain the necessary size fractions obtained from one (or more) sieve analysis in a dry condition in separate containers for each size.

8. Calibration of Cylindrical Measure

8.1 Apply a light coat of grease to the top edge of the dry, empty cylindrical measure. Weigh the measure, grease, and glass plate. Fill the measure freshly boiled, deionized water at a temperature of 18 to 24ºC. Record the temperature of the water. Place the glass plate on the measure, being sure that no air bubbles remain. Dry the outer surfaces of the measure and determine the combined mass of measure, glass plate, grease, and water by weighing. Following the final weighing, remove the grease, and determine the mass of the clean, dry, empty measure for subsequent test.

8.2 Calculate the volume of the measure as follows:

$$V = 1000 \frac{M}{D}$$

where:

V = volume of cylinder, mL,

M = net mass of water, g, and

D = density of water (see table in ASTM C 29/C 29M for density at the temperature used), Kg/m^3

Determine the volume to the nearest 0.1 mL.

Note 2: If the volume of the measure is greater than 100.0 mL, it may be desirable to grind the upper edge of the cylinder until the volume is exactly 100.0 mL, to simplify subsequent calculations.

9. Preparation of Test Samples

9.1 Method A – Standard Graded Sample – Weigh out and combine the following quantities of fine aggregate which has been dried and sieved in accordance with FOP for AASHTO T 27/11.

Individual Size Fraction		Mass, g
Passing	Retained On	
No. 8 (2.36 mm)	No. 16 (1.18 mm)	44
No. 16 (1.18 mm)	No. 30 (600 um)	57
No. 30 (600 um)	No. 50 (300 um)	72
No. 50 (300 um)	No. 100 (150 um)	17
	Total	190

The tolerance on each of these amounts is ± 0.2 g.

9.2 Method B – Individual Size Fractions – WSDOT has deleted this section. They use Method A.

9.3 Method C – As Received Grading – WSDOT has deleted this section. They use Method A.

9.4 Specific Gravity of Fine Aggregate – If the bulk dry specific gravity of fine aggregate from the source is unknown, determine it on the minus No. 4 (4.75 mm) material according to AASHTO T 84. Use this value in subsequent calculations unless some size fractions differ by more than 0.05 from the specific gravity typical of the complete sample, in which case the specific gravity of the fraction (or fractions) being tested must be determined. An indicator of differences in specific gravity of various particle sizes is a comparison of specific gravities run on the fine aggregate in different gradings. Specific gravity can be run on gradings with and without specific size fractions of interest. If specific gravity differences exceed 0.05, determine the specific gravity of the individual 2.36 mm (No. 8) to 150 um (No. 100) sizes for use with Method A or the individual size fractions for use with Method B either by direct measurement or by calculation using the specific gravity data on gradings with and without the size fraction of interest. A difference in specific gravity of 0.05 will change the calculated void content about 1 percent.

10. Procedure

10.1 Mix each test sample with the spatula until it appears to be homogeneous. Position the jar and funnel section in the stand and center the cylindrical measure as shown in Figure 2. Use a finger to block the opening of the funnel. Pour the test sample into the funnel. Level the material in the funnel with the spatula. Remove the finger and allow the sample to fall freely into the cylindrical measure.

10.2 After the funnel empties, strike-off excess heaped fine aggregate from the cylindrical measure by a single pass of the spatula with the width of the blade vertical using the straight part of its edge in light contact with the top of the measure. Until this operation is complete, exercise care to avoid vibration or any disturbance that could cause compaction of the fine aggregate in the cylindrical measure (Note 3). Brush adhering grains from the outside of the container and determine the mass of the cylindrical measure and contents to the nearest 0.1 g. Retain all fine aggregate particles for a second test run.

Note 3: After strike-off, the cylindrical measure may be tapped lightly to compact the sample to make it easier to transfer the container to scale or balance without spilling any of the sample.

10.3 Recombine the sample from the retaining pan and cylindrical measure and repeat the procedure. The results of two runs are averaged (see Section 11).

10.4 Record the mass of the empty measure. Also, for each run, record the mass of the measure and fine aggregate.

11. Calculation

11.1 Calculate the uncompacted voids for each determination as follows:

$$U = \frac{V - (F/G)}{V} \times 100$$

V = volume of cylindrical measure, mL;

F = net mass, g, of fine aggregate in measure (gross mass minus the mass of the empty measure);

G = Bulk dry specific gravity of fine aggregate; and

U = uncompacted voids, percent, in the material

11.2 For the standard Graded Sample (Method A), calculate the average uncompacted voids for the two determinations and report the result as U_s.

12. Report

12.1 For the Standard Graded Sample (Method A) report:

12.1.1 The Uncompacted Voids (U_s) in percent to the nearest 1 percent.

12.1.2 The specific gravity value used in the calculations.

12.2 Report the results using one or more of the following:

- Materials Testing System (MATS)
- DOT Form 350-161
- Form approved in writing by the State Materials Engineer

13. Precision and Bias

See AASHTO T 304 for precision and bias.

Performance Exam Checklist

Uncompacted Void Content of Fine Aggregate
FOP AASHTO T 304

Participant Name _____ Exam Date _____

Procedure Element	**Yes**	**No**
1. The tester has a copy of the current procedure on hand?	☐	☐
2. All equipment is functioning according to the test procedure, and if required, has the current calibration/verification tags present?	☐	☐

Sample Preparation (Method A)

Note: If Bulk Dry Specific Gravity is unknown, determine it on the minus No. 4 (4.75 mm) material according to AASHTO T 84.

1 Field sample obtained per FOP for AASHTO T 2?	☐	☐
2. Sample reduced to testing size per FOP for AASHTO T 248?	☐	☐
3. Sample washed over No. 100 or No. 200 sieve in accordance with FOP for WAQTC/AASHTO T 27/11?	☐	☐
4. Sample dried to constant weight?	☐	☐
5. Standard Graded sample achieved per FOP for WAQTC/AASHTO T 27/11?	☐	☐
6. Necessary size fractions obtained, maintained in a dry condition in separate containers for each size?	☐	☐
7. Standard Graded sample-weighed out and combined per Section 9.1, FOP for AASHTO T 304?	☐	☐

Procedure Element
Procedure (Method A)
N***ote:*** If Bulk Dry Specific Gravity is unknown, determine it on the minus No. 4 (4.75 mm) material according to AASHTO T 84.

		Yes	No
1.	Test sample mixed until it appears to be homogeneous?	☐	☐
2.	Jar and funnel section positioned in stand and cylindrical measure centered on stand?	☐	☐
3.	Finger used to block the opening of the funnel?	☐	☐
4.	Test sample poured into the funnel and leveled?	☐	☐
5.	Finger removed and sample allowed to fall freely into cylindrical measure?	☐	☐
6.	After funnel empties, is excess material struck off w/single pass of upright spatula?	☐	☐
7.	Was care taken to avoid any vibration or disturbance that could cause compaction of material?	☐	☐
8.	All adhering grains brushed off before weighing the cylindrical measure?	☐	☐
9.	Mass of the cylindrical measure and contents weighed to nearest 0.1 gram?	☐	☐
10.	All fine aggregate particles retained and re-homogenized for a second test run?	☐	☐
11.	Percent (%) of Uncompacted Voids calculated for each run, as per FOP for AASHTO T 304, Method A?	☐	☐
12.	Were the results for each run averaged for a final result?	☐	☐
13.	Was the (%) percent of Uncompacted voids reported to the nearest one percent (1%)?	☐	☐
14.	All calculations performed correctly?	☐	☐

First Attempt: Pass ☐ Fail ☐ Second Attempt: Pass ☐ Fail ☐

Signature of Examiner _____

Comments:

WSDOT FOP for AASHTO T 308[1]

Determining the Asphalt Binder Content of Hot Mix Asphalt (HMA) by the Ignition Method

1. Scope

   1.1 This test method covers the determination of asphalt binder content of HMA mixtures by ignition at temperatures that reach the flashpoint of the binder in a furnace. The means of specimen heating may be the convection method or the direct infrared (IR) irradiation method. The aggregate remaining after burning can be used for sieve analysis using FOP for AASHTO T 27/T 11.

   1.2 The values in English units are to be regarded as the standard.

   1.3 This standard may involve hazardous materials, operations, and equipment. This standard does not purport to address all of the safety problems associated with its use. It is the responsibility of whoever uses this standard to consult and establish appropriate safety and health practices and determine the applicability of regulatory limitations prior to use.

2. Referenced Documents

   2.1 AASHTO Standards

   M 231 – Weighing Devices Used in the Testing of Materials

   2.2 Other Standards

   Manufacturer's Instruction Manual

   2.3 WSDOT Standards

   T 329 – FOP for AASHTO Moisture Content of Asphalt (HMA) by Oven Method

   T 27/11 – FOP for WAQTC Sieve Analysis of Fine and Coarse Aggregates

   T 168 – FOP for WAQTC Sampling Bituminous Paving Materials

   T 712 – Reducing Samples of Hot Mix Asphalt to Testing Size

   SOP 728 – Method for Determining Ignition Furnace Calibration Factor

3. Summary of Test Method

   3.1 The asphalt binder in the paving mixture is ignited using the furnace equipment applicable to the particular method.

   3.2 The asphalt binder content is calculated as the difference between the initial mass of the asphalt mixture and the mass of the HMA residual aggregate, with adjustments for the calibration factor, and the moisture content. The asphalt content is expressed as mass percent of moisture-free mixture.

[1]This FOP is based on AASHTO T 308-10 and has been modified per WSDOT standards. To view the redline modifications, contact the WSDOT Quality Systems Manager at 360-709-5412.

4. Significance and Use

4.1 This method can be used for quantitative determinations of asphalt binder content and gradation in HMA mixtures and pavement specimens for quality control, specification acceptance, and mixture evaluation studies. This method does not require the use of solvents. Aggregate obtained by this test method may be used for gradation analysis according to T 27/11.

5. Apparatus

5.1 Ignition Furnace – A forced-air ignition furnace that heats the specimens by either the convection or direct IR irradiation method. The convection-type furnace must be capable of maintaining the temperature at 578°C (1072°F). The furnace chamber dimensions shall be adequate to accommodate a specimen size of 3500 g. The furnace door shall be equipped so that the door cannot be opened during the ignition test. A method for reducing furnace emissions shall be provided. The furnace shall be vented into a hood or to the outside and, when set up properly, shall have no noticeable odors escaping into the laboratory. The furnace shall have a fan with the capability to pull air through the furnace to expedite the test and reduce the escape of smoke into the laboratory.

5.1.1 For Method A, the furnace shall also have an internal balance thermally isolated from the furnace chamber and accurate to 0.1 g. The balance shall be capable of weighing a 3500-g specimen in addition to the specimen baskets. A data collection system will be included so that the mass can be automatically determined and displayed during the test. The furnace shall have a built-in computer program to calculate the change in mass of the specimen baskets and provide for the input of a correction factor for aggregate loss. The furnace shall provide a printed ticket with the initial specimen mass, specimen mass loss, temperature compensation, correction factor, corrected asphalt binder content (percent), test time, and test temperature. The furnace shall provide an audible alarm and indicator light when the specimen mass loss does not exceed 0.01 percent of the total specimen mass for three consecutive minutes. The furnace shall also allow the operator to change the ending mass loss percentage to 0.02 percent.

5.2 Specimen Basket Assembly – Consisting of specimen basket(s), catch pan, and an assembly guard to secure the specimen basket(s) to the catch pan.

5.2.1 Specimen basket(s) – Of appropriate size that allows the specimens to be thinly spread and allows air to flow through and around the specimen particles. Sets with two or more baskets shall be nested. The specimen shall be completely enclosed with screen mesh, perforated stainless steel plate, or other suitable material.

Note 1: Screen mesh or other suitable material with maximum and minimum openings of 2.36 mm (No. 8) and 0.600 mm (No. 30), respectively, has been found to perform well.

5.2.2 Catch Pan – Of sufficient size to hold the specimen basket(s) so that aggregate particles and melting asphalt binder falling through the screen are caught.

5.3 Oven – Capable of maintaining 110 ± 5°C (230 ± 9°F).

5.4 Balance – Of sufficient capacity and conforming to the requirements of M 231, Class G 2.

5.5 Safety Equipment – Safety glasses or face shield, dust mask, high temperature gloves, long sleeve jacket, a heat-resistant surface capable of withstanding 650°C (1202°F), and a protective cage capable of surrounding the specimen baskets during the cooling period.

5.6 Miscellaneous Equipment – A pan larger than the specimen basket(s) for transferring the specimen after ignition, spatulas, bowls, and wire brushes.

6. Sampling

6.1 Obtain specimens of freshly produced hot-mix asphalt in accordance with FOP for WAQTC T 168.

6.2 The test specimen for asphalt content determination shall be the end result of a larger specimen taken in accordance with FOP for WAQTC T 168.

6.3 If the mixture is not sufficiently soft to separate for testing, carefully heat the mixture in an oven until sufficiently soft, not to exceed 350°F or the recommended mixing temperature from the mix design verification report. Do not leave the specimen in the oven for an extended period of time.

6.4 The size of the test specimen shall be governed by the nominal maximum aggregate size of the mixture and shall conform to the mass requirement shown below. Specimen sizes shall not be more than 500 g greater than the minimum recommended specimen mass. The maximum specimen size including basket shall not exceed the capacity of the balance.

Note 2: Large specimens of fine mixes tend to result in incomplete ignition of asphalt binder.

Nominal Max. Agg. * Size	Class		Minimum Mass of Specimen, g	Maximum Mass of Specimen, g
	HMA	Other		
US No. 4			1200	1700
⅜ in	⅜ in		1200	1700
½ in	½ in	ATB	1500	2000
¾ in	¾ in		2000	2500
1 in	1 in		3000	3500
1½ in			4000	4500

*For aggregate, the nominal maximum size, (NMS) is the largest standard sieve opening listed in the applicable specification, upon which any material is permitted to be retained. For concrete aggregate, NMS is the smallest standard sieve opening through which the entire amount of aggregate is permitted to pass.

Note: For an aggregate specification having a generally unrestrictive gradation (i.e., wide range of permissible upper sizes), where the source consistently fully passes a screen substantially smaller than the maximum specified size, the nominal maximum size, for the purpose of defining sampling and test specimen size requirements may be adjusted to the screen, found by experience to retain no more than 5 percent of the materials.

Test Method A

7. Test Procedures

7.1 Test Initiation

7.1.1 Preheat the ignition furnace to 1000°F (538°C). Manually record the furnace temperature (set point) prior to the initiation of the test if the furnace does not record automatically.

7.2 Determine the moisture content of the specimens according to FOP for AASHTO T 329 Moisture Content of Asphalt (HMA) by Oven Method.

7.3 Enter the calibration factor for the specific mix to be tested.

7.4 Weigh and record the mass of the specimen basket(s) and catch pan (with guards in place) to the nearest 0.1 g.

7.5 Prepare the specimen as described in Section 6. Evenly distribute this specimen in the specimen basket(s) that have been placed in the catch pan, taking care to keep the material away from the edges of the basket. Use a spatula or trowel to level the specimen.

7.6 Determine and record the total mass of the specimen, basket(s), catch pan, and basket guards to the nearest 0.1 g. Calculate and record the initial mass of the specimen (total mass minus the mass of the specimen basket assembly).

7.7 Input the initial mass of the specimen in whole grams into the ignition furnace controller. Verify that the correct mass has been entered.

7.8 Tare or zero furnace balance, open the chamber door, and gently set the specimen baskets in the furnace. Close the chamber door, and verify that the specimen mass (including the basket(s)) displayed on the furnace scale equals the total mass recorded in Section 7.6 within ± 6 g. Differences greater than 6 g or failure of the furnace scale to stabilize may indicate that the sample basket(s) are contacting the furnace wall.

Note 3: Due to the extreme heat of the furnace, the operator should wear safety equipment high temperature gloves, face shield, and fire-retardant shop coat when opening the door to load or unload the specimen.

7.9 Initiate the test by pressing the start/stop button. This will lock the specimen chamber and start the combustion blower.

Note 4: The furnace temperature will drop below the setpoint when the door is opened, but will recover with the door closed and when ignition occurs. Specimen ignition typically increases the temperature well above the setpoint, depending on specimen size and asphalt content.

WSDOT Safety Note: Do not attempt to open the furnace door until the binder has been completely burned off.

7.10 Allow the test to continue until the stable light and audible stable indicator indicate the test is complete (the change in mass does not exceed 0.01 percent for three consecutive minutes). Press the start/stop button. This operation will unlock the specimen chamber and cause the printer to print out the test results.

7.11 Open the chamber door, remove the specimen basket assembly and place it on a heat resistance surface. Place the protective cage over the specimen basket assembly, and allow specimen to cool to room temperature (approximately 30 minutes).

7.12 Use the corrected asphalt binder content (0.01 percent) from the printed ticket. If a moisture content (0.01 percent) has been determined, subtract the percent moisture from the printed ticket corrected asphalt content, and report the resultant value as the corrected asphalt binder content to 0.1 percent.

Test Method B

8. Test Procedure

WSDOT does not use Method B and has deleted it from the procedure.

9. Gradation

9.1 Allow the specimen to cool to room temperature in the sample baskets.

9.2 Empty the contents of the baskets into a flat pan. Use a small wire sieve brush to ensure that any residual fines are removed from the baskets. Determine and record the total mass of the specimen to the nearest 0.1g.

9.3 Perform the gradation analysis according to FOP for WAQTC T 27/T 11.

10. Report

10.1 Report the test method (A), corrected asphalt binder content, calibration factor, temperature compensation factor (if applicable), total percent loss, specimen mass, moisture content (if determined) and the test temperature. Attach the original printed tickets to the report for units with internal balances.

10.2 The asphalt percentage and aggregate gradation shall be reported on one or more of the following:

- Materials Testing System (MATS)
- DOT Forms 350-092 and 350-157
- Form approved in writing by the State Materials Engineer

11. Precision and Bias

See AASHTO T 308 for precision and bias.

Performance Exam Checklist

WSDOT FOP for AASHTO T 308
Determining the Asphalt Cement Content of Hot Mix Asphalt (HMA) by the Ignition Method

Participant Name _____ Exam Date _____

Procedure Element	**Yes**	**No**
1. The tester has a copy of the current procedure on hand?	❒	❒
2. All equipment is functioning according to the test procedure, and if required, has the current calibration/verification tags present?	❒	❒
Procedure		
1. Oven at correct temperature 538°C?	❒	❒
2. Mass of specimen baskets and catch pan recorded?	❒	❒
3. Specimen evenly distributed in basket?	❒	❒
4. Mass of specimen recorded?	❒	❒
Method A		
5. Enter calibration factor for specific mix design?	❒	❒
6. Initial mass entered into furnace controller?	❒	❒
7. Specimen correctly placed into furnace?	❒	❒
8. Test continued until stable indicator signals?	❒	❒
9. Binder content obtained on printed ticket?	❒	❒
10. Binder content corrected for moisture?	❒	❒
11. All calculations performed correctly?	❒	❒

First Attempt: Pass ❒ Fail ❒ Second Attempt: Pass ❒ Fail ❒

Signature of Examiner

Comments:

WSDOT FOP for AASHTO T 309[1]

Temperature of Freshly Mixed Portland Cement Concrete

1. Scope

   1.1 This test method covers the determination of temperature of freshly mixed Portland cement concrete.

   1.2 The values stated in English units are to be regarded separately as standard.

   1.3 This standard does not purport to address all of the safety concerns, if any, associated with its use. It is the responsibility of the user of this standard to establish appropriate safety and health practices and determine the applicability of regulatory limitations prior to use.

2. Referenced Documents

   2.1 AASHTO Standards
   T 141 – Sampling Freshly Mixed Concrete

   2.2 ASTM Standards
   C 1721 – Practice for Sampling Freshly Mixed Concrete

3. Significance and Use

   3.1 This test method provides a means for measuring the temperature of freshly mixed concrete. It may be used to verify conformance to a specified requirement for temperature of concrete.

   3.2 Concrete containing aggregate of a nominal maximum size greater than 3 in (75 mm) may require up to 20 min for the transfer of heat from aggregate to mortar. (See ACI Committee 207.1R Report 3.)

4. Apparatus

   4.1 Container – Shall be made of nonabsorptive material and large enough to provide at least 3 in (75 mm) of concrete in all directions around the sensor of the temperature measuring device; concrete cover must also be at least three times the nominal maximum size of the coarse aggregate.

   4.2 Temperature Measuring Device – The temperature measuring device shall be capable of measuring the temperature of the freshly mixed concrete to ± 1°F (± 0.5°C) throughout the entire temperature range likely to be encountered in the fresh concrete. Liquid-in-glass thermometers having a range of 0 to 120°F (-18 to 49°C) are satisfactory. Other thermometers of the required accuracy, including the metal immersion type, are acceptable.

   4.3 Partial immersion liquid-in-glass thermometers (and possibly other types) shall have a permanent mark to which the device must be immersed without applying a correction factor.

[1]This FOP is based on AASHTO T 309-11 and has been modified per WSDOT standards. To view the redline modifications, contact the WSDOT Quality Systems Manager at 360-709-5412.

5. Calibration of Temperature Measuring Device

5.1 Each temperature measuring device used for determining temperature of freshly mixed concrete shall be calibrated.

6. Sampling Concrete

6.1 The temperature of freshly mixed concrete may be measured in the transporting equipment provided the sensor of the temperature measuring device has at least 3 in (75 mm) of concrete cover in all directions around it.

6.2 Temperature of the freshly mixed concrete may be obtained following concrete placement using the forms as the container.

6.3 If the transporting equipment or placement forms are not used as the container, a sample shall be prepared as follows:

6.3.1 Immediately, prior to sampling the freshly mixed concrete, dampen (with water) the sample container.

6.3.2 Sample the freshly mixed concrete in accordance with Practice C 172, except that composite samples are not required if the only purpose for obtaining the sample is to determine temperature.

6.3.3 Place the freshly mixed concrete into the container.

7. Procedure

7.1 Place the temperature measuring device in the freshly mixed concrete so that the temperature sensing portion is submerged a minimum of 3 in (75 mm). Gently press the concrete around the temperature measuring device at the surface of the concrete so that ambient air temperature does not affect the reading.

7.2 Leave the temperature measuring device in the freshly mixed concrete for a minimum period of 2 min or until the temperature reading stabilizes, then read and record the temperature.

7.3 Complete the temperature measurement of the freshly mixed concrete within 5 min after obtaining the sample.

8. Report

8.1 Record the measured temperature of the freshly mixed concrete to the nearest 1°F (0.5°C).

8.2 Report results on concrete delivery ticket (i.e., Certificate of Compliance).

8.3 The name of the tester who performed the field acceptance test is required on concrete delivery tickets containing test results.

9. Precision and Bias

9.1 The precision and bias of this test method have not been determined. A precision and bias statement will be included when sufficient test data have been obtained and analyzed.

Performance Exam Checklist

Temperature of Freshly Mixed Concrete
FOP for AASHTO T 309

Participant Name _____ Exam Date _____

Procedure Element	Yes	No
1. The tester has a copy of the current procedure on hand?	❐	❐
2. All equipment is functioning according to the test procedure, and if required, has the current calibration/verification tags present?	❐	❐
3. Use calibrated thermometer approved for concrete:	❐	❐
4. Place thermometer in sample with a minimum of 3 in (75 mm) cover around sensor?	❐	❐
5. Gently press concrete around thermometer?	❐	❐
6. Read temperature after a minimum of 2 minutes or when temperature reading stabilizes? Complete temperature measurement within 5 minutes of obtaining sample?	❐	❐
7. Record temperature to nearest 1°F (0.5°C)?	❐	❐

First Attempt: Pass ❐ Fail ❐ Second Attempt: Pass ❐ Fail ❐

Signature of Examiner _____

Comments:

WSDOT FOP for AASHTO T 310[1]

In-Place Density and Moisture Content of Soil and Soil-Aggregate by Nuclear Methods (Shallow Depth)

1. Scope

1.1 This test method describes the procedure for determining the in-place density and moisture of soil and soil-aggregate by use of nuclear equipment. The density of the material may be determined by direct transmission, backscatter, or backscatter/air-gap ratio method. The WSDOT standard method for determining density is by direct transmission.

1.2 Density – The total or wet density of soil and soil-rock mixtures is determined by the attenuation of gamma radiation where the source or detector is placed at a known depth up to 12 in (300 mm) while the detector(s) or source remains on the surface (Direct Transmission Method) or the source and detector(s) remain on the surface (Backscatter Method).

1.2.1 The density in mass per unit volume of the material under test is determined by comparing the detected rate of gamma radiation with previously established calibration data.

1.3 Moisture – The moisture content of the soil and soil-rock mixtures is determined by thermalization or slowing of fast neutrons where the neutron source and the thermal neutron detector both remain at the surface.

1.3.1 The water content in mass per unit volume of the material under test is determined by comparing the detection rate of thermalized or slow neutrons with previously established calibration data.

1.4 SI Units – The values stated in SI units are to be regarded as the standard.

1.5 This standard does not purport to address all of the safety problems, if any, associated with its use. It is the responsibility of the user of this standard to establish appropriate safety and health practices and determine the applicability of regulatory limitations prior to use (see Section 6).

2. Referenced Documents

2.1 AASHTO Standards

T 99 – Moisture-Density Relations of Soils Using a 5.5 lb (2.5 kg) Rammer and a 12 in (305 mm) Drop

T 180 – Moisture-Density Relations of Soils Using a 10 lb (4.54 kg) Rammer and an 18 in (457 mm) Drop

T 191 – Density of Soil In-Place by the Sand-Cone Method

[1]This FOP is based on AASHTO 310-11 and has been modified per WSDOT standards. To view the redline modifications, contact the WSDOT Quality Systems Manager at 360-709-5412.

T 217 – Determination of Moisture in Soils by Means of a Calcium Carbide Gas Pressure Moisture Tester

T 224 – Correction for Coarse Particles in the Soil Compaction Test

T 255 – Total Evaporable Moisture Content of Aggregate by Drying

T 265 – Laboratory Determination of Moisture Content of Soils

T 272 – Family of Curves – One-Point Method

2.2 ASTM Test Method

D 2216 – Laboratory Determination of Moisture Content of Soil

D 2487 – Classification of Soils for Engineering Purposes (Unified Soil Classification System)

D 2488 – Description and Identification for Soils (Visual-Manual Procedure)

D 2937 – Density of Soil in Place by the Drive-Cylinder Method

D 4253 – Maximum Index Density and Unit Weight of Soils Using a Vibratory Table

D 4254 – Maximum Index Density and Unit Weight of Soils and Calculation of Relative Density

D 7013 – Standard Guide for Nuclear Surface Moisture and Density Gauge Calibration Facility Setup

2.3 WSDOT Standards

FOP for WAQTC TM 8 – In-Place Density of Bituminous Mixes Using the Nuclear-Density Gauge

T 606 – Method of Test for Compaction Control of Granular Materials

SOP 615 – Determination of the % Compaction for Embankment & Untreated Surfacing Materials using the Nuclear Moisture-Density Gauge

3. Significance

3.1 The test method described is useful as a rapid, nondestructive technique for the in-place determination of the wet density and water content of soil and soil-aggregate.

3.2 The test method is used for quality control and acceptance testing of compacted soil and rock for construction and for research and development. The non-destructive nature allows repetitive measurements at a single test location and statistical analysis of the results.

3.3 Density – The fundamental assumptions inherent in the methods are that Compton scattering is the dominant interaction and that the material under test is homogeneous.

3.4 Moisture – The fundamental assumptions inherent in the test method are that the hydrogen present is in the form of water as defined by ASTM D 2216, and that the material under test is homogeneous.

3.5 Test results may be affected by chemical composition, sample heterogeneity, and, to a lesser degree, material density and the surface texture of the material being tested. The technique also exhibits spatial bias in that the gauge is more sensitive to water contained in the material in close proximity to the surface and less sensitive to water at deeper levels.

4. Interferences

4.1 In-Place Density Interferences

4.1.1 The chemical composition of the sample may affect the measurement, and adjustments may be necessary.

4.1.2 The gauge is more sensitive to the density of the material in close proximity to the surface in the Backscatter Method.

Note 1: The nuclear gauge density measurements are somewhat biased to the surface layers of the soil being tested. This bias has largely been corrected out of the Direct Transmission Method and any remaining bias is insignificant. The Backscatter Method is still more sensitive to the material within the first several inches from the surface. Density measurements with direct transmission is the WSDOT standard method for soil and soil aggregate.

4.1.3 Oversize rocks or large voids in the source-detector path may cause higher or lower density determination. Since there is lack of uniformity in the soil due to layering, rock, or voids the test site beneath the gauge will be excavated and a representative sample will be taken to determine the gradation per WSDOT SOP 615.

4.1.4 Keep all other radioactive sources at least the minimum distance recommended by the manufacture away from the gauge to avoid affecting the measurement.

4.2 In-Place Moisture Content Interferences

4.2.1 The chemical composition of the sample may dramatically affect the measurement and adjustments may be necessary. Hydrogen in forms other than water, as defined by ASTM D 2216, and carbon will cause measurements in excess of the true value. Some chemical elements such as boron, chlorine, and minute quantities of cadmium will cause measurements lower than the true value.

4.2.2 The water content determined by this test method is not necessarily the average water within the volume of the sample involved in the measurement. The measurement is heavily influenced by the water content of the material closest to the surface. The volume of soil and rock represented in the measurement is indeterminate and will vary with the water content of the material. In general, the greater the water content of the material, the smaller the volume involved in the measurement. At 10 lbs/ft^3 (160 kg/m^3), approximately 50 percent of the typical measurement results from the water content of the upper 2 to 3 in (50 to 75 mm).

4.2.3 Keep all other neutron sources at least the minimum distance recommended by the manufacture away from the gauge to avoid affecting the measurement.

5. Apparatus

5.1 Nuclear Density/Moisture Gauge – While exact details of construction of the gauge may vary, the system shall consist of:

5.1.1 A sealed source of high energy gamma radiation such as cesium or radium.

5.1.2 Gamma Detector – Any type of gamma detector such as a Geiger-Mueller tube(s).

5.2 Fast Neutron Source – A sealed mixture of a radioactive material such as americium, radium, or californium-252 and a target material such as beryllium.

5.3 Slow Neutron Detector – Any type of slow neutron detector such as boron trifluoride or helium-3 proportional counter.

5.4 Reference Standard – A block of material used for checking instrument operation, correction of source decay, and to establish conditions for a reproducible reference count rate.

5.5 Site Preparation Device – A plate, straightedge, or other suitable leveling tool which may be used for planing the test site to the required smoothness, and in the Direct Transmission Method, guiding the drive pin to prepare a perpendicular hole.

5.6 Drive Pin – A pin not to exceed the diameter of the rod in the Direct Transmission Gauge by more than ¼ in (6 mm) or as recommended by the gauge manufacturer used to prepare a hole in the material under test for inserting the rod.

5.7 Hammer – Hand-held hammer of sufficient size and weight to drive the drive pin into the material being tested. A slide hammer with an attached drive pin is an acceptable alternate to the Drive Pin, Hammer, and Drive Pin Extractor.

5.8 Drive Pin Extractor – A tool that may be used to remove the drive pin in a vertical direction so that the pin will not distort the hole in the extraction process.

6. Hazards

6.1 This gauge utilizes radioactive materials that may be hazardous to the health of the users unless proper precautions are taken. Users of this gauge must become familiar with applicable safety procedures and government regulations.

6.2 Effective user instructions together with routine safety procedures, such as source leak tests, recording, and evaluation of film badge data, etc., are a recommended part of the operation and storage of this gauge.

7. Calibration

Nuclear gauges used for the purpose of acceptance testing, independent assurance testing, or dispute resolution shall be calibrated

WSDOT-owned nuclear density gauges will be calibrated by WSDOT using the manufacturer's recommended procedures or may be calibrated by an external calibration facility that has been approved by the State Materials Engineer.

Nuclear gauges that are not owned by WSDOT shall be calibrated in accordance with AASHTO T 310 Annexes A1, A 2, and A3.

8. Standardization

8.1 Turn the gauge on and allow it to stabilize for a minimum of 45 minutes prior to standardization. Leave the power on during the day's testing.

Note 2: If for any reason the gauge loses power or is turned off during the work period, the Standard Count must be re-established prior to use.

8.2 Standardize the gauge at the start of each day's work and as often as deemed necessary by the operator or agency. Daily variations in Standard Count shall not exceed the daily variations established by the manufacturer of the gauge. Compare the daily Standard Count to the Density Standard Decay Sheet (Note 3) to ensure the Standard Count falls within acceptable limits. If the daily variations are exceeded after repeating the standardization procedure or if the daily Standard Count is outside the range of the Standard Decay Sheet, the gauge should be repaired and or recalibrated.

8.3 Record the Standard Count for both density and moisture in the Daily Standard Count Log. The exact procedure for standard count is listed in the manufacturer's operators manual.

Note 3: The Density Standard Decay Sheet is located in the calibration documentation. This sheet shows the anticipated Standard Count range based on the calculated decay rate of the gauges radioactive source over the passage of time.

9. Procedure

9.1 Select a test location per WSDOT SOP 615.

9.2 Prepare the test site in the following manner:

9.2.1 Remove all loose and disturbed material and additional material as necessary to expose the top of the material to be tested.

Note 4: The spatial bias should be considered in determining the depth at which the gauge is to be seated.

9.2.2 Select a horizontal area sufficient in size to accommodate four gauge readings that will be 90° to each other. Plane the area to a smooth condition so as to obtain maximum contact between the gauge and the material being tested.

9.2.3 The maximum void beneath the gauge shall not exceed ⅛ in (3 mm). Use native fines or fine sand to fill the voids and smooth the surface with a rigid plate or other suitable tool. The depth of the filler shall not exceed approximately ⅛ in (3 mm).

9.3 This section has been deleted because WSDOT does not use this method.

9.4 Direct Transmission Method of In-Place Nuclear Density and Moisture Content

9.4.1 When selecting a test location, the tester shall visually select a site where the least compactive effort has been applied. Select a test location where the gauge will be at least 6 in (150 mm) away from any vertical mass. If closer than 24 in (600 mm) to a vertical mass, such as in a trench, follow gauge manufacturer correction procedures.

The test location should be at least 33 ft (10 m) away from other sources of radioactivity and at least 10 ft (3 m) away from large objects or the minimum distance recommended by the manufacturer, whichever is the greater distance.

9.4.2 Make a hole perpendicular to the prepared surface using the guide and the hole-forming device (Section 5). The hole shall be a minimum of 2 in (50 mm) deeper than the desired measurement depth and of an alignment that insertion of the probe will not cause the gauge to tilt from the plane of the prepared area.

9.4.3 Mark the test area to allow the placement of the gauge over the test site and to allow the alignment of the source rod to the hole. Follow manufacturer recommendations if applicable.

Note 5: For alignment purposes, the user may expose the source rod for a maximum of ten seconds.

9.4.4 Remove the hole forming device carefully to prevent the distortion of the hole, damage to the surface, or loose material to fall into the hole.

Note 6: If the hole cannot be maintained, contact the Regional Materials Laboratory for directions on how to proceed.

9.4.5 Place the instrument on the material to be tested, making sure of maximum surface contact as described above.

9.4.6 Lower the source rod into the hole to the desired test depth. Pull gently on the gauge in the direction that will bring the side of the probe to face the center of the gauge so that the probe is in intimate contact with the side of the hole in the gamma measurement path.

9.4.7 If the gauge is so equipped, set the depth selector to the same depth as the probe before recording the automated (gauge computed densities, moisture contents, and weights) values.

9.4.8 Secure and record one, one minute dry density and moisture content readings, then turn the gauge 90º and perform another set of readings. If the two dry density readings are not within 3 lbs/cf (50 kg/m^3) of each other, see Note 7.

Note 7: If two readings are not within tolerances stated, rotate gauge 90º and retest. Again compare both 90º readings. If after four readings the results are not within the tolerances stated, rotate gauge 90º and retest. Again compare both readings. If these reading are still not within tolerances stated, move to another location to perform test.

10. Calculation of Results

10.1 If dry density is required, the in-place water content may be determined by using the nuclear methods described herein, gravimetric samples and laboratory determination, or other approved instrumentation.

10.1.1 If the water content is determined by nuclear methods, use the gauge readings directly.

10.1.2 If the water content is determined by other methods and is in the form of percent, proceed as follows:

$$d = \frac{100}{100+W}(m)$$

where:

d = dry density in lb/ft^3 (kg/m^3)
m = wet density in lb/ft^3 (kg/m^3)
W = water as a percent of dry mass

10.2. Percent Compaction

WSDOT has deleted this section. Refer to WSDOT SOP 615 for determining the percent compaction.

11. Report

WSDOT has deleted this section. Refer to WSDOT SOP 615 for reporting.

12. Precision and Bias

WSDOT has deleted this section. Refer to AASHTO T 310 for precision and bias information.

Appendix

WSDOT has deleted this section. WSDOT uses the manufacturer's software to calibrate the gauge.

Performance Exam Checklist

In-Place Density and Moisture Content of Soil and Soil-Aggregate by Nuclear Methods (Shallow Depth)
FOP for AASHTO T 310

Participant Name _____ Exam Date _____

Procedure Element	Yes	No
1. The tester has a copy of the current procedure on hand?	❒	❒
2. All equipment is functioning according to the test procedure, and if required, has the current calibration/verification tags present?	❒	❒
3. Gauge turned on and allowed to stabilize?	❒	❒
4. Gauge standardized and standard count recorded?	❒	❒
5. Test location selected per WSDOT SOP 615?	❒	❒
6. Loose, disturbed material removed?	❒	❒
7. Flat, smooth area prepared?	❒	❒
8. Surface voids filled with native fines (⅛ in (3 mm) maximum thickness)?	❒	❒
9. Hole driven 2 in (50 mm) deeper than material to be tested?	❒	❒
10. Gauge placed, probe placed, and source rod lowered without disturbing loose material?	❒	❒
11. For alignment purposes, did not expose the source rod for more than 10 seconds?.	❒	❒
12. Method B		
a. Gauge firmly seated and gently pulled back so that source rod is against hole?	❒	❒
b. A one-minute count taken; dry density and moisture data recorded?	❒	❒
c. Gauge turned 90° (180° in trench)?	❒	❒
d. Gauge firmly seated and gently pulled back so that source rod is against hole?	❒	❒
e. A second one-minute count taken; dry density and moisture data recorded?	❒	❒
f. Dry density counts within 3 lb/ft3 (50 kg/m3)?	❒	❒
g. Average of two tests?	❒	❒
13. A minimum 9 lbs (4 kg) sample obtained from below gauge?	❒	❒
14. Oversize determined following WSDOT SOP 615?	❒	❒
15. All calculations performed correctly?	❒	❒
16. Nuclear Gauge secured in a manner consistent with current DOH requirements?	❒	❒

First Attempt: Pass ❒ Fail ❒ Second Attempt: Pass ❒ Fail ❒

Signature of Examiner _____

Comments:

WSDOT FOP for AASHTO T 312

Preparing Hot-Mix Asphalt (HMA) Specimens by Means of the Superpave Gyratory Compactor

1. Scope

   1.1 This standard covers the compaction of cylindrical specimens of hot-mix asphalt (HMA) using the Superpave gyratory compactor.

   1.2 This standard may involve hazardous materials, operations, and equipment. This standard does not purport to address all of the safety problems associated with its use. It is the responsibility of the user of this standard to establish appropriate safety and health practices and determine the applicability of regulatory limitations prior to use.

2. Referenced Documents

   2.1 AASHTO Standards

   M 231 – Weighing Devices Used in Testing of Materials

   T 344 – Evaluation of the Superpave Gyratory Compactor (SGC) Internal Angle of Gyration Using Simulated Loading

   R 30 – Mixture Conditioning of Hot-Mix Asphalt (HMA)

   R 35 – Superpave Volumetric Design for Hot-Mix Asphalt (HMA)

   T 166 – Bulk Specific Gravity of Compacted Hot Mix Asphalt (HMA) Using Saturated Surface-Dry Specimens

   T 168 – Sampling Bituminous Paving Mixtures

   T 209 – Theoretical Maximum Specific Gravity and Density of Hot Mix Asphalt (HMA)

   T 275 – Bulk Specific Gravity of Compacted Hot Mix Asphalt (HMA) Using Paraffin-Coated Specimens

   T 316 – Viscosity Determination of Asphalt Binder Using Rotational Viscometer

   2.2 Other Standards

   WSDOT SOP 731 – Method for Determining Volumetric Properties of Hot Mix Asphalt (HMA)

3. Significance and Use

   3.1. This standard is used to prepare specimens for determining the mechanical and volumetric properties of HMA. The specimens simulate the density, aggregate orientation, and structural characteristics obtained in the actual roadway when proper construction procedure is used in the placement of the paving mix.

   3.2. This test method may be used to monitor the density of test specimens during their preparation. It may also be used for field control of an HMA production process.

4. Apparatus

4.1. Superpave Gyratory Compactor – An electrohydraulic or electromechanical compactor with a ram and ram heads as described in Section 4.3. The axis of the ram shall be perpendicular to the platen of the compactor. The ram shall apply and maintain a pressure of 600 ± 18 kPa perpendicular to the cylindrical axis of the specimen during compaction (Note 1). The compactor shall tilt the specimen molds at an average internal angle of 1.16 ± 0.02° (20.2 ± 0.35 mrad), determined in accordance with AASHTO T 344. The compactor shall gyrate the specimen molds at a rate of 30.0 ± 0.5 gyrations per minute throughout compaction.

Note 1: This stress calculates to 10,600 ± 310 N total force for 6 inches (150 mm) specimens.

4.1.1 Specimen Height Measurement and Recording Device – When specimen density is to be monitored during compaction, a means shall be provided to continuously measure and record the height of the specimen to the nearest 0.1 mm during compaction once per gyration.

4.1.2 The system may include a connected printer capable of printing test information, such as specimen height per gyration. In addition to a printer, the system may include a computer and suitable software for data acquisition and reporting.

4.2 Specimen Molds – Specimen molds shall have steel walls that are at least 7.5 mm thick and are hardened to at least a Rockwell hardness of C48. The initial inside finish of the molds shall have a root mean square (rms) of 1.60 um or smoother (Note 2). New molds shall have an inside diameter of 149.90 to 150.00 mm and be at least 250 mm high at room temperature. The inside diameter of in-service molds shall not exceed 150.2 mm.

Note 2: Smoothness measurement is in accordance with ANSI B 46.1. One source of supply for a surface comparator, which is used to verify the rms value of 1.60 um, is GAR Electroforming, Danbury, Connecticut.

4.3 Ram Heads and Mold Bottoms – Ram heads and mold bottoms shall be fabricated from steel with a minimum Rockwell hardness of C48. The ram heads shall stay perpendicular to its axis. The platen side of each mold bottom shall be flat and parallel to its face. All ram and base plate faces (the sides presented to the specimen) shall be flat to meet the smoothness requirement in Section 4.2 and shall have a diameter of 149.50 to 149.75 mm.

4.4 Thermometric Device – Used for determining the temperature of aggregates, binder, and HMA between 18 to 418ºF (10 and 232ºC).

4.5 Balance – A balance meeting the requirements of M 231, Class G5, for determining the mass of aggregates, binder, and HMA.

4.6 Oven – An oven, thermostatically controlled to ± 5ºF (± 3ºC) for heating aggregates, binder, HMA, and equipment as required. The oven shall be capable of maintaining the temperature required for mixture conditioning in accordance with R 30.

4.7 Miscellaneous – Flat-bottom metal pans for heating aggregates, scoop for batching aggregates, containers (grill-type tins, beakers, containers for heating asphalt), large mixing spoon or small trowel, large spatula, gloves for handling hot equipment, paper disks, mechanical mixer (optional), lubricating materials recommended by the compactor manufacturer.

4.8 Maintenance – In addition to routine maintenance recommended by the manufacturer, check the Superpave gyratory compactor's mechanical components for wear, and perform repair, as recommended by the manufacturer.

5. Hazards

5.1 Use standard safety precautions and protective clothing when handling hot materials and preparing test specimens.

6. Standardization

6.1 Items requiring periodic verification of calibration include the ram pressure, angle of gyration, gyration frequency, LVDT (or other means used to continuously record the specimen height), and oven temperature. Verification of the mold and platen dimensions and the inside finish of the mold are also required. When the computer and software options are used, periodically verify the data processing system output using a procedure designed for such purposes. Verification of calibration, system standardization, and quality checks may be performed by the manufacturer, other agencies providing such services, or in-house personnel. Frequency of verification shall follow the manufacturer's recommendations.

6.2 The angle of gyration refers to the internal angle (tilt of mold with respect to end plate surface within the gyratory mold). The calibration of the internal angle of gyration should be verified in accordance with AASHTO T 344.

7. Preparation of Apparatus

7.1 Immediately prior to the time when the HMA is ready for placement in the mold, turn on the main power for the compactor for the manufacturer's required warm-up period.

7.2 Verify the machine settings are correct for angle, pressure, and number of gyrations.

7.3 Lubricate any bearing surfaces as needed per the manufacturer's instructions.

7.4 When specimen height is to be monitored, the following additional item of preparation is required. Immediately prior to the time when the HMA is ready for placement in the mold, turn on the device for measuring and recording the height of the specimen, and verify the readout is in the proper units, mm, and the recording device is ready. Prepare the computer, if used, to record the height data, and enter the header information for the specimen.

8. HMA Mixture Preparation

8.1 Weigh the appropriate aggregate fractions into a separate pan, and combine them to the desired batch weight. The batch weight will vary based on the ultimate disposition of the test specimens. If a target air void level is desired, as would be the case for Superpave mix analysis and performance specimens, batch weights will be adjusted to create a given density in a known volume. If the specimens are to be used for the determination of volumetric properties, the batch weights will be adjusted to result in a compacted specimen having dimensions of 150 mm in diameter and 115 ± 5 mm in height at the desired number of gyrations.

Note 3: It may be necessary to produce a trial specimen to achieve this height requirement. Generally, 4500 to 4700 g of aggregate are required to achieve this height for aggregates with combined bulk specific gravities of 2.55 to 2.70, respectively.

8.2 Place the aggregate and binder container in the oven, and heat them to the required mixing temperature.

8.2.1. The mixing temperature range is defined as the range of temperatures where the unaged binder has a kinematic viscosity of 170 ± 20 mm^2/s (approximately 0.17 ± 0.02 Pa·s for a binder density of 1.00 g/cm^3) measured in accordance with T 316.

Note 4: Modified asphalts may not adhere to the equi-viscosity requirements noted, and the manufacturer's recommendations should be used to determine mixing and compaction temperatures.

Note 5: The SI unit kinematic viscosity is m^2/s; for practical use, the submultiple mm^2/s is recommended. The more familiar centistokes is a cgs unit of kinematic viscosity; it is equal to 1 mm^2/s. The kinematic viscosity is the ratio of the viscosity of the binder to its density. For a binder with a density equal to 1.000 g/cm^3, a kinematic viscosity of 170 mm^2/s is equivalent to a viscosity of 0.17 Pa·s measured in accordance with T 316.

8.3 Charge the mixing bowl with the heated aggregate from one pan and dry-mix thoroughly. Form a crater in the dry blended aggregate and weigh the required amount of binder into the mix. Immediately initiate mixing.

8.4 Mix the aggregate and binder as quickly and thoroughly as possible to yield HMA having a uniform distribution of binder. As an option, mechanical mixing may be used.

8.5 After completing the mixture preparation, perform the required mixture conditioning in accordance with R 30.

8.6 Place a compaction mold and base plate in an oven not to exceed 350°F for a minimum of 60 minutes prior to the estimated beginning of compaction (during the time the mixture is being conditioned in accordance with R 30).

8.7 Following the mixture conditioning period specified in R 30, if the mixture is at the compaction temperature, proceed immediately with the compaction procedure as outlined in Section 9. If the compaction temperature is different from the mixture conditioning temperature used in accordance with R 30, place the mix in another oven at the compaction temperature for a brief time (maximum of 30 minutes) to achieve the required temperature.

8.7.1 The compaction temperature is the mid-point of the range of temperatures where the unaged binder has a kinematic viscosity of 280 ± 30 mm^2/s (approximately 0.28 ± 0.03 Pa·s) measured in accordance with T 316 (Note 4).

8.8 If loose HMA plant mix is used, the sample should be obtained in accordance with T 168. Place the gyratory sample in an oven set no more than 25° F above the compaction temperature (Note 1) as soon as possible to reduce sample cooling. The gyratory test is temperature sensitive. The sample should be heated five degrees above the compaction temperature as shown on the mix design verification report.

Note 1: Any change in compaction temperature must be confirmed by the temperature viscosity chart provided by the asphalt supplier, which can be obtained from the Paving Contractor.

9. Compaction Procedure

9.1 When the temperature of the HMA is five degrees above the compaction temperature as shown on the Mix Design Verification Report, remove the heated mold, base plate, and upper plate (if required) from the oven. Place the base plate and a paper disk in the bottom of the mold.

9.2 Remove the pan of HMA from the oven and in one motion invert the pan onto the construction paper, vinyl mat, etc. Quickly remove any material that remains in the pan and include it with the HMA sample to be compacted. Grasp opposing edges of the paper and roll them together to form the HMA into a cylindrical shape. Insert one end of the paper roll into the bottom of the compaction mold and remove the paper as the HMA slides into the mold. This process needs to be accomplished in approximately 60 seconds. Place the mixture into the mold in one lift. Care should be taken to avoid segregation in the mold. After all the mix is in the mold, level the mix, and place another paper disk and upper plate (if required) on top of the leveled materials.

9.3 Load the charged mold into the compactor and center the loading ram.

9.4 Apply a pressure of 600 ± 18 kPa on the specimen.

9.5 Apply a 1.16 ± 0.02° (20.2 ± 0.35 mrad) average internal angle, as appropriate, to the mold assembly, and begin.

9.6 Allow the compaction to proceed until the desired number of gyrations specified is reached and the gyratory mechanism shuts off.

9.7 Remove the angle from the mold assembly; retract the loading ram; remove the mold from the compactor (if required); and extrude the specimen from the mold.

Note 6: The specimens can be extruded from the mold immediately after compaction for most HMA. However, a cooling period of 5 to 10 minutes in front of a fan may be necessary before extruding some specimens to insure the specimens are not damaged.

9.8 Remove the paper disks from the top and bottom of the specimens.

Note 7: Before reusing the mold, place it in an oven for at least 5 minutes. The use of multiple molds will speed up the compaction process.

10. Density Procedure

10.3 When the specimen height is to be monitored, record the specimen height to the nearest 0.1 mm after each revolution.

11. Density Calculations

WSDOT has removed this section. Refer to WSDOT SOP 731.

12. Report

WSDOT has removed this section. Refer to WSDOT SOP 731.

13. Precision and Bias

See AASHTO T 312 for precision and bias.

Performance Exam Checklist

Determining Density of Hot Mix Asphalt (HMA) Specimens by Means of the SHRP Gyratory Compactor
FOP for AASHTO T 312

Participant Name _____ Exam Date _____

Procedure Element	**Yes**	**No**
1. The tester has a copy of the current procedure on hand?	☐	☐
2. All equipment is functioning according to the test procedure, and if required, has the current calibration/verification tags present?	☐	☐
3. Main power for compactor turned on for manufacturer's required warm-up period if applicable?	☐	☐
4. Angle, pressure, and number of gyrations set?	☐	☐
5. Bearing surfaces, rotating base surface, and rollers lubricated?	☐	☐
Preparation of Mixtures		
1. Is mixture 5°F above compaction temperature? If not, was mixture placed in an oven and brought up to 5°F above compaction temperature?	☐	☐
2. Mold and base plate heated for a minimum of 60 minutes in an oven at a temperature not to exceed 350°F?	☐	☐
Plant Mix – Loose mix brought to compaction temperature by uniform heating immediately prior to molding.		
1. Mold, base plate, and upper plate (if required) removed from oven and paper disk placed on bottom of mold?	☐	☐
2. Mixture placed into mold in one lift, mix leveled, and paper disk and upper plate (if required) placed on top of material?	☐	☐
3. Mold loaded into compactor and a pressure of 600 ± 18 kPa applied?	☐	☐
4. Angle of 1.16 ± 0.02° (20.2 ± 0.35 mrad) applied to the mold assembly and gyratory compaction started?	☐	☐
5. Compactor shuts off when appropriate gyration level is reached?	☐	☐
6. Mold removed and specimen extruded?	☐	☐
7. Paper disks removed?	☐	☐
8. If specimens are used for determination of volumetric properties, are the heights of the specimens 115 ± 5 mm?	☐	☐
9. All calculations performed correctly?	☐	☐

First Attempt: Pass ☐ Fail ☐ Second Attempt: Pass ☐ Fail ☐

Signature of Examiner _____

Comments:

WSDOT FOP for AASHTO T 329[1]

Moisture Content of Asphalt (HMA) by Oven Method

1. Scope

   1.1 This method is intended for the determination of moisture content of hot mix asphalt (HMA) by drying in an oven.

   1.2 The values stated in SI units are to be regarded as the standard.

   1.3 This standard may involve hazardous materials, operations, and equipment. This standard does not purport to address all of the safety concerns associated with its use. It is the responsibility of the user of this standard to consult and establish appropriate safety and health practices and determine the applicability of regulatory limitations prior to use.

2. Referenced Documents

   2.1 AASHTO Standards

   M 231 – Weighing Devices Used in the Testing of Materials

   T 168 – Sampling Bituminous Paving Mixtures

   2.2 WAQTC Standards

   T 168 – Sampling Bituminous Paving Mixtures

   2.3 WSDOT Standards

   T 712 – Standard Method of Reducing Hot Mix Asphalt Paving Mixtures

3. Terminology

   3.1 Constant mass shall be defined as the mass at which further drying at 325 ± 25°F (163 ± 14°C) does not alter the mass by more than 0.1 percent.

4. Summary of Test Method

   4.1 A sample of HMA is dried in a forced-air, ventilated, or convection oven to a constant mass.

5. Apparatus

   5.1 Balance or Scale – 4.4-lb (2-kg) capacity, readable to at least 0.1 g and conforming to the requirements of M 231.

   5.2 Forced-Air, Ventilated, or Convection Oven – Capable of maintaining the temperature surrounding the sample at 325 ± 25°F (163 ± 14°C).

   5.3 Sample Container – The container in which the sample is dried shall be of sufficient size to contain the sample without danger of spilling and to allow the sample to be evenly distributed in a manner that will allow completion of the test in an expeditious manner.

[1]This FOP is based on AASHTO T 329-08 and has been modified per WSDOT standards. To view the redline modifications, contact the WSDOT Quality Systems Manager at 360-709-5412.

5.4 Thermometric Devices – Armored glass, Infrared gun or dial-type thermometers with metal stems for determining the temperature of aggregates, binder, and HMA.

6. Sample

6.1 A sample of HMA shall be obtained in accordance with WSDOT FOP for WAQTC T 168.

6.2 The sample shall be reduced in size in accordance with WSDOT T 712. The size of the test sample shall be a minimum of 1,000 g.

7. Procedure

7.1 Determine and record the mass of the sample container to the nearest 0.1g.

7.2 Place the test sample in the sample container. Determine and record the temperature of the test sample. To facilitate drying, evenly distribute the test sample in the sample container.

7.3 Determine and record the total mass of the sample container and moist test sample to the nearest 0.1 g.

7.4 Preheat the oven to drying temperature of 325 ± 25°F (163 ± 14°C).

Note 1: For repeatability between operators and or laboratories the difference between drying temperatures for samples should not exceed 15°F (9°C).

7.5 Calculate the mass of the initial, moist test sample by subtracting the mass of the sample container determined in Section 7.1 from the total mass of the sample container and moist test sample determined in Section 7.3.

7.6 The test sample shall be initially dried for a minimum of 90 minutes, and it's mass determined. Then, at 30 min intervals until constant mass is achieved.

Note 2: The moisture content of test samples and the number of test samples in the oven will affect the rate of drying at any given time. Placing wet test samples in the oven with nearly dry test samples could affect the drying process.

7.7 Cool the sample container and test sample to approximately the same temperature as determined in Section 7.2.

7.8 Determine and record the total mass of the sample container and dry test sample to the nearest 0.1 g.

Note 3: Do not attempt to remove the test sample from the sample container for the purposes of determining the dry mass of the test sample.

7.9 Calculate the mass of the final, dry test sample by subtracting the mass of the sample container determined in Section 7.1 from the total mass of the sample container and dry test sample determined in Section 7.8.

8. Calculations

8.1 WSDOT uses the following formula to calculate moisture content:

8.1.1

$$\text{Moisture Content, \%} = \frac{M_i - M_f}{M_i} \times 100$$

Where:

M_i = Mass of the initial, moist test sample
M_f = Mass of the final, dry test sample

Example: M_i = 1,389.8 g

M_f = 1,388.0 g

$$\text{Moisture Content} = \frac{1{,}389.8 - 1{,}388.0}{1{,}389.8} \times 100 = 0.129\% = 0.13\%$$

9. Report

9.1 Report the moisture content to the nearest 0.01 percent.

9.2 Report the results using one or more of the following:

- Materials Testing System (MATS)
- WSDOT Forms 350-092 and 350-157
- Form approved in writing by the State Materials Engineer

Performance Exam Checklist

Moisture Content of Asphalt (HMA) by Oven Method
WSDOT FOP for AASHTO T 329

Participant Name _____ Exam Date _____

Procedure Element	**Yes**	**No**
1. The tester has a copy of the current procedure on hand?	❒	❒
2. All equipment is functioning according to the test procedure, and if required, has the current calibration/verification tags present?	❒	❒

Test for Moisture

1. Representative sample obtained; 1,000 g minimum?	❒	❒
2. Mass of sample determined to nearest 0.1 g?	❒	❒
3. Initial temperature recorded?	❒	❒
4. Sample placed in drying oven for a minimum of 90 minutes?	❒	❒
5. Sample dried to a constant weight at 325 ±25° F?	❒	❒
6. Samples checked for additional loss?	❒	❒
7. Sample and container cooled to approximately the initial temperature before mass determined?	❒	❒
8. Calculation of moisture content performed correctly?	❒	❒

% Moisture as percent of Wet Mass

$$\frac{M_i - M_f}{M_i} \times 100$$

First Attempt: Pass ❒ Fail ❒ Second Attempt: Pass ❒ Fail ❒

Signature of Examiner _____

Comments:

WSDOT FOP for AASHTO T 335[1]

Determining the Percentage of Fracture in Coarse Aggregate

1. Scope

   1.1 This test method covers the determination of the percentage, by mass, of a coarse aggregate sample that consists of fractured particles meeting specified requirements.

   1.2 This standard may involve hazardous materials, operations, and equipment. This standard does not purport to address all of the safety problems associated with its use. It is the responsibility of the user of this standard to establish appropriate safety and health practices and determine the applicability of regulatory limitations prior to use.

   1.3 The text of the standard reference notes provide explanatory material. These notes (excluding those in tables and figures) shall not be considered as requirements of the standard.

   1.4 Method 1 will be used by WSDOT for determining the fracture of aggregate as required by the *Standard Specifications*.

2. Referenced Documents

   2.1 AASHTO Standards

   M 92 – Wire-Cloth Sieves for Testing Purposes

   M 231 – Weighing Devices Used in the Testing of Materials

   2.2 WSDOT Standards

   T 2 – FOP for AASHTO Sampling of Aggregates

   T 27/11 – FOP for WAQTC/AASHTO Sieve Analysis of Fine and Coarse Aggregates

   T 248 – FOP for AASHTO Reducing Samples of Aggregate to Testing Size

   T 255 – FOP for AASHTO Total Evaporable Moisture Content of Aggregate by Drying

3. Summary of Test Method

   3.1 A sample of aggregate is separated using the designated size of screen conforming to the specification controlling the determination of coarse and fine aggregate. The coarse aggregate particles are visually evaluated to determine their conformance to the defined fracture. The percentage of conforming particles, by mass, is determined for comparison to standard specifications.

[1]This FOP is based on AASHTO T 335-09 and has been modified per WSDOT standards. To view the redline modifications, contact the WSDOT Quality Systems Manager at 360-709-5412.

4. Apparatus

4.1 Balance – Shall have sufficient capacity, be readable to 0.1 percent of the sample mass, or better, and conform to the requirements of M 231 for general-purpose balance required for the principle sample mass being tested.

4.2 Sieves – Meeting the requirements of M 92.

4.3 Splitter – Meeting the requirements of T 248.

5. Terminology

5.1 Fractured Face – An angular, rough, or broken surface of an aggregate particle created by crushing, or by other means. A face is considered a "fractured face" whenever one-half or more of the projected area, when viewed normal to that face, is fractured with sharp and well-defined edges (this excludes small nicks).

5.2 Fractured Particle – A particle of aggregate having at least the minimum number of fractured faces specified.

6. Sampling

Sample the aggregate in accordance with WSDOT FOP for AASHTO T 2 and reduce the sample in accordance with WSDOT FOP for AASHTO T 248, to the sample sizes shown in Table 2 of WSDOT FOP for AASHTO T 27/11.

7. Sample Preparation

7.1 Where the specifications list only a total fracture percentage, the sample shall be prepared in accordance with Method 1.

7.2 Method 1 – Combined Fracture Determination

7.2.1 Dry the sample sufficiently to obtain a clean separation of fine and coarse material in the sieving operation. Sieve the sample in accordance with WSDOT FOP for WAQTC/AASHTO T 27/11 over the No. 4 (4.75 mm) sieve.

Note 1: Where necessary, wash the sample over the sieve or sieves designated for the determination of fractured particles to remove any remaining fine material and dry in accordance with WSDOT FOP for AASHTO T 255.

7.2.2 Reduce the sample using a splitter in accordance with WSDOT FOP for AASHTO T 248 to the appropriate size for test.

Nominal Maximum Particle Size	Minimum Sample Mass Retained No. 4 (4.75 mm) Sieve
1½ in (37.5 mm)	6 lb (2500 g)
1 in (25 mm)	3.5 lb (1500 g)
¾ in (19.0 mm)	2.5 lb (1000 g)
⅝ in (16.0 mm)	2.0 lb (800 g)
½ in (12.5 mm)	1.5 lb (700 g)
⅜ in (9.5 mm)	0.9 lb (400 g)
No. 4 (4.75 mm)	0.4 lb (200 g)

*For aggregate, the nominal maximum size (NMS) is the largest standard sieve opening listed in the applicable specification, upon which any material is permitted to be retained. For concrete aggregate, NMS is the smallest standard sieve opening through which the entire amount of aggregate is permitted to pass.

Note 2: For an aggregate specification having a generally unrestrictive gradation (i.e., wide range of permissible upper sizes), where the source consistently fully passes a screen substantially smaller than the maximum specified size, the nominal maximum size, for the purpose of defining sampling and test specimen size requirements may be adjusted to the screen, found by experience to retain no more than 5 percent of the materials.

Note 3: If less than 5 percent of the total mass is retained on the No. 4 sieve, then a fracture determination will not be required for this material.

Sample Size (Method 1 – Combined Sieve Fracture)
Table 1

7.3 Method 2 – Individual Sieve Fracture Determination

WSDOT has deleted this section.

8. Procedure

8.1 Spread the sample on a clean flat surface large enough to permit careful inspection of each particle. To verify that a particle meets the fracture criteria, hold the aggregate particle so that the face is viewed directly (see Section 5.1).

8.2 To aid in making the fracture determination, separate the sample into three categories: (1) fractured particles meeting the above criteria, (2) particles not meeting specification criteria, and (3) questionable or borderline particles.

8.3 Determine the mass of particles in the fractured category, the mass of questionable particles, and the mass of the unfractured particles.

9. Calculation

9.1 Report the following information:

9.1.1 Calculate the mass percentage of fracture faces to the nearest 1 percent as follows:

$$P = ((F + Q/2) / (F + Q + N)) \times 100$$

where:

P = percent of fracture,
F = mass of fractured particles,
Q = mass of questionable or borderline particles, and
N = mass of unfractured particles

10. Report

Results shall be reported on standard forms approved for use by the agency. Report fracture to the nearest 1 percent.

Report the results using one or more of the following:

- Materials Testing System (MATS)
- DOT Forms 350-092 and 350-157
- Form approved in writing by the State Materials Engineer

11. Precision and Bias

See AASHTO T 335 for precision and bias statements.

Performance Exam Checklist

Determining the Percentage of Fracture In Coarse Aggregate
WSDOT FOP for AASHTO T 335

Participant Name _____ Exam Date _____

Procedure Element	**Yes**	**No**
1. The tester has a copy of the current procedure on hand?	❐	❐
2. All equipment is functioning according to the test procedure, and if required, has the current calibration/verification tags present?	❐	❐
3. Sample reduced to correct size, if needed?	❐	❐
4. Sample dried and cooled, if necessary?	❐	❐
5. Sample properly sieved through specified sieve(s)?	❐	❐
6. Particles separated into fractured, unfractured, and questionable categories?	❐	❐
7. Dry mass of each category determined to nearest 0.1 g?	❐	❐
8. Calculation performed correctly?	❐	❐

First Attempt: Pass ❐ Fail ❐ Second Attempt: Pass ❐ Fail ❐

Signature of Examiner _____

Comments:

WSDOT Test Method T 420

Test Method for Determining the Maturity of Compost (Solvita Test)

1. Scope

   The Solvita test is used for evaluating compost conditions.

2. Reference Documents

   AASHTO T-2

3. Terminology

   3.1 Definitions

   3.1.1 Compost shall be stable, mature, decomposed organic solid waste that is the result of the accelerated, aerobic biodegradation and stabilization under controlled conditions. The result is a uniform dark, soil-like appearance.

   3.1.2 Maturity of any compost sample may be judged using both color test results from paddle A and C. Paddle A is a styrene paddle with a gel component that measures the ammonia content of the compost. Paddle C is a styrene paddle with a gel component that measures the carbon dioxide emitted by the compost sample.

4. Summary of Test Method

   There are three easy steps involved in using the Solvita test kit to evaluate compost.

   4.1 Obtain and prepare the sample.

   4.2 Perform the test by placing both Solvita gel-paddles in the jar.

   4.2 Determine compost maturity using the color keys provided in the kit.

5. Significant and Use

   This test is used to determine the maturity of compost materials delivered in the field for use. This test measures the amount of ammonia and carbon dioxide in the compost.

6. Apparatus

   6.1 Solvita Kit containing the following:

   - a testing jar with lid
   - a carbon-dioxide paddle (marked with “C”) is purple
   - an ammonia paddle (marked with “A”) is yellow
   - color determination charts

   6.2 Shovel

   6.3 Small trowel or spoon

   6.4 A clean container large enough to combine the sample (approximately 5 gallons)

   6.5 A clean surface for mixing the sample such as a tarp or plywood

7. Sample Preparation

7.1 A composite sample (approximately 1 cubic foot) representing the lot to be tested should be sampled in accordance with AASHTO T-2 "Sampling from Stockpiles" or "Sampling from Transport Units".

7.2 Place the sample on a hard, clean, level surface where there will be neither loss of material nor the accidental addition of foreign material.

7.3 Particles such wood chips which are too large for the jar (over ½ inch) should be removed or screened from the compost sample.

7.4 Checking for optimal moisture is absolutely necessary for accurate maturity testing. Samples which are either too wet or too dry are not likely to produce accurate results. The moisture level should be judged by the squeeze test before proceeding. Perform the Squeeze test by squeezing a small handful of compost. When squeezed tightly the compost should feel wet without producing any free water. Compost that is too dry is dusty and will not clump with hard squeezing.

7.5 Mix the material thoroughly by turning the entire sample over three times. With the last turning, the entire sample shall be placed into a conical pile.

7.6 Using a small trowel, or other device, remove a portion from the center of the pile.

7.7 Fill the jar to the fill line and obtain proper density by sharply tapping the bottom of the jar on a counter. Fluffy or coarse composts should be compacted by pressing firmly into the jar.

7.8 If compost to be tested is in an optimal state, allow to air out for one hour.

7.9 If compost to be tested in not in an optimal state, then the following should be performed:

7.9.1 If the sample is hot, it should be covered and allowed to cool to room temperature before testing.

7.9.2 If the sample is too wet, it should be dried until it passes the squeeze test.

7.9.3 If the sample is too dry, add clean water until it passes the squeeze test. This sample shall be covered and allowed to stand at room temperature for 24 hours before performing the test.

8. Procedure

8.1 Open each package by tearing along the top strip and carefully remove the paddle by grasping the handle. *Do not touch the special gel surface, and don't allow compost to touch it.* Once the gelpack is opened, the test should be started within 30-minutes. The gel is not harmful to touch, but should be kept out of the mouth and eyes.

8.2 Insert the paddles into the sample at right angles to each other so that they can be seen through the viewing side. The edges of the paddles can be touching in the middle. Position the two paddles as indicated by the color squares on the jar label. Push the paddle tips into the compost to the bottom of the jar. Be careful not to jostle or tip the jar. Do not use a paddle if the gel is dried out or if the color is not the "Control Color" indicated on the respective color charts.

8.3 Screw the lid on tight, and keep the jar at room temperature 68-77º F (20-25º C) out of direct sunlight for 4 hours ± 10 minutes.

9. Evaluating the Results

9.1 Read the Solvita paddle colors 4 hours after the test is started. To read the colors, observe the paddles through the viewing side of the jar with the lid in place and illuminated from the front. Color rendition is best in moderate-intensity, fluorescent room light. Compare to the color charts provided with the kit, and record the color numbers that most closely match. Since the Solvita colors may continue to change after 4-hours, the proper interpretation for this test is based on a 4-hour ± 10 minute reading.

10. Reports

10.1 Report both the readings for the "A" paddle and the "C" paddle in the Inspector's Daily Report.

Performance Exam Checklist

Determining the Maturity of Compost (Solvita Test)
WSDOT Test Method T 420

Participant Name _____ Exam Date _____

Procedure Element	**Yes**	**No**
1. The tester has a copy of the current procedure on hand?	❐	❐
Sample Preparation		
1. Representative sample obtained per AASHTO T-2?	❐	❐
2. Sample placed on clean hard surface?	❐	❐
3. Check for optimal moisture?	❐	❐
4. Sampled mixed thoroughly?	❐	❐
5. Small sample taken from the center of the pile?	❐	❐
6. Sample filled in jar to the proper line and compacted?	❐	❐
7. Sample allowed to air out for 1 hour or equilibrate for 24 hours?	❐	❐
Sample Preprocedure		
1. Open the gel packs with out touching the gel sticks?	❐	❐
2. Is the test started within 30 minutes of opening the gel pack?	❐	❐
3. Are the paddles inserted in the compost at right angles to each other?	❐	❐
4. Are the paddles positioned to be seen through the viewing window?	❐	❐
5. Are the paddles pushed to the bottom of the jar?	❐	❐
6. Is the lid screwed on tight?	❐	❐
7. Is the jar at room temperature 68-77°F?	❐	❐
8. Is the test run for 4 hours ± 10 minutes?	❐	❐
9. Maturity determined per Manufacturers instructions?	❐	❐

First attempt: Pass ❐ Fail ❐ Second attempt: Pass ❐ Fail ❐

Signature of Examiner _____

Comments:

Washington State
Department of Transportation

WSDOT Standard Operating Procedure SOP 615

Determination of the % Compaction for Embankment & Untreated Surfacing Materials Using the Nuclear Moisture-Density Gauge

1. Scope

   This procedure covers the procedures for determining the in-place density, moisture content, gradation analysis, oversize correction, and determination of maximum density of compacted soils and untreated surfacing materials using a nuclear density device in the direct transmission mode.

2. References

   a. AASHTO T 99 for Method of Test for Moisture-Density Relations of Soils

   b. AASHTO T 180 for Method of Test for Moisture-Density Relations of Soils

   c. AASHTO T 224 for Correction for Coarse Particles in Soil Compaction Test

   d. T 255 – WSDOT FOP for AASHTO for Total Moisture Content of Aggregate by Drying

   e. T 272 – WSDOT FOP for AASHTO for Family of Curves — One Point Method

   f. T 310 – WSDOT FOP for AASHTO for In-Place Densities and Moisture Content of Soils and Soil-Aggregate by Nuclear Methods (Shallow Depth)

   g. WSDOT T 606 Method of Test for Compaction Control of Granular Materials

3. Test Location

   When selecting a test location, the tester shall visually select a site where the least compactive effort has been applied. Select a test location where the gauge will be at least 6 in (150 mm) away from any vertical mass. If closer than 24 in (600 mm) to a vertical mass, such as in a trench, follow gauge manufacturer correction procedures.

   When retesting is required due to a failing test; retest within a 10-foot radius of the original station and offset.

4. Nuclear Density Test

   Determine the dry density and moisture content of soils and untreated surfacing materials using the nuclear moisture-density gauge in accordance with WSDOT FOP for AASHTO T 310, and record in the Materials Testing System (MATS), WSDOT Form 350-074, Field Density Test, or other form approved in writing by the State Materials Engineer.

5. Oversize Determination

   a. AASHTO T 99 and WSDOT T 606

   A sample weighing a minimum of 4.08 kg (9 lbs) will be taken from beneath the gauge. Care shall be taken to select material that is truly representative of where the moisture density gauge determined the dry density and moisture content.

   There are two methods for determining the percentage of material retained on the No. 4 sieve:

   1. Method 1 – material that allows for the easy separation of fine and coarse aggregate.

      a. Dry the sample until no visible free moisture is present (material may still appear damp but will not be shiny).

      b. Determine and record the mass of the sample to the nearest 0.1 percent of the total mass or better.

      c. Shake the sample by hand over a verified No. 4 (4.75 mm) sieve taking care not to overload the sieve. Overloading for a No. 4 (4.75 mm) sieve is defined as; A retained mass of more than 800 g (1.8 lbs), on a 12 inch sieve, or 340 g, (0.75 lbs); on an 8 inch sieve after sieving is complete.

         Note 1: If the tester suspects a sieve will be overloaded the sample can be separated into smaller increments and recombined after sieving.

      d. Determine and record the mass of the material retained on the No. 4 (4.75 mm) sieve to the nearest 0.1 percent of the total mass or better and record.

   2. Method 2 – recommended for crushed surfacing materials, materials with high clay content, or other granular materials that are at or near the optimum moisture content for compaction.

      a. Determine and record the mass of the sample to the nearest 0.1 percent of the total mass or better and record.

      b. Shake sample by hand over a verified No. 4 (4.75 mm) sieve. Do not overload the sieve. (See Section 1a and Note 1 for overload definition and information on how to prevent overloading of a sieve)

      c. Shake material until no particles are observed passing the No. 4 (4.75 mm) sieve

      d. Rinse the sample with potable water

      e. Continue rinsing the material until it is visibly free of any coating or minus No. 4 material.

      f. Place the washed material, retained on the No. 4 (4.75 mm) sieve, into a tared container and blot until no visible free moisture is present on the material (material may still appear damp but will not appear shiny).

      g. Determine and record the mass of the material retained on the No. 4 (4.75 mm) sieve to the nearest 0.1 percent of the total mass or better.

b. AASHTO T 180

1. Follow either Method 1 or Method 2 in 5 a. with the following exception; sieve the material over a ¾ in (19.0 mm) sieve.
2. Do not overload the ¾" (19.0 mm) sieve. Overloading of a ¾" (19.0 mm) sieve is defined as: A retained mass of more than 3.2 kg (7.04 pounds) on a 12 inch sieve or 1.4 kg (3.08 pounds) on an 8 inch sieve after sieving is complete.

6. Calculations

a. Calculate the percent retained as follows:

$$\% \text{ retained (Pc)} = 100 \times \frac{\text{mass retained on sieve}}{\text{original mass}} \text{ (round to nearest percent)}$$

b. Calculate percent passing as follows:

% passing = 100 – % retained

c. Calculate the dry density as follows:

$$d = \frac{100}{100 + W} (m)$$

Where:

d = dry field density of total sample, pcf
m = total field wet density, pcf
W = moisture content of total field sample

d. Calculate the corrected theoretical maximum density as follows:

$$D_d = \frac{100 \times (D_f) \times (k)}{[(D_f) \times (P_c) + (k) \times (P_f)]}$$

Where:

D_d = corrected dry density of combined fine and oversized particles, expressed as lbs/ft^3.
D_f = dry density of fine particles expressed as lbs/ft^3, determined in lab.
P_c = percent of coarse particles, by weight.
P_f = percent of fine particles, by weight.
k = 62.4 x Bulk Specific Gravity.

Calculate in-place dry density to the nearest 0.1 lbs/ft^3.

Note 2: If the specific gravity of the coarse particles has been determined, use this value in the calculation for the "k" value. If the specific gravity is unknown then use 2.67. Either AASHTO T 85 or WSDOT T 606 Test 3 may be used to determine the specific gravity of the coarse particles.

e. Calculate the percent of compaction using the following equation:

$$\% \text{ compaction} = \frac{\text{Dry Density (lbs/ft}^3)}{\text{corrected theoretical maximum density (lbs/ft}^3)}$$

7. Density Curve Tables

   The Materials Testing System (MATS) Density Curve Tables is the WSDOT preferred method for determining the corrected theoretical maximum density.

   a. MATS calculates the corrected theoretical maximum density in accordance with AASHTO T 224 Section 4.2 and reports the results in the Density Curve Table.

   b. To determine the corrected theoretical maximum density using the Density Curves Table enter the Table at the line corresponding to the % passing or % retained (T 99 & T 180 requires percent retained, T 606 requires percent passing), read across to the column labeled Max this number is the Corrected Theoretical Maximum Density.

8. Report

   a. Report the results using one or more of the following:
      - Materials Testing System (MATS)
      - WSDOT Form 350-074 and 351-015
      - Form approved in writing by the State Materials Engineer

   b. Report the percent of compaction to the nearest whole number.

Performance Exam Checklist

WSDOT Standard Operating Procedure SOP 615
Determination of the % Compaction for Embankment &
Untreated Surfacing Materials Using the Nuclear Moisture-Density Gauge

Participant Name _____ Exam Date _____

Procedure Element	**Yes**	**No**
1. The tester has a copy of the current procedure on hand?	☐	☐
2. All equipment is functioning according to the test procedure, and if required, has the current calibration/verification tags present?	☐	☐

Gradation Analysis
3(A) Method 1

1. Sample Dried to a SSD condition (dried until no visible free moisture present) and mass recorded?	☐	☐
2. Sample allowed to cool sufficiently prior to sieving?	☐	☐
3. Sample was shaken by hand through the appropriate sieve for a sufficient period of time?	☐	☐
4. Recorded mass of material retained on the appropriate sieve?	☐	☐
5. Calculated and recorded percent of material retained and passing the appropriate sieve?	☐	☐

3(B) Method 2

1. Mass of sample determined prior to washing?	☐	☐
2. Material charged with water in suitable container and agitated to suspend fines?	☐	☐
3. Sample decanted over required sieve for a sufficient amount of time without overloading sieve?	☐	☐
4. Retained material dried to SSD condition and mass determined?	☐	☐
5. Recorded mass of material retained on appropriate sieve?	☐	☐
6. Calculated and recorded percent of material retained and passing appropriate sieve?	☐	☐

Correction for Coarse Particles

7. Appropriate MATS Density Curve Table used to determine the corrected theoretical maximum density, based on the percent passing or retained on the appropriate sieve?	☐	☐
8. All calculations performed correctly?	☐	☐

First Attempt: Pass ☐ Fail ☐ Second Attempt: Pass ☐ Fail ☐

Signature of Examiner _____

Comments:

Washington State
Department of Transportation

WSDOT Test Method T 712

Standard Method of Reducing Hot Mix Asphalt Paving Mixtures

Significance

Samples of bituminous paving mixes taken in accordance with FOP for WAQTC T 168 are composites and are large to increase the likelihood that they are representative of the product being tested. Materials sampled in the field need to be reduced to appropriate sizes for testing. It is extremely important that the procedure used to reduce the field sample not modify the material properties.

1. Scope

   This method covers the procedure for reducing samples of Hot Mixed Asphalt (HMA). The samples are to be acquired in accordance with FOP for WAQTC T 168. The sample is to be representative of the average of the HMA being produced.

2. Apparatus
   - Flat-bottom scoop.
   - Broom or brush.
   - Non-stick splitting surface such as metal, paper, canvas blanket or heat-resistant plastic.
   - Large spatulas, trowels, metal straight edge or 12 inch dry wall taping knife, sheet metal quartering splitter.
   - Mechanical Splitter – The splitter shall have four equal width chutes, which will discharge the material into four appropriate size containers. The splitter shall be designed with a receiving hopper that will hold the HMA field sample until a handle releases the material to fall through a divider and is distributed into four equal portions. The splitter shall be designed so that the HMA field sample will flow smoothly and freely through the divider without loss of materials (see Figures 1 to 3).
   - Oven – An oven of appropriate size, capable of maintaining a uniform temperature within the allowable tolerance for the grade of asphalt.
   - Miscellaneous equipment including trowel(s), spatula(s), hot plate, non-asbestos heat-resistant gloves or mittens, pans, buckets, cans.

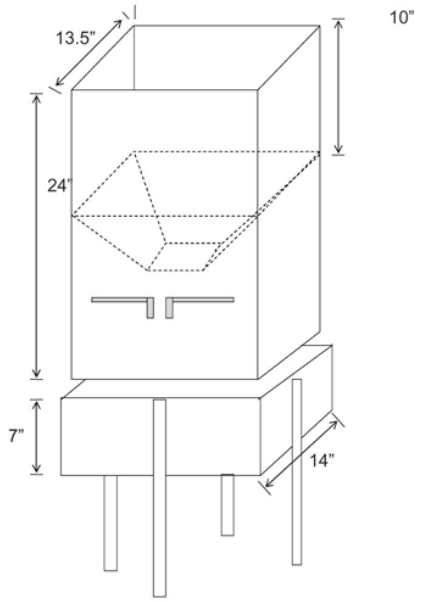

Mechanical Splitter
Figure 1

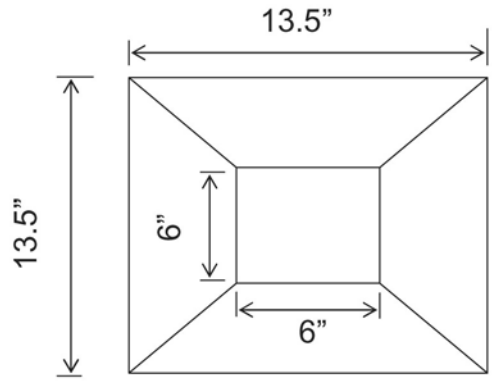

Plan View of Splitter
Figure 2

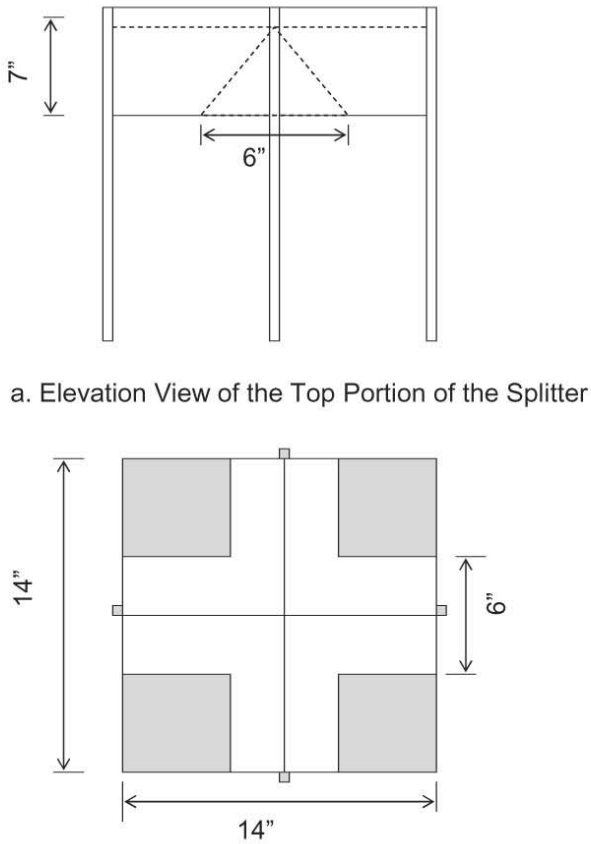

Elevation and Plan View of Bottom Portion of Splitter
Figure 3

3. Sample Preparation

   The sample must be warm enough to separate. If not, warm in an oven until it is sufficiently soft to mix and separate easily.

4. Procedure

   Initial Reduction of Field Sample

   a. Place the sample on a hard, clean, non-stick, level surface where there will be neither loss of material nor the accidental addition of foreign material. The surface may be covered with a canvas blanket, heavy paper or other suitable material. Remove the sample from the agency approved containers by dumping into a conical pile.

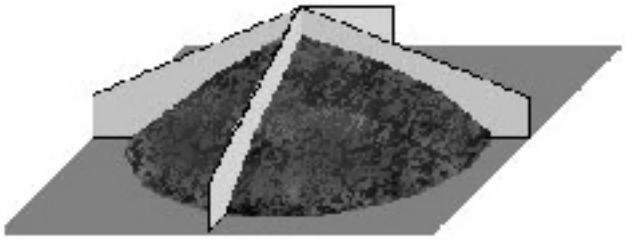

Figure 4

   b. Divide the sample into four approximately equal quarters with a spatula, trowel, flat metal plate, sheet metal quartering splitter, or mechanical splitter.

   c. For Acceptance sampling and testing only: With the quartering device in place remove all the material from each quarter. Retain opposite quarters for testing. The remaining two quarters should be placed in an agency approved containers for storage or shipment, identified as the "Retest".

      For Acceptance and Conformation sampling and testing: With the quartering device in place remove all the material from each quarter. Retain the material from one quarter for testing and the opposite quarter should be placed in an agency approved container if needed for additional testing, or discarded. The two remaining quarters should be placed in agency approved containers and shipped to the Headquarters Materials Laboratory for Conformation Testing.

      Note 1: When testing lean mixes or mixes with aggregate larger than ¾ inch (19 mm), sampling as described in Method B, with no remixing and no removal of a similar amount of material from the opposite quarter, is recommended at this point to obtain samples for each acceptance test.

   d. Pay particular attention that excessive amounts of materials is not left on the splitting surface or splitting equipment.

   e When the further reduction of the HMA is to be done, proceed according to step 2 of methods A, B, or C.

Method A – Reducing to Test Size

1. On a hard, clean, non-stick, level surface where there will be neither loss of material nor the accidental addition of foreign material. Remove the sample from the agency approved containers by dumping into a conical pile. The surface shall be covered with either a canvas blanket, heavy paper or other suitable material.
2. With the material on the canvas or paper, mix the sample thoroughly by turning the entire sample over the minimum amount of times to achieve a uniform distribution. Alternately lift each corner of the canvas or paper and pull it over the sample diagonally toward the opposite corner causing the material to be rolled. With the last turning, lift both opposite corners to form a conical pile.
3. Grasp the canvas or paper, roll the material into a loaf and flatten the top.

Figure 5

4. Pull the canvas or paper so approximately ¼ of the length of the loaf is off the edge of the counter. Allow this material to drop into a container to be saved. As an alternate, use a straight edge to slice off approximately ¼ of the length of the loaf and place in a container to be saved.

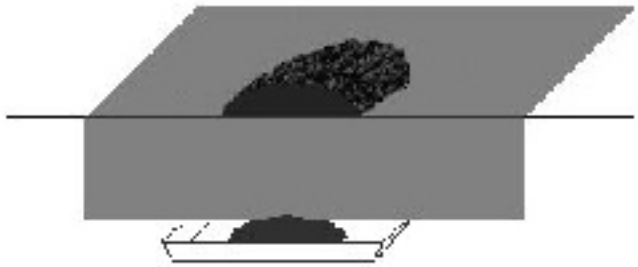

Figure 6

5. Pull additional material (loaf) off the edge of the counter and drop the appropriate size sample into a sample pan or container. As an alternate use a straightedge to slice off an appropriate size sample from the length of the loaf and place in a sample pan or container.
6. Repeat step 5 until the proper size sample has been acquired. Step 5 is to be repeated until all the samples for testing have been obtained.

   Note 3: When reducing the sample to test size it is advisable to take several small increments determining the mass each time until the proper minimum size is achieved. Unless, the sample size is below the minimum or exceeds the maximum test size use the sample as reduced for the test.

Method B – Reducing to Test Size

1. On a hard, clean, non-stick, level surface where there will be neither loss of material nor the accidental addition of foreign material. Remove the sample from the agency approved containers by dumping into a conical pile. The surface shall be covered with either a canvas blanket, heavy paper or other suitable material. (See Note 1.)
2. With the material on the canvas or paper, mix the sample thoroughly by turning the entire sample over the minimum amount of times to achieve a uniform distribution. Alternately lift each corner of the canvas or paper and pull it over the sample diagonally toward the opposite corner causing the material to be rolled. With the last turning, lift both opposite corners to form a conical pile.
3. Quarter the conical pile using a quartering device or straightedge.

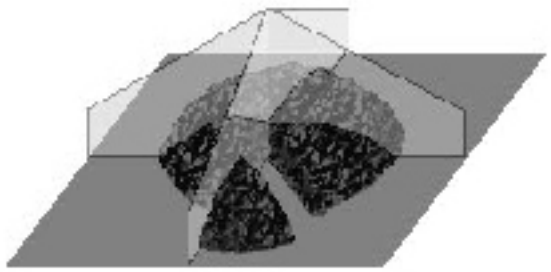

Figure 7

4. With the quartering device in place using a suitable straight edge slice through the quarter of the HMA from the apex of the quarter to the outer edge. Pull or drag the material from the quarter holding one edge of the straight edge in contact with the quartering device. Two straightedges may be used in lieu of the quartering device.
5. Slide or scoop the material into a sample pan. Repeat steps 4 and 5 removing a similar amount of material from the opposite quarter. Steps 4 and 5 are is to be repeated until all the samples for testing have been obtained.

   Note 4: When reducing the sample to test size it is advisable to take several small increments determining the mass each time until the proper minimum size is achieved. Unless, the sample size is below the minimum or exceeds the maximum test size use the sample as reduced for the test.

Method C – Reducing to Test Size

1. On a hard, clean, non-stick, level surface where there will be neither loss of material nor the accidental addition of foreign material. Remove the sample from the agency approved containers by dumping into a conical pile. The surface shall be covered with either a canvas blanket, heavy paper or other suitable material.
2. With the material on the canvas or paper, mix the sample thoroughly by turning the entire sample over the minimum amount of times to achieve a uniform distribution. Alternately lift each corner of the canvas or paper and pull it over the sample diagonally toward the opposite corner causing the material to be rolled. With the last turning, lift both opposite corners to form a conical pile.
3. Quarter the conical pile using a quartering device or straightedge.
4. Remove the opposite quarters saving the material for future use.
5. Repeat step 2 through 4 until the proper size sample has been achieved.
6. When additional test specimens are required, dump the removed material into a conical pile as in step 1 and repeat steps 2 through 5. This process may be repeated until the sample have has been reduced to testing size for all tests.
7. Sample Identification
    a. Each sample submitted for testing shall be accompanied by a transmittal letter completed in detail. Include the contract number, acceptance and mix design verification numbers, mix ID.
    b. Samples shall be submitted in standard sample boxes, secured to prevent contamination and spillage.
    c. Sample boxes shall have the following information inscribed with indelible-type marker: Contract number, acceptance and mix design verification numbers, mix ID.
    d. The exact disposition of each quarter of the original field sample shall be determined by the agency.

Performance Exam Checklist

Reducing Samples of Hot Mix Asphalt to Testing Size
WSDOT Test Method T 712

Participant Name _____ Exam Date _____

Procedure Element	**Yes**	**No**
1. The tester has a copy of the current procedure on hand?	☐	☐
2. Sample warmed if not sufficiently soft?	☐	☐
Method A		
3. Sample placed on paper on clean, hard, and level surface?	☐	☐
4. Sample mixed thoroughly?	☐	☐
5. Rolled into loaf and then flattened?	☐	☐
6. At least ¼ of loaf removed by slicing off or dropping off edge of counter?	☐	☐
7. Proper sample size quantity of material sliced off or dropped off edge of counter onto sample container?	☐	☐
Method B		
8. Sample thoroughly mixed and conical pile formed?	☐	☐
9. Divided into 4 equal portions with quartering device or straightedge?	☐	☐
10. Two straight edges or a splitting device and one straight edge used?	☐	☐
11. Was material sliced from apex to outer edge of the quarter?	☐	☐
12. Similar amount of material taken from opposite quarter?	☐	☐
13. Process continued until proper test size is obtained?	☐	☐
Method C		
13. Sample thoroughly mixed and conical pile formed?	☐	☐
14. Divided into 4 equal portions with quartering device or straightedge?	☐	☐
15. Two diagonally opposite quarters removed and saved?	☐	☐
16. Cleared spaces scraped clean?	☐	☐
17. Process repeated until proper test size is obtained?	☐	☐
18. Were opposite quarters and combined to make sample?	☐	☐

First Attempt: Pass ☐ Fail ☐ Second Attempt: Pass ☐ Fail ☐

Signature of Examiner _____

Comments:

Washington State
Department of Transportation

WSDOT Test Method T 716

Method of Random Sampling for Locations of Testing and Sampling Sites

A. Scope

1. This method outlines the procedure for selecting sampling and testing sites in accordance with accepted random sampling techniques. It is intended that all testing and sampling locations be selected in an unbiased manner based entirely on chance.
2. Testing and sampling locations and procedures are as important as testing. For test results or measurements to be meaningful, it is necessary that the sampling locations be selected at random, typically by use of a table of random numbers. Other techniques yielding a system of randomly selected locations are also acceptable.

B. Summary of Method for Selecting Random Test Location

- Method A – Determining a Random Location for Hot Mixture Asphalt (HMA) Density Tests
- Method B – Determining Random Test Location for Sampling HMA Mix, Aggregates, and Miscellaneous Materials
- Method C – Determining Random Test Location for Portland Cement Concrete
- Appendix A – Hot Mix Asphalt Density Test Locations for Irregular Paving Areas

C. Procedure for Determining Random Test/Sampling Location

Method A – Selection of Random Location for HMA Density

1. Stationing

This method outlines the procedure for determining the random location of HMA Density testing sites using stationing.

Calculate the linear foot distance for tons specified per sublot (i.e. 80 or 100 ton sublots).

Equations:

$$Sublot\ length\ (ft) = \frac{Sublot\ quantity\ (\ tons)}{\frac{(width\ (ft)\ x\ depth\ (\ ft)\ x\ 2.05\ tons)}{27}}$$

a. Use a random number generator (i.e. calculator, computer) or a random number determined by a stopwatch (See Note 1) to enter Table 1. Use the corresponding X value to determine the test station. A new X value is required for every test.

Note 1: To use the stopwatch method, randomly start and stop the stopwatch 10 or more times, then use the decimal part of the seconds as your entry point.

b. Determine the test station as follows:

Test Station = (sublot length × "X" multiplier) + beginning station of paving (round to the nearest foot)

c. Use a random number generator (i.e. calculator, computer) or a random number determined by a stopwatch (See Note 1) to enter Table 2. Use the corresponding "Y" multiplier to determine the offset. A new "Y" multiplier is required for every test.

d. Determine the offset as follows:

Offset = (width of pavement × "Y" multiplier) (round to the nearest 0.1 ft)

Offset may be figured from the right or left edge of pavement. Tester shall indicate in MATS or approved density form from which edge the offset is measured.

e. If a tester must move a testing location due to an obstruction of other interference, a new random number for the offset and station shall be picked and the location recalculate. Document the new location and the reason the testing location was changed.

Example for a 100 ton sublot:

Given:

Paving width = 12 ft
Paving depth = 0.15 ft
Beginning Station = 10 + 00
Offset from left edge of pavement

Calculations:

$$Sublot\ length = \frac{100}{\frac{12 \times 0.15 \times 2.05}{27}} = 731.7\ lf$$

Ending Station = (Beginning Station + Sublot length) = (1000 + 731.7) = 17 + 32
Random generated number = X=25, Y=10
Beginning Test Location
Enter Table 1 at (25): "X" multiplier = 0.080
Enter Table 2 at (10): "Y" multiplier 0.167
Testing Station = (732 × 0.080) + 1000 =1058.5 = 10 + 59 (round to the nearest ft)
Offset = (12 × 0.167) = 2.00 = 2.0 ft left of pavement edge (round to the nearest 0.1 ft)

2. Milepost

   This method outlines the procedure for determining the random location of HMA Density testing sites using mileposts.

   a. Convert to tons per mile using the roadway area based on the roadway width and depth.

      Equations:

$$Sublot\ length\ (mile) = \frac{sublot\ quantity\ (\ tons)}{\left(\frac{width\ (\ ft)\ \times\ depth\ (\ ft) \times\ 2.05\ \frac{tons}{cy}}{27}\right) \times\ 5{,}280\ lf}$$

Round sublot length to the nearest thousandth (0.001) of a mile

Calculate the location of the test site and offset using the same method as described in Method A Stationing except use tons per mile instead of the tons per *lf*.

Test site = (sublot length × "X" multiplier) + beginning milepost

Offset = (width × "Y" multiplier)

Example for 100-ton sublot:

Given:
Paving width = 12 ft
Paving depth = 0.15 ft
Beginning Milepost (MP) = 1.00
Offset determined from right side of pavement

Calculations:

$$Sublot\ length\ =\ \frac{100}{\left(\frac{12\ \times 0.15 \times 2.05}{27}\right) \times\ 5{,}280} = 0.138$$

Ending MP = (Beginning MP + Sublot length) = (1.00 + 0.138) = 1.138
Random generated number = X=25, Y=90
Beginning Test Location
Enter Table 1 at (25): "X" multiplier = 0.080
Enter Table 2 at (90): "Y" multiplier = 0.060
Testing MP = (.138 × 0.080) + 1.00 = 1.011
Offset = (12 × 0.060) = 0.72 = 0.7<u>2</u> ft right of edge of pavement

Random #	X	Random #	X	Random #	X	Random #	X
1	0.794	26	0.526	51	0.304	76	0.617
2	0.500	27	0.519	52	0.167	77	0.584
3	0.393	28	0.446	53	0.308	78	0.591
4	0.427	29	0.219	54	0.570	79	0.563
5	0.165	30	0.780	55	0.322	80	0.482
6	0.821	31	0.574	56	0.491	81	0.499
7	0.562	32	0.730	57	0.349	82	0.227
8	0.284	33	0.435	58	0.681	83	0.476
9	0.704	34	0.338	59	0.858	84	0.258
10	0.988	35	0.515	60	0.716	85	0.227
11	0.692	36	0.751	61	0.521	86	0.364
12	0.491	37	0.063	62	0.568	87	0.186
13	0.769	38	0.269	63	0.168	88	0.791
14	0.675	39	0.357	64	0.460	89	0.985
15	0.205	40	0.555	65	0.708	90	0.562
16	0.187	41	0.837	66	0.453	91	0.753
17	0.238	42	0.699	67	0.778	92	0.097
18	0.400	43	0.456	68	0.484	93	0.723
19	0.263	44	0.730	69	0.609	94	0.214
20	0.545	45	0.314	70	0.949	95	0.215
21	0.230	46	0.179	71	0.575	96	0.428
22	0.700	47	0.152	72	0.263	97	0.647
23	0.616	48	0.334	73	0.192	98	0.794
24	0.179	49	0.284	74	0.845	99	0.154
25	0.080	50	0.819	75	0.095	100	0.964

Random Number - X
Table 1

Random #	Y	Random #	Y	Random #	Y	Random #	Y
1	0.823	26	0.755	51	0.068	76	0.298
2	0.646	27	0.922	52	0.709	77	0.217
3	0.928	28	0.299	53	0.742	78	0.662
4	0.247	29	0.855	54	0.704	79	0.709
5	0.742	30	0.270	55	0.230	80	0.634
6	0.666	31	0.875	56	0.584	81	0.245
7	0.624	32	0.076	57	0.663	82	0.672
8	0.553	33	0.393	58	0.727	83	0.620
9	0.311	34	0.366	59	0.559	84	0.580
10	0.167	35	0.860	60	0.907	85	0.452
11	0.198	36	0.605	61	0.311	86	0.141
12	0.814	37	0.239	62	0.665	87	0.937
13	0.876	38	0.349	63	0.134	88	0.228
14	0.356	39	0.201	64	0.241	89	0.225
15	0.898	40	0.650	65	0.384	90	0.060
16	0.141	41	0.822	66	0.268	91	0.820
17	0.913	42	0.157	67	0.629	92	0.883
18	0.384	43	0.799	68	0.227	93	0.528
19	0.815	44	0.340	69	0.187	94	0.749
20	0.761	45	0.479	70	0.167	95	0.441
21	0.370	46	0.925	71	0.127	96	0.221
22	0.156	47	0.494	72	0.288	97	0.863
23	0.397	48	0.833	73	0.436	98	0.082
24	0.416	49	0.128	74	0.913	99	0.467
25	0.705	50	0.294	75	0.665	100	0.828

Random Number - Y
Table 2

Method B – Hot Mix Asphalt (HMA) Pavement Mixture or Aggregates

1. Determine the sublot increment of the material.
2. Use a random number generator (i.e. calculator, computer, etc) or a random number determined by a stopwatch (See Note 1) to enter Table 1. Use the corresponding X multiplier to determine the offset.
3. A new X multiplier is required for every sublot.
4. Random sample tonnage may be adjusted per sublot to accommodate field testing. Adjustments to random sample tonnage must be documented.
5. Calculate the location of the sampling site as follows:

Equations:

First Sample Site = Sublot increment × "X" multiplier (Table 1)
Subsequent Sites= (sublot increment + (Sublot increment × "X" multiplier)

Aggregate Sample Example:

Given: Crushed Surfacing Base Coarse
Random sample frequency per 9-3.7 =1 per 2,000 tons.
Calculate the location of the first random sample site as follows:

The computer-generated number is 22.
Sublot Increment (Frequency of sampling) = 2,000 tons
Enter Table 1 at (22) "X" = 0.700
Sampling Site = 2000 × 0.700= 1400 tons

Calculate subsequent sample sites as follows:

The computer-generated number is (53).
Sublot Increment (Frequency of sampling) = 2,000 tons
Enter Table 1at 53 "X" = 0.308
Sampling Site = 2000 + (2000 × 0.308) = 2616 tons

Method C Portland Cement (PCC)

1. Determine subsequent random sampling locations as follows:
   a. Example for less than 10 truckloads remaining after reducing frequency:
      (1) Determine amount of pour remaining this will be the sublot increment
      (2) Use a random number generator (i.e. calculator, computer) or a random number determined by a stopwatch (See Note 1) to enter Table 1. Use the corresponding X multiplier to determine the test station. A new X multiplier is required for every test.
      (3) Determine the sample location as follows:

      Sampling Location = Concrete remaining × "X" multiplier (Table 2)

      Given:

      Total cubic yards (cy) of concrete placement = 80 cy
      Truckload = 10 cy
      Given: First two trucks are in specification = 20 cy
      Remaining cubic yards = 80 cy-20 cy= 60 cy< 100 cy
      Sublot increment =60 cy
      Random number =30
      Sampling Location = 60 cy × 0.780 = 46.8= 47 cy or 7th truck

   b. Example for greater than 10 truckloads remaining after reducing frequency
      (1) Determine the sublot increment for the random test sample.

      Sublot increment = cubic yards per truck × 10 truckloads

      Given:

      Pour = 130 cy
      Each truck carries 8 cy of concrete
      First two trucks are in specification = 16 cy
      Remaining cubic yards = 130 - 16 = 114 > 80 cy
      Sublot Increment = 8 cy × 10 trucks = 80 cy

      Use a random number generator (i.e. calculator, computer) or a random number determined by a stopwatch (See Note 1) to enter Table 1. Use the corresponding X value to determine the test station. A new X value is required for every test.

      Determine the sample location as follows:

      Sampling Location = Sublot increment × "X" multiplier (Table 1)

      Example:

      Random number = 15 "X"= 0.205
      Sample location = 80 cy × 0.205 = 16.4
      Determine where the first sample will be taken:
      Testing location = (accumulated cy of last truck sampled) + sample yardage

Example:

First Sample Location:

Accumulated cy successive trucks = 8 × 2 =16
Sample location = 16 cy + 16.4 cy = 32.4 cy
Truck load = 32/8 = 4
Sampling = first half of 4th truck

Determine subsequent sampling locations as follows:

Sublot increment = total pour – (initial loads tested to get two consecutive loads in specification)-(first sublot increment)
Sublot increment = 130 cy – (16 cy) – (80 cy) = 34 cy
Random number = 70 "X" = 0.167
Testing location = (initial loads tested to get two consecutive loads in specification) + (first sublot increment) +(testing location within the second sublot)
Testing location = (16 cy)+(80 cy)+(0.167 × 34 cy)
Testing location = 101.67 cy or 101.67/8 cy per truck = 12.7 = 13th truck

3. Report
   a. Report the random number used to determine station and offset
   b. Document any changes in station or offset of random testing location
   c. Use one of the following to report random location information:
      - Materials Testing System (MATS)
      - Form approved in writing by the State Materials Engineer

Appendix A

Hot Mix Asphalt Density Test Locations for Irregular Paving Areas

A. Track tonnage placed in the irregular shaped area until specified tons are placed, note the stationing.

B. Measure back to the beginning of the paving or end of the previous lot to obtain the length (this is also your beginning station).

C. Use a computer-generated random number or a random number determined by a stopwatch (See Note 1) to enter Table 1. Use the corresponding X value to determine the test station. A new X value is required for every test.

D. Multiply the length by the "X" value and add to the beginning station to locate your testing site.

E. Use a computer-generated random number or a random number determined by a stopwatch (See Note 1) to enter Table 2. Use the corresponding Y value to determine the offset. A new Y value is required for every test.

F. Measure the width at the testing station and multiply the width time the "Y" value to determine the offset of the testing site.

G. Make a sketch of the area to document the test location in the event a retest is required.

Example:

Paving began at Station 101 + 00.

The tester determined Station 105 + 75 was the end of the 100 ton lot.

The width of the pavement began at 0 and transitioned to 12.

Testing Station

Sta 105 + 75 – Sta 101 + 00 = 475 ft
Random number = 45, "X" value = 0.314
475 ft × 0.314= 149.15= 149 Testing station = 10100 + 149 =102 + 49

Testing Offset

Measure width at station 102 + 49
Width = 3.76
Random # 65 "Y" value = 0.384
Offset = 3.76 × 0.384 = 1.44 = 1.4 ft from right edge

Washington State
Department of Transportation

WSDOT SOP 723

Standard Operating Procedure for Submitting Hot Mix Asphalt (HMA) Mix Designs for Verification

1. Scope

   1.1 This standard covers the procedural steps required for submitting a HMA mix design for verification to the Bituminous Materials Section of the State Materials Laboratory.

   1.2 The values stated in English units are to be regarded as the standard.

   1.3 This standard does not purport to address all of the safety concerns, if any, associated with its use. It is the responsibility of the user of this standard to establish appropriate safety and health practices and determine the applicability of regulatory limitations prior to use.

2. Approval of Material

   2.1 Approvals of the material for HMA are required prior to use per *Standard Specifications* Section 1-06.1.

   2.2 A HMA mix design is required for each contract.

3. Referenced Documents

   3.1 WSDOT Standards

   - WSDOT FOP for AASHTO T 2, Standard Practice for Sampling Aggregates
   - WSDOT Test Method T 724, Method of Preparation of Aggregate for Hot Mix Asphalt (HMA) Mix Designs
   - WSDOT *Standard Specifications* M 41-10

4. Procedure

   4.1 The Contractor shall determine a design aggregate structure and asphalt binder content in accordance with WSDOT Standard Operating Procedure 732.

   4.2 Once the design aggregate structure and asphalt binder content have been determined, the Contractor shall submit the HMA mix design on WSDOT form 350-042 demonstrating that the design meets the requirements of *Standard Specifications* Section 9-03.8(2) and 9-03.8(6). For mix designs that contain > 20% RAP and any amount of RAS, the contractor shall include test results for asphalt content and gradation per GSP 5-04.2OPT8.GR5, along with a statement certifying the tonnage of the RAP and/or RAS stockpile(s) to be used in the HMA production.

   4.3 For mix designs that contain ≤ 20% RAP and no amount of RAS, the Contractor shall obtain representative samples of aggregate per WSDOT FOP for AASHTO T 2 that will be used in the HMA production.

4.4 For mix designs that contain > 20% RAP and any amount of RAS, the contractor shall obtain representative samples of aggregate, RAP and/or RAS per WSDOT FOP for AASHTO T 2 that will be used in the HMA production. Additionally, the contractor will submit 100 grams each of recovered asphalt residue from the RAP and/or RAS that are to be used in the HMA production.

4.5 The Contractor shall submit representative samples of aggregate, RAP and RAS (if required), totaling 700 pounds proportioned to match the Contractor's proposal to the State Material's Laboratory for testing.

For example, if the Contractor's proposal consists of five stockpiles with the following blending ratio:

Material	Ratio
¾″ – #4	20%
½″ – #8	30%
#4 – 0	30%
RAP	15%
RAS	5%

Calculate the amount of aggregate needed from each stockpile in the following manner.

Material		Pounds of Aggregate Needed Per Stockpile
¾″ – #4	700 lbs x 0.20	140 pounds
½″ – #8	700 lbs x 0.30	210 pounds
#4 – 0	700 lbs x 0.30	210 pounds
RAP	700 lbs x 0.15	105 pounds
RAS	700 lbs x 0.05	35 pounds

5. Shipping Samples

5.1 Transport aggregate in bags or other containers so constructed as to preclude loss or contamination of any part of the sample, or damage to the contents from mishandling during shipment. The weight limit for each bag or container of aggregate is 30 pounds maximum.

5.2 Each aggregate bag or container shall be clearly marked or labeled with suitable identification including the contract number, aggregate source identification and size of stockpile material. Aggregate bags or containers submitted to the State Materials Laboratory shall be accompanied by a completed transmittal for each stockpile used in the HMA mix design and a completed copy of DOT Form 350-042.

Washington State
Department of Transportation

WSDOT Test Method T 724

Method of Preparation of Aggregate for HOT MIX ASPHALT (HMA) Mix Designs

1. Scope

   This method of test is intended for the processing and preparation of aggregate samples for use in HMA mix designs and Ignition Furnace calibration samples for Hot Mix Asphalt, asphalt treated base, or open graded products.

2. Apparatus

   a. Sieves — shall conform to the specifications of sieves for testing purposes.

   b. Mechanical sieve shaker — of sufficient size to separate the material to the specification sieves.

   c. Oven(s) — of appropriate size, capable of maintaining a uniform temperature of 325 ± 25° F (163 ± 14° C).

   d. Container — pans or containers of suitable size to dry and store the aggregate.

   e. Balance — capacity of at least 8 kg sensitive to 0.1 g and meeting the requirements of AASHTO M 231.

   f. Aggregate washer (optional).

3. Procedure

   a. Representative sample(s) of the production aggregates shall be obtained.

   b. Dry the aggregate in an oven to a constant mass not to exceed 350º F.

      Note: When developing an Ignition Furnace Calibration Factor, samples from separate stockpiles can be combined in the same percentages as the job mix formula prior to further processing. The combined sample should be at least four times the amount required for a single test (i.e., IFCF determination).

   c. Sieve the aggregate over all the specification sieves designated for class of mix being tested. Place the material retained on each sieve in separate containers.

   d. Wash the separated aggregate samples, except the portion passing the No. 200 (0.075 mm) sieve, in accordance with WSDOT FOP for WAQTC/AASHTO T 27/11.

   e. Dry the washed, aggregate samples to constant mass.

   f. Recombine the aggregate samples to match the grading of the job mix formula. The sample size as determined by the specific test procedure performed.

Performance Exam Checklist

Method of Preparation of Aggregate for Hot Mix Asphalt (HMA) Mix Designs
WSDOT Test Method T 724

Participant Name _____ Exam Date _____

Procedure Element	Yes	No
1. The tester has a copy of the current procedure on hand?	❒	❒
2. All equipment is functioning according to the test procedure, and if required, has the current calibration/verification tags present?	❒	❒
3. Representative sample(s) of the production aggregates obtained.	❒	❒
4. Aggregate dried in an oven to a constant mass?	❒	❒
5. Aggregate sieved over designated sieves for class of mix being tested?	❒	❒
6. Material retained on each sieve placed in separate containers?	❒	❒
7. Separated aggregates washed, except the portion passing the No. 200 (0.075mm) sieve, in accordance with FOP for AASHTO T27/T11?	❒	❒
8. Washed aggregate samples dried in an oven to a constant mass?	❒	❒
9. Aggregate recombined to match the grading of the job mix formula?	❒	❒
10. Sample size determined by the specific test procedure to be performed?	❒	❒

First attempt: Pass ❒ Fail ❒ Second attempt: Pass ❒ Fail ❒

Signature of Examiner _____

Comments:

Washington State
Department of Transportation

WSDOT Test Method T 726

Mixing Procedure for Hot Mix Asphalt (HMA)

1. Scope

   This is the mixing procedure for laboratory prepared samples of asphalt concrete, asphalt treated base, or open graded asphalt products mixtures. The aggregates used in this procedure are prepared by means of WSDOT Test Method No. 724.

2. Equipment

   a. Mixing Spoon — A large metal spoon capable of handling hot mix asphalt.

   b. Scoop — A metal scoop of ample size, capable of handling hot mix asphalt.

   c. Curing Pan — A heat resistant pan of ample size to handle samples of hot mix sphalt.

   d. Mixing Bowl — A heat resistant bowl for hand mixing or mechanical mixer of ample size to handle samples of hot mix asphalt.

   e. Mechanical Mixer — A mechanical mixer with heat source may be used in lieu of hand mixing.

   f. Balance — The balance shall have capacity of 11 kg and sensitive to 0.1 gm.

   g. Oven — An oven of appropriate size, capable of maintaining a uniform temperature within the allowable tolerance for the grade of asphalt binder.

   h. Thermometer- Armored glass or dial-type thermometric devices with metal stems or probe for determining the temperature of aggregates, binder, and HMA between 18θ and 418θ ° F (10θ and 232θ° C).

3. Procedure

   a. Heat asphalt binder, aggregate sample(s), and mixing bowl(s) in a preheated oven to the mixing temperature specified by the supplier of asphalt binder or as indicated on mix design report.

   b. Stir the asphalt binder and verify that the temperature of asphalt binder is within the temperature recommended by the asphalt supplier or as indicated on mix design verification report.

   c. After the materials are heated place mixing bowl on balance and tare.

   d. Place heated aggregate sample in the tared mixing bowl and determine the mass of the aggregate sample. Use this mass to calculate the mass of asphalt binder required to produce a sample of HMA at the Job Mix Formula (JMF) asphalt binder content (See calculation below).

   e. Form a crater in the aggregate sample and weigh in asphalt binder as determined above.

      Note: If mixing bowl is not buttered an additional sample should be prepared, mixed and then discarded to properly coat the mixing bowl with asphalt and fines.

f. Mix aggregate sample and asphalt binder for approximately 3 minutes or until aggregate sample is completely coated with asphalt binder. This can be accomplished by hand mixing or by mechanical mixer.

   Note*:* Reheating of the HMA for a short period of time may be necessary to assure complete coating of the aggregate.

g. Transfer mixed HMA to the proper container for other testing as required.

h. Repeat steps A thru H for each sample to be mixed.

   Calculation for Mass of Asphalt Binder:

$$\text{Designated Mass of Asphalt Binder} = \frac{(\mathrm{A})\ \mathrm{D}}{(1 - \mathrm{A})}$$

   Where:

   A = Designated asphalt binder content (expressed in decimal)
   D = Dry aggregate mass (from step 3(c))

   Example:

   The designated asphalt binder content is 5.3%, and dry aggregate mass is 1567.1 grams.

$$\text{Designated Mass of Asphalt Binder} = \frac{(0.053)\ 1567.1}{(1 - 0.053)} = \frac{83.1}{0.947} = 87.7\text{g}$$

Performance Exam Checklist

Mixing Procedure for Hot Mix Asphalt (HMA)
WSDOT Test Method T 726

Participant Name _____ Exam Date _____

Procedure Element	Yes	No
1. The tester has a copy of the current procedure on hand?	❐	❐
2. All equipment is functioning according to the test procedure, and if required, has the current calibration/verification tags present?	❐	❐
3. Aggregate samples prepared as per WSDOT Test Method T 724?	❐	❐
4. Mixing bowl(s), aggregate and asphalt binder heated to appropriate mixing temperature?	❐	❐
5. Asphalt binder stirred and temperature confirmed by thermometer?	❐	❐
6. Heated mixing bowl placed on scale and scale then tared?	❐	❐
7. Heated aggregate sample placed in bowl and scale then tared?	❐	❐
8. Crater formed into center aggregate, weigh in asphalt binder in accordance with mix design information?	❐	❐
9. Mix aggregate and asphalt for approximately 3 minutes or until aggregate is completely coated?	❐	❐
10. When mixing is complete carefully scrape off mixing apparatus, tools and bowl is dumped into correctly marked pan?	❐	❐
11. Repeat steps 4 - 8 for each sample to be mixed?	❐	❐
12. All calculations performed correctly?	❐	❐

First attempt: Pass ❐ Fail ❐ Second attempt: Pass ❐ Fail ❐

Signature of Examiner _____

Comments:

Washington State
Department of Transportation

WSDOT SOP 728

Method for Determining the Ignition Furnace Calibration Factor (IFCF) for Hot Mix Asphalt (HMA)

1. Scope

   This method may be affected by the type of aggregate in the mixture. Accordingly, to optimize accuracy, a calibration factor will be established with the testing of a set of HMA calibration samples for each mix type. This procedure must be performed before any acceptance testing is completed. The calibration process should be repeated each time there is a significant change in the mix ingredients or design.

2. Apparatus

   a. Equipment as described to perform FOP for AASHTO T 308 Method A.

3. Sample Preparation

   a. Prepare a minimum of two HMA calibration samples in accordance with WSDOT Test Method No. 724 and No. 726 or use previously prepared HMA calibration samples.

   b. If the HMA calibration samples are not sufficiently soft to separate for testing, carefully heat the samples in an oven until sufficiently soft. Dry sample to a constant mass, not to exceed 325 ± 25°F (163 ± 14°C). Do not heat the sample basket assemblies.

4. Procedure

   a. Test two HMA calibration samples in accordance with WSDOT FOP for AASHTO T 308.

   b. Determine the measured asphalt binder contents for each sample from the printed tickets.

   c. If the difference between the measured asphalt binder contents of the two samples exceeds 0.15 percent, test two additional HMA calibration samples. From the four tests, discard the high and low results and determine the IFCF from the two remaining results. Calculate the difference between the actual and measured asphalt binder contents for each sample. The IFCF is the average of the differences expressed in percent by mass of the HMA.

Washington State
Department of Transportation

WSDOT SOP 729

Determination of the Moving Average of Theoretical Maximum Density (TMD) for HMA

1. Scope

   This procedure covers the process for obtaining the moving average of the Theoretical Maximum Density (TMD) for calculating pavement compaction in accordance with WSDOT FOP for WAQTC TM 8. The TMD is to be determined in accordance with WSDOT FOP for AASHTO T 209.

2. Procedure

   The procedure for determining the moving average of TMD is as follows:

   a. On the initial day of production of a new Job Mix Formula, two determinations shall be made to establish an initial average value. The samples shall not be from the same truck. Average the two TMDs and report the result to the Moisture Density Gauge Operator. The TMD value from the Mix Design Verification Report shall not be included in the average. If the two TMDs determined on the initial day do not agree within 1.5 lb/ft^3 (24 kg/m^3), a third determination shall be made. The initial average density shall be based on the two closest results.

   b. A TMD test shall be taken with each mix sample. The moving average is defined as the average of the last five TMD values for the HMA being placed. Until five TMD values have been determined, the moving average will consist of all previous TMD values plus the first TMD value for the current production shift. When five TMD values have been determined, the moving average for each shift will include the last four TMD values plus the first TMD value for the current paving shift. This new moving average value will be used for the entire paving shift.

   c. Each TMD shall be compared with the previously computed moving average. If a TMD deviates from the moving average by more than 1.5 lb/ft^3 (± 24 kg/m3), a second test shall be made on another portion of the same sample. If the second TMD agrees within 1.5 lb/ft^3 (± 24 kg/m^3) of the moving average then the first TMD will be discarded and the second TMD will be included in the moving average. If the second TMD is not within 1.5 lb/ft^3 (± 24 kg/m^3) of the moving average but is within 1.5 lb/ft^3 (± 24 kg/m^3) of the first TMD, a new moving average will be initiated, discarding all previous results. The new moving average will be sent to the Moisture Density Gauge operator and will replace the current moving average.

   d. A moving average will be sent to the Moisture Density Gauge operator once per production shift, unless two tests during a shift are not within 1.5 lb/ft^3 (± 24 kg/m^3), then a new moving average will be calculated in accordance with "c" of this procedure and sent to the Moisture Density Gauge operator as the new moving average for the shift. The Moisture Density Gauge Operator will continue to use the previous moving average until a new moving average is available.

3. Report

   The gauge operator will record the average TMD received from the tester at the HMA plant on WSDOT Form 350-092 and 350-157 or in the MATS database. The average TMD will be used in WSDOT FOP for WAQTC TM 8 to calculate the percent of compaction for statistical evaluation.

Washington State
Department of Transportation

WSDOT SOP 730

Correlation of Nuclear Gauge Densities With Hot Mix Asphalt (HMA) Cores

1. When evaluating HMA compaction:

   1.1 A gauge correlation is required:

   a. For each combination of gauge and HMA Mix Design (initial JMF).

   b. When gauge mode changes (i.e., direct transmission to thin layer).

   c. When wearing course lift thickness changes per Note 1.

   d. When a gauge is recalibrated.

   Note 1: For density determined with the "Thin Layer Mode," a layer thickness change of greater than 0.08 feet requires a new correlation. For density determined with the "Direct Transmission Mode," a layer thickness change of greater than 0.15 feet requires a new gauge correlation.

   1.2 A gauge correlation is not required but may be considered by the Regional Materials Engineer when:

   a. Base material changes from the original correlation base (i.e., from a surfacing base to an asphalt base).

   b. The same gauge HMA Mix Design (Reference Mix Design) combination are used on a different contract within the same construction year.

   c. When JMF has been adjusted in accordance with *Standard Specifications* Section 9-03.8(7)A.

2. Gauge correlation is based on ten in-place HMA densities and ten cores taken at the same location as the in-place density.

   2.1 In-place HMA densities shall be determined in accordance with WSDOT FOP for WAQTC TM 8.

   2.2 Cores should be taken no later than the day following paving and before traffic has been allowed on roadway. Correlation cores are not required to be taken at record density locations. Therefore, a site outside the traveled way should be considered for worker safety, as long as the lift thickness matches that of the plan lift thickness of the record density locations.

   Note 2: If a core becomes damaged, it shall be eliminated from the average.

   Note 3: Cores may be taken sooner than the day after paving if the HMA is cooled to prevent damage during coring and removal of cores. Water, ice, or dry-ice may be used to cool the pavement. Another method of cooling that may be used is substitution of nitrogen gas or CO_2 for drilling fluids.

3. Obtain a pavement core from each of the test sites in accordance with WSDOT SOP 734. The core shall be taken in the nuclear gauge footprint.

   3.1 For "direct transmission mode," locate the core at least 1 in (25 mm) away from the edge of the drive pin hole.

   3.2 For "thin layer mode," locate the core in the approximate center of the nuclear gauge footprint. If the core thickness exceeds the plan pavement thickness by more than 0.04 feet, then the core shall be saw cut to the plan thickness prior to performing density testing. If a core thickness is less than the plan thickness by more than 0.04 feet, it shall be eliminated from the average.

4. Bulk Specific Gravity (G_{mb}) of core shall be determined in conformance with WSDOT FOP for AASHTO T 166 Bulk Specific Gravity of Compacted Hot Mix Asphalt (HMA) Using Saturated Surface-Dry Specimens.

   Calculate core density as follows, round to the nearest 0.1 pcf:

   $$\text{Core Density} = G_{mb} \times 62.245 \text{ pcf}$$

   Calculate gauge correlation factor as follows:

   $$\text{Density Ratio} = \frac{(\textit{core density})}{(\textit{nuclear gauge density})}$$

   Round Density Ratio to the nearest 0.001

   $$\text{Gauge correlation factor} = \frac{(\textit{Sum of ratios})}{(\textit{number of cores})}$$

5. Gauge Correlation Factor shall be determined to 0.001.

6. Report the Gauge Correlation Factor using MATS or DOT Form 350-112 EF.

Washington State
Department of Transportation

WSDOT SOP 731

Method for Determining Volumetric Properties of Hot Mix Asphalt

1. Scope

   This procedure covers the determination of volumetric properties of Hot Mix Asphalt, i.e., Air Voids (Va), Voids in Mineral Aggregate (VMA), Voids Filled with Asphalt (VFA), and Dust to Binder Ratio ($P_{\#200}/P_{be}$).

2. References

   T 329 – WSDOT FOP for AASHTO Moisture Content of Hot Mix Asphalt (HMA) by Oven Method

   T 27/11 – WSDOT FOP for WAQTC/AASHTO Sieve Analysis of Fine and Coarse Aggregates

   T 166 – WSDOT FOP for AASHTO Bulk Specific Gravity of Compacted Hot Mix Asphalt Using Saturated Surface-Dry Specimens

   T 168 – WSDOT FOP for WAQTC/AASHTO Sampling of Hot Mix Asphalt Paving Mixtures

   T 209 – WSDOT FOP for AASHTO Theoretical Maximum Specific Gravity and Density of Hot Mix Asphalt Paving Mixtures

   T 308 – WSDOT FOP for AASHTO Determining the Asphalt Binder Content of Hot Mix Asphalt (HMA) by the Ignition Method

   T 312 – WSDOT FOP for AASHTO Preparing Hot Mix Asphalt (HMA) Specimens by Means of the Superpave Gyratory Compactor

   T 712 – WSDOT Test Method Standard Method of Reducing Hot Mix Asphalt Paving Mixtures

3. Calibration of Compactor

   a. The gyratory compactor will be calibrated in accordance with WSDOT VP-58 and according to the manufacturer's established calibration procedure. Anytime the gyratory compactor is moved to a new testing site a new calibration is required in accordance with WSDOT VP-58.

4. Test Samples

   a. All test samples shall be obtained per WSDOT FOP for WAQTC/AASHTO T 168, and reduced in accordance with WSDOT Test Method T 712. It is recommended that the gyratory test sample be the first sample acquired in order to minimize heat loss.

   b. The size of the gyratory sample shall be such that it will produce a compacted specimen 115.0 ± 5.0 mm in height. Generally, the mix design verification report from the State Materials Laboratory initial starting mass is adequate.

   c. Place the gyratory sample in an oven set no more than 25° F above the compaction temperature (Note 1) as soon as possible to reduce sample cooling. The gyratory test is

temperature sensitive. The sample should be heated five degrees above the compaction temperature as shown on the mix design verification report.

Note 1: Any change in compaction temperature must be confirmed by the temperature viscosity chart provided by the asphalt supplier, which can be obtained from the Paving Contractor.

5. Procedure

   a. Place a compaction mold, base plate, and top plate (if required), in an oven set at no more than 350°F for a minimum of 60 minutes prior to the estimated beginning of compaction. Subsequent uses of a conditioned mold will require 5 minutes of reheating.

   b. Place a thermometer into the center of the mix, do not stir the mixture. (Note 3) Compact the sample immediately upon achieving compaction temperature in accordance with step 4 (c).

   Note 2: While the gyratory test sample is heating it is beneficial to prepare and/or run the other tests as times permits.

   c. Perform the sample compaction in accordance with WSDOT FOP for AASHTO T 312 Section 9.

   d. Determine theoretical maximum density per WSDOT FOP for AASHTO T 209.

   e. Determine asphalt content and gradation per WSDOT FOP for AASHTO T 308 and WSDOT FOP for WAQTC/AASHTO T 27/11.

   f. Determine moisture content per WSDOT FOP for AASHTO T 329.

   g. Allow the gyratory compacted specimen to cool at room temperature for 15 to 24 hours. Determine the Bulk Specific Gravity (Gmb) of the specimen in accordance with WSDOT FOP for AASHTO T 166 Method A.

   Note 3: For repeatability between operators the retest sample should be cooled for the same amount of time at room temperature as the original specimen. When sending retest samples to the Region or State Laboratory, note the time the original sample was cooled at room temperature in the remarks section of the transmittal.

6. Volumetric Calculations

   Calculations

   a. Calculate $\%G_{mm}$ @ N_{design} as follows:

$$\%G_{mm}@N_{design} = \frac{G_{mb}}{G_{mm}} \times 100$$

Example:

$$\%G_{mm}@N_{design} = \frac{2.383}{2.493} \times 100 = 95.6\%$$

Where:

$\%G_{mm}@N_{design}$ = % theoretical maximum specific gravity @ N_{design}
G_{mb} = Bulk specific gravity of the compacted specimen
G_{mm} = Maximum specific gravity of the paving mixture
N_{design} = Number of design gyrations

b. Calculate $\%G_{mm}$ @N_{ini} as follows:

$$\%G_{mm}@N_{ini} = 100 \times \left(\frac{G_{mb} \times h_d}{G_{mm} \times h_i}\right)$$

Example:

$$\%G_{mm}@N_{ini} = 100 \times \left(\frac{2.383 \times 110.0}{2.493 \times 123.1}\right) = 85.4\%$$

Where:

$\%G_{mm}@N_{ini}$ = Percent theoretical maximum specific gravity @ $N_{initial}$
h_d = Height of specimen at design gyration level
h_i = Height of specimen at initial design gyration level
$N_{initial}$ = Number of initial gyrations

c. Calculate Air Voids (V_a) as follow:

$$V_a = 100 \times \left(1 - \left(\frac{G_{mb}}{G_{mm}}\right)\right)$$

Example:

$$V_a = 100 \times \left(1 - \left(\frac{2.383}{2.493}\right)\right) = 4.4\%$$

Where:

V_a = Percent air voids

d. Calculate Voids in Mineral Aggregate (VMA) as follows:

$$VMA = 100 - \left(\frac{(G_{mb} \times P_s)}{G_{sb}}\right)$$

Example:

$$VMA = 100 - \left(\frac{(2.383 \times 94.8)}{2.630}\right) = 14.1\%$$

Where:

P_s = Percent of aggregate in the mixture (100-P_b)

Example:
100% mix – 5.2% asphalt = 94.8% aggregate

Where:

G_{sb} = Bulk specific gravity of the combined aggregate
VMA = Voids in Mineral Aggregate, percent

e. Calculate Voids Filled with Asphalt (VFA) as follows:

$$VFA = 100 \times \left(\frac{VMA - V_a}{VMA}\right)$$

Example:

$$VFA = 100 \times \left(\frac{14.1 - 4.4}{14.1}\right) = 68.8\%$$

Where:

VFA = Voids Filled with Asphalt, percent

f. Calculate Gravity Stone Effective (G_{se}) as follows:

$$G_{se} = \frac{100 - P_b}{\left(\frac{100}{G_{mm}} - \frac{P_b}{G_b}\right)}$$

Example:

$$G_{se} = \frac{100 - 5.2}{\left(\frac{100}{2.493} - \frac{5.2}{1.025}\right)} = 2.706$$

Where:

G_{se} = Gravity Stone Effective (specific gravity of aggregates, excluding voids permeable to asphalt)
P_b = Percent of binder
G_b = Gravity binder

Note 4: G_b is the specific gravity of the asphalt binder. It is imperative that current G_b is used in the volumetric calculations. Any changes in the binder specific gravity must be confirmed by the temperature viscosity curve provided by the asphalt supplier, which can be obtained from the paving Contractor.

g. Calculate Percent Binder Effective (P_{be}) as follows:

$$P_{be} = P_b - \left(\frac{(P_s \times G_b)(G_{se} - G_{sb})}{(G_{se} \times G_{sb})}\right)$$

Example:

$$P_{be} = 5.2 - \left(\frac{(94.8 \times 1.025)(2.706 - 2.630)}{(2.706 \times 2.630)}\right) = 4.2$$

Where:

P_{be} = Percent binder effective, the percent by mass of effective asphalt content minus the quantity of binder lost by absorption into the aggregate particles.
P_s = Percent of aggregate in the mixture
G_b = Gravity binder
G_{se} = Effective specific gravity of the aggregate
G_{sb} = Bulk specific gravity of the combined aggregate
P_b = Percent of binder

h. Calculate dust-to-binder ratio (P_{200}/P_{be}) as follows:

$$P_{200}/P_{be} = P_{200} \div P_{be}$$

Example:

$5.0 \div 3.6 = 1.4$

Where:

P_{200}/P_{be} = Dust-to-binder ratio
P_{200} = Percent of aggregate passing the No. 200 sieve

7. Report

Report the results using one or more of the following of the following:

- Materials Testing System (MATS)
- WSDOT Form 350-560 for asphalt content, gradation, and moisture content
- WSDOT Form 350-162 for volumetric properties
- Form approved in writing by the State Materials Engineer

Washington State
Department of Transportation

WSDOT SOP 733

Determination of Pavement Density Differentials Using the Nuclear Density Gauge

1. Scope

   This test method describes the procedure for locating and testing areas of suspected low cyclic density. Lower pavement density has been related to temperature differentials and areas of "spots, streaks" or visual pavement irregularities. This method uses infrared detection devices and visual inspection to identify areas of potentially low cyclic density.

2. Definitions

   a. Temperature Differential Area- Any area where the temperature of the newly placed HMA pavement is greater than 25° F different than the surrounding area.

   b. Aggregate segregation- "Spots, streaks" or visual pavement irregularities in the newly placed HMA pavement that has a significant difference in texture when compared to the surrounding material.

   c. Systematic Density Testing - the testing of temperature differential areas or areas of aggregate segregation to determine if there is a pattern of low cyclic density.

3. Equipment

   a. An approved infrared camera OR a handheld noncontact infrared thermometer (features for both should include continuous reading, minimum, maximum, and average readings, laser sighting, and a minimum distance to spot size ratio (D:S) of 30:1.

   b. Nuclear moisture-density gauge.

   c. Tape measure.

   d. A can of spray paint for marking test locations.

   e. Required report form.

4. Testing Criteria

   a. Where temperature differentials are 25° F or greater a systematic HMA compaction test is required.

   b. Where temperature differentials are less than 25° F a systematic HMA compaction test is not required unless, an area shows signs of visual pavement irregularities, surface segregation or a significantly different texture.

5. Determination of Systematic Density Testing Locations

   Use either and infrared camera or a handheld non-contact infrared device to locate temperature differential areas as follows:

5.1 Infrared Camera

a. Delineate a 500 ft section of pavement and systematically check the area for temperature differentials within one minute of HMA placement and prior to any compaction of the pavement.

b. No temperature profiles shall be performed within the first or last 25 tons of production each day or within 25 feet of any transverse joint.

c. Focus the camera on the freshly placed HMA pavement prior to compaction. Adjust the camera to show the high and low temperatures.

d. Viewing should occur from the side of the paved lane approximately 15 to 20 feet back from the paver looking toward the paver.

e. The "spot" function on the camera should be used to obtain the temperature of the cool area and the surrounding HMA to assess for temperature differentials.

f. If the temperature differential is 25° F or more, locate the approximate center of the temperature differential area with the camera. The offset is from the center of the temperature differential area to the edge of the lane. Mark the location to be tested for systematic HMA compaction by placing a paint mark at the edge of the lane corresponding to the center of the temperature differential. Record the HMA surface temperature, temperature differential, offset, and station on DOT form 350-170 <u>and</u> in the MATS database.

g. If the temperature differential is less than 25° F, there is no need to mark the location unless an area within the paved lane has a significantly different texture. If testing is performed because of a significantly different textured area, locate the center of the affected area and mark the location as described in step g and as shown in Figure 1 with an (S) after the temperature differential.

5.2 Handheld Noncontact Infrared Device

a. Delineate a 500 ft section of pavement and systematically check the area for temperature differentials within one minute of HMA placement and prior to any compaction of the pavement.

b. No temperature profiles shall be performed within the first or last 25 tons of production each day or within 25 feet of any transverse joint.

c. Perform a longitudinal scan of the pavement by standing at the edge of the paving lane about 5 to 10 feet back from the paver. Scan the mat with the handheld noncontact thermometer continuously in a longitudinal manner by walking behind the paver in the direction of paving, staying the same distance away from the paver for 500 ft of HMA placement.

d. The offset for the longitudinal profile should be anywhere from 18 inches from the edge to no more than half the width of the paved lane. (The need to vary the longitudinal offset will be necessary to get an accurate representation of the whole mat.) Scanning temperatures for the other half of the paved lane should be performed from the other side.

Note: Typically, temperature differentials or surface segregation can be captured with the longitudinal scan.

e. Perform a transverse scan after completion of the longitudinal scan, making sure to scan the entire width of the paved lane excluding the outer 18 inches on each side. It should be performed approximately 5 to 10 feet behind the paver (to check for streaking of the mat).

Note: Typically, streaking caused by temperature differentials or surface segregation will be captured by the transverse scan.

f. If the temperature differential is 25° F or more, locate the approximate center of the temperature differential area by scanning that specified location. The offset is from the center of the temperature differential area to the edge of the paved lane. Mark the location to be tested for systematic density testing by placing a paint mark at the edge of the lane corresponding to the center of the temperature differential. Record the HMA surface temperature, temperature differential, offset, and station on DOT form 350-170 or in the MATS database.

g. If the temperature differential is less than 25° F, there is no need to mark the location unless an area within the paved lane has visual pavement irregularities, surface segregation or a significantly different texture. If testing is performed because of a significantly different textured area, locate the center of the affected area and mark the location as described in step g and as shown in Figure 1 with an (S) after the temperature differential.

6. Systematic Density Testing Procedure

a. Systematic density testing shall begin after finish rolling is completed.

b. All systematic density testing shall be performed in accordance with WSDOT FOP for WAQTC TM 8.

c. Systematic density testing shall be performed at all the locations recorded in 5.1f and 5.2f of this procedure. Gauge probe shall be placed at the station and offset determined above as the center of the temperature differential area.

e. If any temperature differentials are found in the initial assessment of the paving operations, at least one temperature profile shall be taken for every subsequent 500 ft of paving operation.

d. If no temperature differentials or streaks greater than 25° F are found or if there are no more than 2 density readings lower than 90 percent found in a 500 ft section, the testing frequency may be reduced. Random checks however, should continue to be made throughout the day and the results recorded.

e. If any significant equipment or weather changes occur, temperature profiles should be performed to determine if the new operation is capable of producing uniform HMA temperatures.

f. If it is found that the paving machine is creating areas that are significantly different in texture from the surrounding pavement, systematic density tests should be performed to determine if these are areas of low cyclic density.

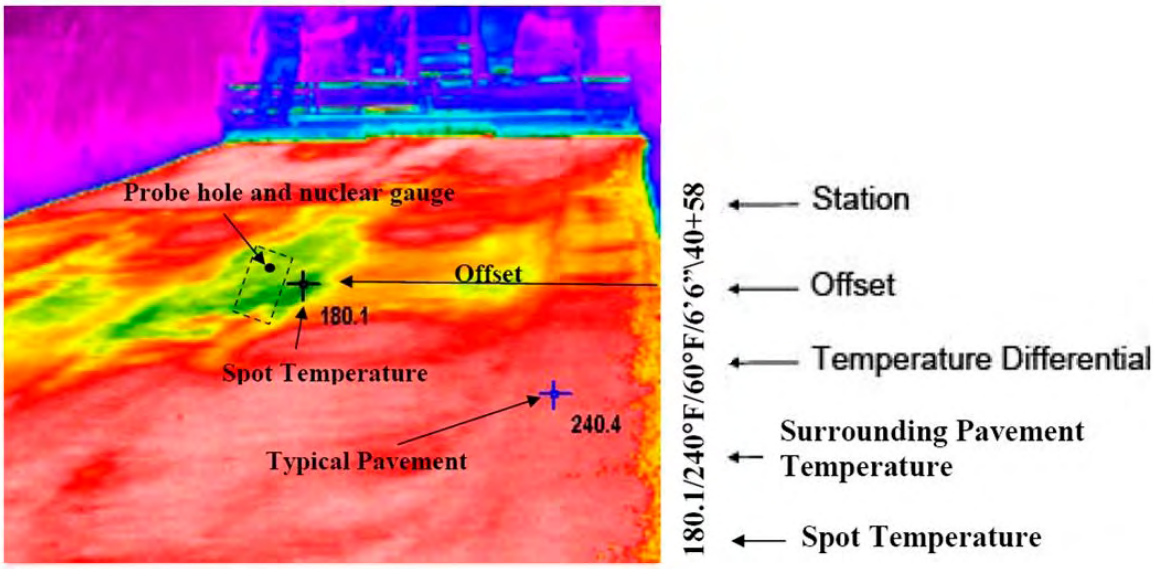

Marking Location of Temperature Differential
Figure 1

WSDOT SOP 734

Sampling Hot Mix Asphalt After Compaction (Obtaining Cores)

1. Scope
   - This method describes the process for obtaining Hot Mix Asphalt test cores for Laboratory testing after compaction has been completed. Cores may range in size from 2 in to 12 in
2. Significance and Use
   - Samples obtained in accordance with the procedure given in this practice may be used for measuring pavement thickness, density, and acceptance testing.
   - When cores are used to determine nuclear gauge correlation, refer to WSDOT SOP 730.
   - When cores are used to determine pavement density, the Bulk Specific Gravity ($\mathbf{G_{mb}}$) is determined according to WSDOT FOP for AASHTO T 166.
   - When cores are used for forensic testing of HMA, refer to SOP 737 "Procedure for the Forensic Testing of HMA Field Cores" to determine the required number and size of cores.
3. Apparatus
   - Core Drill Machine –A Core Drill Machine of sufficient horsepower and depth to minimize distortion of the compacted cores of Hot Mix Asphalt.
   - Core Bit – The cutting edge of the core drill bit shall be of hardened steel or other suitable material with diamond chips embedded in the metal cutting edge or as recommended by the core drill bit manufacturer. Typically the core drill bit should have an inside diameter of 4" ± 0.25" (100 mm ± 6 mm) or 6" ± 0.25" (150 mm ± 6 mm), these core bit dimensions are agency preferred alternatives. Suitable larger and smaller diameter core bit alternatives shall be employed as required by the agency.
   - Tools – Core layers may be separated using a saw or other suitable device which provides a clean smooth surface and does not damage the core.
   - Retrieval Device (Optional) –The retrieval device used for removing core samples from holes must preserve the integrity of the core. The device may be a steel rod of suitable length and with a diameter that will fit into the space between the core and the pavement material. There may be a 90 degree bend at the top to form a handle and a 90 degree bend at the bottom, approximately 2 in (50 mm) long, forming a hook to assist in the retrieval of the core or other suitable device.
4. Safety

   This standard does not purport to address all of the safety concerns, associated with its use. It is the responsibility of the user of this standard operating procedure to establish a pre activity safety plan prior to use.

5. Test Site Location
   - The quantity of cores to be obtained shall be determined by the test procedure to be performed or agency requirements. Refer to WSDOT SOP 730 when taking correlation cores.
   - Determine the location of the core(s) as required by the agency.
6. Procedure
   - For freshly placed Hot Mix Asphalt materials, the core shall be taken when the material has had sufficient amount of time to cool to prevent damage to the core.
   - Pavement may be cooled to expedite the removal of the core by the following methods; water, ice water, ice, or dry ice or liquid nitrogen.
   - Place the coring machine and core bit over the selected location.
   - Keep the core bit perpendicular to the Hot Mix Asphalt surface during the coring process.

     Note 1: If any portion of the coring machine shifts during the operation, the core may break or distort.
   - Constant downward pressure should be applied on the core bit. Failure to apply constant pressure, or too much pressure, may cause the bit to bind or distort the core.
   - Continue the coring operation until the desired depth is achieved.
   - If necessary, use a retrieval device to remove the core.
   - Clearly identify the cores location and offset without causing damage (i.e., lumber crayon or grease pencil).

     Note 2: If the core is damaged to a point that it cannot be used for its intended purpose, a new core shall be obtained within 6 in of the original location.
7. Filling Core Holes
   - When necessary, the hole made from the coring operation shall be filled with a material that will not separate from the surrounding material. If a Hot Mix Asphalt is available and used, it shall be compacted into the hole. A fast set grout product may be used in lieu of a Hot Mix Asphalt. A black dye can be used to color the grout on wearing lifts.
8. Transporting Cores
   - Transport cores in a suitable container(s) that prevents damage from jarring, rolling, hitting together, and/or impact with any object.
   - Prevent cores from freezing or excessive heat above 130º F (54º C), during transport.

     Note 1: In extreme ambient temperature conditions, cores should be placed in water during transport.
   - If the core is damaged in transport to a point it can not be utilized for its intended purpose the core will not be used.
9. Separate The Layers
   - When necessary, separate the lifts or layers of pavement courses by using a water cooled saw to cut the core on the designated lift line or separate by other suitable methods that will not damage the lifts or layers to be tested.

     Note 4: Lift lines are often more visible by rolling the core on a flat surface and/or surface drying the core.

10. Length Determination

    Measure the thickness of the designated lift to the nearest 0.01' or ⅛" according to WSDOT Test Method 720.

11. Report

    Core information shall be reported on standard agency forms and should include the following information.

    - The date the cores were obtained
    - Paving date
    - Contract number
    - Project title
    - Location of test
    - The lift being evaluated
    - Type of material being evaluated
    - Mix Design Lab Number
    - Average thickness of each core (to the nearest 0.01' or ⅛ ")
    - Average Theoretical Maximum Density

Washington State
Department of Transportation

WSDOT SOP 735

Standard Operating Procedure for Longitudinal Joint Density

1. General Scope
   a. This procedure describes the method for determining the location of a longitudinal joint density test.
   b. Longitudinal joint density tests are performed in addition to Quality Assurance (QA) density tests.
   c. One longitudinal joint density test will be performed on the confined or unconfined edge at each longitudinal joint.
2. Longitudinal Joint Testing
   a. The longitudinal joint density test will be conducted in accordance with WSDOT FOP for WAQTC TM 8, except "Test Site Location, Section 1, subsection c, which is modified by this procedure to read "No closer than 18 in (450mm) to any vertical mass, or less than 6 in (152 mm) from a vertical pavement edge," making sure the gauge will sit flush with the hot-mix asphalt (HMA). See Figure 1.
   b. A longitudinal joint density will be required on the lane edge side of a shoulder if the shoulder is required to meet the same QA density requirements as the traveled lane.

      Note: Hot lap joints are not included in longitudinal joint testing.
3. Number of Longitudinal Joint Tests
   a. For projects requiring 400 tons sublot with 5 sublots – One reading, at each longitudinal joint to be tested, will be taken within each compaction lot at the same station location as the third sublot.
   b. For projects requiring 80 ton sublots – One reading, at each longitudinal joint to be tested, will be taken every four hundred tons or at every fifth sublot tested.
4. Calculation of Results
   a. Calculate the Longitudinal Joint density in accordance WSDOT SOP 729.
5. Report
   a. Report the results using one or more of the following:
      - Materials Testing System (MATS)
      - WSDOT Form 350-095
      - Form approved in writing by the State Materials Engineer

      Note: Lot Number corresponds to the lot where the set of longitudinal joint readings were taken. The station corresponds to the station within the lot (i.e., third sublot) where the set of longitudinal joint readings were taken.

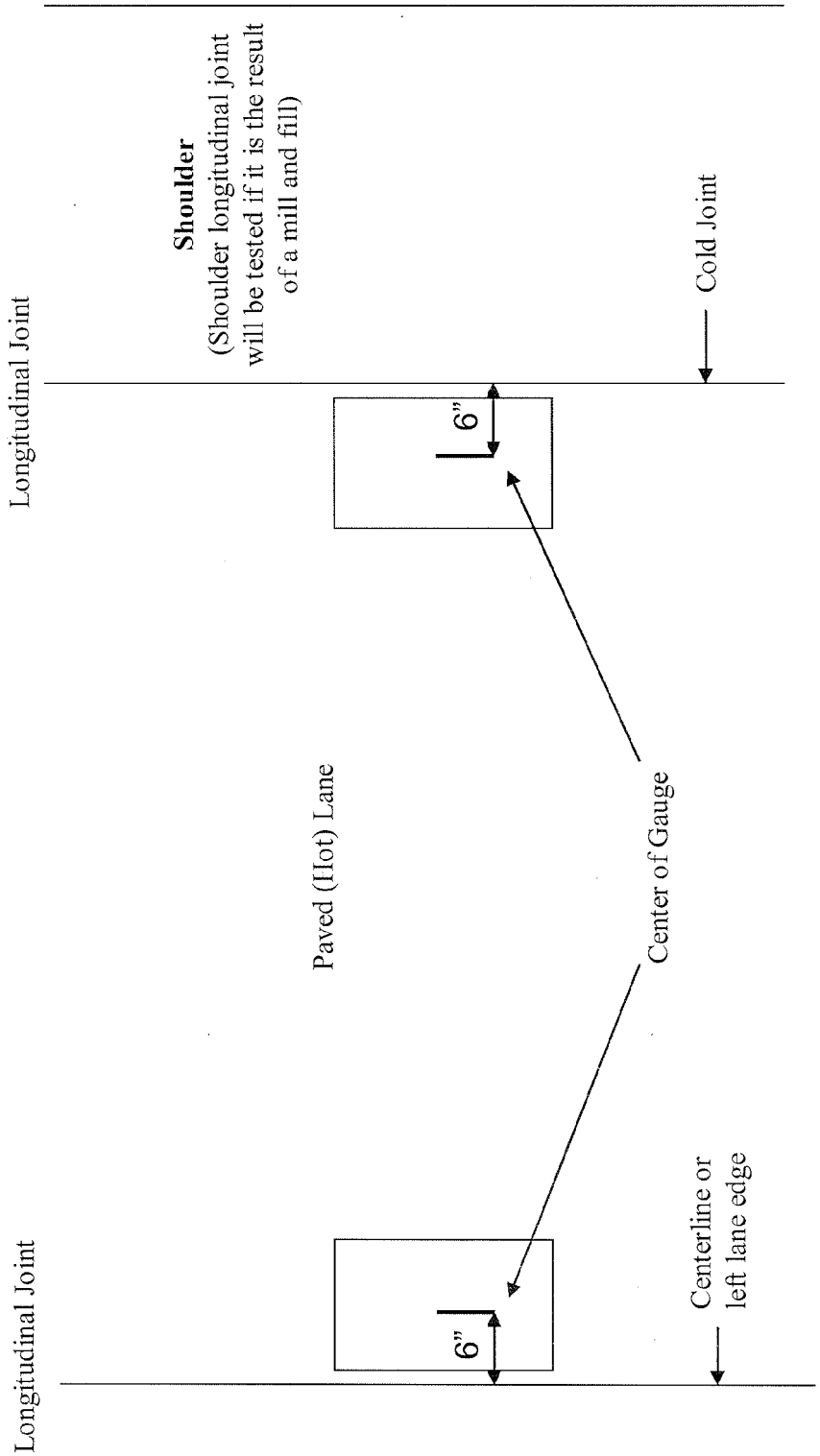

Longitudinal Joint Testing Locations
Figure 1

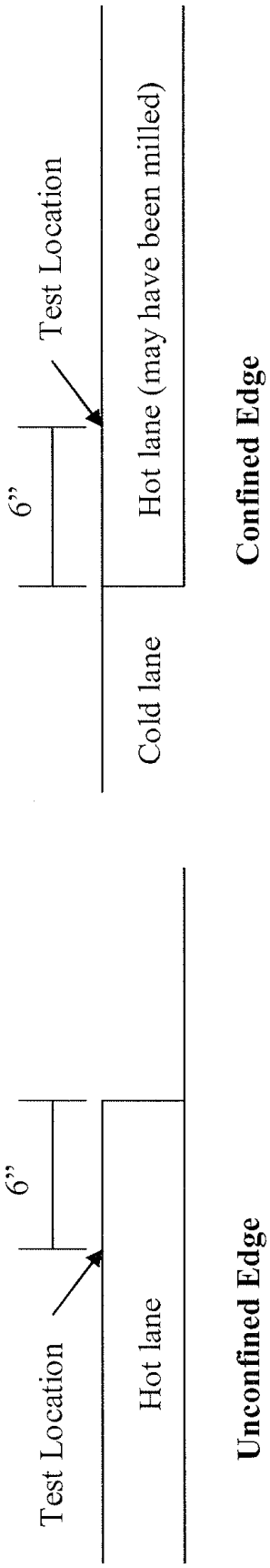

Longitudinal Test Location Examples
Figure 2

Washington State
Department of Transportation

WSDOT SOP 736

In-Place Density of Bituminous Mixes Using Cores

1. Scope

   This test method describes the procedure for determining the relative density of bituminous mixes by means of roadway cores.

2. Procedure

   Cores for densities will be taken in accordance with WSDOT SOP 734 Sampling Hot Mix Asphalt After Compaction (Obtaining Core)

   The bulk specific gravity (Gmb) of the core will be determined in accordance with WSDOT FOP for T 166 Bulk Specific Gravity of Compacted Hot Mix Asphalt (HMA) Using Saturate Surface-Dry Specimens.

   The Theoretical maximum density of the mix will be determined in accordance with WSDOT FOP for AASHTO T 209 Theoretical Maximum Specific Gravity and Density of Hot-Mix Asphalt Paving Mixtures.

   Determine the average theoretical maximum density in accordance with WSDOT SOP 729 Determination of the Moving Average of Theoretical Maximum Density (TMD) for HMA

3. Calculation of Percent of Compaction

   The percent compaction is determined by comparing the density of the roadway core to the theoretical maximum density.

   Calculate core density to the nearest 0.1 pcf as follows:

   $$\textit{Core Density} = Gmb \times 62.245\ pcf$$

   Calculate percent compact (round to the nearest 0.1 percent) as follows:

   $$\textit{Percent Compaction} = (\textit{Core Density})/(\textit{Average Theoretical Maximum Density}) \times 100$$

WSDOT FOP for C 805[1]

Rebound Hammer Determination of Compressive Strength of Hardened Concrete

1. Scope

   1.1 This test method covers the determination of a rebound number of hardened concrete using a spring-driven steel hammer.

   1.2 The values stated in inch-pound units are to be regarded as the standard.

   1.3 This standard does not purport to address all of the safety concerns, if any, associated with its use. It is the responsibility of the user of this standard to establish appropriate safety and health practices and determine the applicability of regulatory limitations prior to use.

2. Referenced Documents

   2.1 ASTM Standards

   C 125 – Terminology Relating to Concrete and Concrete Aggregates

   C 670 – Practice for Preparing Precision and Bias Statements for Test Methods for Construction Materials

   E 18 – Test Methods for Rockwell and Rockwell Superficial Hardness of Metallic Materials

3. Significance and Use

   3.1 This test method is not intended as the basis for acceptance or rejection of concrete because of the inherent uncertainty in the estimated strength.

4. Apparatus

   4.1 Rebound Hammer – Consisting of a spring-loaded steel hammer that when released strikes a steel plunger in contact with the concrete surface. The spring-loaded hammer must travel with a consistent and reproducible velocity. The rebound distance of the steel hammer from the steel plunger is measured on a linear scale attached to the frame of the instrument.

   Note 1: Use type N rebound hammers that are commercially available to accommodate testing of various sizes and types of concrete construction.

   4.2 Abrasive Stone – Consisting of medium-grain texture silicon carbide or equivalent material.

   4.3 Test Anvil – Approximately 150 mm (6 in) diameter by 150 mm (6 in) high cylinder made of tool steel with an impact area hardened to 66 ± 2 HRC as measured by test method ASTM E 18. An instrument guide is provided to center the rebound hammer over the impact area and keep the instrument perpendicular to the surface.

[1]This FOP is based on ASTM C 805 and has been modified per WSDOT standards. To view the redline modifications, contact the WSDOT Quality Systems Manager at 360-709-5412.

4.4 Verification – Rebound hammers shall be serviced and verified annually and whenever there is reason to question their proper operation. Verify the functional operation of a rebound hammer using the test anvil described in Section 4.3. During verification, support the test anvil on a bare concrete floor or slab. The manufacturer shall report the rebound number to be obtained by a properly operating instrument when tested on an anvil of specified hardness.

Note 2: Typically, a rebound hammer will result in a rebound number of 80 ± 2 when tested on the anvil described in Section 4.3. The test anvil needs to be supported on a rigid base to obtain reliable rebound numbers. Verification on the test anvil does not guarantee that the hammer will yield repeatable data at other points on the scale. The hammer can be verified at lower rebound numbers by using blocks of polished stone having uniform hardness. Some users compare several hammers on concrete or stone surfaces encompassing the usual range of rebound numbers encountered in the field.

5. Test Area and Interferences

5.1 Selection of Test Surface – Concrete members to be tested shall be at least 100 mm (4 in) thick and fixed within a structure. Smaller specimens must be rigidly supported. Avoid areas exhibiting honeycombing, scaling, or high porosity. Do not compare test results if the form material against which the concrete was placed is not similar. Troweled surfaces generally exhibit higher rebound numbers than screeded or formed finishes. If possible, test structural slabs from the underside to avoid finished surfaces.

5.2 Preparation of Test Surface – A test area shall be at least 150 mm (6 in) in diameter. Heavily textured, soft, or surfaces with loose mortar shall be ground flat with the abrasive stone described in Section 4.2. Smooth-formed or troweled surfaces do not have to be ground prior to testing. Do not compare results from ground and unground surfaces.

5.3 Do not test frozen concrete.

Note 3: Moist concrete at 0°C (32°F) or less may exhibit high rebound values. Concrete should be tested only after it has thawed. The temperatures of the rebound hammer itself may affect the rebound number. Rebound hammers at -18°C (0°F) may exhibit rebound numbers reduced by as much as two or three units (1 unit = 1 whole number).

5.4 For readings to be compared, the direction of impact, horizontal, downward, upward, or at another angle, must be the same or established correction factors shall be applied to the readings.

5.5 Do not conduct tests directly over reinforcing bars with cover less than 0.75 in (20 mm).

***Note 4*:** The location of reinforcement may be established using reinforcement locators or metal detectors. Follow the manufacturer's instructions for proper operation of such devices.

6. Procedure

6.1 Hold the instrument firmly so that the plunger is perpendicular to the test surface. Gradually push the instrument toward the test surface until the hammer impacts. After impact, maintain pressure on the instrument and, if necessary, depress the

button on the side of the instrument to lock the plunger in its retracted position. Read the rebound number on the scale to the nearest whole number and record the rebound number. Take ten readings from each test area. No two impact tests shall be closer together than 25 mm (1 in). Examine the impression made on the surface after impact, and if the impact crushes or breaks through a near-surface air void, disregard the reading and take another reading.

7. Calculation

7.1 Discard readings differing from the average of ten readings by more than six units and determine the average of the remaining readings. If more than two readings differ from the average by six units, discard the entire set of readings and determine rebound numbers at ten new locations within the test area.

8. Report

8.1 Report the following information for each test area:

8.1.1 Date and time of testing.

8.1.2 Identification of location tested in the concrete construction and the type and size of member tested.

8.1.2.1 Description of the concrete mixture proportions including type of coarse aggregates if known.

8.1.2.2 Design strength of concrete tested.

8.1.3 Description of the test area including:

8.1.3.1 Surface characteristics (trowelled, screeded) of area.

8.1.3.2 If surface was ground and depth of grinding.

8.1.3.3 Type of form material used for test area.

8.1.3.4 Curing conditions of test area.

8.1.3.5 Type of exposure to the environment.

8.1.4 Hammer identification and serial number.

8.1.4.1 Air temperature at the time of testing.

8.1.4.2 Orientation of hammer during test.

8.1.5 Average rebound number for test area.

8.1.5.1 Remarks regarding discarded readings of test data or any unusual conditions.

10. Precision and Bias

See ASTM C 805 precision and bias.

Performance Exam Checklist

Rebound Hammer Determination of Compressive Strength of Hardened Concrete FOP for ASTM C 805

Participant Name _____ Exam Date _____

Procedure Element		
Preparation	**Yes**	**No**
1. Copy of current procedure available at test site?	❒	❒
2. Hammer properly serviced and calibrated or verified?	❒	❒
3. Test location properly prepared?	❒	❒
4. Test location meets minimum size requirement?	❒	❒
5. Ten acceptable readings taken in each test area?	❒	❒
6. Readings properly spaced in test area?	❒	❒
7. Test readings properly converted to estimated strength?	❒	❒
8. Test information properly recorded?	❒	❒
9. All calculations performed correctly?	❒	❒
Equipment		
10. Are calibration/verifications tags present on equipment used in this procedure?	❒	❒
11. All equipment functions according to the requirements of this procedure?	❒	❒

First Attempt: Pass ❒ Fail ❒ Second Attempt: Pass ❒ Fail ❒

Signature of Examiner _____

Comments:

Washington State
Department of Transportation

WSDOT Test Method T 813

Field Method of Fabrication of 2 in (50 mm) Cube Specimens for Compressive Strength Testing of Grouts and Mortars

1. Scope

   This method covers the fabrication of 2 in (50 mm) cube specimens for compressive strength testing of grouts and mortars.

2. Equipment

   a. Specimen Molds – Specimen molds for the 2 in (50 mm) cube specimens shall be tight fitting. The molds shall not have more than three cube compartments and shall not be separable into more than two parts. The parts of the molds, when assembled, shall be positively held together. The molds shall be made of hard metal not attacked by the cement mortar. For new molds, the Rockwell hardness number shall not be less than HRB 55. The sides of the molds shall be sufficiently rigid to prevent spreading or warping. The interior faces of the molds shall conform to the tolerances of Table 1.

Parameter	2 in Cube Molds		50 mm Cube Molds	
	New	In Use	New	In Use
Planeness of Sides	<0.001 in	<0.002 in	<0.025 mm	<0.05 mm
Distance Between Opposite Sides	2 in ± 0.005 in	2 in ± 0.02 in	50 mm + 0.13 mm	50 mm + 0.50 mm
Height of Each Compartment	2 in + 0.001 in to -0.005 in	2 in + 0.01 in to -0.015 in	50 mm + 0.25 mm to -0.013 mm	50 mm + 0.25 mm to -0.38 mm
Angle Between Adjacent Faces*	90 + 0.5°	90 + 0.5°	90 + 0.5°	90 + 0.5°

*Measured at points slightly removed from the intersection. Measured separately for each compartment between all the interior faces and the adjacent face and between interior faces and top and bottom planes of the mold.

Permissible Variations of Specimen Molds
Table 1

   b. Base Plates – Base plates shall be made of a hard metal not attacked by cement mortar. The working surface shall be plane and shall be positively attached to the mold with screws into the side walls of the mold.

   c. Cover Plates – Cover plates shall be made of a hard metal or glass not attacked by cement mortar. The surface shall be relatively plane.

   d. Tamper – The tamper shall be made of a nonabsorptive, nonabrasive, nonbrittle material such as a rubber compound having a Shore A durometer hardness of 80 + 10, or seasoned oak wood rendered nonabsorptive by immersion for 15 minutes in paraffin at approximately 392°F (200°C), and shall have a cross-section of ½ in × 1 in (13 mm × 25 mm) and a length of about 5 to 6 in (125 to 150 mm). The tamping face shall be flat and at right angles to the length of the tamper.

e. Trowel – A trowel which has a steel blade 4 to 6 in (100 to 150 mm) in length, with straightedges.

3. Field Procedure

a. Three or more specimens shall be made for each period of test specified.

b. All joints shall be water tight. If not water tight, seal the surfaces where the halves of the mold join by applying a coating of light cup grease. The amount should be sufficient to extrude slightly when the halves are tightened together. Repeat this process for attaching the mold to the base plate. Remove any excess grease.

c. Apply a thin coating of release agent to the interior faces of the mold and base plate. (WD-40 has been found to work well as a release agent.) Wipe the mold faces and base plate as necessary to remove any excess release agent and to achieve a thin, even coating on the interior surfaces. Adequate coating is that which is just sufficient to allow a distinct fingerprint to remain following light finger pressure.

d. Begin molding the specimens within an elapsed time of not more than 2½ minutes from completion of the mixing.

e. For plastic mixes, place a first layer of mortar about 1 in (25 mm) deep in all the cube compartments (about one-half the depth of the mold). Tamp the mortar in each cube compartment 32 times in about 10 seconds making four rounds, each round perpendicular to the other and consisting of eight adjoining strokes over the surface of the specimen, as illustrated in Figure 1, below. The tamping pressure should be just sufficient to ensure uniform filling of the molds. The four rounds of tamping (32 strokes) shall be completed in one cube before going on to the next. When the tamping of the first layer is completed, slightly over fill the compartments with the remaining mortar and then tamp as specified for the first layer. During tamping of the second layer, bring in the mortar forced out onto the tops of the molds after each round of tamping, by means of gloved fingers and the tamper, before starting the next round of tamping. On completion of tamping, the tops of all the cubes should extend slightly above the tops of the molds.

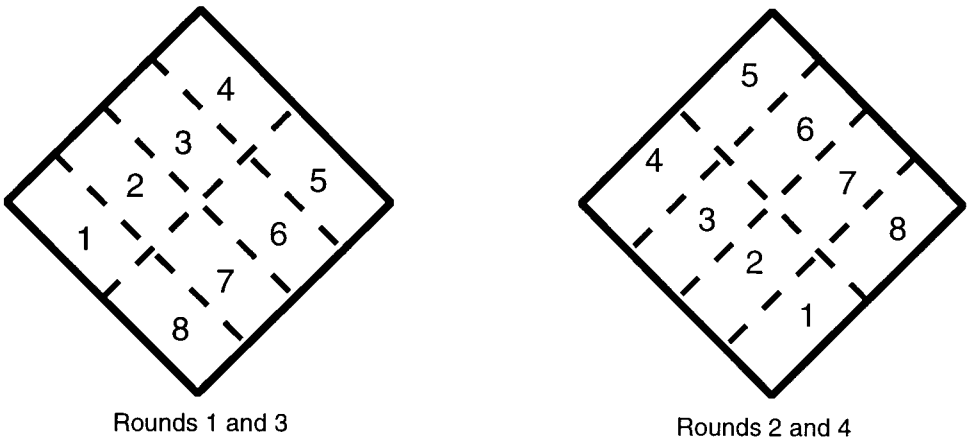

Figure 1

f. Bring in the mortar that has been forced out onto the tops of the molds with a trowel and smooth off the cubes by drawing the flat side of the trowel (with the leading edge slightly raised) once across the top of each cube at right angles to the length of the mold. Then, for the purpose of leveling the mortar and making the mortar that protrudes above the top of the mold of more uniform thickness, draw the flat trailing edge of the trowel (with leading edge slightly raised) once lightly along the length of the mold. Cut off the mortar to a plane surface flush with the top of the mold by drawing the straight edge of the trowel (held nearly perpendicular to the mold) with a sawing motion over the length of the mold.

g. When fabricating fluid mixes, steps e. and f. need not be followed. Instead, the cube mold is filled with mortar and cut off to a plane surface with a sawing motion over the length of the mold.

h. Immediately after molding, place cover plate on top of the mold, cover the sample with wet burlap, towels, or rags, seal it in a plastic sack in a level location out of direct sunlight, avoid freezing of cubes and record the time. Allow the sample to set undisturbed, away from vibration, for a minimum of four hours before moving.

i. Deliver the sample to the Regional or State Materials Laboratory **in the mold** with the cover plate in wet burlap, towels or rags sealed in a plastic bag within 24 hours. **Time of molding MUST be recorded on the Concrete Transmittal.** If delivery within 24 hours is unachievable, contact the Laboratory for instructions on caring for the cubes.

j. Once received in the lab, the molded sample is to be immediately placed in a moist curing room, with the upper surfaces exposed to the moist air but protected from dripping until the sample is a minimum of 20 hours old or has cured sufficiently that removal from the mold will not damage the cube. If the specimens are removed from the mold before they are 24 hours old they are to be kept on the shelves of the moist curing room until they are 24 to 36 hours old.

k. When the specimens are 24 to 36 hours old, immerse them in a lime-saturated water storage tank (Note 1). The specimens are to remain in the storage tank until time of test. (Curing test specimens of material other than hydraulic cement shall be in conformance with the manufacturer's recommendations.)

   Note 1: The storage tank shall be made of noncorroding materials. The water shall be saturated with calcium hydroxide such that excess is present. Stir the lime-saturated water once a month and clean the bath as required by AASHTO M 201.

Performance Exam Checklist

Field Method of Fabrication of 2 in (50 mm) Cube Specimens for Compressive Strength Testing of Grouts and Mortars
WSDOT Test Method T 813

Participant Name _____ Exam Date _____

Procedure Element	Yes	No
1. The tester has a copy of the current procedure on hand?	❐	❐
2. All equipment is functioning according to the test procedure, and if required, has the current calibration/verification tags present?	❐	❐
3. Three cubes made for each time period of test?	❐	❐
4. All joints (mold halves, mold to base plate) shall be water tight?	❐	❐
5. Adequate coating of release agent applied to interior surfaces of the mold?	❐	❐
6. Molding began within 2½ minutes from completion of mixing?	❐	❐
7. Molding performed in two lifts? (Not necessary if mix is fluid.)	❐	❐
8. Lifts tamped 32 times, made up of 4 rounds of 8, each perpendicular to the other? (Not required if mix is fluid.)	❐	❐
9. For second layer, mortar forced out of the mold brought back in before each round? (Not required if mix is fluid.)	❐	❐
10. Mix extends slightly above the mold at the completion of tamping?	❐	❐
11. Mortar smoothed by drawing flat side of trowel across each cube at right angles?	❐	❐
12. Mortar leveled by drawing the flat side of trowel lightly along the length of mold?	❐	❐
13. Mortar cut off flush with mold with edge of trowel using sawing motion?	❐	❐
14. Time of molding recorded?	❐	❐
15. Cover plate placed on top of the mold and covered with wet burlap, towel or rag?	❐	❐
16. Covered sample sealed in a plastic sack in a level location out of sunlight?	❐	❐
17. Sample delivered to the laboratory in the mold within 24 hours?	❐	❐
18. Transmittal includes the time of molding?	❐	❐

First Attempt: Pass ❐ Fail ❐ Second Attempt: Pass ❐ Fail ❐

Signature of Examiner _____

Comments:

WSDOT Test Method T 818

Air Content of Freshly Mixed Self-Compacting Concrete by the Pressure Method

1. The air test will be performed in accordance with WSDOT FOP for WAQTC T 152 with the following modifications to the procedure:

   a. Change item 3 to read: Fill the base completely in one lift.

      Note: Filling the base with concrete by using multiple scoops or by pouring from a bucket or similar container has been found to be acceptable.

   b. Change item 4 to read: Do not consolidate the concrete by rodding, vibration, or tamping. When the base is filled, lightly tap around the exterior of the base with a rubber mallet to allow entrapped air bubbles to escape.

   c. Delete items 5 through 11.

Performance Exam Checklist

Air Content of Freshly Mixed Self Compacting Concrete by the Pressure Method
WSDOT T 818

Participant Name _____ Exam Date _____

Procedure Element	**Yes**	**No**
1. The tester has a copy of the current procedure on hand?	☐	☐
2. All equipment is functioning according to the test procedure, and if required, has the current calibration/verification tags present?	☐	☐
3. Container filled in one layer, slightly overfilling?	☐	☐
4. Sides of the container lightly tapped with the mallet?	☐	☐
5. Concrete struck off level with top of container using the bar and rim cleaned off?	☐	☐
6. Inside of cover cleaned and moistened before clamping to base?	☐	☐
Using a Type B Meter		
7. Both petcocks open?	☐	☐
8. Air valve closed between air chamber and the bowl?	☐	☐
9. Water injected through petcock until it flows out the other petcock?	☐	☐
10. Water injection into the petcock continued while jarring and tapping the meter to insure all air is expelled?	☐	☐
11. Air pumped up to initial pressure line?	☐	☐
12. A few seconds allowed for the compressed air to stabilize?	☐	☐
13. Gauge adjusted to the initial pressure?	☐	☐
14. Both petcocks closed?	☐	☐
15. Air valve opened between chamber and bowl?	☐	☐
16. Sides of bowl tapped with the mallet?	☐	☐
17. Air percentage read after lightly tapping the gauge to stabilize the hand?	☐	☐
18. Air valve closed and then petcocks opened to release pressure before removing the cover?	☐	☐
19. Air content recorded to 0.1 percent?	☐	☐
20. All calculations performed correctly?	☐	☐

First Attempt: Pass ☐ Fail ☐ Second Attempt: Pass ☐ Fail ☐

Signature of Examiner _____

This checklist is derived, in part, from copyrighted material printed in ACI CP-1, published by the American Concrete Institute.

Comments:

WSDOT Test Method T 819

Making and Curing Self-Compacting Concrete Test Specimens in the Field

1. The cylinders will be made and cured in accordance with WSDOT FOP for AASHTO T 23 with the following modifications:

   9. Molding Specimens

      9.2 Casting Cylinders is revised to read:

      Place the concrete in the mold using a scoop, blunted trowel or shovel. Molds shall be filled in one layer by pouring material from a suitable container into the mold. Do not rod, vibrate, or tap the mold.

      Note: Filling the mold with concrete by using multiple scoops or by pouring from a bucket or similar container has been found to be acceptable.

      9.3 Consolidation is deleted

      9.4 Finishing is revised to read:

      Strike off the surface of the concrete level with the top of the mold using a float, trowel or steel strike off bar. Immediately after finishing place a plastic cylinder lid on the cylinder.

Performance Exam Checklist

Making and Curing Self-Compacting Concrete Test Specimens in the Field
WSDOT T 819

Participant Name _____ Exam Date _____

Procedure Element	**Yes**	**No**
1. The tester has a copy of the current procedure on hand?	❐	❐
2. Molds placed on a level, rigid, horizontal surface free of vibration?	❐	❐
3. Making of specimens begun within 15 minutes of sampling?	❐	❐
4. Concrete poured into the mold using a suitable container?	❐	❐
5. Mold filled in one lift?	❐	❐
6. Excess concrete struck off?	❐	❐
7. Specimens covered immediately with plastic cylinder lid?	❐	❐

First Attempt: Pass ❐ Fail ❐ Second Attempt: Pass ❐ Fail ❐

Signature of Examiner _____

This checklist is derived, in part, from copyrighted material printed in ACI CP-1, published by the American Concrete Institute.

Comments:

Washington State
Department of Transportation

WSDOT Test Method T 914

Practice for Sampling of Geosynthetic Material for Testing

1. Scope
   a. This practice covers the procedure for sampling Geosynthetic Material for testing.
2. Definitions
   a. Geogrid- A regular network of integrally connected polymer tensile elements with an aperture geometry sufficient to permit mechanical interlock with the surrounding backfill.
   b. Geosynthetic Material- general term which includes all geotextiles, geogrids, and prefabricated drainage mats.
   c. Geotextile — Any permeable textile used with foundation, soil, rock, earth, or any other geotechnical material, as an integral part of a manmade product, structure, or system.
   d. Lot — All geosynthetic material rolls within a consignment (i.e., all rolls sent to the project site) which were manufactured at the same manufacturing plant having the same product name and specifications, style, or physical characteristics of a particular geosynthetic material product.
   e. Lot Sample — Sample(s) from one or more geosynthetic material rolls taken at random to represent an acceptance sampling lot and used as a source of laboratory samples.
   f. Production Unit — As referred to in this practice, it shall be considered to be synonymous with the geosynthetic material roll as shipped by the manufacturer. Two or more geosynthetic material rolls joined together by sewn seams shall be considered as separate rolls.
   g. Minimum Average Roll Value — The test results of any sampled roll in a lot shall meet or exceed the minimum values specified.
3. Significance and Use
   a. Sampling is an important part of testing and the sampler should make every effort to obtain samples that will show the nature and condition of the materials they represent.
   b. This sampling procedure will provide a representation of the lot which is adequate to establish minimum average roll values as defined by this practice.
4. Procedure
   a. Divide the shipment or consignment into lots as defined in 2.d.
   b. Determine the number of rolls in the shipment or consignment to be sampled using Table 1.

Number of Rolls in Lot	Number of Rolls to be Selected for Lot Sample
1 to 24	1
25 to 49	2
50 to 99	3
100 to 125	5
125 to 216	6
217 to 343	7
344 to 512	8
513 to 729	9
730 to 1,000	10

Number of Rolls to be Selected as Lot Sample
Table 1

c. Laboratory sample selection.

(1) Obtain a laboratory sample from each roll in the Lot Sample. The sample shall be a minimum of 6 feet long by the full width of the geosynthetic material roll with a total area greater than or equal to 6.0 yd^2.

(2) The laboratory sample should not be taken from the outer wrap of the roll nor the inner wrap of the core (i.e., do not take the sample from the very ends of the roll).

(3) Protect the sample from exposure to Ultraviolet light.

5. Sample Submittal

a. All geotextile samples submitted to the State Material Laboratory are to be prepared and shipped as follows:

Roll sample around a 4 in diameter minimum, tube such as PCV pipe or cardboard mailing tube and wrap to protect sample from shipping damage and ultraviolet light (UV) exposure.

b. If sample is for Acceptance of Lots used on project, the following information must be submitted with the sample:

(1) Manufacturer's name and current address.

(2) Full product name.

(3) Roll number(s).

(4) Proposed use(s).

(5) Certified test results from the manufacturer.

(6) The Lot Number being submitted for acceptance. In lieu of a manufacturer provided Lot Number, the Bill of Lading Number can be used.

Testing by the State Materials Laboratory will not begin until all of the required information is received.

Performance Exam Checklist

Practice for Sampling Geosynthetic Material for Testing
WSDOT Test Method T 914

Participant Name _____ Exam Date _____

Procedure Element	**Yes**	**No**
1. The tester has a copy of the current procedure on hand?	❐	❐
2. Sampling		
a. Divided shipment/consignment into lot(s) and used Table 1 to determine the number of rolls to be sampled.	❐	❐
b. Rolls to be sampled selected at random.	❐	❐
c. Samples are a minimum of 6 feet long by the full width of the geosynthetic material roll with a total area greater than or equal to 6.0 yd^2	❐	❐
d. Sample does not include outer wrap or inner wrap of the roll.	❐	❐
3. Shipment Preparation		
a. Roll sample around a 4-in diameter minimum, tube such as PCV pipe or cardboard mailing tube	❐	❐
b. Wrap the sample to protect from ultra-violet light exposure.	❐	❐

First attempt: Pass ❐ Fail ❐ Second attempt: Pass ❐ Fail ❐

Signature of Examiner _____

Comments:

WSDOT Test Method for ASTM C 939[1]

Flow of Grout for Preplaced-Aggregate Concrete (Flow Cone Method)

This standard is issued under the fixed designation C 939; the number immediately following the designation indicates the year of original adoption or, in the case of revision, the year of last revision. A number in parentheses indicates the year of last reapproval. A superscript epsilon (e) indicates an editorial change since the last revision or reapproval. *This specification has been approved for use by agencies of the Department of Defense.*

1. Scope

   1.1 This test method covers a procedure, used both in the laboratory and in the field, for determining the time of efflux of a specified volume of fluid hydraulic cement grout through a standardized flow cone and used for preplaced-aggregate (PA) concrete; however, the test method may also be used for other fluid grouts.

   1.2 It is for use with neat grout and with grouts containing fine aggregate all passing a No. 8 (2.36 mm) sieve.

   1.3 This test method is intended for use with grout having an efflux time of 35 s or less.

   1.4 When efflux time exceeds 35 s, flowability is better determined by flow table, found in Test Method C 109, using 5 drops in 3 s.

   1.5 The values stated in SI units are to be regarded as the standard.

   1.6 *This standard does not purport to address all of the safety concerns, if any, associated with its use. It is the responsibility of the user of this standard to establish appropriate safety and health practices and determine the applicability of regulatory limitations prior to use.*

2. Referenced Documents

   2.1 *ASTM Standards:*

C 109/C109M	Test Method for Compressive Strength of Hydraulic Cement Mortars (Using 2 in or 50 mm Cube Specimens)
C 938	Practice for Proportioning Grout Mixtures for Preplaced-Aggregate Concrete

3. Summary of Test Method

   3.1 The time of efflux of a specified volume of grout from a standardized flow cone is measured.

4. Significance and Use

   4.1 This test method is applicable to the determination of the fluidity of various fluid grout mixtures.

5. Interferences

   5.1 The presence of solid particles retained on the No. 8 (2.36 mm) sieve or lumps of unmixed material in the grout may cause the grout to flow unevenly through the discharge tube of the flow cone or stop the flow completely. Uneven flow will result in slower transit of the grout, thereby indicating a false consistency.

[1] This Test Method is based on ASTM C 939-97.

6. Apparatus

6.1 *Flow Con*e, ~~with dimensions as shown in Figure 1. The discharge tube shall be stainless steel~~. The body and discharge tube can be stainless steel, cast aluminum, or other essentially non-corroding metal.

Note 1: Cones with high-density polyethylene bodies are acceptable for field use in situations where precision as described in this test method is not required.

6.2 *Receiving Container*, capacity 2000 mL, minimum.

6.3 *Ring Stand* or other device, capable of supporting the flow cone in a vertical, steady position over the receiving container.

6.4 *Leve*l, carpenter's or similar.

6.5 *Stop Watch*, least reading of not more than 0.2 s.

6.6 *Grout Mixe*r, conforming to Practice C 938.

7. Test Sample

7.1 The grout test sample shall be in excess of 1725 mL and shall be representative of the grout in the mixer.

7.2 When sampling and testing is being done for the purpose of proportioning or comparing mixes or for qualifying materials, the temperature of the dry materials and mixing water shall be such that the temperature of the freshly mixed grout is 73.4 ± 3°F (23 ± 1.7°C), unless otherwise specified.

8. Calibration of Apparatus

8.1 Mount the flow cone firmly in such a manner that it is free of vibration. Level the top to assure verticality. Close the outlet of the discharge tube with a finger or a stopper. Introduce 1725 ± 5 mL of water into the cone. Adjust the point gage to indicate the level of the water surface. Then allow the water to drain.

8.2 Before first use of the flow cone with grout and periodically thereafter, check the accuracy of the cone by filling it with water as described in 8.1. After checking or adjusting the point gage, start the stop watch and simultaneously remove the finger. Stop the watch at the first break in the continuous flow of water. The time indicated by the stop watch is the time of efflux of water. If this time is 8.0 ± 0.2 s, the cone may be used for determining the time of efflux of grout.

Note: It is imperative that the water be completely still prior to allowing it to flow from the cone, any movement will cause the time of efflux to increase.

9. Procedure

9.1 Moisten the inside of the flow cone by filling the cone with water and, 1 min before introducing the grout sample, allow the water to drain from the cone. Close the outlet of the discharge tube with a finger or a stopper. Introduce the grout into the cone until the grout surface rises to contact the point gage, start the stop watch, and simultaneously remove the finger or stopper. Stop the watch at the first break in the continuous flow of grout from the discharge tube, then look into the top of the cone; if the grout has passed sufficiently, such that light is visible through the discharge tube, the time indicated by the stop watch is the time of efflux of the grout. If light is not visible through the discharge tube, then the use of the flow cone is not applicable for grout of this consistency. At least two tests having times of efflux within 1.8 s of their average shall be made for each grout mixture.

9.2 The test for time of efflux shall be made within 1 min of drawing of the grout from the mixer or transmission line. When grout is being placed over a significant period of time, the time of efflux may be determined at selected intervals to demonstrate that the consistency is suitable for the work.

10. Report

10.1 Report the following information:

10.1.1 Identification of sample,

10.1.2 Identification of materials in the sample, the proportions, and whether laboratory prepared or taken from the field production mix,

10.1.3 Average time of efflux to nearest 0.2 s and time interval from completion of mixing at which the test was made, and

Note 2: Other means of indicating grout level may be used as long as accurate indication of grout level on volume is obtained.

10.1.4 Temperature, ambient and of the sample at the time of test.

11. Precision and Bias

11.1 *Precision* — The following within-laboratory, multiple-operator precision applies. The single laboratory standard deviation has been found to be 0.88 s. Therefore, results from two properly conducted tests on the same material should not differ by more than 2.49 s.

11.2 *Bias* — No statement on bias can be prepared because there are no standard reference materials.

12. Keywords

12.1 flow cone; grout; preplaced—aggregate concrete; time of efflux

WSDOT FOP for ASTM C 1611

Standard Test Method for Slump Flow of Self-Consolidating Concrete

1. Scope

   1.1 This test method covers the determination of slump flow of self-consolidating concrete.

   1.2 The values stated in either inch-pound units or SI units are to be regarded separately as standard. Within the text, the SI units are shown in brackets. The values stated in each system are not exact equivalents; therefore, each system shall be used independently of the other. Combining values from the two systems may result in nonconformance with the standard.

   1.3 This standard does not purport to address all of the safety concerns, if any, associated with its use. It is the responsibility of the user of this standard to establish appropriate safety and health practices and determine the applicability of regulatory limitations prior to use. (**Warning**: Fresh hydraulic cementitious mixtures are caustic and may cause chemical burns to skin and tissue upon prolonged exposure.)

   1.4 The text of this standard references notes and footnotes that provide explanatory material. These notes and footnotes (excluding those in tables and figures) shall not be considered as requirements of the standard.

2. Referenced Documents

   2.1 ASTM Standards

   C 143/C 143M – Test Method for Slump of Hydraulic-Cement Concrete

   C 172 – Practice for Sampling Freshly Mixed Concrete

   C 173/C 173M – Test Method for Air Content of Freshly Mixed Concrete by the Volumetric Method

   C 670 – Practice for Preparing Precision and Bias Statements for Test Methods for Construction Materials

   2.2 AASHTO Standards

   T 119M/T 119 – Standard Test Method for Slump of Hydraulic-Cement Concrete

   T 347 – Slump Flow of Self-Consolidating Concrete (SCC)

   2.3 WAQTC Standards

   TM 2 – Sampling Freshly Mixed Concrete

3. Terminology

3.1 Definitions of terms specific to this standard:

3.1.1 *halo, n* – An observed cement paste or mortar ring that has clearly separated from the coarse aggregate, around the outside circumference of concrete after flowing from the slump cone.

3.1.2 *spread, n* – The distance of lateral flow of concrete during the slump-flow test.

3.1.3 *stability, n* – The ability of a concrete mixture to resist segregation of the paste from the aggregates.

3.1.4 *viscosity, n* – Resistance of a material to flow under an applied shearing stress.

4. Summary of Test Method

4.1 A sample of freshly mixed concrete is placed in a mold shaped as the frustum of a cone. The concrete is placed in one lift without tamping or vibration. The mold is raised, and the concrete allowed to spread. After spreading ceases, two diameters of the concrete mass are measured in approximately orthogonal directions, and slump flow is the average of the two diameters.

5. Significance and Use

5.1 This test method provides a procedure to determine the slump flow of self-consolidating concrete in the laboratory or the field.

5.2 This test method is used to monitor the consistency of fresh, unhardened self-consolidating concrete and its unconfined flow potential.

5.3 It is difficult to produce self-consolidating concrete that is both flowable and nonsegregating using coarse aggregates larger than 1 in (25 mm). Therefore, this test method is considered applicable to self-consolidating concrete having coarse aggregate up to 1 in (25 mm) in size.

6. Apparatus

6.1 Mold – The mold used in this test method shall conform to that described in FOP for AASHTO T 119.

6.2 Base Plate – The base plate on which the mold rests shall be nonabsorbent, smooth, rigid, and have a minimum diameter of 36 in (915 mm).

Note 1: Field experience and results from the round robin test program have shown that base plates made from sealed/laminated plywood, acrylic plastic, or steel are suitable for performing this test.

6.3 Strike-off Bar – As described in FOP for WAQTC T 152.

7. Sample

7.1 The sample of concrete from which test specimens are made shall be representative of the entire batch. Sample in accordance with FOP for WAQTC TM 2.

8. Procedure

8.1 The slump-flow test shall be performed on a flat, level, nonabsorbent base plate. Position and shim the base plate so it is fully supported, flat, and level.

8.2 Filling the Mold – WSDOT requires the use of Procedure B.

8.2.1 Filling Procedure B (Inverted Mold) – Dampen and place the mold, with the smaller opening of the mold facing down, in the center of a flat, moistened base plate or concrete surface. Using a suitable container, fill the entire mold continuously (Note 2). The mold shall be held firmly in place during filling. Do not rod or tamp the SCC. Slightly overfill the mold.

Note 2: Filling the mold with concrete by using multiple scoops or by pouring from a bucket or similar container has been found to be acceptable.

8.3 Strike off the surface of the concrete level with the top of the mold by a sawing motion of the strike-off bar. Remove concrete from the area surrounding the base of the mold to preclude interference with the movement of the flowing concrete. Remove the mold from the concrete by raising it vertically. Raise the mold a distance of 9 ± 3 in (225 ± 75 mm) in 3 ± 1 seconds by a steady upward lift with no lateral or torsional motion. Complete the entire test from start of the filling through removal of the mold without interruption within an elapsed time of 2½ minutes.

8.4 Wait for the concrete to stop flowing and then measure the largest diameter of the resulting circular spread of concrete to the nearest ¼ in (5 mm). When a halo is observed in the resulting circular spread of concrete, it shall be included as part of the diameter of the concrete. Measure a second diameter of the circular spread at an angle approximately perpendicular to the original measured diameter.

8.5 If the measurement of the two diameters differs by more than 2 in (50 mm), the test is invalid and shall be repeated.

9. Calculation

9.1 Calculate the slump flow using Eq 1:

$$\text{Slump flow} = \frac{(d^1 + d^2)}{2}$$

where:

d^1 = the largest diameter of the circular spread of the concrete, and

d^2 = the circular spread of the concrete at an angle approximately perpendicular to d^1

9.2 Record the average of the two diameters to the nearest ¼ in (5 mm).

10. Report

    10.1 Report the slump flow to the nearest ¼ in (5 mm).

    10.2 Report results on concrete delivery ticket (i.e., Certificate of Compliance).

    10.3 The name of the tester who performed the field acceptance test is required on concrete delivery tickets containing test results.

11. Precision and Bias

    See ASTM C1611/C 1611M for precision and bias.

Performance Exam Checklist

WSDOT FOP for ASTM C 1611/C 1611M
Standard Test Method for Slump Flow of Self-Consolidating Concrete

Participant Name _____ Exam Date _____

Procedure Element	Yes	No
1. The tester has a copy of the current procedure on hand?	☐	☐
2. All equipment is functioning according to the test procedure, and if required, has the current calibration/verification tags present?	☐	☐
3. Sample was taken per WSDOT FOP for WAQTC TM 2?	☐	☐
4. Molds and base plate dampened and base plate is flat, level, and fully supported?	☐	☐
5. Mold filled completely (slightly overfilled)?	☐	☐
6. Mold struck off level with top opening?	☐	☐
7. Excess material removed from base plate and mold raised 9 ± 3 inches, in 3 ± 1 seconds?	☐	☐
8. After flow stabilized, measured largest diameter (including halo if necessary)?	☐	☐
9. Second measurement taken approximately perpendicular to first measurement?	☐	☐
10.. First and second measurements agree within 2″?	☐	☐
11. Slump flow was reported as an average of the two measurements?	☐	☐
12. Slump flow reported to the nearest ¼″?	☐	☐

First Attempt: Pass ☐ Fail ☐ Second Attempt: Pass ☐ Fail ☐

Signature of Examiner _____

Comments:

WSDOT FOP for ASTM C 1621/C 1621M[1]

Standard Test Method for Passing Ability of Self-Consolidating Concrete by J-Ring

1. Scope

   1.1 This test method covers determination of the passing ability of self-consolidating concrete by using the J-Ring in combination with a slump cone mold. The test method is limited to concrete with maximum size of aggregate of 1 in (25 mm).

   1.2 The values stated in either inch-pounds or SI units are to be regarded separately as standard. Within the text, the SI units are shown in brackets. The values stated in each system are not exact equivalents; therefore, each system shall be used independently of the other. Combining values from the two systems may result in nonconformance with the standard.

   1.3 The text of this standard references notes that provide explanatory material. These notes (excluding those in tables and figures) shall not be considered as requirements of the standard.

   1.4 This standard does not purport to address all of the safety concerns, if any, associated with its use. It is the responsibility of the user of this standard to establish appropriate safety and health practices and determine the applicability of regulatory limitations prior to use. (***Warning:*** Fresh hydraulic cementitious mixtures are caustic and may cause chemical burns to skin and tissue upon prolonged exposure.)

2. Referenced Documents

   2.1 ASTM Standards

   C 125 – Terminology Relating to Concrete and Concrete Aggregates

   C 143/C 143M – Test Method for Slump of Hydraulic-Cement Concrete

   C 172 – Practice for Sampling Freshly Mixed Concrete

   C 173/C 173M – Test Method for Air Content of Freshly Mixed Concrete by the Volumetric Method

   C 1611/C 1611M – Test Method for Slump Flow of Self-Consolidating Concrete

3. Terminology

   3.1 Definitions

   3.1.1 For definitions of terms used in this test method, refer to Terminology C 125.

   3.2 Definitions of terms specific to this standard:

   3.2.1 *Halo* – An observed cement paste or mortar ring that has clearly separated from the coarse aggregate, around the outside circumference of concrete after flowing from the slump cone.

[1]This Test Method is based on ASTM C 1621/C 1621M and has been modified per WSDOT standards. To view the redline modifications, contact the WSDOT Quality Systems Manager at 360-709-5412.

3.2.2 *J-ring* – An apparatus consisting of a rigid ring supported on sixteen ⅝ in (16 mm) diameter rods equally spaced on a 12 in (300 mm) diameter circle 4 in (100 mm) above a flat surface as shown in Figure 1.

3.2.3 *J-ring flow* – The distance of lateral flow of concrete using the J-Ring in combination with a slump cone.

3.2.4 *Passing ability* – The ability of self-consolidating concrete to flow under its own weight (without vibration) and fill completely all spaces within intricate formwork, containing obstacles, such as reinforcement.

4. Summary of Test Method

4.1 A sample of freshly mixed concrete is placed in a slump mold (inverted position) that is concentric with the J-Ring (Figure 2). The concrete is placed in one lift without tamping or vibration. The mold is raised, and the concrete is allowed to pass through J-Ring and subside (Figure 3).

The diameters of the concrete, in two directions approximately perpendicular to each other, are measured and averaged to obtain the J-Ring flow. The test is repeated without the J-Ring to obtain the slump flow.

The difference between the slump flow and J-Ring flow is an indicator of the passing ability of the concrete.

5. Significance and Use

5.1 This test method provides a procedure to determine the passing ability of self-consolidating concrete mixtures. The difference between the slump flow and J-Ring flow is an indication of the passing ability of the concrete. A difference less than 1 in (25 mm) indicates good passing ability and a difference greater than 2 in (50 mm) indicates poor passing ability. The orientation of the slump cone for the J-Ring test and for the slump flow test without the J-Ring shall be the same.

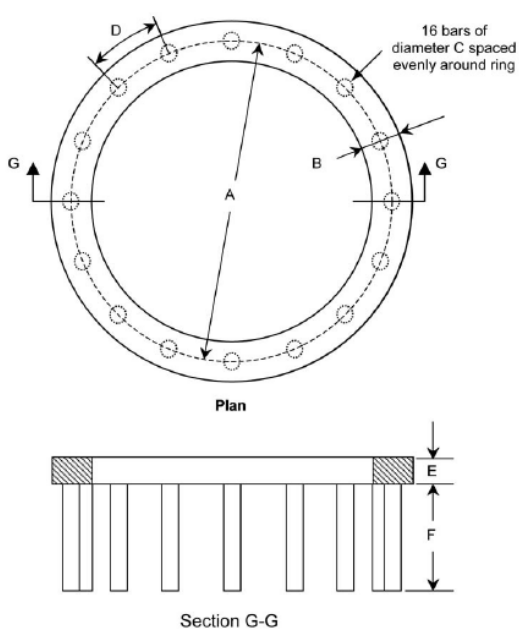

Dimension	in	mm
A	12.0 ± 0.13	300 ± 3.3
B	1.5 ± 0.06	38 ± 1.5
C	0.625 ± 0.13	16 ± 3.3
D	2.36 ± 0.06	58.9 ± 1.5
E	1.0 ± 0.06	25 ± 1.5
F	4.0 ± 0.06	200 ± 1.5

Figure 1

5.2 This test method is applicable for laboratory use in comparing the passing ability of different concrete mixtures. It is also applicable in the field as a quality control test.

6. Apparatus

6.1 J-Ring – The apparatus shall consist of a steel (or equivalent nonabsorbent, rigid material) ring measuring 12 in (300 mm) in diameter at the center of the ring and 1 in (25 mm) in thickness, and sixteen ⅝ in (16 mm) diameter smooth steel rods spaced evenly around the ring measuring 4 in (100 mm) in length (see Figure 1).

6.2 Mold – The mold (slump cone) used in this test method is as described in FOP for AASHTO T 119.

6.3 Base Plate – A nonabsorbent, rigid plate having a diameter of at least 36 in (915 mm).

Note 1: Field experience has shown that base plates made from sealed or laminated plywood, rigid plastic, or steel are suitable for performing this test.

6.4 Strike Off Bar – As described in FOP for WAQTC T 152.

6.5 Measuring Device – A ruler, metal roll-up measuring tape, or similar rigid or semi-rigid length measuring instrument marked in increments of ¼ in (5 mm) or less.

7. Sample

7.1 The sample of concrete from which test specimens are made shall be representative of the entire batch. It shall be obtained in accordance with FOP for WAQTC TM 2.

8. Procedure

8.1 Perform the test on a flat, level, and nonabsorbent base plate. Position and shim the base plate so that it is fully supported and level. Pre-moisten base-plate with a damp towel, rag, or sponge. Rest the J-Ring at the center of the base plate.

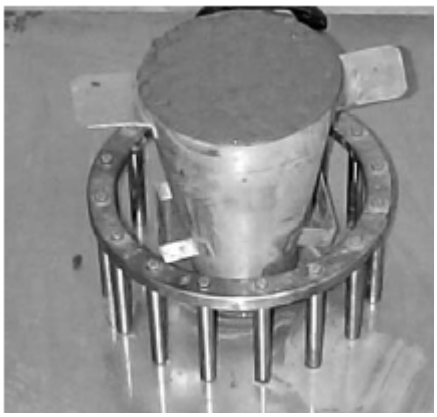

J-Ring Setup with Inverted Mold Filled with Concrete
Figure 2

Ring Flow
Figure 3

8.2 WSDOT uses only Procedure B.

8.1.2 Filling Procedure B (Inverted Mold) – Dampen the mold, and place it on the base plate with the smaller opening facing down and concentric with the J-Ring. Support the mold and fill the mold in one lift (Note 2). Heap the concrete above the top of the mold.

Note 2: Filling the mold with concrete by using multiple scoops or by pouring from a bucket or similar container has been found to be acceptable.

8.3 Strike off the surface of the concrete level with the top of the mold by a sawing motion of the strike off bar. Remove concrete from the area surrounding the mold to preclude interference with the movement of the flowing concrete. Raise the mold a distance of 9 ± 3 in (230 ± 75 mm) in 3 ± 1 s by a steady vertical lift with no lateral or torsional motion. Complete the entire procedure from start of the filling through removal of the mold without interruption within an elapsed time of 2½ min.

8.4 Wait for the concrete to stop flowing and then measure the largest diameter ($d1$) of the resulting circular flow of concrete. When a halo is observed in the resulting circular flow of concrete, it shall be included as part of the diameter of the concrete. Measure a second diameter ($d2$) of the circular flow at approximately perpendicular to the first measured diameter ($d1$). Measure the diameters to the nearest ¼ in (5 mm). Determine the J-Ring flow in accordance with Section 9 of this test method.

8.5 Conduct a slump flow test without the J-Ring in accordance with Test Method C 1611/ C 1611M. Use the same filling procedure as used with the J-Ring. Complete the tests with and without the J-Ring within 6 min.

9. Calculation

9.1 Calculate J-Ring flow according to the following equation:

$$\text{J-Ring flow} = \frac{d^1 + d^2}{2}$$

9.2 Calculate the slump flow according to the following equation:

$$\text{Slump flow} = \frac{d^1 + d^2}{2}$$

9.3 Calculate the difference between slump flow and J-Ring flow to the nearest ½ in (10 mm). This number represents the passing ability of the concrete.

10. Blocking Assessment

    10.1 Identify blocking assessment according to Table 1.

Difference Between Slump Flow and J-Ring Flow	Blocking Assessment
0 to 1 in (0 to 25 mm)	No visible blocking
> 1 to 2 in (>25 to 50 mm)	Minimal to noticeable blocking
> 2 in (>50 mm)	Noticeable to extreme blocking

Blocking Assessment
Table 1

11. Report

    11.1 Report the filling procedure (A or B) that was used.

    11.2 Report the J-Ring flow as the average of the two measured diameters to the nearest ½ in (10 mm).

    11.3 Report the slump flow (without the J-Ring) as the average of the two measured diameters to the nearest ½ in (10 mm).

    11.4 Report the passing ability as the difference between the slump flow and J-Ring flow to the nearest ½ in (10 mm). Identify the blocking assessment.

    11.5 Report results on concrete delivery ticket (i.e., Certificate of Compliance).

    11.6 The name of the tester who performed the field acceptance test is required on concrete delivery tickets containing test results.

12. Precision and Bias

    See ASTM C 1621/C 1621M for precision and bias.

Performance Exam Checklist

WSDOT FOP for ASTM C 1621/C 1621M
Standard Test Method for Passing Ability of Self-Consolidating Concrete by J-Ring

Participant Name _____ Exam Date _____

Procedure Element	Yes	No
1. The tester has a copy of the current procedure on hand?	☐	☐
2. All equipment is functioning according to the test procedure, and if required, has the current calibration/verification tags present?	☐	☐
3. Sample was taken per WSDOT FOP for WAQTC TM 2?	☐	☐
4. Molds and base plate dampened and base plate is flat, level and fully supported?	☐	☐
5. Mold is centered in J-Ring and centered on base plate?	☐	☐
6. Mold filled completely in one lift (slightly overfilled)?	☐	☐
7. Mold struck off level with top opening?	☐	☐
8. Excess material removed from base plate and mold raised 9 ± 3 inches, in 3 ± 1 seconds?	☐	☐
9. After flow has stabilized, measure largest diameter (including halo)?	☐	☐
10. Second measurement taken approximately perpendicular to first measurement?	☐	☐
11. Measurements made to nearest ¼″?	☐	☐
12. Test performed within 6 minutes of FOP for ASTM C 1611?	☐	☐
13. All calculations performed correctly?	☐	☐
14. Results reported to the nearest ½″?	☐	☐

First Attempt: Pass ☐ Fail ☐ Second Attempt: Pass ☐ Fail ☐

Signature of Examiner _____

Comments:

WSDOT FOP for ASTM D 4791[1]

Standard Test Method for Flat Particles, Elongated Particles, or Flat and Elongated Particles in Coarse Aggregate

1. Scope

   1.1 This test method covers the determination of the percentages of flat particles, elongated particles, or flat and elongated particles in coarse aggregates.

   1.2 The values stated in inch-pound units are to be regarded as the standard except in regard to sieve size and the size of aggregate, which are given in SI units in accordance with Specification E 11. The SI units in parentheses are for information purposes only.

   1.3 This standard does not purport to address all of the safety concerns, if any, associated with its use. It is the responsibility of the user of this standard to establish appropriate safety and health practices and determine the applicability of regulatory limitations prior to use.

   Note: WSDOT will be determining flat and elongated particles in accordance with Section 8.3.

2. Referenced Documents

   2.1 WSDOT Standards

   T 2 – FOP for AASHTO for the Sampling of Aggregates

   T 248 – FOP for AASHTO for Reducing Field Samples of Aggregates to Testing Size

   2.2 WAQTC Standards

   T 27/11 – FOP for AASHTO for the Sieve Analysis of Fine and Coarse Aggregates and Materials Finer Than 75 mm (No. 200) in Mineral Aggregates by Washing

3. Terminology

   3.1 Definitions

   3.1.1 *flat or elongated particles of aggregate* – Those particles of aggregate having a ratio of width to thickness or length to width greater than a specified value (see Terminology C 125).

   3.1.2 *flat and elongated particles of aggregate* – Those particles having a ratio of length to thickness greater than a specified value.

   3.1.3 *length* – Maximum dimension of the particle.

   3.1.4 *width* – Maximum dimension in the plane perpendicular to the length.

   3.1.5 *thickness* – Maximum dimension perpendicular to the length and width.

[1]This Test Method is based on ASTM D 4791-05 and has been modified per WSDOT standards. To view the redline modifications, contact the WSDOT Quality Systems Manager at 360-709-5412.

4. Summary of Test Method

4.1 Individual particles of aggregate of specific sieve sizes are measured to determine the ratios of width to thickness, length to width, or length to thickness.

5. Significance and Use

5.1 Flat or elongated particles of aggregates, for some construction uses, may interfere with consolidation and result in harsh, difficult to place materials.

5.2 This test method provides a means for checking compliance with specifications that limit such particles or to determine the relative shape characteristics of coarse aggregates.

6. Apparatus

6.1 The apparatus used shall be equipment suitable for testing aggregate particles for compliance with the definitions in Section 3.1, at the dimensional ratios desired.

6.1.1 Proportional Caliper Device – The proportional caliper devices illustrated in Figures 1, 2, and 3 are examples of devices suitable for this test method. The device illustrated in Figures 1 and 2 consists of a base plate with two fixed posts and a swinging arm mounted between them so that the openings between the arms and the posts maintain a constant ratio. The axis position can be adjusted to provide the desired ratio of opening dimensions. Figure 1 illustrates a device on which ratios of 1:2, 1:3, 1;4, and 1:5 may be set. The device illustrated in Figure 3 contains several fixed posts and has the capability of measuring various ratios simultaneously.

6.1.1.1 Verification of Ratio – The ratio settings on the proportional caliper device shall be verified by the use of a machined block, micrometer, or other appropriate device.

6.1.2 Balance – The balance or scales used shall be accurate to 0.5 percent of the mass of the sample.

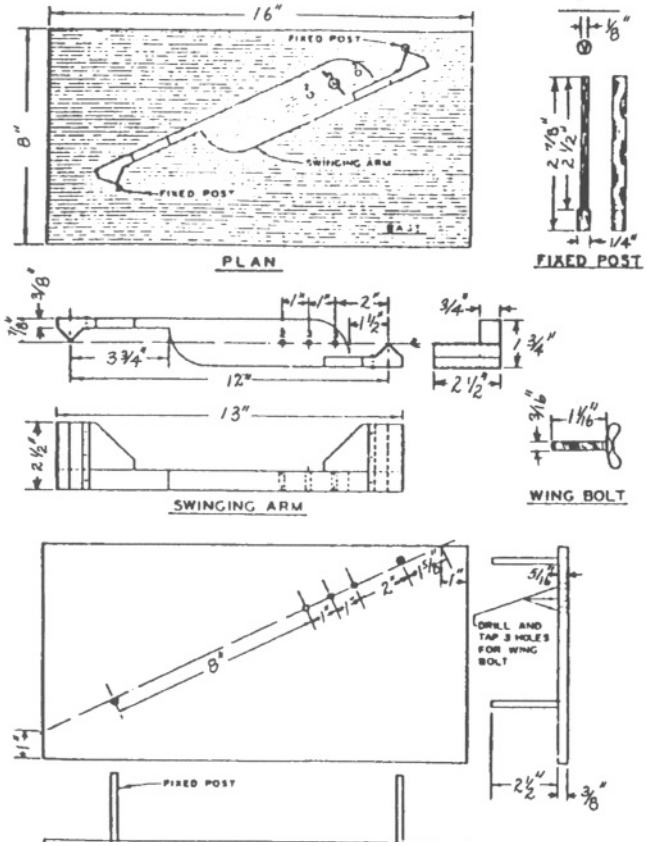

Proportional Caliper
Figure 1

7. Sampling

7.1 Sample the coarse aggregate in accordance with in FOP for AASHTO T 2. The mass of the field sample shall be the mass shown in FOP for AASHTO T 2.

7.2 Thoroughly mix the sample and reduce it to an amount suitable for testing using the applicable procedures described in FOP for AASHTO T 248. The sample for test shall be approximately the mass desired when dry and shall be the end result of the reduction. Reduction to an exact predetermined mass shall not be permitted. The mass of the test sample shall conform to the following:

Nominal Maximum Size* Square Openings, in (mm)	Minimum Mass of Test Sample, lb (kg)
⅜ (9.5)	2 (1)
½ (12.5)	4 (2)
¾ (19)	11 (5)
1 (25.0)	22 (10)
1½ (37.5)	33 (15)
2 (50)	44 (20)
2½ (63)	77 (35)
3 (75)	130 (60)
3½ (90)	220 (100)
4(100)	330 (150)
4½ (112)	440 (200)
5 (125)	660 (300)
6 (150)	1100 (500)

*For aggregate, the nominal maximum size, (NMS) is the largest standard sieve opening listed in the applicable specification, upon which any material is permitted to be retained. For concrete aggregate, NMS is the smallest standard sieve opening through which the entire amount of aggregate is permitted to pass.

Note: For an aggregate specification having a generally unrestrictive gradation (i.e., wide range of permissible upper sizes), where the source consistently fully passes a screen substantially smaller than the maximum specified size, the nominal maximum size, for the purpose of defining sampling and test specimen size requirements may be adjusted to the screen, found by experience to retain no more than 5 percent of the materials.

8. Procedure

8.1 If determination by mass is required, oven dry the sample in accordance with FOP for AASHTO T 255. If determination is by particle count, drying is not necessary.

8.2 Sieve the sample to be tested in accordance with FOP for AASHTO T 27/11. If the material retained on each required size (⅜ and larger) is more than 5 percent of the sample, reduce the material in accordance with FOP for AASHTO T 248 until approximately 100 particles are obtained for each required size.

8.3 Flat and Elongated Particle Test – Test each of the particles in each size fraction and place in one of two groups: (1) flat and elongated or (2) not flat and elongated.

8.3.1 Use the proportional caliper device, set at the desired ratio.

8.3.2 Measurement

8.3.2.1 On proportional caliper devices similar to the devices shown in Figure 1 and Figure 2, set the larger opening equal to the length of the particle. The particle is flat and elongated if the particle, (biggest to smallest) when oriented to measure its thickness (biggest), can pass completely through the smaller opening of the caliper when it is rotated in any direction.

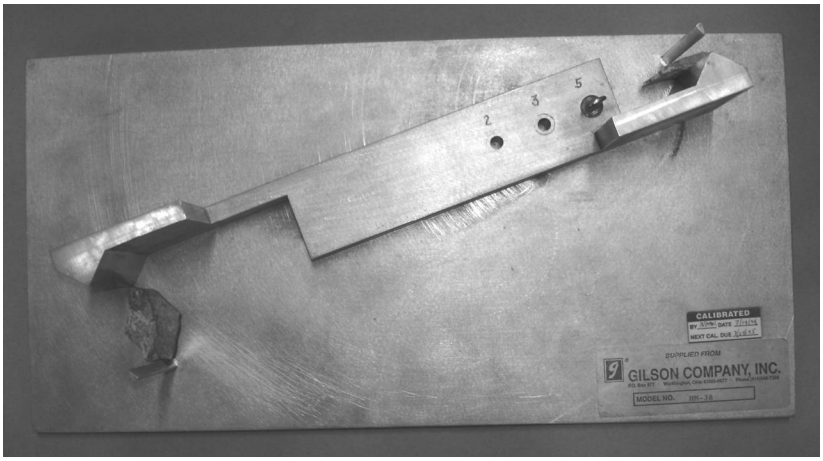

Use of Proportional Caliper
Figure 2

in	mm	in	mm	in	mm
⅛	3.2	⅞	21.2	2½	64.0
3/16	4.8	1	25.4	2⅞	72.0
¼	6.3	1 1/16	27.0	3¾	96.0
5/16	7.9	1½	38.0	8	207.0
⅜	9.5	1⅝	41.0	16	414.0

Metric Equivalents

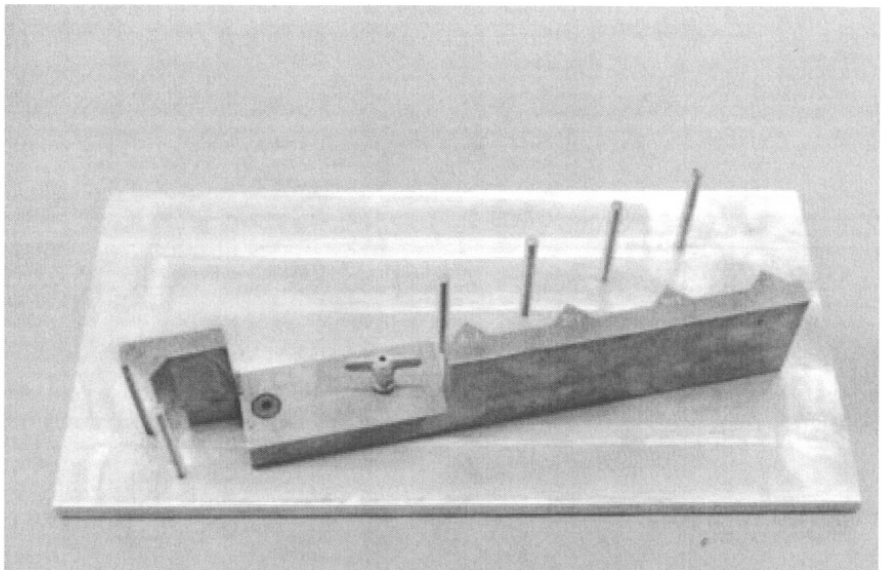

Proportional Caliper
Figure 3

8.3.2.2 On calipers similar to the one described in Figure 3, set the minimum dimension of the proportional caliper device such that the particle, when oriented to measure its thickness, passes snugly between the post and swing arm. The particle is flat and elongated if the particle, when oriented to measure its length, fails to pass the desired large opening of the proportional caliper device.

8.3.3 After the particles have been classified into the groups described in Section 8.3, determine the proportion of the sample in each group by count or mass, as required.

Note: WSDOT performs this test by weight.

9. Calculation

9.1 Calculate the percentage of flat and elongated particles to the nearest 1 percent for each sieve size than ⅜ in and larger (9.5 mm), as required.

10. Report

10.1 Include the following information in the report:

10.1.1 Identification of the coarse aggregate tested.

10.1.2 Grading of the aggregate sample, showing percentage retained on each sieve.

10.1.3 For flat and elongated particle tests:

10.1.3.1 Percentages, calculated by number or by mass, or both, for flat and elongated particles for each sieve size tested.,

10.1.3.2 The dimensional ratio used in the tests.

10.1.4 When required, weighted average percentages based on the actual or assumed proportions of the various sieve sizes tested. Report the grading used for the weighted average if different from that in Section 10.1.2.

10.2 Report results using one or more of the following:

- Materials Testing System (MATS)
- DOT Form 350-161
- Form approved in writing by the State Materials Engineer

11. Precision and Bias

See ASTM D 4791 for precision and bias statements.

Performance Exam Checklist

Flat and Elongated Particles in Coarse Aggregate
FOP for ASTM D 4791

Participant Name _____ Exam Date _____

Procedure Element	**Yes**	**No**
1. The tester has a copy of the current procedure on hand?	☐	☐
2. All equipment is functioning according to the test procedure, and if required, has the current calibration/verification tags present?	☐	☐
3. Field sample obtained per AASHTO T 2?	☐	☐
4. Sample thoroughly mixed prior to reducing to testing size?	☐	☐
5. Sample reduced to testing size per AASHTO T 248?	☐	☐
6. Mass of the test sample conforms to the table in Section 7.2, ASTM D 4791?	☐	☐

Procedure

1. If determination by mass, sample oven dried to a constant weight prior to mass determination?	☐	☐
2. Sample sieved per AASHTO T 27/T 11?	☐	☐
3. Proportional caliper device positioned at proper ratio?	☐	☐
4. Each size fraction ⅜ inch and larger retaining more than 5 percent of the original sample reduced per AASHTO T 248 until approximately 100 particles are obtained for each size fraction required?	☐	☐
5. Each particle of each size fraction tested for FLAT and ELONGATED using the proportional caliper device put in the appropriate group classification? (Flat and Elongated or Not Flat and Elongated)	☐	☐
6. Proportion of the sample of each sieve size determined by Mass?	☐	☐
7. Percent of Flat and Elongated particles figured to the nearest 1 percent for each sieve size?	☐	☐
8. Record number of particles in each sieve size tested?	☐	☐
9. Record percentages calculated by Mass?	☐	☐
10. All calculations performed correctly?	☐	☐

First Attempt: Pass ☐ Fail ☐ Second Attempt: Pass ☐ Fail ☐

Signature of Examiner _____

Comments:

Chapter 10 Documentation

10-1 General

10-1.1 Introduction

This chapter is intended to provide a reference and to act as guidance for the project office in the keeping of Construction Contract Records. While there may be differing needs or circumstances that must also be met within each project office, it is intended that this guidance be used to help identify the minimum requirements that are necessary in order to establish an adequate method of record keeping. These minimum requirements also help to establish a basic level of uniformity among all project offices statewide. This can help to facilitate the review of records by others and promotes greater efficiency when engineering personnel are transferred or reassigned between different projects or even different project offices. If a clear method of record keeping can be identified prior to the beginning of work, then original field notes and records can be easily prepared and maintained as the work progresses. This will also help to reduce the effort required to produce the final contract records upon completion of the project.

Successful contract documentation requires that measurements and calculations supporting contract payments are accurate and that records of these actions are complete. Contract records and documentation must be sufficiently detailed and maintained in a manner that will withstand an audit and be clear enough to be read and understood by anyone unfamiliar with the project. The Project Engineer is responsible to ensure that these accurate and complete records are maintained for all construction project work. If questions arise or assistance is needed, the statewide Documentation Engineer and the Regional Documentation Engineer are both available as resources for the Construction Project Office's use.

It is recommended that original field notes be kept in a form that can be filed and retained as basic documentation. Field notes taken on scratch paper and then passed to the office should not be considered as acceptable documentation. Transcription of field notes to final record form should be avoided due to the possibilities of error and the unnecessary cost of duplication.

All personnel are responsible to ensure that notes are made correctly and are complete with all pertinent information. Sample notes have been included with this chapter and are intended as a guide or reference in preparing final record notes.

Facsimile machines, scanned documents, and electronic mail are normal business practices in most state and private offices. It is acceptable to take action on these types of correspondence; however, in order to properly document and follow the conditions noted in the contract, exchanging or mailing original copies of the documents should follow up all facsimile, scanned documents, and electronic mail. This is especially true for any item that requires a commitment by either the Contractor or the Washington State Department of Transportation (WSDOT). Follow-up mail copies are required for all issues that require an original signature.

Documents which must stand up in a court of law or meet the requirements of a State or Federal Audit require a signature.

A signature, whether digital, electronic, or hand-written, is primarily a symbol signifying intent and identifying those who worked on the documentation record. Now that we are conducting a substantial portion of our business via the computer, each individual should become familiar with those documents which require an original signature and which are acceptable with a printed/computer generated name.

Chapter 11 lists the various electronic construction forms made available by WSDOT. These forms may be used to record, document, and make payment for construction activities and materials on WSDOT construction projects. The forms are categorized by:

- Those persons responsible for completing the form (e.g., project office, Contractor, Materials Lab).
- Whether an original signature is required or a printed/computer generated signature is acceptable.

The State Construction Office encourages the project offices to utilize electronic resources to aid them in their work, and does not wish to stifle creativity in the use of those electronic media. However, it is important to be able to identify an original document, who created it, and to maintain a consistent approach to documentation throughout the State in order to meet the requirements of the contract, an audit or a court of law. Keep in mind that as much as we may wish to have a paperless project, it is very unlikely to occur in the near future. The use of electronic records and signatures is voluntary. Government agencies that accept electronic records and signatures must also accept paper documentation from citizens and businesses, unless otherwise provided by statute.

10-1.2 Requirements for Notes

Documentation of contract items that are not specifically covered by the sample field notes can, in most instances, be created using the examples as a guide for similar items. The following notations should be carefully observed for correct procedure:

1. Each set of notes should contain the date when they were made and the initials of the persons making them.
2. Each set of notes, except staking notes, should contain the date when the phases of work are accomplished, the initials of the persons who compute and check the quantities noted, the dates when the quantities were computed, the dates when the computations were subsequently checked, the locations where the work was performed, and the corresponding group number.

3. When field notes are used as the basic source document in supporting a payment to the Contractor, they must include the date and initials of the person making the entry into the project ledger, the person verifying the entry, and the six-digit entry number.
4. Each pay quantity identified in the field notes should be designated with the corresponding item number and correct item name listed in the contract.
5. It is recommended that the correct field book or loose leaf sheet always be used for the particular kind of work being staked or measured.
6. The degree of accuracy required for computing unit quantities should be consistent with standards established in Section 10-2.1B.
7. It is recommended that sets of field notes and field books be numbered and titled in order to prevent their loss and to aid in tracking payments and their supporting information.

10-1.3 Source Documents

Field notes are one of the many items that might be considered as a Source Document. It is recommended that all field notes, base line notes, centerline notes, and grade books be recorded in bound books. If looseleaf books are to be used, care must be exercised to prevent lost pages.

Notes should be recorded in a manner that is neat, clear, uncrowded, and in sufficient detail so as to be easily understood.

Original entries later determined to be in error must Not be obliterated by erasing, application of correction fluid, taped over, or in the case of computer generated documents, deleted. Instead, a line should be cleanly drawn through the mistaken entry and corrections entered directly above with the date of the correction and the initials of the person making the change. This is very important, as erasures, or deletions will destroy the legal standing of notes. When revisions require abandonment of a considerable portion of notes, they shall be crossed out and a cross reference made of the book and page number where the revised notes may be found.

Each Final Records book should be labeled and contain a title page using DOT Form 422-009 and 422-009B. Each book is to be numbered and a table of contents included on the first page following each book's title sheet. It is essential that original field notes and documents be carefully organized, kept, recorded, and maintained in safe filing facilities during the active stage of a project. These documents should be transferred to safe, adequate, and recoverable storage after the contract is completed. At all times, when not in use, all source documents, reports, survey notes, etc., should be kept in fire resistant files where possible. Additional information on source documents can also be found in Section 10-4.2.

10-2 Measurement of Items of Work

10-2.1 General

10-2.1A Introduction

It is essential that the Project Engineer ensure proper controls are exercised when measuring items of work. The Project Engineer should also ensure that payments are not made for any item that cannot be substantiated by the project records regardless of the work's stage of completion. Items that are paid on the basis of weight or truck volume require measurement of the quantities involved, evidence for receipt of the materials, and documentation for both of these operations through the use of item quantity tickets or other delivery records.

10-2.1B Quantity Details

The number of significant decimal places to which quantities should be measured and/or computed varies with the value or unit bid price of the respective items involved. Unless advised otherwise, the Project Engineer should use the following guidelines.

Bid Price	Significant Decimal Per Unit
Less than $10 per unit	1.
From $10 to $100 per unit	0.1
Over $100 per unit	0.01

Quite often, good practice would dictate that the various parts of a particular quantity be calculated to a higher significant decimal place or in some other unit, a unit other than that used for payment, and then be converted to the payment unit in the summation. Good judgment should be used in selecting when to actually apply rounding to the quantity. In general, it is considered proper to apply rounding at the first summation of each isolated part. For example, at the summation of a day's item quantity tickets the quantity to be recorded should be rounded to the proper significant decimal place and the rounded quantity recorded into the project ledger.

10-2.1C Item Quantity Ticket

A three-part Item Quantity Ticket (IQT) DOT Form 422-021 has been developed for use as a tool in documenting the many items that are paid for on the basis of quantities of materials or other bid item services that are received at the project site. An example of an IQT can be found in Figure 10-1. When using either the State provided IQT or Contractor provided IQT, the Project Engineer should ensure that the items noted below, identified as minimum required information for documenting receipt of materials and for supporting payment of those materials, are completely filled out on each IQT utilized. Additional information may be added to the item quantity tickets at the option of the project office. However, this additional information would be intended only as a convenience for project staff in their work monitoring material use. The Project Engineer should also ensure that the carrier transporting each load of material or the person responsible for the particular contract bid item or service is issued an item quantity ticket for each delivery of the material or service to the jobsite.

In lieu of using DOT Form 422-021, tickets may also be furnished by the Contractor, commercial scale companies, or suppliers at commercial plants or material sources.

These tickets are sometimes electronically produced. In some instances these tickets can be programmed in advance of the hauling to accurately print, on each ticket, the minimum required information as noted below. While this can be done by the Contractor in an effort to cooperate with the project office towards successful completion of the project, the Project Engineer must ultimately ensure that the minimum required information is accurately noted on each ticket.

The following minimum required information is to be recorded on each State-provided IQT, Contractor provided IQT, or IQT's produced by fully automated scales:

- Contract Number
- Date
- Contract Unit Bid Item No.
- Initials of person accepting the item on the jobsite
- Unit of measure
- Identification of hauling vehicle, as appropriate
- Record of the gross, tare, and net weights. If the scale has a tare beam so that the net weight can be read directly or when using batch plants or storage silos with direct reading scales, only the net weight need be recorded. If the unit of measurement is cubic meters, cubic yards, hours, etc. only the net amount need be recorded.

In addition to this minimum required information, there are a number of other items that could also be included on the item quantity tickets. While this information is helpful to others who may also be using these same tickets for monitoring materials, materials placement, or other issues, this additional information is not required for documentation supporting payment for materials received. Placing this information on item quantity tickets can be helpful, but is solely at the option of the project office. Some of these optional items may include:

- The Group, Station, Mile, or Kilometer of material placement or use can be noted to help identify material's location on the jobsite. It can also be used to help identify group payment.
- Contractor/Subcontractor completing the work represented by the ticket noted
- Cumulative totals for the day
- Pit number identifying the source of the material
- Time weighed and initials of the person issuing the ticket
- Time materials or services are received on the jobsite
- Description of the material that matches the unit bid item name
- Ticket serial number, etc.

A representative of WSDOT should be assigned as a receiver at the delivery site or at the site where the item is to be placed. The receiver should collect the tickets from the carrier upon delivery of the ticketed material, record any required or additional information on the ticket as necessary, and retain the original copy for payment. When using Contractor or State provided multiple part tickets, the Contractor's representative should be provided the copy marked "Contractor" either upon delivery or at the end of each day's operation.

For materials or services that are not paid for by weight, the receiver should complete the ticket at the point of delivery. The appropriate items identifying the material or bid item service, the quantity, and its placement should then be filled in.

Payment and documentation of materials received should be based on the original tickets received at the project site. Any tickets that may be identified as missing should be reconciled immediately with the Contractor so they will not be in contention for payment at a later date. Unless the Project Engineer decides otherwise, when using the State provided item quantity tickets it is not necessary to retain the goldenrod or "Book" copy. Once the Contractor has been provided with the green copy of the ticket marked "Contractor" and the white copy of the ticket marked "Original" has been reconciled and approved for payment, the goldenrod or "Book" copy may be discarded.

10-2.1D Conversion Factors

Where the plans require a weight measurement for minor items of construction, the Contractor may request permission to convert volume to weight. When approved by the Engineer, an agreed factor may be used to make this conversion and volume may be used to calculate the corresponding weight for payment. The provisions for this conversion factor can be found in *Standard Specifications for Road, Bridge, and Municipal Construction* M 41-10 Section 1-09.2(5). When using a conversion factor, the Project Engineer must perform adequate tests and retain supporting data establishing the conversion factor or new price quotation. A letter of agreement or change order for the conversion factor is needed.

10-2.2 Items Measured by Weight

10-2.2A General Instructions

All materials paid on the basis of weight are to be weighed in accordance with the provisions of the *Standard Specifications*. When commercial scales are used a representative of WSDOT will periodically observe the weighing operation and scale check procedures. These periodic reviews are to be unscheduled and not less than twice a week. Both WSDOT and commercial scale operators will record the necessary weights and information on Item Quantity Tickets in accordance with Section 10-2.1C.

In accordance with *Standard Specifications* Section 1-09.2(1), WSDOT and commercial scale operators will verify the scales in accordance with *Standard Specifications* Section 1-09.2(5). Several times each day the operator will also make certain the scale balances and returns to zero when the load is removed. The results of scale testing conducted by both WSDOT and commercial scale operators including determination of scale variance, AM/PM tare weights where needed, and intermittent scale balancing are to be recorded for each day's production on the Scaleman's Daily Report DOT Form 422-027. These reports representing each day's production are to be submitted to the engineer daily.

When platform scales are used the scale platform shall be of sufficient length to weigh the entire hauling vehicle or combination of connected vehicles at one time. When needed for gross weight determinations, tare weights for each truck are to be taken at least twice daily and recorded on a tare sheet, scaleperson's diary, or shown on the Scaleman's Daily Report. When using a tare beam scale, the tare weight for each individual truck is to be set on the beam at the time of weighing.

For most materials, material and tare weights will be measured to the nearest 100 pounds. In determining quantities for materials produced from batch type mixing plants, where individual components of each batch of materials are weighed before mixing, the batch weights are acceptable for measurement and payment.

When placing surfacing materials, gravel backfill, riprap, and other similar materials the preferred method for acceptance of quantity is by Item Quantity Tickets. However, where it is reasonably certain that no diversion or substitution of materials can occur, or where an alternative method of calculating the approximate quantity received can be devised, the requirement for issuing and receiving a weight ticket for each individual truckload can be waived. The Project Engineer must approve the use of this procedure in advance of the hauling operation and document to the file the reasons for doing so. In making this decision the Project Engineer should review the risks and the benefit/costs for altering the standard method for receipt of materials. Among other things, this review could include labor savings, the proximity of the scale location to the point at which the materials are to be received, the potential or risk for diversion or substitution of materials, efforts made to mitigate those risks, as well as the methods used to verify the quantities of materials that are received. If an alternate method for receipt of materials is approved it must include provisions for keeping a scale sheet where the weights for each load are recorded along with the other information normally required for an Item Quantity Ticket. The method must also include a procedure for validating the quantities indicated by the dispatch record as being received. This might be a tally sheet, maintained at the project site, showing the arrival of each load. Another method might be a calculation of neat-line volume, which could be compared with weighed quantity to disclose a reasonable conversion factor. In any method, an occasional random check of a loaded vehicle will be needed to provide validation of both the weigher and the scale.

10-2.2B Weighing of Small Quantities

It is recognized that there are certain instances involving small quantities of weighed materials where commercial scales are not reasonably available or where the Project Engineer is unable to staff a WSDOT scale operator to weigh materials at a Contractor provided scale. In these instances where materials are received intermittently throughout the day and the quantities amount to less than 200 tons of untreated materials or 100 tons of treated materials per day, the Project Engineer may choose to receive the material on the basis of weights supplied by the Contractor or supplier. The Project Engineer should ensure that an Item Quantity Ticket is filled out completely and signed by the person who is the weigher of the material. A Scaleman's Daily report is not required for the weighing of these small quantities of materials. Under these conditions, the acceptance of the material will depend entirely on the judgment of the receiver. The receiver of the material should observe the load to ensure the quantity of material shown on the weight ticket appears to be reasonable. The receiver should note this observation in the remarks section on the weight ticket supplied by the Contractor.

The Project Engineer should use their professional judgment in limiting the use of Contractor provided weights. This provision is provided to the engineer so that effective scheduling of WSDOT forces can be made in order to meet other project inspection demands. Every effort should be made to use either a WSDOT or a commercial scale operator while limiting the use of this provision to only those instances that require this action.

10-2.2C Weighing Equipment

Scales for the weighing of natural, manufactured, or processed highway and bridge construction materials that are required to be proportioned or measured and paid for by weight, are to be furnished, erected, and maintained by the Contractor, or be permanently installed, certified, commercial scales. All weighing equipment and scale operations must meet the specific requirements noted in *Standard Specifications* Section 1-09.2.

10-2.3 Items Measured by Volume

10-2.3A Truck Measure

Except as noted below, when materials are measured and paid on the basis of volume delivered in trucks, the Project Engineer should ensure that a receiver is assigned at the point of delivery to issue or receive load tickets and to make periodic computations of yield where applicable.

Item Quantity Tickets (see Section 10-2.1C) should be used for recording the volume of materials paid on the basis of truck measure. The tickets should include all information previously noted as required for materials measured by weight, with the substitution of measured volume in place of measured weight to be shown as the quantity received.

Surfacing Material, Gravel, Topsoil, Etc.

In lieu of issuing individual load tickets when surfacing materials, gravel backfill, top soil, etc., are measured and paid for on the basis of volume delivered in trucks, it is acceptable for the Project Engineer to maintain a field book record showing a recording for each delivery, issuing one ticket for the total amount delivered for each item at the end of each work shift. The field book record will show the truck number, time of delivery, and volume for each load. The ticket issued shall show all pertinent data including reference to the field book number.

In documenting the size of loads received, ensure the following procedures are followed:

1. The volume of the truck box of each hauling conveyance will be calculated and recorded for final records to the nearest 0.1 cubic yard based on a struck or water level height for the leveled load. The volume may be calculated by using a measurement of the truck box (either from the interior or exterior of the bed) using any standard measurement method. This measurement may be performed by a representative of the Engineer or by the Contractor, as verified by the Engineer. The calculation may also be made based upon verified Manufacturer's truck bed dimensions supplied to the Contractor by the Manufacturer, or by filling the truck bed and measuring the volume of a full load after it is dumped. Although State law requires 6 in of freeboard on loaded aggregate material trucks, the actual quantity hauled or calculated may exceed the measured capacity. This is due to the normal practice of heaping material in the center of the load.

2. The material receiver should have sufficient loads leveled at the point of delivery in order to judge consistency in the quantity being hauled.
3. Load volume will be recorded to the nearest cubic yard for pay purposes using the volume computed in part (1) above. If the Inspector questions whether a truck is fully loaded, the load will be leveled. If the vehicle is not fully loaded, the Inspector will measure and document the actual load to the nearest cubic yard.

Water

In order to document the amount of water delivered to the project, a Water Delivery Record DOT Form 422-024) should be maintained showing all pertinent information including time, volume, location of delivery for each load, contract number, and truck number. If the driver maintains the Water Delivery Record, it should be signed by the truck driver or the Contractor and initialed by the Inspector. Daily spot checks should also be completed verifying the quantities being delivered. When performed, random spot checks should be noted on the Delivery Record itself. At the end of each work shift an Item Quantity Ticket should be issued to cover the water delivered to the project that day. The Water Delivery Record should be maintained in a manner that allows it to be easily referenced to the corresponding WSDOT copy of the Item Quantity Ticket used for payment.

The Project Engineer should ensure that the capacity of each water truck is determined by measuring or weighing, and is recorded in the project records. It is recommended that copies of the truck identification and capacity records be attached to the water ticket book to ensure the information is available to the field Inspector.

When water meters are installed at the discharge point for hydrants or water trucks, the Inspector should record the meter reading at the beginning and end of each shift and issue a ticket for the net quantity of water placed in accordance with contract specifications for the item. The Project Engineer should also ensure that the meters are checked for accuracy and that the checks are recorded in support of payment documentation.

10-2.3B Cross-Sections

Many excavation items are measured by field cross sections and/or template notes. The Project Engineer should ensure that the project is staked and measured accurately in accordance with guidance noted in the “Basic Surveying” manual and utilizing sound engineering practices. As a minimum, the field notes should show the date the data was taken, weather, Crewmembers, and their assigned duties. When re measurements are required, it is important that the same base line and elevation datum be used.

Documentation of volume measurement for excavation areas which require original and final measurements, should contain cross references between the original notes and the re-measure notes. Also references should be made to the transit notes and elevation datum for that excavation area.

10-2.3C Neat Line Measurement

Some items, such as concrete volumes, are paid based on dimensions detailed in the plans. For these items, the quantities need to be calculated and the calculations made a part of the record. If additional sketches or dimensions are also required in order to compute the quantities, these should be included in the records as well.

Other items, such as structure excavation and gravel backfill, are measured for payment using neat line volumes based on plan dimensions as a maximum limit. These items require field measurement to determine pay quantities that may be less than neat line maximums. Many times, sketches with the dimensions shown are desirable. The dimensions should show the limits of the actual work, except when these limits exceed the maximum allowed for payment, then the dimensions should be limited to the maximum allowed.

10-2.4 Items Measured by Hour/Day

When contract items are to be measured and paid for on an hourly or daily basis, the Project Engineer is to ensure that a WSDOT representative is assigned to verify the hours or days of payment, and issue Item Quantity Tickets or other verified field note records. At least one ticket should be issued at the end of each work shift or working period. The Project Engineer should ensure that tickets show all pertinent information for the item involved. Some items measured by the hour may be eligible for payment during non-shift hours; for example, a 24-hour flashing arrow used for lane closures or detours in effect during nonworking hours. In these situations, an Item Quantity Ticket for one shift may show more hours for payment than are actually available within the shift.

In order to ensure agreement on the hours or days of work performed, Item Quantity Tickets for items of work measured by the hour or by the day should be initialed by the Inspector and signed by the Contractor's representative on a daily basis.

10-2.5 Items Measured by Lump Sum

For items that are to be paid on a Lump Sum basis, the project records should identify the item, the date that the material was received, and/or the date work was accomplished. This can be accomplished by ensuring that a field note record is made showing the dates work was performed, has the initial of the Inspector, and shows the work to be 100 percent complete. A field note should also be used to show any estimated portions for progress payment of a Lump Sum amount prior to 100 percent completion. It must include the basis on which any quantities used for progress estimate payments were calculated.

10-2.6 Items Measured by Other Units

10-2.6A Linear Measurement

Records for materials measured by length should show the length measured, initials of the persons making the measurements, and the date measured.

For features, such as guard rail and barrier, that are paid by length and which contain repetitive elements or units, the length may be "measured" by calculation. In other words, if the length of a single element is known, then the number of elements may be counted and multiplied by that amount and a total "measured" length determined. Care should be taken to account for odd length elements, such as end sections and custom-fabricated pieces, and for areas where elements overlap or gaps exist.

Records for measurement should also include the beginning and ending stations of the work, recorded by the Inspector or person making the measurement, tying the work to its location on the project. The dates of construction should also be recorded.

10-2.6B Area Measurement

Records for materials or work measured by area should show the length and width measured or otherwise determined, initials of the persons making the measurements, and the date measured. In many instances a sketch of the area with the measurements would be very helpful in showing the computed area. The dates of construction should also be recorded.

10-2.6C Per Each Measurement

Records for materials or work measured per each unit should provide a listing showing the location of each item constructed, dates constructed, and initials of the Inspector or person measuring the item.

10-2.7 Items Bid at "No Charge"

Normal documentation procedures are not required for items bid at "no charge" if the items do not physically constitute a portion of the finished work. However, notes in the diary or Inspector's Daily Report are necessary to show when the work was done. Examples of these items might include water, haul, and embankment compaction.

For items bid at "no charge" which physically constitute a portion of the finished work, normal documentation procedures, such as Item Quantity Tickets or cross sections, are required to show how the item was incorporated into the project. Examples of these items might include layering materials and prime coat aggregate.

10-3 Final Records for Projects Constructed by Contract

10-3.1 Records

These records consist of field books, Inspector's record of field tests, project and Inspector's diaries, Inspector's Daily Reports, invoices, weigh bills, contaminated material disposal bills, Item Quantity Tickets, receiving reports, project ledgers, mass diagrams, plotted cross-sections, computer listings, working profiles, and any other documents that could be considered a basis of payment for work performed or materials furnished. All records that are created during the administration of a construction project can be placed in one of two categories, *Permanent Records*, records kept by the Headquarters and State Archives for future reference, and *Temporary Records,* records kept by the Region for a limited period of time after which they are discarded by the Region.

10-3.1A Permanent Records

The Region should ensure that those records designated as *Permanent Records,* records that are to be permanently filed, are assembled as a portion of the overall project final records DOT Form 422-012 should be completed and affixed to each final record book when submitted with the files to Engineering Records for filing. The address for Engineering Records may be found on the most current version of DOT Form 722-025. All final records sent to Engineering Records for filing will be kept permanently as the Permanent Final Records for the completed project.

All final record books prepared for *Permanent Final Records* are to be numbered as outlined below.

Permanent Records consist of the following:

Records provided by Headquarters:

- Contracts
- Change Orders
- Contract Estimate Payments

Records provided by the project office in books numbered as follows:

1. Final Records Book No. 1 (See Section 10-3.5 for requirements)
2. Project Engineer's Diaries (Using DOT Form 422-014 or 422-004)
3. Inspector's Daily Reports
4. Traffic Surveillance and Contractor's Daily Report of Traffic Control Summary and Log
5. Pile Driving Records
6. Post Tensioning Records
7. Contaminated Materials Disposal Bills

8. Miscellaneous Records
   - Full size (22 inch × 34 inch) electronic or paper As-Built Plans and Completed Contractor Provided Shop Drawings. Offices that chose to submit paper As-Built Plans and Shop Drawings should submit them in rolls (not in books/not bound)

10-3.1B Temporary Final Records

All records designated as *Temporary Final Records* are to be retained within the Region for a period of three years after which they may be destroyed. If a claim, lawsuit, or other circumstance is found to be pending at the end of this three year period, the Region should further retain those pertinent records until the issues have been resolved. The Region should ensure that those records designated as *Temporary Final Records* are also assembled as a portion of the overall project final records. The date for the beginning of this three-year retention period for State-funded projects is the Acceptance Date; the date the State Construction Engineer signs the Final Contract Voucher Certification accepting the project. If Federal funds are involved in the project, the date for the beginning of this three-year retention period is the date that FHWA accepts the final payment voucher. The Headquarters Accounting and Financial Services Division will send a Retention of Records on Federal Aid Projects letter to the Region that specifically indicates the retention period.

The following list contains some of the items that may be kept as *Temporary Final Records*. This listing is not a complete listing of all the possible items that could be grouped into this category. In short, *Temporary Final Records* consist of all project records that are not kept as *Permanent Final Records*. If *Temporary Final Records* are kept in numbered books then, in order to eliminate confusion with *Permanent Final Records*, these books are to be numbered consecutively beginning with Book Number 9. Examples of *Temporary Final Records* include:

- Item Quantity Tickets
- Project Engineer's Copy of Estimates
- Project Correspondence
- The original Project Personnel and Signature Listing
- Inspector's Record of Field Tests
- Scaleman's Diary and Scale Checks
- Scale Test Reports
- Concrete Pour Records
- Record of Field Audits
- Approval of Source of Materials
- Quantity Computation Sheets
- Surfacing Depth Check Records
- Copies of Shop Drawings
- Contractor's Payrolls (Federal Aid Projects)
- FHWA Form 1589 (ARRA Projects)
- Source document files
- Alignment (Transit) Book

- Grade Book
- Cross-Section Notes
- Drainage Notes
- Photographs
- Mass Diagrams
- Computer Summary Sheets
- Computer Listings
- Falsework and Form Plans
- Daily Report of Force Account Worked
- Quarterly Report of Amounts Credited DBE Participation
- Quarterly Report of Amounts Paid MBE/WBE Participants
- Washington State Patrol Field Check list

10-3.1C Electronic Documents Filed With Temporary/Permanent Records

Documents created electronically that do not require an original signature may be kept in an electronic file cabinet during the life of the contract, and if they are not part of the permanent records, they may be placed on a CD and included in the temporary files. No hard copies are necessary.

Documents created electronically that require an original signature and which are to be included in the permanent final records package may be kept in an electronic file cabinet during the life of the contract; however, original hard copies must be provided as part of the permanent records package. CDs are not acceptable.

Documents created electronically that require an original signature and which are not part of the permanent final records package may be kept in an electronic file cabinet during the life of the contract, placed on a CD for the temporary files and the original hard copies destroyed at contract Acceptance or at the end of the three-year retention period.

10-3.2 Contracts

The original signed contract documents are maintained in the Contract Processing Section of the State Accounting Services Office during the active stage of a contract. After final payment has been made, Accounting sends these documents to Records Services for permanent filing.

10-3.3 Change Orders

Approved change orders are a legal part of the contract documents and are treated just like the original contract documents. For a complete discussion of change orders, see Section SS 1-04.4, Changes.

10-3.4 Contract Estimate Payments

Documentation of contract estimate payments is facilitated by use of the electronic Contract Administration and Payment System (CAPS) which includes both the monthly progress estimates and the final estimate. For a complete discussion of the contract estimate process, see Section SS 1-09.9, Payments. Specific information on the final estimate package is found in Section SS 1-09.9, Final Estimates. After final payment has been made, Accounting sends these documents to Records Services for permanent filing.

10-3.5 Final Record Book No. 1

Final Record Book No. 1 is the first book of the *Permanent Final Records* for a construction contract. It contains indices to the records that have been compiled for both *Permanent and Temporary Final Records*. It also identifies the people who worked on the project and provides specific summary information. Final Record Book No. 1 is to be signed by the Regional Administrator or designee. Final Record Book No. 1 should contain a title sheet DOT Form 422-009) and should be assembled with a semi rigid, water resistant cover.

The following records are to be incorporated into Final Record Book No. 1 in the order as arranged below. No other material is to be included in this book.

1. **Index** –There are two indices referred to within Final Record Book No. 1. The first is an index or detailed listing showing the various sections of Final Record Book No. 1 itself. An example of an index for Final Record Book No. 1 can be found in Figure 10-2. The second index is actually the first section of the book. It provides a detailed listing of all records that have been kept and assembled for the project, including both *Permanent Records* and *Temporary Records*. An example of this listing or index for Section 1 can be found in Figure 10-3.
2. **WSDOT Personnel List** – Section 2 of Final Record Book No. 1 contains a copy of the listing of all WSDOT personnel assigned to the project and their classifications. Each person noted should place their identifying signature and initials after their name on the listing in the same manner as it appears in other final record documents. The project office may use Project Personnel Signature Listing DOT Form 422-001 for this purpose.
3. **Comparison of Quantities** – Section 3 of Final Record Book No. 1 contains this CAPS report prepared from the Final Estimate.
4. **Final Estimate Sheets** – Section 4 of Final Record Book No. 1 contains a copy of the Final Contract Voucher Certification.
5. **Contract Estimate Payment Totals** – Section 5 of Final Record Book No.1 contains a copy of this report obtained from the final estimate.
6. **Affidavit of Wages Paid** – Section 6 of Final Records Book No. 1 contains all Affidavit of Wages Paid received from the Contractor, subcontractors, lower tier subcontractors or suppliers performing work or providing certain products to the project.

7. **Change Orders** – Section 7 of Final Records Book No. 1 contains a listing of all Change Orders prepared for the completed project.
8. **Record of Construction Materials** – Section 8 of Final Records Book No. 1 contains a tabulation showing the source of all construction materials. If material of a certain type was obtained from two or more sources, the station limits or parts of a structure relative to each source should be shown. A copy of the maintained and completed Materials Tracking Program (MTP) Report per *Construction Manual* Section 9-1.2D shall be included.

When preparing the individual Final Record Books, other than Book No. 1, it is not necessary to label pages within each book. Where it is appropriate, a table of contents may be added to identify sections within a particular book.

10-3.6 Diary Records

Diary records consist of both the Project Diary(s) and the Inspector's Daily Report (IDR). Together they should provide a complete narrative picture of the project, covering both the normal work processes and anything unusual that might have occurred on the project. Diary records are to be included in the project's *Permanent Final Records*.

10-3.6A Project Engineer's Diary

A complete, well-kept Project Diary is a valuable administrative tool. It is a collection point for many of the project's pertinent facts arranged in any chronological order. It may show how questions were answered, how problems were solved, progress of the work, and unusual conditions pertaining to working days charged. It can provide data for analysis of both claims and requests for extensions of contract time. It is also available for reference long after the work is completed.

The Project Engineer should ensure that a Project Diary is kept current for every construction contract. It is recommended that the Project Diary be maintained primarily by the Project Engineer. However this responsibility may be delegated to the assistant Project Engineer or to the chief field Inspector. At a minimum, one Construction Project Diary is required for each project. The Project Diary should be used to record all matters of importance which are not covered by other routine reports or may contain a record of routine matters if the circumstances are unusual, conferences with the Contractor or the Contractor's field representative, agreements made, special notes regarding equipment or organization, labor conditions, weather or other causes for delays if of any consequence, and any other matters that might have a bearing on the completion of the project. To avoid keeping separate diaries and to avoid duplication, the Project Engineer and the principal assistant(s) may make entries in the same diary. Each diary entry should include the date of the entry and be followed by a signature or initials on the line immediately under the entry to identify the writer. The Project Engineer is responsible for ensuring the existence of a Construction Project Diary for each project.

10-3.6B Inspector's Daily Report

The Inspector's Daily Report (IDR) is a record of operations for a specific type of work on the project, such as surfacing, grading, paving, bridge, etc., which is being inspected by the writer. Page one of the IDR is a structured sheet of questions addressing identification of work operations and the associated labor and equipment being used to accomplish the work. This page should be filled out completely for all questions that pertain to the specific type of work activity being inspected. Page two is a narrative portion that should include a notation of any orders given or received, discussions with the Contractor, unusual conditions, delays in the operations, and the presence of any visitors. If an operation is being inspected which results in the partial payment of an item, the item should be identified along with the basis for calculating the partial payment. It is also of value to note the Inspector or Engineer's activities in the daily report.

The Project Engineer should ensure that the Inspector's Daily Report DOT Form 422-004, 422-004A, and 422-004B) are utilized for completing this daily report of activities. Each page of these forms is printed separately in a tablet in duplicate on NCR paper. Both types of tablets have the instructions printed on the tablet cover. The original copy is to be submitted to the Project Engineer each day.

If necessary, the Project Engineer should add comments or remarks on the original copies of the Inspector's Daily Reports to clarify the report. The duplicate copy of the report should remain in the book for the Inspector's immediate information and may be discarded when it is no longer useful for that purpose. The original copies of the Inspector's Daily Report should be included in the Final Records for permanent retention.

IDR Content

The IDR is intended to document communication, progress of work, Contractor workforce/equipment and materials sampling/acceptance. Keeping this in mind, the following are general rules for content of IDRs:

1. Remember that the IDR is part of the public record and may be called upon in case of litigation. The level of detail and professionalism exhibited may be of great benefit.
2. Do not make (or document) derogatory comments, as this is unprofessional behavior, and may be used to demonstrate that the inspector was hostile toward the Contractor and did not behave in a manner consistent with good faith.
3. All statements must be based on facts and requirements should reference the contract requirements.
4. All entries should be clear, neat, correctly spelled, and most importantly, legible.
5. Summarize key points of any discussion of work activities with the Contractor.
6. Be specific when recording information about work activities. Use drainage codes, exact bid item numbers, line and station limits, etc. Avoid referencing a co-worker's IDR, but if doing so, attach a copy.

7. Be specific when recording deliveries of materials to the project. Use bid item numbers, drainage codes, RAM number, etc. Record heat numbers, lot numbers, "Approved For Shipment" and "WSDOT Inspected" tags or stamps, etc. Using the IDR as materials documentation is acceptable. If used as documentation for acceptance, a copy of the IDR, with the appropriate items high-lighted, should be included with the materials documentation file.
8. Daily Equipment Status Reports should be complete and current.
   - Record all equipment, including any trailer or transport used to deliver equipment to the project.
   - Record the make, model and year of equipment. Request an equipment list from the Contractor and keep it updated. Photos make a good record of condition and configuration.
   - Record the exact bid item on which the equipment was working.
   - Understand the difference between down, idle, and standby time and use the correct term on the report.
   - Record crew composition (once a week or whenever it changes) along with the hours worked where practicable. This can be done on a separate IDR or in the narrative portion (page 2).
9. Record a chronology of events throughout the day, as they occur. Taking notes and transferring them to the IDR will work, but duplicates work and introduces an opportunity for error.
10. Record any potential delay, in as much detail as possible. Include start and end time, who was notified of the issue and when; along with any mitigating action by the Inspector or the Contractor.
11. Record every time the Contractor disagrees with a determination or protests a decision by the Engineer, and remind the Contractor to follow the process for protest as defined in the *Standard Specifications*.

Subject to the following, it is acceptable for inspectors to produce IDR's by recording information onto a recording device while at the job site for later transcription to a paper format.

1. All information required on the regular handwritten form must appear on the typed version.
2. The Inspector must read and sign the typed document. (It is desirable for this to take place within 24 to 48 hours of the reporting period. However, it is recognized that certain situations may not permit this time frame and therefore it is not mandatory.)
3. The Inspector may make and initial hand corrections to the typed document.

Please note that inspectors who use lap top computers can also produce electronic versions of the IDR document. The electronically produced document must be complete, including the Inspector identification block (the old signature block), consistent with the above criteria.

10-3.7 Record of Collisions and Traffic Control

10-3.7A Record of Collisions and Traffic Surveillance

In the past, all Record of Accidents (now known as Record of Collisions) received by the Project Engineer's office used to be included as part of the Permanent Records. Since collisions recorded by the WSP are now part of WSDOT's Transportation Data Office records (TDO), there is no need for a project office to keep Record of Collisions in either the Temporary or Final Records. If it is necessary to change traffic control as a result of a collision, the project office only needs to reference the record of collision report in either the Project Engineer's diary or Inspector's Daily Report. The Record of Collisions should only be used during the life of the project to augment decisions on changing traffic control plans during construction. It should be noted that Section SS 1-10, Temporary Traffic Control does not require a collision report be obtained for every collision that may occur within the project limits.

A separate file should also contain the records of traffic control surveillance prepared in accordance with Section SS 1-10, Temporary Traffic Control. Information in this file should be kept current and upon completion of the contract, submitted to Headquarters Engineering Records as a part of the project's *Permanent Final Records*. When the Washington State Patrol provides the Project Engineer with traffic control assistance they also provide the engineer with a WSP Traffic Control Checklist DOT Form 421-045. While this form is a part of the traffic control operations, it can be kept separately and made part of the Temporary Final Records.

10-3.7B Contractor's Daily Report of Traffic Control

The Contractor's Daily Report of Traffic Control DOT Form 421-040A and 421-040B), completed by the Contractor's Traffic Control Supervisor, should also be included as part of the project's *Permanent Final Records*. The Contractor's Daily Report of Traffic Control is discussed in more detail in Section SS 1-10, Temporary Traffic Control.

10-3.8 Pile Driving Records

The Pile Driving Record Book DOT Form 450-004 or Pile Driving Log DOT Form 450-004A should be included and made a part of the *Permanent Final Records*. The requirements for pile driving and pile driving records are further detailed in Chapter 6.

10-3.9 Post Tensioning Records

The Post Tensioning Record Book DOT Form 450-005 should be included and made a part of the *Permanent Final Records*. The requirements for post tensioning and post tensioning records are further detailed in Chapter 6.

10-3.10 Miscellaneous Records

Miscellaneous Records are, in general, optional records and may be included in the permanent records at the Project Engineer's discretion. This part of the records is intended for items that might be considered of added importance. This might include photographs of special features or construction methods, information regarding opening to traffic, dedication activities, or other documentation of particular importance. Placing these in the *Permanent Final Records* will make them a matter of permanent record where they will be retained for future reference.

Records of environmental contamination issues are not optional and should be included in Miscellaneous Records, except records of disposal of contaminated materials which are placed in Book 7.

10-3.11 As-Built Plans and Shop Drawings

As-Built Plans are a record of changes made to the originally intended physical product of the contract. As-Built drawings should reflect the same degree of detail as the original plan drawings. As-Built Plans are necessary as a way of preserving the historical detail of what occurred on the project. As-Built Plans can also be used as a basis to plan and design future projects in the same location and to make repairs to damaged structural components or other non-functioning facilities. In addition, state law requires that owners of "underground facilities" be able to locate these facilities within 24 inches of the outside dimensions. As-Built Plans offer a convenient means for recording these facilities.

10-3.11A Preparing As-Built Plans

Within two weeks after a contract has been awarded, the State Pre-Contract Administration Office or Printing Services Office will furnish the Region Office with one set of full size (22 inches × 34 inches) black line prints of the contract plans which will be marked "For As Constructed Plans Only." These plans shall be used by the Project Engineer solely for the purpose of preparing "As-Built Plans". All corrections, revisions, and additional sketches, necessary to depict the work as it was constructed should be shown on these plans. All As-Built plans must meet the same requirements no matter how they are produced. Corrections are to be made by lining out quantities or features that were changed during construction, then noting the correction or change in red ink. These corrections and revisions are to be noted on the plans in a manner that results in neat and legible sheets. A red pen that writes sharp, clear, and dark with a medium width line shall be used to mark these corrections. If desired, the changes may be further identified by placing them in a "cloud" symbol. Fine lined pens do not reproduce well when scanned and are not to be used. If electronic versions of these plans are available, corrections may be made on these plans, but must be noted electronically and plotted in a manner that produces these same results (i.e.: changes shown in red). If plan sheets from change orders are intended to be used as part of the As-Built plans, the changes should be made in red. Special care must be taken to ensure that changes in construction are noted on all contract plan sheets affected by the change. For instance, the change in location of a catch basin or manhole may affect the location listed in the structure note sheet, the drainage plan view sheet, and the drainage profile sheet.

As-Built plans for Design-Build contracts must meet the same requirements as any other set of As-Builts, unless specifically stated otherwise in the contract documents. This is to include formatting, file size, and naming conventions.

If concrete foundations are partially removed, the remaining portions of the foundations should be shown on the As-Built Plans. It is not required that the As-Built, Summary of Quantities sheets be revised to reflect final estimate quantities. Summary of Quantity sheets are to be marked identifying them as original plan quantities which are shown as preliminary estimates of work. It should also be noted that final As-Built quantities for individual unit bid items can be obtained from the final CAPS ledger for the project.

In order to help identify significant changes in work location or significant changes in the work completed at a particular location, the Quantity Tabulation sheets must be updated to show the actual physical feature items or the locations of installations where significant changes were made. Types of significant changes may include revisions to guardrail, guardrail termini, post types, anchors or anchor types, revisions to monuments, etc. The intent is to show what significant changes to the planned work were made. Except for significant changes to quantities of items used or items added at a particular installation, it is not necessary to update item quantities for actual quantities used. Final As-Built quantities for the individual unit bid items can be more accurately obtained from the final CAPS ledger for the project.

In order to help identify significant changes in work location or the significant changes in the structure work completed at a particular location, the Structure Note sheets must be updated to show the actual physical feature items or the locations of installations where these significant changes were made. Types of significant changes may include structure notes that were added or revised, pipe size and types that were changed, revised locations for catch basins, manholes, etc. The intent is to show what significant changes to the planned work were made. Except for significant changes to quantities of items used or items added at a particular installation, it is not necessary to update item quantities for actual quantities used. Final As-Built quantities for the individual unit bid items involved can be more accurately obtained from the final CAPS ledger for the project.

Correction tape may only be used to complete corrections or revisions made to the Quantity Tabulation and Structure Note sheets. Correction tape is not to be used for noting corrections on any other plan sheet of the As-Built plans. If electronic versions of these sheets are available, corrections noted electronically that clearly depict that a change has been made and plotted in a manner that produces these same results, is acceptable.

In addition to the requirements outlined above for As-Constructed or As-Built contract plans, the *Standard Specifications* also require that the Contractor furnish the Engineer with original reproducible tracings or drawings suitable for scanning or for use in correcting contract plans for; shop drawings, schematic circuit drawings etc. for Illumination, Traffic Signal Systems, and Electrical for shop drawings, including approved revisions for prestressed structural elements and all other structural steel components fabricated from shop plans. Specific requirements for these plans are outlined in *Standard Specifications* Section 6-02.3(26)A, 6-03.3(7), 8-03.3(10), and 8-20.3(17).

10-3.11A(1) Requirements for Submitting Paper As-Built Plans

Upon project completion, all "As-Built" plans are to be arranged in numerical sequence, including a cover sheet using DOT Form 722-025 (use only the most current version of the form which may be downloaded from the Forms Management web page), and submitted to the Headquarters Engineering Records office, where they will become a part of the project *Permanent Final Records*. As-Built plans are being scanned to the Oracle Content Management System by Records Management Imaging Services (RMIS). In order to achieve consistency, each Region shall:

- Submit as-built plan sheets with latest version of DOT Form 722-025 attached.
- Submit full sized plan sheets only.
- Make corrections in red.
- Submit any and all shop drawings with the roll(s) of as-built plans (not in books/ not bound).

Once the scanning process is completed, Engineering Records will recycle (shred) the submitted as-built plans.

10-3.11A(2) Requirements for Submitting Electronic As-Built Plans

As-built Plans and Shop Drawings can be electronically transferred from a CAD program as pdf files into the designated download site shown below. For each contract that a region submits electronically, a region staff member must be responsible for uploading and verifying all electronically transferred As-Built content. The staff member will also be responsible for informing HQ Engineering Records by email at recimages@wsdot.wa.gov that the plans have been placed on the download site. The staff member will wait for an email confirmation that HQ Engineering Records has received and processed the electronic plans into Oracle before the region staff member can delete the region's copy of the electronic As-Builts.

Format – PDF (non-editable)

Dpi – 300

Size – 22 in × 34 in (full size plan sheets)

As-built Plans – Mark each sheet with "FOR AS-CONSTRUCTED PLANS ONLY". This mark can either be a grey watermark applied to each sheet or stamped in red to each sheet.

As-built Sheet Contract Numbers – Each sheet should have the contract number applied, for example, "1234".

Naming Convention – Each pdf document must be named using the contract number, for example, "001234.pdf". If the contract is large, you would need to break it up in volumes no greater than 50 Mb each. An example of pdf naming with the contract number and volume for volume 1 of a 10 volume set would be "001234-Vol-1-of-10.pdf". An example of pdf naming for volume 10 of a 10 volume set would be "001234-Vol-10-of-10.pdf".

As-Built Cover Sheet – The plans will be transferred with a completed As-Built Cover Sheet form 722-025. This is what is used to key in the metadata. The form can be filled out electronically in FileMaker Pro, then saved as a pdf and transmitted with the As-Builts. The most current As-Built Cover Sheet form 722-025 is located at wwwi.wsdot.wa.gov/fasc/adminservices/forms/default.htm

Design Bid Build P.E. Stamps and Signatures – All appropriate WSDOT P.E. stamps and signatures as shown in awarded contract plans must be shown on As-builts.

Design Builder P.E. Stamps & Signatures – All appropriate Design Builder P.E. stamps and signatures as shown in the Released for Construction (RFC) plans must be shown on the final As-builts.

Transfer Pdf Files – Transfer pdf's to this public folder so that HQ Engineering Records can download them:
\\wsdot.loc\hq\Corporate\Public\DOT\EngineeringRecords\As-Builts

10-3.12 Final Record Field Notebooks

Field notebooks are bound books of notes that are used for specific kinds of work such as alignment notes, grading notes, pile driving notes, etc. Field notebooks can also consist of loose leaf field notes that have been bound together into books as well. Records that appear in the field books should not be duplicated and placed in other final record books. The only exception to this rule are copies of Field Note Records with multiple item numbers which may be copied as described in Section 10-4.3.

Field notebooks should be consecutively numbered and each should have the pages numbered beginning with number one. Typing information in the field book is not necessary as hand lettering is preferred. As with other project records, erasure corrections of any kind are not permitted.

The quantities for payment for each item of work in the field notebook shall correspond directly to entries in the CAPS project ledger. Adequate cross-referencing must be made between the field notebook and the project ledger in order to trace item quantities and entries from one to the other.

The field notes should show the initials of the persons or person making them, the date, and the weather conditions if appropriate. In some cases, different stages of work will be noted on the same page, such as staking, measurement, and construction. This would require dates and initials at each stage of work. The notes shall also show the dates that quantities are computed and checked along with the initials of those persons doing the work. In all cases, field notes should be neat and legible and show all necessary information. Figure 10-4 and 10-5 show sample field notes and summary for clearing.

Sketches should be shown when necessary to compute a quantity that cannot be computed from the As-Built Plans. Sometimes structure excavation sketches are helpful for determining the pay limits and computing the volume; other sketches are helpful on special details.

Current business practices provide for electronic calculation and storage of all types of detailed surveying data, quantity calculations, etc. Data forms for template input, calculation setup, forms for direct recording of field information, storage media for electronic files, as well as output for the calculated data shall all be treated as an original source documents. See Section 10-3.13 for further direction in regards to electronic data.

Remeasure cross section notes, where a deviation from the established roadway section or slopes has occurred, should be indexed carefully so that they can be identified readily with the original cross section. For convenience of calculation on remeasure, plotted cross sections may also be used.

Structure and drainage notes in the Final Record Field Notebook should show the stationing, distance left or right, angle or skew if applicable, flow line elevation and grade in the case of culverts, drains and ditches, and all information necessary for computation of the pay items involved in the construction. For convenience, it is recommended that all pay quantities pertaining to the construction of items listed on the Structure Notes sheets of the plans, be shown in the field book with structure note number, item number, and quantities, and that cross-references be used to show where the totals were obtained. It should be remembered that quantities must be segregated by group number as shown in the summary of quantities contained in the contract plans.

For use as an example, Figure 10-6 and 10-7 show the front and back of a completed field note for the installation of a reinforced concrete sewer pipe.

10-3.13 Electronically Produced Documents

There are many computer applications available for use on a WSDOT highway construction project. Included are programs for earthwork quantities, mass diagrams, basic cut and fill, geometrics, surveying, and for determining structural quantities. In addition, there are many other “stand alone” applications created by individuals in each office for use on personal computers that are also recognized for these kinds of uses.

When electronic computations are used, the output generated must be bound together and identified with a title sheet for final record purposes. These documents are to be made a part of the three-year *Temporary Final Records* retained by the Region as explained in Section 10-3.1. When a computer program is used to calculate quantities for payment, the summary sheets containing the quantities entered in the project ledger must be treated as source documents with all required signatures, dates, ledger entry number, and sufficient cross-referencing to provide a good audit trail.

10-3.14 Photographs

A detailed photographic record is an important part of the project documents. A photographic record could consist of filmed photographs, digital photos, infrared photographs, video, etc. A photographic record should be taken of unusual equipment, construction methods, problem areas, areas of possible controversy, traffic control, and especially conditions in the area of an accident. In addition to these are ”before” and “after” views taken from the same vantage point. These are particularly useful in documenting the progress of work. When photographs are to be maintained as a part of the project documents they must be fully identified. Photographs should clearly note when they were taken (date and time), where they were taken, and who took the picture. Although photographs are placed in the category of three-year *Temporary Final Records*, some regions have extended the Region retention period for photographs or have even included them as a part of the project’s *Permanent Final Records* for permanent retention.

10-3.15 Pre-Estimate Reports

A pre-estimate report prepares the CAPS system to make an estimate payment. This report provides the opportunity for the project office to preview the estimate and is a means to allow for any corrections or deferments to be made before actual payment. The corrected pre-estimate report used to make a progress payment must be signed by the Project Engineer in order to indicate authorization for payment. The signed pre-estimate report must be retained in the project files, and become a part of the three-year *Temporary Final Records*. For additional information regarding progress payments and the CAPS system, see Section SS 1-09.9, Payments.

10-3.16 Estimate Reports

When a payment is made to the Contractor for a progress or Final Estimate, the project office receives a copy of all the reports that are sent to the Contractor along with the warrant. The Contract Estimate Payment Advice report and the Contract Estimate Payment Totals report should be compared to the pre-estimate report verifying that the amount actually paid is the same as the amount authorized. These estimate reports should be kept with the completed pre-estimate reports in the project files, and become a part of the three-year *Temporary Final Records*. For additional information regarding progress payments and the CAPS system, see Section SS 1-09.9, Payments.

10-4 Project Ledger System

10-4.1 General

The Contract Administration and Payment System (CAPS) provides both an accounting and payment system, while also acting as an information collection system. The CAPS program uses an electronic project ledger that is maintained current throughout the life of the project as the backbone of the system. All items of work on a project for which payment is made must be entered into the electronic project ledger. Items posted in the ledger become the basis for payment and summary record document for dollars paid to the Contractor, quantity of work performed by the Contractor, status reports during the active life of the contract, and are also used as the basis for final reports when the project is completed.

As work is completed on the project, the project office continuously enters those quantities into the ledger, those records then become eligible for payment when the next progress estimate is due. Processing of monthly progress and project final estimates is further detailed in Section SS 1-09.9, Payments. With the ledger entries completed, the application compiles all those records eligible for payment and transfers the data to the payment portion of the CAPS system. Because of the system's ability to store information it is also used as an extensive resource for corporate information regarding the construction program and is used extensively by many other groups throughout WSDOT.

All electronic data incorporated into the CAPS system is stored on either an active file or a history file. These files are both permanently retained and are available for use whenever the need arises. It is not necessary, or intended, that paper copies of the project ledger be retained for final records.

Detailed instructions for the use of the CAPS system can be found in the *CAPS Manual* M 72-89.

A key function of CAPS is to provide a complete accounting trail for every pay item. An accounting trail must be clearly maintained from the original source document through the actual payment to the Contractor. Audits are an effective tool used by both state and federal governments to ensure established procedures and processes are correctly used to maintain the most effective use of the public's funds. It is important that WSDOT maintain sufficient records and documentation to clearly identify an accounting trail that is capable of withstanding the test of audits.

In order to satisfy the requirements of an accounting audit, the following conditions must be met:

- There must be a source document for every ledger entry and vice-versa.
- There must be an orderly filing system to facilitate timely retrieval of source documents.
- Both Interim Progress Estimate and Final Estimate reports must be signed by the Project Engineer.
- The Contract Estimate Payment Advice report must be filed along with its corresponding Progress Estimate report.

10-4.2 Source Documents

Each ledger entry must be supported by a detailed source document, which specifically identifies the type, amount, and location of the work or material that is being entered into CAPS for payment. Source documents used to support these entries are intended to be complete documents, documents that stand alone, and fully support the payment that is being made. If information from other documents is used in the source document, these additional document(s) must be clearly identified in order to complete the audit trail.

Some examples of source documents include Item Quantity Tickets, Field Note Records, Inspector's Estimates, and Force Account sheets. Source documents are the beginning of the audit trail. They show that a WSDOT Inspector has observed and determined the amount of work performed by the Contractor. Also, the source document must show that all calculations have been checked by a second WSDOT employee to ensure they are correct.

Source documents must show four sets of dated initials as follows: (1) the person who does the original calculations, (2) the person who checks the original calculations, (3) the person who enters the payment quantity/amount in the CAPS ledger, and (4) the person who verifies the CAPS ledger entry. In addition, the source document must also show the ledger entry number.

Ledger entries for estimates of monthly progress quantities for grading, lump sum, or other such items must also be supported by a source document. Among other things, the source document must show the method used for determining the estimate. These methods and source documents must lead to an accurate measurement after the item of work has been completed. For lump sum items, the field notes or diaries can show an estimated percentage of work completed. If this percentage method is used, then a brief discussion outlining the basis for the calculation and any assumptions that were used should also be included.

Many project offices use electronic data collectors for surveying work. These data collectors eliminate the need for hand prepared field transit and field level books. Many project offices have also developed or routinely use other electronic programs or applications, which perform calculations and produce a report of the results. In using these applications there can be confusion regarding the need for checking data that has been compiled and reported electronically. In the absence of specific direction, when an electronically produced record or set of notes is used as a source document for a contract payment, the individual who originated the document should be noted. A second person can then check both input and output for both reasonableness and accuracy. This check may range from duplicating the process to verifying the input. Whatever the case may be, it is recommended that the dated initials of those two individuals be on the source document.

10-4.3 Source Document Filing Systems

Basic criteria for a good Source Document Filing System would include ease of set up, ease of use, and the capability to retrieve any specific document in a timely manner. The source document filing system should also be set up to coordinate easily with final records requirements. The filing system described here for source documents is not mandatory. However, it is presented as one alternative that works well with the CAPS electronic ledger system, the final records process, and is easy to use. The unique ledger entry number from CAPS makes this method work. Files are set up in two books or sets of notes. The first book is organized by Unit Bid Item Number and the second book is organized by Structure Note Number. Source documents are filed by Unit Bid Item Number except for drainage items, which are filed by Structure Note Number. With this method there is only one item per source document except for the drainage items. Drainage items are filed by Structure Note Number because their source document (field note record) normally has multiple items while the Structure Note Number is unique to a specific drainage facility. For all other items, if more than one item appears on a source document, a copy is made for each item noted, the desired item number is highlighted, and then the copy is filed behind their respective Unit Bid Item Number locations. This works extremely well if the source documents are placed in order by date in their respective files.

To look at the source document for a ledger entry, simply note the item number, entry number, and date; go to the file and look for the entry number within the item file. If files are maintained in order by date, this is made even easier. For ledger entries of drainage items, it is necessary to include the structure note number in the remarks section.

This system allows anyone to easily locate the source documents that support a contract payment. These records are retained in the Project Office until Final Record time when the source documents are bound into books with their respective titles and made a part of the three-year *Temporary Final Records*.

10-5 Region Project Documentation Reviews

10-5.1 General

The Region is responsible to ensure that reviews of record keeping and documentation procedures are completed during the progress of the work. This will help to ensure that the original field records and pay notes are being properly prepared and that proper procedures are being followed. The Region should review specific pay items for correctness of the payments made as well as for procedural requirements for documenting and processing of contract payments, acceptance of materials and other pertinent contract administration requirements. Reviews of specific pay items should be recorded on DOT Form 421-014. Reviews of procedural items should be recorded on either DOT Form 230-036A or 230-036B. Version A should be used for the first review made on a project. Version B places more emphasis on individual pay items and should be used for the second review or on larger projects during the initial review phase where this emphasis is more appropriate.

On projects that are estimated to cost more than $1,000,000, and require more than 35 working days to construct, the Region should conduct an interim documentation review when the project is approximately 50 percent complete. This review should be thorough and complete to ensure that the documentation records are adequate and are being properly maintained. This review should include both procedural checks for those items listed on DOT Form 230-036A and detailed reviews of specific pay items for accurate documentation practices of contract payments completed to date. Audit work for pay items may also be started at this time in preparation for the Final Records general Review at Physical Completion. This early audit work could consist of checking any individual items that have been fully completed. Reviews of completed items that are recorded on DOT Form 421-014 can be kept and then made a part of the Final Records check upon Physical Completion. Once the project has been completed, information from both procedural reviews and specific pay item reviews can then become a part of the *Temporary Final Records*.

On projects that are estimated to cost more than $500,000 and require more than 100 working days to construct, the interim documentation review should be considered as early as 30 percent completion but, where possible, no later than 50 percent completion. On these larger projects, it is particularly important that the interim reviews be sufficient to verify both documentation and procedural practices. However, on many projects, the nature of the work completed at 30 percent may not provide an adequate representation of the documentation procedure to merit a documentation review. In these instances, the Region should exercise considerable judgment regarding the timing of interim documentation reviews.

The Region reviewer should also exercise considerable judgment in deciding whether or not to perform additional documentation reviews in conjunction with the reviews described above. In addition to cost and time, other criteria should also be used to evaluate the need for additional documentation reviews. This could include results of previous documentation reviews as well as the history, knowledge, and experience of the specific Project Office personnel involved. The Region reviewer should be satisfied on a case-by-case basis that each project's records are adequate and are being properly maintained.

It is recommended that each time a documentation review is performed on a project the Region reviewers discuss the results of the review with the Project Office staff, leaving a completed copy of DOT Form 230-036 and 421-014 to be included in the project temporary records.

10-5.2 Review Procedures for Final Estimates and Final Records

When work on the project is physically complete, it is important that the final records be completed and assembled in as timely a manner as possible. The final quantities should be checked and the final estimate or Final Contract Voucher Certification furnished to the Contractor as soon as is reasonably possible.

In order to facilitate this, the Project Engineer should ensure that the overall project final records, including the final contract quantities, are made ready for Region review as timely as can be and that the Region has completed their review work shortly thereafter.

The Region is responsible to ensure that the final records for the contract are complete, accurate and maintained in an orderly manner. The Region may exercise considerable judgment regarding the procedures used for this check. These procedures may include a complete check of all records or a representative sampling of records in order to validate all records maintained. If problems are discovered during the review of the representative sample, and if those problems indicate that the entire population might be flawed, then the entire population should be checked and corrected by the field office and a new representative sample taken. In conducting these final reviews the Region reviewer should mark the areas that have been checked, initialing and dating the records or portions of records that have been reviewed. The Examination Sheets for Contract Items DOT Form 421-014 and Documentation Review (Procedures) DOT Form 230-036A and 230-036B should be kept until the contract final records check is completed and then filed with the *Temporary Final Records* where they can be further reviewed should an audit occur.

Washington State Department of Transportation

Item Quantity Ticket

Date *	Location	Group
Remarks		

Time Received	○ AM ○ PM	Time Weighed	○ AM ○ PM
Received By *		Weighed By	
Pit Number		Truck Number *	
Check One * ○ Tons ○ Hours ○ Cu. Yds. ○ M. Gal. ○ LBS. ○ Each ○ Days		Legal Gross Weight	
		Gross *	
		Tare *	
		Net *	
Other Unit of Measure		This Load	Total

Item Identification	
Contract Number *	Item Number *
Item Description	
Subcontractor	
Contractor	
*** Required Information**	Ticket Number

DOT Form 422-021
Revised 4/00

Figure 10-1

Contract #6767
Johnson Creek Bridge 112/38
Columbia Basin Region
Final Records Book Number 1

Item	Section
Listing of All Final Records Books	1
Listing of State Personnel	2
Comparison of Quantities	3
Final Contract Voucher	4
Contract Estimate Payment Totals	5
Affidavit of Wages Paid	6
Change Orders	7
Record of Construction Materials	8

Figure 10-2

Contract # 7767

Johnson Creek Bridge 112/38

Columbia Basin Region

Permanent Final Records

(Retained at HQ Records Services)

Book Description	Book No.
Final Records Book No. 1	1
Project Engineer's Diary	2
Inspector's Daily Reports	3
Traffic Control Reports	4
Pile Driving Records	5
Post Tensioning Records	6
Contaminated Materials Disposal Bills	7
Miscellaneous Records	8
As-Built Plans (Submitted under separate cover dated 08/10/2000)	

Temporary Final Records

(Retained Within the Region)

Description	Book No.
Item Quantity Tickets	9
Project Engineer's Copy of Estimates	10
Inspector's Record of Field Tests	11
Scaleman's Diary and Scale Checks	12
Scale Test Report	13
Concrete Pour Records	14
Field Note Records	15
Drainage Notes	16
Approval of Source of Materials	17
Daily Report of Force Account Worked	18
Other Source Document Files	19
Quarterly Report of Amounts Credited DBE Participation	20
Quarterly Report of Amounts Paid MBE/WBE Participation	21
Contractor's Payrolls (Fed-Aid Projects)	22
FHWA Form 1589 (ARRA Projects)	23
Alignment (Transit) Book	24
Grade Book	25
Cross Section Notes	26
Quantity Computation Sheets	27
Record of Field Audits	28
Surfacing Depth Checks	29
Washington State Patrol Field Checklist	30

Figure 10-3

Washington State Department of Transportation

Field Note Record

Contract No.	Station	Line	C/S
4747	SEE DETAIL	L-LINE	2316

Staked By	Date	Work Started	Work Completed
G. Lewis	2-12-98	2-5-98	2-9-98

Calculated By	Date	Checked By	Date	Inspector's Signature	Date
G.L.	2-14-98	CB	2-15-98	John Smith	2-9-98

CREW: LEWIS M, BARNES, TOMS
WEATHER: CLEAR, COOL

CLEARING & GRUBBING

GROUP 1 TOTAL 21172 M^2 FROM REVERSE SIDE
= 2.12 HECTARES

GROUP 2 TOTAL 14609 FROM PAGE 4
= 1.46 HECTARES

PROJECT TOTAL = 3.58 HECTARES

Item No.	Material	Manufacturer	Brand Name Model/Type	RAMS/QPL Ref. No.	Appr/Accept Code	Basis of Acceptance

Item No.	Item Description	Group	Date Work Completed	Unit	Quantity	CAPS Entry No.	Posted By Initials	Posted By Date	Checked By Initials	Checked By Date	Est. No.
2	CLEARING & GRUBBING	1	2-9-98	HECTARE	2.12	7	GS	4/16	CR	4/20	1
2	" "	2	2-9-98	HECTARE	1.46	8	GS	4/16	CR	4/20	1

DOT Form 422-635 EF
Revised 3/98

Page No. _____

Figure 10-4

Contract No. 4747

Station	Left	Right	Length or Width	Area M³	Remarks
GROUP 1	BEGIN CLEARING				
57+400		8-15			
57+420		8-15	7	140	
57+440		10-15	6	120	
57+460	0	10-15	5	100	
57+480	18-10	12-15	8	160	
57+500	18-3	0	13	260	
57+520	18-1		16	320	
57+540	18-0	0-7	21	420	
57+560	21	7	26.5	530	
57+580	24	7	29.5	590	
57+600	24	7	31		
57+620	24				
57+64				590	
		7	29.5	590	
	21	10	31	620	
61+000	18	7.5	28.25	565	
61+020	18	7.5	25.5	510	
61+040	18	5.5	24.5	490	
61+060	18.5	5.5	23.75	475	
61+080	17.5	5	23.25	465	
61+100	17.5	5.5	22.75	455	
61+120	17.5	5.5	23	460	
61+140	17	5	22.5	450	GROUP 1 END CLEARING
			Page Total	21172	

DOT Form 422-635 EF
Revised 3/98

Figure 10-5

Washington State Department of Transportation

Field Note Record For Drainage

Book No. _____ Page No. _____

Contract No.	Station	Line	C/S	Code Number
4747	62+170 to 62+220	L LINE	1701	9-15

Staked By	Date	Work Started	Work Completed
T. ROBERTS	1-12-98	1-16-98	1-24-98

Calculated By	Date	Checked By	Date	Inspector's Signature	Date
TMC	1-26-98	DEM	1-30-98	C. Stokes	1-24-98

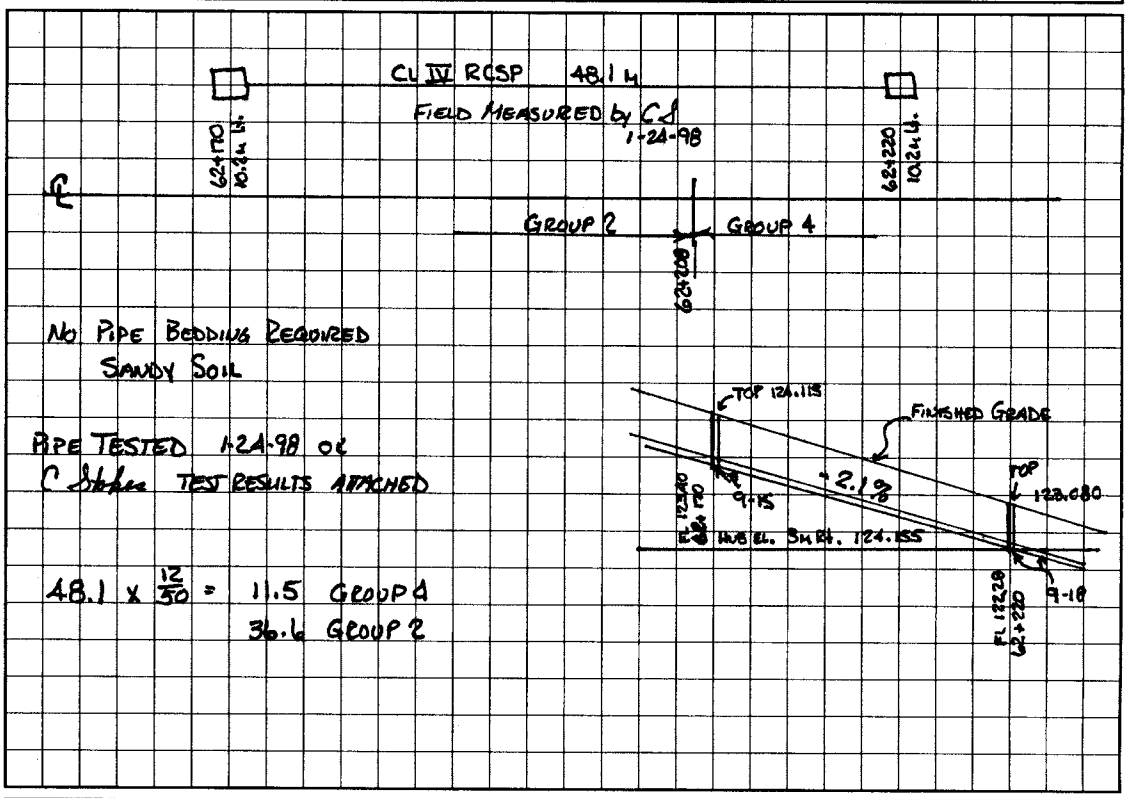

Item No.	Item	Group No.	Date	Unit	Quantity	RAMS No.	Basis of Material Acceptance	CAPS Entry No.	Initials Post	Initials OK	Est. No.
7	STR. EXC. CL. B	2	1/18/98	M^3	17.6			53	DS 1/19	CR 1/20	1
7	" " "	4	1/18/98	M^3	6.7			54	DS 1/19	CR 1/20	1
24	CL IV RCSP 300MM	2	1/24/98	M	36.6	4063	TAG # A123A56	76	DS 1/25	CR 1/26	1
24	" " "	4	1/24/98	M	11.5	4063	TAG # A123A56	77	DS 1/25	CR 1/26	1
25	TESTING SEWER PIPE	2	1/24/98	M	36.6			78	DS 1/25	CR 1/26	1
25	" " "	4	1/24/98	M	11.5			79	DS 1/25	CR 1/26	1
26	C.B. TYPE 1	2	1/24/98	EACH	1	4063	TAG # A123A56	80	DS 1/25	CR 1/26	1

DOT Form 422-637 EF
Revised 9/97

Figure 10-6

BOOK NO. _____ PAGE NO. _____

STRUCTURE EXCAVATION (PIPE STRUCTURE EXCAVATION WIDTH = 1 m)

STATION	FLOW LINE GRADE	ORIGINAL GROUND	SUB-GRADE	CENTERLINE CUT FLOW LINE	CENTERLINE CUT BOTTOM DITCH	OFFSET HUB (RK 1.8m Rt)	OFFSET CUT-F.L.	REMARKS
CB9-18								
0+000	122.28	123.02		C-0.74		122.97	C-0.69	
0+000.7	122.29	123.02		C-0.73				Begin Str. Exc.
0+010	122.53	122.96		C-0.43				
0+020	122.80	123.14		C-0.34		123.51	C-0.71	
0+030	123.00	123.38		C-0.38				
0+040	123.33	123.60		C-0.27		124.05	C-0.72	
0+049.3	123.38	123.81		C-0.43				End Str. Exc.
0+050	123.40	123.81		C-0.41		124.21	C-0.81	
CB9-15								

0.05m added for pipe thickness

REMARKS Str. Exc.

									m^3	
GRP 4	0+000.7	C-0.74	0.64	X	9.3	X	1	=	5.95	
	0+010	C-0.43	0.48	X	1.5	X	1	=	0.72	
	0+011.5	C-0.42	0.43	X	8.5	X	1	=	3.66	6.7 Group 4
GRP 2	0+020	C-0.34	0.41	X	10	X	1	=	4.10	
	0+030	C-0.38	0.38	X	10	X	1	=	3.80	
	0+040	C-0.27	0.40	X	9.3	X	1	=	3.72	
	0+049.3	C-0.43							15.3 Group 2	

CB 0.85 X 0.91 X 0.61
1.46 X 1.52 X 1.04 = 2.3 m^3

6.7
15.3
2.3
24.3 m^3 Total Str. Exc.

Pay 6.7 m^3 Grp. 4
17.6 m^3 Grp. 2

DOT Form 422-637 (Back) Revised 9/95

Figure 10-7

Washington State Department of Transportation

Field Note Record

Contract No.	Station	Mile/Line:	C/S
C7616	Project Limits	SR 26	0134 - G1/ 3830 - G2

Staked by	Date	Work Started Date	Work Completed Date
Jason Lefler	3/23/2009	4/27/2009	4/27/2009

Calculated by	Date	Checked by	Date	Inspector	Date
Jason Lefler	4/27/2009	Sean Carpenter	5/6/2009	Jason Lefler	4/27/09

One Type B Guardrail Connection installed at each bridge corner; 4 total.

Group 1
Station 299+93 Left and Right = 2

Pay 2.00 each

Group 2
Station 302+43 Left and Right = 2

Pay 2.00 each

Item Num	Material Brand Name/Model Type	Manufacturer	RAMS/QPL Ref. No.	Appr/Acc Code	Basis of Accept	Acceptance Date	Acceptance Init.
019.01	9-16 Fence and Guardrail W and Thrie Beam + componants	Trinity Highway Products, LLC	QPL-0012	3002	Document conformance to approved plan	04/27/09	JL
019.02.00	9-09 Timber and Lumber	Superior Wood Treating	QPL-0013	2110	Verify Cert of Treatment and Lumber Grade Stamp.	04/27/09	JL
019.02.02	Steel Fasteners Threaded Rods,Nuts,and Washers	Portland Bolt and Mfrg	QPL-0022	2015	Verify Product along with MCC and CMO	04/27/09	JL
019.02.03	9-26 Epoxy Resins Acrylic Tie (AT)	Simpson Strong Tie Co., Inc.	QPL-0021	3008	Visually Verify Product	04/27/09	JL

Item Num	Item Description	Grp	Date Work Complete	Unit	Quantity	Ledger Entry No.	Posted By Init.	Posted By Date	Checked By Init.	Checked By Date	Est. No.
0019	TYPE B GUARDRAIL CONNECTION	1	4/27/2009	EACH	2.00	48	rah	05/07/09	TH	05/07/09	
0019	TYPE B GUARDRAIL CONNECTION	2	4/27/2009	EACH	2.00	49	rah	05/07/09	TH	05/07/09	

Attachments

File Attachment

DOT Form IP 422-635ER EF
Revised 2/2009

Figure 10-8

IDR Sheet 1 of 3 Sheets

Washington State Department of Transportation

Inspector's Daily Report

Contract	SR Nos.	Day	Shift	Date
C7762	SR 206	Tuesday	Day	7/28/2009

Weather
AM clr/warm PM clr/hot

Prime Contractor	Representative/Title
A. Inland Asphalt	Tony Via

	Subcontractor or Agent	Apprd	DBE	Representative/Title
a	Northstar	y	y	Jeremy Simpkins

Work Activity Summary
Description and Location

Installing Class A construction signs.

Pay Note Made Today?
☑ No - Work not complete. Will complete Paynote on completion or at estimate cutoff.
☐ No - LS Item. Work is not completed. Will complete paynote on completion or percentage at estimate cutoff.
NOTE: Any "No" will be explained in Diary.

Item No.	Contract Item Description	Location	Required Backup Samples Taken Y/N	Matls Documentation Approved Y/N	Matls Source Approved Y/N	Y/N
41	Construction Signs Class A	Throughout project	NA	No	NA	No

File Upload
File Attachment

Contractor's Equipment
Operating Contractors Id (A-E Above)

	No.	Equipment - ID No. and Description	Opr	Stdby	Down	Idle
a	1	GMC 3500 20,000 GVW flatbed truck, #45A	8			
a	1	Dodge 1500 pickup, #39A	6			
a	1	20 foot flatbed trailer #18	8			

Contractor's Workforce
Operating contractors ID(A-E see above)

	Number/Hours																Number			
	Laborers		Carpenters		Operators		Teamsters		IronWorkers		Masons		Flaggers		Electricians		Male	Female	Appr	Trnee
a	4	32											1	3			4	1		

Traffic Control

Was Traffic Control Labor Required Today? ☑ Yes ☐ No
Was WZTC according to approved TCP? ☐ Yes ☑ No
Photos/Video taken Today? ☐ Yes ☑ No
Do all Flaggers and Spotters have current flagging card? ☐ Yes ☐ No

Inspector's On Site Hours
From 9:00 am
To 2:30 PM

Gordon Hurt
Inspector

Genessa Cebriak
Reviewed By

DOT Form IP 422-004 EF
Revised 3/2009

Reviewed by ggc **C.I./P.M.** **A.P.E.** DGM **P.E.** rah **O.E.**

Figure 10-9

IDR Sheet 3 of 3 Sheets

Washington State
Department of Transportation

Inspector's Daily Report

Contract	Day	Date
C7762	Tuesday	2009-07-28

File Upload

File Attachment

DIARY - Including but not limited to: a report of the day's operations, time log (if applicable), orders given and received, discussions with contractor, and any applicable statements for the monthly estimate.

Northstar called the office this morning at 8:30 with questions about the Class A signing. This was the first we heard that they were working today. Northstar still does not have an approved traffic control plan for short duration shoulder work.

I met the installation crew on the jobsite around 9:00 am and answered their questions. A couple of stakes had been knocked over which I located and set back in place.

Kevin Littleton and Chad Swenson visited the site to evaluate the proposal to not grind out the shoulders between US 2 and Yale rd. to avoid adjusting the drainage structures.

Spent the day on site answering questions from the sign installation crew and working on documentation.

Off site at 2:30 PM

Gordon Hurt
Inspector

Figure 10-9 (continued)

Chapter 11 Forms

11-1 Introduction

This chapter is published to acquaint engineers and inspectors with the various forms provided by WSDOT for keeping records of the construction activities and payment for the various phases of the work.

The following pages contain a list of forms to be used in reporting project progress. The sample forms listed in this manual in the past have been eliminated. Copies of the forms are available via three different methods:

- The WSDOT internal Forms website accessible from the intranet homepage.
- The WSDOT external website at www.wsdot.wa.gov/forms.
- By ordering the forms through your WSDOT Regional Stores personnel.

11-2 General Instructions

Forms shown in this chapter are categorized by those persons or offices responsible for completing the form(s) and alphabetically by form name.

It is recommended that the on-line version be utilized, which should be the most current copy of the form, during the administration of a project.

Unless otherwise noted, the previous version of a revised form may continue to be used until the existing supply is gone. However, if the supply of the older form is not exhausted at the end of six months after the revision date shown below, the supply of old forms should be discarded and the latest version used. The latest version may also be used immediately if desired.

Blank forms should be ordered or downloaded from one of the methods listed in Section 11-1 when supplies run low rather than photocopying an existing form. This will ensure that the latest version of the form is used.

Signatures

The collection of information in the field has traditionally consisted of text-based documents which were intended to be “hand-signed” by the originator of the document. Now that these forms are available electronically, the question arises as to which forms will require an original hand-written signature and which will be acceptable with computer generated or printed signatures.

The electronic forms listed in this chapter are further categorized into those forms requiring an original signature and which are acceptable with computer generated or printed signatures. Project Office personnel will need to review the forms to familiarize themselves with the signature requirement of each form. All computer generated forms are acceptable as a hard copy with a “handwritten” signature.

Signature Blocks

Any form, on which the word "Signature" appears in the block, requires an original handwritten signature in that block (e.g., Inspector's signature_____, contractor's signature___, project engineer's signature___). Any form on which the signature block contains anything other than "Signature" may utilize a computer generate or printed signature (e.g., Completed by___, Prepared by___, Submitted by___, Inspector___). Signature blocks on these forms are "open" on the FileMaker Pro electronic forms in order to allow the originator of the form to type in their name.

When filling out and completing our construction forms, all signature or initial blocks must be completed. Leaving them blank is not acceptable.

Identifying Individual's Signatures

Project Offices will need to establish a procedure in which printed signatures or initials appearing on a document may be accepted as equal to a handwritten signature or initials. A WSDOT personnel signature list (Project Personnel Signature Listing DOT Form 422-001) is available for Project Office use.

This list shall be included with the final records as defined in Section 10-3.5. It is recommended that before work commences on a project, all those who will be assigned a role on the project sign and initial this sheet. The list should be kept current throughout the life of the project.

Note: A handwritten signature is always acceptable on all forms.

***Indicates that only forms with the revised date shown are to be used. All older forms will be discarded. Forms should be downloaded from Forms Management prior to each use in order to ensure that the latest version is being used.**

11-2A Project Office

Form No.	Revised Date	Form Name
Administration		
410-025	3/02	Project Engineer Transmittal
420-012	1/96	Recommended Changes in the *Standard Specifications*
421-005A	12/09	Change Order – Minor Change (2 page)
421-006	10/11	Order to Suspend Work
421-007	5/06	Order to Resume Work
421-010	4/15*	Prime Contractor Performance Report
540-509	3/11	Commercial Pesticide Application Record
722-025	1/14	As Built Cover Sheet
750-001	10/13	Fall Protection Plan
750-001A	1/05	Tower and Bridge Fall Protection Plan
Aggregates		
350-023	4/02	Pit Evaluation Report
422-020	4/11	Record of Field Tests
422-020A	5/08	Aggregate Record of Field Tests
422-020B	7/08	Inspector's Record of Field Test

Form No.	Revised Date	Form Name
Asphalt Testing		
350-016	4-02	Asphalt Emulsion Label
350-126	8/97	Asphalt Plant Inspection
350-157	4/02	Rice Density
350-161	3/11	HMA Mineral Aggregates
350-162	7/09	Volumetrics Worksheet
350-560	4/09	Ignition Furnace Worksheet
Concrete Testing		
350-009	7/02	Concrete Test Cylinder Transmittal
450-001	2/12	Manufacturer's Certificate of Compliance for Ready Mixed Concrete
DBE/EEO		
272-051	5/15	DBE On-Site Review for Architect & Engineering/Professional Services Firms
272-052	5/15	DBE On-Site Review for Construction Subcontractors/Regular Dealers/ Manufacturers
272-060	12/04	Federal-Aid Highway Construction Annual Project Training Report
226-012	5/06	Trainee Interview Questionnaire
424-003	12/96	Employee Interview Report
Density (Asphalt/Soils)		
350-073	5/11	Hot Mix Asphalt Test Point Evaluation Report
350-074	3/10	Field Density Test
350-092	1/09	Hot Mix Asphalt Compaction Report (Station)
350-092A	5/10	Mile Post Hot Mix Asphalt Compaction Report
350-092B	3/10	Hot Mix Asphalt Compaction Report (80 ton)
351-015	7/10	Daily Compaction Test Report
Documentation		
134-146	10/07*	Final Contract Voucher Certificate
350-115	2/10	Contract Materials Checklist
410-027	4/02	Test Pile Record
422-001	10/08	Project Personnel Signature Listing
422-001A	10/08	Change Order Authorization Signature
422-007	3/08	Report of Protested Work
422-008	4/12*	Daily Report of Force Account Worked
422-009	2/96	Final Record Notes Title Page
422-009B	2/96	Final Record Notes Title Page
422-010	7/10*	Force Account Equipment Rate Request
422-012	4/01	Final Record Notes – Title Sticker
422-021	4/08	Item Quantity Ticket
422-024	7/95	Water Delivery Record
422-568	4/01	Load Tally Sheet
422-635	3/08	Field Note Record
422-636	8/96	Field Note Record (Sketch Grid)
422-637	3/08	Field Note Record for Drainage
422-700	8/99	Daily Work Quantities
450-004	8/12	Pile Book
450-004A	10/11	Pile Driving Log
591-020A	6/11	Daily Traffic Item Ticket (Equipment)
591-020B	10/10	Daily Traffic Item Ticket (Labor)
591-020C	6/11	Summary of Daily Traffic Item Ticket

Form No.	Revised Date	Form Name
General Materials		
350-026	5/02	Preliminary Sample Transmittal
350-056	1/09	Sample Transmittal
350-130	3/08	Field Acceptance/Verification Report (RAM/QPL)
350-572	6/04	Manufacturer's Certificate of Compliance Checklist
Inspection		
421-045	2/97	WSP Field Check List
422-004	3/08	Inspector's Daily Report
422-004A	7/08	Inspector's Daily Report Diary Page
422-004B	7/08	(Street) Inspector's Daily Report
422-027	10/11	Scaleman's Daily Report
422-644	12/95*	Daily Report of BST Operations
540-020	3/02	Backflow Prevention Assembly Test Report

11-2B Regional Office

Form No.	Revised Date	Form Name
230-036A	4/07	Initial Documentation Review (Procedures)
230-036B	3/07	Follow-Up Documentation Review
272-061	3/12	Federal-Aid Highway Construction Cumulative Training Report
420-012	1/96	Recommended Changes to Specifications and *Construction Manual*
421-014	1/97	Examination Sheet for Contract Items
422-100	6/03	Interim Inspection of Federal-Aid Project
FHWA-1392	6/13	Federal-Aid Highway Construction Summary of Employment Data

11-2C Fabrication Inspector

Form No.	Revised Date	Form Name
350-004	5/02	Fabrication Progress Report
450-005	3/02	Post-Tensioning Record

11-2D State Construction Office

Form No.	Revised Date	Form Name
422-101	6/07	Final Inspection and Acceptance of Federal-Aid Project
FHWA-1392	6/13	Federal-Aid Highway Construction Summary of Employment Data

11-2E Materials Laboratory (State or Region)

Form No.	Revised Date	Form Name
350-112	3/02	Correlation – Nuclear Gauge to Core Density
350-514	4/97	Moisture – Density Relationship Report
351-021	4/02	Statement of Receipt of Radioactive Material

11-2F Contractor

Form No.	Revised Date	Form Name
134-146	10/07*	Final Contract Voucher Certificate
272-049	3/12	Training Program
272-050	9/07	Apprentice/Trainee Approval Request
272-062	6/98	Contract Compliance Review Request for Additional Information
350-040	6/06	Concrete Mix Design
350-042	11/13	HMA Mix Design Submittal
350-071	12/12*	Request for Approval of Material
350-109	7/12	Certification of Materials Origin
410-029	5/13	Contractor's Construction Process Evaluation
420-004	3/08*	Contractor and Subcontractor or Lower-Tier Subcontractor Certification for Federal-Aid Projects
421-009	6/12	Release – Retained Percentage (Except Landscaping)
421-012	11/09*	Request to Sublet Work
421-023	4/10*	Quarterly Report of Amounts Paid MBE/WBE Participants
421-040A	4/04	Contractor's Daily Report of Traffic Control - Summary
421-040B	3/08	Contractor's Daily Report of Traffic Control - Traffic Control Log
422-102	2/06	Quarterly Report of Amounts Credited as DBE Participation
540-509	3/11	Commercial Pesticide Application Record
820-010	6/99*	Monthly Employment Utilization Report
FHWA-1391	9/13	Federal-Aid Highway Construction Contractor's Annual EEO Report

Alphabetical Listing of Forms

Forms Requiring an Original Hand Written Signature

(X) = Contractor's signature is desirable but not necessary to make payment.

Cont.	PE	Form No.	Form Name
X		421-023	Quarterly Report of Amounts Paid as MBE/WBE Participants*(4/10)
X		272-050	Apprentice/Trainee Approval Request
	X	540-020	Backflow Prevention Assembly Test Report
X		350-109	Certification of Materials Origin
X	X		CCIS Generated Change Order
(X)		421-005A	Change Order – Minor Change (2 page)
	X	540-509	Commercial Pesticide Application Record
X	X	272-062	Contract Compliance Review Request for Additional Information
	X	350-115	Contract Materials Checklist
X		420-004	Contractor and Subcontractor or Lower-Tier Subcontractor Certification for Federal-Aid Projects*(3/08)
(X)	X	422-008	Daily Report of Force Account Worked*(4/12)
X	X	FHWA-1391	Federal-Aid Highway Construction Contractors' Annual EEO Report
X	X	FHWA-1392	Federal-Aid highway Construction Summary of Employment Data
X	X	134-146	Final Contract Voucher Certificate*(10/07)
X		820-010	Monthly Employment Utilization Report*(6/99)
	X	421-010	Prime Contractor Performance Report*(3/08)
	X	422-001	Project Personnel Signature Listing
X		422-102	Quarterly Report of Amounts Credited as DBE Participation
X	X	421-009	Release – Retained Percentage (Except Landscaping)
X	X	422-007	Report of Protested Work
X	X	421-012	Request to Sublet Work* (11/09)
	X	351-021	Statement of Receipt of Radioactive Material
X	x	272-049	Training Program

Forms Suitable for Printed Signature

(X)* = Contractor's signature is desirable but not necessary.

Cont.	PE	Form No.	Form Name
		722-025	As Built Cover Sheet
(X)*		350-126	Asphalt Plant Inspection
		350-016	Asphalt Emulsion Label
	X	350-009	Concrete Test Cylinder Transmittal
	X	350-040	Concrete Mix Design
(X)*		410-029	Contractor's Construction Process Evaluation
X		421-040A	Contractor's Daily Report of Traffic Control -Summary
X		421-040B	Contractor's Daily Report of Traffic Control –Traffic Control Log
	X	350-112	Correlation – Nuclear Gauge to Core Density
	X	351-015	Daily Compaction Test Report
(X)*	X	422-644	Daily Report of BST Operations*(12/95)
(X)	X	591-020A	Daily Traffic Item Ticket (Equipment)
(X)	X	591-020B	Daily Traffic Item Ticket (Labor)
	X	591-020C	Daily Traffic Item Ticket (Summary)
(X)*	X	422-644	Daily Report of BST Operations
	X	422-700	Daily Work Quantities
	X	424-003	Employee Interview Report
	X	421-014	Examination Sheet for Contract Items
	X	350-004	Fabrication Progress Report
	X	750-001	Fall Protection Plan
	X	272-060	Federal-Aid Highway Construction Annual Training Report
	X	272-061	Federal-Aid Highway Construction Cumulative Training Report
	X	350-130	Field Acceptance/Verification Report (RAM/QPL)
	X	350-074	Field Density Test
	X	350-074A	Field Dry Density Test
	X	422-635	Field Note Record
	X	422-367	Field Note Record for Drainage
	X	422-636	Field Note Record (Sketch Grid)
	X	422-101	Final Inspection and Acceptance of Federal-Aid Project
		422-009	Final Records Notes Title Page
		422-009B	Final Records Notes Title Page
	X	230-036B	Follow-Up Documentation Review
		422-010	Force Account Equipment Rate Request*(7/10)
		350-564	Gradation Chart – 0.45 Power
(X)*	X	350-161	HMA Mineral Aggregates
(X)*	X	350-092	Hot Mix Asphalt Compaction Report
	X	350-073	Hot Mix Asphalt Test Section Report
(X)*		350-042	HMA Mix Design Submittal
(X)*	X	350-560	Ignition Furnace Worksheet
	X	230-036A	Initial Documentation Review (Procedures)
	X	422-004	Inspector's Daily Report
	X	422-004A	Inspector's Daily Report - Diary Page
	X	422-004B	(Street) Inspector's Daily Report*(3/08)
(X)*	X	422-020	Inspector's Record of Field Test
	X	422-100	Interim Inspection of Federal-Aid Project
(X)	X	422-021	Item Quantity Ticket
	X	422-568	Load Tally Sheet

Cont.	PE	Form No.	Form Name
	X	272-051	DBE On-Site Review
	X	350-572	Manufacturer's Certificate of Compliance Checklist
(X)*		450-001	Manufacturer's Certificate of Compliance for Ready Mixed Concrete
	X	350-514	Moisture – Density Relationship Report
	X	421-007	Order to Resume Work
	X	421-006	Order to Suspend Work
		450-004	Pile Book
	X	350-023	Pit Evaluation Report
	X	450-005	Post-Tensioning Record
	X	350-026	Preliminary Sample Transmittal
(X)*	X	410-025	Project Engineer Transmittal
	X	420-012	Recommended Changes to Specification and *Construction Manual*
	X	350-071	Request for Approval of Material*(12/12)
	X	350-157	Rice Density
	X	350-056	Sample Transmittal
(X)	X	422-027	Scaleman's Daily Report
	X	410-027	Test Pile Record
		422-012	Title Sticker – Final Record Books
	X	226-012	Trainee Interview Questionnaire
(X)*	X	350-162	Volumetrics Worksheet
(X)	X	422-024	Water Delivery Ticket
		421-045	WSP Field Check List