Washington State Department of Transportation

Publications Transmittal

Transmittal Number	Date
PT 10-044	June 2010

Publication Title / Publication Number

Hydraulics Manual M 23-03.03

Originating Organization

Environmental and Engineering Programs, Hydraulics Office,
through Administrative and Engineering Publications

Remarks and Instructions

The complete manual, revision packages, and individual chapters can be accessed at www.wsdot.wa.gov/publications/manuals/m23-03.htm.

Please contact Jay Christianson at 360-705-7269 with comments, questions, or suggestions for improvement to the manual.

Instructions for Printed Manuals

Page numbers indicating portions of the manual that are to be removed and inserted are shown below.

Chapter	Remove Pages	Insert Pages
Title Page	i–ii	i–ii
Contents	iii–viii	iii–viii
Chapter 2 Hydrology	2-i – A2-3-1	2-1 – 2-104
Chapter 5 Drainage of Highway Pavements	5-i – 5-20	5-1 – 5-26
Chapter 6 Storm Drains	6-i – 6-19	6-1 – 6-22
Chapter 7 Fish Passage	7-i – 7-4	7-1 – 7-4

To get the latest information for WSDOT administrative and engineering manuals, sign up for e-mail updates for individual manuals at www.wsdot.wa.gov/publications/manuals/.

Washington State Department of Transportation
Administrative and Engineering Publications
PO Box 47304
Olympia, WA 98504-7304

Phone: 360-705-7430
E-mail: engrpubs@wsdot.wa.gov

Approved By	Signature
Matthew J. Witecki, PE	/s/

Washington State
Department of Transportation

TECHNICAL MANUAL

Hydraulics Manual

M 23-03.03

June 2010

Environmental and Engineering Programs
Hydraulics Office

Americans with Disabilities Act (ADA) Information

Materials can be provided in alternative formats by calling the ADA Compliance Manager at 360-705-7097. Persons who are deaf or hard of hearing may contact that number via the Washington Relay Service at 7-1-1.

Title VI Notice to Public

It is the Washington State Department of Transportation's (WSDOT) policy to assure that no person shall, on the grounds of race, color, national origin, or sex, as provided by Title VI of the Civil Rights Act of 1964, be excluded from participation in, be denied the benefits of, or be otherwise discriminated against under any of its federally funded programs and activities. Any person who believes his/her Title VI protection has been violated, may file a complaint with WSDOT's Office of Equal Opportunity (OEO). For Title VI complaint forms and advice, please contact OEO's Title VI Coordinator at 360-705-7098 or 509-324-6018.

To get the latest information for WSDOT administrative and engineering manuals, sign up for individual manual e-mail updates at www.wsdot.wa.gov/publications/manuals.

Washington State Department of Transportation
Administrative and Engineering Publications
PO Box 47304
Olympia, WA 98504-7304

Phone: 360-705-7430
E-mail: engrpubs@wsdot.wa.gov
Internet: www.wsdot.wa.gov/publications/manuals

Contents

		Page
Chapter 1	**Design Policy**	1-1
	1-1 General	1-1
	1-2 Responsibility	1-2
	1-3 Hydraulic Reports	1-4
	1-3.1 Hydraulic Report Types	1-4
	1-3.2 Writing a Hydraulic Report	1-5
	1-3.3 Hydraulic Report Submittal and Archiving	1-6
	1-3.4 Hydraulic Report Revisions and Supplements	1-7
	1-3.5 Hydraulic Reports and Design Build Project	1-7
	1-3.6 Developers and Utility Agreements	1-8
	1-4 Storm Frequency Policy and Recommended Software/Design Tools	1-8
	1-5 Hydraulic Report Review Schedule	1-11
	1-5.1 Milestones and Scheduling	1-12
	Appendix 1-1 Conversion Table	1-14
	Appendix 1-2 Environmental Documentation	1-15
	Appendix 1-3 Hydraulic Report Outline	1-16
	Appendix 1-4 Hydraulic Report Checklist	1-17
Chapter 2	**Hydrology**	2-1
	2-1 General Hydrology	2-1
	2-2 Selecting a Method	2-2
	2-3 Drainage Basin	2-5
	2-4 Cold Climate Considerations	2-5
	2-4.1 Calculating Snowmelt	2-5
	2-4.2 Additional Considerations	2-6
	2-5 The Rational Method	2-7
	2-5.1 General	2-7
	2-5.2 Runoff Coefficients	2-8
	2-5.3 Time of Concentration	2-10
	2-5.4 Rainfall Intensity	2-13
	2-5.5 Rational Formula Example	2-16
	2-6 Single-Event Hydrograph Method: Santa Barbara Urban Hydrograph	2-16
	2-6.1 Design Storm Hyetograph	2-17
	2-6.2 Runoff Parameters	2-18
	2-6.3 Hydrograph Synthesis	2-22
	2-6.4 Level Pool Routing	2-23
	2-6.5 Hydrograph Summation	2-24
	2-7 Continuous Simulation Method (Western Washington Only for Stormwater)	2-24
	2-7.1 Modeling Requirements	2-25
	2-8 Published Flow Records	2-28
	2-9 USGS Regression Equations	2-29

Page

2-10 Flood Reports 2-31
2-11 Mean Annual Runoff 2-32
Appendix 2-1 USGS Streamflow Gage Peak Flow Records 2-33
Appendix 2-2 USGS Regression Equations 2-93
Appendix 2-3 Isopluvial and MAP Web Links and Mean Annual Runoff Data 2-103

Chapter 3 Culvert Design 3-1
3-1 Overview 3-1
3-1.1 Metric Units and English Units 3-1
3-2 Culvert Design Documentation 3-2
3-2.1 Common Culvert Shapes and Terminology 3-2
3-2.2 Hydraulic Reports 3-3
3-2.3 Required Field Data 3-3
3-2.4 Engineering Analysis 3-5
3-3 Hydraulic Design of Culverts 3-7
3-3.1 Culvert Design Flows 3-8
3-3.1.1 Precast Reinforced Concrete Three Sided Structure 3-9
3-3.1.2 Additional Requirement for Culverts Over 20′ 3-10
3-3.1.3 Alignment and Grade 3-10
3-3.1.4 Allowable Grade 3-10
3-3.1.5 Minimum Spacing 3-11
3-3.1.6 Culvert Extension 3-11
3-3.1.1 Temporary Culverts 3-12
3-3.2 Allowable Headwater 3-12
3-3.2.1 General 3-12
3-3.2.2 Allowable Headwater for Circular and Box Culverts and Pipe Arches 3-13
3-3.2.3 Allowable Headwater for Bottomless Culverts 3-15
3-3.3 Tailwater Conditions 3-15
3.3.4 Flow Control 3-16
3-3.4.1 Culverts Flowing With Inlet Control 3-16
3-3.4.2 Calculating Headwater for Inlet Control 3-17
3-3.4.4 Calculating Headwater for Outlet Control 3-26
3-3.4.5 Outlet Control Nomographs 3-28
3-3.5 Velocities in Culverts — General 3-42
3-3.5.1 Calculating Outlet Velocities for Culverts in Inlet Control 3-43
3-3.5.2 Calculating Outlet Velocities for Culverts in Outlet Control 3-44
3-3.6 Culvert Hydraulic Calculations Form 3-50
3-3.7 Computer Programs 3-55
3-3.8 Example 3-56

Page

3-4 Culvert End Treatments 3-61
3-4.1 Projecting Ends 3-61
3-4.2 Beveled End Sections 3-62
3-4.3 Flared End Sections 3-63
3-4.4 Headwalls and Slope Collars 3-64
3-4.5 Wingwalls and Aprons 3-65
3-4.6 Improved Inlets 3-66
3-4.7 Energy Dissipators 3-67
3-4.8 Culvert Debris 3-68
3-5 Miscellaneous Culvert Design Considerations 3-72
3-5.1 Multiple Culvert Openings 3-72
3-5.2 Camber 3-73
3-5.5 Angle Points 3-73
3-5.6 Upstream Ponding 3-74
3-5.7 Misc Design Considerations – Siphons 3-75

Chapter 4 Open Channel Flow 4-1
4-1 General 4-1
4-2 Determining Channel Velocities 4-2
4-2.1 Field Measurement 4-3
4-2.2 Manning's Equation 4-4
4-2.2.1 Hand Calculations 4-5
4-2.2.2 Field Slope Measurements 4-8
4-2.2.3 Manning's Equation in Sections 4-9
4-3 Roadside Ditch Design Criteria 4-11
4-4 Critical Depth 4-11
4-4.1 Example Critical Depth in a Rectangular Channel 4-13
4-4.2 Example Critical Depth in a Triangular Channel 4-13
4-4.3 Example Critical Depth in a Trapezoidal Channel 4-14
4-4.3 Example Critical Depth in a Circular Shaped Channel 4-14
4-5 River Backwater Analysis 4-14
4-6 River Stabilization 4-16
4-6.1 Bank Barbs 4-17
4-6.1.1 Riprap Sizing for Bank Barbs 4-20
4-6.1.2 Riprap Placement for Bank Barbs 4-22
4-6.1.3 Vegetation 4-22
4-6.2 Drop Structures 4-23
4-6.3 Riprap Bank Protection 4-25
4-6.3.1 Riprap Sizing for Bank Protection 4-26
4-6.3.2 Placement of Riprap Bank Protection 4-29
4-6.3.3 Scour Analysis for Bridges and Three Sided Culverts 4-30
4-6.4 Engineered Log Jams and Large Woody Debris 4-31

		Page
4-7	Downstream Analysis	4-32
4-7.1	Downstream Analysis Reports	4-33
4-7.2	Review of Resources	4-33
4-7.3	Inspection of Drainage Conveyance System	4-34
4-7.4	Analysis of Off Site Affects	4-34
4-8	Weirs	4-35
4-8.1	Rectangular Weirs	4-36
4-8.2	V-Notch Weirs	4-37
4-8.3	Trapezoidal or Cipoletti Weirs	4-37
Appendix 4-1	Manning's Roughness Coefficients (n)	4-1
Chapter 5	**Drainage of Highway Pavements**	5-1
5-1	Roadway and Structure Geometrics and Drainage	5-1
5-2	Hydrology	5-2
5-3	Rural Highway Drainage	5-2
5-3.1	Downstream End of Bridge Drainage	5-3
5-3.2	Slotted Drains and Trench Systems	5-3
5-3.3	Drop Inlets	5-4
5-4	Gutter Flow	5-4
5-5	Grate Inlets and Catch Basins	5-6
5-5.1	Inlet Types	5-7
5-5.2	Capacity of Inlets on a Continuous Grade	5-12
5-5.3	Side Flow Interception	5-14
5-5.4	Capacity of Inlets in Sag Locations	5-20
5-6	Hydroplaning and Hydrodynamic Drag	5-26
Chapter 6	**Storm Drains**	6-1
6-1	Introduction	6-1
6-2	Design Criteria	6-2
6-3	Data for Hydraulics Report	6-5
6-4	Storm Drain Design – Handheld Calculator Method	6-6
6-4.1	General	6-6
6-4.2	Location	6-6
6-4.3	Discharge	6-6
6-4.4	Drain Design Section	6-9
6-4.5	Drain Profile	6-11
6-4.6	Remarks	6-11
6-5	Storm Drain Design – Computer Analysis	6-11
6-6	Hydraulic Grade Line	6-12
6-6.1	Friction Losses in Pipes	6-14
6-6.2	Junction Entrance and Exit Losses	6-14
6-6.3	Losses From Changes in Direction of Flow	6-15
6-6.4	Losses From Multiple Entering Flows	6-16
6-7	Drywells	6-17
6-8	Pipe Materials for Storm Drains	6-17
6-9	Subsurface Drainage	6-18

		Page
Chapter 7	**Fish Passage**	7-1
	7-1 Introduction	7-1
	7-2 Designing for Fish Passage	7-1
	7-2.1 General	7-1
	7-2.2 Types of Structures	7-2
	7-2.3 Culvert Design Approach	7-2
	7-2.4 River Training Devices	7-3
Chapter 8	**Pipe Classifications and Materials**	8-3
	8-1 Classifications of Pipe	8-3
	8-1.1 Drain Pipe	8-4
	8-1.2 Underdrain Pipe	8-4
	8-1.3 Culvert Pipe	8-5
	8-1.4 Storm Sewer Pipe	8-9
	8-1.5 Sanitary Sewer Pipe	8-10
	8-2 Pipe Materials	8-11
	8-2.1 Concrete Pipe	8-11
	8-2.2 Metal Pipe – General	8-13
	8-2.3 Thermoplastic Pipe – General	8-16
	8-2.4 Ductile Iron Pipe	8-20
	8-2.5 Solid Wall HDPE	8-20
	8-3 Vacant	8-20
	8-4 Pipe Corrosion Zones and Pipe Alternate Selection	8-20
	8-4.1 Corrosion Zone I	8-21
	8-4.2 Corrosion Zone II	8-22
	8-4.3 Corrosion Zone III	8-23
	8-5 Corrosion	8-29
	8-5.1 pH	8-29
	8-5.2 Resistivity	8-30
	8-5.3 Methods for Controlling Corrosion	8-30
	8-6 Abrasion	8-32
	8-7 Pipe Joints	8-34
	8-8 Pipe Anchors	8-35
	8-8.1 Thrust Blocks	8-35
	8-9 Pipe Rehabilitation and Abandonment	8-35
	8-9.1 Pipe Replacement	8-35
	8-9.2 Trenchless Techniques for Pipe Replacement	8-36
	8-10 Pipe Design	8-37
	8-10.1 Categories of Structural Materials	8-37
	8-10.2 Structural Behavior of Flexible Pipes	8-37
	8-10.3 Structural Behavior of Rigid Pipes	8-38
	8-10.4 Foundations, Bedding, and Backfill	8-39
	8-11 Structural Analysis and Fill Height Tables	8-40
	8-11.1 Pipe Cover	8-40
	8-11.2 Shallow Cover Installation	8-40
	8-11.3 Fill Height Tables	8-42

2-1 General Hydrology

The Washington State Department of Transportation (WSDOT) Headquarters (HQ) Hydraulics Office uses several methods for determining runoff rates and/or volumes. Experience has shown these methods to be accurate, convenient, and economical. The following methods will be discussed in detail in subsequent sections of this chapter:

1. The Rational Method
2. The Santa Barbara Urban Hydrograph (SBUH) Method
3. Continuous Simulation Method (western Washington for stormwater design)
4. Published Flow Records
5. United States Geological Survey (USGS) Regression Equations
6. Flood Reports

   Two other methods, documented testimony and high water mark observations, may be used as back-up material to confirm the results of the above statistical and empirical methods. Where calculated results vary from on-site observations, further investigation may be required.

7. Documented Testimony

   Documented testimony of long-time residents should also be given serious consideration by the designer. The engineer must be aware of any bias that testifying residents may have. Independent calculations should be made to verify this type of testimony. The information that may be furnished by local residents of the area should include, but not be limited to the following:

   a. Dates of past floods.
   b. High water marks.
   c. Amount of drift.
   d. Any changes in the river channel, which may be occurring (i.e., stability of streambed, is channel widening or meandering).
   e. Estimated velocity.

f. Description of flooding characteristics between normal flow to flood stage.

8. High Water Mark Observations

   Sometimes the past flood stage from a drainage area may be determined by observing ordinary high water marks (OHWM) on existing structures or on the bank of a stream or ditch. The Region Biologist can assist in determining the OHWM if needed. These marks along with other data may be used to determine the discharge by methods discussed in the Open Channel Flow chapter or the Culverts chapter of this manual.

Additional hydrologic procedures are available including complex computer models, which can give the designer accurate flood predictions. However, these methods, which require costly field data and large amounts of data preparation and calculation time, can rarely be justified for a single hydraulic structure. The HQ Hydraulics Office should be contacted before a procedure not listed previously is used in a hydrologic analysis.

For the sake of simplicity and uniformity, the HQ Hydraulics Office will normally require the use of one of the first six of the eight methods listed previously. Exceptions will be permitted if adequate justification is provided and approved by the State Hydraulic Engineer.

2-2 Selecting a Method

The first step in performing a hydrologic analysis is to determine which method is most appropriate. The following briefly describes each method that can be used to determine runoff rates and/or volumes. Figure 2-2.1 provides a summary table for quick comparison. Subsequent sections in this chapter provide a more detailed description of each method.

1. **Rational Method** – This method is used when peak discharges for small basins must be determined. It is a fairly simple and accurate method especially when the basin is primarily impervious. The rational method is appropriate for culvert design, pavement drainage design, storm drain design, and some stormwater facility designs in eastern Washington.

2. **SBUH Method** – This method is used when peak discharges and runoff volumes for small basins must be determined. This method is not complicated but requires a computer due to its computationally intensive nature. The SBUH method can be used for many stormwater facility designs in eastern Washington and can also be used for culvert design, pavement drainage design, and storm drain design through the entire state.

3. **Continuous Simulation Method** – The Continuous Simulation method captures the hydrologic effects of back to back storms more common in western Washington. This method uses a HSPF routine for computing runoff from western Washington extended precipitation time series or precipitation stations on pervious and impervious land areas. WSDOT continuous simulation hydrologic model MGSFlood is the recommended software product to use for calculating runoff treatment rates and volumes when designing WSDOT stormwater facilities. MGSFlood is not an appropriate model for calculating flow in fish passage culvert design. Consult Chapter 7 of this manual for a list of acceptable models.

4. **Published Flow Records** – This method is used when peak discharges for large basins must be determined. This is more of a collection of data rather than a predictive analysis like the other methods listed. Some agencies (primarily the USGS) gather streamflow data on a regular basis. This collected data can be used to predict flood flows for the river and is typically more accurate than calculated flows. Published flow records are most appropriate for culvert and bridge design.

5. **USGS Regression Equations** – This method is used when peak discharges for medium to large basins must be determined. It is a set of regression equations that were developed using data from streamflow gaging stations. The regression equations are very simple to use but lack the accuracy of published flow records. USGS regression equations are appropriate for culvert and bridge design.

6. **Flood Reports** – This method is used when peak discharges for medium to large basins must be determined. It is basically using results from an analysis that has been conducted by another agency. Often these values are very accurate since they were developed from an in-depth analysis. Flood report data are appropriate for culvert and bridge design.

Method	Assumptions	Data Needs
Rational	• Small catchments (< 1000 acres) • Time of concentration < 1 hour • Storm duration > or = concentration time • Rainfall uniformly distributed in time and space • Runoff is primarily overland flow • Negligible channel storage	Time of concentration (min) Drainage area (acreage) Runoff coefficient (C values) Rainfall intensity (use m,n values in/hr)
SBUH	• Rainfall uniformly distributed in time and space • Runoff is based on surface flow • Small to medium basin (up to 1,000 acres) • Urban type area (pavement usually suffices) **Regional Storms (Eastern Washington)**[1] • Short duration storm for stormwater conveyance • Long durations storm for stormwater volume **Type 1A Storm (Western Washington)**[1] (stormwater conveyance)	Curve number (CN values) Drainage area (acreage) Precipitation values (Isopluvials) Use software similar to StormSHED
Continuous Model (Western Washington)	• HSPF routine for stormwater best management practices including detention and infiltration ponds, vegetated filter strips, and bioswales • Medium size basin (<320 acres) • Elevations below 1500 feet	Use MGSFlood software Drainage basin area (acreage) Land cover (impervious, grass) Soils (outwash, till, wetland) Climatic region (MAP)
Published Flow Record	• Midsized and large catchments with stream gage data • Appropriate station and/or generalized skew coefficient relationship applied	10 or more years of gaged flood records (A list of gages are published in *Hydraulics Manual.*)
USGS Regional Regression 2001	• Appropriate for culvert and bridge design • Midsized and large catchments • Simple but lack accuracy of flow records	Regional Equations 2001 Annual precipitation (inches) Drainage area (square miles) (National Flood Frequency (NFF) or Stream Stats software can be used)
Flood Reports	• Appropriate for culvert and bridge design • Midsized and large watershed • Often very accurate, but check with agency	Available from FEMA
Basin Transfer of Gage Data With USGS Equations	• Similar hydrologic characteristics • Channel storage	Discharge and area for gaged watershed Area for ungaged watershed

[1]Chapter 4 of the *Highway Runoff Manual* provides detailed guidance for design storms.

Summary of Methods for Estimating Runoff Rates and/or Volumes
Figure 2-2.1

2-3 Drainage Basin

The size of the drainage basin is one of the most important parameters regardless of which method of hydrologic analysis is used. To determine the basin area, select the best available topographic map or maps, which cover the entire area contributing surface runoff to the point of interest. Outline the area on the map or maps and determine the size in square meters, acres, or square miles (as appropriate for the specific equations), either by scaling or by using a planimeter. Sometimes drainage basins are small enough that they fit entirely on the CADD drawings for the project. In these cases the basin can be digitized on the CADD drawing and calculated by the computer. Any areas within the basin that are known to be non-contributing to surface runoff should be subtracted from the total drainage area.

The USGS has published two open-file reports titled, *Drainage Area Data for Western Washington* and *Drainage Area Data for Eastern Washington*. Copies of these reports can be obtained from the HQ Hydraulics Office and the Region Hydraulics Engineer. These reports list drainage areas for all streams in Washington where discharge measurements have been made. Drainage areas are also given for many other sites such as highway crossings, major stream confluences, and at the mouths of significant streams. These publications list a total of over 5,000 drainage areas and are a valuable time saver to the designer. The sites listed in these publications are usually medium sized and larger drainage basin areas. Small local drainage areas need to be determined from topographic maps as outlined above.

2-4 Cold Climate Considerations

Snowmelt and rain-on-snow is a complicated process and in some areas can result in greater rates of runoff. There are two parts to this section: the first part focuses on calculating the impacts of snowmelt and the second section provides additional considerations for designers when evaluating the impacts of snowmelt in a project location.

2-4.1 Calculating Snowmelt

The following general guidance was developed for urban areas; however, it can be used in rural areas. This method should be added to the 100-year 24-hour precipitation when using the single event model to account for snowmelt. No additional amounts need to be added to precipitation when designing for conveyance and other hydraulic calculations.

When an area is evaluated for snow impacts the designer should: apply the method described in this section; consult the Region Hydraulics Engineer, the project maintenance office, the project engineer, and finally historical data. Then in the hydraulics report, the designer should describe in detail what value (if any) was determined to most accurately represent snowmelt at a project location.

The first question designers should consider is whether or not cold climate effects will impact a project. In particular, designers should check the snow record to determine the maximum monthly average snow depths for the project. Snow depths can be found at the following website or through contacting the Region Hydraulics Engineer or Headquarter Hydraulics Office at www.wrcc.dri.edu/summary/climsmwa.html.

The following equation uses a factor of 5 developed from the energy budget equation developed by the U.S. Army Corps of Engineers (USACE) and available snow for eastern Washington cities to convert depth to snow water equivalent. This amount should be added to the 100-year 24-hour precipitation value when designing for flood conditions for rain-on-snow or snowmelt. The equation below should only be applied when the average snow depth within the month at a project location meets or exceeds 2 inches/day.

$$\text{Snow Water Equivalent} = \frac{\text{Average Snow Depth (max. month (in/day))}}{5}$$

The snow water equivalent should not be greater than 1.5 in/day.

2-4.2 Additional Considerations

Regardless of whether or not snowmelt will impact a project site, designers need to also consider the following important issues to provide adequate road drainage and prevent flood damage to downstream properties.

1. **Roadside Drainage** – During the design phase, consideration should be given to how roadside snow will accumulate and possibly block inlets and other flow paths for water present during the thawing cycle. If it is determined that inlets could be blocked by the accumulation of plowed snow, consideration should be given to an alternate course of travel for runoff. This will help to prevent the water ponding that sometimes occurs in certain areas due to snowmelt and rain not having an open area in which to drain.

2. **Retention Ponds** – When retention ponds are located near the roadway, the emergency spillway should be located outside of any snow storage areas that could block overflow passage or an alternative flow route should be designated.

3. **Frozen Ground** – Frozen ground coupled with snowmelt or rain-on-snow can cause unusually adverse conditions. These combined sources of runoff are generally reflected in the USGS regression equations as well as in the historic gauge records. No corrections or adjustments typically need to be made to these hydrology methods for frozen ground or snowmelt. For smaller basins, the SBUH and Rational methods are typically used to determine peak volume and peak runoff rates. The CN value for the SBUH

method, and the runoff coefficient for the Rational method do not need to be increased to account for frozen ground in snowy or frozen areas as consideration has been given to this in the normal precipitation amounts and in deriving the snowmelt equation.

2-5 The Rational Method

2-5.1 General

The Rational method is used to predict peak flows for small drainage areas, which can be either natural or developed. The Rational method can be used for culvert design, pavement drainage design, storm drain design, and some eastern Washington stormwater facility design. The greatest accuracy is obtained for areas smaller than 100 acres (40 hectares) and for developed conditions with large areas of impervious surface (e.g., pavement, roof tops). Basins up to 1,000 acres (400 hectares) may be evaluated using the rational formula; however, results for large basins often do not properly account for effects of infiltration and thus are less accurate. Designers should never perform a Rational method analysis on a basin that is larger than the lower limit specified for the USGS regression equations since the USGS regression equations will yield a more accurate flow prediction for that size of basin.

The formula for the Rational method is:

$$Q = \frac{CIA}{K_c} \tag{2-1}$$

Where:

- Q = runoff in cubic feet per second (cubic meters per second)
- C = runoff coefficient in dimensionless units
- I = rainfall intensity in inches per hour (millimeters per hour)
- A = drainage area in acres (hectares)
- K_c = conversion factor of 1 for English (360 for Metric units)

When several subareas within a drainage basin have different runoff coefficients, the Rational formula can be modified as follows:

$$Q = \frac{I\Sigma CA}{K_c} \tag{2-1a}$$

Where:

$\Sigma CA = C_1 \times A_1 + C_2 \times A_2 + \ldots C_n \times A_n$

Hydrologic information calculated by the Rational method should be submitted on DOT Form 235-009 (see Figure 2-5.1). This format contains all the required input information as well as the resulting discharge. The description of each area should be identified by name or stationing so that the reviewer may easily locate each area.

2-5.2 Runoff Coefficients

The runoff coefficient "C" represents the percentage of rainfall that becomes runoff. The Rational method implies that this ratio is fixed for a given drainage basin. In reality, the coefficient may vary with respect to prior wetting and seasonal conditions. The use of an average coefficient for various surface types is quite common and it is assumed to stay constant through the duration of the rainstorm.

When considering frozen ground, designers should review Section 2-4.2 number 3 of this manual.

In a high growth rate area, runoff factors should be projected that will be characteristic of developed conditions 20 years after construction of the project. Even though local stormwater practices (where they exist) may reduce potential increases in runoff, prudent engineering should still make allowances for predictable growth patterns.

The coefficients in Figure 2-5.2 are applicable for peak storms of 10-year frequency. Less frequent, higher intensity storms will require the use of higher coefficients because infiltration and other losses have a proportionally smaller effect on runoff. Generally, when designing for a 25-year frequency, the coefficient should be increased by 10 percent; when designing for a 50-year frequency, the coefficient should be increased by 20 percent; and when designing for a 100-year frequency, the coefficient should be increased by 25 percent. The runoff coefficient should not be increased above 0.95, unless approved by the Regional Hydraulics Engineer. Higher values may be appropriate for steeply sloped areas and/or longer return periods, because in these cases infiltration and other losses have a proportionally smaller effect on runoff.

SR	Project	
Calculated By		Date

EQUATIONS	LEGEND				
$T_c = \frac{L}{K\sqrt{S}} = \frac{L^{1.5}}{K\sqrt{\Delta H}}$	Q	=	Flow	T_c	=	Time of concentration
$I = \frac{m}{(T_C)^n}$	L	=	Length of drainage basin	m & n	=	Rainfall coefficients
$Q = \frac{CIA}{K_C}$	S	=	Average slope	K_c	=	Conversion
	K	=	Ground cover coefficient	C	=	Runoff coefficient
	ΔH	=	Elevation change of basin	A	=	Drainage area

Description Of Area	MRI	L	ΔH	S	K	T_c	Rainfall Coeff		K_c	C	I	A	Q
							m	n					

Hydrology by the Rational Method
Figure 2-5.1

Below is the web link for electronic spreadsheet (WSDOT Form 235-009):

www.wsdot.wa.gov/publications/fulltext/Hydraulics/programs/hydrology.xls

Type of Cover	Flat	Rolling 2%–10%	Hilly Over 10%
Pavement and roofs	0.90	0.90	0.90
Earth shoulders	0.50	0.50	0.50
Drives and walks	0.75	0.80	0.85
Gravel pavement	0.50	0.55	0.60
City business areas	0.80	0.85	0.85
Suburban residential	0.25	0.35	0.40
Single family residential	0.30	0.40	0.50
Multi units, detached	0.40	0.50	0.60
Multi units, attached	0.60	0.65	0.70
Lawns, very sandy soil	0.05	0.07	0.10
Lawns, sandy soil	0.10	0.15	0.20
Lawns, heavy soil	0.17	0.22	0.35
Grass shoulders	0.25	0.25	0.25
Side slopes, earth	0.60	0.60	0.60
Side slopes, turf	0.30	0.30	0.30
Median areas, turf	0.25	0.30	0.30
Cultivated land, clay and loam	0.50	0.55	0.60
Cultivated land, sand and gravel	0.25	0.30	0.35
Industrial areas, light	0.50	0.70	0.80
Industrial areas, heavy	0.60	0.80	0.90
Parks and cemeteries	0.10	0.15	0.25
Playgrounds	0.20	0.25	0.30
Woodland and forests	0.10	0.15	0.20
Meadows and pasture land	0.25	0.30	0.35
Pasture with frozen ground	0.40	0.45	0.50
Unimproved areas	0.10	0.20	0.30

Runoff Coefficients for the Rational Method — 10-Year Return Frequency
Figure 2-5.2

2-5.3 Time of Concentration

Time of concentration (T_c) is defined as the time for runoff to travel from the hydraulically most distant point of the watershed to a point of interest in the watershed. Travel time (T_t) is the time it takes water to travel from one location to another in a watershed. Travel time (T_t) is a component of time of concentration (T_c), which is computed by summing all the travel times for consecutive components of the drainage flow path. This concept assumes that rainfall is applied at a constant rate over a drainage basin which would eventually produce a constant peak rate of runoff.

Actual precipitation does not fall at a constant rate. A precipitation event will begin with small rainfall intensity then, sometimes very quickly, build to peak intensity and eventually taper down to no rainfall. Because rainfall intensity is variable, the time of concentration is included in the Rational method so that the designer can determine the proper rainfall intensity to apply across the basin. The intensity that should be used for design purposes is the highest intensity that will occur with the entire basin contributing flow to the location where the designer is interested in knowing the flow rate. It is important to note that this may be a much lower intensity than the absolute maximum intensity. The reason is that it often takes several minutes before the entire basin is contributing flow but the absolute maximum intensity lasts for a much shorter time so the rainfall intensity that creates the greatest runoff is less than the maximum by the time the entire basin is contributing flow.

Most drainage basins will consist of different types of ground covers and conveyance systems that flow must pass over or through. These are referred to as flow segments. It is common for a basin to have flow segments that are overland flow and flow segments that are open channel flow. Urban drainage basins often have flow segments that flow through a storm drainpipe in addition to the other two types. A travel time (the amount of time required for flow to move through a flow segment) must be computed for each flow segment. The time of concentration is equal to the sum of all the flow segment travel times.

For a few drainage areas, a unique situation occurs where the time of concentration that produces the largest amount of runoff is less than the time of concentration for the entire basin. This can occur when two or more subbasins have dramatically different types of cover (i.e., different runoff coefficients). The most common case would be a large paved area together with a long narrow strip of natural area. In this case, the designer should check the runoff produced by the paved area alone to determine if this scenario would cause a greater peak runoff rate than the peak runoff rate produced when both land segments are contributing flow. The scenario that produces the greatest runoff should be used, even if the entire basin is not contributing flow to this runoff.

The procedure for determining the time of concentration for overland flow was developed by the United States Natural Resources Conservation Service (formerly known as the Soil Conservation Service) and is described below. It is sensitive to slope, type of ground cover, and the size of channel. If the total time of concentration is less than 5 minutes, a minimum of five minutes should be used as the duration, see Section 2-5.4 for details. The time of concentration can be calculated as in Equations 2-2 and 2-3:

$$T_t = \frac{L}{K\sqrt{S}} = \frac{L^{1.5}}{K\sqrt{\Delta H}} \quad (2\text{-}2)$$

$$T_c = T_{t1} + T_{t2} + \ldots T_{tnz} \quad (2\text{-}3)$$

Where:

T_t = travel time of flow segment in minutes
T_c = time of concentration in minutes
L = length of segment in feet (meters)
ΔH = elevation change across segment in feet (meters)
K = ground cover coefficient in feet (meters)
S = slope of segment $\frac{\Delta H}{L}$ in feet per feet (meter per meter)

Type of Cover		K (English)	K (Metric)
Forest with heavy ground cover		150	50
Minimum tillage cultivation		280	75
Short pasture grass or lawn		420	125
Nearly bare ground		600	200
Small roadside ditch w/grass		900	275
Paved area		1,200	375
Gutter flow	4 inch deep (100 mm)	1,500	450
	6 inch deep (150 mm)	2,400	725
	8 inch deep (200 mm)	3,100	950
Storm sewers	1 foot diam. (300 mm)	3,000	925
	18 inch diam. (450 mm)	3,900	1,200
	2 feet diam. (600 mm)	4,700	1,425
Open Channel Flow (n = .040) Narrow Channel (w/d = 1)	1 foot deep (300 mm)	1,100	350
	2 feet deep (600 mm)	1,800	550
	4 feet deep (1.20 m)	2,800	850
Open Channel Flow (n =.040) Wide Channel (w/d = 9)	1 foot deep (300 mm)	2,000	600
	2 feet deep (600 mm)	3,100	950
	4 feet deep (1.20 m)	5,000	1,525

Ground Cover Coefficients
Figure 2-5.3

2-5.4 Rainfall Intensity

After the appropriate storm frequency for the design has been determined (see Chapter 1) and the time of concentration has been calculated, the rainfall intensity can be calculated. Designers should never use a time of concentration that is less than 5 minutes for intensity calculations, even when the calculated time of concentration is less than 5 minutes. The 5-minute limit is based on two ideas:

1. Shorter times give unrealistic intensities. Many IDF curves are constructed from curve smoothing equations and not based on actual data collected at intervals shorter than 15 to 30 minutes. To make the curves shorter, involves extrapolation, which is not reliable.

2. It takes time for rainfall to generate into runoff within a defined basin, thus it would not be realistic to have less than 5 minutes for a time of concentration.

It should be noted that the rainfall intensity at any given time is the average of the most intense period enveloped by the time of concentration and is not the instantaneous rainfall. Equation 2-4 is the equation for calculating rainfall intensity.

$$I = \frac{m}{(T_c)^n} \qquad (2\text{-}4)$$

Where:

I = rainfall intensity in inches per hour (millimeters per hour)
T_c = time of concentration in minutes
m & n = coefficients in dimensionless units (Figures 2-5.4A and 2-5.4B)

The coefficients (m and n) have been determined for all major cities for the 2-, 5-, 10-, 25-, 50-, and 100-year mean recurrence intervals (MRI). The coefficients listed are accurate from 5-minute durations to 1,440-minute durations (24 hours). These equations were developed from the *1973 National Oceanic and Atmospheric Administration Atlas 2, Precipitation-Frequency Atlas of the Western United States, Volume IX-Washington.*

With the Region Hydraulic Engineer's assistance, the designer should interpolate between the two or three nearest cities listed in the tables when working on a project that is in a location not listed on the table. If the designer must do an analysis with a T_c greater than 1,440 minutes, the Rational method should not be used.

Location	2-Year MRI		5-Year MRI		10-Year MRI		25-Year MRI		50-Year MRI		100-Year MRI	
	m	n	m	n	m	n	m	n	m	n	m	n
Aberdeen and Hoquiam	5.10	0.488	6.22	0.488	7.06	0.487	8.17	0.487	9.02	0.487	9.86	0.487
Bellingham	4.29	0.549	5.59	0.555	6.59	0.559	7.90	0.562	8.89	0.563	9.88	0.565
Bremerton	3.79	0.480	4.84	0.487	5.63	0.490	6.68	0.494	7.47	0.496	8.26	0.498
Centralia and Chehalis	3.63	0.506	4.85	0.518	5.76	0.524	7.00	0.530	7.92	0.533	8.86	0.537
Clarkston and Colfax	5.02	0.628	6.84	0.633	8.24	0.635	10.07	0.638	11.45	0.639	12.81	0.639
Colville	3.48	0.558	5.44	0.593	6.98	0.610	9.07	0.626	10.65	0.635	12.26	0.642
Ellensburg	2.89	0.590	5.18	0.631	7.00	0.649	9.43	0.664	11.30	0.672	13.18	0.678
Everett	3.69	0.556	5.20	0.570	6.31	0.575	7.83	0.582	8.96	0.585	10.07	0.586
Forks	4.19	0.410	5.12	0.412	5.84	0.413	6.76	0.414	7.47	0.415	8.18	0.416
Hoffstadt Cr. (SR 504)	3.96	0.448	5.21	0.462	6.16	0.469	7.44	0.476	8.41	0.480	9.38	0.484
Hoodsport	4.47	0.428	5.44	0.428	6.17	0.427	7.15	0.428	7.88	0.428	8.62	0.428
Kelso and Longview	4.25	0.507	5.50	0.515	6.45	0.509	7.74	0.524	8.70	0.526	9.67	0.529
Leavenworth	3.04	0.530	4.12	0.542	5.62	0.575	7.94	0.594	9.75	0.606	11.08	0.611
Metaline Falls	3.36	0.527	4.90	0.553	6.09	0.566	7.45	0.570	9.29	0.592	10.45	0.591
Moses Lake	2.61	0.583	5.05	0.634	6.99	0.655	9.58	0.671	11.61	0.681	13.63	0.688
Mt. Vernon	3.92	0.542	5.25	0.552	6.26	0.557	7.59	0.561	8.60	0.564	9.63	0.567
Naselle	4.57	0.432	5.67	0.441	6.14	0.432	7.47	0.443	8.05	0.440	8.91	0.436
Olympia	3.82	0.466	4.86	0.472	5.62	0.474	6.63	0.477	7.40	0.478	8.17	0.480
Omak	3.04	0.583	5.06	0.618	6.63	0.633	8.74	0.647	10.35	0.654	11.97	0.660
Pasco and Kennewick	2.89	0.590	5.18	0.631	7.00	0.649	9.43	0.664	11.30	0.672	13.18	0.678
Port Angeles	4.31	0.530	5.42	0.531	6.25	0.531	7.37	0.532	8.19	0.532	9.03	0.532
Poulsbo	3.83	0.506	4.98	0.513	5.85	0.516	7.00	0.519	7.86	0.521	8.74	0.523
Queets	4.26	0.422	5.18	0.423	5.87	0.423	6.79	0.423	7.48	0.423	8.18	0.424
Seattle	3.56	0.515	4.83	0.531	5.62	0.530	6.89	0.539	7.88	0.545	8.75	0.5454
Sequim	3.50	0.551	5.01	0.569	6.16	0.577	7.69	0.585	8.88	0.590	10.04	0.593
Snoqualmie Pass	3.61	0.417	4.81	0.435	6.56	0.459	7.72	0.459	8.78	0.461	10.21	0.476
Spokane	3.47	0.556	5.43	0.591	6.98	0.609	9.09	0.626	10.68	0.635	12.33	0.643
Stevens Pass	4.73	0.462	6.09	0.470	8.19	0.500	8.53	0.484	10.61	0.499	12.45	0.513
Tacoma	3.57	0.516	4.78	0.527	5.70	0.533	6.93	0.539	7.86	0.542	8.79	0.545
Vancouver	2.92	0.477	4.05	0.496	4.92	0.506	6.06	0.515	6.95	0.520	7.82	0.525
Walla Walla	3.33	0.569	5.54	0.609	7.30	0.627	9.67	0.645	11.45	0.653	13.28	0.660
Wenatchee	3.15	0.535	4.88	0.566	6.19	0.579	7.94	0.592	9.32	0.600	10.68	0.605
Yakima	3.86	0.608	5.86	0.633	7.37	0.644	9.40	0.654	10.93	0.659	12.47	0.663

Index to Rainfall Coefficients (English Units)
Figure 2-5.4A

Location	2-Year MRI		5-Year MRI		10-Year MRI		25-Year MRI		50-Year MRI		100-Year MRI	
	m	n	m	n	m	n	m	n	m	n	m	n
Aberdeen and Hoquiam	129	0.488	158	0.488	179	0.487	208	0.487	229	0.487	250	0.487
Bellingham	109	0.549	142	0.555	167	0.559	201	0.562	226	0.563	251	0.565
Bremerton	96	0.480	123	0.487	143	0.490	170	0.494	190	0.496	210	0.498
Centralia and Chehalis	92	0.506	123	0.518	146	0.524	178	0.530	201	0.533	225	0.537
Clarkston and Colfax	128	0.628	174	0.633	209	0.635	256	0.638	291	0.639	325	0.639
Colville	83	0.558	138	0.593	177	0.610	230	0.626	271	0.635	311	0.642
Ellensburg	73	0.590	132	0.631	179	0.649	240	0.664	287	0.672	335	0.678
Everett	94	0.556	132	0.570	160	0.575	199	0.582	228	0.585	256	0.586
Forks	106	0.410	130	0.412	148	0.413	172	0.414	190	0.415	208	0.416
Hoffstadt Cr. (SR 504)	101	0.448	132	0.462	156	0.469	189	0.476	214	0.480	238	0.484
Hoodsport	114	0.428	138	0.428	157	0.427	182	0.428	200	0.428	219	0.428
Kelso and Longview	108	0.507	140	0.515	164	0.519	197	0.524	221	0.526	246	0.529
Leavenworth	77	0.530	105	0.542	143	0.575	202	0.594	248	0.606	281	0.611
Metaline Falls	85	0.527	124	0.553	155	0.566	189	0.570	236	0.592	265	0.591
Moses Lake	66	0.583	128	0.634	178	0.655	243	0.671	295	0.681	346	0.688
Mt. Vernon	100	0.542	133	0.552	159	0.557	193	0.561	218	0.564	245	0.567
Naselle	116	0.432	144	0.441	156	0.432	190	0.443	204	0.440	226	0.436
Olympia	97	0.466	123	0.472	143	0.474	168	0.477	188	0.478	208	0.480
Omak	77	0.583	129	0.618	168	0.633	222	0.647	263	0.654	304	0.660
Pasco and Kennewick	73	0.590	132	0.631	178	0.649	240	0.664	287	0.672	335	0.678
Port Angeles	109	0.530	138	0.531	159	0.531	187	0.532	208	0.532	229	0.532
Poulsbo	97	0.506	126	0.513	149	0.516	178	0.519	200	0.521	222	0.523
Queets	108	0.422	132	0.423	149	0.423	172	0.423	190	0.423	208	0.424
Seattle	90	0.515	123	0.531	143	0.530	175	0.539	200	0.545	222	0.545
Sequim	89	0.551	127	0.569	156	0.577	195	0.585	226	0.590	255	0.593
Snoqualmie Pass	92	0.417	122	0.435	167	0.459	196	0.459	223	0.461	259	0.476
Spokane	88	0.556	138	0.591	177	0.609	231	0.626	271	0.635	313	643
Stevens Pass	120	0.462	155	0.470	208	0.500	217	0.484	269	0.499	316	513
Tacoma	91	0.516	121	0.527	145	0.533	176	0.539	200	0.542	223	545
Vancouver	74	0.477	103	0.496	125	0.506	154	0.515	177	0.520	199	0.525
Walla Walla	85	0.569	141	0.609	185	0.627	246	0.645	291	0.653	337	0.660
Wenatchee	80	0.535	124	0.566	157	0.579	202	0.592	237	0.600	271	0.605
Yakima	98	0.608	149	0.633	187	0.644	239	0.654	278	0.659	317	0.663

Index to Rainfall Coefficients (Metric Units)
Figure 2-5.4B

2-5.5 Rational Formula Example

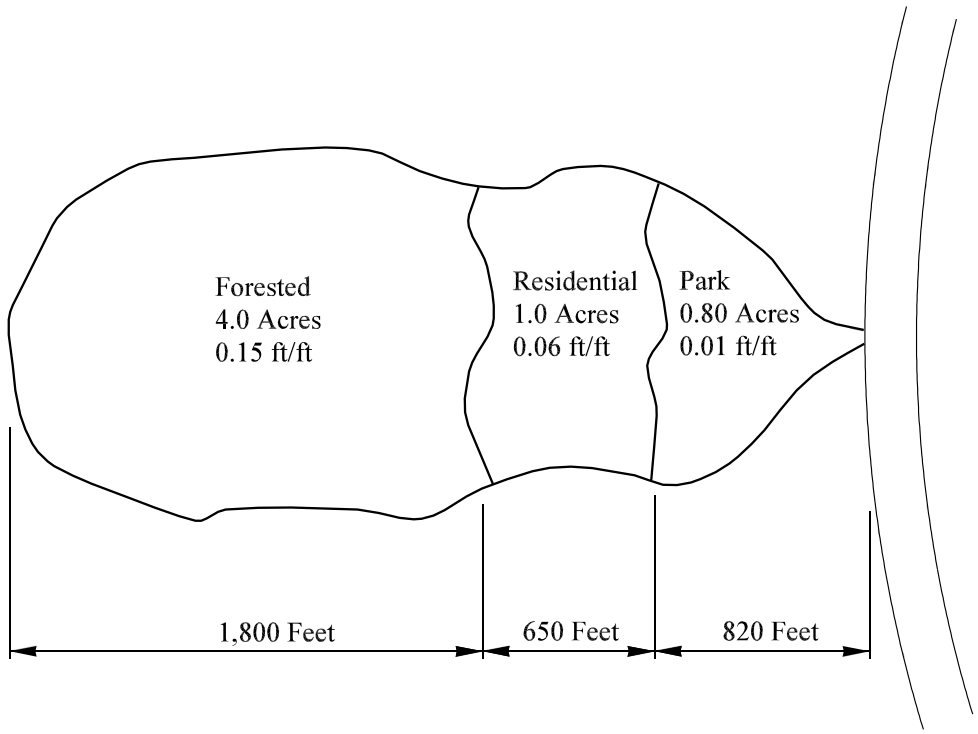

Compute the 25-year runoff for the Spokane watershed shown above. Three types of flow conditions exist from the highest point in the watershed to the outlet. The upper portion is 4.0 acres of forest cover with an average slope of 0.15 ft/ft. The middle portion is 1.0 acres of single family residential with a slope of 0.06 ft/ft and primarily lawns. The lower portion is a 0.8 acres park with 18-inch storm sewers with a general slope of 0.01 ft/ft.

$$T_c = \Sigma \frac{L}{K\sqrt{S}} = \frac{1{,}800}{150\sqrt{0.15}} + \frac{650}{420\sqrt{0.06}} + \frac{820}{3{,}900\sqrt{0.01}}$$

$$T_c = 31 \text{ min} + 6 \text{ min} + 2 \text{ min} = 39 \text{ min}$$

$$I = \frac{m}{(T_c)^n} = \frac{9.09}{(39)^{0.626}} = 0.93 \frac{\text{in}}{\text{hr}}$$

$$\Sigma CA = 0.22\ (4.0 \text{ acres}) + 0.44\ (1.0 \text{ acres}) + 0.11\ (0.8 \text{ acres}) = 1.4 \text{ acres}$$

$$Q = \frac{I(\Sigma CA)}{K_c} = \frac{(0.93)(1.4)}{1} = 1.31 \text{ cfs}$$

2-6 Single-Event Hydrograph Method: Santa Barbara Urban Hydrograph

Of the several commonly accepted hydrograph methods, the Santa Barbara Urban Hydrograph (SBUH) method is the best suited for WSDOT projects where conveyance systems are being designed and for some stormwater

treatment facilities in eastern Washington. SBUH was developed to calculate flow that will occur from surface runoff and is most accurate for drainage basins smaller than 100 acres (40 hectares) although it can be used for drainage basins up to 1,000 acres (400 hectares). SBUH should not be used where groundwater flow can be a major contributor to the total flow. While not all WSDOT projects are in urban basins, it is typically the paved surfaces (similar to urban areas) that generate the majority of the total flow.

An SBUH analysis requires that the designer understand certain characteristics of the project site, such as drainage patterns, predicted rainfall, soil type, area to be covered with impervious surfaces, type of drainage conveyance, and for eastern Washington the flow control BMP that will be used. The physical characteristics of the site and the design storm determine the magnitude, volume, and duration of the runoff hydrograph. Other factors, such as the conveyance characteristics of channel or pipe, merging tributary flows, and type of BMP used, will alter the shape and magnitude of the hydrograph. The key elements of a single-event hydrograph analysis are listed below (and described in more detail in this section):

- Design storm hyetograph.
- Runoff parameters.
- Hydrograph synthesis.
- Hydrograph routing.
- Hydrograph summation.

While the equations for the SBUH method are fairly simple, it is computationally intensive and would take hours if done by hand. Because of this, the only practical way to perform an analysis is to use a computer application. There are several commercially available computer programs that include the SBUH method, however the recommended software for WSDOT project is StormShed. Other commercially available computer program may also be used with prior approval from the State Hydraulic Engineer.

2-6.1 Design Storm Hyetograph

The SBUH method requires the input of a rainfall distribution or design storm hyetograph. The design storm hyetograph is rainfall depth versus time for a given design storm frequency and duration. For this application, it is presented as a dimensionless table of unit rainfall depth (incremental rainfall depth for each time interval divided by the total rainfall depth) versus time. The type of design storm used depends on the project locations as noted below:

- **Eastern Washington** – For projects in eastern Washington, the design storms are the short duration storm for conveyance design and the regional storm for volume based stormwater facilities. (Design storms are discussed further in Appendix 4C of the *Highway Runoff Manual*.)

- **Western Washington** – For projects in western Washington, the design storm for conveyance design is the Type 1A storm. For designs other than conveyance, see Section 2-7 for a description of the Continuous Simulation method.

Along with the design storm, precipitation depths are needed and should be selected for the city that is closest to the project site from the contours on an isopluvial map. The National Weather Service publishes isopluvial maps for different storm durations and recurrence intervals and links to these maps can be found in Appendix 4A of the *Highway Runoff Manual* or can be obtained from the HQ Hydraulics Office. ArcGIS has the isopluvial maps loaded into the program and may be the most accurate method since precipitation depths are given for the exact location of a project.

2-6.2 Runoff Parameters

The SBUH method requires input of parameters that describe physical drainage basin characteristics. These parameters provide the basis from which the runoff hydrograph is developed. This section describes the three key parameters (contributing drainage basin areas; runoff curve number; and runoff time of concentration) that, when combined with the rainfall hyetograph in the SBUH method, develop the runoff hydrograph. The proper selection and delineation of the contributing drainage basin areas to the BMP or structure of interest is required in the hydrograph analysis. The contributing basin area(s) used should be relatively homogeneous in land use and soil type. If the entire contributing basin is similar in these aspects, the basin can be analyzed as a single area. If significant differences exist within a given contributing drainage basin, it must be divided into subbasin areas of similar land use and soil characteristics. Hydrographs should then be computed for each subbasin area and summed to form the total runoff hydrograph for the basin. Contributing drainage basins larger than 100 acres should be divided into subbasins. By dividing large basins into smaller subbasins and then combining calculated flows, the timing aspect of the generated hydrograph is typically more accurate. Basin delineation is not the same as TDA delineation. For more details on delineation of TDAs, see Section 4-2.5.

Curve Numbers

The NRCS has conducted studies into the runoff characteristics of various land types. After gathering and analyzing extensive data, the NRCS developed relationships between land use, soil type, vegetation cover, interception, infiltration, surface storage, and runoff. The relationships have been characterized by a single runoff coefficient called a curve number (CN). CNs are chosen to depict average conditions—neither dry, nor saturated. The designer is referred to FHWA Ip-80-1 for more information on choosing appropriate curve numbers. Appendix 4B of the *Highway Runoff Manual* shows suggested CN values for various land covers and soil conditions.

The factors that contribute to the CN value are known as the soil-cover complex. The soilcover complexes have been assigned to one of four hydrologic soil groups, according to their runoff characteristics. These soil groups are labeled Types A, B, C, and D; with Type A generating the least amount of runoff and Type D generating the greatest. Appendix 4B of the *Highway Runoff Manual* shows the hydrologic soil groups of most soils in Washington State. The different soil groups can be described as follows:

- **Type A** – Soils having high infiltration rates, even when thoroughly wetted, and consisting chiefly of deep, well-drained to excessively drained sands or gravels. These soils have a high rate of water transmission.
- **Type B** – Soils having moderate infiltration rates when thoroughly wetted and consisting chiefly of moderately fine to moderately coarse textures. These soils have a moderate rate of water transmission.
- **Type C** – Soils having slow infiltration rates when thoroughly wetted and consisting chiefly of soils with a layer that impedes downward movement of water or soils with moderately fine to fine textures. These soils have a slow rate of water transmission.
- **Type D** – Soils having very slow infiltration rates when thoroughly wetted and consisting chiefly of clay soils with a high swelling potential, soils with a permanent high water table, soils with a hardpan or clay layer at or near the surface, and shallow soils over bedrock or other nearly impervious material. These soils have a very slow rate of water transmission.

The NRCS (formerly the Soil Conservation Service, or SCS) has developed maps for Washington State that show the specific soil classification for any given location. These maps are compiled by county and are typically available from the regional NRCS office. To determine which soil group to use for an analysis, locate the project site on the SCS map and read the soil classification listed. (See Appendix 4B of the *Highway Runoff Manual* for a web link to data to convert from the specific soil classification to a hydrologic soil group.) The WSDOT Materials Lab can also perform a soil analysis to determine the soil group for the project site. This should be done only if an SCS soils map cannot be located for the county in which the site is located; the available SCS map does not characterize the soils at the site (many SCS maps show “urban land” in highway right of ways and other heavily urbanized areas where the soil properties are uncertain); or there is reason to doubt the accuracy of the information on the SCS map for the particular site.

When performing an SBUH analysis for a basin, it is common to encounter more than one soil type. If the soil types are fairly similar (within 20 CN points), a weighted average can be used. If the soil types are significantly different, the basin should be separated into smaller subbasins (previously described for different land uses). Pervious ground cover and impervious

ground cover should always be analyzed separately. If the computer program StormShed is used for the analysis, pervious and impervious land segments will automatically be separated, but the designer will have to combine and manually weight similar pervious soil types for a basin.

Antecedent Moisture Condition

The moisture condition in a soil at the onset of a storm event, referred to as the antecedent moisture condition (AMC), has a significant effect on both the volume and rate of runoff. Recognizing this, the SCS developed three antecedent soil moisture conditions: I, II, and III.

AMC I: Soils are dry, but not to the wilting point.

AMC II: Average conditions.

AMC III: Heavy rainfall, or light rainfall and low temperatures, has occurred within the last 5 days, near saturated or saturated soil.

Table 2-6 gives seasonal rainfall limits for the three antecedent soil moisture conditions.

AMC	Dormant Season	Growing Season
I	Less than 0.5	Less than 1.4
II	0.5 to 1.1	1.4 to 2.1
III	Over 1.1	Over 2.1

Total 5-Day Antecedent Rainfall (Inches)
Table 2-6

The CN values generally listed are for AMC II, if the AMC falls into either group I or III, the CN value will need to be modified to actually represent the project site conditions. Appendix 4C of the *Highway Runoff Manual* provides further information regarding when the AMC should be considered and Appendix 4B of the *Highway Runoff Manual* provides conversions for the curve number for different antecedent moisture conditions for the case of Ia = 0.2S. For other conversions, see SCS National Engineering Handbook No. 4, 1985.

Time of Concentration

Time of Concentration (T_c) is defined as the time for runoff to travel from the hydraulically most distant point of the watershed to a point of interest in the watershed. Travel time (T_t) is the time it takes water to travel from one location to another in a watershed. Travel time (T_t) is a component of time of concentration (T_c), which is computed by summing all the travel times for consecutive components of the drainage flow path. While this section

starts the same as Section 2-5.3, the analysis described in this section is more detailed because how water travels through a basin is classified by flow type. The different types of flow include: sheet flow, shallow concentrated flow, open channel flow, or some combination of these. Classifying flow type is best determined by field inspection and using the parameters described below:

- **Sheet flow** is flow over plane surfaces. It usually occurs in the headwater areas of streams and also for short distances on evenly graded slopes. With sheet flow, the friction value (ns, which is a modified Manning's roughness coefficient) is used. These ns values are for very shallow flow depths up to about 0.1 foot (3 cm) and are used only for travel lengths up to 300 feet (90 m) on paved surfaces and 150 feet on pervious surfaces. Appendix 4B of the *Highway Runoff Manual* provides the Manning's *ns* values for sheet flow at various surface conditions.

  For sheet flow of up to 300 feet, use Manning's kinematic solution to directly compute T_t:

  $$T_t = (0.42\ (n_s L)^{0.8})/((P_2)^{0.527}(s_o)^{0.4}) \qquad (2\text{-}5)$$

  Where:
  - T_t = travel time (minutes)
  - n_s = sheet flow Manning's coefficient (dimensionless)
  - L = flow length (feet)
  - P_2 = 2-year, 24-hour rainfall (inches)
  - s_o = slope of hydraulic grade line (land slope, ft/ft)

- **Shallow Flow** – After a maximum of 300 feet, sheet flow is assumed to become shallow concentrated flow. The average velocity for this flow can be calculated using the k_s values from Appendix 4B of the *Highway Runoff Manual*. Average velocity is a function of watercourse slope and type of channel. After computing the average velocity using the Velocity Equation (Equation 4-2), the travel time (T_t) for the shallow concentrated flow segment can be computed by dividing the length of the segment by the average velocity.

- **Open channels** are assumed to begin where surveyed cross section information has been obtained, where channels are visible on aerial photographs, or where lines indicating streams appear on USGS Quadrangle maps. For developed drainage systems, the travel time of flow in a pipe is also represented as an open channel. The k_c values from Appendix 4B of the *Highway Runoff Manual* used in the Velocity Equation can be used to estimate average flow velocity. Average flow velocity is usually determined for bank full conditions. After average velocity is computed, the travel time (T_t) for the channel segment can be computed by dividing the length of the channel segment by the average velocity.

A commonly used method of computing average velocity of flow, once it has measurable depth, is the following Velocity Equation:

$$V = (k)(so0.5) \quad (2\text{-}6)$$

Where:
V = velocity (ft/s)
k = time of concentration velocity factor (ft/s)
so = slope of flow path (ft/ft)

Regardless of how water moves through a watershed, when estimating travel time (T_t), the following limitations apply:

- Manning's kinematic solution should not be used for sheet flow longer than 300 feet.
- The equations given here to calculate velocity were developed by empirical means; therefore, English Units (such as inches) must be used for all input variables for the equation to yield a correct answer. Once the velocity is calculated, it can be converted to metric units to finish the travel time calculations in the case of shallow concentrated flow and channel flow.

Appendix 4B of the *Highway Runoff Manual* shows suggested "*n*" and "*k*" values for various land covers to be used in travel time calculations.

2-6.3 Hydrograph Synthesis

The SBUH method applies the selected CNs to SCS equations to compute soil absorption and precipitation excess from the rainfall hyetograph. Each time step of this process generates one increment of an instantaneous hydrograph with the same duration. The instantaneous hydrograph is then routed through an imaginary reservoir, with a time delay equal to the basin time of concentration. The end product is the runoff hydrograph for that land segment.

Abstractions (including rainfall interception and storage in small depressions in the ground surface) are also accounted for in the SBUH method. The abstraction of runoff, S, is computed from the CN as follows:

$$S = (1000/CN) - 10 \quad (2\text{-}7)$$

Using the abstraction value and precipitation for the given time step, the runoff depth, D, per unit area is calculated as follows:

$$D(t) = ((p(t) - 0.2(S))^2)/(p(t) + 0.8(S)) \quad (2\text{-}8)$$

Where:
p(t) = precipitation for the time increment (in)

The total runoff, R(t), for the time increment is computed as follows:

$$R(t) = D(t) - D(t\text{-}1) \tag{2-9}$$

The instantaneous hydrograph, *I(t)*, in cubic feet per second (cfs) at each time step, *dt*, is computed as follows:

$$I(t) = 60.5\ R(t)\ A/dt \tag{2-10}$$

Where:
A = area (acres)
dt = time interval (min)

Note: A time interval of 10 minutes can be used for the Type 1A storm or the Regional Long-Duration Storm, however a 5 minute interval should always be used for the Short-Duration Storm. The runoff hydrograph, *Q(t)*, is then obtained by routing the instantaneous hydrograph *I(t)* through an imaginary reservoir with a time delay equal to the time of concentration of the drainage basin. The following equation estimates the routed flow, *Q(t)*:

$$Q(t+1) = Q(t) + w[I(t) + I(t+1) - 2Q(t)] \tag{2-11}$$

Where:
$w = dt/(2T_c + dt)$
T_c = time of concentration for the contributing drainage basin area

2-6.4 Level Pool Routing

This section presents the methodology for routing a hydrograph through a stormwater facility using hydrograph analysis. Level pool routing is done the same way regardless of the method used to generate the hydrograph; therefore, this part of the analysis is not unique to the SBUH method. The level pool routing technique presented here is one of the simplest and most commonly used hydrograph routing methods and is the method used by StormShed. It is based on the following continuity equation:

$$\text{Inflow} - \text{Outflow} = \text{Change in Storage} \tag{2-12}$$
$$((I1 + I2)/2) - ((O1 + O2)/2) = S2 - S1$$

Where:
I1, I2 = inflow at time 1 and time 2
O1, O2 = outflow at time 1 and time 2
S1, S2 = storage at time 1 and time 2

The time interval for the routing analysis must be consistent with the time interval used in developing the inflow hydrograph. The time interval used for a 24-hour storm is 10 minutes. The variables can be rearranged to obtain the following equation:

$$I1 + I2 + 2S1 - O1 = O2 + 2S2 \quad (2\text{-}13)$$

If the time interval is in minutes, the unit of storage (S) is now cubic feet per minute (cf/min), which can be converted to cfs by multiplying by 1 min/60 sec. The terms on the left-hand side of the equation are known from the inflow hydrograph and from the storage and outflow values of the previous time step. The unknowns O and S can be solved interactively from the given stage-storage and stage-discharge curves. As with the synthesis of a hydrograph, the computations are fairly simple, but very voluminous. The best way to route a hydrograph through a stormwater facility is to use a computer program. Many hydrologic analysis software programs include features that make hydrograph routing an easy process including Storm Shed.

2-6.5 Hydrograph Summation

One of the key advantages of hydrograph analysis is the ability to accurately describe the cumulative effect of runoff from several contributing drainage basin areas having different runoff characteristics and travel times. This cumulative effect is best characterized by a single hydrograph, which is obtained by summing the individual hydrographs from tributary basins at a particular discharge point of interest. The general procedure for performing a hydrograph summation begins with selecting a discharge point of interest where it is important to know the effects of the runoff generated on the project site. Next, route each individual hydrograph through a conveyance system that carries it to the point of interest. The final step is to sum the flow values for each hydrograph for all of the time intervals. This will yield a single discharge hydrograph.

2-7 Continuous Simulation Method (Western Washington Only for Stormwater)

When designing stormwater facilities in western Washington, the designer must use an approved continuous simulations model, to meet the requirements of the most current version of the *Highway Runoff Manual*. A continuous simulation model captures the back to back affects of storm events that are more common in western Washington. These events are associated with high volumes of flow from sequential winter storms rather than high peak flow from short duration events as is characteristic in eastern Washington. WSDOT's approved continuous simulation hydrologic model is MGSFlood (see Section 4-3.5.2 of the *Highway Runoff Manual*) which uses the HSPF routines for computing runoff from rainfall on pervious and impervious

land areas. In addition, MGSFlood has the BMP design criteria built into the software and will alert the designer regarding whether the runoff treatment flow rates and volumes meet the requirements of the *Highway Runoff Manual*. See the HQ Hydraulics web page for a detailed example of this modeling approach and for information on how to obtain a copy of the public domain program at www.wsdot.wa.gov/Design/Hydraulics/Training.htm.

MGSFlood does have limitations that the designer should understand before using the program, regarding the project location, conveyance design, and the size of the basin. MGSFlood is for projects in western Washington only, at elevations below 1500 feet, and for basins up to 320 acres (about one-half square mile). The program does not include routines for simulating the accumulation and melting of snow, and its use should be limited to areas where snowmelt is typically not a major contributor to floods or to the annual runoff volume. MGSFlood is generally not used for conveyance design unless a conveyance system is downstream of a stormwater pond and the 15 minute time step is used. For projects located in western Washington that fall outside the modeling guidelines described in this paragraph, contact region or HQ hydraulics staff for assistance.

2-7.1 Modeling Requirements

MGSFlood should be used once the designer has selected the BMP(s) for the project site and has determined the input values for: precipitation, drainage basin delineation, and soil characteristics. Each of these input values are further described in the sections below.

2-7.1.2 Precipitation Input

There are two methods for transposing precipitation timeseries that are available in the continuous simulation model: Extended Precipitation Timeseries Selection and Precipitation Station Selection. The designer will generally select the Extended Precipitation Timeseries unless it is not available for a project site, then the Precipitation Station is selected. Both methods are further described below.

1. **Extended Precipitation Timeseries Selection** – Extended Precipitation Timeseries uses a family of prescaled precipitation and evaporation timeseries. These timeseries were developed by combining and scaling precipitation records from widely separated stations, resulting in record lengths in excess of 100 years. Extended hourly precipitation and evaporation timeseries have been developed using this method for most of the lowland areas of western Washington where WSDOT projects are constructed. These timeseries should be used for stormwater facility design for project sites with a mean annual precipitation ranging from 24 to 60 inches and located in the region shown in Figure 2-7.1.

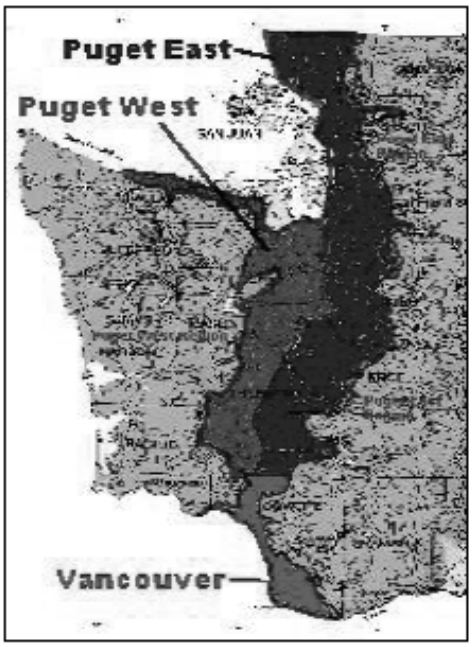

Extended Precipitation Timeseries Regions
Figure 2-7.1

2. **Precipitation Station Selection** – For project sites located outside the extended timeseries region, a second precipitation scaling method is used. A source gage is selected and a single scaling factor is applied to transpose the hourly record from the source gage to the site of interest (target site). The current approach for single factor scaling, as recommended in Ecology's SMMWW, is to compute the scaling factor as the ratio of the 25-year, 24-hour precipitation for the target and source sites. Contact region or Headquarters Hydraulics staff if assistance is needed in selecting the appropriate gage. Updating areas with the extended precipitation timeseries will be done eventually for all of western Washington, based on available funding.

2-7.1.3 TDAs and Drainage Basin Characteristics

To facilitate rainfall-runoff modeling the project site must be defined in terms of Threshold Discharge Areas (TDAs) and drainage basins. The *Highway Runoff Manual* Minimum Requirements for flow control and/or runoff treatment might be triggered in some or all TDAs along the project. For those TDAs that require a stormwater BMP, drainage basins should show the areas of land that contribute flow to a point of interest; typically a stormwater BMP. Since the continuous simulation model simulates the rainfall-runoff for each land cover/soil type combination separately, determining both the predeveloped and post developed land cover is critical. Additionally, any areas that are reverted to pervious surfaces should be accounted for as well.

Finally, if there are any existing wetlands within the TDA and stormwater is proposed to discharge or detract from the natural wetland evaluation of the hydroperiod maybe necessary.

The delineation and specifics of TDAs are part of the *Highway Runoff Manual* requirements and designers should review the following sections of the manual prior to using MGSFlood:

1. TDA Delineation – Section 4-2.5
2. Predeveloped Land Cover – Section 4-3.6
3. Reverision of an Existing Impervious Surface – Section 4-3.6
4. Separation of On-Site and Off-Site Flow – Section 4-3.6
5. Wetland Hydroperiods – Section 4-6

2-7.1.4 Hydrologic Soil Groups

For each basin, land use is defined in units of acres for predeveloped and developed conditions. Soils must be classified into one of three default categories for use in the continuous simulation model: till, outwash, or saturated soil (as defined by the USGS). Mapping of soil types by the Soil Conservation Service (SCS), which is now the Natural Resource Conservation Service (NRCS), is the most common source of soil/geologic information used in hydrologic analyses for stormwater facility design. Each soil type defined by the NRCS has been classified into one of four hydrologic soil groups: A, B, C, and D. As is common in hydrologic modeling in western Washington, the soil groups used in the continuous simulation model generally correspond to the NRCS hydrologic soil groups shown in Table 2-7.2.

NRCS Group	HSPF Group
A	Outwash
B	Till or Outwash
C	Till
D	Wetland

Relationship Between NRCS Hydrologic Soil Group and HSPF Soil Group
Table 2-7.2

NRCS Type B soils can be classified as either glacial till or outwash, depending on the type of soil under consideration. Type B soils underlain by glacial till or bedrock, or that have a seasonally high water table, are classified as till. Conversely, well-drained B-type soils should be classified as outwash. It is very important to work with the WSDOT Materials Lab or a licensed geotechnical engineer to make sure the soil properties and near-surface

hydrogeology of the site are well understood, as they are significant factors in the final modeling results. Appendix 4B of the *Highway Runoff Manual* contains some soils classification information for preliminary work.

Wetland soils remain saturated throughout much of the year. The hydrologic response from wetlands is variable, depending on the underlying geology, the proximity of the wetland to the regional groundwater table, and the geometry of the wetland. Generally, wetlands provide some base flow to streams in the summer months and attenuate storm flows via temporary storage and slow release in the winter. Special design consideration must be taken into account when including wetlands in continuous simulation runoff modeling.

2-8 Published Flow Records

When available, published flow records provide the most accurate data for designing culverts and bridge openings. This is because the values are based on actual measured flows and not calculated flows. The streamflows are measured at a gaging site for several years. A statistical analysis (typically Log Pearson Type III) is then performed on the measured flows to predict the recurrence intervals.

The USGS maintains a large majority of the gaging sites throughout Washington State. A list of all of the USGS gages, with adequate data to develop the recurrence intervals, is provided in Appendix 2-1 along with the corresponding latitude, longitude, hydrologic unit, and drainage area. Flood discharges for these gaging sites, at selected exceedance probabilities (based on historical data up to 1996), can be found in Table 2 at the following Web link: http://wa.water.usgs.gov/pubs/wrir/flood_freq/.

In addition to these values, the HQ Hydraulics Office maintains records of daily flows and peak flows for all of the current USGS gages. Also, average daily flow values for all current and discontinued USGS gages are available through the Internet on the USGS homepage (note these are average daily values and not peak values) at http://waterdata.usgs.gov/usa/nwis/dvstat?referred_module=sw.

Historical data for additional gaging sites is available through the Stream Hydrology Unit (SHU) of Ecology's Environmental Monitoring and Trends Section. This flow information was recorded in support of the salmon recovery efforts and water resource management. While discharge is measured at these sites 6 to 8 times a year, the majority of the actual measurements are of stream stage and a calculated stream discharge. The calculations are made using information from stream gages operated by other governmental agencies (primarily the USGS) and rating curves developed by SHU that relate river stage to discharge (www.ecy.wa.gov/programs/eap/flow/shu_main.html).

Some local agencies also maintain streamflow gages. Typically, these are on smaller streams than the USGS gages. While the data obtained from these gages is usually of high enough quality to use for design purposes, the data is not always readily available. If the designer thinks that there is a possibility that a local agency has flow records for a particular stream then the engineering department of the local agency should be contacted. The HQ Hydraulics Office does not maintain a list of active local agency streamflow gages.

2-9 USGS Regression Equations

While measured flows provide the best data for design purposes, it is not practical to gage all rivers and streams in the state. A set of equations has been developed by USGS to calculate flows for drainage basins in the absence of a streamflow gage. The equations were developed by performing a regression analysis on streamflow gage records to determine which drainage basin parameters are most influential in determining peak runoff rates

The equations break the state up into nine unique hydrologic regions, as shown on the map in Appendix 2-2. The various hydrologic regions require different input variables, depending on the hydrologic region. Input parameters that maybe required include: total area of the drainage basin, percent of the drainage basin that is in forest cover, and percent of the drainage basin that is in lakes, swamps, or ponds. These variables can be determined by the designer through use of site maps, aerial photographs, and site inspections.

For some hydrologic regions, the designer will need to determine the Mean Annual Precipitation (MAP) which can be found through the Web links in Appendix 2-3. It should be noted that the regression equations were developed using the 1965 NOAA precipitation maps and the maps in Appendix 2-3 are an update to these maps. The new maps are considered more accurate because the values are based on more actual precipitation data and an improved methodology for determining precipitation values is utilized. However, in some areas of Washington there was a significant change in the precipitation values from the 1965 maps and designers should verify that the new precipitation value is within the MAP limits noted on the Regression Equation worksheets. In addition to the MAP limits, each region has limits for the drainage basin area size. The designer should be careful not to use data that is outside of the limits specified for the equations since the accuracy of the equations is unknown beyond these points.

The designer must be aware of the limitations of these equations. They were developed for natural rural basins, however the equations have been updated with current flood events. The equations can be used in urban ungaged areas with additional back-up data, i.e., comparing results to nearest gage data for calibration and a sensitivity analysis, field inspection of highwater lines and information from local maintenance. Designers should contact the Region Hydraulics Engineer for further guidance. Also any river that has a dam and reservoir in it should not be analyzed with these equations. Finally, the designer must keep in mind that due to the simple nature of these equations and the broad range of each hydrologic region, the results of the equations contain a fairly wide confidence interval, represented as the standard error.

The standard error is a statistical representation of the accuracy of the equations. Each equation is based on many rivers and the final result represents the mean of all the flow values for the given set of basin characteristics. The standard error shows how far out one standard deviation is for the flow that was just calculated. For a bell- shaped curve in statistical analysis, 68 percent of all the samples are contained within the limits set by one standard deviation above the mean value and one standard deviation below the mean value. It can also be viewed as indicating that 50 percent of all the samples are equal to or less than the flow calculated with the equation and 84 percent of all samples are equal to or less than one standard deviation above the flow just calculated.

The designers shall use the mean value determined from the regression equations with no standard error or confidence interval. If the flows are too low or too high for that basin based on information that the designer has collected, then the designer may apply the standard error specific to the regression equation accordingly. The designer should consult the Region Hydraulic Engineer for assistance.

The equations were updated as noted in Appendix 2-2 and are only presented in English units. To obtain metric flow data, the designer should input the necessary English units data into the appropriate regression equation and then multiply the results by 0.02832 to convert the final answer to cubic meters per second.

Estimates of the magnitude and frequency of flood-peak discharges and flood hydrographs are used for a variety of purposes, such as the design of bridges, culverts, and flood-control structures, and for the management and regulation of flood plains.

In addition to the worksheets at the end of this chapter, the USGS has programs to improve the process of estimating peak flows. One program is the National Flood Frequency (NFF) Program, which acts as a calculator taking the manual input of the physical site and climate characteristics and then using the regression equations to calculate the peak flow and the standard error. The program is available for designers use at the following web site and should be loaded by the Region IT: http://water.usgs.gov/software/nff.html. Streamstats is another USGS tool that not only estimates peak flows, but can also delineate the basin area and determine the MAP as well as other basin characteristics. Streamstats can be found at the following web site: http://water.usgs.gov/osw/streamstats/Washington.html. It should be noted that Streamstats uses the 1965 NOAA maps and may produce a slightly different result than the map links on Appendix 2-3.

2-10 Flood Reports

Flood reports have been developed for many rivers in Washington State. Most of these reports, and the ones that are most readily accessible, have been developed by the Federal Emergency Management Agency (FEMA). Other reports have been developed by the United States Army Corps of Engineers and by some local agencies.

These reports are a good source of flow information since they were developed to analyze the flows during flooding conditions of a particular river or stream. The types of calculations used by the agency conducting the analysis are more complex than the rational method or USGS regression equations and because of this are more accurate. The increased time required to perform these complex calculations is not justified for the typical structure that WSDOT is designing; however, if the analysis has already been performed by another agency, then it is in WSDOT's best interest to use this information. Flood study data should never be used in place of published flow records.

The HQ Hydraulics Office maintains a complete set of FEMA reports and also has several Corps of Engineers flood reports. Region Environmental Offices should be contacted for local agency reports.

2-11 Mean Annual Runoff

Sometimes it is necessary to determine the mean annual flow or runoff for a given stream. When published flow records are available they are the best source of information. Minor streams, which do not have any gaging records available, can be estimated by the following procedure:

English Units:

$$Q = \frac{(MAR)A}{13.6} \tag{2-14}$$

Where:
- Q = mean annual runoff in cfs
- MAR = mean annual runoff in inches taken from Appendix 2-3
- A = area of the drainage basin in square miles

Metric Units:

$$Q = \frac{(MAR)A}{1{,}241}$$

Where:
- Q = mean annual runoff in cms
- MAR = mean annual runoff in inches taken from Appendix 2-2
- A = area of the drainage basin in kilometers

Site - ID	Station Name	Latitude (Degrees)	Longitude (Degrees)	Hydrologic Unit (OWDC)	Drainage Area (Miles2)
10393500	SILVIES RIVER NEAR BURNS, OR	434255	1191035	17070101	934
10396000	DONNER UND BLITZEN RIVER NEAR FRENCHGLEN, OR	424728	1185200	17120003	200
10401800	MALHEUR LAKE NEAR VOLTAGE,OR	431730	1184905	17120001	2150
10406500	TROUT CREEK NEAR DENIO, NV	420920	1182714	17070101	88
12000000	WASHINGTON STATE OFFICE TEST STATION	470000	1223000	17110019	--
12009500	BEAR BRANCH NEAR NASELLE, WA	461948	1235437	17100106	11.7
12010000	NASELLE RIVER NEAR NASELLE, WASH.	462227	1234432	17100106	54.8
12010500	SALMON CREEK NEAR NASELLE, WASH.	462120	1234500	17100106	16.4
12010600	LANE CREEK NEAR NASELLE, WASH.	462220	1234700	17100106	2.15
12010700	SOUTH FORK NASELLE RIVER NEAR NASELLE, WA	462039	1234823	17100106	17.9
12010710	NASELLE RIVER AT NESELLE, WA	462159	1234829	17100106	--
12010800	SOUTH NEMAH RIVER NEAR NASELLE, WASH.	462627	1235138	17100106	1.99
12010830	SOUTH NEMAH RIVER NEAR NEMAH, WASH.	462833	1235301	17100106	6.72
12010900	MIDDLE NEMAH RIVER NEAR SOUTH BEND, WASH.	462938	1235312	17100106	11.6
12011000	NORTH NEMAH RIVER NEAR SOUTH BEND, WASH.	462930	1235000	17100106	18
12011100	NORTH NEMAH R TRIBUTARY NR SOUTH BEND, WASH.	463045	1234630	17100106	0.46
12011103	NORTH NEMAH RIVER NEAR NEMAH, WASH.	463050	1235142	17100106	--
12011200	WILLIAMS CREEK NEAR SOUTH BEND, WASH.	463149	1235139	17100106	9.43
12011500	WILLAPA RIVER AT LEBAM, WASH.	463350	1233350	17100106	41.4
12012000	FORK CREEK NEAR LEBAM, WASH.	463319	1233500	17100106	20.4
12012200	GREEN CREEK NEAR LEBAM, WASH.	463515	1233530	17100106	1.79
12012500	STRINGER CREEK NR HOLCOMB, WA	463515	1233750	17100106	3.02
12013000	MILL CREEK NR WILLAPA, WA	463850	1233820	17100106	23.7
12013500	WILLAPA RIVER NR WILLAPA, WA	463904	1233905	17100106	130
12014000	WARD CREEK NR WILLAPA, WA	464145	1233855	17100106	19.3
12014500	SOUTH FORK WILLAPA RIVER NEAR RAYMOND, WASH.	463742	1234212	17100106	27.8
12015000	ELKHORN CREEK NR RAYMOND, WA	464610	1234450	17100106	15.6
12015100	CLEARWATER CREEK NEAR RAYMOND, WASH.	464459	1234559	17100106	3.98
12015200	SMITH CREEK NEAR RAYMOND, WASH.	464525	1234625	17100106	57.7
12015500	NORTH RIVER NEAR BROOKLYN, WASH.	464655	1232850	17100106	29.8
12016000	FALL RIVER AT BROOKLYN, WA	464630	1233015	17100106	41
12016500	LITTLE NORTH RIVER NEAR COSMOPOLIS, WASH.	465420	1234250	17100106	18.6
12016600	NORTH RIVER ABOVE JOE CR, NR RAYMOND, WASH.	465140	1234400	--	189
12016700	JOE CREEK NEAR COSMOPOLIS, WASH.	465019	1234305	17100106	2.05
12016900	NORTH R AT AMERICAN MILL ROAD NR RAYMOND, WASH.	464946	1234948	17100105	210
12017000	NORTH RIVER NEAR RAYMOND, WASH.	464827	1235058	17100106	219
12017303	KINDRED SLOUGH AT HWY 105 NEAR TOKELAND, WASH.	464339	1240029	17100106	--
12017315	CANNERY SLOUGH TRIBUTARY NEAR TOKELAND, WASH.	464345	1240215	17100106	0.17
12017330	DRAINAGE DITCH NO. 1 NEAR TOKELAND, WASH.	464409	1240356	17100106	--
12017500	JOHNS RIVER NR MARKHAM, WA	465130	1235540	17100105	18.9
12018000	NEWSKAH CREEK NEAR ABERDEEN, WASH.	465445	1234920	17100105	7.44
12018500	CHARLEY (CHARLIES) CREEK NEAR ABERDEEN, WASH.	465625	1234810	17100104	5.93
12019000	CHEHALIS RIVER NR PE ELL, WA	463215	1231725	17100103	54.7
12019500	ROCK CREEK NR PE ELL, WA	463300	1232025	17100103	13.4
12019600	WATER MILL CREEK NEAR PE ELL, WASH.	463349	1231831	17100103	1.98

Site - ID	Station Name	Latitude (Degrees)	Longitude (Degrees)	Hydrologic Unit (OWDC)	Drainage Area (Miles2)
12020000	CHEHALIS RIVER NEAR DOTY, WASH.	463703	1231635	17100103	113
12020500	ELK CREEK NEAR DOTY, WASH.	463742	1231950	17100103	46.7
12020565	CHEHALIS RIVER AT DRYAD, WASH.	463754	1231451	17100103	--
12020800	SOUTH FORK CHEHALIS RIVER NEAR WILDWOOD, WA	462642	1230457	17100103	27
12020900	SOUTH FORK CHEHALIS RIVER NEAR BOISTFORT, WASH.	463138	1230658	17100103	44.9
12021000	SOUTH FORK CHEHALIS R AT BOISTFORT, WASH.	463245	1230755	17100103	48
12021500	HALFWAY CREEK NR BOISTFORT, WA	463135	1230855	17100103	13.4
12021800	CHEHALIS RIVER NEAR ADNA, WA	463733	1230602	17100103	--
12022000	BUNKER CREEK NR ADNA, WA	463905	1230730	17100103	20.1
12022050	DEEP CK. ABV. CARSON CK. NR. BUNKER	464212	1230705	17100103	--
12022090	DEEP CK. NR. MOUTH NR. BUNKER	463909	1230648	17100103	--
12022250	CHEHALIS RIVER AT ADNA, WASH.	463742	1230335	17100103	--
12022500	STEARNS CREEK NR NAPAVINE, WA	463440	1225900	17100103	14.1
12023000	STEARNS CREEK NEAR ADNA, WASH.	463550	1230010	17100103	--
12023500	CHEHALIS RIVER NR CHEHALIS, WASH.	463830	1230055	17100103	434
12024000	SOUTH FORK NEWAUKUM RIVER NEAR ONALASKA, WASH.	463433	1224102	17100103	42.4
12024059	CARLISLE LAKE AT ONALASKA, WASH.	463441	1224334	17100103	--
12024100	S.F. NEWAUKUM RIVER AT FOREST, WASH.	463614	1225115	17100103	--
12024400	NORTH FORK NEWAUKUM RIVER AB BEAR CR NR FOREST, WA	464003	1224608	17100103	--
12024500	NORTH FORK NEWAUKUM RIVER NEAR FOREST, WASH.	463920	1224640	17100103	31.5
12024820	N.F. NEWAUKUM RIVER AT FOREST, WASH.	463631	1225105	17100103	--
12025000	NEWAUKUM RIVER NR CHEHALIS, WASH.	463713	1225638	17100103	155
12025020	NEWAUKUM RIVER AT CHEHALIS, WASH.	463901	1225846	--	--
12025100	CHEHALIS RIVER AT WWTP AT CHEHALIS, WA	463940	1225858	17100103	--
12025300	SALZER CREEK NEAR CENTRALIA, WASH.	464130	1225425	17100103	12.6
12025500	CHEHALIS RIVER AT CENTRALIA, WASH.	464245	1225839	17100103	--
12025700	SKOOKUMCHUCK RIVER NEAR VAIL, WASH.	464622	1223534	17100103	40
12026000	SKOOKUMCHUCK RIVER NEAR CENTRALIA, WASH.	464715	1224245	17100103	61.7
12026150	SKOOKUMCHUCK R BLW BLDY RN CR N CENTRALIA, WASH.	464725	1224403	17100103	65.9
12026300	SKOOKUMCHUCK R TRIBUTARY NEAR BUCODA, WASH.	464740	1225345	17100103	0.58
12026400	SKOOKUMCHUCK RIVER NEAR BUCODA, WASH.	464620	1225523	17100103	112
12026500	HANAFORD CREEK NR CENTRALIA, WA	464450	1224640	17100103	13.3
12026504	HANAFORD CK. ABV. COAL CK. NR. BUCODA	464406	1224452	17100103	--
12026508	HANAFORD CREEK ABV SNYDER CREEK NR BUCODA, WASH.	464517	1224800	17100103	--
12026530	HANAFORD CK BLW. SNYDER CK NR. BUCODA	464547	1224902	17100103	--
12026533	PACKWOOD CK. ABV. MINING SITE NR. KOPIAH	464309	1224734	17100103	--
12026535	PACKWOOD CREEK NEAR BUCODA, WASH.	464457	1224911	17100103	--
12026540	PACKWOOD CK. ABV. STEAMPLANT NR. BUCODA	464517	1225002	17100103	7.93
12026542	HANAFORD CR BLW PACKWOOD CR NEAR BUCODA, WASH.	464532	1225039	17100103	--
12026550	HANAFORD CREEK NEAR BUCODA, WASH.	464544	1225347	17100103	--
12026560	SOUTH HANAFORD CK NR. KOPIAH	464143	1225008	17100103	--
12026570	SOUTH HANAFORD CK. NR. CENTRALIA	464532	1225359	17100103	14.4
12026600	SKOOKUMCHUCK RIVER AT CENTRALIA, WASH.	464352	1225710	17100103	172
12026615	BORST LAKE AT CENTRALIA, WASH.	464320	1225835	17100103	--
12026700	CHEHALIS RIVER AT GALVIN, WASH.	464408	1230107	17100103	--
12027000	LINCOLN CREEK NEAR ROCHESTER, WASH.	464410	1231040	17100103	19.3

Site - ID	Station Name	Latitude (Degrees)	Longitude (Degrees)	Hydrologic Unit (OWDC)	Drainage Area (Miles2)
12027100	LINCOLN CK. ABV. SPONENBERGH CK. NR. GALVIN	464536	1230549	17100103	--
12027220	LINCOLN CK. NR. GALVIN	464429	1230240	17100103	--
12027500	CHEHALIS RIVER NEAR GRAND MOUND, WASH.	464634	1230204	17100103	895
12027550	PRAIRIE CREEK NEAR GRAND MOUND, WASH.	464725	1230115	17100103	--
12028000	SCATTER CREEK NEAR GRAND MOUND, WASH.	464950	1225935	17100103	--
12028050	SCATTER CREEK NEAR ROCHESTER, WASH.	464900	1230400	17100103	36.2
12028070	CHEHALIS R AT INDIAN RESV NR OAKVILLE, WASH.	464834	1230816	17100103	--
12028500	WADELL CREEK NR LITTLE ROCK, WA	465450	1230300	17110010	15.9
12029000	BLACK RIVER AT LITTLE ROCK, WASH.	465410	1230120	17100103	63.7
12029015	DEEP LAKE NEAR MAYTOWN, WASH.	465433	1225454	17100103	--
12029050	SCOTT LAKE NEAR MAYTOWN, WASH.	465519	1225553	17100103	--
12029060	BEAVER CREEK AT LITTLEROCK, WA	465353	1230106	17100103	--
12029150	MILL CREEK NEAR MOUTH NEAR LITTLEROCK, WA	465347	1230544	17100103	--
12029200	BLACK RIVER NEAR OAKVILLE, WASH.	464900	1231100	17100103	130
12029202	WILLAMETTE CREEK NEAR OAKVILLE, WASH.	464917	1231126	17100103	--
12029210	BLACK RIVER NEAR MOUTH NEAR OAKVILLE, WASH.	464918	1231228	17100103	--
12029500	GARRARD (GARROD) CR NR OAKVILLE, WA	464845	1231505	17110010	27.7
12029700	CHEHALIS RIVER NEAR OAKVILLE, WASH.	464951	1231531	17100103	1160
12030000	ROCK CREEK AT CEDARVILLE, WASH.	465205	1231825	17100103	24.8
12030500	CEDAR CREEK NEAR OAKVILLE, WASH.	465230	1231615	17100103	38.2
12030550	GIBSON CREEK NEAR PORTER, WASH.	465415	1231725	17100103	6.96
12030900	PORTER CREEK AT PORTER, WASH.	465700	1231730	17100104	35.3
12030950	PORTER CR AT U.S. HWY 12 AT PORTER, WA	465615	1231835	17100104	39.8
12031000	CHEHALIS RIVER AT PORTER, WASH.	465617	1231845	17100103	1290
12031890	EAST FORK WILDCAT CREEK AT MCCLEARY, WASH.	470351	1231557	17100104	4.45
12032000	WILDCAT CREEK NEAR ELMA, WA	470130	1232110	17100104	19.8
12032500	CLOQUALLUM RIVER AT ELMA, WASH.	470017	1232311	17100104	64.9
12033000	CHEHALIS RIVER AT SOUTH ELMA, WASH.	465856	1232440	17100106	1420
12033305	CHEHALIS RIVER ABV SATSOP RIVER AT FULLER, WASH.	465843	1232842	17100104	--
12033500	EAST FORK SATSOP RIVER NR MATLOCK, WASH.	470945	1232200	17100104	23.7
12034000	BINGHAM CR NR MATLOCK, WASH.	470940	1232345	17100104	--
12034200	EAST FORK SATSOP RIVER NEAR ELMA, WASH.	470740	1232500	17100104	65.9
12034500	MIDDLE FORK SATSOP RIVER NEAR SATSOP, WASH.	470510	1232920	17100104	--
12034700	WEST FORK SATSOP RIV TRIBUTARY NR MATLOCK, WASH.	471850	1233525	17100104	0.33
12034800	WEST FORK SATSOP RIVER NEAR SATSOP, WASH.	470233	1233126	17100104	94.9
12035000	SATSOP RIVER NEAR SATSOP, WA	470003	1232937	17100104	299
12035002	CHEHALIS RIVER NEAR SATSOP,WASH.	465753	1233115	17100104	1760
12035100	CHEHALIS RIVER NEAR MONTESANO, WA	465745	1233612	17100104	1780
12035380	WYNOOCHEE LAKE NEAR GRISDALE, WA	472308	1233616	17100104	--
12035400	WYNOOCHEE RIVER NR GRISDALE, WA	472250	1233631	17100104	41.3
12035450	BIG CREEK NEAR GRISDALE, WASH.	472228	1233808	17100104	9.57
12035500	WYNOOCHEE RIVER AT OXBOW, NR ABERDEEN, WASH.	472000	1233900	17100104	70.7
12036000	WYNOOCHEE RIVER ABV SAVE CREEK, NR ABERDEEN, WA	471757	1233907	17100104	74.1
12036400	SCHAFER CREEK NEAR GRISDALE, WASH.	471216	1233650	17100104	12.1
12036500	WYNOOCHEE RIVER NEAR MONTESANO, WASH.	471045	1233730	17100104	112
12036650	ANDERSON CREEK NEAR MONTESANO, WASH.	470702	1233917	17100104	2.72

Site - ID	Station Name	Latitude (Degrees)	Longitude (Degrees)	Hydrologic Unit (OWDC)	Drainage Area (Miles2)
12036800	WYNOOCHEE RIV BLW HELM CR NR MONTESANO, WASH.	470444	1234157	17100104	133
12037000	CTY,ABERDEEN WYNOOCHEE R INTAKE NR MONTESANO, WA	470100	1234115	17100104	--
12037400	WYNOOCHEE RIVER ABOVE BLACK CR NR MONTESANO, WA	470042	1233915	17100104	155
12037500	WYNOOCHEE RIV BLW BLACK CR NR MONTESANO, WASH.	470035	1233900	17100104	180
12038000	WISHKAH RIVER NEAR WISHKAH, WASH.	470635	1234720	17100105	57.8
12038005	WISHKAH RIV ABV EAST FORK NR ABERDEEN, WASH.	470420	1234609	17100104	--
12038100	WISHKAH RIVER AB WISHKAH ROAD NEAR WISHKAH, WA	470420	1234610	17100104	--
12038400	CHEHALIS RIVER BLW WISHKAH RIVER AT HOQUIAM, WA	465819	1234825	17100104	2110
12038500	WEST FORK HOQUIAM RIVER NEAR HOQUIAM, WASH.	470305	1235525	17100105	--
12038510	W F HOQUIAM RIV BLW POLSON CR NR HOQUIAM, WASH.	470324	1235535	17100105	--
12038750	GIBSON CREEK NEAR QUINAULT, WASH.	472830	1234150	17100105	1.16
12039000	HUMPTULIPS RIVER NEAR HUMPTULIPS, WASH.	471342	1235623	17100105	130
12039003	HUMPTULIPS RIVER AT HUMPTULIPS, WASH.	471348	1235738	17100105	--
12039005	HUMPTULIPS RIVER BELOW HWY 101 NR HUMPTULIPS, WA	471354	1235822	17100105	--
12039050	BIG CREEK NEAR HOQUIAM, WASH.	470840	1235310	17100105	0.56
12039100	BIG CREEK TRIBUTARY NEAR HOQUIAM, WASH.	470855	1235310	17100105	0.15
12039220	MOCLIPS RIVER AT MOCLIPS, WASH.	471432	1241127	17100102	35
12039300	NORTH FORK QUINAULT R NEAR AMANDA PARK, WASH.	473546	1233723	17100102	74.1
12039400	HIGLEY CREEK NEAR AMANDA PARK, WASH.	472055	1235345	17100102	0.77
12039500	QUINAULT RIVER AT QUINAULT LAKE, WASH.	472728	1235317	17100102	264
12039520	RAFT RIVER BLW RAINY CR NEAR QUEETS, WASH.	472717	1241858	17100102	76
12039900	QUEETS RIVER ABV CLEARWATER RIV NR QUEETS, WASH.	473258	1241635	17100102	--
12040000	CLEARWATER RIVER NR CLEARWATER, WASH.	473500	1241740	17100102	140
12040002	CLEARWATER RIVER NR QUEETS, WASH.	473445	1241800	17100102	143
12040500	QUEETS RIVER NEAR CLEARWATER, WASH.	473217	1241852	17100102	445
12040600	QUEETS RIVER AT QUEETS, WASH.	473230	1241955	17100102	--
12040680	LAKE HOH NEAR FORKS, WA	475400	1234706	17100101	--
12040700	HOH RIVER BELOW MT. TOM CREEK NEAR FORKS, WASH.	475207	1235302	17100101	97.8
12040900	SOUTH FORK HOH RIVER NEAR FORKS, WASH.	474825	1235943	17100101	50.4
12040910	HOH RIVER AT MILE 30.0 NEAR FORKS, WASH.	474856	1240150	17100101	--
12040930	HOH RIVER AT MILE 28.4 NEAR FORKS, WASH.	474837	1240333	17100101	--
12040940	CANYON CREEK AT MOUTH NEAR FORKS, WASH.	474844	1240412	17100101	--
12040950	OWL CREEK NEAR FORKS, WA	474657	1240443	17100101	--
12040960	OWL CREEK AT MOUTH NR FORKS, WASH.	474817	1240439	17100101	9.63
12040965	SPRUCE CREEK AT MOUTH NR FORKS, WASH.	474819	1240448	17100101	--
12040985	MAPLE CREEK AT MOUTH NR FORKS, WASH.	474814	1240517	17100101	--
12040990	DISMAL CREEK AT MOUTH NR FORKS, WASH.	474821	1240525	17100101	--
12041000	HOH RIVER NEAR FORKS, WASH.	474825	1241500	17100101	208
12041040	HOH RIVER AT RIVER MILE 24.0 NR FORKS, WASH.	474844	1240728	17100101	--
12041100	HOH RIVER AT MILE 20.0 NR FORKS, WASH.	474919	1241134	17100101	--
12041110	WILLOUGHBY CREEK AT MOUTH NR FORKS, WASH.	474919	1241146	17100101	--
12041120	ELK CREEK AT MOUTH NR FORKS, WASH.	474856	1241254	17100101	--
12041130	HOH RIVER AT MILE 18.0 NR FORKS, WASH.	474843	1241329	17100101	--
12041140	ALDER CREEK AT MOUTH NR FORKS, WASH.	474843	1241342	17100101	--
12041160	WINFIELD CREEK NEAR FORKS, WA	474753	1241334	17100101	--
12041170	WINFIELD CREEK AT MOUTH NR FORKS, WASH.	474836	1241350	17100101	11.8

Site - ID	Station Name	Latitude (Degrees)	Longitude (Degrees)	Hydrologic Unit (OWDC)	Drainage Area (Miles2)
12041200	HOH RIVER AT U.S. HIGHWAY 101 NEAR FORKS, WASH.	474825	1241459	17100101	253
12041206	HOH RIVER AT MILE 12.0 NR FORKS, WASH.	474712	1241647	17100101	--
12041209	LOST CREEK AT MOUTH NR FORKS, WASH.	474701	1241702	17100101	--
12041212	HOH RIVER AT MILE 8.9 NR FORKS, WASH.	474545	1241851	17100101	--
12041214	HOH RIVER AT MILE 6.7 NR FORKS, WASH.	474507	1242005	17100101	--
12041217	NOLAN CREEK AT HWY 101 BRIDGE NR FORKS, WASH.	474507	1241916	17100101	8.35
12041220	BRADEN CREEK AT HWY 101 BRIDGE NR FORKS, WASH.	474422	1242051	17100101	--
12041223	HOH RIVER AT MILE 4.3 NR FORKS, WASH.	474410	1242159	17100101	--
12041226	HOH RIVER AT MILE 2.3 NR FORKS, WASH.	474450	1242346	17100101	--
12041230	CHALAAT CR.AT TREATMENT PLANT, HOH RESV, WASH.	474432	1242458	17100101	--
12041234	CHALAAT CR.AT COMM.CENTER, HOH RESV, WASH.	474445	1242520	17100101	--
12041250	HOH RIVER AT MILE 0.6 NR FORKS, WASH.	474458	1242543	17100101	--
12041350	ROUND LAKE NEAR FORKS, WA	474557	1234715	17100101	--
12041500	SOLEDUCK RIVER NEAR FAIRHOLM, WASH.	480240	1235728	17100101	83.8
12041600	SOLDUCK RIVER TRIBUTARY NEAR FAIRHOLM, WASH.	480245	1235735	17100101	0.42
12042000	SOLEDUCK R NEAR BEAVER, WASH.	480400	1240550	17100101	116
12042300	SOLEDUCK RIVER NEAR FORKS, WASH.	480115	1242255	17100101	--
12042400	SOLEDUCK R AT HWY 101 AT FORKS, WASH.	475901	1242348	17100101	--
12042500	SOLEDUCK R NR QUILLAYUTE, WASH.	475705	1242758	17100101	219
12042503	SOLEDUCK R AT MOUTH NR LA PUSH, WASH.	475455	1243227	17100101	--
12042700	MAY CREEK NEAR FORKS, WASH.	475255	1242100	17100101	2.03
12042800	BOGACHIEL R NR FORKS, WASH.	475340	1242119	17100101	111
12042900	GRADER CREEK NEAR FORKS, WASH.	475540	1242425	17100101	1.67
12042920	SITCUM RIVER TRIBUTARY NEAR FORKS, WASH.	475719	1241211	17100101	0.42
12043000	CALAWAH R NR FORKS, WASH.	475737	1242330	17100101	129
12043003	CALAWAH R AT MOUTH NR FORKS, WASH.	475604	1242649	17100101	--
12043015	BOGACHIEL R NR LAPUSH, WASH.	475411	1243239	17100101	--
12043080	EAST FORK DICKEY RIVER NEAR LA PUSH, WASH.	475910	1243245	17100101	39.8
12043100	DICKEY R NR LA PUSH, WASH.	475755	1243250	17100101	86.3
12043101	DICKEY R AB COLBY CR NR LA PUSH, WASH.	475724	1243332	17100101	86.3
12043103	DICKEY RIVER AT MORA, WASH.	475520	1243705	17100101	108
12043120	QUILLAYUTE RIVER AT LAPUSH, WASH.	475502	1243803	17100101	--
12043123	QUILLAYUTE R. AT RIVER MILE 0.2 AT LAPUSH, WASH.	475436	1243817	17100101	--
12043125	QUILLAYUTE R. AT RIVER MILE 0.0 AT LAPUSH, WASH.	475435	1243826	17100101	--
12043149	OZETTE LAKE AT OZETTE, WASH	480912	1244005	17100101	--
12043150	OZETTE RIVER AT OZETTE,WASH	480913	1244004	17100101	77.5
12043156	SOOES RIVER AB PILCHUCK CR NR OZETTE,WASH	481444	1243713	17100101	--
12043159	PILCHUCK CREEK NEAR OZETTE,WASH	481355	1243735	17100101	--
12043163	SOOES R BLW MILLER CR NR OZETTE,WASH	481556	1243728	17100101	32
12043173	WAATCH R BLW EDUCKET CR AT NEAH BAY,WASH	482126	1243730	17110021	9.96
12043176	WAATCH RIVER AT NEAH BAY,WASH	482123	1243757	17110021	--
12043186	VILLAGE CR AT NEAH BAY,WASH	482211	1243738	17110021	--
12043190	SAIL RIVER NR NEAH BAY,WASH	482127	1243338	17110021	5.42
12043195	SEKIU RIVER NEAR SEKIU, WASH.	481638	1242659	17110020	22
12043270	HOKO RIVER TRIB NR SEKIU, WASH.	481214	1242508	17100101	0.67
12043300	HOKO RIVER NR SEKIU, WA	481430	1242257	17110021	51.2

Site - ID	Station Name	Latitude (Degrees)	Longitude (Degrees)	Hydrologic Unit (OWDC)	Drainage Area (Miles2)
12043304	HOKO R ABV LITTLE HOKO R NR SEKIU	481524	1242110	17110021	--
12043330	HOKO R. NR. SEKIU	481628	1242119	17110021	--
12043350	CLALLAM RIVER NEAR CLALLAM BAY, WASH.	481325	1241510	17110021	137
12043365	PYSHT R NR SAPPHO, WASH	481015	1241240	17110021	10.2
12043400	PYSHT R NR PYSHT	481123	1240923	17110021	--
12043430	EAST TWIN RIVER NEAR PYSHT, WASH.	480949	1235633	17110021	14
12043450	CROSS CR NR FAIRHOLM, WASH.	480320	1235235	17110021	0.92
12043470	LAKE CRESCENT TRIBUTARY NEAR PIEDMONT, WA	480300	1234805	17110021	0.79
12043500	HAPPY LAKE NEAR PIEDMONT, WA	480033	1234109	17110021	--
12044000	LYRE RIVER AT PIEDMONT, WASH.	480535	1234730	17110021	48.6
12044500	SALT CREEK NEAR PORT ANGELES, WA	480740	1234040	17110021	8.31
12044600	ELWHA RIVER AB SLATE CR NR PORT ANGELES, WA	474434	1232922	17110021	--
12044610	SLATE CREEK NEAR PORT ANGELES, WA	474436	1232926	--	--
12044615	BUCKINGHORSE CREEK NEAR PORT ANGELES, WA	474442	1232855	--	--
12044675	GODKIN CREEK NEAR PORT ANGELES, WA	474535	1232723	--	--
12044680	ELWA RIVER AT CAMP WILDER NEAR PORT ANGELES, WA	474559	1232734	--	--
12044685	LEITHA CREEK NEAR PORT ANGELES, WA	474558	1232730	--	--
12044690	UNNAMED TRIB NR CAMP WILDER NR PORT ANGELES, WA	474637	1232706	--	--
12044695	HAYES RIVER NR HAYES RS NR PORT ANGELES, WA	474836	1232644	--	--
12044790	LOST RIVER NEAR ELKHORN RS NEAR PORT ANGELES, WA	475145	1232754	--	--
12044800	ELWA RIVER AT ELKHORN RS NEAR PORT ANGELES, WA	475218	1232813	--	--
12044825	LILLIAN RIVER AT SHELTER NEAR PORT ANGELES, WA	475616	1233101	--	--
12044850	ELWHA RIVER NEAR GOBLINS GATE NR PORT ANGELES, WA	475722	1233424	17110020	--
12044900	ELWHA RIVER ABOVE LAKE MILLS NEAR PORT ANGELES, WA	475813	1233522	17110020	198
12044910	ELWHA R DELTA SITE 1 AT LAKE MILLS NR PORT ANGELES	475823	1233518	17110020	--
12044915	HURRICANE CREEK NEAR PORT ANGELES, WA	475834	1233507	--	--
12044920	ELWHA R DELTA SITE 2 AT LAKE MILLS NR PORT ANGELES	475835	1233524	17110020	--
12044930	CRYSTAL CREEK NEAR OLYMPIC HOT SPRINGS, WA	475843	1234106	--	--
12044940	COUGAR CREEK NEAR OLYMPIC HOT SPRINGS, WA	475917	1233922	--	--
12044950	BOULDER CREEK NEAR PORT ANGELES, WA	475854	1233608	--	--
12045000	LAKE MILLS AT GLINES CANYON, NEAR PORT ANGELES, WA	480008	1233555	17110020	--
12045100	LAKE MILLS PWRPLT TLWTR GAGE NR PORT ANGELES, WA.	480016	1233554	17110020	245
12045150	GRIFFIN CREEK AT ELWA RS NEAR PORT ANGELES, WA	480058	1233522	--	--
12045200	ELWHA RIVER AT ALTAIRE BRIDGE NEAR PORT ANGELES	480039	1233521	17110020	--
12045500	ELWHA RIVER AT MCDONALD BR NR PRT ANGELES, WASH.	480318	1233455	17110020	269
12045520	LITTLE RIVER NEAR PORT ANGELES, WA	480326	1233013	--	--
12045535	COWEN CREEK NEAR PORT ANGELES, WA	480210	1232957	--	--
12045550	LITTLE R AT OLY HOT SPRINGS RD NR PORT ANGELES, WA	480348	1233416	--	--
12045560	ELWHA R BLW LITTLE R NR PORT ANGELES	480356	1233435	17110020	--
12045590	UNNAMED TRIB TO INDIAN CREEK NEAR PORT ANGELES, WA	480341	1233556	--	--
12045900	LAKE ALDWELL NEAR PORT ANGELES, WA	480542	1233322	17110020	315
12046000	ELWHA RIVER NEAR PORT ANGELES, WA	480540	1233320	17110020	315
12046090	UNNAMED TRIB AT HIGHWAY 112 NEAR PORT ANGELES, WA	480558	1233246	--	--
12046100	ELWHA RIVER BELOW ELWHA DAM NEAR PORT ANGELES,WA	480620	1233306	17110020	--
12046250	ELWHA R AT OLD HWY 112 BRIDGE NR PORT ANGELES, WA	480650	1233307	--	--
12046260	ELWHA RIVER AT DIVERSION NEAR PORT ANGELES, WA	480653	1233307	17110020	--

Site - ID	Station Name	Latitude (Degrees)	Longitude (Degrees)	Hydrologic Unit (OWDC)	Drainage Area (Miles2)
12046300	ELWHA RIVER DIVERSION BL ELWHA DAM NR PORT ANGELES	480658	1233306	17110020	--
12046390	ELWHA RIVER DIVERSION TO FISH POND NR PORT ANGELES	480654	1233258	17110020	--
12046400	ELWHA RIVER DIVESION CANAL NEAR PORT ANGELES, WA	480654	1233304	17110020	--
12046500	ELWHA RIVER BELOW DIVERSION NEAR PORT ANGELES, WA	480655	1233310	17110020	318
12046510	ELWHA R NR MOUTH NR PORT ANGELES WASH	480841	1233350	17110020	--
12046520	WEST SLOUGH AT ANGELES PT NR PORT ANGELES, WA	480900	1233328	17110020	--
12046523	BOSCO CR NR PORT ANGELES, WASH	480840	1233317	17110020	--
12046526	EAST SLOUGH AT ANGELES PT NR PORT ANGELES, WA	480857	1233246	17110020	--
12046800	EAST VALLEY CREEK AT PORT ANGELES, WASH.	480610	1232620	17110020	0.69
12047000	ENNIS CREEK NEAR PORT ANGELES, WA	480625	1232340	17110020	8.32
12047100	LEES CREEK AT PORT ANGELES, WASH.	480620	1232255	17110020	4.77
12047150	PJ LAKE NEAR PORT ANGELES, WA	475647	1232429	17110020	--
12047300	MORSE CREEK NEAR PORT ANGELES, WASH.	480217	1232057	17110020	46.6
12047500	SIEBERT CREEK NEAR PORT ANGELES, WASH.	480500	1231652	17110020	15.5
12047550	SIEBERT CR AT MOUTH NEAR AGNEW, WASH.	480709	1231715	17110020	--
12047650	MCDONALD CREEK NEAR AGNEW, WASH.	480730	1231302	17110020	22.9
12047700	GOLD CREEK NR BLYN, WASH.	475515	1230230	17110020	2.28
12048000	DUNGENESS RIVER NEAR SEQUIM, WASH.	480052	1230753	17110020	156
12048050	CANYON CREEK NEAR SEQUIM, WASH.	480126	1230815	17110020	11.9
12048500	DUNGENESS RIVER BELOW CANYON CREEK, NR SEQUIM, WA	480230	1230845	17110020	170
12048550	DUNGENESS R AT DUNGENESS MEADOWS NR CARLSBORG, WA	480343	1230910	17110020	--
12048600	DUNGENESS R AT HWY 101 BR NR CARLSBORG	480434	1230858	17110020	178
12048650	DUNGENESS RIVER AT RR BRIDGE NEAR SEQUIM, WA	480508	1230847	17110020	--
12048700	DUNGENESS R AT WOODCOCK BRIDGE NR DUNGENESS, WA	480658	1230854	17110020	--
12048750	HURD CREEK NEAR DUNGENESS, WASH.	480721	1230827	17110020	--
12048800	MATRIOTTI CREEK NEAR DUNGENESS, WASH.	480812	1230839	17110020	13.6
12049000	DUNGENESS RIVER AT DUNGENESS, WASH.	480840	1230740	17110020	197
12049020	MEADOWBROOK CREEK AT DUNGENESS, WASH.	480840	1230721	17110020	0.53
12049040	CASSALERY CREEK NEAR DUNGENESS, WASH.	480738	1230557	17110020	3.19
12049080	GIERIN CREEK NEAR SEQUIM, WASH.	480615	1230428	17110020	3.49
12049200	BELL CREEK NEAR SEQUIM, WASH.	480501	1230319	17110020	8.86
12049400	DEAN CREEK AT BLYN, WASH.	480130	1230035	17110020	2.96
12049500	JIMMYCOMELATELY CREEK NEAR BLYN, WA	480040	1230005	17110020	18.3
12050000	SALMON CREEK NEAR MAYNARD, WA	475850	1225340	17110020	13
12050500	SNOW CREEK NEAR MAYNARD, WASH.	475625	1225310	17110020	11.2
12051000	ANDREWS CREEK NEAR MAYNARD, WA	475635	1225300	17110020	10.2
12051100	SNOW CR AT UNCAS, WASH	475915	1225305	17110020	--
12051200	CHEVY CHASE CR AT S. DISCOVERY RD NR IRONDALE, WA	480350	1225012	17110020	--
12051450	CHIMACUM CR BLW W. VALLEY RD AT CENTER, WA	475653	1224754	17110019	9.38
12051500	CHIMACUM CREEK NR CHIMACUM, WASH.	475827	1224635	17110019	13.8
12051530	CHIMACUM CR. AT HADLOCK	480151	1224632	17110019	--
12051550	CHIMACUM CR ABV IRONDALE RD AT IRONDALE, WA	480232	1224652	17110019	--
12051590	LUDLOW CREEK ABOVE FALLS NEAR PORT LUDLOW, WA	475502	1224252	17110019	--
12051595	SHINE CREEK BELOW STATE HIGHWAY 104 NEAR SHINE, WA	475235	1224232	17110019	--
12051600	THORNDYKE CR AT THORNDYKE RD NR SOUTH POINT, WA	474926	1224420	17110019	--
12051700	TARBOO CREEK AT DABOB ROAD NEAR DABOB, WA	475208	1224858	17110019	11.3

Site - ID	Station Name	Latitude (Degrees)	Longitude (Degrees)	Hydrologic Unit (OWDC)	Drainage Area (Miles2)
12051750	DONOVAN CREEK NEAR QUILCENE, WA	475112	1225127	17110019	--
12051900	LITTLE QUILCENE RIVER BLW DIVERSION NR QUILCENE,WA	475230	1225730	17110018	--
12052000	LITTLE QUILCENE RIVER NR QUILCENE, WASH.	475015	1225310	17110018	23.7
12052200	BIG QUILCENE RIVER ABOVE DIVERSION NR QUILCENE, WA	474707	1225846	17110018	49.4
12052210	BIG QUILCENE RIVER BELOW DIVERSION NR QUILCENE, WA	474705	1225842	17110018	49.4
12052390	BIG QUILCENE RIVER ABOVE PENNY CR NR QUILCENE, WA	474832	1225443	17110018	59.7
12052400	PENNY CREEK NEAR QUILCENE, WASH.	474840	1225450	17110018	6.78
12052500	BIG QUILCENE RIVER NR QUILCENE, WN.	474839	1225434	17110018	66.4
12052800	LAKE CONSTANCE NEAR BRINNON, WA	474504	1230829	17110018	--
12053000	DOSEWALLIPS RIVER NR BRINNON, WASH.	474335	1230030	17110018	93.5
12053400	DOSEWALLIPS R TRIBUTARY NEAR BRINNON, WASH.	474300	1225620	17110018	0.62
12053500	DOSEWALLIPS R. AT BRINNON	474125	1225352	17110018	116
12054000	DUCKABUSH RIVER NEAR BRINNON, WASH.	474103	1230037	17110018	66.5
12054100	DUCKABUSH R. AT BRINNON	473857	1225601	17110018	--
12054500	HAMMA HAMMA RIVER NEAR ELDON, WASH.	473518	1230657	17110018	51.3
12054600	JEFFERSON CREEK NEAR ELDON, WASH.	473500	1230618	17110018	21.6
12055000	HAMMA HAMMA R N HOODSPORT WASH	473248	1230325	17110018	83.5
12055500	EAGLE CREEK NEAR LILLIWAUP, WA	472910	1230440	17110018	7.06
12056000	FINCH CREEK AT HOODSPORT, WA	472420	1230850	17110018	3.45
12056300	ANNAS BAY TRIBUTARY NEAR POTLATCH, WASH.	472050	1230935	17110018	0.82
12056400	UPPER FLAPJACK LAKE NEAR HOODSPORT, WA	473339	1232021	17110018	--
12056495	NF SKOKOMISH R AT STAIRCASE RPDS, NR HOODSPORT, WA	473112	1232001	17110017	--
12056500	NF SKOKOMISH R BLW STRCSE RPDS NR HDSPRT, WASH.	473052	1231943	17110017	57.2
12057000	LAKE CUSHMAN NR HOODSPORT	472525	1231320	17110017	93.7
12057500	NORTH FORK SKOKOMISH RIVER NR HOODSPORT, WASH.	472524	1231316	17110017	93.7
12058000	DEER MEADOW CREEK NEAR HOODSPORT, WASH.	472456	1231336	17110017	1.83
12058500	DOW CREEK NEAR HOODSPORT, WASH.	472440	1231115	17110017	1.67
12058600	LOWER LAKE CUSHMAN NR HOODSPORT	472352	1231157	17110017	--
12058605	PENSTOCK AT POWERHOUSE NEAR POTLATCH, WA	472210	1230936	17110017	--
12058800	NF SKOKOMISH R. BL LWR CUSHMAN DAM NR POTLATCH, WA	472327	1231230	17110017	--
12059000	MCTAGGERT CREEK NEAR HOODSPORT, WASH.	472450	1231425	17110017	1.3
12059300	NF SKOKOMISH R BLW MCTAGGERT CR NR POTLACH, WASH	472122	1231405	17110017	--
12059500	N.F. SKOKOMISH RIVER NR POTLATCH, WA	471942	1231433	17110017	117
12059800	S.F. SKOKOMISH RIVER NR HOODSPORT, WASH.	472645	1232454	17110017	26
12059900	S.F. SKOKOMISH R BLW LEBAR CR NR HOODSPORT	472503	1231945	--	--
12060000	S.F. SKOKOMISH RIVER NR POTLATCH, WASH.	472310	1231830	17110017	65.6
12060100	ROCK CR NR POTLATCH, WA	472228	1231859	17110015	--
12060500	SOUTH FORK SKOKOMISH RIVER NEAR UNION, WASH.	472026	1231644	17110017	76.3
12060995	VANCE CR NR CAMP GOVEY NR POTLATCH, WA	471949	1231857	17110017	15.6
12061000	VANCE CREEK NEAR POTLATCH, WASH.	471945	1231848	17110017	--
12061200	FIR CREEK TRIBUTARY NEAR POTLATCH, WASH.	472015	1231800	17110017	0.76
12061500	SKOKOMISH RIVER NEAR POTLATCH, WASH.	471836	1231033	17110017	227
12062500	PURDY CREEK NEAR UNION, WASH.	471805	1231050	17110017	3.73
12062505	WEAVER CR NR POTLATCH WASH	471835	1231055	--	--
12063000	UNION RIVER NEAR BREMERTON, WASH.	473145	1224705	17110018	3.16
12063500	UNION RIVER NEAR BELFAIR, WASH.	472820	1224940	17110018	19.8

Site - ID	Station Name	Latitude (Degrees)	Longitude (Degrees)	Hydrologic Unit (OWDC)	Drainage Area (Miles2)
12064000	MISSION LAKE NR. BREMERTON	473200	1225005	17110018	--
12064500	MISSION CREEK NEAR BREMERTON, WASH.	473200	1225005	17110018	1.91
12065000	MISSION CREEK NR BELFAIR, WASH.	472920	1225145	17110018	4.43
12065020	TIGER LAKE NR BELFAIR	473035	1225007	17110018	--
12065500	GOLD CREEK NEAR BREMERTON, WASH.	473320	1224835	17110018	1.51
12066000	TAHUYA RIVER NEAR BREMERTON, WASH.	473300	1225050	17110018	5.99
12066500	PANTHER LAKE NR. BREMERTON	473110	1225108	17110018	--
12067000	PANTHER CREEK NEAR BREMERTON, WASH.	473150	1225130	17110018	1
12067500	TAHUYA RIVER NEAR BELFAIR, WASH.	472940	1225420	17110018	15
12068000	TAHUYA RIVER NEAR TAHUYA, WASH.	472420	1230020	17110018	42.2
12068500	DEWATTO RIVER NEAR DEWATTO, WASH.	472810	1230133	17110018	18.4
12069000	ANDERSON CREEK NEAR HOLLEY, WA	473405	1225740	17110018	6.3
12069500	STAVIS CREEK NEAR SEABECK, WA	473725	1225230	17110018	5.6
12069550	BIG BEEF CREEK NEAR SEABECK, WASH.	473827	1224702	17110018	13.8
12069600	DEVILS HOLE CREEK NEAR BANGOR, WA	474415	1224354	17110019	2.61
12069651	GAMBLE CREEK NEAR PORT GAMBLE, WA	474757	1223451	17110018	5.86
12069660	PORT GAMBLE TRIB NO 2 NR PORT GAMBLE WASH	475030	1223352	17110018	--
12069663	PORT GAMBLE TRIB NO 3 AT PORT GAMBLE WASH	475116	1223358	17110018	--
12069710	GROVERS CREEK NEAR INDIANOLA WASH	474625	1223323	17110019	--
12069720	MILLER BAY TRIB NO 2 NR SUQUAMISH WASH	474449	1223332	17110019	--
12069721	MILLER BAY TRIB NO 3 NR SUQUAMISH WASH	474451	1223336	17110019	--
12069731	PORT ORCHARD TRIB NO 2 NR SUQUAMISH WASH	474245	1223419	17110019	--
12069760	PORT ORCHARD TRIB NO 4 AT KEYPORT WASH	474229	1223619	17110019	--
12069995	DOGFISH CR AT BIG VALLEY RD NR POULSBO, WA	474558	1223820	17110019	--
12070000	DOGFISH CREEK NEAR POULSBO, WASH.	474511	1223836	17110019	5.08
12070040	JOHNSON CREEK AT DNR SITE NEAR POULSBO, WA	474436	1224039	17110018	0.17
12070045	NORTH FORK JOHNSON CREEK NEAR POULSBO, WA	474403	1223945	17110019	2.04
12070050	JOHNSON CREEK NEAR POULSBO, WA	474400	1223942	17110019	2.52
12070455	ISLAND LAKE NR. KEYPORT	474042	1223932	17110019	--
12070500	CLEAR CREEK NEAR SILVERDALE, WA	473950	1224050	17110019	8.5
12071000	WILDCAT LAKE NR. BREMERTON	473559	1224535	17110019	--
12071500	KITSAP LAKE NR. BREMERTON	473447	1224234	17110019	--
12072000	CHICO CREEK NEAR BREMERTON, WASH.	473525	1224230	17110019	15.3
12072400	GORST CREEK NEAR MOUTH AT GORST, WA	473141	1224158	17110019	--
12072500	BLACKJACK CREEK AT PORT ORCHARD, WASH.	473220	1223750	17110019	14.5
12072600	BEAVER CR NR MANCHESTER WASH.	473415	1223330	17110019	1.61
12072615	LONG LAKE NR PORT ORCHARD	472858	1223512	17110019	--
12072630	JUDD CR ON VASHON ISLAND NR VASHON, WA	472421	1222810	17110019	--
12072675	CRESCENT LAKE NR. GIG HARBOR	472318	1223418	17110019	--
12072681	CRESCENT CR. NR GIG HARBOR,WASH.	472102	1223444	17110019	--
12072685	NORTH CREEK AT GIG HARBOR,WASH.	472014	1223537	17110019	--
12072710	ARTONDALE CREEK AT ARTONDALE,WASH.	471755	1223704	17110019	--
12072750	UNNAMED TRIB.TO CARR INLET AT ROSEDALE,WASH	471949	1223854	17110019	--
12072770	MCCORMICK CREEK AT PURDY,WASH.	472216	1223721	17110019	--
12072795	PURDY CREEK NEAR PURDY,WASH.	472412	1223651	17110019	--
12072800	PURDY CREEK AT PURDY,WASH.	472318	1223730	17110019	3.44

Site - ID	Station Name	Latitude (Degrees)	Longitude (Degrees)	Hydrologic Unit (OWDC)	Drainage Area (Miles2)
12073000	BURLEY CREEK AT BURLEY, WASH.	472455	1223750	17110019	10.7
12073490	HUGE CREEK AT COUNTYLINE NEAR WAUNA,WASH.	472412	1224210	17110019	--
12073500	HUGE CREEK NEAR WAUNA, WASH.	472322	1224152	17110019	6.47
12073505	HORSESHOE LAKE NR BURLEY	472433	1223934	17110019	--
12073550	TRIBUTARY TO BEAVER CREEK NR HERRON, WA	471648	1224801	17110019	0.21
12073585	JACKSON LAKE NR. HOME	471710	1224619	17110019	--
12073600	MASTIN CREEK NR KEY CENTER, WA	472113	1224436	17110019	0.2
12073890	WYE LAKE NEAR BELFAIR	472525	1224537	17110019	--
12074000	SHUMOCHER CR (HD SHERWOOD CR) NR UNION, WA	471910	1225920	17110019	12.2
12074500	MASON LAKE NEAR UNION, WASH.	472114	1225517	17110019	20.2
12074780	PHILLIPS LAKE NR SHELTON	471452	1225752	17110019	--
12075000	DEER CREEK NEAR SHELTON, WASH.	471600	1230015	17110019	13.6
12075500	CRANBERRY CREEK NEAR SHELTON, WASH.	471600	1230030	17110019	15.2
12076000	JOHNS CREEK NEAR SHELTON, WASH.	471500	1230515	17110019	17.7
12076100	LOST LAKE NR SHELTON	470955	1231445	17110019	--
12076500	GOLDSBOROUGH CREEK NEAR SHELTON, WASH.	471256	1231052	17110019	39.3
12077000	GOLDSBOROUGH CREEK AT SHELTON, WASH.	471230	1230600	17110019	55
12077490	ISABELLA LAKE NR SHELTON	471002	1230658	17110019	--
12077500	MILL CREEK AT SHELTON, WASH.	471145	1230545	17110019	19.5
12078000	SKOOKUM CREEK AT KAMILCHE, WASH.	470730	1230650	17110019	16.1
12078200	SUMMIT LAKE NR. KAMILCHE	470312	1230720	17110019	--
12078400	KENNEDY CREEK NEAR KAMILCHE, WASH.	470437	1230733	17110019	17.4
12078500	KENNEDY CREEK NEAR NEW KAMILCHE, WA	470530	1230545	17110019	18.7
12078600	SCHNEIDER CREEK TRIBUTARY NEAR SHELTON, WASH.	470525	1230430	17110019	1.12
12078650	SNYDER CREEK NEAR OLYMPIA, WASH.	470509	1225824	17110019	0.52
12078700	BLACK LAKE NR. TUMWATER	470036	1225750	17100103	--
12078705	BLACK LAKE DITCH AT LAKE OUTLET NR TUMWATER, WA.	470037	1225750	17110019	--
12078720	BLACK LAKE DITCH NR OLYMPIA, WA.	470139	1225618	17110019	--
12078730	PERCIVAL CREEK NR OLYMPIA, WA.	470132	1225552	17110019	5.84
12078940	LAWRENCE LK NR RAINIER,WASH	465057	1223451	17110016	--
12079000	DESCHUTES RIVER NR RAINIER, WASH.	465108	1224003	17110016	89.8
12079004	DESCHUTES R AT HWY 507 NR RAINIER, WASH	465223	1224344	17110016	101
12079300	MCINTOSH LAKE NR TENINO	465144	1224636	17110016	--
12079380	OFFUTT LAKE NR EAST OLYMPIA	465506	1224904	17110016	--
12079500	SPURGEON CREEK NEAR OLYMPIA, WA	465700	1225030	17110016	11
12079550	AYER CREEK NEAR TUMWATER, WA	465829	1225140	17110016	--
12079900	MUNN LAKE NR OLYMPIA	465914	1225242	17110016	--
12079980	DESCHUTES R AT HENDERSON BLVD NR OLYMPIA, WA	465944	1225247	17110016	--
12079994	CHAMBERS LAKE NR OLYMPIA ,WASH	470121	1225004	17110016	--
12079996	LITTLE CHAMBERS LK NR OLYMPIA,WASH	470105	1224956	17110016	--
12080000	DESCHUTES RIVER NEAR OLYMPIA, WASH.	470005	1225340	17110016	160
12080010	DESCHUTES R AT E ST BRIDGE AT TUMWATER, WASH	470043	1225407	17110016	162
12080012	DESCHUTES RIVER AT TUMWATER, WASH	470053	1225407	17110016	--
12080025	CAPITOL LAKE AT OLYMPIA	470237	1225429	17110019	--
12080070	WARD LAKE NEAR TUMWATER	470021	1225235	17110016	--
12080090	INDIAN-MOXLIE CR AT UNION AVE AT OLYMPIA, WA	470224	1225326	17110019	--

Site - ID	Station Name	Latitude (Degrees)	Longitude (Degrees)	Hydrologic Unit (OWDC)	Drainage Area (Miles2)
12080092	INDIAN-MOXLIE CR OUTFALL AT OLYMPIA, WA	470252	1225335	17110019	--
12080100	MISSION CREEK AT MOUTH NR OLYMPIA, WA	470402	1225343	17110019	--
12080450	WOODWARD CR AT ENSIGN ROAD AT OLYMPIA, WA	470304	1225106	17110019	--
12080500	WOODWARD CREEK NR OLYMPIA, WA.	470501	1225134	17110019	3.8
12080550	HICKS LAKE NEAR LACEY	470102	1224742	17110019	--
12080560	WOODLAND CR AT PATTERSON LAKE INLET NR LACEY, WA	470018	1224714	17110019	2.25
12080570	PATTERSON LAKE NR LACEY	465954	1224615	17110019	--
12080600	LONG LAKE NR. LACEY	470203	1224648	17110019	--
12080650	WOODLAND CREEK AT LONG LAKE OUTLET NR LACEY, WA	470208	1224652	17110019	12.2
12080670	WOODLAND CREEK AT MARTIN WAY AT LACEY, WA.	470300	1224814	17110019	12.4
12080750	WOODLAND CR AT DRAHAM RD NR OLYMPIA, WA	470338	1224811	17110019	20.5
12081000	WOODLAND CR NR OLYMPIA, WA	470418	1224858	17110019	24.6
12081010	WOODLAND CR TRIBUTARY AT JORGENSON RD NR OLYMPIA	470435	1224914	17110019	0.46
12081300	EATON CREEK NEAR YELM, WASH.	465805	1224330	17110019	2.28
12081480	ST. CLAIR LAKE NEAR YELM, WA	470009	1224307	17110019	19.9
12081500	MCALLISTER SPRINGS NEAR OLYMPIA, WASH.	470145	1224325	17110019	--
12081590	NISQUALLY R. ABV. DEAD HORSE CR. AT PARADISE, WA	464710	1214518	17110015	--
12081595	NISQUALLY R. ABV. GLACIER BRIDGE AT PARADISE, WA	464650	1214530	17110015	--
12081700	PARADISE RIVER AT PARADISE, WA	464640	1214420	17110015	--
12081900	KAUTZ CREEK (UPPER SITE) NEAR LONGMIRE, WA	464740	1214740	17110015	--
12081910	KAUTZ CREEK (LOWER SITE) NEAR LONGMIRE, WA	464630	1214840	17110015	--
12081990	TAHOMA CREEK AT HWY BRIDGE NR ASHFORD	464420	1215400	17110015	14
12082000	NISQUALLY RIVER NEAR ASHFORD, WA	464430	1215540	17110015	68.5
12082500	NISQUALLY RIVER NEAR NATIONAL, WASH.	464510	1220457	17110015	133
12082990	MINERAL LAKE AT MINERAL	464308	1221036	17110015	--
12083000	MINERAL CREEK NEAR MINERAL, WASH.	464440	1220836	17110015	75.2
12083400	NISQUALLY R AT ELBE, WASH	464547	1221127	17110015	--
12083500	EAST CREEK NR ELBE, WASH.	464440	1221220	17110015	11.5
12084000	NISQUALLY RIVER NEAR ALDER, WASH.	464605	1221605	17110015	252
12084500	LITTLE NISQUALLY RIVER NEAR ALDER, WASH.	464720	1221845	17110015	28
12085000	ALDER RESV AT ALDER WASH	464809	1221837	17110015	286
12085500	LA GRANDE RESERVOIR AT LA GRANDE, WA	464923	1221813	17110015	289
12086000	NISQUALLY RIVER AT LA GRANDE DAM, WA	464922	1221811	17110015	289
12086100	TACOMA POWER CONDUIT AT LA GRANDE DAM, WA	464922	1221813	17110015	--
12086500	NISQUALLY RIVER AT LA GRANDE, WASH.	465037	1221946	17110015	292
12087000	MASHEL RIVER NEAR LA GRANDE, WASH.	465125	1221805	17110015	80.7
12087300	CLEAR LAKE NR. PARADISE	465548	1221540	17110015	--
12087400	OHOP LAKE NEAR EATONVILLE, WASH.	465306	1221638	17110015	17.3
12087500	LYNCH CREEK NEAR EATONVILLE, WA	465250	1221630	17110015	16.3
12088000	OHOP CREEK NEAR EATONVILLE, WA	465252	1221640	17110015	34.5
12088020	OHOP CREEK AT SR7 NEAR EATONVILLE, WA	465152	1222033	17110015	--
12088300	SILVER LAKE NR. LA GRANDE	465253	1222155	17110015	--
12088400	NISQUALLY R ABV POWELL C NR MCKENNA, WASH.	465104	1222603	17110015	431
12088500	NISQUALLY RIVER NEAR MCKENNA, WASH.	465120	1222710	17110015	445
12088900	TANWAX LAKE NEAR KAPOWSIN, WASH.	465640	1221626	17110015	4.08
12089000	TANWAX CREEK NR MCKENNA, WASH.	465155	1222705	17110015	26

Site - ID	Station Name	Latitude (Degrees)	Longitude (Degrees)	Hydrologic Unit (OWDC)	Drainage Area (Miles2)
12089020	CLEAR LAKE NR. MC KENNA	464942	1222832	17110015	--
12089200	HARTS LAKE NR. MC KENNA	465332	1222818	17110015	--
12089208	CENTRALIA POWER CANAL NR MCKENNA, WASH	465401	1222950	17110015	--
12089300	NISQUALLY RIVER BELOW CENTRALIA DAM NR MCKENNA, WA	465358	1222948	17110015	--
12089500	NISQUALLY RIVER AT MCKENNA, WA	465601	1223335	17110015	517
12089700	YELM CREEK NR YELM, WASH.	465318	1223614	17110015	1.72
12090000	MUCK CREEK NEAR LOVELAND, WA	470055	1222515	17110015	16.9
12090060	MUCK CR NR ROY, WASH	470200	1222935	17110015	--
12090200	MUCK CREEK AT ROY, WASH.	470020	1223232	17110015	86.8
12090203	NISQUALLY LAKE NR ROY, WASH	470121	1223734	17110015	--
12090205	MUCK CREEK AT MOUTH NR ROY, WASH	465949	1223737	--	--
12090240	NISQUALLY R. AT NISQUALLY, WASH	470343	1224142	17110015	710
12090288	LOUISE LAKE NR STEILACOOM	470952	1223400	17110019	--
12090290	MURRAY CREEK NR. TILLICUM	470700	1223347	17110019	--
12090300	AMERICAN LAKE NR. TILLICUM	470630	1223518	17110019	--
12090325	CLOVER CR AT TSC RIFLE RANGE NR SPANAWAY, WA	470606	1222050	17110019	--
12090330	CLOVER CR AT MILITARY RD NR SPANAWAY, WA	470617	1222232	17110019	18
12090335	CLOVER CR AT 152ND ST. E NR SPANAWAY, WA	470707	1222248	17110019	--
12090340	UNNAMED TRIB. TO CLOVER CR AT BINGHAM AVE E.	470733	1222200	17110019	0.01
12090350	CLOVER CREEK NEAR PARKLAND, WA	470735	1222312	17110019	--
12090355	CLOVER CR AT 25TH AVE E. NR PARKLAND, WA	470740	1222343	17110019	20.7
12090358	CLOVER CR BLW BROOKDALE GOLF COURSE NR SPANAWAY,WA	470730	1222444	17110019	--
12090360	CLOVER CR BLW 138TH ST S. NR PARKLAND, WA	470755	1222532	17110019	42.6
12090362	CLOVER CR AT 136TH ST S. NR PARKLAND, WA	470801	1222543	17110019	--
12090365	UNNAMED TRIB. TO NF CLOVER CR AT WALLER ROAD	470802	1222316	17110019	0.14
12090367	UNNAMED TRIB TO NF CLOVER CR AT 136TH ST E. NR	470800	1222326	17110019	--
12090370	NF CLOVER CR AT BROOKDALE RD NR PARKLAND, WA	470758	1222407	17110019	--
12090380	UNNAMED TRIB TO NF CLOVER CR AT 99TH ST E. NR TAC	471003	1222439	17110019	0.19
12090395	UNNAMED TRIB TO NF CLOVER CR AT BROOKDALE RD NR PA	470804	1222428	17110019	--
12090396	QA-CLOVER CR FIELD BLANK	470804	1222449	17110019	--
12090400	NORTH FORK CLOVER CREEK NEAR PARKLAND, WASH.	470805	1222450	17110019	6.25
12090430	CLOVER CR AT 17TH AVE S. NR PARKLAND, WA	470838	1222728	17110019	49.7
12090448	SPANAWAY CR AT SPANAWAY LOOP RD NR SPANAWAY, WA	470603	1222655	17110019	--
12090450	SPANAWAY LAKE NR SPANAWAY	470630	1222628	17110019	--
12090452	SPANAWAY CR AT SPANAWAY LK OUTLET NR SPANAWAY, WA	470721	1222642	17110019	17.2
12090460	SPANAWAY CR AT TULE LK OUTLET NR PARKLAND, WA	470824	1222718	17110019	--
12090480	MOREY CR ABV MCCHORD AFB NR PARKLAND, WA	470749	1222742	17110019	--
12090500	CLOVER CREEK NEAR TILLICUM, WASH.	470846	1223033	17110019	73.8
12090600	CLOVER CREEK ABV. STEILACOOM LK. NR. TACOMA	470925	1223139	17110019	--
12090602	CLOVER CR AT GRAVELLY LAKE DR. NR TACOMA, WA	470923	1223120	17110019	75.9
12090690	GRAVELLY LAKE NR. TILLICUM	470832	1223145	17110019	--
12090800	WAPATO LAKE AT TACOMA, WASH	471134	1222720	17110019	--
12090850	PONCE DE LEON CREEK NR. STEILACOOM	470945	1223141	17110019	--
12090990	STEILACOOM LAKE NR. STEILACOOM	471040	1223204	17110019	--
12091000	CHAMBERS CREEK AT STEILACOOM L., NR STEILACOOM,	471040	1223205	17110019	--
12091040	CHAMBERS CR ABV FLETT CR NEAR STEILACOOM, WASH.	471128	1223137	17110019	90.4

Site - ID	Station Name	Latitude (Degrees)	Longitude (Degrees)	Hydrologic Unit (OWDC)	Drainage Area (Miles2)
12091050	FLETT CREEK AT 74TH ST., AT TACOMA, WASH.	471126	1222908	17110019	4.23
12091055	USGS WAREHOUSE DCP TEST FACILITY NR STEILACOOM, WA	471034	1222925	17110019	--
12091060	FLETT CREEK AT MT. VIEW MEMORIAL PARK, WASH.	471106	1222917	17110019	5.91
12091070	FLETT CREEK BELOW FLETT SPRINGS AT TACOMA, WASH.	471050	1223010	17110019	6.72
12091098	FLETT CR AT CUSTER RD AT TACOMA, WASH	471111	1223105	17110019	--
12091100	FLETT CREEK AT TACOMA, WASH.	471123	1223108	17110019	8.01
12091180	LEACH CREEK AT HOLDING POND, AT FIRCREST, WASH.	471329	1223032	17110019	4.59
12091200	LEACH CREEK NR FIRCREST, WASH.	471318	1223029	17110019	4.73
12091300	LEACH CR NR STEILACOOM, WA	471154	1223117	17110019	6.56
12091500	CHAMBERS C BW LEACH C, NR STEILACOOM, WASH.	471152	1223139	17110019	104
12091600	CHAMBERS CR. NR. STEILACOOM	471132	1223420	17110019	108
12091700	JUDD CREEK NEAR BURTON, WASH.	472440	1222818	17110019	4.41
12091950	DEER CR NR ELECTRON, WA	465128	1215806	17110014	--
12091960	UPPER GOLDEN LAKE NEAR ELECTRON, WA	465320	1215357	17110014	--
12092000	PUYALLUP RIVER NR ELECTRON, WA	465414	1220202	17110014	92.8
12092100	ALLISON CREEK NR ELECTRON, WASH.	465647	1200343	17110014	1.78
12092500	PUYALLUP RIVER AT ELECTRON, WA	465945	1221030	17110014	131
12093000	KAPOWSIN CREEK NEAR KAPOWSIN, WASH.	465944	1221144	17110014	25.9
12093500	PUYALLUP RIVER NEAR ORTING, WASH.	470222	1221224	17110014	172
12093505	FOREST LAKE NR. ORTING	470254	1221129	17110014	--
12093510	PUYALLUP RIVER AT ORTING, WASH	470521	1221243	17110014	--
12093600	PUYALLUP RIVER NEAR MCMILLIN, WASH.	470747	1221404	17110014	186
12093650	GREEN LAKE NEAR FAIRFAX, WA	465837	1215134	17110014	--
12093900	CARBON RIVER AT FAIRFAX, WASH.	470047	1220042	17110014	76.2
12094000	CARBON RIVER NEAR FAIRFAX, WA	470141	1220153	17110014	78.9
12094300	CARBON RIVER NR. ORTING	470556	1220905	17110014	--
12094400	SO PRAIRIE CREEK NR ENUMCLAW, WASH.	470530	1215705	17110014	22.4
12094497	WILKESON CR AT SNELL LK RD AT WILKESON, WASH	470606	1220150	17110014	--
12094498	WILKESON CR NR SKOOKUM TUNNEL AT WILKESON,WASH	470605	1220206	--	--
12094499	WILKESON CR NR SCHOOLHOUSE AT WILKESON, WASH	470603	1220244	17110014	--
12094500	WILKESON (GALE) CREEK AT WILKESON, WA	470620	1220245	17110014	25
12094501	WILKESON CR BLW WWTP AT WILKESON, WA	470636	1220303	17110014	--
12095000	SOUTH PRAIRIE CREEK AT SOUTH PRAIRIE, WASH.	470823	1220529	17110014	79.5
12095300	SOUTH PRAIRIE CR NR CROCKER, WASH	470634	1220843	17110014	89.5
12095500	VOIGHT CREEK NEAR CROCKER, WA	470410	1220700	17110014	22.9
12095660	VOIGHT CR NR ORTING, WASH	470455	1221030	17110014	--
12095690	CARBON RIVER AT ORTING, WA	470700	1221308	17110014	230
12095900	PUYALLUP RIVER AT MCMILLIN, WASH	470825	1221331	17110014	416
12096000	FENNEL CREEK NEAR MCMILLIN, WA	470910	1221255	17110014	12.5
12096500	PUYALLUP RIVER AT ALDERTON, WASH.	471107	1221342	17110014	438
12096510	UPPER DEADWOOD LAKE NEAR GREENWATER, WA	465314	1213116	17110014	--
12096600	WHITE RIVER NEAR GREENWATER, WA	465350	1213701	17110014	16.2
12096800	DRY CREEK NEAR GREENWATER, WASH.	470040	1213145	17110014	1.01
12096950	JIM CREEK NEAR GREENWATER, WASH.	470245	1214120	17110014	4.31
12097000	WHITE RIVER AT GREENWATER, WASH.	470848	1213844	17110014	216
12097500	GREENWATER RIVER AT GREENWATER, WASH.	470913	1213804	17110014	73.5

Site - ID	Station Name	Latitude (Degrees)	Longitude (Degrees)	Hydrologic Unit (OWDC)	Drainage Area (Miles2)
12097600	WHITE R. NR. GREENWATER	470953	1214437	17110014	--
12097700	CYCLONE CREEK NEAR ENUMCLAW, WASH.	471030	1214640	17110014	2.35
12097850	WHITE R BL CLEARWATER R NR BUCKLEY WASH	470849	1215132	17110014	375
12098000	MUD MOUNTAIN LAKE NEAR BUCKLEY,WASH	470827	1215548	17110014	400
12098500	WHITE RIVER NEAR BUCKLEY, WASH.	470905	1215655	17110014	401
12098600	WHITE R. NR. BUCKLEY	470946	1215831	17110013	--
12098910	WHITE RIVER FLUME NR BUCKLEY WASH	471012	1220018	--	--
12099000	WHITE RIVER CANAL AT BUCKLEY, WASH.	471019	1220113	17110014	--
12099100	WHITE RIVER ABOVE BOISE CREEK AT BUCKLEY, WA	471012	1220012	17110014	411
12099300	BOISE CR ABOVE RESERVOIR, NR ENUMCLAW, WASH.	471130	1215350	17110014	4.6
12099400	BOISE C BL MILLPOND NR ENUMCLAW WN	471145	1215547	17110014	8.27
12099500	BOISE CREEK NEAR ENUMCLAW, WASH.	471120	1215820	17110014	12.3
12099600	BOISE CR. AT BUCKLEY	471034	1220102	17110014	15.4
12100000	WHITE RIVER AT BUCKLEY, WASH.	471028	1220109	--	427
12100050	WHITE R. BL BOISE CR. NR BUCKLEY	471101	1220338	17110014	--
12100490	WHITE RIVER AT R-STREET NEAR AUBURN, WASHINGTON	471630	1221224	17110014	--
12100496	WHITE R. NR. AUBURN	471558	1221343	17110014	464
12100500	WHITE RIVER NR SUMNER, WASH.	471501	1221433	17110014	470
12100600	STUCK RIVER TRIBUTARY NEAR MILTON, WA	471520	1221635	17110014	0.53
12101000	LAKE TAPPS NEAR SUMNER, WASH	471428	1221126	17110014	--
12101100	LAKE TAPPS DIVERSION AT DIERINGER, WASH.	471418	1221337	17110014	--
12101104	WHITE RIVER AT TACOMA AVE BRIDGE AT SUMNER, WA	471300	1221410	17110014	--
12101105	WHITE RIVER AT WILLIAMS RD BRIDGE AT SUMNER, WASH	471245	1221430	17110014	--
12101110	WHITE R. AT SUMNER	471215	1221440	17110014	--
12101475	PUYALLUP R AT MERIDIAN ST BR AT PUYALLUP, WAS	471210	1221733	17110019	--
12101478	WAPATO CR DIV TO PUYALLUP RIV AT NO. PUYALLUP WA	471213	1221746	17110014	--
12101500	PUYALLUP RIVER AT PUYALLUP, WA	471231	1221933	17110014	948
12102000	CLARK CREEK AT PUYALLUP, WASH.	471040	1221900	17110014	--
12102005	MEEKER DITCH AT 7TH ST S AT PUYALLUP, WA	471100	1221804	17110014	--
12102010	CLARKS CR AT 7TH AVE S.W. AT PUYALLUP, WA	471110	1221907	17110014	--
12102020	DIRU CR AT INFLOW TO HATCHERY NR PUYALLUP, WA	471130	1222017	17110014	1.17
12102025	DIRU CR BLW HATCHERY AND PIONEER WAY NR PUYALLUP	471135	1222012	17110014	1.18
12102040	W.F. CLARKS CR AT 104TH ST. EAST NR PUYALLUP, WA.	470943	1222053	17110014	--
12102050	CLARKS CR TRIB AT PIONEER WAY NR PUYALLUP, WA	471147	1222048	17110014	1.56
12102075	CLARKS CREEK AT TACOMA ROAD NEAR PUYALLUP, WA	470923	1221909	17110014	13
12102100	CLARKS CR AT RIVER ROAD NR PUYALLUP, WA	471249	1222027	17110014	16.3
12102102	PUYALLUP RIVER ABOVE CLEAR CREEK NEAR TACOMA, WA	471410	1222330	17110014	--
12102105	W.F. CLEAR CR AT 84TH ST. EAST NR TACOMA, WASH.	471052	1222233	17110014	--
12102110	W.F. CLEAR CR AT 72ND ST E. TACOMA, WA	471130	1222231	17110014	0.74
12102112	E.F. CLEAR CR AT 100TH ST. EAST NEAR TACOMA, WASH.	470959	1222156	17110014	--
12102115	E.F. CLEAR CR AT 72ND ST E. NR TACOMA, WASH.	471129	1222211	17110014	1.52
12102140	CLEAR CR AT PIONEER WAY BLW HATCHERY NR TACOMA, WA	471310	1222225	17110014	3.09
12102145	CANYON CREEK AT 77TH ST. EAST NR TACOMA, WASH.	471111	1222110	17110014	--
12102150	SQUALLY CR AT 72ND ST E. TACOMA, WA	471129	1222308	17110014	0.1
12102175	CLEAR CR AT 31ST AVE CT. E. TACOMA, WA	471354	1222308	17110014	8.53
12102180	SWAN CREEK AT 96TH ST. EAST NR TACOMA, WASH.	471012	1222333	17110014	--

Site - ID	Station Name	Latitude (Degrees)	Longitude (Degrees)	Hydrologic Unit (OWDC)	Drainage Area (Miles2)
12102190	SWAN CR AT 80TH ST. EAST NR TACOMA, WASH.	471105	1222333	17110014	2.35
12102200	SWAN CREEK NEAR TACOMA, WASH.	471130	1222335	17110014	2.15
12102202	SWAN CR AT FLUME LINE ROAD, TACOMA, WA	471142	1222235	17110014	2.28
12102212	SWAN CR AT PIONEER WAY, TACOMA, WA	471343	1222326	17110014	3.45
12102400	PUYALLUP RIVER AT LINCOLN AVENUE AT TACOMA, WA	471500	1222447	17110014	--
12102490	WAPATO CR AT UNION PAC RR NR NO. PUYALLUP, WA	471253	1221804	17110019	0.62
12102500	WAPATO CREEK NEAR TACOMA, WA	471330	1222010	17110019	6
12102510	WAPATO CR AT 12TH ST E. IN FIFE, WA	471446	1222206	17110019	3.47
12102750	NORTH LAKE NR FEDERAL WAY	471817	1221719	17110019	--
12102760	KILLARNEY LAKE NR ALGONA	471711	1221721	17110012	--
12102770	HYLEBOS CR AT S. 370 ST. NEAR MILTON, WASH.	471613	1221806	17110019	--
12102775	HYLEBOS CR TRIB ABV S. 363 PL. NR MILTON, WASH.	471637	1221824	17110019	--
12102800	SOUTH FORK HYLEBOS CREEK NR PUYALLUP, WASH.	471535	1221740	17110019	0.27
12102900	HYLEBOS CR ABV TRIB AT 5TH AVE IN MILTON, WA	471510	1221939	17110019	4.77
12102920	WEST TRIB TO HYLEBOS CR AT S.356 ST NR MILTON,WA	471658	1221934	17110019	--
12103000	WEST TRIB TO HYLEBOS(HYLEBOS)CR NEAR MILTON,WA	471602	1221942	17110019	7.33
12103005	WEST TRIB TO HYLEBOS CR AT COMET ST NR MILTON, WA	471517	1221959	17110019	--
12103020	HYLEBOS CREEK AT HIGHWAY 99 AT FIFE, WA	471439	1222013	17110019	16.8
12103025	HYLEBOS CR AT 8TH AVE E. IN FIFE, WA	471500	1222046	17110019	16.7
12103035	FIFE DITCH AT 54TH ST E. IN FIFE, WA	471525	1222127	17110019	2.03
12103200	JOES CREEK AT TACOMA, WASH.	471844	1222320	17110019	0.78
12103205	JOES CR AT MARINE DR. NEAR TACOMA, WASH.	471937	1222231	17110019	--
12103207	LAKOTA CR ABV SEWAGE TRTMNT PLANT NR TACOMA, WA	471933	1222206	17110019	--
12103210	REDONDO CR 1 AT REDONDO SHORES NR DESMOINES, WA	472032	1221952	17110019	--
12103212	REDONDO C 2 AB REDONDO HTS CONDO NR DESMOINES WA	472051	1221913	17110019	--
12103215	WOODMONT DRIVE CREEK NEAR DESMOINES, WASH.	472155	1221855	17110019	--
12103220	UNNAMEDCR AT SALT WATER ST PARK NR DESMOINES WA	472230	1221909	17110019	--
12103324	DES MOINES CR NR MOUTH AT DES MOINES, WA	472420	1221938	17110019	6
12103326	MILLER CREEK NR DES MOINES, WA	472647	1222103	17110019	8.5
12103330	SEOLA BEACH DRAIN AT SEATTLE, WASH	472948	1222227	17110019	--
12103375	PIONEER CR NR LESTER, WA	471057	1212200	17110013	--
12103380	GREEN RIVER ABV TWIN CAMP CREEK NR LESTER, WA	471055	1212315	17110013	16.5
12103390	SUNDAY CR NR LESTER, WA	471338	1212616	17110013	--
12103395	INTAKE CR NR LESTER, WA	471221	1212417	17110013	3.4
12103400	GREEN RIVER BLW INTAKE CR NR LESTER, WASH.	471244	1212513	17110013	34.8
12103500	SNOW CREEK NEAR LESTER, WASH.	471510	1212410	17110013	11.5
12104000	FRIDAY CREEK NEAR LESTER, WASH.	471317	1212722	17110013	4.67
12104500	GREEN RIVER NEAR LESTER, WASH.	471228	1213307	17110013	96.2
12104700	GREEN CANYON CREEK NEAR LESTER, WASH.	471308	1213428	17110013	3.23
12105000	SMAY CREEK NEAR LESTER, WASH.	471543	1213352	17110013	8.56
12105480	CANTON CREEK AT HUMPHERY	471350	1214319	17110013	--
12105500	CHARLEY CREEK NR EAGLE GORGE, WASH.	471500	1214700	17110013	11.3
12105700	N.F. GREEN RIVER NR PALMER, WASH.	471830	1214620	17110013	16.5
12105710	NORTH FORK GREEN RIVER NEAR LEMOLO, WASH.	471821	1214620	17110013	16.7
12105800	HOWARD A. HANSON RESERVOIR NEAR PALMER, WASH.	471638	1214703	17110013	220
12105900	GREEN RIVER BELOW HOWARD A. HANSON DAM, WASH.	471702	1214748	17110013	221

Site - ID	Station Name	Latitude (Degrees)	Longitude (Degrees)	Hydrologic Unit (OWDC)	Drainage Area (Miles2)
12106000	BEAR CREEK NR EAGLE GORGE, WASH.	471700	1214810	17110013	4.1
12106500	GREEN RIVER NEAR PALMER, WASH.	471740	1214920	17110013	230
12106700	GREEN RIVER AT PURIFICATION PNT NR PALMER, WASH.	471819	1215058	17110013	231
12107000	GREEN RIVER AT KANASKAT, WA	471910	1215330	17110013	240
12107200	DEEP CREEK NEAR CUMBERLAND, WASH.	471725	1215500	17110013	2.17
12107290	WALKER LAKE NEAR CUMBERLAND	471547	1215425	17110013	--
12107300	ICY CREEK NR BLACK DIAMOND, WASH.	471640	1215825	17110013	3.29
12107498	GREEN R AT FLAMING GEYSER BR NR BLACK DIAMOND,WA	471651	1220212	17110013	280
12107500	GREEN RIVER NR BLACK DIAMOND, WASH.	471700	1220310	17110013	285
12107950	NORTH FORK NEWAUKUM CREEK NEAR ENUMCLAW,WASH	471406	1215542	17110013	1.93
12107995	NEWAUKUM CR AT SE 400TH ST NR ENUMCLAW, WA	471438	1220217	17110013	--
12108000	NEWAUKUM CREEK NEAR ENUMCLAW, WA	471630	1220330	17110013	25.5
12108050	CLOVERCREST OUTFALL AT ENUMCLAW,WASH	471238	1220014	17110013	0.26
12108450	NEWAUKUM CREEK TRIBUTARY NEAR BLACK DIAMOND,WASH	471512	1220134	17110013	1.52
12108500	NEWAUKUM CREEK NEAR BLACK DIAMOND, WASH.	471633	1220330	17110013	27.4
12109000	BURNS CREEK NEAR BLACK DIAMOND, WA	471700	1220610	17110013	3.47
12109010	GREEN R AT AUBURN ACADEMY NR AUBURN, WASH	471718	1220933	17110013	--
12109450	SHADOW LAKE NR MAPLE VALLEY	472408	1220458	17110012	--
12109500	LITTLE SOOS CREEK NEAR KENT, WASH.	472222	1220646	17110013	6.08
12109550	LITTLE SOOS CR AT 164TH SE AT MERIDAN HEIGHTS, WA	472143	1220718	17110012	3.4
12110000	BIG SOOS CR ABV JENKINS CR NEAR AUBURN, WASH.	472038	1220800	17110013	20.9
12110002	WILDERNESS LAKE NR. MAPLE VALLEY	472204	1220212	17110013	--
12110003	WILDERNESS LAKE OUTLET NR MAPLE VALLEY, WA	472234	1220214	17110013	0.66
12110004	PIPE LAKE NR. MAPLE VALLEY	472158	1220306	17110013	--
12110005	LUCERNE LAKE NR. MAPLE VALLEY	472205	1220250	17110013	--
12110400	S.F. JENKINS CREEK NEAR COVINGTON, WASH.	472122	1220502	17110013	3.47
12110500	JENKINS CREEK NEAR AUBURN, WASH.	472024	1220742	17110013	13.5
12111000	LAKE SAWYER NEAR BLACK DIAMOND, WASH.	471953	1220223	17110013	13
12111500	COVINGTON CREEK NR BLACK DIAMOND, WASH.	472010	1220240	17110013	13
12112000	COVINGTON CREEK NEAR AUBURN, WASH.	471851	1220632	17110013	21.6
12112500	BIG SOOS CREEK NEAR AUBURN, WASH.	471900	1220840	17110013	62.9
12112550	SOOSETTE CREEK NEAR AUBURN, WASH.	471903	1220930	17110013	5.5
12112600	BIG SOOS CREEK ABV HATCHERY, NR AUBURN, WA	471845	1220951	17110013	66.7
12112610	BIG SOOS CR NR MOUTH NR AUBURN, WASH	471822	1221016	17110013	--
12113000	GREEN RIVER NR AUBURN, WA	471845	1221210	17110013	399
12113200	MILL CREEK NEAR AUBURN, WASH.	471815	1221600	17110012	3.14
12113300	MILL CREEK TRIBUTARY NEAR AUBURN, WASH.	472010	1221510	17110013	0.3
12113340	GREEN R AT 212 ST. NR KENT, WASH.	472445	1221549	17110013	--
12113342	ANGLE LAKE NR DES MOINES,WASH	472530	1221732	17110019	--
12113346	SPRING BROOK CREEK AT ORILLIA, WA	472553	1221335	17110013	8.44
12113347	MILL CREEK AT EARTHWORKS PARK AT KENT, WA	472300	1221325	17110013	2.49
12113349	MILL CREEK NEAR MOUTH AT ORILLIA, WA	472620	1221426	17110013	6.03
12113350	GREEN RIVER AT TUKWILA, WASH.	472755	1221450	17110013	440
12113370	SPRINGBROOK CR AT SW 27TH AT TUKWILLA, WA	472721	1221335	17110013	--
12113375	SPRINGBROOK CREEK AT TUKWILA, WA	472757	1221353	17110013	19
12113385	BLACK RIVER BELOW PUMP STATION NEAR RENTON, WA	472833	1221441	--	--

Site - ID	Station Name	Latitude (Degrees)	Longitude (Degrees)	Hydrologic Unit (OWDC)	Drainage Area (Miles2)
12113390	DUWAMISH R AT GOLF COURSE AT TUKWILA, WA	472845	1221527	17110013	461
12113400	DUWAMISH R AT TUKWILLA, WASH.	472858	1221600	17110013	--
12113470	DUWAMISH R AT FIRST AVENUE S AT SEATTLE WA	473233	1222001	17110013	477
12113485	DUWAMISH R AT TERMINAL 3 AT SEATTLE WA	473355	1222053	17110013	483
12113488	LONGFELLOW CR AT SW BRANDON ST NR WEST SEATTLE, WA	473317	1222157	17110013	2.2
12113492	DUWAMISH R AT TERM 5 AT SEATTLE, WASH.	473450	1222138	17110013	483
12113493	DUWAMISH R AT TERM 20 AT SEATTLE, WASH.	473451	1222042	17110013	483
12113499	TAYLOR CREEK AT LAKERIDGE PARK NEAR RENTON, WA	473033	1221449	17110012	--
12113500	NORTH FORK CEDAR RIVER NEAR LESTER, WASH.	471910	1213005	17110012	9.3
12114000	SOUTH FORK CEDAR RIVER NEAR LESTER, WASH.	471830	1213100	17110012	6
12114500	CEDAR R. BELOW BEAR CR., NEAR CEDAR FALLS, WASH.	472032	1213252	17110012	25.4
12115000	CEDAR RIVER NEAR CEDAR FALLS, WASH.	472213	1213726	17110012	40.7
12115300	GREEN POINT CREEK NEAR CEDAR FALLS, WASH.	472320	1214030	17110012	0.89
12115500	REX RIVER NEAR CEDAR FALLS, WASH.	472103	1213943	17110012	13.4
12115700	BOULDER CR NR CEDAR FALLS, WASH.	472159	1214130	17110012	4.64
12115800	RACK CREEK NR CEDAR FALLS,WASH.	472329	1214317	17110012	2.14
12115900	CHESTER MORSE LAKE AT CEDAR FALLS, WASH.	472434	1214322	17110012	78.4
12116000	CEDAR RIVER AT CEDAR LAKE, NEAR NORTH BEND, WA	472420	1214310	17110012	77.7
12116060	CEDAR LAKE (MASONRY POOL) NEAR CEDAR FALLS,WASH.	472443	1214504	17110012	78.4
12116100	CANYON CREEK NEAR CEDAR FALLS, WASH.	472511	1214555	17110012	0.19
12116400	CEDAR RIVER AT POWERPLANT AT CEDAR FALLS, WA	472508	1214649	17110012	--
12116450	CEDAR RIVER BELOW POWERPLANT NEAR CEDAR FALLS, WA	472511	1214652	17110012	--
12116500	CEDAR RIVER AT CEDAR FALLS, WASH.	472502	1214727	17110012	84.2
12116700	MIDDLE FORK TAYLOR CREEK NEAR SELLECK, WASH.	472115	1214730	17110012	5.17
12116800	NORTH FORK TAYLOR CREEK NEAR SELLECK, WASH.	472220	1214820	17110012	3.77
12117000	TAYLOR CREEK NEAR SELLECK, WASH.	472312	1215042	17110012	17.2
12117490	CEDAR R. AB ROCK CR. NR LANDSBURG	472328	1215508	17110012	--
12117500	CEDAR RIVER NEAR LANDSBURG, WASH.	472338	1215712	17110012	121
12117600	CEDAR RIVER BELOW DIVERSION NR LANDSBURG, WA	472247	1215856	17110012	124
12117695	ROCK CR AT CEDAR FALLS RD NR LANDSBURG, WA	472412	1215353	17110012	2.78
12117699	ROCK CREEK NEAR LANDSBURG, WA	472358	1215513	17110012	4.73
12117700	ROCK CR ABOVE WALSH LK DITCH NR LANDSBURG, WASH.	472356	1215512	17110012	4.91
12117800	WALSH LAKE CREEK NEAR LANDSBURG, WASH.	472400	1215515	17110012	--
12117820	WALSH LAKE DITCH NEAR LANDSBURG, WA.	472357	1215513	17110012	9.42
12118000	ROCK CREEK DIVERSION NEAR LANDSBURG, WASH.	472330	1215840	17110012	11
12118200	RETREAT LAKE NEAR RAVENSDALE	472102	1215642	17110013	--
12118300	ROCK CREEK NEAR RAVENSDALE, WASH.	472145	1215945	17110012	--
12118400	ROCK CREEK AT HIGHWAY 516 NEAR RAVENSDALE, WA	472145	1220035	17110013	11.2
12118500	ROCK CREEK NEAR MAPLE VALLEY, WASH.	472248	1220058	17110012	12.6
12118510	CEDAR R. AT MAPLE VALLEY	472422	1220218	17110012	--
12119000	CEDAR RIVER AT RENTON, WA	472858	1221208	17110012	184
12119005	CEDAR R. AT WILLIAMS AV AT RENTON	472904	1221218	17110012	187
12119007	CEDAR R AT LOGAN ST AT RENTON, WASH	472909	1221228	17110012	--
12119300	MAY CREEK NEAR ISSAQUAH WASH	472953	1220553	--	2.82
12119302	MAY CREEK TRIB AT STATE ROAD 900 NR ISSAQUAH,WA	472953	1220554	17110012	--
12119375	MAY CREEK AT RENTON WASH	473102	1220855	--	7.57

Site - ID	Station Name	Latitude (Degrees)	Longitude (Degrees)	Hydrologic Unit (OWDC)	Drainage Area (Miles2)
12119400	BOREN LAKE NEAR RENTON	473152	1220945	17110012	--
12119450	HONEY CREEK NEAR RENTON WASH	473048	1221041	--	0.7
12119500	MAY CREEK NR RENTON, WASH.	473125	1221145	17110012	12.5
12119600	MAY CREEK AT MOUTH, NEAR RENTON, WASH.	473148	1221200	17110012	12.7
12119700	COAL CREEK NR BELLEVUE, WASH.	473400	1221045	17110012	6.8
12119725	LAKE HILLS STORM SEWER OUTFALL AT BELLEVUE, WA.	473623	1220812	17110012	--
12119730	148TH AV STORM SWR BLW LK HILLS BLVD BELLEVUE,WA	473601	1220830	17110012	--
12119731	148TH AVE UPSTREAM MANOMETER AT BELLEVUE WA	473601	1220831	--	--
12119732	148TH AVE DOWNSTREAM MANOMETER AT BELLEVUE WA	473601	1220832	--	--
12119795	VALLEY CREEK AT NE 27TH ST NEAR BELLEVUE, WA	473807	1220903	17110012	2.1
12119800	VALLEY (NO BRANCH MERCER) CR NR BELLEVUE, WASH.	473742	1220906	17110012	3.05
12119850	WEST BRANCH KELSEY CREEK AT BELLEVUE, WA	473608	1220950	17110012	10.1
12119900	SUNSET CREEK AT SE 30TH ST NEAR BELLEVUE, WA	473508	1220944	17110012	2.1
12119950	WOODRIDGE PARK TRIB OF RICHARDS CR AT BELLEVUE	473532	1220952	17110012	--
12120000	MERCER CREEK NEAR BELLEVUE, WASH.	473611	1221047	17110012	12
12120005	SURREY DOWNS STORM SEWER OUTFALL AT BELLEVUE, WA	473602	1221130	17110012	--
12120480	JUANITA CREEK AT NE 132ND ST NR KIRKLAND, WA	474308	1221207	17110012	3.4
12120490	JUANITA CREEK AT JUANITA, WA	474240	1221235	17110012	6.3
12120500	JUANITA CREEK NEAR KIRKLAND, WASH.	474227	1221251	17110012	6.69
12120600	ISSAQUAH CREEK NEAR HOBART, WASH.	472727	1220014	17110012	17.6
12121000	ISSAQUAH CREEK NEAR ISSAQUAH, WASH.	472855	1220210	17110012	27
12121500	EAST FORK ISSAQUAH CREEK AT ISSAQUAH, WA	473155	1220120	17110012	8.54
12121510	EAST FORK ISSAQUAH CR AT MOUTH AT ISSAQUAH WASH	473208	1220211	--	9.5
12121600	ISSAQUAH CREEK NR MOUTH, NR ISSAQUAH, WA	473309	1220248	17110012	56.6
12121699	TIBBETTS CR AT SE NEWPORT WAY NEAR ISSAQUAH, WA	473225	1220343	17110012	--
12121700	TIBBETTS CREEK NEAR ISSAQUAH, WASH.	473230	1220347	17110012	3.9
12121720	LAUGHING JACOBS CREEK NEAR ISSAQUAH, WASH.	473357	1220304	17110012	--
12121750	LEWIS CR AT 187TH AVE SE NR BELLEVUE, WA	473415	1220529	17110012	1.9
12121800	PINE LAKE NR ISSAQUAH, WA	473517	1220224	17110012	1.06
12121810	PINE LAKE OUTLET NR ISSAQUAH, WA	473515	1220309	17110012	1.06
12121815	PINE LK CR AT BURL-NORTH RR NEAR ISSAQUAH, WASH.	473608	1220441	17110012	--
12121820	SAMMAMISH LAKE TRIB. NEAR REDMOND, WASH.	473630	1220418	17110012	--
12121830	INGLEWOOD CR AT E. LK. SAMM. PKWY NR REDMOND, WA	473656	1220359	17110012	--
12122000	SAMMAMISH LAKE NEAR REDMOND, WASH.	473447	1220638	17110012	99.6
12122010	SAMMAMISH R AB BEAR CR NR REDMOND,WASH.	473928	1220653	17110012	102
12122500	BEAR CREEK NR REDMOND, WA	474304	1220434	17110012	13.9
12123000	COTTAGE LAKE CR NEAR REDMOND, WASH.	474415	1220445	17110012	10.7
12123100	COTTAGE LAKE CR ABV BEAR CR NR REDMOND, WASH.	474303	1220507	17110013	12.2
12123200	BEAR CREEK TRIBUTARY NEAR REDMOND, WASH.	474202	1220408	17110012	1.4
12123300	EVANS CREEK TRIBUTARY NEAR REDMOND, WASH.	473905	1220245	17110012	2.46
12123500	EVANS CREEK NEAR REDMOND, WA	473915	1220445	17110012	10.9
12124000	EVANS CREEK (ABOVE MOUTH) NR REDMOND, WASH.	474031	1220448	17110012	13
12124500	BEAR CREEK AT REDMOND, WASH.	474010	1220630	17110012	48.2
12124998	SAMMAMISH R AT REDMOND, WASH	474015	1220735	17110012	148
12125000	SAMMAMISH RIVER NEAR REDMOND, WASH.	474010	1220750	17110012	150
12125200	SAMMAMISH RIVER NEAR WOODINVILLE, WASH.	474215	1220829	17110012	159

Site - ID	Station Name	Latitude (Degrees)	Longitude (Degrees)	Hydrologic Unit (OWDC)	Drainage Area (Miles2)
12125500	BEAR CREEK AT WOODINVILLE, WASH.	474525	1220950	17110012	15.3
12125800	PENNY CREEK NEAR EVERETT, WASH.	475115	1221241	17110012	3.67
12125900	NORTH CREEK BLW PENNY CR NEAR BOTHELL, WASH.	474913	1221242	17110012	12
12125950	NORTH CREEK TRIBUTARY NEAR WOODINVILLE, WASH.	474907	1221224	17110012	4.2
12126000	NORTH CREEK NEAR BOTHELL, WASH.	474730	1221147	17110012	24.6
12126100	NORTH CREEK NEAR WOODINVILLE. WASH.	474648	1221113	17110012	27
12126200	NORTH CREEK AT NORTH CREEK PARKWAY NR BOTHELL, WA	474634	1221107	17110012	27
12126500	SAMMAMISH RIVER AT BOTHELL, WASH.	474532	1221209	17110012	212
12126800	SWAMP CREEK NEAR ALDERWOOD MANOR, WASH.	474932	1221515	17110012	9.55
12126900	SCRIBER CREEK NEAR MOUNTLAKE TERRACE, WASH.	474758	1221527	17110012	6.14
12127000	SWAMP CREEK NEAR BOTHELL, WA	474600	1221425	17110012	21.8
12127100	SWAMP CREEK AT KENMORE, WASH.	474522	1221357	17110012	23.1
12127101	SWAMP CREEK NEAR KENMORE, WA	474520	1221350	17110012	--
12127290	LYON CR AT NE 178TH AT LAKE FOREST PARK, WA	474523	1221651	17110012	3.6
12127300	LYON CREEK AT LAKE FOREST PARK, WASH.	474511	1221635	17110012	3.67
12127395	ECHO LAKE NR RICHMOND HEIGHTS	474623	1222025	17110012	--
12127400	LAKE BALLINGER NEAR EDMONDS, WASH.	474643	1221938	17110012	5.09
12127500	MCALEER CREEK NEAR BOTHELL, WASH.	474530	1221725	17110012	7.48
12127600	MCALEER CREEK AT LAKE FOREST PARK, WASH.	474507	1221648	17110012	7.8
12127700	NF THORNTON CR BL GOLF COURSE NEAR SEATTLE, WA	474331	1221847	17110012	3.1
12127800	SF THORNTON CR AT 30TH AVE NE NR SEATTLE, WA	474225	1221736	17110012	3.4
12128000	THORNTON CREEK NEAR SEATTLE, WASH.	474145	1221630	17110012	12.1
12128150	DEER LAKE NR CLINTON	475820	1222313	17110019	--
12128300	GOSS LAKE NR LANGLEY	480205	1222845	17110019	--
12128500	POWDER CREEK NR MIKILTEO, WA	474710	1221610	17110019	--
12128900	TYE RIVER NEAR SCENIC, WASH.	474335	1210830	17110009	7.6
12129000	TYE RIVER NEAR SKYKOMISH, WASH.	474220	1211740	17110009	79.8
12129300	FOEHN LAKE NEAR SKYKOMISH, WASH	473402	1211526	17110009	--
12129310	0PAL LAKE NEAR SKYKOMISH, WASH	473438	1211508	17110009	--
12129320	EMERALD LAKE NEAR SKYKOMISH, WASH	473453	1211516	17110009	--
12129330	JADE LAKE NEAR SKYKOMISH, WASH	473510	1211525	17110009	--
12129350	TAHL LAKE NEAR SKYKOMISH, WASH	473431	1211544	17110009	--
12129360	AL LAKE NEAR SKYKOMISH, WASH	473458	1211539	17110009	--
12129370	LOCKET LAKE NEAR SKYKOMISH, WASH	473518	1211614	17110009	--
12129390	LAKE ILSWOOT NEAR SKYKOMISH, WASH	473522	1211504	17110009	--
12129600	SOUTH TANK LAKE NEAR SKYKOMISH, WASH	473340	1211546	17110009	--
12129610	NORTH TANK LAKE NEAR SKYKOMISH, WASH	473401	1211550	17110009	--
12129620	BONNIE LAKE NEAR SKYKOMISH, WASH	473354	1211622	17110009	--
12129710	ANGELINE LAKE NEAR SKYKOMISH, WASH	473445	1211826	17110009	--
12129730	BIG HEART LAKE NEAR SKYKOMISH, WASH	473502	1211905	17110009	--
12129750	DELTA LAKE NEAR SKYKOMISH, WASH	473545	1211846	17110009	--
12129800	LITTLE HEART LAKE NEAR SKYKOMISH, WASH	473535	1211942	17110009	--
12129810	COPPER LAKE NR SKYKOMISH, WA	473628	1211941	17110009	--
12129820	MCCAFFREY LAKE NEAR SKYKOMISH, WASH	473634	1211952	17110009	--
12129840	LAKE MALACHITE NEAR SKYKOMISH, WASH	473637	1212005	17110009	--
12129850	TROUT LAKE NEAR SKYKOMISH, WASH	473710	1211844	17110009	--

Site - ID	Station Name	Latitude (Degrees)	Longitude (Degrees)	Hydrologic Unit (OWDC)	Drainage Area (Miles2)
12129870	ROCK LAKE NR SKYKOMISH, WASH	473832	1211956	17110009	--
12129890	TOP LAKE NR SKYKOMISH, WASH	473925	1212014	17110009	--
12129895	TOP LAKE POTHOLE NEAR SKYKOMISH, WASH	473923	1212002	17110009	--
12129900	EVANS LAKE NEAR SKYKOMISH, WASH	473926	1211928	17110009	--
12130000	FOSS RIVER NEAR SKYKOMISH, WA	474140	1211750	17110009	54.8
12130500	S. F. SKYKOMISH RIVER NEAR SKYKOMISH, WASH.	474220	1211830	17110009	135
12130800	BULLBUCKER CREEK NR SKYKOMISH, WASH.	474951	1211755	17110009	0.7
12131000	BECKLER RIVER NEAR SKYKOMISH, WASH.	474420	1211910	17110009	96.5
12132000	MILLER RIVER AT MILLER RIVER, WASH.	474230	1212350	17110009	45.6
12132500	S.F. SKYKOMISH R NR MILLER RIVER, WASH	474348	1212427	17110009	--
12132700	S.F. SKYKOMISH RIVER TRIBUTARY AT BARING, WASH.	474614	1212851	17110009	0.95
12133000	S.F. SKYKOMISH RIVER NEAR INDEX, WASH.	474820	1213244	17110009	355
12133500	TROUBLESOME CREEK NEAR INDEX, WASH.	475400	1212340	17110009	10.6
12134000	NORTH FORK SKYKOMISH RIVER AT INDEX, WASH.	474910	1213310	17110009	146
12134500	SKYKOMISH RIVER NEAR GOLD BAR, WASH.	475015	1213956	17110009	535
12134900	WALLACE LAKE NEAR GOLD BAR	475408	1214026	17110009	--
12135000	WALLACE RIVER AT GOLD BAR, WASH.	475151	1214053	17110009	19
12135500	OLNEY CREEK NEAR GOLD BAR, WASH.	475640	1214230	17110009	8.31
12136000	OLNEY CREEK NEAR STARTUP, WASH.	475535	1214310	17110009	10.3
12136500	MAY CREEK NEAR GOLD BAR, WASH.	475130	1213630	17110009	3.8
12137000	SKYKOMISH R AT SULTAN	475138	1214848	17110009	--
12137200	ELK CREEK NEAR SULTAN,WASH	475814	1213312	--	11.4
12137260	WILLIAMSON CREEK NEAR SULTAN,WASH	475909	1213600	--	15.6
12137290	SOUTH FORK SULTAN RIVER NEAR SULTAN, WA	475651	1213732	17110009	11.6
12137300	SPADA LAKE NEAR STARTUP, WA	475828	1214110	17110009	68.3
12137500	SULTAN RIVER NEAR STARTUP, WASH.	475827	1214647	17110009	74.5
12137790	SULTAN RIVER AT DIVERSION DAM WEIR NR SULTAN, WA	475734	1214746	17110009	77.1
12137800	SULTAN RIVER BLW DIVERSION DAM NR SULTAN, WASH.	475734	1214746	17110009	77.1
12138000	SULTAN RIVER NEAR SULTAN, WASH.	475540	1214750	17110009	86.6
12138150	SULTAN RIVER BLW CHAPLAIN CR NR SULTAN, WASH.	475452	1214836	17110009	92.6
12138160	SULTAN RIVER BLW POWERPLANT NEAR SULTAN, WASH.	475427	1214851	17110009	94.2
12138200	SULTAN R AT SULTAN	475138	1214910	17110009	--
12138450	SKYKOMISH R BLW SULTAN R AT SULTAN, WASH	475134	1214911	17110009	--
12138500	MCCOY CREEK NEAR SULTAN, WASH.	474950	1214940	17110009	6.17
12139000	ELWELL CREEK NEAR SULTAN, WA	475010	1215100	17110009	22.9
12139490	ROESIGER LAKE NEAR MONROE	475819	1215523	17110009	--
12139500	ROESIGER CREEK NEAR MACHIAS, WASH.	475750	1215500	17110009	3.8
12140000	WOODS CREEK BELOW ROESIGER CREEK, NR MONROE, WA	475640	1215340	17110009	19
12140500	CARPENTER CREEK NEAR MACHIAS, WA	475750	1215810	17110009	8.89
12141000	WOODS CREEK NEAR MONROE, WASH.	475208	1215531	17110009	56.4
12141090	WOODS CR AT MONROE	475116	1215750	17110009	--
12141100	SKYKOMISH RIVER AT MONROE, WA.	475108	1215729	17110009	834
12141300	MIDDLE FORK SNOQUALMIE RIVER NEAR TANNER, WASH.	472910	1213848	17110010	154
12141500	MIDDLE FORK SNOQUALMIE R NR NORTH BEND, WASH.	472920	1214535	17110010	169
12141800	M.F. SNOQUALMIE R AT 428TH ST NR NORTH BEND, WA	473059	1214605	17110010	--
12142000	N.F. SNOQUALMIE RIVER NR SNOQUALMIE FALLS, WA.	473654	1214244	17110010	64

Site - ID	Station Name	Latitude (Degrees)	Longitude (Degrees)	Hydrologic Unit (OWDC)	Drainage Area (Miles2)
12142200	CALLIGAN CREEK NR SNOQUALMIE, WASH.	473605	1214120	17110010	7.31
12142295	HANCOCK LAKE NR. SNOQUALMIE	473421	1214112	17110010	--
12142300	HANCOCK CREEK NR SNOQUALMIE, WASH.	473421	1214112	17110010	7.67
12142500	N.F. SNOQUALMIE R AT CABLE BR NR NORTH BEND, WA.	473420	1214250	17110010	85.6
12143000	N.F. SNOQUALMIE RIVER NEAR NORTH BEND, WASH.	473215	1214426	17110010	95.7
12143300	S F SNOQUALMIE R TRIB NEAR NORTH BEND, WASH.	472347	1212833	17110010	0.15
12143310	SF SNOQUALMIE R TR NO.9 NR NORTH BEND, WASH.	472348	1212838	17110010	0.34
12143400	SF SNOQUALMIE R AB ALICE CR NR GARCIA, WASH.	472455	1213510	17110010	41.6
12143500	S.F. SNOQUALMIE RIVER NR GARCIA, WASH.	472500	1213520	17110010	45.8
12143550	S.F. SNOQUALMIE R. AT WEEKS FALLS NR GARCIA, WA.	472554	1213839	17110012	53.9
12143600	SF SNOQUALMIE R AT EDGEWICK, WA	472710	1214310	17110010	65.9
12143700	BOXLEY CREEK NEAR CEDAR FALLS, WASH.	472558	1214504	17110012	1.57
12143800	RATTLESNAKE LAKE AT CEDAR FALLS, WASH.	472539	1214629	17110012	1.86
12143900	BOXLEY CREEK NEAR EDGEWICK, WASH.	472656	1214350	17110010	3.64
12144000	S.F. SNOQUALMIE RIVER AT NORTH BEND, WA	472935	1214720	17110010	81.7
12144400	SNOQUALMIE RIVER AT SNOQUALMIE, WASH.	473137	1214840	17110010	--
12144500	SNOQUALMIE RIVER NEAR SNOQUALMIE, WASH.	473243	1215028	17110010	375
12144800	BEAVER C NR SNOQUALMIE WN	473755	1214500	17110010	4.13
12145000	TOKUL CREEK NEAR SNOQUALMIE, WASH.	473320	1215015	17110010	32.2
12145490	ALICE LAKE NR PRESTON	473203	1215307	17110010	--
12145500	RAGING RIVER NEAR FALL CITY, WASH.	473224	1215428	17110010	30.6
12145550	RAGING RIVER AT FALL CITY, WA	473352	1215316	17110010	--
12145600	SNOQUALMIE R AT FALL CITY, WA	473406	1215318	17110010	--
12146000	PATTERSON CREEK NEAR FALL CITY, WASH.	473452	1215623	17110010	15.5
12146500	PATTERSON CR, 8/10 MI ABV MOUTH, NR FALL CITY, WA	473515	1215540	17110010	21.3
12147000	GRIFFIN CREEK NEAR CARNATION, WASH.	473658	1215415	17110010	17.1
12147500	NORTH FORK TOLT RIVER NEAR CARNATION, WASH.	474245	1214715	17110010	39.9
12147600	SOUTH FORK TOLT RIVER NEAR INDEX, WASH.	474225	1213556	17110010	5.34
12147700	PHELPS CREEK NEAR INDEX, WASH.	474220	1213605	17110010	2.04
12147800	S F TOLT RIVER AT UPPER STA. NR CARNATION, WA.	474230	1213650	17110010	8.82
12147900	S.F. TOLT RESERVOIR NEAR CARNATION, WASH.	474138	1214116	17110010	--
12148000	SOUTH FORK TOLT RIVER NR CARNATION, WASH.	474122	1214244	17110010	19.7
12148100	SO FK TOLT RIVER TRIB NR CARNATION, WASH.	474150	1214400	17110009	2.19
12148300	S F TOLT R BLW REGULATING BASIN NR CARNATION, WA	474149	1214710	17110010	29.6
12148500	TOLT RIVER NR CARNATION, WA	474145	1214922	17110010	81.4
12148700	STOSSEL CREEK NEAR CARNATION, WASH.	474145	1214950	17110010	5.58
12148790	LANGLOIS LAKE NR CARNATION	473814	1215303	17110010	--
12148800	TOLT R AT MOUTH NR CARNATION, WA	473822	1215524	17110010	--
12149000	SNOQUALMIE RIVER NEAR CARNATION, WASH.	473958	1215527	17110010	603
12149500	HARRIS CREEK NEAR CARNATION, WA	474042	1215422	17110010	8.39
12149990	AMES LAKE NR CARNATION	473840	1215720	--	--
12150000	AMES CREEK NEAR TOLT, WA	473940	1215750	17110010	3.17
12150400	SNOQUALMIE RIVER AT DUVALL, WA.	474436	1215912	17110010	--
12150450	KING LAKE NEAR MONROE	474834	1215519	17110010	--
12150480	MARGARET LAKE NR DUVALL	474613	1215406	17110010	--
12150500	CHERRY CREEK NEAR DUVALL, WASH.	474440	1215635	17110010	19.2

Site - ID	Station Name	Latitude (Degrees)	Longitude (Degrees)	Hydrologic Unit (OWDC)	Drainage Area (Miles2)
12150700	SNOQUALMIE RIVER NR MONROE, WASH	474814	1220006	17110010	--
12150800	SNOHOMISH RIVER NEAR MONROE, WASH.	474952	1220250	17110011	1540
12151000	EVANS CREEK NEAR SNOHOMISH, WA	475030	1220500	17110011	2.75
12151500	FRENCH CREEK NEAR MONROE, WA	475340	1220040	17110011	7.09
12152000	PILCHUCK RIVER BLW WORTHY CR, NR GRANITE FALLS, WA	480120	1215310	17110011	41.7
12152500	PILCHUCK RIVER NEAR GRANITE FALLS, WASH.	480315	1215725	17110011	54.5
12152800	PILCHUCK R NR LAKE STEVENS, WASH	480312	1220122	17110011	--
12153000	LITTLE PILCHUCK C NEAR LAKE STEVENS, WASH.	480200	1220304	17110011	17
12153100	CASSIDY LAKE NR LAKE STEVENS	480251	1220528	17110011	--
12153500	STEVENS LAKE NR LAKE STEVENS,WASH	480053	1220355	17110011	--
12154000	STEVENS CREEK AT LAKE STEVENS, WASH.	480100	1220310	17110011	15.3
12154500	DUBUQUE CR NR LAKE STEVENS WASH	475825	1220140	17110011	7.16
12155000	PANTHER CREEK NEAR LAKE STEVENS, WA	475925	1220140	17110011	5.93
12155300	PILCHUCK RIVER NEAR SNOHOMISH, WA	475606	1220419	17110011	127
12155400	PILCHUCK R AT SNOHOMISH	475447	1220456	17110011	--
12155500	SNOHOMISH R AT SNOHOMISH	475438	1220552	17110011	1720
12156000	WOOD CREEK NEAR EVERETT, WASH.	475525	1221100	17110011	1.89
12156100	SNOHOMISH R AT US HIGHWAY 2 AT EVERETT, WASH.	475843	1221057	17110011	1750
12156400	MUNSON CREEK NEAR MARYSVILLE, WASH.	480350	1220810	17110011	0.97
12156500	ALLEN CREEK AT MARYSVILLE, WA	480305	1220945	17110011	7.93
12157000	QUILCEDA CREEK NEAR MARYSVILLE, WASH.	480620	1220940	17110011	15.4
12157005	QUILCEDA CR ABV WEST FORK NR MARYSVILLE, WASH.	480508	1221026	17110011	17.4
12157020	W.F. QUILCEDA CREEK NEAR MARYSVILLE, WASH	480603	1221105	17110011	9.41
12157030	QUILCEDA CREEK TRIB.NR.MARYSVILLE,WASH	480434	1221117	17110011	--
12157035	STURGEON CREEK AT MARYSVILLE,WASH	480327	1221147	17110011	--
12157130	JOHN SAM LAKE NEAR TULALIP, WA	480710	1221450	17110019	--
12157140	MISSION CREEK BELOW JOHN SAM LAKE NR TULALIP, WA	480642	1221452	17110019	--
12157150	MISSION CR NR MARYSVILLE,WASH	480508	1221450	17110008	--
12157170	MISSION CR TRIBUTARY NR TULALIP,WASH	480500	1221458	17110019	--
12157200	ROSS LAKE NR MARYSVILLE, WASH	480528	1221346	17110019	--
12157202	TRIBUTARY TO MISSION CREEK NEAR TULALIP, WA	480515	1221337	17110019	0.74
12157210	MISSION CR TRIB #2 NR TULALIP,WASH	480445	1221436	17110019	--
12157247	MISSION CR NR MISSION BEACH, WASH	480313	1221452	17110019	--
12157250	MISSION CREEK NEAR TULALIP, WA	480331	1221558	17110019	7.92
12157500	LAKE GOODWIN NEAR SILVANA, WASH.	480802	1221757	17110019	5.17
12157900	LOMA LAKE NR TULALIP	480806	1221456	17110008	--
12157950	CRABAPPLE LAKE NR TULALIP	480757	1221626	17110019	--
12158000	LAKE SHOECRAFT NEAR TULALIP, WASH.	480734	1221811	17110019	6.02
12158001	LAKE SHOECRAFT OUTLET NR TULALIP, WASH	480724	1221824	--	--
12158007	WEALLUP LAKE AT OUTLET NEAR TULALIP, WA	480643	1221500	17110019	8.31
12158008	TULALIP CREEK BELOW WEALLUP LAKE NR TULALIP, WA	480643	1221758	17110019	8.31
12158010	TULALIP CREEK ABOVE EAST BRANCH NEAR TULALIP, WA	480551	1221717	17110019	9.74
12158025	EAST BRANCH CR AB MARY SHELTON LAKE NR TULALIP, WA	480647	1221545	17110019	0.8
12158030	EAST BRANCH TULALIP CREEK NEAR TULALIP, WA	480613	1221627	17110019	--
12158032	EAST BRANCH TULALIP CREEK NR MOUTH NR TULALIP, WA	480535	1221644	17110019	--
12158040	TULALIP CREEK NEAR TULALIP, WA	480407	1221712	17110019	15.4

Site - ID	Station Name	Latitude (Degrees)	Longitude (Degrees)	Hydrologic Unit (OWDC)	Drainage Area (Miles2)
12158050	CUMMINGS LAKE NEAR TULALIP, WASH	480724	1222046	17110019	--
12158070	HOWARD LAKE NR SYLVANA	480922	1221924	17110019	--
12158072	MARTHA LAKE NR SILVANA	481003	1222046	17110008	--
12158300	DEER CREEK NEAR SILVERTON, WASH.	480640	1213450	17110006	1.07
12158500	S F STILLAGUAMISH R AT SILVERTON WASH	480420	1213450	17110008	37.2
12159000	SF STILLAGUAMISH R BLW BENDER CR, NR SILVERTON, WA	480410	1213550	17110008	40.7
12159500	S.F. STILLAGUAMISH RIVER NR SILVERTON, WASH.	480400	1213620	17110006	43.7
12160000	BOARDMAN CREEK NEAR SILVERTON, WA	480400	1214030	17110008	8.52
12160400	S.F.STILLAGUAMISH R. NR. VERLOT, WASH.	480512	1214538	17110008	--
12160500	BENSON CREEK NEAR GRANITE FALLS, WA	480530	1214630	17110008	2.7
12161000	S.F. STILLAGUAMISH R. NR. GRANITE FALLS, WASH.	480612	1215707	17110008	119
12161400	CANYON CR. AT MASONIC PARK NR GRANITE FALLS, WA.	480702	1215405	17110008	--
12161500	CANYON CR NR GRANITE FALLS WASH	480715	1215545	17110008	59.8
12162000	S F STILLAGUAMISH R AT GRANITE FALLS WASH	480540	1215820	17110008	182
12162500	S.F. STILLAGUAMISH R AB JIM CR NR ARLNGTN, WASH.	481005	1220405	17110008	199
12163000	JIM CR NR OSO WASH	481230	1215540	17110008	10.9
12163500	CUB CR NR OSO WASH	481220	1215610	17110008	6.44
12164000	JIM CREEK NEAR ARLINGTON, WASH.	481025	1220405	17110008	46.2
12164500	S.F. STILLAGUAMISH RIVER NR ARLINGTON, WASH.	481140	1220545	17110008	251
12164510	S F STILLAGUAMISH R AT ARLINGTON	481203	1220704	17110008	--
12164900	NF STILLAGUAMISH R AB SQUIRRE CR NR DARRINGTON, WA	481704	1213818	17110005	48.2
12165000	SQUIRE CREEK NEAR DARRINGTON, WASH.	481615	1214000	17110008	20
12165500	N F STILLAGUAMISH R NR DARRINGTON, WASH.	481648	1214204	17110008	82.2
12166000	BOULDER CREEK NEAR OSO, WA	481645	1214645	17110008	27
12166300	N F STILLAGUAMISH R NR OSO	481621	1215313	17110007	--
12166500	DEER CREEK AT OSO, WASH.	481700	1215545	17110008	65.9
12166900	N.F. STILLAGUAMISH R AT CICERO, WASH	481604	1220044	17110008	--
12167000	N.F. STILLAGUAMISH R. NR. ARLINGTON, WASH.	481542	1220247	17110008	262
12167400	STILLAGUAMISH RIVER AT ARLINGTON, WASH.	481210	1220735	17110008	539
12167500	ARMSTRONG CREEK NR ARLINGTON, WASH.	481315	1220800	17110008	7.33
12167700	STILLAGUAMISH RIVER NR SILVANA, WA	481148	1221233	17110008	557
12168000	CAVANAUGH LAKE NEAR OSO, WA	481930	1221915	17110007	6.7
12168500	PILCHUCK CREEK NEAR BRYANT, WASH.	481558	1220946	17110008	52
12168600	PILCHUCK CREEK NEAR SILVANA, WASH.	481244	1221300	17110008	--
12169000	PORTAGE CREEK NEAR ARLINGTON, WA	481045	1221140	17110008	8.8
12169400	KI LAKE NR SILVANA	480925	1221545	17110008	--
12169500	FISH CREEK NEAR ARLINGTON, WASH.	481035	1221325	17110008	7.52
12170000	CHURCH CREEK NEAR STANWOOD, WA	481400	1221930	17110008	6.4
12170300	STILLAGUAMISH R NR STANWOOD, WASH	481241	1222010	17110008	--
12170305	UNNAMED TRIB TO SARATOGA PASSAGE ON CAMANO IS, WA	480405	1222310	17110019	0.41
12170310	UNNAMED TRIB TO SKAGIT BAY ON CAMANO ISLAND, WA	481517	1222740	17110019	0.6
12170315	UNNAMED TRIB TO SKAGIT BAY NR OAK HARBOR, WA	481958	1223229	17110019	6.36
12170320	UNNAMED TRIB TO PENN COVE NR SAN DE FUCA, WA	481421	1224226	17110019	2.92
12170400	CULTUS CREEK NEAR MAXWELTON, WA	475606	1222400	17110019	3.05
12170440	UNNAMED TRIB TO ADMIRALTY INLET NR BUSH POINT, WA	480310	1223517	17110019	0.5
12170500	SKAGIT RIVER NR HOPE, B.C.	490250	1210545	--	357

Site - ID	Station Name	Latitude (Degrees)	Longitude (Degrees)	Hydrologic Unit (OWDC)	Drainage Area (Miles2)
12170600	SKAGIT R. AT INTNTL BNDRY, NR HOPE, B.C.	490001	1210415	--	381
12171000	LIGHTNING CREEK NEAR NEWHALEM, WASH.	485330	1205850	17110005	129
12171200	SKYMO LAKE NEAR NEWHALEM, WA	485014	1210603	17110005	--
12171500	SKAGIT RIVER AB DEVILS CR NR NEWHALEM, WASH.	485030	1210220	17110005	655
12172000	BIG BEAVER CREEK NEAR NEWHALEM, WASH.	484640	1210420	17110005	63.2
12172500	SKAGIT RIVER NR NEWHALEM, WA	484450	1210150	17110005	765
12173000	GRANITE CR NR NEWHALEM WASH	484140	1205330	17110005	71
12173500	RUBY C BELOW PANTHER C, NR NEWHALEM, WASH.	484230	1205810	17110005	206
12174000	RUBY CREEK NEAR NEWHALEM, WASH.	484320	1210030	17110005	210
12174500	SKAGIT R BELOW RUBY C, NEAR NEWHALEM, WASH.	484420	1210340	17110005	999
12175000	ROSS RESERVOIR NEAR NEWHALEM, WASH.	484358	1210402	17110005	999
12175400	THUNDER CR BLW MCALLISTER CR NR NEWHALEM, WASH.	483800	1210300	17110005	91.7
12175500	THUNDER CREEK NR. NEWHALEM, WASH.	484022	1210418	17110005	105
12176000	THUNDER CREEK NEAR MARBLEMOUNT, WASH.	484230	1210600	17110005	114
12176500	DIABLO RESERVOIR NEAR NEWHALEM, WASH.	484256	1210752	17110005	--
12177000	SKAGIT R AT REFLECTOR BAR, NR NEWHALEM, WASH.	484250	1210830	17110005	1120
12177450	STETATTLE CR BL CAMP DAYO CR NR NEWHALEM, WA	484357	1210955	17110005	19.5
12177500	STETATTLE CREEK NEAR NEWHALEM, WASH.	484320	1210858	17110005	22
12177520	PYRAMID CR NR NEWHALEM WASH.	484237	1210840	17110005	2.82
12177620	SKAGIT RIVER TRIB NR NEWHALEM, WA	484219	1211047	17110005	0.43
12177700	GORGE RESERVOIR NEAR NEWHALEM, WASH.	484153	1211225	17110005	--
12177900	LADDER CREEK AT NEHALEM, WA.	484032	1211420	17110005	--
12178000	SKAGIT RIVER AT NEWHALEM, WASH.	484019	1211442	17110005	1180
12178050	UPPER WILCOX LAKE NEAR NEWHALEM, WA	483604	1211014	17110005	--
12178100	NEWHALEM CREEK NR. NEWHALEM, WASH.	483922	1211414	17110005	27.9
12178400	GOODELL CR NR N CASCADES NP BOUNDARY NR NEWHALEM	484053	1211617	17110005	38.6
12178500	GOODELL CREEK NEAR NEWHALEM, WA	484025	1211550	17110005	38.7
12179000	SKAGIT RIVER ABV ALMA CR, NR MARBLEMOUNT, WASH.	483627	1212137	17110005	1270
12179500	ALMA CREEK NR MARBLEMOUNT, WA	483600	1212140	17110005	8.48
12179800	SKAGIT R. ABOVE BACON CREEK NEAR MARBLEMOUNT WA.	483510	1212311	17110005	1290
12179820	GREEN LAKE NEAR MARBLEMOUNT, WA	484135	1213015	17110005	--
12179900	BACON CREEK BELOW OAKES CREEK NEAR MARBLEMOUNT, WA	483617	1212354	17110005	49.7
12180000	BACON CREEK NEAR MARBLEMOUNT, WASH.	483520	1212340	17110005	50.9
12180500	DIOBSUD CREEK NEAR MARBLEMOUNT, WA	483340	1212500	17110005	25.4
12181000	SKAGIT RIVER AT MARBLEMOUNT, WASH.	483202	1212543	17110005	1380
12181090	SOUTH CASCADE MIDDLE TARN NEAR MARBLEMOUNT, WA	482208	1210332	17110005	--
12181100	S.F. CASCADE R AT SO CASCADE GL NR MBLMNT, WASH.	482213	1210423	17110005	2.36
12181110	SOUTH CASCADE GLACIER HUT 1 NR MARBLEMOUNT, WA	482152	1210353	17110005	--
12181120	SOUTH CASCADE GLACIER HUT 2 NR MARBLEMOUNT, WA	482153	1210353	17110005	--
12181200	SALIX CR AT SO CASCADE GL NR MARBLEMOUNT, WASH.	482216	1210435	17110005	0.08
12181500	MARBLE CREEK NEAR MARBLEMOUNT, WA	483210	1211620	17110005	15.9
12182000	CASCADE RIVER NEAR MARBLEMOUNT, WASH.	483125	1212300	17110005	140
12182200	CASCADE R TR NR MARBLEMOUNT WASH.	483154	1212006	17110005	0.72
12182500	CASCADE RIVER AT MARBLEMOUNT, WASH.	483137	1212450	17110005	172
12183000	CLARK CR AT MARBLEMOUNT WASH	483115	1212505	17110005	1.42
12183500	JORDAN CR AT MARBLEMOUNT WASH	483100	1212500	17110005	12

Site - ID	Station Name	Latitude (Degrees)	Longitude (Degrees)	Hydrologic Unit (OWDC)	Drainage Area (Miles2)
12184000	ROCKY CREEK NEAR MARBLEMOUNT, WA	483030	1212950	17110005	10
12184200	UPPER ILLABOT CR NR ROCKPORT, WASH.	482554	1212542	17110005	--
12184300	IRON CREEK NEAR ROCKPORT, WASH.	482605	1212755	17110005	1.7
12184500	ILLABOT CR. NR ROCKPORT, WASH.	482853	1213003	17110005	42.4
12184700	SKAGIT RIVER NR ROCKPORT, WASH.	482930	1213255	17110005	1660
12185000	N F SAUK R NR BARLOW PASS WASH	480520	1212000	17110006	76.4
12185295	GOAT LAKE INLET NEAR MONTE CRISTO, WASH.	480052	1212051	17110006	--
12185297	GOAT LAKE NEAR MONTE CRISTO, WASH.	480104	1212049	17110006	--
12185300	ELLIOTT CR AT GOAT LK OUTLET NR MONTE CRISTO, WA	480120	1212119	17110006	3.03
12185500	S.F. SAUK RIVER NR BARLOW PASS, WASH.	480345	1212420	17110006	33.1
12186000	SAUK R ABV WHITECHUCK R NR DARRINGTON, WASH.	481008	1212810	17110006	152
12186500	WHITE CHUCK R NR DARRINGTON WASH	481030	1212300	17110006	77.9
12187000	SAUK R AB CLEAR CR NR DARRINGTON WASH	481300	1213400	17110006	259
12187500	SAUK RIVER AT DARRINGTON, WASH.	481500	1213500	17110006	293
12188000	SUIATTLE RIVER BLW LIME CR, NR DARRINGTON, WA	481455	1211810	17110006	213
12188300	STRAIGHT CREEK NEAR DARRINGTON, WASH.	481405	1212310	17110006	4.32
12188400	SUIATTLE R ABV BIG CR NR DARRINGTON, WASH.	482032	1212708	17110006	307
12188500	BIG CR NR MANSFORD WASH	482020	1212610	17110006	21
12189000	SUIATTLE RIVER NEAR MANSFORD, WASH.	482150	1212930	17110006	335
12189400	SAUK RIVER TRIBUTARY NEAR DARRINGTON, WASH.	482030	1213300	17110006	1.3
12189498	SAUK R NR ROCKPORT, WASH	482424	1213327	17110006	--
12189500	SAUK RIVER NEAR SAUK, WASH.	482529	1213402	17110006	714
12190000	JACKMAN CR NR CONCRETE WASH	483125	1214245	17110005	23.9
12190400	BAKER RIVER ABV BLUM CR NR CONCRETE,WASH	484515	1213245	17110005	--
12190700	MOROVITZ CREEK NEAR CONCRETE, WASH.	484535	1214025	17110005	2.58
12190710	SWIFT CREEK NEAR CONCRETE, WASH.	484407	1213926	17110005	36.4
12190718	PARK CREEK AT UPPER BRIDGE NEAR CONCRETE, WASH.	484436	1214123	17110005	10.5
12190720	PARK CREEK NR CONCRETE, WASH	484358	1213943	17110005	--
12190800	BOULDER CREEK NEAR CONCRETE,WASH	484300	1214134	17110005	--
12191000	SANDY CREEK NEAR CONCRETE,WASH	484105	1214223	17110005	--
12191500	BAKER R BELOW ANDERSON C, NR CONCRETE, WASH.	483950	1214025	17110005	211
12191600	BAKER LAKE AT UPPER BKR DM NR CONCRETE WASH	483858	1214122	17110005	215
12191700	BAKER RIVER AT UPPER BAKER DAM NR CONCRETE,WASH	483854	1214147	17110005	--
12191800	SULPHUR CREEK NEAR CONCRETE, WA	484040	1214500	17110005	8.36
12191820	SULPHUR CREEK AT GUARD STATION NR CONCRETE,WASH	483933	1214244	17110005	--
12191900	ROCKY CREEK NEAR CONCRETE,WASH	483852	1214350	17110005	--
12192000	BEAR CREEK NEAR CONCRETE, WA	483710	1214435	17110005	10
12192500	N.F. BEAR CREEK NEAR CONCRETE, WA	483805	1214420	17110005	20.2
12192600	BEAR CREEK BLW TRIBUTARIES NEAR CONCRETE, WASH.	483711	1214409	17110005	14.4
12192700	THUNDER CREEK NEAR CONCRETE, WASH.	483608	1214217	17110005	22.4
12193000	LAKE SHANNON AT CONCRETE, WASH.	483253	1214422	17110005	297
12193200	LOWER BAKER PP TAILWATER AT CONCRETE, WASH.	483240	1214425	17110005	--
12193500	BAKER RIVER AT CONCRETE, WASH.	483224	1214431	17110005	297
12194000	SKAGIT RIVER NEAR CONCRETE, WA	483128	1214611	17110007	2740
12194500	FINNEY CR NR CONCRETE WASH	483035	1214845	17110007	51.6
12195000	GRANDY CREEK NEAR CONCRETE, WA	483200	1215300	17110007	18.9

Site - ID	Station Name	Latitude (Degrees)	Longitude (Degrees)	Hydrologic Unit (OWDC)	Drainage Area (Miles2)
12195500	O TOOLE CREEK NEAR HAMILTON, WA	483040	1215505	17110007	5.69
12196000	ALDER CREEK NR HAMILTON, WASH.	483142	1215658	17110007	10.7
12196150	SKAGIT RIVER NEAR HAMILTON, WASH.	483027	1220040	17110007	2870
12196153	LORETTA CR NR DAY CR, WASH	482803	1215915	17110007	--
12196155	LORETTA CR NR HAMILTON, WASH	483013	1220116	17110007	--
12196170	DAY LAKE NR LYMAN	482429	1215830	17110007	--
12196200	DAY CREEK BELOW DAY LAKE, NEAR LYMAN, WASH.	482431	1215847	17110007	6.56
12196400	DAY CREEK NEAR HAMILTON, WASH.	482910	1220157	17110007	32.3
12196500	DAY CREEK NEAR LYMAN, WASH.	483005	1220245	17110007	34.2
12197000	JONES CREEK NR LYMAN, WA	483215	1220240	17110007	7.8
12197020	CHILDS CR NR LYMAN WASH	483146	1220517	17110007	--
12197040	TANK CR NR LYMAN WASH	483138	1220619	17110007	2.5
12197100	MINKLER LAKE NR LYMAN	483124	1220611	17110007	--
12197110	MINKLER CR NR LYMAN WASH	483115	1220600	17110007	--
12197200	PARKER CREEK NEAR LYMAN, WASH.	482925	1220550	17110007	1.82
12197500	GILLIGAN CREEK NEAR LYMAN, WA	482905	1220800	17110007	6.31
12197680	BLACK CREEK NEAR MINKLER, WASH.	483234	1220650	--	--
12197690	BLACK CR NR LYMAN WASH	483209	1220720	17110007	--
12197700	WISEMAN CR NR LYMAN WASH	483149	1220808	17110007	3
12198000	COOL CR NR SEDRO WOOLLEY WASH	483200	1220900	17110007	1.88
12198500	HANSEN CR NR SEDRO WOOLLEY WASH	483030	1221210	17110007	9.66
12199000	SKAGIT RIVER NEAR SEDRO WOOLLEY, WASH.	482903	1221431	17110007	3020
12199200	MCMURRAY LAKE AT MCMURRAY	481850	1221310	17110007	--
12199499	BIG LAKE AT BIG LAKE	482352	1221424	17110007	--
12199500	NOOKACHAMPS CREEK NEAR MOUNT VERNON, WA	482405	1221410	17110007	22.2
12199800	EAST FORK NOOKACHAMPS CREEK NEAR BIG LAKE, WASH.	482450	1220925	17110007	3.56
12200000	E.F. NOOKACHAMPS CREEK NR CLEAR LAKE, WASH.	482530	1221230	17110007	20.5
12200020	CLEAR LAKE AT CLEAR LAKE	482756	1221306	17110007	--
12200025	BEAVER LAKE NR CLEAR LAKE	482645	1221310	17110007	--
12200500	SKAGIT RIVER NEAR MOUNT VERNON, WASH.	482642	1222003	17110007	3090
12200675	S F SKAGIT R AT CONWAY	482031	1222103	17110007	--
12200680	FRESH WATER SLOUGH OF SF SKAGIT R AT CONWAY,WAS	482000	1222103	17110007	3100
12200700	CARPENTER CR TRIB NR MOUNT VERNON, WASH.	481710	1221725	17110007	2.58
12200702	UNNAMED TRIB TO SKAGIT BAY NR LACONNER,WASH	482257	1222148	17110007	--
12200704	UNNAMED TRIB NO2 TO SKAGIT BAY NR LACONNER WASH	482347	1223208	17110019	--
12200706	UNNAMED TRIB TO SWINOMISH CHANNEL NR LACONNER WA	482512	1223003	17110019	--
12200708	UNNAMED TRIB NO2 TO SWINOMISH CHNL N LACONNER WA	482555	1223054	17110019	--
12200728	UNNAMED TRIB TO JASPER BAY ON LOPEZ ISLAND, WA	482819	1225125	17110003	--
12200730	UNNAMED TRIB TO DAVIS BAY ON LOPEZ ISLAND, WA	482805	1225508	17110003	--
12200733	UNNAMED TRIB TO LOPEZ SOUND ON LOPEZ ISLAND, WA	483042	1225254	17110003	--
12200737	UNNAMED TRIB TO SQUAW BAY ON SHAW ISLAND, WA	483350	1225721	17110003	--
12200746	AMERICAN CAMP POND ON SAN JUAN ISLAND, WA	482736	1225833	17110003	--
12200750	UNNAMED TRIB TO TROUT LAKE ON SAN JUAN ISLAND, WA	483208	1230750	17110003	--
12200754	UNNAMED CR AT ENGLISH CAMP ON SAN JUAN ISLAND, WA	483509	1230851	17110003	--
12200762	UNNAMED TRIB TO MASSACRE BAY ON ORCAS ISLAND, WA	483904	1225914	17110003	--
12200800	LAKE CREEK NEAR BELLINGHAM, WASH.	484105	1222330	17110002	2.35

Site - ID	Station Name	Latitude (Degrees)	Longitude (Degrees)	Hydrologic Unit (OWDC)	Drainage Area (Miles2)
12200850	SAMISH LAKE NR. BELLINGHAM	483856	1222215	17110002	17.3
12200900	FRIDAY CR AT ALGER	483710	1222050	17110002	--
12201000	FRIDAY CREEK NR BURLINGTON, WASH.	483420	1222015	17110002	37.1
12201100	FRIDAY CR BLW HATCHERY NR BURLINGTON	483332	1221938	17110002	--
12201500	SAMISH RIVER NR BURLINGTON, WASH.	483246	1222013	17110002	87.8
12201900	PADDEN LAKE AT BELLINGHAM	484215	1222741	17110002	--
12201950	ANDERSON CREEK NEAR BELLINGHAM, WASH.	484026	1221558	17110002	4.13
12201960	BRANNIAN CREEK AT S BAY DR NR WICKERSHAM, WA	484009	1221644	17110002	3.36
12202000	AUSTIN CREEK NR BELLINGHAM, WASH.	484247	1221948	17110002	7.73
12202050	SMITH CR NR BELLINGHAM WASH	484401	1221820	17110002	5.12
12202300	OLSEN CREEK NR BELLINGHAM, WASH.	484505	1222108	17110002	3.78
12202310	CARPENTER CREEK AT N SHORE DRIVE NR BELLINGHAM, WA	484515	1222110	17110002	1.17
12202400	EUCLID CR AT EUCLID AVE AT BELLINGHAM, WA	484456	1222429	17110002	0.54
12202420	MILL CREEK AT FLYNN ROAD AT BELLINGHAM, WA	484519	1222455	17110002	0.79
12202450	SILVER BEACH CR AT MAYNARD PL AT BELLINGHAM, WA	484610	1222419	17110002	1.2
12202500	WHATCOM LAKE NR BELLINGHAM	484545	1222510	17110002	55.9
12203000	WHATCOM CREEK NR BELLINGHAM, WASH.	484514	1222535	17110002	55.4
12203500	WHATCOM CR BLW HATCHERY NR BELLINGHAM, WASH.	484506	1222542	17110002	56.1
12203540	WHATCOM CREEK AT JAMES ST AT BELLINGHAM, WA	484517	1222750	17110002	--
12203550	WHATCOM CR. AT BELLINGHAM	484518	1222853	17110002	64.7
12203900	TOAD LK NR BELLINGHAM,WASH	484723	1222357	17110002	--
12204000	SQUALICUM CREEK AT BELLINGHAM, WA	484650	1222625	17110002	12
12204050	TENNANT LAKE NR FERNDALE	484948	1223447	17110004	--
12204200	GALENA CREEK NEAR GLACIER, WASH.	485218	1213955	17110004	0.55
12204400	NOOKSACK RIVER TRIBUTARY NEAR GLACIER, WASH.	485430	1214820	17110004	1.15
12204500	NOOKSACK RIVER AT EXCELSIOR, WA	485420	1214910	17110004	95.7
12205000	N.F. NOOKSACK R BLW CASCADE CR NR GLACIER, WASH.	485422	1215035	17110004	105
12205295	DAVIS CR AT GLACIER, WASH	485242	1215544	--	--
12205298	LITTLE CR AT GLACIER, WASH	485252	1215612	--	--
12205310	GALLOP CR NR GLACIER, WASH	485053	1215655	17110004	--
12205315	GALLOP CR ABV MOUTH NR GLACIER WASH	485158	1215658	17110004	--
12205320	GALLOP CR NR MOUTH AT GLACIER, WASH	485306	1215639	17110004	--
12205340	CORNELL CREEK AT GLACIER WASH	485315	1215733	17110004	--
12205350	WEST CORNELL CREEK NEAR GLACIER, WA	485315	1215735	17110004	--
12205360	HENDRICK CREEK NEAR GLACIER	485346	1215815	17110004	--
12205490	KIDNEY CREEK NR GLACIER, WASH.	485640	1215520	17110004	2.66
12205497	CANYON CREEK NEAR GLACIER, WA	485452	1215928	17110004	30.4
12205500	N.F. NOOKSACK RIVER NR GLACIER, WASH.	485415	1215930	17110004	195
12206000	KENDALL CR AT KENDALL WASH	485505	1220835	17110004	24
12206500	KENDALL CREEK NR MOUTH AT KENDALL, WA	485420	1220820	17110004	29.2
12206900	RACEHORSE CR AT NORTH FORK ROAD NR KENDALL, WA	485306	1220755	17110004	10.5
12207000	COAL CREEK NEAR KENDALL, WA	485320	1220905	17110004	4.57
12207200	N.F. NOOKSACK RIVER NR DEMING, WASH.	485224	1220856	17110004	282
12207250	KENNY CREEK NEAR DEMING, WA	485108	1220835	17110004	--
12207300	NF NOOKSACK RIVER BELOW KENNEY CREEK NR DEMING, WA	485018	1220910	17110004	--
12207750	WARM CREEK NEAR WELCOME, WA	484603	1215748	17110004	4.13

Site - ID	Station Name	Latitude (Degrees)	Longitude (Degrees)	Hydrologic Unit (OWDC)	Drainage Area (Miles2)
12207800	MF NOOKSACK R AB CLEARWATER C NR DEMING,WASH	484617	1220235	17110004	47.2
12207850	CLEARWATER CREEK NEAR WELCOME, WA	484719	1220118	17110004	18.5
12207900	CLEARWATER CREEK NR DEMING,WASH	484620	1220243	17110004	--
12207950	MF NOOKSACK DIVERSION AT PUMP STATION NR DEMING,WA	484225	1221000	17110004	--
12208000	M.F. NOOKSACK RIVER NR DEMING, WASH.	484643	1220620	17110004	73.3
12208100	MF NOOKSACK RIVER BL HEISTERS CR NR VAN ZANDT, WA	484709	1220644	17110004	--
12208500	CANYON CREEK AT KULSHAN, WASH.	485000	1220805	17110004	8.7
12209000	S.F. NOOKSACK RIVER NEAR WICKERSHAM, WASH.	483952	1220756	17110004	103
12209460	ARLECHO CREEK NEAR WICKERSHAM, WA	484059	1220315	17110004	--
12209490	SKOOKUM CR ABOVE DIVERSION NR WICKERSHAM, WA	484018	1220818	17110004	23
12209495	SKOOKUM CR. HATCHERY INFLOW NR. WICKERSHAM	484020	1220823	17110004	23.1
12209498	SKOOKUM CR. HATCHERY OUTFLOW NR. WICKERSHA	484015	1220828	17110004	--
12209500	SKOOKUM CREEK NEAR WICKERSHAM, WASH.	484020	1220824	17110004	23.1
12210000	SOUTH FORK NOOKSACK R AT SAXON BRIDGE WASH	484040	1220955	17110004	129
12210480	SOUTH FORK NOOKSACK RIVER AT VAN ZANDT, WA	484714	1221151	17110004	--
12210500	NOOKSACK RIVER AT DEMING, WASH.	484838	1221213	17110004	584
12210700	NOOKSACK RIVER AT NORTH CEDARVILLE, WASH.	485031	1221735	17110004	588
12210800	SMITH CREEK NEAR GOSHEN	485121.1	1221738.2	17110004	--
12210900	ANDERSON CREEK AT SMITH ROAD NEAR GOSHEN, WA	484750	1222013	17110004	8.96
12211000	ANDERSON CREEK AT GOSHEN, WA	485127	1222015	17110004	12.9
12211200	NOOKSACK RIVER AT EVERSON, WA	485505	1222048	17110004	--
12211390	KAMM CR AT KAMM ROAD NR LYNDEN, WA	485724	1222404	17110004	--
12211400	KAMM CREEK AT LYNDEN, WA	485645	1222617	17110004	6.9
12211480	SCOTT CREEK AT THEIL ROAD NEAR LYNDEN, WA	485506	1222512	17110004	--
12211490	SCOTT CREEK AT BLYSMA ROAD NEAR LYNDEN, WA	485508	1222750	17110004	--
12211500	NOOKSACK RIVER NEAR LYNDEN, WASH.	485514	1222904	17110004	648
12211890	FISHTRAP CREEK NEAR PEARDONVILLE, BC	490053	1222411	--	--
12211900	FISHTRAP CREEK AT I.B. NR LYNDEN, WA	490010	1222422	--	--
12211950	FISHTRAP CREEK NEAR LYNDEN, WA	485844	1222546	17110004	--
12212000	FISHTRAP CREEK AT LYNDEN, WASH.	485752	1222549	17110004	22.3
12212030	FISHTRAP CREEK AT E MAIN AT LYNDEN, WA	485646	1222732	17110004	--
12212035	PEPIN CREEK (EAST) AT LYNDEN, WA	485652	1222824	17110004	--
12212040	PEPIN CREEK AT LYNDEN, WA	485648	1222807	17110004	--
12212050	FISHTRAP CREEK AT FRONT STREET AT LYNDEN, WA	485620	1222840	17110004	37.8
12212100	FISHTRAP CREEK AT FLYNN ROAD AT LYNDEN, WA	485536	1222942	17110004	38.1
12212200	FISHTRAP CREEK AT RIVER ROAD NEAR LYNDEN, WA	485451	1223110	17110004	--
12212400	BERTRAND CR AT BERTRAND H ST BRIDGE NR LYNDEN, WA	485936.2	1223033.5	17110004	--
12212450	BERTRAND CR AT WEST BADGER ROAD NEAR LYNDEN, WA	485750	1223026	17110004	--
12212480	BERTRAND CR AT BIRCH BAY LYNDEN ROAD NR LYNDEN, WA	485608	1223208	17110004	--
12212500	BERTRAND CREEK NEAR LYNDEN, WA	485527	1223139	17110004	40.3
12212700	TENMILE CREEK TRIBUTARY NR BELLINGHAM, WASH.	485030	1222430	17110004	0.74
12212800	TENMILE CREEK TRIB #2 NR BELLINGHAM, WASH.	485035	1222430	17110004	0.24
12212895	TENMILE CR BELOW FOURMILE CR NR FERNDALE, WA	485200	1222856	17110004	22.7
12212900	TENMILE CREEK AT LAUREL, WASH.	485150	1222945	17110004	23.6
12212950	TENMILE CREEK AT HEMMI ROAD, NEAR FERNDALE, WA	485145	1223051	17110004	--
12213000	TENMILE CREEK NR FERNDALE, WA	485115	1223225	17110004	22.7

Site - ID	Station Name	Latitude (Degrees)	Longitude (Degrees)	Hydrologic Unit (OWDC)	Drainage Area (Miles2)
12213030	DEER CREEK NEAR FERNDALE, WA	485043	1223242	17110004	--
12213050	TENMILE CREEK AT BARRETT ROAD NEAR FERNDALE, WA	485113	1223420	17110004	--
12213095	NOOKSACK RIVER NEAR FERNDALE, WASH.	485114	1223455	17110004	786
12213100	NOOKSACK RIVER AT FERNDALE, WASH.	485042	1223517	17110004	786
12213140	NOOKSACK RIVER AT BRENNAN, WASH.	484910	1223443	17110004	790
12213155	KWINA SLOUGH AT FISH PEN CANAL NR MARIETTA	484642	1223614	17110004	--
12213500	CALIFORNIA CREEK NEAR CUSTER, WA	485518	1223933	17110002	6.85
12213950	SF DAKOTA CR AT DELTA LINE RD NR BIRCH BAY, WA	485645	1223655	17110002	--
12213980	NORTH FORK DAKOTA CREEK NEAR CUSTER, WA	485704	1223812	17110002	--
12214000	DAKOTA CREEK NEAR BLAINE, WA	485725	1223930	17110002	18.4
12214050	DAKOTA CREEK AT GILES ROAD NEAR BLAINE, WA	485747	1224051	17110002	--
12214500	SUMAS RIVER NEAR SUMAS, WASH.	485830	1221500	17110001	33
12214550	SUMAS RIVER AT SUMAS, WASH.	485934	1221510	17110001	34.1
12214900	JOHNSON CREEK AT HIGHWAY 9 AT SUMAS, WA	485933.9	1221600	17110001	--
12214990	SUMAS CREEK AT JOHNSON ST AT SUMAS, WA	485957	1221602	17110001	--
12215000	JOHNSON CREEK AT SUMAS, WA	485950	1221540	17110001	23
12215100	SUMAS RIVER NEAR HUNTINGDON, B.C.	490009	1221350	--	57.6
12215500	SAAR CREEK NEAR SUMAS, WA	485935	1221235	17110001	9.76
12215650	COPPER LAKE NEAR GLACIER, WA	485507	1212702	17110001	--
12215700	CHILLIWACK RIVER NR VEDDER CROSSING, B.C.	490502	1212724	--	131
12215900	SLESSE CREEK NEAR VEDDER CROSSING, B.C.	490421	1214158	--	62.7
12224000	COLUMBIA RIVER AT DONALD, B.C.	512900	1171045	--	3700
12230500	COLUMBIA RIVER AT REVELSTOKE, B.C.	510029	1181309	--	10400
12233000	INCOMAPPLEAX RIVER NR BEATON, B.C.	504625	1174036	--	387
12238000	LOWER ARROW LAKE AT NEEDLES, B.C.	495227	1180535	--	--
12241000	COLUMBIA RIVER AT CASTLEGAR, B.C.	491956	1174033	--	--
12294500	KOOTENAY RIVER NR SKOOKUMCHUCK, B.C.	495438	1154408	--	2780
12296000	KOOTENAY RIVER AT FORT STEELE, B.C.	493650	1153805	--	4350
12296500	BULL RIVER NR WARDNER, B.C.	492935	1152150	--	578
12297000	KOOTENAY RIVER AT WARDNER, B.C.	492513	1152510	--	5200
12299500	ELK R AT PHILLIPS BRIDGE NR ELKO, B.C.	491254	1150638	--	1720
12322300	DUNCAN RIVER BLW B.B. CREEK,B.C.	503817	1170250	--	499
12322400	DUNCAN FOREBAY AT DUNCAN DAM, B.C.	501520	1165651	--	--
12322560	DUNCAN RIVER BLW LARDEAU RIVER, B.C.	501356	1165718	--	1560
12322640	KOOTENAY LAKE AT QUEENS BAY, B.C.	493916	1165547	--	--
12322680	KOOTENAY RIVER AT NELSON (GAUGE NO. 10), B.C.	493033	1171646	--	--
12322900	SLOCAN RIVER NR CRESCENT VALLEY, B.C.	492940	1172004	--	17700
12323000	COLUMBIA RIVER AT BIRCHBANK, B.C.	491040	1174259	17110001	34000
12325200	LARDEAU RIVER AT MARBLEHEAD, B.C.	501547	1165802	--	610
12331800	CLARK FORK RIVER NEAR DRUMMOND, MT	464244	1131948	--	2500
12354500	CLARK FORK R. AT ST. REGIS, MT	471807	1150511	--	10700
12355500	NORTH FORK FLATHEAD RIVER NEAR COLUMBIA FALLS, MT	482944	1140736	--	1550
12358500	MIDDLE FORK FLATHEAD RIVER NR WEST GLACIER, MT	482943	1140033	--	1130
12363000	FLATHEAD RIVER AT COLUMBIA FALLS, MT	482143	1141102	--	4460
12395000	PRIEST RIVER NEAR PRIEST RIVER, ID	481231	1165449	--	902
12395500	PEND OREILLE RIVER AT NEWPORT, ID.	481100	1170200	17010216	24200

Site - ID	Station Name	Latitude (Degrees)	Longitude (Degrees)	Hydrologic Unit (OWDC)	Drainage Area (Miles2)
12395502	PEND OREILLE R AT US HWY 2 AT NEWPORT, WASH.	481107	1170200	17010216	24200
12395800	DEER CREEK NEAR DALKENA, WASH.	481149	1171738	17010216	4.75
12395900	DAVIS CREEK NEAR DALKENA, WASH.	481351	1171714	17010216	16.8
12395910	DAVIS CR NR USK, WASH.	481640	1171550	17010216	--
12395950	PEND OREILLE RIVER AT CUSICK, WASH.	482010	1171731	17010216	--
12396000	CALISPELL CREEK NEAR DALKENA, WASH.	481440	1172026	17010216	68.3
12396100	WINCHESTER CREEK NEAR CUSICK, WASH.	481652	1172144	17010216	16.8
12396200	SMALLE CREEK NEAR CUSICK, WA	481940	1172100	17010216	25.1
12396220	CALISPEL RIVER AT CUSICK, WASH.	482015	1171815	17010216	--
12396300	TRIMBLE CREEK NEAR CUSICK, WA	482120	1172025	17010216	3.5
12396302	TACOMA CR NR CUSICK, WASH.	482320	1171845	17010216	--
12396450	LITTLE MUDDY CREEK AT IONE, WASH.	484358	1172144	17010216	11.3
12396470	BOX CANYON DAM HEADWATER (AUXILIARY GAGE) NR ION	484649	1172432	17010216	--
12396480	BOX CANYON PRPLNT HDWTR NR IONE, WASH.	484649	1172447	17010216	--
12396490	PEND OREILLE R. BLW BOX CANYON TAILWATER NR IONE	484649	1172442	17010216	24900
12396500	PEND OREILLE R BEL BOX CANYON NR IONE, WASH.	484652	1172455	17010216	24900
12396501	PEND OREILLE R. BLW BOX CANYON NR IONE, WASH.	484649	1172442	17010216	24900
12396900	SULLIVAN C ABV OUTLET C NR METALINE FALLS, WASH.	485047	1171709	17010216	70.2
12396950	HARVEY CREEK NEAR NEAR METALINE FALLS, WA	484610	1171743	17010216	--
12397000	SULLIVAN LAKE NR METALINE FALLS, WA	485021	1171715	17010216	51.2
12397100	OUTLET CREEK NEAR METALINE FALLS, WASH.	485042	1171712	17010216	51.5
12397500	SULLIVAN CREEK NEAR METALINE FALLS, WASH.	485110	1171720	17010216	122
12398000	SULLIVAN CREEK AT METALINE FALLS, WASH.	485140	1172150	17010216	142
12398090	PEND OREILLE R AT METALINE FALLS, WASH.	485155	1172220	17010216	--
12398500	PEND OREILLE R B Z CNYN NR METALINE FLLS, WASH.	485850	1172040	17010216	25200
12398550	BOUNDARY RESERVOIR NEAR METALINE FALLS, WA.	485920	1172055	17010216	--
12398560	BOUNDARY POWER PLANT T.W. NR METALINE FALLS,WASH	485920	1172055	17010216	25200
12398600	PEND OREILLE RIVER AT INTERNATIONAL BOUNDARY	485956	1172109	17010216	25200
12398900	SALMO RIVER NEAR SALMO, B.C.	490407	1171637	--	476
12399000	SALMO RIVER NEAR WANETA, B.C.	490149	1172226	--	500
12399300	PEND OREILLE RIVER AT WANETA, B.C.	490015	1173705	--	--
12399500	COLUMBIA RIVER AT INTERNATIONAL BOUNDARY	490003	1173742	17020001	59700
12399510	COLUMBIA R AUXIL AT INTERNA BNDRY, WASH.	485817	1173824	17020001	59700
12399550	COLUMBIA R BLW RAPIDS AT INTERNATIONAL BOUNDARY	485941	1173806	17020001	59700
12399600	DEEP CREEK NEAR NORTHPORT, WASH.	485547	1174459	17020001	191
12399900	BIG SHEEP CREEK NEAR ROSSLAND, B.C.	490100	1175640	--	134
12400000	SHEEP CREEK NR VELVET, WASH.	485710	1175250	17020001	171
12400500	SHEEP CREEK NEAR NORTHPORT, WASH.	485640	1174650	17020001	225
12400520	COLUMBIA RIVER AT NORTHPORT, WASH.	485521	1174632	17020001	60200
12400900	MYERS CREEK NEAR CHESAW, WA	485955	1190108	17020002	90.9
12401500	KETTLE RIVER NR FERRY, WA	485853	1184555	17020002	2200
12402000	CURLEW LAKE NEAR MALO, WA	484520	1183930	17020004	65.9
12402500	CURLEW CREEK NR MALO, WASH.	484600	1183910	17020004	66.8
12403000	CURLEW CR NR CURLEW, WASH.	484625	1183845	17020004	--
12403500	KETTLE R AT CURLEW, WASH.	485310	1183600	17020002	--
12403700	THIRD CREEK NEAR CURLEW, WASH.	485221	1182520	17020002	1.18

Site - ID	Station Name	Latitude (Degrees)	Longitude (Degrees)	Hydrologic Unit (OWDC)	Drainage Area (Miles2)
12404000	KETTLE RIVER AT CASCADE, B.C.	490135	1181220	17110001	3550
12404500	KETTLE RIVER NEAR LAURIER, WASH.	485904	1181255	17020002	3800
12404860	PIERRE LAKE NEAR ORIENT, WASH.	485351	1180814	17020002	26.8
12404900	KETTLE RIVER NR BARSTOW, WASH.	484705	1180727	17020002	4040
12405000	KETTLE RIVER AT BOYDS, WASH.	484320	1180720	17020002	4070
12405400	NANCY CREEK NEAR KETTLE FALLS, WASH.	483920	1180640	17020001	11.9
12405500	COLUMBIA RIVER AT KETTLE FALLS, WASH.	483720	1180700	17020001	64500
12406000	DEER LAKE NEAR LOON LAKE, WASH.	480628	1173618	17020003	18.2
12406500	LOON LK NR LOON LK, WASH.	480320	1173830	17020003	14.1
12407000	SHEEP CR AT LOON LAKE, WASH.	480335	1173910	17020003	37.9
12407500	SHEEP CREEK AT SPRINGDALE, WASH.	480328	1174504	17020003	48.2
12407520	DEER CREEK NEAR VALLEY, WASH.	480706	1174752	17020003	36
12407530	JUMPOFF JOE LAKE NEAR VALLEY, WASH.	480811	1174106	17020003	2.35
12407550	WAITTS LAKE NEAR VALLEY, WASH.	481125	1174713	17020003	14.2
12407600	THOMASON CREEK NEAR CHEWELAH, WASH.	481738	1174012	17020003	4.08
12407680	COLVILLE R AT CHEWELAH, WASH.	481538	1174252	17020003	295
12407700	CHEWELAH CREEK AT CHEWELAH, WASH.	481700	1174250	17020003	94.1
12408000	COLVILLE RIVER AT BLUE CREEK, WASH.	481910	1174910	17020001	428
12408190	FRATER LAKE NEAR TIGER	483918	1172911	17020003	0.68
12408195	LEO LAKE NEAR TIGER	483846	1173006	17020003	2.94
12408200	PATCHEN (BIGHORN) C NR TIGER, WASH.	483832	1173105	17020003	1.65
12408205	HERITAGE LAKE NEAR TIGER	483747	1173154	17020003	10.2
12408210	THOMAS LAKE NEAR TIGER	483707	1173239	17020003	12.7
12408214	GILLETTE LAKE NEAR TIGER	483643	1173235	17020003	14.9
12408216	SHERRY LAKE NEAR TIGER	483624	1173236	17020003	15.3
12408300	LITTLE PEND OREILLE RIVER NEAR COLVILLE, WASH.	482758	1174453	17020003	132
12408400	NARCISSE CREEK NEAR COLVILLE, WASH.	483052	1174357	17020003	11.1
12408410	LITTLE PEND OREILLE R AT ARDEN, WASH.	483005	1175250	17020003	--
12408420	HALLER C NR ARDEN, WASH.	482802	1175424	17020003	37
12408440	WHITE MUD LAKE NEAR COLVILLE, WA	483110	1174845	17020003	15.3
12408450	MILL CREEK BELOW FORKS, NEAR COLVILLE, WA	483645	1174650	17020003	67.9
12408500	MILL CREEK NEAR COLVILLE, WASH.	483444	1175156	17020003	83
12408700	MILL CR AT MOUTH NR COLVILLE, WASH.	483425	1175635	17020003	146
12409000	COLVILLE RIVER AT KETTLE FALLS, WASH.	483540	1180341	17020003	1010
12409200	BARNABY CREEK NEAR RICE, WASH.	482604	1181331	17020001	45.9
12409290	LITTLE JIM CREEK NEAR DAISY, WASH.	482204	1181143	17020001	4.04
12409500	HALL CREEK AT INCHELIUM, WASH.	481841	1181239	17020001	161
12409900	N. TWIN LAKE NR INCHELIUM, WA.	481647	1182245	17020001	30.2
12409920	S. TWIN LAKE NR INCHELIUM, WA.	481525	1182232	17020001	36.9
12410000	STRANGER CREEK AT METEOR, WASH.	481540	1181700	17020001	50.9
12410050	ROUND LAKE NEAR INCHELIUM	481733	1181904	17020001	5.02
12410500	STRANGER CREEK AT INCHELIUM	481732	1181120	17020001	80.2
12410600	SOUTH FORK HARVEY CREEK NR CEDONIA, WASH.	481026	1180642	17020001	18.1
12410650	NORTH FORK HARVEY CREEK NR CEDONIA, WASH.	481236	1180449	17020001	6.96
12410700	HARVEY CREEK NEAR CEDONIA, WA	481025	1180655	17020001	29.9
12410710	NEZ PERCE CREEK NEAR KEWA, WASH.	481027	1181446	17020001	22.6

Site - ID	Station Name	Latitude (Degrees)	Longitude (Degrees)	Hydrologic Unit (OWDC)	Drainage Area (Miles2)
12410715	FALLS CREEK NEAR KEWA, WASH.	480859	1181611	17020001	13.1
12410770	WILMONT CREEK NEAR HUNTERS, WASH.	480434	1181929	17020001	51.1
12410775	NINEMILE CREEK NEAR FRUITLAND, WASH.	480250	1182606	17020001	106
12410780	LITTLE NINEMILE CREEK NEAR FRUITLAND, WASH.	480104	1182438	17020001	6.12
12410785	SIXMILE CREEK NEAR MILES, WASH.	475823	1182222	17020001	10.8
12410790	THREEMILE CREEK NEAR MILES, WASH.	475618	1182206	17020001	106
12410800	COUER D ALENE RIVER NEAR MAGEE RANGER STATION, ID	475810	1161125	17010301	--
12414500	ST. JOE RIVER AT CALDER, ID	471629	1161117	--	1030
12419000	SPOKANE RIVER NR POST FALLS, ID.	474211	1165837	17010305	3840
12419495	SPOKANE R AT ID-WA STATE LINE NR OTIS ORCHARDS, WA	474155	1170240	17010305	3870
12419500	SPOKANE R AB LIBERTY BRIDGE NR OTIS ORCHARDS, WA	474056	1170505	17010305	3880
12419800	NEWMAN LAKE NEAR NEWMAN LAKE, WASH.	474607	1170440	17010305	28.6
12420000	LIBERTY LAKE AT LIBERTY LAKE, WASH.	473909	1170520	17010305	13.3
12420300	SPOKANE R AT HARVARD RD BR NR OTIS ORCHARDS, WA	474100	1170600	17010305	--
12420500	SPOKANE RIVER AT GREENACRES, WASH.	474045	1170925	17010305	4150
12420800	SPOKANE R AT SULLIVAN RD BR NR TRENTWOOD, WASH	474022	1171143	17010305	--
12421000	SPOKANE RIVER AT TRENT WASH	474120	1171330	17010305	4210
12421200	SPOKANE R. AT TRENT BRIDGE AT TRENTWOOD	474132	1171403	17010305	4200
12421500	SPOKANE RIVER BLW TRENT BRG NR SPOKANE, WASH.	474150	1171435	17010305	4200
12421700	SPOKANE RIVER AT ARGONNE RD BR AT SPOKANE, WASH	474130	1171700	17010305	--
12422000	SPOKANE RIVER BLW GREEN ST AT SPOKANE WASH	474040	1172220	17010305	--
12422010	SPOKANE R. AT MISSION AVE. AT SPOKANE	474019	1172312	17010305	4220
12422100	SPOKANE RIVER AT TRENT AVE BR AT SPOKANE, WASH	473930	1172600	17010305	--
12422400	SPOKANE FIELD OFFICE DCP TEST STATION	473934	1172653	17010308	--
12422500	SPOKANE RIVER AT SPOKANE, WASH.	473934	1172653	17010305	4290
12422990	HANGMAN CREEK AT STATE LINE ROAD NEAR TEKOA, WA	471210	1170223	17010306	--
12423000	HANGMAN (LATAH) CREEK AT TEKOA, WA	471320	1170435	17060109	130
12423500	NF HANGMAN (LATAH) CREEK AT TEKOA, WA	471335	1170430	17060109	60
12423550	HANGMAN CREEK TRIBUTARY NEAR LATAH, WASH.	471916	1171042	17010306	2.18
12423700	SO FK ROCK CR TRIBUTARY NR FAIRFIELD, WASH.	472054	1170406	17010306	0.59
12423900	STEVENS CREEK TRIBUTARY NR MORAN, WASH.	473335	1172055	17010306	2.02
12423980	HANGEMAN CR NR SPOKANE, WASH	473515	1172405	17010306	--
12424000	HANGMAN CREEK AT SPOKANE, WASH.	473910	1172655	17010306	689
12424003	HANGMAN CR. AT MOUTH AT SPOKANE	473917	1172712	17010306	689
12424100	SPOKANE R. AT FT. WRIGHT BR. AT SPOKANE	474050	1172707	17010307	4990
12424200	SPOKANE R. AT RIVERSIDE STATE PARK AT SPOK,WA	474148	1172948	17010307	5010
12424500	SPOKANE R AT 7 MILE BRIDGE NR SPOKANE WASH	474425	1173110	17010307	5020
12425000	MEDICAL LAKE AT MEDICAL LAKE, WA	473423	1174100	17010307	--
12425500	DEEP CREEK NEAR SPOKANE, WA	474030	1174100	17010307	76.6
12426000	SPOKANE R. BLW. NINE MILE DAM AT SPOKANE	474634	1173236	17010307	5200
12426500	LITTLE SPOKANE RIVER AT SCOTIA, WA	480620	1170910	17010216	74.2
12427000	LITTLE SPOKANE RIVER AT ELK, WASH.	480120	1171619	17010308	115
12427500	DIAMOND LAKE NEAR NEWPORT, WASH.	480708	1171305	17010308	17.4
12428000	SACHEEN LAKE NEAR NEWPORT, WASH.	480950	1171803	17010308	33.5
12428500	ELOIKA LAKE NEAR ELK, WASH.	480145	1172225	17010308	101
12428600	WEST BRANCH LITTLE SPOKANE RIVER NR ELK, WA	480025	1172146	17010308	101

Site - ID	Station Name	Latitude (Degrees)	Longitude (Degrees)	Hydrologic Unit (OWDC)	Drainage Area (Miles2)
12429000	LITTLE SPOKANE RIVER AT MILAN, WA	475800	1172000	17010308	274
12429200	BEAR CREEK NEAR MILAN, WASH.	475548	1172027	17010308	10.5
12429600	DEER CREEK NEAR CHATTAROY, WASH.	475325	1172000	17010308	31.9
12429800	MUD CREEK NEAR DEER PARK, WASH.	475408	1173408	17010308	1.83
12430000	WETHEY CREEK NEAR DEER PARK, WA	475300	1172830	17010308	12
12430100	DRAGOON CREEK AT MOUTH, NR CHATTAROY, WA	475229	1172209	17010308	177
12430150	LITTLE SPOKANE R BLW DRAGOON CR, NR CHATTEROY, WA	475226	1172203	17010308	511
12430200	LITTLE SPOKANE RIVER AT BUCKEYE, WASH	475034	1172226	17010308	--
12430250	LITTLE SPOKANE RIVER NEAR BUCKEYE, WASH	474926	1172224	17010308	--
12430300	LITTLE SPOKANE R ABV DEADMAN CR NR DARTFORD, WA	474819	1172240	17010308	--
12430320	LITTLE SPOKANE R AT L SPOK DR NR DARTFORD, WA	474754	1172253	17010308	--
12430350	DEADMAN CREEK NEAR MEAD, WA	474645	1172105	17010308	80.3
12430370	BIGELOW GULCH NEAR SPOKANE, WASH.	474310	1171934	17010308	2.07
12430400	DEADMAN CR BLW U.S. HWY 195, NR MEAD, WA	474653	1172149	17010308	94.7
12430500	DEEP CREEK AT COLBERT, WA	474915	1172045	17010308	32.8
12430600	LITTLE SPOKANE R BLW DEADMAN CR, NR DARTFORD, WA	474736	1172303	17010308	659
12430650	LITTLE SPOKANE R AT GREENLEAF DR NR DARTFORD, WA	472958	1172352	17010308	--
12430700	LITTLE SPOKANE R AB WANDERMERE CR AT DARTF	474705	1172402	17010308	660
12430800	WANDERMERE LAKE CR NR DARTFORD, WA	474701	1172404	17010308	4.32
12431000	LITTLE SPOKANE RIVER AT DARTFORD, WASH.	474705	1172412	17010308	665
12431010	LITTLE SPOKANE R AT DARTFORD DR NR DARTFORD, WA	474705	1172415	17010308	--
12431100	LITTLE CREEK AT DARTFORD, WASH.	474705	1172500	17010308	11.9
12431200	LITTLE SPOKANE BLW COUNTRY CLUB NR DARTFORD, WA	474650	1172945	17010308	--
12431500	LITTLE SPOKANE RIVER NEAR DARTFORD, WASH.	474650	1172945	17010308	698
12431900	LITTLE SPOKANE R. NR. MOUTH NR. SPOKANE	474700	1173143	17010308	700
12432000	LITTLE SPOKANE RIVER NEAR SPOKANE, WA	474725	1173140	17010308	701
12432500	LONG LK AT LONG LK WA	475012	1175020	17010307	6020
12433000	SPOKANE RIVER AT LONG LAKE, WASH.	475012	1175025	17010307	6020
12433100	CHAMOKANE CREEK NEAR SPRINGDALE, WASH.	475944	1174328	17010307	99.9
12433200	CHAMOKANE CR BELOW FALLS NEAR LONG LAKE, WASH.	475142	1175128	17010307	179
12433300	SPRING CR TRIBUTARY NR REARDAN, WASH.	474449	1175131	17010307	1.14
12433500	SPOKANE R BLW LITTLE FALLS NR LONG LAKE, WASH.	474930	1175625	17010307	6220
12433540	GS-1 UNNAMED TRIB TO BLUE CRK NR WELLPINIT	475539	1180448	17010307	--
12433542	BLUE CR ABV MIDNITE MINE DRAINAGE NR WELLPINIT, WA	475528	1180518	17010307	6
12433546	BELOW HAUL RD AT MIDNITE MINE NR WELLPINIT GS-2	475533	1180448	17010307	--
12433548	EAST DRAINAGE FR MIDNITE MINE NR WELLPINIT D-11	475548	1180520	17010307	--
12433550	WASTEPOND AT MIDNITE MINE NR WELLPINIT D-20	475607	1180535	17010307	--
12433552	BELOW DAM AT MIDNITE MINE NR WELLPINIT D-15	475606	1180535	17010307	--
12433554	WEST DRAINAGE FR MIDNITE MINE NR WELLPINIT D-10	475552	1180535	17010307	--
12433556	MIDNITE MINE DRAINAGE NEAR WELLPINIT, WASH.	475527	1180520	17010307	1.3
12433558	BLUE CR BLW MIDNITE MINE DRAINAGE NR WELLPINIT, WA	475524	1180520	17010307	7.3
12433559	BLUE CR BTW MIDNITE MINE & OYACHEN CR NR WELLPINIT	475437	1180621	17010307	8.4
12433560	BLUE CR ABV OYACHEN CR NR WELLPINIT D-7,WA	475404	1180649	17010307	--
12433561	BLUE CR NR MOUTH NR WELLPINIT, WA	475349	1180805	17010307	19.1
12433562	BLUE CR ABV LK ROOSEVELT NR WELLPINIT D-8, WA	475340	1180819	17010307	--
12433580	COTTONWOOD (HAWK) C AT DAVENPORT, WASH.	473931	1180809	17020001	23.2

Site - ID	Station Name	Latitude (Degrees)	Longitude (Degrees)	Hydrologic Unit (OWDC)	Drainage Area (Miles2)
12433790	SANPOIL R ABV GRANITE CR NR REPUBLIC, WASH	483904	1184216	17020004	--
12433800	GRANITE CREEK NEAR REPUBLIC, WASH.	483945	1184945	17020004	4.25
12433810	SANPOIL R BLW GRANITE CR NR REPUBLIC, WASH	483658	1184343	17020004	--
12433890	SANPOIL R ABV 13 MILE CR NR REPUBLIC, WASH.	482837	1184341	17020004	263
12433896	THIRTEENMILE CREEK NR. REPUBLIC	482838	1184341	17020004	16.9
12433930	BAILEY CREEK NR AENEAS WASH.	483348	1190158	17020006	8.04
12433950	CRAWFISH LAKE NEAR DISAUTEL	482847	1191236	17020004	0.83
12433995	LOST CREEK NR. DISAUTEL	482826	1190149	17020004	--
12434000	LOST CREEK NEAR AENEAS, WA	482930	1190100	17020004	84
12434050	GOLD LAKE NEAR WEST FORK	482215	1185516	17020004	3.5
12434100	GOLD CREEK NEAR REPUBLIC, WASH.	482718	1184756	17020004	47.4
12434110	WEST FORK SANPOIL RIVER NEAR REPUBLIC, WASH.	482733	1184457	17020004	308
12434120	SEVENTEENMILE CREEK NR. REPUBLIC	482619	1184411	17020004	28.9
12434130	NINETEENMILE CREEK NR. REPUBLIC	482455	1184412	17020004	4.41
12434180	NORTH NANAMKIN CREEK NR. KELLER	481839	1184414	17020004	15.7
12434230	THIRTYMILE CREEK NR. KELLER	481540	1184053	17020004	24.9
12434300	BRIDGE CREEK NEAR KELLER, WASH.	481425	1183549	17020004	18.4
12434320	BRIDGE CREEK AT MOUTH NR. KELLER	481325	1184119	17020004	31.6
12434380	CACHE CREEK NR. KELLER	481019	1184221	17020004	7.72
12434450	IRON CREEK NR. KELLER	480812	1184113	17020004	9.23
12434500	SANPOIL RIVER NEAR KELLER, WASH.	480628	1184151	17020004	880
12434520	BRUSH CREEK NR. KELLER	480620	1184209	17020004	6.21
12434590	SANPOIL R ABV JACK CR AT KELLER, WASH	480504	1184125	17020004	--
12434600	JACK CREEK AT KELLER, WASH.	480454	1184118	17020004	8.17
12434700	COPPER CREEK NR. KELLER	480416	1183955	17020004	9.02
12434800	MEADOW CREEK NR. KELLER	480355	1184022	17020004	7.85
12434900	SILVER CREEK NR. KELLER	480301	1183919	17020004	5.11
12435000	SANPOIL R AT KELLER, WASH.	480505	1184126	17020004	928
12435020	JOHN TOM CREEK NR. KELLER	480147	1183924	17020004	7.47
12435050	DICK CREEK NR. KELLER	480033	1184012	17020004	6.8
12435100	MANILA CREEK NR. KELLER	480026	1184149	17020004	21.2
12435500	FEEDER CANAL AT GRAND COULEE, WASH.	475705	1185940	17020001	--
12435810	SCBID EL 85 XX WASTEWAY NR MESA, WA	463541	1185927	--	--
12435840	SCBID EL 85 JJ LATERAL AT HEAD NR MESA, WA	463805	1185920	--	--
12435850	SCBID EL85 CANAL BLW EL85JJ LATERAL NR MESA, WA	463806	1185922	--	--
12436000	FRANKLIN ROOSEVELT LAKE AT GRAND COULEE DAM, WA.	475720	1185902	17020005	74700
12436500	COLUMBIA RIVER AT GRAND COULEE, WASH.	475756	1185854	17020005	74700
12436540	MCGINNIS LAKE NEAR SEATONS GROVE	480158	1185349	17020005	4
12436542	PETER DAN CREEK AT ELMER CITY	480042	1185655	17020005	15.5
12436550	BUFFALO LAKE NEAR COLVILLE INDIAN AGENCY	480316	1185225	17020005	13.7
12436850	PARMENTER CR NR NESPELEM WASH.	481506	1185847	17020005	6.94
12436895	MILL CREEK BELOW ARMSTRONG CR NR NESPELEM, WA	481328	1190004	17020005	27
12436900	MILL CREEK NR. NESPELEM	481234	1185905	17020005	29
12437000	NESPELEM CANAL NR. NESPELEM	481047	1185844	17020005	--
12437500	NESPELEM RIVER AT NESPELEM, WASH.	481035	1185852	17020005	122
12437505	NESPELEM R BELOW MILLPOND AT NESPELEM, WASH.	480955	1185846	17020005	123

Site - ID	Station Name	Latitude (Degrees)	Longitude (Degrees)	Hydrologic Unit (OWDC)	Drainage Area (Miles2)
12437530	OWHI LAKE NR NESPELEM	481322	1185333	17020005	13.2
12437590	LITTLE NESPELEM RIVER NR. NESPELEM	480723	1185839	17020005	90.4
12437600	NESPELEM RIVER AT MOUTH NR. NESPELEM	480738	1190132	17020005	224
12437690	COYOTE CREEK NR. NESPELEM	480848	1190634	17020005	28.7
12437700	GOOSE LAKE NEAR MONSE	480937	1191957	17020005	23.5
12437900	RUFUS WOODS LK AT BRIDGEPORT WASH	475940	1193805	17020005	75400
12437930	EAST FORK FOSTER CREEK AT LEAHY, WASH.	475445	1192250	17020005	35.4
12437940	EAST FOSTER CREEK AT BELL BUTTE ROAD NR LEAHY, WA	475655	1193024	17020005	--
12437950	EAST FORK FOSTER CREEK TRIBUTARY NR BRIDGEPORT, WA	475700	1193750	17020005	4.75
12437960	WEST FORK FOSTER CREEK NR BRIDGEPORT, WASH.	475305	1194250	17020005	28
12437980	WEST FORK FOSTER CR AB EAST FORK NR BRIDGEPORT, WA	475704	1193935	17020005	--
12438000	COLUMBIA RIVER AT BRIDGEPORT, WASH.	480024	1193951	17020005	75700
12438500	OKANAGAN RIVER AT OKANAGAN FALLS, B.C.	492026	1193440	--	2650
12438700	OKANOGAN RIVER NEAR OLIVER, B.C.	490653	1193350	--	2930
12439000	OSOYOOS LAKE NEAR OROVILLE, WASH.	485724	1192618	17020006	3130
12439100	OKANOGAN RIVER BELOW OSOYOOS LAKE NR OROVILLE, WA	485635	1192545	17020006	3130
12439150	OKANOGAN R AT BRIDGE ST AT OROVILLE, WASH	485620	1192536	17020006	3130
12439200	DRY CREEK TRIB NR MOLSON, WASH.	485453	1191244	17020006	1.68
12439300	TONASKET CREEK AT OROVILLE, WASH.	485635	1192445	17020006	60.1
12439350	OKANOGAN RIVER BELOW TONASKET CR AT OROVILLE, WA	485610	1192530	17020006	3200
12439400	OKANOGAN RIVER AT ZOSEL MILLPOND AT OROVILLE, WA	485555	1192505	17020006	3200
12439500	OKANOGAN RIVER AT OROVILLE, WASH.	485551	1192509	17020006	3200
12439600	SIMILKAMEEN RIVER AT PRINCETON, B.C.	492147	1203120	--	730
12440000	SINLAHEKIN CR ABV BLUE LAKE NEAR LOOMIS, WASH.	484130	1194300	17020007	41.7
12441000	SINLAHEKIN CR AT TWIN BR NR LOOMIS WASH	484410	1194020	17020007	75.5
12441500	SINLAHEKIN CR NR LOOMIS WASH	484650	1193900	17020007	86
12441700	MIDDLE FORK TOATS COULEE CR NEAR LOOMIS, WASH.	485230	1195350	17020007	17.1
12441800	OLIE CREEK NEAR LOOMIS, WASH.	485059	1194354	17020007	1.42
12442000	TOATS COULEE CREEK NEAR LOOMIS, WASH.	485001	1194132	17020007	130
12442200	WHITESTONE IRR CANAL NR LOOMIS WASH	484950	1194125	17020007	--
12442300	SINLAHEKIN CR ABV CHOPAKA CR NEAR LOOMIS, WASH.	485110	1193850	17020007	256
12442310	CHOPAKA LAKE NR NIGHTHAWK,WASH	485413	1194133	17020007	--
12442400	PALMER LAKE NR NIGHTHAWK, WASH	485430	1193650	17020007	293
12442500	SIMILKAMEEN RIVER NEAR NIGHTHAWK, WASH.	485905	1193702	17020007	3550
12443000	OROVILLE TONASKET IRR DST CANAL N OROVILLE WASH	485700	1192800	17020007	--
12443500	SIMILKAMEEN RIVER NEAR OROVILLE, WASH.	485740	1193000	17020007	3580
12443600	SIMILKAMEEN R AT OROVILLE, WASH	485605	1192627	17020007	3550
12443700	SPECTACLE LAKE TRIB NR LOOMIS, WASH.	484837	1193310	17020006	4.59
12443800	SPECTACLE LAKE NR LOOMIS,WASH	484852	1193115	17020006	17.2
12443980	WANNACUT LAKE NR OROVILLE, WASH	485205	1193054	17020006	--
12444000	WHITESTONE LAKE NEAR TONASKET, WASH.	484714	1192749	17020006	52.3
12444100	WHITESTONE CREEK NEAR TONASKET, WASH.	484705	1192600	17020006	55.4
12444400	SIWASH CR TRIB NR TONASKET, WASH.	484312	1192212	17020006	0.66
12444490	BONAPARTE CREEK NEAR WAUCONDA, WASH.	483926	1191202	17020006	96.6
12444550	BONAPARTE CR AT TONASKET, WASH	484205	1192630	17020006	--
12444700	AENEAS LAKE NEAR TONASKET, WASH.	484037	1193028	17020006	32.4

Site - ID	Station Name	Latitude (Degrees)	Longitude (Degrees)	Hydrologic Unit (OWDC)	Drainage Area (Miles2)
12444990	OKANOGAN R AT JANIS, WASH	483857	1192810	17020006	--
12445000	OKANOGAN RIVER NEAR TONASKET, WASH.	483757	1192738	17020006	7260
12445500	JOHNSON CREEK NEAR RIVERSIDE, WA	482950	1193130	17020006	68.2
12445700	WANNACOTT CREEK NR. OMAK	482552	1192742	17020006	19.4
12445750	SUMMIT LAKE NEAR DISAUTEL	481705	1190852	17020006	0.49
12445800	OMAK CR TRIB NR DISAUTEL, WASH.	482016	1191016	17020006	4.12
12445900	OMAK CREEK NEAR OMAK, WASH.	482202	1192638	17020006	119
12445920	KARTER CREEK ABV NELSON CREEK NR OMAK, WA	481316	1191608	17020006	--
12445930	KARTAR CREEK NR. OMAK	481452	1191945	17020006	48.8
12445939	NO NAME CREEK NEAR SOURCE NEAR OMAK,WASH	482112	1192633	17020006	--
12445940	NO NAME CREEK DIVERSION NEAR OMAK,WASH	482043	1192606	17020006	--
12445941	NO NAME CREEK BELOW DIVERSION NEAR OMAK,WASH	482043	1192629	17020006	--
12445942	NO NAME CREEK DIVERSION RETURN NEAR OMAK,WASH	482025	1192624	17020006	--
12445944	NO NAME CREEK AT GRANITE LIP NEAR OMAK,WASH	481946	1192606	17020006	--
12445945	NO NAME CREEK NR. OMAK	481940	1192602	17020006	3.98
12445948	NO NAME CREEK AT MOUTH NR. OMAK	481922	1192546	17020006	7.11
12445950	OMAK LAKE NR OMAK, WA.	481437	1192026	17020006	--
12445990	OMAK CREEK AT OMAK	482412	1193007	17020006	--
12446000	OKANOGAN RIVER AT OKANOGAN, WASH.	482140	1193450	17020006	7900
12446480	CONCONCULLY RESERVOIR NR OMAK, WASH	483216	1194450	17020006	--
12446500	SALMON CREEK NEAR CONCONULLY, WASH.	483200	1194450	17020006	121
12447000	SALMON CREEK NEAR OKANOGAN, WASH.	482400	1193700	17020006	150
12447100	OKANOGAN RIVER TRIB AT MALOTT, WASH.	481650	1194200	17020006	2.66
12447200	OKANOGAN RIVER AT MALOTT, WA	481653	1194212	17020006	8080
12447270	SUMMIT CREEK NEAR MALOTT, WA	482234	1194610	17020006	17.4
12447300	OKANOGAN RIVER NEAR MALOTT, WASH.	480610	1194230	17020006	8220
12447306	SOAP LAKE NEAR MALOTT	481342	1193842	17020006	16.1
12447350	METHOW RIVER ABOVE ROBINSON CREEK NR MAZAMA, WA	483934	1203223	17020008	--
12447370	LOST RIVER NEAR MAZAMA, WA	483919	1203018	17020008	146
12447374	METHOW R BLW GATE CR NR MAZAMA, WASH	483746	1202750	17020008	--
12447380	PINE CREEK NEAR MAZAMA, WASH.	483450	1203735	17020008	4.63
12447382	EARLY WINTERS CREEK NR MAZAMA, WA	483555	1202631	17020008	80.2
12447383	METHOW RIVER ABOVE GOAT CR NEAR MAZAMA, WA	483432	1202305	17020008	373
12447384	GOAT CREEK NEAR MAZAMA, WA	483431	1202243	17020008	--
12447385	METHOW R AT WEEMAN BR NR MAZAMA, WASH	483240	1201920	17020008	--
12447386	METHOW RIVER ABOVE WOLF CREEK NEAR WINTROP, WA	482929	1201349	17020008	--
12447387	WOLF CREEK BELOW DIVERSION NEAR WINTHROP, WA	482900	1201824	17020008	32.5
12447388	PATTERSON LAKE NR WINTHROP	482759	1201459	17020008	--
12447390	ANDREWS CREEK NEAR MAZAMA, WASH.	484923	1200841	17020008	22.1
12447394	LAKE CREEK NEAR WINTHROP, WA	484525	1200809	17020008	--
12447400	DOE CR NR WINTHROP, WASH.	484041	1200759	17020007	3.8
12447430	ORTELL CR NR WINTHROP, WASH.	483945	1201510	17020008	4.05
12447440	EIGHTMILE CREEK NEAR WINTHROP, WA	483618	1201001	17020008	--
12447450	CHEWUCH RIVER AT EIGHTMILE RANCH NEAR WINTHROP, WA	483602	1200952	17020008	--
12447500	CHEWUCH RIVER BELOW BOULDER CR NEAR WINTHROP, WA	483436	1201026	17020008	466
12447600	CHEWUCH RIVER ABOVE CUB CREEK NEAR WINTHROP, WA	483353	1201035	17020008	466

Site - ID	Station Name	Latitude (Degrees)	Longitude (Degrees)	Hydrologic Unit (OWDC)	Drainage Area (Miles2)
12447900	PEARRYGIN LAKE NR WINTHROP	482932	1200946	17020008	--
12448000	CHEWUCH RIVER AT WINTHROP, WA	482838	1201107	17020008	525
12448500	METHOW RIVER AT WINTHROP, WASH.	482825	1201034	17020008	1010
12448610	(BIG) TWIN LAKE NR WINTHROP	482635	1201139	17020008	--
12448620	METHOW RIVER MVID EAST DIVERSION NR WINTHROP, WA	482508	1200824	17020008	--
12448700	WILLIAMS CR NR TWISP, WASH.	482350	1202745	17020008	3.15
12448850	TWISP RIVER ABOVE BUTTERMILK CREEK NEAR TWISP, WA	482142	1202024	17020008	--
12448900	LITTLE BRIDGE CR NR TWISP, WASH.	482425	1201940	17020008	16.6
12448990	TWISP RIVER ABOVE NEWBY CREEK NEAR TWISP, WA	482251	1201538	17020008	207
12448992	TWISP RIVER TVPI DIVERSION NEAR TWISP, WA	482250	1201431	17020008	--
12448996	TWISP RIVER MVID WEST DIVERSION NR TWISP, WA	482212	1201131	17020008	--
12448998	TWISP RIVER NEAR TWISP, WASH.	482212	1200851	17020008	245
12449000	TWISP RIVER AT TWISP, WA	482202	1200717	17020008	250
12449500	METHOW RIVER AT TWISP, WA	482155	1200654	17020008	1300
12449510	METHOW RIVER NR TWISP, WASH	482053	1200621	17020008	--
12449600	BEAVER CREEK BELOW SOUTH FORK, NEAR TWISP, WASH.	482544	1200112	17020008	62
12449700	BEAVER CREEK NEAR TWISP, WASH.	482350	1200220	--	68.1
12449710	BEAVER CREEK NEAR MOUTH NEAR TWISP, WA	481943	1200329	17020008	110
12449760	METHOW RIVER AT CARLTON, WA	481411	1200643	17020008	--
12449780	LIBBY CREEK NEAR CARLTON, WA	481355	1200717	17020008	--
12449790	RAINY CREEK NEAR METHOW, WASH.	480850	1201000	17020008	8.51
12449795	GOLD CREEK NEAR CARLTON, WA	481121	1200613	17020008	--
12449900	METHOW RIVER TRIBUTARY NR METHOW, WASH.	480425	1200010	17020008	0.77
12449910	METHOW RIVER TRIB NO. 2 NEAR METHOW, WASH.	480424	1195943	17020008	1
12449950	METHOW RIVER NR PATEROS, WASH.	480439	1195902	17020008	1770
12449954	METHOW R AT 2ND BRIDGE NR PATEROS WASH	480429	1195720	17020008	1780
12450000	ALTA LAKE NR PATEROS,WASH	480115	1195633	17020008	5.01
12450500	METHOW RIVER AT PATEROS, WASH.	480250	1195440	17020008	1810
12450650	WELLS POWER PLANT H. W. NR. PATEROS, WASH.	475652	1195145	17020005	86100
12450660	WELLS POWERPLANT TAILWATER NEAR PATEROS, WASH.	475652	1195145	17020005	86100
12450700	COLUMBIA RIVER BELOW WELLS DAM, WASH.	475648	1195156	17020005	86100
12450720	ANTOINE CREEK NEAR AZWELL, WA	475532	1195407	17020005	35.6
12450950	UPPER DEE DEE LAKE NEAR STEHEKIN, WA	482413	1203858	17020009	--
12451000	STEHEKIN RIVER AT STEHEKIN, WASH.	481947	1204126	17020009	321
12451200	LAKE CHELAN AT PURPLE POINT AT STEHEKIN, WASH.	481822	1203911	17020009	--
12451500	RAILROAD CREEK AT LUCERNE, WASH.	481145	1203550	17020009	64.8
12451600	SAFETY HARBOR CREEK NEAR MANSON, WASH.	480638	1202132	17020009	7.85
12451620	GRADE CREEK NEAR MANSON, WASH.	480336	1201526	17020009	8.45
12451650	GOLD CREEK NEAR MANSON, WASH.	480114	1201140	17020009	6.3
12451700	ANTILON LK FEEDER SYSTEM NR MANSON WASH	475830	1200930	17020009	--
12451800	WAPATO LAKE NR MANSON	475444	1200915	17020009	--
12452000	LAKE CHELAN AT CHELAN, WA	475011	1200337	17020009	924
12452500	CHELAN RIVER AT CHELAN, WASH.	475005	1200043	17020009	924
12452750	ENTIAT RIVER AT SULLIVANS BRIDGE NR ARDENVOIR, WA	475305	1202611	17020010	--
12452800	ENTIAT RIVER NEAR ARDENVOIR, WASH.	474907	1202519	17020010	203
12452880	TILLICUM CR NR ARDENVOIR, WASH.	474325	1202620	17020010	7.15

Site - ID	Station Name	Latitude (Degrees)	Longitude (Degrees)	Hydrologic Unit (OWDC)	Drainage Area (Miles2)
12452890	MAD RIVER AT ARDENVOIR, WA	474413	1202203	17020010	--
12452900	MAD RIVER NEAR ARDENVOIR, WA	474410	1202148	17020011	92.4
12452990	ENTIAT RIVER NR ENTIAT, WASH.	473948	1201458	17020010	419
12453000	ENTIAT RIVER AT ENTIAT, WASH.	473940	1201330	17020010	419
12453500	PINE CANYON CR NR WATERVILLE WASH	474010	1200640	17020010	11.1
12453600	COLUMBIA R TRIB NR ENTIAT, WASH.	473320	1201640	17020010	0.77
12453679	ROCKY REACH HD UNIT 10W NR WENATCHEE, WA	473200	1201800	17020010	--
12453680	ROCKY REACH HD UNIT 10 NEAR WENATCHEE, WA	473200	1201800	17020010	--
12453690	ROCKY REACH DAM TW UNIT 10 NR WENATCHEE, WA.	473200	1201800	17020010	87800
12453700	COLUMBIA RIVER AT ROCKY REACH DAM, WA	473128	1201804	17020010	87800
12454000	WHITE RIVER NEAR PLAIN, WASH.	475227	1205209	17020011	150
12454290	LITTLE WENATCHEE R TRIB NR TELMA, WASH.	475025	1205550	17020011	1.02
12454500	WENATCHEE LAKE NEAR PLAIN, WASH.	474950	1204630	17020011	273
12455000	WENATCHEE RIVER BELOW WENATCHEE LAKE, WASH.	474950	1204630	17020011	273
12455500	NASON CREEK NEAR NASON, WA	474610	1204810	17020011	88.7
12455550	NASON CR NR PLAIN WASH	474827	1204248	--	108
12455600	FISH LAKE NR PLAIN	474942	1204235	17020011	--
12456000	PHELPS CR NR PLAIN, WASH.	480425	1205055	17020011	16.4
12456300	BRUSH CR NR TELMA, WASH.	475320	1204315	17020011	3.34
12456500	CHIWAWA RIVER NEAR PLAIN, WASH.	475015	1203940	17020011	170
12457000	WENATCHEE RIVER AT PLAIN, WASH.	474547	1203954	17020011	591
12457300	SKINNEY CR AT WINTON, WASH.	474323	1204406	17020011	2.55
12457500	CHIWAUKUM CREEK NEAR CHIWAUKUM, WA	474050	1204350	17020011	49.6
12457800	WENATCHEE R NR LEAVENWORTH	474025	1203400	17020010	672
12457880	WENATCHEE R ABV ICICLE CR AT LEAVENWORTH, WASH	473438	1204026	17020011	--
12457900	CHATTER CR NR LEAVENWORTH, WASH.	473630	1205305	17020011	2.25
12457950	EIGHT MILE LAKE NEAR LEAVENWORTH, WASH	473115	1205128	17020011	--
12457952	LITTLE EIGHT MILE LAKE NEAR LEAVENWORTH, WASH	473124	1205058	17020011	--
12457957	HORSESHOE LAKE NEAR LEAVENWORTH, WASH	472940	1205414	17020011	--
12457959	LAKE STUART NEAR LEAVENWORTH, WASH	472944	1205217	17020011	--
12457962	COLCHUCK LAKE NEAR LEAVENWORTH, WASH	472941	1205005	17020011	--
12457980	SHIELD LAKE NEAR LEAVENWORTH, WASH	472953	1204640	17020011	--
12457982	EARLE LAKE NEAR LEAVENWORTH, WASH	473025	1204604	17020011	--
12457984	MESA LAKE NEAR LEAVENWORTH, WASH	473031	1204549	17020011	--
12458000	ICICLE CREEK ABV SNOW CR NR LEAVENWORTH, WASH.	473228	1204308	17020011	193
12458020	ENCHANTMENT LAKE NO. 9 NEAR LEAVENWORTH, WASH	472850	1204902	17020011	--
12458025	ENCHANTMENT LAKE NO. 8 NEAR LEAVENWORTH, WASH	472843	1204854	17020011	--
12458030	ISOLATION LAKE NEAR LEAVENWORTH, WASH	472839	1204855	17020011	--
12458040	ENCHANTMENT LAKE NO. 7 NEAR LEAVENWORTH, WASH	472837	1204842	17020011	--
12458045	ENCHANTMENT LAKE NO. 6 NEAR LEAVENWORTH, WASH	472841	1204841	17020011	--
12458055	INSPIRATION LAKE NEAR LEAVENWORTH, WASH	472852	1204755	17020011	--
12458065	PERFECTION LAKE NEAR LEAVENWORTH, WASH	472844	1204738	17020011	--
12458075	ENCHANTMENT LAKE NO. 3 NEAR LEAVENWORTH, WASH	472849	1204659	17020011	--
12458080	ENCHANTMENT LAKE NO. 2 NEAR LEAVENWORTH, WASH	472855	1204648	17020011	--
12458090	TEMPLE LAKE NEAR LEAVENWORTH, WASH	472904	1204634	17020011	--
12458097	UPPER SNOW LAKE NEAR LEAVENWORTH, WASH	472901	1204459	17020011	--

Site - ID	Station Name	Latitude (Degrees)	Longitude (Degrees)	Hydrologic Unit (OWDC)	Drainage Area (Miles2)
12458100	LOWER SNOW LAKE NEAR LEAVENWORTH, WASH	472923	1204402	17020011	--
12458120	NADA LAKE NEAR LEAVENWORTH, WASH	472950	1204401	17020011	--
12458500	ICICLE CR NR LEAVENWORTH WASH	473330	1204000	17020011	211
12458900	POSEY CANYON NR LEAVENWORTH, WASH.	473601	1203722	17020011	1.36
12459000	WENATCHEE RIVER AT PESHASTIN, WASH.	473500	1203646	17020011	1000
12459400	TRONSEN CR NR PESHASTIN, WASH.	472018	1203358	17020011	3.44
12459500	PESHASTIN CREEK AT BLEWETT, WA	472509	1203929	17020011	40
12459800	CRYSTAL LAKE NEAR LEAVENWORTH, WASH	472826	1204758	17020011	--
12460000	PESHASTIN CREEK AT ALLENS RANCH NR PESHASTIN, WA	472829	1203919	17020011	101
12460500	WENATCHEE VALLEY CANAL AT DRYDEN WASH	473240	1203320	--	--
12461000	WENATCHEE RIVER AT DRYDEN, WASH.	473240	1203340	17020011	1160
12461001	WENATCHEE R NR DRYDEN, WASH	473207	1203259	17020011	--
12461100	EAST BRANCH MISSION C NR CASHMERE, WASH.	472250	1202910	17020011	15.4
12461200	EAST BRANCH MISSION CR TRIB, NR CASHMERE, WASH.	472250	1202920	17020010	2.49
12461400	MISSION CREEK ABOVE SAND CR NEAR CASHMERE, WASH.	472548	1203020	17020011	39.8
12461500	SAND CREEK NEAR CASHMERE, WASH.	472548	1203025	17020011	18.6
12462000	MISSION CR AT CASHMERE, WASH.	473100	1202830	17020011	81.2
12462500	WENATCHEE RIVER AT MONITOR, WASH.	472958	1202524	17020011	1300
12462520	WENATCHEE RIVER AT WENATCHEE, WASH.	472732	1202007	17020011	--
12462545	ROCK ISLAND CREEK NEAR ROCK ISLAND, WA	472122	1200607	17020010	--
12462550	ROCK ISLAND DAM POWER PLANT NORTH HEADWATER	464955	1194855	17020015	89400
12462560	ROCK ISLAND PP TW (UNIT 1) NR WENATCHEE, WASH.	472100	1200600	17020010	89400
12462566	ROCK ISLAND PP TW (UNIT 10) NR WENATCHEE, WASH.	472100	1200600	--	--
12462600	COLUMBIA RIVER BELOW ROCK ISLAND DAM, WA	471957	1200448	17020010	89400
12462610	DRY GULCH NR MALAGA, WASH.	471838	1200547	17020010	12
12462630	COLOCKUM CR TRIBUTARY NR MALAGA, WASH.	471554	1201056	17020010	0.49
12462640	COLOCKUM CREEK NEAR ROCK ISLAND, WA	471736	1200913	17020010	--
12462700	MOSES CR AT WATERVILLE, WASH.	473850	1200310	17020012	3.48
12462800	MOSES CREEK AT DOUGLAS, WASH.	473649	1200010	17020012	15.4
12463000	DOUGLAS CREEK NEAR ALSTOWN, WASH.	473500	1200050	17020012	99.9
12463500	DOUGLAS CR NR PALISADES, WASH.	472800	1195230	17020012	206
12463600	RATTLESNAKE CR TRIB NR SOAP LAKE, WASH.	472630	1193545	17020012	2.22
12463690	GRIMES LAKE NR MANSFIELD, WASH.	474318	1193559	17020012	--
12463695	JAMESON LAKE NR MANSFIELD,, WASH.	474013	1193748	17020012	--
12463700	MCCARTENEY CREEK TRIBUTARY NEAR FARMER, WASH.	473748	1194438	17020012	0.4
12463800	PINE CANYON TRIBUTARY NEAR FARMER, WASH.	473851	1194850	17020012	1.1
12464000	DOUGLAS CR AT PALISADES, WASH.	472500	1195600	17020012	844
12464500	COLUMBIA RIVER AT TRINIDAD, WASH.	471330	1200050	17020010	90500
12464600	SCHNEBLY COULEE TRIBUTARY NEAR VANTAGE, WASH.	465744	1200847	17020010	0.82
12464606	SAND HOLLOW CR AT S RD SW NR VANTAGE, WA	465550	1195355	17020010	47
12464607	SAND HOLLOW AT MOUTH NR VANTAGE, WA	465546	1195701	17020010	--
12464610	WANAPUM POWERPLANT HEADWATER NR BEVERLY WA	465238	1195813	17020010	--
12464614	WANAPUM POWERPLANT TAILWATER NEAR BEVERLY, WA.	465600	1195800	--	--
12464650	CRAB CREEK TRIBUTARY NEAR WAUKON, WA	473212	1175112	17020013	0.68
12464669	WEST MEDICAL LAKE NR MEDICAL LAKE, WASH.	473417	1174215	17020013	1.84
12464670	CLEAR LAKE NEAR MEDICAL LAKE, WA	473230	1174121	17020013	9.51

Site - ID	Station Name	Latitude (Degrees)	Longitude (Degrees)	Hydrologic Unit (OWDC)	Drainage Area (Miles2)
12464770	CRAB CREEK AT ROCKY FORD ROAD NEAR RITZVILLE, WA	471810	1182205	17020013	384
12464774	SOUTH FORK CRAB CREEK NEAR MOUTH NR RITZVILLE, WA	471804	1182209	17020013	--
12464780	CRAB CR ABOVE SYLVAN LAKE NR LAMONA, WASH.	471832	1182954	17020013	542
12464800	COAL CREEK AT MOHLER, WASH.	472423	1181854	17020013	64.7
12464809	SYLVAN LAKE NR LAMONA WASH	471933	1183444	17020013	675
12464810	CRAB CREEK BLW SYLVAN LAKE NR ODESSA, WASH.	471918	1183625	17020013	--
12464900	COFFEE POT LAKE NR ODESSA,WASH	472847	1183607	17020013	--
12464910	DEER LAKE NR ODESSA,WASH	472803	1183724	--	--
12464950	PACIFIC LAKE NR ODESSA, WASH	472448	1184417	17020013	--
12465000	CRAB CREEK AT IRBY, WASH.	472138	1185056	17020013	1040
12465100	CONNAWAI CREEK TRIBUTARY NEAR GOVAN, WASH.	473658	1184540	17020013	0.25
12465300	BROADAX DRAW TRIBUTARY NEAR WILBUR, WASH.	475024	1184540	17020013	1.12
12465400	WILSON CREEK BLW CORBETT DRAW NEAR ALMIRA, WASH.	473947	1185546	17020013	327
12465500	WILSON CREEK AT WILSON CREEK, WASH.	472550	1190610	17020013	427
12466000	CRAB CR AT WILSON CREEK P.O. NR WILSON CREEK, WA	472524	1190747	17020013	1760
12466090	BILLY CLAPP LK NR PINTO RIDGE DAM NR STRATFORD, WA	472704	1191457	17020014	--
12466100	WEST CANAL NR ROYAL CITY, WASH.	465606	1193349	17020015	--
12466101	INFLOW TO DW272A1 BASIN,BL86 COLUMBIA BASIN,WASH	465605	1193348	17020015	--
12466500	CRAB CREEK AT ADRAIN, WA	472320	1192230	17020015	1950
12467000	CRAB CREEK NEAR MOSES LAKE, WASH.	471122	1191553	17020015	2230
12467400	HAYNES CANYON NEAR COULEE CITY, WASH.	473846	1192122	17020014	2.7
12467500	PARK CREEK NEAR COULEE CITY, WASH.	473520	1192300	17020014	400
12468000	PARK LAKE NR COULEE CITY, WASH.	473441	1192505	17020014	317
12468500	PARK CREEK BLW PARK LAKE NR COULEE CITY, WASH.	473422	1192532	17020014	317
12469000	BLUE LAKE NR COULEE CITY WASH	473421	1192530	17020014	334
12469500	LENORE LK NR SOAP LK, WASH	473052	1193006	17020014	367
12470000	SOAP LK NR SOAP LK, WASH	472411	1192911	17020014	413
12470300	IRON SPRINGS CREEK NEAR WINCHESTER, WASH.	472000	1194212	17020015	1.57
12470500	ROCKY FORD CREEK NEAR EPHRATA, WASH.	471846	1192640	17020015	458
12470600	ROCKY FORD CR AT SR 17 NR EPHRATA, WA	471542	1192716	17020015	--
12470800	MOSES LAKE AT CITY PARK NR MOSES LAKE, WA	471105	1192100	17020015	--
12470900	MOSES LK IN PARKER HORN AT ALDER ST AT MOSES LK, W	470803	1191640	17020015	--
12471000	MOSES LK AT MOSES LK, WASH.	470611	1191902	17020015	3080
12471005	POTHOLES RES IN CRAB CR ARM NR MOSES LAKE, WA	470306	1192057	17020015	--
12471008	POTHOLES RES. IN WEST ARM NR MOSES LAKE, WA	470325	1192443	17020015	--
12471050	WINCHESTER WSTWY AT GAGE ON SE C RD NR MOSES LK, W	465943	1192527	17020015	--
12471080	FRENCHMAN HILLS WSTWY AT SCBSWRA NR MOSES LAKE, WA	470122	1194401	17020015	--
12471090	FRENCHMAN HILLS WSTWY ON SE C RD NR MOSES LK, WA	465828	1192542	17020015	202
12471100	PAHA COULEE TRIBUTARY NEAR RITZVILLE, WASH.	470303	1182526	17020015	8.52
12471200	LIND COULEE TRIBUTARY NEAR LIND, WASH.	475722	1183555	17020001	0.21
12471270	FARRIER COULEE NEAR SCHRAG, WASH.	470745	1185115	17020015	42
12471300	WEBER COULEE TRIBUTARY NEAR RUFF, WASH.	470825	1185220	17020015	0.95
12471400	LIND COULEE WASTEWAY AT SR17 NR WARDEN, WA	470037	1190810	17020015	703
12471440	WARDEN LAKE NR WARDEN, WASH.	465746	1191025	17020015	--
12471482	O SULLIVAN DAM NR WARDEN, WA	465859	1191529	17020015	--
12471485	POTHOLES CANAL AT ROAD K.2 NEAR WARDEN, WA	465843	1191526	17020015	--

Site - ID	Station Name	Latitude (Degrees)	Longitude (Degrees)	Hydrologic Unit (OWDC)	Drainage Area (Miles2)
12471495	CRAB CR AT UPPER COLUMBIA NW REFUGE NR OTHELLA, WA	465725	1191527	17020015	--
12471500	CRAB CREEK NEAR WARDEN, WASH.	465700	1191520	17020015	4470
12471505	UPPER GOOSE LAKE NR OTHELLO,WASH	465555	1191720	17020015	--
12471506	LOWER GOOSE LK AT E. END OF KULM RD NR OTHELLO, WA	465525	1191714	17020015	--
12471510	SODA LAKE NR OTHELLO,WASH	465727	1191344	17020015	--
12471600	HEART LAKE NR OTHELLO, WASH	465544	1191116	17020015	--
12471610	CANAL LAKE NR OTHELLO,WASH	465512	1191123	17020015	--
12471710	SCBID WAHLUKE BRANCH CANAL BLW SIPHON NR OTHELLO	464221	1190834	--	--
12471720	SCBID PRIEST RAPIDS WASTEWAY NR MOUTH NR MATTAWA	464442	1195638	17020016	--
12471722	SCBID WB48E WASTEWAY NR MOUTH NR MATTAWA, WA	464232	1195604	17020016	--
12471724	SCBID MATTAWA WASTEWAY NR MATTAWA, WA	463917	1194748	--	18.1
12472000	CRAB CREEK AT MORGAN LAKE ROAD NEAR OTHELLO, WA	465510	1191416	17020015	9.83
12472190	LOWER CRAB CR AT MCMANANON RD NR OTHELLO, WA	465345	1191810	17020015	--
12472200	CRAB CR NR OTHELLO,WASH	464908	1192154	17020015	4700
12472300	DW 272 A1 DRAIN NEAR ROYAL CAMP, WASH.	465448	1193232	17020015	0.88
12472350	DW 272 A DRAIN NEAR ROYAL CAMP, WASH.	465454	1193230	17020015	3.36
12472380	CRAB CR LATERAL AB ROYAL LAKE NR OTHELLO, WA	465237	1192051	17020015	56
12472400	CRAB CREEK AT B SE ROAD NEAR ROYAL CITY, WA	464920	1192710	17020015	86.2
12472500	CRAB CREEK NEAR SMYRNA, WASH.	465035	1193625	17020015	4500
12472515	RED ROCK COULEE AT E ROAD SW NEAR SMYRNA, WA	465228	1193551	17020015	--
12472520	RED ROCK COULEE NEAR SMYRNA, WA	465120	1193548	17020015	--
12472600	CRAB CR NR BEVERLY, WASH.	464948	1194948	17020015	4840
12472700	PRIEST RAPIDS POWERPLANT HEADWATER NR BEVERLY WA	463846	1195424	17020016	--
12472750	PRIEST RAPIDS POWERPLANT T W NR BEVERLY, WASH.	463842	1195432	17020016	96000
12472800	COLUMBIA RIVER BELOW PRIEST RAPIDS DAM, WASH.	463744	1195149	17020016	96000
12472900	COLUMBIA R AT VERNITA BR NR PRIEST RAPIDS DAM,WA	463824	1194354	17020016	96000
12472950	SCBID SADDLE MOUNTAIN WASTEWAY NR MATTAWA, WA	464209	1193937	--	37.1
12473100	WAHLUKE BRANCH 10A WSTWY NR OTHELLO, WA	463834	1191958	17020016	--
12473190	WAHLUKE BRANCH 10 WASTEWAY NEAR WHITE BLUFFS, WA	464034	1192445	17020016	--
12473200	WAHLUKE BRANCH 10 WSTWY NR MOUTH NR WHITE BLUFFS	464036	1192638	17020016	--
12473502	SCBID WB 5 WASTEWAY AT DROP 14 NR RINGOLD, WA	463224	1191631	--	--
12473506	SCBID PE 16.4 WASTEWAY BLW EAGLE LK NR BASIN CITY	464024	1190856	--	--
12473507	SCBID PE16.4 WASTEWAY AT RICKERT RD NR RINGOLD, WA	463121	1191418	17020016	--
12473508	SCBID PE 16.4 WASTEWAY NR MOUTH NR HANFORD, WA	463022	1191532	--	118
12473510	COLUMBIA RIVER AT RINGOLD, WA	462916	1191515	17020016	--
12473512	BAXTER CANYON SPRINGS NR RICHLAND, WA	462635	1191513	--	--
12473518	COLUMBIA R E CHANNEL AT JOHNSON IS NR RICHLAND, WA	462319	1191552	17020016	--
12473519	COLUMBIA R W CHANNEL AT JOHNSON IS NR RICHLAND, WA	462321	1191613	17020016	--
1247351920	COLUMBIA R BLW JOHNSON IS. NO.1 NR RICHLAND, WA	462246	1191620	17020016	96900
1247351940	COLUMBIA R BLW JOHNSON IS. NO. 2 NR RICHLAND, WA	462235	1191617	17020016	96900
1247351960	COLUMBIA R BLW JOHNSON IS. NO. 3 NR RICHLAND, WA	462228	1191616	17020016	96900
1247351980	COLUMBIA R BLW JOHNSON IS. NO.4 NR RICHLAND, WA	462204	1191608	17020016	96900
12473520	COLUMBIA RIVER AT RICHLAND WASH	461846	1191528	--	96900
12473560	FCID WASTEWAY AT PASCO, WA	461529	1190830	--	--
12473700	KANSAS NO.2 NEAR CUNNINGHAM, WASH.	464926	1185532	17020016	6.06
12473710	KANSAS NO.2 TRIB NR CUNNINGHAM, WASH.	464926	1185635	17020016	3.31

Site - ID	Station Name	Latitude (Degrees)	Longitude (Degrees)	Hydrologic Unit (OWDC)	Drainage Area (Miles2)
12473740	EL 68 D WASTEWAY NEAR OTHELLO, WASH	464347	1190256	17020016	146
12473760	SCBID POTHOLES E. CANAL BLW SCOOTENEY RES NR MESA	464005	1190151	--	--
12473820	SCBID ELTOPIA BRANCH CANAL ABV FALLS NR PASCO, WA	462027	1185816	--	--
12473860	SCBID WASTEWATER DITCH NO. 1 NR RICHLAND, WA	462058	1191450	--	--
12473880	SCBID PPL 4.3 WASTEWAY NR RICHLAND, WA	461919	1191408	--	--
12473900	SCBID PASCO WASTEWAY NR RICHLAND, WA	462240	1191518	--	--
12473980	GOLD CR ABOVE KEECHELUS LAKE NR HYAK,WA	472325	1212254	--	--
12474000	KEECHELUS LAKE NEAR MARTIN, WA	471920	1212020	17030001	55.8
12474500	YAKIMA RIVER NEAR MARTIN, WASH.	471917	1212006	17030001	54.7
12474510	YAKIMA R 2 MI BELOW KEECHELUS LAKE AT MARTIN,WA	471831	1211848	--	--
12474700	MOSQUITO CR NR EASTON, WASH.	471732	1211923	17030001	1.07
12475000	CABIN CREEK NEAR EASTON, WASH.	471430	1211340	17030001	31.7
12475300	BOX CANYON CR TRIBUTARY NR EASTON, WASH.	472257	1211542	17030001	0.36
12475400	LODGE CR ABOVE KACHESS LAKE NR EASTON,WA	471958	1211521	--	--
12475420	TRIBUTARY TO LAKE KACHEES NR EASTON,WA	471842	1211455	--	--
12475500	KACHESS LAKE NEAR EASTON, WA	471550	1211200	17030001	63.6
12476000	KACHESS RIVER NEAR EASTON, WASH.	471541	1211208	17030001	63.6
12476500	KITTITAS CANAL AT EASTON, WA	471400	1211100	17030001	--
12476599	KITTITAS MAIN CANAL AT DIVERSION AT EASTON,WA	471426	1211109	--	--
12476650	HIGHLINE CANAL NR ELLENSBURG,WA	470628	1203334	--	--
12477000	YAKIMA RIVER AT EASTON, WASH.	471420	1211040	17030001	188
12477001	YAKIMA @ EASTON UNREGULATED FROM MODEL	463331	1202811	--	22
12477600	YAKIMA RIVER ABV CLE ELUM RIVER NR CLE ELUM,WASH	471110	1210231	17030001	248
12478000	CLE ELUM R ABV WAPTUS R NR ROSYLN, WA	472746	1210249	17030001	--
12478100	WAPTUS RIVER AT MOUTH NR ROSLYN, WA	472513	1210515	17030001	--
12478200	COOPER RIVER AT SALMON LASAC NR ROSLYN, WA	472429	1210611	17030001	--
12478300	CLE ELUM R ABOVE CLE ELUM LAKE NR ROSLYN, WA	472119	1210622	--	--
12478500	CLE ELUM LAKE NEAR ROSLYN, WA	471440	1210400	17030001	203
12479000	CLE ELUM RIVER NEAR ROSYLN, WASH.	471441	1210400	17030001	203
12479100	DOMERIE CREEK NEAR ROSLYN, WASH.	471447	1210622	17030001	3.19
12479280	CLE ELUM R NR CLE ELUM,WA	471128	1210057	--	--
12479300	CLE ELUM RIVER NR CLE ELUM, WASH.	471105	1210010	17030001	221
12479500	YAKIMA RIVER AT CLE ELUM, WASH.	471135	1205655	17030001	502
12479501	YAKIMA @ CLE ELUM UNREGULATED FROM MODEL	463332	1202812	--	22
12479600	THORNTON CR NR CLE ELUM, WASH.	470922	1205134	17030001	0.66
12479720	JUNGLE CREEK NR MOUTH NR CLE ELUM, WA	472030	1205159	17030001	--
12479750	NO FK TEANAWAY R BLW BRIDGE AT DICKEY CR CAMPGRND	471721	1205130	17030001	--
12480000	TEANAWAY RIVER BELOW FORKS NEAR CLE ELUM, WASH.	471448	1205136	17030001	172
12480500	TEANAWAY RIVER NEAR CLE ELUM, WASH.	471140	1204650	17030001	200
12480600	TEANAWAY R NR CLE ELUM, WASH	471030	1204505	17030001	--
12480700	HOVEY CREEK NEAR CLE ELUM, WASH.	471905	1204132	17020010	2.65
12481000	SWAUK CREEK NEAR CLE ELUM, WA	470950	1204404	17030001	87.8
12481090	SWAUK CREEK NEAR THORP, WA	470745	1204435	17030001	--
12481100	SWAUK CREEK AT HIGHWAY 10 NEAR THORP, WA	470728	1204408	17030001	--
12481500	CASCADE CANAL NEAR ELLENSBURG WASH	470635	1204302	--	--
12481600	WEST SIDE DITCH AT UMTANUM RD NR ELLENSBURG, WA	465659	1203408	17030001	--

Site - ID	Station Name	Latitude (Degrees)	Longitude (Degrees)	Hydrologic Unit (OWDC)	Drainage Area (Miles2)
12481900	TANEUM CR AT TANEUM MEADOW NR THORP, WA	470647	1205201	17030001	--
12482000	TANEUM CREEK NEAR THORP, WASH.	470510	1204640	17030001	74.3
12482100	TANEUM CREEK AT BRUTON RD. AT THORPE, WA	470457	1204357	--	--
12482600	YAKIMA RIVER NR THORP, WASH.	470605	1204204	17030001	--
12482700	TOWN CANAL AT ELLENSBURG,WA	470009	1203142	--	--
12482720	CASCADE CANAL AT ELLENSBURG,WA	470103	1203100	--	--
12482780	YAKIMA RIVER AT EVERGREEN FARM NR ELLENSBURG, WA	470107	1203628	17030001	--
12482800	YAKIMA R AT THORP HIGHWAY BR. AT ELLENSBURG, WA	470020	1203543	--	--
12483190	SOUTH FORK MANASTASH CR NR ELLENSBURG, WA	465818	1204832	17030001	--
12483200	SO FK MANASTASH CR AB LAZY F CAMP NR ELLENSBURG,WA	465735	1204702	17030001	--
12483300	SOUTH FK MANASTASH CR TRIB NR ELLENSBURG, WASH.	465740	1204541	17030001	2.12
12483500	MANASTASH CREEK NEAR ELLENSBURG, WASH.	465800	1204140	17030001	74.5
12483520	MANASHTASH CR AT BROWN RD NR ELLENSBURG,WA	465944	1203523	--	--
12483535	CURRIER CR AT DRY CR RD AT ELLENSBURG, WA	470121	1203451	17030001	--
12483540	REECER CR AT FAUST RD AT ELLENSBURG,WA	470003	1203428	--	--
12483575	UNNAMED DRAIN 1.9 MI. NW THRALL, WA	465645	1203226	17030001	--
12483585	YAKIMA RIVER NEAR THRALL, WA	465551.1	1203103.6	17030001	--
12483590	YAKIMA R ABOVE WILSON CR AT RM 148 AT THRALL,WA	465452	1203031	--	--
12483600	WILSON CREEK NEAR ELLENSBURG, WASH.	470735	1202935	17030001	13.6
12483750	NANEUM CR BLW HIGH CR NR ELLENSBURG, WA	471055	1202644	17030001	--
12483800	NANEUM CREEK NEAR ELLENSBURG, WASH.	470737	1202847	17030001	69.5
12483900	WILSON CREEK AT ELLENSBURG, WA	465806	1203213	--	--
12483940	NANEUM CREEK ABOVE GAME FARM ROAD NR KITTITAS, WA	470059	1202830	17030001	--
12483995	COLEMAN CREEK BELOW TOWN CANAL NEAR KITTITAS, WA	465835	1202814	17030001	--
12484000	COLEMAN CR AT WILSON CR RD AT THRALL,WA	465654	1202948	--	--
12484100	WILSON CREEK ABOVE CHERRY CREEK AT THRALL, WA	465535	1203001	17030001	180
12484200	JOHNSON CANYON TRIBUTARY NEAR KITTITAS, WASH.	465841	1201424	17030001	0.65
12484225	PARK CR AT CLEMENS RD AT KITTITAS, WA	465742	1202444	17030001	--
12484250	TILE DRAIN TO CARIBOU CR NR KITTITAS,WA	470235	1202206	--	--
12484300	COOKE CREEK NEAR ELLENSBURG, WASH.	470540	1202240	17030001	18.6
12484440	CHERRY CREEK AB WHIPPLE WASTEWAY AT THRALL, WA	465556	1202928	17030001	166
12484460	BADGER CR AT BADGER PKT RD & PARALLEL RD	465444	1202206	17030001	--
12484480	CHERRY CREEK AT THRALL, WASH.	465534	1202951	17030001	214
12484490	WILSON CREEK AT THRALL, WASH.	465504	1203025	17030001	382
12484500	YAKIMA RIVER AT UMTANUM, WASH.	465146	1202844	17030001	1590
12484501	YAKIMA @ UMTANUM UNREGULATED FROM MODEL	463333	1202813	--	22
12484550	UMTANUM CREEK NR MOUTH AT UMTANUM, WA	465127	1202946	17030001	53
12484560	YAKIMA RIVER BELOW UMTANUM CR AT UMTANUM, WA	465118	1202859	17030001	--
12484600	MCPHERSON CANYON AT WYMER, WASH.	465003	1202712	17030001	5.48
12484650	SQUAW CREEK AT HIGHWAY 821 NEAR WYMER, WA	464908	1202713	--	--
12484700	YAKIMA R BELOW SQUAW CR AT RM 134 AT ROZA,WA	464807	1202710	--	--
12484800	BURBANK CR AT MOUTH NR WYMER, WA	464610	1202653	17030001	--
12484900	YAKIMA RIVER AT ROZA DAM, WASH.	464650	1202710	17030001	1800
12484950	YAKIMA R ABV CANAL DIVERSION AT RM 128 AT ROZA DAM	464503	1202752	--	--
12485000	ROZA CANAL AT ROZA DAM NEAR POMONA,WA	464452	1202759	--	--
12485002	ROZA CANAL AT POWERHOUSE AT YAKIMA,WA	463658	1202716	--	--

Site - ID	Station Name	Latitude (Degrees)	Longitude (Degrees)	Hydrologic Unit (OWDC)	Drainage Area (Miles2)
12485003	ROZA CANAL AT N 33RD ST. BLW POWERHOUSE	463700	1202715	17030003	--
12485005	ROZA CANAL AT BEAM ROAD NEAR ZILLAH,WASH	462458	1200959	--	--
12485010	ROZA CANAL AT SCOON RD NR SUNNYSIDE WASH	462325	1200107	17030003	--
12485012	ROZA CANAL BLW SULPHUR CR WSTWY NR SUNNYSIDE, WA	462220	1195727	17030003	--
12485014	ROZA CANAL AT BLK CANYON CR NR SUNNYSIDE WASH	462049	1195353	17030003	--
12485016	ROZA CANAL AT FACTORY RD NR SUNNYSIDE WASH	461902	1195328	17030003	--
12485018	ROZA CANAL AT WILGUS RD NR GRANDVIEW WASH	461722	1194948	17030003	--
12485019	ROZA CANAL AT GAP RD NR PROSSER, WA	461659	1194718	17030003	--
12485020	ROZA CANAL AT ROTHROCK RD NR PROSSER,WA	461650	1194215	--	--
12485100	YAKIMA R BELOW ROZA DAM NR POMONA,WA	464449	1202758	--	--
12485299	ROZA CANAL AT N 33RD ST. DOWNSTRM OF PWRHOUSE	463658	1202716	17030003	--
12485500	SELAH-MOXEE CANAL NR SELAH WASH	464122	1202911	--	--
12485550	YAKIMA RIVER AB SELAH CR AT POMONA, WA	464232	1202825	17030001	--
12485700	SELAH CREEK TRIBUTARY NEAR YAKIMA, WASH.	464034	1202320	17030001	0.68
12485740	SELAH CR AT MOUTH AT POMONA, WA	464227	1202759	17030001	--
12485750	YAKIMA R ABOVE WENAS CR AT RM 122.5 AT POMONA,WA	464146	1202925	--	--
12485790	YAKIMA R AT HARRISON RD BRIDGE NR POMONA, WA	464040	1202928	17030001	--
12485890	WENAS CREEK ABV WENAS LAKE NEAR SELAH, WA	464937	1204154	--	--
12485900	PINE CANYON NEAR NACHES, WASH.	464911	1204016	17030001	2.26
12485940	WENAS CREEK AT FLETCHER LANE NEAR SELAH, WA	464446	1203619	17030001	--
12485960	WENAS CREEK AT WENAS ROAD CROSSING NR SELAH,WASH	464232	1203111	17030001	186
12486000	WENAS CREEK NEAR SELAH, WASH.	474200	1202945	17030001	192
12486500	TAYLOR CANAL NR SELAH WASH	464051	1202930	17030001	--
12487000	YAKIMA R AT SELAH GAP NR N YAKIMA WASH	463752	1203109	17030001	2130
12487050	N.F. LITTLE NACHES R ABV MID. FK. NR CLIFFDELL, WA	470523	1211352	17030002	--
12487200	LITTLE NACHES RIVER AT MOUTH NR CLIFFDELL, WA	465920	1210555	17030002	--
12487400	DEEP CR NR GOOSE PRAIRIE, WASH.	464730	1211930	17030002	12.7
12487500	LITTLE NACHES R. UNPUBLISHED BUR'S, ?????	465212	1205735	--	117
12488000	BUMPING RIVER NEAR NILE, WASH.	465222	1211729	17030002	70.7
12488050	BUMPING R AT SODA SPRINGS WALKWAY NR NILE,WA	465527	1211250	--	--
12488100	BUMPING RIVER AT AMERICAN RIVER WASH	465830	1211010	--	--
12488250	AMERICAN RIVER AT HELLS CROSSING NR NILE, WA	465804	1211545	17030002	--
12488300	AMERICAN RIVER TRIBUTARY NEAR NILE, WASH.	465759	1211519	17030002	1.1
12488500	AMERICAN RIVER NEAR NILE, WASH.	465840	1211003	17030002	78.9
12489000	NACHES R AT ANDERSON RANCH NR NILE WASH	465500	1210300	17030002	--
12489050	NACHES R AT COTTONWOOD CAMPGRND NR CLIFFDELL, WA	465424	1210133	17030002	--
12489100	RATTLESNAKE CR ABV N.F. RATTLESNAKE CR NR NILE, WA	464834	1210408	17030002	--
12489150	RATTLESNAKE CR ABV LITTLE RATTLESNAKE NR NILE, WA	464850	1205658	17030002	--
12489200	RATTLESNAKE CREEK (UNPUBLISHED BUR'S RECORDS)	464915	1205620	--	134
12489300	RATTLESNAKE CR AT MOUTH NR NILE, WA	464909	1205601	17030002	--
12489500	NACHES R AT OAK FLAT NEAR NILE, WASH.	464510	1204910	17030002	641
12489600	CITY OF YAKIMA (OAK FLAT) DIVERSION NR NACHES, WA	464450	1204705	17030003	--
12490000	SELAH VALLEY CANAL NEAR NACHES, WA	464440	1204750	17030003	--
12490010	NACHES R NR NACHES, WASH.	463450	1204715	17030003	--
12490500	N.F. TIETON RIVER ABV CLEAR LAKE NR RIMROCK, WA	463532	1212043	17030002	--
12491000	RIMROCK LAKE AT TIETON DAM, NR NACHES, WA	463910	1210730	17030003	187

Site - ID	Station Name	Latitude (Degrees)	Longitude (Degrees)	Hydrologic Unit (OWDC)	Drainage Area (Miles2)
12491500	TIETON RIVER AT TIETON DAM NEAR NACHES, WASH.	463946	1210725	17030002	187
12491700	HAUSE CREEK NEAR RIMROCK, WASH.	464033	1210449	17030002	3.91
12492000	TIETON CANAL NEAR NACHES, WA	464010	1210030	17030003	--
12492500	TIETON RIVER AT CANAL HEADWORKS NR NACHES, WASH.	464016	1210010	17030002	239
12493000	TIETON R AT OAK C GAME RANGE, WASH.	464330	1204820	17030002	296
12493100	TIETON RIVER AT MOUTH NR NACHES, WA	464439	1204706	17030002	--
12493500	WAPATOX CANAL NEAR NACHES, WA	464450	1204620	17030002	--
12494000	NACHES RIVER BELOW TIETON RIVER NR NACHES, WASH.	464444	1204605	17030002	941
12494400	NACHES RIVER AT NACHES, WASH.	464328	1204156	17030001	953
12496510	PACIFIC POWER & LIGHT COMPANY WASTEWAY	464144	1203911	17030002	--
12496511	CITY OF YAKIMA FINISH WATER	464110	1203910	17030002	--
12496550	BUCKSKIN SLOUGH BLW GLEED DITCH NR GLEED, WA	463801	1203450	17030002	--
12498700	NACHES RIVER NR YAKIMA, WASH.	463755	1203510	17030002	976
12498980	COWICHE CREEK WEIKEL, WA	463740	1203928	17030003	--
12499000	NACHES RIVER NR NORTH YAKIMA, WA	463742	1203110	17030001	1110
12500005	YAKIMA R ABOVE ROZA POWER RETURN NR YAKIMA,WA	463622	1202846	--	--
12500010	YAKIMA R NR TERRACE HEIGHTS	463621	1202827	17030003	3250
12500400	FIREWATER CANYON NR MOXEE CITY, WASH.	463014	1200837	17030003	7.3
12500410	UNNAMED DRAIN AT WALTERS RD AT MOXEE CITY, WA	463246	1202118	17030003	--
12500415	TRIB. TO MOXEE DRAIN AT BELL RD NR UNION GAP, WA	463326	1202632	17030003	--
12500420	MOXEE DRAIN AT BIRCHFIELD ROAD NEAR UNION GAP, WA	463246	1202613	17030003	--
12500430	MOXEE DRAIN AT THORP RD NR UNION GAP,WA	463218	1202719	--	--
12500437	WIDE HOLLOW CR AT W. VALLEY M.S. NR AHTANUM, WA	463456	1203634	17030003	--
12500439	WIDE HOLLOW CR AT GOODMAN RD AT UNION GAP	463327	1203004	17030003	--
12500440	WIDE HOLLOW CR AT UNION GAP	463301	1202848	17030003	64.3
12500442	WIDE HOLLOW CR AT OLD STP AT UNION GAP, WA	463235	1202826	17030003	--
12500445	WIDE HOLLOW CREEK NEAR MOUTH AT UNION GAP,WASH	463235	1202827	17030003	66.9
12500450	YAKIMA R ABV AHTANUM CR AT UNION GAP, WASH.	463204	1202758	17030003	3480
12500500	NORTH FORK AHTANUM CREEK NEAR TAMPICO, WASH.	463340	1205510	17030003	68.9
12500600	N.F. AHTANUM CR AT TAMPICO	463155	1205206	17030003	--
12500900	S.F. AHTANUM CR ABV CONRAD RNCH NR TAMPICO, WA	462932	1205723	17030003	--
12501000	SO FK AHTANUM CR AT CONRAD RNCH N TAMPICO, WASH.	463033	1205436	17030003	24.8
12501500	SOUTH FORK AHTANUM CR NR TAMPICO, WASH.	463110	1205320	17030003	28.5
12501600	S.F. AHTANUM CR AT TAMPICO	463137	1205220	17030003	--
12501990	AHTANUM CR NR TAMPICO,WA	463130	1204955	--	--
12502000	AHTANUM CR AT THE NARROWS NR TAMPICO, WASH.	463140	1204800	17030003	119
12502490	AHTANUM CR AT GOODMAN RD AT UNION GAP	463255	1203003	17030003	--
12502500	AHTANUM CREEK AT UNION GAP, WASH.	463210	1202820	17030003	173
12503000	YAKIMA RIVER AT UNION GAP, NR YAKIMA, WASH.	463150	1202810	17030003	3650
12503001	YAKIMA RIVER AT UNION GAP , WASH.(RECONSTRUCTED)	463150	1202810	--	3650
12503002	YAKIMA RIV AT UNION GAP(RECON.W/CANALS+PARKER)	463150	1202810	--	3650
12503300	YAKIMA R. @ UNION GAP (UNREGULATED FROM MODEL)	463150	1202810	--	3650
12503301	YAKIMA R. @ UNION GAP (UNREGULATED NUMB 2 MODEL)	463151	1202810	--	3650
12503500	MAIN CANAL NR PARKER, WASH	463114	1202842	17030003	--
12503599	WAPATO MAIN CANAL NR PARKER, WA	463114	1202842	--	--
12503640	UNNAMED DRAIN AT LATERAL & RIGGS RDS NR WAPATO, WA	462840	1203159	17030003	--

Site - ID	Station Name	Latitude (Degrees)	Longitude (Degrees)	Hydrologic Unit (OWDC)	Drainage Area (Miles2)
12503650	WAPATO MAIN CANAL EXTENSION AT MARBLE RD NR BROWNS	462705	1203738	--	--
12503900	WAPATO CANAL AT BECKER & LARUE RDS AT TOPPENISH	462140	1202119	17030003	--
12503950	YAKIMA R AT PARKER	463022	1202707	17030003	--
12504000	OLD RESERVATION CANAL NR PARKER WASH	462940	1202700	--	--
12504490	SUNNYSIDE CANAL AT DIVERSION NR PARKER, WA	462944	1202558	17030003	--
12504500	SUNNYSIDE CANAL NR PARKER WASH	462940	1202540	--	--
12504505	SUNNYSIDE CANAL AT BEAM ROAD NEAR GRANGER,WASH	462239	1200959	--	--
12504508	SUNNYSIDE CANAL AB N OUTLOOK RD NR SUNNYSIDE, WA	462158	1200541	17030003	--
12504510	SUNNYSIDE CANAL AT MAPLE GROVE RD NR SUNNYSIDE	462127	1200222	17030003	--
12504512	SUNNYSIDE CANAL BLW SULPHUR CR WSTWY NR SUNNYSDE	462048	1195820	17030003	--
12504514	SUNNYSIDE CANAL AT EDISON RD NR SUNNYSIDE WASH	461926	1195614	17030003	--
12504516	SUNNYSIDE CANAL AT BETHNAY RD NR GRANDVIEW, WASH	461745	1195529	17030003	--
12504518	SUNNYSIDE CANAL AT GRANDVIEW WASH	461532	1195325	17030003	--
12504520	SUNNYSIDE CANAL AT GAP RD NR PROSSER,WA	461421	1194718	--	--
12505000	YAKIMA RIVER NEAR PARKER, WASH.	462950	1202630	17030003	3660
12505001	YAKIMA R NEAR PARKER (UNREGULATED FROM MODEL)	462950	1202630	--	3660
12505002	YAKIMA R NEAR PARKER (UNREGULATED NUMB 2, MODEL)	462951	1202630	--	3660
12505050	YAKIMA RIVER NEAR WAPATO, WA	462908.6	1202549.2	17030003	--
12505100	YAKIMA R AT DONALD RD AT RM 100.3 AT DONALD,WA	462758	1202351	--	--
12505300	YAKIMA R NR TOPPENISH	462435	1201847	17030003	--
12505310	YAKIMA RIVER BELOW HIGHWAY 22 NEAR TOPPENISH, WA	462413.6	1201829.7	17030003	--
12505320	YAKIMA R AT RM 91 AT ZILLAH,WA	462407	1201654	--	--
12505350	E TOPPENISH DRAIN AT WILSON RD NR TOPPENISH,WASH	462204	1201500	17030003	--
12505410	SUB 35 DRAIN AT PARTON ROAD NEAR GRANGER,WASH	462011	1201348	17030003	--
12505435	YAKIMA RIVER NEAR GRANGER, WASH.	462046	1201242	17030003	--
12505440	YAKIMA R AT BRIDGE AVE AT GRANGER,WA	462016	1201148	--	--
12505450	GRANGER DRAIN AT GRANGER, WA	462037	1201109	17030003	--
12505460	GRANGER DRAIN AT MOUTH NR GRANGER, WA	462010	1201138	17030003	--
12505465	YAKIMA R AT HWY 223 BRIDGE AB MARION DR AT GRANGER	462000	1201138	17030003	--
12505466	HARRAH DRAIN AT HARRAH DRAIN RD AT HARRAH, WA	462352	1203349	17030003	--
12505467	UNNAMED DRAIN TO MARION DRAIN NR HARRAH, WA	462050	1203042	17030003	--
12505468	UNNAMED DRAIN AT FORT RD NR HARRAH, WA	462232	1202945	17030003	--
12505469	UNNAMED DRAIN AT BECKER & YOST RDS NR TOPPENISH	462046	1202121	17030003	--
12505470	WANITY SLOUGH AT EAST FIRST ST. AT WAPATO, WA	462652	1202358	17030003	--
12505472	UNNAMED DRAIN AT HOFFER RD NR WAPATO, WA	462626	1202539	17030003	--
12505474	UNNAMED DRAIN AT BRANCH RD AT ASHUE NR WAPATO, WA	462417	1202738	17030003	--
12505475	UNNAMED DRAIN AT YETHONAT AT BRANCH RD NR WAPATO	462416	1202404	17030003	--
12505480	WANITY SLOUGH AT ROCKY FORD RD NR TOPPENISH	462019	1201759	17030003	--
12505482	WANITY SLOUGH AT MEYERS RD	462002	1201733	17030003	--
12505490	SATUS NO. 2 CANAL AT HAPPY RD NR SATUS,WA	461625	1201316	17030003	--
12505495	SATUS NO. 3 CANAL AT WINNIER RD NR MABTON,WA	461139	1200549	17030003	--
12505500	MARION DRAIN NR GRANGER	461914	1201326	17030003	--
12505510	MARION DRAIN AT INDIAN CHURCH RD AT GRANGER, WA	461952	1201154	17030003	--
12505900	TOPPENISH CR AB WILLY DICK CNYN NR FORT SIMCOE, WA	461653	1205215	17030003	--
12506000	TOPPENISH CREEK NEAR FORT SIMCOE, WASH.	461840	1204713	17030003	122
12506300	NORTH FORK SIMCOE CREEK NEAR FORT SIMCOE, WA	462723	1205207	17030003	--

Site - ID	Station Name	Latitude (Degrees)	Longitude (Degrees)	Hydrologic Unit (OWDC)	Drainage Area (Miles2)
12506330	SOUTH FORK SIMCOE CREEK NEAR FORT SIMCOE, WA	462641	1205306	17030003	--
12506490	SIMCOE CREEK ABOVE SPRING CREEK NR FORT SIMCOE, WA	462340	1204835	--	--
12506500	SIMCOE CREEK BELOW SPRING CR NR FORT SIMCOE, WA	462340	1204830	17030003	81.5
12506520	SIMCOE CREEK AT MEDICINE VLY RD NR WHITE SWAN, WA	462255	1204747	17030003	--
12506600	AGENCY CREEK NEAR FORT SIMCOE, WA	462027	1205148	17030003	--
12506700	SIMCOE CREEK NEAR WHITE SWAN, WA	462340	1204340	17030003	--
12506800	NORTH MEDICINE CREEK NEAR WHITE SWAN, WA	462653	1204809	17030003	--
12506900	SIMCOE CREEK AT BARKES ROAD NEAR WHITE SWAN, WA	462325	1203855	17030003	--
12506960	UNNAMED CREEK AT BARKES RD NR WHITE SWAN, WA	462311	1203852	17030003	--
12506980	DRAIN AT MOUNTAIN VIEW ROAD NEAR WHITE SWAN, WA	462601	1203830	17030003	--
12507000	TOPPENISH CREEK BL SIMCOE CR NR WHITE SWAN, WA	462230	1203710	17030003	409
12507050	UNNAMED DRAIN AT PROGRESSIVE RD NR HARRAH, WA	462509	1203545	17030003	--
12507090	MUD LAKE DRAIN NR HARRAH	462232	1203600	17030003	--
12507100	MILL CR AT CANYON RD NR WHITE SWAN	461745	1204422	17030003	--
12507150	TRIB TO MILL CR AT TECUMSEH RD NR WHITE SWAN, WA	462132	1203738	17030003	--
12507200	TOPPENISH CR AT ISLAND RD NR HARRAH,WA	462022	1203505	--	--
12507300	TOPPENISH CREEK TRIBUTARY NEAR TOPPENISH, WASH.	461731	1202130	17030003	1.24
12507400	TOPPENISH CREEK NEAR TOPPENISH, WA	461833	1202042	17030003	--
12507500	TOPPENISH CR AT ALFALFA,WASH	461850	1201300	17030003	625
12507508	TOPPENISH CR AT INDIAN CHURCH RD NR GRANGER,WASH	461852	1201153	17030003	599
12507510	TOPPENISH CR NR SATUS,WASH	461839	1201120	17030003	625
12507525	YAKIMA R BL TOPPENISH CR AT RM 79.6 NR GRANGER, WA	461858	1200913	17030003	--
12507545	YAKIMA RIVER (RIGHT CHANNEL) NEAR GRANGER, WA	461829.6	1200831.5	17030003	--
12507550	YAKIMA R BL TOPPENISH CR AT RM 78.1 NR GRANGER, WA	461852	1200803	--	--
12507560	COULEE DRAIN AT NORTH SATUS ROAD NEAR SATUS,WASH	461749	1200842	--	--
12507580	YAKIMA R ABV SATUS CR AT RM 73 NR SATUS,WA	461638	1200523	--	--
12507585	YAKIMA RIVER AT RM 72 AB SATUS CR NR SUNNYSIDE, WA	461611	1200530	17030003	4480
12507590	YAKIMA R AT RM 71 AB SATUS CR NR SUNNYSIDE, WA	461526	1200545	17030003	--
12507594	SATUS CR ABV WILSON-CHARLEY CANYON NR TOPPENISH,WA	460100	1204054	17070106	--
12507595	SATUS CREEK AB SHINANDO CREEK NR TOPPENISH, WA	460100.6	1203855.5	17030003	17.9
12507600	SHINANDO CREEK TRIBUTARY NEAR GOLDENDALE, WASH.	460017	1203832	17030003	0.38
12507650	SHINANDO CR NR GOLDENDALE, WASH.	460110	1203750	17070106	7.9
12507660	SATUS CREEK TRIBUTARY NEAR TOPPENISH, WASH.	460527	1203257	17030003	8.54
12507940	SATUS CR ABV LOGY CR NR TOPPENISH	461216	1202837	17030003	--
12507950	LOGY CR NR TOPPENISH	461236	1202853	17030003	--
12508000	SATUS CREEK NEAR TOPPENISH, WA	461420	1202440	17030003	271
12508300	SATUS CREEK AT HIGHWAY 97 NEAR TOPPENISH, WA	461408	1202505	17030003	--
12508400	SATUS CREEK ABOVE DRY CREEK NEAR TOPPENISH, WA	461511	1202351	17030003	--
12508480	DRY CR NR TOPPENSIH	461513	1202426	17030003	--
12508500	SATUS CR BELOW DRY CR NEAR TOPPENISH, WASH.	461500	1202240	17030003	435
12508590	SATUS CREEK AT PLANK ROAD NEAR SATUS,WASH	461725	1201312	--	560
12508600	SATUS CR NR SATUS, WASH	461625	1200915	17030003	612
12508602	SATUS CREEK ABOVE NORTH DRAIN NEAR SATUS, WA	461624	1200849	17030003	--
12508605	NORTH DRAIN ABOVE POND NEAR SATUS, WA	461727	1200856	17030003	--
12508608	NORTH DRAIN EASTSIDE SATUS ROAD NEAR SATUS, WA	461626	1200843	17030003	--
12508609	NORTH DRAIN AT MOUTH NEAR SATUS, WA	461627	1200845	17030003	--

Site - ID	Station Name	Latitude (Degrees)	Longitude (Degrees)	Hydrologic Unit (OWDC)	Drainage Area (Miles2)
12508610	SATUS CREEK AT NORTH SATUS ROAD AT SATUS,WASH	461623	1200844	--	--
12508620	SATUS CREEK AT GAGE AT SATUS, WA	461626	1200832	17030003	563
12508621	SATUS CR AT SATUS	461617	1200748	17030003	--
1250862120	WEST INFLOW TO MCBRIDE LAKE NEAR SATUS, WA	461627.6	1200719.5	17030003	--
1250862140	MCBRIDE LAKE OUTLET CREEK TO SATUS CR NR SATUS, WA	461615.8	1200656.9	17030003	--
1250862220	TEAL LAKE NEAR SATUS, WA	461556.7	1200644.5	17030003	--
1250862240	TEAL LAKE OUTLET CREEK TO SATUS CREEK NR SATUS, WA	461555	1200643.1	17030003	--
12508625	YAKIMA R BLW SATUS CR AT RM 68 NR SATUS,WA	461506	1200545	--	--
12508630	SOUTH DRAIN NEAR SATUS, WA	461535	1200757	17030003	--
12508660	SATUS DRAIN 302 AT HIGHWAY 22 NEAR MABTON, WA	461428	1200542	17030003	--
12508680	YAKIMA R ABOVE SULPHUR CR AT RM 61.3 NR MABTON,WA	461415	1200132	--	--
12508690	SATUS DRAIN 303 AT LOONEY ROAD NEAR MABTON,WASH	461257	1200202	--	--
12508730	SULPHUR CREEK NR SUNNYSIDE WASH	462254	1195723	--	--
12508753	DRAIN 61.0 AT SLI RD. NR SUNNYSIDE, WASH.	462140	1195544	17030003	--
12508755	DRAIN 61.0 NR SUNNYSIDE,WA(DAILY SEDIMENT X 100)	462049	1195628	17030003	--
12508765	DRAIN 60.7 AT SLI RD. NR SUNNYSIDE, WASH.	462140	1195604	17030003	--
12508766	DRAIN 60.5 AT SLI RD. NR SUNNYSIDE, WASH.	462140	1195614	17030003	--
12508769	DRAIN 60.7 NEAR SUNNYSIDE, WASH.	462054	1195705	17030003	0.92
12508770	DRAIN 59.6 AT SLI RD. NR SUNNYSIDE, WASH.	462140	1195655	17030003	--
12508771	DRAIN 60.0 AT SLI RD. NR SUNNYSIDE, WASH.	462140	1195647	17030003	--
12508773	DRAIN 60.2 AT SLI RD. NR SUNNYSIDE, WASH.	462140	1195629	17030003	--
12508775	DRAIN 59.6 BLW DR. 60.2 NR SUNNYSIDE, WASH.	462110	1195658	17030003	0.68
12508776	DRAIN 59.4 AT SLI RD. NR SUNNYSIDE, WASH.	462140	1195723	17030003	--
12508778	DRAIN 59.4 TRIB AT SLI RD. NR SUNNYSIDE, WASH.	462140	1195707	17030003	--
12508779	DRAIN 59.4 NR SUNNYSIDE,WA(DAILY SEDIMENT X 100)	462109	1195702	17030003	--
12508790	DID 18 DRAIN AT SUNNYSIDE WASH	461929	1195838	17030003	14.7
12508800	YAKIMA RIVER TRIBUTARY NEAR SUNNYSIDE, WASH.	462520	1195623	17030003	1.91
12508810	WASHOUT DRAIN AT SUNNYSIDE WASH	461835	1195924	17030003	--
12508815	BLACK CANYON CR NR SUNNYSIDE WASH	462050	1195354	--	--
12508820	BLACK CANYON CREEK AT WANETA RD NR SUNNYSIDE, WA	461722	1195842	17030003	35.8
12508830	DID 9 DRAIN NR SUNNYSIDE WASH	461700	1195953	17030003	27.1
12508838	DID 3 DRAIN BLW STP AT MIDVALE RD AT SUNNYSIDE, WA	461728	1200148	17030003	--
12508840	DID 3 DRAIN NR SUNNYSIDE WASH	461658	1200030	17030003	18.8
12508850	SULPHUR CR WASTEWAY NR SUNNYSIDE WASH	461503	1200107	17030003	--
12508910	SATUS DRAIN 303 AT HWY 22 AT MABTON,WA	461302	1200108	--	--
12508990	YAKIMA RIVER AT MABTON, WASH.	461353	1195954	17030003	5360
12508997	GRANDVIEW DRAIN AT CHASE ROAD NR GRANDVIEW,WASH	461346	1195528	--	--
12508998	DRAIN TO YAKIMA R 1 MI ABOVE EUCLID BR AT GRANDVIE	461327	1195548	--	--
12509000	YAKIMA RIVER NEAR MABTON, WA	461300	1195510	17030003	5380
12509050	YAKIMA R AT EUCLID BR AT RM 55 NR GRANDVIEW,WA	461301	1195500	17030003	5400
12509200	DRAIN TO YAKIMA R ABOVE PROSSER,WA	461144	1195102	--	--
12509489	YAKIMA R AT PROSSER	461237	1194632	17030003	--
12509492	JD 52.8 AT WAMBA ROAD AT PROSSER, WA	461245	1194640	17030003	--
12509496	SHELBY DRAIN AT SHELBY ROAD AT PROSSER,WASH	461319	1191524	--	--
12509499	CHANDLER CANAL AT BUNN RD AT PROSSER, WA	461327	1194408	17030003	--
12509500	YAKIMA RIVER NEAR PROSSER, WASH.	461300	1194500	17030003	5450

Site - ID	Station Name	Latitude (Degrees)	Longitude (Degrees)	Hydrologic Unit (OWDC)	Drainage Area (Miles2)
12509600	KID CANAL NR CHANDLER, WA	461537	1193441	--	--
12509612	KID BADGER WEST LATERAL AT HEAD NR KIONA, WA	461246	1192138	17030003	--
12509614	KID BADGER EAST LATERAL AT HEAD NR KIONA, WA	461244	1192136	17030003	--
12509620	KID CANAL AT BADGER CANYON RD NR KIONA, WA	461155	1192153	--	--
12509638	KID CANAL AT CLODFELTER RD NR KENNEWICK, WA	461120	1191514	--	--
12509640	AMON WASTEWAY BLW KID PUMP NR KENNEWICK, WA	461131	1191412	--	--
12509650	KID HIGHLAND FEEDER CANAL AT HEAD NR KENNEWICK, WA	461134	1191419	17030003	--
12509660	KENNEWICK CANAL AT S ELY ST. AT KENNEWICK, WA	461203	1190929	17030003	--
12509666	KID HIGHLIFT CANAL DUMP TO CORP DRAIN NR KENNEWICK	460943	1190602	--	--
12509670	KID DIVISION 4 CANAL AT HEAD NR KENNEWICK, WA	461139	1191411	17030003	--
12509674	KID AMON PUMP LATERAL AT HEAD NR KENNEWICK, WA	461126	1191312	17030003	--
12509678	KID DIVISION 4 WASTEWAY NR MOUTH NR FINLEY, WA	460609	1185849	--	--
12509682	YAKIMA RIVER NEAR BUNN RD AT PROSSER, WA	461325	1194346	17030003	--
12509690	YAKIMA R AB SNIPES CR & SPRING CR NR WHITSTRAN, WA	461327	1194138	17030003	--
12509696	SPRING CREEK AT HANKS RD NR PROSSER, WA	461622	1194417	17030003	--
12509698	SPRING CREEK AT MCCREADIE RD NR PROSSER	461527	1194237	17030003	34
12509700	SPRING CREEK AT HESS ROAD NEAR PROSSER,WASH	461402	1194102	--	44.7
12509710	SPRING CREEK AT MOUTH AT WHITSTRAN, WA	461400	1194038	17030003	41.5
12509800	SNIPES CR TRIBUTARY NR BENTON CITY, WASH.	462015	1193930	17030003	5.18
12509820	SNIPES CREEK NEAR PROSSER,WASH	461432	1194048	--	33.6
12509829	SNIPES CREEK AT MOUTH AT WHITSTRAN, WA	461402	1194037	17030003	34.2
12509830	SNIPES CR PLUS SPRING CR AT WHITSTRAN,WA	461358	1194031	--	--
12509850	YAKIMA RIVER NEAR HOSKO RD	461423	1193902	17030003	--
12509900	YAKIMA R ABOVE CHANDLER PUMP AT RM 35.9 NR WHITSTR	461558	1193518	--	--
12510200	CORRAL CANYON CR AT MOUTH NR BENTON CITY, WA	461703	1193206	17030003	25.1
12510500	YAKIMA RIVER AT KIONA, WASH.	461513	1192837	17030003	5620
12510600	WEBBER CANYON NEAR KIONA, WASH.	461113	1192723	17030003	2.88
12510618	COLD CREEK AT COUNTY LINE NR PRIEST RAPIDS DAM, WA	463510	1195227	17030003	--
12510620	COLD CR TRIBUTARY NR PRIEST RAPIDS DAM, WASH.	463538	1195144	17020016	0.89
12510625	COLD CREEK AT HIGHWAY 24 NR PRIEST RAPIDS DAM, WA.	463414	1194717	17030003	--
12510650	DRY CR AT HIGHWAY 241 NR PRIEST RAPIDS DAM, WA.	463129	1195224	17030003	--
12510655	DRY CR NR RATTLESNAKE SP NR PRIEST RAPIDS DAM, WA.	463028	1194153	17030003	--
12510700	YAKIMA RIVER TRIBUTARY NEAR KIONA, WASH.	461553	1192316	17030003	3.35
12510800	YAKIMA R AT RM 24 NR BENTON CITY,WA	461926	1192920	--	--
12510950	YAKIMA RIVER AB HORN RAPIDS DAM NR RICHLAND, WA	462246	1192525	17030003	--
12511000	CID CANAL AT HORN RAPIDS DAM NR WEST RICHLAND, WA	462242	1192502	--	--
12511016	CID WASTEWAY AT COLUMBIA PARK AT KENNEWICK, WA	461358	1191158	--	--
12511020	CID CANAL AT GRANT STREET BRIDGE AT KENNEWICK, WA	461343	1191133	--	--
12511030	CID NO. 2 CANAL AT HEAD AT KENNEWICK, WA	461207	1190628	--	--
12511034	CID NO. 2 CANAL WASTEWAY NR FINLEY, WA	461055	1190147	--	--
12511038	CID NO. 2 CANAL AT END AT FINLEY, WA	460953	1190055	--	--
12511040	CID NO. 3 CANAL AT HEAD AT KENNEWICK, WA	461201	1190647	--	--
12511050	CID NO. 1 CANAL AT HEAD AT KENNEWICK, WA	461203	1190627	--	--
12511520	YAKIMA R BELOW HORN RAPIDS DAM NR RICHLAND,WA	462208	1192356	--	--
12511800	YAKIMA RIVER AT VAN GEISAN BR NR RICHLAND	461750	1191956	17030003	--
12511900	YAKIMA RIVER AT I-182 HWY BRIDGE AT RICHLAND, WA	461515	1191708	17030003	--

Site - ID	Station Name	Latitude (Degrees)	Longitude (Degrees)	Hydrologic Unit (OWDC)	Drainage Area (Miles2)
12512000	YAKIMA RIVER NR RICHLAND WASH	461510	1191530	17030003	6120
12512100	AMON WASTEWAY TRIB AT MEADOW SPRINGS AT RICHLAND	461307	1191520	--	--
12512150	AMON WASTEWAY NR MOUTH NR RICHLAND, WA	461427	1191527	--	--
12512500	PROVIDENCE COULEE AT CUNNINGHAM, WASH.	464920	1184836	17020016	27.8
12512550	PROVIDENCE COULEE NEAR CUNNINGHAM, WASH.	464811	1184855	17020016	52.1
12512600	HATTON COULEE TRIB NO.2 NR CUNNINGHAM, WASH.	464924	1184149	17020016	2.44
12512700	HATTON COULEE TRIBUTARY NEAR HATTON, WASH.	464550	1184756	17020016	3.71
12513000	ESQUATZEL COULEE AT CONNELL, WA	463949	1185144	17020016	234
12513300	DUNNIGAN COULEE NR CONNELL WASH.	463439	1185126	17020016	27.1
12513400	ESQUATZEL COULEE AT MESA, WA	463518	1190000	17020016	269
12513500	ESQUATZEL COULEE AT ELTOPIA, WA	462745	1190040	17020016	551
12513600	ESQUATZEL COULEE AT SAGEMOOR RD NR PASCO, WA	462313	1190406	17020016	453
12513650	ESQUATZEL DIV CHANNEL BL HEADWORKS NR PASCO, WA	462148	1190516	17020016	798
12513700	ESQUATZEL DIV CHANNEL NR MOUTH NR RICHLAND, WA	462131	1191458	--	--
12514000	COLUMBIA R AT PASCO WASH	461300	1190555	17020016	104000
12514095	ZINTEL CNYN WSTWY ABV VANCOUVER ST AT KENNEWICK,WA	461205	1190857	17020016	--
12514100	ZINTEL CANYON WASTEWAY NR MOUTH NR KENNEWICK, WA	461253	1190824	--	--
12514400	COLUMBIA RIVER BELOW HWY 395 BRIDGE AT PASCO, WA	461332	1190725	17020016	104000
12514500	COLUMBIA RIVER ON CLOVER ISLAND AT KENNEWICK,WA	461300	1190629	17020016	104000
13000000	SPOKANE FIELD OFFICE TEST STATION, WA.	473934	1172653	17010305	--
13214000	MALHEUR RIVER NR DREWSEY, OR	434705	1181950	--	910
13269000	SNAKE RIVER AT WEISER, ID	441444	1165848	--	69200
13272500	UNITY RESERVOIR NEAR UNITY, OR	443013	1181045	17050202	309
13273000	BURNT RIVER NEAR HEREFORD, OR	443014	1181035	17050202	309
13275300	POWDER RIVER NEAR SUMPTER, OR	444020	1175940	17070101	168
13277000	POWDER RIVER AT BAKER, OR	444606	1174950	17050203	351
13285000	THIEF VALLEY RESERVOIR NR POWDER, OR	450115	1174700	17050203	826
13285500	POWDER R BL T VLY RES NR NORTH POWDER,OREG.	450050	1174700	17050203	910
13286700	POWDER RIVER NEAR RICHLAND,OREG.	444640	1171730	17050203	1310
13288200	EAGLE C AB SC NR NEW BRIDGE, OREG.	445250	1171510	17050203	156
13290190	PINE CREEK NEAR OXBOW, OREGON	445713	1165221	--	--
13290450	SNAKE RIVER AT HELLS CANYON DAM ID-OR STATE LINE	451505	1164150	17050203	--
13292000	IMNAHA RIVER AT IMNAHA,OREG.	453345	1165000	17060102	622
13317000	SALMON RIVER AT WHITE BIRD, ID	454501	1161923	--	13600
13320000	CATHERINE CREEK NEAR UNION, OREG.	450920	1174626	17060104	105
13324280	LOOKINGGLASS CR BLW INTAKE NR LOOKING GLASS, OR	454406	1175148	17060104	--
13324300	LOOKINGGLASS CREEK NEAR LOOKING GLASS, OR.	454355	1175150	17060104	78.3
13326000	WALLOWA LAKE NEAR JOSEPH,OREG.	452010	1171315	17060105	50.8
13329770	WALLOWA R ABV CROSS CNTY CANAL NR ENTERPRISE, OR	452918	1172410	--	--
13330000	LOSTINE RIVER NEAR LOSTINE, OREG.	452620	1172535	17060105	70.9
13330050	LOSTINE RIVER AT CAUDLE LANE AT LOSTINE, OR	452922	1172608	--	--
13330300	LOSTINE RIVER AT BAKER ROAD NR LOSTINE, OR	453214	1172843	--	--
13330500	BEAR CREEK NEAR WALLOWA, OREG.	453137	1173305	17060105	68
13330700	BEAR CREEK AT WALLOWA, OR	453450	1173221	--	--
13331450	WALLOWA RIVER BELOW WATER CANYON, NR WALLOWA, OR	453630	1173655	--	--
13331500	MINAM RIVER AT MINAM,OREG.	453712	1174332	17060105	240

Site - ID	Station Name	Latitude (Degrees)	Longitude (Degrees)	Hydrologic Unit (OWDC)	Drainage Area (Miles2)
13331800	WALLOWA RIVER NEAR MINAM, OR	453637	1173615	--	--
13333000	GRANDE RONDE RIVER AT TROY, OREG.	455645	1172700	17060106	3280
13334000	GRANDE RONDE RIVER AT ZINDEL, WASH.	460413	1170016	17060106	3950
13334300	SNAKE RIVER NEAR ANATONE, WA	460550	1165836	17060103	93000
13334310	CAPTAIN JOHN CREEK AT MOUTH NEAR LEWISTON, ID	460910	1165555	17060103	27
13334360	COUSE CREEK AT MOUTH NEAR ASOTIN, WASH.	461217	1165800	17060103	24.1
13334400	MILL CR AT ANATONE, WASH.	460804	1170751	17060103	2.74
13334420	TENMILE CREEK AT MOUTH NEAR ASOTIN, WASH.	461752	1165928	17060103	41.9
13334450	ASOTIN CREEK BELOW CONFLUENCE NEAR ASOTIN, WA	461625	1171729	17060103	104
13334500	ASOTIN CREEK NEAR ASOTIN, WASH.	461940	1171220	17060103	156
13334700	ASOTIN CR BLW KEARNEY GULCH NR ASOTIN, WASH.	461935	1170906	17060103	170
13334900	PINTLER CREEK NEAR ANATONE, WASH.	460759	1170956	17060103	0.86
13335050	ASOTIN CREEK AT ASOTIN, WA	462027	1170318	17060103	323
13335200	CRITCHFIELD DRAW NR CLARKSTON, WASH.	462228	1170507	17060103	1.8
13335249	TAMMANY CREEK AT MOUTH, NEAR LEWISTON, ID	462154	1170336	17060103	34.9
13335299	SNAKE RIVER AT MILE 139.43 AT LEWISTON, ID	462519	1170208	--	--
13336500	SELWAY RIVER NR LOWELL, ID	460512	1153046	--	1910
13337000	LOCHSA RIVER NR LOWELL, ID	460902	1153511	--	1180
13338500	S.F. CLEARWATER RIVER AT STITES, ID	460512	1155832	--	1150
13340000	CLEARWATER RIVER AT OROFINO, ID	462843	1161523	--	5580
13340600	N.F. CLEARWATER RIVER NR CANYON RANGER STATION, ID	465026	1153711	--	1360
13341000	NORTH FORK CLEARWATER RIVER AT AHSAHKA, ID	463011	1161918	--	2440
13341050	CLEARWATER RIVER NR PECK, ID	463000	1162330	--	8040
13341470	LITTLE BEAR CR AT TROY, ID	464358	1164547	--	--
13341600	ARROW GULCH NR ARROW, ID	462823	1164617	--	--
13342450	LAPWAI CR NR LAPWAI, ID	462536	1164815	--	235
13342500	CLEARWATER RIVER AT SPALDING, ID	462655	1164935	17060306	9570
13342600	HATWAI CREEK AT MOUTH NEAR LEWISTON, IDAHO	462600	1165446	17060306	32.5
13343000	CLEARWATER RIVER NEAR LEWISTON, ID	462606	1165736	17060306	9640
13343009	LOWER GRANITE RES AT EAST LEWISTON, ID	462528	1165904	--	--
13343190	CLEARWATER RIVER AT MILE 0.41 AT LEWISTON, ID	462534	1170140	--	--
13343220	SNAKE RIVER AT MILE 137.17 AT CLARKSTON, WA	462523	1170432	17060103	--
13343400	DRY CREEK NEAR CLARKSTON, WA	462310	1170814	17060107	2.34
13343450	DRY CREEK AT MOUTH NR CLARKSTON, WASH.	462427	1170621	17060103	6.83
13343500	SNAKE RIVER NEAR CLARKSTON, WASH.	462541	1170951	17060107	103000
13343505	SNAKE RIVER ABOVE ALPOWA CR NR ANATONE, WA	462519	1171044	17060107	103000
13343510	ALPOWA CR AT PEOLA, WASH.	461903	1172928	17060107	0.5
13343520	CLAYTON GULCH NR ALPOWA, WASH.	462652	1171736	17060107	5.6
13343530	ALPOWA CREEK AT MOUTH NEAR CLARKSTON, WASH.	462444	1171245	17060107	129
13343560	STEPTOE CANYON CREEK AT MOUTH NEAR CLARKSTON, WA.	462710	1171217	17060107	23.5
13343590	LOWER GRANITE LK FOREBAY AT LOWER GRANITE DAM, WA	463934	1172531	17060107	--
13343595	SNAKE RIVER BL LOWER GRANITE DAM (RB), WA	463958	1172629	17060107	--
13343600	SNAKE RIVER BELOW LOWER GRANITE DAM, WASH	464004	1172638	17060107	--
13343620	SOUTH FORK DEADMAN CREEK TRIB NR PATAHA, WASH.	462845	1172448	17060107	0.54
13343660	SMITH GULCH TRIBUTARY NEAR PATAHA, WASH.	462924	1172642	17060107	1.85
13343680	DEADMAN CR NR CENTRAL FERRY, WASH.	463650	1174707	17060107	135

Site - ID	Station Name	Latitude (Degrees)	Longitude (Degrees)	Hydrologic Unit (OWDC)	Drainage Area (Miles2)
13343700	BEN DAY GULCH TRIBUTARY NR POMEROY, WASH.	463220	1173525	17060107	0.78
13343790	MEADOW CR TRIBUTARY NR CENTRAL FERRY, WASH.	463506	1174451	17060107	1.63
13343800	MEADOW CREEK NR CENTRAL FERRY, WASH.	463551	1174654	17060107	66.2
13343855	LAKE BRYAN FOREBAY AT LITTLE GOOSE DAM, WA	463506	1180132	17060107	--
13343860	SNAKE RIVER BELOW LITTLE GOOSE DAM, WA	463459	1180231	17060107	--
13344000	TUCANNON RIVER NR POMEROY, WASH.	462630	1174450	17060107	160
13344300	PATAHA CR NR POMEROY	462840	1173320	--	--
13344500	TUCANNON RIVER NEAR STARBUCK, WASH.	463020	1180355	17060107	431
13344506	KELLOGG CR TR NO. 2 NR STARBUCK, WASH.	462846	1180647	17060107	2.95
13344508	KELLOGG CR TRIB NR STARBUCK, WASH.	463003	1180750	17060107	6
13344510	KELLOG CREEK AT STARBUCK, WA	463038	1180747	17060107	35.3
13344520	TUCANNON R AT POWERS	463218	1180918	17060107	--
13344620	PALOUSE RIVER NEAR HARVARD, ID	465700	1164020	--	--
13344700	DEEP CR TRIB NR POTLATCH, ID	470128	1165257	--	--
13344800	DEEP CREEK NEAR POTLATCH, ID	465738	1165604	--	--
13345000	PALOUSE RIVER NR POTLATCH, ID.	465455	1165700	17060108	317
13345300	PALOUSE RIVER AT PALOUSE, WASH.	465436	1170407	17060108	360
13345310	PALOUSE RIVER AT STATE ROUTE 272 NEAR PALOUSE, WA	465452	1170505	17060108	345
13345500	PALOUSE RIVER AT ELBERTON, WA	465850	1171310	17060108	406
13345510	PALOUSE RIVER AT ELBERTON ROAD NR ELBERTON, WA	465837	1171359	17060108	452
13346000	PALOUSE RIVER NEAR COLFAX, WASH.	465515	1171904	17060108	491
13346050	PALOUSE R ABV BUCK CANYON AT COLFAX	465428	1172014	17060108	--
13346100	PALOUSE RIVER AT COLFAX, WASH.	465350	1172120	17060108	497
13346400	S.F. PALOUSE RIVER TRIBUTARY NR PULLMAN, WASH.	463855	1170505	17060108	--
13346450	S.F. PALOUSE RIVER NR MOSCOW, ID	464241	1165845	--	--
13346500	SO FK PALOUSE R ABV PARADISE C NR PULLMAN, WASH.	464220	1170955	17060108	84.4
13346600	S.F. PALOUSE R BLW SUNSHINE CR AT PULLMAN, WASH	464307	1170948	17060108	--
13346700	PARADISE CR AT D ST AT MOSCOW, ID	464345	1165832	--	--
13346750	PARADISE CR AT MOSCOW, ID	464326	1165846	--	--
13346760	PARADISE CREEK AT STP NEAR MOSCOW, ID	464355	1170124	--	17.1
13346770	PARADISE CREEK BELOW STP NEAR MOSCOW, ID	464352	1170207	--	18.7
13346990	PARADISE CREEK AT PULLMAN, WASH.	464316	1170810	17060108	34
13347000	PARADISE CR NR PULLMAN, WASH.	464310	1170930	17060108	34.5
13347500	DRY FORK OF S F PALOUSE R AT PULLMAN WASH	464325	1171110	17060108	7.28
13348000	SOUTH FORK PALOUSE RIVER AT PULLMAN, WASH.	464357	1171048	17060108	132
13348400	MISSOURI FLAT CREEK TRIB NEAR PULLMAN, WASH.	464552	1171001	17060108	0.88
13348500	MISSOURI FLAT CREEK AT PULLMAN, WASH.	464359	1171047	17060108	27.1
13348505	STP OUTFLOW TO SF PALOUSE RIVER AT PULLMAN, WA	464420	1171117	17060108	--
13348520	S F PALOUSE R NR PULLMAN	464512	1171246	17060108	--
13349000	FOURMILE CR AT SHAWNEE, WASH.	464955	1171620	17060108	71.6
13349200	S.F. PALOUSE RIVER AT COLFAX, WA	465232	1172042	17060108	274
13349210	PALOUSE RIVER BELOW SOUTH FORK AT COLFAX, WASH.	465323	1172209	17060108	796
13349220	PALOUSE RIVER BELOW STP NEAR COLFAX, WA	465333	1172244	17060108	788
13349300	PALOUSE RIVER TRIBUTARY AT COLFAX, WASH.	465322	1172259	17060108	2.1
13349302	PALOUSE R NR DIAMOND	465542	1172451	17060108	--
13349309	PALOUSE R TRIBUTARY AT WINONA, WASH.	465737	1194812	17060108	2.94

Site - ID	Station Name	Latitude (Degrees)	Longitude (Degrees)	Hydrologic Unit (OWDC)	Drainage Area (Miles2)
13349310	PALOUSE RIVER AT WINONA,WASH.	465640	1174810	17060108	986
13349320	REBEL FLAT CREEK AT WINONA, WA	465636	1174749	17060108	73.2
13349325	PHILLEO DITCH NR CHENEY, WA	472407	1172948	17060109	14.7
13349340	PINE CR AT ROSALIA, WASH	471430	1172225	17010306	--
13349350	HARDMAN DRAW TRIBUTARY AT PLAZA, WASH.	471836	1172314	17060109	1.64
13349400	PINE CREEK AT PINE CITY, WA	471224	1173014	17060109	302
13349410	PINE CREEK AT PINE CITY ROAD AT PINE CITY, WA	471216	1173125	17060109	302
13349500	ROCK CREEK NEAR EWAN, WASH.	470822	1174326	17060109	523
13349670	PLEASANT VALLEY CR TRIBUTARY NR THORNTON, WASH.	470230	1172619	17060109	0.77
13349690	COTTONWOOD C BL PLEASANT VALLEY C NR EWAN,WASH	470651	1173944	17060109	110
13349700	ROCK CREEK BELOW COTTONWOOD CREEK NEAR REVERE, WA	470616	1174713	17060109	--
13349800	IMBLER CR TRIBUTARY NEAR LAMONT, WASH.	470951	1175256	17060109	1.33
13349850	ROCK CREEK NEAR REVERE, WA	470425	1175603	17060109	--
13349860	ROCK CREEK AT BREEDEN ROAD BRIDGE NEAR REVERE, WA	470333.6	1175759.1	17060108	--
13349900	ROCK CR NR WINONA,WASH.	465459	1175537	17060109	954
13350000	PALOUSE RIVER AT WINONA, WASH.	465435	1175540	17060108	2060
13350300	UNION FLAT CR NR COLTON, WASH	463435	1170855	17060108	--
13350448	COW CR AT GENESEE, ID	463248	1165537	--	--
13350500	UNION FLAT CREEK NEAR COLFAX, WASH.	464837	1172552	17060108	189
13350700	UNION FLAT CR NR LACROSSE,WASH.	465142	1175333	17060108	294
13350800	WILLOW CR TRIBUTARY NEAR LACROSSE, WASH.	464526	1175508	17060108	0.95
13350900	WILLOW CR AT GORDON,WASH.	464554	1180123	17060108	67.4
13351000	PALOUSE RIVER AT HOOPER, WA	464531	1180852	17060108	2500
13351300	SILVER LAKE AT MEDICAL LAKE,WASH	473424	1173905	17060108	19
13351495	BADGER LAKE NR AMBER,WASH	472019	1173847	17060108	--
13351500	WILLIAMS LAKE NEAR AMBER, WASH.	472005	1174001	17060108	23.4
13351520	AMBER LAKE AT AMBER, WA.	472035	1174315	17060108	--
13351800	SPRAGUE LAKE NR SPRAGUE,WASH	471723	1180116	17060108	289
13352000	COW CR AT OUTLET OF COLVILLE LAKE NR KEYSTONE, WA	471339	1180639	17060108	117
13352200	COW CREEK TRIBUTARY NEAR RITZVILLE, WASH.	471038	1181131	17060108	1.51
13352500	COW CREEK AT HOOPER, WASH.	464546	1180846	17060108	679
13352550	STEWART CANYON TRIB NEAR RIPARIA, WASH.	463821	1180741	17060108	1.27
13352595	LAKE H G WEST FOREBAY AT LOWER MONUMENTAL DAM, WA	463314	1183252	17060110	--
13352600	SNAKE RIVER BELOW LOWER MONUMENTAL DAM, WA	463314	1183252	17060108	--
13352950	LAKE SACAJAWEA FOREBAY AT ICE HARBOR DAM, WA	461458	1185242	17060110	--
13353000	SNAKE RIVER BLW ICE HARBOR DAM, WASH.	461502	1185255	17060110	108000
13353010	SNAKE RIVER BL GOOSE ISLAND BL ICE HARBOR DAM, WA	461432	1185620	17060110	--
13353050	SMITH CANYON TRIBUTARY NEAR CONNELL, WASH.	463228	1184554	17060110	1.8
13353200	SNAKE RIVER AT BURBANK, WASH.	461259	1190122	17060110	109000
14000000	PASCO FIELD OFFICE TEST STATION, WA.	461846	1191528	17020016	--
14005000	COLUMBIA RIVER AT FINLEY,WASH.	461036	1190111	17070101	--
14006000	CID NO. 3 CANAL AT END NR FINLEY, WA	460747	1190027	--	--
14012600	WALLA WALLA R NR COLLEGE PLACE	460046	1182318	17070102	--
14013000	MILL CREEK NEAR WALLA WALLA, WASH.	460029	1180703	17070102	59.6
14013500	BLUE CREEK NEAR WALLA WALLA, WASH.	460330	1180810	17070102	17
14013600	MILL CR BLW BLUE CR NR WALLA WALLA, WA.	460455	1181125	17070102	91

Site - ID	Station Name	Latitude (Degrees)	Longitude (Degrees)	Hydrologic Unit (OWDC)	Drainage Area (Miles2)
14013700	MILL CR AT FIVE MILE RD BRIDGE NR WALLA WALLA, WA	460509	1181338	17070102	--
14014000	YELLOWHAWK CR AT WALLA WALLA, WASH.	460420	1181655	17070102	--
14014400	YELLOWHAWK CR NR COLLEGE PLACE, WASH.	460120	1182315	17070102	--
14014500	GARRISON CR AT WALLA WALLA, WASH.	460425	1181710	17070102	--
14015000	MILL CREEK AT WALLA WALLA, WASH.	460435	1181621	17070102	95.7
14015002	MILL CR AT TAUSICK WAY AT WALLA WALLA	460434	1181658	17070102	--
14015400	MILL CR AT MISSION RD BR NR COLLEGE PLACE	460232	1182812	17070102	--
14015550	WALLA WALLA R NR LOWDEN,WASH.	460253	1183314	--	429
14015900	SPRING CREEK TRIBUTARY NEAR WALLA WALLA, WASH.	460615	1181121	17070102	1.94
14016000	DRY CREEK NEAR WALLA WALLA, WASH.	460720	1181410	17070102	48.4
14016050	DRY CR AT LOWDEN,WASH.	460325	1183523	17070102	246
14016100	PINE CR NR TOUCHET,WASH.	460044	1183653	17070102	168
14016500	NORTH FORK TOUCHER RIVER AT DAYTON, WA	461645	1175405	17070102	102
14016600	HATLEY CREEK NEAR DAYTON, WASH.	461652	1175337	17070102	4.12
14016610	EF TOUCHET R BL HATLEY CR NR DAYTON,WASH	461645	1175405	--	106
14016640	EAST FORK TOUCHET RIVER AT DAYTON, WASH.	461753	1175705	17070102	108
14016650	DAVIS HOLLOW NEAR DAYTON, WASH.	461800	1175710	17070102	3.01
14016700	SOUTH FORK TOUCHET RIVER AT DAYTON, WASH.	461613	1175646	17070102	39
14016800	PATIT CR NR DAYTON,WASH.	462025	1175702	--	53.5
14016810	TOUCHET RIVER NEAR DAYTON, WASH.	461726	1180240	17070102	--
14016900	WHISKEY CR NR WAITSBURG,WASH.	461440	1180441	--	--
14016950	COPPEI CR NR WAITSBURG,WASH.	461545	1180907	17070102	34.1
14017000	TOUCHET RIVER AT BOLLES, WASH.	461628	1181315	17070102	361
14017040	THORN HOLLOW NEAR DAYTON, WASH.	462050	1180355	17070102	2.68
14017070	EAST FORK MCKAY CREEK NEAR HUNTSVILLE, WASH.	462147	1180757	17070102	4.92
14017100	WHETSTONE HOLLOW AT PRESCOTT,WASH.	461757	1181938	17070102	101
14017120	TOUCHET R NR LAMAR,WASH.	461714	1182913	17070102	--
14017200	BADGER HOLLOW NEAR CLYDE, WASH.	462457	1182016	17070102	4.16
14017490	TOUCHET RIVER TRIBUTARY NEAR LOWDEN, WA	460910	1183825	17070102	4.7
14017500	TOUCHET R NR TOUCHET, WASH.	460230	1184100	17070102	733
14017600	TOUCHET RIVER AT TOUCHET	460229	1184059	17070102	--
14018000	ATTALIA IRRIGATION DISTRICT CANAL NR WALLULA, WA	460400	1185130	17070102	--
14018500	WALLA WALLA RIVER NEAR TOUCHET, WASH.	460140	1184343	17070102	1660
14018600	WALLA WALLA R BL WARM SPR CR NR TOUCHET	460216	1184555	17070102	--
14019000	WALLA WALLA RIVER NEAR WALLULA, WA	460400	1185130	17070102	1760
14019100	WALLA WALLA RIVER TRIBUTARY NEAR WALLULA, WASH.	460312	1185258	17070102	0.8
14019200	COLUMBIA RIVER AT MCNARY DAM,NEAR UMATILLA,OR	455558.2	1191743.7	17070101	214000
14019210	COLUMBIA R FOREDAY AT MCNARY DAM NR UMATILLA, OR	455739	1191745	17070101	214000
14019220	COLUMBIA RIVER AT MCNARY DAM LOCK, NR UMATILLA, OR	455826	1191747	17070101	--
14019240	COLUMBIA RIVER BELOW MCNARY DAM NEAR UMATILLA, OR	455601	1191931	17070101	--
14020000	UMATILLA RIVER ABOVE MEACHAM CREEK NR GIBBON, OR	454311	1181920	17070103	131
14020300	MEACHAM CREEK AT GIBBON,OREG.	454120	1182120	17070103	176
14020520	SQUAW CREEK NEAR GIBBON, OR	454000	1182400	17070103	32.6
14020740	MOONSHINE CR NR MISSION, OR	453937	1183542	--	4.62
14020760	COTTONWOOD CR NR MISSION, OR	453938	1183352	--	4.01
14020850	UMATILLA R AT W RESERVATION BNDY NR PENDLETON, OR	454018	1184408	--	--

Site - ID	Station Name	Latitude (Degrees)	Longitude (Degrees)	Hydrologic Unit (OWDC)	Drainage Area (Miles2)
14021980	PATAWA CR AT WEST BOUNDARY NR PENDLETON, OR	453911	1184439	--	30
14022200	NORTH FORK MCKAY CREEK NEAR PILOT ROCK,OREG.	453024	1183657	17070103	48.6
14033500	UMATILLA R NR UMATILLA OREG	455411	1191933	17070103	2290
14034040	BOFER CANYON TRIBUTARY NR KENNEWICK, WASH.	460342	1191322	17020016	1.53
14034100	FOURMILE CANYON NR PLYMOUTH, WASH.	455810	1191322	17070101	81.2
14034250	GLADE CREEK TRIBUTARY NEAR BICKLETON, WASH.	460407	1201223	17070101	0.5
14034270	EAST BRANCH GLADE CREEK NEAR PROSSER, WASH.	460435	1193610	17070101	50.3
14034280	EAST BRANCH GLADE CREEK TRIB NR PROSSER, WASH.	460739	1193610	17070101	0.77
14034320	DEAD CANYON TRIB NEAR ALDERDALE, WASH.	455512	1195429	17070101	0.62
14034325	ALDER CREEK NEAR BICKLETON, WASH.	455949	1201631	17070101	8.35
14034350	ALDER CR AT ALDERDALE, WASH.	455030	1195530	17070101	197
14034470	WILLOW CREEK ABV WILLOW CR LAKE, NR HEPPNER, OR	452027	1193053	17070104	67.6
14034480	BALM FORK NEAR HEPPNER, OR	451956	1193224	17070104	26.3
14034490	WILLOW CREEK LAKE AT HEPPNER, OR	452050	1193237	17070104	96.6
14034500	WILLOW CREEK AT HEPPNER, OREG.	452102	1193256	17070104	96.8
14034550	SHOBE CREEK AT HEPPNER, OR	452000	1193337	17070104	--
14034580	HINTON CR BL KILKENNY FK NR HEPPNER, OR	452155	1192516	17070104	--
14034600	HINTON CREEK NEAR HEPPNER, OR	452152	1193118	17070104	--
14036500	ROCK CR NR GOLDENDALE, WASH.	454810	1203010	17070101	120
14036600	ROCK CREEK NEAR ROOSEVELT, WASH.	454455	1202604	17070101	213
14036860	JOHN DAY R AT BLUE MTN HOT SPRINGS NR PRAIRIE CITY	442129	1183430	--	--
14038530	JOHN DAY RIVER NEAR JOHN DAY, OR	442507	1185419	17070101	386
14044000	M FK JOHN DAY R AT RITTER, OREG.	445320	1190825	17070203	515
14046000	N FK JOHN DAY R AT MONUMENT, OREG.	444850	1192550	17070202	2520
14046500	JOHN DAY RIVER AT SERVICE CREEK, OR	444738	1200020	17070204	5090
14048000	JOHN DAY R AT MCDONALD FERRY,OREG.	453516	1202430	17070204	7580
14103000	DESCHUTES RIVER AT MOODY, NEAR BIGGS OREG	453720	1205405	17070306	10500
14105700	COLUMBIA RIVER NEAR THE DALLES, OR	453900	1205800	17070105	237000
14106000	KLICKITAT RIVER ABOVE PEARL CREEK, NR GLENWOOD, WA	461850	1211530	17070106	131
14106500	PEARL CREEK NEAR GLENWOOD, WA	461850	1211550	17070106	4
14107000	KLICKITAT R ABV WEST FK NR GLENWOOD, WASH.	461554	1211438	17070106	151
14108000	WEST FORK KLICKITAT R NR GLENWOOD, WASH.	461530	1211620	17070106	87
14108200	KLICKITAT R BLW SODA SPR CR NR GLENWOOD	461258	1211609	17070106	--
14108500	CUNNINGHAM CREEK NEAR GLENWOOD, WA	461040	1211720	17070106	16
14109000	BIG MUDDY CR NR GLENWOOD, WASH.	460906	1211733	17070106	--
14109500	COUGAR CREEK NEAR GLENWOOD, WA	460830	1211800	17070106	3.8
14110000	KLICKITAT RIVER NEAR GLENWOOD, WASH.	460520	1211530	17070106	360
14110480	TROUT CR NR GLENWOOD	460349	1211249	17070106	--
14110490	ELK CR NR GLENWOOD	460322	1211152	17030003	--
14110700	MEDLEY CANYON CR NR GLENWOOD, WASH.	455647	1211813	17070106	1.26
14110720	OUTLET CR NR GLENWOOD,WASH	460101	1211228	17070106	124
14110800	WHITE CR NR GLENWOOD	460048	1210857	17070106	--
14111100	SUMMIT CR NR GLENWOOD	455911	1210729	17070106	--
14111400	KLICKITAT R BL SUMMIT CR NR GLENWOOD, WA	455745	1210604	17070106	--
14111500	KLICKITAT R BLW GLENWOOD	455613	1210703	17070106	--
14111700	BUTLER CREEK NEAR GOLDENDALE, WASH.	455447	1204217	17070106	11.6

Site - ID	Station Name	Latitude (Degrees)	Longitude (Degrees)	Hydrologic Unit (OWDC)	Drainage Area (Miles2)
14111800	W PRONG LITTLE KLICKITAT R NR GOLDENDALE, WASH.	455530	1204311	17070106	10.4
14112000	LITTLE KLICKITAT R NR GOLDENDALE, WASH.	455040	1204742	17070106	83.5
14112200	LITTLE KLICKITAT RIVER TRIB NR GOLDENDALE, WASH.	455015	1204750	17070106	0.71
14112300	SPRING CREEK NEAR BLOCKHOUSE, WASH.	455025	1205415	17070106	2.75
14112400	MILL CREEK NEAR BLOCKHOUSE, WASH.	455134	1205749	17070106	26.9
14112500	LITTLE KLICKITAT R NR WAHKIACUS, WASH	455038	1210332	17070106	280
14113000	KLICKITAT RIVER NEAR PITT, WASH.	454524	1211232	17070106	1300
14120000	HOOD RIVER AT TUCKER BRIDGE, NR HOOD RIVER, OR	453920	1213250	17070105	279
14121300	WHITE SALMON R BLW CASCADES CR NR TROUT L, WASH.	460606	1213614	17070105	32.4
14121400	WHITE SALMON R AB TR LK CR NR TROUT LK, WASH.	460150	1213150	17070105	64.9
14121500	TROUT LAKE CREEK NR TROUT LAKE, WASH.	460020	1213220	17070105	69.3
14122000	WHITE SALMON RIVER NEAR TROUT LAKE, WASH.	455930	1212930	17070105	185
14122500	WHITE SALMON R AT SPLASH DAM NR TROUT LK, WASH.	455700	1212820	17070105	240
14122800	PHELPS C NR B-Z CORNER, WASH.	455301	1213113	17070105	1.88
14122900	WHITE SALMON RIVER AT B-Z CORNER, WASH.	455145	1213015	17070105	269
14123000	WHITE SALMON RIVER AT HUSUM, WASH.	454750	1212900	17070105	294
14123500	WHITE SALMON R NR UNDERWOOD, WASH.	454508	1213133	17070105	386
14124000	LITTLE WHITE SALMON R NR WILLARD, WASH.	454800	1213830	17070105	39.2
14124500	LITTLE WHITE SALMON RIVER AT WILLARD, WASH.	454650	1213730	17070105	114
14125000	LTLE WHITE SALMON R ABV LAPHAM CR WILLARD, WASH.	454600	1213740	17070105	117
14125200	ROCK CREEK NEAR WILLARD, WASH.	454510	1213850	17070105	4.1
14125500	LITTLE WHITE SALMON RIVER NEAR COOK, WASH.	454325	1213758	17070105	134
14126300	COLUMBIA RIVER TRIBUTARY AT HOME VALLEY, WASH.	454250	1214640	17070105	0.54
14126500	FALLS CREEK NEAR CARSON, WASH.	455420	1215620	17070105	24.3
14126600	WIND R BLW DRY CR NEAR CARSON, WASH.	455250	1215838	--	79
14127000	WIND R AB TROUT CREEK NR CARSON, WASH.	454831	1215427	17070105	108
14127200	LAYOUT CR NR CARSON, WASH.	454901	1220250	17070105	1.8
14127300	TROUT CREEK NEAR STABLER, WA	454921	1220055	17070105	21
14127500	TROUT CREEK NEAR CARSON, WASH.	454800	1215500	17070105	30.3
14128000	PANTHER CREEK NEAR CARSON, WASH.	454800	1215200	17070105	30.1
14128500	WIND RIVER NEAR CARSON, WASH.	454337	1214737	17070105	225
14128600	COLUMBIA R AT STEVENSON, WA	454158	1215202	17070105	240000
14143200	CANYON CREEK NEAR WASHOUGAL, WASH.	453545	1221130	17080001	2.74
14143500	WASHOUGAL RIVER NEAR WASHOUGAL, WASH.	453730	1221655	17080001	108
14144000	LITTLE WASHOUGAL RIVER NEAR WASHOUGAL, WASH.	453651	1222126	17080001	23.3
14144100	WASHOUGAL R AT WASHOUGAL, WASH	453511	1222110	17080001	--
14144550	SHANGHAI CREEK NEAR HOCKINSON, WASH.	454205	1222625	17080001	2.14
14144590	LACKAMAS LAKE AT CAMAS, WASH.	453616	1222422	17080001	--
14144600	GROENEVELD CREEK NEAR CAMAS, WASH.	453505	1222730	17080001	0.51
14144700	COLUMBIA R AT VANCOUVER, WA	453715	1224020	17080001	241000
14211895	BURNT BRIDGE CREEK AT 112TH AVE AT VANCOUVER, WA	453930	1223324	17080001	3.6
14211897	BURNT BRIDGE CREEK AT BURTON ROAD AT VANCOUVER, WA	453823	1223450	17080001	--
14211898	BURNT BRIDGE CREEK AT 18TH STREET AT VANCOUVER, WA	453806	1223721	17080001	18.9
14211900	BURNT BRIDGE CREEK AT VANCOUVER, WA	453910	1223920	17080001	21.6
14211901	COLD CREEK AT MOUTH AT VANCOUVER, WA	453933	1224000	17080001	2.71
14211902	BURNT BRIDGE CREEK NEAR MOUTH AT VANCOUVER, WA	453942	1224003	17080001	27.6

Site - ID	Station Name	Latitude (Degrees)	Longitude (Degrees)	Hydrologic Unit (OWDC)	Drainage Area (Miles2)
14211903	BURNT BRIDGE CREEK AT MOUTH AT VANCOUVER, WA	453942	1224016	17080001	--
14212000	SALMON CREEK NEAR BATTLE GROUND, WASH.	454626	1222640	17080001	18.3
14212300	SALMON CR ABV WEAVER CR NR BRUSH PRAIRIE, WASH.	454457	1223132	17080001	--
14212350	BATTLEGROUND LAKE NR BATTLEGROUND, WASH.	454811	1222937	17080001	--
14212400	WEAVER CRK AT BRUSH PRAIRIE, WASH.	454434	1223243	17080001	--
14212500	SALMON CREEK NEAR BRUSH PRAIRIE, WA	454345	1223550	17080001	63.5
14213000	SALMON CREEK NEAR VANCOUVER, WASH.	454232	1223853	17080001	80.7
14213200	LEWIS RIVER NEAR TROUT LAKE, WASH.	460955	1215210	17080002	127
14213500	BIG CREEK BELOW SKOOKUM MDW NR TROUT LK, WASH.	460536	1215150	17080002	13.2
14214000	RUSH CREEK AB MEADOW CREEK NR TROUT LAKE, WASH.	460230	1215030	17080002	5.87
14214200	RUSH CREEK ABOVE MEADOW CREEK, NEAR GULER, WA	460230	1215130	17080002	10.1
14214500	MEADOW CR BLW LONE BUTTE MDW NR TROUT LK, WASH.	460250	1215120	17080002	11.7
14215000	RUSH CREEK ABOVE FALLS NEAR COUGAR, WASH.	460312	1215440	17080002	26
14215500	CURLY CREEK NEAR COUGAR, WASH.	460222	1215438	17080002	11.6
14216000	LEWIS RIVER AB MUDDY RIVER NR COUGAR, WASH.	460338	1215900	17080002	227
14216100	MUDDY RIVER ABOVE SMITH CREEK NEAR COUGAR, WASH.	460002	1220312	17080002	--
14216200	SMITH CREEK AT MOUTH NEAR COUGAR, WASH.	460002	1220310	17080002	23.9
14216300	CLEARWATER CREEK NEAR MOUTH NEAR COUGAR, WA.	461207	1220054	--	33
14216350	MUDDY RIVER AB CLEAR CR NR COUGAR, WASH.	460703	1220024	17080002	84.1
14216450	CLEAR CREEK NEAR COUGAR, WASH.	460740	1215920	17080002	46.9
14216500	MUDDY CREEK BELOW CLEAR CREEK NEAR COUGAR, WA	460433	1215951	17080002	135
14216800	PINE CREEK NEAR COUGAR, WASH.	460530	1220227	17080002	22.4
14216900	PINE CREEK AT MOUTH NEAR COUGAR, WASH.	460424	1220057	17080002	26
14217000	LEWIS RIVER AT PETERSONS RANCH NR COUGAR, WA	460340	1221120	17080002	454
14217100	SWIFT CR 2 MILES ABV WEST FK NR COUGAR, WASH.	460743	1221045	17080002	--
14217500	SWIFT CREEK NEAR COUGAR, WASH.	460350	1221130	17080002	27.5
14217598	SWIFT RESERVOIR AT CAMP CR NR COUGAR, WASH.	460325	1220405	17080002	--
14217600	SWIFT RESERVOIR NEAR COUGAR, WASH.	460338	1221144	17080002	481
14217700	SWIFT POWERPLANT NO 1 TAILRACE NR COUGAR, WASH.	460340	1221205	--	481
14217812	SWIFT POWERPLANT NO 2 HEADWATER NR COUGAR, WASH.	460335	1221530	--	--
14218000	LEWIS RIVER NEAR COUGAR, WASH.	460330	1221240	17080002	481
14218030	SWIFT POWER PLANT 2 TAILWATER NR COUGAR, WASH.	460330	1221535	17080002	--
14218300	DOG CREEK AT COUGAR, WASH.	460240	1221830	17080002	2.31
14218500	YALE RESERVOIR NEAR YALE, WASH.	460306	1221730	17080002	596
14219000	CANYON CREEK NR AMBOY, WA	455630	1221915	17080002	63.8
14219500	LEWIS RIVER NEAR AMBOY, WASH.	455750	1222300	17080002	665
14219800	SPEELYAI CREEK NEAR COUGAR, WASH.	460028	1222046	17080002	12.6
14220000	LAKE MERWIN AT ARIEL, WASH.	455723	1223313	17080002	730
14220200	LEWIS R AT MERWIN DAM AT ARIEL, WASH.	455721	1223320	17080002	--
14220500	LEWIS RIVER AT ARIEL, WASH.	455707	1223346	17080002	731
14221000	CHELATCHIE CREEK AT AMBOY, WA	455445	1222645	17080002	12.8
14221500	CEDAR CREEK NEAR ARIEL, WASH.	455554	1223140	17080002	40.8
14221700	LEWIS RIVER AT WOODLAND, WASH.	455325	1224355	17080002	--
14222000	EAST FORK LEWIS RIVER NR YACOLT, WA	454900	1221530	17080002	31.4
14222500	EAST FORK LEWIS RIVER NEAR HEISSON, WASH.	455013	1222754	17080002	125
14222540	EAST FORK LEWIS RIVER NR BATTLEGROUND, WASH.	454836	1223245	17080002	151

Site - ID	Station Name	Latitude (Degrees)	Longitude (Degrees)	Hydrologic Unit (OWDC)	Drainage Area (Miles2)
14222550	EAST FORK LEWIS R NR DOLLAR CORNER, WASH.	454853	1223526	17080002	--
14222700	EAST FK LEWIS R TRIB NR WOODLAND, WASH.	455129	1224215	17080002	0.53
14222749	KALAMA R ABOVE FOSSIL CR NEAR COUGAR, WASH.	460820	1221925	17080003	--
14222910	COLUMBIA R AT KALAMA, WA	460113	1225130	17080003	254000
14222920	KALAMA R NR COUGAR, WASH.	460733	1221957	17080003	12.3
14222930	FOSSIL CREEK NR COUGAR, WASH.	460822	1222030	17080003	8.21
14222950	DRY CREEK NEAR COUGAR, WASH.	460717	1221934	17080003	3.29
14222960	MERRILL LAKE NEAR COUGAR, WASH.	460443	1221852	17080003	--
14222970	SPRING CREEK NEAR COUGAR, WASH.	460637	1222123	17080003	--
14222980	KALAMA RIVER BELOW FALLS NEAR COUGAR, WASH.	460625	1222133	17080003	37.4
14222986	KALAMA R BELOW SUMMERS CRK NR ARIEL, WASH.	460203	1223916	17080003	--
14223000	KALAMA RIVER NEAR KALAMA, WASH.	460102	1224352	17080003	179
14223500	KALAMA RIVER BELOW ITALIAN CR NEAR KALAMA, WASH.	460210	1225120	17080003	198
14223600	KALAMA RIVER ABV SPENCER CR NEAR KALAMA, WASH.	460250	1225011	17080003	202
14223800	COLUMBIA RIVER TRIBUTARY AT CARROLLS, WASH.	460420	1225140	17080003	1.06
14224000	OHANAPECOSH RIVER NEAR LEWIS, WASH.	464030	1213510	17080004	101
14224500	CLEAR FK COWLITZ RIVER NR PACKWOOD, WASH.	464050	1213430	17080004	56.5
14224590	SNOW LAKE NEAR PACKWOOD, WA	464527	1214149	17080005	--
14224600	BLUE LAKE NEAR PACKWOOD, WA	464418	1214036	17080004	--
14225000	COAL CR AT MOUTH NR LEWIS, WASH.	463830	1213640	17080004	10.5
14225400	PACKWOOD LAKE NEAR PACKWOOD, WASH.	463547	1213407	17080004	19.2
14225500	LAKE CREEK NEAR PACKWOOD, WASH.	463547	1213408	17080004	19.2
14226000	LAKE CREEK AT MOUTH, NEAR PACKWOOD, WASH.	463748	1213812	17080004	26.5
14226500	COWLITZ RIVER AT PACKWOOD, WASH.	463647	1214041	17080004	287
14226800	SKATE CREEK TRIBUTARY NEAR PACKWOOD, WASH.	464210	1214830	17080004	1.22
14226900	SKATE CREEK TRIB NO.2 NEAR PACKWOOD, WASH.	464030	1214510	17080004	1.82
14227500	HAGER CREEK NEAR LEWIS, WA	463500	1213900	17080004	3.81
14228000	NORTH FORK HAGER CREEK NEAR LEWIS, WA	463520	1213840	17080004	1.45
14228500	HALL CR NR PACKWOOD, WASH.	463450	1214110	17080004	10.9
14229000	JOHNSON CREEK BLW WEST FORK, NEAR LEWIS, WASH.	463150	1213700	17080003	33.3
14229500	JOHNSON CR BL GLACIER CR NR PACKWOOD, WASH.	463230	1213715	17080004	42.8
14230000	JOHNSON CREEK NEAR PACKWOOD, WASH.	463430	1214200	17080004	50
14230500	SILVER CREEK NEAR RANDLE, WA	463230	1215500	17080004	51.1
14231000	COWLITZ RIVER AT RANDLE, WA	463157	1215720	17080004	541
14231100	MILLER C AT RANDLE, WASH.	463210	1215720	17080004	2.29
14231600	COWLITZ R ABOVE CISPUS R NEAR RANDLE, WASH.	462747	1220522	17080005	--
14231670	WALUPT LAKE NR PACKWOOD, WASH.	462515	1212817	17080004	13.7
14231700	CHAMBERS CR NR PACKWOOD, WASH.	462455	1213245	17080004	5.25
14231900	CISPUS RIVER ABOVE YELLOWJACKET CR NR RANDLE, WA	462638	1215028	17080004	250
14232000	YELLOWJACKET CREEK NEAR RANDLE, WA	462545	1215000	17080004	66.3
14232300	QUARTZ CR NR COSMOS, WASH.	462150	1220315	17080002	1.48
14232500	CISPUS RIVER NEAR RANDLE, WASH.	462650	1215146	17080004	321
14233000	TOWER ROCK SPRINGS NEAR RANDLE, WA	462645	1215200	17080004	--
14233160	CISPUS R BELOW WOODS CR NEAR RANDLE, WASH.	462628	1220140	17080004	400
14233200	QUARTZ CREEK NR KOSMOS, WASH.	462150	1220315	17080005	1.48
14233400	COWLITZ RIVER NR RANDLE, WASH.	462813	1220551	17080004	1030

Site - ID	Station Name	Latitude (Degrees)	Longitude (Degrees)	Hydrologic Unit (OWDC)	Drainage Area (Miles2)
14233490	LAKE SCANEWA NEAR KOSMOS, WA	462800	1220628	17080005	1040
14233500	COWLITZ RIVER NEAR KOSMOS, WA	462759	1220628	17080005	1040
14234000	RAINY CR NR KOSMOS, WASH.	463030	1220915	17080005	17.9
14234500	LANDERS CREEK NEAR KOSMOS, WA	462730	1221415	17080005	9.61
14234800	RIFFE LAKE NEAR MOSSYROCK, WASH.	463207	1222525	17080005	1150
14234805	MOSSYROCK POWER PLANT TAILWATER NR MOSSYROCK, WA	463207	1222528	17080005	--
14234810	COWLITZ RIVER BELOW MOSSYROCK DAM, WASH.	463207	1222526	17080005	1150
14235000	COWLITZ RIVER AT MOSSYROCK, WASH.	463301	1222931	17080005	1160
14235300	TILTON RIVER NEAR MINERAL, WASH.	463940	1221155	17110015	0.79
14235500	WEST FORK TILTON RIVER NEAR MORTON, WASH.	463640	1221436	17080005	16.4
14235700	E.F. TILTON R NR MORTON, WASH.	463520	1221430	17080005	--
14235900	TILTON R NR MORTON, WASH.	463420	1221540	17080005	--
14236000	TILTON RIVER AT MORTON, WA	463330	1221700	17080005	70.2
14240351	COLDWATER LAKE (SO. SIDE) NR SPIRIT LK, WASH.	461716	1221535	17080005	--
14240352	COLDWATER LAKE CANAL NR SPIRIT LK, WASH.	461730	1221550	17080005	--
14240360	NORTH FORK TOUTLE RIVER NEAR ELK ROCK	461535	1221530	17080005	--
14240370	NF TOUTLE R BLW MARATTA CR NR SPIRIT LK, WASH.	461703	1221808	17080005	--
14240400	N. F. TOUTLE RIVER ABV. BEAR CR. NR. KID VALLEY,WA	461621	1222054	--	--
14240440	CASTLE CREEK ABV CASTLE LAKE NR SPIRIT LAKE, WA	461512	1221542	17080005	--
14240445	SOUTH FORK CASTLE LAKE DEBRIS DAM	461532	1221640	17080005	--
14240446	CASTLE LAKE NEAR MOUNT ST. HELENS, WA	461531	1221627	17080005	--
14240447	SO. FK. CASTLE CR LK WEST NR SPIRIT LK, WASH.	461531	1221628	17080005	--
14240450	ELK CR NR SPIRIT LAKE, WASH.	461651	1222025	17080005	3.27
14240460	NF TOUTLE R BELOW ELK CR NR SPIRIT LAKE, WASH	461640	1222119	17080005	--
14240466	N F TOUTLE R NR CAMP BAKER (NORTH CHANNEL), WA.	461717	1222245	17080005	--
14240467	N F TOUTLE R NR CAMP BAKER (SOUTH CHANNEL), WA.	461710	1222245	17080005	--
14240490	N F TOUTLE R ABV ALDER CR NR KID VALLEY, WA.	461946	1223048	17080005	--
14240500	N F TOUTLE R AT ST HELENS, WASH.	462040	1223200	17080005	124
14240520	N F TOUTLE RIVER ABOVE SRS NEAR KID VALLEY, WASH.	462142	1223243	17080005	--
14240525	NORTH FORK TOUTLE RIVER BL SRS NR KID VALLEY, WA	462219	1223440	17080005	175
14240580	RYAN LAKE NEAR SPIRIT LAKE, WASH.	462116	1220352	17080005	--
14240600	VENUS LAKE NR SPIRIT LAKE, WASH.	462035	1220904	17080005	--
14240700	FAWN LAKE NR SPIRIT LAKE, WASH.	461927	1221521	17080005	--
14240800	GREEN R ABV BEAVER CR NEAR KID VALLEY, WASH.	462255	1223121	17080005	129
14241000	GREEN R NR TOUTLE, WASH.	462230	1223350	17080005	131
14241100	N.F. TOUTLE RIVER AT KID VALLEY, WASH.	462155	1223740	17080005	284
14241101	N. FORK TOUTLE RIVER AT CABLEWAY NR KID VALLEY, WA	462152	1223741	17080005	284
14241200	COLDSPRING CREEK NEAR COUGAR, WASH.	461038	1221725	17080005	5.47
14241460	SF TOUTLE R BLW DISAPPNTMENT CR NR SPIRIT LK, WA	461244	1221941	17080005	--
14241465	S F TOUTLE R ABV HERRINGTON CR NR SPTTD BUCK MTN	461340	1222340	17080005	--
14241490	S F TOUTLE R AT CAMP 12 NR TOUTLE, WASH.	461905	1224001	17080005	117
14241495	S F TOUTLE R AT RR BRIDGE NEAR TOUTLE, WASH.	461925	1224035	17080005	118
14241500	SOUTH FORK TOUTLE RIVER AT TOUTLE, WASH.	461920	1224145	17080005	120
14242000	SILVER LAKE AT SILVER LAKE, WASH.	461746	1224827	17080005	41.5
14242450	TOUTLE R AT COAL BANK BR NR SILVER LK,WASH.	461953	1224330	17080005	--
14242500	TOUTLE RIVER NEAR SILVER LAKE, WASH.	462011	1224327	17080005	474

Site - ID	Station Name	Latitude (Degrees)	Longitude (Degrees)	Hydrologic Unit (OWDC)	Drainage Area (Miles2)
14242511	STORAGE IN CFS IN LAKES AFTER ERUPTION,ESTIMATES	462012	1224327	--	474
14242512	TOUTLE ADJUSTED FOR R-R STUDY STORAGE-NOT GOOD!!	462013	1224327	--	474
14242513	FAKE TOUTLE R. RECORD DONT YOUS'S USE	462012	1224329	--	474
14242580	TOUTLE RIVER AT TOWER ROAD NR SILVER LAKE, WASH.	462002	1225020	17080005	496
14242592	CLINE CK. AT WILKES HILLS NR. SILVER LAKE	462232	1225105	17080005	--
14242595	CLINE CK. NR. MOUTH NR. SILVER LAKE	462032	1225122	17080005	--
14242600	TOUTLE R TRIBUTARY NR CASTLE ROCK, WASH.	461925	1225130	17080005	0.64
14242690	TOUTLE R AT HIWAY 99 BRIDGE NR CASTLE ROCK, WA.	461910	1225427	17080005	511
14242700	TOUTLE R NR CASTLE ROCK, WASH.	461910	1225428	17080005	512
14243000	COWLITZ RIVER AT CASTLE ROCK, WASH.	461630	1225448	17080005	2240
14243500	DELAMETER CREEK NEAR CASTLE ROCK, WASH.	461549	1225758	17080005	19.6
14244000	OSTRANDER CREEK NEAR KELSO, WA	461145	1225300	17080003	25.3
14244200	COWLITZ RIVER AT KELSO, WASH.	460844	1225447	17080005	2350
14244500	COWEMAN RIVER NEAR KELSO, WA	460740	1225010	17080003	119
14244600	COWEMAN RIVER ABV SAM SMITH CREEK NR KELSO,WASH	461023	1224346	17080005	68.6
14245000	COWEMAN RIVER NEAR KELSO, WASH.	460857	1225345	17080005	119
14245100	COWEMAN RIVER AT KELSO, WASH.	460817	1225347	17080005	--
14245300	COLUMBIA RIVER AT LONGVIEW, WA	460622	1225714	17080003	257000
14245400	COLUMBIA R. AT FISHER ISLAND NR LONGVIEW, WASH.	460920	1230320	17080003	--
14245410	COAL CK. ABV. EAST FORK COAL CK. NR. LONGVIEW	461350	1230248	17080003	--
14245420	COAL CK. NR. LONGVIEW	461221	1230107	17080003	--
14245500	GERMANY CREEK NEAR LONGVIEW, WA	461150	1230735	17080003	22.9
14246000	ABERNATHY CR NR LONGVIEW, WASH.	461210	1230915	17080003	20.3
14246500	MILL CREEK NR CATHLAMET, WA	461140	1231125	17080003	27.6
14247500	ELOCHOMAN RIVER NEAR CATHLAMET, WASH.	461317	1232028	17080003	65.8
14248000	SKAMOKAWA CREEK NEAR SKAMOKAWA, WA	461800	1232630	17080003	17.4
14248100	RISK CREEK NEAR SKAMOKAWA, WASH.	461505	1232350	17080003	1.13
14248200	JIM CROW CREEK NEAR GRAYS RIVER, WASH.	461637	1233337	17080006	5.48
14249000	GRAYS RIVER ABV SOUTH FK NR GRAYS RIVER, WASH.	462336	1232839	17080006	39.9
14249500	GRAYS R BLW SOUTH FK NR GRAYS RIVER, WASH.	462330	1232835	17080006	60.3
14250000	GRAYS R NR GRAYS RIVER, WASH.	462240	1233150	17080006	60.6
14250500	WEST FORK GRAYS RIVER NEAR GRAYS RIVER, WASH.	462307	1233330	17080006	15.2
14250900	GRAYS R. NR. GRAYS RIVER	462134	1233355	17080006	--
14251000	HULL CREEK AT GRAYS RIVER, WA	462120	1233615	17080006	11.9
14270000	COLUMBIA RIVER NEAR ILWACO,WASH	461600	1240212	17080006	--

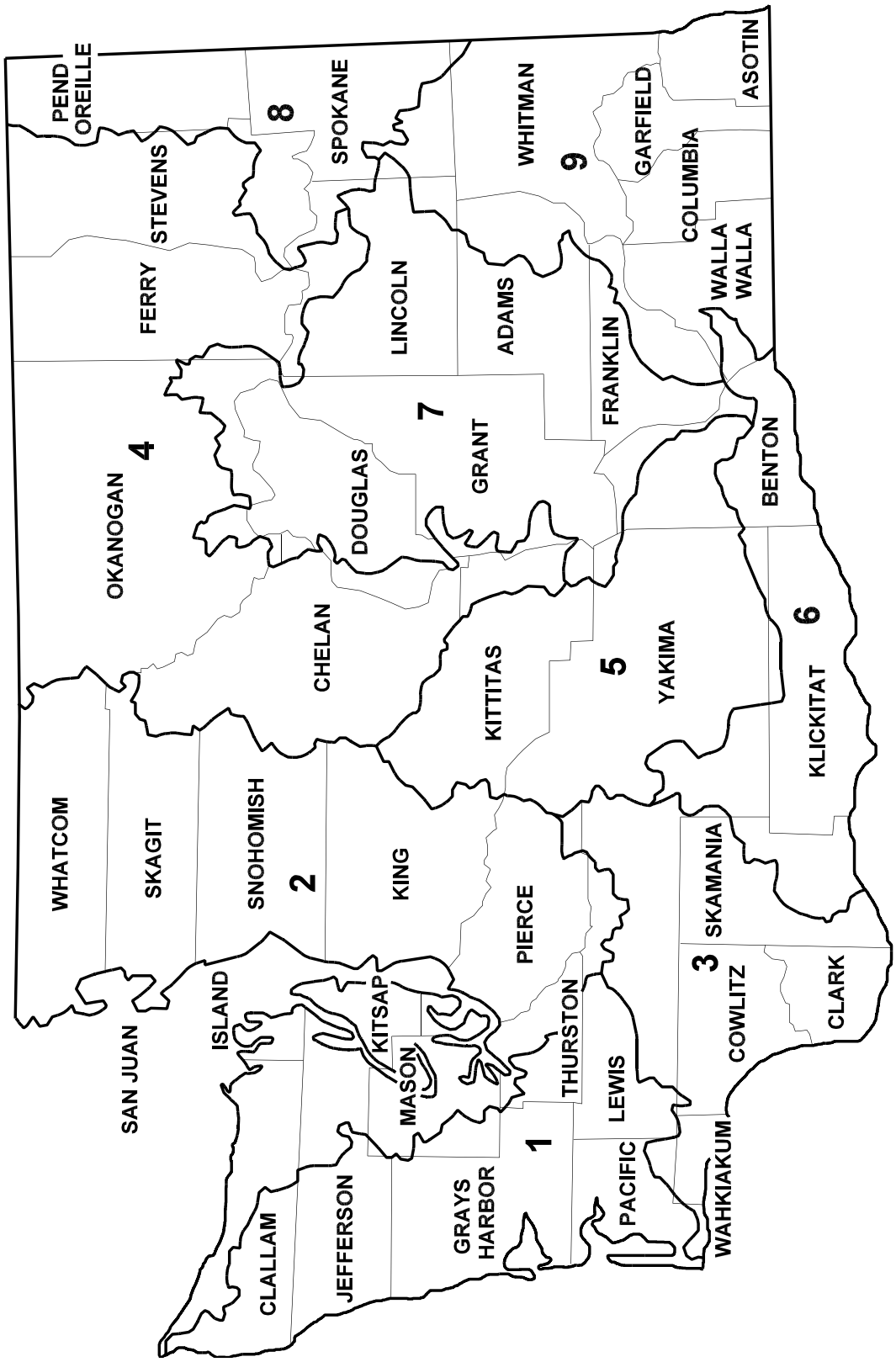
PEND OREILLE
STEVENS
FERRY
OKANOGAN
4
WHATCOM
SKAGIT
SAN JUAN
ISLAND
CLALLAM
JEFFERSON
SNOHOMISH
2
CHELAN
DOUGLAS
8
SPOKANE
LINCOLN
7
GRANT
KITSAP
MASON
KING
GRAYS HARBOR
1
KITTITAS
ADAMS
WHITMAN
9
PIERCE
THURSTON
LEWIS
PACIFIC
5
YAKIMA
FRANKLIN
GARFIELD
COLUMBIA
WALLA WALLA
BENTON
6
KLICKITAT
ASOTIN
SKAMANIA
3
COWLITZ
WAHKIAKUM
CLARK

Washington State Hydrology
USGS Regression Equations
Region 1 – 61 stations

SR _____ Date _____

Project _____

Made By _____

Equations:

Q 2yr	=	$0.35 \times A^{0.923} \times (MAP)^{1.24}$	(Standard Error = 32%)
Q 10yr	=	$0.502 \times A^{0.921} \times (MAP)^{1.26}$	(Standard Error = 33%)
Q 25yr	=	$0.59 \times A^{0.921} \times (MAP)^{1.26}$	(Standard Error = 34%)
Q 50yr	=	$0.666 \times A^{0.921} \times (MAP)^{1.26}$	(Standard Error = 36%)
Q 100yr	=	$0.745 \times A^{0.922} \times (MAP)^{1.26}$	(Standard Error = 37%)

		Legend	Limits
Q	=	Flow (cfs)	
A	=	Drainage Basin Area (miles ^{2})	(0.15 mile $s^2 \leq A \leq$ 1,294 miles$^{2)}$
MAP	=	Mean Annual Precipitation (inches)	(45.0 in < MAP $\leq$ 201 in)

Description of Area	Return Frequency	A	MAP	Q

USGS Regression Equations — Region 1
Figure A2-2.2
(Updated March 2001)

Washington State Hydrology
USGS Regression Equations
Region 2 – 202 stations

SR _____ Date _____

Project _____

Made By _____

Equations:

Q 2yr	=	$0.090 \times A^{0.877} \times (MAP)^{1.51}$	(Standard Error = 56%)
Q 10yr	=	$0.129 \times A^{0.868} \times (MAP)^{1.57}$	(Standard Error = 53%)
Q 25yr	=	$0.148 \times A^{0.864} \times (MAP)^{1.59}$	(Standard Error = 53%)
Q 50yr	=	$0.161 \times A^{0.862} \times (MAP)^{1.61}$	(Standard Error = 53%)
Q 100yr	=	$0.174 \times A^{0.861} \times (MAP)^{1.62}$	(Standard Error = 54%)

		Legend	Limits
Q	=	Flow (cfs)	
A	=	Drainage Basin Area (miles ^{2})	(0.08 miles $s^2 \leq A \leq$ 3,020 miles$^{2)}$
MAP	=	Mean Annual Precipitation (inches)	(23 in < MAP $\leq$ 170 in)

Description of Area	Return Frequency	A	MAP	Q

USGS Regression Equations — Region 2
Figure A2-2.3
(Updated March 2001)

Washington State Hydrology
USGS Regression Equations
Region 3 – 63 stations

SR _____ Date _____

Project _____

Made By _____

Equations:

Q 2yr	=	$0.817 \times A^{0.877} \times (MAP)^{1.02}$	(Standard Error = 57%)
Q 10yr	=	$0.845 \times A^{0.875} \times (MAP)^{1.14}$	(Standard Error = 55%)
Q 25yr	=	$0.912 \times A^{0.874} \times (MAP)^{1.17}$	(Standard Error = 54%)
Q 50yr	=	$0.808 \times A^{0.872} \times (MAP)^{1.23}$	(Standard Error = 54%)
Q 100yr	=	$0.801 \times A^{0.871} \times (MAP)^{1.26}$	(Standard Error = 55%)

		Legend	Limits
Q	=	Flow (cfs)	
A	=	Drainage Basin Area (miles ^{2})	(0.36 mile $s^2 \leq A \leq$ 2,198 miles$^{2)}$
MAP	=	Mean Annual Precipitation (inches)	(42 in < MAP $\leq$ 132 in)

Description of Area	Return Frequency	A	MAP	Q

USGS Regression Equations — Region 3
Figure A2-2.4
(Updated March 2001)

Washington State Hydrology
USGS Regression Equations
Region 4 – 60 stations

SR _____ Date _____

Project _____

Made By _____

Equations:

Q 2yr	=	$0.025 \times A^{0.880} \times (MAP)^{1.70}$	(Standard Error = 82%)
Q 10yr	=	$0.179 \times A^{0.856} \times (MAP)^{1.37}$	(Standard Error = 84%)
Q 25yr	=	$0.341 \times A^{0.85} \times (MAP)^{1.26}$	(Standard Error = 87%)
Q 50yr	=	$0.505 \times A^{0.845} \times (MAP)^{1.20}$	(Standard Error = 90%)
Q 100yr	=	$0.703 \times A^{0.842} \times (MAP)^{1.15}$	(Standard Error = 92%)

		Legend	Limits
Q	=	Flow (cfs)	
A	=	Drainage Basin Area (miles ^{2})	(0.66 mile $s^2 \leq A \leq$ 2,220 miles$^{2)}$
MAP	=	Mean Annual Precipitation (inches)	(12 in < MAP $\leq$ 108 in)

Description of Area	Return Frequency	A	MAP	Q

USGS Regression Equations — Region 4
Figure A2-2.5
(Updated March 2001)

Washington State Hydrology
USGS Regression Equations
Region 5 – 19 stations

SR _____ Date _____

Project _____

Made By _____

Equations:

Q 2yr	=	$14.7 \times A^{0.815}$	(Standard Error = 96%)
Q 10yr	=	$35.2 \times A^{0.787}$	(Standard Error = 63%)
Q 25yr	=	$48.2 \times A^{0.779}$	(Standard Error = 56%)
Q 50yr	=	$59.1 \times A^{0.774}$	(Standard Error = 53%)
Q 100yr	=	$71.2 \times A^{0.769}$	(Standard Error = 52%)

Legend

Q = Flow (cfs)

A = Drainage Basin Area (miles ^{2})

Limits

(0.38 mile $s^2 \leq A \leq$ 638 miles$^{2)}$

Description of Area	Return Frequency	A	Q

USGS Regression Equations — Region 5
Figure A2-2.6
(Updated March 2001)

Washington State Hydrology
USGS Regression Equations
Region 6 – 23 stations

SR _____ Date _____

Project _____

Made By _____

Equations:

Q 2yr	=	$2.24 \times A^{0.719} \times (MAP)^{0.833}$	(Standard Error = 63%)
Q 10yr	=	$17.8 \times A^{0.716} \times (MAP)^{0.487}$	(Standard Error = 69%)
Q 25yr	=	$38.6 \times A^{0.714} \times (MAP)^{0.359}$	(Standard Error = 72%)
Q 50yr	=	$63.6 \times A^{0.713} \times (MAP)^{0.276}$	(Standard Error = 74%)
Q 100yr	=	$100 \times A^{0.713} \times (MAP)^{0.201}$	(Standard Error = 77%)

		Legend	Limits
Q	=	Flow (cfs)	
A	=	Drainage Basin Area (miles ^{2})	(0.50 mile $s^2 \leq A \leq$ 1,297 miles$^{2)}$
MAP	=	Mean Annual Precipitation (inches)	(10 in $\leq$ MAP $\leq$ 116 in)

Description of Area	Return Frequency	A	MAP	Q

USGS Regression Equations — Region 6
Figure A2-2.7
(Updated March 2001)

Washington State Hydrology
USGS Regression Equations
Region 7 – 17 stations

SR _____ Date _____

Project _____

Made By _____

Equations:

Q 2yr	=	$8.77 \times A^{0.629}$	(Standard Error = 128%)
Q 10yr	=	$50.9 \times A^{0.587}$	(Standard Error = 63%)
Q 25yr	=	$91.6 \times A^{0.574}$	(Standard Error = 54%)
Q 50yr	=	$131 \times A^{0.566}$	(Standard Error = 53%)
Q 100yr	=	$179 \times A^{0.558}$	(Standard Error = 56%)

Legend			Limits
Q	=	Flow (cfs)	
A	=	Drainage Basin Area (miles ^{2})	(0.21 mile $s^2 \leq A \leq$ 2,228 miles$^{2)}$

Description of Area	Return Frequency	A	Q

USGS Regression Equations — Region 7
Figure A2-2.8
(Updated March 2001)

Washington State Hydrology
USGS Regression Equations
Region 8 – 23 stations

SR _____ Date _____

Project _____

Made By _____

Equations:

Q 2yr	=	$12.0 \times A^{0.761}$	(Standard Error = 133%)
Q 10yr	=	$32.6 \times A^{0.706}$	(Standard Error = 111%)
Q 25yr	=	$46.2 \times A^{0.687}$	(Standard Error = 114%)
Q 50yr	=	$57.3 \times A^{0.676}$	(Standard Error = 119%)
Q 100yr	=	$69.4 \times A^{0.666}$	(Standard Error = 126%)

Legend			Limits
Q	=	Flow (cfs)	
A	=	Drainage Basin Area (miles ^{2})	(0.59 mile $s^2 \leq A \leq$ 689 miles$^{2)}$

Description of Area	Return Frequency	A	Q

USGS Regression Equations — Region 8
Figure A2-2.9
(Updated March 2001)

Washington State Hydrology
USGS Regression Equations
Region 9 – 36 stations

SR _____ Date _____

Project _____

Made By _____

Equations:

Q 2yr	=	$0.803 \times A^{0.672} \times (MAP)^{1.16}$	(Standard Error = 80%)
Q 10yr	=	$15.4 \times A^{0.597} \times (MAP)^{0.662}$	(Standard Error = 57%)
Q 25yr	=	$41.1 \times A^{0.570} \times (MAP)^{0.508}$	(Standard Error = 55%)
Q 50yr	=	$74.7 \times A^{0.553} \times (MAP)^{0.420}$	(Standard Error = 55%)
Q 100yr	=	$126 \times A^{0.538} \times (MAP)^{.344}$	(Standard Error = 56%)

		Legend	Limits
Q	=	Flow (cfs)	
A	=	Drainage Basin Area (miles ^{2})	(0.54 mile $s^2 \leq A \leq$ 2,500 miles$^{2)}$
MAP	=	Mean Annual Precipitation (inches)	(12.0 in < MAP $\leq$ 40.0)

Description of Area	Return Frequency	A	MAP	Q

USGS Regression Equations — Region 9
Figure A2-2.10
(Updated March 2001)

Appendix 2-3 Isopluvial and MAP Web Links and Mean Annual Runoff Data

The 24-hour and 2-hour Isopluvial maps and the Mean Annual Precipitation maps for Washington are available in pdf format through the links below or by using ArcMap. Contact your local GIS group for how to extract precipitation data using ArcMap.

Washington 2-hour Isopluvial Maps

Washington 24-hour Isopluvial Maps

Washington Mean Annual Precipitation Map

5-1 Roadway and Structure Geometrics and Drainage

Roadway and structure pavement drainage should be considered early in a project design, while the roadway geometry is still being developed since the hydraulic capacity of gutters and inlets is determined by the longitudinal slope and superelevation of the pavement. The imperviousness of the roadway pavement will result in significant runoff from any rainfall event. To ensure safety to the traveling public, careful consideration must be given to removing the runoff from the roadway through structure pavement drainage facilities.

A roadway with a gutter section should normally be placed at a minimum longitudinal slope of 0.3 percent to 0.5 percent to allow for reasonable drainage. The flatter slopes may be used with wider shoulders and the 0.5 percent should be used as a minimum for narrow shoulders. Superelevation and/or widening transitions can create a gutter profile far different from the centerline profile. The designer must carefully examine the geometric profile of the gutter to eliminate the formation of sumps or birdbaths created by these transitions. These areas should be identified and eliminated. This generally requires geometric changes stressing the need for early consideration of drainage.

Improperly placed superelevation transitions can cause serious problems especially on bridges. As discussed in Section 5-4, inlets or other means must pick up gutter flow before the flow crosses over to the other side of the pavement. The collection of crossover flow on bridges is very complex as effective drain inlets are difficult to place within structure reinforcement. Bridges over waterways and wetlands pose water quality issues as well and drop drains may not be allowed. Also, bridge drain downspouts have a history of plugging problems and are an objectionable aesthetic impact on the structure.

Eliminating inlets on bridges can usually be accomplished by considering drainage early in the design phase. Superelevation transitions, zero gradients, and sag vertical curves should be avoided on bridges. Modern bridges generally use watertight expansion joints so that all surface water can run off of the structure and be collected in inlets placed at the bridge ends.

Drainage design at bridge ends requires a great deal of coordination between the Region designer, Bridge designer, and the Headquarters (HQ) Hydraulics Office. In many areas, the drainage plan may include the bridge. The designer is responsible for drainage upstream and downstream of the bridge. HQ Hydraulics is responsible for bridge drainage and coordination necessary at the downstream end of the bridge.

Multi-lane highways create unique drainage situations. The number of lanes draining in one direction should be considered during the design phase. The Geometric Cross Section chapter in the WSDOT *Design Manual* is a good reference when designing drainage for multi-lane highways. The Region Hydraulics Engineer and HQ Hydraulics Office is also available to provide design guidance. See Section 5-6 for discussion on hydroplaning and hydrodynamic drag and how to reduce its potential.

5-2 Hydrology

The Rational Method is the recommended procedure for determining peak flow rates for pavement drainage. This method is easy to use for pavement drainage design because the time of concentration is generally taken as 5 minutes. For more discussion on the Rational Method, see Chapter 2 of this manual. The design frequency and spread width are also significant variables in the design of pavement drainage. These two variables are dependant, because it reflects public expectancy for finding water on a roadway, and is linked to the classification of the highways as summarized in Figure 5-4.1.

5-3 Rural Highway Drainage

When rural highways are built on a fill, roadway drainage is usually allowed to flow, uncollected, to the sides of the roadway and over the side of the fill slope. Usually, this sheet flow of highway drainage does not present any problem to adjacent property owners nor is it a threat to the highway fill. This type of drainage is allowed for fills up to 25 ft (7.5 m). A curb should be used in highly erosive soils when the fill is high enough to justify the use of a guardrail.

Fill heights greater than 25 ft (7.5 m) may present an erosion threat to the embankment especially where the roadway forms a sag vertical curve. This problem is usually present immediately after construction and before vegetation is established. In these situations, it may be prudent to construct a curb and gutter to collect the sheet flow from the pavement and discharge this flow through a runoff treatment or flow control Best Management Practice (BMP). The treated and controlled runoff can then be discharged into an established stream or a low spot in the surrounding terrain. Selection of an appropriate BMP is dependent on the characteristics of the project site. Designers should reference the *Highway Runoff Manual* for selection and design criteria of BMP usage. Designers should place pipe outfalls at the bottom of a slope when feasible. This will reduce the likelihood of slope erosion due to concentrated flows at pipe outfalls. If designers chose to use channels flowing down an embankment to carry away concentrated stormwater, these channels should be lined with rock spalls, over filter material or geotextile, to ensure good service for many years. Paved channels,

on the other hand, are very vulnerable to damage. The edges of the pavement have been found to break off easily, especially if the capacity of the channel is frequently exceeded or seepage is able to get under the pavement. The HQ Hydraulics Office does not recommend paved channels unless they have a very short length and have adequate soils supporting the sides of the channel.

As noted above, curbs are often used before vegetation is established to prevent erosion. Once sufficient vegetation is present to resist erosion and treat runoff, consideration should be given to eliminating the curb in future overlay contracts. However, since most approach slabs include curb, consideration must be given to dispersing the concentrated flow at the bridge ends before removing curb. Possible solutions include; discharging runoff to an inlet, maintain curbing until runoff can be properly dispersed or utilizing a fabric or filter blanket.

5-3.1 Downstream End of Bridge Drainage

The downstream end of bridges need special attention, as further described in this paragraph. If a storm drain inlet system is not provided, a channel should be provided at the end of any significant barrier, which collects and concentrates stormwater away from the bridge. Bridges with approach slabs generally have an extruded curb beginning at the bridge end and terminating just past the approach slab. The concentrated flow shall be directed into a rock-lined ditch by creating a small depression and shaping an asphalt chute in the edge of the shoulder apron. Inlets should be located a minimum of 10 feet downstream from an approach slab to avoid approach slab settlement, see Standard Plan B-95.40-00. Bridges without approach slabs and curbing pose yet another set of problems. The concentrated flow runs off the bridge slab and flows off the fill slope, or drains behind the wing walls. Care must be taken to assure the flow is directed into the ditch, and not allowed to erode material away from the bridge end.

A ditch running parallel to the roadway generally drains rural highways in a cut section. These ditches are designed and sized in accordance with the criteria shown in Chapter 4. If the ditch slopes are very steep, they may be fitted with a series of check dams made of rock spalls and keyed into the sides of the ditch. Check dams will reduce flow velocities, prevent erosion of the soil, and may help to trap sediment from upstream sources. Check dams as well as other erosion and sediment control BMP's are covered in the *Highway Runoff Manual*.

5-3.2 Slotted Drains and Trench Systems

Historically, slotted drains have been used with varying degrees of success. In fact the situations that warrant the use of slotted drain inlets can actually hinder their performance. Slotted drain inlets are usually placed in areas of

minimal horizontal slope and superelevation. Since the invert of the drain is parallel to the pavement, siltation can occur due to low flow velocities. Slotted drains should be capable of H-25 loading, for installation in heavy traffic locations. Designers should contact Region or HQ Hydraulics for design assistance.

A number of trench drain systems are available including pre-formed systems, as well as slotted channels that may be attached to metal or polyethylene pipe. The pre-formed systems are constructed of various materials and have a cross section that minimizes siltation. These systems are usually encased in a concrete-backfilled trench that provides the support of the frame. Grates vary depending on application, are produced in a variety of load ratings and may be constructed of ductile iron, stainless or galvanized steel, resin composites or fiberglass.

Other systems consist of slotted channels, usually constructed of metal and may have a minimal slope built in to help minimize the siltation problem. The slotted channel is placed in the pavement, but with the built in slope, the host pipe may be sloped slightly to improve flow. The channels can be attached to metal or polyethylene pipe and come in various widths and lengths. HQ Hydraulics has more information on all these systems and is available to assist in their design.

5-3.3 Drop Inlets

The use of the drop inlet (Standard Plans B-45.20 thru B-50.20) is intended for mountainous areas or portions of highways that have very long continuous grades. Normal wheel loads can safely pass over the grate and it is not classified as an obstruction. They have a high hydraulic capacity and are most often used in medians. The outlet pipe usually controls the discharge rather than the grate itself. They are also quite effective in passing debris that would normally plug a standard grate.

When the inlet is located in the clear zone, the designer should place the inlet as close to parallel in the direction of traffic as possible. Placing the inlet at an angle may cause an errant vehicle to overturn.

5-4 Gutter Flow

When stormwater is collected and carried along the roadside in a gutter, the allowable top width of the flow prism (Zd) is dependant on the Road Classification as noted in Figure 5-4.1.

Road Classification		Design Frequency	Design Spread (Zd)
Interstate, Principal, Minor Arterial, or Divided	< 45 mph (70 km/hr) ≥ 45 mph (70 km/hr) Sag Pt.	10-year 10-year 50-year	Shoulder+2 ft (0.67 m)[1] Shoulder Shoulder+2 ft (0.67 m)[1]
Collector and Local Streets	< 45 mph (70 km/hr) ≥ 45 mph (70 km/hr) Sag Pt.	10-year 10-year 50-year	Shoulder+½ Driving Lane[2] Shoulder ½ Driving Lane[2]

[1]The travel way shall have at least 10 ft that is free of water.

[2]In addition to the design spread requirement, the depth of flow shall not exceed 0.12 ft at the edge of shoulder.

Design Frequency and Spread
Figure 5-4.1

In urban situations, with much lower speeds than noted in Figure 5-4.1, it may not be feasible to use the design spread recommended in this manual. In this situation, designers should first consider innovative solutions such as: increasing the slope of the gutter (from 2 to 5 percent for example), depressing the inlet, or using a combination curb opening and grate inlet. If it is still not possible to meet the design spread in Figure 5-4.1, the designer should consider the safety of the intersection, how hydroplaning could affect a driver at this location, and how quickly ponding from the rainfall event will shed off the roadway. The designer and project engineer should work with the Region Hydraulic Engineer and traffic engineer to develop a solution that best suits the project location and keeps the roadway safe. If after considering all possible scenarios, it is determined that the spread of runoff is not safe at this location then more drastic measures such as revising the project scope or seeking more funding may be necessary.

In addition to the requirements above, areas where a superelevation transition causes a crossover of gutter flow, the amount of flow calculated at the point of zero superelevation shall be limited to 0.10 cfs (0.003 m^3/s). The designer will find, by the time the roadway approaches the zero point, the Z_d will become very wide. The flow width criteria will be exceeded at the crossover point even when the flow is less than 0.10 cfs (0.003 m^3/s).

The equation for calculating the gutter flow capacity is a modified version of Manning's Equation. It is based on a roughness value of 0.015, which assumes a rough, concrete or asphalt pavement gutter. Equation 5-1 and 5-2 assumes a uniform gutter section as shown in Figure 5-4.2. If the gutter section is different, designers should consult the Region Hydraulic Engineer and the *Hydraulic Engineering Circular No. 22,* Chapter 4, for further guidance found at www.fhwa.dot.gov/bridge/hydpub.htm. Generally, the discharge, longitudinal slope, and superelevation are known and used to determine the depth of flow and the top width as shown in Equations 5-1 and 5-2.

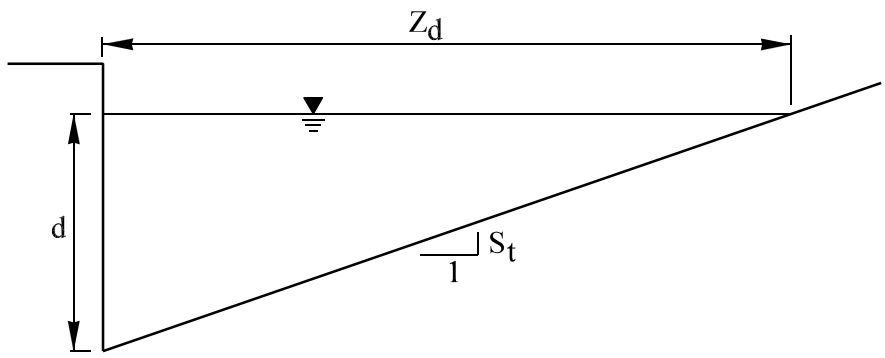

Typical Gutter Section
Figure 5-4.2

$$d = \left[\frac{\Delta O S_t}{37(S_L)^{0.5}} \right]^{3/8} \quad (5\text{-}1)$$

$$Z_d = \frac{d}{S_t} \quad (5\text{-}2)$$

Where:

- d = depth of flow at the face of the curb (ft)
- ΔO = gutter discharge (cfs)
- S_L = longitudinal slope of the gutter (ft/ft)
- S_t = transverse slope or superelevation (ft/ft)
- Z_d = top width of the flow prism (ft)

5-5 Grate Inlets and Catch Basins

There are many variables involved in determining the hydraulic capacity of an inlet including; depth of flow, grade, superelevation, and placement. The depth of flow next to the curb is a major factor in the interception capacity of an inlet. Slight variations in grade or superelevation of the roadway can also have a large effect on flow patterns. And the placement of an inlet can result in dramatic changes in its hydraulic capacity. These variables can be found by collecting the following information prior to starting an inlet design: plan sheets, road profiles, cross sections, superelevations, and contour maps.

Drainage structures should never be placed directly in the wheel path. While many are traffic rated and have lock down grates, the constant pounding of traffic causes unnecessary stress and wear on the structure, frame, and grate. Care should be taken to place the inlets next to the face of curb and at the proper elevation relative to the pavement. The structure offset shown in the plans should be to the center of grate, not to the center of structure, to ensure the grate is located along the face of curb.

Generally, median barrier scuppers are not recommended for passing runoff from one side of the barrier to a drainage structure on the other side. Instead inlets placed on each side of the median barrier should be installed as shown in Standard Plan B-95.20-00, allowing runoff to pass between the structures via a drainpipe.

Debris floating in the gutter has a tendency to collect at the inlets, plugging part or all of the grate opening. Inlets locations on a continuous grade are calculated using the full width of the grate with no allowance needed for debris. Inlets located in a sump are analyzed with an allowance for debris and are further discussed in Section 5-5.4. Areas with deciduous trees and large pedestrian populations are more prone to debris plugging. Bark from logging operations and agricultural areas are also known to cause debris problems.

This section has been divided into three areas: inlets on a continuous grade, side flow interception and sag analysis. Properties of grate inlets available in the *WSDOT Standard Plans* are summarized in Figure 5-5.7 and further discussed below.

5-5.1 Inlet Types

The characteristics of the most commonly used inlets at WSDOT are summarized below. For inlet additional specifications including dimensions, see Standard Plans, Section B, Drainage Structures and Hydraulics.

Herringbone Pattern or Standard Plan B-30.50

The HQ Hydraulics Office no longer recommends using herringbone grates. Historically, use of the vaned grate was limited due to cost considerations. The cost difference now is minimal, the vaned grate is bicycle safe, and as described further in this section is hydraulically superior under most conditions. Installation of the vaned grate is critical as the grate is directional. If installed backwards the interception capacity is severely limited. Figure 5-5.1 includes the herringbone information for existing conditions only, it is not intended for new construction.

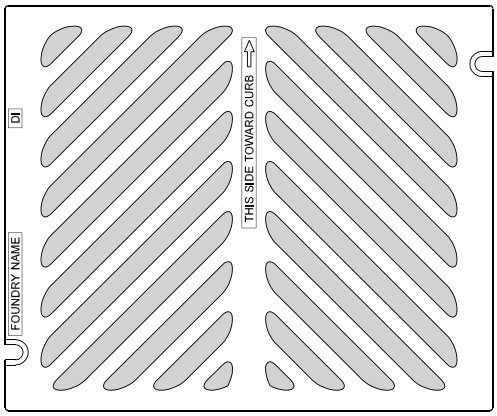

Herringbone Pattern
Figure 5-5.1

Vaned Grate or Standard Plan B-30.30 or 30.40

At low velocities the vaned grate and herringbone grate are equally efficient. At higher velocities, greater than 5 ft/s (1.5 m/s), a portion of the flow tends to skip over the herringbone whereas the vaned grate will capture a greater portion of this flow. The vaned grate also has a higher capacity for passing debris and should be used for high debris areas.

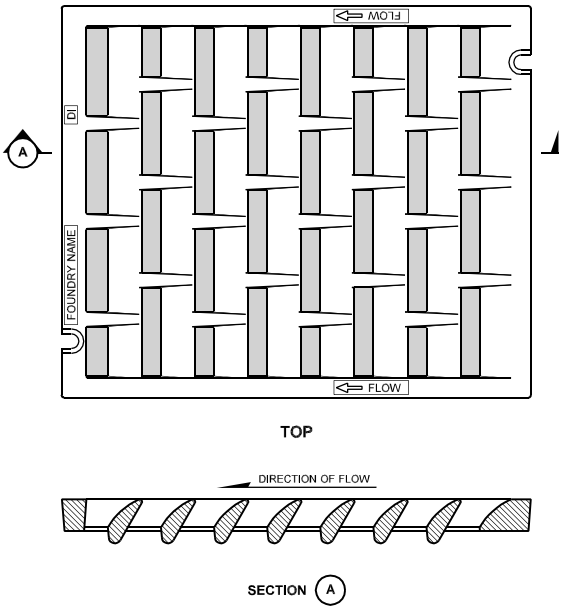

Vaned Grate
Figure 5-5.2

Combination Inlets or Standard Plan B-25.20

The combination inlet is a vaned grate on a catch basin with a hooded curb cut area. Its vaned grate is very debris efficient, and if the grate does become clogged, the overflow goes into the hooded opening. These inlets

are extremely useful for sag condition installations, although they can also be effective on continuous grades. The interception capacity of a combination inlet is only slightly greater than with a grate alone. Therefore the capacity is computed neglecting the curb opening and designers should follow the same analysis as for a vaned grate alone. See Section 5-5.4 for design guidance in a sag condition.

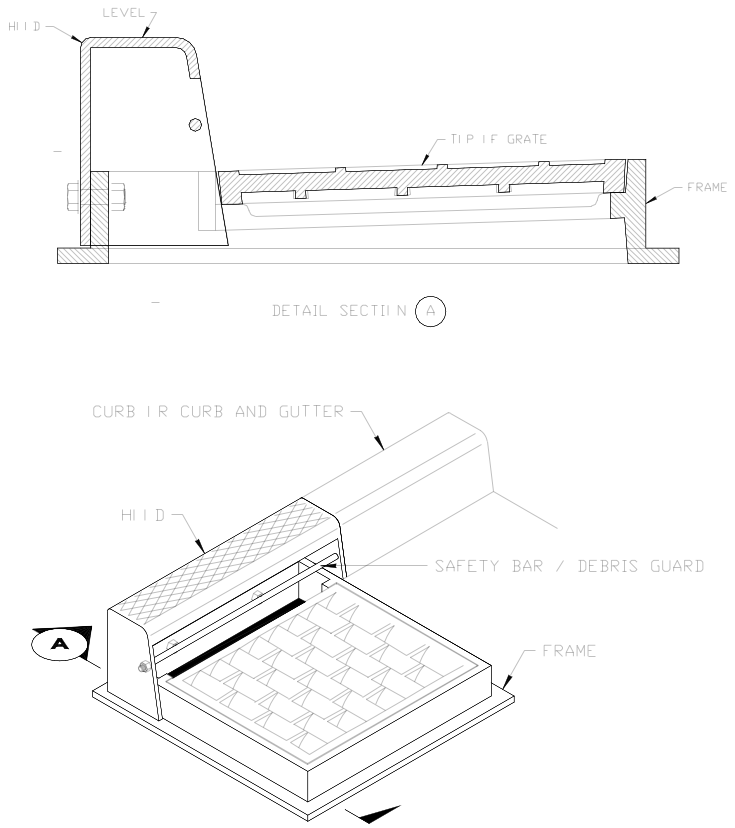

Section and Isometric View
Combination Inlet
Frame, Hood, and Vaned Grate
Figure 5-5.3

Grate Inlets Type 1 or 2 or Standard Plans B-35.20, B-35.40, and B-40.20

Both Types 1 or 2 grate inlets have large openings that can compensate for debris problems, however, there are limitations in their usage. A Type 1 grate inlet is a non-reinforced, cast-in-place concrete inlet, which cannot support traffic loads. Type 2 grate inlets are pre-cast and can withstand traffic loading. These inlets are installed with a Grate A, Grate B (see Figure 5-5.4) or a frame and vaned grate (see the next paragraph and Figure 5-5.5 for more information on frame and vaned grates). Due to structural failure of both Grates A or B, neither of these grates can be installed in heavy traffic areas where wheel loads will pass directly over. Grate B has very large openings and is useful in

ditches or non-paved median locations, in areas where there is no pedestrian or bicycle traffic. Grate A can be used anywhere Grate B is used as well as at the curb line of a wide interstate shoulder. Grate A may occasionally be hit by low-speed traffic or parked on but it can not withstand repeated interstate loading or turning vehicles.

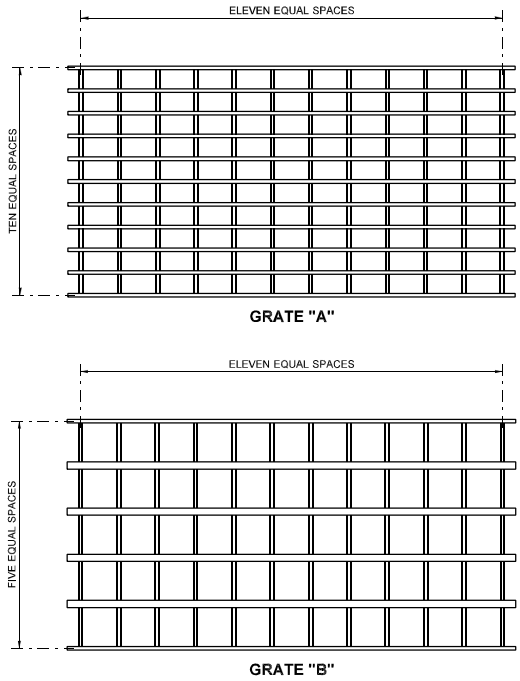

Grate A and B
Figure 5-5.4

Frame and Vaned Grates or Standard Plan B-40.40

Standard Plan B-40.40 has been tested in H-25 loading and was determined compatible with heavy traffic installations. This frame and double vaned grate should be installed in a Unit H on top of a grate inlet Type 2. The frame and vaned grates may be used in either new construction or retrofit situations. When used in areas of highway speeds, lock down grates should be specified.

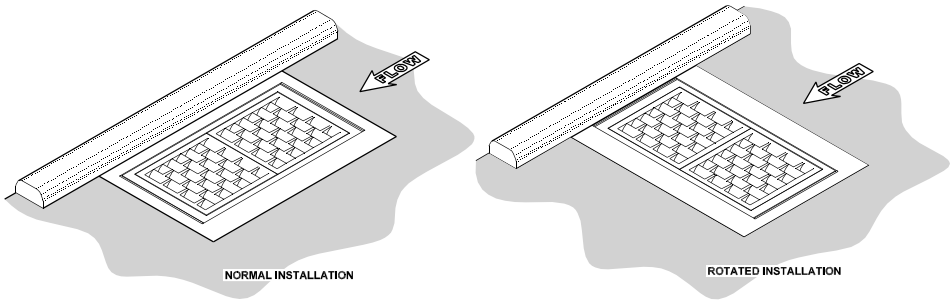

Frame and Vaned Grates for Installation on Grate Inlet
Figure 5-5.5

Circular Grate or Standard Plan B-30.80

Circular grates are intended for use with drywells, see Standard Plans B-20.20 and B-20.60 for details. Install with circular frames (rings) as detailed in Standard Plan B-30.70.

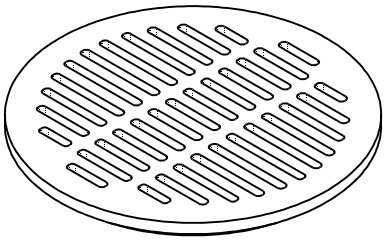

Circular Grate
Figure 5-5.6

Quarry Spall Placement Around Inlets

Quarry spalls shall not be placed around inlets. This creates a safety hazard for the maintenance personnel who need good footing to lift the heavy lids. If quarry spall check dams are desired for erosion control, locate them a minimum of 10 feet away from the grate inlet.

Standard Plan	Description	Continuous Grade[1]		Sump Condition[2] Perimeter Flows as Weir	
		Grate Width	Grate Length	Width	Length
B-30.50[3]	Rectangular Herringbone Grate	1.67 ft (0.50 m)	2.0 ft (0.61 m)	0.69 ft (0.21 m)	0.78 ft (0.24 m)
B-30.30 or 30.40[8]	Vaned Grate for Catch Basin and Inlet	1.67 ft (0.50 m	2.0 ft (0.61 m)	1.31 ft (0.40 m)	1.25 ft (0.38 m)
B-25.20[2]	Combination Inlet	1.67 ft (0.50 m	2.0 ft (0.61 m)	1.31 ft (0.40 m)	1.25 ft (0.38 m)
B-40.20	Grate Inlet Type 1 (Grate A or B[4])	2.01 ft (0.62 m) 3.89 ft[7] (1.20 m)	3.89 ft (0.62 m) 2.01 ft[7] (1.20 m)	1.67 ft (0.50 m) 3.52 ft (1.07 m)	3.52 ft (1.07 m) 1.67 ft (0.50 m)
B-30.80	Circular Grate[9]	1.52 ft (0.47 m)		2.55 ft[10] (0.79 m)	
B-40.40	Frame and Vaned Grates for Grate Inlet Type 2	1.75 ft[5] (0.52 m) 3.52 ft[6] (1.05 m)	3.52 ft[5] (1.05 m) 1.75 ft[6] (0.52 m)	1.29 ft (0.40 m) 2.58 ft[6] (0.80 m)	2.58 ft (0.50 m) 1.29 ft[6] (0.26 m)

[1]Inlet widths on a continuous grade are not reduced for bar area or for debris accumulation.
[2]The perimeters and areas in this portion of the table have already been reduced for bar area. These values should be cut in half when used in a sag location as described in Section 5-5.4, except for the Combination Inlet B-25.20.
[3]Shown for informational purposes only. See Section 5-5.1.
[4]Type B grate shall not to be used in areas of pedestrian or vehicular traffic. See Section 5-5.1 for further discussion.
[5]Normal Installation, see Figure 5-5.5 or Standard Plans.
[6]Rotated Installation see Figure 5-5.5 or Standard Plans.
[7]Rotated installation, see Figure 5-5.5 or Standard Plans.
[8]For sag conditions, combinations inlets should use a Bi-Directional Vaned grate as shown in Standard Plan B-30.40.
[9]Circular Grates are only intended for use with dry wells.
[10]Only the perimeter value has been provided for use with weir equations.

Properties of Grate Inlets
Figure 5-5.7

5-5.2 Capacity of Inlets on a Continuous Grade

The interception capacity of an inlet on a continuous grade depends on the amount of water flowing over the grate, the size and configuration of the grate, the velocity of the flow in the gutter, and the longitudinal slope of the roadway. For longitudinal slopes between 2 to 3 percent and for velocities in the range of 3 to 5 ft/s the interception capacity of an inlet is based mainly on frontal flow. Frontal flow is water that travels through the gutter and enters through the front side (width) of the inlet. For longitudinal slopes less than 2 percent and velocities less than 3 ft/s side flow interception should also be considered as described in Section 5-5.3. An inlet will intercept essentially all frontal flow passing over the width of the inlet as long as the

velocity is less than 5 ft/s. When velocities exceed 5 ft/s water will "splash-over" the inlets reducing the portion of the flow that will be intercepted and increase the bypass flow. The Region Hydraulics Engineer or HQ Hydraulics Office is available to provide direction when velocities exceed 5 ft/s and additional guidance can be found in the FHWA HEC No. 22, Section 4-3 at www.fhwa.dot.gov/engineering/hydraulics/library_arc.cfm?pub_number=22&id=47.

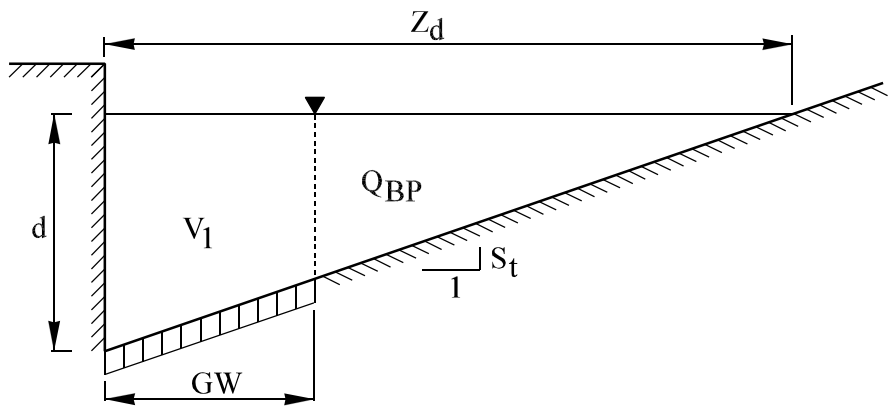

Section at Inlet
Figure 5-5.7

The flow that is not intercepted by the first grate inlet is considered bypass flow and should be added to the flow traveling toward the next grate located downstream. This carry-over process continues to the bottom of the grade or the end of the inlet system. The last inlet on a highway system is permitted to bypass 0.10 cfs (0.003 m^3/s) for the 10-year MRI storm without making any further provisions. That is because 0.1 cfs will not usually cause erosion or hydroplaning problems. However the designer should still consider the cumulative affects of the final bypass flow and the area between the bypass flow and the next inlet or outfall. In areas of lower speeds such as local streets or intersections, a bypass of 0.1 cfs or greater may be an acceptable design. The designer should consider the safety of the location with the higher bypass and consult with the Region Hydraulic Engineer for approval.

The amount of flow bypassing the inlet on a continuous grade is computed as follows:

$$Q_{BP} = Q\left[\frac{(Z_d) - (GW)}{(Z_d)}\right]^{8/3} \qquad (5\text{-}3)$$

Where:

Q_{BP} = portion of flow outside the width of the grate, cfs
ΔQ = total flow of gutter approaching the inlet, fcs
Z_d = top width of the flow prism, feet
GW = width of the grate inlet perpendicular to the direction of flow in feet

The flow that is intercepted by the inlet is calculated as follows.

$$Q_i = \Delta Q - Q_{BP} \tag{5-4}$$

The velocity of flow directly over the inlet is calculated as shown in Equation 5-5.

$$V_{continuous} = \frac{Q - Q_{BP}}{(GW)[d - 0.5(GW)(S_t)]} \tag{5-5}$$

Where:

$V_{continuous}$ = velocity over the inlet in ft/s (m/s)
S_t = transverse slope or superelevation in ft/ft (m/m)
d = depth of flow at the face of the curb ft (m)

5-5.3 Side Flow Interception

For longitudinal slopes less than 2 percent and when Equation 5-5 yields velocities less than 3 ft/s, side flow interception begins to make an appreciable contribution to the inlet capacity analysis and should be considered.

The velocity of flow entering the side of an inlet is shown in Equation 5-6 below.

$$V_{side} = \left(\frac{1.11}{n}\right)(S_L^{0.5} S_t^{0.67} Z_d^{0.67}) \tag{5-6}$$

Where:

V_{side} = velocity in triangular channel, ft/s
n = 0.015 (Manning's value for concrete pavement)
S_L = longitudinal slope

The ratio of frontal flow to total gutter flow is shown in Equation 5-7 below.

$$E_O = 1 - \left(1 - \frac{GW}{Z_d}\right)^{2.67} \tag{5-7}$$

Where:

GW = width of depressed grate, ft
Z_d = top width of the flow prism, ft

The ratio of side flow intercepted to total side flow is shown in Equation 5-8 below.

$$R_s = \frac{1}{\left(1 + \frac{0.15V_{side}^{1.8}}{S_t G L^{2.3}}\right)} \quad (5\text{-}8)$$

The efficiency of the grate is expressed in Equation 5-9 below.

$$E = R_f E_o + R_s(1 - E_o) \quad (5\text{-}9)$$

The amount of flow intercepted by an inlet when side flow is considered is expressed in Equation 5-10 below:

$$Q_i = Q(R_f E_o + R_s(1 - E_o)) \quad (5\text{-}10)$$

5-5.3.1 Inlet Analysis Spreadsheet

When locating and determining the capacity of inlets on a continuous grade, the process described in Sections 5-5.2 and 5-5.3 and illustrated in this example should be followed. A Microsoft Excel spreadsheet has been developed that follows this procedure to calculate roadway runoff and inlet interception for a roadway on a longitudinal slope. When velocities are less than 3 ft/s and the longitudinal slope is less than 2 percent, the spreadsheet will automatically consider side flow in the analysis. Also, when velocities exceed 5 ft/s or the bypass flow at the last inlet exceeds 0.1 cfs, the spreadsheet will warn the designer. The spreadsheet is located at www.wsdot.wa.gov/Design/Hydraulics/Programdownloads.htm.

5-5.3.2 Example

The project is located in Seattle on a non-interstate roadway with a posted speed limit of 35 mph. The high point of a vertical curve is at Station 41+00. The width of pavement is 38 ft (11.5 m), with a 5 ft shoulder and three 11 ft lanes. A proposed drainage system consists of grate inlets placed at the following stations:

Station	(S_L) Longitudinal Grade	(S_t) Superelevation
48+50	0.011	0.035
51+50	0.011	0.022
54+50	0.011	0.02
57+50	0.011	0.02
59+00	0.011	0.02

Complete a pavement and drain inlet analysis for this situation using the formulas below:

Solution:

Assume $T_c = 5$ min for all inlets
Use 10-year MRI design rainfall

1. Determine the intensity, see Chapter 2 of this manual Equation 2-4 and Figure 2-5.4B for m and n values. If the spreadsheet is used, once the m and n values are input 'I' will automatically be calculated.

$$I = \frac{m}{(T_c)^n} = \frac{5.62}{(5)^{0.530}} = 2.39\ \frac{in}{hr}$$

2. Next select an inlet from Section 5-5 of this chapter and note the grate width (GW) and length (GL). For this example, grate inlets will be used with a GW=2.01 and GL=3.89. The designer should insert these values in the spreadsheet only at the stations where inlets will be located.

3. Designers should input the superelevation and longitudinal grade from the table above on the spreadsheet. Stations where the superelevation and or longitudinal grade change but there is no grate should still be noted on the spreadsheet.

4. Using the Rational Method, Section 2-5, determine the runoff from the flow at the high point of the vertical curve to the next inlet or ΔQ. This is the amount of runoff that could be intercepted by the first inlet. By noting the parameters in steps 1 and 2 along with the width of the paved area and the station where proposed inlets will be located, ΔQ will automatically be calculated on the spreadsheet.

   a. Determine the area of flow from the high point of the vertical curve (Station 41+00) to the first inlet (Station 48+50).

$$A = 38\ ft \times ((48 + 50 - 41 + 00)) = 28{,}500\ ft^2$$

(Convert to acres; see Appendix A 1-1 for conversion.)

$$A = \frac{28{,}500\ ft^2}{43{,}560\ \frac{ft^2}{acre}} = 0.65\ acres$$

   b. Determine flow collected from Stations 41+00 to 48+50.

$$\Delta Q = \frac{CIA}{K_c} = \frac{(0.9)(2.39)(0.65)}{1} = 1.41\ cfs$$

5. The inlet at Station 48+50 is analyzed next. The depth of flow (d) and width of flow (Z_d) are calculated using the Equations 5-1 and 5-2. Verify Z_d is within the allowable limit as shown in Figure 5-4.1. For this example, the Z_d is limited to the the shoulder width (5 ft) plus one-half of the traveled lane (5.50 ft) or 10.5 ft.

$$d = \left[\frac{\Delta Q S_t}{37(S_L)^{0.5}}\right]^{3/8} = \left[\frac{1.41 \times 0.035}{37(0.011)^{0.5}}\right]^{3/8} = 0.19 \text{ ft}$$

$$Z_d = \frac{d}{S_t} = \frac{0.19}{.035} = 5.56 \text{ ft}$$

Z_d is acceptable since Z_d = 5.56 ft which is less than the allowable limit of 10.5 ft. When Z_d is less than allowable designers can chose to move the inlet further downstream as long as the inlet spacing requirements are still met. Once Z_d reaches the allowable limit a GW and GL should be inserted at that station on the spreadsheet.

6. QBP is then calculated utilizing Equation 5-3, this is the portion of water that is flowing past the inlet and added to the flow for the next inlet (51+50).

$$Q_{BP} = \Delta Q \left[\frac{(Z_d) - (GW)}{Z_d}\right]^{8/3} = 1.41 \left[\frac{(5.56) - (2.01)}{5.56}\right]^{8/3} = 0.43 \text{ cfs}$$

7. Calculate the velocity to verify it is between 3-5 ft/s. If the velocity is less than 3 ft/s and the grade is less than 2 percent, side flow should also be considered as shown in Example 5-5.3.3. If the velocity is greater than 5 ft/s, the designer should attempt to reduce the velocity. In this example even though the grade is less than 2 percent, the velocity is greater than 3 ft/s so side flow is still considered negligible.

$$V_{continuous} = \frac{\Delta Q - Q_{BP}}{(GW)[d - 0.5(GW)(S_t)]} = \frac{1.41 - 0.43}{(2.05)[0.19 - 0.5(2.05)(0.035)]} = 3.07 \frac{\text{ft}}{\text{s}}$$

8. Next, the amount of flow intercepted by the grate is calculated using Equation 5-4.

$$Q_i = \Delta Q - Q_{BP} = 1.41 - 0.43 = 0.98 \text{ cfs}$$

9. The designer then proceeds to the next inlet at Station 51+50 and repeats the analysis at steps 2 and 3 as shown below:

$$A = 38 \text{ ft} \times ((51 + 50 - 48 + 50)) = 11{,}400 \text{ ft}^2$$

$$A = \frac{11{,}400 \text{ ft}^2}{43{,}560 \frac{\text{ft}^2}{\text{acre}}} = 0.26 \text{ acres}$$

$$\Delta Q = \frac{CIA}{K_c} = \frac{(0.9)(2.39)(0.26)}{1} = 0.56 \text{ cfs}$$

10. The by pass flow (Q_{BP}) from Station 48+50 should be added to delta flow (ΔQ) above to determine the total flow (ΣQ) approaching the next inlet at Station 51+50.

$$\Sigma Q = Q_{BP} + \Delta Q = 0.43 + 0.56 = 0.99 \text{ cfs}$$

If the velocity remained between 3 to 5 ft/s and the longitudinal slope was greater than 2 percent, designers would repeat steps 5–10 till the end of the inlet system.

5-5.3.3 Example – Inlet Capacity Analysis With Side Flow

For velocities less than 3 ft/s and longitudinal grades less than 2 percent, side flow should also be considered in the analysis as shown below.

Station	(S_L)Longitudinal Grade	(S_t) Superelevation
48+50	0.011	0.035
51+50	0.011	0.022
54+50	0.011	0.02
57+50	0.011	0.02
59+00	0.011	0.02

11. This is the same as step 5 above; except the depth of flow (d) and width of flow (Z_d) are calculated at station 51+50. 5-2.

$$d = \left[\frac{\Delta Q S_t}{37(S_L)^{0.5}}\right]^{3/8} = \left[\frac{0.99 \times 0.022}{37(0.011)^{0.5}}\right]^{3/8} = 0.14 \text{ ft}$$

$$Z_d = \frac{d}{S_t} = \frac{0.14}{.022} = 6.51 \text{ ft}$$

Z_d is acceptable sisnce Z_d < 10.5 ft

12. Q_{BP} is then calculated utilizing Equation 5-3, this is the portion of water that is flowing past the inlet and added to the flow for the next inlet (51+50).

$$Q_{BP} = \Delta Q \left[\frac{(Z_d) - (GW)}{Z_d}\right]^{8/3} = 0.99 \left[\frac{(6.51) - (2.01)}{6.51}\right]^{8/3} = 0.37 \text{ cfs}$$

13. Check the velocity at station 51+50.

$$V_{continuous} = \frac{\Delta Q - Q_{BP}}{(GW)[d - 0.5(GW)(S_t)]} = \frac{0.99 - 0.37}{(2.01)[0.14 - 0.5(2.01)(0.022)]} = 2.55 \frac{\text{ft}}{\text{s}}$$

Since the velocity is less than 3 ft/s, side flow should also be considered in the analysis.

14. The velocity of flow entering the side of an inlet is calculated using Equation 5-6.

$$V_{side} = \left(\frac{1.11}{n}\right)(S_L^{0.5}S_t^{0.67}Z_d^{0.67}) = \left(\frac{1.11}{0.015}\right)(0.011)^{0.5}(0.022)^{0.67}(6.51)^{0.67} = 2.11\frac{ft}{s}$$

15. Next determine the ratio of frontal flow to total gutter flow is shown using Equation 5-7 below.

$$E_O = 1 - \left(1 - \frac{GW}{Z_d}\right)^{2.67} = 1 - \left(1 - \frac{2.01}{6.51}\right)^{2.67} = 0.63$$

16. Using Equation 5-8, calculate the ratio of side flow intercepted to total side flow.

$$R_S = \frac{1}{\left(1 + \frac{0.15V_{side}^{1.8}}{S_tGL^{2.3}}\right)} = \frac{1}{\left(1 + \frac{0.15(2.11)^{1.8}}{(0.022)(3.89)^{2.3}}\right)} = 0.47$$

17. The efficiency of the grate is expressed using Equation 5-9. R_f is the ratio of front flow intercepted to total frontal flow. As noted in Section 5-5.2, all the flow traveling over the inlet is assumed to be intercepted by the inlet. So for this example Rf is assumed to be 1 or 100 percent.

$$E = R_fE_O + R_S(1 - E_O) = (1(0.63) + (0.47)(1 - 0.63)) = 0.80$$

18. The amount of flow intercepted by an inlet when side flow is considered is calculated using Equation 5-10.

$$Q_i = Q(R_fE_O + R_S(1 - E_O)) = 0.99(1.0(0.63) + 0.47(1 - 0.63)) = 0.79 \text{ cfs}$$

19. Finally determine the flow that bypasses the inlet and travels to the next inlet downstream.

$$Q_{BP} = \Sigma Q - Q_i = 0.99 - 0.79 = 0.20 \text{ cfs}$$

Repeat the process starting at step 9 through the end of the inlet system.

5-5.3.4 Example – Conclusion

Designers should verify all velocities are less than 5 ft/s and the Z_d does not exceed the allowable spread as noted in Table 5-4.1.

Verify Q_{BP} downstream of the final inlet is less than 0.10 cfs (0.003 m3/s). The spacing between inlets should be a minimum of 20 ft (7 m) to enable the bypass water to reestablish flow against the face of curb.

Keep in mind that the deeper a gutter flows, the more efficient the inlet will perform. Generally 300 ft (90 meter) spacing between inlets is the maximum allowed, see Section 6-2 for further discussion.

5-5.4 Capacity of Inlets in Sag Locations

By definition, a sag is any portion of the roadway where the profile changes from a negative grade to a positive grade. Inlets at sag locations perform differently than inlets on a continuous grade and therefore require a different design criterion. Theoretically, inlets at sag locations may operate in one of two ways: (1) at low ponding depths, the inlet will operate as a weir; (2) high ponding depths (5″ depth above the grated inlet and 1.4 times the grate opening height for combination inlets), the inlet will operate as an orifice. It is very rare that ponding on a roadway will become deep enough to force the inlet to operate as an orifice. As a result, this section will focus on inlets operating as a weir with flow spilling in from the three sides of the inlet that are exposed to the ponding.

Inlets at sag locations can easily become plugged with debris and therefore, it is good engineering practice to provide some type of relief. This relief can be accomplished by locating flanking inlets, on either side of the sag inlet, so they will operate before water exceeds the allowable spread into the travel lane at the sag. This manual recommends flanking inlets be located so the depth of water at the flanking inlet ponds to half the allowable depth at the sag (or $\frac{1}{2}d_B$). With that said, flanking inlets are only required when the sag is located in a depressed area and water has no outlet except through the system. A curb, traffic barrier, retaining wall, or other obstruction, which prevents the runoff from flowing off of the traveled roadway, generally contains this ponded area. However, if runoff is capable of overtopping the curb and flowing away from the roadway before exceeding the allowable limits noted in Figure 5-4.1, flanking inlets are not required. With this situation there is a low potential for danger to the drivers of the roadway if the inlets do not function as designed. Before flanking inlets are removed in this situation, designers should consider the potential damage of water going over the curb. Designers should use the guidelines provided in this section for locating flanking inlets. If a designer suspects flanking inlets are unnecessary, consult the Region Hydraulics Engineer early in the design for approval.

Any section of roadway located in a sag should be designed according to the criteria described below. To aid the designer in sag analysis, a copy of the sag worksheet is located on the HQ Hydraulic web page at http://www.wsdot.wa.gov/publications/fulltext/Hydraulics/Programs/SagWorksheetud.xls.

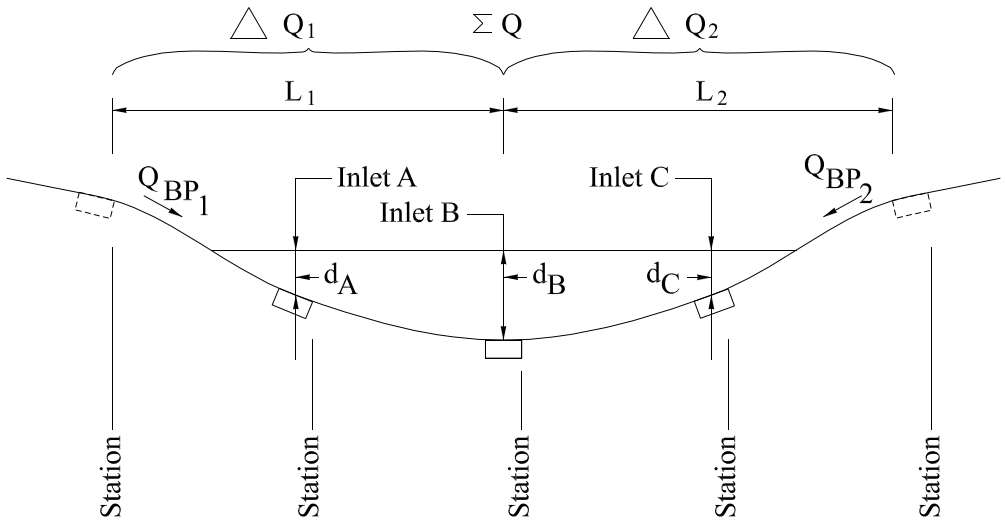

Sag Analysis
Figure 5-5.8

Once an inlet has been placed in a sag location, the total actual flow to the inlet can be determined as shown below. Q_{Total} must be less than $Q_{allowable}$ as described in Equation 5-13.

$$Q_{Total} = Q_{BP1} + Q_{BP2} + \Delta Q_1 + \Delta Q_2 \quad (5\text{-}11)$$

Where:

$Q_{BP1\&2}$ = bypass flow from the last inlet on either side of a continuous grade calculated using Equation 5-3

$\Delta Q_{1\&2}$ = runoff that is generated from last inlet on either side of the continuous grades, see Figure 5-5.3

The effective perimeter of the flanking and sag inlets can be determined using the length and widths for various grates given in Figure 5-5.7. This would be the sum of the three sides of the inlet where flow spills in and where ponding would occur. The three inlets should be assumed to be 50 percent plugged (except for the Combination Inlet B-25.20, which should be considered 0 percent plugged), therefore the total available perimeter should be reduced by half in the analysis. This adjustment is in addition to reducing the perimeter to account for the obstruction caused by the bars in the grate. Figure 5-5.7 lists perimeters for various grates with reductions already made for bars.

$$P_n = 0.5[L + 2W] \quad (5\text{-}12)$$

Where:
- P = effective perimeter of the flanking and sag inlet
- L = length of the inlet from Figure 5-5.7
- W = width of the inlet from Figure 5-5.7

The allowable capacity of an inlet operating as a weir, that is the maximum $Q_{allowable}$, can be found depending on the inlet layout as described below:

When there is only a single inlet at the sag (no flanking inlets) the following equation should be used:

$$Q_{allowable} = C_w \times P \times d_{B\ allowable}^{1.5} \quad (5\text{-}13a)$$

Where:
- C_W = Weir coefficient, 3.0 for English (1.66 for Metric)
- P = effective perimeter of the grate in feet
- $d_{B\ allowable}$ = maximum depth of water at the sag inlet in feet

As noted previously it is recommended that flanking inlets be located laterally from the sag inlet at a distance equal to $0.5d_{B\ allowable}$. When this recommendation is followed, $Q_{allowable}$ can be simplified as shown below. If the inlets are not all the same size, the following equation will need to be modified to account for different perimeters:

$$\Sigma Q = C_W \times P \times [2(0.5d_B)^{1.5} + (d_B)^{1.5}] \quad (5\text{-}13b)$$

Where:
- d_B = depth of water at the sag inlet (ft)

In some applications, locating inlets so water ponds to $0.5d_{B\ allowable}$ is too far (generally in cases with long flat slopes). Designers should instead ensure that the spread of surface water does not exceed those noted in Figure 5-4.1 and use the equation below.

$$Q_{allowable} = C_W\ P[d_A^{1.5} + (d_B)^{1.5} + d_C^{1.5}] \quad (5\text{-}13c)$$

Where:
- d_N = depth of water at the flanking inlets and the sag (ft)

The actual depth of water over the sag inlet can be found with Equation 5-14 below and must be less than $d_{B\ allowable}$ which can be found using Equation 5-2. If however, the inlets are or are not located at $0.5d_{B\ allowable}$, Equation 5-14 will need to be modified to reflect this.

$$d_B = \left[\frac{Q_{Total}}{(C_{WA}P_A 0.3536 + C_{WB}P_B + C_{WC}P_C 0.3536)} \right]^{2/3} \quad (5\text{-}14)$$

Where:

Q_{Total} = actual flow into the inlet in cfs (cms)
C_W = Weir coefficient, 3.0 (1.66 for metric)
P_N = effective grate perimeter, in feet (m), see Figure 5-5.7
d_B = actual depth of ponded water at the inlet in feet (m)

After the analysis is completed the designer should verify the allowable depth and flow have not been exceeded. That is verify $Q_{allowable} > Q_{Total}$ and $d_{B\ allowable} > d_B$. If the allowable flow and depth are greater than the actual, then the maximum allowable spread will not be exceeded and the design is acceptable. If the actual depth or flow is greater than the allowable, then the runoff will spread beyond the maximum limits and the design is not acceptable. In this case, the designer should add flanking inlets or replace the three original inlets with inlets that have larger openings. If additional flanking inlets are used they should be placed close to the sag inlet to increase the flow interception and reduce the flow into the sag.

5-5.4.1 Example

For this example, assume there is a roadway with a sag in the profile. Inlet spacing has already been calculated using the 10-year MRI for the continuous grade sections on either side of the sag, see Example 5-5.3.2.

1. Place an inlet at the low or sag point in the gutter profile, use the gutter profile to determine this location instead of the centerline profile. Whenever possible, a combination inlet should be used at this location to provide continued inlet flow if the grate becomes plugged with debris.

2. The next step is to determine how much runoff will bypass the final inlet on either side of the sag using the 50-year MRI, see step 1 in Example 5-5.3.2. Using the pavement design spreadsheet from Example 5-5.3.2, repeat the analysis using the 50-year m and n values. This may create a higher than allowable width of flow at some inlet locations on the continuous grade section previously calculated; however, this is ignored since the flows are calculated only to determine how much flow will bypass the final inlet on the continuous grade and enter the sag during the 50-year MRI. For this example, use 0.1 cfs for a bypass flow from the down stationing side and 0.08 cfs for a bypass flow from the up stationing side (the bypass was found using Equation 5-3 similar to 6 of Example 5-5.3.2).

3. The next step is to calculate the runoff, other than bypass flow, that is contributing to the ponding in the sag using the 50-year MRI. This is done as described in step 4 of Example 5-1 and is the runoff that is generated from the pavement between the last inlet on either side of the continuous grades. It is calculated by determining the total pavement area downstream of the continuous grade inlets contributing runoff to the sag and applying the rational method using this area. The rational method is used in the same manner as when runoff is calculated for a continuous grade (see the Example 5-5.3.2 numbers 2 and 3). For this example, use $Q_1 + Q_2 =$ 0.72 cfs as the runoff from the pavement in the sag.

4. Once this flow value is calculated, it is added to the two bypass flows to determine the total flow contributing to the sag, using Equation 5-11.

$$Q_{Total} = Q_{BP1} + Q_{BP2} + Q_1 + Q_2$$

$$Q_{Total} = 0.1 + 0.08 + 0.72 = 0.90 \text{ cfs}$$

5. Next, $d_{B\ allowable}$ is checked at the sag using Equation 5-2. At the lowest point of the sag, in this example, the transverse slope or superelevation at the pavement edge is 0.02 ft/ft. Since the shoulder is 5 feet wide and the traveled lane is 11 feet wide, the allowable width of ponding (Z_d) is 10.5 feet (the shoulder width plus half of the traveled lane). The allowable depth of ponding at the sag is:

$$d_{B\ allowable} = S_t \times Z_d = 0.02 \times 10.5 = 0.21 \text{ ft}$$

6. Two additional flanking inlets should be placed on each side of the inlet at the sag this will add relief if the sag inlet becomes clogged or the design spread is exceeded. The flanking inlets can be regular grate inlets and should be located so that the ponded water is $0.5d_{B\ allowable} = 0.105$ ft. deep above the flanking inlets and the allowable spread is equal to or less than noted in Figure 5-4.1.

7. Next, use Equation 5-14 to determine the effective perimeter of the flanking and sag vaned inlets using the length and widths given in Figure 5-5.7. The three inlets must convey the total flow without causing more that 0.21 ft of ponding at the deepest point.

$$P_n = 0.5[L + 2W]$$

$$P = 0.5\ (1.25 + 2 \times 1.31) = 1.94 \text{ ft}$$

8. Next, determine the maximum allowable flow $\Sigma Q_{allowable}$ into all three inlets when maximum ponding ($d_{B\ allowable}$) occurs. The flow into the lowest inlet is calculated using Equation 5-13b with the depth $d_{B\ allowable}$ and the effective perimeter.

$$\Sigma Q_{allowable} = C_W \times P \times [2(0.5d_B)^{1.5} + (d_B)^{1.5}]$$

$$\Sigma Q_{allowable} = [3 \times 1.94 \times [2(.5 \times 0.21)^{1.5} + (0.21)^{1.5}]] = 0.95 \text{ cfs}$$

9. The actual depth of water over the sag inlet, dB should be calculated.

$$d_B = \left[\frac{Q_{Total}}{(C_{WA}P_A 0.3536 + C_{WB}P_B + C_{WC}P_C 0.3536)}\right]^{2/3}$$

$$d_B = \left[\frac{0.90}{3 \times 1.94 \times 0.3536 + 3 \times 1.94 + 3 \times 1.94 \times 0.3536}\right]^{2/3} = 0.20 \text{ ft}$$

10. Finally the actual values are compared to the maximum allowable values as follows:

0.95 cfs > 0.90 cfs or

$Q_{allowable} > Q_{Total}$

∴ Therefore the design is acceptable

0.21 ft > 0.20 ft or

$d_{B\ allowable} > d_B$

∴ Therefore the design is acceptable

If either the actual depth or flow exceeded the maximum allowable, the design would not be acceptable. In this case the designer would need to repeat the process as described in Section 5-5.3 until the design parameters are met. If the design parameters cannot be met due to project constraints, the designer should consult the Region Hydraulics Engineer for further design guidance.

A worksheet of the steps outlined in this example can be found at the following web link: www.wsdot.wa.gov/publications/fulltext/Hydraulics/Programs/SagWorksheetud.xls. Designers may find it useful to fill out the worksheet for each inlet located at a sag. Worksheets should be submitted with the hydraulics reports.

5-6 Hydroplaning and Hydrodynamic Drag

As the depth of water flowing over a roadway surfaces increases, the potential for both hydroplaning and hydrodynamic drag increases. Both are discussed in more detail in the subsequent paragraphs below.

Hydrodynamic drag is a term used to describe the force applied to the tire of a vehicle pushing through water as opposed to the tire lifting off the pavement (hydroplaning). The differential force between the tire in the water and the tire out of the water causes the vehicle to "pull" or veer to the side of the water. This usually occurs at speeds less than 50 mph and in water deeper than the depth of the vehicles tire tread. Minimizing water flow depth across lanes and intrusion of flow into lanes will decrease the possibility of hydrodynamic drag.

When rolling tires encounter a film of water on the roadway, the water is channeled through the tire pattern and through the surface roughness of the pavement. Hydroplaning occurs when the drainage capacity of the tire tread pattern and the pavement surface is exceeded and the water begins to build up in front of the tire. As the water builds up, a water wedge is created and this wedge produces a force, which can lift the tire off the pavement surface. This is considered as full dynamic hydroplaning and, since water offers little shear resistance, the tire loses its tractive ability and the driver may lose control of the vehicle.

Hydroplaning is a function of the water depth, roadway geometrics, vehicle speed, tread depth, tire inflation pressure, and conditions of the pavement surface. The following can reduce the hydroplaning potential of a roadway surface:

1. Design the highway geometries to reduce the drainage path lengths of the water flowing over the pavement. This will prevent flow build-up.
2. Increase the pavement surface texture depth by such methods as grooving of Portland cement concrete. An increase of pavement surface texture will increase the drainage capacity at the tire pavement interface.
3. The use of open graded asphaltic pavements has been shown to greatly reduce the hydroplaning potential of the roadway surface. This reduction is due to the ability of the water to be forced through the pavement under the tire. This releases any hydrodynamic pressures that are created and reduces the potential for the tires to hydroplane.
4. The use of drainage structures along the roadway to capture the flow of water over the pavement will reduce the thickness of the film of water and reduce the hydroplaning potential of the roadway surface.

6-1 Introduction

A storm drain (storm sewer) is a network of pipes that conveys surface drainage from a surface inlet or through a manhole, to an outfall. Storm drains are defined as closed pipe networks connecting two or more inlets, see Figure 6-1.1. Storm drain networks typically consist of lateral(s) that discharge into a trunk line. The trunk line then receives the discharge and conveys it to an outfall.

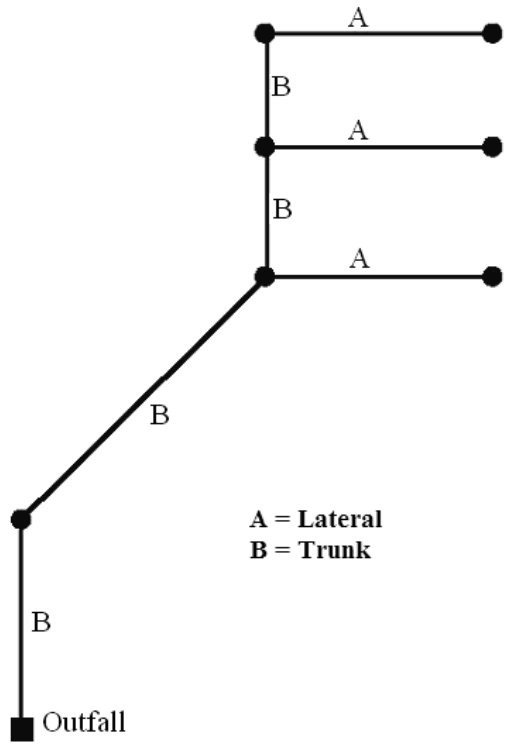

Storm Drain Structure
Figure 6-1.1

While configurations like the one shown in Figure 6-1.1 are typical, there are also other configurations that do not meet the storm drain definition as shown in Figure 6-1.2. In cases where there is only one inlet and no more than two pipes, this should be classified as a culvert on the plan sheets and designed as follows:

1. Storm drain – that does not require pressure testing.
2. Lateral – that does not require pressure testing.

3. Storm drain – that does require pressure testing.
4. Storm drain – that does not require pressure testing.

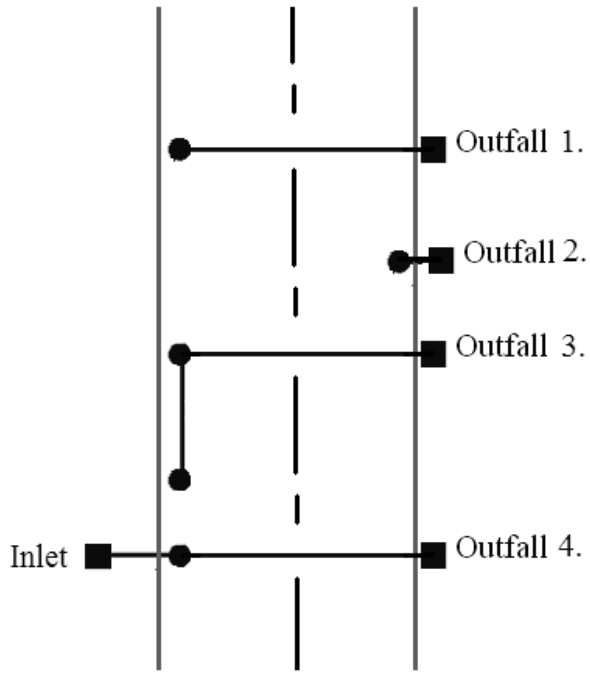

Storm Drain Configurations
Figure 6-1.2

All storm drain designs will be based on an engineering analysis which takes into consideration runoff rates, pipe flow capacity, hydraulic grade line, soil characteristics, pipe strength, potential construction problems, and potential runoff treatment issues. The majority of time spent on a storm drain design is calculating runoff from an area and designing a pipe to carry the flow. A storm drain design may be performed by hand calculations or by one of several available computer programs and spreadsheets. In addition to storm drain design guidance, this chapter also contains information on drywells (Section 6-7), pipe materials used for storm drains (Section 6-8), and designing for subsurface drainage (Section 6-9).

6-2 Design Criteria

Along with determining the required pipe sizes for flow conveyance and the hydraulic grade line, storm drain system design should consider the following guidelines:

1. **Soil Conditions** – Soil with adequate bearing capacity must be present to interact with the pipes and support the load imparted by them. Surface and subsurface drainage must be provided to assure stable soil conditions.

Soil resistivity and pH must also be known so the proper pipe material can be specified. See Section 8-5 for further guidance.

2. **Inlet Spacing and Capacity** – Design guidelines for inlet spacing and capacity are detailed in Chapter 5, Drainage of Highway Pavements. For minimum clearance between culverts and utilities, designers should consult the Region Utilities Office for guidance.

3. **Junction Spacing** – Junctions (catch basins, grate inlets and manholes) should be placed at all breaks in grade and horizontal alignment. Pipe runs between junctions should not exceed 300 feet (100 meters) for pipes smaller than 48 inches (1,200 millimeters) in diameter and 500 feet (150 meters) for pipes 48 inches (1,200 millimeters) or larger in diameter. When grades are flat, pipes are small or there could be debris issues; designers should consider reducing the spacing. Region Maintenance should be consulted for final approval on maximum spacing.

4. **Future Expansion** – If it is anticipated that a storm drain system may be expanded in the future, provision for the expansion shall be incorporated into the current design. Additionally, prior to expanding an existing system, the existing system should be inspected for structural integrity and hydraulic capacity.

5. **Velocity** – The design velocity for storm drains should be between 3 to 10 feet per second. This velocity is calculated using Manning's Equation (6-1), under full flow condition even if the pipe is only flowing partially full with the design storm. The minimum slope required to achieve these velocities is summarized in the Figure 6-2.

Pipe Diameter (inches)	Minimum Slope (ft/ft)	
n=0.013	2.5 fps	3 fps
12	0.003	0.0044
15	0.0023	0.0032
18	0.0018	0.0025
24	0.0012	0.0017

Minimum Storm Drain Slopes
Figure 6-2

When flows drop below 3 feet per second (1.0 meter per second), pipes can clog due to siltation. Flows can be designed to as low as 2.5 feet per second with justification in the hydraulic report however, lower velocities require prior approval. As the flow approaches (and exceeds) 10 feet per second, higher energy losses are produced in the storm drain system that

can cause abrasion in the pipes. For velocities approaching or exceeding 10 feet per second, designers should consult the Section 8-6 for abrasion design guidance.

6. **Grades at Junctions** – Pipe crowns, of differing diameter, branch or trunk lines should be at the same elevation when entering and exiting junctions. For pipes of the same diameter where a lateral is placed so the flow is directed against the main flow through the manhole or catch basin, the lateral invert must be raised to match the crown of the inlet pipe. Matching the crown elevation of the pipes, will prevent backflow in the smaller pipe. (A crown is defined as the highest point of the internal surface of the transverse cross section of a pipe.)

7. **Minimum Pipe Diameter** – The minimum pipe diameter shall be 12 inches (300 millimeters), except that single laterals less than 50 feet (15 meters) long may be 8 inches (200 millimeters) in diameter (some manufacturers are unable to add protective treatment for 8 inch storm drain pipe).

8. **Structure Constraints** – During the storm drain layout design, designers should also consider the physical constraints of the structure. Specifically:

   - **Diameter** – Designers should verify the maximum allowable pipe diameter into a drainage structure prior to design. Some standard plans for drainage structures have pipe allowances clearly stated in tables for various pipe materials.

   - **Angle** – Before finalizing the storm drain layout, designers should verify the layout is constructible with respect to the angle between pipes entering or exiting a junction. In order to maintain the structural integrity of a junction there are minimum clearance requirements that must be met depending on the pipe diameter. Designers can verify the minimum pipe angle with the Pipe Angle Calculation Worksheet located on the HQ Hydraulics web page at: www.wsdot.wa.gov/Design/Hydraulics/ProgramDownloads.htm.

9. **Pipe Material** – Storm drains should be designed to include all Schedule A pipe options, unless specific site constraints limit options. See Section 6-8 for further discussion.

10. **Increase in Profile Grade** – In cases where the roadway or ground profile grades increase downstream along a storm drain, a smaller diameter pipe may be sufficient to carry the flow at the steeper grade. However, due to maintenance concerns, the Washington State Department of Transportation (WSDOT) design practices do not allow pipe diameters to decrease in downstream runs.

Consideration could be given in such cases to running the entire length of pipe at a grade steep enough to allow use of the smaller diameter pipe. Although this will necessitate deeper trenches, the trenches will be narrower for the smaller pipe and therefore the excavation may not substantially increase. A cost analysis is required to determine whether the savings in pipe costs will offset the cost of any extra structure excavation.

11. **Outfalls** – An outfall can be any structure (man-made or natural) where stormwater from WSDOT highways is conveyed off of the right of way (ROW.) Outfalls must conform to the requirements of all federal, state, and local regulations and be documented as described in Appendix 1-3 of this manual.

    Additional considerations for outfalls include energy dissapators and tidal gates. Energy dissipators prevent erosion at the storm drain outfall, for design guidance see Section 3-4.7 of this manual. Installation of tide gates may be necessary when the outfall is in a tidal area, consult the Region Hydraulics Engineer for further guidance.

12. **Location** – Medians usually offer the most desirable storm drain location. In the absence of medians, a location beyond the edge of pavement on state right of way or on easements is preferable. It is generally recommended when a storm drain is placed beyond the edge of the pavement that a one-trunk system, with connecting laterals, be used instead of running two separate trunk lines down each side of the road.

13. **Confined Space and Structures** – Per WAC 296, any structure (catch basin, manhole, grate inlet, or underground detention vault) more than 4 feet in depth is considered a confined space. As such, any structure exceeding 4 feet in depth that could be accessed by personnel must be equipped with a ladder. To determine if personnel will access the structure or if a vactor hose will be used for maintenance, consult the local maintenance office. Structures over 15 feet in depth should be avoided due to the limitations of WSDOT vactor trucks. Any design requiring a structure deeper than 15 feet must consult the Region Hydraulics Office for design approval. Underground detention vaults should only be considered as a last resort due to the overall expense of maintenance. Designers should consult the Region Maintenance Office and Region Hydraulic Engineer before including a vault in any design.

6-3 Data for Hydraulics Report

The design of a storm drain system requires that data be collected and documented in an organized fashion. Hydraulics reports should include all related calculations (whether performed by hand or computer). See Appendix 1-3 of this manual for guidelines on what information should be submitted and recommendations on how it should be organized.

6-4 Storm Drain Design – Handheld Calculator Method

Storm drain design is accomplished in two parts: determine the pipe capacity and then evaluate the HGL. The steps outlined in this section provide the design guidance to determine the pipe capacity. In this section the pipes are designed under full flow conditions to verify the velocity requirements are met. For the HGL evaluated in Section 6-6, the actual surface water elevation in the pipe will be used to verify the system operates under gravity flow conditions.

6-4.1 General

Storm drain design can be accomplished with a handheld calculator using the Rational Method and Figure 6-4.1 to show calculations. Figure 6-4.1 has five divisions: Location, Discharge, Drain Design, Drain Profile, and Remarks. These divisions are further expanded in the subsections below.

6-4.2 Location

The Location section gives all the layout information of the drain.

Column 1 gives a general location reference for the individual drain lines, normally by the name of a street or a survey line.

Columns 2 and **3** show the stationing and offset of the inlets, catch basins, or manholes either along a roadway survey line or along a drain line.

6-4.3 Discharge

The Discharge section presents the runoff information and total flow into the drain.

Column 4 is used to designate the drainage areas that contribute to particular point in the drain system. The drainage areas should be numbered or lettered according to some reference system on the drainage area maps. The type of ground cover (pavement, median, etc.) may be indicated. Since drainage areas must be subdivided according to soil and ground cover types, a drainage area may have several different parts.

Column 5 shows the area of the individual drainage areas listed in Column 4 in acres (hectares).

Column 6 shows the Rational method runoff coefficient (see Chapter 2). Each individual drainage area must have a corresponding runoff coefficient.

Column 7 is the product of Columns 5 and 6. Column 7 is also the effective impervious area for the subsection.

Storm Drain Design Calculations

Calculated By	Date	Checked By	Date	SR	Project	Sheet # Of Sheet

Location			Discharge									Drain Design				Drain Profile						
Drain Located On	From Station	To Station	Source of Drainage	Drainage Area (A)	Runoff Coeff. (C)	CA	Σ CA	Tc to Col.2 Station	Rainfall Intensity in/hr	Runoff cfs	Con. Inflow cfs	Total Flow cfs	Pipe Diameter ft	Pipe Slope ft/ft	Flow Velocity ft/s	Pipe Capacity cfs	Length ft	Elev. Change ft	Upstr. Ground Elev.	Downstr. Ground Elev.	Upstr. Invert Elev.	Downstr. Invert Elev.	Remarks
1	2	3	4	5	6	7	8	9	10	11	12	13	14	15	16	17	18	19	20	21	22	23	24

Storm Drain Design Calculations

Figure 6-4.1

Column 8, the summation of CA, is the accumulation of all the effective impervious areas contributing runoff to the point in the system designated in Column 2. All the individual areas in Column 7 contributing to a point in Column 2 are summed. This would include runoff from upstream inlets that contribute to the pipe capacity.

C**olumn 9** shows the time of concentration to the structure indicated in Column 2. Section 2-5.3 of this manual details how to calculate the time of concentration. Generally the time chosen here would be the longest time required for water to travel from the most hydraulically remote part of the storm drain system to this point. This would include flow over the drainage basin and flow through the storm drain pipes. The time of concentration should be expressed to the nearest minute and as discussed in Chapter 2 is never less than 5 minutes.

When the runoff from a drainage area enters a storm drain and the time of concentration (Tc) of the new area is shorter than the accumulated Tc of the flow in the drain line, the added runoff should be calculated using both values for Tc. First the runoff from the new area is calculated for the shorter Tc. Next the combined flow is determined by calculating the runoff from the new area using the longer Tc and adding it to the flow already in the pipe. The Tc that produces the larger of the two flows is the one that should be used for downstream calculations for the storm drain line.

The easiest method for determining the Tc of the flow already in the system (upstream of the structure in Column 2) is to add the Tc from Column 9 of the previous run of pipe (this value should be on the row above the row that is currently being filled in) to the time it took the flow to travel through the previous run of pipe. To determine the time of flow (or more correctly, the travel time) in a pipe, the velocity of flow in the pipe and the length of the pipe must be calculated. Velocity is computed using Manning's Equation and is found in Column 16 of the previous run of pipe. The length used is the value entered in Column 18 for the previous run of pipe. Obviously, this calculation is not performed for the very first (most upstream) run of pipe in a storm drain system.

$$T_1 = \frac{L}{60V}$$

Where:

T_1 = time of concentration of flow in pipe in minutes
L = length of pipe in feet (meters) Column 18
V = velocity in ft/s (m/s) Column 16 of the previous run of pipe

The designer should note that this calculation assumes that the pipe is flowing full. It is accurate for pipes flowing slightly less than half full up to completely full. It will be slightly conservative for T_c calculations when the pipe is flowing significantly less than half full.

Column 10 shows the rainfall intensity corresponding to the time indicated in Column 9 and the location of the project.

The intensity is in inches per hour to the nearest hundredth for English units (millimeters per hour to the nearest tenth). The rainfall intensity used is a 25-year recurrence interval for storm drain laterals and trunks and the 10-year recurrence interval for laterals without trunks. See Chapter 2 for a complete description of how this intensity can be determined. Projects in eastern Washington should also consult Chapter 4 of the *Highway Runoff Manual* for further design guidance.

Column 11 shows the amount of runoff to the (nearest tenth of a cubic foot per second) (nearest hundredth of a cubic meter per second) up to the point indicated in Column 2. It is computed as the product of Columns 8 and 10. This is simply applying the rational method to compute runoff from all the drainage area upstream of the pipe being analyzed.

Column 12 shows any flow, other than the runoff calculated in Column 11, to the nearest tenth of a cubic foot per second (nearest hundredth of a cubic meter per second) that is entering the system up to the point indicated in Column 2. It is rare to have flow entering a system other than runoff from the drainage basin but this does occur. For instance, when an underdrain, which is draining groundwater, is connected to the storm drain. The label for this column indicates that these flows are considered constant for the duration of the storm so they are independent of the time of concentration.

This column is also used when the junction is a drywell and a constant rate of flow is leaving the system through infiltration. When this occurs the value listed in Column 12 is negative. See Section 6-7 for a complete discussion of drywells.

Column 13 is the sum of columns 11 and 12 and shows the total flow in cubic feet per second to the nearest tenth (cubic meters per second to the nearest hundredth) to which the pipe must be designed.

6-4.4 Drain Design Section

This section presents the hydraulic parameters and calculations required to design storm drain pipes.

Column 14 shows the pipe diameter in feet (millimeters). This should be a minimum of 8 inches or 0.67 feet (200 millimeters) for any pipe run with a length of 50 feet (15 meters) or less. Pipes runs longer than 50 feet (15 meters) must have a minimum diameter of 12 inches or 1 foot (300 millimeters). Pipe sizes should never decrease in the downstream direction.

The correct pipe size is determined through a trial and error process. The engineer selects a logical pipe size that meets the minimum diameter requirements and a slope that fits the general slope of the ground above the storm drain. The calculations in Column 17 are performed and checked against the value in Column 13. If Column 17 is greater than or equal to Column 13, the pipe size is adequate. If Column 17 is less than Column 13 the pipe does not have enough capacity and must have its diameter or slope increased after which Column 17 must be recalculated and checked against Column 13.

Column 15, the pipe slope, is expressed in feet per foot (meters per meter). This slope is normally determined by the general ground slope but does not have to match the surface ground slope. The designer should be aware of buried utilities and obstructions, which may conflict, with the placement of the storm drain.

Column 16 shows the full flow velocity. It is determined by Manning's Equation, which is shown below. The velocity is calculated for full flow conditions even though the pipe is typically flowing only partially full. Partial flows will be very close to the full flow velocity for depths of flow between 30 percent and 100 percent of the pipe diameter.

$$V = \frac{1.486}{n} R^{2/3}\sqrt{S} = \frac{1.486}{n}\left[\frac{D}{4}\right]^{2/3}\sqrt{S} \qquad \text{(English Units)} \qquad (6\text{-}1)$$

$$V = \frac{1}{n} R^{2/3}\sqrt{S} = \frac{1}{n}\left[\frac{D}{4}\right]^{2/3}\sqrt{S} \qquad \text{(Metric Units)}$$

Where:

- V = velocity in ft/s (m/s)
- D = pipe diameter in feet (meters)
- S = pipe slope in feet/foot (meters/meter)
- n = Manning's roughness coefficient (see Appendix 4-1)

Extremely high velocities should be avoided because of excessive abrasion in the pipe and erosion at the outlet of the system. Drop manholes should be considered for pipe velocities over 10 fps (3.0 meters per second). The engineer should also keep in mind that energy losses at junctions become significant above 6 feet per second (2 meters per second).

The minimum velocity as determined by this equation is 3 feet per second (1 meter per second).

Column 17, the pipe capacity, shows the amount of flow in cubic feet per second (cubic meters per second), which can be taken by the pipe when flowing full. It is computed using the following formula:

$$Q = VA = V\frac{\pi D^2}{4} \tag{6-2}$$

Where:
- Q = full flow capacity in cfs (cms)
- V = velocity as determined in Column 16 in ft/s (m/s)
- A = cross sectional area of pipe in feet squared (meters sq)
- D = diameter of pipe in feet (meters)

6-4.5 Drain Profile

Columns 18 through **23**, the drain profile section, includes a description of the profile information for each pipe in the storm drain system. It describes the pipe profile and the ground profile. The ground elevations should be finished elevations, to the hundredth of a foot. The items in this section are generally self-explanatory. The only exception is Column 18, the length shown is the horizontal projection of the pipe, in feet (meters), from the center to center of appurtenances. Generally, profiles should be set to provide a minimum of 2 feet (0.6 meters) of cover over the top of the pipe, see Chapter 8 for further design guidance.

6-4.6 Remarks

Column 24, remarks, is for any information, which might be helpful in reviewing the calculations. This space should note unique features such as drop manholes, long times of concentration, changes in the type of pipe, or changes in design frequency.

6-5 Storm Drain Design – Computer Analysis

With the addition of personal computers to most engineering workstations, storm drain design by handheld calculator has become less prevalent. Storm drain design by computer analysis offers some distinct advantages over calculations performed by hand. Chief among these advantages is the decreased amount of time required to perform the pipe sizing and hydraulic grade line calculations and the reduced chance for calculation errors.

Some computer programs will use the Rational method for storm drain design while others will use a hydrograph method such as the SBUH method. Both of these methods are valid for WSDOT storm drain design; however, they will yield different peak runoff values. This is most distinct for drainage basins

that have very short times of concentration. As a basin's time of concentration extends beyond 15 minutes the two methods yield more similar answers. This difference in peak runoff values ends up having little effect on storm drain design since runoff from basins with short times of concentration tends to be small and the required pipe size is determined by the minimum allowable pipe size. As flows entering the system increase to the point that minimum pipe sizes are no longer the governing factor, the associated time of concentration becomes greater and the two methods produce similar peak flow rates.

There are several commercially available computer programs for storm drain design. Each of these programs has certain features that make them unique from other programs but the primary calculations are performed the same way. Because of this, nearly any commercially available computer programs that perform storm drain design are acceptable for designing WSDOT storm drains.

The HQ Hydraulics Office has purchased the computer program StormShed 3G for the Ferries Division and each WSDOT region to use whenever designing storm drains. Training material for StormShed 3G has been developed specifically for WSDOT applications and is available on the HQ Hydraulics web page or designers can consult the HQ Hydraulics Office for additional technical assistance. To attain the latest version of StormShed 3G software contact the HQ Hydraulics Office or your Region Hydraulic Engineer. Prior to using StormShed 3G, the distance between catch basins/manholes/inlets in every run of storm drains should be located using a Microsoft® Excel Pavement Drainage spreadsheet. A spreadsheet is available on the HQ Hydraulic web page at: www.wsdot.wa.gov/eesc/design/hydraulics. The spreadsheet lacks the advanced features found in commercially available computer programs but does offer a simple and effective way to locate storm drains.

6-6 Hydraulic Grade Line

The hydraulic grade line (HGL) should be designed so there is a space of air between the top of water and the inside of the pipe. In this condition the flow is operating as gravity flow and the HGL is the water surface elevation traveling through the storm drain system. If the HGL becomes higher than the crown elevation of the pipe the system will start to operate under pressure flow. If the system is operating under pressure flow, the water surface elevation in the catch basin/manhole needs to be calculated to verify the water surface elevation is below the rim (top) elevation. When the water surface elevation exceeds the rim elevation, water will discharge through the inlet and cause severe traffic safety problems. Fortunately, if the storm drain pipes were designed as discussed in the previous sections, then the HGL will only become higher than the catch basin/manhole rim elevation when energy losses become significant or if the cover over a storm drain is low (less than 5 feet).

Regardless of the design conditions, the HGL should always be evaluated especially when energy losses become significant. Possible situations where energy losses can become significant include: high flow velocities through the system (greater than 6.6 ft/s), pipes installed under low cover at very flat gradients, inlet and outlet pipes forming a sharp angle at junctions, and multiple flows entering a junction.

The HGL can only be calculated after the storm drain system has been designed. When computer models are used to determine the storm drain capacity, the model will generally evaluate the HGL. The remainder of this section provides the details for how the analysis is performed.

The HGL is calculated beginning at the most downstream point of the storm drain (outfall) and ending at the most upstream point, which is exactly the opposite direction that was used to design the pipe sizes. To start the analysis, the water surface elevation at the storm drain outfall must be known. Refer to Chapter 3 for an explanation on calculating water surface elevations at the downstream end of a pipe (the tailwater is calculated the same for storm drain outfalls and culverts). Once the tailwater elevation is known, the energy loss (usually called head loss) from friction is calculated for the most downstream run of pipe and the applicable minor losses are calculated for the first junction upstream of the outfall. All of these head losses are added to the water surface elevation at the outfall to obtain the water surface elevation at the first upstream junction (also the HGL at that junction). The head losses are then calculated for the next upstream run of pipe and junction and they are added to the water surface elevation of the first junction to obtain the water surface elevation of the second upstream junction. This process is repeated until the HGL has been computed for each junction. The flow in most storm drainpipes is subcritical; however, if any pipe is flowing supercritical (see Chapter 4 for an explanation of subcritical and supercritical flow) the HGL calculations are restarted at the junction on the upstream end of the pipe flowing supercritical. The HGL calculation process is represented in the following equation:

$$WSEL_{J1} = WSEL_{OUTFALL} + H_{f1} + H_{e1} + H_{ex1} + H_{b1} + H_{m1} \quad (6\text{-}3)$$

$$WSEL_{J2} = WSEL_{J1} + H_{f2} + H_{e2} + H_{ex2} + H_{b2} + H_{m2}$$

...

$$WSEL_{Jn+1} = WSEL_{Jn} + H_{fn+1} + H_{en+1} + H_{exn+1} + H_{bn+1} + H_{mn+1}$$

Where:

$WSEL$ = water surface elevation at junction noted
H_f = friction loss in pipe noted (see Section 6-6.1)
H_e = extrance head loss at junction noted (see Section 6-6.2)
H_{ex} = exit head loss at junction noted (see Section 6-6.2)
H_b = bend head loss at junction noted (see Section 6-6.3)
H_m = multiple flow head loss at junction noted (see Section 6-6.4)

As long as the HGL is lower than the rim elevation of the manhole or catch basin, the design is acceptable. If the HGL is higher than the rim elevation, flow will exit the storm drain and the design is unacceptable. The most common way to lower the HGL below the rim elevation is to lower the pipe inverts for one or more runs of the storm drain or increase the pipe diameter.

6-6.1 Friction Losses in Pipes

Head loss due to friction is a result of the kinetic energy lost as the flow passes through the pipe. The rougher the pipe surface is, the greater the head loss is going to be. Head loss from friction can be calculated with the following equation.

$$H_f = L\left[\frac{2.15Qn}{D^{2.667}}\right]^2 \quad \text{(English Units)} \qquad (6\text{-}4)$$

$$H_f = L\left[\frac{3.19Qn}{D^{2.667}}\right]^2 \quad \text{(Metric Units)}$$

Where:

H_f = head loss due to friction in feet (meters)
L = length of pipe in feet (meters)
Q = flow in pipe in cfs (cms)
n = Manning's roughness coefficient (see Appendix 4-1)
D = diameter of pipe in feet (meters)

6-6.2 Junction Entrance and Exit Losses

When flow enters a junction, it loses all of its velocity. As a result, there is an associated head loss equal to one velocity head. Then when the flow exits the junction and accelerates into the next pipe, there is another head loss equal to approximately half of one velocity head. These two head losses can be represented with the following equations (Metric and English units use the same equations).

$$H_e = \frac{v_2^2}{2g} \qquad (6\text{-}5)$$

$$H_{ex} = 1.0\left(\frac{V^2}{2g} - \frac{V_d^2}{2g}\right) \approx \frac{V^2}{4g}$$

Where:

H_e = head loss from junction entrance in feet (meters)
H_{ex} = head loss from junction exit in feet (meters)
V = flow velocity in pipe in feet per second (m/s)
V_d = channel velocity downstream of outlet in feet per second (m/s)
g = gravitational acceleration constant

6-6.3 Losses From Changes in Direction of Flow

When flow changes direction inside of a junction, there is an associated head loss. The amount of head loss that will occur is dependent on how great the change is. As the angle between the inflow and outflow pipes increase, the amount of head loss increases. This head loss can be calculated with Equation 6-6 (metric and English units use the same equation).

$$H_b = K_c \frac{v^2}{2g} \tag{6-6}$$

Where:

H_b = head loss from change in direction in feet (meters)

K_b = head loss coefficient for change in direction, see below:

K_b	Angle of Change in Degrees
0.00	0
0.19	15
0.35	30
0.47	45
0.56	60
0.64	75
0.70	90 and greater

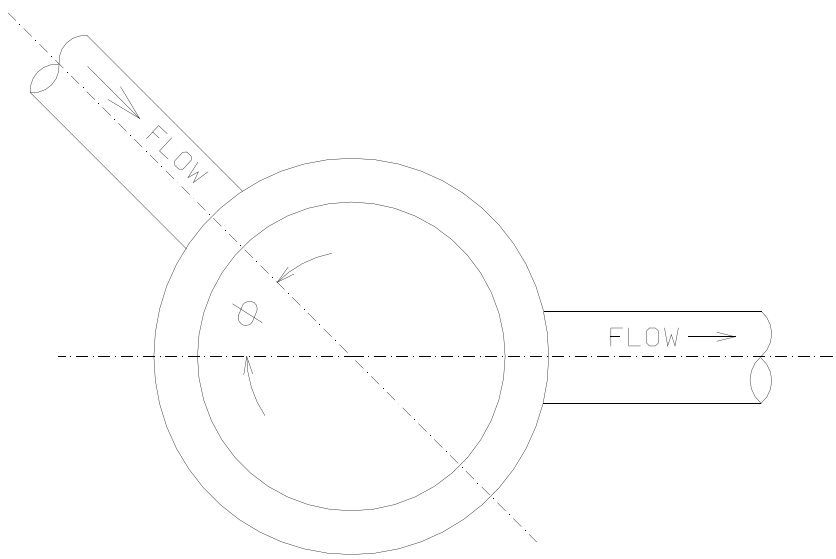

Changes in Direction of Flow
Figure 6-6.3

6-6.4 Losses From Multiple Entering Flows

When flow enters a junction from more than one pipe there is an associated head loss. The head loss is dependent on the amount of flow in each pipe and the direction flow enters the junction through each pipe. Once the angle is determined, this head loss can be calculated with the following equation (Metric and English units use the same equation).

$$H_m = \frac{Q_2V_2^2 - Q_1V_1^2 - \cos\phi Q_3V_3^2}{2gQ_2} \qquad (6\text{-}7)$$

Where:

H_m = head loss from multiple flows in feet (meters)

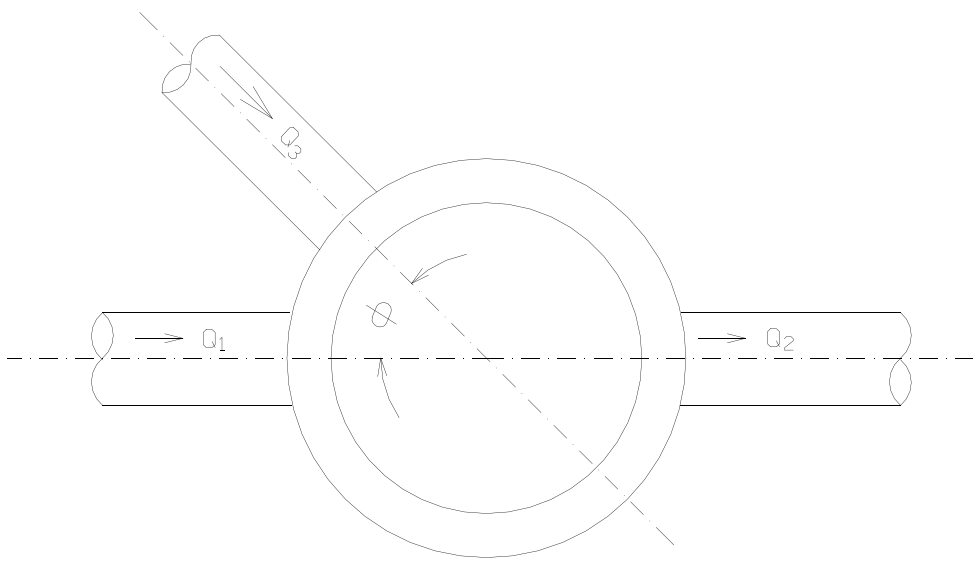

Multiple Flows Entering a Junction
Figure 6-6.4

6-7 Drywells

A drywell is an underground structure that is typically precast with perforations along the structure walls and bottom that allow stormwater runoff to flow directly into the ground. Drywells can be stand alone structures or installed as part of a storm drain system. The primary advantage of drywells is that they reduce flooding by discharging flow into groundwater instead of discharging it to surface waters such as rivers and creeks. Also, when allowed as part of a storm drain system, the drywell reduces the flow which can reduce the size of the pipes in the system. Standard Plan B-20.20 of the WSDOT *Standard Plans for Road, Bridge, and Municipal Construction* depicts a typical drywell. Additional information about the appropriate geotextile (Class A Underground drainage with moderate survivability) to select for the installation of the drywell is located in the *Standard Specifications for Road, Bridge, and Municipal Construction,* Sections 9-33 and 9-03.12(5).

Prior to specifying a drywell in a design, designers should consult the *Highway Runoff Manual* for additional guidance and design criteria. Drywells are considered Underground Injection Control Wells (UICs) and are required to be registered with DOE per WAC 173-218, see Section 4-5.4 of the *Highway Runoff Manual*. Additionally, stormwater must be treated prior to discharging into a drywell using a Best Management Practice described in Chapter 5 of the *Highway Runoff Manual*. Finally, all drywells should be sized following the design criteria outlined in Section 4-5.4.2 of the *Highway Runoff Manual.*

6-8 Pipe Materials for Storm Drains

When designing a storm drain network, the designer should review Section 8-2 (Pipe Materials), as well as the list of acceptable pipe material (Schedule Pipe) in Section 7-04 (Storm Sewers) of the *Standard Specifications*. Storm drain pipe is subject to some use restrictions, which are detailed in Section 8-1.4 (Storm Sewer Pipe) of this manual.

Pipe flow capacity depends on the roughness coefficient, which is a function of pipe material and manufacturing method. Fortunately, most storm drain pipes are 24 inches (600 millimeters) in diameter or less and studies have shown that most common schedule pipe materials of this size range have a similar roughness coefficient. For calculations, the designer should use a roughness coefficient of 0.013 when all schedule pipes 24 inches (600 millimeters) or smaller are acceptable. For larger diameter pipes, the designer should calculate the required pipe size using the largest Manning's Roughness Coefficient for all the acceptable schedule pipe values in Appendix 4-A of this manual. In the event a single pipe alternative has been selected, the designer should design the required pipe size using the applicable Manning's Roughness Coefficient for that material listed in Appendix 4-A.

In estimating the quantity of structure excavation for design purposes at any location where alternate pipes are involved, estimate the quantity of structure excavation on the basis of concrete pipe since it has the largest outside diameter.

6-9 Subsurface Drainage

Subsurface drainage is provided for control of groundwater encountered at highway locations. Groundwater, as distinguished from capillary water, is free water occurring in a zone of saturation below the ground surface. The subsurface discharge depends on the effective hydraulic head and on the permeability, depth, slope, thickness, and extent of the aquifer.

The solution of subsurface drainage problems often calls for specialized knowledge of geology and the application of soil mechanics. The designer should work directly with the Region Materials Engineer as subsurface conditions are determined and recommendations are made for design in the soil's report.

Subsurface drainage can be intercepted with underdrain pipe that is sized by similar methods used to design storm drain pipes. There are two different methods, recommended in this manual that are used to size underdrains depending on the application.

1. When an underdrain is installed for control of seepage in cuts or side hills or the lowering of the groundwater table for proper subgrade drainage, the design method used to size storm drains should be followed. The only difference is that the flow used for the calculations is the predicted infiltration from groundwater into the system instead of flow entering the system from roadway drainage. When subsurface drainage is connected to a storm drain system, the invert of the underdrain pipe shall be placed above the operating water level in the storm drain. This is to prevent flooding of the underdrain system which would defeat its purpose.

2. The second method involves underdrains installed in combination with a BMP or hydraulic feature such as: media filter drains, swales, ditches, and infiltration trenches as shown in Figure 6-9.1. For these applications, underdrain should be sized so water drains from the bedding material substantially faster than water enters the soil layer above. To achieve this, a factor or safety is applied to the inflow as is described on the next page.

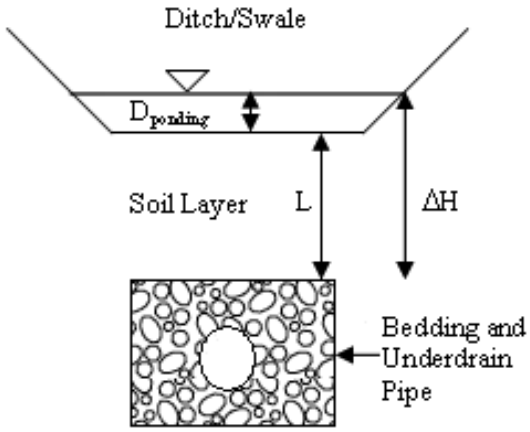

Underdrain Installation in Combination with a BMP or Hydraulic Feature
Figure 6-9.1

The following steps should be used to size an underdrain:

1. Determine the runoff volume (Vud) (ft^3) from the basin contributing to the underdrain. The design event used to size the BMP or hydraulic feature should be used to determine the runoff volume.

2. Specify the maximum designed depth of ponding water ($D_{ponding}$) (ft) in the BMP or hydraulic feature above the underdrain (ft). This can be calculated using StormShed or following the design guidance in the *Highway Runoff Manual* for the applicable BMP. For media filter drains, use 12 inches.

3. Determine the cross sectional area (A) (ft^2) of the flow by dividing the runoff volume by the depth of ponding water.

$$A = \frac{V_{ud}}{D_{ponding}} \tag{6-8}$$

4. Determine infiltration rate (rate runoff moves through the soil) using Darcy's Equation or use infiltration rate from lab.

$$q = \frac{K\Delta H}{L} \tag{6-9}$$

Where:
- q = flow per cross sectional area (in/hr per unit)
- K = hydraulic conductivity (in/hr)
- ΔH = change in head (ft) at the height of water from ponding depth to top of bedding material
- L = thickness of soil layer (ft)

5. The total flow to the underdrain is based on the rate runoff moves through soil and the basin area contributing to the BMP or hydraulic feature.

$$Q = q \times A \tag{6-10}$$

Where:
- Q = total flow to underdrain (cfs)
- q = flow per cross sectional area (in/hr per unit)
- A = cross sectional area of the ditch/swale

6. Determine the design flow Q_{df}, by applying a Factor of Safety (FS) = 2 to Q, so pipe is sized to carry 2 times the total flow.

$$Q_{df} = Q \times 2 \tag{6-11}$$

Where:
- Q_{df} = underdrain design flow (cfs)
- Q = flow total flow to underdrain (cfs)

7. Given design flow, determine the pipe diameter. For pipe diameters that exceed 12″, contact either the region or HQ Hydraulics.

$$D = 16\left(\frac{(Q_{df} \times n)}{s^{0.5}}\right)^{3/8} \tag{6-12}$$

Where:
- D = underdrain pipe diameter (inches)
- n = Manning's coefficient (use 0.010-0.011 for smooth wall)
- s = slope of pipe (ft/ft)

Sample Problem

An underdrain will be located under a ditch that can intercept runoff from a road that is 1,000 ft by 34 ft. The Materials Lab has determined the ditch has a hydraulic conductivity of 2.9 in/hr. Assume the soil layer will be 2 ft deep and the slope of the underdrain pipe will be set at 0.5 percent. Determine the size of underdrain needed.

1. The runoff volume (Vud) (ft3) was determined to be 2,875 cu ft. The value was determined using the 10-year design event to size the ditch and StormShed 3G.

2. The maximum depth of ponding water (Dponding) (ft) in the ditch was determined to be 4 inches using StormShed.

3. Determine the cross sectional area (A) (ft^2) of the flow.

$$A = \frac{V_{ud}}{D_{ponding}}$$

$$A = \frac{2{,}875 \text{ cu ft}}{0.33 \text{ ft}} = 8{,}712 \text{ sq ft}$$

4. Determine the infiltration rate.

$$q = \frac{K\Delta H}{L}$$

$$q = \frac{2.9 \text{ in/hr} \times 2.33 \text{ ft}}{2 \text{ ft}} = 3.38 \text{ in/hr}$$

5. The total flow to the underdrain is based on the rate runoff moves through soil and basin area contributing to the BMP or hydraulic feature.

$$Q = q \times A$$

$$Q = 3.38 \text{ in/hr} \times 8{,}712 \text{ sq ft} \times 1 \text{ ft/12 in} = 0.68 \text{ cfs}$$

6. Determine design flow Qdf, by applying a Factor of Safety (FS) = 2.

$$Q_{df} = Q \times 2$$

$$Q_{df} = 0.68 \text{ cfs} \times 2 = 1.36 \text{ cfs}$$

7. Given design flow, determine the pipe diameter.

$$D = 16 \left(\frac{(Q_{df} \times n)}{s^{0.5}} \right)^{3/8}$$

$$D = 16 \left(\frac{(1.36 \times 0.011)}{(0.005)^{0.5}} \right)^{3/8} = 8.94 \text{ in}$$

Upsize pipe diameter to the next available size, which is 10 inches.

7-1 Introduction

Most rivers and creeks in Washington State contain one or more species of fish during all or part of the year. These fish must be allowed to freely migrate up and down the streams they occupy. If roadways are constructed across the stream without thought given to fish passage, the roadway could create a migration barrier. However, a stream crossing designed with consideration of fish will not hinder migration. The Washington State Department of Transportation (WSDOT) and the Washington State Department of Fish and Wildlife (WDFW) have been evaluating existing stream crossings through a cooperative Fish Passage Barrier Removal Program since 1991. Some of the fish barriers have been identified for repair and a few of those have been retrofitted and/or replaced. Prior to starting a project, designers should consult the following Web link to determine if their project contains a known fish barrier: www.wsdot.wa.gov/NR/rdonlyres/F9743AD2-B4DB-439E-91C5-B973CBF17506/0/FishPassageRpt08.pdf.

WDFW developed guidelines for permanent road crossing culverts to facilitate upstream fish migration titled "Design of Road Culvert for Fish Passage." The guideline provides direction for projects involving new culvert construction as well as retrofitting or replacing existing culverts.

The purpose of this chapter is to summarize the WDFW design approaches, note the type of structures recommended, and reference grade control. For guidance, designers should consult the WDFW "Design of Road Culverts for Fish Passage" guideline at the following web page: www.wdfw.wa.gov/hab/engineer/cm/. Questions should be directed to the Region Hydraulics Engineer.

7-2 Designing for Fish Passage

7-2.1 General

The basic concept used to ensure continued fish passage is to design the stream crossing to match the natural river or creek channel as much as practical. The idea being if fish migration occurred in the crossing prior to construction, then migration should continue after construction (in other words post construction flow conditions should be similar to preconstruction or natural flow conditions). For some types of crossing structures, it is easy to create flow conditions exactly like the natural flow conditions. But for other types of crossing structures, a detailed analysis is necessary to accomplish an acceptable design. The first step in designing for fish passage is to determine which, if any, species of fish are in the stream. WSDOT

Regional Environmental staff is the primary contact for this information and will contact the WDFW when necessary. The design criterion varies depending on the species of fish since the swimming and leaping ability of fish varies from species to species. Additionally, different species migrate through the stream during different times of the year and, as a result, the design flow used for the analysis must correlate with the time of year that the fish are migrating.

7-2.2 Types of Structures

For fish passage purposes, there are three basic types of stream crossing structures:

1. **Bridges** – Structures that have piers or abutments supporting some type of girder system. Bridges do not have a significant impact on fish migration and are the preferred method of spanning a body of water. HQ Hydraulics is responsible for all water elements concerning bridge design.

2. **Open Bottom Culverts** – Metal and concrete arches or three-sided concrete frame structures that have no floor and are supported by footings.

3. **Full Culverts** – Metal, concrete, and plastic round, pipe arch, elliptical, and box-shaped culverts that are completely enclosed self-supporting structures.

7-2.3 Culvert Design Approach

Adequate fish passage for open bottom or full culverts can be determined using one of the three different design options described below. Independant of which option is selected, designers will also need to evaluate the culvert design using the guidelines described in Chapter 3 of this manual. Figures 3-2.3 and 3-2.4 provide a list of field data and other information that is required for a culvert analysis and hydraulic report.

1. **No-Slope Design Option** – Results in reasonably-sized culverts without requiring much in the way of calculations. It is most effective for relatively short culverts at low-gradient sites. Culverts are typically larger than the hydraulic option; however, the design avoids the additional cost of surveying and engineering.

2. **Stream Simulation Design Option** – A design method used to create or maintain natural stream processes in a culvert. This method is usually the preferred alternative for steep channels and long crossings.

   The streambed mix placed inside the culvert should emulate that found in the natural channel. The guidelines in the “Culvert-Bed Design” section of Chapter 6 in the WFDW “Design of Road Culverts for Fish Passage (2003)” document, describe how to size the streambed gravel.

3. **The Hydraulic Design Option** – A design method that is based on swimming abilities of a target fish species and age class. This method requires hydrologic, open-channel hydraulic calculations and specific site data. The hydraulic design option typically results in smaller culverts than the no-slope option. The analysis is based on velocity, depth, and maximum turbulence requirements for a target species and age class. When this option is selected, designers should not use MGSFlood to determine fish passage flow rates.

   In eastern Washington when the hydraulic option is selected, WDFW recommends the research approach developed by E. R. Rowland. This approach defines fish passage design per unit drainage area and is further discussed in the WDFW "Design of Road Culverts for Fish Passage Guidelines (2003)" under the hydraulic design option section. Fish passage flow rates for eastern Washington can also be found in ArcMap under the WSDOT GIS Environmental Workbench Fish and Wildlife – Fish section.

   For additional guidance, designers can also consult the following WSDOT research documents developed for the hydraulic design option:

   a. Modeling Hydrology for Design of Fish Passage (WA-RD 545.1).

   b. Culvert Design Flows for Fish Passage and Structural Safety in East Cascade and Blue Mountain Streams (WA-RD 545.2).

7-2.4 River Training Devices

River training devices can also be used for fish passage as well as to protect streambanks by redirecting the flow away from the bank towards the center of the channel. The most common types of devices are made of rock, timber, or concrete and reach from bank to bank. Designers should consult Chapter 4 for further design guidance.

WDFW has also developed guidelines for managing streambanks titled "Integrated Streambank Protection Guidelines," located at the following web link: www.wdfw.wa.gov/hab/ahg/ispgdoc.htm. Designers should direct questions to the Region Hydraulics Engineer.