Washington State Department of Transportation

Publications Transmittal

Transmittal Number	Date
PT 13-077	November 2013
Publication Distribution	
To: Plans Preparation Manual holders	
Publication Title	Publication Number
Plans Preparation Manual – November 2013	M 22-31.05
Originating Organization	
WSDOT Engineering and Regional Operations – Development Division – Design Office	

REMARKS AND INSTRUCTIONS

2013 changes to the Plans Preparation Manual:

The sections in all the revised divisions/appendices have been renumbered and redated. For a summary of the changes for 2013, see page 2.

Publications Services:

To access the latest PPM revision package or separate chapters, or to get the latest information on individual WSDOT publications, go to:
www.wsdot.wa.gov/publications/manuals/

Remove/Insert instructions for those who maintain a printed manual:

SECTION/DIVISION	REMOVE PAGES	INSERT PAGES
Title Page	i – ii	i – ii
Foreword, Comment Form, and Contents	iii – viii	iii – viii
4 Contract Plans	4-1 – 4-48 and Plan Examples 4-1&2, 4-11 to 4-16, 4-25&26	4-1 – 4-44 and Plan Examples 4-1&2, 4-11 to 4-16, 4-25&26
6 Contract Provisions	6-1 – 6-10	6-1 – 6-10
7 Miscellaneous Contract Considerations	7-1 – 7-36	7-1 – 7-36
Appendix 5 Addendum Preparation	A5-1 – A5-4	A5-1 – A5-4
Appendix 6 Determination of Contract Time	A6-1 – A6-16	A6-1 – A6-16

About revision marks:

- A new date appears in the footer of each division/appendix page that has changes.
- Revision marks (underlines/sidebars) are used where new text has been added. They are a convenience to show designers what has changed.
- When a chapter is new or completely rewritten, no revision marks are applied.

Design Office Signature	Phone Number:
/s/ Pasco Bakotich III	360-705-7231

Summary of *Plans Preparation Manual* Changes – November 2013

Division 4:

- Corrected a website link in Section 400.03, Headquarters Assistance/Review.
- Changed Region No. information in Section 400.05(2), Title Bar Information.
- Added "Environmental Compliance Plans (ECP)" to Section 400.06(1)(a), Plan Sequence.
- In Section 400.06(3), Index, corrected the procedure to add or delete a plan sheet in a series.
- Fixed a typo in Section 400.06(10)(c), Quantity Tabulations, Bid Items, 4th paragraph. It currently states "(See the information on rounding in 400.06(3), Summary of Quantities)." Corrected to read "400.06(5)."
- Updated Sections 400.06(18)(a) and (b) to bring them into compliance with environmental laws and the new *Roadside Policy Manual.*
- Corrected broken links on pages 4-22 through 4-47.
- Made some minor changes in the Contract Plan Examples, as follows:
  - Plan Example 4-2: Corrected fonts.
  - Plan Examples 4-11 through 4-15: Changed plan sheet order.
  - Plan Examples 4-25 through 4-26: Added datum symbol.

Division 6:

- In Section 600.04(3), corrected the materials wording in the contract provisions format section to align text with the *Construction Manual*.

Division 7:

- Removed all references to Asphalt Treated Base and ATB from Division 7.
- Added link to Section 700.01(6), Buy America, referencing the FHWA and WSDOT Construction memos on Buy America.
- Added text to Section 700.01(6), Buy America, and Section 700.09(7), Salvaged Materials, that states Buy America requirements apply to both new and salvaged materials.
- Added a new subsection in Section 700.05 regarding Commercial HMA.
- Updated Section 700.05(7) regarding HMA Price Adjustment, to better match the Standard Specification.
- Updated Section 700.08(1) regarding TESC Plans, to meet current regulations.
- Updated Section 700.08(2) regarding Roadside Restoration and Considerations, to meet current regulations and the new *Roadside Policy Manual*.
- Added new Section 700.09(5): "Managed Access Highways and Construction Rights."
- Updated Section 700.09(6), Paths and Trails, to make it clearer for designers.
- Updated Section 700.09(10)(c) to align with the requirements of Exhibit 300-4 in the *Design Manual*.

Appendix 5:

- Corrected Division 4 reference in Section A5-1, General.
- Made several changes in Section A5-3, Guidelines for Preparing Addendum Plan Sheets:
  - Section A5-3(2), Added/Replacement Sheets: Corrected numbering procedure for adding plan sheets by addendum.
  - Section A5-3(4), Addendum Cloud: Corrected a line style.
  - Section A5-3(5), Shading: Corrected the red, green, blue shade values.

Appendix 6:

- Page A6-12: Removed “Asphalt Treated Base” table from the PPM.
- Page A6-12, “Cement Concrete Pavement” table: Corrected the Daily Production Rate for cement concrete pavement.

Washington State
Department of Transportation

Plans Preparation Manual

M 22-31.05

November 2013

Engineering and Regional Operations

Development Division, Design Office

Americans with Disabilities Act (ADA) Information

Materials can be provided in alternative formats by calling the ADA Compliance Manager at 360-705-7097. Persons who are deaf or hard of hearing may contact that number via the Washington Relay Service at 7-1-1.

Title VI Notice to Public

It is Washington State Department of Transportation (WSDOT) policy to ensure no person shall, on the grounds of race, color, national origin, or sex, as provided by Title VI of the Civil Rights Act of 1964, be excluded from participation in, be denied the benefits of, or be otherwise discriminated against under any of its federally funded programs and activities. Any person who believes his/her Title VI protection has been violated may file a complaint with WSDOT's Office of Equal Opportunity (OEO). For Title VI complaint forms and advice, please contact OEO's Title VI Coordinator at 360-705-7082 or 509-324-6018.

To get the latest information on individual WSDOT publications, sign up for email updates at:
www.wsdot.wa.gov/publications/manuals

Foreword

The *Plans Preparation Manual* is intended to provide instruction and guidance for preparing Right of Way Plans, Contract Plans, Special Provisions, and Estimate packages for highway construction projects. It also provides direction and links to standards used in the preparation of these plans.

Updating this manual is an ongoing process, and revisions will be issued as required.

Questions, comments, improvements, and ideas are welcome. Please use the Comment Form on the following page to contact us.

/s/ Pasco Bakotich III

Pasco Bakotich III, P.E.
Director & State Design Engineer,
Development Division

Plans Preparation Manual Comment Form

We appreciate our users' suggestions for improving the *Plans Preparation Manual* (PPM). If you have comments or suggestions, please do one of the following:

1. Send an email with your comment(s), including the contact and manual information noted below, or
2. Fill out a copy of this form and attach a scanned copy to an email.

Please send your email to your designated ASDE or Area Design Liaison. Attach any other applicable information you feel will explain/clarify your comment(s).

Date	
Name	
Office & Address/ Location	
Phone Number	
Email Address	
PPM Division or Appendix Number	
Section Number & Page Number	
Comment(s)/Suggestion(s):	

Contents

Division 1	**Right of Way Plans**		1-1
	100.01	Introduction	1-1
	100.02	Vicinity Map (or Vicinity Map and Total Parcel Details)	1-1
	100.03	Plan Sheets	1-2
	100.04	Right of Way Acquisition Details	1-9
	100.05	Sundry Site Plans	1-11
	100.06	Parcel Acquisition Plans	1-13
	100.07	Exhibit Maps	1-14
	100.08	Access Report Plan	1-14
	100.09	Access Hearing Plan	1-15
	100.10	Special Right of Way Plans	1-15
	100.11	Revisions to Approved Right of Way Plans	1-18
	100.12	Access Control Notes	1-20
Division 2	**Survey Records**		2-1
	200.01	Introduction	2-1
	200.02	Record of Survey	2-1
	200.03	Monumentation Map	2-8
	200.04	State Land Plat	2-14
	200.05	Permit to Remove or Destroy	2-17
	200.06	Legal Descriptions	2-20
Division 3	**Right of Way Plans – Standard Symbols and Conventions**		3-1
Division 4	**Contract Plans**		4-1
	400.01	Introduction	4-1
	400.02	Project Manager's Responsibilities	4-2
	400.03	Headquarters Assistance/Review	4-5
	400.04	Drafting Requirements	4-6
	400.05	Plan Sheet Sizes and Layout Format	4-10
	400.06	Plan Sequence	4-12
	400.07	Plan Examples	4-44
Division 5	**PS&E Plans – Standard Symbols and Conventions**		5-1
Division 6	**Contract Provisions**		6-1
	600.01	Introduction	6-1
	600.02	Amendments	6-3
	600.03	Special Provisions	6-3
	600.04	Format	6-5

Division 7 Miscellaneous Contract Considerations 7-1
700.01 General Requirements 7-1
700.02 Earthwork 7-11
700.03 Production From Quarry and Pit Sites and Stockpiling 7-13
700.04 Bases – Vacant 7-15
700.05 Surface Treatments and Pavements 7-15
700.06 Structures 7-18
700.07 Drainage Structures, Storm Sewers, Sanitary Sewers, Water Mains, and Conduits – Vacant 7-19
700.08 Miscellaneous Construction 7-19
700.09 Other Contract Considerations 7-21

Division 8 Contract Estimate 8-1
800.01 Introduction 8-1
800.02 Estimate Content 8-1
800.03 Estimate Preparation 8-2

Appendices
Appendix 1 Structure Notes, Quantity Tabulation Sheets, and Sign Specification Sheets A1-1
Appendix 2 Vacant A2-1
Appendix 3 Transmittal Memorandums A3-1
Appendix 4 Acronyms and Abbreviations A4-1
Appendix 5 Addendum Preparation A5-1
Appendix 6 Determination of Contract Time A6-1

Division 4 Contract Plans

400.01 Introduction
400.02 Project Manager's Responsibilities
400.03 Headquarters Assistance/Review
400.04 Drafting Requirements
400.05 Plan Sheet Sizes and Layout Format
400.06 Plan Sequence
400.07 Plan Examples

400.01 Introduction

The contents of this manual can be applied to the majority of the projects a designer will encounter. It is understood that no two projects are the same and that it is not possible to provide information for every circumstance that may be encountered. There will be those projects, or portions of projects, that do not fit the standard applications. In those cases, the designer must be able to recognize the need to adjust the standards to best depict the work to be accomplished.

This manual is intended to show representative information and examples the designer can, and should, use as a basis to make decisions on what is to be included in the Plans, Specifications, and Estimates (PS&E), and how it is to be shown in the plans. The main responsibility of the designer is to assemble a package that contains the precise information required by a contractor to submit a responsible bid and for WSDOT to get an acceptable finished product. Providing too much information can, at times, cause as many problems as not providing enough. Contract Plans should include only that information necessary for the contractor to properly bid and construct. Information intended for WSDOT inspectors should not be included. In addition, designers should look for opportunities to consolidate and reduce plan sheets where appropriate. The designer must remember that projects requiring contractor surveying will require more detail and information than a project being surveyed by WSDOT.

400.01(1) Contract Plans and Provisions

The Plans, Specifications, and Estimates are some of the documents required for the advertisement of a project.

The Contract Plans and Contract Provisions must set forth the work in a clear and concise manner to avoid misinterpretation.

The Contract Plans shall conform to the geometric design as documented in the Design Approval Package (DAP), the Project Definition (PD) package, and the Project File—specifically, the Design Documentation Package (DDP). (See the *Design Manual* for more information.) All plan details and Contract Provisions are to be specifically applicable to the project being developed. It is acceptable to use details and provisions from previous contracts. However, they should be examined closely and modified as required to ensure they are specifically applicable to the current project.

Deviations from Washington State Department of Transportation (WSDOT) policies and standard practices require approval by the appropriate approving authority, in accordance with the *Design Manual*, in advance of advertisement of the project.

The designer and the Headquarters (HQ) Bridge and Structures Office will coordinate design schedules when structures are involved to ensure the project will be completed in a timely manner.

The designer is to take every opportunity to reduce the volume of the plans by using logical combinations of plan series to best display the information. Avoid duplication whenever possible in the Contract Plans and Provisions. Because no two projects are exactly the same, the designer needs to examine the logical combinations of plan series for each project. Displaying too much information may cause confusion to the contractor bidding the project and could result in higher bid prices. On the other hand, a series of plan sheets with minimal information displayed on each sheet makes it difficult to determine the interrelationship of different items of work, which could also equate to increased prices by bidders estimating the project. A balance resulting in complete and accurate information on the correct series of plan sheets is what is necessary. For an example of how this can be accomplished, see the public WSDOT Computer-Aided Engineering (CAE) website under "Consultant Resources > Example Projects" (http://www.wsdot.wa.gov/design/cae).

The designer must remember that standards are not developed to stifle their ability to design, but instead to provide consistency across the state. We should strive for consistent use of state standards, regardless of where the project is located, recognizing that unique situations may require varying from the standards. When standard materials are called for, the contractors and the suppliers know what we're looking for and what to expect in the way of testing and approvals. When the same work is specified and represented in the plans the same way, the contractors develop an understanding of our expectations. Using standard items and construction methods is almost always more economical. Proprietary items should be avoided unless there is proper justification.

A tool available to the designer to help ensure required items are addressed during the PS&E preparation is the "PS&E Review Checklist," available on the WSDOT Internet/Intranet Home Page under the "Design / PS&E Review" heading (www.wsdot.wa.gov/design/projectdev). This checklist contains the type of information that will be examined during the Stewardship Process Review, conducted by Headquarters and the Federal Highway Administration (FHWA) at the end of the project.

400.02 Project Manager's Responsibilities

All projects must have formal approval action in order to be advertised. Refer to the Appendices of the *Advertisement and Award Manual* for a sample of the Memorandum "Approval for Advertising – HQ Ad & Award."

400.02(1) General

The Project Manager has the following responsibilities:

(a) Prepare the PS&E in the basic format presented in this manual and in accordance with the geometric design documented in the Design Approval Package (DAP), the Project Definition (PD) package, and in the Project File—specifically, the Design Documentation Package (DDP). (See the Design Manual for more information.)

(b) Obtain permits, approvals, clearances, and certifications for which the region is responsible. The PS&E shall reflect the requirements of these documents.

(c) Provide and maintain accurate bid item quantities, reasonable and current unit prices, and backup data used to determine the estimated cost for lump sum bid items or other bid items that have little or no historical cost data. (See the program "BidTabs Pro" for current bid prices.)

(d) Maintain the cost of the project within the budgeted amount. Address budget issues through the appropriate authorities as warranted.

(e) Ensure the aggregate total cost of State Force Work and state-supplied materials are in accordance with RCW 47.28.030 and RCW 47.28.035 (see Division 7).

(f) Determine the sources for materials and locations of sundry sites furnished by WSDOT to verify the quality and quantity of material available at the provided sources.

(g) Verify that required new right of way will be secured prior to the need to occupy the property.

(h) Coordinate the HQ Bridge and Structures Office PS&E preparation with the region PS&E preparation. Provide the HQ Bridge and Structures Office with design and bridge site data in a timely manner.

(i) Ensure the reviews by the region and the appropriate Headquarters offices have been completed. Ensure the title block in the PS&E has the correct full names of the personnel, the design team has returned a brief written response to all review comments, and all appropriate changes have been incorporated into the PS&E prior to advertisement.

(j) Coordinate activities and review for projects on National Forest System land in accordance with "Highways Over National Forest Lands," a Memorandum of Understanding (NFS 00-MU-11060000-040) between WSDOT and the USDA Forest Service (USFS), Pacific Northwest Region.

(k) Provide a memorandum, with written justification, to the appropriate Assistant State Design Engineer (ASDE) for the approval and use of all proprietary items (see Division 7).

(l) Provide a memorandum, with written justification and estimated costs to use state-furnished materials, state labor, a mandatory materials source, and/or a mandatory waste site to the correct approving authority in accordance with the *Design Manual* (see Division 7).

(m) Coordinate with the region (Utilities Engineer, Right of Way, and so on) to obtain written construction permits and easements for work to be performed outside WSDOT right of way.

(n) Coordinate with region permitting offices (Utilities Engineer, Right of Way Engineer, Highways and Local Programs, Environmental, and so on) to obtain all required agreements to perform work under the contract for governmental agencies, private companies, and private individuals. These agreements shall include how the work is to be funded. There shall be substantiation that the benefit derived from the work is equal to or greater than the cost to WSDOT. Ensure all local/state/federal regulations have been addressed for the project.

(o) Provide justification and obtain approval from the Statewide Travel and Collision Data Office (formerly known as the HQ Transportation Data Office) for liquidated damages, including interim liquidated damages other than those specified in the *Standard Specifications for Road, Bridge, and Municipal Construction* (*Standard Specifications*) (see Division 7).

(p) Provide justification and obtain approval from the HQ Construction Office for incentive/disincentive pay and liquidated damages that revise Section 1-08.9 of the *Standard Specifications*.

(q) Provide justification for stockpiling materials for use on future construction contracts.

(r) Provide justification for not using all pipe alternates.

(s) Provide justification for the use of construction engineering percentages different from the percentages specified in Division 8.

(t) Ensure the project title on all deliverable documents exactly matches the latest official title as agreed to by the Region Program Management Office and the Region Plans Office at the time of their delivery. If for some reason the scope of the project has changed so dramatically that the official project title must be changed, the title change must be negotiated with and agreed to by the Region Program Management Office and the Region Plans Office.

(u) Provide justification and obtain approval from the HQ Construction Office or current delegated authority in each region for use of nonstandard time for project completion specifications.

(v) Provide justification and obtain approval from the HQ Construction Office or the delegated authority in each region for using project-specific specifications that alter the *Standard Specifications* and/or General Special Provisions (GSPs).

(w) Coordinate in a timely manner with the Region Traffic Office on the preparation of all signal, illumination, ITS, and other design elements needed to be incorporated in the PS&E preparation.

(x) Ensure the Contract Plans/Contract Provisions are stamped in accordance with WSDOT Executive Order E 1010.01, Certification of Documents by Licensed Professionals:
http://wwwi.wsdot.wa.gov/publications/policies/fulltext/1010.pdf

400.02(2) Project Specifications

The HQ Construction Office desires to maintain consistency, accuracy, and legality with project specifications. For this reason, a project designer should always try to use the specifications listed in the *Standard Specifications*. It is not uncommon for a project to have a method of work or a working window of time that differs from those listed in the *Standard Specifications*. There are also items of work that are region-specific and as such aren't covered in the Standard Specifications. In those cases where there is a nonstandard item of work in a project, the designer may write a project-specific Special Provision to describe the work. In the case of a region nonstandard item of work, the region may write Region General Special Provisions (RGSPs) to describe the work. If these project-specific Special Provisions or RGSPs change the content or wording of any specifications in the *Standard Specifications*, approval must be given by the HQ Construction Office or delegated authority. In some cases, the HQ Materials Lab must approve changes to Division 9 before project-specific Special Provisions or some RGSPs may be used in a project.

Once a Region GSP has been approved by the HQ Construction Office, it can then be used on future projects without being submitted to the HQ Construction Office for another approval, unless the Region GSP instructions state that approval is required for each project. However, project-specific Special Provisions, when approved by the HQ Construction Office, are only to be used on the project for which they were written. They cannot be used on another project without reacquiring the HQ Construction Office's approval. When referencing the *Standard Specifications* in the Special Provisions, the headings from the *Standard Specifications* are never to be changed. When a section of the *Standard Specifications* is "Vacant," the designer is **not** to use these sections for their Special Provisions.

It is essential that the Project Manager understands and ensures no alterations to plans or specifications are made by anyone but the person who submitted the plans or specifications under their personal PE stamp and signature. This includes HQ Bridge and Structures, Traffic, Architecture, Landscape Architecture, Surveying, or any other branch/unit that certifies design with a professional stamp.

The professional licensee who was directly responsible for the original documents shall certify all revisions to plans and specifications.

Changes regarding quantities, payment estimates, and time lines are not considered technical changes; therefore, they do not require certification by a Professional Engineer (PE). However, all changes in these areas shall be verified and documented by the original designer/submitter of that item of work and shall not be changed by the Project Manager without the specific permission of the original designer/submitter.

400.03 Headquarters Assistance/Review

Various offices of expertise are available for assistance if requested by the region. For examples of transmittal memos to Headquarters or region support offices, designers should contact their Region Plans Office for assistance.

(a) Many of the key Headquarters offices that are available to assist during PS&E preparation are listed below and can be found, along with other support offices, on the WSDOT internal website: wwwi.wsdot.wa.gov/siteindex/default.htm

1. Real Estate Services Office
2. Design Office
   - Hydraulics
   - Highway Access Control
   - Right of Way Plans
   - Cost Risk Assessment (CRA)
   - Project Development
   - Roadside and Site Development
   - Utilities, Railroad, and Agreements
   - Design Standards (*Standard Plans*)
   - Computer-Aided Engineering
   - Design Policy
   - Project Management
   - Strategic Analysis Estimating
   - Value Engineering
3. Bridge and Structures Office
4. Construction Office
5. Traffic Operations
6. Materials Laboratory
7. Maintenance and Operations
8. Office of Equal Opportunity (OEO)

   One of the two units of the HQ Office of Equal Opportunity (OEO) is the External Civil Rights Office, which provides some of the following services, which are important in PS&E preparation and contract administration:

   - Implement the On-the-Job Training (OJT) programs under the Training Special Provisions (TSP) of USDOT-assisted construction contracts.
   - Implement the Disadvantaged Business Enterprises (DBE) program on USDOT-assisted contracts and procurements.
   - Set annual DBE goals.
   - Establish and monitor a DBE Supportive Services program.
   - Implement the Minority and Women Business Enterprise (MWBE) program on state-funded contracts and procurements.
   - Provide training and technical assistance to WSDOT and its subrecipients, as well as to contractors and consultants.

- Develop and revise program implementation plans.
- Investigate external civil rights complaints.
- Implement the Title VI program, which requires nondiscrimination by recipients of federal financial assistance.

Contact the OEO to establish DBE goals, obtain Special Training hours, and determine which WSDOT General Special Provision (GSP) is needed for your project.

9. Capital Program Development and Management Office (CPDM) and Systems Analysis & Program Development Office
   - The HQ Capital Program Development and Management Office establishes and manages project control and management procedures, including the change management process using project control reporting forms (PCRFs) and the execution procedures for authorization of work order expenditures (WOA).
   - The HQ Office of Systems Analysis & Program Development (SA&PD) focuses on building and managing WSDOT programs for future biennia. They establish program and subprogram funding levels and the process for federal-aid project authorizations. Designers should work through Region Program Management offices regarding these processes and requests.

(b) The following Headquarters offices can be found on the WSDOT public website:
www.wsdot.wa.gov/

- Bridge and Structures
- Highway Maintenance
- Local Programs
- Traffic Operations
- Construction
- Materials Laboratory
- Design
- Contract Ad and Award

400.04 Drafting Requirements

400.04(1) General

How the plan information is displayed on the plan sheets can have a great impact on the usefulness of the plans. To get the best possible bid and the best possible finished product, the plans must present the information clearly and concisely. Everyone who examines the plan should be able to determine what work is required and arrive at a single interpretation of the information.

To ensure a clear and singular interpretation, it is imperative that:

- Overcrowding of plan sheets is avoided by displaying only information relevant to the plan series.
- The plan is drawn with appropriate drafting standards as specified in this manual.

The designer will need to determine what information is required for the contractor to bid and construct the project and for WSDOT to administer the project. The requirements of other readers such as FHWA and various Headquarter offices also need to be considered. Many of the requirements in this manual, such as "Begin Federal Aid" and "End Federal Aid" Number and Section Lines shown on the Vicinity Map, may not be required to construct or administer the project but have value to other users of the Contract Plans.

The designer also needs to determine what information does not add value and only serves to clutter the plans and create confusion for the reader. Following are some examples of information that *should not* be included in plan sheets and some ways to help eliminate excess plan sheets:

- Alignment and R/W Plans where no changes in alignment and R/W are planned or where the alignment and R/W staking is being conducted and maintained by WSDOT.
- Quantity Tabulations for all items of work or where only a few items of work are listed.
- Right of way lines that have no ties add no value. If right of way needs to be shown, it should have ties showing where it is.
- Future alignments that have nothing to do with construction of the project can clutter a plan sheet making it hard to find the needed information.
- Showing existing pavement markings/edge of existing roadway on Paving Plans or Pavement Marking Plans.
- Showing anything that is slated for removal on a Site Preparation Plan and not anywhere else in the plans.
- Repeating plan sheets just to keep the same number of sheets in each series. Use break lines to eliminate sheets of nonchanging information. If there is no drainage code on a Drainage Plan sheet, the sheet shouldn't be included in the series. Also, for Paving Plans and Pavement Marking Plans, if nothing changes between intersections or interchanges, use break lines to eliminate sheets.
- Whenever possible, the designer shall avoid the practice of cross-hachuring, polka-dotting, or shading of large areas to represent areas to be paved, planed, or anything else. The roadway sections will adequately show the areas to be planed and paved. The use of large areas of cross-hachuring only hides or detracts from the rest of the information being displayed on the sheet.
- Profile sheets showing overlay, grinding and inlay, or paving exception areas of the project add no value. Show only the portions of the project that have a change in the vertical alignment of the roadway under construction. In the same way repeating information already shown on roadway sections on Paving Plans without showing dimensions adds no value to the contract.

If it does not provide needed information or add value to the plans—***REMOVE IT!***

400.04(2) Plan Sheets

The designer, early in the design process, needs to give careful consideration to the different series of plan sheets that will be required and the information that will need to be displayed on each series.

The use of different levels of the computer-aided drafting and design (CADD) system allow the flexibility to provide additional series of plans easily and quickly if it turns out that more information is required than was originally anticipated. For this reason, it is important that all CADD work use the prescribed level scheme.

(a) Most of the drawings created by CADD users in a design office are 11-inch by 17-inch plan sheets for PS&E. Therefore, references will pertain to that size unless otherwise noted. In general, the plotting scale for 11-inch by 17-inch plan sheets is 1 inch equals 100 feet (1"=100'), except as indicated below. Set the plotting scale in MicroStation under the WSDOT pull down menu.

There may be occasions when the scale of a plan sheet needs to be increased to as much as 1"=40' for an 11-inch by 17-inch plan sheet. When this is done, the designer needs to examine the sheet to be sure that required information is easily read. It may be necessary to resize some text or symbols to make them legible.

(b) Vicinity Maps are to be drawn at a scale appropriate to the size of the project and the detail required to show the appropriate information, as discussed in 400.06, Plan Sequence.

(c) Sheets requiring a larger scale to display a great deal of information in a small area should be drawn to an appropriate scale to allow all information to be easily read and understood.

(d) Strip maps are to be drawn at a scale appropriate to display the information clearly. For further details, see 700.05.

(e) Use cross-hachuring only for small, isolated areas of work such as pavement repair areas or butt joint planing locations that may get lost if not displayed in this manner. On occasion, with concurrence of the Region Plans Office, color may be used for clarity. Gray-area shading is reserved exclusively for use in an addendum to highlight changes to a plan sheet. (See the Appendices for Addendum Preparation.)

(f) Plan sheets may be plotted or be hand drafted. If hand drafted, use black ink on full-size Mylar sheets and then reduce at the time of submittal to the region.

(g) Sheets utilizing a combination of CADD-generated base maps and inked construction features will be considered hand-drafted sheets. No stick-ons are to be used on plan sheets.

(h) All screened (half-toned) portions of plan sheets shall be dark enough to adequately reproduce.

(i) Line weight, lettering height, and symbols for Contract Plans shall conform to the standards contained in the *Electronic Engineering Data Standards* manual. It is important to conform to these standards for consistency and for reproduction.

(j) Under most circumstances, lettering and dimensioning shall be placed so they may be read from either the bottom of the sheet or the right side of the sheet. Text shall not be placed across roadway centerlines or right of way lines. Text is to be clear of all lines and should normally be placed outside the drawing itself. Leader lines shall not cross one another or text. The two exceptions to the bottom and right reading text are:

1. All Section Corner and Township line numbers shall have their tops to the north, and Range Line numbers shall have their tops to the west, regardless of the orientation of north to the sheet.
2. All information identifying a centerline, such as line designation, stationing, tick marks, and bearings, shall be placed on top of the line and read left to right, with both the top of the line and left to right being based on the direction of the stationing.

(k) When lines are coincidental, the following order of precedence for placing them on the sheet shall be used:

1. Construction Centerline
2. Right of Way Centerline
3. Range/Township Line

4. Section Line
5. Corporate Limit Line
6. County Line

(l) When Corporate Limit lines coincide with other lines, the Corporate Limits will be labeled in an effort to clarify that the line is also the corporate limits.

(m) Each plan view sheet shall have a north arrow and a scale bar. The north arrow will normally be oriented towards either the top or right side of the sheet.

(n) All plan view sheets and profile sheets that physically show the Begin Project and End Project headings will identify these points as follows:

STATE-FUNDED PROJECTS:

Begin Project	End Project
SR XX, MP XX.XX	SR XX, MP XX.XX
STA XX+XX.XX	STA XX+XX.XX

FEDERALLY FUNDED PROJECTS:

Begin F.A. No.	End F.A. No.
Begin Project	End Project
SR XX MP XX.XX	SR XX MP XX.XX
STA XX+XX.XX	STA XX+XX.XX

(o) If the "Begin and/or End Federal Aid" are different than the "Begin and/or End Project," this information will be displayed similarly to the above on a separate leader line drawn to the appropriate location. Use "Begin Construction" and "End Construction" when work is being done on crossroads adjacent to the main line work or at ramp termini.

(p) Each series of plan view sheets (such as site preparation, drainage, paving, and others) shall have a legend of features applicable to that series, and the legend will appear on each plan sheet of that series.

(q) The legend is to contain all items that are shown on any of the individual plan sheets in that series. For example, if your Drainage Plan series consists of 15 plan sheets, and throughout these 15 plan sheets there are 12 items to be identified in the legend, all 15 of the drainage plan sheets in this series will have a legend that will have all 12 items listed and identified.

(r) If a sheet in the series is too crowded to include a legend, a note shall be added to the sheet to tell the reader on which sheet the legend may be found. The preferred method is to refer the reader to the legend on the preceding sheet.

(s) WSDOT Contract Plans show the slope of a line in several forms, such as ratio, percentage, and decimal. When a slope is shown in ratio form in WSDOT plans, it is shown as run over rise, which is opposite of mathematical standards in which a slope is always given as rise over run in ratio and fraction form. In WSDOT plans, a 4:1 slope means that the slope has a 4-foot horizontal run and a 1-foot vertical rise. Some WSDOT manuals further clarify the meaning of a 4:1 slope by adding a post text, such as 4H:1V, to further clarify that there are four units horizontal (run) and one unit vertical (rise). However, WSDOT Contract Plans will not carry such a post text.

(t) Plan sheets prepared by architects and engineers for building facilities and associated site improvements shall be exempt from the requirements of the drafting standards described in this chapter. Drafting standards for building facilities and associated site improvements shall be determined by the Facilities Administrator.

400.05 Plan Sheet Sizes and Layout Format

400.05(1) General Information

(a) The Advertisement set of plan sheets shall be on 11-inch by 17-inch paper.

(b) If the Contract Plans have more than 225 sheets or Contract Provisions have more than 225 pages, they will need to be separated into volumes, with no volume having more than 225 sheets or pages.

- The break for volumes is to be made at a logical point in the package, which may not be at 225 sheets or pages.
- If a project has 275 plan sheets, and the last 80 are bridge sheets, the logical break would be between the civil sheets and the bridge sheets.
- If multiple volumes are required for the Contract Provisions, the logical break would be at the end of a main section. For example, break between HOT MIX ASPHALT PAVEMENT and the following main section, CULVERTS.
- Do not place the break in the middle of a section.

(c) Stamping: WSDOT plans and specifications shall be stamped with a seal, signature, and the date signed; the expiration date of the license is optional. Licensees are directed to WSDOT Executive Order E 1010.00, RCW 18.43, and WAC 196 (Engineers and Land Surveyors); RCW 18.08 and WAC 308-12 (Architects); and RCW 18.96 and WAC 308-13 (Landscape Architects).

- The licensee's seal shall be placed on all plan sheets adjacent to the WSDOT logo, except for the Index to the plans, Vicinity Map, Summary of Quantities, and Quantity Tabulations. Bar-Lists are not required to be stamped. This space should be reserved during initial plan sheet layout.
- The following plan sheets prepared by WSDOT are not required to be stamped: index, Vicinity Map, Summary of Quantities, Quantity Tabulations, Bar-Lists, TESC sheets, and Traffic Control Plans.
- For plans prepared by consultant/developers, the Licensed Engineer's seal, signature, date signed (expiration date of license is optional), and logo is to be placed on all plan sheets adjacent to the WSDOT logo. The index to the plans, Vicinity Map, Summary of Quantities, Quantity Tabulations, and Bar-Lists are not required to be stamped. This space should be reserved during initial plan sheet layout.

(d) Construction notes shall be numbered consecutively within each plan sheet series of the project. However, only the construction notes that are applicable to a particular sheet shall be shown on that plan sheet. Once you have created a construction note 1, it will always be the same for that plan sheet series. Continue sequencing of construction notes consecutively as you add them. **DO NOT** resequence from one plan sheet to the next. Each plan sheet series will have consecutive construction notes.

400.05(2) Title Bar Information

All plan sheets have a title bar on the bottom of the plan. Fill in the information according to the following instructions:

- PLOTTED BY: The first and last name of the person who created the plot.
- DESIGNED BY: The first and last name of the person who designed the sheet.
- ENTERED BY: The first and last name of the CADD operator who electronically entered the plan.
- CHECKED BY: The first and last name of the design team leader or person who checked the plan.
- PROJ. ENGR.: The first and last name of the design Project Engineer.
- REGIONAL ADM.: The first and last name of the Region Administrator.
- REVISION box: To be filled out when there is a revision made after the Advertisement Date. This is generally for the purpose of issuing an addendum

In the block labeled REVISION, give a brief description of the revision that was made.

- DATE: Enter the date in which the revision was made.
- BY: Enter the initials of the person who made the revision.
- REGION NO.: This two-letter code is for the geographical location of the project. Use ER = Eastern Region, NC = North Central Region, OR = Olympic Region, SC = South Central Region, and SW = Southwest Region.
- STATE: This should always be WASH.
- JOB NUMBER: Enter the number used for the Estimate Bid Analysis System (EBASE) that is issued by the Region Plans Office.
- CONTRACT NO.: This field is left blank. The contract number is entered by hand at Headquarters after the contract has been awarded.
- FED. AID PROJ. NO.: Enter the Federal Aid Project Number if there is federal aid in the construction phase of the project. This number can be obtained from the Region Program Management Office.
- LOCATION NO.: Enter the preliminary engineering work order number.
- PE STAMP BOXES: All plans that are considered final and that will be part of the advertised contract must contain the seal/stamp of the licensee who prepared or directly supervised the work. Preliminary documents—those documents not considered final—shall be stamped by the licensee who prepared or directly supervised the work. For more direction, refer to Executive Order E 1010.00, WAC 196-23-020, and RCW 18.43.
- PROJECT TITLE BOX: This is the upper portion of the box that is directly to the right of the WSDOT logo. Enter the exact project name, as determined by the Region Plans Office.
- SHEET TITLE: This is the lower portion of the box that is directly to the right of the WSDOT logo. Enter the sheet name as it appears in the Title column of the Index.

- PLAN REFERENCE: This is the upper portion of the box farthest right on the title bar. This is an alpha/numeric number. The alpha portion is selected by the design team; it should be logical in nature, containing letters that refer to the type of plan. The numeric portion is sequential. The plan reference shall match the Plan Reference No. column of the Index. For suggested plan reference abbreviations, see the *Electronic Engineering Data Standards* manual.
- SHEET NUMBER: This is the lower portion of the box farthest right on the title bar. This field is filled in on the plans that are advertised when the total number of sheets is fixed. Contact the Region Plans Office for instructions on filling in this field for the review of the plans.

400.06 Plan Sequence

400.06(1) Assembling Plans

The following outline is the sequence to follow when assembling plans for a construction project. It is a list of possible plan sheets and is not intended to represent a project.

400.06(1)(a) Plan Sequence

1. Index.
2. Vicinity Map.
3. Summary of Quantities.
4. Borrow, pit, quarry, stockpile, waste sites, and reclamation plans.
5. Roadway sections: main roadway, ramps, frontage roads, detours, others.
6. Grading sections, if applicable.
7. Stage construction plans, if applicable.
8. Alignment or Alignment/Right of Way.
9. Quantity Tabulation sheets (Q-tabs). These sheets will be placed immediately prior to the plan sheets showing the work being tabulated, such as site preparation items, temporary erosion and sediment control (TESC) items, guardrail items, and traffic items.
10. Site Preparation. Existing topography and removal and demolition work may be shown on Alignment Plans; however, if extensive details are required and the plan sheet becomes too crowded, it should be on a separate series.
11. Existing Utilities. This is an extension of the Site Preparation Plan and is only required if the existing utilities are so extensive that they cannot be clearly shown on the Site Preparation Plan.
12. Roadway profiles—normally only required when grade is being revised.
13. Environmental Compliance Plans (ECP).
14. TESC Plans—may not be required if work is minor and can be combined with Drainage Plans or other plan sheets. Refer to Division 7 for information on when a TESC Plan is required.
15. TESC details.
16. Drainage structure notes—will precede plan series showing drainage features.
17. Drainage Plans—may not be required if work is minor and can be combined with another series of plans.
18. Drainage profiles—will follow plan series showing drainage features.
19. Drainage details.

20. Utility Structure Note sheets—only required if there is work to be done by the contractor on existing utilities.
21. Utility Plans—only required if there is work to be done by the contractor on existing utilities.
22. Utility details—only required if there is work to be done by the contractor on existing utilities.
23. Irrigation Structure Note sheets.
24. Irrigation Plans.
25. Irrigation details.
26. Landscape, wetland, rest areas, roadside restoration, and viewpoints.
27. Interchange contours.
28. Paving Plans are required for overlay projects when paving breaks, paving dimensions, intersection paving, taper lengths, dimensions of taper widths, and so on, can't be shown adequately on the roadway sections. In this case, the roadway sections, Paving Plans, and Paving Detail sheets are to be prepared in conjunction with each other to show all paving work.
29. Paving details.
30. Minor structures such as retaining walls.
31. Illumination Plans—may be shown on Paving Plans if illumination is minor and Paving Plan will not be too crowded.
32. Illumination details—will follow plan series showing illumination layout.
33. Traffic Signal Plans.
34. Traffic signal details.
35. Intelligent Transportation System (ITS) Plans.
36. ITS details.
37. Sign Specification sheets—will precede the plan series showing the signing.
38. Signing Plans—may be shown on Paving Plans if signing is minor and Paving Plans will not be too crowded.
39. Signing details—will follow plan series showing signing.
40. Bridges and other structures.
41. Building plans and details.
42. Traffic Control Plans.
43. Detour routes and detour signing. If the detour is simple and straightforward, this information may be shown on the Vicinity Map, as long as the additional information does not detract from the Vicinity Map.

400.06(2) Plan Sheets

The designer is to determine the actual plan sheets required to best depict the project. Each project will require the designer to verify the order of plan sheets to determine what is or isn't required. A basic P1 paver will normally not require as many sheets as a project that has safety, mobility and paving work. When two or more projects are merged into one project, the plan sheet sequence will be followed. Even with logical combinations of plan sheet series, the following basic order of sheets shall be maintained:

- **Item information:** Quantity Tabulation/Structure Note/Sign Specification.
- **Plan series:** The series showing the items of work described on the Quantity Tabulation/Structure Note/Sign Specification sheets.
- **Details:** For work associated with items shown on the plan sheets.

400.06(3) Index

See Contract Plan Examples 4-1 and 4-2.

An index is required for all projects with 30 or more plan sheets. A project with more than one volume of plan sheets shall have a complete project index in each volume, providing information on all volumes.

List the plan sheet titles exactly as they appear on the plan sheets. Avoid sheet titles such as "Miscellaneous Details." If a sheet contains guardrail and drainage details, use "Guardrail and Drainage Details" as the sheet title and in the index. Note that not everyone using the plans will be as familiar with them as the designer.

On small projects, and as scale permits, the index can be placed on the Vicinity Map plan sheet. However, DO NOT reduce your Vicinity Map size to allow you to combine the index and Vicinity Map as one plan sheet.

Regardless of the size of the project, it is recommended that Plan Reference Nos. be used on all projects in lieu of plan sheet numbers during the design phase.

Plan sheet numbers are not critical during the design phase of the project. Until the design team leader or region plans reviewer has all the plan sheets for all the separate series (such as paving, drainage, and signing) to be included in the project, the total number of plan sheets to be included in the contract is unknown.

There are several advantages to using Plan Reference Nos. to identify plan sheets for individual series during the design phase:

- The designer doesn't have to know the total number of plan sheets included in the contract.
- Once Plan Reference Nos. have been assigned to individual plan sheets included in a series, these numbers should not have to be changed. This makes referencing details on other plan sheets easy to do and should help eliminate the habit of forgetting to do this. Once the statement "FOR DETAIL, SEE SHEET D12" is placed on the plan sheet, this reference will almost always be correct unless plan sheet D12 is deleted from the contract.
- Plan sheets can be inserted or deleted within the series with slight modifications to reference number. For example, a plan sheet that needed to be inserted between D6 and D7, sheets D7 through the end of the series would need to be renumbered. The use of D6A should be only used in an addendum. (See Appendix 5 for additional information.)

400.06(4) Vicinity Map

See Contract Plan Examples 4-2, 4-3, 4-4, 4-5, and 4-6.

Every project will have a Vicinity Map plan sheet that shows and has labeled all construction centerlines, detours, and haul routes.

Projects may be broken into Sections (see Contract Plan Examples 4-3 and 4-4) when it is required or necessary to split the project into different areas.

This is the logical way of showing the work to be performed, listing quantities, and so on, when all the work involved is not conveniently located in one continuous area with no exceptions or gaps.

If the entire project is on one State Route (SR), but has breaks in the areas where work is to be performed between the Begin Project and End Project, these breaks should be labeled "exceptions" or "exception areas." If there are numerous exceptions or exception areas, an alternate method of showing these exceptions is to label as "Sections" the areas where work is to be performed.

If the project has multiple SRs, where the work is definitely spread out, it is highly recommended that the work be broken into Sections. When multiple SRs are used in a title, the smallest SR number followed by et al. is used to shorten the title.

AN IMPORTANT REMINDER

If the project is broken into Sections, make sure all references to a Section are exactly the same throughout all plan sheet series (Summary of Quantities, Roadway Sections, Quantity Tabulation sheets, Structure Note sheets, Profile sheets, and so on) in the plan set for that Section. All exception work areas and gaps must be shown identically in all locations and references throughout the Contract Plans and Provisions.

(a) Project limits are to be referenced to State Route Mileposts (SRMP) based on the State Highway Log (TRIPS System).

(b) Stationing shall be stated at the Begin Project and End Project on the main line and the Begin Construction and End Construction for secondary crossroads.

(c) The Begin Project and End Project are defined as follows:

- For projects with one applicable State Route, the beginning and ending of any permanent work on the main line highway is assigned as Begin Project and End Project.

(d) If the project includes multiple SRs, there is still only one Begin Project and End Project location. Projects with multiple SRs may have a Begin Project on one SR but an End Project on a different SR. Begin Project is assigned to the beginning of permanent work at the most westerly or southerly portion of the project, and the End Project to the most easterly or northerly portion, determined by the general direction of the project activities.

(e) Begin Construction and End Construction are defined as follows:

- The limits of permanent work, such as signing, guardrail, striping, drainage, landscaping, and so on, to be performed on city, county, or state roadways not on the project main line, included in the contract.

(f) The Begin and End of Federal Funding shall be shown and referenced by Federal-Aid Number, milepost, and stationing. The federal funding limits will most often be the same as the project limits, but will cover all work.

(g) All equations and exceptions shall be shown on the Vicinity Map. If the scale of the Vicinity Map is such that equations can be shown with headers and leader lines to the approximate point where the equation is located (by stationing), this is the preferred method to identify the equation. If there is insufficient room on the Vicinity Map itself (because of scale) to clearly identify the equation and exception areas, they may be shown in tabular form (data box) on the Vicinity Map plan sheet.

(h) The distance in miles from the beginning of project (Begin Project) to the nearest city or town and in the opposite direction from the other end of the project (End Project) to the nearest city or town shall be shown. Do not use "local" descriptions such as "10 miles to EZ Corners." If the nearest city or town is shown on the WSDOT highway map, it should be recognizable enough to be used for this purpose. The city or town shall be one that is shown on the WSDOT highway map.

(i) The Vicinity Map is the only place in the plans where the overall layout of the main line, ramps, frontage roads, and street locations are shown. County roads and city streets shall be shown and labeled if they are important to the project. Do not show county roads and city streets just to "fill up" the sheet. As with all plan series, delete anything that does not add value to the plan sheet or that provides detail or information that your reader does not need. DO NOT LABEL LOCAL BUSINESSES ON THE VICINITY MAP.

(j) The scale of the Vicinity Map shall be large enough to easily identify all construction lines and appropriate local and private streets or roadways. A scale bar will be provided on the Vicinity Map. In addition to including the scale bar, the scale of the plan sheet, detail, and so on, will also be shown in text underneath the scale bar.

(k) Material sites, waste sites, stockpile sites, and haul routes will be shown. Do not reduce the scale of the Vicinity Map so that these sites can be shown to scale. If they are too far removed from the project to be shown at the scale appropriate for the Vicinity Map, they can be shown in a separate box in a corner of the Vicinity Map sheet at a smaller scale. The haul route from the site to the highway shall be shown, and the distance in miles from the site to the nearest point on the project will be shown or noted.

(l) Features such as railroads, waterways, and streams, as well as overcrossing and underpassing roadways, shall be shown and named. Railroads running parallel to the project and adjacent to the right of way are also to be shown. If the railroad crosses through the project, there is to be a clear indication of whether or not the intersection is at grade.

(m) Wetland and wetland mitigation sites are to be shown on the Vicinity Map. The designer may have to enlarge sections of the Vicinity Map in order to make wetland and wetland mitigation sites visible.

(n) Identify each bridge found within the Project Limits on Vicinity Map as follows:

- For existing bridges, identify the bridge by bridge number and the type of bridge work. Examples of the most common types of work are: WIDENING, BRIDGE REMOVAL, BRIDGE WIDENING, RAIL RETROFIT, MILL/FILL, CONCRETE OVERLAY, HMA OVERLAY, BST (Bituminous Surface Treatment), NEW APPROACH SLAB, SEISMIC RETROFIT, BRIDGE REPAIR, UTILITY ATTACHMENT, and SIGN BRACKET.
- When there is no contract work on an existing bridge and the contract work does not affect a bridge, or the work is beyond the end of the bridge (such as guardrail transitions attached to the bridge barrier), then identify the bridge number and include "NOT INCLUDED IN PROJECT" as the type of work.
- For new bridges, a bridge number is not available at the time of PS&E preparation. Show the project stationing at the beginning of the bridge, and include "NEW BRIDGE" as the type of work.

(o) Cadastral information (Township, Range, and Section) is to be shown on the Vicinity Map and any plan sheets that show dimensioned right of way and/or limited access.

(p) Township, Range, and Section information will be shown on the Vicinity Map as follows:

- Township and Range Lines will be shown and identified if they fall within the limits shown on the Vicinity Map.
- If Township and Range Lines do not fall within the limits shown on the Vicinity Map, Township and Range information will be shown at the top center of the Vicinity Map plan sheet.

- Section Lines will be shown with associated Section Corners, with Section Numbers. On small projects, or larger scale Vicinity Maps, this may require the use of break lines to bring the corners within the limits shown. If the corners are found, the ties to centerline are to be shown. If there are no Section Corners within the limits shown, a quarter or sixteenth Section Line can be shown and the cadastral information (Township, Range, and Section) given to indicate location.

400.06(5) Summary of Quantities

See Contract Plan Examples 4-7, 4-8, and 4-9.

The Summary of Quantities sheet provides a complete tabulation of all bid items and pay quantities that have been determined by the designer/design team to be required for the project. Bid items and quantities are entered into the project estimate via EBASE. The Summary of Quantities Plan sheet is generated from the estimate database by requesting a Summary of Quantities report. Utilization of the program BidTabs Pro will give the designer access to current bid prices for use on the estimate.

The Summary of Quantities shall be divided into groups and columns within the groups.

400.06(5)(a) Groups

A separate group is required whenever:

- There is a change in program item number (PIN).
- There is a change in program or subprogram (I2, P1, P2, and so on).
- There is a change in funding: any change in funding participants, their individual participation rates, or their source of funding. Funding participants may be the FHWA, a state agency or other public agencies, a county, a city, or private organizations.
- There is a change in control section.

A separate state-funded group (one per project) is required for third-party damages. The bid item "Reimbursement for Third Party Damage" is included in this group; it will be a minimum of $5.00 (see the EBASE User's Manual).

400.06(5)(b) Columns

Each group is required to have at least one column associated with it. Additional columns within a group are required for the following:

1. Each bridge and structural retaining wall—those covered in Section 6-11 of the *Standard Specifications*—shall have its own column in order to identify materials quantities required to construct this item.
2. Each state-furnished pit site (mandatory or not) shall have its own column.

There are exceptions that will be allowed for item 1 above. For projects with a single wall, a single bridge, or both, the wall and bridge quantities may be entered into a single column or combined with another column. For projects with multiple walls, if the materials quantities required for each wall are clearly tabulated in the plans, these wall quantities may be entered into a single column or combined with another column in the Summary of Quantities.

In addition, when paving across multiple bridges, the paving quantities need not be separated out for each bridge and may be included in main line paving quantities in the Summary of Quantities.

The intent of item 1 above is to be able to identify the quantities of work at each wall or bridge during construction activities.

The designer is advised to use additional columns within groups to show quantity breakouts for individual construction lines. For example, by using separate columns for the main line, a frontage road, and each ramp, it is much easier to track and make quantity revisions during design, and much easier to track quantities for overruns or underruns during construction, than it is if all of the quantities are combined in a single column.

400.06(5)(c) Quantities

The quantities for the following types of items will typically appear only in the Summary of Quantities:

- Lump sum items: LS will appear on the Summary of Quantities for these items; the approximate quantity for lump sum items will appear in the Special Provisions.
- Force account items.
- Water.
- Aeration items.
- Structure items, such as bridges and structural retaining walls—although separate Quantity Tabulation sheets are desirable for structural retaining walls when there is more than one wall in a project.
- Borrow materials—unless the conditions noted in Division 7 apply.
- Surfacing materials.
- Paving materials.
- Sign covering.
- Sequential arrow sign.
- Contractor piloted traffic control.
- Traffic control labor.
- Construction Signs Class A.
- Traffic Control Supervisor.
- Traffic control vehicle.
- Spill Prevention Plan.
- ESC Lead.

Bid items shall be listed in the same order as they appear in the current Standard Item Table.

Bid items not listed in the Standard Item Table shall be intermixed, according to type of work, with the bid items that are listed.

Bid item names for nonstandard bid items shall be singular in form and close to similar nonstandard bid item names used in previous projects. This information can be found in BidTabs Pro. (See Division 7 for additional information on standard items.)

400.06(5)(d) Standard Item Table

The Standard Item Table provides useful information to the designer in the last column to the right (Item Use Message). Listed in this column is a statement that will tell the designer what, if anything, needs to be done if this bid item is used in the project. Some of the statements that are listed in this column are as follows, with a definition of the statement:

STANDARD ITEM
Indicates that this bid item is a standard item and is covered in the *Standard Specifications*. The designer may not need to do anything to revise or supplement the information provided in the *Standard Specifications*.

However, the designer must decide whether information concerning this bid item, as addressed in the *Standard Specifications*, is sufficient or whether more "project-specific" information is required.

REQUIRES SPECIAL PROV.
Indicates that the designer needs to do one of the following:

- Revise the appropriate section or sections in the *Standard Specifications*.
- Supplement the appropriate section or sections in the *Standard Specifications*.
- Write a "stand-alone" project-specific specification because the *Standard Specifications* does not contain information/direction for this item of work.

STD. ITEM, GSP REQUIRED
Indicates this bid item is a standard item, it is covered in the Standard Specifications, and there is a General Special Provision (GSP) that needs to be included in the contract Special Provisions when it is used. It is the designer's responsibility to ensure the GSP is applicable or "project-specific" to the contract.

GSP ITEM
Indicates that a GSP exists and must be included in the contract Special Provisions. It is the designer's responsibility to ensure this GSP is applicable or "project-specific" to the contract.

AMENDMENT ITEM
Indicates that an Amendment exists and must be included in the contract Special Provisions when this bid item is used.

REQ SPECIAL, HQ APPROVAL
Indicates that when this bid item is used, a project-specific Special Provision must be written and HQ Construction Office approval must be given prior to including this Special Provision in the contract.

HEADQUARTERS USE ONLY
Indicates this bid item will be included in contracts only when directed by the HQ Construction Office.

TECHNICAL SPECIFICATION
Indicates this bid item will require a technical Special Provision to be written. Architects generally write this type of Special Provision. These bid items are typically used only for architectural-type work (such as building facilities construction at ferry terminals and rest areas).

SUPERSTRUCTURE ITEM
Indicates this bid item is to be used in conjunction with Standard Bid Item 4300 ONLY. The 9000 series bid items are to be used only to provide lump sum breakout data for bid item 4300 "Superstructure – XXXXXX."

DO NOT use the 9000 series bid items as stand-alone bid items in your contract estimate.

400.06(5)(e) Quantities

A quantity shall not be duplicated within the body of the plans. The item totals shown in the Summary of Quantities shall be the sum of the quantities shown for the item throughout the plans. Quantities are typically listed in the Quantity Tabulation, Structure Note, and Profile Plan sheets. When quantities for an item appear in places other than where your reader would expect to find them, or when quantities for an item appear in two or more places throughout the plans, a cross-referencing statement, such as "FOR ADDITIONAL QUANTITIES – SEE SHEETS Qnn and Wnn," shall be included.

Quantities for work items such as pigmented sealer, whose cost is included in the cost of the associated concrete, are shown in the plans for the sole purpose of aiding the contractor in the bidding process and shall be accompanied by the note, "Informational Only."

Care must be taken when calculating quantities for surfacing and paving materials to ensure reasonable accuracy. The *Design Manual* contains units and conversion factors for estimating surfacing and paving quantities.

Quantities listed in the Summary of Quantities are intended to be representative of the work to be performed. Rounding will take place each time a quantity is placed on a Quantity Tabulation sheet, a Profile sheet, or another location in the plans. The total of the rounded quantities will be carried forward to the Summary of Quantities.

400.06(5)(f) Rounding of Quantities

The following general rules shall apply to the rounding of quantities:

1. Items having an estimated unit price of $9.99 or less will be shown to the highest multiple of 10; for example, 3,640 (not 3,637) units of haul at $0.50, and 560 (not 554) tons of ballast at $1.25.
2. Items with an estimated unit price of $10.00 to $99.99 will be shown to the nearest full digit; for example, 61 (not 60.5) cubic yards of concrete at $43.00.
3. Items with an estimated unit price of $100.00 or more will be shown to one decimal place; for example, 18.3 (not 18.25) acres of clearing at $1500.00.
4. Exceptions to numbers 1, 2, and 3 above:
   - Earthwork items, roadway excavation, embankment compaction, and borrow excavations are to be rounded to the nearest multiple of 10 units, regardless of price. The rounding for roadway excavation and embankment compaction will be made for each entry on the Profile sheets. The borrow quantities will be rounded to the nearest 10 units and placed on the Summary of Quantities. On a new construction project with extremely large earthwork quantities, the quantities could even be rounded to the nearest 50 units at each entry on the Profile sheets.
   - HMA and crushed surfacing items are to be rounded to the nearest 10 units.
   - Pipe items will be rounded to the nearest foot for each pipe run entered on the Structure Note sheets, regardless of price.

400.06(5)(g) Unit Bid Prices

Good sources to use for determining the estimated unit bid prices for quantities are BidTabs Pro and Unit Bid Analysis. If these are not available through your Region Intranet Home Page, they can be accessed via the WSDOT Project Development Home Page under the "Engineering Applications" heading: www.wsdot.wa.gov/design/projectdev/

400.06(6) Contract Reclamation Plans

See Contract Plan Example 4-10.

A Contract Reclamation Plan will clearly set forth all reclamation work to be accomplished in the contract.

A Contract Reclamation Plan is required for every WSDOT contract that contains a WSDOT furnished-material source. The Contract Reclamation Plan will be based on the Ultimate Reclamation Plan (ultimate REC plan). A reproducible (reverse-reading Mylar) of the approved ultimate REC plan can be obtained from the Region Materials Laboratory. This plan will be modified to create a Contract Reclamation Plan, which will be included in the Contract Plans.

By RCW 78.44, the approved ultimate REC plan must be followed or WSDOT is subject to fines for each incident. If the contract work requires deviation from the ultimate REC plan, a modification to the ultimate REC plan has to be submitted for Department of Natural Resources (DNR) approval prior to beginning work at the site.

In some cases, Contract Reclamation Plans need to be developed during Contract Plan preparation for sites that do not have ultimate REC plans. Materials sources located on federal land or sites smaller than 3 acres in area usually do not have ultimate REC plans.

400.06(6)(a) Contract Reclamation Plan Elements

1. The existing contour lines shown on the Ultimate Reclamation Plan when it was approved will be updated to show the topography as it exists immediately prior to the contract. Only the contours in the portion of the site affected by your project need be shown, not for the entire site.
2. The contractor's designated work area will be noted.
3. The available raw material will be indicated, or, when appropriate, a note may be added on the plan stating that sufficient raw material is available for the project.
4. A block detailing materials to be produced and reclamation items needed under this contract.
5. The interim and reclaimed slopes shall be no steeper than the slopes on the ultimate REC plan.
6. Specific directions for excavation will be added as a note; for example, "Excavation shall progress to full depth from the existing face of excavation toward the southeast."
7. Only notes on the ultimate REC plan that are applicable to work being performed under the contract are to be included on the Contract Reclamation Plan.
8. Other notes and information necessary to the specific contract will be added. It is the intent that the Contract Reclamation Plan stand alone for the work (reclamation) to be accomplished under the contract.

400.06(6)(b) Contract Materials

It is the designer's responsibility to verify with the Region Materials Laboratory that the quantity of available material is accurate and that it is possible to produce all the materials listed within WSDOT specifications. If the contractor will be required to perform some special or extra work to manufacture material that meets the specifications, the special or extra work requirements are to be included in the Special Provisions.

Quantities for stripping, clearing, and grubbing, and all other items of work to be performed within a site, shall be tabulated on the plan. For a nonmandatory site, the items of work shall be site-specific ("Clearing and Grubbing – Site QS-A-495"). For a mandatory site, the work will fall under the general contract work item ("Clearing and Grubbing"), but will be shown in a separate column.

Identification numbers for stockpile and waste sites are assigned by the Region Materials Laboratory. Although a Contract Reclamation Plan is not required for stockpile or waste sites, the plans shall indicate any restrictions on the use of such sites.

Access to the sites shall be shown. If an access road is to be built, rebuilt, or widened, indicate the width of right of way, and clearly identify all work to be performed by the contractor on the access roads as a part of the contract. How the contractor will be paid for the access road work will be outlined in the Contract Provisions.

Agreements are required with the owners of all roads that make up the haul route. These agreements will indicate WSDOT's and the contractor's responsibilities for returning the roadway to the "before hauling" condition.

400.06(7) Roadway Sections

See Contract Plan Examples 4-11, 4-12, 4-13, 4-14, 4-15, and 4-16.

Roadway sections are to provide complete geometric information on the roadway cross section from the subgrade up and general information left and right of centerline. The information on the roadway sections will tie directly to the Paving Plans and the profiles if these series of plans are included in the project.

On federal-aid projects, future paving and surfacing depths required to bring the roadway to the ultimate design cross section shall be shown in order to qualify for future participation by the FHWA.

Roadway sections are required for every combination of surfacing and paving depths used on the main line, ramps, detours, frontage roads, road approaches, city streets, and so on.

Consider the use of tables with a section example in order to reduce the number of unnecessary plan sheets.

Roadway sections are to represent conditions from the subgrade up for the entire length of the construction line(s) (such as main line, ramps, detours, frontage roads, road approaches, and city streets) included in the project. Start at the beginning station on an alignment and identify all stationing to the end of line without gaps/overlaps.

When drawing roadway sections, it is recommended that proportional scaling be used to indicate lane widths and depths of materials to be placed. A 12-foot lane should be drawn so that it appears slightly larger than a 10-foot shoulder. A 0.15-foot lift of hot mix asphalt (HMA) should be drawn so that it appears approximately one quarter the thickness of a 0.60-foot lift of gravel base course.

Roadway sections should be drawn to reflect how the work is expected to be performed in the field. If HMA is to be placed in multiple lifts, draw the roadway section to reflect this fact by showing the number of lifts with the required depths of each lift. Show each lift with an edge line that would indicate where each lift would end left and right of centerline. **DO NOT** simply draw each lift of HMA to extend out into the shoulder unless this is exactly how the HMA is to be placed.

Variable dimensions (for example, Varies 2' to 10') may be used to represent differences in shoulder or lane widths, or transition areas, only if there is a Paving Plan that clearly shows, by stationing, the actual widths desired. If the project is a pavement overlay project and no Paving Plan is going to be provided, the use of

variable horizontal dimensions is discouraged unless construction notes or a table is used to describe, by stationing, where the variable paving widths or transitions begin and end.

A generic roadway section for bridges must be provided to avoid having gaps in stationing. If the bridge is being overlaid, additional detail will be required; be sure the roadway section matches any bridge information in the plans. When a project has a structure on the main line or a secondary line that is not included in the project, a paving exception should be noted on the Roadway Section sheet.

Bridge approach slabs, if required, shall be shown as a separate roadway section.

Station equations, paving exceptions, and project exceptions are to be shown in proximity to the roadway section to which they apply.

400.06(7)(a) Roadway Section Items

Each roadway section in the project shall show the following applicable items:

1. Horizontal dimensions of the roadways, as approved in the Design Decision Summary.
2. Project-specific design details and required features such as curbs, sidewalks, or riprap.
3. The depths of surfacing and paving.
4. Station-to-station limits for each line represented by the roadway section.
5. The position of the profile grade, the pivot point for super transition, and the construction centerline.
6. The depth from profile grade to the roadway surface being constructed if the project does not include ultimate design surfacing. This depth shall be labeled “Future.”
7. The type, width, and thickness of the existing surface if the characteristics of the existing surface will affect construction.
8. A general note indicating that all surfacing and paving depths are compacted depths and courses shall not exceed the depths defined in the *Standard Specifications*.
9. The roadway ditch depth shall meet the design criteria in the Design Manual. A slope table should be used when embankment and excavation heights vary enough to require different slope rates. Show sideslopes for embankment sections and inslopes and backslopes for excavation areas.
10. A section showing shoulder widening for guardrail. If shoulder widening for guardrail is isolated to one or two roadway sections, it can be shown as part of the particular section. If shoulder widening for guardrail applies to several roadway sections, a separate shoulder-widening section can be drawn and referenced from the applicable roadway sections.
11. A section showing the shoulder design on the outside of a curve (super elevation section) if the project involves constructing subgrade on the outside of curves (a standard CADD detail that need only be shown once).

12. A surfacing legend is to be shown on each sheet indicating the type of surfacing material, with the exact item name as found on the Summary of Quantities. For HMA, it is necessary to indicate the class of material used, but not the performance grade (PG), when only one grade is used for the entire project. However, if there are two or more performance grades used on the project, they must all be detailed on the roadway sections. Each type of material shall be assigned an identifying number enclosed by a hexagon symbol.
13. Construction notes shall be numbered consecutively, but only the construction notes that are applicable to a particular sheet will be shown on the sheet. Once you have created a construction note 1, it will always be the same for that series. Continue the sequencing of construction notes consecutively as you add them. DO NOT resequence from one plan sheet to the next. For example:
    - Sheet R1 may have construction notes 1, 2, 3, and 4.
    - Sheet R2 may have construction notes 1, 3, and 5. (Notes 1 and 3 on sheet R2 would be identical to notes 1 and 3 on sheet R1, and note 5 on R2 is a new note, consecutively numbered).
14. If the total paving depth for a class of HMA exceeds the nominal compacted depth specified in the *Standard Specifications*, one of the following methods of indicating the paving requirements will be used:
    - Multiple lifts shall be drawn on the roadway section indicating the desired minimum compacted depth of each lift.
    - A construction note shall be provided for the roadway section specifying the number of lifts required and the maximum allowable compacted depth for any lift.

400.06(7)(b) Paving Depths

If you don't show paving depths in your roadway sections (as specified in the two methods above), and the paving depths for your project exceed normal depths (as shown in the *Standard Specifications*), you should take another look at Section 5-04.3(9) of the *Standard Specifications*. In part, it reads:

> **5-04.3(9) Spreading and Finishing**
>
> The mixture shall be laid upon an approved surface, spread, and struck off to the grade and elevation established. HMA pavers complying with Section 5-04.3(3) shall be used to distribute the mixture. **Unless otherwise directed by the Engineer, the nominal compacted depth of any layer of any course shall not exceed the following:**

The bold sentence in the preceding paragraph is where our plans can create problems if they are not in accordance with 14 above. When roadway sections show paving depths that exceed the allowable depths listed in the *Standard Specifications*, the depths shown in the plans will supersede the depths in the *Standard Specifications* (see Section 1-04.2) in accordance with the order of precedence.

400.06(8) Grading Sections

See Contract Plan Example 4-17.

These plan sheets will show items such as: types of embankment; use of waste in slope flattening; drainage layers; composite sections; relief ditch details; slope tables; unsuitable stripping depth tables; controlled blasting slopes; wetland sections; horizontal drain details; surcharge details; large unsuitable foundation excavation and backfill areas; and soil stabilization details. Most projects will not require grading sections.

400.06(9) Alignment/Right of Way Plan

See Contract Plan Examples 4-18 and 4-19.

The alignment and right of way (R/W) information will appear on the same series of plan sheets for most projects.

In the past, right of way was required to be shown for projects having work outside the existing toe of fills or existing bottom of ditches. Now, for the purpose of reducing the number of plans sheets, the designer should include Right of Way Plans only when they are necessary for contractors to perform their work.

If R/W information is not required (such as for a paving project), the alignment information could be shown on another plan series, such as the Site Preparation Plan series or the Paving Plan series, as long as the additional information does not cause overcrowding of the plan sheet.

Site preparation information may appear with the Alignment Plans, but only if there is minimal existing topography and minimal site preparation work to be shown. If there is considerable topography or a great deal of site preparation work to be shown, the information is to be placed on a separate plan series.

400.06(9)(a) Alignment/Right of Way Plan Series

The following information will normally appear on the Alignment/Right of Way Plan series:

1. Construction centerlines for all roadways being constructed.
2. All stationing, bearings, and curve data associated with each construction centerline. For new construction, ramp stationing will always run in the same direction as the main line stationing.
3. Right of way centerline—not always required (see discussion below).
4. Right of way lines. All WSDOT R/W Boundary Lines (proposed and existing), *without exception*, will always be solid lines on the Contract Plans.
5. Ties of all right of way breaks to either the right of way or construction centerlines—show both station and offset distance.
6. Construction permits with private citizens, and all easements, identified by type and use.
7. Ties of all construction permits and all easements to either the right of way or construction centerline—show both station and offset distance.
8. Township and Range Lines that cross centerline, with appropriate descriptive information (such as bearing and distance to found corners), including centerline stationing at intersection point.
9. Limited access hachures when appropriate. Hachures need to be drawn to the correct stationing, but the stationing of the ends or breaks in limited access does not have to be identified on the construction plans.
10. Found Section Corners and monuments, with station and offset ties to construction centerline.
11. Station and offset ties to railroads and railroad rights of way that intersect the project or are affected by the project.
12. Corporate limit and county lines with station identification where they cross the construction centerline.
13. Names of rivers, streams, bays, and inlets, their direction of flow and meander lines, and the ordinary high tide or high-water lines of navigable waterways.

14. On all projects that include grading, the slope catch lines shall be shown. It may be desirable to show slope catch lines on the Drainage Plan; however, if this is done, the right of way line must also be shown on the Drainage Plan.
15. The outline of sand drainage blankets, unsuitable foundation excavation, and toxic waste excavation areas.
16. Show all found property corners along WSDOT R/W lines with a note stating "Per RCW 58.09.130, any monument or corner disturbed by the Contractor's operation shall be replaced at no cost to the Contracting Agency."

400.06(9)(b) Right of Way Centerline

When the right of way centerline is coincidental with the construction centerline, an equation shall be provided at the Begin Project and End Project to show the relationship between the official right of way stationing and the construction centerline stationing. An equation will be provided to show relationship between the construction centerline and the right of way centerline at the location of Right of Way Plan equations. All right of way offsets and associated stationing will then be referenced to the construction centerline.

When the right of way centerline is **not** coincidental with the construction centerline, the same procedure described in the previous paragraph may be used. The offset distance between the right of way and construction centerlines shall be shown at the Begin Project and End Project. In addition to the equations at the Begin Project and End Project, equations shall be shown at all points where the right of way and construction centerlines cross and at the location of Right of Way Plan equations.

400.06(9)(c) Right of Way Stationing/Alignment

The official Right of Way Plans may be included in the Contract Plans under the following circumstances:

- The official right of way stationing runs the opposite direction of the construction stationing.
- The right of way alignment is substantially different than the construction alignment and is not easily tied. For example, the right of way alignment has numerous curves that do not exist in the construction centerline and the right of way would have to be described using metes and bounds as opposed to offsets from the construction centerline.

If either of the two circumstances above exists, the designer needs to contact the HQ Right of Way Plans Section and request that it prepare the existing Right of Way Plans to be included in the Contract Plans. The designer will have to provide the HQ Right of Way Plans Section with the equation relating the Begin Project and End Project construction centerline to the existing R/W stationing. If this option is used, the HQ Right of Way Plans Section needs to be notified early in the design process so that the work can be added to its schedule, to ensure the plans can be prepared within the PS&E schedule.

If the project requires that Profile sheets be included in the Contract Plans, the layout of the Alignment Plan sheet must take into account that the station limits on each Profile Plan sheet are to match exactly the station limits of each Alignment Plan sheet. Horizontal alignment and steep grades can each affect the matching of stationing limits between the Alignment and Profile sheets, so they must be examined together. The alignment and profile may be shown on the same plan sheet by showing both the plan and profile on same sheet.

400.06(9)(d) Vicinity Map

Township and Range information is to be shown on the Vicinity Map. It does not have to be shown on the Alignment Plans unless one or both of the following cases occurs:

- The Township or Range Lines cross the centerline, in which case the line will be shown with the station of the intersection identified.
- Right of way boundary lines are shown WITH dimensions from the roadway alignment.

Section Lines only have to be shown on the Alignment Plans if the Section Corners are found, requiring that the ties to centerline be shown.

The following information will be shown for all horizontal alignments:

1. Line identification, using alpha designation and stationing (M 5+50).
2. Station ticks shown on the top side of the alignment line—top as related to the direction of the stationing.
3. Tangent bearings.
4. Point of intersection (PI), point of curvature (P.C.), point of tangency (P.T.), point on tangent (POT), point on curve (POC), point of compound curve (PCC), point of reverse curve (PRC) and point on semitangent (POST) for all horizontal alignment where applicable.
5. Angle points (A.P.) in horizontal alignments.
6. Curve data box showing:
   - Station of the point of intersection (P.I.) of bearings for each curve.
   - Delta for each curve: deflection angle between intersecting bearings.
   - Radius of each curve.
   - Tangent length for each: distance from P.C. and P.T. to the P.I.
   - Length of curve for each curve: distance from P.C. to P.T. along the horizontal curve.
   - Full super rate for each horizontal curve.

400.06(9)(e) Construction Stationing

Construction stationing shall increase from the beginning of the project to the end, and shall run from south to north on odd-numbered highways, and west to east on even-numbered highways.

All ramp stationing for new construction shall increase in the same direction as the main line stationing.

Ramp stationing should begin at station 10+00 to avoid negative stationing due to alignment changes.

Offset equations shall be shown as follows:

- The secondary line (ramp, crossroad, or right of way centerline) designation and station is listed first.
- The main line (construction centerline) designation and station, perpendicular distance, and left or right is listed next. The direction (left or right) is referenced from main line looking ahead on line.

400.06(9)(f) Linear Equations

Linear equations should not be an issue if the designer establishes construction stationing for the project instead of using right of way stationing. If linear equations are present, the designer must make sure that they are gap equations and not overlap equations. Overlap equations cause confusion because of the duplication of stationing caused by the overlap. To convert an overlap equation to a gap equation, a 1 can be added in front of the Ahead station (5+00 would become 15+00), or the first digit of the Ahead station can be increased by 1 (110+00 would become 210+00).

Examples:

1. Overlap equation 10+00 BK =
   5+00 AHD
   add 1 in front of the Ahead station would become
   Gap equation 10+00 BK =
   15+00 AHD

2. Overlap equation 150+00 BK =
   110+00 AHD
   add 1 to the first digit of the Ahead station would become
   Gap equation 150+00 BK =
   210+00 AHD

When showing the equation in the plans, the BACK station goes on the back-side of the equation line and the AHEAD station goes on the ahead-side of the equation line.

400.06(10) Quantity Tabulation Plan Sheets

See Contract Plan Examples 4-20 and 4-32.

Quantity Tabulation Plan sheets are used to tabulate the locations, quantities, and notes pertaining to specific bid items. Quantity Tabulation Plan sheets may not be required on projects where the information is shown elsewhere in the contract.

400.06(10)(a) Quantity Tabulation Plan Sheet Items

The following types of items will normally appear on Quantity Tabulation sheets:

1. Removal items—except items paid by lump sum.
2. Asphalt concrete curb and asphalt concrete gutter.
3. Timber and lumber—except bridge items.
4. Cement concrete approach.
5. Cement concrete curbs, and curb and gutter.
6. Guardrail items, including anchors, terminals, and transition items.
7. Concrete barrier items.
8. Impact attenuators.
9. Guideposts.
10. Raised pavement markers, paint lines, and pavement marking items.
11. Conduit pipe—except bridge, illumination, and traffic signal system items.
12. Wildlife reflectors.

13. Steel reinforcing bars and wire mesh—except bridge structural retaining walls and drainage items.
14. Monument cases and covers.
15. Cement concrete sidewalk.
16. Asphalt concrete sidewalk.
17. Concrete slope protection.
18. Fencing items, including gates and end, corner, and pull posts.
19. Adjustment items.
20. Delineation lights.
21. Temporary Erosion and Sediment Control Devices.

400.06(10)(b) Quantity Tabulation Plan Sheet Preparation

Quantity Tabulation Plan sheets are to be prepared on 11-inch by 17-inch paper. The Quantity Tabulation spreadsheet program is available through the Region Plans Offices or the HQ Project Development Unit. For additional information and instructions for the Quantity Tabulation spreadsheet, see the Appendices).

Standard sheets have been prepared with the heading "Quantity Tabulation." A descriptive addition (see types of items above) may be added after the plan sheet heading "QUANTITY TABULATION – XXXXXXX XXXXXX" to indicate what type of work is included on this plan sheet.

Quantity Tabulation Plan sheets will be placed immediately preceding the plan sheets that contain the tabulated items. This will intersperse them throughout the plans.

For projects involving only a few items, the quantities may be placed in data boxes on appropriate plan sheets or on Profile sheets, eliminating the need for Quantity Tabulation Plan sheets. Data boxes should be laid out in the same manner as the Quantity Tabulation sheets.

Blank columns shall be provided between listed bid items, and blank rows shall be provided in station listing (about every fifth entry and a space or two between each reference sheet listed). This procedure allows for the addition of bid items and stationing with ease, even during the addendum phase.

400.06(10)(c) Bid Items

Bid items shall be placed from left to right in the same order in which they appear in the Summary of Quantities Estimate.

Bid items shall be identified on the Quantity Tabulation Plan sheets exactly as they appear in the *Standard Specifications* (spelling, punctuation, spacing, and so on) and in the same order as they appear on the Summary of Quantities.

If there are more bid items to be tabulated than will fit across the top of the sheet, with the appropriate blank spaces, additional Quantity Tabulation Plan sheets will be required. The station listing will be identical for the continued sheets. Likewise, if there are more station listings than will fit on a single sheet, with the required blank spaces, additional Quantity Tabulation Plan sheets will be required. The bid items across the top will be identical for the continued sheets.

Each time an item is used in a different location, it will have a separate quantity entry. Related items, however, may be included in a single entry if the station limits are the same. For example, a single entry could include the type of guardrail, required anchors, and transition types.

Each quantity entered on the Quantity Tabulation Plan sheet is to be rounded appropriately at the time of entry. Do not add up the unrounded quantities and round the total to carry forward to the Estimate/Summary of Quantities. (See the information on rounding in 400.06(5), Summary of Quantities.)

The bid item totals on the Quantity Tabulation sheets must be consistent with the bid item totals entered in the Summary of Quantities Estimate.

400.06(10)(e) Plan Reference No.

The **Code** column shall contain the Quantity Tabulation code number, which is made up of the Plan Reference No. and the number identifying the individual construction feature on the sheet (for example, P1-1, P1-2, … P1-6, P2-1, P2-2, … P2-26). The numbers shall be listed in the ascending order of plan sheets.

Bid items, identified by station(s) and quantity or quantities, on individual Quantity Tabulation Plan sheets are tied directly to the plan sheet series they are related to by the number immediately following the Plan Reference No. mentioned above. The related series sheet shall have its own consecutive series of numbers identifying construction features (octagonal enclosed numbers beginning with number 1) beginning in the top left corner of the sheet and progressing across and down the sheet. A light, arrowless line shall be drawn from the octagon to the construction feature. When a construction feature is continued on more than one sheet, the octagon on the continued sheet shall be divided with a horizontal line, and the Plan Reference No. on which the construction feature first appears shall be inserted in the upper half and the first sheet individual identifying number shall be inserted in the lower half. If this is done, a larger-scale octagon may be used. The octagonal symbol shall not be used for any other purposes.

For items such as pavement markings that are continuous for the entire project, list the station limits and leave the code column blank.

400.06(10)(f) General Notes

The General Notes will include information required to complete the data for a particular construction feature, such as:

- Guidepost type and color.
- Guardrail placement case, terminal connection, alternate anchor type, and connection type when connecting transition to stiffer barrier like bridge rail.
- Acceptable impact attenuators for each location.
- References to applicable Special Provisions identify the Special Provision by the exact name.
- References to applicable details in the Contract Plans. Identify the exact plan sheet (using the Plan Reference No.) where the detail is located.
- Reference to applicable Standard Plan(s). Provide the Standard Plan number, which is located in the bottom right corner of the page.
- Type of curbing to be used.

If the quantities for an item appear on other plan sheets in addition to the Quantity Tabulation Plan sheets, cross-references shall be made to the sheets where the additional quantities can be found.

400.06(11) Site Preparation

See Contract Plan Example 4-21.

The Site Preparation Plan series is where all existing topography within your project limits is to be shown, as well as all the project removal and demolition work.

If there is very little topography to be shown and very little removal and demolition work to be performed, this information can be shown on the Alignment/Right of Way Plan series as long as it does not compromise the information required on the Alignment/Right of Way Plans.

The construction centerlines will be shown on the Site Preparation Plans; however, lanes, shoulders, and other features being constructed are not to be shown.

Removal and demolition of existing features, paid as separate items, are to be identified using the General Notes in the Quantity Tabulation sheets.

Items included in the lump sum price for “Removal of Structures and Obstructions,” are to be identified with notes located directly on the appropriate plan sheet. For example, removal of wire fence should be identified with a note such as “wire fence to be removed.” Items of work (such as removal of guideposts) included in the lump sum price for “Removal of Structures and Obstructions” that cover the entire project do not have to be identified on the plan. Items of work being paid as "Removal of Structures and Obstructions" will not appear on Quantity Tabulation sheets.

If large, complete areas of pavement, sidewalk, or curbs and gutters are being removed, it is best not to use cross-hachuring to identify these areas. Large areas of cross-hachuring actually detract from the plans and often hide important information. It will suffice to show the limits of the removal and identify the area with a General Note on the Quantity Tabulation sheet, or note on the plan sheet “begin pavement removal/end pavement removal.” If there are a number of small, isolated areas of pavement removal, cross-hachuring may be used to identify these areas.

400.06(12) Profiles

See Contract Plan Example 4-22.

Roadway profiles are required only when there is a change in the vertical alignment of the roadway under construction. If only a section of the vertical alignment is changed, a profile is required only for that section.

The station-to-station limits shown on each Profile sheet match exactly the station-to-station limits shown on the corresponding Alignment sheet.

400.06(12)(a) Profile Sheets

The following information is required on Profile sheets:

1. The limits of roadway sections will appear with arrows. These are always to be the topmost entry on the Profile sheets.
2. Super elevation diagrams. These should be shown on a separate sheet if they cause crowding of other required information.
3. The finished profile grade line will be shown as CADD weight 5 solid line style.
4. The datum symbol and information shall be shown on all sheets. North American Vertical Datum (NAVD) 88 is the desirable vertical datum. However, National Geodetic Vertical Datum (NGVD) 29 is acceptable in certain situations. If there is a need to use NGVD 29 datum on a project, the HQ Right of Way Plans Section, Land Survey Support, needs to be contacted for concurrence for use.

5. Show all vertical control, including benchmarks that exist in the area of the alignment profiled on the sheet—both temporary and permanent. Be sure to include all pertinent information associated with vertical control points such as location, offset, stationing, elevation, and so on.
6. Beginning station and elevation (BVC) and ending station and elevation (EVC) of each vertical curve will be shown. Elevations and stations through each vertical curve will be shown on even stations at intervals not shorter than 50 feet but not greater than 200 feet.
7. The station and elevation of the point of intersection of the gradients (VPI) will be shown.
8. Gradients between vertical curves—shown as a percentage, carried out to a sufficient number of places so that the calculation from the elevation at one VPI on the given gradient will give the elevation at the next VPI.
9. Length of each vertical curve.
10. Elevation and station at each break—angle point; AP—in gradient with elevation shown to 0.01 foot.
11. The existing ground line will be shown as a dashed line.
12. Areas of work or quantities will be shown, with arrows, between the station-to-station limits of the work, or at 10 station (1,000') totals if the work extends beyond 10 station totals, or at other logical breaks such as bridges or group breaks. If these logical breaks are slightly more or less than 1,000 feet apart, it would be appropriate to have a 1,300-foot total or a 700-foot total.
13. Quantities to be shown will be, but will not be limited to roadway excavation; controlled blasting; vertical sand drains; unsuitable foundation excavation; toxic waste excavation; embankment compaction; special backfill; clearing and grubbing; seeding; compost; topsoil; and fertilizing and mulching.
14. The use of the term “embankment” by itself is permitted only when Method A compaction is specified. In this instance, it must be noted that embankment quantities are shown for informational purposes only.
15. Details showing sideslopes for unsuitable foundation excavation and toxic waste excavation shall be shown on the profiles or detailed on separate sheets. The bottom of unsuitable foundation excavation and toxic waste excavation will be shown, but should be shown as a squiggly line to indicate that the actual bottom elevation of the excavation is unknown.

The designer needs to give some thought to the layout of the Profile sheets prior to placing information, because the layout is to be the same on each Profile sheet in the series. All quantity arrows are to be placed in the same position on each sheet to allow quantities to be located easily.

If there is only minor grading on the project, and Profile sheets are not used, 10 station totals, or similar quantity breakdowns, will be shown on a Quantity Tabulation sheet.

400.06(13) Structure Notes

See Contract Plan Examples 4-23 and 4-28.

All of the information shown on the Structure Note sheet and the Drainage Plans and Profiles will meet the requirements contained in the *Hydraulics Manual* and the *Standard Plans for Road, Bridge, and Municipal Construction (Standard Plans)*.

(a) Structure Note sheets are used to tabulate locations, bid items, quantities, and notes pertaining to drainage items, utilities, water lines, and so on.

(b) The Structure Note sheets are to be on 11-inch by17-inch paper. The Structure Note spreadsheet is available through Region Plans Offices or the HQ Project Development Unit. For additional information and instructions for this microcomputer spreadsheet, see the Appendices.

(c) Standard sheets have been prepared with the heading "Structure Notes." A descriptive addition such as "Utilities" or "Irrigation" shall be added after the heading "STRUCTURE NOTES – XXXXXXX XXXXXX" to indicate what type of work is included on the plan sheet. Structure Note sheets are to be placed immediately preceding the plan sheets that contain the features being tabulated.

(d) For those projects involving only a few drainage bid items at a few locations, the information normally provided on Structure Note sheets may be provided on the appropriate plan sheets, in either a tabular form in data boxes, or placed in a convenient location on the sheet, with a leader line used to connect the information with the corresponding drainage feature.

(e) Blank columns shall be provided between listed bid items, and blank rows shall be provided in station listing—about every fifth entry and a space or two between each reference sheet listed. This procedure allows for the addition of bid items and stationing with ease, even during the addendum phase.

(f) The bid items shall be placed from left to right in the same order in which they appear in the Summary of Quantities Estimate.

Bid items will be identified on the Structure Note Plan sheets exactly (spelling, punctuation, and spacing) as they appear in the WSDOT Standard Item Table.

(g) If there are more bid items to be tabulated than will fit across the top of the sheet, with the appropriate blank spaces, additional tabulation sheets will be required. The station listing will be identical for the continued sheets. Likewise, if there are more station listings than will fit on a single sheet, with the required blank spaces, additional tabulation sheets will be required. The bid items across the top will be identical for the continued sheets.

(h) Each time an item is used in a different location, it will have a separate quantity entry. Related items, however, may be included in a single entry if the station limits are the same. For example, a single entry could include a catch basin, pipe, structure excavation, and riprap.

(i) Each quantity entered on the Structure Note Plan sheet is to be rounded appropriately at the first point of entry. Do not add up the unrounded quantities and then round the total to carry forward to the Summary of Quantities Estimate. (See the information on rounding in 400.06(3).)

(j) The Code column shall contain the structure code number, which is made up of the Plan Reference No. and the number identifying the drainage features on the sheet (for example, D1-1, D1-2, … D1-6, D2-1, D2-2, … D2-26). The numbers shall be listed in ascending order of plan sheets.

(k) Indicate the construction centerline stationing on the Structure Note sheet for cross culverts, and indicate station and offset for each end of longitudinal pipe installations. If a sanitary or storm sewer line stationing is used, the sewer line stationing will be used on the Structure Note sheet, and the plan sheets will indicate the appropriate ties to the construction centerline.

(l) The bid item for storm sewer pipe will be "Schedule ___Storm Sewer Pipe ___ In. Diam." A table indicating the acceptable pipe alternates is included in Section 7-04 of the *Standard Specifications*. There will be times when not all of the pipes shown as acceptable alternates in the table will be acceptable because of conditions on a specific project. When there are pipes not acceptable for a specific project, the designer will include a General Note on the Structure

Note sheet identifying the unacceptable pipe type. The *Hydraulics Manual* contains a complete discussion on storm sewer pipes and is to be used for guidance.

(m) When WSDOT does sanitary sewer pipe work, it is usually to extend or replace a system affected by the highway work. The utility or local agency will normally specify the type of pipe, or specify that the pipe extension or replacement be in kind. The system owner's request for pipe type is to be placed in the P&SE portion of the Project File to serve as backup justification. The bid item will be the pipe type requested by the owner, and the General Note on the Structure Note Plan sheet will read either "no acceptable alternates" or "replace in kind," whichever is appropriate.

(n) The General Notes will include information required to complete the data for a particular drainage feature, such as:

- Acceptable or unacceptable pipe alternates for drain, underdrain, and culvert pipes.
- Unacceptable alternates for culvert and storm sewer pipes bid on a schedule basis.
- The appropriate treatment for pipes, except when the treatment is described by the bid item name.
- The corrugation dimension for corrugated steel pipe when a size other than the standard size corrugation is required.
- Specific vertical elongation where elliptical-shaped steel or aluminum pipes are required, whether the elliptical pipe is specified in the bid item or as an alternate.
- Procedures or instructions necessary to complete construction of the drainage feature.
- Required features, such as beveled end sections, safety bars, and other improvements.
- References to applicable details in the Contract Plans. Identify the exact plan sheet using the Plan Reference No. where the detail is located.
- References to applicable *Standard Plans*, with the full Standard Plan number.
- References to applicable Special Provisions. Identify the Special Provision by the exact name.

The bid item totals on the Structure Note sheets must be consistent with the bid item totals entered in the Summary of Quantities Estimate.

(o) If the quantities for an item appear on other plan sheets in addition to the Structure Note sheets, cross-references shall be made to the sheets where the additional quantities can be found.

400.06(14) Drainage Plan

See Contract Plan Example 4-24.

Each plan sheet will have its own consecutive series of numbers identifying drainage features. The numbers (beginning with number 1 enclosed in circles) will begin in the top left corner of the sheet and progress across and down the sheet. A light, arrowless line will be drawn from the circle to the drainage feature or features. These numbers relate directly back to the Structure Note plan sheets.

When a drainage feature is continued on more than one sheet, the circle will be divided with a horizontal line. The plan sheet reference number on which the drainage feature first appears will be inserted in the upper half and the individual identifying number will be inserted in the lower half. A larger-scale circle may be used if this is done. The circle symbol is reserved for the purpose of identifying drainage features and is not to be used for any other purpose.

If a sanitary or storm sewer line stationing is used, the plan sheets will indicate the appropriate ties to the construction centerline.

Each cross pipe will have a separate code number, which will include any attached drainage structure and any riprap, quarry spalls, or other end treatment being constructed in conjunction with the pipe.

Each run of pipe in a closed sewer system will have a separate code number, which will include the pipe and the drainage structure on the inlet end of the run of pipe.

If multiple pipes are to be placed in the same trench, they may be combined under a single structure code.

The skew angle for all skewed cross pipes shall be indicated on the plan sheets, unless both ends are controlled by station and offset and the stations and offsets appear on the Structure Note sheet.

A roadway ditch that is shown as part of a roadway section does not need to be shown on the Drainage Plans. This roadway ditch is included in the earthwork for Roadway Excavation Incl. Haul. This roadway ditch shall not be assigned a Structure Note number. When a ditch is constructed based on a drainage profile in the Drainage Plans, then this ditch shall be assigned a Structure Note number and the excavation is included in the bid item Ditch Excavation.

400.06(15) Drainage Profiles

See Contract Plan Examples 4-25 and 4-26.

The established scale controls the drainage profiles vertically. There is usually no horizontal scale for the drainage profiles, but it is recommended that distances represented be drawn proportionately. Each profile will be drawn in proportion horizontally for the length of the profile (the space representing 10 feet will appear the same for the length of the profile, and it will appear to be approximately two times a space, representing 5 feet).

The profiles can be made visually easier to follow by using an elongated triangle to represent manholes and an elongated rectangle to represent other drainage structures (such as catch basins or inlets). The distance shown between drainage structures is not the length of pipe but the horizontal distance from center of structure to center of structure. If it happens to appear to be the same as the length of pipe shown in the Structure Note Plan sheet, it is merely coincidental.

Pipe diameters are to be drawn with proportionate scale, so a 12-inch-diameter pipe will be drawn half the size of a 24-inch-diameter pipe.

The drainage profiles are to be drawn as a straight line representation of the path the water will take as it flows through the system, without regard for the actual plan view direction the pipes are running. The designer does not have to break the profile because a system that had been running parallel to the centerline has turned ninety degrees at a catch basin and crossed the roadway.

At locations where two or more pipes bring water to a drainage structure and one pipe carries the water away, there will have to be breaks in the profiles. One profile will continue through the common drainage structure and show the water leaving the structure, while the other profiles will stop or start at the common structure. There will be a leader line drawn between the representations of the common drainage structure with the note “same catch basin,” which is the tie between the profiles and completes each without having to draw the exit pipe a number of times. The information for the common structure will only be shown on one profile, usually the one that shows the outlet pipe.

400.06(15)(a) Drainage Profile Information

The following information is to appear on the drainage profiles:

1. Inlet and outlet flow line elevations of pipes—shown below the pipe profile. Inlet and Outlet flow line elevations are those elevations derived from pipe slopes carried to the center of drainage structure.
2. Outflow treatments such as riprap, quarry spalls, and, if the ditch is other than a roadway or median ditch, ditch profiles.
3. Debris deflectors, standpipes, and headwalls.
4. The type of drainage structure and station and offset location of the structure—shown above the structure.
5. The rim elevation of manholes, catch basins, inlets, or other drainage structures—shown above the structure.
6. The horizontal distance between adjacent drainage structures from center of structure to center of structure.
7. The size of pipe in each run—you do not have to include the type of pipe.
8. The pipe slope—carried out to sufficient decimal places so that when the calculation is made from the indicated inlet flow line, on the given grade, for the given distance, the result will be the outlet flow line indicated.
9. Finished ground line above the pipe.
10. Original ground line if pipes will be placed prior to embankment construction or if original ground differs from the finished ground line.

400.06(16) Utility Plan

See Contract Plan Example 4-29.

When the contractor is to work on the existing utilities as part of the contract, plan sheets for utility structure notes, plans, and details will be required. These shall follow the same general guidelines as specified for Drainage Structure Notes/Plans/Details.

To locate utilities in areas where only a few utilities exist, consider using tables with stations and offsets in lieu of creating additional plan sheets.

RCW 19.122.040 requires WSDOT to identify and locate known underground utilities in our contracts. The designer should make every effort to also identify and locate aboveground utilities.

RCW 19.122.040 “Underground facilities identified in bid or contract – Excavator's duty of reasonable care – Liability for damages – Attorneys' fees,” reads as follows:

> (1) Project owners shall indicate in bid or contract documents the existence of underground facilities known by the project owner to be located within the proposed area of excavation. The following shall be deemed changed or differing site conditions:
>
> (a) An underground facility not identified as required by this chapter or other provision of law; and
>
> (b) An underground facility not located, as required by this chapter or other provision of law, by the project owner or excavator if the project owner or excavator is also a utility.
>
> (2) An excavator shall use reasonable care to avoid damaging underground facilities. An excavator shall:

(a) Determine the precise location of underground facilities which have been marked;

(b) Plan the excavation to avoid damage to or minimize interference with underground facilities in and near the excavation area; and

(c) Provide such support for underground facilities in and near the construction area, including during backfill operations, as may be reasonably necessary for the protection of such facilities.

(3) If an underground facility is damaged and such damage is the consequence of the failure to fulfill an obligation under this chapter, the party failing to perform that obligation shall be liable for any damages. Any clause in an excavation contract which attempts to allocate liability, or requires indemnification to shift the economic consequences of liability, different from the provisions of this chapter is against public policy and unenforceable. Nothing in this chapter prevents the parties to an excavation contract from contracting with respect to the allocation of risk for changed or differing site conditions.

(4) In any action brought under this section, the prevailing party is entitled to reasonable attorneys' fees.

[1984 c 144 § 4.]

Identified utilities are to be shown in the bid or contract documents as stated in the RCW. The Site Preparation Plan series is where they would normally be shown (see 400.06(11), Site Preparation). If the project is in an area with many utilities, as well as many other topographical features, it may be necessary to separate the utilities on a separate series of plans following the Site Preparation Plan series. The best available information as to the location of underground and overhead utilities is to be used. Contract Plan Example 4-19 shows how utilities are typically shown on a plan sheet.

Do not forget to include WSDOT utilities, such as traffic signal, illumination, and ITS conduits and fixtures.

The required amount of detail related to utility location is directly proportional to the amount of underground work involved in the contract and the proximity to the utility. A simple paver should require less utility detail than a project with excavation at or near a 24-inch natural gas line or a 96-inch sewer line.

400.06(17) Contour Grading Plan

Contour Grading Plans provide finished ground contours. These plans require the Region Landscape Architect's stamp (or the HQ Landscape Architect's stamp for regions without a Landscape Architect), regardless of whether they are prepared by the design team or the landscape section. (See the *Design Manual* for more information.)

400.06(18) Wetlands, Mitigation Sites, and Detention/Retention Site Plans

400.06(18)(a) Wetlands

All wetlands, whether inside the right of way or not, that **could be** impacted by the construction work shall be shown on the construction plans, using standard symbols found in the *Electronic Engineering Data Standards* manual.

Wetlands within the right of way must be delineated in the field by a qualified wetland biologist and survey data collected. Delineated wetlands will, in most cases, have buffer zones associated with them. Construction contract plans must accurately show the location of wetlands and their buffers based on the survey data collected. Wetlands that are outside the right of way may have

buffers that extend into the work areas shown on the construction contract plans. Impacts to buffers of off-site wetlands may result in indirect impacts to the wetland that reduces its functional value.

The buffer zone is established by the local jurisdiction and may not always be identified on the permit. For each wetland identified within a project area, the designer will have to check with the Region Environmental Office to get the buffer zone information. The buffer zone is developed by adding the required buffer width to the surveyed wetland boundary.

If a contractor is allowed to work within an existing wetland or wetland buffer zone, the allowable work area shall be delineated by the cut and fill line. The contractor shall possess a permit identifying each wetland in which work is allowed.

Wetlands and their buffers are shown on the Vicinity Map and all other construction contract plan sheets, such as those showing cut/fill lines, staging and stockpile locations, drainage, TESC, or other features that could impact them.

For further information, see the *Roadside Policy Manual*.

400.06(18)(b) Mitigation Sites

A wetland mitigation site is a wetland area that has been or is being established (created), restored, enhanced, or preserved to compensate for wetlands impacted by construction.

All wetland mitigation sites shall be shown on the construction contract plans and identified as either "existing" or "to be constructed." A mitigation site, whether existing or to be constructed, is always identified as a mitigation site on construction contract plan sheets. Wetlands in mitigation sites become subject to regulatory jurisdiction as soon as they are constructed.

If a contractor is allowed to work within an existing wetland mitigation site, the allowable work area shall be delineated by the cut and fill line. The contractor shall possess a permit identifying each wetland in which work is allowed.

Designers should contact the HQ GeoMetrix Office with the Township, Range, Section, State Route (SR), and Mileposts (MP) of their project, to obtain copies of the Sundry Site Plans that show existing mitigation sites on record.

400.06(18)(c) Detention/Retention Sites

All facilities related to the detention, retention, and treatment, filtration, or drainage of stormwater or surface water, whether existing or to be constructed, shall be shown on the construction contract plans and labeled as Stormwater Treatment Areas. It is important to identify stormwater treatment areas so they will not be misconstrued to be wetlands or mitigation areas in the future.

400.06(19) Paving/Pavement Marking Plan

See Contract Plan Examples 4-27, 4-30, 4-31, and 4-36.

Paving and pavement marking information will normally be combined on a single series of plans.

If the project requires the paving information to be separate from the pavement marking information, the Paving Plan will show the total roadway and shoulder widths described by the roadway sections, not lane widths. The Pavement Marking Plans will show the lane configuration and widths. The information is not to be repeated on both series of plans.

The Paving/Pavement Marking Plan series may be necessary when the work cannot be shown adequately on the roadway sections. If the roadway sections adequately describe most of the project, only the areas requiring more detailed or specific information need be shown in Paving/Pavement Marking Plans.

Pavement marking will conform to the requirements shown in the *Design Manual* and the pavement marking applications shown in the *Standard Plans*. Pavement marking layout information is not required in the plans if the required pavement markings are as shown in the *Standard Plans*. Pavement marking quantities are to be tabulated on Quantity Tabulation sheets if not accurately shown elsewhere.

When Paving/Pavement Marking Plans are included, they will show all lane and shoulder widths, information on pavement taper lengths and widths, widening for guardrail, and the locations of concrete barrier, guardrail, impact attenuators, and traffic islands. The various areas and types of pavement marking will be identified by General Notes in the Quantity Tabulation sheets; if there is only minor pavement marking, the beginning and ending stations could be shown in the plan for each type in the area.

The only existing information that will appear on the Paving/Pavement Marking Plans will be the existing roadways and approaches beyond the point where the new construction begins or ends to show the tie between the new and existing. The "old" roadway and lane lines through the construction area are not to be shown.

If there is only minor drainage, signing, or illumination work on the project, it can be shown on the Paving/Pavement Marking Plans, provided it does not compromise the clarity of the paving and pavement marking information being shown.

Paving or pavement marking details showing the layout of traffic islands or other features (such as curb ramps) may need to be drawn at a larger scale on separate detail sheets to provide sufficient information or required dimensioning. These details will follow immediately after the Paving/Pavement Marking Plan series.

400.06(20) Plan Detail Sheet

Details specific to the project being developed will have to be provided by the designer to ensure the contractor has a clear picture of the work to be performed.

The plan details are to be organized on plan sheets so they are grouped according to plan series. The detail sheets will then be placed as the last set of plans in the plan series. For example, all of the drainage details will be grouped on the appropriate number of sheets and will become the last sheets in the Drainage Plan series—normally following the drainage profiles.

It is important that details be complete, meaningful, and necessary. It is also important that details be drawn at a scale that will clearly show the information when reduced and placed on the 11-inch by 17-inch plan sheets.

Plan details are not to be a redrawn Standard Plan. Many times, however, it is necessary to draw details showing a project-specific modification to a Standard Plan. In these instances, sufficient detail is to be provided to indicate the modification, but all of the information on the Standard Plan that is still applicable is not to be redrawn. Instead, a note stating "FOR INFORMATION NOT SHOWN, SEE STANDARD PLAN X-XX" is to be included on the detail.

Details that are not associated with a Standard Plan must be complete, because the contractor is only obligated to provide what is shown on the detail.

The *Electronic Engineering Data Standards* manual contains a number of generic or standard details found in the CADD system. Many of these details can be used as is, or they may be modified to fit requirements for a specific application. Use of these details can save both the designer and the CADD operator considerable time over developing and inputting details from scratch.

400.06(21) Minor Structures

Projects with quantities for minor structures, such as nonstructural retaining walls (see Section 8-24 of the *Standard Specifications*) or other like items of work, shall have these quantities shown in the plans in one of the following methods:

- Quantities shall be shown on Quantity Tabulation sheet(s).
- Quantities shall be shown in tabular form (in data boxes) on the individual plan sheet(s).

400.06(22) Illumination Plan

See Contract Plan Example 4-37 and 4-38.

The design of illumination systems will conform to guidelines in the *Design Manual*.

If the illumination work is minor adjustments to an existing system or the installation of a small system (one or two luminaires) at an intersection, it can often be shown on another series of plans.

400.06(22)(a) Illumination Plan Information

The following information is required for Illumination Plans:

1. The location of light standards: new and existing.
2. The light standard number for new luminaires.
3. The location of the power source: whether new or existing.
4. The layout of the conduit and electrical circuitry.
5. The mounting height for new luminaires: for existing if being relocated.
6. The mast arm length for new luminaires: for existing if being relocated.
7. Base requirements, fixed or slip, for new luminaires: for existing if being relocated.
8. Conduit size and fill for new installation: for existing affected by, or affecting, the project.
9. Service cabinet requirements for new: or modifications to existing.
10. Junction box locations and types for new: for existing affected by, or affecting, the project.
11. Luminaire light source, distribution, and voltage for new luminaires.
12. All other features unique to the specific project.

400.06(22)(a) Stationing and Offsets

Stationing and offsets, shown in the foundation schedule for light standard locations, are to be reasonably accurate to ensure the design light levels are achieved.

400.06(23) Traffic Signal Plan

Traffic Signal Plans are normally provided by either the Region Traffic Office or the HQ Traffic Office, and the designer simply incorporates them into the project. The Traffic Signal Plans will follow the guidelines in the *Design Manual*.

400.06(24) Intelligent Transportation System Plan

See Contract Plan Example 4-39.

The Region Traffic Office normally provides Intelligent Transportation Systems (ITS) Plans, and the designer simply incorporates them into the project. ITS Plans will follow the guidelines in the *Design Manual*.

Even though the designer is not responsible for the design of the Intelligent Transportation System, the designer is responsible for providing the appropriate base maps to the HQ Traffic Office. The base map information provided to the traffic designer will show the locations of all new and existing features, such as utilities, drainage pipes, and structures, so that these features can be taken into account during the initial design. It is also the designers' responsibility to keep the traffic designer aware of all design revisions made to the plans from the time the initial layout was given to the traffic designer.

400.06(25) Sign Specification Plan Sheet

See Contract Plan Examples 4-40, 4-41, and 4-42.

Sign Specification Plan sheets are to be prepared on 11-inch by 17-inch paper sheets plotted from CADD or an Excel program.

A separate Sign Specification Plan sheet will normally be prepared for the installation of new signs, the removal of signs, and the relocation of signs. If the signing work is minor, it is permissible to combine the different types of work on a single sheet, but there should be a distinct, identifiable section of the sheet for each type of work presented.

There will be a separate sign-numbering system for each of the three types of signing work, and each will be continuous from the beginning of the project to the end.

The Sign Specification Plan sheets are to be completely filled out.

Remember that the material stock used for the signs comes in 48-inch by 96-inch sheets, so sign sizes need to be adjusted to make the most efficient use of the stock material. The following guidelines should be used:

- For signs having a horizontal dimension of 48 inches or less, all dimensions shall be specified in inches.
- For signs having a horizontal dimension of greater than 48 inches, all dimensions shall be specified in feet and inches.

Wood posts can be called out as 4 x 4 (the common name for a 3-1/2" x 3-1/2" piece of lumber), 4 x 6, and so on, as long as there is no reference to inches.

When a sign installation requires multiple steel posts, the designer will have to specify which base type is to be used (see the *Standard Plans* for each multiple-post installation).

400.06(26) Signing Plan

See Contract Plan Examples 4-43 and 4-44.

The Signing Plans will follow the guidelines in the *Design Manual*.

Signing will always be shown in a plan view; however, the designer needs to assess the need for the Signing Plan series. In many cases, there are not sufficient signs to require a separate series of plans. In these cases the signing information can be combined with another series, such as the Paving/Pavement Marking Plan series, without affecting the clarity of the overall plan.

Signing Plans do not normally require a great deal of roadway detail. The centerline and edge of the roadway is normally all that is required for two-lane highways. For multilane highways, additional detail and roadway information may be required.

For region-wide signing projects, where an extensive area is covered, a smaller scale (even a strip map) can be used for directional sign placements. However, even in these instances, larger-scale details may be required to show sign installations at intersections and other areas where there are numerous signs being installed in a small area.

There is never to be a light standard within 50 feet of the front of an overhead sign installation.

Signs will be located in the plans and identified using the plan sign number. For new installations, the plan sign number will be enclosed in an oval. The plan sign number for sign removals will be enclosed in a rectangle and "R-" will preceded the number. Sign relocations will show both the original and relocated locations of the sign and the plan sign number will be enclosed in a square. There will be a leader line from the plan sign number to the sign location. Sign relocations will have two leader lines: a dashed line from the plan sign number to the original location and a solid line from the plan sign number to the relocated location.

The Signing Plans will show the following:

- Construction centerlines—all that is required for signing, such as destination and speed limit.
- Basic roadway layout in areas where detail is required, such as intersections with considerable signing.
- Sign locations.
- Small-scale layout of directional and special signs, showing required details, such as where upper- and lower-case lettering is to be used, location of directional arrows, and so on. Details may be placed on a separate sheet to avoid overcrowding of the plan.
- Small-scale layout of standard control signs may be shown in the plans. This can be very helpful to both the contractor and the inspector.
- Plan sign number with leader line pointing to sign location.
- WSDOT Sign Fabrication code number adjacent to plan sign number.
- Signs to be installed.
- Signs to be removed.
- Signs to be relocated. Show the sign locations for both the original, using a dashed leader line, and the relocated, using a solid leader line.
- Power source for all illuminated signs. If the source is coincidental to an illumination or traffic signal system and shown on those plans, a construction note referencing the sheet where the source is identified will suffice.

400.06(27) Signing Details

When overhead signs are being installed on a sign bridge or cantilever structure, the Sign Specification and/or Sign Detail needs to show the following information:

- Simple drawing of the new structure and signs
- Distance between signs
- Distance between signs and end supports or posts

- Location of overhead signs in relation to lanes
- Sign light spacing
- Maintenance walkway position
- Other data called for in the plans

400.06(28) Bridge Plan

Bridge Plans are prepared by the HQ Bridge and Structures Office. The designer may be required to provide field information for use by the HQ Bridge and Structures Office during the design. Required data/guidelines are shown in the *Design Manual*.

Most projects with bridge construction will have items of work required because of the bridge work, but are indicated on the Bridge Plans as "not included in bridge quantities." The designer is to provide the required PS&E information for these items.

Following are some of the items typically "not included in bridge quantities":

- Drains
- Gravel backfill for drain
- Gravel backfill for wall
- Underdrain pipe behind or around abutments or walls
- Drain pipe in embankments at bridge ends
- Utility conduits and anchorage
- Slope protection
- Concrete barrier
- Guardrail connections

The bridge designer will provide the designer with a list of items that are not included in the bridge work.

400.06(29) Traffic Control Plan

See Contract Plan Examples 4-45 through 4-54.

As required in the highway administration rules and regulations (23 CFR 630 Subpart J), every project shall have a Temporary Traffic Control Plan (TTC). "Traffic Control Plans" is the common name for typical, site-specific, or project-specific TTC Plans. Primary consideration should be given to public safety, worker safety, and maintaining mobility for vehicles, bicyclists, and pedestrians (including pedestrians with disabilities) through or around a work zone. (See the *Design Manual* for further guidance.)

The designer may consider typical Traffic Control Plans found in the *Standard Plans*, *Work Zone Traffic Control Guidelines*, or the MUTCD, Part 6, as a starting point for developing contract Traffic Control Plans. The Plan Sheet Library on the public design website includes many typical Traffic Control Plans. On smaller projects, such as a two-lane paver, the designer may consider the use of an item for contractor-prepared Traffic Control Plans in lieu of providing plans in the contract.

It is important for the designer of the Traffic Control Plans to remember that when the contractor uses the traffic control layouts shown in the plans, WSDOT is in a high-liability position should anything go wrong when the traffic control called for is in place. Because of the high liability, this portion of the plan needs to be developed with a great deal of thought, by someone with an understanding of the project as well as an understanding of traffic control requirements.

The size and color of all traffic control signs are to be shown on the plan. Warning (W series) signs are required by WSDOT policy to be a minimum of 48 inches by 48 inches, but this information still has to be on the plan. Traffic control signing is laid out in respect to the distance from the work area. These distances, from the work area and between signs, are to be shown as plus/minus (+/-) distances. For example, if the required spacing between signs is 1,500 feet, it will appear on the plan sheet as 1,500'+/-. This does not mean the sign can be put any place the contractor chooses within the 1,500-foot range; it means the sign is to be placed at 1,500 feet unless there is an engineering reason to move it slightly. (See "Work Zone Safety and Mobility" in the *Design Manual* for additional items to be included in these plans.)

Tables have been developed for sign spacing, taper lengths, pavement marking, device spacing, and buffer zone data that establish criteria for a variety of speeds. It is recommended that these tables be utilized for consistency and to eliminate the possibility of errors in calculations.

The guidance in the *Standard Specifications* allows the contractor to develop Traffic Control Plans or revise those furnished in the contract (see “Traffic Control Plans” in the *Standard Specifications*).

Traffic Control Plans may contain certain required items, not supplied by WSDOT, for which bid items will be provided in the project. The Traffic Control Plans shall be reviewed to ensure all items required for traffic control and bidding are shown as either separate bid items or included in bid items for a lump sum bid—if approved by the proper delegated authority.

When Traffic Control Plans are prepared by someone other than the primary project designer, ensure they are familiar with all the project elements so they will produce compatible plans. The primary designer should keep the Traffic Control Plan designer aware of any design changes and thoroughly review the Traffic Control Plans to make sure they address all the project’s work zone impacts.

400.07 Plan Examples

In order to help illustrate the intent of WSDOT contract plan sheets, examples of typical plan sheets and electronic data files are available. These examples are strictly for informational purposes. Final approval of plan sheets will be in accordance with this manual and the Region Plans Review Office.

400.07(1) Example Plan Sheets

This section provides examples of typical PS&E plan sheets showing general plan requirements.

400.07(2) Example Projects

Additional plan examples may be viewed from the following public WSDOT Computer Aided Engineering (CAE) website under “Consultant Resources”: http://www.wsdot.wa.gov/design/cae

These plans represent an information-only example of a complete project plan set. This project shows the relationship between “Base” information, plan view sheets, section view sheets, profile view sheets, and other spreadsheet-based sheets per the *Plans Preparation Manual* and the *Electronic Engineering Data Standards* manual.

Plans may be viewed in PDF format from the website, or downloaded in native MicroStation (dgn) and Microsoft Excel (xls) file format compressed by WinZIP (zip).

INDEX

SHEET NO.	PLAN REFERENCE NO.	TITLE
1 - 2	IN1 - IN2	INDEX
3	VP1	VICINITY MAP
-	SQ	SUMMARY OF QUANTITIES
-	RC	RECLAMATION PLAN
4 - 17	RS1 - RS14	ROADWAY SECTION
-	GS	GRADING SECTION
-	SU	STAGING PLAN
18 - 25	AL1 - AL8	ALIGNMENT AND RIGHT OF WAY
26 - 27	QTSP1 - QTSP2	QUANTITY TABULATION - SITE PREPARATION
28 - 35	SP1 - SP8	SITE PREPARATION PLAN
-	EU	EXISTING UTILITIES PLAN
36 - 44	RP1 - RP9	ROADWAY PROFILE
-	QTEC	QUANTITY TABULATION - TESC
45 - 52	EC1 - EC8	TESC PLAN
-	EC	TESC DETAIL
53 - 62	NTDR1 - NTDT10	STRUCTURE NOTES - DRAINAGE
63 - 70	DR1 - DR8	DRAINAGE PLAN
71 - 86	DP1 - DP16	DRAINAGE PROFILES
-	DR	DRAINAGE DETAIL
87 - 92	NTUT1 - NTUT6	STRUCTURE NOTES - UTILITIES
93 - 96	UT3, UT6 - UT8	UTILITY PLAN
-	UT	UTILITY DETAIL
-	NTIR	STRUCTURE NOTES - IRRIGATION

INDEX (CONTINUED)

SHEET NO.	PLAN REFERENCE NO.	TITLE
-	IR	IRRIGATION PLAN
-	IR	IRRIGATION DETAIL
-	LS	LANDSCAPE PLAN
-	CN	INTERCHANGE CONTOUR PLAN
97 - 106	PV1 - PV10	PAVING PLAN
-	PV	PAVING DETAIL
107 - 114	QTPM1 - QTPM8	QUANTITY TABULATION - PAVEMENT MARKING
115 - 124	PM1 - PM10	PAVEMENT MARKING PLAN
-	PM	PAVEMENT MARKING DETAIL
-	ST	MINOR STRUCTURES
125 - 132	IL1 - IL8	ILLUMINATION PLAN
-	IL9	ILLUMINATION SCHEDULE
-	IL9	ILLUMINATION DETAIL
-	SG	
-	SG	
133 - 134	TS3, TS7	
-	TS	

Notes to the Designers:

1) For any contract that consist of 30 or more plan sheets, an index is required. Also any contract with multiple volumes will have a complete index in each volume.

2) The federal aid number is required on the first sheet of the plans, whether it is the index or vicinity map.

3) Plan reference numbers shall not be repeated.

4) The limit of plan sheets per volume is 225 pages. Break volumes at the end of a plan set.

PLAN REFERENCE NO.

SHEET OF SHEETS

NOTE: ALL SHEET REFERENCES, FIRST NOS. OF STRUCTURE CODE DESIGNATIONS AND MATCH LINE SHEET REFERENCES, ETC., THROUGHOUT THE PLANS, REFER TO THE ENTRY IN THE PLAN REFERENCE NUMBER BOX.

FILE NAME	C:\AAWork\Manuals\PPM\2012\Div 4 Example files\PPM_Div4_PS_IN.dgn				
TIME	3:16:47 PM				
DATE	9/5/2012				
PLOTTED BY	KerrT				
DESIGNED BY	DESIGNER				
ENTERED BY	CAD OPERATOR				
CHECKED BY	TEAM LEAD				
PROJ. ENGR.	PROJECT ENGINEER				
REGIONAL ADM.	REGIONAL ADM.	REVISION	DATE	BY	

REGION NO.	STATE	FED.AID PROJ.NO.
10	WASH	NH-0000(000)
JOB NUMBER 00Z000		
CONTRACT NO.		LOCATION NO. XL-1234

P.E. STAMP BOX DATE

P.E. STAMP BOX DATE

Washington State Department of Transportation

EXAMPLE 4-1
I-5 AND LABREE RD INTERCHANGE
SAMPLE PROJECT

INDEX

Plot 1

PLAN REF. NO. IN1

SHEET OF SHEETS

INDEX

SHEET NO.	PLAN REFERENCE NO.	TITLE
1	VM1	INDEX/VICINITY MAP
2-3	SQ1-SQ2	SUMMARY OF QUANTITIES
4	RS1	ROADWAY SECTIONS
5-6	PV1-PV2	PAVING AND PAVEMENT MARKING
7-8	RA1-RA2	ROAD APPROACH DETAILS
9	PL1	PLANING DETAILS
10	PD1	PAVING DETAILS
11-16	QT1-QT6	QUANTITY TABULATION-TRAFFIC
17	MD1	PAVEMENT MARKING DETAILS
18	MD1	MONUMENT DETAILS
19	DL1	DETECTOR LOOP REPLACEMENT PLAN
20-23	SS1-SS4	SIGN SPECIFICATIONS
24-25	S1-S2	SIGN PLANS
26	AV1	ADVANCED WARNING SIGN PLAN
27-39	TC1-TC13	TRAFFIC CONTROL PLAN

Notes to the Designer:

1) This is an example of combining the index and vicinity map on a small project.

2) For any contract that consists of 30 or more plan sheets, an index is required.

3) The Federal Aid Number is required on the first sheet of the plans, whether it is the index or vicinity map.

4) Plan reference nos. shall not be repeated.

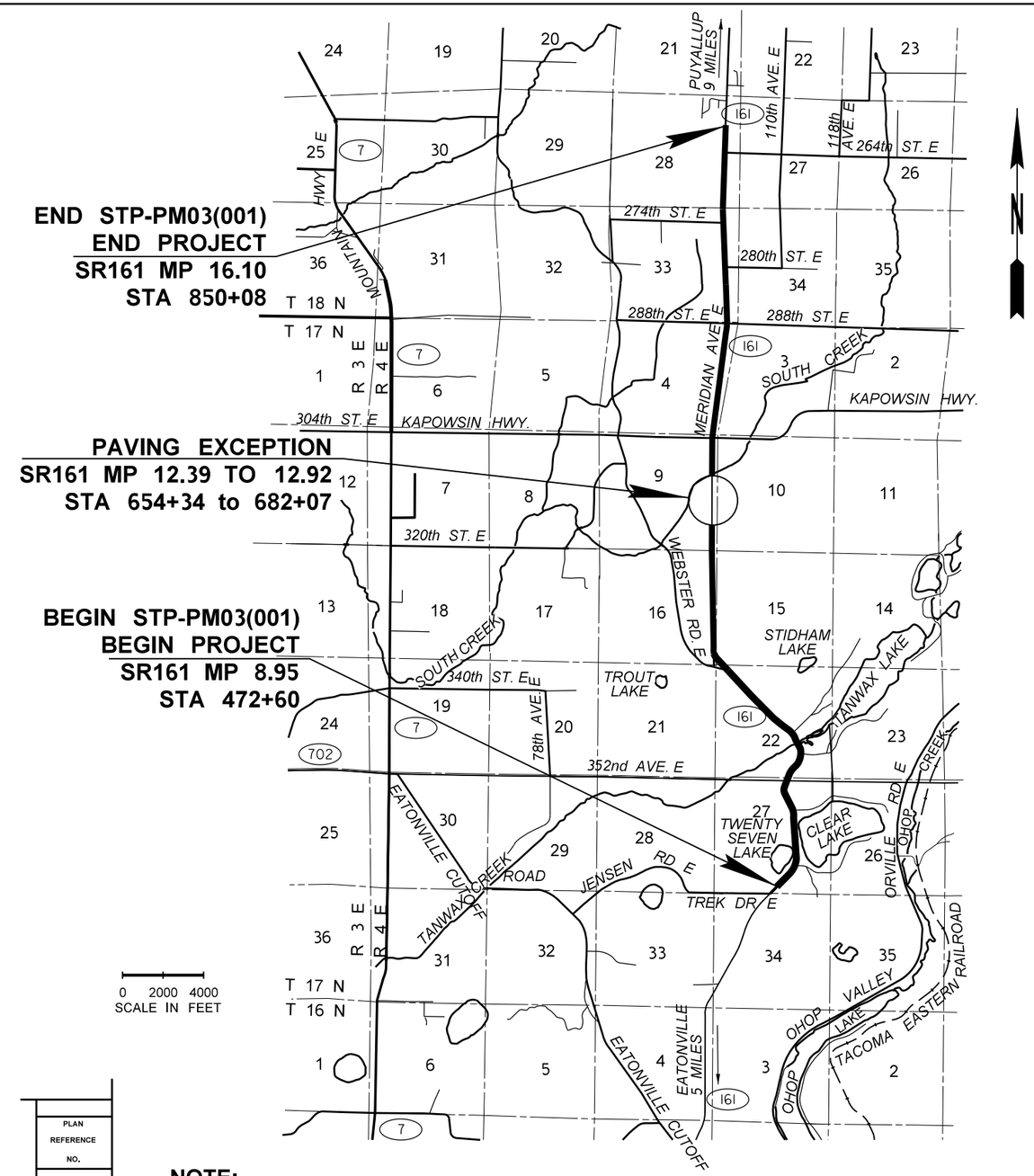

PLAN REFERENCE NO.
SHEET OF SHEETS

NOTE:
ALL SHEET REFERENCES, FIRST NOS. OF STRUCTURE CODE DESIGNATIONS AND MATCH LINE SHEET REFERENCES, ETC., THROUGHOUT THE PLANS, REFER TO THE ENTRY IN THE PLAN REFERENCE NUMBER BOX.

FILE NAME	C:\AAWork\Manuals\PPM\2013\Div 4 Example files\PPM_Div_4_Example_1-40.dgn					
TIME	2:30:07 PM					
DATE	8/6/2013					
PLOTTED BY	KerrT					
DESIGNED BY	DESIGNER					
ENTERED BY	CAD OPERATOR					
CHECKED BY	TEAM LEADER					
PROJ. ENGR.	PROJECT ENGINEER					
REGIONAL ADM.	REGIONAL ADM.	REVISION	DATE	BY		

REGION NO.	STATE	FED.AID PROJ.NO.
10	WASH	NH-0000(000)
JOB NUMBER 00Z000		
CONTRACT NO.		LOCATION NO. XL-1234

P.E. STAMP BOX DATE

P.E. STAMP BOX DATE

Washington State Department of Transportation

EXAMPLE 4-2

INDEX / VICINITY MAP

Plot 2

VM1

SHEET OF SHEETS

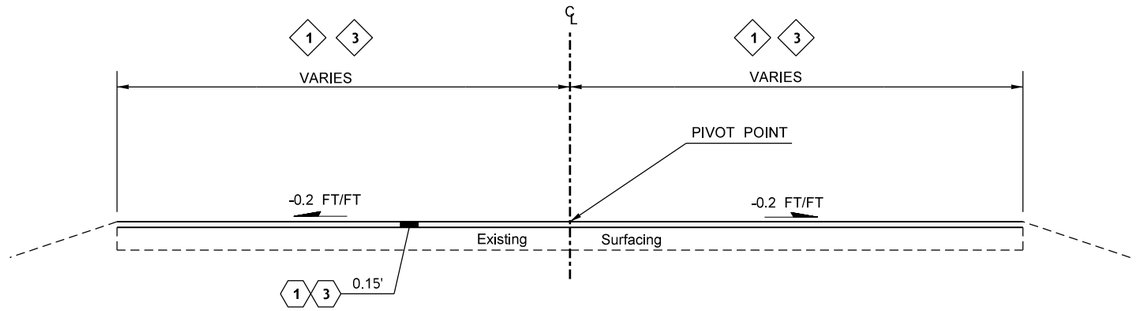

ROADWAY SECTION A

STA. L 461+50.00 TO STA. L 465+36.00
STA. L 468+18.00 TO STA. L 471+61.00

CONSTRUCTION NOTES

1. SEE PAVING PLANS
2. SEE SITE PREPARATION PLANS
3. BRIDGE NO. 241/010 AND APPROACH SLABS NOT INCLUDED IN PROJECT STA. L465+36.00 TO STA. L468+18.00
4. ALL PAVEMENT AND SURFACING DEPTHS SHOWN ARE COMPACTED DEPTHS (SEE STD. SPEC. 5-04.3(9) FOR MAXIMUM DEPTHS PER LAYER)
5. NST - NOT STEEPER THAN

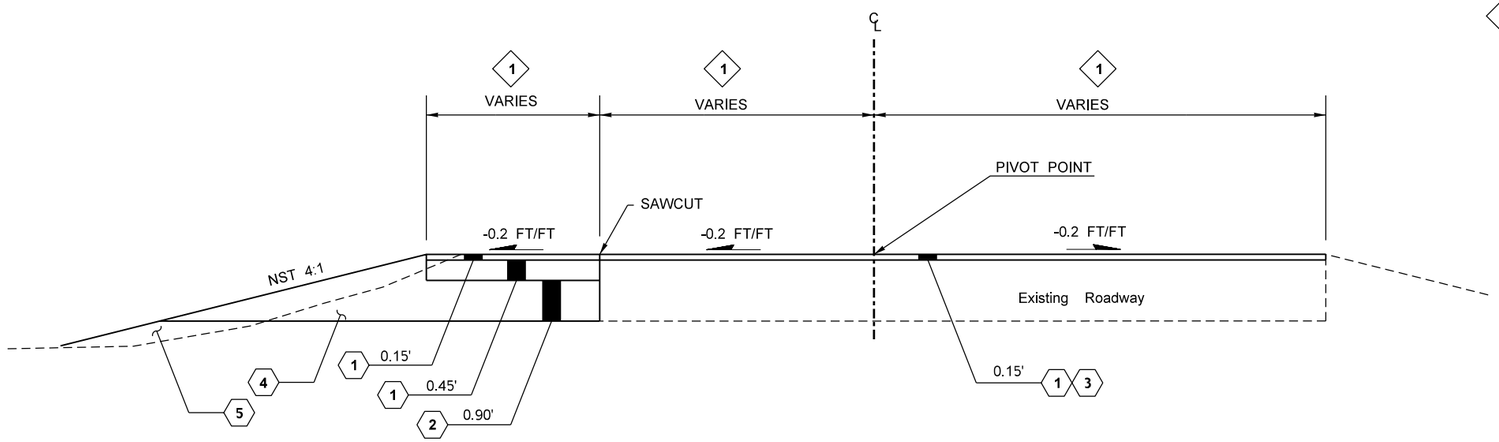

ROADWAY SECTION B

STA. L 471+61.00 TO STA. L 473+00.00

LEGEND

1. ASPHALT CONCRETE PAVEMENT CLASS A PG. 64-28
2. CRUSHED SURFACING BASE COURSE
3. PLANING BITUMINOUS PAVEMENT
4. ROADWAY EXCAVATION INCL. HAUL
5. EMBANKMENT COMPACTION

FILE NAME	C:\AAWork\Manuals\PPM\2013\Div 4 Example files\PPM_Div_4_Example_1-40.dgn						
TIME	2:30:16 PM				REGION NO. 10	STATE WASH	FED.AID PROJ.NO. NH-0000(000)
DATE	8/6/2013						
PLOTTED BY	KerrT						
DESIGNED BY	DESIGNER				JOB NUMBER 00Z000		
ENTERED BY	CAD OPERATOR						
CHECKED BY	TEAM LEADER				CONTRACT NO.		LOCATION NO. XL-1234
PROJ. ENGR.	PROJECT ENGINEER						
REGIONAL ADM.	REGIONAL ADM.	REVISION	DATE	BY			

P.E. STAMP BOX DATE

P.E. STAMP BOX DATE

Washington State Department of Transportation

EXAMPLE 4-11

ROADWAY SECTION

Plot 11

RS2

SHEET OF SHEETS

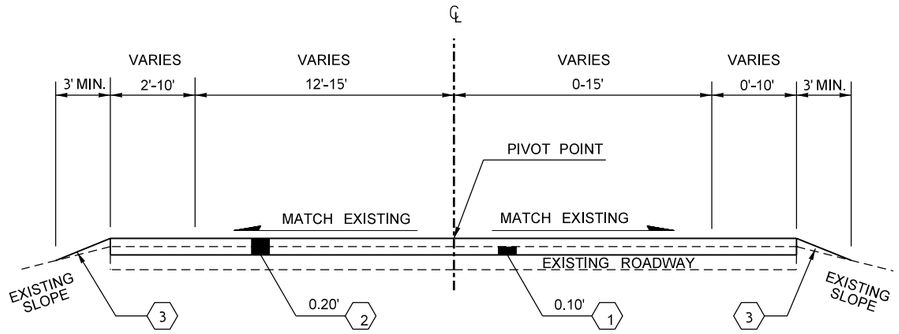

ROADWAY SECTION A

STATION	TO	STATION
L 10+00.00		L 31+11.37
L 34+74.70		L 46+96.00
C 318+92.80		C 327+22.80

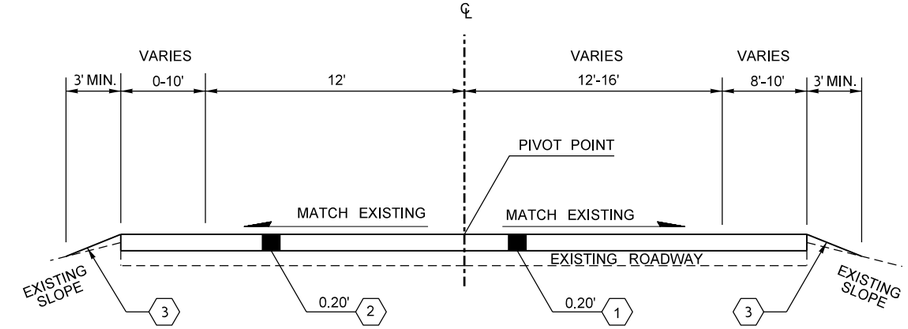

ROADWAY SECTION B

STATION	TO	STATION
L 46+96.00		L 64+38.40
L 77+58.40		L 239+15.20
L 241+79.20		L 242+84.80
CEW 13+00.00		CEW 30+06.93

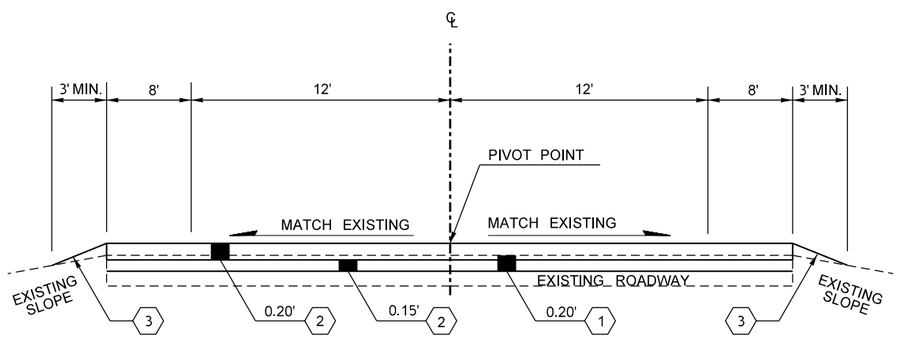

ROADWAY SECTION C

STATION	TO	STATION
L 64+38.40		L 77+58.40
L 239+15.20		L 241+79.20

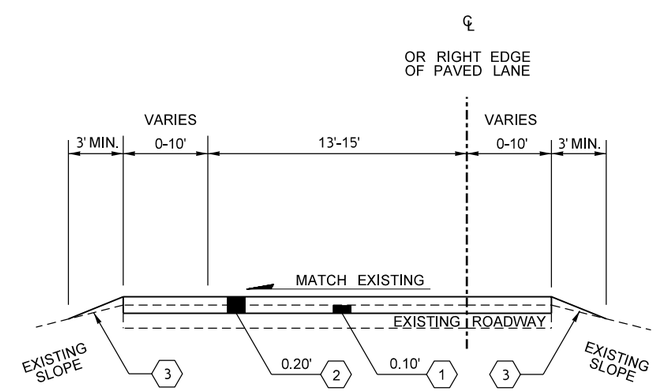

ROADWAY SECTION D

STATION	TO	STATION
C 327+22.80		C 333+01.65
C 327+22.80		L 39+27.95

LEGEND

1. PLANING BITUMINOUS PAVEMENT
2. HMA CL. ½ IN. PG
3. SHOULDER FINISHING

NOTES:

1. ALL DEPTHS SHOWN ARE COMPACTED DEPTHS
2. SEE PAVING PLAN FOR VARIABLE WIDTHS
3. BRIDGE 12/612 IS INCLUDED IN THIS PROJECT (STATION L 31+11.37 TO L34+74.70)

NOT TO SCALE

FILE NAME	C:\AAWork\Manuals\PPM\2013\Div 4 Example files\PPM_Div_4_Example_1-40.dgn						
TIME	2:30:22 PM				REGION NO. 10	STATE WASH	FED.AID PROJ.NO. NH-0000(000)
DATE	8/6/2013						
PLOTTED BY	KerrT						
DESIGNED BY	DESIGNER				JOB NUMBER 00Z000		
ENTERED BY	CAD OPERATOR						
CHECKED BY	TEAM LEADER				CONTRACT NO.		LOCATION NO. XL-1234
PROJ. ENGR.	PROJECT ENGINEER						
REGIONAL ADM.	REGIONAL ADM.	REVISION	DATE	BY			

DATE
P.E. STAMP BOX

DATE
P.E. STAMP BOX

Washington State Department of Transportation

EXAMPLE 4-12

ROADWAY SECTION

Plot 12

RS3

SHEET OF SHEETS

CONSTRUCTION NOTES:

1. AUXILIARY PASSING LANE
   LANE VARIES FROM 0' AT L 669+29
   TO 12' AT L 672+24, AND
   FROM 12' AT L702+10 TO 0' AT
   L 708+01

2. RIGHT SHOULDER
   SHOULDER VARIES FROM 8' AT L 699+29
   TO 4' AT L 670+28, AND FROM 4'
   AT L 706+04 TO 8' AT
   L 708+01

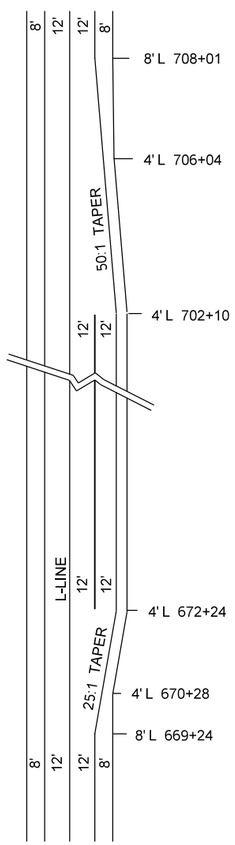

AUXILIARY PASSING LANE

LEGEND

1. ASPHALT CONC. PAVEMENT CL. B - 0.15' COMP. DEPTH
2. CRUSHED SURFACING TOP COURSE - VARIES COMP. DEPTH

Notes to the Designer:

1) The auxiliary passing lane detail is shown here for your use in seeing what Roadway Section C is accomplishing without the use of a paving or channelization plan on a simple paving project.

2) The two Roadway Section C's are displayed as an example of different ways of showing the same thing.

3) Even though the shoulder doesn't specify tapering exactly as shown in the plan detail it is sufficient for an overlay project where the paving in the field will be done to the existing condition and the contractor can still obtain a reasonable quantity take-off from it.

L-LINE

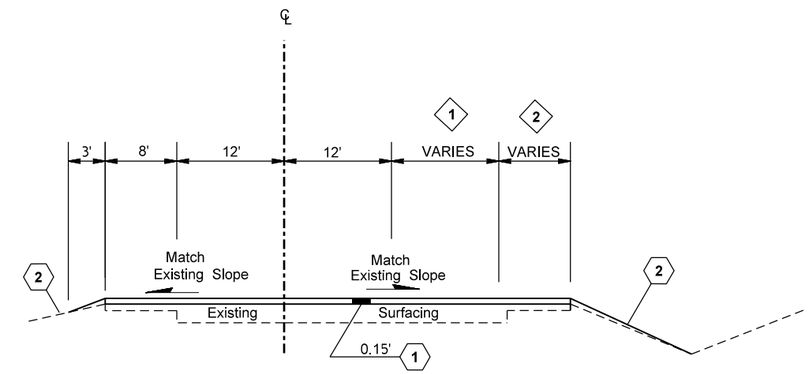

ROADWAY SECTION C

L 505+25 TO L 997+38

L-LINE

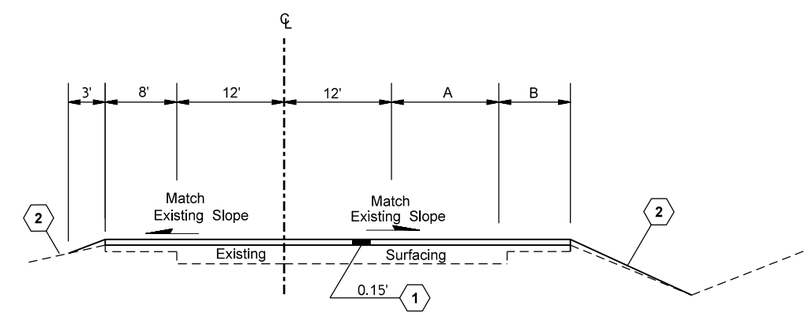

ROADWAY SECTION D

STATION	A	B
L 505+25 TO L 669+29	0	8'
L 669+29 TO L 672+24	0-12'	8'-4'
L 672+24 TO L 702+10	12'	4'
L 702+10 TO L 708+01	12'-0	4'-8'
L 708+01 TO L 997+38	0	8'

FILE NAME	C:\AAWork\Manuals\PPM\2013\Div 4 Example files\PPM_Div_4_Example_1-40.dgn						
TIME	2:30:27 PM				REGION NO. 10	STATE WASH	FED.AID PROJ.NO. NH-0000(000)
DATE	8/6/2013						
PLOTTED BY	KerrT						
DESIGNED BY	DESIGNER				JOB NUMBER 00Z000		
ENTERED BY	CAD OPERATOR						
CHECKED BY	TEAM LEADER				CONTRACT NO.		LOCATION NO. XL-1234
PROJ. ENGR.	PROJECT ENGINEER						
REGIONAL ADM.	REGIONAL ADM.	REVISION	DATE	BY			

P.E. STAMP BOX DATE

P.E. STAMP BOX DATE

Washington State Department of Transportation

EXAMPLE 4-13

ROADWAY SECTION

Plot 13

RS4

SHEET OF SHEETS

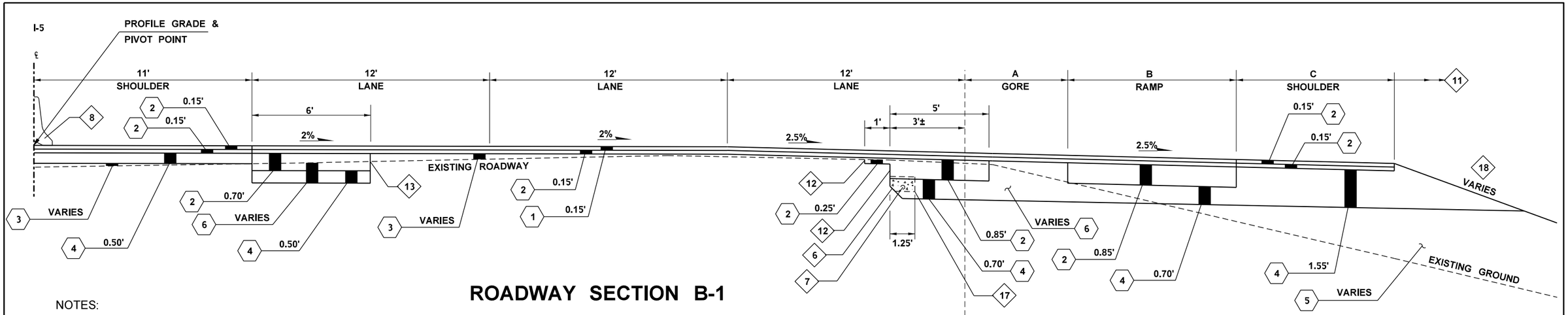

ROADWAY SECTION B-1

STATION RANGE	A	B	C
L 1450+25.14 (RT) TO L 1464+01.08 (RT)	0'	0'	10'
L 1461+01.08 (RT) TO L 1464+40.90 (RT)	0'	0' - 2'	10' - 8'
L 1464+40.90 (RT) TO L 1467+01.44 (RT)	0'	2' - 15'	8'
L 1467+01.44 (RT) TO L 1470+20.00 (RT)	0' - 16'	15'	8'
L 1504+76.00 (RT) TO L 1510+75.44 (RT)	12' - 0'	15'	8'
L 1510+75.44 (RT) TO L 1517+26.18 (RT)	0'	15' - 2'	8'
L 1517+26.18 (RT) TO L 1518+26.09 (RT)	0'	2' - 0'	8' - 10'
L 1518+26.09 (RT) TO L 1520+00.00 (RT)	0'	0'	10'

NOTES:

- (6) DO NOT MAKE VERTICAL CUT BELOW PCCP PANEL USE 1:1
- (7) 4" CORRUGATED PLASTIC UNDERDRAIN PIPE TO BE REMOVED AS PART OF ROADWAY EXCAVATION INCL. HAUL.
- (8) SEE STAGING AND TESC PLANS FOR BARRIER TYPE AND PLACEMENT
- (11) SEE SHOULDER DETAILS, REFERENCE SHEET R16
- (12) SAW CUT OR GRIND EDGE TO BE WITHIN 1" OF EDGE OF EXISTING CONC. PANEL EDGE
- (13) SAW CUT OR GRIND EDGE
- (14) SINGLE SLOPE BARRIER PRE-CAST TYPE SEE STANDARD PLAN C-13
- (16) CONCRETE SLOPE PROCTION SEE STANDARD PLAN A-30.10
- (18) SEE SHOULDER SCHEDULE, REFERENCE SHEET RS15, RS16 FOR SHOULDER SLOPE

ALL DEPTHS ARE COMPACTED DEPTHS
NST = NOT STEEPER THAN

LEGEND

- (1) HMA CL. ½ IN. PG 70-22
- (2) HMA CL. ½ IN. PG 64-22
- (3) HMA FOR PRELEVELING CL.½ IN. PG 64-22
- (4) CRUSHED SURFACING BASE COURSE
- (5) SPECIAL BORROW INCL. HAUL
- (6) ROADWAY EXCAVATION INCL. HAUL
- (7) PLANING BITUMINOUS PAVEMENT
- (8) TOPSOIL TYPE B

ROADWAY SECTION B-2

STATION RANGE	A
L 1470+20.00 (RT) TO L 1473+01.49 (RT)	16' - 11'
L 1495+17.30 (RT) TO L 1504+76.00 (RT)	11' - 12'

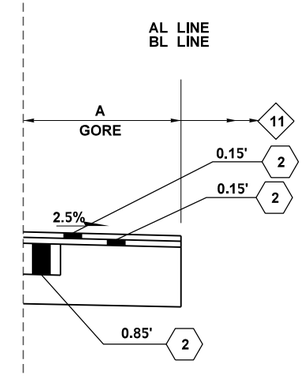

ROADWAY SECTION B-3

STATION RANGE
L 1473+01.49 (RT) TO L 1481+70.54 (RT)
L 1489+28.13 (RT) TO L 1495+17.30 (RT)

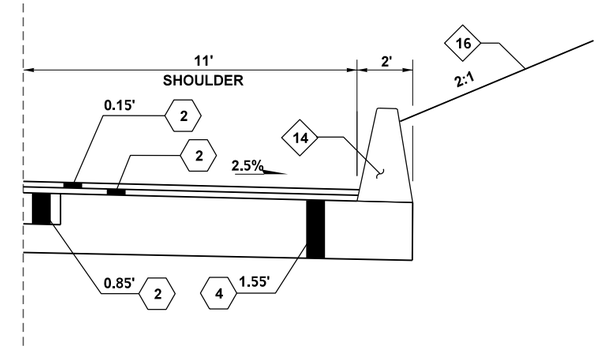

NOT TO SCALE

FILE NAME	C:\AAWork\Manuals\PPM\2013\Div 4 Example files\PPM_Div4_PS_RS.dgn					
TIME	2:25:07 PM					
DATE	8/6/2013					
PLOTTED BY	KerrT					
DESIGNED BY	DESIGNER					
ENTERED BY	CAD OPERATOR					
CHECKED BY	TEAM LEAD					
PROJ. ENGR.	PROJECT ENGINEER					
REGIONAL ADM.	REGIONAL ADM.	REVISION	DATE	BY		

REGION NO.	STATE	FED.AID PROJ.NO.
10	WASH	NH-0000(000)
JOB NUMBER 00Z000		
CONTRACT NO.		LOCATION NO. SP1234

P.E. STAMP BOX DATE

P.E. STAMP BOX DATE

Washington State Department of Transportation

EXAMPLE 4-14
I-5 AND LABREE RD INTERCHANGE
EXAMPLE PROJECT

ROADWAY SECTION

Plot 3
PLAN REF NO RS3
SHEET OF SHEETS

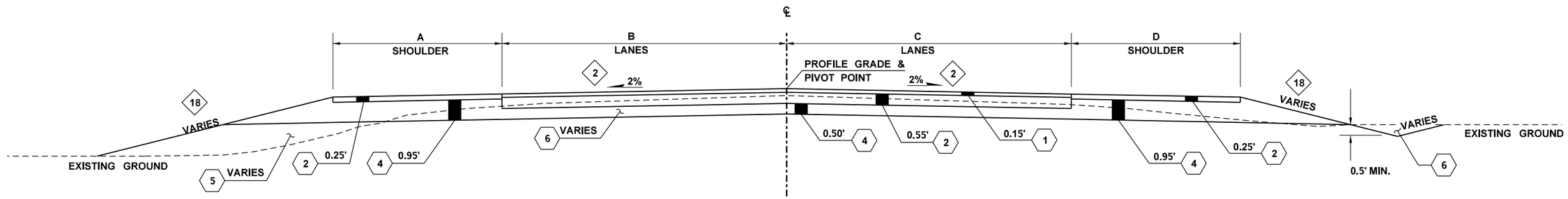

ROADWAY SECTION I-1

STATION RANGE	A	B	C	D
H 1728+69.89 TO H 1728+91.89	8.4'	11.3'	10.7'	9.4'
H 1728+91.89 TO H 1729+09.20	8.4'	11.3'	10.7' - 12.9'	9.4' - 10.3'
H 1729+09.20 TO H 1729+40.28	8.3' - 10.3'	11.3'	12.9' - 17'	10.3'
H 1729+40.28 (RT) TO H 1730+52.76 (RT)			17' - 32.2'	10.3'
H 1729+40.28 (LT) TO H 1730+75.77 (LT)	10.3' - 10.6'	11.3' - 17.8'		

NOTES:

- (2) CROSS SLOPES VARY, SEE SUPERELEVATION DIAGRAMS
- (9) CEMENT CONCRETE TRAFFIC CURB SEE STANDARD PLAN F-10.12
- (10) CEMENT CONCRETE TRAFFIC CURB AND GUTTER. SEE STANDARD PLAN F-10.12
- (15) ROUNDABOUT TRUCK APRON CEMENT CONCRETE CURB SEE STANDARD PLAN F-10.12
- (18) SEE SHOULDER SCHEDULE, REFERENCE SHEET RS15, RS16 FOR SHOULDER SLOPE
- (19) ROUND EDGE FOR SMOOTH TRANSITION

ALL DEPTHS ARE COMPACTED DEPTHS
NST = NOT STEEPER THAN

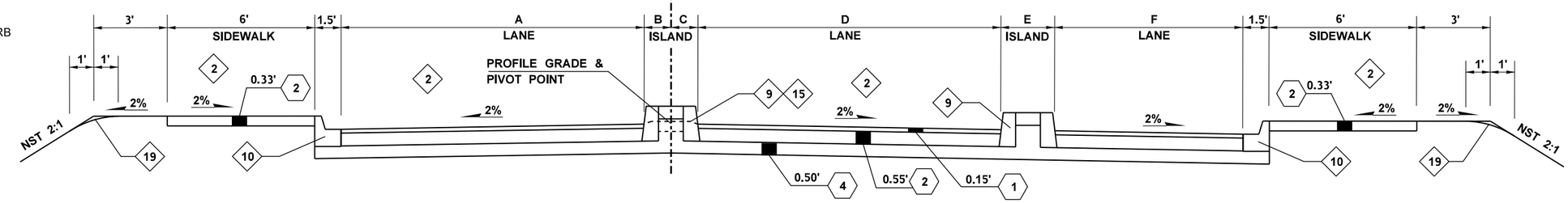

ROADWAY SECTION I-2

STATION RANGE	A	B	C	D	E	F
H 1730+52.76 (RT) TO H 1730+81.15 (RT)			1.3'	20.5'	0'	19.7'
H 1730+81.15 (RT) TO H 1730+92.13 (RT)			1.3' - 1.5'	20.5' - 22.2'	0'	19.7' - 21.2'
H 1730+92.13 (RT) TO H 1731+61.78 (RT)			1.5' - 11.9'	20.1' - 22'	5' - 23.6'	19'
H 1730+75.77 (LT) TO H 1730+81.15 (LT)	21' - 21.2'	0'				
H 1730+81.15 (LT) TO H 1731+60.15 (LT)	19.2' - 20.3'	2' - 11.5'				

LEGEND

1. HMA CL. ½ IN. PG 70-22
2. HMA CL. ½ IN. PG 64-22
3. HMA FOR PRELEVELING CL.½ IN. PG 64-22
4. CRUSHED SURFACING BASE COURSE
5. SPECIAL BORROW INCL. HAUL
6. ROADWAY EXCAVATION INCL. HAUL
7. PLANING BITUMINOUS PAVEMENT
8. TOPSOIL TYPE B

NOT TO SCALE

FILE NAME	C:\AAWork\Manuals\PPM\2013\Div 4 Example files\PPM_Div4_PS_RS.dgn						
TIME	2:25:18 PM				REGION NO. 10	STATE WASH	FED.AID PROJ.NO. NH-0000(000)
DATE	8/6/2013						
PLOTTED BY	KerrT						
DESIGNED BY	DESIGNER				JOB NUMBER 00Z000		
ENTERED BY	CAD OPERATOR						
CHECKED BY	TEAM LEAD				CONTRACT NO.		LOCATION NO. SP1234
PROJ. ENGR.	PROJECT ENGINEER						
REGIONAL ADM.	REGIONAL ADM.	REVISION	DATE	BY			

P.E. STAMP BOX DATE

P.E. STAMP BOX DATE

Washington State Department of Transportation

EXAMPLE 4-15
I-5 AND LABREE RD INTERCHANGE
EXAMPLE PROJECT

ROADWAY SECTION

Plot 13
PLAN REF NO RS13
SHEET OF SHEETS

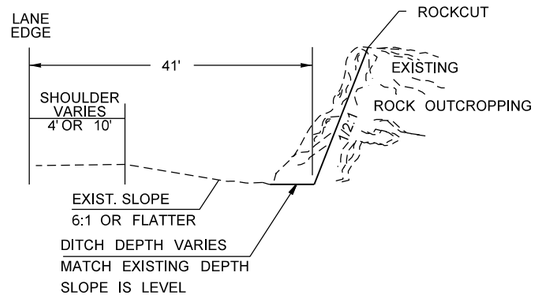

ROCKCUT DETAIL
(TYPICAL)

LL 1118+92 to 1126+00 MED.
LL 1177+50 to 1192+50 MED.

LL 1119+75 to 1140+50 LT.
LL 1176+50 to 1193+00 LT.
LL 1203.50 to 1205+00 LT.

LR 1112+50 to 1115+00 MED.
LR 1128+10 to 1146+70 MED.
LR 1152+70 to 1155+50 MED.

LR 1134+50 to 1138+50 RT.
LR 1178+00 to 1179+25 RT.
LR 1182+00 to 1194+40 RT.

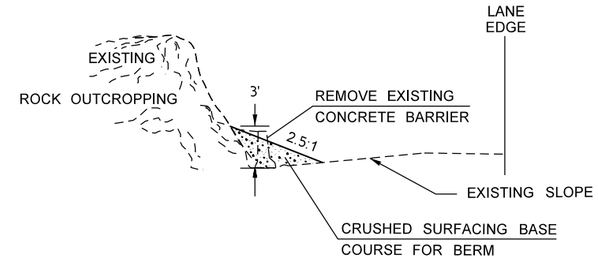

MEDIAN BERM DETAIL
(TYPICAL)

LL 1225+45 to 1228+50 MED.
LL 1240+00 to 1250+20 MED.

LL 1220+00 to 1222+50 LT.
LL 1376+00 to 1382+50 LT.

LR 1092+50 to 1105+50 MED.
LR 1220+00 to 1254+00 MED.
LR 1275+50 to 1281+00 MED.

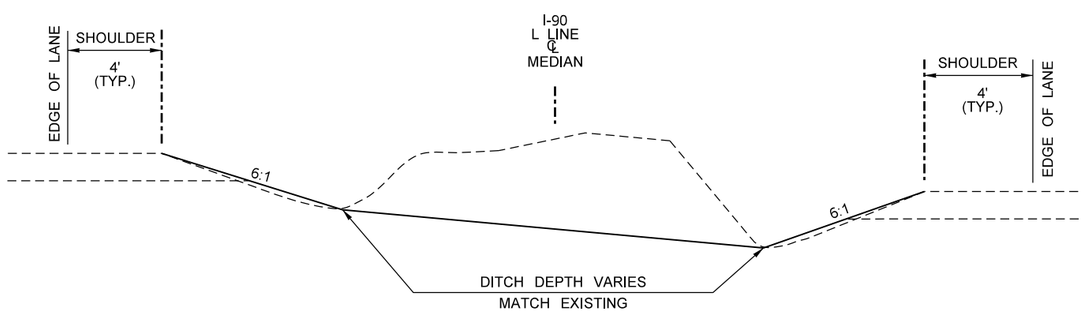

MEDIAN CUT DETAIL
(TYPICAL)

LR 1274+50 to 1276+00
LR 1332+50 to 1341+00

SLOPE SELECTION TABLE	
HEIGHT OF CUT	SLOPE NOT STEEPER THAN
0-5	6:1
5-20	3:1
OVER 20	2:1

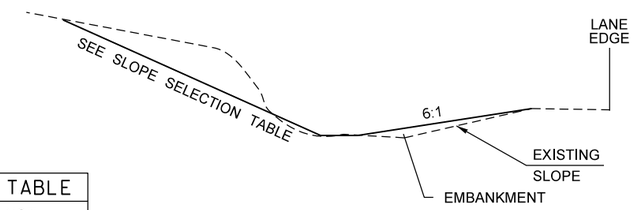

SLOPE FLATTENING DETAIL
(TYPICAL)

LR 1199+50 to 1203+75 MED.
LR 1588+10 to 1598+00 MED.
LR 1691+50 to 1710+00 MED.

LR 1134+00 to 1138+00 RT.
LR 1333+50 to 1338+00 RT.
LR 1372+50 to 1376+00 RT.

LL 1094+50 to 1097+00 MED.
LL 1177+50 to 1192+50 MED.
LL 1344+25 to 1353+50 MED.

LL 1135+50 to 1140+50 LT.
LL 1214+50 to 1220+00 LT.
LL 1241+00 to 1254+50 LT.

NOT TO SCALE

FILE NAME	C:\AAWork\Manuals\PPM\2012\Div 4 Example files\PPM_Div_4_Example_1-40.dgn						
TIME	3:30:39 PM				REGION NO. 10	STATE WASH	FED.AID PROJ.NO. NH-0000(000)
DATE	9/5/2012						
PLOTTED BY	KerrT						
DESIGNED BY	DESIGNER				JOB NUMBER 00Z000		
ENTERED BY	CAD OPERATOR						
CHECKED BY	TEAM LEADER				CONTRACT NO.		LOCATION NO. XL-1234
PROJ. ENGR.	PROJECT ENGINEER						
REGIONAL ADM.	REGIONAL ADM.	REVISION	DATE	BY			

P.E. STAMP BOX DATE

P.E. STAMP BOX DATE

Washington State
Department of Transportation

EXAMPLE 4-16

ROADWAY SECTION

Plot 16

RS6

SHEET OF SHEETS

Notes to the Designer:

1) Notice that drainage code (DR4 7) is used to show the drainage structure and the pipe that outflows from the structure.

2) Use structure notes to give further details, such as type of pipe, offset distances, new pipe connections, pipe alternatives, pipe treatments, and removal of existing pipe. See example sheet 4-21.

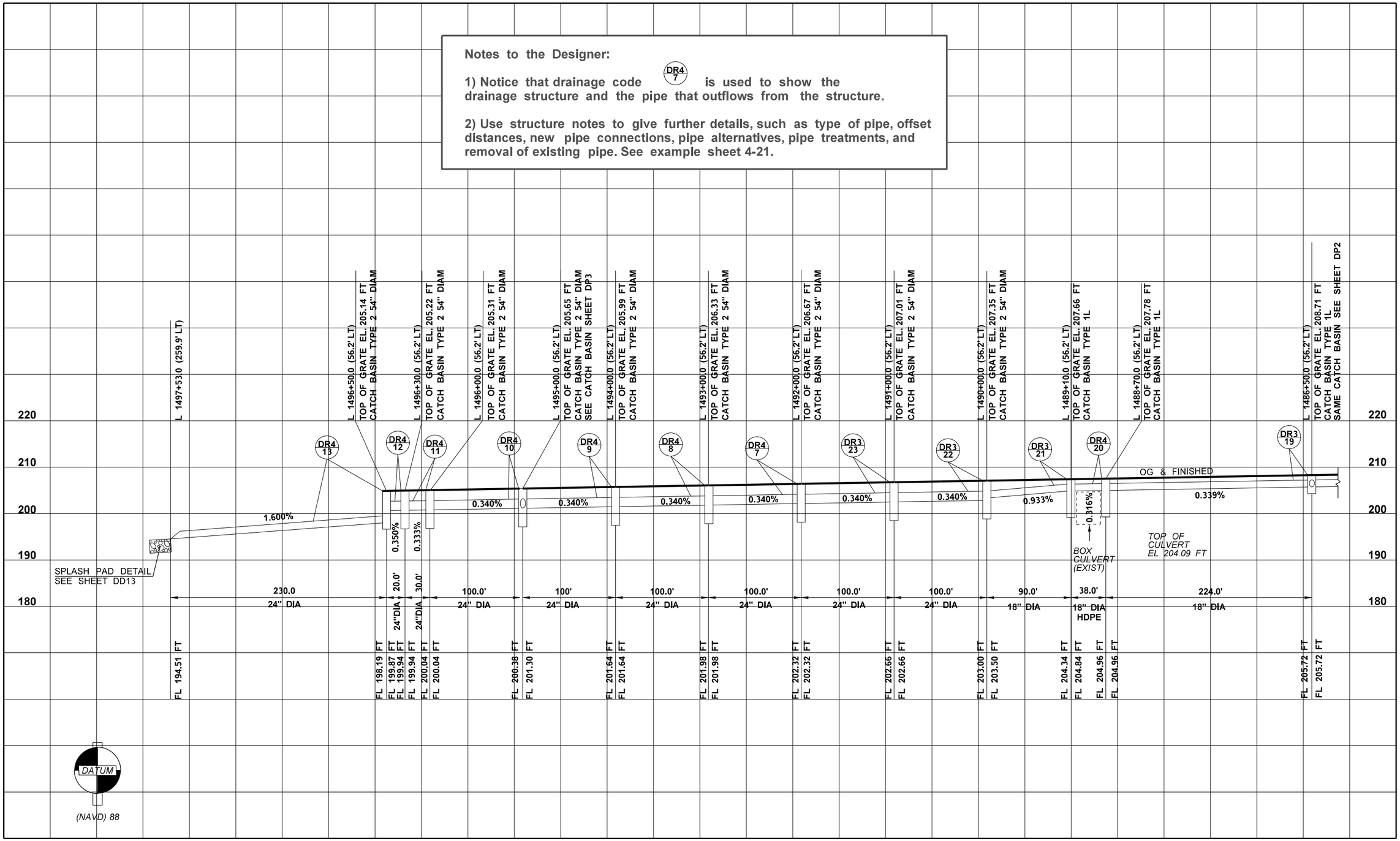

FILE NAME	C:\AAWork\Manuals\PPM\2013\Div 4 Example files\PPM_Div4_PR_DP.dgn				REGION NO. 10	STATE WASH	FED.AID PROJ.NO. NH-0000(000)
TIME	2:32:07 PM				JOB NUMBER 00Z000		
DATE	8/6/2013				CONTRACT NO.		LOCATION NO. XL-1234
PLOTTED BY	KerrT						
DESIGNED BY	DESIGNER						
ENTERED BY	CAD OPERATOR						
CHECKED BY	TEAM LEAD						
PROJ. ENGR.	PROJECT ENGINEER						
REGIONAL ADM.	REGIONAL ADM.	REVISION	DATE	BY			

P.E. STAMP BOX DATE

P.E. STAMP BOX DATE

Washington State Department of Transportation

EXAMPLE 4-25
I-5 AND LABREE RD INTERCHANGE
SAMPLE PROJECT

DRAINAGE PROFILE

Plot 2

PLAN REF. NO. DP2

SHEET OF SHEETS

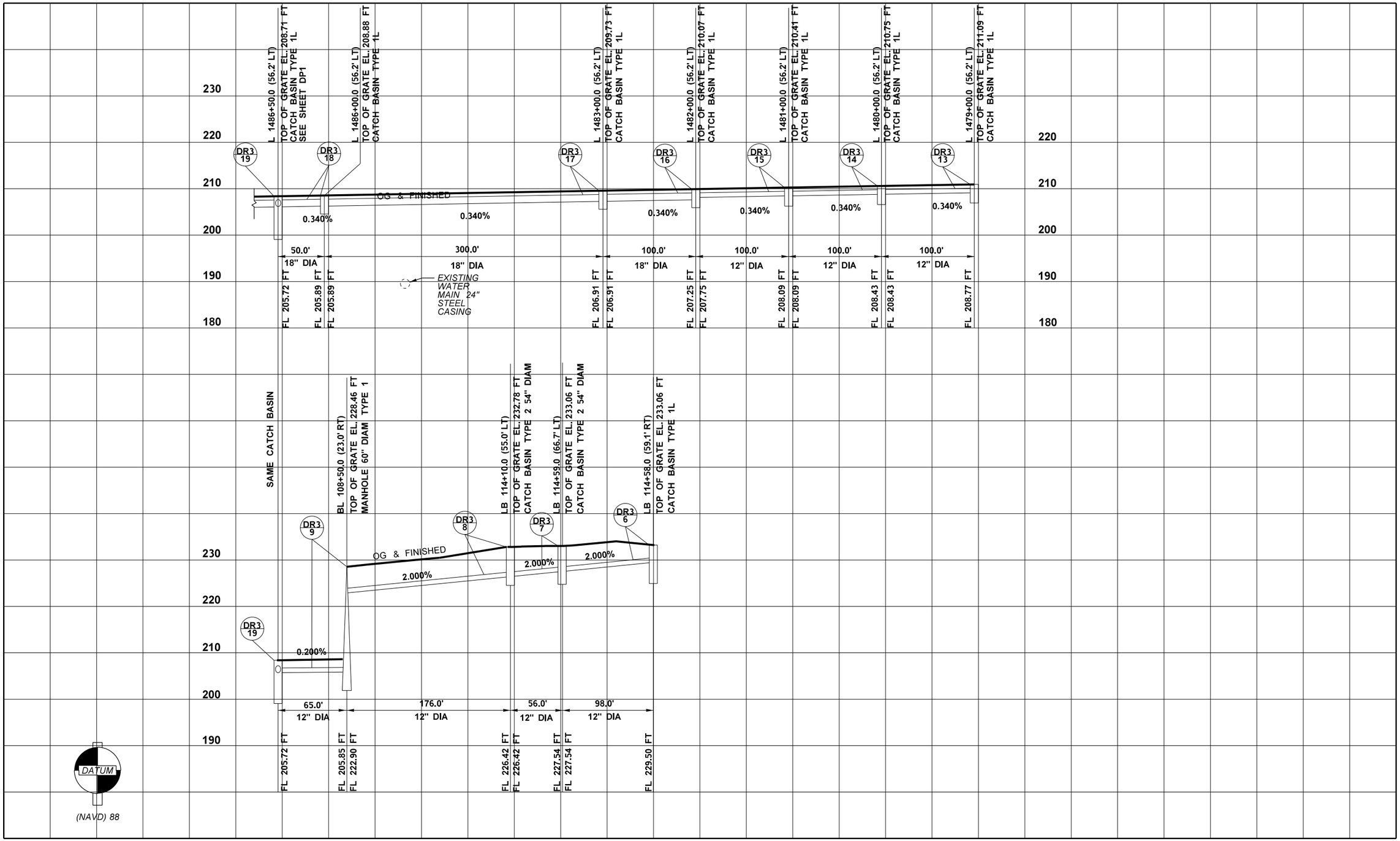

FILE NAME	C:\AAWork\Manuals\PPM\2013\Div 4 Example files\PPM_Div4_PR_DP.dgn				REGION NO. 10	STATE WASH	FED.AID PROJ.NO. NH-0000(000)		Plot 3
TIME	2:24:04 PM							Washington State Department of Transportation	EXAMPLE 4-26 I-5 AND LABREE RD INTERCHANGE SAMPLE PROJECT	PLAN REF. NO. DP3
DATE	8/6/2013				JOB NUMBER 00Z000				
PLOTTED BY	KerrT								
DESIGNED BY	DESIGNER								
ENTERED BY	CAD OPERATOR								SHEET OF SHEETS
CHECKED BY	TEAM LEAD				CONTRACT NO.		LOCATION NO. XL-1234		DRAINAGE PROFILE
PROJ. ENGR.	PROJECT ENGINEER								
REGIONAL ADM.	REGIONAL ADM.	REVISION	DATE	BY				P.E. STAMP BOX DATE / P.E. STAMP BOX DATE	

600.01 Introduction
600.02 Amendments
600.03 Special Provisions
600.04 Format

600.01 Introduction

Contract Provisions are legally enforceable specifications to contracts formed between the Washington State Department of Transportation (WSDOT) and contractors.

600.01(1) General

Contract Provisions consist of the following:

1. Notice to Planholders
   - Project Engineer's name, address, and phone number
2. Table of Contents
3. Amendments
   - Revisions to the *Standard Specifications for Road, Bridge, and Municipal Construction* (Standard Specifications)
4. Special Provisions
   - A combination of the General Special Provisions (GSPs) and project-specific provisions
5. Boring Logs
   - All final boring logs provided by the WSDOT Geotechnical Division, Region Materials Engineers, and/or consultants
6. Federal-Aid Provisions
   - For federal-aid projects
7. Prevailing Minimum Hourly Wage Rates
   - State, federal, or both, depending on project funding
8. Proposal (informational copy)
   - Subcontractor List
   - Signature Page
   - Declaration of Non-Collusion
   - Certification for Federal-Aid Contractors
9. Appendices to the Special Provisions
10. Forest Service Provisions (if applicable)
11. Railroad Insurance Forms (if applicable)
12. Other Documents

600.01(2) PS&E Word Program

This section will discuss the PS&E Word Program, Amendments, GSPs, and project-specific provisions.

The Amendment and Special Provisions sections of the Contract Provisions are created using the WSDOT "PS&E Word Program" (see the Appendices for a User's Guide). Each Amendment and GSP is given a unique file name. That file name is a number that corresponds to the section of the *Standard Specifications* being supplemented or revised by the document. Project-specific provisions are assigned a unique file name by the writer of the document.

The designer makes a list, called the run-list, of the applicable file names, and the computer system compiles the actual documents in the order requested on the run-list.

The PS&E Word Program allows the designer to access the Amendments and GSPs through the region's computer network system and enables designers to:

- Read the documents.
- Compile the run-list.
- Write the project-specific information.
- Insert the information in the run-list.
- Compile the completed Contract Provisions.
- Create the Table of Contents.

WSDOT offices, consultants, and local agencies not connected to the WSDOT computer network system can download the PS&E Word program, Amendments, and GSPs from the Internet. Access this information on the WSDOT Project Development – Specifications, Amendments, and GSPS website at: www.wsdot.wa.gov/Design/ProjectDev/Specifications.htm

For program compatibility issues, contact the WSDOT HQ Strategic Analysis Estimating Office (SAEO) for help.

The Internet information is updated on the same schedule as the WSDOT system, so the information is always current. It is the user's responsibility to regularly check for program, Amendment, and GSP updates at the Project Development Specifications website (see above) or by signing up for e-mail alerts at:
http://service.govdelivery.com/service/subscribe.html?code=WADOT_75

Assistance with the PS&E Word Program and the Amendment and GSP information is available through the HQ Strategic Analysis Estimating Office (SAEO) at:
www.wsdot.wa.gov/Design/ProjectDev/Specifications.htm

For complete instructions on how to use the PS&E Word Program, access the User's Guide for PS&E Support Contract Provisions at:
www.wsdot.wa.gov/publications/fulltext/projectdev/manuals/PS&EManual.pdf

600.02 Amendments

600.02(1) General

The Amendments are revisions to the *Standard Specifications* that occur between printings. They are distributed by the HQ SAEO.

It is important for all designers to have the opportunity to see the Amendments when they are distributed so they are aware of changes in requirements, materials, and how work is being measured and paid. Too often, the most recent Amendments are included in a project and they conflict with information in the Special Provisions, the plans, or both, because the designer did not stay current with the changes. These conflicts can be costly.

The Index to the Amendments contains the file name, section heading, date of last revision, and instructions for use.

The Amendments file name identifies the section of the *Standard Specifications* being amended. For example, 10.AP1 indicates that Section 1-10 is being amended. When you create a Table of Contents using the program, the Amendment file name will be shown to the left of the section heading. When using the program, the Amendment filenames will automatically add to your run-list based on the options you choose.

It is recommended that you develop a system for marking your copy of the *Standard Specifications* to indicate the areas that have been revised by Amendment. When writing Special Provisions, this system makes it easy for you to determine whether the information in the book is the latest or it has been revised by an Amendment.

600.03 Special Provisions

600.03(1) General

The Special Provisions consist of the General Special Provisions (GSPs), Region General Special Provisions (RGSPs), and the project-specific provisions.

600.03(2) GSPs

GSPs are provisions that are written to cover legal and construction requirements that may occur on a project. They supplement or revise the *Standard Specifications* and are written to provide statewide standardization for the work covered. The State Construction Engineer is the approving authority for all changes made to the *Standard Specifications*, including GSPs. Consequently, after approval, these are available for use, in their original state, for multiple projects.

The Index to the GSPs contains the file name, section heading, date of last revision, and instructions for use.

The GSP file names are directly related to the divisions in the *Standard Specifications*. For example, 8-01.3.GR8 would be a GSP that either revises or supplements Section 8-01.3. The extension GR (General Roadway) is followed by the division number of the Standard Specification. The file name 8-01.3 refers to the section (01) and subsection (3) in the division.

A GSP is to be used, as is, if it is applicable to the project being developed. HQ Construction Office approval is needed for any revisions to GSPs.

600.03(3) RGSPs

RGSPs are provisions that are written to cover the legal and construction requirements that occur on projects that differ from region to region. They supplement or revise the *Standard Specifications* and are written to provide regionwide standardization for the work covered.

RGSPs are approved for region use by the State Construction Engineer. After initial approval, no justification needs to be submitted to the State Construction Engineer to incorporate an RGSP into your contract package. Any modifications to an already approved RGSP will require resubmittal to the State Construction Engineer.

The Index to the RGSPs contains the file name with a region identifier, section heading, date of last revision, and instructions for use.

The RGSP file extension has a region identifier assigned to each region after the file name. The identifier is .DT1 through .DT6 depending on what region is applicable. For example, 0108.DT1 would be for the Northwest Region.

600.03(4) Project-Specific Provisions

The project-specific provisions are written by the designer to supplement or revise information in the *Standard Specifications* and Amendments to make them fit the project being developed. Project-specific provisions are not to duplicate information contained in the *Standard Specifications*, Amendments, GSPs, or plans.

Approval of project-specific specifications that alter the *Standard Specifications* (WSDOT Spec. book) is required prior to inclusion in your contract. All project-specific specifications are to be sent, along with justification, to the State Construction Engineer for concurrence and approval. Special provisions prepared by a support group must be reviewed to ensure they fit within the specifications/Special Provisions of the project. Any changes to a support group Special Provision must have concurrence and approval prior to sending it to the State Construction Engineer.

Project-specific provisions should be thought of as “project-specific Amendments.” In order to know what information needs to be added to supplement the information in the *Standard Specifications*, or what information in the *Standard Specifications* needs to be revised to be applicable to the project, you have to be familiar with the information in the *Standard Specifications*. No one is expected to memorize it, but you are expected to read the applicable information and Amendments before you start writing. The field inspector will be using the *Standard Specifications* to construct the project, so it is reasonable that you use it as a design tool and the basis for every project-specific provision you write.

Project-specific provisions will be preceded by six asterisks in parentheses (******). The asterisks are to be placed after Standard Specification headings and ahead of the project-specific information that either supplements or revises the Standard Specification, as follows:

ROADWAY EXCAVATION AND EMBANKMENT (Spec. book heading)

Construction Requirements (Spec. book section)

Roadway Ditches (Spec. book subsection)
Section 2-03.3(9) is supplemented with the following:

(******)
Project-specific information goes here

If the designer has written a new project-specific subsection, the asterisks would go after the Standard Specification section heading and ahead of the new subsection heading, as follows:

ROADWAY EXCAVATION AND EMBANKMENT (Spec. book heading)

Construction Requirements (Spec. book section)

Roadway Ditches (Spec. book subsection)
Section 2-03.3(9) is supplemented with the following:

(******)
Rock Fallout Ditches (new, project-specific subsection)
Project-specific information goes here.

Refer to the Appendices for a User's Guide to the PS&E Word Program.

600.04 Format

600.04(1) General

The Special Provisions will follow the format found in the *Standard Specifications*. Most of the information will appear under the same main headings as the division headings in the *Standard Specifications*.

Generally, Divisions 2 through 8 in the *Standard Specifications* each have the following five sections:

1. Description
2. Materials
3. Construction Requirements
4. Measurement
5. Payment

There will be occasions when the work being performed does not fall under one of the divisions in the *Standard Specifications*, and the designer will have to write a complete new specification called a Stand Alone. However, the format will remain the same and the designer will simply be responsible for providing all of the information. In these types of specials, the designer does not write what division they are supplementing, revising, and so on, in the special.

Because the *Standard Specifications* are the beginning point for every GSP and project-specific provision, before writing anything, you need to first explore the *Standard Specifications* and determine which sections need to be supplemented or revised to get the desired work performed.

If the information is adequately covered in the *Standard Specifications*, then there is nothing to write. The most difficult part of writing good Special Provisions is providing the proper amount of information—not too much, not too little—to get the desired results.

600.04(2) Description

The description is a brief statement of what the work is, written in the following format example:

> "This work shall consist of removing and disposing of concrete inlets."

If the work is "furnishing and installing modified catch basins," a description would not be required, since the description in Section 7-05 of the *Standard Specifications* covers the construction of all kinds of manholes, inlets, and catch basins. The writer could move on to the materials section and explain any differences in the materials for the modified catch basin.

If a description is required, it will **not** contain:

- Detailed information, such as station limits of the work or quantities.
- Phrases like "as detailed in the Plans," "as shown in the Plans," or "as directed by the Engineer."

If there is a detail in the plans, save this information for the construction requirements section.

It is the designer's responsibility to show the location of every item of work in the plans. It is not necessary to keep stating this in the Special Provisions.

Engineers do not direct the work on the project—they administer the project. The only work that is "directed" by the Engineer is force account work and work that is done off the project; for example, "the Contractor shall deliver the salvaged material to the maintenance site and stack it as directed by the Engineer."

600.04(3) Materials

The Materials section will normally reference the appropriate section of the *Standard Specifications* or the appropriate section of a nationally recognized material specification such as AASHTO or ASTM.

All materials information is to be in the Materials section of the Special Provisions. If a detail in the plans has materials information on it, it is not necessary to repeat the information in the Special Provisions. However, there will have to be a reference in the Special Provisions to let the reader know where to find the information. A statement such as "Materials requirements for (whatever it is) are on the detail in the Plans" is all that is required to get the reader to the information. Do not indicate a specific plan sheet number, but rather reference a series of plans (such as Drainage Plans or Drainage Details) using the same wording as shown on the Index sheet, so the information can be easily found.

The *Standard Specifications* defines the requirements for materials used in road and bridge construction. There may be occasions when the regions have the need to change these requirements by Special Provision. The regions are to notify the Construction Materials Engineer at the HQ Materials Laboratory and request concurrence with the specification change prior to including the Special Provision in the contract documents.

In some situations, the regions may have a need to reduce the testing frequency of certain materials. This can be accomplished by one of the two following methods:

- Before construction: Contact the Construction Materials Engineer at the HQ Materials Laboratory and request concurrence with the frequency change prior to reducing the testing frequency.
- During construction: Follow the guidance in Section 9-1.1 of the *Construction Manual*, PE Authority for Materials Approval and Acceptance.

To change the testing requirements of a material, such as testing aggregate by visual inspection, request and obtain approval from the HQ Construction Materials Engineer.

When writing a materials specification that includes a revision to Division 9 materials requirements, include the materials requirements within the Special Provision it pertains to—do not place the materials specification in Division 9.

600.04(4) Construction Requirements

The construction requirements must be written to clearly describe what needs to be done. Define the work that the contractor is to perform, and provide any specific requirements that need to be completed or met in order to complete the work. Do not specify *how* to do it or explain *why* the work needs to be done.

Construction requirements are to be shown in the order in which the work is to be performed.

If there is a detail in the plans, this is where a statement would tell the contractor to “construct the (whatever it is) as detailed in the Plans.”

Construction requirements are to be placed in the Special Provisions where they are enforceable.

600.04(5) Measurement

The measurement statement will be written to describe how the work or material will be measured, not the pay item name. For example, write “measure the removal of drainage structures,” not “Removing Drainage Structures,” (pay item name), or “measure culvert pipe,” not “Schedule A Culv. Pipe 12 In. Diam.” (pay item name).

It is important to read the measurement statement found in the *Standard Specifications*, because many times it will apply to items that would seem to be project-specific. For example, if the project has the item "Special Culv. Pipe 12 In. Diam.," the measurement statement found in the *Standard Specifications* applies to all culvert pipe: standard, special, modified, and so on.

To be complete, the measurement statement needs to include not only the unit of measure, but information as to when and where the measurement will be made. For example, “The length of culvert pipe or pipe arch will be the number of linear feet of completed installation measured along the invert.”

600.04(6) Payment

The payment statement needs to be written in quotes and followed by the unit of measure. The bid item has to have the exact same name found in the Summary of Quantities; for example, “Adjust Catch Basin”, per each. Generally this is all that would be required for the payment statement.

If there is additional work associated with the item, the payment statement needs to also describe the work included. For example:

> “Removing Manhole”, per each.
>
> The unit contract price per each for “Removing Manhole” shall include all costs for sawcutting existing pavement associated with the removal.

There should be no surprises in the payment statement. If sawcutting is required and is to be included in the cost of the catch basin removal, it has to have been discussed in some other section of the Special Provision. It will not just show up in the payment statement as being required and included in the cost of the item.

600.04(7) Text General Guidelines

Special Provisions and the plans shall adhere to several general guidelines:

1. Write in a clear, concise, and complete manner.
2. Avoid the use of nonstandard words or numerous cross-references to other specifications.
3. When cross-referencing is necessary, ensure the provision is capable of standing alone as an explanatory document.
4. Place punctuation outside the quotation marks used with a bid item.
5. Capitalize the following words within the text: Contractor, Engineer, Plans, Section (referring to a specific section of the *Standard Specifications*), Special Provisions, *Standard Specifications*, *Standard Plans*, State, and Contracting Agency.
6. Use "all costs" or "all expenses," but not both.
7. Use "as shown in the Plans" rather than "as shown on the Plans."
8. Avoid repetition of information available from other parts of the contract document, including the *Standard Specifications*.
9. Avoid abbreviations, except for those included within a bid item name.
10. Use the word "shall" to denote work to be done by the Contractor.
11. Use the word "will" to denote something the State is to do.
12. Do not use "Incidental to and included in" as a combination phrase. "Incidental to" refers to a general type of work, such as earthwork or paving, whereas "included in" links payment to a specific item of work.
13. Avoid "As directed by the Engineer." Both "As designated by the Engineer" or "As staked by the Engineer" are applicable within the project limits.

14. Avoid using " to the satisfaction of the Engineer." If enough information is available to describe a standard of work, the description is preferable.
15. Avoid "and/or" where possible. For example, "steel, wood, or both" is preferable to "steel and/or wood."
16. Avoid "as per" as a substitute for "in accordance with."
17. Use alpha notation when referring to a number of things; for example, install two catch basins.
18. Express all measurement units in Arabic numerals; for example, 6 inches, 20 feet, 1.5 miles, and so on.
19. Express counted numbers as follows:
    - Spell out numbers 1 through 10 (for example, six working days, seven catch basins, and so on).
    - Use Arabic numerals for numbers larger than 10 (for example, 35 working days, 24 hours, and so on).
    - Spell out all numbers that begin a sentence. If your sentence starts with a large number, try to reconfigure your sentence.
    - Do not use Arabic and spelled-out numbers together.

Division 7 Miscellaneous Contract Considerations

700.01 General Requirements
700.02 Earthwork
700.03 Production From Quarry and Pit Sites and Stockpiling
700.04 Bases
700.05 Surface Treatments and Pavements
700.06 Structures
700.07 Drainage Structures, Storm Sewers, Sanitary Sewers, Water Mains, and Conduits
700.08 Miscellaneous Construction
700.09 Other Contract Considerations

700.01 General Requirements

700.01(1) DBE or MWBE Goals

Disadvantaged Business Enterprise (DBE) goals for federally funded projects are **condition of award goals**. In order for the bid to be considered responsive, the low bidder must either meet the established goal or demonstrate Good Faith Efforts in meeting the goal. The HQ External Civil Rights Branch establishes these goals and monitors DBE participation. Minority and Women's Business Enterprise (M/WBE) goals for state-funded projects are voluntary; however, the outreach efforts to provide M/WBEs maximum practicable opportunities are not. On state-funded projects, prime contractors shall submit an M/WBE Participation Plan as part of their responsibility, before work begins.

700.01(2) Alternate/Cumulative Bids

700.01(2)(a) Alternate Bids

It is, at times, desirable to solicit bids using alternates for specific bid items for work to be performed under the contract. The contract Estimate, Proposal, and Summary of Quantities will be divided into sections. One section will contain the base information, and there will be a section for each of the alternates. This requires the contractor to bid the base portion of the project and to bid the alternates as required by the Special Provisions. By comparing the base bid plus the alternate bids, WSDOT is able to determine the most economical combination.

One of the conditions of setting up a project in this manner is that WSDOT has to treat each of the alternates as equal, and make the decision regarding which is the best bid based on the lowest cost Alternate Plus Base Bid.

This is different than allowing the contractor the latitude to choose between different material options available for a contract item.

For additional information concerning alternates, refer to the *EBASE Users Guide*.

700.01(2)(b) Cumulative Alternative Bids

Use in contracts when the award process is modified to include Cumulative Alternates. The region shall determine and notify the Ad and Award Office of the Funds Available. The bid items shall be segregated into a Base Bid and Alternates, as appropriate. Fill-ins consist of a brief description of the portion of the project or of the work that is included in the noted Alternates. The specification language may be adjusted to suit the number of Alternates.

For further information on how this is to be used in a project, see Division 1-02.6, General Special Provisions.

700.01(3) Addenda

Addenda are revisions to the plans and contract provisions that are made **during** the advertising period. Addenda are to be issued only when the revision will affect the contractor's ability to provide a responsible bid. Consult with the Region Plans Office to coordinate preparation and notification to plan holders.

Items to be considered for preparing addenda, which would affect the scope of work and the contractor's ability to accurately bid the project, might include:

- Material specification changes.
- New bid item(s).
- A substantial quantity revision (generally, a 25% or greater increase or decrease) for an item in the bid documents.
- A revision to a legal requirement in the contract.
- A new supplement or a revision to the Special Provisions.

Small adjustments to quantities, spelling, and punctuation, and design changes that do not affect quantity and relocation of items of work within the project will not normally require an addendum because they will not affect the way the contractor bids the project. These items are not to be ignored, but the information, in the form of revised plan sheets, need only be passed along to the office of the construction project engineer, so they can be incorporated into the project and given to the contractor that is awarded the project. For example:

- **Not required for addenda:** The advertised project has 23 catch basins to be installed, and it is discovered that an additional catch basin, not shown on the plans, will be required. This would not warrant an addendum if this were the **only change** being made. The small change in quantity will not impact the contractor's bid. This can be handled under construction as any other increase in quantity.
- **Addenda Required:** The addition of the one catch basin causes the 18-inch-diameter pipe item to increase from 985 feet to 1,250 feet. This increase in pipe length is greater than 125% of the original, which could cause this item to be renegotiated under the contract, so the addendum would be justified. Since the addendum is required for the pipe, the additional catch basin would also be included in the addendum.

For instructions and procedures on preparing addenda, see the Appendices.

700.01(4) Standard Plans

WSDOT's *Standard Plans* are made a part of contracts by reference in the Special Provisions. Plan details that duplicate details in the *Standard Plans* are not to be drawn, and the designer is not to redesign a Standard Plan by detail in the project. It is important that standard work be done the standard way, and that standard materials be used whenever possible; in almost all cases, standard materials cost less.

700.01(5) Competitive Bidding, Proprietary Items, and Use of the Qualified Products List (QPL)

700.01(5)(a) Competitive Bidding

WSDOT uses competitively acquired products to fulfill the requirements of a contract whenever feasible. This helps achieve the lowest prices, the best product quality, and the most efficient use of resources.

There are several ways to specify bid items or materials in a contract that create a competitive bidding environment. Following are three different methods, listed in order of preference:

1. **Specifying by Standard or Nonstandard Bid Items**

   This method doesn't use brand names. The contractor is allowed to choose the product, as long as it meets the requirements of the *Standard Specifications* and contract provisions. This method fosters a competitive bidding environment and does not require approval for proprietary items.

2. **Specifying Brand Names and Allowing for Approved Equals**

   When brand name specifying, the designer is providing the bidder with options by naming at least two products or manufacturers that are acceptable and allowing for "approved equals" followed by a performance specification. When this is done, no approval is required for usage; it is not considered a proprietary item.

   A good specification for brand name specifying will read as follows:

   The (type of product) furnished shall be (brand name, model), (brand name, model), or an approved equal having the following features (functions):

   a. (feature)

   b. (feature)

   c. (feature)

   In order to find the two acceptable items, the designer had to be looking for certain features or functions. These features or functions are the ones that need to be clearly identified in the Special Provision.

3. **Specifying at Least Three Brand Names**

   Listing a reasonable number (three or more) of brand names/models that are acceptable is a competitive bidding environment also and doesn't require approval. A performance specification is not required.

700.01(5)(b) Specifying Proprietary Items

There are instances in which competitive bidding may not or cannot be provided and a specific proprietary product is allowed. This applies to temporary items/ materials as well as permanent items/materials incorporated into the project.

By the Federal Highway Administration (FHWA) Stewardship Agreement, WSDOT has adopted the Code of Federal Regulations (CFR) for use of proprietary items on all projects. Specific guidelines regarding the use and certification of proprietary items are provided in 23 CFR Part 635.411. The CFR guidelines state that federal funds shall not participate, directly or indirectly, in payment for any proprietary product unless one of the following applies:

1. It is purchased or obtained through competitive bidding with equally suitable other items (the three methods found above).
2. It is certified that:
   a. The proprietary item is essential for synchronization with existing highway facilities. Synchronization may be based on:
      - Function (the proprietary product is necessary for the satisfactory operation of the existing facility. A product could be essential due to the fact that it has been tested with other components and is documented to work with existing components or that it is a one-of-a-kind item. A product or manufacturer could be essential because using anything else would require replacing other components of the existing highway system,
      - Aesthetics (the proprietary product is necessary to match the visual appearance of existing facilities),
      - Logistics (the proprietary product is interchangeable with products in an agency's maintenance inventory), or
      - Any combination thereof.

Or

   b. No other equally suitable alternative exists:
      - The product (or manufacturer) is one of a kind.
      - Other workable alternative products or manufacturers are not equal in longevity, cost, delivery, durability, compatibility, warranty, and so on.
3. It is used for research or for a distinctive type of construction on relatively short sections of road. It is for experimental purposes to obtain experimental information on a product or manufacturer for the public good. When requesting this type of usage, approval documentation showing the scheduling, monitoring, results, and conclusion are required with the request (www.wsdot.wa.gov/design/projectdev/proprietaryitems.htm).
4. A proprietary product may be used when other equally suitable alternatives exist, if approved by the FHWA Division Administrator (for federal-aid projects) or by the Assistant State Design Engineer (for state-funded projects) because it is in the public's interest.

These guidelines are valid for state-funded projects also.

700.01(5)(c) Using Proprietary Items in Contracts

Prior to advertisement, the designer needs to request and receive written certification for any proprietary material, work, manufacturer, or product included in a project. It is the designer's responsibility to submit a memorandum of justification to the Assistant State Design Engineer in sufficient time for it to be reviewed and acted upon (sent to FHWA if required), and for adjustments to be made to the contract should the use be denied.

There are two basic types of requests that can be submitted for approval:

- Use of the proposed proprietary item will be allowed for regionwide or statewide use, referred to as a "blanket certification" (this is usually valid for a biennium). A copy of the original certification shall be placed in the Design File. Copies can be found on the "Current Blanket Proprietary Certifications" web page at:
  http://www.wsdot.wa.gov/design/projectdev/blanketapprovals.htm

- Use of the proposed proprietary item will be allowed for a specific project only (just for the duration of the project). The original signed certification shall be placed in the Design File.

An example of the memorandum of justification and a shell document can be seen at:
www.wsdot.wa.gov/design/projectdev/proprietaryitems.htm

Approval of a proprietary item does not override the federal specification for foreign steel (Buy America) or the applicable General Special Provisions (GSP, Division 1).

When a proprietary item has been certified, the designer will, in the Special Provisions, give the product manufacturer, model, model number, and any additional information required to ensure only the specified item will be furnished. There will usually be only one item named in the Special Provisions when listing a proprietary item. The phrase "or approved equal" will **never** follow the naming of a proprietary item in a Special Provision. There are no options allowed. The contractor's bid is to reflect the price to supply and incorporate the one item specified.

700.01(5)(d) Using the Qualified Products List

There is a definite difference between proprietary item specifying and brand name specifying, and the Qualified Products List (QPL) has nothing to do with either proprietary or brand name specifying.

The QPL is a list of products and materials that have been preapproved for use on WSDOT projects. If the contractor chooses to provide items listed on the QPL, there is no need to submit a Request for Approval of Manufacturer. For some products or materials on the QPL, there is no requirement to submit the items for testing prior to using the product or material on the project.

The preapproval of items in the QPL does not mean they are the only products or materials that will be allowed. The contractor can provide any product or material that meets the specifications, whether they are listed in the QPL or not.

700.01(6) Buy America

Check with the Construction Office to verify whether or not this item is required for the project. Use this link to review the Buy America memorandums from FHWA and the HQ Construction Office: www.wsdot.wa.gov/design/support.htm#america. Due to the conditions set forth by Buy America, both new and salvaged materials fall under the same requirements when applied to Buy America.

Buy America requirements do not apply to steel items that are considered to be temporary, such as form work or false work.

700.01(7) Legal Relations and Responsibilities to the Public

Section 1-07.1 of the *Standard Specifications* requires the contractor to comply with all federal, state, or local laws and regulations that affect work under the contract. These laws and regulations do not need to be identified in the contract. However, certain project-specific regulations, such as permits, agreements, MOUs, licenses, variances, or others, need to be identified in the contract. Examples of such regulations with conditions that need to be part of the contract are: HPA, EIS, Noise Variance, Shoreline Permit, Department of Ecology MOU, and other documents that would affect or restrict work on the contract.

In many cases, the GSPs will trigger the need for the text of such documents to be listed in the Special Provision, either as a fill-in or as an appendix. When construction activities require the need for a permit, variance, agreement, MOU, or other regulations, the designer should always discuss the need for such documents to be put in the contract with the appropriate region support personnel.

700.01(7)(a) Decommissioning of Wells Procedure

The water well abandonment procedure shall adhere to the Washington State Department of Ecology (Ecology) regulations for abandonment of water wells following the guidelines in WAC 173-160-460 and RCW 18.104.048. Notice shall be given at least seventy-two hours in advance of commencing work. The notice shall be submitted on forms provided by Ecology, along with the proper fees.

700.01(8) Washington State Laws

Following is a partial listing of laws that are frequently used in the administration of WSDOT contracts:

1. RCW 4.24.360: Any clause in a construction contract that disallows a contractor, subcontractor, or supplier any damages due to unreasonable delays in performance caused by WSDOT is void and unenforceable.
2. RCW 18.27.090: Contractors are exempt from contractor registration laws provided they are prequalified by WSDOT.
3. RCW 18.104.048: Prior notice of well construction, reconstruction, or decommissioning of wells is required (see 700.01(2)(a)).
4. RCW 19.122.040: Existing utility locations (see 400.06 for the contents of this RCW).
5. RCW 39.12: Wages (see Section 1-07.9 of the *Standard Specifications*).
6. RCW 39.19: See the GSP concerning minority and women's businesses.
7. RCW 46.44: Vehicle weight limitations within project boundaries.
8. RCW 47.28.030: State Force Work and materials (see 700.09(11)).
9. RCW 47.28.035: Related to RCW 47.28.030, State Force Work and materials (see 700.09(11)).
10. RCW 47.28.070: Prequalification of contractors (see Section 1-02.1 of the *Standard Specifications*).
11. RCW 47.28.100: Contractors are allowed 20 days after award to execute a contract. WSDOT may extend this time no more than an additional 20 days (see Sections 1-03.3 and 1-03.5 of the *Standard Specifications*).
12. RCW 47.28.120: Contractors must file their claims within 180 days after acceptance (see Section 1-09.9 of the *Standard Specifications*).
13. RCW 47.30: Requirements for paths and trails.
14. RCW 49.28: Wages – overtime.
15. RCW 60.28.011: WSDOT must hold 5% of the contract amount in reserve for material and worker claims. Contractors can post a bond in lieu of the reserve fund (see Section 1-09.9 of the *Standard Specifications*).
16. RCW 78.44: A Contract Reclamation Plan is required for every WSDOT contract that contains a WSDOT-furnished materials source (see 400.06).

Some of the laws are referenced in the *Standard Specifications* or the GSPs; some are not. In either case, these laws are not to be altered. All Special Provisions that appear to be altered should be questioned.

700.01(9) Asbestos Removal

When the removal of asbestos or items containing asbestos is required, or when asbestos is suspected, the specifications shall include sufficient information and detail to inform the contractor of the nature and location of the asbestos. There are GSPs that are to be included in the contract provisions. The WSDOT *Asbestos Abatement Manual* is to be used to determine whether there are special conditions or requirements that should be included in the contract provisions. (You can access a copy of the *Asbestos Abatement Manual* through the WSDOT Library at: www.wsdot.wa.gov/library, or send them an e-mail at: library@wsdot.wa.gov.)

700.01(10) Permits

A conscientious effort shall be made to ensure all permits necessary for the project are completed and signed prior to the project going to Ad. However, in the event this cannot be accomplished, it is the responsibility of the region to determine the risk involved in going to Ad without the completed permit, in accordance with the *Advertisement and Award Manual*.

700.01(11) Training Goals

The bid item for "Training" is to be provided on most federal-aid projects. For projects with federal-aid dollars, 23 CFR Part 230.111 requires all state highway agencies to review projects to determine their ability to support the inclusion of "Training Special Provisions" hours. The training goals, in terms of the total number of training hours required, are established by the HQ External Civil Rights Office. The number of training hours, if assigned to a project, is based on the following:

- Total estimated project labor hours
- Availability of minorities, women, and other disadvantaged individuals
- Potential for effective training
- Duration of the contract
- Dollar value of the contract
- Anticipated workforce size
- Project location
- Scopes of work

The region may submit a training recommendation for consideration by the HQ External Civil Rights Office. If the region is submitting a training recommendation, it needs to provide an estimation of total projected project labor hours.

Note: If you have any questions regarding either of the two programs referred to above, please contact the WSDOT Office of Equal Opportunity at 360-705-7090.

700.01(12) Assigning the Risk

It is important that the contractor be able to determine whether the risks on the project will be the contractor's responsibility or will be borne by WSDOT. In most cases, it is best to assign the risk to WSDOT. This keeps the contractor from having to inflate bid prices to offset the possible risks of doing the work. These inflated prices cost WSDOT extra dollars when the problem does not materialize.

- For example, do not say, "The contractor may encounter obstructions during the excavation." The contractor has to assume that obstructions will be encountered and that they will be the contractor's problem when they are. The unit price for the excavation will include the cost of obstruction removal, and WSDOT will pay for the removal even if there are no obstructions encountered.
- It would be much better to say, "If obstructions are encountered during excavation, the Engineer will pay for the removal of the obstruction in accordance with Section 1-09.4 of the *Standard Specifications*." Now the contractor can bid the actual cost of doing the excavation work and be confident that if something out of the ordinary is encountered, the cost of removal will be dealt with fairly, and if there are no obstructions encountered, there is no cost to WSDOT.

700.01(13) Agreements

All agreements necessary for the project should be complete and signed prior to the project going to Ad. If this cannot be accomplished, it is the responsibility of the region to determine the risk involved in going to Ad without the completed agreement, in accordance with the *Advertisement and Award Manual*. Particular attention is to be paid to the following:

- The quantities, bid item names, units of measurement, and prices in the agreement should to be the same as those in the PS&E.
- Another party may be financially responsible for some of the work in WSDOT's contract, such as the construction of sidewalks, utility installations, signal systems, pavement markings, intersection improvements, and so on.
- Though not common, some participating agreements will contain an "out clause," which allows the outside agency to withdraw the work if the bid prices are not favorable. When an out clause is included in the agreement, the GSP titled "Award of Contract" needs to be included in the contract provisions.

For agreements with an out clause, each bid item needs to be set up with a separate bid item name and placed in a separate group in the Summary of Quantities. A Special Provision needs to address each bid item.

When preparing the estimate of cost for an agreement for work under the contract that is the financial responsibility of an outside agency, mobilization, engineering, and contingencies are to be included.

Additionally, agreements that include work that WSDOT's contractor will perform, or work performed by others that WSDOT will reimburse a third party for, should be clearly stated in the project Special Provisions.

For more information on agreements, see the *Agreements Manual* or contact the HQ Utilities, Railroad, and Agreements Section.

700.01(14) Haul Road and Detour Agreements

When the project provides a materials source, or requires traffic to be detoured from the state highway, the region may be required to acquire agreements with the owners of the roads that will be used as the haul road or the detour route. (See the Haul Road/Detour Agreements chapter in the *Agreements Manual* for guidance.) The process of generating an agreement should be started as early in the design phase as possible. Discuss with region personnel responsible for processing agreements. The lack of a completed agreement may cause a project Ad date to be delayed. It is the responsibility of the region to determine the risk involved in going to Ad without the completed agreement, in accordance with the *Advertisement and Award Manual*.

The agreement will normally provide compensation to the owner of the haul road or detour for damage done to the road by the hauling equipment or by the extra traffic on the roadway. The compensation may be in the form of work to be done under the contract to bring the roads back to precontract conditions, or the owner may be paid a cash settlement and would be responsible for making the repairs.

All haul roads and detours are to be clearly shown and labeled on the Vicinity Map.

700.01(15) Vehicle Weight Limitations Within Project Boundaries

The designer is to review each individual project to determine whether the vehicles employed in the construction that exceed the gross weight limitations, per RCW 46.44, can be tolerated.

When existing bridges or major drainage structures are involved, overweight clearance is obtained from the HQ Bridge and Structures Office. The clearance information provided by the HQ Bridge and Structures Office is to be included in the PS&E portion of the Project File.

The designer is to use the information in the *Standard Specifications*, or include the appropriate GSP in the contract provisions, to inform the contractor of the load limit restrictions for the project.

700.01(16) Working Days

The designer needs to give careful consideration to the number of working days allowed for a project. Too many working days can cause as many problems as not enough working days.

The determination of working days for the different work items is to be based on production rates and other considerations (see the Appendices). Using the time required for the individual work items, the Critical Path Method (CPM) (see Appendix 6) is then used to determine how the project work will fit together, and the total number of working days will be determined.

The working days required for bridge construction are to be coordinated with the working days required for the other construction.

The CPM will be placed in the PS&E portion of the Project File.

700.01(17) Liquidated Damages

700.01(17)(a) HQ Construction Office Approval Required

Liquidated damages are monies assessed or withheld from the contractor's payment for failure to complete the project within a specified period of time. Liquidated damages are not to be considered a penalty, but reimbursement for the costs to the contracting agency for the contractor's failure to perform within the time frame of the project.

There are two types of liquidated damages to be considered for a project:

1. **Contract Time-Related Liquidated Damages**

   Liquidated damages for Physical Completion are calculated in accordance with the formula in Section 1-08.9 of the *Standard Specifications*. This formula actually calculates the estimated cost to WSDOT to continue engineering the project beyond the allotted contract time, but is presented in the contract as compensation for any and all damage resulting from an unexcused extended duration. The designer must avoid double charging through both the Standard Specification and a separate Special Provision for the same extended days. This situation may arise when an interim completion milestone is violated after all contract time has expired. Only the contract time-related liquidated damages may be assessed.

The designer must be able to identify and document the cost(s) associated with the damage. All liquidated damages that are different from the Standard Specification require the approval of the HQ Construction Office or the delegated region official. Submit the proposed provision and the calculations supporting the damage amount to the HQ Construction Office.

2. **Interim Completion of Phases (Staging)**

Interim liquidated damages are monies assessed or withheld from the contractor's payment for failure to complete a part (phase or stage) of the project within a specific period of time identified in the Special Provisions.

Large or complex projects often have interim completion times, with liquidated damages for such things as failure to open a closed lane(s), ramp(s), or detour(s) to all traffic by a specified time, or for completion of all work identified for a specific stage or phase of a project as defined in the Special Provisions. These types of liquidated damages can be assessed in time increments that range from 15-minute to full-day segments.

Liquidated damages assessed for failure to have a lane, ramp, or roadway open to traffic, or to have an Intelligent Transportation System (ITS) operational at the specified time, are an estimate of the actual cost to the contracting agency and the traveling public for not having that portion of the road or ITS available. The Statewide Travel and Collision Data Office (STCDO) (formerly the HQ Transportation Data Office (TDO)) has standardized methodology for calculating the cost, based on traffic counts. This is the only acceptable way of calculating these costs (see http://wwwi.wsdot.wa.gov/planning/collisionandtraveldata/liquidated_intro.htm).

Once the designer has received these calculated costs from the STCDO, the region must make the determination whether or not the damages represent a sufficient benefit to the state to put them in the contract.

Interim liquidated damages for two or more separate reasons can be additive for the same time period.

A copy of the data used to justify liquidated damages and a copy of the STCDO information is to be placed in the PS&E portion of the Project File.

700.01(18) Fuel Cost Adjustments

Check with the Construction Office to verify whether or not this item is required for the project.

700.01(19) Steel Cost Adjustment

Check with the Construction Office to verify whether or not this item is required for the project.

700.01(20) Force Account Work

Standard Item Number 7715, "Force Account ____," has been created to monitor the total amount of money spent on force account work. This standard item, with the appropriate fill-in information, is to be used for all force account bid items, except for those that already have a standard item number.

If work can be measured and clearly identified, the design should use existing standard bid items. If the work is not quantifiable or cannot be easily measureable, the use of this item may be appropriate.

The use of this standard item number does not preclude the need for a project-specific provision to describe the work to be accomplished.

The force account item is to be placed in the appropriate section on the Summary of Quantities. (A force account removal item would be placed with the other removal items; a force account structure item would be placed with the other structure items.)

700.01(21) Lump Sum Bid Items

A lump sum bid item may include several items of work or the same item of work at different locations. The Special Provisions must cover the complete item of work, including the description of work, materials, construction requirements (which includes the approximate quantities for bidding purposes), and payment statements. The quantities listed should be double-checked to avoid contractor claims.

Only work that can be easily defined by quantity, amount of effort, and equipment and labor requirements is to be included in lump sum items. If any of these items are unknown/uncertain, payment at unit prices or by force account would be more appropriate.

The backup data used to determine the estimated cost for lump sum bid items is to be placed in the PS&E portion of the Project File.

The designer must decide whether each lump sum bid item is to be prorated or whether individual Summary of Quantities column costs are to be assigned for each lump sum bid item.

700.02 Earthwork

700.02(1) Earthwork Measurement

Measurement of earthwork other than as specified in the *Standard Specifications for Road, Bridge, and Municipal Construction (Standard Specifications)* requires the approval of the HQ Construction Office. (See Division 6 for more information on developing a Special Provision.)

700.02(2) Clearing and Grubbing

For estimating purposes, clearing is to be calculated as being performed 10 feet, and grubbing 7 feet, beyond the toe of slope for embankments and the upper limit of slope treatment in cuts. Coordinate with the Region Landscape and Environmental offices on the proposed limits, and show these limits on the proper plan sheets.

If clearing requires the cutting of merchantable timber amounting to at least one log truck load (approximately 5,000 board feet) from within the right of way, the General Special Provision (GSP) for Timber Export Restrictions is to be included in the contract provisions. This GSP notifies the contractor that they will be required to pay to the Department of Revenue the forest excise tax on the harvested lumber.

700.02(3) Removal of Pavement, Sidewalks, or Curbs

When looking at work requiring removal of pavement, sidewalk, or curb, the method of measuring and paying for the work is determined on where work is occurring: within or outside the limits of an excavation area.

700.02(3)(a) Outside

When pavement, sidewalk, or curb removal is required **outside the limits** of an excavation area, it can be included in the lump sum price for “Removal of Structures and Obstructions,” or separate bid items may be established for the work.

If the work is included as part of the lump sum item, the Special Provisions will indicate the approximate locations and quantities. If separate bid items for removal are established, the individual items will appear on the Quantity Tabulation sheets, where the approximate locations and quantities will be indicated. In either case, the locations of the removal items will be indicated on the plans as well.

700.02(3)(b) Within

When pavement, sidewalk, or curb removal is required **within the limits** of an excavation area, nothing is required on the plans or in the Special Provisions. All costs for the removal of the pavement, sidewalk, or curb are included in the excavation work, and no additional compensation is made to the contractor.

The other possibility is that, for some reason, the designer wants the contractor to remove the pavement, sidewalk, or curb that lies within an excavation area prior to performing the excavation. In this case, the work would be handled as described above for removal outside an excavation area.

700.02(4) Borrow Material

Because WSDOT is committed to conserving valuable mineral resources, it is imperative that careful consideration be given to the earthwork portion of every project, to ensure the most efficient and cost-effective use of the material from the roadway excavations.

If there is insufficient roadway excavation material due to a shortage of on-site material or because all, or a portion of, the on-site material is known to be unacceptable for constructing embankments, material will have to be imported, and a borrow item will be included in the project.

If the borrow is required because the roadway excavation material is not acceptable for embankment construction, the Special Provisions shall identify the locations of the unacceptable roadway excavation material. Consult with the Region Plans Office on how this information is to be presented.

If a single type of borrow material is required to supplement the quantity of roadway excavation material, it will be the contractor's responsibility to determine the most efficient and cost-effective means and operations of using the on-site material and the borrow to construct the embankments. In this situation, the borrow material quantities will appear only on the Summary of Quantities, and they will not be shown as a quantity on the roadway profile sheets. The designer needs to note in the Contract Plans or the Specials that the quantity of borrow shown in the Summary of Quantities is to be used to supplement the quantity of roadway excavation at his discretion for constructing embankments. Otherwise, the contractor will not know it is WSDOT's intent to have the two items used together.

If the borrow material is being used only at specific, well-defined locations on the project (bridge end embankments, for example), the exact locations are to be identified on the roadway profile by showing the quantity arrow, indicating the station-to-station limits and quantity of borrow material needed for the embankment construction. If profiles are not included in the project, the Special Provisions are to contain a statement such as, "Gravel borrow shall be used to construct the bridge end embankments, L X+XX to L X+XX."

If two or more types of borrow material are required, the specific locations for all but one of the types of borrow shall be identified on the profiles, or in the Special Provisions, as described above. For example:

- If gravel borrow is required for the construction of bridge end embankments, and common borrow is required to supplement the roadway excavation material to construct other embankments, the station-to-station limits of the gravel borrow material are to be shown on the profiles or in the Special Provisions. It will remain the contractor's responsibility to determine the most efficient and cost-effective way to use the common borrow and the roadway excavation material to construct the remaining embankments. Therefore, show the common borrow quantity only in the Summary of Quantities.

In all cases, the quantities for roadway excavation and embankment shall appear on the Summary of Quantities and on the Profile sheets or, on smaller projects, tabulated on Quantity Tabulation sheets.

700.02(5) Embankment In Place

This bid item is to be used on projects where earthwork consists mainly of borrow excavation. It provides payment for acquiring, excavating, hauling, placing, and compacting borrow materials to construct the embankment.

If there are minor quantities of roadway excavation included in the project, this work can be included in the item "Embankment In Place." Measurement for payment will be by the cubic yard volume between the original ground line and the neat lines of the embankment template. No allowance is made for subsidence or settlement.

The use of this item requires a Special Provision and approval by the HQ Construction Office. Include the following information when requesting to use this item:

- Assurance that the foundation on which the embankment material is to be placed is unyielding.
- Estimated quantities of excavation, embankment compaction, and roadway excavation.

700.02(6) Aeration

If it is found necessary or desirable to include the bid item "Aeration" in a project, approval by the Headquarters (HQ) Construction Office is required. A copy of this written approval is to be included in the Plans, Specifications, and Estimates (PS&E) portion of the Project File.

700.02(7) Shoring or Extra Excavation

All excavations of 4 feet or more in depth shall be shored, protected by cofferdams, or shall meet the open-pit requirements specified in the *Standard Specifications*.

RCW 39.04.180 requires that a separate bid item for shoring or extra excavation be included in the estimate and proposal. In no case shall the costs for shoring or extra excavation be included in other bid items.

700.03 Production From Quarry and Pit Sites and Stockpiling

700.03(1) Materials Sources and Waste Sites

Materials sources provided by the contracting agency can be either mandatory or nonmandatory sites. For mandatory sites, verify with the region ASDE on the appropriate documentation needed, and refer to *Design Manual* Chapter 300 for approval authority of mandatory sites.

When mandatory materials sources or waste sites are specified, the region shall provide a memorandum of justification. For mandatory materials sources, justification shall be made in accordance with 23 CFR 635.407, showing a definite finding that it is in the public's best interest to require the use of the mandatory sites furnished or designated by the contracting agency. The use of mandatory sites can also be designated based on environmental considerations, provided the environment would be substantially enhanced without excessive cost. The memorandum of justification is to be placed in the Project File.

When nonmandatory sites are specified, the contracting agency makes the site available to the contractor, but the contractor has the option to use or not use the site.

For any mandatory source or waste site to be used, coordinate with the Region Plans, Materials, and Environmental offices.

Bid items for work to be performed within a nonmandatory site are to be site-specific; for example, "Wire Fence Type 1 – QS-X-XX." (See the GSP for State Furnished Material Sources for more information.) This allows the contractor the opportunity to bid zero for these site-specific items if they do not intend to use the site. If the contractor decides later to use the site, the work specified by the site-specific items will be performed, and the contractor will be paid at the bid amount of $0.00.

Site-specific items are not required for work to be performed on mandatory sites.

A separate column, under the appropriate group, is to be set up for each material source or waste site provided by the contracting agency. This allows the contractor to easily identify the work to be performed within a site and also allows for easy accounting of the work by WSDOT.

The region shall prepare a Haul Road Agreement if the haul route to or from the site is other than a state highway.

700.03(2) Stockpiling Aggregates

Under the construction contract, the regions are authorized to spend M5 funds for acquisition of aggregates, provided the region's biennial M5 allocation is not exceeded.

The following Headquarters offices need to be advised by the region of all M5 aggregate stockpile acquisitions made under a construction contract:

- Administrative Services Office, Purchasing and Inventory Branch
- Comptroller's Office, Budget Management Branch
- Program Management Office, Program Manager
- Pre-Contract Administration Office

700.03(3) Amortization of Materials and Stockpile Sites

If a state source of materials is provided, the project report form is to include the dollar amount to be amortized, providing the region intends that amortization be included in the project.

The estimate will include the dollar amount so that federal-aid participation can be obtained on federal-aid projects, or so that proper accounting procedures can be followed when only state funds are involved.

700.03(4) Royalties on Materials Sites

If the contracting agency furnishes a materials site owned by others, and the owner requires that a royalty be paid for materials removed from the site, the dollar amount of the royalty, and who will be responsible to pay the royalty, will be specified in the Special Provisions. FHWA has authorized federal-aid participation in royalty payments.

700.04 Bases

Vacant

700.05 Surface Treatments and Pavements

700.05(1) Asphalt for Fog Seal

The item “Asphalt for Fog Seal" is normally associated with bituminous surface treatment (BST) projects and the shoulders of paving projects that place only HMA in the traffic lanes, and it is required on all open-graded HMA projects as well.

700.05(2) Soil Residual Herbicide

The item “Soil Residual Herbicide” should be used in conjunction with HMA, asphalt concrete sidewalks and paths, or parking lots only when very aggressive weeds that are capable of breaking through pavement are in the vicinity. Those weeds include equisetum and knotweeds. The designer is to check with the Maintenance Supervisor responsible for the area for a recommendation on whether soil residual herbicide is required.

700.05(3) Commercial HMA

Any quantity (tons) of Commercial HMA may be used for the following applications:

- Prelevel
- Sidewalks
- Ditches
- Paths
- Gores
- Digouts
- Road Approaches
- Slopes
- Trails
- Other nonstructural applications approved by the Project Engineer.

700.05(4) HMA for Preleveling

The bid item for “HMA for Preleveling Cl. ____ PG ____” is to be provided when a project requires preleveling of the existing roadway surface.

The quantity of preleveling is to be based on a survey of field conditions. In some regions, this survey may be made by the Materials Laboratory and it may provide the prelevel rate or quantity.

The roadway sections should show in the typical sections where and what type of prelevel is to be completed (wheel rutting or on a lane to correct a super rate issue) so that the contractor knows how to bid and what equipment is expected to be used.

700.05(5) HMA for Approach

The item “HMA for Approach Cl.____ PG____” is to be used when there are road approaches to be paved on the project.

This is not to be confused with county roads and city street intersections. County road and city street intersections shall be included in main line paving quantities.

Road approaches will be identified by approach sections on the roadway section sheets, and on the Paving Plans, if they are present, so the contractor is aware of the number, locations, and paving requirements. Place HMA quantities for each approach either in a table or in the Quantity Tabulation sheets.

700.05(6) Anti-Stripping Additive

A bid item for "Anti-Stripping Additive" shall be included in all projects with bituminous surface treatment (BST) using cut-back (not emulsified) asphalts, HMA, and asphalt treated base (ATB).

The estimated force account dollar amount for "Anti-Stripping Additive" can be calculated at $1 per ton of HMA/ATB. Round the total estimated amount to the nearest $10.

700.05(7) HMA Price Adjustment

An HMA Price Adjustment is required for all projects containing Hot Mix Asphalt. Verify the correct HMA Price Adjustment with the Construction Office.

700.05(8) Other Price Adjustments

Check with the Construction Office to verify whether or not any other price adjustments are required for the project.

700.05(9) HMA Quality Assurance

As an incentive for contractors to provide superior quality HMA, the Washington State Department of Transportation (WSDOT) will pay a bonus of up to 5% of the unit bid price of the HMA. The bonus is comprised of 3% for the mixture and 2% for compaction. When a project calls for paving with HMA, the item "Job Mix Compliance Price Adjustment" (JMCPA) will be required. For HMA accepted by nonstatistical or commercial evaluation, this item is only used when there is nonconforming mix resulting in a credit. For HMA accepted by nonstatistical or commercial evaluation, the JMCPA will be -$1 for the estimate. For HMA accepted by statistical evaluation, the JMCPA will be calculated using the following formula:

JMCPA = (0.03) (TEC)

Where:
TEC = Summation of the Total Estimated Cost of HMA accepted by statistical evaluation.

Example:

Description Quantity Unit Price Est. Cost
HMA Cl. ½ IN. PG_ (2,600 tons) ($70.00) = $182,000
HMA for Preleveling Cl. ½ IN. PG_ (1,500 tons) ($135.00) = N/A
(commercial evaluation)
HMA Cl. ⅜ IN. PG_ (1,100tons) ($82.00) = N/A (nonstatistical evaluation)
Summation of Total Est. Costs (TEC) = $182,000
JMCPA = (0.03)($182,000)
JMCPA = $5,460

Use $5,500 for "Job Mix Compliance Price Adjustment"

When a project calls for paving with HMA, the item "Compaction Price Adjustment" (CPA) will be required, regardless of the tonnage, if the total compacted depth for a class of HMA placed in the traffic lanes is greater than 0.10 foot.

The price adjustment will be calculated using the following formula:

CPA = (0.02) (TWTEC)

Where:
TWTEC = Travel Way Total Estimated Cost of HMA with a total depth greater than 0.10 foot.

Note: **If the same compaction effort is required on the shoulders, the shoulders will be included in the calculations for "Compaction Price Adjustment" (for example, where the shoulders are currently being constructed full depth because they will become a driving lane in the future or where shoulder driving is going to be allowed). There would also have to be a Special Provision written specifying that the same compaction effort is required on the shoulders as the traveled way.**

Example:

HMA CL ½ IN. PG_:
Length: 500'
Width: 2 lanes @ 12' and 2 shoulders @ 10.0'
Depth: 1 lift @ 0.20' depth
Unit Price: $40/ton
Conversion factor: 2.05 t/cy

TWTEC = (500')(24')(0.20')(2.05t/cy)($40/ton)
($27ft^3$/cy)

TWTEC = $7,288.89

HMA CL ½ IN. PG_:
Length: 300'
Width: 2 lanes @ 12' and 2 shoulders @ 4'
Depth: 1 lift @ 0.15' depth
Unit Price: $42/ton

TWTEC = (300')(24')(0.15')(2.05t/cy)($42/ton)
($27ft^3$/cy)

TWTEC = $3,444.00

Travel Way Total Est. Cost
(TWTEC) = $10,732.89

CPA = (0.02)($10,732.89) = $214.66

Use $220 for "Compaction Price Adjustment"

700.06 Structures

700.06(1) Retaining Walls

When a project contains standard retaining walls, as detailed in the *Standard Plans for Road, Bridge, and Municipal Construction (Standard Plans)*, the Contract Plans shall include:

- A plan and profile of the wall, with original and proposed ground profiles at the front and back faces of the wall.
- All existing utilities in the vicinity of the wall.
- Wall geometry.
- Right of way limits.
- Construction sequence and stage construction sequence requirements.
- Highest permissible elevation for foundation construction.
- Location, depth, and extent of unsuitable material.
- Quantities for the wall and backfill materials.
- Details of wall appurtenances such as traffic barriers; coping; wall face treatment and limits of treatment; drain outlets; and location of signs and lighting, including conduit locations.

In general, a site that will support a standard cantilever retaining wall will also support a proprietary retaining wall. If the region decides to provide preapproved proprietary retaining wall systems as an alternate, the HQ Materials Laboratory Foundation Engineer and the HQ Bridge and Structures Office Bridge Project Engineer need to be consulted on the selection of suitable wall systems for the conditions. In order to evaluate aesthetic considerations, a rough site plan shall be submitted to the HQ Bridge Project Engineer for review.

The region will be required to contact the suppliers of the selected retaining wall systems to confirm the adequacy of the systems for the given situation. The HQ Materials Laboratory Foundation Engineer is to be contacted to provide assistance in evaluating the systems for overall stability and to provide soil criteria for design.

The HQ Bridge and Structures Office will prepare the Special Provisions for preapproved proprietary retaining walls, including design criteria. The HQ Foundation Engineer will be consulted for establishing the criteria for design. The Special Provisions will require the proprietary wall manufacturer selected by the contractor to submit shop plans, design criteria, and calculations to the HQ Foundation Engineer for approval. The HQ Bridge and Structures Office will then review the design submitted by the preapproved proprietary wall manufacturer.

In addition, keep in mind that these retaining wall alternates may be selected by the contractor and that all of these alternates are proprietary. On all federal-aid projects, two alternates must be selected, or reasons for using fewer alternates must be submitted for approval to the Assistant State Design Engineer assigned to the region. Proprietary retaining wall systems are preapproved for certain heights. Walls that exceed the preapproved height will be considered special designs and each must be submitted to the HQ Bridge and Structures Office for review and approval.

700.07 Drainage Structures, Storm Sewers, Sanitary Sewers, Water Mains, and Conduits

Vacant

700.08 Miscellaneous Construction

700.08(1) Temporary Erosion and Sediment Control Plans

Chapter 6 of the *Highway Runoff Manual* provides detailed information on Temporary Erosion and Sediment Control (TESC) planning. The goal of TESC planning is to prevent erosion damage to projects and sediment-laden runoff that can harm the environment and waters of the state. WSDOT uses TESC Plans to meet the stormwater pollution prevention planning (SWPPP) requirements of the NPDES Construction Stormwater General Permit (CSWGP) issued in Washington by the Department of Ecology. A TESC Plan (which includes a narrative section and plan sheets) shall describe the site-specific erosion risks associated with the project and list the best management practices (BMPs) selected to reduce or eliminate the identified risks. A temporary erosion or sediment control BMP can be a design or procedural practice or a structural device that minimizes erosion or traps sediment prior to a discharge from the construction site.

A TESC Plan must be prepared if a construction project is covered by the CSWGP or if the project adds or replaces (removal of existing road surface down to base course) 2,000 square feet or more of impervious surface or disturbs 7,000 square feet or more of soil. Projects that don't meet these thresholds must manage erosion-related risks to prevent impacts to surface waters, but a complete TESC Plan (narrative section and plan sheets) is optional.

To be effective, the TESC Plan must contain contractually enforceable elements. The TESC Plan narrative must include site-specific project information about erosion-related risks that are not written as contract language. However, the narrative should make reference to relevant sections of the *Standard Specifications*, *Standard Plans*, General Special Provisions (GSP), and Special Provisions. Refer to Chapter 6 of the *Highway Runoff Manual* when designing a TESC Plan narrative.

TESC designers should keep in mind that TESC Plans (either the narrative or the plan sheets) are required to be adapted as needed throughout construction based on site conditions or discharge quality. TESC plan sheets should be designed to show site features that will impact erosion-related risk and a baseline plan for BMP installations. Listed below are the features that must be shown on the TESC plan sheets. Some of these features may not be known at the time the TESC plan sheets are designed. For example, the last two bulleted features will need to be written in once construction begins.

- Direction of north, property lines, existing structures, roads, and impervious surfaces.
- Cut and fill slopes indicating the top and bottom catch lines.
- Approximate contours and direction of stormwater flow before and after major grading.
- Clearing limits and actively worked areas.
- Stormwater treatment areas and BMPs.
- Locations of offsite material, stockpiles, waste storage, borrow areas, and storage yards covered by the CSWGP.
- Locations of all surface water bodies and receiving waters, including wetlands.
- Permitted temporary outfalls into receiving waters and discharge sample locations.
- Areas where final stabilization has been accomplished.

The contractually enforceable tools contained in the TESC Plan shall address the direct details the contractor will be responsible for, such as items of work; types of materials; duration; maintenance and removal of items; and measurement and payment of nonstandard items, as applicable to the specific contract. The plan sheets or Special Provisions shall show or list the locations of the BMPs.

WSDOT staff responsible for designing TESC Plans should attend the Construction Site Erosion & Sediment Control Course every three years. Multiple resources for TESC Plan preparation exist, including the *Highway Runoff Manual*, *Design Manual*, *Roadside Manual*, *Hydraulics Manual*, *Construction Site Erosion and Sediment Control Course Manual*, *Standard Specifications* (Section 8-01), and *Standard Plans*.

The WSDOT Environmental Services Office (ESO) Erosion Control Program maintains a SharePoint site, that has TESC planning guidance materials and a TESC Plan template. The TESC Plan designer reviews requirements, analyzes risk, selects BMPs, and identifies contractual tools to ensure enforcement of TESC Plans. The template provides step-by-step guidance on preparing the TESC narrative section. Other resources include Region Water Quality/Hydraulics Office staff, ESO staff, and the Statewide Erosion Control Lead.

Some regions require that TESC Plans prepared by the project office be routed through the Region Water Quality/Hydraulics Office or ESO for review. Once complete, the TESC Plan is incorporated into the contract documents.

700.08(2) Roadside Restoration and Considerations

The roadside blends the highway facility into the natural and built environment and provides operational, visual, and environmental functions. For all projects requiring work outside the shoulders, it is important that the designer consider the various functions and how the elements that meet these functions relate to each other. Contact the Region Landscape Architect or HQ Landscape Architect (for regions without one) to assist in meeting the functions and to determine ways to minimize and mitigate impacts to the roadside.

Earthwork can spread noxious and invasive species of weeds if these exist in the project vicinity. Long-term weed control issues within the roadside should be discussed with the area maintenance staff. If there are areas of noxious weed stands within the project limits, the designer should arrange to have WSDOT maintenance forces treat them prior to earth-moving activities, or the project should include weed control prior to this work. For projects that last through multiple seasons, weed control during the duration of the project should be specified for all areas within the right of way. If the project needs weed control (outside of planting areas), the separate weed control standard pay item must be included.

It is important to preserve existing desirable vegetation and to minimize disturbance and compaction of existing soils as much as possible. This will minimize water runoff, reduce erosion during the project, and reduce impacts that require restoration and mitigation.

The *Roadside Policy Manual* outlines requirements for vegetation preservation and revegetation. The Landscape Architect can assist the designer in fulfilling these requirements. The Roadside Restoration Worksheet should be referenced to determine the impacts and restoration needs that were determined for the project during the scoping process.

Consider the various elements of the project that are viewed by the highway user and from adjacent areas. Elements such as lighting standards, sign bridge types, traffic barriers, rockfall protection, bridge and wall design, textures and colors, contour grading, stormwater treatment and storage facilities, and vegetation blend the project into the context of the environment and provide a unified visual experience through the corridor.

Permanent vegetation provides erosion control, slope stabilization, weed minimization, and stormwater treatment and storage. Consider Context Sensitive design solutions (see *Design Manual* Section 305.7). The Landscape Architect can provide expertise to identify and blend visual elements.

Pedestrian facilities must be designed to be accessible by incorporating Americans with Disabilities Act of 1990 (ADA) standards.

700.08(3) Earthwork for Guardrail Terminals

It is important that the designer include the earthwork quantities required to construct widening needed for proper installation of guardrail terminals. It is easy to assume that these seemingly minor quantities will have little, if any, impact on the final quantities, so they are often left out of the final quantities.

There have been many projects where the earthwork quantities overran, and the reason for the overrun was because the designer had not included the required earthwork quantities for the construction of guardrail widening areas. As minor as these quantities may seem at the time of design, they can have a big impact on the construction project if not accounted for in the contract.

If, after the final guardrail locations are set, a final earthwork run is not made to account for the earthwork quantity in the flare construction, the designer needs to add the quantity to account for these spot widenings.

If the project is basically a paver, with isolated areas of widening for guardrail or slope flattening, and profiles are not required for the paving, the earthwork quantities are to be presented in tabular form for each area or in some other logical breakout.

700.09 Other Contract Considerations

700.09(1) Combining Bid Items

In an effort to streamline projects to make them easier for WSDOT to manage, as well as easier for the contractors to bid, some thought should be given on each project to doing similar, or associated, work under a single bid item instead of having two or more items under which to work.

The lump sum item “Removal of Structure and Obstruction” has always been made up of a combination of various removal items, and this will not change. This item is not governed by an estimated cost limit for work that can be included. As long as each different removal item is precisely described as to the actual work to be performed, the locations of the work, and the estimated quantity of work, there are no limits to the removal work that can be combined in the single “Removal of Structure and Obstruction” item. (See 700.09(4) for additional discussion on lump sum items.)

Work that is measurable—estimated cost of $5,000 or greater—will be a separate bid item. However, if the work is minor—estimated cost of less than $5,000— and there is a logical item of work with which to associate the minor work, the items may be combined and the cost of the minor work included in the cost of the associated work. A nonstandard bid item is created to capture all of the work involved when combining bid items.

The designer must remember that if items of work are combined, additional information will be required to describe the work involved, to clearly identify what items are being combined, and that the quantities provided for the combined items need be more accurately calculated.

For example, do not combine the cost of structure excavation with the cost of the pipe without giving a reasonably accurate estimated quantity for the structure excavation required for each pipe. Giving the total estimated quantity for the structure excavation does not provide the contractor a clear enough picture of the work required to make a responsible bid.

Accuracy of estimating quantities is also important because it can be difficult to address overruns, underruns, or added work when only one portion of the item combination is involved in the overrun or underrun, or work is added to only one of the items of work.

Care must be taken to ensure that by combining the items of work, additional problems will not be encountered during construction because of changes in conditions or work methods.

Items being combined shall relate to each other well and the quantities shall be dependent on each other, so if one changes in the field, the associated quantities would be affected uniformly.

700.09(1)(a) Example of a Good Combination

If the project had a few locations where culverts were to be installed, it would be acceptable to include the cost of structure excavation with the per-foot price for the size and type of culvert pipes. This is a good combination because the items are closely associated and the quantities are dependent on one another. The quantity for structure excavation is dependent on the amount of pipe installed and will increase or decrease as the length of pipe actually installed increases or decreases.

- Even though this combination of items is logical, it is imperative that the quantities for the structure excavation be calculated to a higher degree of accuracy then if the two items were separate.
- This higher accuracy of the structure excavation quantity is necessary because once the quantity is calculated for the planned length of pipe, that relationship of cubic foot of structure excavation per foot of pipe never changes. If the calculated structure excavation quantity is too high, the contracting agency is overpaying for the work actually performed. If the calculated structure excavation quantity is too low, the contractor is not being fairly compensated for the work performed. In either case, there is no way to make adjustments to the structure excavation.
- If there was a separate pay item for the structure excavation, and the quantity for the item was miscalculated, the contractor will be paid for the actual work performed, so the estimated quantity is a basis for the contractor's bid only.
- The structure excavation quantity will appear on the Structure Note sheet as "informational only" for each associated structure code.

700.09(1)(b) Example of a Bad Combination

Do not combine clearing and grubbing with embankment compaction, even though the plan is to clear and grub only where the embankments are to be constructed. The Special Provisions will have to specify the areas and approximate acres to be cleared and grubbed so the contractor can include that cost with the cubic yard price for embankment compaction. This is a bad combination of items, because the two items are not closely associated with each other. The quantity for either of these items could be increased or decreased without impacting the quantity of the other item.

- If the items above are combined under a cubic yard pay item, and during construction it is determined that additional slope flattening is necessary within the original clearing and grubbing limits, it would be difficult to determine and justify an increase. The difficulty lies in the fact that clearing and grubbing is generally around $6,000 per acre, whereas embankment compaction is around $2.00 per cubic yard. In this case, the contractor would be receiving a premium price for the additional embankment.
- If the items above are combined under a per acre pay item, and during construction it is determined that additional clearing, grubbing, and embankment compaction is necessary, again, it would be difficult to determine and justify an increase. The problem is, how is a square acre converted to a cubic measurement?

700.09(1)(c) Incorporating Combined Items

To maintain consistency in the combining of items statewide, the HQ Plans Liaison Engineer for the region is to be consulted in advance of incorporating combined items into projects. In addition to consistency, this will provide a single office to monitor which items are routinely being combined and which item combinations work and which do not, allowing for responsible decisions in the future.

Note: Two items that cannot, by law, be combined with any other item of work are "Shoring or Extra Excavation Class A" and "Shoring or Extra Excavation Class B."

700.09(2) Equipment Acquisition Through Construction Contracts

The practice of WSDOT acquiring, through a construction contract, items that would normally be acquired or purchased through the equipment fund is to be avoided. This practice circumvents the state's procedures and purchasing rules.

Specific examples of these items are: survey equipment, computers and other IT equipment, vehicles, maintenance equipment, radios, workboats, and truck-mounted impact attenuators.

700.09(3) Geotechnical Project Documentation

(a) The Region Project Development Office or Terminal Engineering Department for WSF is responsible for notifying the HQ Geotechnical Division at least 12 to 14 weeks in advance of the Ad or Shelf Date, when the final project geotechnical documentation is due for each pertinent project.

(b) When a PS&E document is near completion, all of the geotechnical design memoranda and materials source reports are compiled to form the Final Geotechnical Project Documentation, to be published for the use of prospective bidders.

(c) The Region Project Development Office or Terminal Engineering Department for the Washington State Ferries (WSF) will identify who has been designated to receive, handle, and continue the publication process of the report.

(d) It is desirable that the final geotechnical documentation be available for printing 10 weeks prior to the Ad or Shelf Date; however, it absolutely must be available no later than two Fridays prior to the Ad or Shelf Date.

(e) When transmitting the final project geotechnical documentation, the HQ Geotechnical Division will explicitly identify the geotechnical documentation as **final** and camera-ready. Likewise, the region materials section will concurrently send a camera-ready **final** copy of region-generated reports, to be included as part of the geotechnical documentation for the project.

(f) For Headquarters Ad and Award projects, when the region has received the report, the Region Project Development Office sends the complete package to the HQ Printing Services Office for final publication and to be made available to prospective bidders for purchasing. For WSF projects, the WSF Contracts/Legal Services Office is responsible for copying and making the report available to prospective bidders.

(g) The HQ Contract Ad and Award Office will issue a notice indicating the availability of the geotechnical documentation to bidders.

(h) In addition, some geotechnical information shall be included as part of the contract. It will generally consist of the final project boring logs and/or a Summary of Geotechnical Conditions when applicable. Both of these items are provided by the HQ Geotechnical Division.

700.09(4) Items a Designer "Might" Need

The designer is advised to avoid including items in the project they think "might" be needed. This is particularly important for items such as borrow or excavation below grade, because the contractor bids, at a high price, the small quantity shown, and then finds a way to use a considerable quantity of the item on the project.

If it is unknown whether or not the item is required, it is best to leave it out of the project and let the Construction Office add the item by change order if necessary. History shows that this is the easiest, most cost-effective way of handling these items.

There may be times when it will be appropriate to include an item that might be needed. In these rare cases, it should be included as a force account item, so the Engineer has complete control of the work.

700.09(5) Managed Access Highways and Construction Rights

For work on managed access highways outside of incorporated areas, refer to *Design Manual* 1340.03(2), WSDOT Projects, for additional guidance.

700.09(6) Paths and Trails

WSDOT tracks expenditures for pedestrian and bicycle facility improvements so this information can be reported to the Legislature and the public, per RCW 47.30. The information is also used to measure the performance of WSDOT's transportation system.

Paths and Trails Calculations

$$\left({}^{X}/_{Y}\right) \times 100 = P\&T\%$$

Where: X = The summation of paths and trails-related items* (including mobilization, sales tax, engineering, and contingencies).

Y = The grand total of the project cost.

*Includes (but is not limited to) the items listed below. This paths and trails percentage needs to be included in your 100% PS&E turn-in cover memo when submitted to the Region Plans Office.

Features that are specifically for pedestrian and/or bicycle facilities need to be included in the paths and trails calculations. Overlaying an existing shoulder with HMA or bituminous surface treatment (BST) does not constitute the need for paths and trails calculations. Widening of a shoulder(s) that is part of a larger roadway-widening project is not to be included in the paths and trails calculations.

The following are example types of work that are to be included in the paths and trails calculations. (See the *Design Manual* for definitions of terminology and additional information.)

- Shared-use path
- Structures (specifically for nonmotorized use)
- Sidewalk
- Bike lane
- New curb ramp
- Curb extension
- Pedestrian refuge island
- Buffer strip (only a planter strip that is a minimum of 3 feet wide between the sidewalk and curb can be included)

Following MUTCD guidelines, signing and pavement markings associated with pedestrian and bicycle facilities may include:

- Crosswalks
- School crossings
- In-pavement flashing warning devices
- Preferential lane symbols and signing
- Pedestrian signals/detectors
- Bicycle-specific signals/detectors
- Pedestrian-scale lighting
- Bicycle facilities lighting

For these types of features, the paths and trails calculations shall include the entire cost to complete the work of each feature.

Constructing a dedicated bicycle or pedestrian facility is always preferable to widening shoulders, especially in urban or urbanizing areas. However, paths and trails calculations for bicycle and pedestrian facility improvements shall be calculated for roadway shoulders when all of the following conditions are met:

- The route is identified in a local, regional, or state plan as a priority bicycle connection.
- The widening of a shoulder is a stand-alone project to benefit bicycling and walking and is not part of a larger roadway-widening project or done to achieve other goals.
- The existing shoulder is widened to at least the minimum widths outlined in the *Design Manual* for accommodating bicyclists and pedestrians.
- The paths and trails calculations for this shoulder-widening work shall be 50% of all the costs included to complete the shoulder widening.

700.09(7) Salvaged Materials

Salvaged materials are items that do not become the contractor's property when removed as part of the contract. This material is to be used in future projects. For federal-aid projects, salvaged credits are governed by state procedures; however, they are subject to the requirements set forth by Buy America (see Section 700.01(6)). In accordance with FHWA Contract Administration Core Curriculum guidance, WSDOT has established the following procedure on salvaged material.

WSDOT procedure does not require a salvage credit on state-funded projects. Therefore, a salvage credit on a federal-aid-funded project is also not required.

700.09(7)(a) Use of Salvaged or State-Furnished Material

The Use of Salvaged or State-Furnished Material flow chart (Figure 700-1) details the procedures to follow when these types of materials are proposed to be incorporated in a contract.

The use of material acquired in other than competitive bidding may be waived under specific conditions if it is found to be in the public's interest. On federally funded projects, a Public Interest Finding (PIF) is required to be approved by the FHWA. The PIF will consist of a written document outlining the basis for the request and supporting documentation such as cost/benefit analysis, discussion of compatibility, logistical concerns, etc. For details on what is required for a PIF, refer to 23 USC 112 and 23 CFR 635.

For state-funded projects, the use of salvaged or state-furnished materials must be approved by the Region Administrator or to the delegated regional authority.

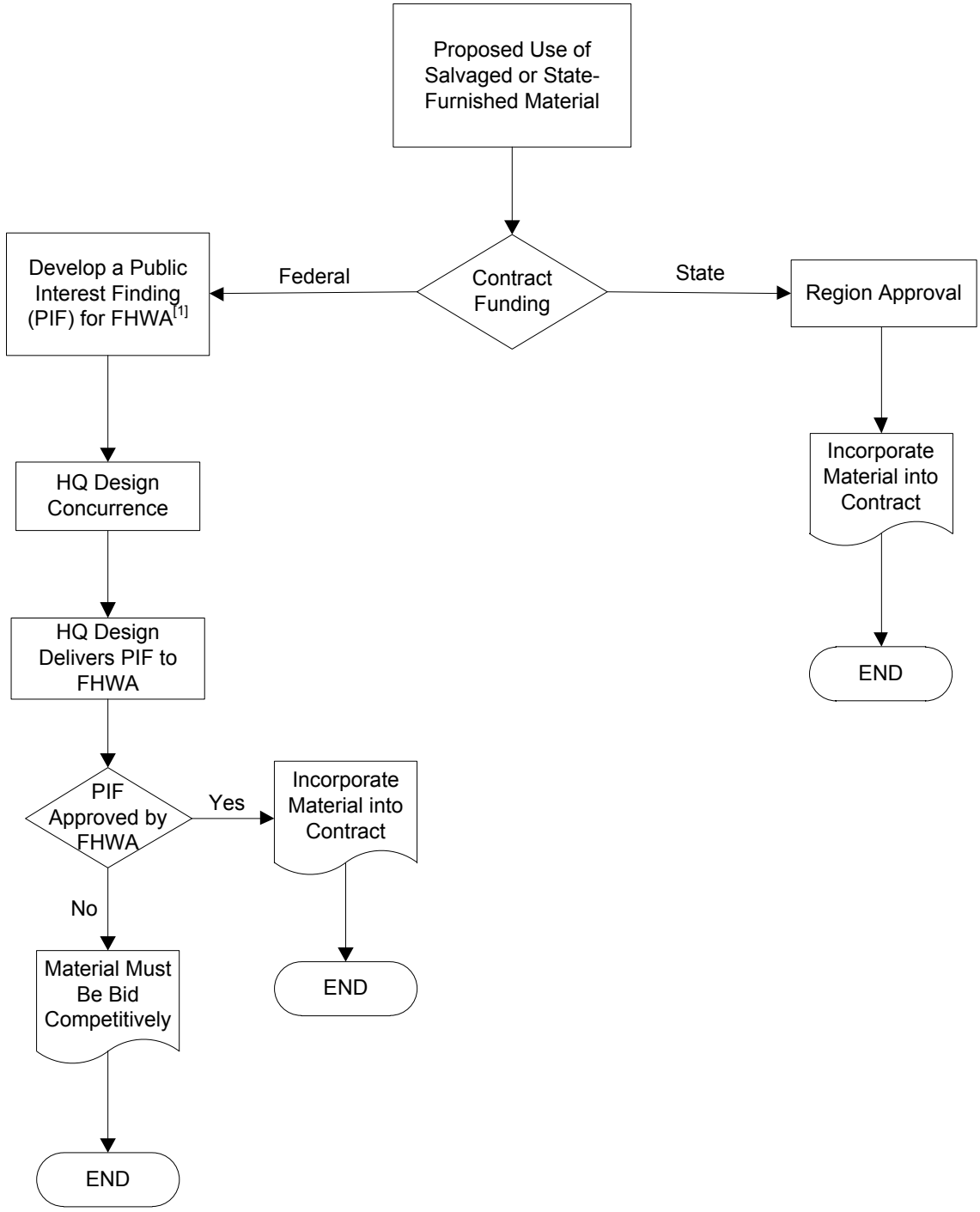

Notes:

[1] Refer to:

- 23 CFR 635.407, Use of Materials Made Available by Public Agency
- *Design Manual*, Exhibit 300-4

Use of Salvaged or State-Furnished Material
Figure 700-1

700.09(8) Specialing Out Right of Way Parcels

It may be necessary to identify right of way parcels that are unavailable to the contractor for construction at the time the contract is awarded.

The Special Provisions shall be specific regarding the location of these parcels and the estimated dates of availability to the contractor. Region Real Estate Services can provide a reasonable availability date to go in the Special Provisions. There is no problem if the property becomes available early, but there can be major problems if the property is not available by the date promised.

Right of way parcels that are "specialed out" must also be indicated on the Right of Way or Alignment/Right of Way Plans by drawing in the appropriate property lines and by cross-hachuring the parcels. The plans shall indicate that the cross-hachured parcels are unavailable and there will be a note referencing the Special Provisions.

When right of way is being specialed out, the order of work has to be examined to ensure the project sequencing is not adversely affected because portions of the right of way are not available for immediate use.

700.09(9) Standard Items

When a standard item exists, it should be used. The Standard Bid Item Table is not a complete listing of standard items. It is a list of the bid items being tracked in the Unit Bid Analysis (UBA) system. Code numbers, which are referred to as Standard Item Numbers, track them.

Standard items are those items that appear in the payment statements in the *Standard Specifications*. Many of these payment statements, like the following, are written with blanks:

- "HMA for Preleveling Cl. ____ PG ____," per ton.
- "Catch Basin Type ____," per each.
- "Manhole Additional Height ____ In. Diam. Type ____," per foot.

If the blanks are filled in with the expected information and the information in the *Standard Specifications* applies, they are standard items even though they may be a size, type, or class not shown in the Standard Bid Item Table.

Minor revisions that have little or no impact on the cost can be made to the material or construction requirements in the *Standard Specifications*, and they can remain standard items. Care must be taken, however, not to mislead the contractor by making major revisions that could substantially affect the cost of the item and calling it the standard item. In these cases, it is best to develop a nonstandard item.

700.09(10) State Force Work or State-Furnished Materials

The State Force Work referenced is any and all state force labor, state-furnished materials, and/or state-furnished equipment to be paid utilizing construction dollars, unless specifically excluded as mentioned below (see Figure 700-2).

The designer shall provide written justification for all state-furnished materials and all State Force Work to be performed on all projects, in accordance with RCW 47.28.030 and RCW 47.28.035.

700.09(10)(a) RCW 47.28.030

The complete RCW reads as follows:

Contracts – State forces – Monetary limits – Small businesses, minority, and women contractors – Rules.

A state highway shall be constructed, altered, repaired, or improved, and improvements located on property acquired for right of way purposes may be repaired or renovated pending the use of such right of way for highway purposes, by contract or state forces.

The work or portions thereof may be done by state forces when the estimated costs thereof is [are] less than fifty thousand dollars and effective July 1, 2005, sixty thousand dollars: PROVIDED, That when delay of performance of such work would jeopardize a state highway or constitute a danger to the traveling public, the work may be done by state forces when the estimated cost thereof is less than eighty thousand dollars and effective July 1, 2005, one hundred thousand dollars.

When the department of transportation determines to do the work by state forces, it shall enter a statement upon its records to that effect, stating the reasons therefore.

To enable a larger number of small businesses, and minority, and women contractors to effectively compete for department of transportation contracts, the department may adopt rules providing for bids and award of contracts for the performance of work, or furnishing equipment, materials, supplies, or operating services whenever any work is to be performed and the engineer's estimate indicates the cost of the work would not exceed eighty thousand dollars and effective July 1, 2005, one hundred thousand dollars.

The rules adopted under this section:

(1) Shall provide for competitive bids to the extent that competitive sources are available except when delay of performance would jeopardize life or property or inconvenience the traveling public; and

(2) Need not require the furnishing of a bid deposit nor a performance bond, but if a performance bond is not required then progress payments to the contractor may be required to be made based on submittal of paid invoices to substantiate proof that disbursements have been made to laborers, material men, mechanics, and subcontractors from the previous partial payment; and

(3) May establish prequalification standards and procedures as an alternative to those set forth in RCW 47.28.070, but the prequalification standards and procedures under RCW 47.28.070 shall always be sufficient.

The department of transportation shall comply with such goals and rules as may be adopted by the office of minority and women's business enterprises to implement RCW 39.19 with respect to contracts entered into under this chapter.

The department may adopt such rules as may be necessary to comply with the rules adopted by the office of minority and women's business enterprises under RCW 39.19.

[1999 c 15 § 1; 1984 c 194 § 1; 1983 c 120 § 15; 1977 ex.s. c 225 § 3; 1973 c 116 § 1; 1971 ex.s. c 78 § 1; 1969 ex.s. c 180 § 2; 1967 ex.s. c 145 § 40; 1961 c 233 § 1; 1961 c 13 § 47.28.030.

Prior: 1953 c 29 § 1; 1949 c 70 § 1, part; 1943 c 132 § 1, part; 1937 c 53 § 41, part; Rem. Supp. 1949 § 6400-41, part.]

700.09(10)(b) RCW 47.28.035

The complete RCW reads as follows:

> Cost of project, defined.
>
> The cost of any project for the purposes of RCW 47.28.030 shall be the aggregate of all amounts to be paid for labor, material, and equipment on one continuous or interrelated project where work is to be performed simultaneously. The department shall not permit the construction of any project by state forces by dividing a project into units of work or classes of work to give the appearance of compliance with RCW 47.28.030.
>
> [1984 c 194 § 2.]

700.09(10)(c) Justifications

If the project is new/reconstruction on the Interstate, the justification for state-furnished materials and for State Force Work requires FHWA approval.

RCW 47.28.030 requires that WSDOT have documentation on file for all State Force Work/ Furnished Materials. The justification and estimate for work to be done by state forces and state-furnished materials is to be processed per region policy in sufficient time to allow for review and approval prior to advertising of the project. When FHWA approval is required, the justification must also include a request for federal funding participation. Also, it must be reported to the Headquarters Office of Capital Program Development and Management when State Force Work is performed on federal-aid projects.

The justification for both state-furnished materials and State Force Work must show that it is economically cost-effective to provide the materials or to perform the work with state forces. It does not matter how or when the state-furnished material was purchased or whether it was purchased through competitive bidding or not, the cost of the state-furnished material is to be incorporated into the State Force Work/Furnished Materials total costs, and the limitations per RCW 47.28.030 apply. Once an item is purchased and furnished to another contract, that item becomes state-furnished material. Refer to Figure 700-2 and the *EBASE Users Guide* for guidelines when engineering and contingencies are used (when other state agencies do the State Force Work) or when engineering and contingencies are not used (when WSDOT state forces do the work) in regard to State Force Work and for state-furnished materials.

As of July 1, 2005, the maximum total dollar value of work done by state forces per construction project, including labor, materials, and equipment, is $60,000 or up to $100,000 if it is an emergency, as stated in RCW 47.28.030. An increase in the dollar amounts in the RCW must go before the Legislature; currently, there are no additional increases built into the law.

700.09(10)(d) Blanket Approval Items

There are a few items of work that have received a blanket approval to be performed by state forces and receive FHWA funding participation. They are: striping, pavement marking, second-stage fertilizing, and one-way piloted traffic control. With blanket approval items, WSDOT must still have documentation on file, and the dollar limitations also apply to this work.

700.09(10)(e) Exceptions

When the state provides materials and/or equipment and there is NO state labor performed by state forces on the project, the dollar limitation per RCW 47.28.030 does not apply. For example, if WSDOT provides a $90,000 sign bridge, as long as there is **no** state force labor, this dollar amount can be approved. If there is **any** state force labor (even for unrelated work such as removal of silt fence) on the project that is going to be a below-the-line item, then the aggregate total of materials and labor would exceed the $60,000 per RCW 47.28.030 and therefore cannot be approved.

Work performed off the state roadway right of way **may not** be subject to RCW 47.28.030; therefore, no limit on state-furnished materials or state force labor would apply. If work is done outside the WSDOT transportation corridor (state right of way, fence line to fence line), and state force thresholds in RCW 47.28 do not apply (as with wetland mitigation sites, sundry sites, and other capital facilities), then RCW 39.04 applies. This applies only to those areas outside of and unattached to existing state highway right of way.

Work that is **not** to be considered State Force Work includes: inspection of any type; materials testing; surveying; monitoring; public relations work; or any kind of investigation or research. If state forces do these types of work, they are to be included in the engineering and contingencies. If the cost of this work is substantial, it can be used as justification to increase the engineering and contingency percentage to offset the costs.

- Inspection is defined as work performed to ensure material or contractor installations meet the specifications outlined in the contract **after** the contract has been awarded. Inspection **does not** include work performed to correct the deficiency or failure to meet specifications.
- Surveying is part of the inspection requirements. It shall be considered as construction engineering and is not subject to state force thresholds.
- Material testing is defined as work performed prior to contract award, or prior to the material being delivered to the contractor, to ensure the material meets the specifications outlined in the contract. Material testing includes diagnostic testing and/or modifications to the material or equipment to ensure compatibility and interoperability with the existing infrastructure. For example, when electronic equipment is procured, materials testing would include assembling the equipment into a system and modifying software or hardware components as necessary to ensure the system operates as specified and is compatible with existing electronic equipment and/or software (see Figure 700-2, State Force Work/Materials).

700.09(10)(f) Questions Asked by WSDOT and Answered by the Attorney General's Office (AGO)

1. **WSDOT:** If work is not related, but on the same project, does the RCW limit apply to each unrelated item of State Force Work or is all the unrelated State Force Work added together for the aggregate total for the project?

   AGO: All State Force Work activities (labor, equipment, and materials), related or not, are included in the aggregate total and are subject to state force thresholds.

2. **WSDOT:** Has the Legislature looked at the excessive increase in costs and considered raising the dollar limitation in the RCW accordingly?

   AGO: In 1999 the Legislature was approached about raising the limit for State Force Work to $250,000. Under this request, the limit was raised by $10,000 only, with a few step raises in the RCW in later years. The state Legislature would prefer work to be contracted out and the dollar limit on State Force Work kept low.

3. **WSDOT:** How does the RCW apply to contractually purchased materials used by state maintenance labor and equipment—for example, on BST projects where the aggregate is purchased through contract and stockpiled, State Force Work is requested for the labor and equipment to place the BST, and the labor and equipment is less than the dollar limitation?

   AGO: If Maintenance purchases materials (such as crushed rock), regardless of whether this material is purchase through a competitive bidding process or not, it is considered to be from a supplier and is not considered a WSDOT construction contract. Therefore, the material is included in the aggregate total of labor, equipment, and materials and is subject to state force cost thresholds.

4. **WSDOT:** What determines a contractor versus a supplier? If we have a competitively bid contract for rock chips for chip seal jobs that we can use whenever we need to in a one-year or two-year period, is this a contractor or a supplier?

   AGO: A supplier.

5. **WSDOT:** If there is no state labor, does the RCW dollar limit apply?

   AGO: If there is no state labor in the project and only state-furnished materials are being purchased, the dollar limitation per RCW 47.28.030 does not apply. If there is any State Force Work labor on the project, whether or not it is relevant to the materials acquisition, then the RCW 47.28.030 dollar limitations apply to the aggregate total.

6. **WSDOT:** If there are overruns during State Force Work on labor, material, or equipment costs that are covered under the State Force Work request and that exceed the RCW dollar limitation, is this a violation of the law? Should this be documented and, if so, how?

   AGO: A good faith effort is required to justify and document the state force request during the project development phase. If, during construction, the actual costs exceed the estimated costs, this is considered an incremental increase. If this happens on a consistent basis, the original estimate will not be considered a good faith effort and the law has not been followed.

7. **WSDOT:** Who has the authority to authorize State Force Work in excess of the monetary limit set in RCW 47.28?

   AGO: No one outside the Legislature has the authority to approve State Force Work in excess of the monetary limit set in RCW 47.28.030. Exceeding the RCW is a violation of the law. **The law would have to be changed by the Legislature to increase the monetary limit in RCW 47.28**.

8. **WSDOT:** When does State Force Work have to be documented and kept on file?

   AGO: Per the law, all State Force Work must have documentation on file justifying the work. RCW 47.28.030 states, "When the department of transportation determines to do the work by state forces, it shall enter a statement upon its records to that effect, stating the reasons therefore" (see Figure 700-2, State Force Work/Materials).

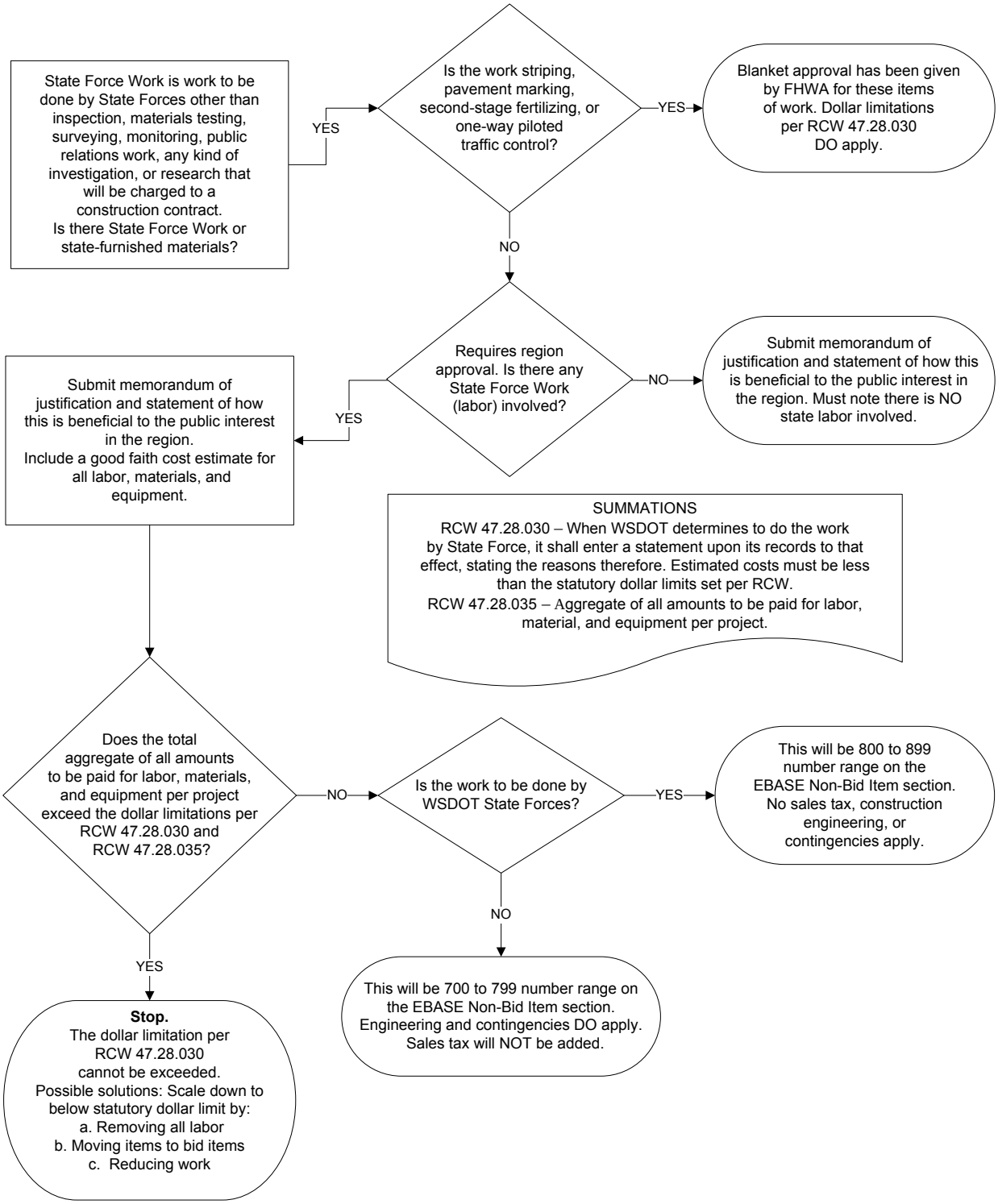

State Force Work/Materials
Figure 700-2

700.09(11) Strip Maps

Strip maps may be used on projects such as overlays, fog seal, BST, stockpiling, signing, safety, and similar projects when a great deal of detail is not required.

Many times a strip map can be used for a series of plans within a set of plans, such as for the signing series, if the signing is simple destination-type signing and requires no real detail. In most cases, by simply showing the construction centerline with stationing and the required signing information, it is possible to stack the information on the sheet such that twice the information can be displayed on each sheet. Keep in mind that most of the information shown on strip maps is not really alignment-dependent; that is, a curve in the highway is not going to affect the showing of a sign at the correct station, so the centerline can appear as a straight line on the strip map.

The use of strip maps when feasible is not only an option, but is also a recommended procedure to help reduce the total number of plan sheets in the project.

The use of photographic strip maps is allowed if the work can be shown adequately and if a clear copy can be ensured.

700.09(12) Truck Measurement of Earthwork Quantities

Truck measurement can be utilized on projects with 5,000 cubic yards or less of embankment to be constructed or when the project consists of numerous small embankment areas where cross-sectioning is not practical.

700.09(13) Truck Weigh Stations

The components of a truck weigh station for which federal funds can be used are:

- Additional right of way.
- The construction of access lanes and vehicle standing and storage areas.
- The illumination of access lanes and vehicle standing and storage areas.

The construction of the scale house and its service facilities, scale pit, and scale are not eligible for federal-aid participation.

For additional information on truck weigh stations, see the *Design Manual*.

700.09(14) Warranties and Guarantees

WSDOT may choose to include warranty clauses in federal-aid highway construction contracts as specified in Code of Federal Regulations (CFR), Title 23, Volume 1 (revised April 1, 2001), Part 635, under Subpart D – General Material Requirements Section 635.413, Guaranty and warranty clauses. An excerpt from the CFR text reads as follows:

The STD may include warranty provisions in National Highway System (NHS) construction contracts in accordance with the following:

(a) Warranty provisions shall be for a specific construction product or feature. Items of maintenance not eligible for Federal participation shall not be covered.

(b) All warranty requirements and subsequent revisions shall be submitted to the Division Administrator for advance approval.

(c) No warranty requirement shall be approved which, in the judgment of the Division Administrator, may place an undue obligation on the contractor for items over which the contractor has no control.

(d) A STD may follow its own procedures regarding the inclusion of warranty provisions in non-NHS Federal-aid contracts. There may be occasions when the regions have the need to include warranty and/or guarantee clauses in state-funded contracts. The region will notify the Construction Materials Engineer at the HQ Materials Laboratory and request concurrence with the specification prior to including the Special Provision in the contract documents.

The contractor is required to pass along to WSDOT all manufacturers' normal guarantees and warranties for products and equipment installed on the project.

700.09(15) Washington State Patrol Work Zone Enforcement and Assistance

If Washington State Patrol (WSP) use is warranted on a project, an estimated dollar amount shall be included in the project estimate as a below-the-line item. WSP enforcement duties will not be identified in the contact. If WSP assistance is to be used as a required element of the traffic control plans, it should be identified on the plans and provided as a resource to the contractor with a General Special Provision.

Refer to the *Traffic Manual*, Appendix 5.A, for more information on when and how to include WSP in a project.

A5-1 General

When addenda are needed, they should be numbered chronologically as they are compiled and sent to bidders/planholders so the number of addenda sent can be tracked. Designers need to work closely with their Region Plans Office in preparing addenda. Great care should be used to ensure all plan sheets affected by an addendum are identified and included in the addendum; one minor change can have a ripple effect on other sheets.

Contract specification revisions or new contract specifications, created while a contract is on Ad, shall be stamped by the engineer directly responsible for the work. Those stamped specifications shall be filed in the Project File for the project. The addendum, which transmits revised or new specifications, does not need to show the stamp, provided the stamped originals are in the Project File. Plan revisions or new plans (in accordance with Division 4) sent out by an addendum need to be stamped by the engineer, and copies of those stamped plans will be sent out with the addendum.

A5-2 Notes to the Designer

The following paragraph shall to be placed on all addenda:

Bidders shall furnish the Secretary of Transportation with evidence of the receipt of this addendum. This addendum will be incorporated in the contract when awarded and formally executed.

The following paragraph should be placed on an addendum when changes are made to the Proposal and the addendum does not transmit a new Proposal as an attachment to the bidders:

> *Bidders are instructed to revise pages ___ and ___ of the Proposal as revised pages have not been prepared for attachment to this addendum. If the bidder fails to make these corrections on the Proposal, the items will be corrected by the Department.*

The following example shows how to notify the bidder that the contract wage rates are to be deleted and replaced in an addendum:

> *Wage Rates:*
>
> *Federal Wage Determination WA_____, Modification___, page___, is deleted and replaced with WA02000___, Modification____, page___.*

This statement shows how the wage rate addendum would be worded when the wage rate determination is an attachment:

> *Attachment:*
>
> *Federal Wage Determination WA_____, Modification___, page___. (Rev. February___, 2002)*

A5-3 Guidelines for Preparing Addendum Plan Sheets

A5-3(1) Deletions

The item, line, figure, or detail to be deleted is completely removed from the sheet. The area where the deletion occurred shall NOT contain any addendum clouds. The deletion is to be noted in the revision block and shall be shaded. When a plan sheet requires a P.E.'s stamp, the revision block date is to be dated on or before the date it is signed by the P.E. authorizing the change.

On Summary of Quantity, Qtabs, Structure Notes, and Sign Specification sheets, delete the line item(s), but leave the row or column in place as a blank placeholder.

A5-3(2) Added/Replacement Sheets

An added sheet is a sheet that previously did not exist. It is to be numbered and inserted in its proper location, adding an alphabetical character to its sheet designation; for example, the "A" in D6, D6A, D7.

A replacement sheet is a sheet on which the changes are so massive, a cloud(s) would cover a substantial portion (over 50%) of the sheet, or the changes could not be clearly defined with a cloud(s).

These sheets are noted in the revision block by the note "Added Sheet" or "Replacement Sheet," whichever is applicable. Only the revision block shall be shaded.

A5-3(3) Revisions/Additions

The revision/addition note shall be placed in the revision block, and all revisions, including additions, shall be shaded.

A5-3(4) Addendum Cloud (for Plan/Profile/Section/Detail Sheets Only)

On CAD-produced sheets (plan view, profile view, sections view, and detail), use the cloud line tool to identify an item(s) or area(s) to be changed. To cloud an addendum, in MicroStation version V8, from the WSDOT MENU, browse to "Sheet Items > GI General Sheet Items," select "Addendum Cloud," and draw a boundary line around the item(s) or area(s) to be changed.

Addendum cloud line attributes will have an arc radius of 0.1, arc angle of 145°, line style of 0, line weight of 5, and line color of 15 (RBG value = R:120, B:120, G:120).

Refer any questions about addendum cloud(s) to your region CAD coordinator or the HQ CAE Office.

A5-3(5) Shading

On Summary of Quantity, Qtabs, Structure Notes, and Sign Specification sheets, shade the cell(s) and revision block with a gray color Red, Green, Blue (RGB) value = R:180, B:180, G:180).

All PS&E submittals for Contract Advertisement and addenda shall be only original plots from printers that use stippling to produce gray.

Reproductions or photocopies will not be allowed as they make poor quality prints when reproduced. Some variation in shade density may be noticed when comparing output from various printers.

A5-4 Examples

The following addendum examples are provided to show several of the many possible addenda that may need to be sent to amend a project once it has been advertised (Ad).

A5-4(1) Example 1

This example, titled "SR 161, Jovita Blvd. to SR 18 Widening – Stage 1, Addendum No. 3" is an actual addendum that amended the Special Provisions, the Proposal, and the Wage Rates of a past contract while it was on Ad. The example provides notes to the designer/reader (see explanations in parentheses) to inform the designer of how the changes need to be explained or shown on various documents, in order to provide the necessary information to the bidders/planholders. Note: In this example, the proposal, plans, and wage rate attachments showing the changes are not included.

A5-4(2) Example 2

This example, titled “SR 520 Bike Path – Bellevue to Redmond, Addendum No 1” is an actual addendum that amended the Special Provisions, the Plans, and the Proposal of a past contract while it was on Ad. In this example, only the addendum letter and proposal are included.

A5-4(3) Plans Sheets

1. **Example A5-1**

   This example shows how a Structure Note sheet would use addendum shading. This same type of shading would also be used in Summary of Quantity, Qtabs, and Sign Specification sheets.

2. **Example A5-2**

   This example shows the addendum cloud on a Drainage Plan sheet.

3. **Example A5-3**

   This example shows the addendum cloud on a Paving Plan sheet.

Appendix 6 Determination of Contract Time

A6-1 Background

A6-1(1) Contract Time

Contract time is the maximum time allowed in the contract for completion of all work contained in the contract documents. Contract time often arises as an issue when the traveling public is being inconvenienced and the contractor does not appear to be aggressively pursuing the work. There may be a number of reasons for a project to appear dormant, such as weather limitations, concrete curing times, materials arriving late, and so on. However, all too often the causes are traceable to excessive time originally established by the contracting agency to complete the project or poor contractor scheduling of operations.

A6-1(2) Duration of Construction Projects

The duration of highway construction projects in many instances is more critical today than it was in the past. Some of the reasons are:

1. Traffic volumes on most highways are generally continuing to increase. This is creating a greater impact on the motoring public in both safety considerations and costs.
2. Proper selection of contract time allows for optimizing construction engineering costs and other resources.

A6-2 Elements in Determining Contract Time

A6-2(1) Written Procedures

Written procedures for the determination of contract time are important so that production rates and other considerations are applied uniformly throughout the state. These procedures should account for significant geographic and climatic differences throughout the state, which could affect contractor productivity rates. The fact that some types of work can be undertaken during certain times of the year while other types of work cannot should be addressed. Where applicable, the effects of working under traffic also need to be considered.

A6-2(2) Reasonableness of Contract Time

The reasonableness of the contract time included in contracts is important. If time is insufficient, bid prices may be higher and there may be an unusual number of time overruns and contractor claims. If, on the other hand, the time allowed is excessive, there may be inefficiencies (costs) by both the state and the contractor. Also, the public may be inconvenienced unnecessarily and subjected to traveling on roadways where safety is less than desirable for an extended period of time. In establishing contract time, the state should strive for the shortest feasible traffic interruptions to the road user. If the time set is such that all work on a project may be stopped for an extended period—not including necessary winter shutdowns—and the contractor can still complete the project on schedule, it means the contract time allowed was excessive. There may be some exceptions, as indicated in “Factors That Influence Contract Time” and “Other Factors That Influence Contract Time” below.

A6-2(3) Reasonableness of Contract Time

For most projects, the essential elements in determining contract time are:

1. Establishing production rates for each controlling item.
2. Adapting production rates to a particular project.
3. Computing of contract time with a progress schedule.

EXPERIENCE AND JUDGMENT SHOULD BE USED IN THE FINAL DETERMINATION OF CONTRACT TIME.

A6-3 Establishing Production Rates

A6-3(1) Production Rate

A production rate is the amount or quantity produced/constructed over a specific time period. The application of realistic production rates is key in setting an appropriate contract completion time. Production rates for the same item of work will vary considerably across the state, from small to large construction projects and from rural to urban areas. Production rate ranges should be established based on project size, type (such as grading and structures), and location (urban or rural) for controlling items of work.

Typical production rates follow this text.

A6-4 Factors That Influence Contract Time

A6-4(1) Determining Contract Time

In addition to production rates, the following items should be considered when determining contract time:

1. Effects of the maintenance of traffic requirements on scheduling and the sequence of operations.
2. Curing time and waiting periods between successive paving courses or between concrete placement operations, as well as specified embankment settlement periods.
3. Seasonal limitations for certain items need to be considered when determining both the number of days the contractor will be able to work and the production rates.
4. Conflicting operations of adjacent projects, both public and private.
5. Review time for falsework plans, shop drawings, post-tensioning plans, mix designs, and so on.
6. Time for fabrication of structural steel and other specialty items.
7. Time for fabrication and procurement of signal and illumination equipment.
8. Coordination with utilities.
9. Time to obtain permits.
10. Effects of permit conditions and/or restrictions.
11. Restrictions for nighttime and/or weekend operations.
12. Time of year of the letting as well as duration of the project.

13. Special local area events (such as parades, festivals, athletics, fairs, and races).
14. Canadian and neighboring states' holidays.
15. Location.
16. Work hour/noise restrictions.
17. Other pertinent items as determined by the designer.

A6-4(2) Working Days

Zero working days may be indicated during the winter months, while 20 to 22 working days per month are common during the summer. Bridge work is generally assigned the greatest number of working days in a month. If historical working day data are not available, historical rain and temperature data are available from the National Weather Service to develop average working days per month.

A6-5 Adapting Production Rates to a Particular Project

A6-5(1) Management Decisions

Before time durations for individual work items can be computed, certain project-specific information should be determined and some management decisions made. A determination should be made relative to the urgency of the completion of the proposed project. The traffic volumes affected and the effect of detours should be analyzed. The size and location of the project should be reviewed as well as the effects of staging, working double shifts, the feasibility of night work, and the restrictions on closing lanes. Also, the availability of material for controlling items of work should be investigated. For example, it might be appropriate to consider the need for multiple crews on a specific item to expedite the completion when there are exceptionally large quantities or when there is a large impact on traffic.

A6-5(2) Accelerating Project Completion

Procedures that would accelerate project completion should be considered when construction will affect traffic substantially or when project completion is crucial. This is especially important in urban areas that have high traffic volumes. Realizing that public inconvenience needs to be minimized, the production rates applied in setting the contract time for these types of projects should be based on that of an efficient contractor working more than 8 hours per day, more than 5 days per week, and possibly with additional workers. The development and application of a separate set of production rates for these critical types of projects is recommended.

A6-6 Computation of Contract Time: Developing a Progress Schedule

A6-6(1) Progress Schedule

The contract time for most construction projects can be determined by developing a progress schedule. The progress schedule basically shows the production durations associated with the chosen production rates for the items of work. The time to complete each critical item (those items essential to total project completion) of work included in the progress schedule is computed based on the production rates applicable to that project. Critical items should be arranged by chronological sequence of construction operations. Minor items that may be performed concurrently with critical items do not need to be analyzed.

A6-6(2) Starting and Ending Time

In determining a progress schedule, it should be remembered that the starting and ending time for each critical item needs to be based on the earliest time in which work on that item will begin and how long it will take to complete. The earliest start time for each activity will be determined by the completion of the activities that precede it, allowing for the fact that some activities can begin before the preceding activity is entirely completed. Along with the time established for all critical items, additional time should be allowed in the contract for initial mobilization.

A6-7 Critical Path Method (CPM)

A6-7(1) Using CPM to Determine Number of Working Days

The CPM must be used to determine the number of working days. The CPM used to determine working days for a project shall be transmitted to the Plans Office with the Plans, Specifications, and Estimates (PS&E) transmittal.

A6-7(2) Using CPM to Determine Contract Time

A brief description of the application of the CPM technique to determine contract time is as follows:

1. The first step in applying the CPM method is to separate a project into the tasks or operations necessary for project completion. Each of these separate operations or processes is called an activity. The completion of an activity is called an event.
2. Once all the activities necessary to complete a project have been listed, the relationship of these activities to one another needs to be determined. In some cases, several activities can be undertaken concurrently. At other times, certain activities cannot be undertaken until others have been completed. In determining the sequence of operations, the question needs to be asked: "What needs to be done before proceeding with this activity, and what can be done concurrently?" Every activity has a definite event to mark its relationship with others, with respect to completing a project.
3. In working with this procedure, a network (a diagrammatic representation of the project to be undertaken) is developed. The network shows the correct sequence and relationship to activities and events. Each separate activity is shown by its own arrow and the start of all activities leaving a node depends on the completion of all activities entering a node, Therefore, the event represented by any node is not achieved until all activities leading to the node have been completed. The resulting diagram will be a schematic representation of a project, showing all the relevant activates and events in correct sequence.
4. An actual time can be set to each activity based on production rates and other appropriate factors. The time to complete each activity is shown on each arrow to indicate the duration. The "early start" for each activity is the earliest point in time that it will start, provided that all activities before it have finished. This is not necessarily the point in time it will start; however, it is the earliest time it can start. The "early finish" for an activity is merely the duration of the activity after its "early start." As is the case with the "early start," this is not necessarily the point in time the work represented by the activity will be over, but is the earliest point in time it can occur. A "finish" date in CPM is defined as the first day upon which no further work is to be done for an activity; it is the first day after the physical completion of the activity. The completion time of a project is, therefore, the sum of the longest time path through the network leading to completion of the project.

5. The optimum time and cost for performing the project can be evaluated by assigning resources (such as equipment, labor hours, and materials) to each activity. The diagrammatic representation of the project then provides a means to evaluate the costs incurred with respect to the completion of specified activities.

A6-7(3) Advantages of Using the CPM

This brief summary gives an indication of how this method can be applied to each project. Several advantages of using such a schedule are:

1. It is an accurate technique for determining contract time and verifying that the project can be constructed as designed and with identified construction sequences.
2. It is a useful tool for project managers in monitoring a project, especially when dealing with relationships of work items with respect to time.
3. Activities responsible for delays can be identified and corrective measures to keep a project on schedule can be determined.

A6-7(4) Drawbacks of Using the CPM

Several drawbacks of CPM schedules are:

1. They need to be developed by someone knowledgeable in using CPM scheduling.
2. They need to be updated regularly to ensure the contractor's operation is accurately represented.

A6-7(5) WSDOT Classes in Design Scheduling

Two classes offered by WSDOT for design scheduling are listed below:

1. **CB5** GEN: Intro to Scheduling
   - See ATMS for course description
2. **CIL** DES: Contract Working Days Requires CB5
   - See ATMS for course description

Courses may change, so designers should always check with their region trainers for the latest courses offered.

A6-8 Other Factors That Influence Contract Time

A6-8(1) Conditional Notice to Proceed

Construction time on some projects, such as illumination or signalization, may be governed by the long lead time necessary to obtain materials. To minimize traffic disruption, the contract may specify a completion date several months after the notice to proceed, but the contractor should be limited to a relatively short on-site time. This may be accomplished by including in the contract a "conditional notice to proceed" clause, which would allow a specified amount of time to purchase and assemble materials. This would be followed by issuance of a full work order, which would be issued upon expiration of the assembly period or sooner, at the contractor's request.

A6-8(2) Scheduling the Contract in Consideration of Other Work

Another approach in which greater flexibility may be allowed would be to include in the contract a combination of an overall completion date and a specified number of consecutive available working days, which would be changed once construction had started. It is sometimes advantageous to allow a contractor to set the actual construction dates within a given construction season. An example would be a typical small paving job that may only require the contractor to be on-site for a few weeks. For a project let in the spring, the completion date can be set for the end of the construction season, but the contractor's on-site time may be limited in the contract to a month. This allows the contractor to schedule this contract with consideration of other work the contractor may have in the same paving season. Net benefits include lower project inspection costs and a minimal disruption to traffic.

A6-8(3) Dividing the Project into Phases

An option that may be applicable to some projects is dividing a project into phases, with each phase having its own completion date. This may be applicable when coordinating with other projects or activities in the area in order to meet tight deadlines.

A6-9 Production Rate Tables

The following production rates should be used in computing contract completion time. Production rates vary depending on the amount of traffic, the complexity of the project, and/or other restrictions.

Rates have been produced based on data furnished by districts with disregard to the size or complexity of the project or the quantity of a particular item.

Generally, large quantities in a particular project will have high production rates.

PREPARATION			
Item	**Units**	**Daily Production Rate (based on 8-hour day)**	
		West	**East**
Mobilization	Days	3 to 6	3 to 6
Clearing and Grubbing	Ac.	1	3
Stripping Inc. Haul	C.Y.	1	3
Removing Manhole	Ea.	3	3
Removing Drainage Structure	Ea.	4	4
Removing Conc. Inlet	Ea.	6	6
Removing Bituminous Pavement	S.Y.	1800	3000
Removing Cement Conc. Pavement	S.Y.	600	600
Removing Asphalt Conc. Pavement	S.Y.	2500	3000
Removing Cem. Conc. Curb & Gutter	L. F.	1200	1200
Removing Asphalt Conc. Curb	L. F.	2000	2000
Removing Cement Conc. Sidewalk	S.Y.	250	400
Removing Guardrail	L.F.	1000	1200
Removing Guardrail Anchor	Ea.	8	10
Removing Paint Line	L.F.	2000	2500
Removing Plastic Line	L.F.	900	1000
Removing Paint Traffic Marking	Ea.	200	100
Removing Plastic Traffic Marking	Ea.	150	75
Removing Raised Pavement Markers	Hund.	8	2.0
Removing Chain Link Fence	L.F.	1000	1000
Removing Wire Fence	L.F.	4000	4000

Preparation Items

1. Clearing and grubbing rates are very dependent on density and type of vegetation.
2. Some of these items may be included in roadway excavation work.
3. If removal items are to be salvaged, the production rate may be less.
4. Proximity of waste site may be a factor.

GRADING

Item	Units	Daily Production Rate (based on 8-hour day)	
		West	East
Roadway Excavation			
Range	C.Y.	600-3000	1000-4000
Normal	C.Y.	1500	2000
Pavement Repair Excavation Inc. Haul	C.Y.	70-300	300-500
Embankment Compaction			
Range	C.Y.	850-5000	1500-6000
Normal	C.Y.	1700	2000
Gravel Borrow Inc. Haul			
Range	Ton	800-3500	1000-4000
Normal	Ton	1600	2000

Grading Items

1. Pavement repair excavation usually requires backfill and pavement replacement the same day.
2. Consideration must be given as to whether trucks or scrapers will be used.
3. Embankment compaction is usually in conjunction with roadway excavation or gravel borrow.
4. Rock cuts would decrease roadway excavation production rates.
5. Proximity of pit and waste sites may be a factor.

STOCKPILING (Aggregate Production)

Item	Units	Daily Production Rate (based on 8-hour day)	
		West	East
Ballast	Ton	1200-3000	1200-1500
Crushed Surf. Base Course	Ton	1200-3000	1200-1500
Crushed Surf. Top Course	Ton	1200-2700	1200-2700

Stockpiling Item

1. Aggregate production is dependent on the source. Time must be allowed for drilling and blasting to get ahead of crushing operation in a quarry site.

DRAINAGE			
Item	**Units**	**Daily Production Rate (based on 8-hour day)**	
		West	**East**
Ditch Excavation			
Range	C.Y.	125-1000	200-1000
Normal	C.Y.	400	500
Concrete Inlet	Ea.	4	4
Cement Conc. Gutter	L.F.	250-400	250-400
Asphalt Conc. Gutter	L.F.	600-1000	600-1000
Hand-Placed Rip Rap	C.Y.	30-50	30-50
Rip Rap			
Range	Ton	70-500	70-500
Normal	Ton	300	300
Quarry Spalls			
Range	Ton	100-600	100-600
Normal	Ton	400	400
End Section W/Bars	Ea.	3	3
Flared End Section	Ea.	7-20	7-20
Underdrain Pipe			
Range	L.F.	100-500	100-500
Normal	L.F.	200	200
Drain Pipe			
Range	L.F.	100-400	100-400
Normal	L.F.	200	200
Culvert Pipe 12”-36”			
Range	L.F.	50-300	100-300
Normal	L.F.	100	150
Culvert Pipe 42”-72”	L.F.	20-100	50-100
Stru. Plate Pipe	L.F.	50-100	50-100
Stru. Plate Pipe Arch	L.F.	50-100	50-100
Steel Underpass	L.F.	50-100	50-100

Drainage Items

1. End sections are usually incidental to pipe runs.
2. Pipe production rates can vary due to depth of structure excavation.

STORM SEWERS			
Item	**Units**	**Daily Production Rate (based on 8-hour day)**	
		West	**East**
Catch Basin Type 1	Ea.	5	5
Catch Basin Type 2 48”-54”	Ea.	2	2
Catch Basin Type 2 72”-96”	Ea.	1	1
Catch Basin Type 3	Ea.	2	2
Testing Storm Sewer Pipe			
Range	L.F.	500-2500	500-2500
Normal	L.F.	1000	1000
Storm Sewer Pipe 12”-36”			
Range	L.F.	300-1500	500-2000
Normal	L.F.	800	1500
Storm Sewer Pipe 42”-72”	L.F.	50-200	50-200

Storm Sewer Items

1. Pipe production rates can vary due to depth of structure excavation.
2. Testing production rates are dependent on pipe sizes (large diameter pipe requires more time then small diameter pipe).

SANITARY SEWER			
Item	**Units**	**Daily Production Rate (based on 8-hour day)**	
		West	**East**
Testing Sewer Pipe			
Range	L.F.	500-2500	500-2500
Normal	L.F.	1000	1000
Sewer Pipe 6”-48”	L.F.	200-400	200-400

Sanitary Sewer Items

1. Pipe production rates can vary due to depth of trench excavation.
2. Conflicts with existing utilities can cause reduced production rates.
3. Testing production rates are dependent on pipe sizes (large diameter pipe requires more time then small diameter pipe).

WATER LINES

Item	Units	Daily Production Rate (based on 8-hour day)	
		West	East
Installing Valves	Ea.	3	3
Hydrant Assembly	Ea.	2	2
Resetting Existing Hydrant	Ea.	2	2
Service Connection	Ea.	3.5	3.5
Water Main			
Range	L.F.	100-800	100-800
Normal	L.F.	300	300

Water Line Items

1. Water main production rates can vary due to depth of excavation.
2. Time must be allowed for cleaning and testing.
3. Conflicts with existing utilities can cause reduced production rates.

STRUCTURE

See the *Bridge Design Manual* for construction time rates.

SURFACING

Item	Units	Daily Production Rate (based on 8-hour day)	
		West	East
Ballast	Ton	1000-3000	1000-3000
Gravel Base	Ton	1000-3000	1000-3000
Crushed Surf. Base Course	Ton	1000-3000	1000-3000
Crushed Surf. Top Course	Ton	500-2000	500-2000

Surfacing Items

1. Shoulder work can reduce production rates.
2. Irregular areas can reduce production rates.

BITUMINOUS SURFACE TREATMENT

Item	Units	Daily Production Rate (based on 8-hour day)	
		West	East
Processing and Finishing			
Range	Mile	0.25-2	0.25-2
Normal	Mile	0.75	0.75
New Construction			
Range	Mile	1-7	1-7
Normal	Mile	5	5
Seal Coats			
Range	Mile	3-10	3-10
Normal	Mile	8	8

CEMENT CONCRETE PAVEMENT

Item	Units	Daily Production Rate (based on 8-hour day)	
		West	East
Cement Conc. Pavement	C.Y.	1200	1200
Bridge Approach Slab	S.Y.	25	25

Cement Concrete Pavement Items

1. Concrete paving rates are based on a single drum batch plant. A single drum batch plant produces 10 CY per minute, with 90% efficiency.
2. Concrete paving “Rule of Thumb” is 1 mile of 24-foot-wide pavement per day (slip form).
3. Unfinished concrete pavement usually has irregular areas that require more forming and handwork.
4. Allow time for forming, if required, and curing.
5. Cement Conc. Approaches are usually incidental to sidewalk work.

HOT MIX ASPHALT

Item	Units	Daily Production Rate (based on 8-hour day)	
		West	East
Preparation of Untreated Roadway	Mile	0.5-2	0.5-2
Planing Bituminous Pavement			
Range	S.Y.	7000-13,000	7000-13,000
Normal	S.Y.	9000	9000
Hot Mix Asphalt for Prelevel			
Range	Ton	500-1500	500-2000
Normal	Ton	700	1500
HMA for Pavement	Ton	1200-2200	1500-3000

Asphalt Concrete Pavement Items

1. Time may be required for road approaches.
2. Night work will affect paving production.
3. Requirements to plane/pave back in the same day will affect project time.

IRRIGATION AND WATER DISTRIBUTION

Irrigation and Water Distribution Items

1. Lump Sum…Contacts

EROSION CONTROL AND PLANTING

Item	Units	Daily Production Rate (based on 8-hour day)	
		West	East
Seed Fert. and Mulching			
Range	Ac.	4-10	5-20
Normal	Ac.	5	8
Preparation for Planting			
Range	S.Y.	2000-5000	2000-5000
Normal	S.Y.	3000	3000
Sod Installation	S.Y.	800-2750	800-2750
Seeded Lawn Installation			
Range	S.Y.	2000-18,000	2000-18,000
Normal	S.Y.	2400	2400
Mulching, With Binding Agent	C.Y.	360	360

TRAFFIC			
Item	**Units**	**Daily Production Rate (based on 8-hour day)**	
		West	**East**
Cement Conc. Curb	L.F.	1500	3000
Beam Guardrail			
Range	L.F.	450-1850	450-1850
Normal	L.F.	750	750
Beam Guardrail Anchor	Ea.	5	5
Raising Existing Beam Guardrail	L.F.	1500	1500
Precast Conc. Barrier	L.F.	1000-2000	1000-2000
Cast-In-Place Barrier	L.F.	100-800	100-800
Temp. Conc. Barrier	L.F.	1000-2000	1000-2000
Removing & Resetting Conc. Barrier	L.F.	600-1200	1000-2000
Flexible Guideposts	Ea.	80-160	80-160
Paint Line	L.F.	14,000-100,000	14,000-200,000
Plastic Line	L.F.	400	2200
Raised Pavement Marker	Hund.	8	8
Asphalt Rumble Strips	L.F.	20,000	20,000

Traffic Items

1. Allow time for forming and curing of concrete work.
2. Pavement-marking production rates will decrease in channelization, intersection, and interchange areas.

SIGNAL/ILLUMINATION	
Four-Pole Signal Intersection	10-20 days
Illumination System Includes the following work: • Excavation • Concrete • Cure time • Plumbing • Conduit • Wiring	5 days per pole
Signal/Illumination Items 1. For material procurement, use four (4) months minimum. 2. These would be noncharged workdays in most cases. 3. Revising/modifying existing system may warrant additional time. 4. Salvaging existing equipment may warrant additional time. 5. On projects where the electrical work is a small part of the overall work, it is doubtful that this work would be critical.	

SIGNING	
Sign Installation	
• Cantilever Sign Structure	2 days
• Sign Bridge	5 days
• Overhead Structure	2 days
• Wood Posts	15/day
• Metal Posts (concrete base)	4/day
Fabrication	
• Signs	500 ft^2/day
• Cantilever Sign Structure	120 days
• Sign Bridge Structure	120 days
Signing Items 1. Structure fabrication time includes approval of shop plans. 2. Fabrication of multiple structures would take less time.	

OTHER ITEMS			
Item	**Units**	**Daily Production Rate (based on 8-hour day)**	
		West	**East**
Monument Case and Cover	Ea.	8	8
Conc. Slope Protection	S.Y.	100	100
Chain Link Fence	L.F.	250-700	250-700
Wire Fence			
Range	L.F.	500-2000	500-2000
Normal	L.F.	1000	1000
Glare Screen			
Range	L.F.	100-1000	300-1900
Normal	L.F.	350	1100
Gabion Cribbing			
Range	C.Y.	20-110	20-110
Normal	C.Y.	40	40
Adjust Drain Structure	Ea.	4-11	4-11
Adjust Manhole	Ea.	4	4
Manhole Under 12 Ft.	Ea.	1.5	1.5
Manhole Over 12 Ft.	Ea.	1	1
Adjust Catch Basin	Ea.	4-12	4-12
Adjust Valve Box	Ea.	4-10	4-10

Other Items

1. Fencing production rates will vary with terrain, groundwater, and alignment.