the roadway surface to the bottom of the signal housing with 12-inch sections are shown in Figure 850-1.

Distance	Signal Display	Maximum Height
Signal displays 40 feet from the stop bar	Vertical 3 section	17.3 feet
	Vertical 4 section	16.9 feet
	Vertical 5 section*	16.5 feet
Signal displays 45 feet from the stop bar	Vertical 3 section	19.1 feet
	Vertical 4 section	17.9 feet
	Vertical 5 section*	16.8 feet
Signal displays 50 feet from the stop bar	Vertical 3 section	20.9 feet
	Vertical 4 section	19.7 feet
	Vertical 5 section*	18.5 feet
Signal displays 53 to 150 feet from the stop bar	Vertical 3 section	21.9 feet
	Vertical 4 section	20.7 feet
	Vertical 5 section*	19.6 feet
* Note: The 5 section cluster display is the same height as a vertical 3-section signal display.		

Signal Display Maximum Heights
Figure 850-1

Install an advanced signalized intersection warning sign assembly to warn motorists of a signalized intersection when either of the two following conditions exists:

- The visibility requirements in Table 4-1 of the MUTCD are not achievable.
- The 85th percentile speed is 55 mph or higher and the nearest signalized intersection is more than two miles away.

This warning sign assembly consists of a W3-3 sign, with Type IV reflective sheeting and two continuously flashing beacons. Locate the sign in advance of the intersection in accordance with Table II-1 (Condition A) of the MUTCD.

(9) Signal Supports

Signal supports for vehicle displays consist of metal vertical shaft standards (Type I), cantilevered mast arm standards (Type II, Type III, and Type SD Signal Standards), metal strain poles (Type IV and Type V Signal Standards), or timber strain poles. See the Standard Plans. Mast arm installations are preferred because they provide greater stability for signal displays in high wind areas and reduce maintenance costs. Preapproved mast arm signal standard designs are available with arm lengths up to 65 ft. Use mast arm standards for permanent installations unless display requirements cannot be met. Metal strain poles are allowed when signal display requirements cannot be achieved with mast arm standards or the installation is expected to be in place less than 5 years. Timber strain pole supports are generally used for temporary installations that will be in place less than 2 years.

Pedestrian displays can be mounted on the shafts of vehicle display supports or on individual vertical shaft standards (Type PS). The push buttons used for the pedestrian detection system can also be mounted on the shafts of other display supports or on individual pedestrian push button posts. Do not place the signal standard at a location that blocks pedestrian or wheelchair activities. Locate the pedestrian push buttons so they are ADA accessible to pedestrians and persons in wheelchairs.

Terminal cabinets mounted on the shafts of mast arm standards and steel strain poles are recommended. The cabinet provides electrical conductor termination points between the controller cabinet and signal displays that allows for easier construction and maintenance. Terminal cabinets are usually located on the back side of the pole to reduce conflicts with pedestrians and bicyclists.

In the placement of signal standards, the primary consideration is the visibility of signal faces. Place the signal supports as far as practicable from the edge of the traveled way without adversely affecting signal visibility. The MUTCD provides additional guidance for locating signal supports. Initially, lay out the location for supports for vehicle display systems, pedestrian detection systems, and pedestrian display systems independently to determine the optimal location for each type of support. If conditions allow and optimal locations are not compromised, pedestrian displays and pedestrian detectors can be installed on the vehicular display supports.

Responsibility for Various Types of Facilities on State Highways				
Area	**Responsibility**	**Emergency vehicle signals**	**Traffic signals, school signals, & intersection control beacons**	**Reversible lane signals & moveable bridge signals**
Cities with less than 22,500 population	Finance Construct Maintain Operate	ESD(1) ESD(1) ESD(1) ESD(1)	State State State State	State State State State
Cities with 22,500 or greater population	Finance Construct Maintain Operate	ESD(1) ESD(1) ESD(1) ESD(1)	City(2) City(2) City(2) City(2)	City(2) City(2) City(2) City(2)
Beyond corporate limits	Finance Construct Maintain Operate	ESD(1) ESD(1) ESD(1) ESD(1)	State County(3) State State State	State State State State
Access control	Finance Construct Maintain Operate	ESD(1) ESD(1) ESD(1) ESD(1)	State State State State	State State State State

Notes:

(1) ESDrefers to the applicable Emergency Service Department.

(2) State highways without established limited access control. See 850.04(2)b.

(3) See 850.04(2)d.

Responsibility for Facilities

Figure 850-3

Advance copy. Will become official when published. (Scheduled for Spring 2008.)

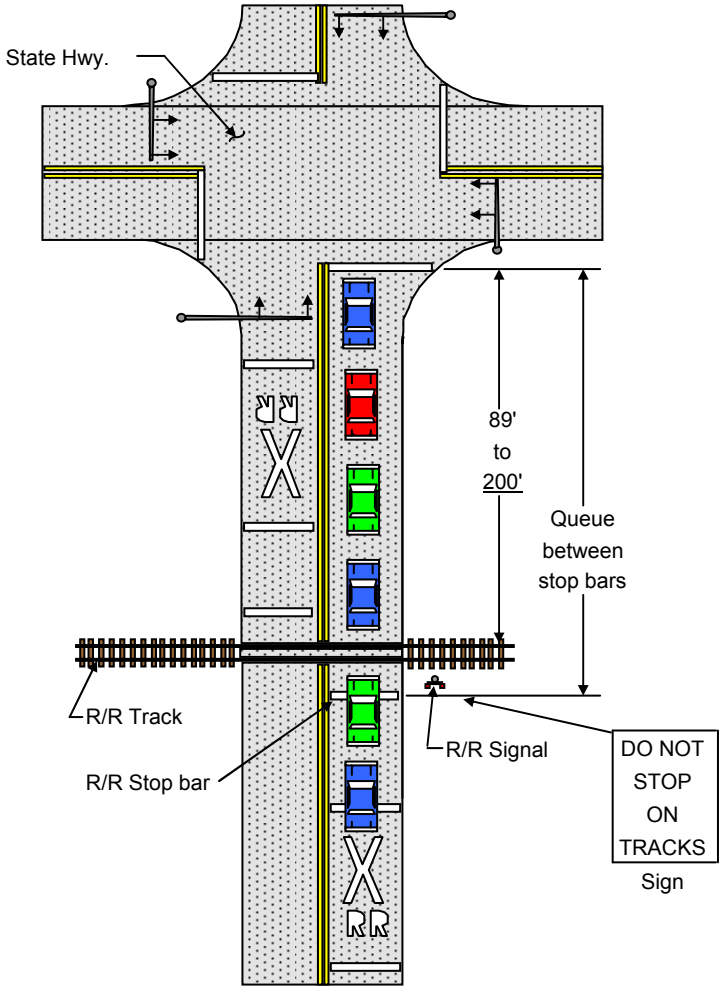

Railroad Crossing more than 88 feet from Intersection

Intersections With Railroad Crossings

Figure 850-11b

Given: Figures 850-14a and 850-14b, and the following diagram.

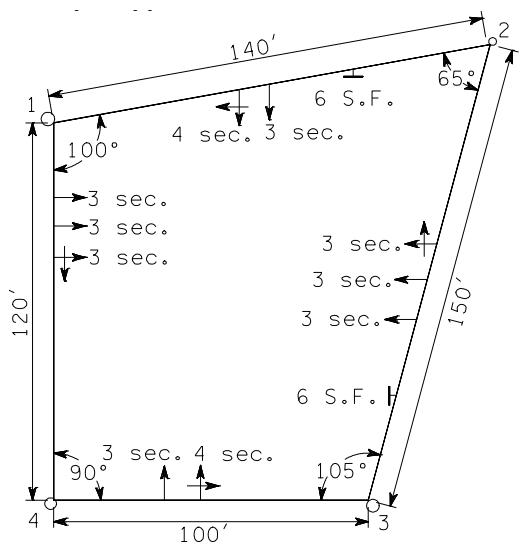

Determine the following:

Cable Tensions (T)
Pole Loads (PL)
Pole Classes
Foundation Depths (D)

Step 1. Span lengths given above.

Step 2. Calculate (P) and (G) values.

Span 1-2, n = 3

7 sections x 40 lbs/sec	=	280 lbs
6 s.f. sign x 6.25 lbs/s.f.	=	38 lbs
Total (P)	=	318 lbs
G = P/n = 318/3	=	106 lbs

Span 2-3, n = 4

9 sections x 40 lbs/sec	=	360 lbs
6 s.f. sign x 6.25 lbs/s.f.	=	38 lbs
Total (P)	=	398 lbs
G = P/n = 398/4	=	100 lbs

Span 3-4, n = 2

7 sections x 40 lbs/sec	=	280 lbs
Total (P)	=	280 lbs
G = P/n = 280/2	=	140 lbs

Span 4-1, n = 3

9 sections x 40 lbs/sec	=	360 lbs
Total (P)	=	360 lbs
G = P/n = 360/3	=	120 lbs

Step 3. Determine Cable Tensions (T) values

Span	Length	G	Chart	n	min n	T
1-2	140'	106 lbs	3	3	4	3000 lbs
2-3	150'	100 lbs	3	4	4	2900 lbs
3-4	100'	140 lbs	2	2	3	2800 lbs
4-1	120'	120 lbs	2	3	3	2500 lbs

Step 4.
Calculate (PL) values by computing the vector resultant of the (T) values.

$$a = \sqrt{b^2 + c^2 - 2bc(\cos A)}$$

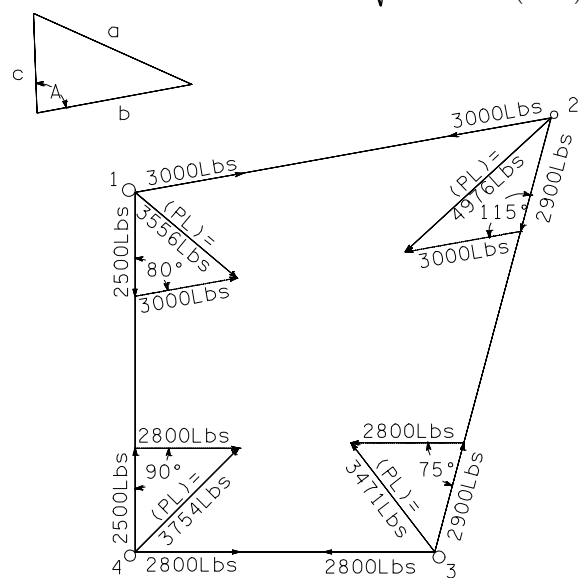

Step 5.
Select the pole class from the Foundation Design Table (Figure 850-14a).

Pole Number	(PL)	Pole Class
1	3556 lbs	3700 lbs
2	4976 lbs	5600 lbs
3	3471 lbs	3700 lbs
4	3754 lbs	4800 lbs

Step 6.
Calculate the required foundation depths.
Given: (S) = 1000 psf

$$D = a\frac{DT}{\sqrt{S}}$$

			Foundation Depths (D)		
Pole No.	Pole Class	DT	3' Rd (a = 50)	4' Rd (a = 43)	3' Sq (a = 41)
1	3700 lbs	8'	13'	11'	11'
2	5600 lbs	10'	16'	14'	13'
3	3700 lbs	8'	13'	11'	11'
4	4800 lbs	9'-6"	15'	13'	13'

Strain Pole and Foundation Selection Example
Figure 850-15

Advance copy. Will become official when published. (Scheduled for Spring 2008.)