Technical Report Documentation Page

1. Report No.	2. Government Accession No.	3. Recipient's Catalog No.
FHWA/TX-05/0-4692-1		

4. Title and Subtitle	5. Report Date
PORTABLE CONCRETE TRAFFIC BARRIER FOR MAINTENANCE OPERATIONS	May 2005
	6. Performing Organization Code
7. Author(s) Roger P. Bligh, Nauman M. Sheikh, Wanda L. Menges, and Rebecca R. Haug	8. Performing Organization Report No. Report 0-4692-1
9. Performing Organization Name and Address Texas Transportation Institute The Texas A&M University System College Station, Texas 77843-3135	10. Work Unit No. (TRAIS)
	11. Contract or Grant No. Project 0-4692
12. Sponsoring Agency Name and Address Texas Department of Transportation Research and Technology Implementation Office P.O. Box 5080 Austin, Texas 78763-5080	13. Type of Report and Period Covered Technical Report: September 2003 – August 2004
	14. Sponsoring Agency Code

15. Supplementary Notes

Project performed in cooperation with the Texas Department of Transportation and the Federal Highway Administration.
Project Title: Development of Portable Concrete Traffic Barriers for Maintenance Operations
URL: http://tti.tamu.edu/documents/0-4692-1.pdf

16. Abstract

The objective of this project is to develop and test a portable barrier system for high-speed applications that can be easily transported and erected by Texas Department of Transportation (TxDOT) maintenance forces using readily available equipment such as a front-end loader. Consideration was given to factors such as segment length, segment weight, connection method, barrier constructability, and dynamic barrier deflection. A deflection constraint of 3 ft was imposed by the project panel.

Based on the results of the testing and evaluation reported herein, the new precast, cross-bolt, F-shape concrete traffic barrier with 10-ft barrier segments is considered suitable for implementation on high-speed roadways. The cross-bolt connection system adapted for use in the new barrier helps limit dynamic deflection during an impact. When subjected to a crash test with an impact severity 15 percent greater than currently required in *NCHRP Report 350*, the barrier deflected only 27 inches. This is the lowest deflection of any free-standing, portable concrete barrier approved to *NCHRP Report 350* requirements other than TxDOT's X-bolt barrier with 30-ft segments. The low deflection and ease of placement and repair make the barrier well suited for maintenance and work zone operations.

17. Key Words	18. Distribution Statement
Concrete Median Barriers, CMB, Portable Concrete Barriers, PCB, F-Shape, New Jersey Shape, Safety Shape, Crash Testing, Roadside Safety	No restrictions. This document is available to the public through NTIS: National Technical Information Service Springfield, Virginia 22161 http://www.ntis.gov

19. Security Classif.(of this report)	20. Security Classif.(of this page)	21. No. of Pages	22. Price
Unclassified	Unclassified	70	

Form DOT F 1700.7 (8-72) **Reproduction of completed page authorized**

PORTABLE CONCRETE TRAFFIC BARRIER FOR MAINTENANCE OPERATIONS

by

Roger P. Bligh, P.E.
Associate Research Engineer
Texas Transportation Institute

Nauman M. Sheikh
Assistant Transportation Researcher
Texas Transportation Institute

Wanda L. Menges
Associate Research Specialist
Texas Transportation Institute

and

Rebecca R. Haug
Assistant Research Specialist
Texas Transportation Institute

Report 0-4692-1
Project 0-4692
Project Title: Development of Portable Concrete Traffic Barriers for Maintenance Operations

Sponsored by the
Texas Department of Transportation
In Cooperation with the
Federal Highway Administration

May 2005

TEXAS TRANSPORTATION INSTITUTE
The Texas A&M University System
College Station, Texas 77843-3135

DISCLAIMER

The contents of this report reflect the views of the authors, who are responsible for the facts and the accuracy of the data, and the opinions, findings, and conclusions presented herein. The contents do not necessarily reflect the official view or policies of the Texas Department of Transportation (TxDOT), Federal Highway Administration (FHWA), The Texas A&M University System, or the Texas Transportation Institute. This report does not constitute a standard, specification, or regulation, and its contents are not intended for construction, bidding, or permit purposes. In addition, the above listed agencies assume no liability for its contents or use thereof. The names of specific products or manufacturers listed herein do not imply endorsement of those products or manufacturers. The engineer in charge was Roger P. Bligh, P.E. (Texas, #78550).

ACKNOWLEDGMENTS

This research project was conducted under a cooperative program between the Texas Transportation Institute, the Texas Department of Transportation, and the U.S. Department of Transportation, Federal Highway Administration. The TxDOT project director for this research was John DeWitt, San Angelo District. The authors acknowledge and appreciate his guidance and assistance. The contributions and assistance of Ms. Rory Meza, Design Division, are also gratefully acknowledged.

TABLE OF CONTENTS

Page

LIST OF FIGURES ix

LIST OF TABLES x

CHAPTER 1. INTRODUCTION 1
- INTRODUCTION 1
- BACKGROUND 1
- OBJECTIVES/SCOPE OF RESEARCH 2

CHAPTER 2. DESIGN CONSIDERATIONS 3
- BARRIER SELECTION 4
- BARRIER DEFLECTION 5
- FINITE ELEMENT SIMULATION 5
  - Impact Conditions 7
- PORTABILITY 9
- END TREATMENTS 10
- BARRIER LENGTH REQUIREMENTS 12
- SUMMARY 14

CHAPTER 3. CRASH TESTING 17
- TEST ARTICLE 17
- CRASH TEST CONDITIONS 18
- TEST VEHICLE 22
- TEST DESCRIPTION 22
- TEST RESULTS 22
- ASSESSMENT OF TEST RESULTS 27

CHAPTER 4. SUMMARY AND CONCLUSIONS 33

CHAPTER 5. IMPLEMENTATION STATEMENT 37

REFERENCES 39

APPENDIX A. CRASH TEST AND DATA ANALYSIS PROCEDURES 41
- ELECTRONIC INSTRUMENTATION AND DATA PROCESSING 41
- ANTHROPOMORPHIC DUMMY INSTRUMENTATION 42
- PHOTOGRAPHIC INSTRUMENTATION AND DATA PROCESSING 42
- TEST VEHICLE PROPULSION AND GUIDANCE 42

APPENDIX B. TEST VEHICLE PROPERTIES AND INFORMATION 45

TABLE OF CONTENTS (CONTINUED)

Page

APPENDIX C. SEQUENTIAL PHOTOGRAPHS 49

APPENDIX D. VEHICLE ANGULAR DISPLACEMENTS AND ACCELERATIONS 53

LIST OF FIGURES

Figure		Page
1	Finite Element Representation of F-Shape Portable Concrete Barrier.	6
2	Finite Element Representation of Cross-Bolt Connection.	7
3	Plan View of Impact Simulation, (a) Before Impact (b) After Impact.	8
4	Top View of Impact Simulation of 100-ft Barrier Installation with Unrestrained Ends; (a) Before Impact (b) After Impact.	13
5	Top View of Impact Simulation of 50-ft Barrier Installation with Constrained Ends; (a) Before Impact (b) After Impact.	14
6	Details of the TxDOT Cross-Bolt Concrete Median Barrier.	19
7	Cross-Bolt Concrete Median Barrier before Test 446924-1.	21
8	Vehicle/Installation Geometrics for Test 446924-1.	23
9	Vehicle before Test 446924-1.	24
10	After Impact Trajectory Path for Test 446924-1.	25
11	Installation after Test 446924-1.	26
12	Vehicle after Test 446924-1.	28
13	Interior of Vehicle for Test 446924-1.	29
14	Summary of Results for *NCHRP Report 350* Test 3-11 on the Cross-Bolt Concrete Median Barrier.	30
15	Vehicle Properties for Test 446924-1.	45
16	Sequential Photographs for Test 446924-1 (Overhead and Frontal Views).	49
17	Sequential Photographs for Test 446924-1 (Rear View).	51
18	Vehicle Angular Displacements for Test 446924-1.	53
19	Vehicle Longitudinal Accelerometer Trace for Test 446924-1 (Accelerometer Located at Center of Gravity).	54
20	Vehicle Lateral Accelerometer Trace for Test 446924-1 (Accelerometer Located at Center of Gravity).	55
21	Vehicle Vertical Accelerometer Trace for Test 446924-1 (Accelerometer Located at Center of Gravity).	56
22	Vehicle Longitudinal Accelerometer Trace for Test 446924-1 (Accelerometer Located over Rear Axle).	57
23	Vehicle Lateral Accelerometer Trace for Test 446924-1 (Accelerometer Located over Rear Axle).	58
24	Vehicle Vertical Accelerometer Trace for Test 446924-1 (Accelerometer Located over Rear Axle).	59

LIST OF TABLES

Table **Page**

1 Performance Evaluation Summary for *NCHRP Report 350* Test 3-11 on the Cross-Bolt Concrete Median Barrier. 35
2 Exterior Crush Measurements for Test 446924-1.....46
3 Occupant Compartment Measurements for Test 446924-1.....47

CHAPTER 1. INTRODUCTION

INTRODUCTION

Texas Department of Transportation's (TxDOT) portable concrete traffic barrier standards have evolved over the years to incorporate rail segments that are 30 ft in length and weigh approximately 14,000 lb each. While these barriers serve their function well once they are in position, these barrier segments are only nominally "portable" in that they usually require a crane to lift and place them. Maintenance sections do not typically have this type of heavy equipment and must, therefore, rely on rented cranes and operators. The delay between the time the need for the traffic barrier occurs and the time that it is placed can sometimes turn into days. This introduces additional levels of expense and liability, and precludes their use for many routine and emergency maintenance and construction operations that would benefit from the quicker response time that a truly portable rail system would provide.

BACKGROUND

TxDOT standards include several different barrier systems that can be classified as temporary/precast barriers. The low-profile barrier has been successfully tested and approved for Test Level 2 (TL-2) of National Cooperative Highway Research Program (NCHRP) *Report 350* *(1)*, which permits its use on roadways with speeds up to 43.5 mph. This 20-inch tall barrier is intended for use in urban work zones where sight distance problems at intersections are common *(2)*. The single slope barrier has been approved for TL-3, which makes it acceptable for general use on all roadways, including high-speed facilities on the national highway system *(3)*. The Type 3 precast concrete traffic barrier is intended for use in work zones, primarily on bridge deck, where a temporary barrier is required to be placed less than 2 ft from the edge of a deck or dropoff. This system, which involves securing the barrier section to the deck using angled pins, was successfully tested to TL-3 conditions *(4)*.

The Type 2 precast concrete traffic barrier (PCTB[1]-90) has two different joint types. Joint type A includes a male-female design option which utilizes three 1-inch diameter tiebars and a slotted design option which uses a prefabricated tiebar grid. During a full-scale crash test, this joint can fail, resulting in dynamic barrier deflection in excess of 9 ft *(5)*. A retrofit for this barrier has been developed which limits the lateral deflection to 4 ft under design impact conditions. The retrofit involves attaching a steel plate or strap on the toe of each side of the barrier across the joint between two segments using epoxy or mechanical anchors. Joint type B incorporates a 12-inch overlap of the two barrier sections which are then bolted together through the overlapping sections using a 1-inch diameter threaded rod. There are presently no plans to evaluate this barrier with additional crash testing due to its limited use throughout the state.

Connection of the portable and precast concrete barrier rail (CB[P&P]-87) involves bolting a 3 ft-6 inch steel angle section to the bottom of the barrier segments across each side of a joint. The Houston District uses a modified version of the design that utilizes a channel connector. This system has not been crash tested.

More recently, a new precast concrete traffic barrier was developed and successfully crash tested under Project 0-4162 *(6)*. The barrier incorporates an innovative cross-bolt connection comprised of two 7/8-inch diameter high-strength threaded rods. This connection limited the barrier deflection to only 19 inches, which is the lowest deflection of any free-standing, portable concrete barrier approved to *NCHRP Report 350*. The barrier incorporates an F-shape profile rather than the New Jersey profile used on current TxDOT barriers. The F shape is widely considered to provide improved impact performance over the New Jersey shape. Full-scale crash testing indicates that vehicles experience less climb and remain more stable during impacts with barriers having an F-shape profile compared to those with a New Jersey profile.

These portable work zone barriers all serve a similar purpose of shielding motorists from hazards, and separating and protecting work crews from traffic. However, with the exception of the low-profile barrier, which is limited to low-speed applications, all of the above mentioned barriers utilize 30-ft long segments that weigh approximately 14,000 lb each. Thus, while these barriers typically serve their intended functions well once they are in place, many consider them to be only minimally "portable" because heavy equipment such as cranes are usually required to lift and place them on and off the trailers used to deliver them to a job site. Because maintenance sections do not typically have the heavy equipment capable of moving and setting these long, heavy rail sections, they must contract for these services. In emergency situations, such as damaged bridge railing, any delay between the time the need for the rail occurs and the time that it is eventually placed can leave traffic exposed to hazards.

In addition to addressing emergency situations, there are many routine maintenance and construction operations that would benefit from a truly portable rail system that TxDOT maintenance crews could transport and place with readily available equipment such as a front-end loader. Such a barrier system could reduce the expense and liability associated with moving and placing the standard 30-ft barrier segments.

OBJECTIVES/SCOPE OF RESEARCH

The objective of this project is to develop and test a portable barrier system for high-speed applications that can be easily transported and erected by TxDOT maintenance forces using readily available equipment such as a front-end loader. Consideration was given to factors such as segment length, segment weight, connection method, barrier constructability, and dynamic barrier deflection. A deflection constraint of 3 ft was imposed by the project panel.

This report summarizes the research performed to design and test a new precast concrete traffic barrier for use in maintenance operations. Chapter 2 describes the design and analysis process. Chapter 3 presents details of the full-scale crash test. Conclusions resulting from the research are summarized in Chapter 4, and implementation recommendations are presented in Chapter 5.

CHAPTER 2. DESIGN CONSIDERATIONS

One of the most obvious means for achieving better portability involves reducing the length and weight of the barrier segments. Texas is the only state known to use barrier segments as long as 30 ft. Other state departments of transportation (DOTs) use segments that range from 10 ft to 20 ft in length. There are several barriers approved by the Federal Highway Administration (FHWA) for use on the National Highway System (NHS) that have segment lengths on the lower end of this range (i.e., 10 ft or 12.5 ft).

The majority of these designs utilize some form of pin-and-loop connection. The pin-and-loop connection involves inserting a vertical pin through two or more sets of overlapping loops that extend from the ends of the barrier segments. While this type of connection provides barrier tensile capacity, it acts as a hinge and typically requires considerable deflection and rotation of the barrier segments before providing any moment resistance about the vertical axis of the barriers. Consequently, the design deflections associated with pin-and-loop connections is commonly greater than 4 ft. This is illustrated by three pin-and-loop barriers tested at the Texas Transportation Institute (TTI) *(7,8,9)*. These barriers, which had segment lengths ranging from 10 ft to 20 ft, had deflections ranging from 4 ft to 6 ft.

The ease with which the pin-and-loop connection can be assembled and repaired is a function of the tolerances provided. Greater tolerance in the connection and larger gap between barrier segments improves constructability but results in increased deflection. Another feature of pin-and-loop connections is that the loops extending from the ends of the barrier preclude the ability to lower the barrier segments vertically into place. Instead, the barrier segments must be slid into place either longitudinally or laterally.

While reducing the length of the barrier segments is an effective means of decreasing the weight and enhancing portability, it also generally results in increased barrier deflections. That is, for a given connection design, the dynamic barrier deflection will increase as the barrier segments length decreases. This is primarily due to the additional number of joints along the length of the system. The additional joints can introduce more slack into the system that, during impact, translates into additional lateral barrier deflection.

For a given segment length and barrier profile, another means of achieving weight reduction is through reducing the width or thickness of the barrier. TxDOT's portable concrete barriers are 8 inches wide at the top of the cross section. Other states have used barriers that range from 6 inches to 12 inches wide at the top. However, reducing the width of the barrier can decrease its structural capacity. Failure of concrete in the vicinity of a joint will tend to increase dynamic barrier deflection. The reduction in strength associated with decreasing the barrier width can usually be partially, but not entirely, compensated for through the introduction of additional steel reinforcement in the concrete.

A more efficient way to reduce barrier deflection is through the use of a strong, tight connection. During impact, any deformation of the connection members or slack in the connection will result in increased dynamic deflection. A strong, tight connection, which

minimizes construction slack and component deformation during impact, will effectively decrease deflection. However, practical tolerances must be maintained in the connection to provide reasonable construction tolerance in the field and the ability to accommodate vertical and horizontal curvature. Thus, the objectives of limiting deflection and providing a barrier that is easy to construct tend to work against each other and must be properly balanced to achieve an effective barrier design.

BARRIER SELECTION

A review of approved barrier designs was performed. There is a large experience base nationwide regarding the testing and use of work zone barriers. The FHWA has approved the use of numerous portable barrier systems having different materials, shapes, lengths, and connections. Data from these and other known portable barrier systems were reviewed and categorized by key characteristics such as segment length, barrier profile, connection type, and dynamic barrier deflection. Additionally, TTI researchers conceptualized numerous connection designs with the project objectives and constraints in mind.

The researches met with the project director and advisory panel to review the existing and new barrier systems for applicability to Texas. When evaluating these design options, TTI researchers and TxDOT engineers considered factors such as impact performance, deflection, cost, ease of field installation, placement on curves, etc.

Four existing precast concrete barrier systems have deflections less than the 3-ft limit established as a design constraint. The TxDOT X-bolt connection has the lowest deflection (19 inches) among these barriers *(6)*. It was recognized that this low deflection was achieved in part through the use of 30-ft barrier segments. As the segment length is decreased to enhance portability, the deflection is expected to increase due to the added joints. However, it was expected that the deflection associated with shorter segments with the X-bolt connection would still be less than the deflections of other barriers.

Adaptation of the X-bolt connection would also provide compatibility with the standard TxDOT X-bolt, F-shape barrier with 30-ft segments without the need for a special barrier transition section should it be desirable to connect the systems together. Ease of placement is another advantage of the X-bolt barrier. Due to the protrusion of connection components from the end of the barrier segments, most other barrier systems must be installed by sliding them laterally into place. Since it has no protruding connection hardware, the X-bolt barrier can be vertically set in place. Finally, the X-bolt barrier is perceived to offer easier repair than many other connection options. The cross bolts can be readily replaced if damaged during an impact, whereas damage to other barrier systems with integral, cast-in-place connection components (e.g., loops or plates) often requires replacement of the entire barrier segment.

Based on these reasons, the project panel selected the F-shape barrier with X-bolt connection and 10-ft segments for further evaluation under this project. Various analyses were performed to help assess the ability of this barrier system to meet *NCHRP Report 350* impact

performance criteria and other design constraints prior to conducting a full-scale crash test. A description of the analyses follows.

BARRIER DEFLECTION

The cross-bolt system utilizes two 7/8-inch diameter, A325 bolts or equivalent strength threaded rods to form the connection. The bolts pass through nominal 1-1/4-inch diameter, schedule 40 guide pipes cast into the ends of the barrier segments. The oversized pipe provides connection tolerance for barrier fabrication and installation. The 1-1/4-inch pipe has an inside diameter of 1.38 inch, which provides a ½-inch tolerance between the outside diameter of the cross bolts and the inside diameter of the guide pipes. The available tolerance assists with barrier constructability and placement of the barrier on horizontal and vertical curves. The relative angle that can be achieved between barrier segments is 4 degrees. In combination with the 10-ft segment lengths, the barrier has a minimum radius of curvature of approximately 125 ft. This value was experimentally determined using the prototype barrier installation constructed for the full-scale crash test.

As mentioned previously, providing a barrier that is easy to construct must be balanced with barrier deflection. In order to determine the expected deflection of the X-bolt barrier with 10-ft segments under design impact conditions, finite element simulation was performed.

FINITE ELEMENT SIMULATION

Computer simulation techniques supported the analysis efforts. The code utilized in the computer modeling efforts is LS-DYNA *(10)*. LS-DYNA is a general-purpose, explicit finite element code used to analyze the nonlinear dynamic response of three-dimensional inelastic structures. This code is capable of capturing the complex interactions that occur when a vehicle impacts a roadside safety structure. In recent years, LS-DYNA has been used extensively for crashworthiness simulations of automobiles and their components by automobile manufacturers and by researchers in the roadside safety community in the design and evaluation of roadside safety features.

In order to evaluate the cross-bolted connection design concept, full-scale finite element computer model was developed. The 10-ft long concrete barrier segments were modeled with solid elements to have an F-shape profile. The barrier segments were 32 inches tall, and had a top width of 9.25 inches. The finite element model of one of the segments is shown in Figure 1.

The lowest layer of solid elements that are in contact with the ground surface were assigned elastic material properties, and the rest of the elements comprising the barrier segment were assigned rigid material properties. The lower elastic layer of solid elements was incorporated into the barrier model to provide a reliable account of friction in the contact between the concrete median barrier (CMB) segments and the ground. A friction coefficient of 0.4, as determined from barrier pull tests on a concrete pavement, was used between the CMB

and the ground. Rigid material representation for the remainder of the model helps speed up numerical calculations significantly.

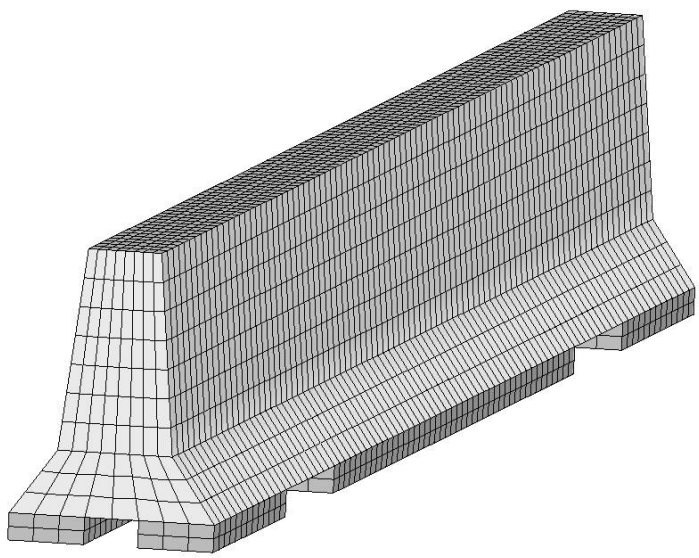

Figure 1. Finite Element Representation of F-Shape Portable Concrete Barrier.

A limitation to this type of rigid CMB model is that it does not incorporate concrete failure. Modeling concrete failure requires a reliable, validated concrete material model that considers fracture. Although the Federal Highway Administration has sponsored the development of such a material model, the research effort was not complete during this project. Without incorporating concrete failure into the analysis, it should be noted that the results of the simulation represent a lower bound estimate of the overall CMB system deflection. If concrete fracture and spalling occurs at the ends of one or more barrier segments during an actual impact, additional joint rotation can occur and deflections can increase. Conversely, a rigid barrier representation is conservative in regard to stress and deformation of the connection bolts. Concrete fracture and spalling near the ends of the barrier segments will help relieve the loads transferred to the connection bolts. With these aspects of the model understood, valuable design and performance information can be gleaned from the predictive simulation results.

Solid elements, such as those comprising the barrier model, tend to behave less reliably compared to shell elements in regard to contact definitions. In order to provide more robust contact, end faces of the CMB segment models were covered with a thin layer of finely meshed rigid shell elements. All contacts involving the barriers were defined with this shell cover.

The cross-bolt connection was modeled by first creating rigid, cylindrical shafts with shell elements to represent the pipe sections embedded in the concrete through which the cross bolts pass. These shafts were placed in the concrete barrier segments at their appropriate locations and rigidly constrained to the concrete such motion of the shafts relative to the barriers was prohibited. This is depicted in Figure 2.

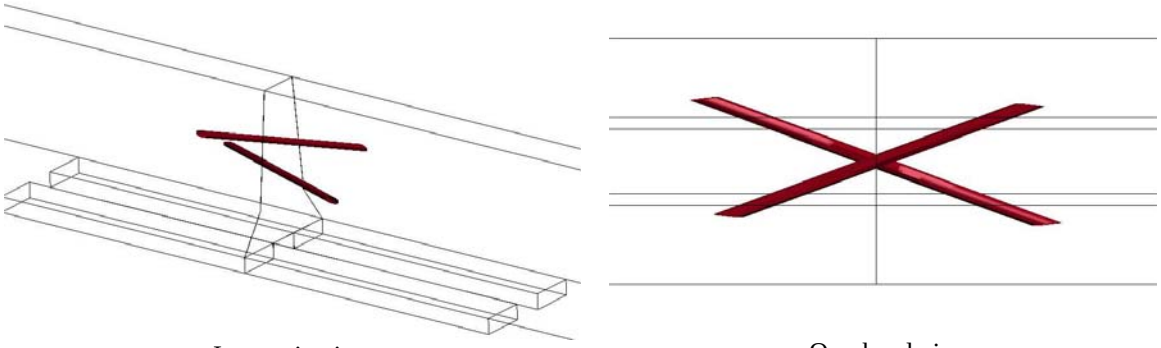

Isometric view

Overhead view

Figure 2. Finite Element Representation of Cross-Bolt Connection.

The bolts inside the shafts were modeled using beam elements. The mechanical properties of the bolts were defined using a bilinear stress strain curve representing ASTM A325 high-strength steel. A325 bolts have a yield strength of 92 ksi and a tensile strength of 120 ksi.

Impact Conditions

The initial full-scale simulation of the X-bolt barrier system with 10-ft segments replicated Test Designation 3-11 of *NCHRP Report 350*. This test involves a 4409-lb pickup truck impacting the barrier at a speed of 62 mph and an angle of 25 degrees. This is considered to be the critical test for evaluating the structural integrity of the connections and the maximum dynamic deflection of a precast concrete barrier. A total of 19 portable concrete median barrier (PCMB) segments were modeled to provide a barrier length of 190 ft.

The finite element pickup truck model *(11)* impacted the ninth barrier segment (counting from the upstream end of the barrier installation), 3.9 ft upstream from the barrier joint. The simulation was terminated at 0.5 seconds (s), at which time the vehicle was exiting the barrier system. The pickup truck was successfully contained and redirected in a relatively stable manner with only moderate climb and roll. Top views of the simulated impact event as the vehicle enters and exits the barrier (i.e., t = 0 s and t = 0.5 s) are shown in Figure 3.

The maximum dynamic deflection of the barrier system was 20 inches. As previously discussed, this deflection estimate was considered to be a lower bound estimate. Previous simulations of the X-bolt barrier with 30-ft segments indicated a lower bound deflection of 16 inches *(6)*. In a subsequent full-scale crash test, some concrete fracture and spalling occurred at the base of the barrier at several joint locations, and the measured dynamic barrier deflection was 19 inches *(6)*. Using the ratio of the actual and simulated deflections as a factor to account for concrete damage at the joints provides an estimated deflection of approximately 24 inches for the X-bolt connection with 10-ft barrier segments. This predicted lateral barrier deflection is well below the 3-ft design limit imposed at the outset of the project.

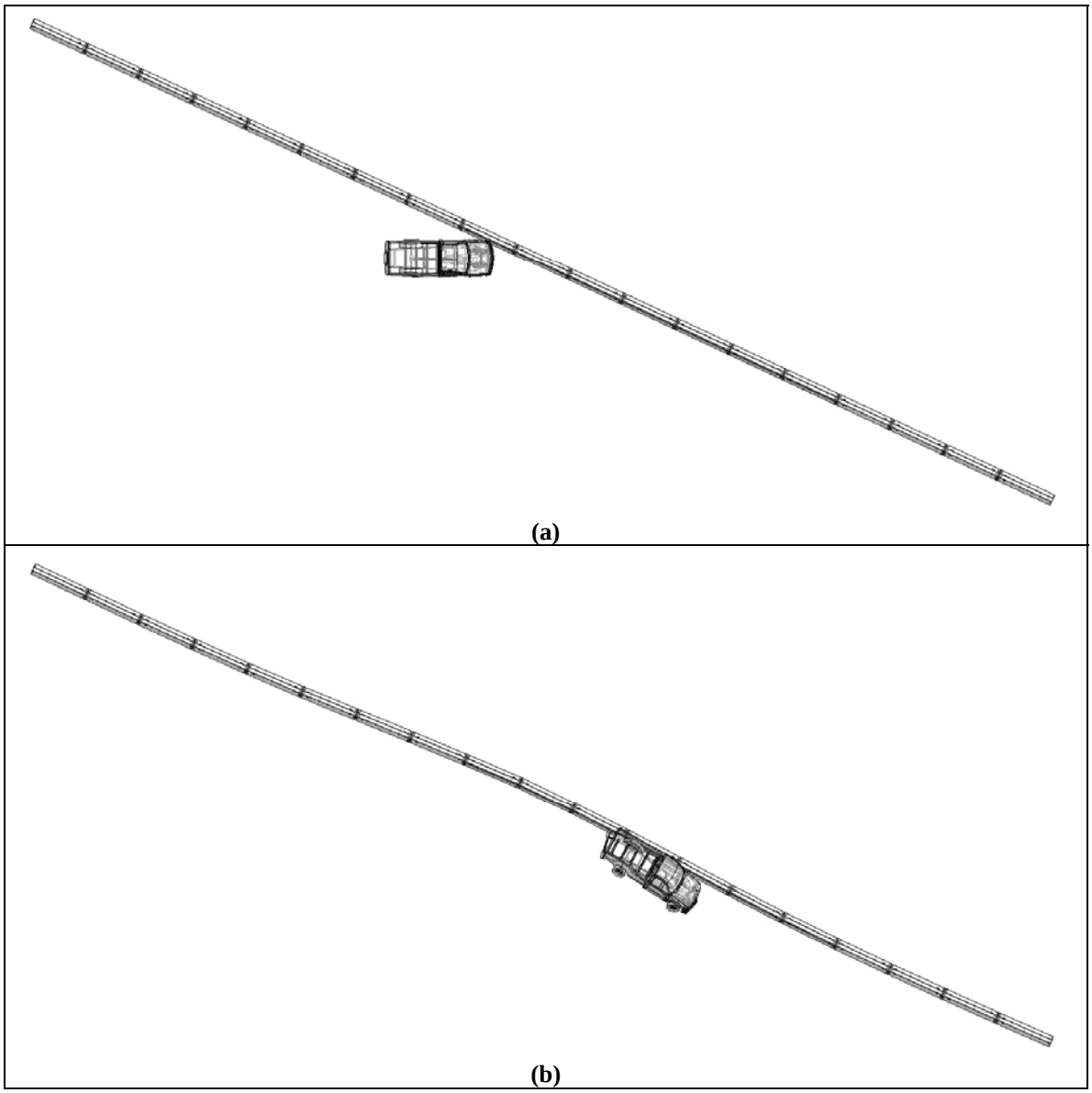

Figure 3. Plan View of Impact Simulation, (a) Before Impact (b) After Impact.

Prior to conducting the full-scale crash test, TxDOT engineers and TTI researchers received information regarding proposed revisions to the impact conditions used to evaluate longitudinal barriers. NCHRP Project 22-14(2) is updating the guidelines and procedures contained in *NCHRP Report 350* for testing and evaluation of roadside safety features. After some successful crash tests conducted on W-beam guardrail and portable concrete barrier systems under Project 22-14(2) and feedback received from the project panel, the principal investigator of the research effort had a high degree of confidence that the weight of the pickup truck design vehicle will increase from 4409 lb to 5000 lb. Further, a minimum center-of-gravity (c.g.) height of 27 inches would be adopted as part of the new vehicle specification.

With a progressive attitude, TxDOT decided to test and evaluate the new maintenance barrier system following the proposed revisions to the impact conditions. The increase in vehicle weight results in a 15 percent increase in impact severity. To determine the effect of this change on the predicted barrier deflection, another finite element impact simulation was conducted.

The full-scale simulation replicated the impact conditions proposed for the update to *NCHRP Report 350* and involved a 5000-lb pickup truck impacting the barrier at a speed of 62 mph and an angle of 25 degrees. Additional mass was added to the finite element vehicle model to increase its weight to the prescribed value. The mass was added throughout the vehicle in such a way that the c.g. height of the pickup was 27 inches.

In the simulation, the barrier successfully contained and redirected the heavier pickup truck. The factored dynamic barrier deflection, which accounts for some concrete damage, increased to 27 inches.

PORTABILITY

The objective of this research was to develop a truly portable barrier system for high-speed applications that can be easily transported and erected by TxDOT maintenance forces using readily available equipment such as a front-end loader. The primary means of achieving better portability involved reducing the length of the barrier segments from 30 ft to 10 ft. The measured weight of prototypes of the 10-ft barrier segments with X-bolt connection was 4530 lb.

A review of equipment capabilities available to most TxDOT maintenance offices for barrier transport and erection was conducted to determine if this weight and size can be readily accommodated. The preferred method of barrier deployment is to transport the barriers to the work site with a haul truck and put the barriers in place using a district's existing wheel loaders with approved forklift attachments.

Personnel in the San Angelo District office contacted various equipment manufacturers regarding the handling capacity of their equipment for this application. At the request of the manufacturers, drawings and other details of the barrier segments were provided to assist with the evaluation of their movement and placement. Manufacturers of John Deere (544G), Komatsu (WA-180-3), Case (621B), and Hyundai (HL 740-3) loaders verified that their front-end loaders fitted with fork attachments can safely lift and place the 10-ft barrier segments.

The location and size of the drainage troughs at the base of the barrier segments were modified to readily accept forks attached to front-end loaders. It was desirable to accommodate a fork spread or tine spacing of 60 inches to permit stable movement of the 10-ft barrier segments. Furthermore, lateral tolerance was needed in the fork lift slot to permit approach to the barrier segment at angles less than 90 degrees. This was accomplished through the use of two 2-ft long × 3-inches tall troughs cast into the bottom of the barrier. The outer edges of the slots are located 1 ft-6 inches from each end of the barrier segment. The 3-inch height accommodates tines typical of forks with the spread and load capacity desired for this application.

END TREATMENTS

Unless there is room to flare the end of a temporary barrier out of the clear zone at an acceptable rate (i.e., one that will not compromise impact performance), a crashworthy end treatment is required to shield motorists from the ends of the barrier. In keeping with the objective of the project, it is important that any end treatment considered for use with the portable maintenance barrier be equally portable using equipment readily available with TxDOT's district offices.

A review of available end treatments for CMBs was conducted to identify existing products in the marketplace suitable for use with the new portable maintenance barrier. Weight, portability, and ease of deployment were among the factors considered during the product review. Researchers identified several suitable products, some of which are already approved for use in Texas.

One such product offered by Barrier Systems, Inc., is known as ABSORB 350. ABSORB 350 is a non-redirective, gating crash cushion designed specifically to shield motorists from the ends of concrete barriers. As a gating system, the crash cushion is designed to permit controlled penetration of a vehicle striking near the nose of the system at an angle. As a non-redirective cushion, it is designed to contain and capture a vehicle impacting downstream of the nose along its length. The ABSORB 350 is a modular, water-filled system that has been tested and approved for use as an end treatment for both portable and permanent concrete barriers. The configuration approved for use on high-speed roadways (*NCHRP Report 350*, TL-3) is a nine-element system that is 32 inches tall, 2 ft wide, and 32 ft in length. The empty weight of an element is 110 lb. After being filled with 80 gallons of water from a water truck, each element weighs 717 lb. The system is attached to the end of a concrete barrier by means of a specially fabricated backup structure. No anchorage to the pavement or ground is required. The ABSORB 350 is approved for use in Texas.

Energy Absorption Systems, Inc., offers two products that meet the portability requirements of the project. The Triton CET is a non-redirective, gating crash cushion designed to shield motorists from impacting the ends of <u>unanchored</u> portable CMBs. Its impact performance is similar to an array of sand-filled inertial barrels, but water, rather than sand, provides the mass. The Triton CET system is comprised of a six-module array of standard Triton water-filled barrier segments and a fabricated steel transition piece designed to attach to a CMB. *NCHRP Report 350* TL-3 performance, for use of the crash cushion on high-speed roadways, is achieved through the attachment of pedestals to the barrier modules. Each Triton barrier module is 32 inches tall, 21 inches wide, and 78 inches long. The pedestals support the barrier segments 7 inches above ground, bringing the modules to a total height of 39 inches. The empty weight of a module is 140 lb, and the ballasted weight (after filling with 145 gallons of water) is approximately 1350 lb. The empty Triton modules are readily transported, erected on site (i.e., pinned together), and then filled with water using a water truck. The first segment at the nose of the system is left empty. As with the ABSORB 350, the Triton is a free-standing barrier and does not require any anchorage to the ground or pavement.

Another product offered by Energy Absorption Systems, Inc., that satisfies the project requirements is the Quadguard CZ crash cushion. The Quadguard crash cushion is a redirective, non-gating crash cushion. During head-on impacts, the Quadguard telescopes rearward and attenuates the energy of the impacting vehicle by crushing a staged set of cartridges. Unlike the ABSORB 350 and Triton CET, which are gating systems, the non-gating, redirective Quadguard contains and redirects vehicles impacting along the entire length of the cushion. The price that is paid for this redirective capability is that the system must be anchored. The CZ version of the Quadguard is specifically configured for construction zones in which added portability is desired. The high-speed TL-3 version of the crash cushion includes 6 bays and is 21 ft in length. The Quadguard CZ comes fully assembled and attached to a 3/4-inch steel plate. Thus, it simply needs to be transported, placed into position, and anchored on the job site. The steel plate to which the crash cushion is mounted contains anchorage holes around its perimeter to facilitate its anchorage to the ground or pavement. Anchorage to the ground is accomplished using steel stakes, and anchorage to a pavement surface is accomplished using anchor bolts installed into pre-drilled holes. The unit, including the steel plate, has a 42-inch wide footprint, weighs 4200 – 4400 lb, and comes with lifting points and lifting chains to assist with lifting and placement. As mentioned previously, the 10-ft, X-bolt barrier segments weigh approximately 4530 lb. Therefore, any equipment that can load and unload one of these 10-ft segments would have sufficient capacity for moving and placing the Quadguard CZ. The Quadguard CZ is approved for use in Texas.

Another crash cushion product of Energy Absorption Systems, Inc., that has work zone applications is the REACT 350 workzone crash cushion system. The REACT 350 is a non-gating, redirective crash cushion system. It comprises vertically oriented cylinders made of high molecular weight, high-density polyethylene. Each cylinder is nominally 36 inches in outside diameter and 48 inches tall. In a head-on impact, energy of an impacting vehicle is attenuated through the collapse of the cylinders. The cylinders have the ability to recover much of their shape, position, and performance capabilities after an impact. The high-speed TL-3 version of the REACT 350 is a nine row/cylinder system. It attaches to a self-contained backup structure which can be tied to a CMB through the use of transition plates and standard W-beam guardrail terminal connectors. The system is anchored to concrete pavement through the use of 56 wedge anchors, and to asphalt pavement through the use of 56 drive spikes and 12 channel stakes. The system, provided as an assembled unit with independent backup structure, weighs approximately 4300 lb.

Other crash cushion systems may also have application for safely treating the ends of the new portable concrete traffic barrier. For example, the FastBrake system by Energy Absorption Systems, Inc., is a non-gating, redirective crash cushion system designed to attach to portable concrete median barrier. When impacted head-on, the system telescopes rearward and dissipates the kinetic energy of the vehicle through momentum transfer, friction, and metal working. The system is 19 inches wide and 32 ft in length. However, the general specifications for the FastBrake system indicate that it should be installed in a unidirectional configuration. Thus, it is not considered suitable for applications in which the crash cushion will be exposed to two-way traffic and be subject to a “reverse direction” impact.

The Universal TAU-II® crash cushion, a product of Barrier Systems, Inc., is a redirective, non-gating system that is designed to be attached and/or transitioned to most types of longitudinal barriers including portable concrete median barrier. The Universal TAU-II system is available pre-assembled for final installation at the job site. The high-speed, *NCHRP Report 350*, TL-3 configuration is an eight-bay system that weights approximately 3000 lb (without concrete pad or foundation). Installation at a job site can be accomplished using a forklift or truck-mounted crane. The manufacturer recommends that the Universal TAU-II system be anchored to standard 6-inch reinforced concrete foundation. However, other foundation options can be provided. The Universal TAU-II system requires only 21 anchor points into the foundation.

The Trinity Attenuating Crash Cushion (TRACC), a product of Trinity Industries, Inc., is classified as a non-gating, redirective crash cushion. During an end-on impact, the impacting vehicle pushes a sled along a guidance track, causing the fender panels on the side of the cushion to telescope. Energy dissipates through momentum transfer and shredding metal plates. The system is anchored to a concrete foundation pad or pavement using anchor studs secured with chemical grout. A family of TRACC products exists for use with shielding different hazards. Narrow hazards, such as the ends of concrete barriers, are shielded with the standard TRACC. This TL-3 version of the standard TRACC is approximately 30-inches wide, 32-inches tall, and 22-ft long. A construction zone version of the system that will be attached to a steel foundation plate for ease of anchoring is under development.

BARRIER LENGTH REQUIREMENTS

Finite element simulation was used to investigate the minimum installation length required for this barrier system to provide proper impact performance. Depending on the type of end treatment or crash cushion used to shield the barrier ends, the ends of the barrier may be free to move or displace (i.e., unanchored condition) or fixed/constrained against movement (i.e., anchored condition). The unanchored condition would exist when a free-standing, unanchored crash cushion (e.g., ABSORB 350, Triton CET) shields the ends of the barrier. When redirective, non-gating end treatments are used (e.g., Quadguard CZ), the crash cushions are anchored to the soil or pavement and fixedly attached to the first portable concrete barrier segment. This provides constrained end conditions for the barrier. Both of these scenarios were modeled and simulated to determine minimum acceptable barrier lengths to achieve acceptable impact performance and dynamic deflection.

The first configuration analyzed was a 100-ft installation (i.e. ten 10-ft barrier segments) with the ends of the barrier unconstrained. The full-scale simulations replicated the impact conditions proposed for the update to *NCHRP Report 350*, and involved a 5000-lb pickup truck impacting the barrier at a speed of 62 mph and an angle of 25 degrees. As indicated in Figure 4, the pickup truck was successfully contained and redirected. The factored dynamic barrier deflection, which accounts for some concrete damage to the barrier segments, was estimated to be 32 inches. This deflection is 19 percent greater than that predicted for the longer (i.e., 190 ft) barrier installation, but still satisfies the project constraints.

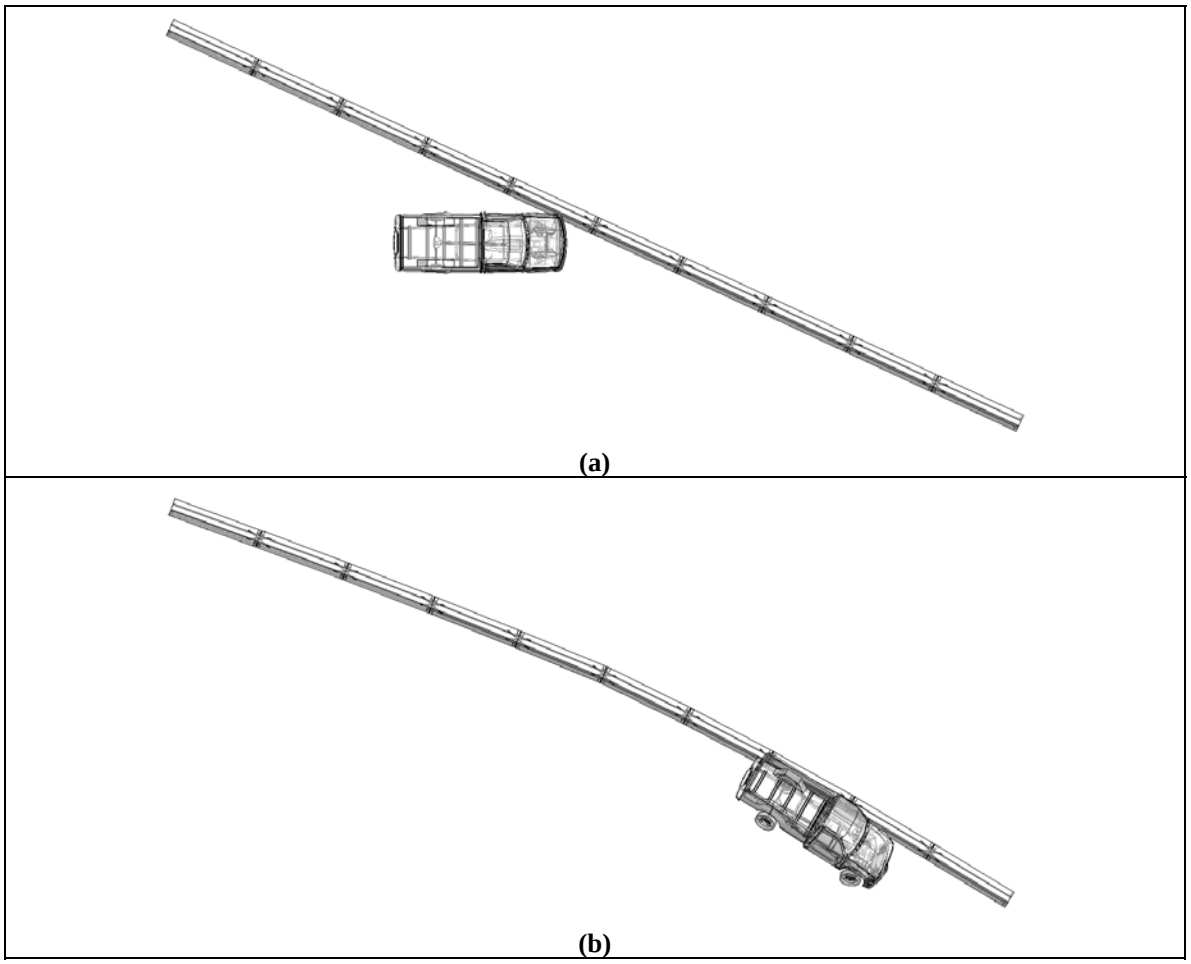

Figure 4. Top View of Impact Simulation of 100-ft Barrier Installation with Unrestrained Ends; (a) Before Impact (b) After Impact.

The second configuration analyzed was a 50-ft barrier with restrained ends. The finite element model incorporated seven barrier segments. The outer barrier segment on each end of the installation was rigidly constrained to represent an anchored crash cushion. The five barriers in the middle were free standing and attached to the constrained barrier segments using the same cross-bolt connection used between the other barrier segments. The same impact conditions used for the unrestrained barrier were used for the constrained barrier analysis. As shown in Figure 5, the finite element vehicle was successfully contained and redirected. The factored dynamic barrier deflection of the restrained 50-ft barrier system, which accounts for some concrete damage to the barrier segments, was 22 inches.

It should be noted that the minimum barrier lengths selected for the restrained and unrestrained end conditions are based on impact performance and dynamic deflection. The required barrier length of need should be determined following appropriate guidelines with consideration given to site conditions, size, and lateral offset of hazards being shielded, and protection of workers in the work zone area.

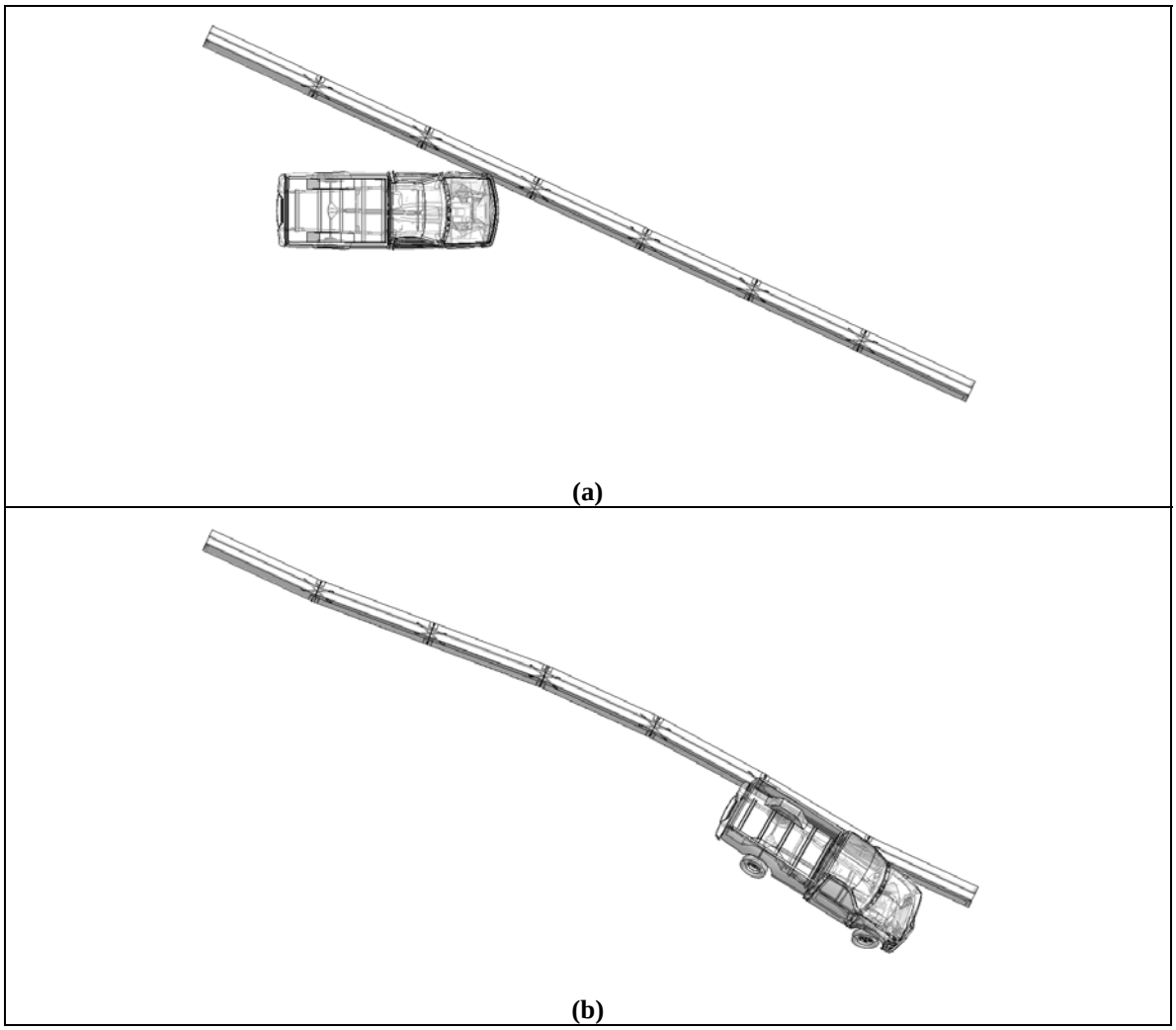

Figure 5. Top View of Impact Simulation of 50-ft Barrier Installation with Constrained Ends; (a) Before Impact (b) After Impact.

SUMMARY

A recently developed cross-bolt connection for concrete median barriers was analyzed for use in a highly portable barrier system for high-speed applications that can be easily transported and erected by TxDOT maintenance forces using readily available equipment. The cross-bolt design yielded very low barrier deflections when tested with 30-ft barrier segments. The highly portable barrier adapts this same technology to a barrier system with 10-ft segments.

Full-scale finite element computer models were developed for the barrier system. The simulation results indicated that the cross-bolted barrier system should meet *NCHRP Report 350* evaluation criteria. The structural integrity of the connection was maintained and the modified barrier successfully contained and redirected the finite element test vehicle. The simulation results estimated dynamic barrier deflection of 27 inches when impacted by a 5000-lb pickup

truck at 62 mph and 25 degrees. Based on simulation results, it was recommended that TxDOT conduct a full-scale crash test the barrier system to verify its impact performance and dynamic deflection.

CHAPTER 3. CRASH TESTING

TEST ARTICLE

The precast segments used to construct the test installation for the cross-bolt concrete median barrier system were 10 ft in length and had a standard F-shape profile. The barrier segments were 32 inches in height, 23-5/8 inches wide at the base, and 9-1/4 inches wide at the top. Two 2-ft long × 3-inch tall fork lift slots, which can also serve as drainage slots, are cast into the barrier segments 1 ft-6 inches from each end. A 24-inch wide × 3-inch tall trough runs longitudinally along the bottom of the barrier along its centerline. This trough, which is optional, assists with leveling the barrier on uneven terrain. It was included in the test article since it represents a more critical condition in terms of strength at the base of the barrier.

Horizontal barrier reinforcement consists of eight #5 bars spaced liberally within the vertical reinforcement. Vertical barrier reinforcement in the barrier segments consists of #5 bars spaced 6 inches on center. These vertical bars are bent in a "hairpin" fashion to conform to the F-shape barrier profile. A U-shaped bar is tied to the bottom of the vertical bars to provide closed stirrups. All reinforcement used to construct the barrier segments had minimum yield strength of 60 ksi.

Sections of 1-1/4-inch diameter, schedule 40 pipe are cast into the ends of the barrier segments at an angle of 20 degrees to the barrier axis to serve as a guide shaft and reinforcement for the cross bolts. The centers of the guide pipes are vertically spaced 6 inches apart. A 4-inch × 4-1/2-inch × 3/8-inch thick, A36 steel plate is welded to one end of each pipe section. A 1-3/8-inch diameter hole, which matches the inside diameter of the guide pipes, is drilled through the center of the plate to permit passage of the cross bolts. Two #6 bars are bent in an "L" shape and welded to the inside surface of each end plate. Triangular wedges are cast into the barrier to permit the exposed ends of the cross bolts to be recessed and, thus, prevent vehicle snagging. Due to space restrictions, the spacing of the vertical reinforcement is adjusted and a slightly modified vertical bar is used in the immediate vicinity of the guide pipes and triangular wedges.

The cross bolts are fabricated from 7/8-inch diameter, SAE Grade 5 threaded rod. The lengths of the upper and lower cross bolts were 25-1/4 inches and 29 inches, respectively. The barriers segments are placed end to end and the cross bolts are inserted through aligning guide pipes between adjacent barrier segments. A 3-inch × 3-inch × 3/8-inch thick, A36 steel plate washer is used under the nut at each end of the cross bolts.

The 1-1/4-inch guide pipes have an inside diameter of 1-3/8 inches, which provides a 1/2-inch tolerance between the outside diameter of the cross bolts and the inside diameter of the guide pipes. The available tolerance assists with barrier constructability and permits the barriers to be placed on curves. Field trials with the barrier test sections indicated they can be placed on a 125-ft radius curve.

The completed test installation consisted of 20 barrier segments for a total installation length of approximately 200 ft. The compressive strength of the concrete at the time of the test

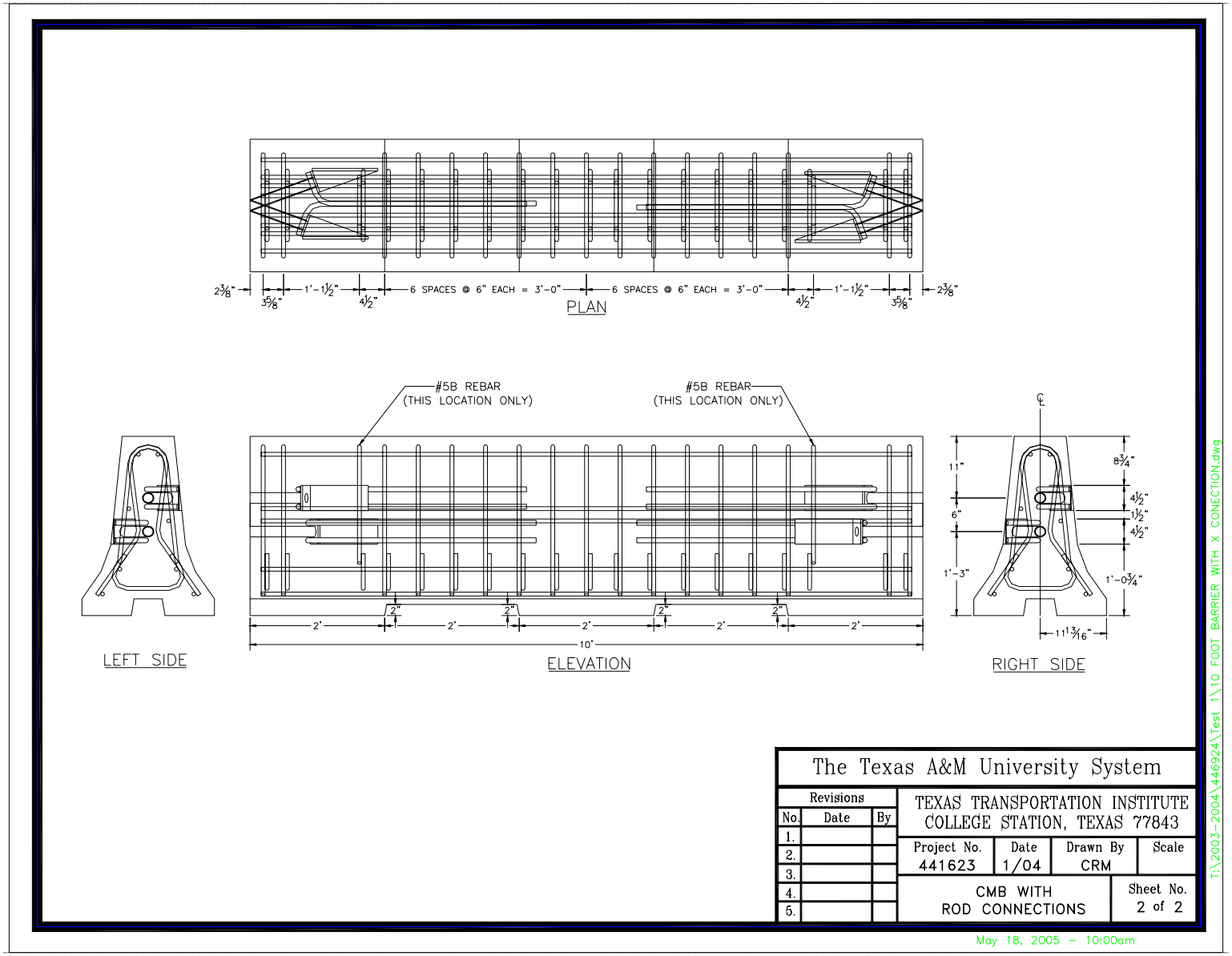

Figure 6. Details of the TxDOT Cross-Bolt Concrete Median Barrier.

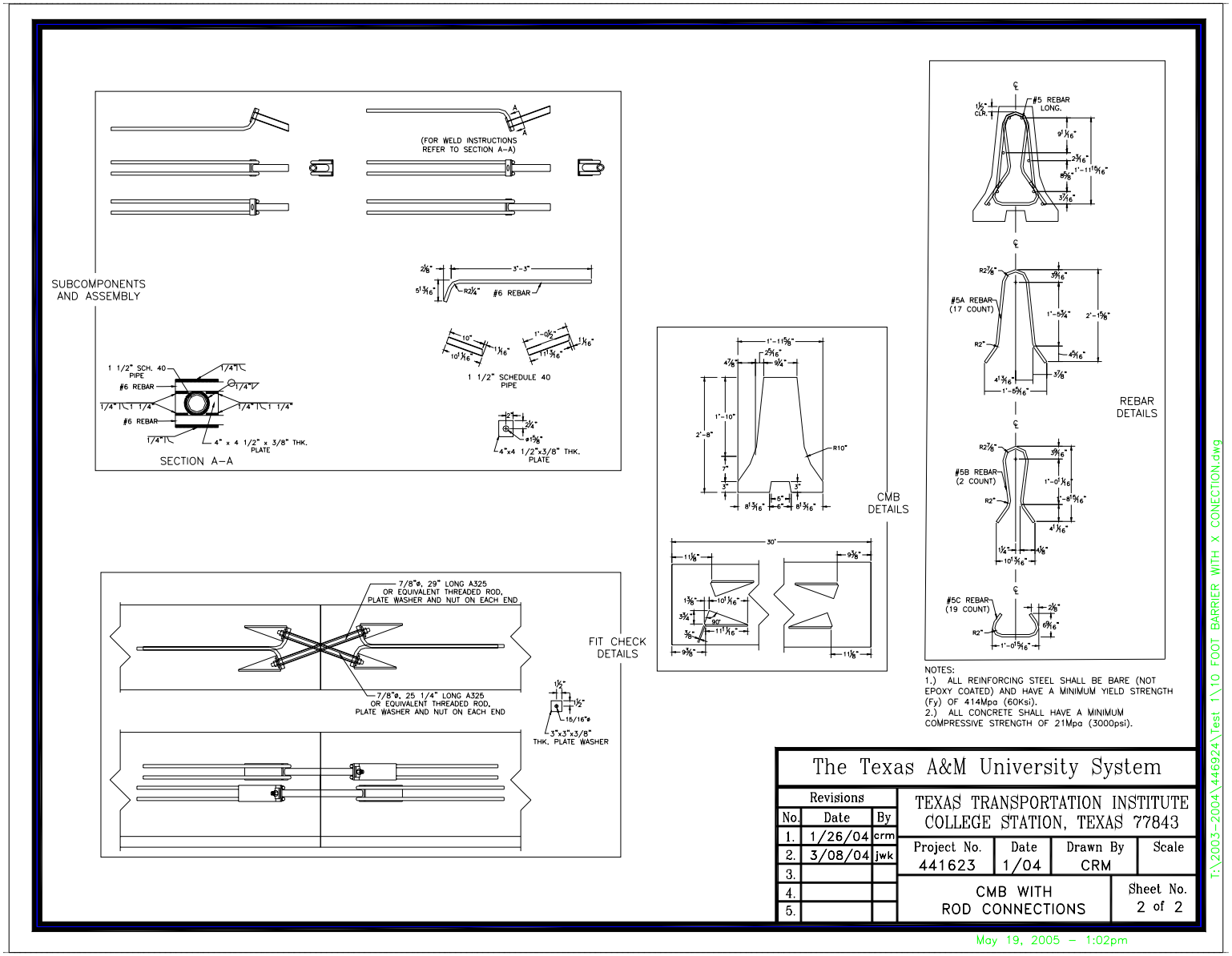

Figure 6. Details of the Details of the TxDOT Cross-Bolt Concrete Median Barrier (continued).

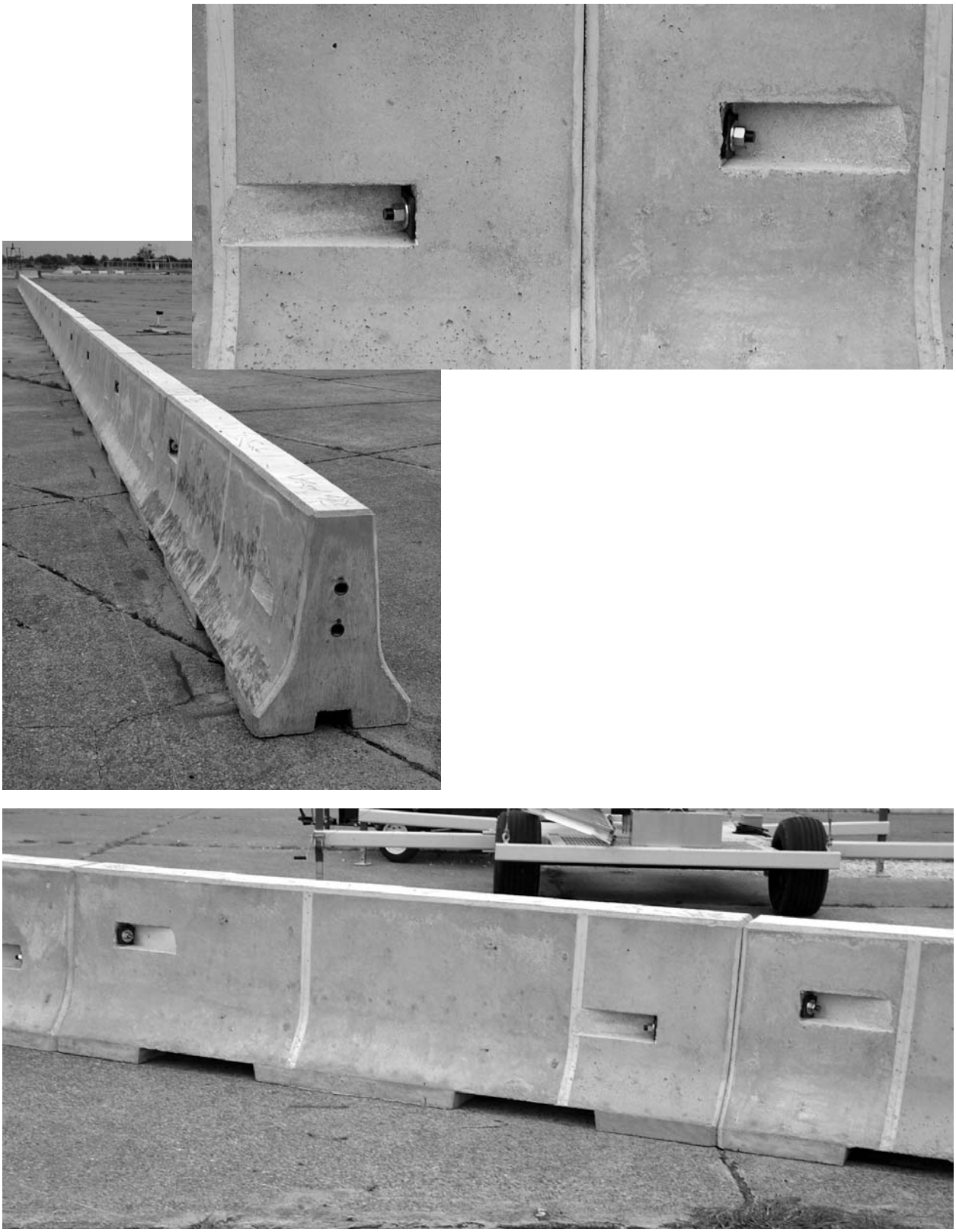

Figure 7. Cross-Bolt Concrete Median Barrier before Test 446924-1.

The critical impact point for the barrier for crash test was chosen according to guidelines contained in *NCHRP Report 350*. With reference to Figure 6, the target impact point was selected to be 3.9 ft upstream of the joint between segments 8 and 9.

The crash test and data analysis procedures were in accordance with guidelines presented in *NCHRP Report 350*. Appendix A presents brief descriptions of these procedures.

TEST VEHICLE

A 2001 Chevrolet 2500 pickup truck, shown in Figures 8 and 9, was used for the crash test. Test inertia weight of the vehicle was 4965 lb, and its gross static weight was 4960 lb. The height to the lower edge of the vehicle bumper was 12.4 inches, and the height to the upper edge of the bumper it was 27.6 inches. The vertical c.g. height of the vehicle was measured to be 27.5 inches. Figure 15 in Appendix B gives additional dimensions and information on the vehicle. The vehicle was directed into the installation using the cable reverse tow and guidance system, and was released to be free-wheeling and unrestrained just prior to impact.

TEST DESCRIPTION

The 4965-lb pickup truck, traveling at a speed of 62.0 mph, contacted the barrier 3.5 ft upstream of the joint between segments 8 and 9 at an impact angle of 24.5 degrees. Shortly after impact, the bumper deformed and the left front tire began to climb the face of the barrier. At 0.017 s, the vehicle began to redirect, and at 0.018 s, the left front tire blew out. The barrier began to move toward the field side at 0.045 s, and the vehicle began to climb up the face of the barrier at 0.100 s. At 0.209 s, the left rear tire blew out, and at 0.231 s, the rear of the vehicle contacted the barrier, and the vehicle was parallel to the barrier traveling at a speed of 53.0 mph. At 0.0351 s, the vehicle moved out of view of the overhead camera and was traveling at a speed of 52.6 mph and an angle of 2.1 degrees. The left rear tire and outer wheel rim separated from the inner rim at 0.364 s, and the vehicle rode off the end of the barrier at 2.051 s. Brakes on the vehicle were applied at 2.5 s after impact, and the vehicle subsequently came to rest 187.7 ft downstream of impact and 22.6 ft forward of the traffic face of the barrier. Figures 16 and 17 in Appendix C show sequential photographs of the test period.

TEST RESULTS

Damage to the portable concrete barrier installation is shown in Figures 10 and 11. Spalling was noted on the lower front corners of segments 8 and 9 at the joint, and also on the lower rear corner of segment 5 at the joint with segment 6. When disassembling the barrier, permanent deformation to some of the connection bolts was noted. Five bolts were bent sufficiently to require replacement. Four other bolts were only slightly bent and were considered reusable. Length of contact of the vehicle with the barrier was 39 ft. Maximum movement of the barriers was 27.0 inches at the joint between segments 8 and 9.

Figure 8. Vehicle/Installation Geometrics for Test 446924-1.

Figure 9. Vehicle before Test 446924-1.

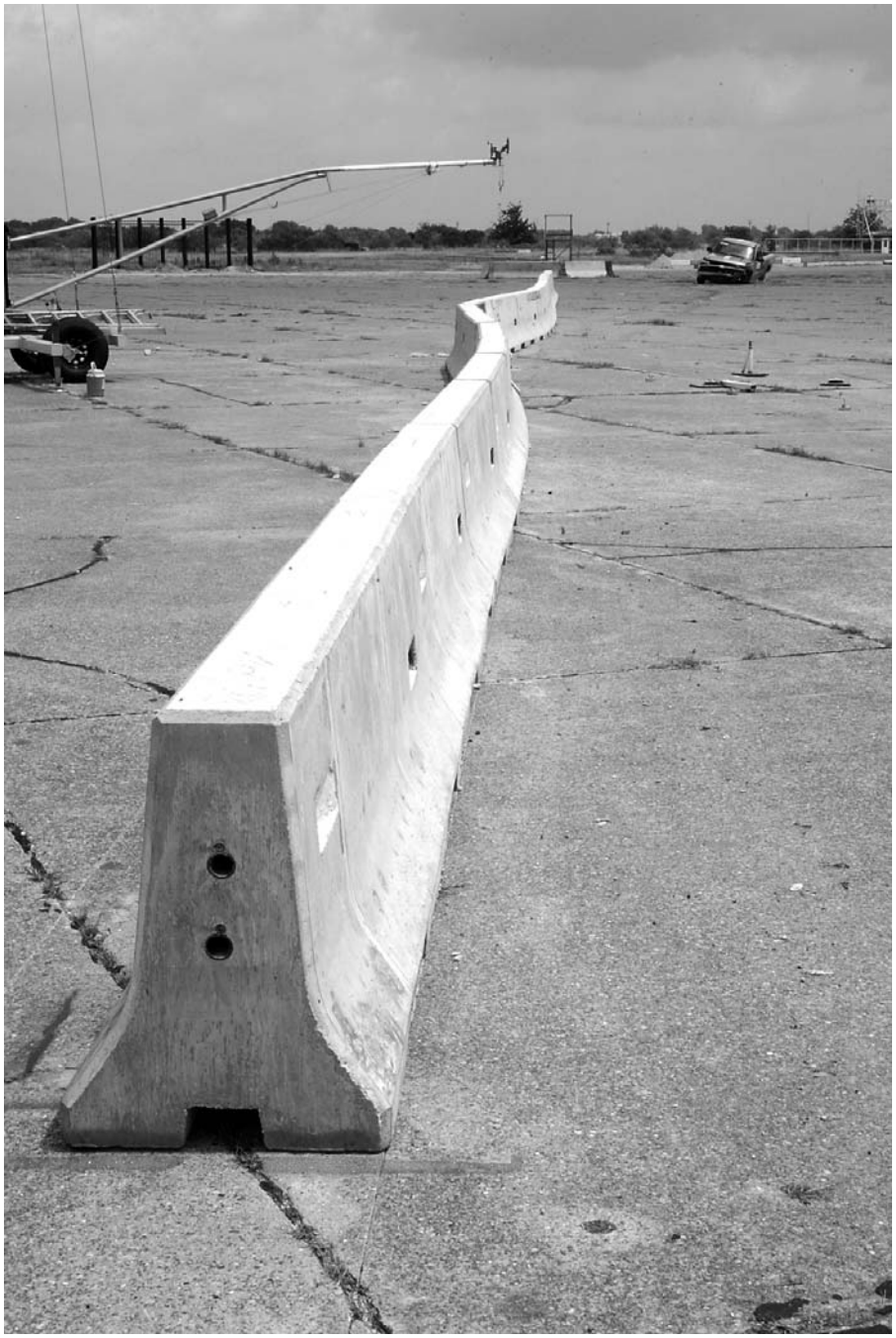

Figure 10. After Impact Trajectory Path for Test 446924-1.

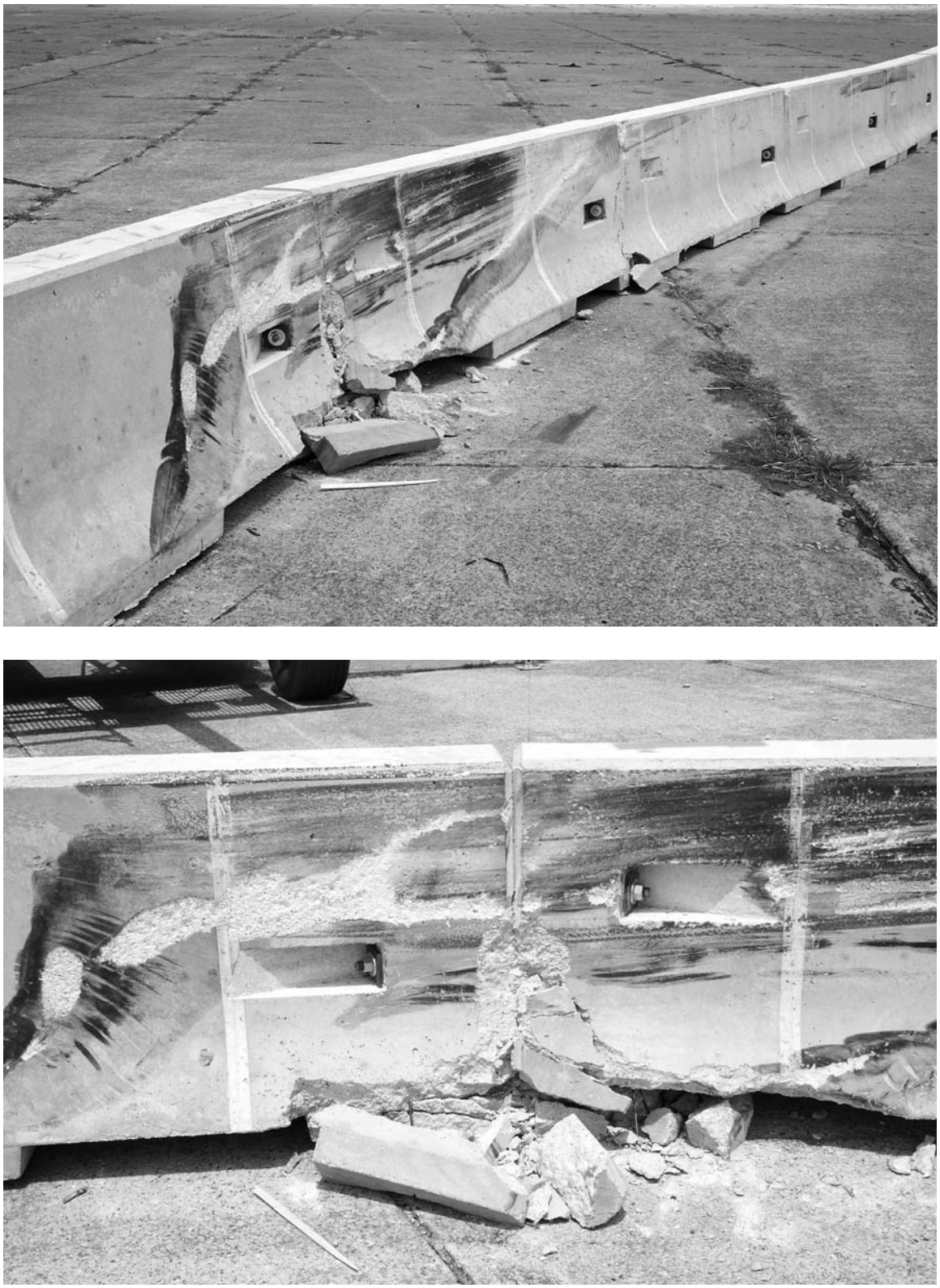

Figure 11. Installation after Test 446924-1.

The vehicle sustained damage to the left front quarter, as shown in Figure 12. Structural damage included deformation of the cross member, upper A-arm, and left side frame rail. Also damaged were the front bumper, radiator, left front quarter panels, left door, left rear exterior bed, and the rear bumper. On both the left front and rear wheel rim assembly, the inner rim separated from the outer rim, and the rims were deformed. The right front quarter panel was deformed due to end shift from the left side. Maximum exterior crush to the vehicle was 20.9 inches in the left side plane at the front corner of the bumper. Maximum occupant compartment deformation was 1.8 inches in the left side firewall area. Photographs of the interior of the vehicle are shown in Figure 13. Tables 2 and 3 of Appendix B present exterior vehicle crush measurements and occupant compartment deformations.

Data from the triaxial accelerometer, located at the vehicle center of gravity, were digitized to compute occupant impact velocity and ridedown accelerations. Only the occupant impact velocity and ridedown accelerations in the longitudinal axis are required from these data for evaluation of criterion L in *NCHRP Report 350*. In the longitudinal direction, occupant impact velocity was 15.7 ft/s at 0.094 s, maximum 0.010-s ridedown acceleration was -9.3 g's from 0.182 to 0.192 s, and the maximum 0.050-s average was -6.7 g's between 0.009 and 0.059 s. In the lateral direction, the occupant impact velocity was 21.0 ft/s at 0.094 s, the highest 0.010-s occupant ridedown acceleration was 6.0 g's from 0.217 to 0.227 s, and the maximum 0.050-s average was 9.4 g's between 0.020 and 0.070 s. Figure 14 presents these data and other pertinent information from the test. Figures 18 through 24 in Appendix D present traces of vehicle angular displacements and accelerations versus time.

ASSESSMENT OF TEST RESULTS

An assessment of the test based on the applicable *NCHRP Report 350* evaluation criteria is provided below.

Structural Adequacy

A. Test article should contain and redirect the vehicle; the vehicle should not penetrate, underride, or override the installation although controlled lateral deflection of the test article is acceptable.

Results: The portable concrete barrier contained and redirected the pickup truck. The pickup truck did not penetrate, underride, or override the installation. Maximum dynamic deflection of the installation was 27.0 inches. (PASS)

Occupant Risk

D. Detached elements, fragments, or other debris from the test article should not penetrate or show potential for penetrating the occupant compartment, or present an undue hazard to other traffic, pedestrians, or personnel in a work zone. Deformation of, or intrusions into, the occupant compartment that could cause serious injuries should not be permitted.

Figure 12. Vehicle after Test 446924-1.

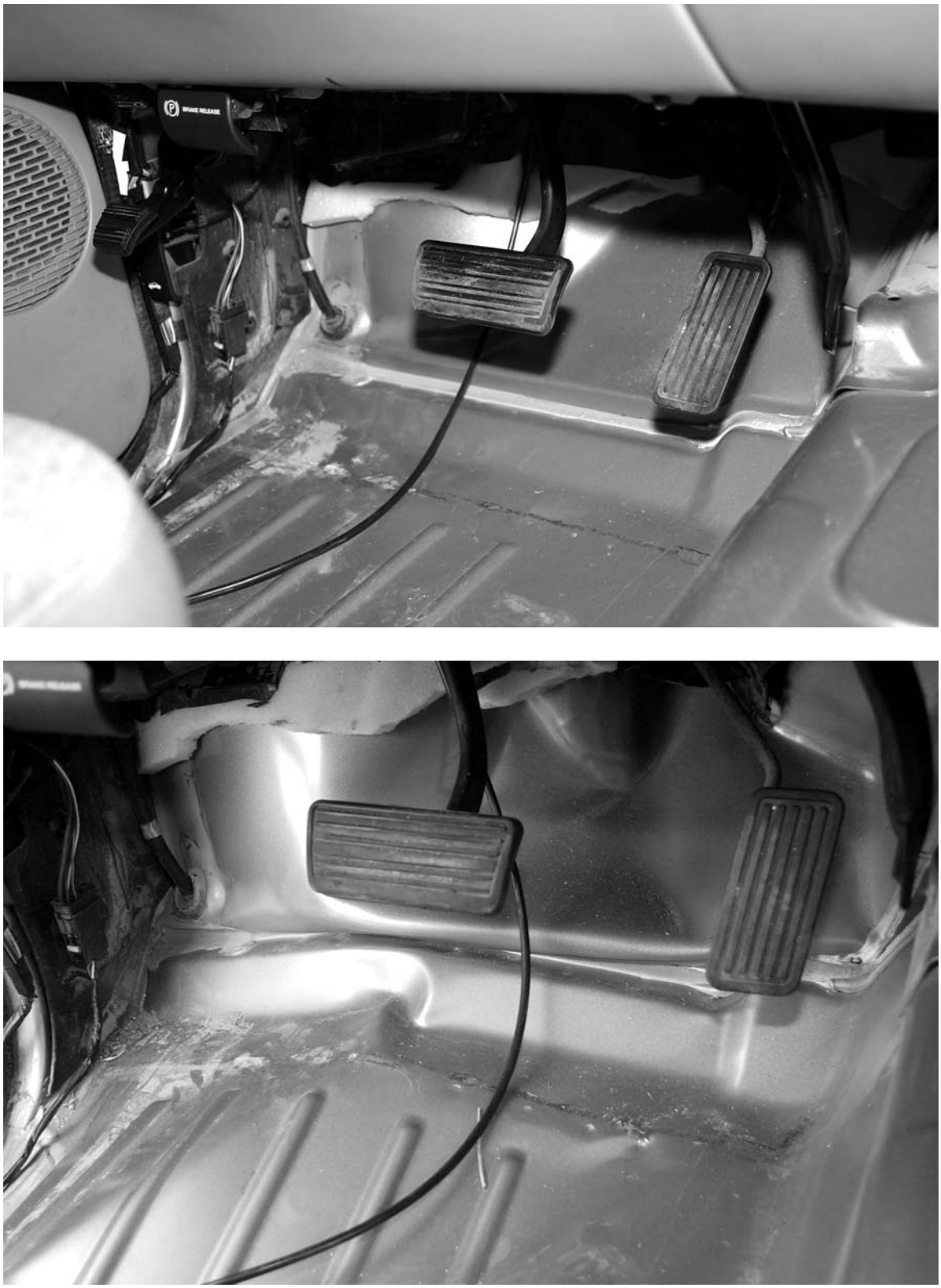

Figure 13. Interior of Vehicle for Test 446924-1.

0.000 s

0.100 s

0.301 s

0.502 s

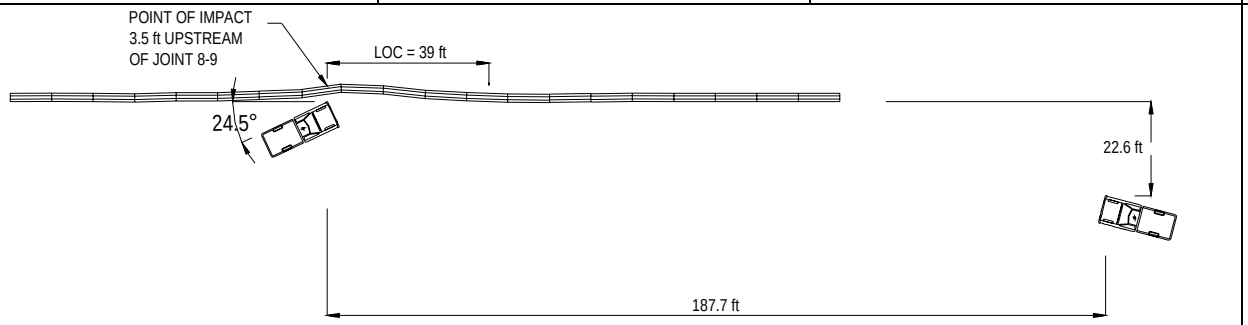

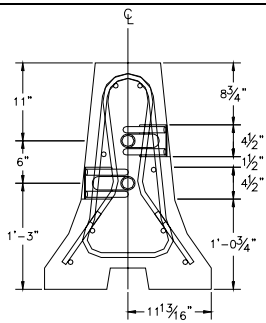

General Information
- Test Agency ..... Texas Transportation Institute
- Test No. 446924-1
- Date 06/02/2004

Test Article
- Type ..... Cross-Bolt Portable Concrete Barrier
- Name ..... TxDOT CSB(8)-04
- Installation Length (ft) 200
- Material or Key Elements ..... 10 ft Cross-Bolt Portable Concrete Median Barrier Segments

Soil Type and Condition ..... Concrete Pavement, Dry

Test Vehicle
- Type ..... Production
- Designation 2000P
- Model ..... 2001 Chevrolet 2500 Pickup Truck
- Mass (lb)
  - Curb 5145
  - Test Inertial 4965
  - Dummy ..... No dummy
  - Gross Static 4960

Impact Conditions
- Speed (mph) 62.0
- Angle (deg) 24.5

Exit Conditions
- Speed (mph) 52.6
- Angle (deg) 2.1

Occupant Risk Values
- Impact Velocity (ft/s)
  - Longitudinal 4.8
  - Lateral ..... -6.4
- THIV (mph) 28.1
- Ridedown Accelerations (g's)
  - Longitudinal ..... -9.3
  - Lateral 6.0
- PHD (g's) 10.1
- ASI 1.15
- Max. 0.050-s Average (g's)
  - Longitudinal ..... -6.7
  - Lateral 9.4
  - Vertical ..... -2.0

Test Article Deflections (inches)
- Dynamic 27.0
- Permanent 27.0
- Working Width 19.7

Vehicle Damage
- Exterior
  - VDS 11LFQ4
  - CDC 11FLEW3
  - Maximum Exterior Vehicle Crush (inch) 20.9
- Interior
  - OCDI FS0000000
  - Maximum Occupant Cmpt. Deformation (inch) 1.8

Post-Impact Behavior
(during 1.0 sec after impact)
- Max. Yaw Angel (deg) 55
- Max. Pitch Angle (deg) ..... -20
- Max. Roll Angle (deg) ..... -30

Figure 14. Summary of Results for *NCHRP Report 350* Test 3-11 on the Cross-Bolt Concrete Median Barrier.

Results: No detached elements, fragments, or other debris were present to penetrate or to show potential for penetrating the occupant compartment, or to present hazard to others in the area. Maximum occupant compartment deformation was 1.8 inches. (PASS)

F. The vehicle should remain upright during and after collision although moderate roll, pitching, and yawing are acceptable.

Results: The vehicle remained upright during and after the collision period. (PASS)

Vehicle Trajectory

K. After collision, it is preferable that the vehicle's trajectory not intrude into adjacent traffic lanes.

Result: The vehicle came to rest 187.7 ft downstream of impact and 22.6 ft forward of the traffic face of the barrier. (FAIL)

L. The occupant impact velocity in the longitudinal direction should not exceed 12 m/s and the occupant ridedown acceleration in the longitudinal direction should not exceed 20 g's.

Result: Longitudinal occupant impact velocity was 15.7 ft/s (4.8 m/s), and longitudinal ridedown acceleration was -9.3 g's. (PASS)

M. The exit angle from the test article preferably should be less than 60 percent of the test impact angle, measured at time of vehicle loss of contact with the test device.

Result: Exit angle at loss of contact was approximately 2.1 degrees, which was 9 percent of the impact angle. (PASS)

CHAPTER 4. SUMMARY AND CONCLUSIONS

The size and weight of TxDOT's existing precast concrete median barrier designs render them only nominally "portable" in that they usually require a crane to lift and place them. The objective of this research was to develop and test a portable barrier system for high-speed roadway applications that can be easily transported and placed by TxDOT maintenance forces using readily available equipment such as a front-end loader with fork attachment. It was additionally desired that the design deflection of the new portable barrier system be less than 3 ft.

A recently developed cross-bolt connection for concrete median barriers was adapted for use in the new barrier portable barrier system. The primary means of achieving better portability involved reducing the length of the barrier segments from 30 ft to 10 ft. Reduction in the barrier segment length reduced the segment weight to 4530 lb.

A review of equipment capabilities available to most TxDOT maintenance offices for barrier transport and erection determined if this weight and size can be readily accommodated. The preferred method of barrier deployment is to transport the barriers to the work site with a haul truck and put the barriers in place using a district's existing wheel loaders with approved forklift attachments. Several manufacturers verified that their front-end loaders fitted with fork attachments can safely lift and place the 10-ft barrier segments. The location and size of the drainage troughs at the base of the barrier segments were modified to readily accept such fork attachments.

A review of available end treatments for concrete median barrier (CMB) identified existing products in the marketplace suitable for use with the new portable maintenance barrier. Weight, portability, and ease of deployment were among the factors considered during the product review. Several suitable products were identified, some of which are already approved for use in Texas.

Predictive finite element computer simulations helped evaluate the barrier, quantify its design deflection, and assess its ability to meet *NCHRP Report 350* impact performance criteria. The simulation effort provided TTI researchers and TxDOT engineers a more detailed understanding of the three-dimensional impact response of the barrier prior to conducting full-scale crash testing.

Subsequent to its design and simulation, a full-scale crash test was conducted to assess impact performance and quantify the design deflection of the cross-bolted F-shape barrier. The test involved a 5000-lb pickup truck impacting the barrier at a speed of 62 mph and an angle of 25 degrees. The weight of the pickup truck reflects an increase of approximately 15 percent from the current weight of 4409 lb for design test vehicle in *NCHRP Report 350*. This is a proposed change being considered as part of the update to *NCHRP Report 350* that is in progress under NCHRP Project 22-14(2).

As summarized in Table 1, the new TxDOT portable concrete barrier satisfied *NCHRP Report 350* evaluation criteria for the modified test designation 3-11 impact conditions. The structural integrity of the barrier and its connections was maintained, and the barrier successfully contained and redirected the test vehicle in an upright manner. The occupant risk factors were within the preferred limits specified in *NCHRP Report 350*. Although the barrier sustained some damage that would require repair, there were no detached elements, fragments, or other debris that showed potential for penetrating the occupant compartment, or presented a hazard to workers or others in the area.

The dynamic barrier deflection under the more severe impact conditions used for the test was 27 inches. This deflection is less than the 3-ft deflection constraint imposed by TxDOT at the onset of the project. In fact, even though the impact severity was 15 percent greater than required in *NCHRP Report 350*, the 10-ft barrier segments with X-bolt connection has the lowest deflection of any free-standing, portable concrete barrier approved to *NCHRP Report 350* requirements other than the X-bolt barrier with 30-ft segments.

Table 1. Performance Evaluation Summary for *NCHRP Report 350* Test 3-11 on the Cross-Bolt Concrete Median Barrier.

Test Agency: Texas Transportation Institute	Test No.: 446924-1	Test Date: 06/02/2004
***NCHRP Report 350* Test 3-11 (Modified) Evaluation Criteria**	**Test Results**	**Assessment**
Structural Adequacy *A. Test article should contain and redirect the vehicle; the vehicle should not penetrate, underride, or override the installation although controlled lateral deflection of the test article is acceptable*	The portable concrete barrier contained and redirected the pickup truck. The pickup truck did not penetrate, underride, or override the installation. Maximum dynamic deflection of the installation was 27.0 inches.	Pass
Occupant Risk *D. Detached elements, fragments, or other debris from the test article should not penetrate or show potential for penetrating the occupant compartment, or present an undue hazard to other traffic, pedestrians, or personnel in a work zone. Deformations of, or intrusions into, the occupant compartment that could cause serious injuries should not be permitted.*	No detached elements, fragments, or other debris were present to penetrate or to show potential for penetrating the occupant compartment, or to present hazard to others in the area. Maximum occupant compartment deformation was 1.8 inches.	Pass
F. The vehicle should remain upright during and after collision although moderate roll, pitching, and yawing are acceptable.	The vehicle remained upright during and after the collision period.	Pass
Vehicle Trajectory *K. After collision, it is preferable that the vehicle's trajectory not intrude into adjacent traffic lanes.*	The vehicle came to rest 187.7 ft downstream of impact and 22.6 ft forward of the traffic face of the barrier.	Fail*
L. The occupant impact velocity in the longitudinal direction should not exceed 12 m/s and the occupant ridedown acceleration in the longitudinal direction should not exceed 20 g's.	Longitudinal occupant impact velocity was 15.7 ft/s (4.8 m/s), and longitudinal ridedown acceleration was -9.3 g's.	Pass
M. The exit angle from the test article preferably should be less than 60 percent of test impact angle, measured at time of vehicle loss of contact with test device.	Exit angle at loss of contact was approximately 2.1 degrees, which was 9 percent of the impact angle.	Pass*

* Criteria K and M are preferred, not required.

CHAPTER 5. IMPLEMENTATION STATEMENT

Texas Department of Transportation's (TxDOT) portable concrete traffic barrier standards have evolved over the years to incorporate rail segments that are 30 ft in length and weigh approximately 14,000 lb each. While these barriers serve their function well once they are in position, the 30-ft barrier segments are only nominally "portable" in that they usually require a crane to lift and place them. Maintenance sections do not typically have this type of heavy equipment and must, therefore, contract for these services. The benefits of a truly portable rail system include reduced deployment time (which can be critical for some emergency maintenance operations) and reduced expense and liability associated with moving and placing the larger, heavier 30-ft barrier segments.

Under this project, a new precast concrete traffic barrier system for maintenance operations was developed through a program of simulation and full-scale crash testing. The new barrier system achieves the objective of greatly enhanced portability combined with a low dynamic barrier design deflection. The 10-ft barrier segments have a weight of 4530 lb, which can be readily lifted and placed using a front-end loader with fork attachment. The location and size of the drainage troughs at the base of the barrier segments were modified to accommodate the use of such equipment.

Based on the results of the testing and evaluation reported herein, the new precast, cross-bolt, F-shape concrete traffic barrier with 10-ft barrier segments is considered suitable for implementation on high-speed roadways. The cross-bolt connection system adapted for use in the new barrier helps limit dynamic deflection during an impact. When subjected to a crash test with an impact severity 15 percent greater than currently required in *NCHRP Report 350*, the barrier deflected only 27 inches. This is the lowest deflection of any free-standing, portable concrete barrier approved to *NCHRP Report 350* requirements other than TxDOT's X-bolt barrier with 30-ft segments. The low deflection and ease of placement and repair make the barrier well suited for maintenance and work zone operations.

The tolerance available in the X-bolt connection assists with barrier constructability and placement of the barrier on horizontal and vertical curves. The relative angle that can be achieved between barrier segments is 4 degrees. In combination with the 10-ft segment lengths, the barrier has a minimum radius of curvature of approximately 125 ft.

Unless the ends of the portable concrete barrier can be flared out the required clear zone at an acceptable rate, they must be shielded using crashworthy end treatments or crash cushions. Researchers identified several existing crash cushion products suitable for use with the highly portable barrier system, some of which are already approved for use in Texas.

Finite element impact simulations were conducted to investigate the minimum installation lengths appropriate for the barrier. Simulations of a 100-ft installation with free ends and a 50-ft installation with constrained ends showed successful redirection of the finite element vehicle with reasonable barrier deflections. The unrestrained end condition represents use of the barrier with a free-standing, unanchored end treatment or crash cushion. The restrained end

condition corresponds to the use of a fully anchored end treatment or crash cushion. It should be noted that the minimum barrier lengths selected for the restrained and unrestrained end conditions are based on impact performance and dynamic deflection. The required barrier length of need should be determined following appropriate guidelines with consideration given to site conditions, size, and lateral offset of hazards being shielded, and protection of workers in the work zone area.

The F-shape profile of the barrier maintains compatibility with the standard TxDOT X-bolt, F-shape barrier with 30-ft segments without the need for a special barrier transition section should it be desirable to connect the systems together. The F-shape barrier profile should provide improved safety in comparison with New Jersey-profile barriers by reducing the frequency of rollover crashes. Full-scale crash testing indicates that vehicles impacting barriers with an F-shape profile experience less climb and remain more stable compared to those that impact barriers with a New Jersey profile.

After the successful crash test, details of the barrier system were provided to personnel in TxDOT's Design Division. These details are shown in Figure 6. Statewide implementation of the new cross-bolt F-shape barrier has been achieved by TxDOT's Design Division through the development and issuance of a new standard detail sheet (CSB[8]-04).

REFERENCES

1. H. E. Ross, Jr., D. L. Sicking, R. A. Zimmer, and J. D. Michie. *Recommended Procedures for the Safety Performance Evaluation of Highway Features*, National Cooperative Highway Research Program Report 350, Transportation Research Board, National Research Council, Washington, DC, 1993.

2. T. R. Guidry and W. L. Beason. *Development of a Low-Profile Portable Concrete Barrier*. Research Report 990-4F, Texas Transportation Institute, College Station, TX, November 1991.

3. W. L. Beason, H. E. Ross, Jr., H. S. Perera, and W. L. Campise. *Development of a Single Slope Concrete Median Barrier*. Research Report 9429C-1, Texas Transportation Institute, College Station, TX, February 1989.

4. W. L. Beason and D. L. Bullard, Jr. *Development of a Limited Slip Portable Concrete Barrier Connection*. Research Report No. 1959-1, Texas Transportation Institute, College Station, TX, November 1993.

5. R. P. Bligh, D. L. Bullard, Jr., W. L. Menges, and B. G. Butler. *Evaluation of Texas Grid-Slot Portable Concrete Barrier System*. Report 0-4162-1, Texas Transportation Institute, College Station, TX, April 2002.

6. R. P. Bligh, N. M. Sheikh, W. L. Menges, and R. R. Haug. *Development of Low-Deflection Precast Concrete Barrier*. Report 0-4162-3. Texas Transportation Institute, College Station, TX, January 2005.

7. C. E. Buth, N. M. Sheikh, R. P. Bligh, W. L. Menges, and R. H. Haug. *NCHRP Report 350 Testing of Montana Portable Concrete Safety Shape Barriers*. Report FHWA/MT-03-002/8162, Texas Transportation Institute, College Station, TX, April 2003.

8. W. L. Menges, C. E. Buth, R. A. Zimmer, and W. F. Williams. *NCHRP Report 350 Test 3-11 of Georgian Temporary Concrete Barrier*. Research Report No. 404821-1, Texas Transportation Institute, College Station, TX, August 1999.

9. C. E. Buth, W. L. Menges, and S. K. Schoeneman. *NCHRP Report 350 Test 3-11 of the Modified Virginia DOT Portable Concrete Barrier*. Research Report No. 402041-1, Texas Transportation Institute, College Station, TX, January 1999.

10. J. O. Hallquist. *LS-DYNA*. Livermore Software Technology Corporation, 2002.

11. A. K. Zaouk, N.E. Bedewi, C. D. Kan, and D. Marzougui. "Development and Evaluation of a C-2500 Pick-Up Truck Model for Roadside Hardware Impact." *Federal Highway Administration Simulation Conference*, Langley, VA, 1997.

APPENDIX A. CRASH TEST AND DATA ANALYSIS PROCEDURES

The crash test and data analysis procedures were in accordance with guidelines presented in *NCHRP Report 350*. Brief descriptions of these procedures are presented as follows.

ELECTRONIC INSTRUMENTATION AND DATA PROCESSING

The test vehicle was instrumented with three solid-state angular rate transducers to measure roll, pitch, and yaw rates; a triaxial accelerometer near the vehicle center of gravity (c.g.) to measure longitudinal, lateral, and vertical acceleration levels; and a backup biaxial accelerometer in the rear of the vehicle to measure longitudinal and lateral acceleration levels. These accelerometers were ENDEVCO® Model 2262CA, piezoresistive accelerometers with a ±100 g range.

The accelerometers are strain gage type with a linear millivolt output proportional to acceleration. Angular rate transducers are solid state, gas flow units designed for high-"g" service. Signal conditioners and amplifiers in the test vehicle increase the low-level signals to a ±2.5 volt maximum level. The signal conditioners also provide the capability of an R-cal (resistive calibration) or shunt calibration for the accelerometers and a precision voltage calibration for the rate transducers. The electronic signals from the accelerometers and rate transducers are transmitted to a base station by means of a 15-channel, constant bandwidth, Inter-Range Instrumentation Group (IRIG), FM/FM telemetry link for recording on magnetic tape and for display on a real-time strip chart. Calibration signals from the test vehicle are recorded before the test and immediately afterward. A crystal-controlled time reference signal is simultaneously recorded with the data. Wooden dowels actuate pressure-sensitive switches on the bumper of the impacting vehicle prior to impact by wooden dowels to indicate the elapsed time over a known distance to provide a measurement of impact velocity. The initial contact also produces an "event" mark on the data record to establish the instant of contact with the installation.

The multiplex of data channels, transmitted on one radio frequency, is received and demultiplexed onto separate tracks of a 28-track, (IRIG) tape recorder. After the test, the data are played back from the tape machine and digitized. A proprietary software program (WinDigit) converts the analog data from each transducer into engineering units using the R-cal and pre-zero values at 10,000 samples per second per channel. WinDigit also provides Society of Automotive Engineers (SAE) J211 class 180 phaseless digital filtering and vehicle impact velocity.

All accelerometers are calibrated annually according to the SAE J211 *4.6.1* by means of an ENDEVCO® 2901, precision primary vibration standard. This device and its support instruments are returned to the factory annually for a National Institute of Standards Technology (NIST) traceable calibration. The subsystems of each data channel are also evaluated annually, using instruments with current NIST traceability, and the results are factored into the accuracy of

the total data channel, per SAE J211. Calibrations and evaluations are made any time data is suspect.

The Test Risk Assessment Program (TRAP) uses the data from WinDigit to compute occupant/compartment impact velocities, time of occupant/compartment impact after vehicle impact, and the highest 10-millisecond (ms) average ridedown acceleration. WinDigit calculates change in vehicle velocity at the end of a given impulse period. In addition, WinDigit computes maximum average accelerations over 50-ms intervals in each of the three directions. For reporting purposes, the data from the vehicle-mounted accelerometers are filtered with a 60-Hz digital filter, and acceleration versus time curves for the longitudinal, lateral, and vertical directions are plotted using TRAP.

TRAP uses the data from the yaw, pitch, and roll rate transducers to compute angular displacement in degrees at 0.0001-s intervals and then plots yaw, pitch, and roll versus time. These displacements are in reference to the vehicle-fixed coordinate system with the initial position and orientation of the vehicle-fixed coordinate systems being initial impact.

ANTHROPOMORPHIC DUMMY INSTRUMENTATION

Use of a dummy in the 2000P vehicle is optional according to *NCHRP Report 350*, and there was no dummy used in the tests with the 2000P vehicle.

PHOTOGRAPHIC INSTRUMENTATION AND DATA PROCESSING

Photographic coverage of the test included three high-speed cameras: one overhead with a field of view perpendicular to the ground and directly over the impact point; one placed behind the installation at an angle; and a third placed to have a field-of-view parallel to and aligned with the installation at the downstream end. A flash bulb activated by pressure-sensitive tape switches was positioned on the impacting vehicle to indicate the instant of contact with the installation and was visible from each camera. The films from these high-speed cameras were analyzed on a computer-linked Motion Analyzer to observe phenomena occurring during the collision and to obtain time-event, displacement, and angular data. A 16-mm movie cine, a BetaCam, a VHS-format video camera and recorder, and still cameras were used to record and document conditions of the test vehicle and installation before and after the test.

TEST VEHICLE PROPULSION AND GUIDANCE

The test vehicle was towed into the test installation using a steel cable guidance and reverse tow system. A steel cable for guiding the test vehicle was tensioned along the path, anchored at each end, and threaded through an attachment to the front wheel of the test vehicle. An additional steel cable was connected to the test vehicle, passed around a pulley near the impact point, through a pulley on the tow vehicle, and then anchored to the ground such that the tow vehicle moved away from the test site. A 2-to-1 speed ratio between the test and tow vehicle

existed with this system. Just prior to impact with the installation, the test vehicle was released to be free-wheeling and unrestrained. The vehicle remained free-wheeling, i.e., no steering or braking inputs, until the vehicle cleared the immediate area of the test site, at which time the vehicle's brakes were activated to bring it to a safe and controlled stop.

APPENDIX B. TEST VEHICLE PROPERTIES AND INFORMATION

Date: 06-02-2004 Test No.: 446924-1 VIN No.: 1GCGC24U01Z309169

Year: 2001 Make: Chevrolet Model: 2500

Tire Inflation Pressure: 50/80 psi Odometer: 160000 Tire Size: 245 75R16

Describe any damage to the vehicle prior to test: _____

● Denotes accelerometer location.

NOTES: _____

Engine Type: V-8
Engine CID: 6.0 liter
Transmission Type:
x Auto
___ Manual
Optional Equipment:

Dummy Data:
Type: None
Mass:
Seat Position:

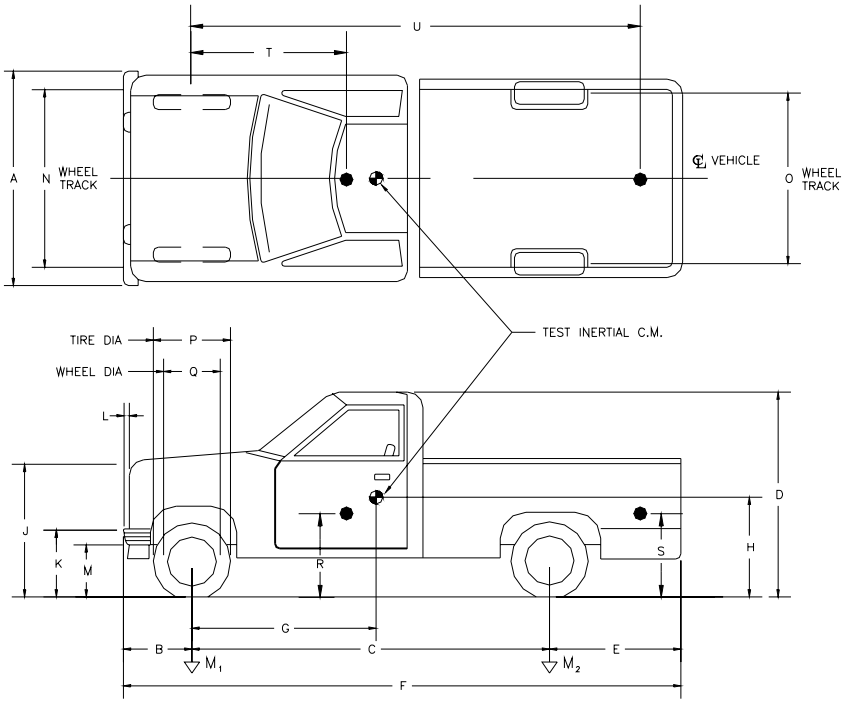

Geometry (inch)

A	74.8	E	51.2	J	45.1	N	68.7	R	30.7
B	35.8	F	220.5	K	27.6	O	66.7	S	37.2
C	133.5	G	55.3	L	3.3	P	29.7	T	55.1
D	72.2	H	27.5	M	12.4	Q	17.3	U	136.0

Mass (lb)	Curb	Test Inertial	Gross Static
M_1	2943	2910	
M_2	1982	2055	
M_{Total}	5145	4965	

Mass Distribution (lb): LF: 1435 RF: 1475 LR: 1067 RR: 988

Figure 15. Vehicle Properties for Test 446924-1.

Table 2. Exterior Crush Measurements for Test 446924-1.

VEHICLE CRUSH MEASUREMENT SHEET[1]

Complete When Applicable	
End Damage	Side Damage
Undeformed end width _____	Bowing: B1 _____ X1 _____
Corner shift: A1 _____	B2 _____ X2 _____
A2 _____	
End shift at frame (CDC)	Bowing constant
(check one)	$\frac{X1 + X2}{2}$ = _____
< 4 inches _____	
≥ 4 inches _____	

Note: Measure C_1 to C_6 from driver to passenger side in front or rear impacts – rear to front in side impacts.

Specific Impact Number	Plane* of C-Measurements	Direct Damage		Field L**	C_1	C_2	C_3	C_4	C_5	C_6	±D
		Width** (CDC)	Max*** Crush								
1	At Front Bumper	730	360	700	360	300	250	110	60	0	-350
2	At Front Bumper	730	530	1320	20	N/A	N/A	380	420	530	+1760

[1]Table taken from National Accident Sampling System (NASS).

*Identify the plane at which the C-measurements are taken (e.g., at bumper, above bumper, at sill, above sill, at beltline, etc.) or label adjustments (e.g., free space).

Free space value is defined as the distance between the baseline and the original body contour taken at the individual C locations. This may include the following: bumper lead, bumper taper, side protrusion, side taper, etc. Record the value for each C-measurement and maximum crush.

**Measure and document on the vehicle diagram the beginning or end of the direct damage width and field L (e.g., side damage with respect to undamaged axle).

***Measure and document on the vehicle diagram the location of the maximum crush.

Note: Use as many lines/columns as necessary to describe each damage profile.

Table 3. Occupant Compartment Measurements for Test 446924-1.

T R U C K

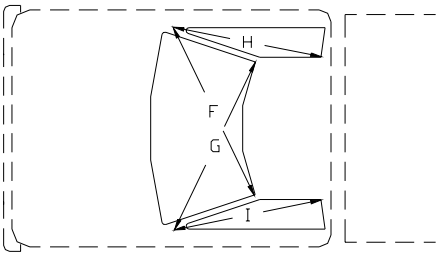

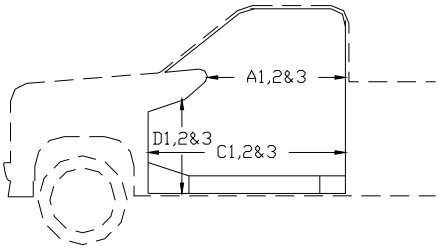

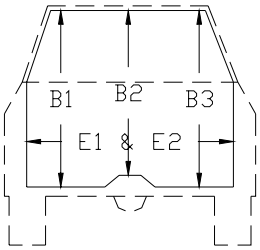

Occupant Compartment Deformation

	BEFORE (inch)	AFTER (inch)
A1	37.3	37.1
A2	37.6	37.4
A3	37.0	37.0
B1	43.5	42.6
B2	40.0	40.0
B3	43.3	43.3
C1	53.9	52.8
C2	54.2	54.2
C3	54.0	54.0
D1	12.9	11.1
D2	5.7	5.7
D3	12.7	12.7
E1	62.5	62.9
E2	62.6	63.1
F	58.0	58.0
G	58.0	58.0
H	34.8	34.8
I	37.0	37.0
J*	60.2	59.5

*Lateral area across the cab from driver's side kickpanel to passenger's side kickpanel.

APPENDIX C. SEQUENTIAL PHOTOGRAPHS

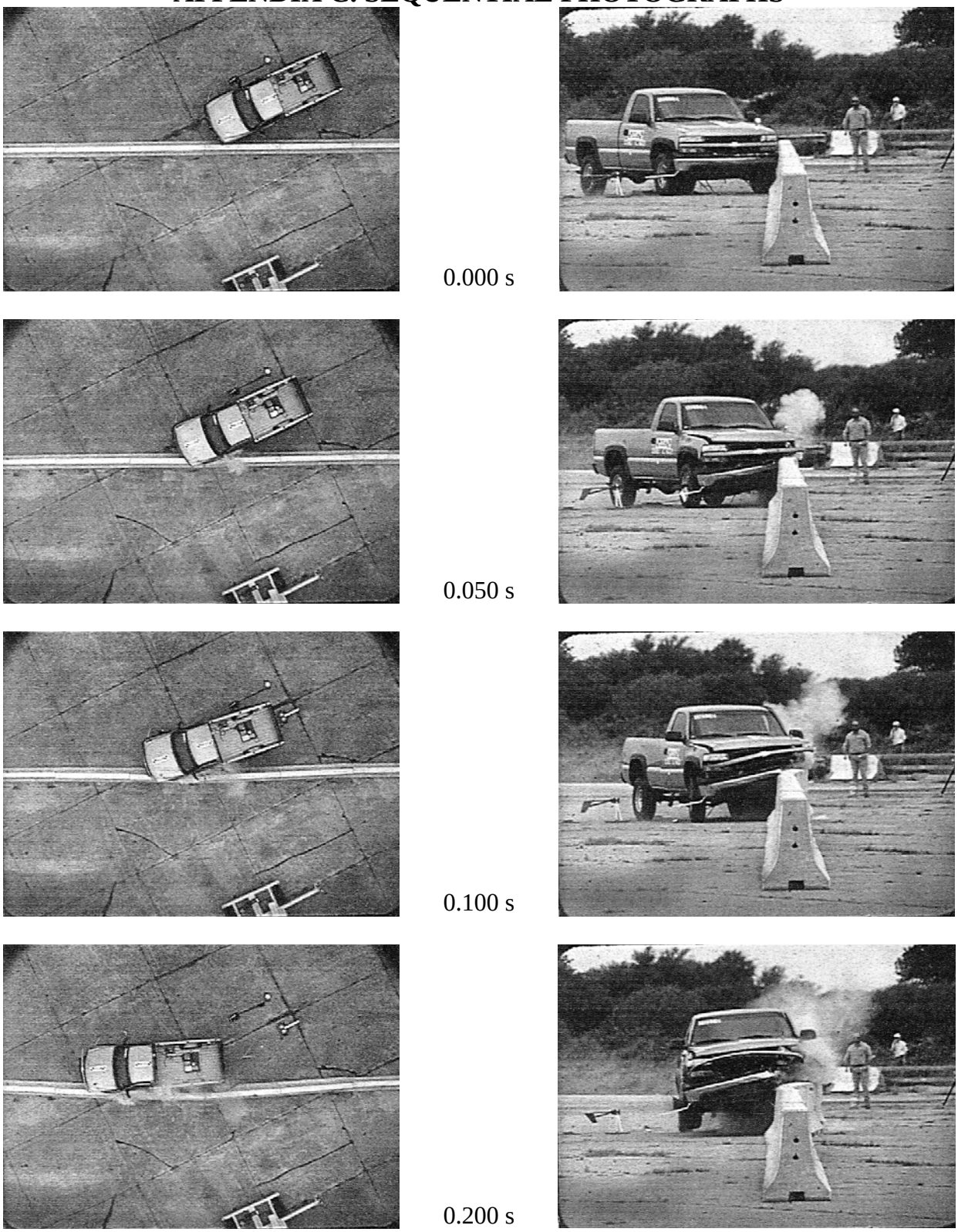

Figure 16. Sequential Photographs for Test 446924-1 (Overhead and Frontal Views).

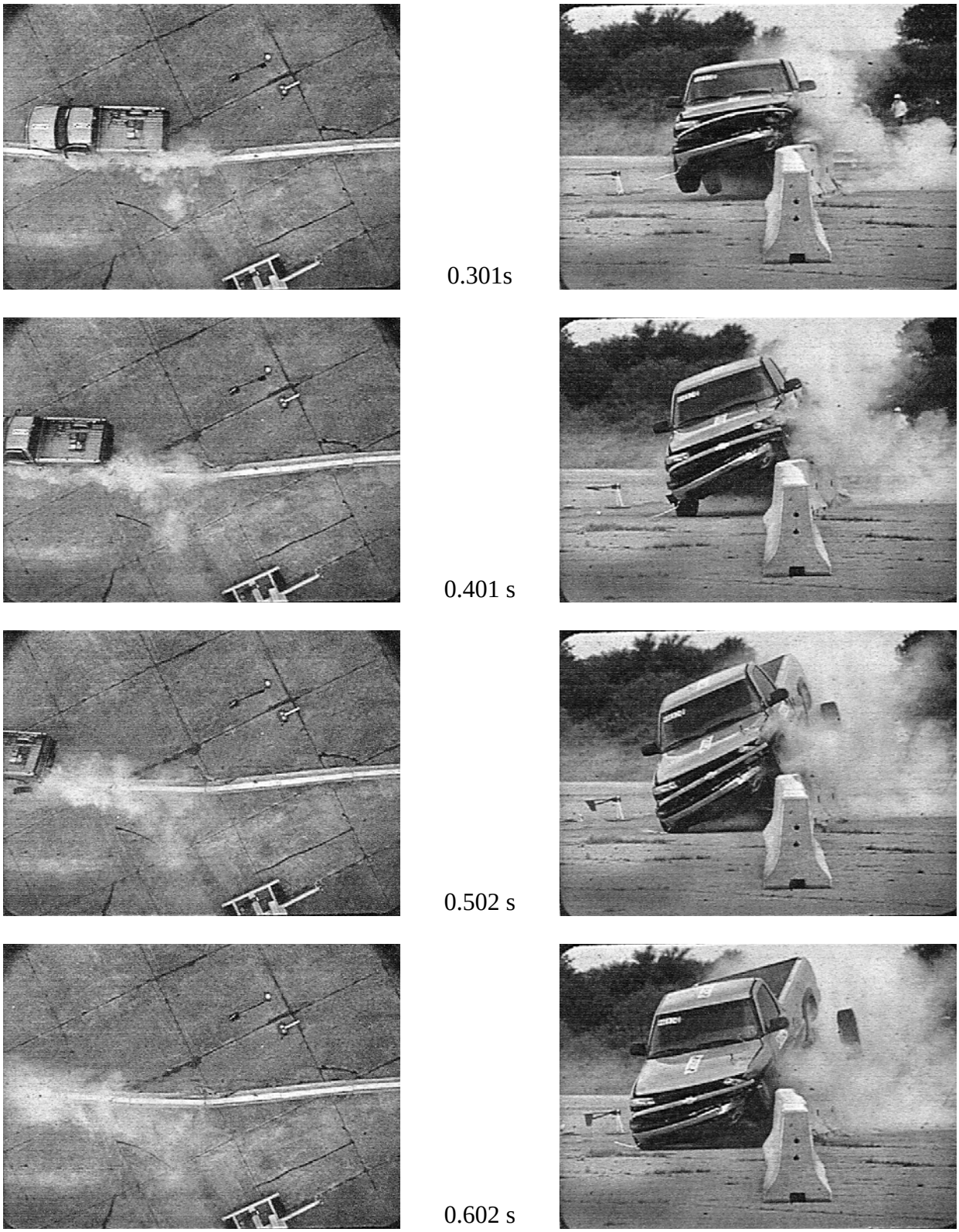

Figure 16. Sequential Photographs for Test 446924-1 (Overhead and Frontal Views) (continued).

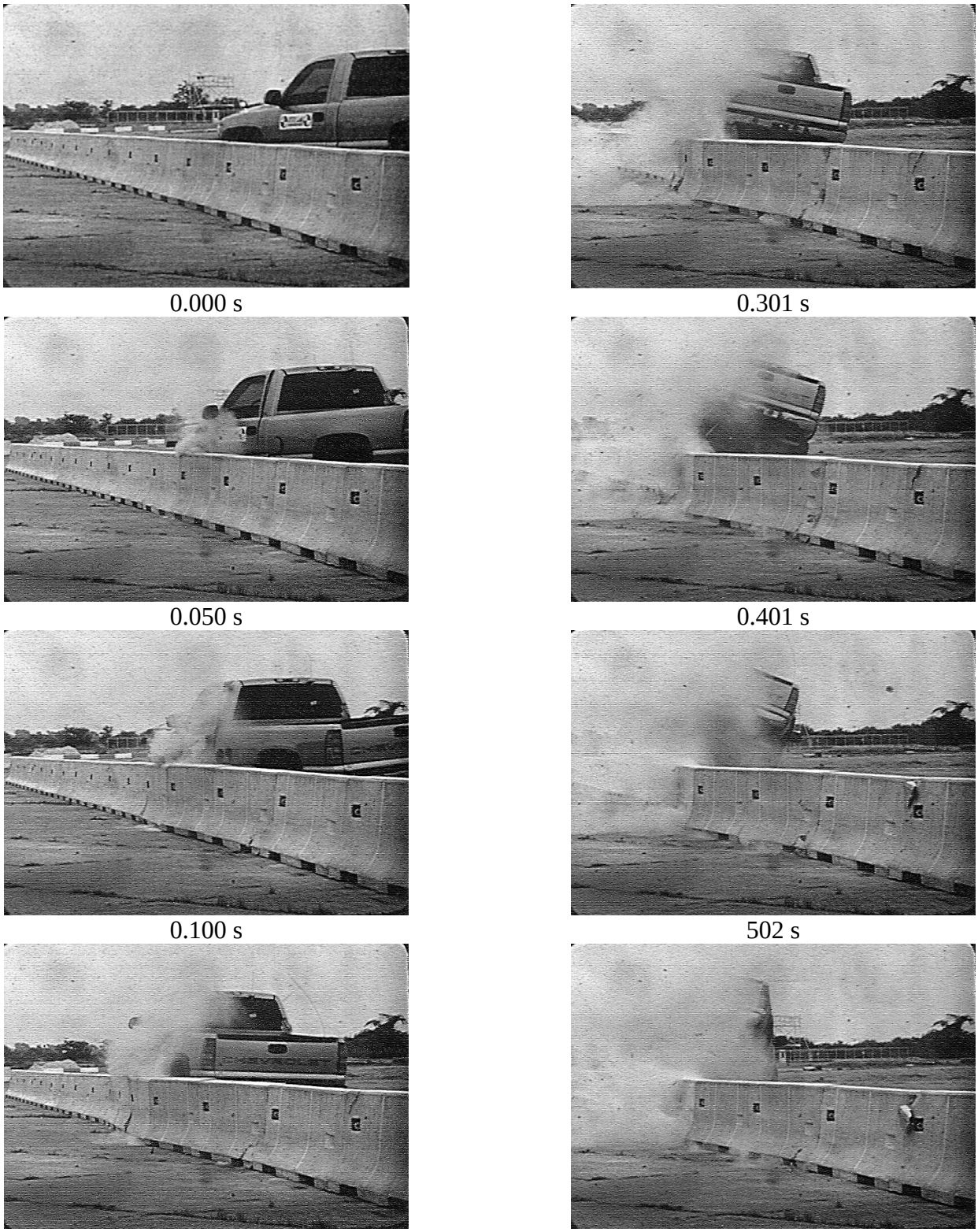

Figure 17. Sequential Photographs for Test 446924-1 (Rear View).

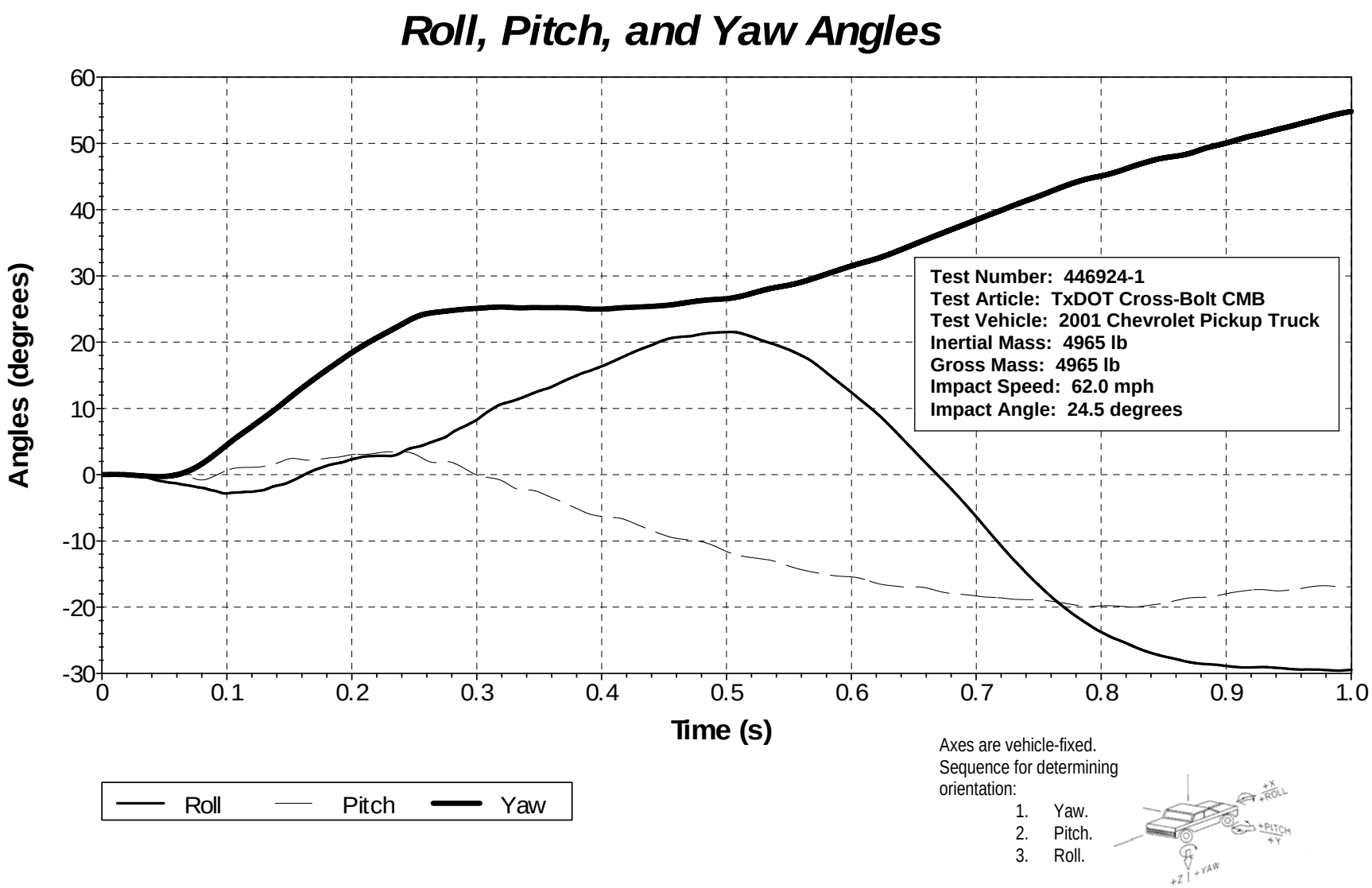

Figure 18. Vehicle Angular Displacements for Test 446924-1.

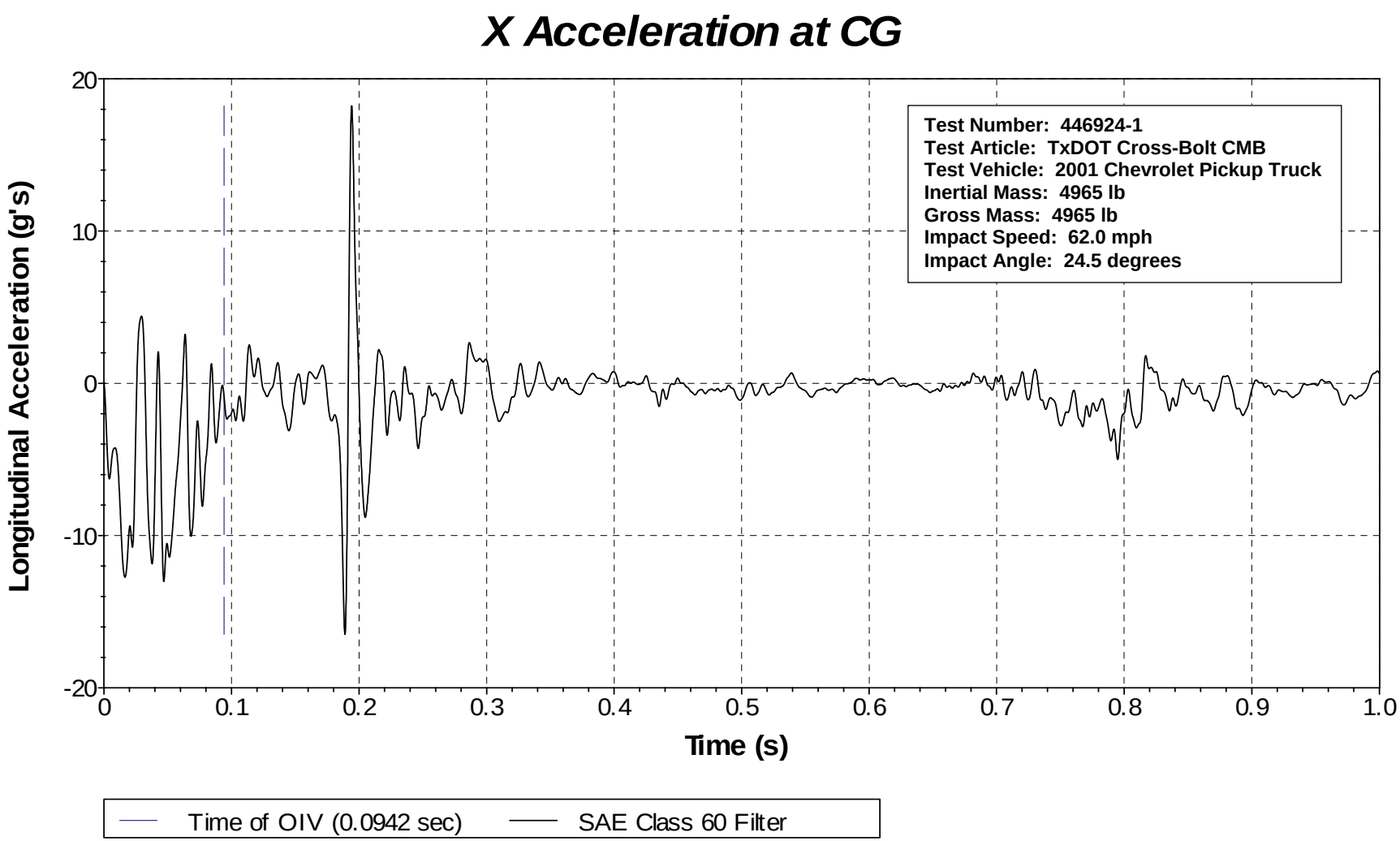

Figure 19. Vehicle Longitudinal Accelerometer Trace for Test 446924-1 (Accelerometer Located at Center of Gravity).

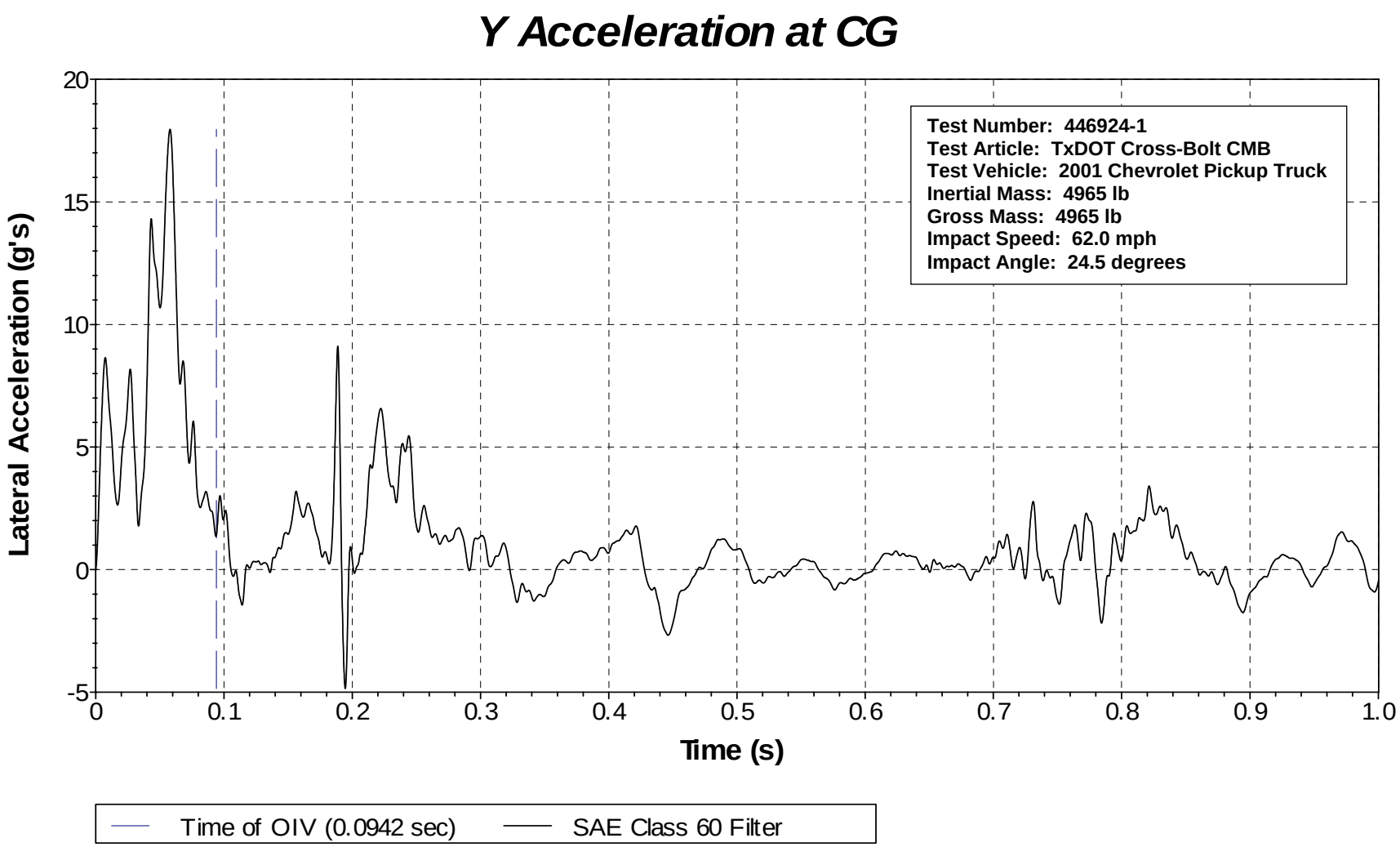

Figure 20. Vehicle Lateral Accelerometer Trace for Test 446924-1 (Accelerometer Located at Center of Gravity).

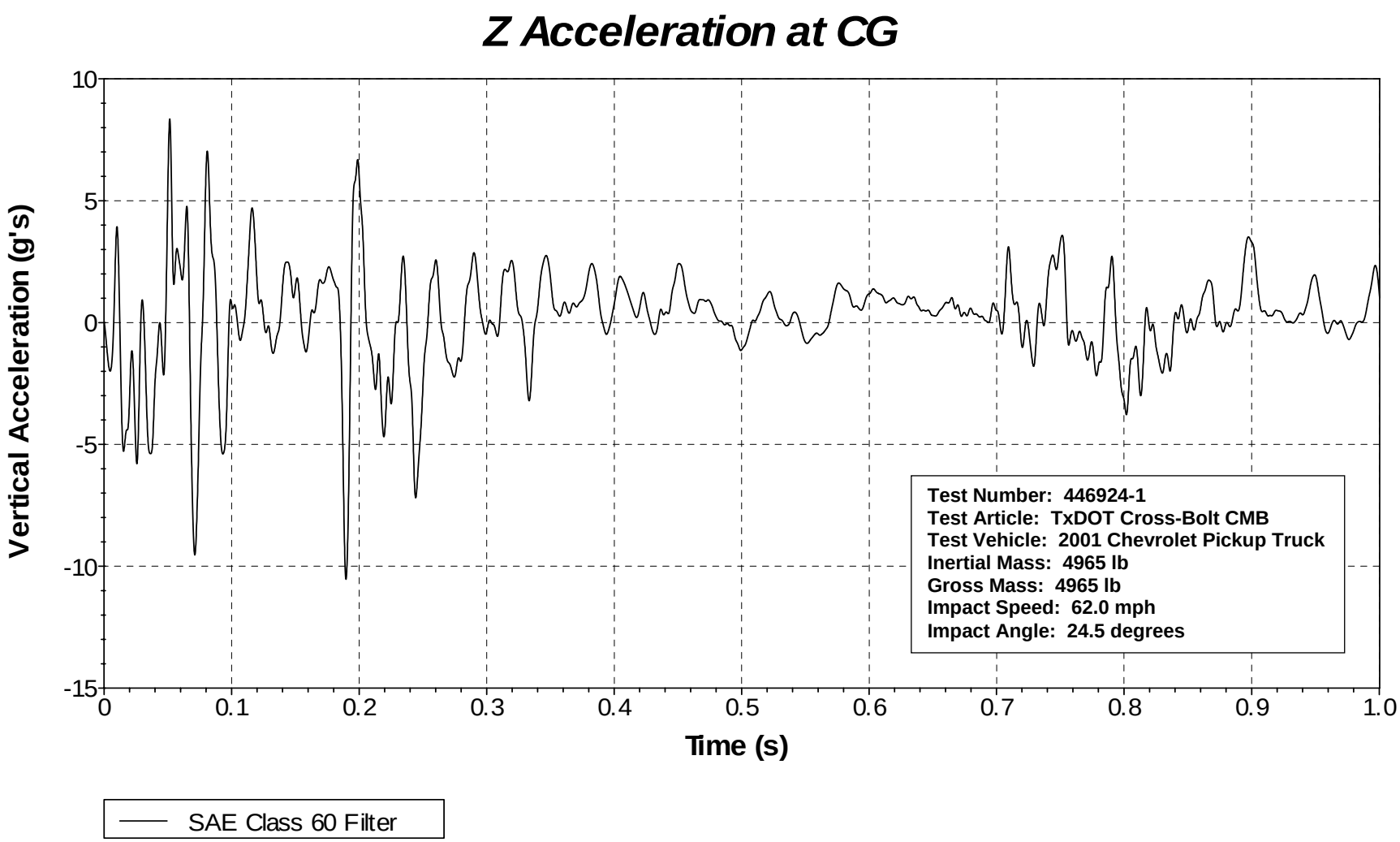

Figure 21. Vehicle Vertical Accelerometer Trace for Test 446924-1 (Accelerometer Located at Center of Gravity).

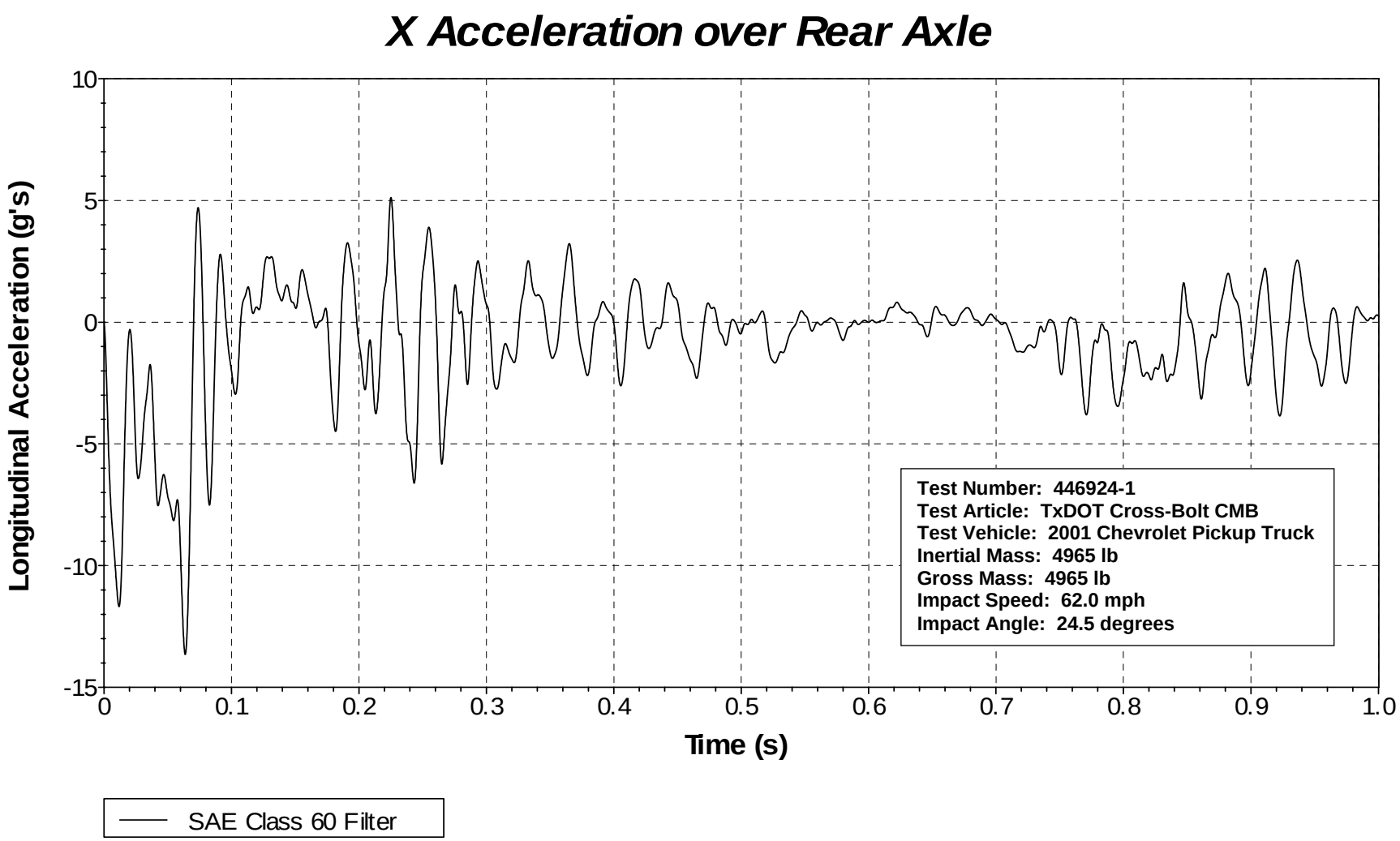

Figure 22. Vehicle Longitudinal Accelerometer Trace for Test 446924-1 (Accelerometer Located over Rear Axle).

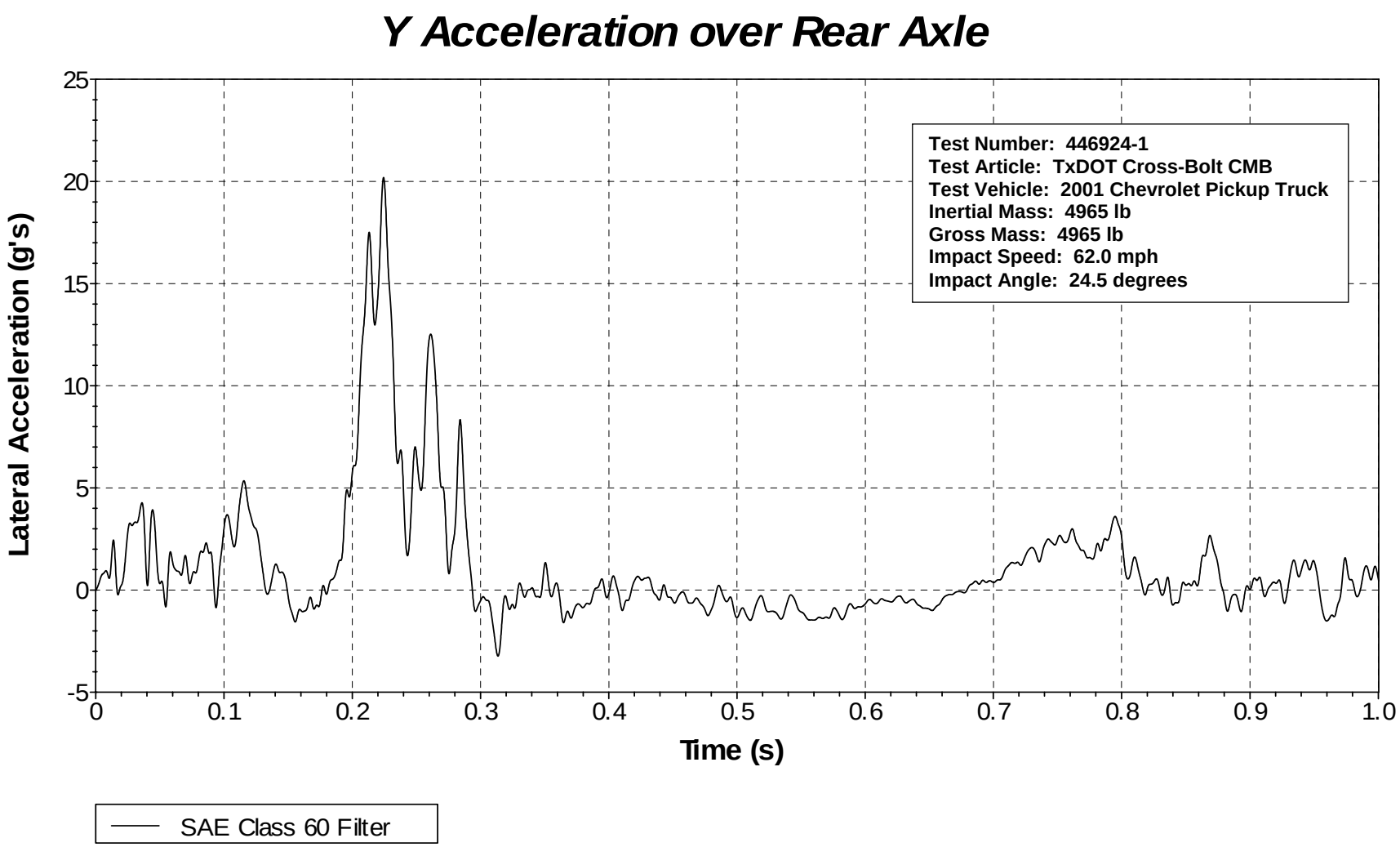

Figure 23. Vehicle Lateral Accelerometer Trace for Test 446924-1 (Accelerometer Located over Rear Axle).

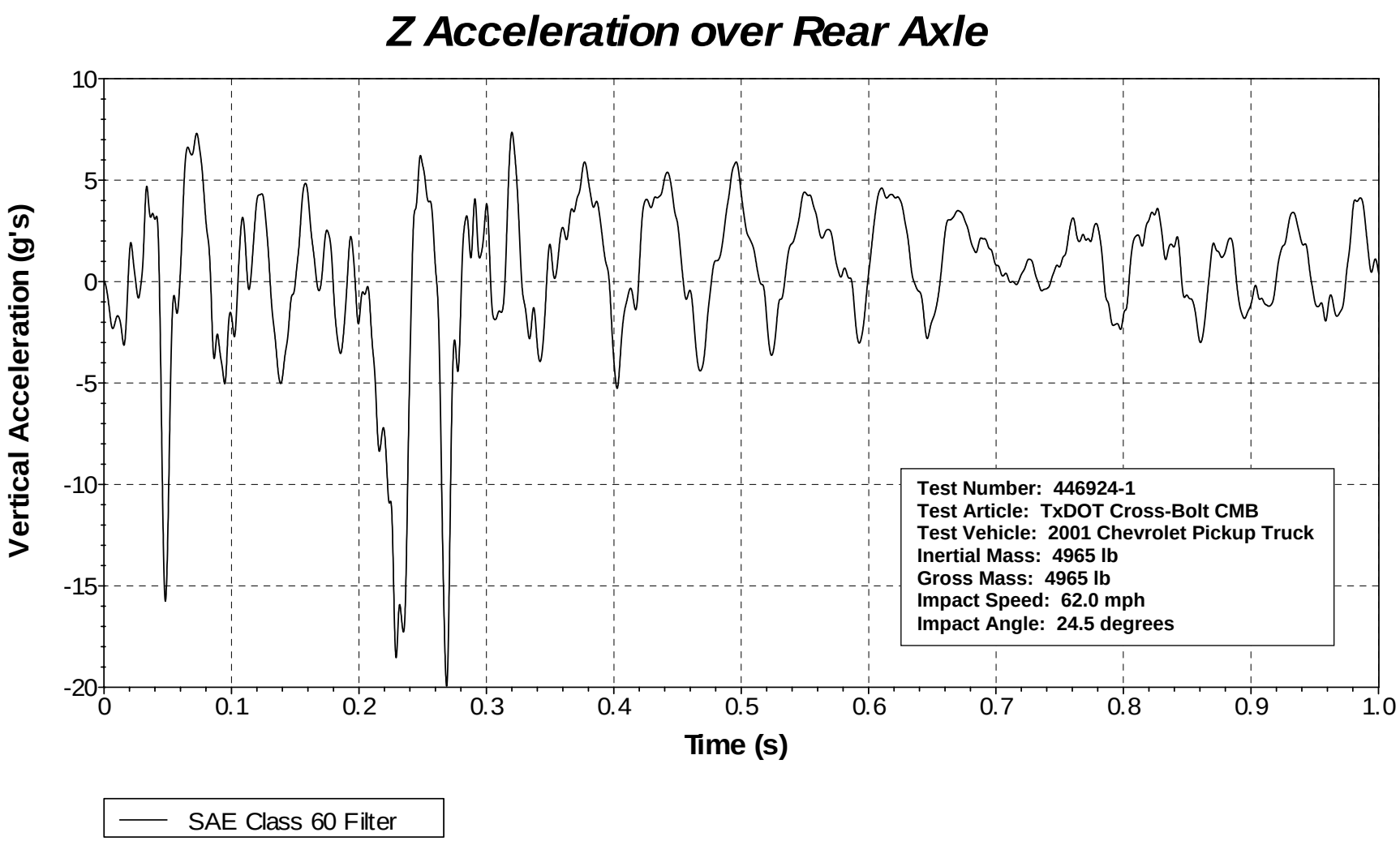

Figure 24. Vehicle Vertical Accelerometer Trace for Test 446924-1 (Accelerometer Located over Rear Axle).