Trend®

Transition End Treatment

The unique combination transition section and end treatment for shielding hazardous barrier ends

- MEETS NCHRP#230 STANDARDS FOR **BOTH** A CRASHWORTHY END TREATMENT AND A TRANSITION ELEMENT
- DECELERATES IMPACTING VEHICLES WITHOUT VAULTING, RAMPING OR SPEARING
- GREATER REDIRECTIVE CAPABILITY THAN ANY OTHER END TREATMENT
- HIGH REUSABILITY

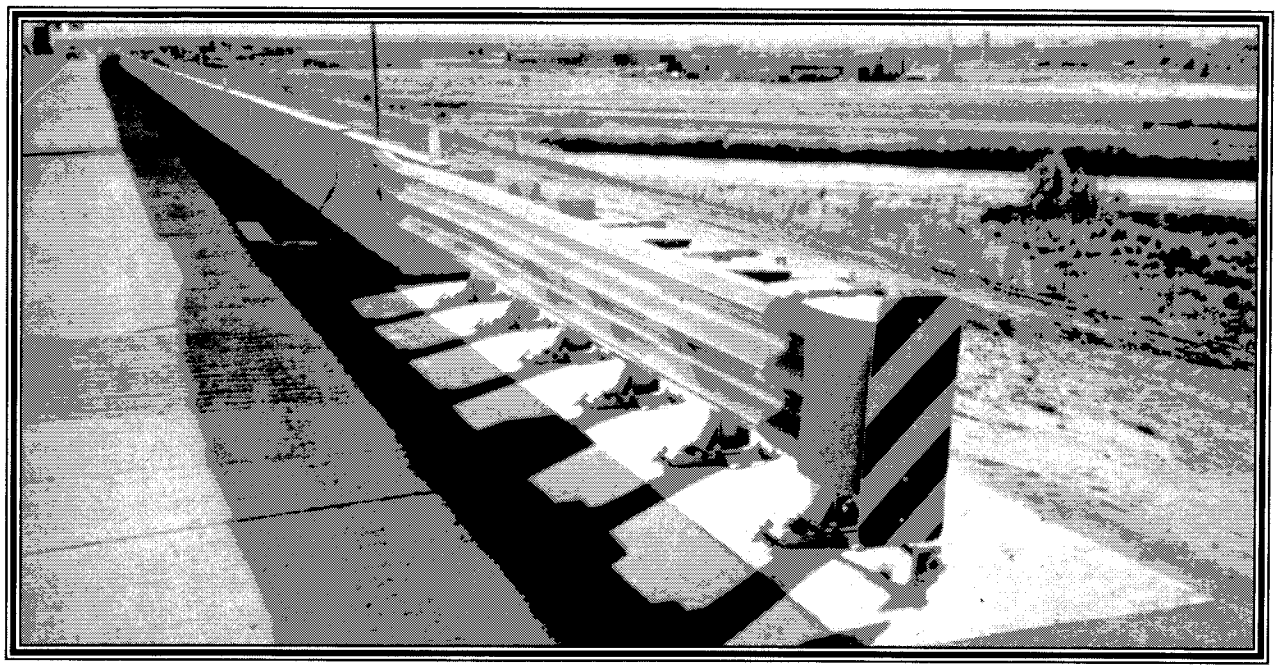

The TREND Transition End Treatment is a revolutionary system designed to be both an end treatment and a transition section to protect errant motorists from the deadly hard point on rigid barrier ends. A typical roadside barrier as shown in Figure I requires a transition and standard section of guardrail, as well as a crashworthy end treatment. In applications where the standard section can be eliminated, the transition and end treatment requirements can now be combined and met with the TREND System, Figure II.

Now for the first time, many hazards such as safety-shaped barrier ends, bridge rails and abutments, can be shielded in as little as 20 feet, all without the risk of vaulting, ramping or spearing vehicles as light in weight as 1,800 pounds.

The TREND System consists of a series of nested fender panels, support posts with slip bases, a tension strap and sand-filled boxes that help to dissipate the collision energy. For head-on impacts, the TREND System directs the nose of the vehicle away from the hard point. For angle impacts, the vehicle is redirected back onto the roadway and away from the hazard.

Most major TREND System components are reusable after a design impact hit. Its low initial cost, redirective capacity and reusability make the TREND System the cost-effective transition end treatment of choice for hazardous barrier ends.

ADVANTAGES AND APPLICATIONS

- Standard rigid barrier installation lengths can be reduced by the use of an end treatment with sufficient redirective capability
- Fully tested under the rigid test procedures outlined by NCHRP #230
- Designed as both a crashworthy end treatment and a transition element for vehicles weighing between 1800 and 4500 pounds traveling at speeds up to 60 mph
- Impacts in the middle of TREND, redirects the vehicle safely along roadway
- TREND can be installed by a three-man crew in a few hours
- Most principal components can be repositioned and reused after design impacts
- Unique redirecting cable and telescoping panels pull the unit sideways, guiding an impacting vehicle away from the rigid barrier hard point
- For design information regarding specific applications, please consult TREND product manuals

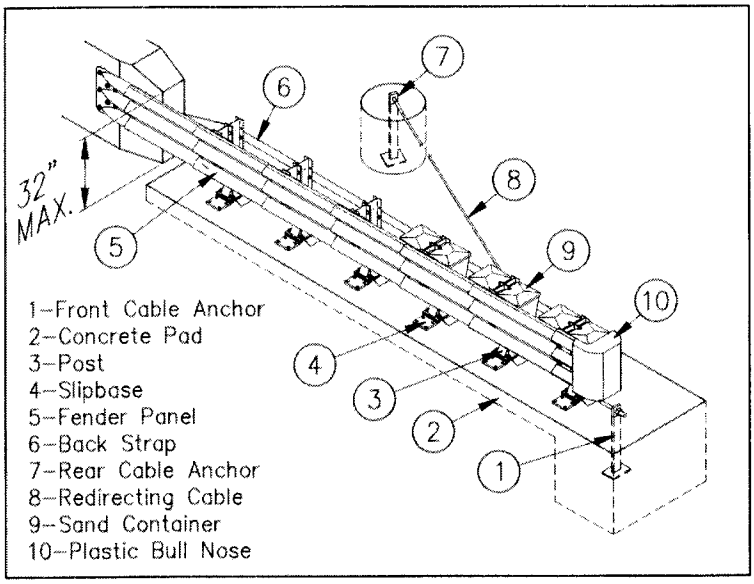

SYSTEM CHARACTERISTICS:

Length	20.0 ft.
Width	1.25 ft.
Weight	Approx. 1,150 lbs
Debris scatter	Sand and sandboxes
Repair time 3-man crew	Less than 2 hours
Equipment needed for repair	Truck, wrenches, tow chains, drift pin, hand tools and spare parts

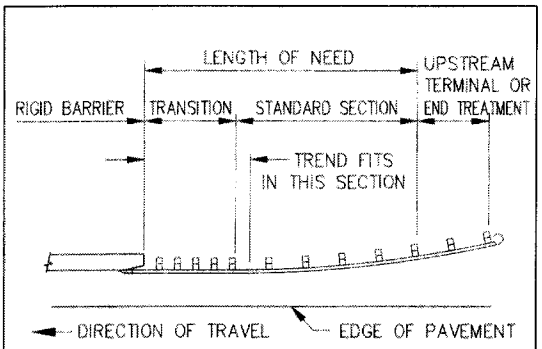

FIGURE I – TYPICAL ROADSIDE BARRIER

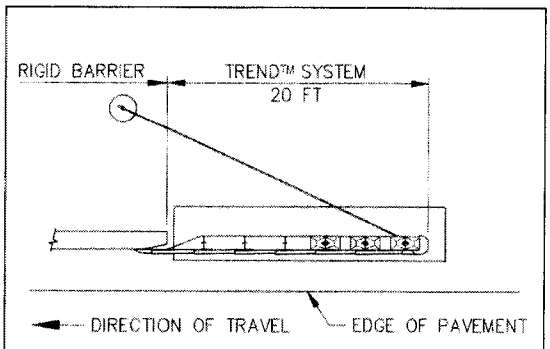

FIGURE II – TREND SYSTEM

ENERGY ABSORPTION SYSTEMS, INC.
Corporate Offices:
One East Wacker Drive - 30th Floor
Chicago, Illinois 60601
Telephone: (312) 467-6750
Fax: (312) 467-1356
Engineering and Manufacturing Facilities
Rocklin, CA and Pell City, AL

Coral Sales Company
P.O. Box 577 • 10560 S.E. Highway 212
Clackamas, Oregon 97015
Doug Daniels • 503/655-6351

©1991 Energy Absorption Systems, Inc.
Printed in U.S.A.