Note: A 4'-0" offset is to be used unless otherwise specified in the contract or by the Engineer

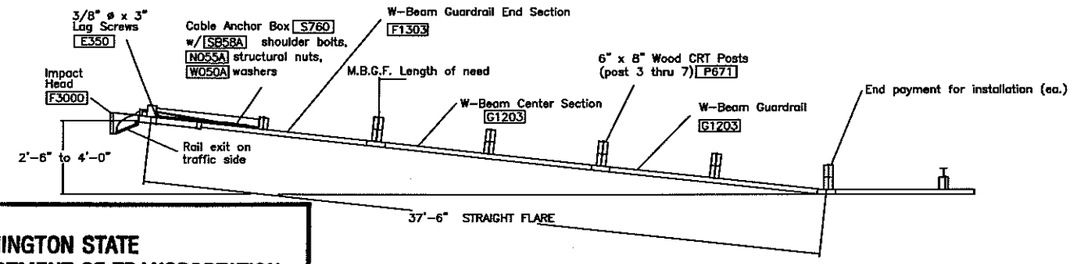

PLAN

WASHINGTON STATE DEPARTMENT OF TRANSPORTATION

TRAFFIC →

☐ Approved

☒ Approved with revision

☐ Rejected

See Notes

By: R. Erickson

DATE: 9/19/05

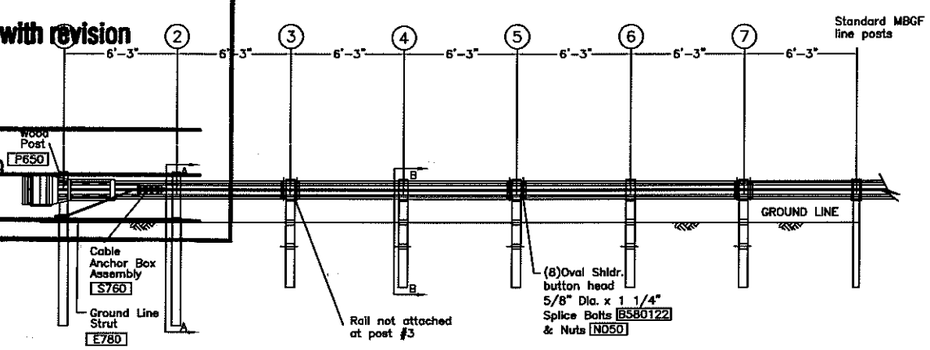

ELEVATION

GENERAL NOTES

1. Breakaway posts are required with the FLEAT
2. All bolts, nuts, cable assemblies, cable anchors and bearing plates shall be galvanized.
3. The soil tubes shall not protrude more than 4" above ground (measured along a 5' cord). Site grading may be necessary to meet this requirement.
4. The soil tubes may be driven with an approved driving head. Soil tubes should not be driven with the post in the tube. If the tubes are placed in drilled holes, the backfill material must be satisfactorily compacted to prevent settlement.
5. When rock is encountered during excavation, a 12" Dia. post hole, 20" deep may be used if approved by the engineer. Granular material will be placed in the bottom of the hole approx. 2 1/2" deep to provide drainage. The soil tubes will be field cut to length, placed in the hole and backfilled with adequately compacted material excavated from the hole.
6. The breakaway cable assembly must be taut. A locking device, (vice grips or channel lock pliers) should be used to prevent the cable from twisting when tightening nuts.

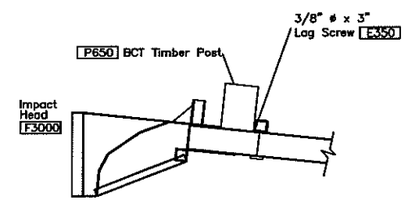

IMPACT HEAD CONNECTING DETAIL

ITEM #	QTY	BILL OF MATERIALS
F3000	1	IMPACT HEAD
F1303	1	W-BEAM GUARDRAIL END SECTION, 12 GA.
G1203	2	W-BEAM GUARDRAIL, 12 GA.
S730	2	*FOUNDATION SOIL TUBE, 6" x 8" x 6'-0"
E740	1	PIPE SLEEVE
E750	1	BEARING PLATE, 8" x 8" x 5/8"
S760	1	CABLE ANCHOR BOX
E770	1	BCT CABLE ANCHOR ASSEMBLY
E780	1	GROUND STRUT
P650	2	5.5" x 7.5" x 45" WOOD POSTS
P671	5	6" x 8" x 6'-0" WOOD CRT POST
P675	5	6" x 8" x 14" TIMBER BLOCKOUT
		HARDWARE
B580122	24	5/8" Dia. x 1 1/4" SPLICE BOLT
B580754	2	5/8" Dia. x 7 1/2" HEX BOLT
B581004	2	5/8" Dia. x 10" HEX BOLT
B581002	1	5/8" Dia. x 10" H.G.R. BOLT (Post 2 only)
B581802	5	5/8" Dia. x 18" H.G.R. BOLT (Posts 3-7)
N050	34	5/8" Dia. H.G.R. NUT (SPLICE 24, SOIL TUBES 2, STRUT 2, POST 2, 1; POST 3 THRU 7, 5)
W050	10	H.G.R. WASHER
N100	2	1" ANCHOR CABLE HEX NUT
W100	2	1" ANCHOR CABLE WASHER
E350	2	3/8" x 3" LAG SCREW
SB58A	8	CABLE ANCHOR BOX SHOULDER BOLTS
N055A	8	1/2" A325 STRUCTURAL NUTS
W050A	16	1 1/16" OD X 9/16" ID A325 STR. WASHER

Foundation Tube Options For Posts 1 & 2

*6'-0" Split Foundation Tubes S730
*6'-0" Solid Foundation Tubes E731
*5'-0" Foundation Tubes S735 W/Soil Plates SP600
*4'-6" Foundation Tubes E735 W/Soil Plates SP600

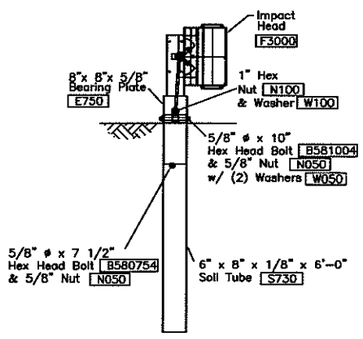

FRONT VIEW OF POST 1

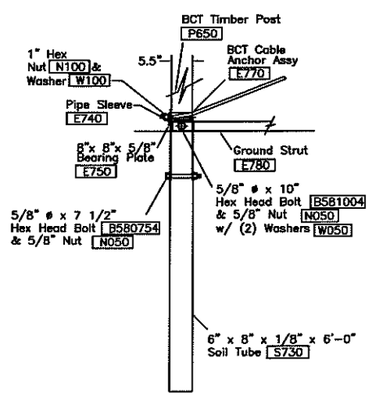

PARTIAL VIEW OF POST 1

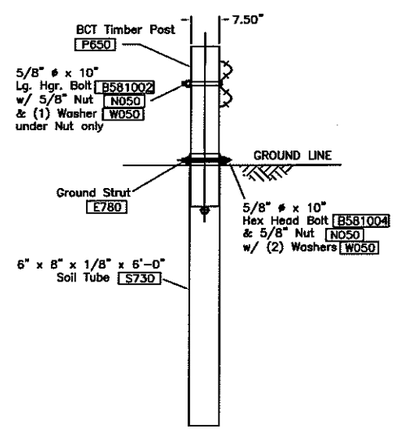

SECTION A-A
at Post #2

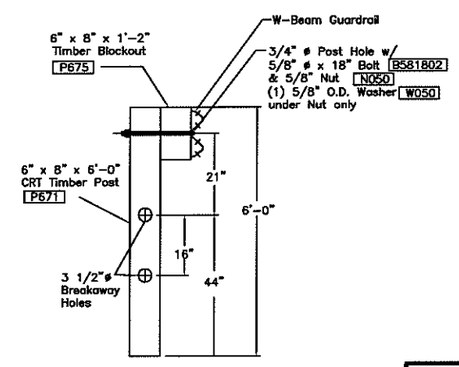

SECTION B-B
typical ⊙ Post 3 thru 7
Note: Rail not Bolted ⊙ Post 3

RSI Road Systems, Inc.
Big Spring, TX
Phone: 915-263-2435
or Phone: 330-346-0721

Flared Energy Absorbing Terminal - FLEAT Assembly (6'-3" Post Spacing) for Wood Breakaway Post System

Sheet:	Date:	Drawing Name:	Scale:	By:	Rev:
A1	07/09/01	FLT-W-US-R3.DWG	NONE	SML	3