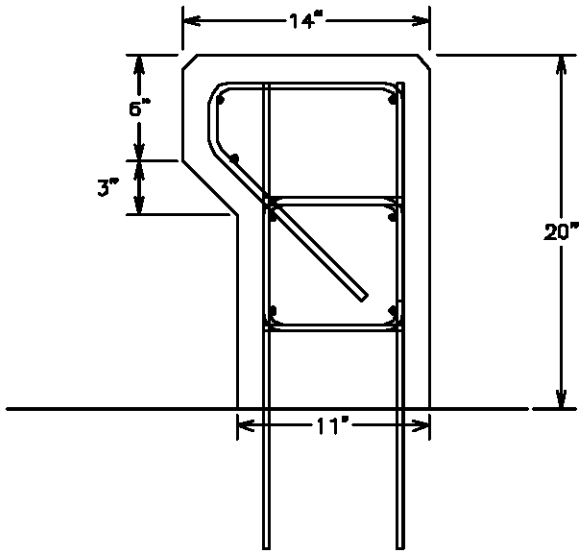

End View

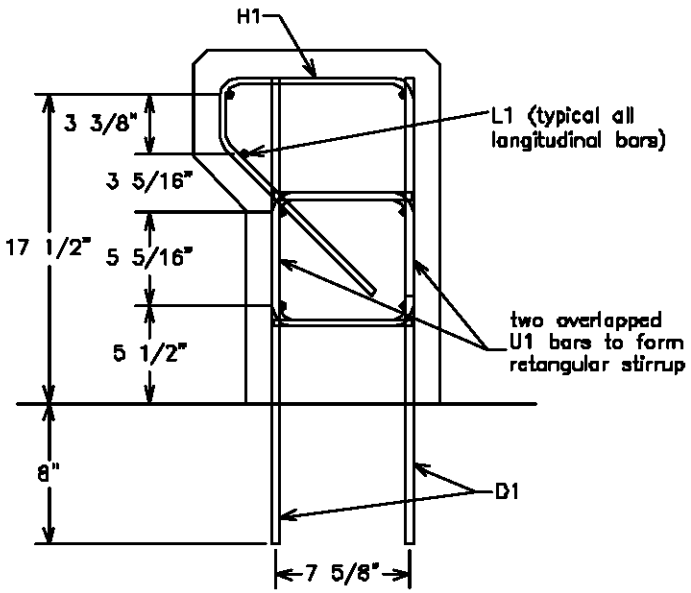

Rebar Details

NOTES:
(1) Use Grade 60 reinforcement.
(2) Use minimum concrete strength of f'c=4,500 psi.
(3) Use 1½" minimum cover.
(4) Use ¾" chamfer on top corners.
(5) Extra No. 3 bar place along sloped stirrup used for continuity near front face. (Position may be altered.)
(6) Minimum lap length for longitudinal bars is 9".
(7) Special reinforcement spacing at free ends or joints to be determined.

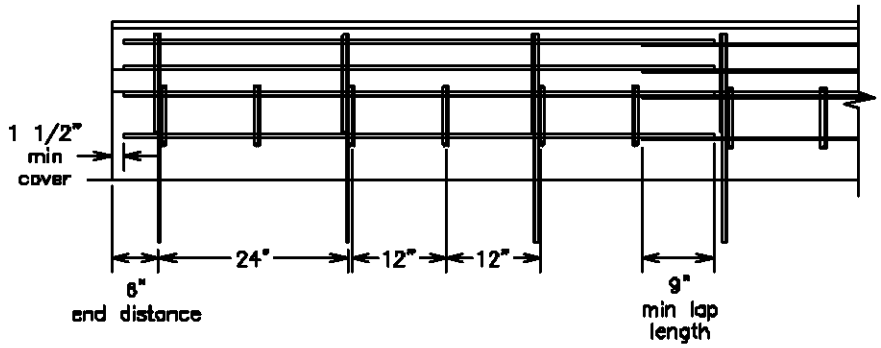

Rebar Longitudinal Details

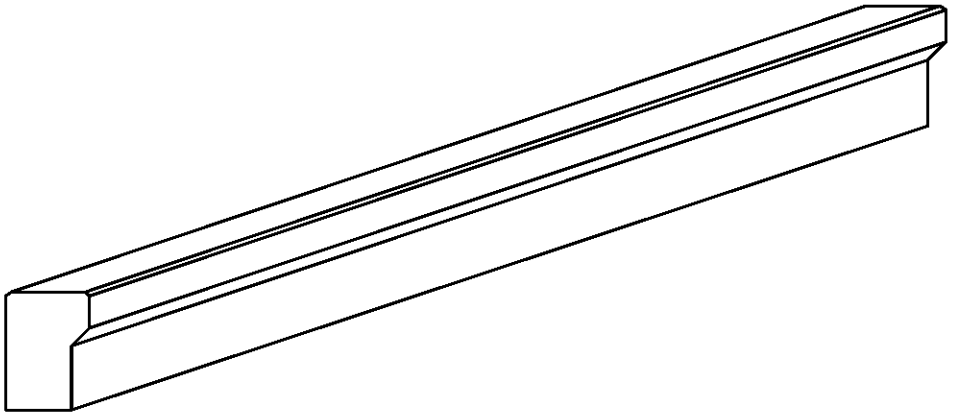

Isometric Rail View

MwRSF Midwest Roadside Safety Facility		Low Profile Bridge Rail
DATE: 1/25/2001	Revised:	File Name: lowprofwall.dwg
BY: Eric A. Keller		
SCALE: none		Sheet 01 of 02

Bar Bill

	#	Size	Description	Total Length
D1	76	No. 3	Vertical Dowel Bar	26 1/2"
L1	*	No. 3	Longitudinal Bar	Discretionary
H1	38	No. 3	Vertical Hoop Bar	37 5/8"
U1	150	No. 3	Vertical U Stirrup	21 7/8"

* A total length of 897" (74 ft 9 in) is required for each longitudinal rebar run (7 runs of longitudinal rebar) for 75 feet of barrier. Length of longitudinal bar is optional, as long as length is added for the number of corresponding laps, with a minimum lap of 9".

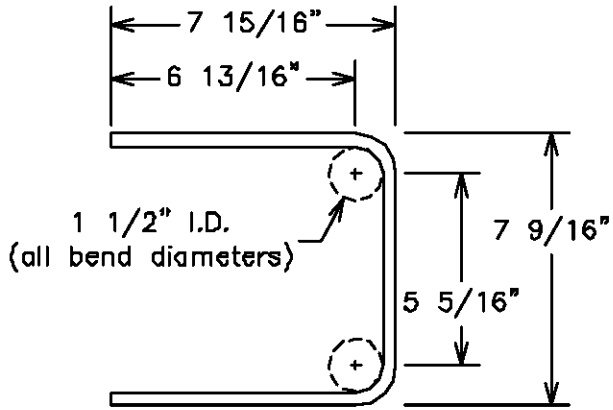

U1

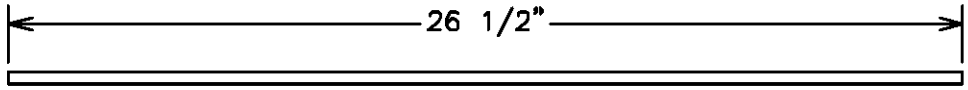

D1

L1

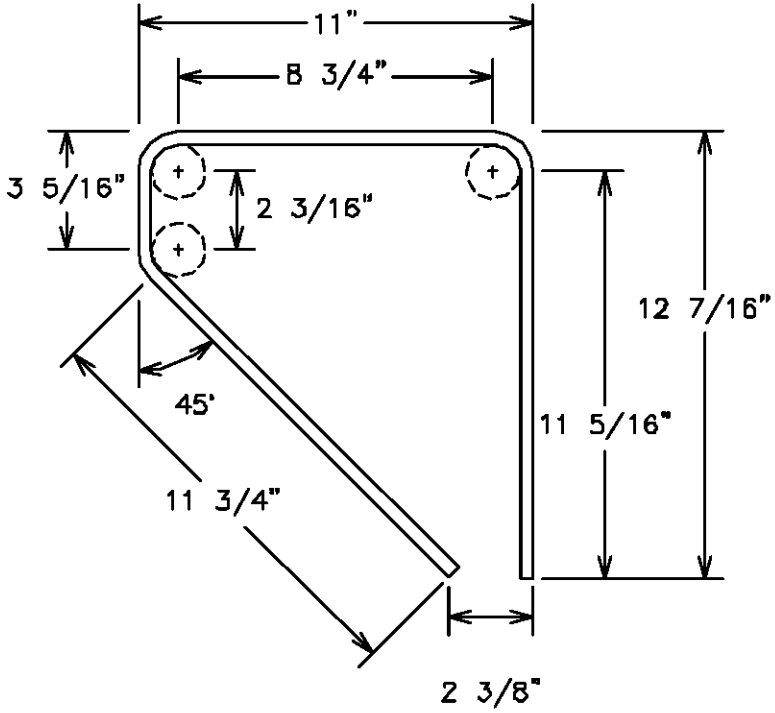

H1

MwRSF Midwest Roadside Safety Facility		Low Profile Bridge Rail Bar Bill
DATE: 1/25/2001	Revised:	File Name: lowprofwall.dwg
BY: Eric A. Keller		
SCALE: none		Sheet 02 of 02