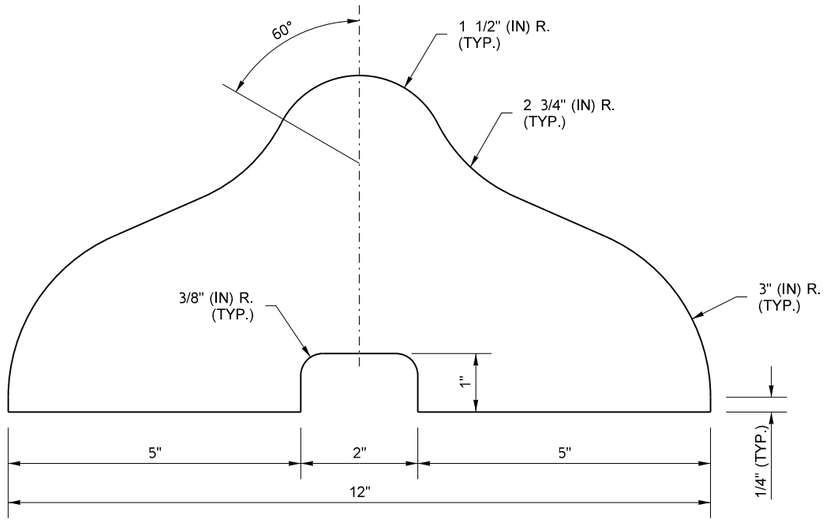

SECTION

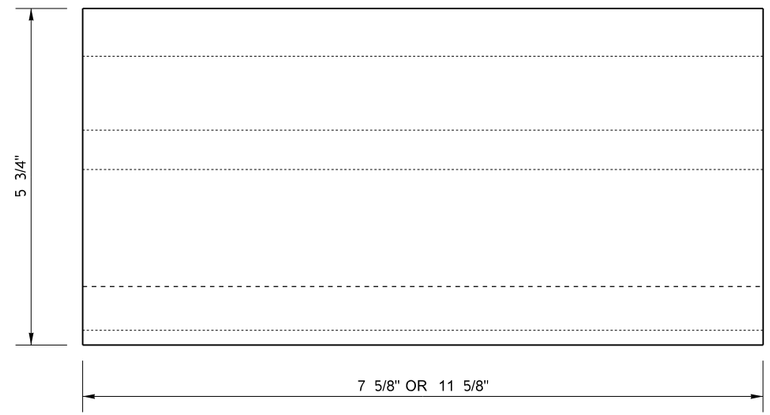

ELEVATION

TYPE C BLOCK

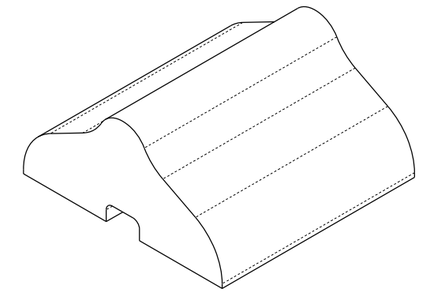

TYPE C BLOCK

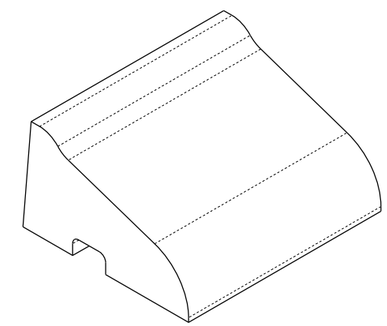

TYPE A BLOCK

ISOMETRIC VIEWS

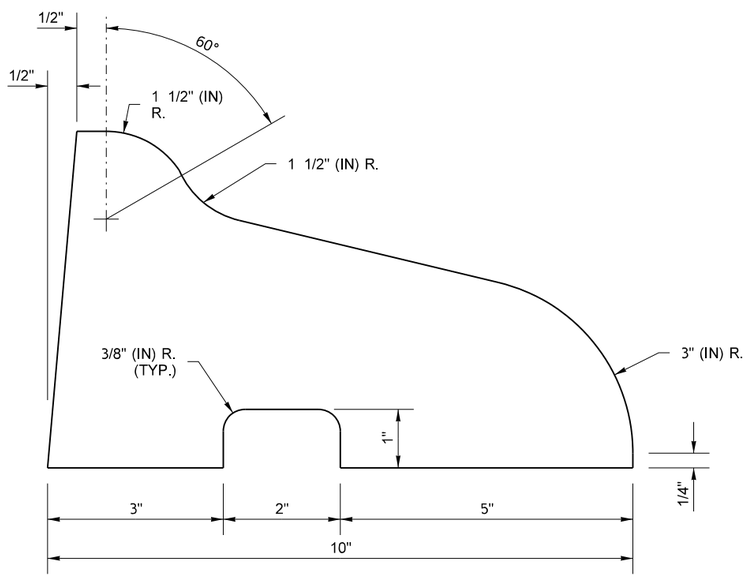

SECTION

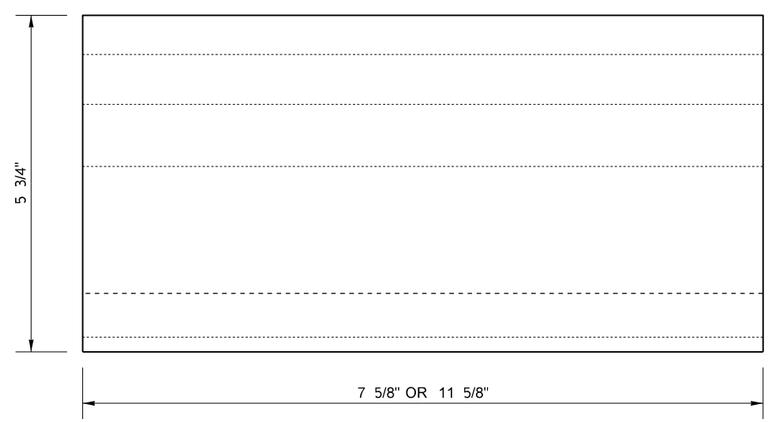

ELEVATION

TYPE A BLOCK

FILE NAME	S:\Design R P& S\4-Standards\2-Plan Sheet Library\01-Published PSL\(GD) Curbs, Sidewalks, and Driveways Geometric Design\(GD-2) Block Traffic Curb\GD-2.dgn						Plot 1
TIME	1:49:56 PM			REGION NO. / STATE	FED.AID PROJ.NO.	Washington State Department of Transportation	PLAN REF NO GD-2
DATE	10/6/2014			WASH			
PLOTTED BY	FletcCo			JOB NUMBER			SHEET 1 OF 1 SHEETS
DESIGNED BY							
ENTERED BY							
CHECKED BY				CONTRACT NO.	LOCATION NO.		BLOCK TRAFFIC CURB
PROJ. ENGR.							
REGIONAL ADM.		REVISION	DATE	BY			

P.E. STAMP BOX DATE

P.E. STAMP BOX DATE