NOTE

1. SCUPPERS TO BE PROVIDED AT INTERVALS AS REQUIRED BY THE ENGINEER.

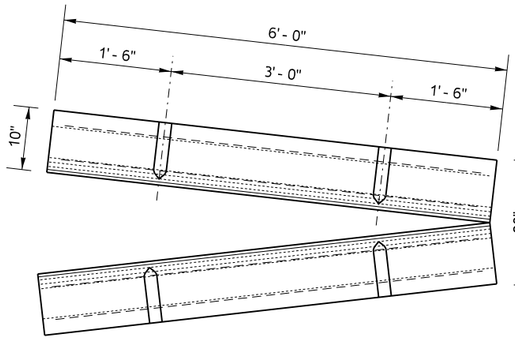

TYPE A CURB SECTION

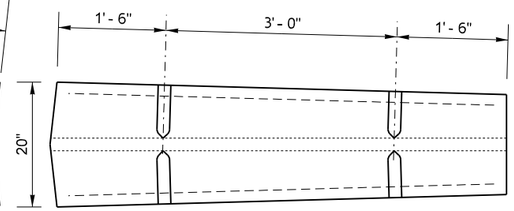

TYPE A CONNECTING DIVIDER NO. 2

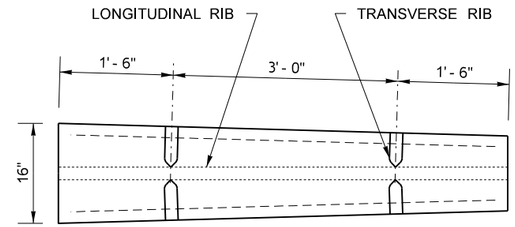

TYPE A CONNECTING DIVIDER NO. 1

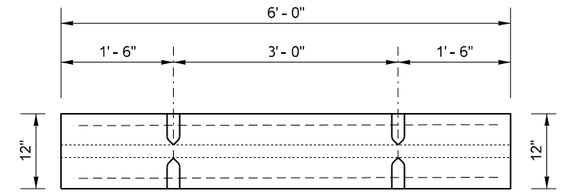

TYPE C CURB

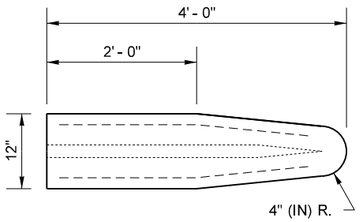

TYPE C NOSING

PLAN VIEW

THE MAIN BODY OF THE CURB AND THE LONGITUDINAL RIB SHALL FORM A UNIFORM TRANSITION FROM A TYPE C SECTION TO A TYPE A (BACK TO BACK) SECTION.

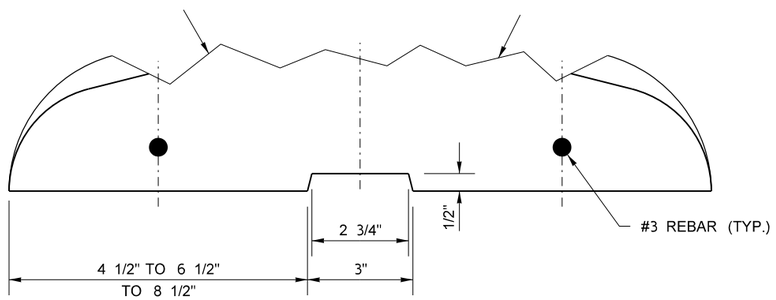

TYPE A CONNECTING DIVIDER SECTION

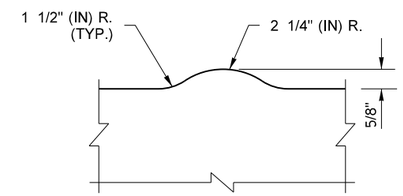

LONGITUDINAL SECTION THROUGH TRANSVERSE RIB

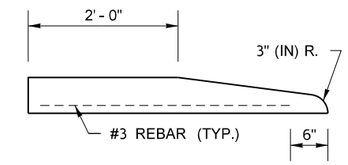

TYPE A & C NOSING ELEVATION

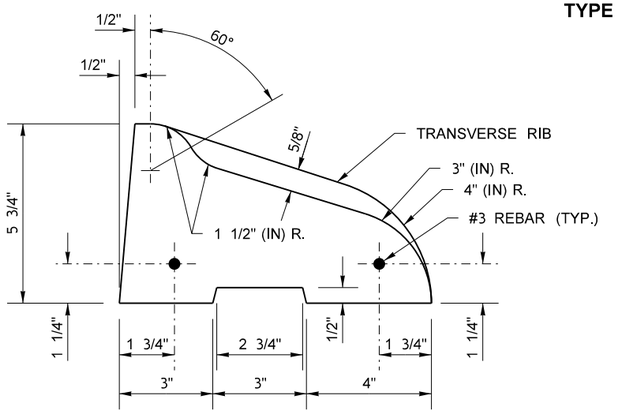

TYPE A CURB SECTION

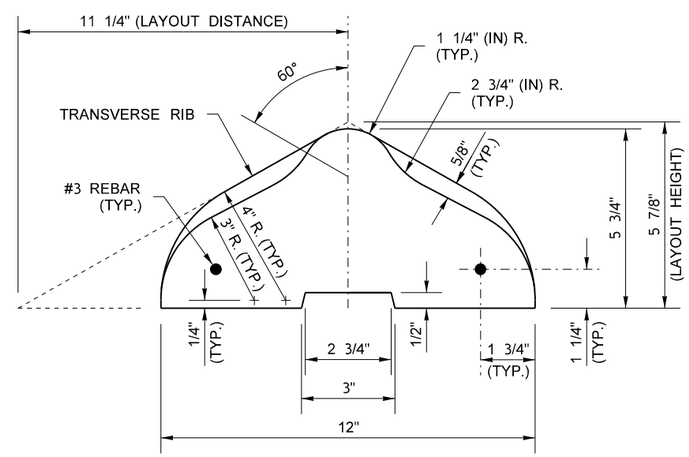

TYPE C CURB SECTION

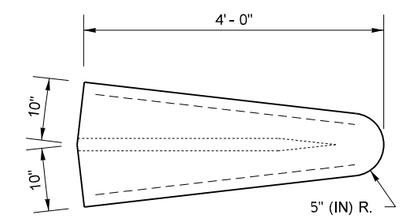

TYPE A NOSING

FILE NAME	S:\Design R P& S\4-Standards\2-Plan Sheet Library\01-Published PSL\(GD) Curbs, Sidewalks, and Driveways Geometric Design\(GD-1) Precast Traffic Curb\GD-1.dgn						
TIME	1:48:19 PM				REGION NO. / STATE	FED.AID PROJ.NO.	
DATE	10/6/2014				WASH		
PLOTTED BY	FletcCo				JOB NUMBER		
DESIGNED BY							
ENTERED BY							
CHECKED BY					CONTRACT NO.	LOCATION NO.	
PROJ. ENGR.							
REGIONAL ADM.		REVISION	DATE	BY			

P.E. STAMP BOX DATE

P.E. STAMP BOX DATE

Washington State Department of Transportation

PRECAST TRAFFIC CURB

Plot 1

PLAN REF NO GD-1

SHEET 1 OF 1 SHEETS