NOTES

1. This plan depicts the transition used for Concrete Barrier Type 2 to a Pre-Cast Single Slope Barrier only.
2. Provide Wire Loops, Notches, and other details to match the Barrier Connections shown in **Standard Plan C-8.**
3. See **Standard Plan C-13** for REBAR GRID DETAIL and BARRIER CONNECTION DETAIL.

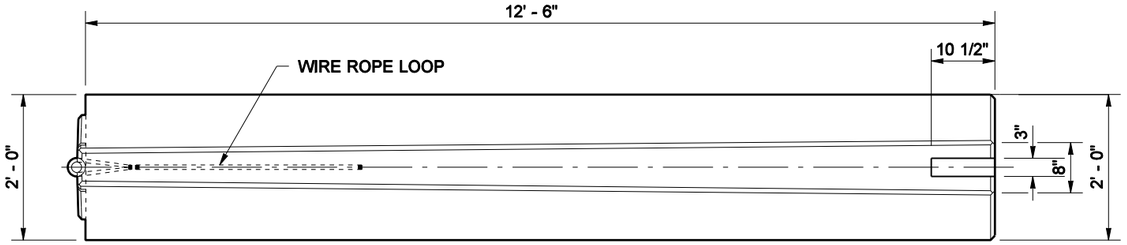

PLAN

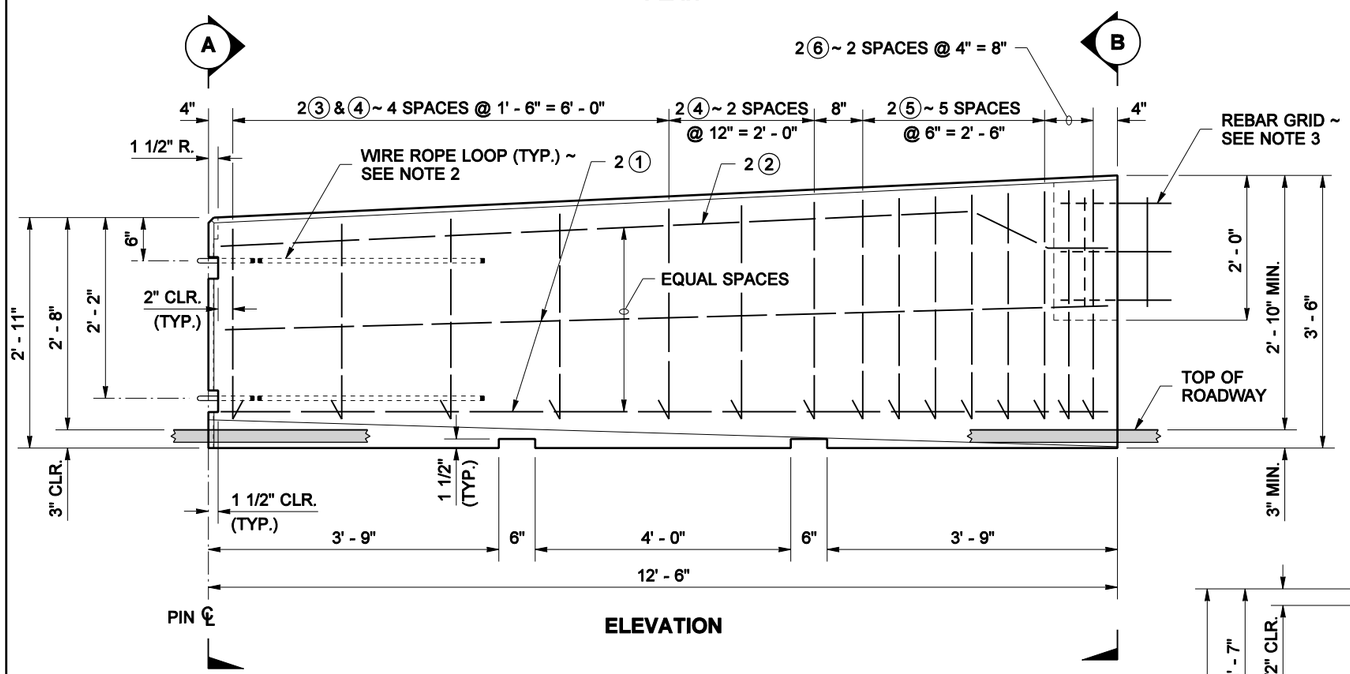

ELEVATION

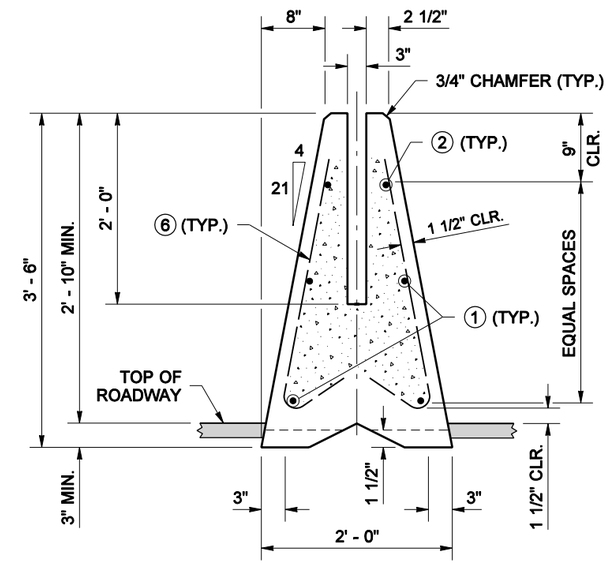

SECTION (B)

FOR DETAILS NOT SHOWN SEE **STANDARD PLAN C-13**

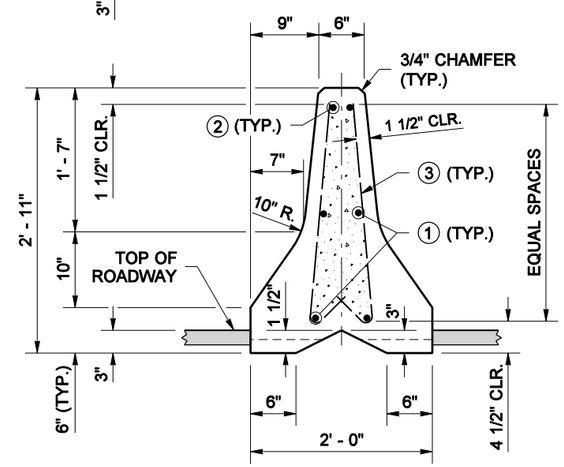

SECTION (A)

FOR DETAILS NOT SHOWN SEE **STANDARD PLAN C-8**

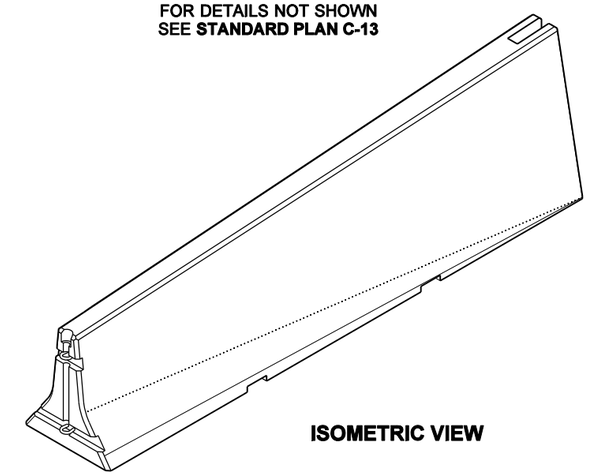

ISOMETRIC VIEW

BAR LIST

MARK	QTY	SIZE	LENGTH
①	4	#5	12' - 3"
②	2		12' - 4"
③	6	#4	VARIES
④	8		VARIES
⑤	10		VARIES
⑥	6		VARIES

BENDING DIAGRAM

SEE STD. SPEC. 9-07.1(2) FOR BENDING DIAMETERS

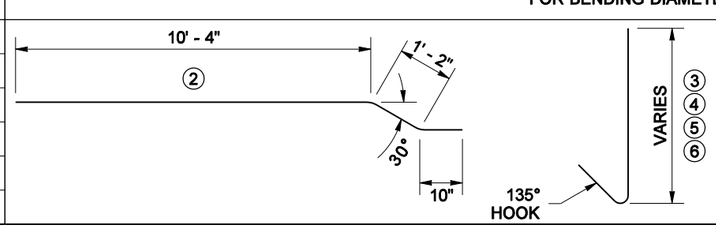

FILE NAME	S:\Design R P& S\4-Standards\2-Plan Sheet Library\02-Traffic Barrier (TB)\(TB-23) Transition, Type 2 to Single Slope (Precast)\TB-23.dgn				
TIME	9:21:58 AM				
DATE	6/4/2008				
PLOTTED BY	berensb				
DESIGNED BY					
ENTERED BY					
CHECKED BY					
PROJ. ENGR.					
REGIONAL ADM.		REVISION	DATE	BY	

REGION NO.	STATE	FED.AID PROJ.NO.
10	WASH	
JOB NUMBER		
CONTRACT NO.		LOCATION NO.

P.E. STAMP BOX DATE

P.E. STAMP BOX DATE

Washington State Department of Transportation

TYPE 2 TO SINGLE SLOPE TRANSITION

PLOT1

TB-23

SHEET OF SHEETS