NOTE

1. SEE **STANDARD PLAN J-20.26** FOR PEDESTRIAN PUSH BUTTON DETAILS.

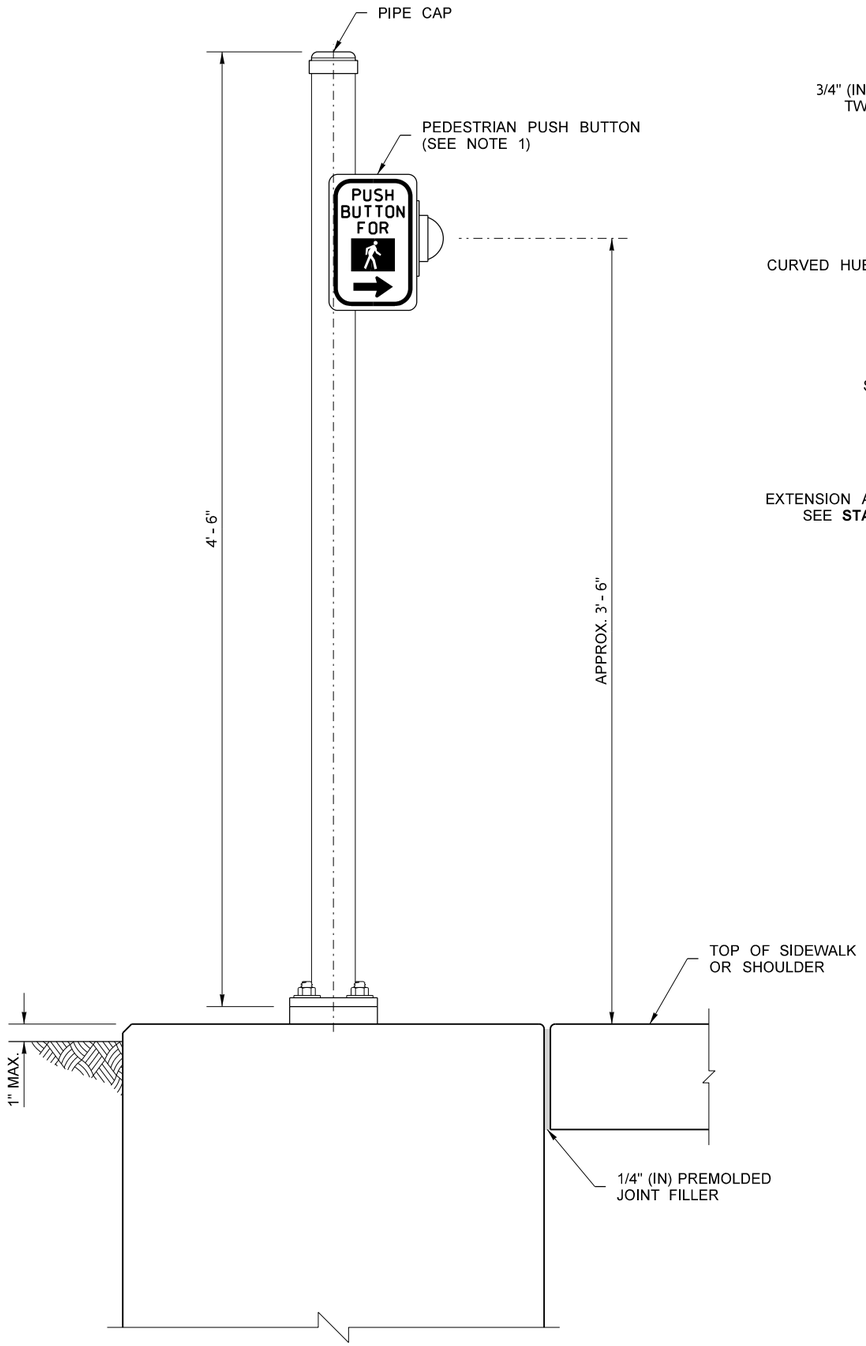

ELEVATION
WITHOUT LANDING

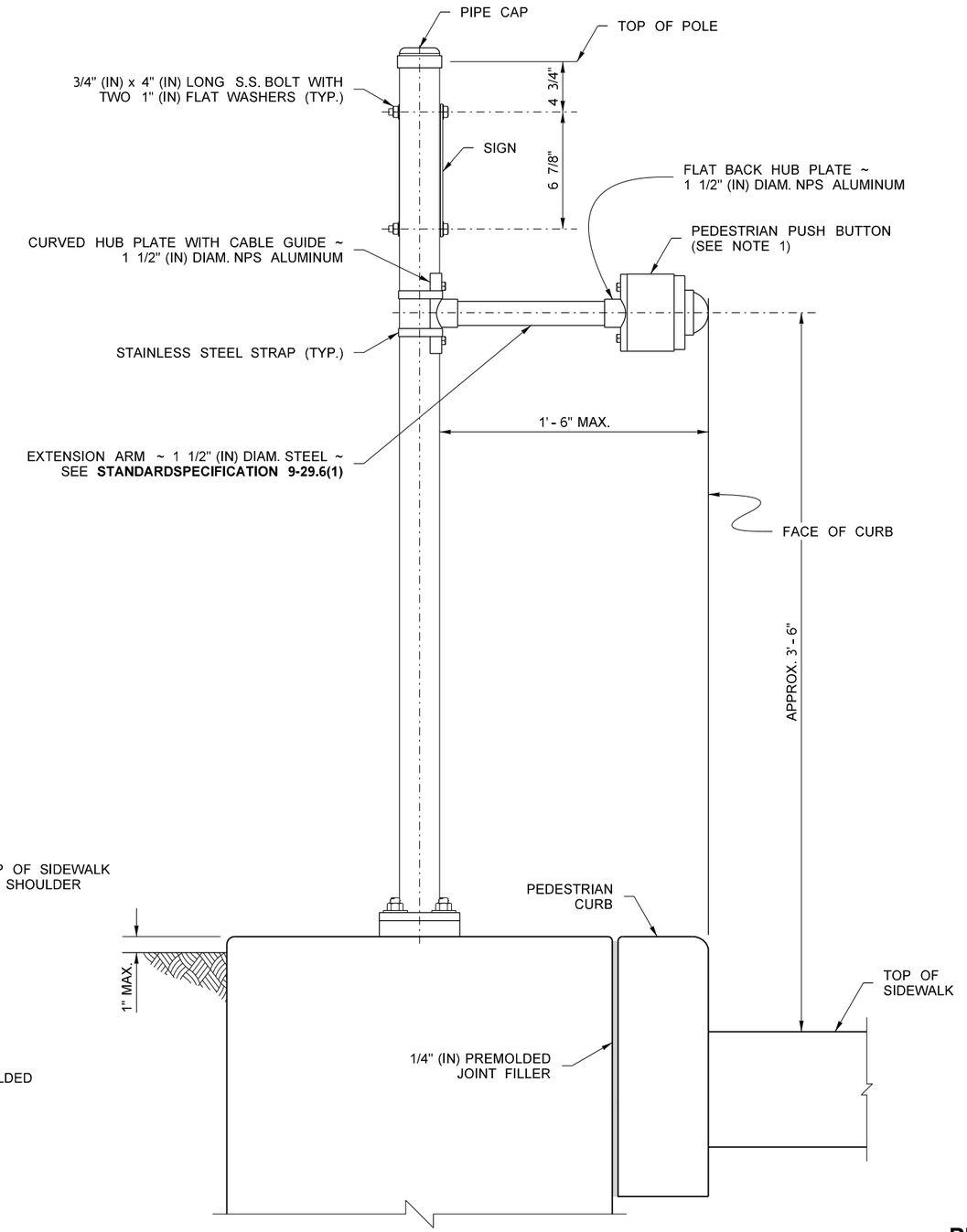

ELEVATION
WITH LANDING

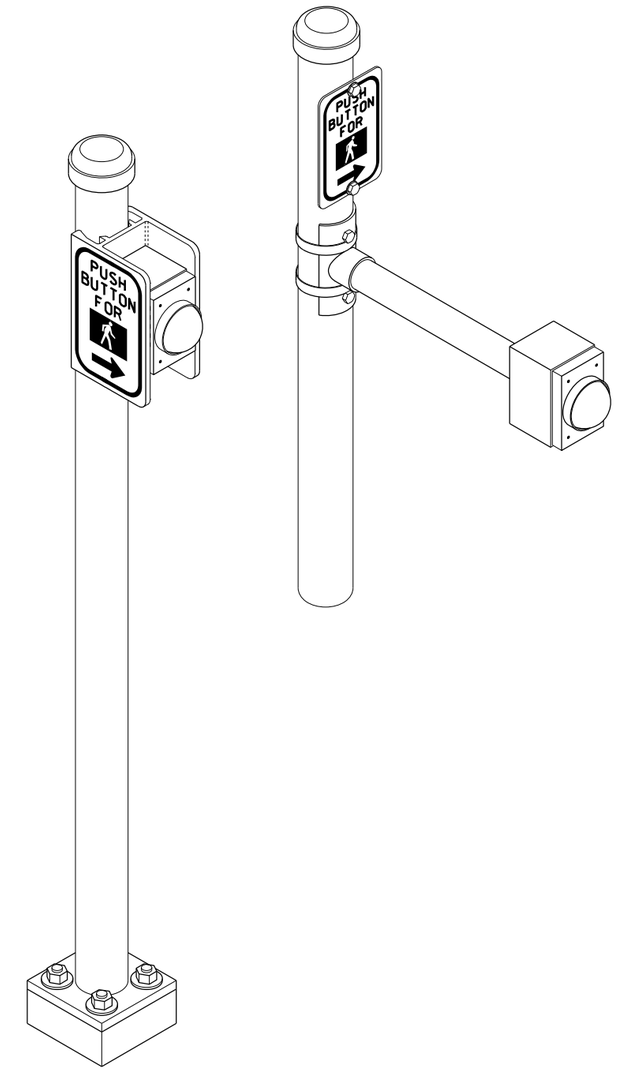

ISOMETRIC VIEW

PEDESTRIAN PUSH BUTTON POST

FILE NAME	S:\Design R P& S\4-Standards\2-Plan Sheet Library\01-Published PSL\(IS) Illumination, Signals, and ITS\(IS-1) Pedestrian Push Button Post and Foundation\IS-1.dgn								Plot 1
TIME	1:32:12 PM				REGION NO.	STATE	FED.AID PROJ.NO.	Washington State Department of Transportation	PLAN REF NO IS-1
DATE	10/6/2014					WASH			
PLOTTED BY	FletcCo				JOB NUMBER				SHEET 1 OF 2 SHEETS
DESIGNED BY									
ENTERED BY									
CHECKED BY					CONTRACT NO.		LOCATION NO.		PEDESTRIAN PUSH BUTTON (PPB) POST AND FOUNDATION
PROJ. ENGR.									
REGIONAL ADM.		REVISION	DATE	BY					

P.E. STAMP BOX DATE

P.E. STAMP BOX DATE

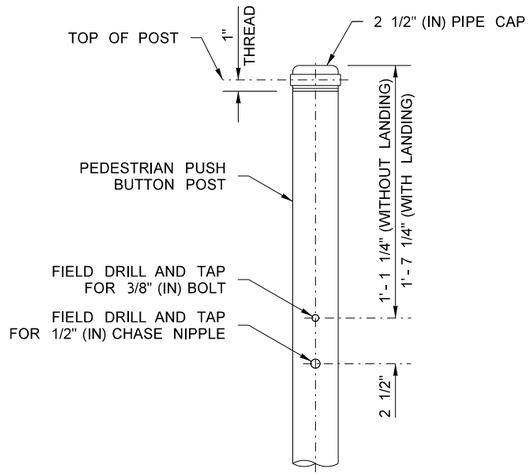

POST DETAIL

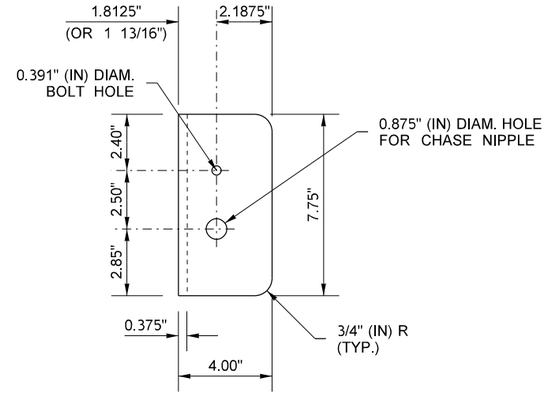

2-WAY MOUNTING ANGLE DETAIL

MIRROR IMAGE FOR RIGHT SIDE
0.375" (IN) THICK, 6063 ALUMINUM PLATE

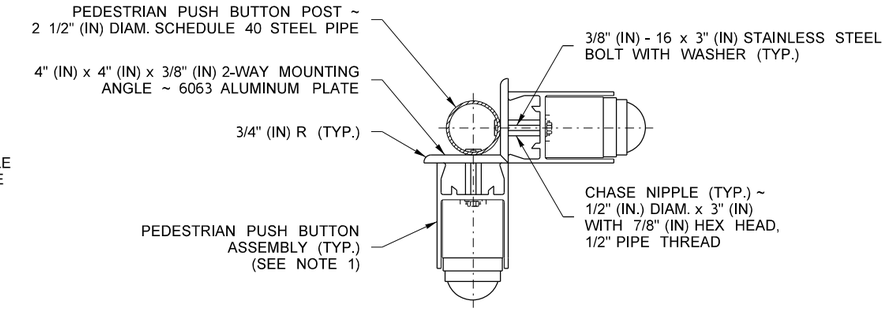

2-WAY PEDESTRIAN PUSH BUTTON DETAIL

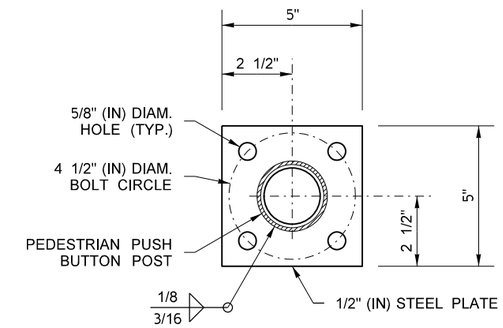

BASE PLATE DETAIL

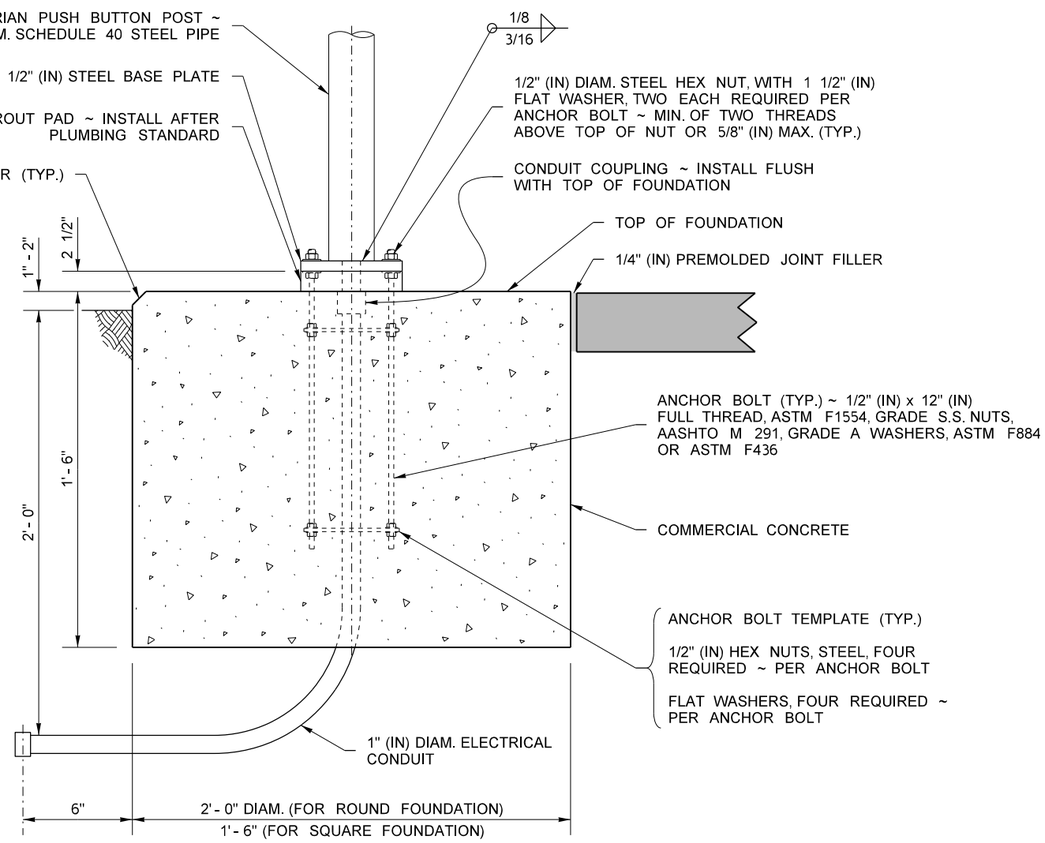

FOUNDATION DETAIL

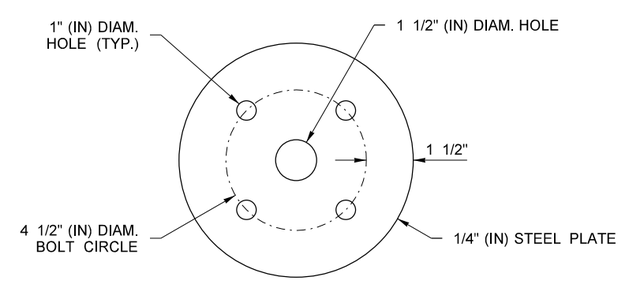

ANCHOR BOLT TEMPLATE

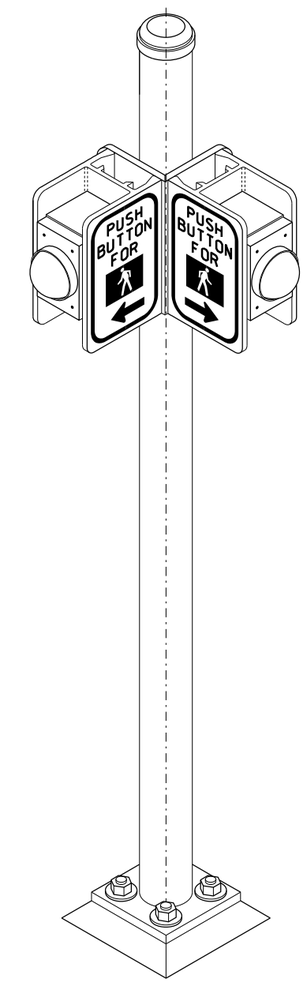

ISOMETRIC VIEW

OPTIONAL 2-WAY PEDESTRIAN PUSH BUTTON POST

FILE NAME	S:\Design R P& S\4-Standards\2-Plan Sheet Library\01-Published PSL\(IS) Illumination, Signals, and ITS\(IS-1) Pedestrian Push Button Post and Foundation\IS-1.dgn						
TIME	1:32:23 PM			REGION NO.	STATE	FED.AID PROJ.NO.	
DATE	10/6/2014				WASH		
PLOTTED BY	FletcCo			JOB NUMBER			
DESIGNED BY							
ENTERED BY							
CHECKED BY				CONTRACT NO.		LOCATION NO.	
PROJ. ENGR.							
REGIONAL ADM.		REVISION	DATE	BY			

P.E. STAMP BOX DATE

P.E. STAMP BOX DATE

Washington State Department of Transportation

PEDESTRIAN PUSH BUTTON (PPB) POST AND FOUNDATION

Plot 2

PLAN REF NO IS-1

SHEET 2 OF 2 SHEETS