JUMP TO A SECTION IN THE TABLE OF CONTENTS:
A B C D E F G H I J K L M

Washington State
Department of Transportation

Standard Plans

M 21-01

August 6, 2012

Engineering and Regional Operations
Development Division, Design Office

EFFECTIVE: AUGUST 6, 2012 TO August 4, 2013
EFFECTIVE: AUGUST 6, 2012 TO August 4, 2013
EFFECTIVE: AUGUST 6, 2012 TO August 4, 2013
EFFECTIVE: AUGUST 6, 2012 TO August 4, 2013

EFFECTIVE: AUGUST 6, 2012 TO August 4, 2013

Americans with Disabilities Act (ADA) Information

Materials can be provided in alternative formats by calling the ADA Compliance Manager at 360-705-7097. Persons who are deaf or hard of hearing may contact that number via the Washington Relay Service at 7-1-1.

Title VI Notice to the Public

It is Washington State Department of Transportation (WSDOT) policy to ensure no person shall, on the grounds of race, color, national origin, or sex, as provided by Title VI of the Civil Rights Act of 1964, be excluded from participation in, be denied the benefits of, or be otherwise discriminated against under any of its federally funded programs and activities. Any person who believes his/her Title VI protection has been violated may file a complaint with WSDOT's Office of Equal Opportunity (OEO). For Title VI complaint forms and advice, please contact OEO's Title VI Coordinator at 360-705-7082 or 509-324-6018.

EFFECTIVE: AUGUST 6, 2012 TO August 4, 2013

EFFECTIVE: AUGUST 6, 2012 TO August 4, 2013

To get the latest information on WSDOT publications, sign up for individual email updates at www.wsdot.wa.gov/publications/manuals.

Washington State Department of Transportation
Engineering and Regional Operations
Development Division, Design Office
PO Box 47329
Olympia, WA 98504-7329

Email: designstandards@wsdot.wa.gov
www.wsdot.wa.gov/design/standards/plans.htm

EFFECTIVE: AUGUST 6, 2012 TO August 4, 2013

Foreword

This manual contains standard engineering drawings used for road, bridge, and municipal construction. These drawings have been prepared under the direct supervision of a Washington State licensed professional engineer, who is knowledgeable in the specialized field of civil engineering depicted in each drawing. This manual standardizes fabrication, installation, and construction methods for specific items of work, and complements the contract documents and the *Standard Specifications for Road, Bridge, and Municipal Construction.*

Updating the manual is a continual process and revisions are issued periodically. Questions, comments, and recommendations for changes are welcome.

Contact the **Design Standards Team** at:

(360) 705-7256 (phone)

designstandards@wsdot.wa.gov (e-mail)

For contact via conventional mail, the *Comment Request Form* on the reverse side of this page is provided to facilitate routing and prompt delivery. Making a copy will preserve the original form for future use. Attach a copy of the form as a cover sheet when sending comments or sketches made on other documents, such as marked copies of specific Standard Plans. Your questions, comments, and/or recommendations should be sent to:

Design Standards
Transportation Building
Olympia, WA 98504-7329.

Further information, as well as Bentley MicroStation (.dgn) CAD files, Adobe Acrobat (.pdf) files, and some AutoCAD (.dwg) CAD files, can be found on the Design Standards website at:

http://www.wsdot.wa.gov/eesc/design/designstandards

Contact the **Engineering Publications Office** at **(360) 705-7430** if you require additional copies of this manual.

Pasco Bakotich III
State Design Engineer

EFFECTIVE: AUGUST 6, 2012 TO August 4, 2013

Comments

From: _____ Date: _____
_____ Phone: _____
_____
_____

To: Design Standards
Washington State Department of Transportation
Transportation Building
PO Box 47329
Olympia, WA 98504-7329

Subject: Standard Plans Manual Comment

Comment: ☐ See attached

Preserve this original for future use • Submit copies only

EFFECTIVE: AUGUST 6, 2012 TO August 4, 2013

EFFECTIVE: AUGUST 6, 2012 TO August 4, 2013

EFFECTIVE: AUGUST 6, 2012 TO August 4, 2013

Contents

Plan No.	Plan Title	Publication Approval Date	
Section A	**Roadway Construction**		
A-10.10-00	Survey Stakes	8/7/07	*2 Sheets*
A-10.20-00	Survey Monument Types 1 and 2	10/5/07	
A-10.30-00	Monument and Cover	10/5/07	
A-20.10-00	Slope Treatment	8/31/07	
A-30.10-00	Concrete Slope Protection	11/8/07	
A-30.15-00	Semi-open Concrete Masonry Slope Protection	11/8/07	
A-30.30-01	Wire Mesh Slope Protection	6/16/11	
A-30.35-00	Slope Protection Anchors	10/12/07	
A-40.00-00	Dowel Bar Baskets	8/11/09	
A-40.10-02	Cement Concrete Pavement Joints	6/2/11	
A-40.15-00	PCC Pavement Isolation Joints	8/11/09	*2 Sheets*
A-40.20-01	Bridge Transverse Joint Seals for HMA	2/7/12	
A-40.50-01	Bridge Approach Slab	6/2/11	*2 Sheets*
A-50.10-00	Embankment Widening at Bridge End with Wing Wall	11/17/08	*2 Sheets*
A-50.20-01	Embankment Widening at Bridge End with Curtain Wall	9/22/09	*2 Sheets*
A-50.30-00	Embankment Widening at Bridge End with "L" Shaped Abutment	11/17/08	*2 Sheets*
A-50.40-00	Embankment Widening at Bridge End with Sidewalk	11/17/08	
A-60.10-01	Cement Concrete Pavement Repair	10/14/09	*2 Sheets*
A-60.20-02	Dowel Bar Retrofit for Cement Concrete Pavement	6/2/11	*2 Sheets*
A-60.30-00	Bridge Deck Transition for HMA Overlay	11/8/07	
A-60.40-00	HMA Overlay: Further Deck Preparation	8/31/07	
Section B	**Drainage Structures and Hydraulics**		
B-5.20-01	Catch Basin Type 1	6/16/11	
B-5.40-01	Catch Basin Type 1L	6/16/11	
B-5.60-01	Catch Basin Type 1P (for Parking Lot)	6/16/11	
B-10.20-01	Catch Basin Type 2	2/7/12	
B-10.40-00	Catch Basin Type 2 with Flow Restrictor	6/1/06	
B-10.60-00	Catch Basin Type 2 with Baffle Type Flow Restrictor	6/8/06	
B-15.20-01	Manhole Type 1	2/7/12	
B-15.40-01	Manhole Type 2	2/7/12	
B-15.60-01	Manhole Type 3	2/7/12	
B-20.20-02	Drywell Type 1 (for Swale)	3/16/12	
B-20.40-03	Drywell Type 2 (with Pipe Inlet)	3/16/12	
B-20.60-03	Drywell Type 3 (with At-Grade Inlet)	3/15/12	
B-25.20-01	Combination Inlet	3/15/12	
B-25.60-00	Concrete Inlet	6/1/06	
B-30.10-01	Rectangular Frame (Reversible)	4/26/12	
B-30.20-02	Rectangular Solid Metal Cover	4/26/12	
B-30.30-01	Rectangular Vaned Grate	4/26/12	
B-30.40-01	Rectangular Bi-Directional Vaned Grate	4/26/12	
B-30.50-01	Rectangular Herringbone Grate	4/26/12	
B-30.70-03	Circular Frame (Ring) and Cover	4/26/12	
B-30.80-00	Circular Grate	6/8/06	
B-30.90-01	Miscellaneous Details for Drainage Structures	9/20/07	

Contents

Plan No.	Plan Title	Publication Approval Date	
B-35.20-00	Grate Inlet Type 1 (Cast-In-Place)	6/8/06	
B-35.40-00	Grate Inlet Type 2	6/8/06	*2 Sheets*
B-40.20-00	Welded Grates for Grate Inlet	6/1/06	
B-40.40-01	Frame and Dual Vaned Grates for Grate Inlet	6/16/10	
B-45.20-00	Drop Inlet Type 1	6/1/06	
B-45.40-00	Drop Inlet Type 2	6/1/06	
B-50.20-00	Grates for Drop Inlet	6/1/06	
B-55.20-00	Pipe Zone Bedding and Backfill	6/1/06	
B-60.20-00	Connection Details for Dissimilar Culvert Pipe	6/8/06	
B-60.40-00	Coupling Bands for Corrugated Metal Pipe	6/1/06	
B-65.20-01	Animal Underpass	4/26/12	
B-65.40-00	Equipment Underpass	6/1/06	
B-70.20-00	Beveled End Sections (for Culverts 30” Diameter or Less)	6/1/06	
B-70.60-00	Flared End Sections	6/1/06	
B-75.20-01	Headwalls for Culvert Pipe and Underpass	6/10/08	
B-75.50-01	Type 1 Safety Bars for Stepped Culvert Pipe or Pipe Arch	6/10/08	
B-75.60-00	Type 2 Safety Bars for Culvert Pipe or Pipe Arch (On Cross Road)	6/8/06	
B-80.20-00	Tapered End Section with Type 3 Safety Bars	6/8/06	
B-80.40-00	Tapered End Section with Type 4 Safety Bars (On Cross Road)	6/1/06	
B-82.20-00	Residential Storm Drain, Under Sidewalk	6/1/06	
B-85.10-01	Vertical Connection (for Sanitary Sewer Use)	6/10/08	
B-85.20-00	Side Sewer Connection (for Sanitary Sewer Use)	6/1/06	
B-85.30-00	Standing Side Sewer Connection (for Sanitary Sewer Use)	6/1/06	
B-85.40-00	8 Inch Sewer Clean-Out (for Sanitary Sewer Use)	6/8/06	
B-85.50-01	Drop Connections (for Sanitary Sewer Use)	6/10/08	
B-90.10-00	Hydrant Setting Types A and B	6/8/06	
B-90.20-00	2 Inch Blowoff Assembly	6/8/06	
B-90.30-00	Combination Air Release / Air Vacuum Valve Assembly	6/8/06	
B-90.40-00	Concrete Thrust Block	6/8/06	
B-90.50-00	Concrete Thrust Block for Convex Vertical Bends	6/8/06	
B-95.20-01	Median Barrier Drainage Installation	2/3/09	
B-95.40-00	Inlet Placement at Bridge End	6/8/06	

Section C Traffic Barrier

C-1	Beam Guardrail Types 1 ~ 4 (W-Beam)	6/16/11	*2 Sheets*
C-1a	Beam Guardrail (Thrie Beam)	10/14/09	
C-1b	Beam Guardrail Posts and Blocks	6/16/11	*2 Sheets*
C-1c	Beam Guardrail	5/30/97	
C-1d	Thrie Beam Guardrail Reducer Section	10/31/03	
C-2	Guardrail Placement (Cases 1, 2 & 3)	1/6/00	
C-2a	Guardrail Placement (Cases 4, 5 & 6)	6/21/06	
C-2b	Guardrail Placement (Cases 7 & 8)	6/21/06	
C-2c	Guardrail Placement, Median Bull Nose (Cases 9A, 9B & 9C)	6/21/06	
C-2d	Guardrail Placement (Cases 10A, 10B & 10C)	6/21/06	

EFFECTIVE: AUGUST 1, 2011 TO August 5, 2012

Contents

Plan No.	Plan Title	Publication Approval Date	
C-2e	Guardrail Placement (Cases 11A, 11B & 11C)	6/21/06	
C-2f	Guardrail Placement, Weak Post Intersection Design (8' - 6" Max. Radius) (Cases 12AC, 12AD, 12BC & 12BD)	3/14/97	
C-2g	Guardrail Placement, Weak Post Intersection Design (35' Max. Radius) (Cases 13AC, 13AD, 13BC & 13BD)	7/27/01	
C-2h	Guardrail Placement (Case 14)	3/28/97	
C-2i	Guardrail Placement (Case 15)	3/28/97	
C-2j	Guardrail Placement (Cases 16, 17 & 18)	6/12/98	
C-2k	Guardrail Placement 12' - 6" Span (Cases 19A & 19B)	7/27/01	
C-2n	Guardrail Placement 18' - 9" Span (Case 20)	7/27/01	
C-2o	Guardrail Placement 25' Span (Case 21)	7/13/01	
C-2p	Guardrail Placement, Strong Post Intersection Design (Cases 22AC, 22AD, 22BC & 22BD)	10/31/03	
C-3	Beam Guardrail Transition Sections (Types 1, 1A, & 1B)	7/2/12	
C-3a	Beam Guardrail Transition Sections (Types 2, 4, 5, & 6)	10/4/05	
C-3b	Beam Guardrail Transition Sections (Types 10 ~ 15)	6/27/11	*2 Sheets*
C-3c	Beam Guardrail Transition Sections (Types 16, 17, & 18)	6/27/11	
C-4b	Beam Guardrail Flared Terminal	6/8/06	
C-4e	Beam Guardrail Non-Flared Terminal	2/20/03	
C-4f	Beam Guardrail Bull Nose Terminal	7/2/12	*4 Sheets*
C-6	Beam Guardrail Anchor Type 1	5/30/97	*2 Sheets*
C-6a	Beam Guardrail Anchor Type 2	10/14/09	
C-6c	Beam Guardrail Anchor Type 4	1/6/00	
C-6d	Beam Guardrail Anchor Type 5	5/30/97	
C-6f	Beam Guardrail Anchor Type 7	7/25/97	
C-7	Beam Guardrail End Sections	6/16/11	
C-7a	Thrie Beam End Sections	6/16/11	
C-8	Concrete Barrier Type 2	2/10/09	*2 Sheets*
C-8a	Concrete Barrier Type 4 and Transition Section	7/25/97	
C-8b	Concrete Barrier Light Standard Section	6/27/11	2 Sheets
C-8e	Precast Concrete Barrier Anchor ~ Type 3 (Permanent)	2/21/07	
C-8f	Concrete Barrier Transition, Type 2 to Bridge F-Shape	6/30/04	
C-10	Box Culvert Guardrail Steel Post	6/3/10	*2 Sheets*
C-16a	Traffic Barrier Shoulder Widening ~ for Shoulders 8.0' and Wider	6/3/10	
C-16b	Traffic Barrier Shoulder Widening ~ for Shoulders Less Than 8.0' Wide	6/3/10	
C-20.10-00	Beam Guardrail Type 31	7/2/12	
C-20.14-02	Beam Guardrail Type 31: Placement (Cases 1-31, 2-31, & 3-31)	7/2/12	
C-20.15-01	Beam Guardrail Type 31: Placement (Cases 4-31 & 5-31)	7/2/12	
C-20.18-01	Beam Guardrail Type 31 Placement (Cases 10A-31, 10B-31 and 10C-31)	7/2/12	
C-20.19-01	Beam Guardrail Type 31 Placement (Cases 11A-31, 11B-31 and 11C-31)	7/2/12	
C-20.40-03	Beam Guardrail Type 31: Placement ~ 12'-6", 18'-9", or 25'-0" Span	7/2/12	

Contents

Plan No.	Plan Title	Publication Approval Date	
C-20.42-03	Guardrail Placement Strong Post ~ Type 31 Intersection Design	7/2/12	
C-20.45-01	Beam Guardrail Type 31 - DS (W-Beam)	7/2/12	
C-22.14-02	Beam Guardrail Type 1 Buried Terminal Type 2	6/16/11	
C-22.16-03	Beam Guardrail Type 31 Buried Terminal Type 2	4/18/12	
C-22.40-02	Beam Guardrail Type 31: Non-Flared Terminal	6/16/10	
C-22.45-00	Beam Guardrail Type 31 Non-Flared Terminal Steel Posts (40 mph/Below)	6/16/11	
C-23.60-02	Beam Guardrail (Type 31) Anchor Type 10	6/21/12	
C-24.10-00	Guardrail Connections to Bridge Rail or Concrete Barrier	7/2/12	
C-25.18-03	Beam Guardrail (Type 31) Transition Section Type 20	7/2/12	
C-25.20-05	Beam Guardrail (Type 31) Transition Section Type 21	7/2/12	
C-25.22-04	Beam Guardrail (Type 31) Transition Section Type 22	7/2/12	
C-25.26-02	Beam Guardrail (Type 31) Transition Section Type 23	7/2/12	
C-25.80-02	Beam Guardrail Type 31 to Beam Guardrail Type 1 Adapter	7/2/12	
C-40.14-02	Barrier Placement Cable to Thrie Beam Bull Nose Connection	7/2/12	
C-40.16-02	Barrier Placement ~ Cable to W-Beam Shielding for Redirectional Landform	7/2/12	
C-40.18-02	Barrier Placement ~ Cable Barrier Shielding for Redirectional Landform	7/2/12	
C-70.10-00	Single Slope Concrete Barrier (Pre-Cast)	4/18/12	*3 Sheets*
C-75.10-00	Single Slope Concrete Barrier (Pre-Cast)Transition Section	4/18/12	
C-75.20-00	Single Slope Concrete Barrier (Pre-Cast) Vertical Back	4/18/12	
C-75.30-00	Single Slope Concrete Barrier (Pre-Cast) Terminal	4/18/12	
C-80.10-00	Single Slope Concrete Barrier (Cast-in-Place) Dual Faced	4/18/12	*3 Sheets*
C-80.20-00	Single Slope Concrete Barrier (Cast-in-Place) Terminal	4/18/12	
C-80.30-00	Single Slope Concrete Barrier (Cast-in-Place) Trans. Section	4/18/12	
C-80.40-00	Single Slope Concrete Barrier (Cast-in-Place) Vertical Back	4/18/12	
C-80.50-00	Concrete Barrier Transition, Type 2 to Single Slope	4/18/12	
C-85.10-00	Single Slope Concrete Barrier Placement (Split)	4/18/12	
C-85.11-00	Single Slope Concrete Barrier Placement (Wrap)	4/18/12	
C-85.14-00	Single Slope Concrete Barrier Light Standard Foundation	6/16/11	
C-85.15-00	Single Slope Concrete Barrier (42") Light Standard Foundation	6/16/11	
C-85.16-00	Single Slope Concrete Barrier Sign Bridge Foundation	6/16/11	*2 Sheets*
C-85.18-00	Single Slope Concrete Barrier Transition for Monotube Support	6/16/11	
C-85.20-00	Single Slope Concrete Barrier Truss-Type Sign Foundation	6/16/11	*2 Sheets*
C-90.10-00	Impact Attenuator Inertial Barrier Configurations	7/3/08	

EFFECTIVE: AUGUST 6, 2012 TO August 4, 2013
EFFECTIVE: AUGUST 6, 2012 TO August 4, 2013
EFFECTIVE: AUGUST 6, 2012 TO August 4, 2013
EFFECTIVE: AUGUST 6, 2012 TO August 4, 2013
EFFECTIVE: AUGUST 1, 2011 TO August 5, 2012

EFFECTIVE: AUGUST 6, 2012 TO August 4, 2013

Contents

Plan No.	Plan Title	Publication Approval Date	
Section D	**Retaining, Noise Barrier, and Geosynthetic Walls**		
D-2.04-00	Noise Barrier Wall Type 2 (CIP Conc. on Spread Footing)	11/10/05	*2 Sheets*
D-2.06-01	Noise Barrier Wall Type 3 (… on Offset Spread Footing)	1/6/09	*2 Sheets*
D-2.08-00	Noise Barrier Wall Type 4 (CIP Conc. on Shaft Foundation)	11/10/05	*2 Sheets*
D-2.14-00	Noise Barrier Wall Type 6 (CIP Conc. with Traffic Barrier on Spread Footing)	11/10/05	
D-2.16-00	Noise Barrier Wall Type 6SS (CIP Conc. w/ Single Slope Traffic Barrier on Spread Footing)	11/10/05	
D-2.18-00	Noise Barrier Wall Type 7 (CIP Conc. with Traffic Barrier on Shaft Foundation)	11/10/05	
D-2.20-00	Noise Barrier Wall Type 7SS (CIP Conc. w/ Single Slope Traffic Barrier on Shaft Fdn.)	11/10/05	
D-2.32-00	Noise Barrier Wall Type 9 (Precast Conc. on Spread Footing)	11/10/05	*2 Sheets*
D-2.34-01	Noise Barrier Wall Type 10 (… on Offset Spread Footing)	1/6/09	*2 Sheets*
D-2.36-02	Noise Barrier Wall Type 11 (... on Shaft Foundation)	1/6/09	*3 Sheets*
D-2.42-00	Noise Barrier Wall Type 13 (Precast Conc. with Traffic Barrier on Spread Footing)	11/10/05	
D-2.44-00	Noise Barrier Wall Type 13SS (Precast w/ Single Slope Traffic Barrier on Spread Footing)	11/10/05	
D-2.46-00	Noise Barrier Wall Type 14 (Precast Conc. w/ Traffic Barrier on Shaft Foundation)	11/10/05	*2 Sheets*
D-2.48-00	Noise Barrier Wall Type 14SS (Precast Conc. w/ Single Slope Traffic Barrier on Shaft Fdn.)	11/10/05	*2 Sheets*
D-2.60-00	Noise Barrier Wall Type 16 (Masonry on Trench Footing)	11/10/05	*2 Sheets*
D-2-62-00	Noise Barrier Wall Type 17 (Masonry on Spread Footing)	11/10/05	*2 Sheets*
D-2.64-01	Noise Barrier Wall Type 18 (Masonry on Offset Spread Ftg.)	1/6/09	*2 Sheets*
D-2.66-00	Noise Barrier Wall Type 19 (Masonry on Shaft with Grade Beam Foundation)	11/10/05	*2 Sheets*
D-2.68-00	Noise Barrier Wall Type 20 (Masonry on Shaft Foundation)	11/10/05	*2 Sheets*
D-2.80-00	Noise Barrier Wall Access Door Type 1 (Cast-In-Place)	11/10/05	
D-2.82-00	Noise Barrier Wall Access Door Type 2 (Cast-In-Place)	11/10/05	*2 Sheets*
D-2.84-00	Noise Barrier Wall Access Door Type 3 (Precast)	11/10/05	
D-2.86-00	Noise Barrier Wall Access Door Type 4 (Precast)	11/10/05	*2 Sheets*
D-2.88-00	Noise Barrier Wall Access Door Type 5 (Masonry)	11/10/05	
D-2.92-00	Noise Barrier Wall Access Door & Frame	11/10/05	*2 Sheets*
D-3.09-00	Permanent Geosynthetic Wall	5/17/12	*4 Sheets*
D-3.10-00	Cast-In-Place Permanent Geosynthetic Wall Fascia and Facing	6/16/10	
D-3.11-01	Precast Permanent Geosynthetic Wall Fascia	3/15/12	*2 Sheets*
D-3.15-01	Permanent Geosynthetic Wall: Single Slope Barrier	5/17/12	
D-3.16-01	Permanent Geosynthetic Wall: F-Shape Barrier	5/17/12	
D-3.17-01	Permanent Geosynthetic Wall Expansion Joint Details	5/17/12	
D-4	Backfill and Drainage for Retaining Walls	12/11/98	
D-6	Gabions	6/19/98	
D-10.10-01	Reinforced Concrete Retaining Wall Type 1 and 1 SW	12/2/08	*2 Sheets*
D-10.15-01	Reinforced Concrete Retaining Wall Type 2 and 2 SW	12/2/08	*2 Sheets*

EFFECTIVE: AUGUST 1, 2011 TO August 5, 2012

Contents

Plan No.	Plan Title	Publication Approval Date	
D-10.20-00	Reinforced Concrete Retaining Wall Type 3 and 3 SW	7/8/08	*2 Sheets*
D-10.25-00	Reinforced Concrete Retaining Wall Type 4 and 4 SW	7/8/08	*2 Sheets*
D-10.30-00	Reinforced Concrete Retaining Wall Type 5	7/8/08	*2 Sheets*
D-10.35-00	Reinforced Concrete Retaining Wall Type 6	7/8/08	*2 Sheets*
D-10.40-01	Reinforced Concrete Retaining Wall Type 7	12/2/08	*2 Sheets*
D-10.45-01	Reinforced Concrete Retaining Wall Type 8	12/2/08	*2 Sheets*
D-15.10-01	Traffic Barrier Details for Reinforced Concrete Retaining Walls	12/2/08	*2 Sheets*
D-15.20-02	Traffic Barrier Details for Reinforced Concrete Retaining Walls	6/2/11	*2 Sheets*
D-15.30-01	Traffic Barrier Details for Reinforced Concrete Retaining Walls	12/2/08	*2 Sheets*

Section E Bridges and Trestles

E-1	Date Numeral Placement on Bridge Traffic Barrier	2/21/07	
E-2	Pile or Frame Detour Bridge with Asphalt Overlay	5/29/98	*2 Sheets*
E-4	Precast Prestressed Concrete Piles	8/27/03	
E-4a	Precast Prestressed Concrete Piles: Handling & Capping	8/27/03	

Section F Curbs, Sidewalks, and Driveways

F-10.12-02	Cement Concrete Curbs	6/16/11	
F-10.16-00	Cement Concrete Curb and Gutter Pan	12/20/06	
F-10.18-00	Roundabout Cement Concrete Curbs	6/27/11	
F-10.40-02	Extruded Curb Placement	6/21/12	
F-10.42-00	Extruded Curb	1/23/07	
F-10.62-01	Precast Concrete Sloped Mountable Curb	9/5/07	*2 Sheets*
F-10.64-02	Precast Concrete Dual Faced Sloped Mountable Curb	7/3/08	
F-30.10-01	Cement Concrete Sidewalk	6/3/10	
F-40.12-01	Parallel Curb Ramp	6/3/10	
F-40.14-01	Combination Curb Ramps	6/3/10	
F-40.15-01	Perpendicular Curb Ramps	6/3/10	
F-40.16-01	Single Direction Curb Ramps	6/3/10	
F-45.10-01	Detectable Warning Surface	6/21/12	
F-80.10-02	Cement Concrete Driveway Entrance: Types 1, 2, 3, & 4	3/15/12	*2 Sheets*

Section G Signs and Sign Supports

G-10.10-00	Milepost	9/20/07	
G-20.10-00	Ground Mounted Sign Placement	9/20/07	
G-22.10-01	Timber Sign Support	7/3/08	*3 Sheets*
G-24.10-00	Steel Sign Support Type AP, Installation Details	11/8/07	
G-24.20-01	Steel Sign Support Type AS, Installation Details	2/7/12	
G-24.30-01	Steel Sign Support, Types PL, PL-T, & PL-U, Inst. Det.	2/7/12	*2 Sheets*
G-24.40-02	Steel Sign Support, Types SB-1, SB-2 & SB-3 Installation Details	2/7/12	*2 Sheets*
G-24.50-01	Steel Sign Support, Types ST-1 ~ ST-4, Installation Details	2/7/12	
G-24.60-01	Steel Sign Support, Types TP-A & TP-B, Installation Details	6/16/11	*2 Sheets*

Contents

Plan No.	Plan Title	Publication Approval Date	
G-25.10-03	Steel Sign Support Foundation Details	3/15/12	
G-30.10-01	Sign Installation on Signal and Light Standards	6/16/11	*2 Sheets*
G-50.10-00	Sign Bracing	11/8/07	*2 Sheets*
G-60.10-01	Cantilever Sign Structure (Truss-Type)	6/27/11	*4 Sheets*
G-60.20-01	Cantilever Sign Structure (Truss-Type) Foundation Type 1	6/27/11	*2 Sheets*
G-60.30-01	Cantilever Sign Structure (Truss-Type) Fdn., Types 2 & 3	6/27/11	*2 Sheets*
G-70.10-01	Sign Bridge (Truss-Type)	6/27/11	*4 Sheets*
G-70.20-01	Sign Bridge (Truss-Type) Foundation Type1	6/27/11	
G-70.30-01	Sign Bridge (Truss-Type) Foundation Types 2 & 3	6/27/11	
G-90.10-01	Overhead Sign Bracing and Lighting Placement	5/11/11	
G-90.20-01	Overhead Sign Mounting (Monotube Structure)	6/27/11	
G-90.30-01	Overhead Sign Mounting (Truss Structure)	6/2/11	
G-90.40-01	Overhead Sign Lighting Details	10/14/09	
G-95.10-01	Maintenance Walkway for Sign Bridges	6/2/11	*3 Sheets*
G-95.20-02	Maintenance Walkway Mounting for Monotube Sign Bridge	6/2/11	*3 Sheets*
G-95.30-02	Maintenance Walkway Mounting for Truss-Type Sign Bridge	6/2/11	*2 Sheets*

Section H Roadside and Site Development

H-10.10-00	Tree and Shrub Planting Details	7/3/08	
H-10.15-00	Live Stake Installations	7/3/08	
H-30.10-00	Crest Gage	10/12/07	
H-32.10-00	Automated Ground Water Monitoring Well	9/20/07	
H-60.10-01	Bollard Type 1	7/3/08	
H-60.20-01	Bollard Type 2	7/3/08	
H-70.10-01	Mailbox Support Type 1	2/7/12	*2 Sheets*
H-70.20-01	Mailbox Support Type 2	2/16/12	*2 Sheets*
H-70.30-02	Mailbox Support Type 3	2/7/12	*2 Sheets*

Section I Site Preservation and Erosion Control

I-10.10-01	High Visibility Fence	8/11/09	
I-30.10-01	Silt Fence with Backup Support	8/11/09	
I-30.15-01	Silt Fence	2/7/12	
I-30.20-00	Erosion Control At Culvert Ends	9/20/07	
I-30.30-00	Wattle Installation On Slope	9/20/07	
I-30.40-00	Compost Sock	10/12/07	
I-40.10-00	Temporary Silt Fence for Inlet Protection In Unpaved Areas	9/20/07	
I-40.20-00	Storm Drain Inlet Protection	9/20/07	
I-50.10-00	Geotextile Encased Check Dam Installation	9/20/07	
I-50.20-00	Check Dams	8/31/07	
I-60.10-00	Erosion Control Blanket Placement On Slope	8/31/07	
I-60.20-00	Erosion Control Blanket Placement In Channel	8/31/07	
I-80.10-01	Miscellaneous Erosion Control Details	8/11/09	

Contents

Plan No.	Plan Title	Publication Approval Date	
Section J	**Illumination, Signals, and ITS**		
J-3	Type A, B, and C Service Lighting Details	8/1/97	*2 Sheets*
J-3b	Service Cabinet Type B Modified (0 - 200 Amp Type, 120/240 Single Phase)	3/4/05	*2 Sheets*
J-3c	Service Cabinet Type D (0 - 200 Amp Type, 120/240 Single Phase)	6/24/02	
J-3d	Service Cabinet Type E (0 - 200 Amp Type, 240/480 Single Phase)	11/5/03	
J-10	Electrical Conduit Placement	7/18/97	
J-10.10-01	Cabinet Orientation, Conduit Layout and Foundation Detail	5/11/11	*5 Sheets*
J-10.15-00	Cabinet Enclosure on Slope	7/2/12	
J-15.10-00	Timber Light Standard	5/18/12	
J-15.15-00	Span Wire Installation	6/16/10	
J-16b	Conduit Installation in Traffic Barrier on Retaining Wall	2/10/09	
J-16c	Conduit Installation in Single Slope Conc. Barrier (Dual Face)	2/10/09	
J-20.10-01	Accessible Pedestrian PushButton Post (PPB) and Foundation	7/12/12	*2 Sheets*
J-20.11-00	Accessible Pedestrian PushButton with Curb Base	7/12/12	*2 Sheets*
J-20.15-01	Accessible Breakaway Pedestrian PushButton (PPB) Post	7/12/12	
J-20.16-01	Pedestrian Signal Standard (Type PS) Details	7/12/12	
J-20.20-01	Pedestrian Signal Standard (Type PS) Electrical Details	7/12/12	
J-20.26-01	Accessible Pedestrian PushButton (PPB) Details	7/12/12	
J-21.10-02	Type PS, Type 1 RM and FB Signal Standard Foundation Details	6/27/11	*2 Sheets*
J-21.15-00	Type 1 Signal Standard Details	10/14/09	
J-21.16-00	Flashing Beacon Type 1 Signal Standard Details	10/14/09	
J-21.17-00	Flashing Beacon Type 1 Signal Standard Electrical Details	10/14/09	
J-21.20-00	Type 1 Signal Standard Electrical Details	10/14/09	
J-22.15-00	Ramp Meter Signal Standard Details	10/14/09	
J-22.16-01	Ramp Meter Signal Standard Electrical Details	6/3/10	
J-26.10-02	Signal Standard Foundation Plan	3/15/12	
J-26.15-01	Signal Standard Foundation Placements	5/17/12	*3 Sheets*
J-27.10-00	Type 4 and 5 Strain Pole Standard Foundation	3/15/12	
J-27.15-00	Type 4 and 5 Strain Pole Standard	3/15/12	
J-28.10-01	Steel Light Standard	5/11/11	*2 Sheets*
J-28.22-00	Steel Light Standard: Placement (Slip Base)	8/7/07	*2 Sheets*
J-28.24-00	Steel Light Standard: Placement (Fixed Base)	8/7/07	
J-28.26-01	Steel Light Standard: Placement ~ Miscellaneous	12/2/08	
J-28.30-02	Steel Light Standard: Foundation Types A & B	6/27/11	*2 Sheets*
J-28.40-01	Steel Light Standard: Base Mounting	10/14/09	
J-28.42-00	Steel Light Standard: Anchor/Slip Plate for Slip Base	8/7/07	
J-28.45-01	Steel Light Std.: Elbow Mounting on Bridge & Retaining Wall	6/27/11	
J-28.50-02	Steel Light Standard: Pole Base and Hand Hole Details	6/2/11	
J-28.60-01	Steel Light Standard: Barrier Mounted Base	6/2/11	
J-28.70-01	Steel Light Standard: Wiring Details	5/11/11	
J-29.10-00	Camera Pole Foundation Details	6/27/11	
J-29.15-00	Camera Pole Standard Details	6/27/11	*2 Sheets*
J-29.16-00	Camera Pole Details	6/27/11	
J-40.10-02	Locking Lid Standard Junction Box Types 1 & 2	5/11/11	*2 Sheets*
J-40.20-01	Heavy Duty Junction Box, Types 4, 5 & 6	5/17/12	*2 Sheets*
J-40.30-02	Locking Lid Standard Duty Junction Box Type 8	5/11/11	*2 Sheets*
J-40.35-00	Sign post mounted Junction Box	3/15/12	

Contents

Plan No.	Plan Title	Publication Approval Date	
J-40.36-00	Nema 4X Non-Adjustable Junction Box	6/3/10	
J-40.37-00	Nema 3R Adjustable Junction Box	6/3/10	*2 Sheets*
J-40.38-00	Surface Mounted Junction Box	6/16/11	
J-50.10-00	Type 1 Induction Loop	6/3/11	
J-50.11-00	Type 2 Induction Loop	6/3/11	*2 Sheets*
J-50.12-00	Type 3 Induction Loop	6/3/11	*3 Sheets*
J-50.15-00	Induction Loop Details	6/3/11	*3 Sheets*
J-50.20-00	Permanent Traffic Recorder Site Installations	6/3/11	*3 Sheets*
J-50.25-00	Weigh-In Motion Site Installation	6/3/11	*2 Sheets*
J-50.30-00	Permanent Traffic Recorder & Weigh-In Motion Details	6/3/11	*3 Sheets*
J-60.05-00	Typical Grounding Details	6/16/11	*4 Sheets*
J-60.13-00	Stainless Steel Channel	6/16/10	
J-60.14-00	Stainless Steel Channel Mounting Details on Column or Pole	6/16/10	
J-75.10-01	Signal Head Mounting Details Pole and Post Top Mountings	5/11/11	
J-75.20-00	Signal Head Mounting Details Mast Arm and Span Wire Mountings	2/10/09	
J-75.30-01	Miscellaneous Signal Details	5/11/11	
J-75.40-00	Overhead Sign Electrical Details (Monotube Structure)	10/14/09	
J-75.45-00	Overhead Sign Electrical Details (Truss Structure)	10/14/09	
J-90.10-01	Pull Box	6/27/11	*2 Sheets*
J-90.20-01	Cable Vault	6/27/11	*2 Sheets*

Section K Work Zone Traffic Control

K-10.20-01	Road Closure, with Diversion	10/12/07
K-10.40-00	Road Closure, with Off-Site Detour	2/15/07
K-20.20-01	Lane Closure, without Flaggers ~ Low Volume Road	10/12/07
K-20.40-00	Lane Closure, with Flagger Control	2/15/07
K-20.60-00	Lane Closure, with Pilot Car	2/15/07
K-22.20-01	Lane Shift, onto Passing Lane	10/12/07
K-24.20-00	Single Lane Closure, with Encroachment	2/15/07
K-24.40-01	Double Lane Closure, on Multilane Roadway	10/12/07
K-24.60-00	Single Lane Closure, on Multilane Roadway	2/15/07
K-24.80-01	Single Lane Closure, with Temporary Concrete Barrier	10/12/07
K-26.20-00	Lane Shift, onto Two-way Left Turn Lane	2/15/07
K-26.40-01	Left and Center Lane Closure ~ Two-Way Left Turn Lane	10/12/07
K-30.20-00	Intersection ~ Lane Shift on 3 Lane Two-Way Left Turn Lane	2/15/07
K-30.40-01	Intersection ~ Lane Shift on 5 Lane Two-Way Left Turn Lane	10/12/07
K-32.20-00	Intersection ~ Right Lane Closure, Far Side	2/15/07
K-32.40-00	Intersection ~ Left Lane Closure, Far Side	2/15/07
K-32.60-00	Intersection ~ Multiple Lane Closure	2/15/07
K-32.80-00	Intersection ~ Half Road Closure with Lane Shift	2/15/07
K-34.20-00	Intersection ~ Pedestrian Detour	2/15/07
K-36.20-00	Intersection ~ Shoulder Work	2/15/07
K-40.20-00	Shoulder Closure ~ High Speed Roadway (45 MPH or Higher)	2/15/07

Contents

Plan No.	Plan Title	Publication Approval Date	
K-40.40-00	Shoulder Closure ~ Low Speed Roadway (40 MPH or Lower)	2/15/07	
K-40.60-00	Shoulder Closure ~ Short Duration	2/15/07	
K-40.80-00	Work Beyond the Shoulder	2/15/07	
K-55.20-00	Emergency ~ Passable Hazard	2/15/07	
K-60.20-02	Speed Zone, Supplemental Signing ~ Chip Seal Project	7/3/08	
K-60.40-00	Motorcycle, Supplemental Signing	2/15/07	
K-70.20-00	Temporary Channelization	2/15/07	
K-80.10-00	Class A Construction Signing Installation	2/21/07	
K-80.20-00	Type 3 Barricade	12/20/06	*2 Sheets*
K-80.30-00	Alternative Temporary Conc. Barrier (F-Shape)	2/21/07	
K-80.35-00	Temporary Conc. Barrier Anchoring	2/21/07	
K-80.37-00	Temporary Conc. Barrier Anchoring ~ Narrow	2/21/07	

Section L Fence and Glare Screen

L-10.10-02	Wire Fence Types 1 & 2, and Wire Gates	6/21/12	*2 Sheets*
L-20.10-02	Chain Link Fence, Types 3 and 4	6/21/12	*2 Sheets*
L-30.10-01	Chain Link Gate	6/16/11	*2 Sheets*
L-40.10-02	Glare Screen Type 1, Design A	6/21/12	*2 Sheets*
L-40.15-01	Glare Screen Type 1, Design B	6/16/11	
L-40.20-02	Glare Screen Type 2 (Chain Link with Slats)	6/21/12	
L-70.10-01	Access Control Gate	5/21/08	
L-70.20-01	Access Control Double Gate	5/21/08	

Section M Roadway Delineation

M-1.20-02	Ramp Channelization: Single Lane	6/3/11
M-1.40-02	Ramp Channelization: Two Lane	6/3/11
M-1.60-02	Ramp Channelization: Collector Distributor Road	6/3/11
M-1.80-03	Ramp Channelization: Parallel On & Weaving Section	6/3/11
M-2.20-02	Gore Area Marking Layouts	6/3/11
M-3.10-03	Left Turn Channelization	6/3/11
M-3.20-02	Left Turn Channelization: Reduced Tapers	6/3/11
M-3.30-03	Left Turn Channelization: Tee Intersection and Back-to-back Turn Lanes	6/3/11
M-3.40-03	Two-way Left-Turn and Median Channelization	6/3/11
M-3.50-02	Double Left Turn Channelization	6/3/11
M-5.10-02	Right Turn Channelization	6/3/11
M-7.50-01	High Occupancy Vehicle (HOV) Lane Symbol Layout	1/30/07
M-9.50-01	Bicycle Lane Symbol Layout	1/30/07
M-9.60-01	Shared - Use Path Markings	2/10/09
M-11.10-01	Railroad Crossing Layout	1/30/07
M-15.10-01	Crosswalk Layout	2/6/07
M-17.10-02	Parking Space Layouts	7/3/08
M-20.10-02	Longitudinal Marking Patterns	6/3/11
M-20.20-01	Profiled and Embossed Plastic Lines	1/30/07
M-20.30-02	Longitudinal Marking Supplement with Raised Pavement Markers (RPM's)	10/14/09

EFFECTIVE: AUGUST 6, 2012 TO August 4, 2013

Contents

Plan No.	Plan Title	Publication Approval Date	
M-20.40-02	Longitudinal Marking Supplement with RPM's ~ Turn Lanes	6/3/11	*2 Sheets*
M-20.50-02	Longitudinal Marking Substitution with RPM's	6/3/11	
M-24.20-01	Symbol Markings: Traffic Arrows for High Speed Roadways	5/31/06	*3 Sheets*
M-24.40-01	Symbol Markings: Traffic Arrows for Low Speed Roadways	5/31/06	*2 Sheets*
M-24.50-00	Roundabout Traffic Arrows	6/16/11	
M-24.60-03	Symbol Markings: Miscellaneous	5/11/11	*2 Sheets*
M-40.10-02	Guide Posts and Barrier Delineators	5/11/11	
M-40.20-00	Guide Post Placement: Interchanges	10/12/07	
M-40.30-00	Guide Post Placement: Grade Intersections	9/20/07	
M-40.40-00	Guide Post Placement: Horizontal Curves	9/20/07	
M-40.50-00	Guide Post Placement: Bridges	9/20/07	
M-40.60-00	Guide Post Placement: Miscellaneous	9/20/07	
M-60.10-01	Shoulder Rumble Strip Type 1, for Divided Highways	6/3/11	*4 Sheets*
M-60.20-02	Shoulder Rumble Strip, Types 2, 3, and 4, for Undivided Highways	6/27/11	*2 Sheets*
M-65.10-02	Center Line Rumble Strip	5/11/11	*2 Sheets*
M-80.10-01	Traffic Letter and Numeral Applications	6/3/11	*2 Sheets*
M-80.20-00	Traffic Letters and Numerals (High Speed Roadways)	6/10/08	
M-80.30-00	Traffic Letters and Numerals (Low Speed Roadways)	6/10/08	

EFFECTIVE: AUGUST 6, 2012 TO August 4, 2013

EFFECTIVE: AUGUST 6, 2012 TO August 4, 2013

EFFECTIVE: AUGUST 6, 2012 TO August 4, 2013

EFFECTIVE: AUGUST 6, 2012 TO August 4, 2013

EFFECTIVE: AUGUST 6, 2012 TO August 4, 2013
EFFECTIVE: AUGUST 6, 2012 TO August 4, 2013

DRAWN BY: ADAM COCHRAN

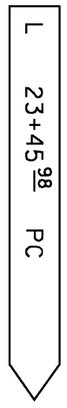

LINE DESIGNATION

LINE STATIONING

HUNDRED FOOT INCREMENTS

CONTROL POINT

ALIGNMENT STAKE

STAKE EVERY 100 FEET ON TANGENTS,
EVERY 25 FEET ON CURVES

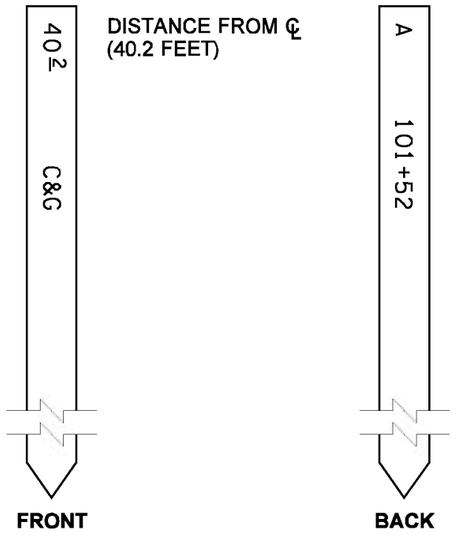

DISTANCE FROM ℄ (40.2 FEET)

LINE DESIGNATION

LINE STATIONING

HUNDRED FOOT INCREMENTS

CLEARING/GRUBBING (C&G) LATH

STAKE AT EACH FULL STATION,
100 FEET ON TANGENTS,
EVERY 25 FEET ON CURVES.
NO HUB NECESSARY.

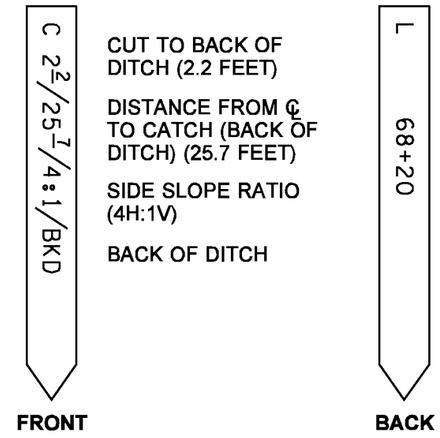

CUT TO BACK OF DITCH (2.2 FEET)

DISTANCE FROM ℄ TO CATCH (BACK OF DITCH) (25.7 FEET)

SIDE SLOPE RATIO (4H:1V)

BACK OF DITCH

LINE DESIGNATION

LINE STATIONING

HUNDRED FOOT INCREMENTS

SLOPE STAKE

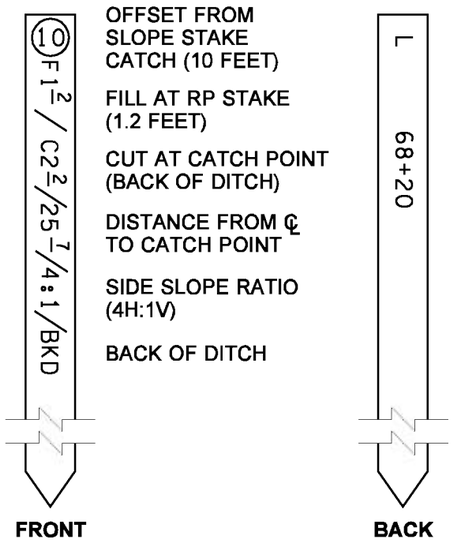

OFFSET FROM SLOPE STAKE CATCH (10 FEET)

FILL AT RP STAKE (1.2 FEET)

CUT AT CATCH POINT (BACK OF DITCH)

DISTANCE FROM ℄ TO CATCH POINT

SIDE SLOPE RATIO (4H:1V)

BACK OF DITCH

LINE DESIGNATION

LINE STATIONING

HUNDRED FOOT INCREMENTS

LATH FOR SLOPE REFERENCES

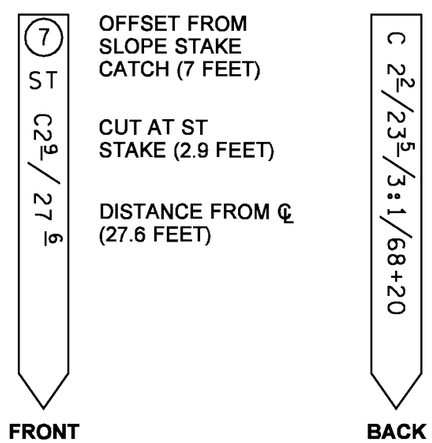

OFFSET FROM SLOPE STAKE CATCH (7 FEET)

CUT AT ST STAKE (2.9 FEET)

DISTANCE FROM ℄ (27.6 FEET)

CUT AT CATCH POINT (2.2 FEET)

DISTANCE FROM ℄ TO CATCH (BACK OF DITCH) (23.5 FEET)

SIDE SLOPE RATIO (3H:1V)

LINE STATIONING

HUNDRED FOOT INCREMENTS

SLOPE TREATMENT (ST) STAKE FOR CUT SECTIONS

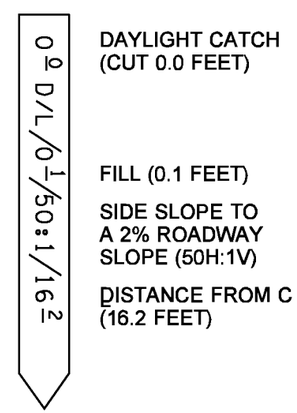

DAYLIGHT CATCH (CUT 0.0 FEET)

FILL (0.1 FEET)

SIDE SLOPE TO A 2% ROADWAY SLOPE (50H:1V)

DISTANCE FROM C (16.2 FEET)

DAYLIGHT (D/L) STAKE

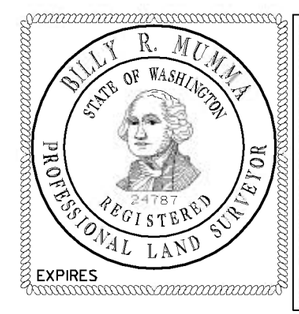

NOTE: THIS PLAN IS NOT A LEGAL ENGINEERING DOCUMENT BUT AN ELECTRONIC DUPLICATE. THE ORIGINAL, SIGNED BY THE ENGINEER AND APPROVED FOR PUBLICATION, IS KEPT ON FILE AT THE WASHINGTON STATE DEPARTMENT OF TRANSPORTATION. A COPY MAY BE OBTAINED UPON REQUEST.

SURVEY STAKES

STANDARD PLAN A-10.10-00

SHEET 1 OF 2 SHEETS

APPROVED FOR PUBLICATION

Pasco Bakotich III — STATE DESIGN ENGINEER

08-07-07 — DATE

Washington State Department of Transportation

EFFECTIVE: AUGUST 6, 2012 TO August 4, 2013
EFFECTIVE: AUGUST 6, 2012 TO August 4, 2013
EFFECTIVE: AUGUST 6, 2012 TO August 4, 2013
EFFECTIVE: AUGUST 6, 2012 TO August 4, 2013

EFFECTIVE: AUGUST 6, 2012 TO August 4, 2013
EFFECTIVE: AUGUST 6, 2012 TO August 4, 2013

DRAWN BY: ADAM COCHRAN

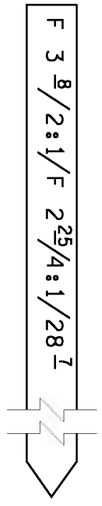

FILL FROM CATCH POINT TO BEGINNING OF SECOND SLOPE (3.8 FEET)

SLOPE RATIO (2H:1V)

FILL TO SUBGRADE SHOULDER (2.25 FEET)

SLOPE RATIO (4H:1V)

DISTANCE FROM ℄ TO CATCH POINT (28.7 FEET)

COMPOUND SLOPE LATH

DITCH CUT TO BOTTOM OF DITCH (0.60 FEET)

DISTANCE FROM CATCH POINT TO BOTTOM OF DITCH (2.4 FEET)

SIDE SLOPE RATIO (4H:1V)

FRONT

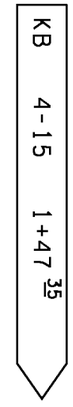

STRUCTURE NOTE REFERENCE

PLAN SHEET NUMBER (4)
STRUCTURE NOTE NUMBER (15)

DITCH SECTION ALIGNMENT STATIONING

BACK

STAKE FOR DITCH CONSTRUCTION

OFFSET TO CENTER OF BASE (10 FEET)

FILL TO TOP OF CONCRETE BASE (1.1 FEET TO TOP OF FOUNDATION)

FRONT

LUMINAIRE NUMBER (23)

LINE DESIGNATION AND STATIONING

HUNDRED FOOT INCREMENTS

BACK

STAKE FOR FOUNDATION OF LUMINAIRES, SIGNALS OR SIGN STRUCTURES

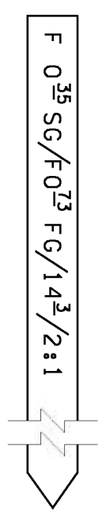

FILL TO SUBGRADE (0.35 FEET)

FILL TO FINISH GRADE (CURB ELEVATION) (0.73 FEET)

DISTANCE FROM ℄ (14.3 FEET)

SLOPE RATIO (2H:1V)

SLOPE LATH FOR CURB SECTION

OFFSET (10 FEET)

CUT TO FLOW LINE (1.26 FEET)

FRONT

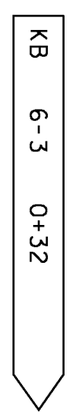

STRUCTURE NOTE REFERENCE

PLAN SHEET NUMBER (6)
STRUCTURE NOTE NUMBER (3)

DRAINAGE ALIGNMENT STATIONING

25' INCREMENTS

BACK

STAKE FOR DRAINAGE

OFFSET (3 FEET)

FILL TO TOP AND BACK EDGE OF CURB (0.90 FEET)

FRONT

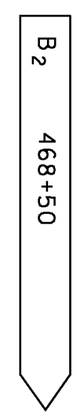

LINE DESIGNATION

LINE STATIONING

HUNDRED FOOT INCREMENTS

BACK

STAKE FOR CURB/GUTTER

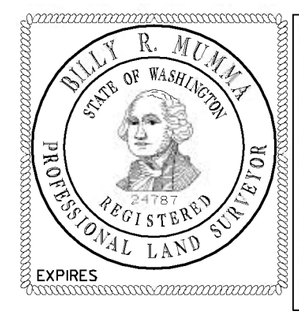

NOTE: THIS PLAN IS NOT A LEGAL ENGINEERING DOCUMENT BUT AN ELECTRONIC DUPLICATE. THE ORIGINAL, SIGNED BY THE ENGINEER AND APPROVED FOR PUBLICATION, IS KEPT ON FILE AT THE WASHINGTON STATE DEPARTMENT OF TRANSPORTATION. A COPY MAY BE OBTAINED UPON REQUEST.

SURVEY STAKES

STANDARD PLAN A-10.10-00

SHEET 2 OF 2 SHEETS

APPROVED FOR PUBLICATION

Pasco Bakotich III — STATE DESIGN ENGINEER

08-07-07 — DATE

Washington State Department of Transportation

EFFECTIVE: AUGUST 6, 2012 TO August 4, 2013
EFFECTIVE: AUGUST 6, 2012 TO August 4, 2013
EFFECTIVE: AUGUST 6, 2012 TO August 4, 2013
EFFECTIVE: AUGUST 6, 2012 TO August 4, 2013

EFFECTIVE: AUGUST 6, 2012 TO August 4, 2013

DRAWN BY: MARK SUJKA

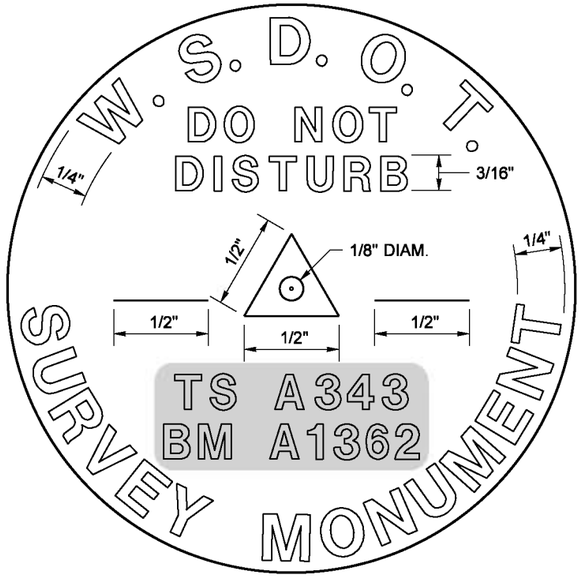

TYPE 1

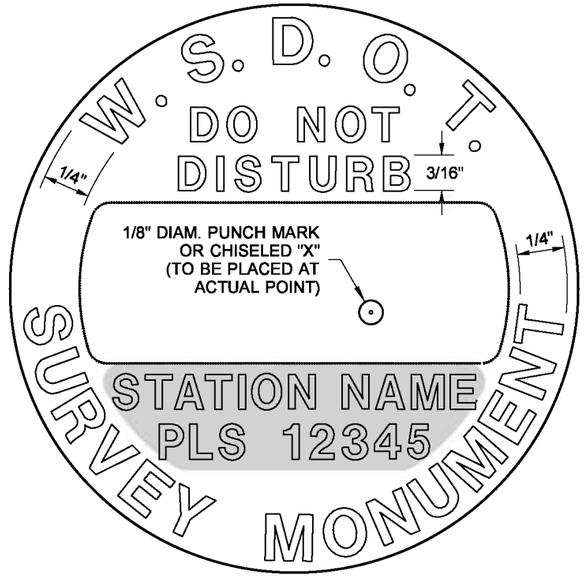

TYPE 2

TOP VIEW

BRASS DISC

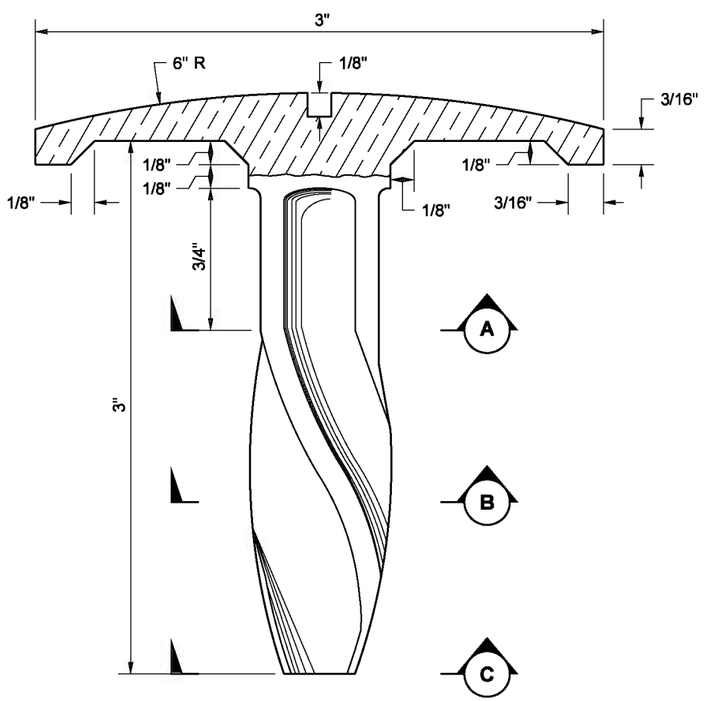

SIDE VIEW

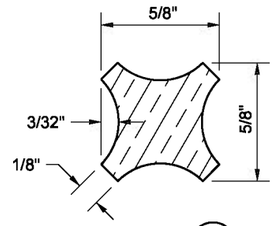

SECTION A

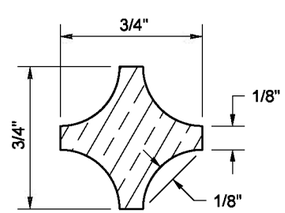

SECTION B

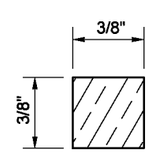

SECTION C

EFFECTIVE: AUGUST 6, 2012 TO August 4, 2013

EFFECTIVE: AUGUST 6, 2012 TO August 4, 2013

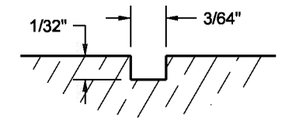

SECTION OF GROOVE FOR 1/4" LETTERS

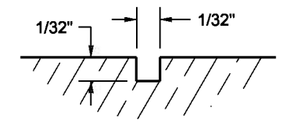

SECTION OF GROOVE FOR 3/16" LETTERS

NOTES

1. The Brass Disc will be furnished by the State.
2. The text in the shaded area (see TOP VIEW) shall be 3/16" high and will be stamped by WSDOT personnel prior to setting the cap. Only the assigned identification letters and numbers are to be placed on the Brass Disc.
3. The hole shall be 32" minimum in depth or 6" below the deepest recorded frost line. All loose material shall be removed from the bottom of the hole so that the concrete is placed on firm undisturbed earth.
4. The top of the concrete shall be troweled smooth and the Brass Disc set in the center with top flush and level. The top of the monument may be recessed or protruding, depending on conditions.
5. The Brass Disc shall be rotated so it can be read while the observer is facing north.
6. When the concrete is set, cover the entire monument with moist earth and leave for three days.
7. To replace a Public Land Survey System (PLSS) corner, consult a licensed Professional Land Surveyor (PLS).

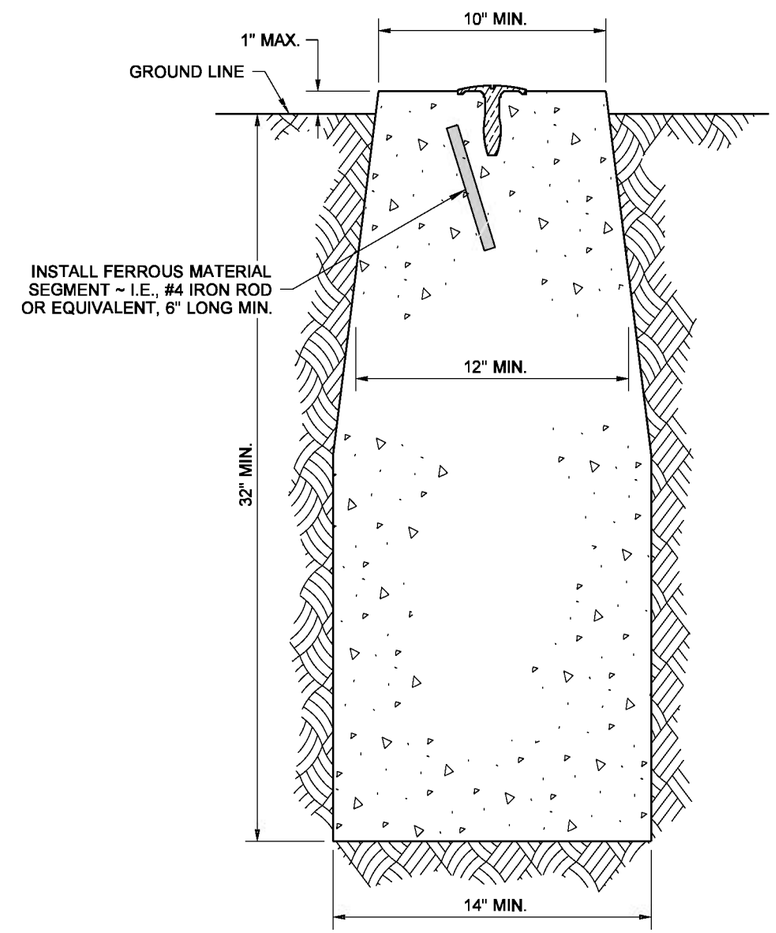

SECTION VIEW

GENERAL INSTALLATION

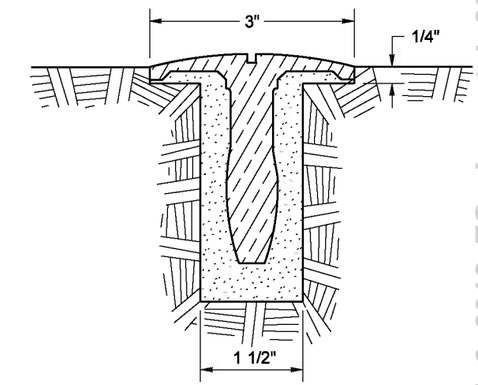

SECTION VIEW

LEDGE ROCK, CONCRETE, OR ASPHALT INSTALLATION

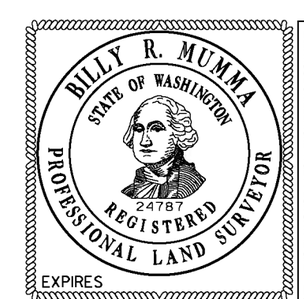

NOTE: THIS PLAN IS NOT A LEGAL ENGINEERING DOCUMENT BUT AN ELECTRONIC DUPLICATE. THE ORIGINAL, SIGNED BY THE ENGINEER AND APPROVED FOR PUBLICATION, IS KEPT ON FILE AT THE WASHINGTON STATE DEPARTMENT OF TRANSPORTATION. A COPY MAY BE OBTAINED UPON REQUEST.

SURVEY MONUMENT TYPES 1 AND 2

STANDARD PLAN A-10.20-00

SHEET 1 OF 1 SHEET

APPROVED FOR PUBLICATION

Pasco Bakotich III — STATE DESIGN ENGINEER

10-05-07 — DATE

Washington State Department of Transportation

EFFECTIVE: AUGUST 6, 2012 TO August 4, 2013

EFFECTIVE: AUGUST 6, 2012 TO August 4, 2013

EFFECTIVE: AUGUST 6, 2012 TO August 4, 2013

EFFECTIVE: AUGUST 6, 2012 TO August 4, 2013
EFFECTIVE: AUGUST 6, 2012 TO August 4, 2013

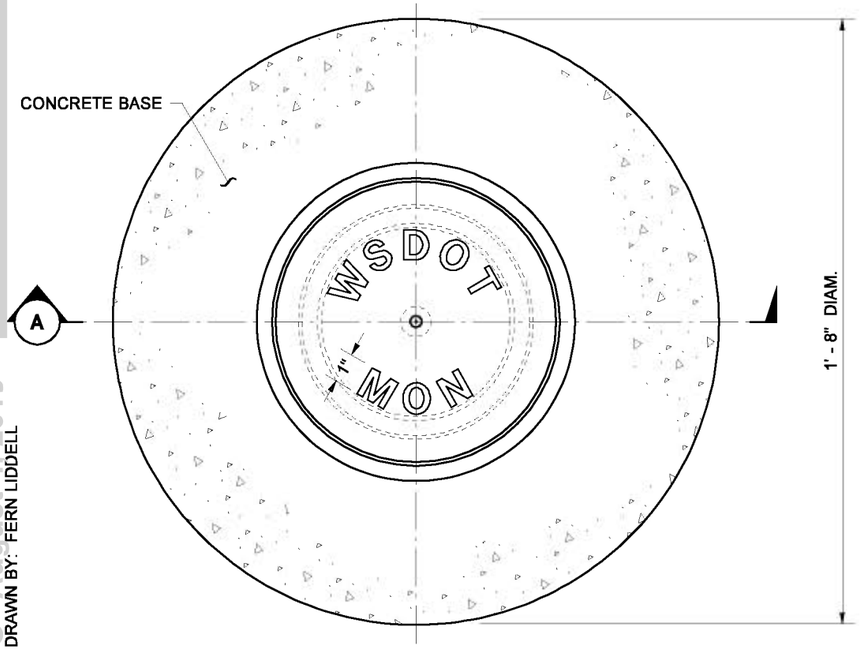

PLAN VIEW

DRAWN BY: FERN LIDDELL

RISER RING DIMENSIONS			
A (SIZE)	1 1/2"	2"	3"

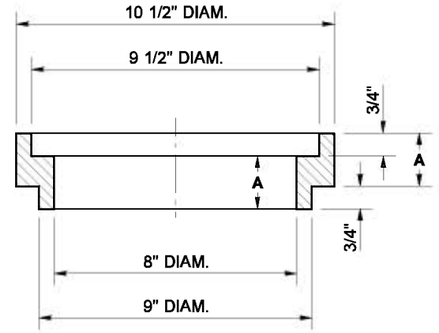

SECTION

RISER RING

NOTES

1. Dimensions may vary according to manufacturer.
2. Base to be placed on a well compacted foundation.
3. Monument case to be installed by contractor.
4. See Standard Plan A-10.20 for Monument (brass disc) type to place in 2" O.D. galvanized pipe.

APPROXIMATE WEIGHTS	
CASE	60 LBS
COVER	19 LBS
TOTAL	79 LBS

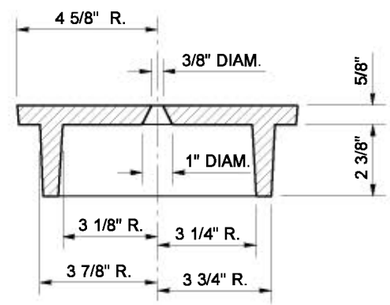

SECTION

COVER

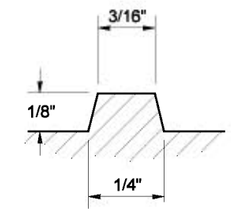

SECTION OF LETTER

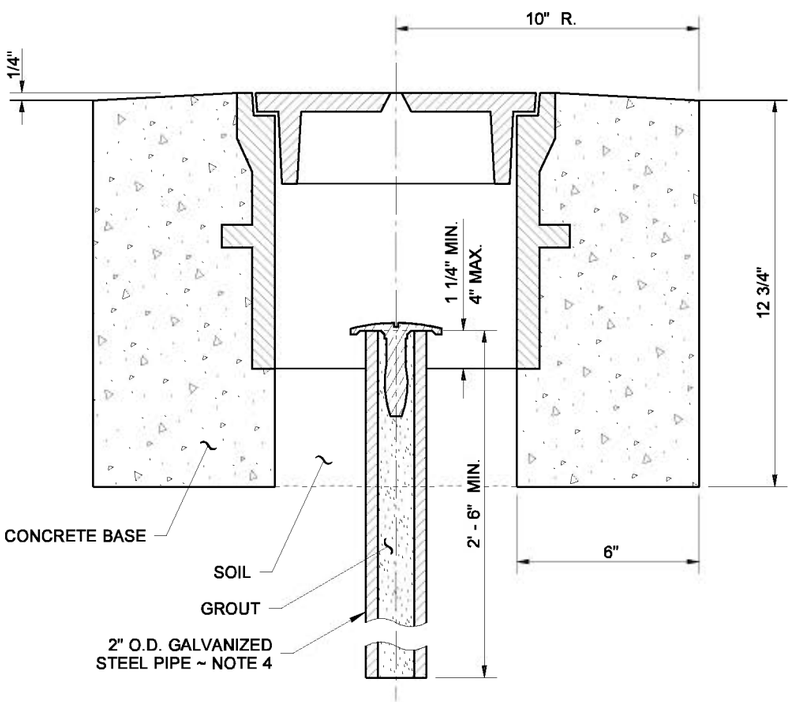

SECTION (A)

INSTALLATION

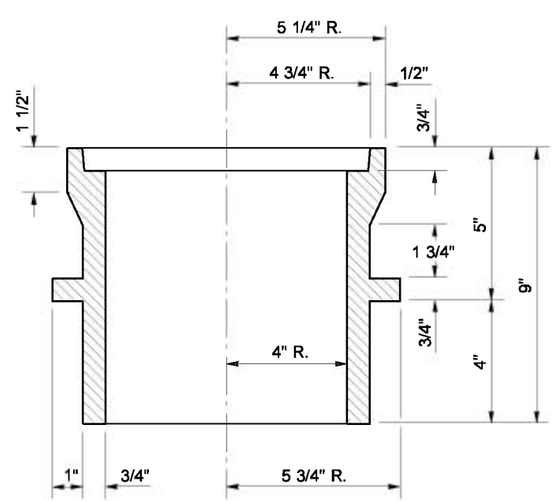

SECTION

CASE

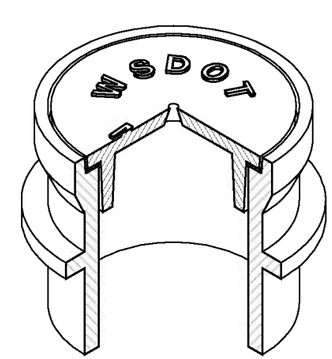

ISOMETRIC

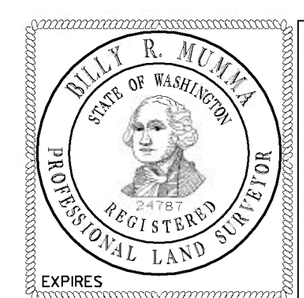

NOTE: THIS PLAN IS NOT A LEGAL ENGINEERING DOCUMENT BUT AN ELECTRONIC DUPLICATE. THE ORIGINAL, SIGNED BY THE ENGINEER AND APPROVED FOR PUBLICATION, IS KEPT ON FILE AT THE WASHINGTON STATE DEPARTMENT OF TRANSPORTATION. A COPY MAY BE OBTAINED UPON REQUEST.

MONUMENT CASE AND COVER

STANDARD PLAN A-10.30-00

SHEET 1 OF 1 SHEET

APPROVED FOR PUBLICATION

Pasco Bakotich III — STATE DESIGN ENGINEER

10-05-07 — DATE

Washington State Department of Transportation

EFFECTIVE: AUGUST 6, 2012 TO August 4, 2013
EFFECTIVE: AUGUST 6, 2012 TO August 4, 2013
EFFECTIVE: AUGUST 6, 2012 TO August 4, 2013
EFFECTIVE: AUGUST 6, 2012 TO August 4, 2013

EFFECTIVE: AUGUST 6, 2012 TO August 4, 2013

DRAWN BY: TERN LIDDELL

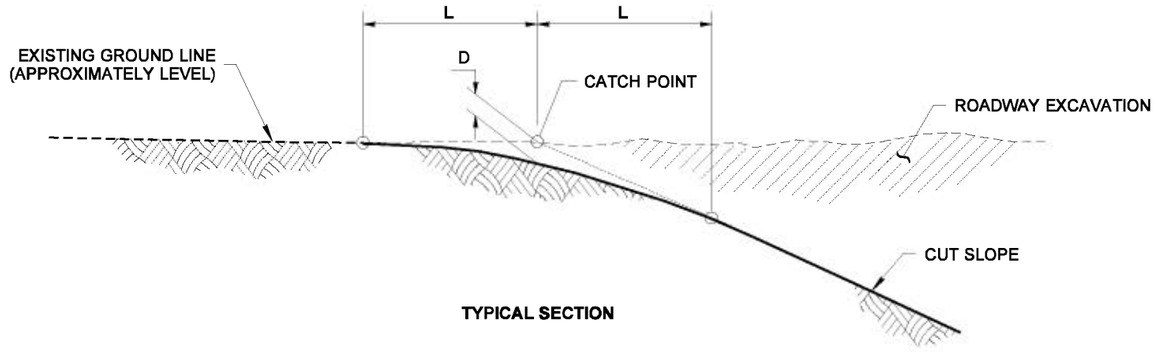

TYPICAL SECTION

LEVEL GROUND LINE

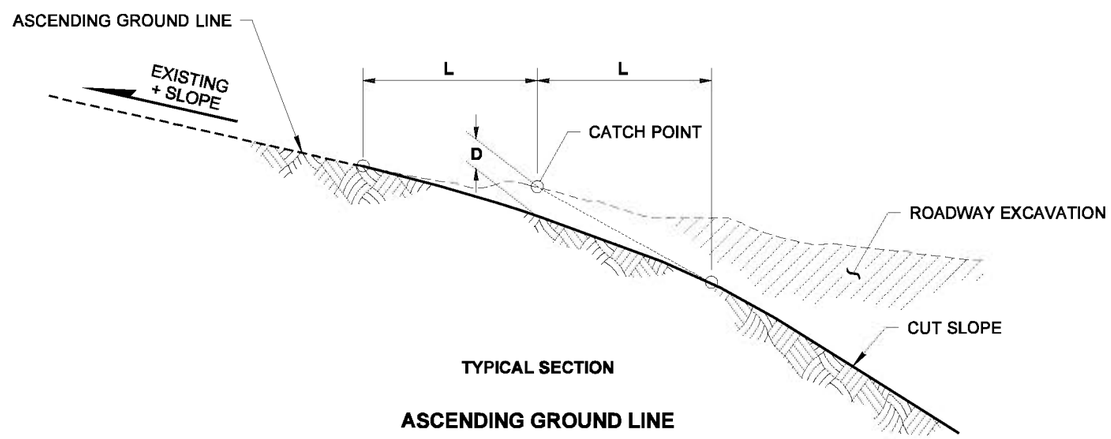

TYPICAL SECTION

ASCENDING GROUND LINE

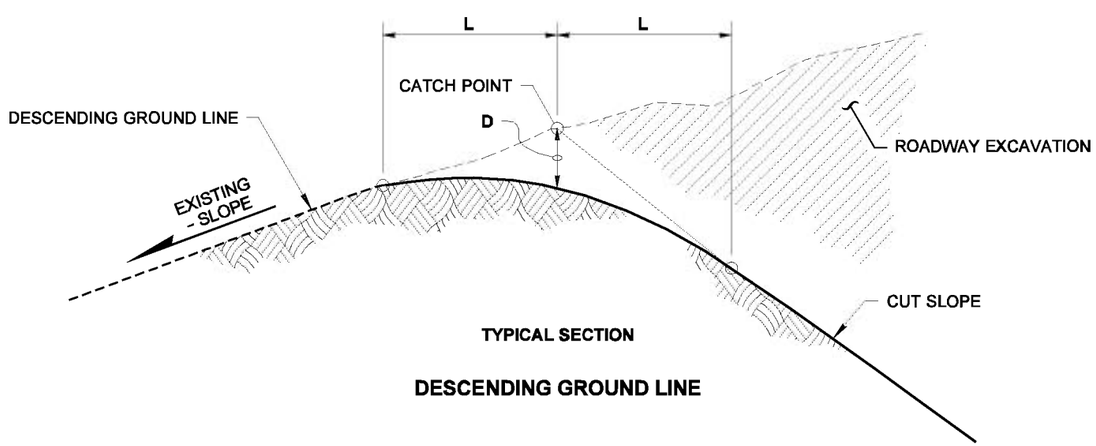

TYPICAL SECTION

DESCENDING GROUND LINE

NOTES

1. Slope treatment shall be constructed simultaneously with the roadway excavation. Hand trimming will not be required if satisfactory results are obtained with mechanical equipment.

2. Slope treatment is used to provide a transition between the existing ground and the cut slope. The intended purpose is to eliminate the abrupt edge and give the area a more natural appearance. The dimensions shown are approximate and can vary to achieve this purpose.

CUT SLOPE (H : V)	GROUND LINE (H : V)	CLASS A L = 10.0' D	CLASS B L = 5.0' D
1.5 : 1	+2 : 1	0.5'	◇1
	+3 : 1	1.0'	0.5'
	+4 : 1	1.0'	0.5'
	+6 : 1	1.2'	0.8'
	≈ LEVEL	2.0'	1.0'
	-6 : 1	2.2'	1.0'
	-4 : 1	2.0'	1.0'
	-3 : 1	3.0'	1.5'
2 : 1	+3 : 1	0.5'	◇1
	+4 : 1	0.5'	◇1
	+6 : 1	1.2'	0.5'
	≈ LEVEL	1.5'	0.8'
	-6 : 1	2.2'	1.0'
	-4 : 1	2.0'	1.0'
	-3 : 1	3.0'	1.5'
3 : 1	+6 : 1	0.5'	◇1
	≈ LEVEL	1.0'	0.5'
	-6 : 1	1.2'	0.5'
	-4 : 1	1.5'	0.8'
	-3 : 1	2.0'	1.0'
4 : 1	≈ LEVEL	0.5'	◇1
	-6 : 1	1.0'	0.5'
	-4 : 1	1.2'	0.5'
	-3 : 1	1.5'	0.8'
5 : 1	≈ LEVEL	0.5'	◇1
	-6 : 1	1.0'	0.5'
	-4 : 1	1.2'	0.5'
	-3 : 1	1.5'	0.8'

◇1 SLOPE TREATMENT NOT REQUIRED

STATE OF
WASHINGTON
REGISTERED
LANDSCAPE ARCHITECT

MARK W. MAURER
CERTIFICATE NO. 000598

NOTE: THIS PLAN IS NOT A LEGAL ENGINEERING DOCUMENT BUT AN ELECTRONIC DUPLICATE. THE ORIGINAL, SIGNED BY THE ENGINEER AND APPROVED FOR PUBLICATION, IS KEPT ON FILE AT THE WASHINGTON STATE DEPARTMENT OF TRANSPORTATION. A COPY MAY BE OBTAINED UPON REQUEST.

SLOPE TREATMENT

STANDARD PLAN A-20.10-00

SHEET 1 OF 1 SHEET

APPROVED FOR PUBLICATION

Pasco Bakotich III — STATE DESIGN ENGINEER
08-31-07 — DATE

Washington State Department of Transportation

EFFECTIVE: AUGUST 6, 2012 TO August 4, 2013

EFFECTIVE: AUGUST 6, 2012 TO August 4, 2013
EFFECTIVE: AUGUST 6, 2012 TO August 4, 2013

DRAWN BY: FERN LIDDELL

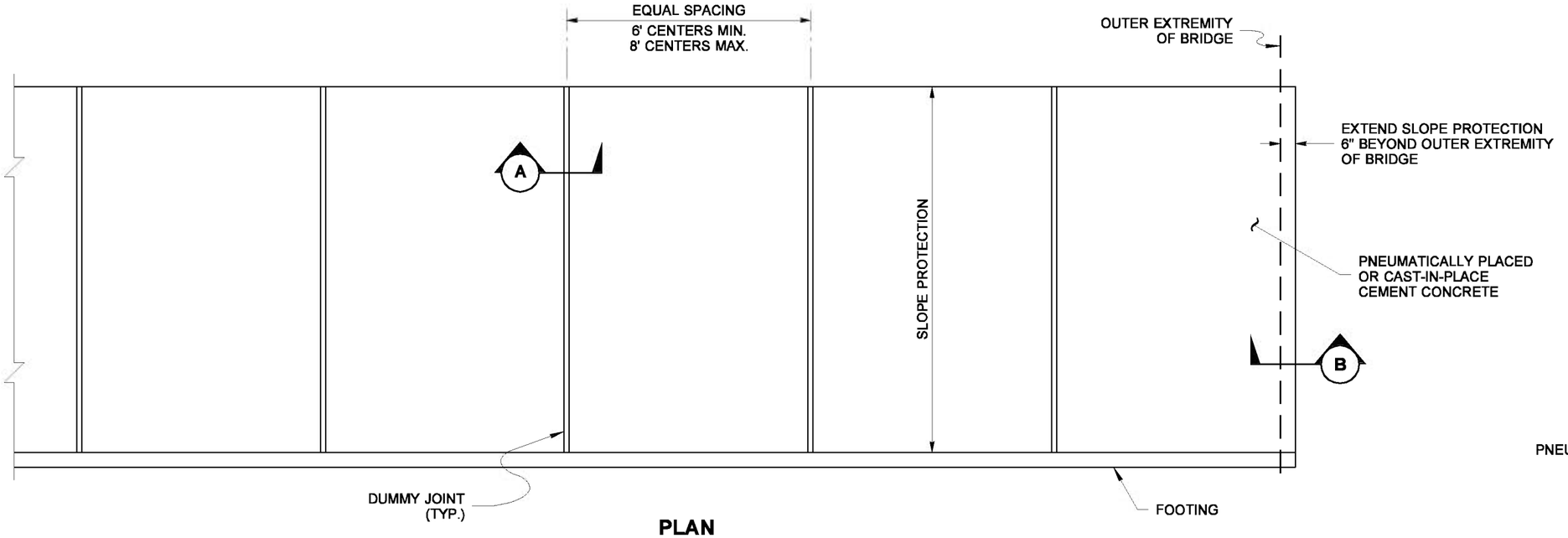

PLAN

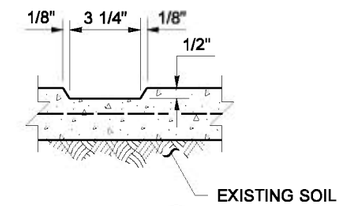

SECTION A

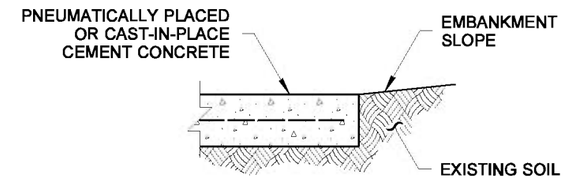

SECTION B

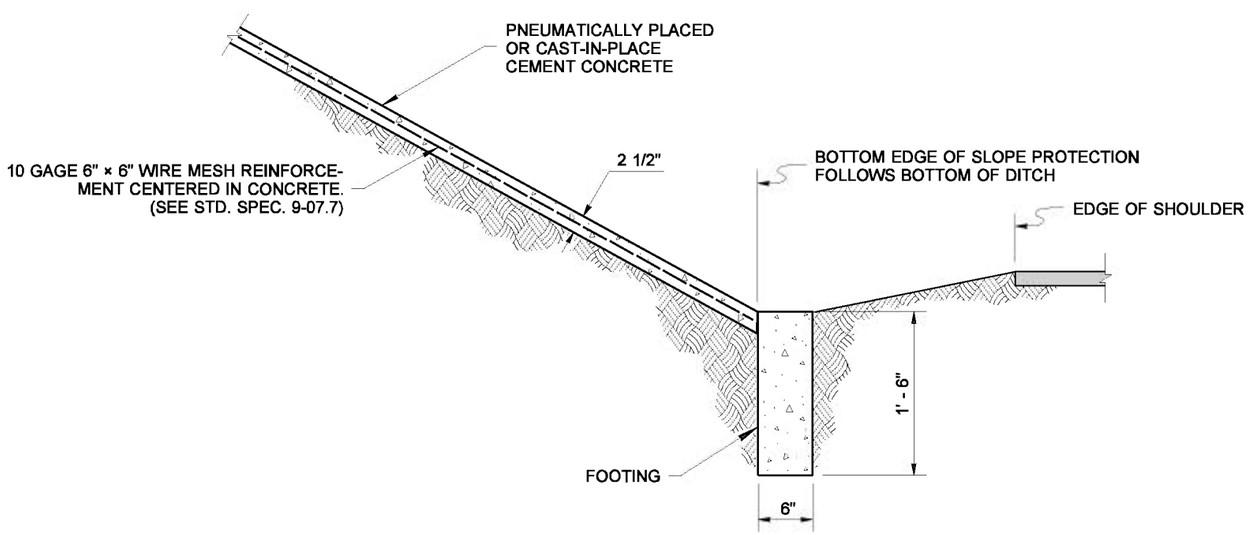

TYPICAL SECTION

(SHOWN ON LOWER ROADWAY)

STATE OF WASHINGTON REGISTERED LANDSCAPE ARCHITECT

SANDRA L. SALISBURY

CERTIFICATE NO. 000860

NOTE: THIS PLAN IS NOT A LEGAL ENGINEERING DOCUMENT BUT AN ELECTRONIC DUPLICATE. THE ORIGINAL, SIGNED BY THE ENGINEER AND APPROVED FOR PUBLICATION, IS KEPT ON FILE AT THE WASHINGTON STATE DEPARTMENT OF TRANSPORTATION. A COPY MAY BE OBTAINED UPON REQUEST.

CONCRETE SLOPE PROTECTION

STANDARD PLAN A-30.10-00

SHEET 1 OF 1 SHEET

APPROVED FOR PUBLICATION

Pasco Bakotich III — STATE DESIGN ENGINEER

11-8-07 — DATE

Washington State Department of Transportation

EFFECTIVE: AUGUST 6, 2012 TO August 4, 2013
EFFECTIVE: AUGUST 6, 2012 TO August 4, 2013
EFFECTIVE: AUGUST 6, 2012 TO August 4, 2013
EFFECTIVE: AUGUST 6, 2012 TO August 4, 2013

EFFECTIVE: AUGUST 6, 2012 TO August 4, 2013
EFFECTIVE: AUGUST 6, 2012 TO August 4, 2013

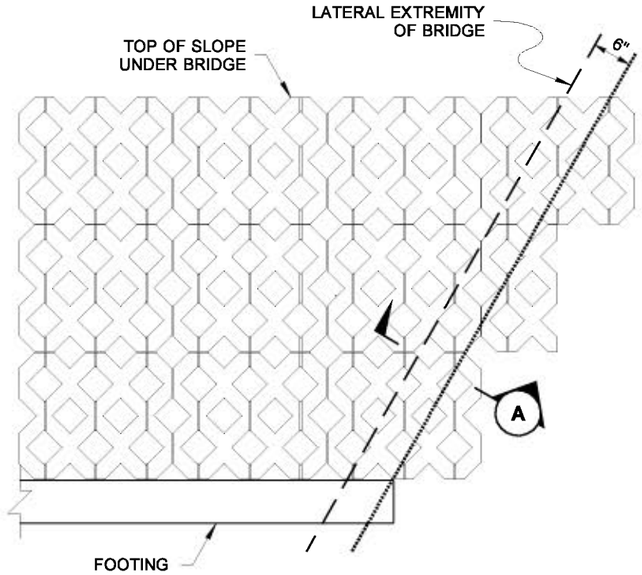

PLAN

MASONRY UNIT PLACEMENT ON SKEWED BRIDGE

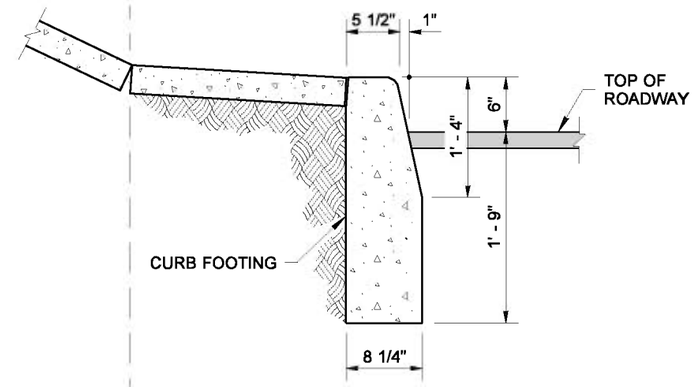

CURB SECTION
(SEE NOTE 2)

NOTES

1. The design and shape of the semi-open concrete masonry unit shown is only one example of the products that may be used.
2. The Curb Section shall be used only when the lower roadway cross section requires a curb.

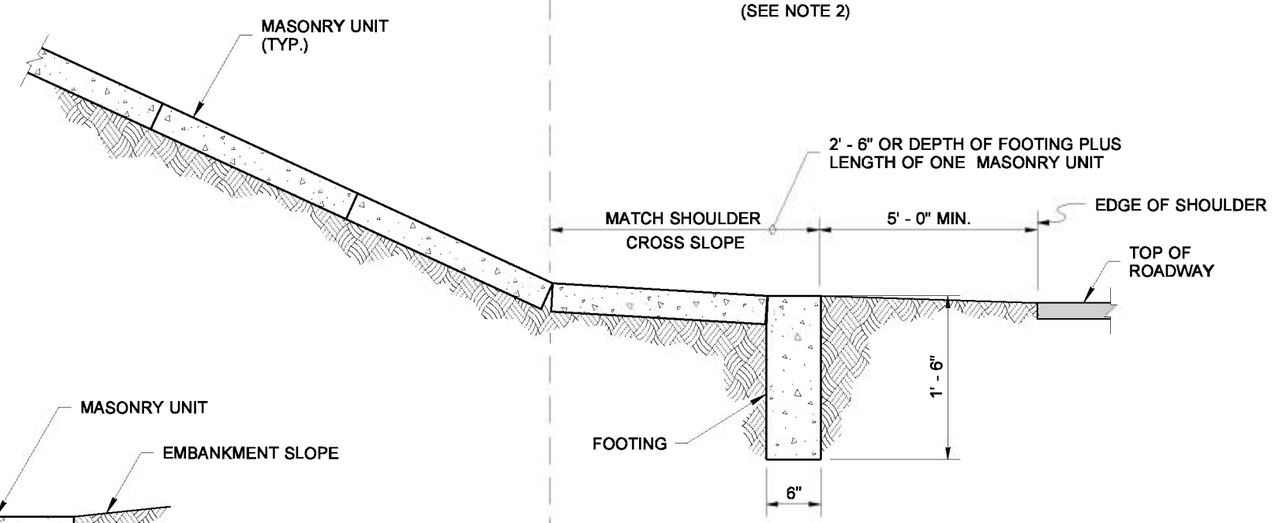

TYPICAL SECTION

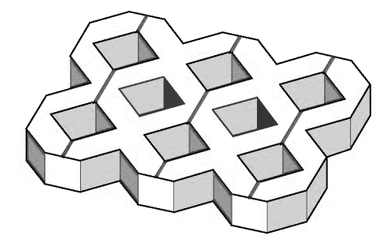

ISOMETRIC VIEW

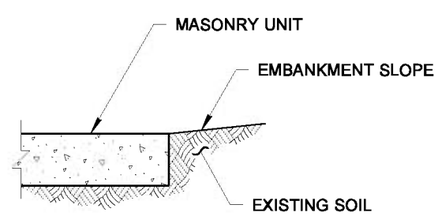

SECTION (A)

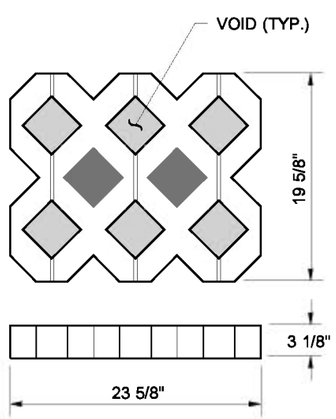

MASONRY UNIT DETAIL
(SEE NOTE 1)

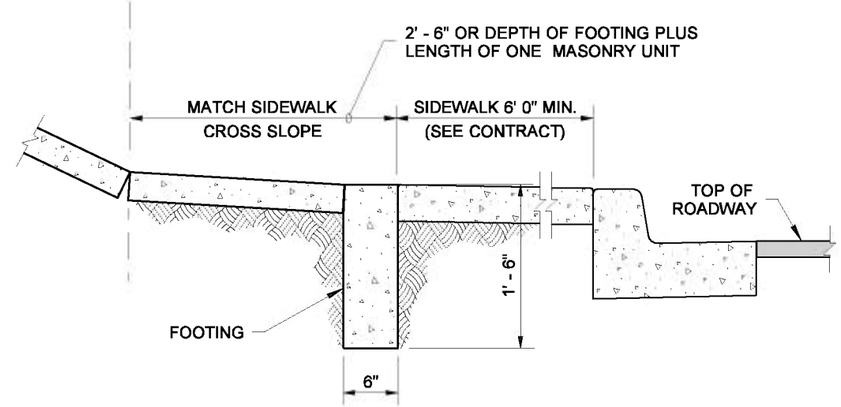

SECTION WITH SIDEWALK

STATE OF
WASHINGTON
REGISTERED
LANDSCAPE ARCHITECT

SANDRA L. SALISBURY
CERTIFICATE NO. 000860

NOTE: THIS PLAN IS NOT A LEGAL ENGINEERING DOCUMENT BUT AN ELECTRONIC DUPLICATE. THE ORIGINAL, SIGNED BY THE ENGINEER AND APPROVED FOR PUBLICATION, IS KEPT ON FILE AT THE WASHINGTON STATE DEPARTMENT OF TRANSPORTATION. A COPY MAY BE OBTAINED UPON REQUEST.

SEMI-OPEN CONCRETE MASONRY SLOPE PROTECTION STANDARD PLAN A-30.15-00

SHEET 1 OF 1 SHEET

APPROVED FOR PUBLICATION

Pasco Bakotich III — STATE DESIGN ENGINEER
11-8-07 — DATE

Washington State Department of Transportation

DRAWN BY: FERN LIDDELL

EFFECTIVE: AUGUST 6, 2012 TO August 4, 2013
EFFECTIVE: AUGUST 6, 2012 TO August 4, 2013
EFFECTIVE: AUGUST 6, 2012 TO August 4, 2013
EFFECTIVE: AUGUST 6, 2012 TO August 4, 2013

EFFECTIVE: AUGUST 6, 2012 TO August 4, 2013
EFFECTIVE: AUGUST 6, 2012 TO August 4, 2013

DRAWN BY: FERN LIDDELL

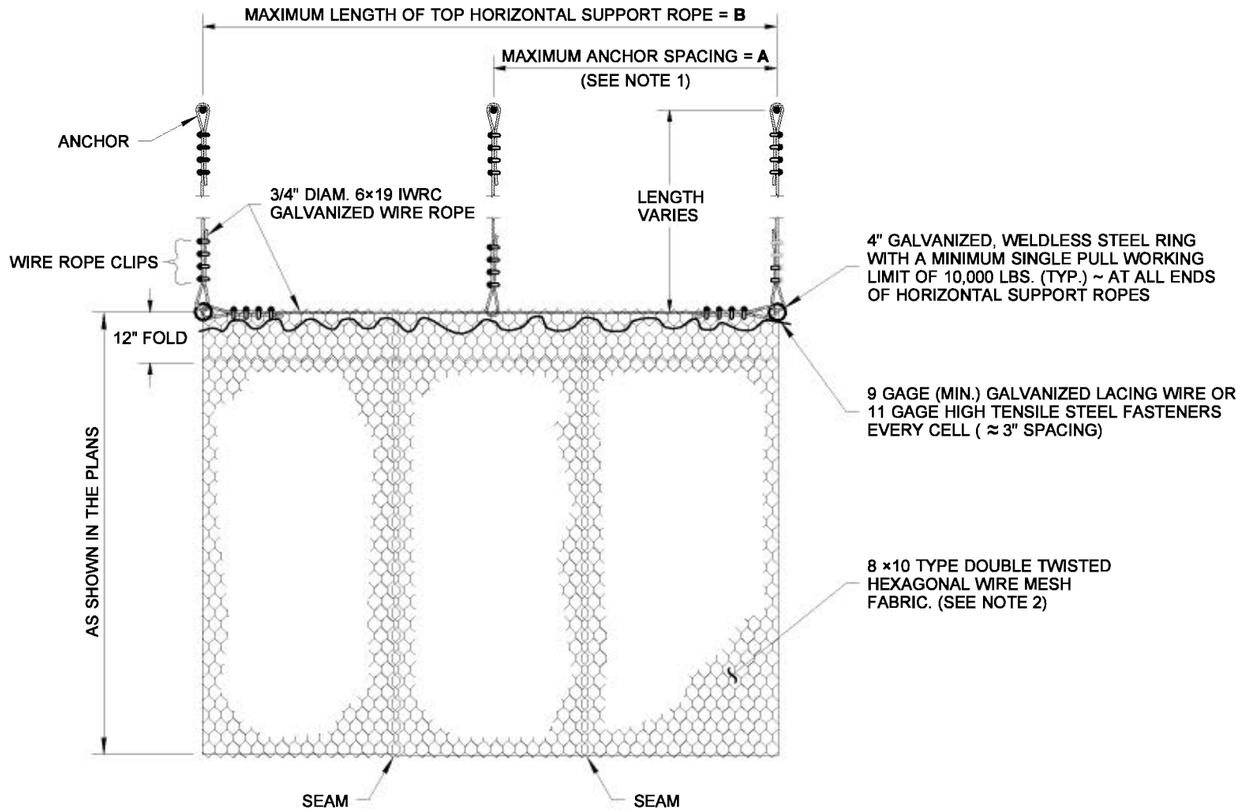

ELEVATION

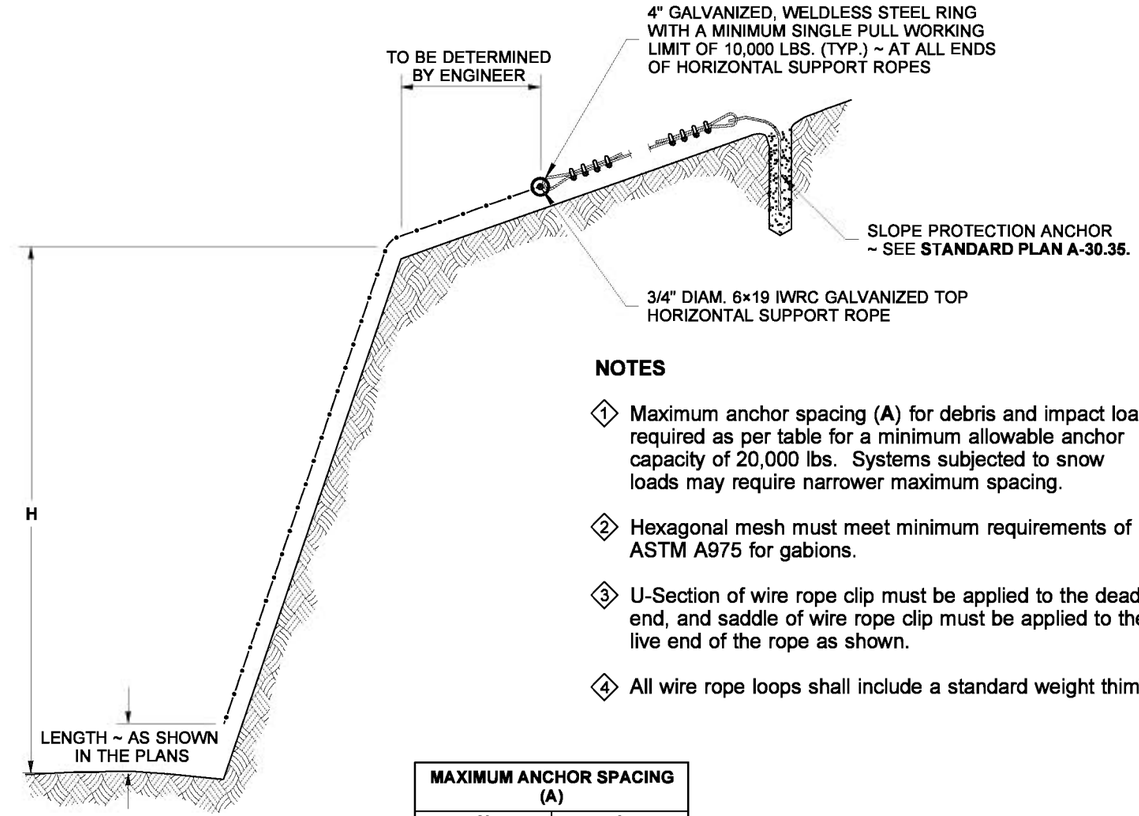

SECTION VIEW

NOTES

1. Maximum anchor spacing (**A**) for debris and impact loads required as per table for a minimum allowable anchor capacity of 20,000 lbs. Systems subjected to snow loads may require narrower maximum spacing.
2. Hexagonal mesh must meet minimum requirements of ASTM A975 for gabions.
3. U-Section of wire rope clip must be applied to the dead end, and saddle of wire rope clip must be applied to the live end of the rope as shown.
4. All wire rope loops shall include a standard weight thimble.

MAXIMUM ANCHOR SPACING (A)	
H	A
0' ~ 100'	50'
100' ~ 200'	35'
200' ~ 300'	20'

MAXIMUM LENGTH ~ TOP HORIZONTAL SUPPORT ROPE (B)	
H	B
50'	400'
100'	200'
200'	100'
300'	75'

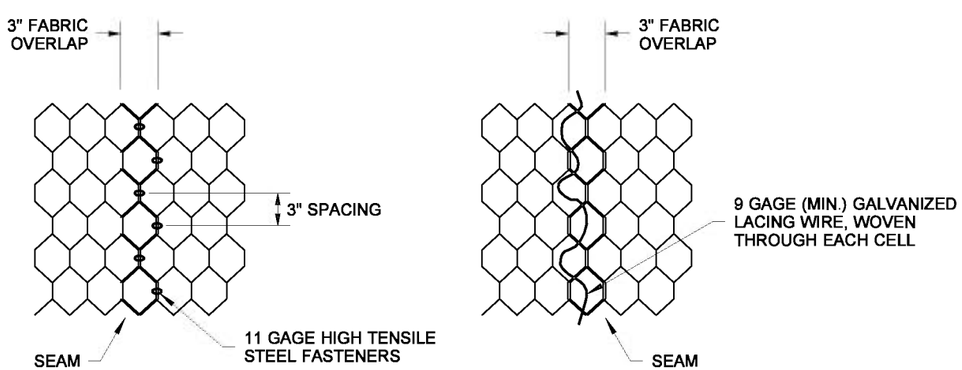

OVERLAPPED SEAM WITH FASTENERS

OVERLAPPED SEAM WITH LACING

SEAM ALTERNATIVES

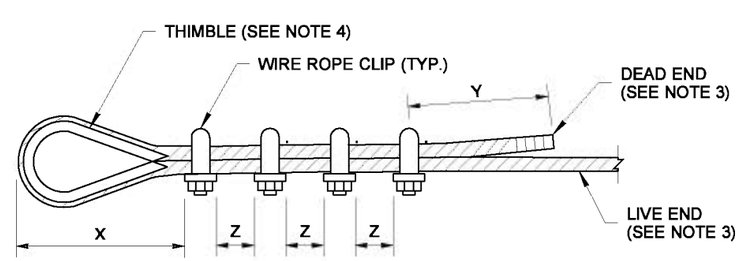

WIRE ROPE DETAIL

DISTANCES X,Y,Z AND TORQUE TO COMPLY WITH MANUFACTURER'S SPECIFICATIONS

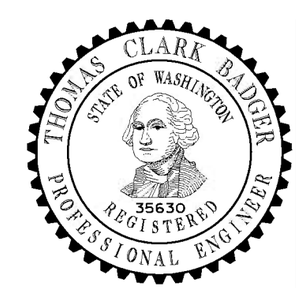

NOTE: THIS PLAN IS NOT A LEGAL ENGINEERING DOCUMENT BUT AN ELECTRONIC DUPLICATE. THE ORIGINAL, SIGNED BY THE ENGINEER AND APPROVED FOR PUBLICATION, IS KEPT ON FILE AT THE WASHINGTON STATE DEPARTMENT OF TRANSPORTATION. A COPY MAY BE OBTAINED UPON REQUEST.

WIRE MESH SLOPE PROTECTION

STANDARD PLAN A-30.30-01

SHEET 1 OF 1 SHEET

APPROVED FOR PUBLICATION

Pasco Bakotich III — STATE DESIGN ENGINEER

06-16-11 — DATE

Washington State Department of Transportation

EFFECTIVE: AUGUST 6, 2012 TO August 4, 2013
EFFECTIVE: AUGUST 6, 2012 TO August 4, 2013
EFFECTIVE: AUGUST 6, 2012 TO August 4, 2013
EFFECTIVE: AUGUST 6, 2012 TO August 4, 2013

EFFECTIVE: AUGUST 6, 2012 TO August 4, 2013

DRAWN BY: FERN LIDDELL

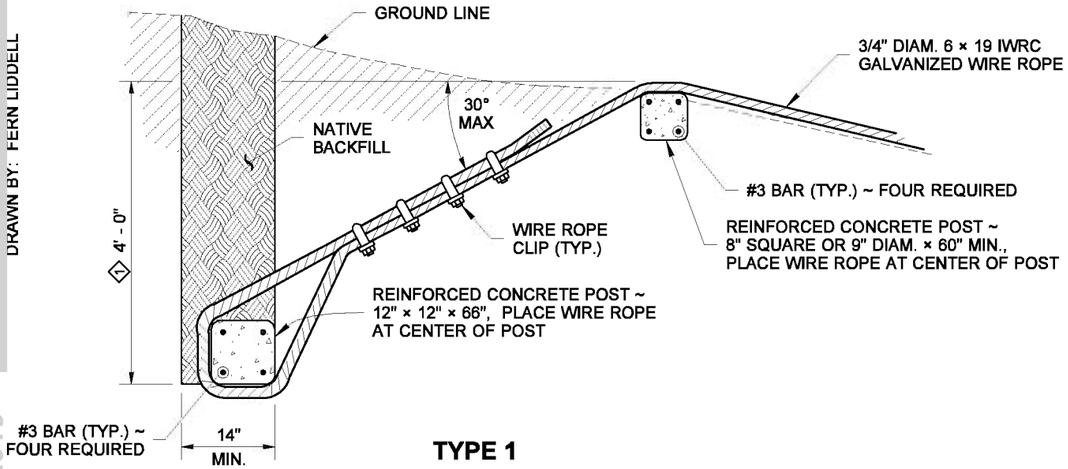

TYPE 1

DEADMAN

(FOR USE IN SOIL)

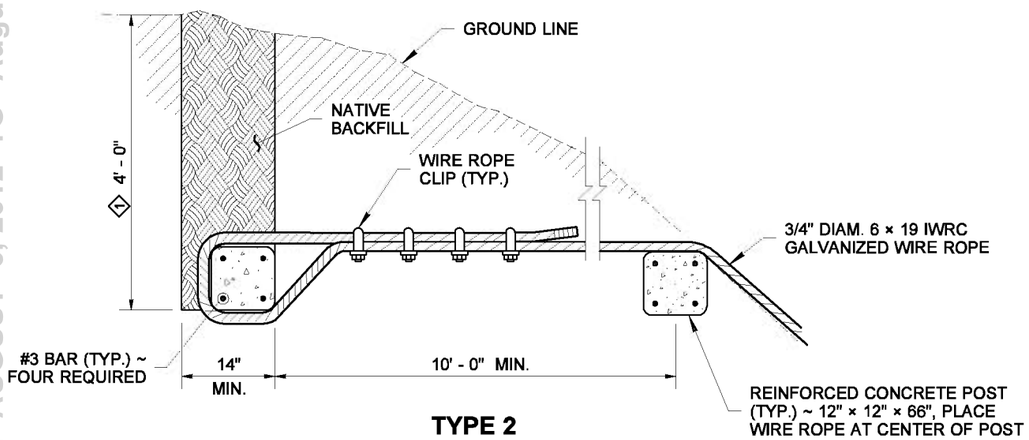

TYPE 2

DEADMAN

(FOR USE IN SOIL)

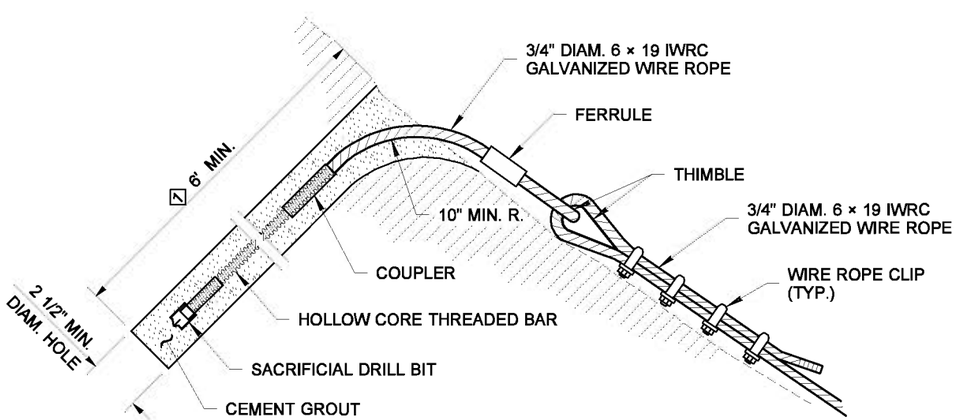

TYPE 3

DRILLABLE - GROUTABLE

(FOR USE IN ROCK)

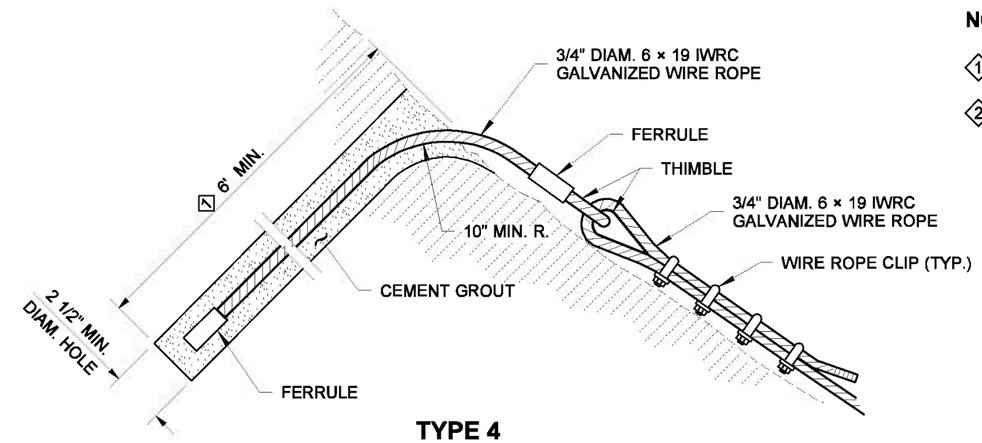

TYPE 4

3/4" WIRE ROPE

(FOR USE IN ROCK OR SOIL)

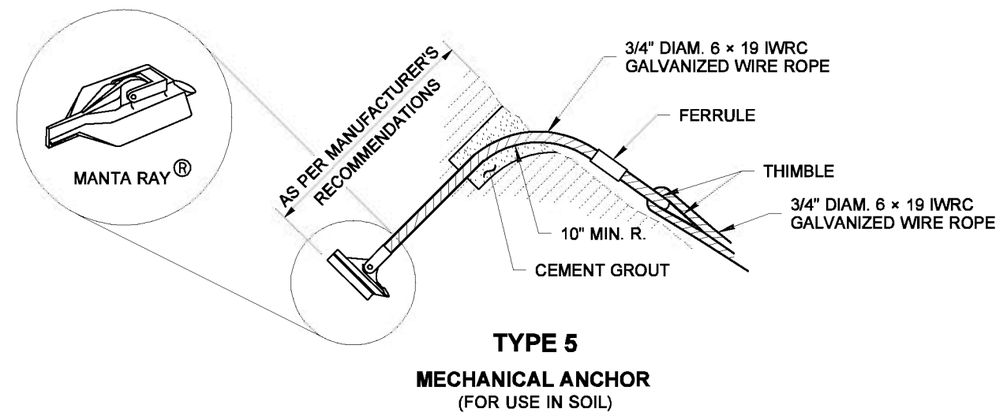

TYPE 5

MECHANICAL ANCHOR

(FOR USE IN SOIL)

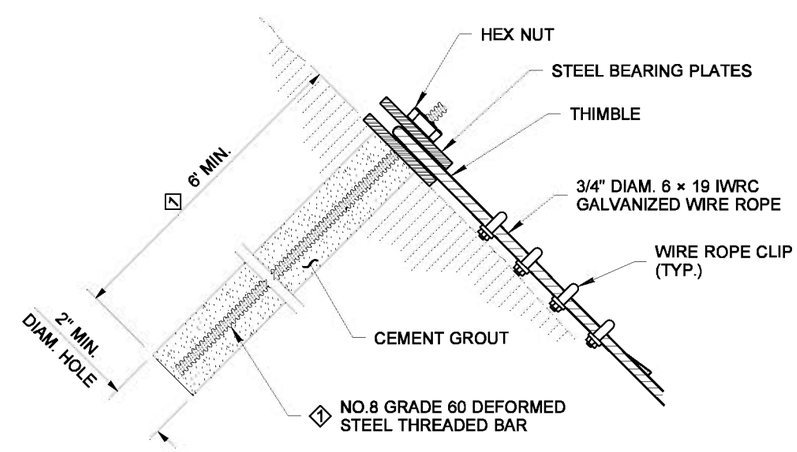

TYPE 6

DEFORMED STEEL THREADED BAR

(FOR USE IN ROCK)

NOTES

1. SUGGESTED MINIMUM DEPTH
2. MINIMUM ALLOWABLE ANCHOR CAPACITY SHALL BE 20,000 LBS.

EXPIRES NOVEMBER 8, 2007

NOTE: THIS PLAN IS NOT A LEGAL ENGINEERING DOCUMENT BUT AN ELECTRONIC DUPLICATE. THE ORIGINAL, SIGNED BY THE ENGINEER AND APPROVED FOR PUBLICATION, IS KEPT ON FILE AT THE WASHINGTON STATE DEPARTMENT OF TRANSPORTATION. A COPY MAY BE OBTAINED UPON REQUEST.

SLOPE PROTECTION ANCHORS

STANDARD PLAN A-30.35-00

SHEET 1 OF 1 SHEET

APPROVED FOR PUBLICATION

Pasco Bakotich III — STATE DESIGN ENGINEER

10-12-07 — DATE

Washington State Department of Transportation

EFFECTIVE: AUGUST 6, 2012 TO August 4, 2013

EFFECTIVE: AUGUST 6, 2012 TO August 4, 2013
EFFECTIVE: AUGUST 6, 2012 TO August 4, 2013

DRAWN BY: LISA CYFORD

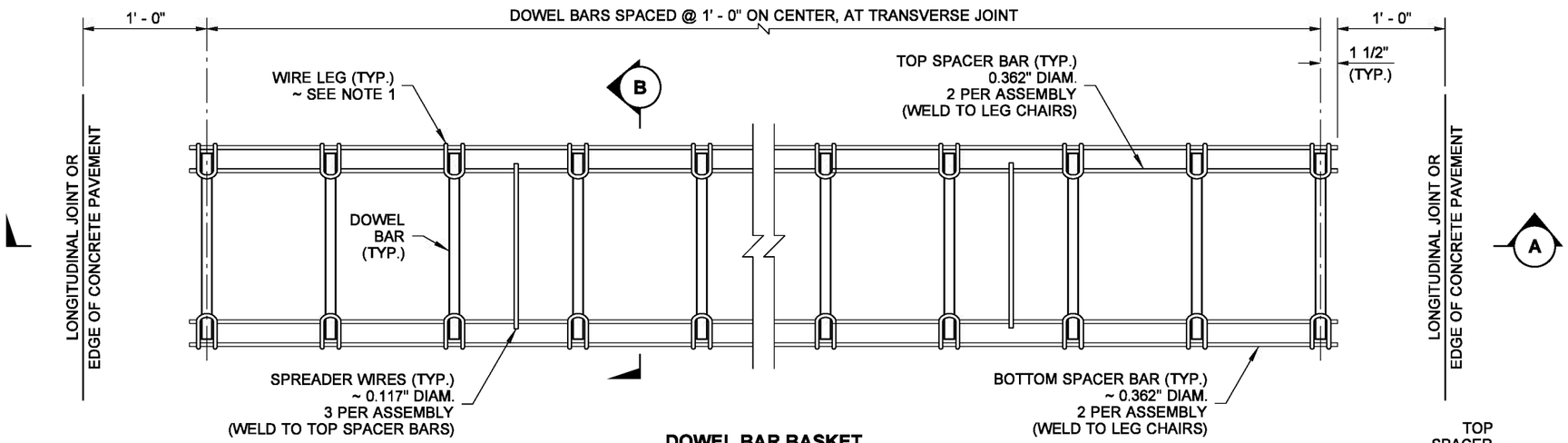

DOWEL BAR BASKET

PLAN VIEW

"U" SHAPE ASSEMBLY SHOWN

NOTES

1. The "U" shape or "V" shape are both acceptable.
2. Wire sizes shown are minimum required.
3. All wire intersections are to be welded.
4. Basket must be firmly attached to existing or new base.
5. Dowels and Tie Bars shall be held firmly in the above welded assembly.
6. Do not clip Spreader Wires.

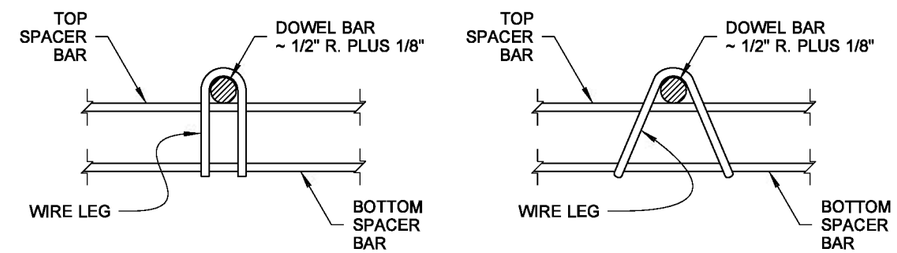

DETAIL C

WIRE LEG DETAILS

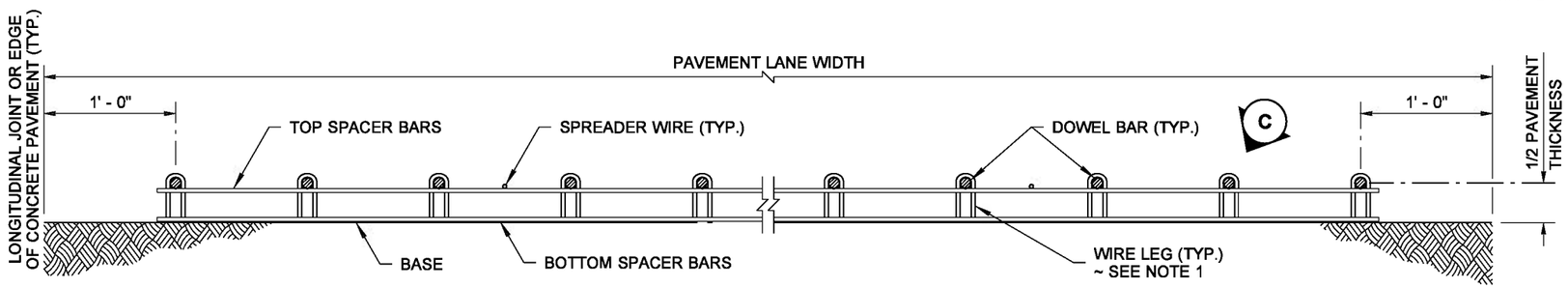

SECTION A

ELEVATION VIEW

"U" SHAPE ASSEMBLY SHOWN

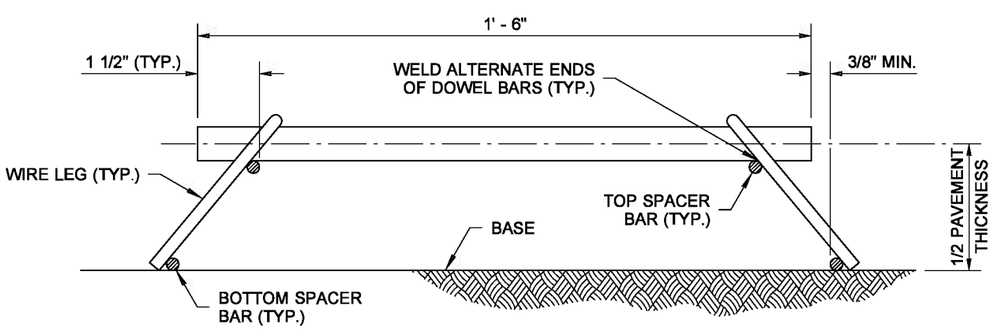

SECTION B

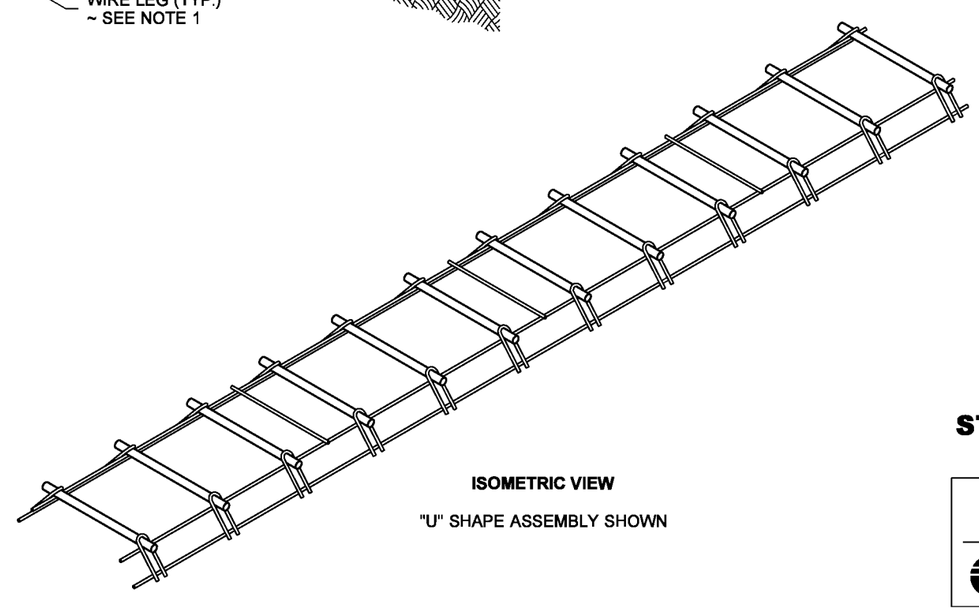

ISOMETRIC VIEW

"U" SHAPE ASSEMBLY SHOWN

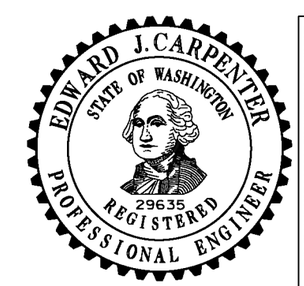

NOTE: THIS PLAN IS NOT A LEGAL ENGINEERING DOCUMENT BUT AN ELECTRONIC DUPLICATE. THE ORIGINAL, SIGNED BY THE ENGINEER AND APPROVED FOR PUBLICATION, IS KEPT ON FILE AT THE WASHINGTON STATE DEPARTMENT OF TRANSPORTATION. A COPY MAY BE OBTAINED UPON REQUEST.

DOWEL BAR BASKETS

STANDARD PLAN A-40.00-00

SHEET 1 OF 1 SHEET

APPROVED FOR PUBLICATION

Pasco Bakotich III — STATE DESIGN ENGINEER

08-11-09 — DATE

Washington State Department of Transportation

EFFECTIVE: AUGUST 6, 2012 TO August 4, 2013
EFFECTIVE: AUGUST 6, 2012 TO August 4, 2013
EFFECTIVE: AUGUST 6, 2012 TO August 4, 2013
EFFECTIVE: AUGUST 6, 2012 TO August 4, 2013

EFFECTIVE: AUGUST 6, 2012 TO August 4, 2013

DRAWN BY: FERN LIDDELL

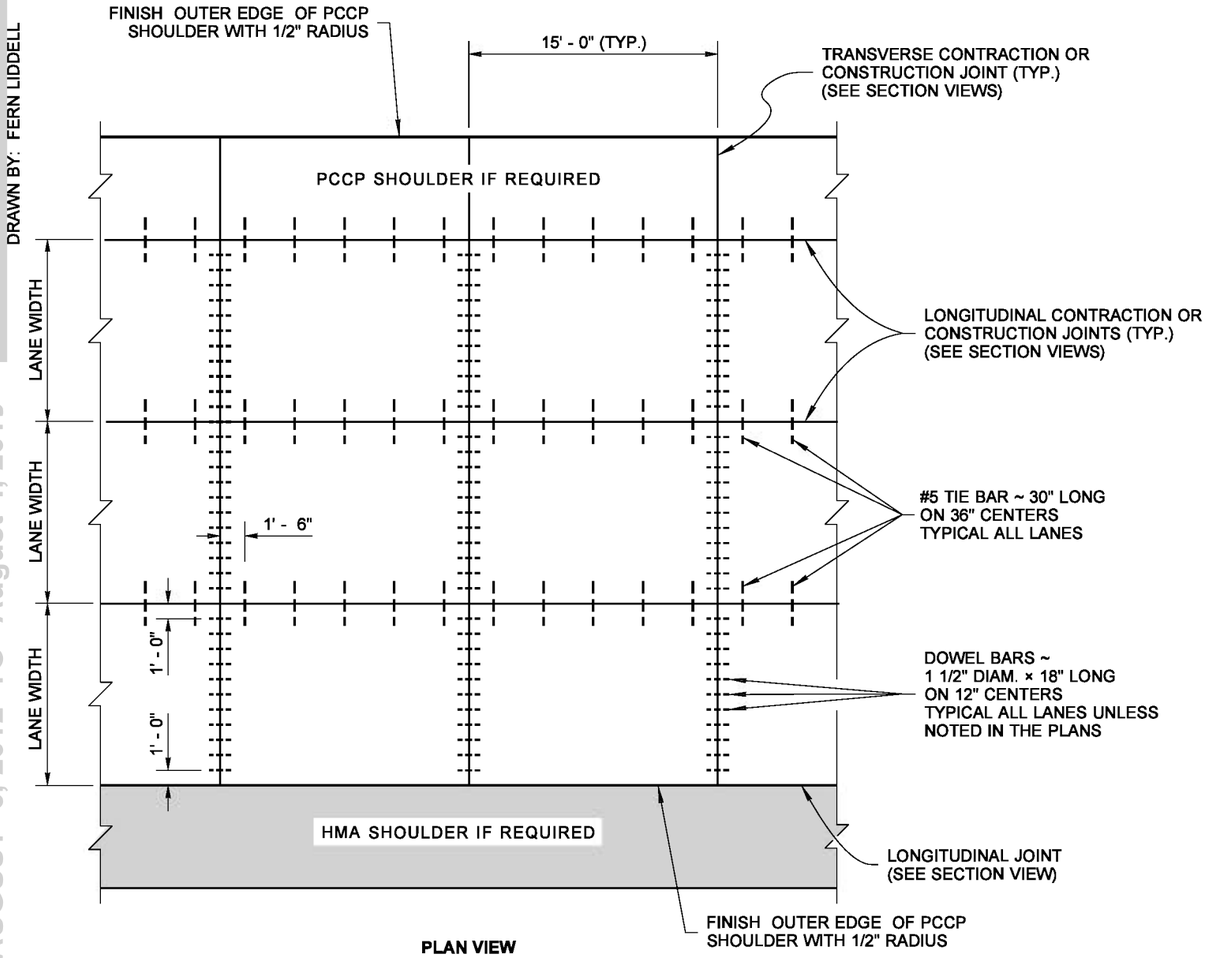

PLAN VIEW

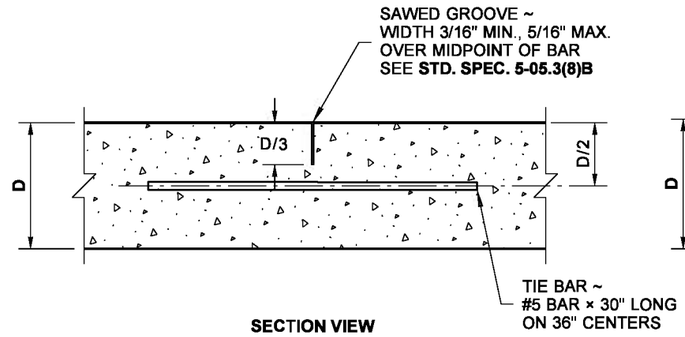

SECTION VIEW

LONGITUDINAL CONTRACTION JOINT

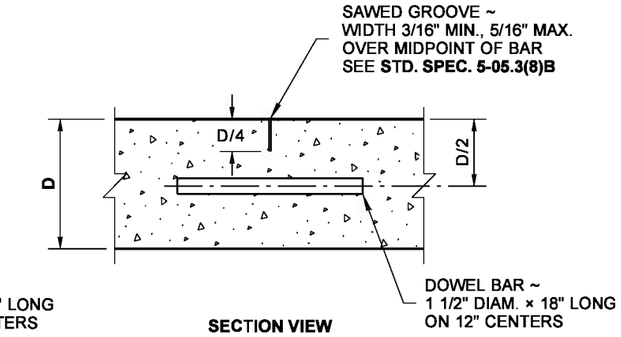

SECTION VIEW

TRANSVERSE CONTRACTION JOINT

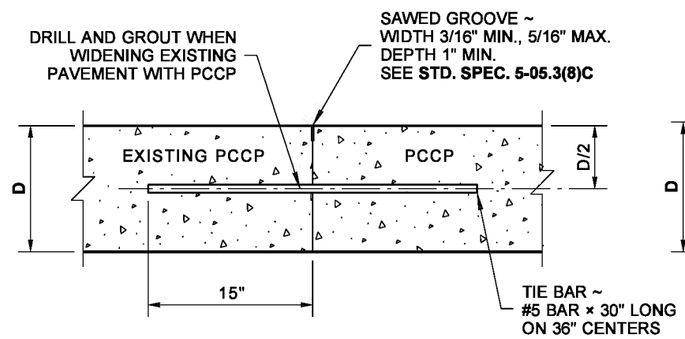

SECTION VIEW

PCCP TO PCCP LONGITUDINAL CONSTRUCTION JOINT

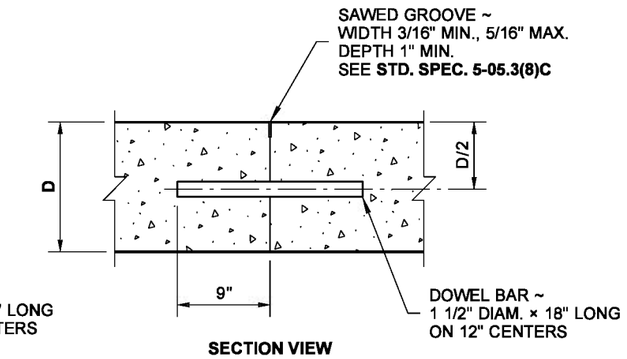

SECTION VIEW

TRANSVERSE CONSTRUCTION JOINT

SLAB THICKNESS (D)	A
12"	5"
D	D/2 - 1"

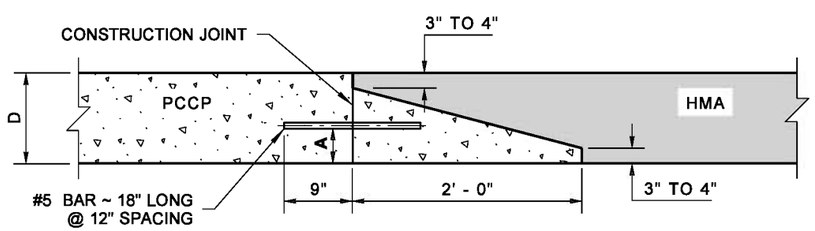

ELEVATION VIEW

HMA TRANSITION DETAIL

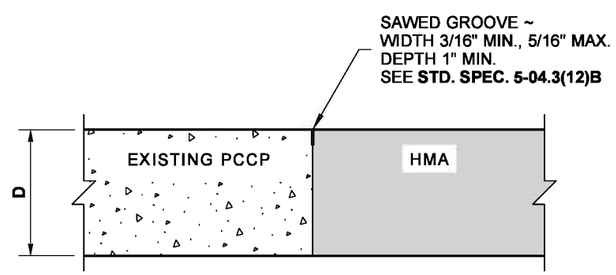

SECTION VIEW

PCCP TO HMA LONGITUDINAL JOINT

DEPTH OF PCCP (D)	A
12"	15"
D	1.25 × D

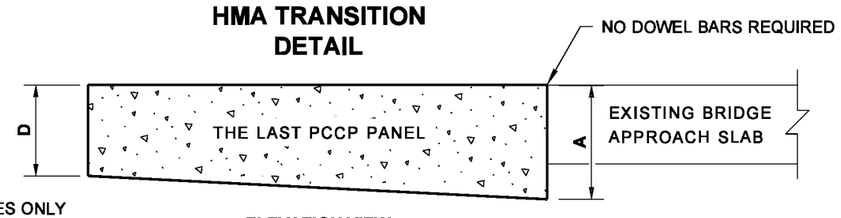

USE ON GRANDULAR BASES ONLY
NO TAPER REQUIRED ON ASPHALT BASES

ELEVATION VIEW

EXISTING APPROACH SLAB TRANSITION DETAIL

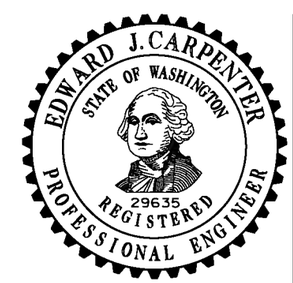

NOTE: THIS PLAN IS NOT A LEGAL ENGINEERING DOCUMENT BUT AN ELECTRONIC DUPLICATE. THE ORIGINAL, SIGNED BY THE ENGINEER AND APPROVED FOR PUBLICATION, IS KEPT ON FILE AT THE WASHINGTON STATE DEPARTMENT OF TRANSPORTATION. A COPY MAY BE OBTAINED UPON REQUEST.

CEMENT CONCRETE PAVEMENT JOINTS

STANDARD PLAN A-40.10-02

SHEET 1 OF 1 SHEET

APPROVED FOR PUBLICATION

Pasco Bakotich III — STATE DESIGN ENGINEER

06-02-11 — DATE

Washington State Department of Transportation

EFFECTIVE: AUGUST 6, 2012 TO August 4, 2013

EFFECTIVE: AUGUST 6, 2012 TO August 4, 2013
EFFECTIVE: AUGUST 6, 2012 TO August 4, 2013

DRAWN BY: FERN LIDDELL

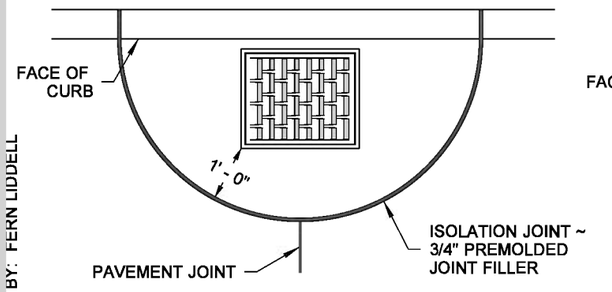

CONDITION A

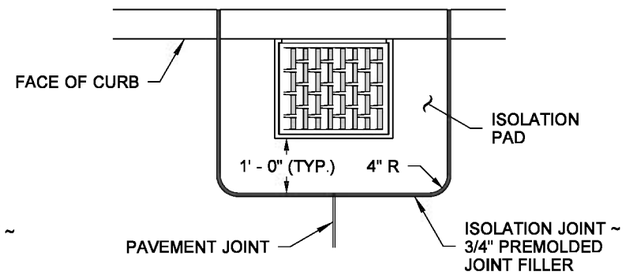

CONDITION B

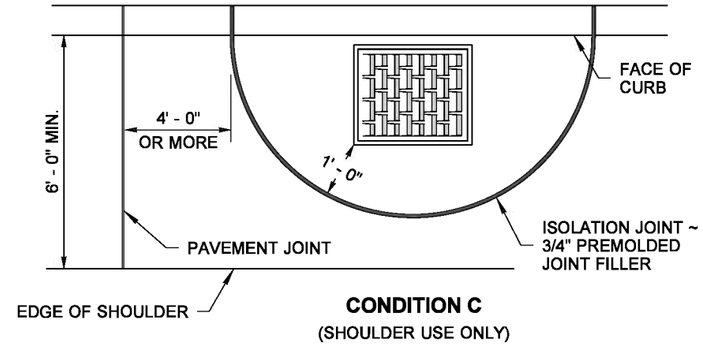

CONDITION C
(SHOULDER USE ONLY)

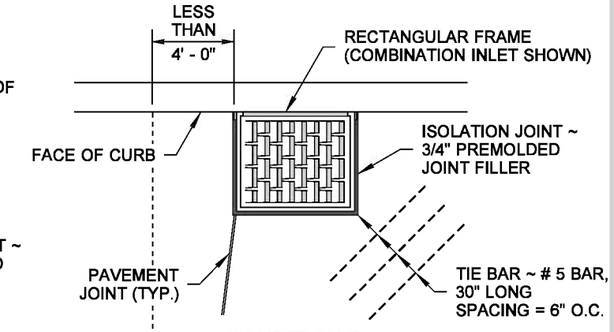

CONDITION D

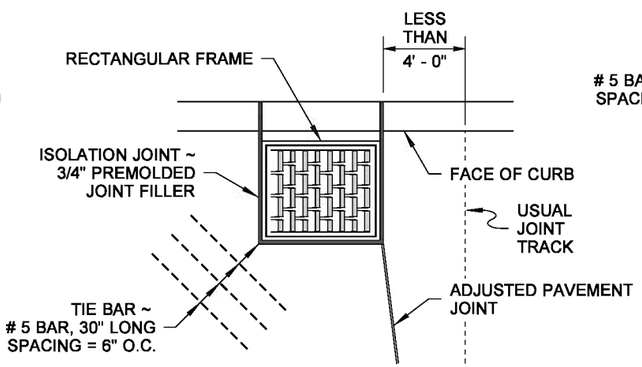

CONDITION E

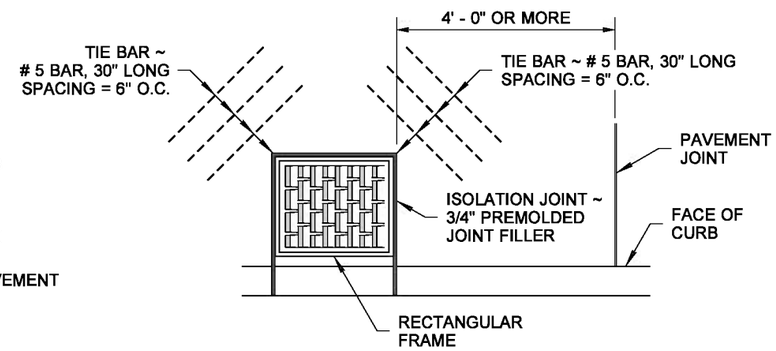

CONDITION F

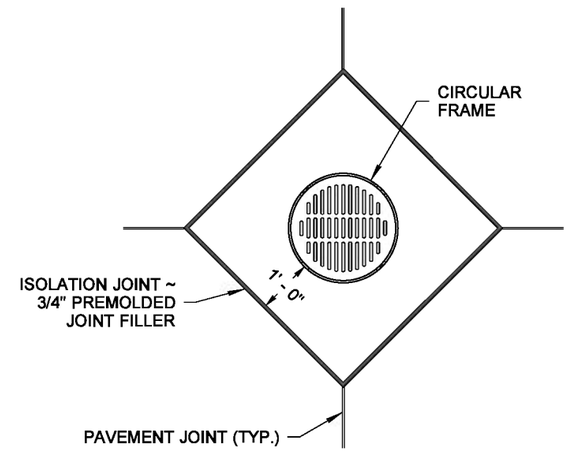

CONDITION G

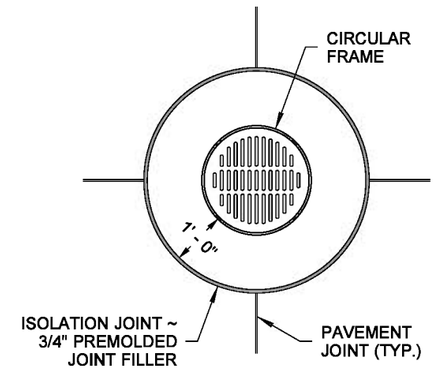

CONDITION H

NOTE

ALL CONDITIONS ARE SHOWN IN PLAN VIEW.

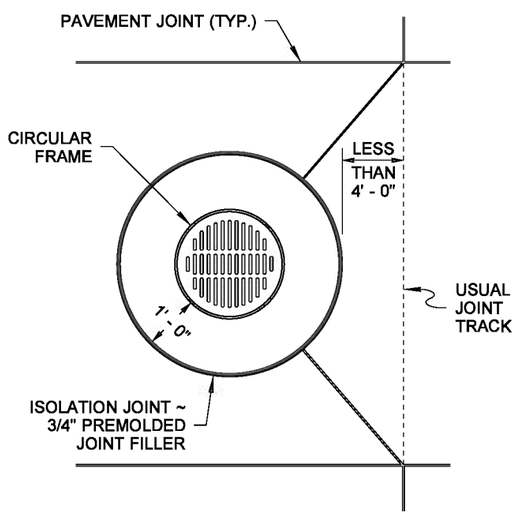

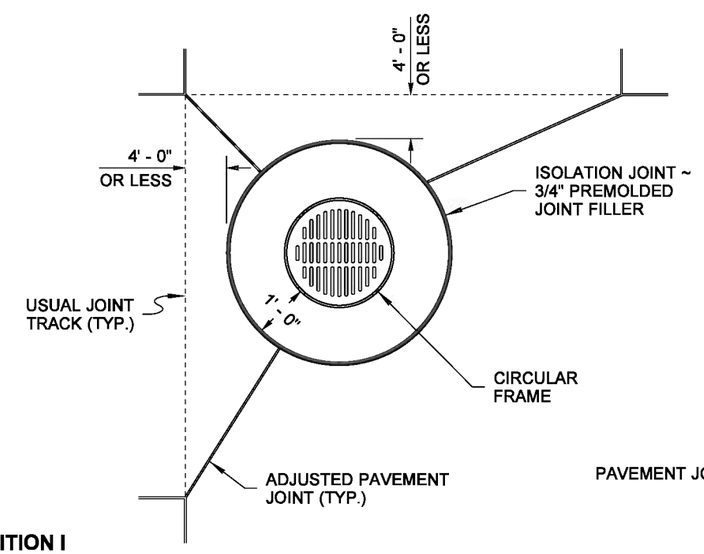

CONDITION I

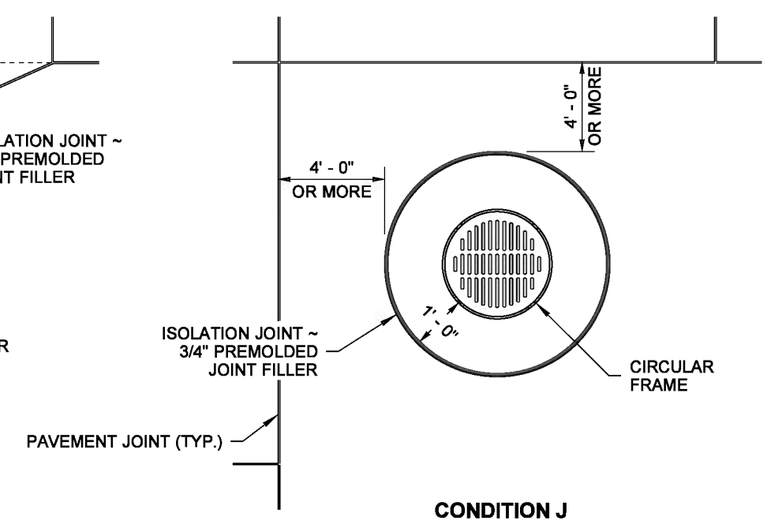

CONDITION J

NOTE: THIS PLAN IS NOT A LEGAL ENGINEERING DOCUMENT BUT AN ELECTRONIC DUPLICATE. THE ORIGINAL, SIGNED BY THE ENGINEER AND APPROVED FOR PUBLICATION, IS KEPT ON FILE AT THE WASHINGTON STATE DEPARTMENT OF TRANSPORTATION. A COPY MAY BE OBTAINED UPON REQUEST.

PCC PAVEMENT ISOLATION JOINTS

STANDARD PLAN A-40.15-00

SHEET 1 OF 2 SHEETS

APPROVED FOR PUBLICATION

Pasco Bakotich III — STATE DESIGN ENGINEER
08-11-09 — DATE

Washington State Department of Transportation

EFFECTIVE: AUGUST 6, 2012 TO August 4, 2013
EFFECTIVE: AUGUST 6, 2012 TO August 4, 2013
EFFECTIVE: AUGUST 6, 2012 TO August 4, 2013
EFFECTIVE: AUGUST 6, 2012 TO August 4, 2013

EFFECTIVE: AUGUST 6, 2012 TO August 4, 2013
EFFECTIVE: AUGUST 6, 2012 TO August 4, 2013

DRAWN BY: FERN LIDDELL

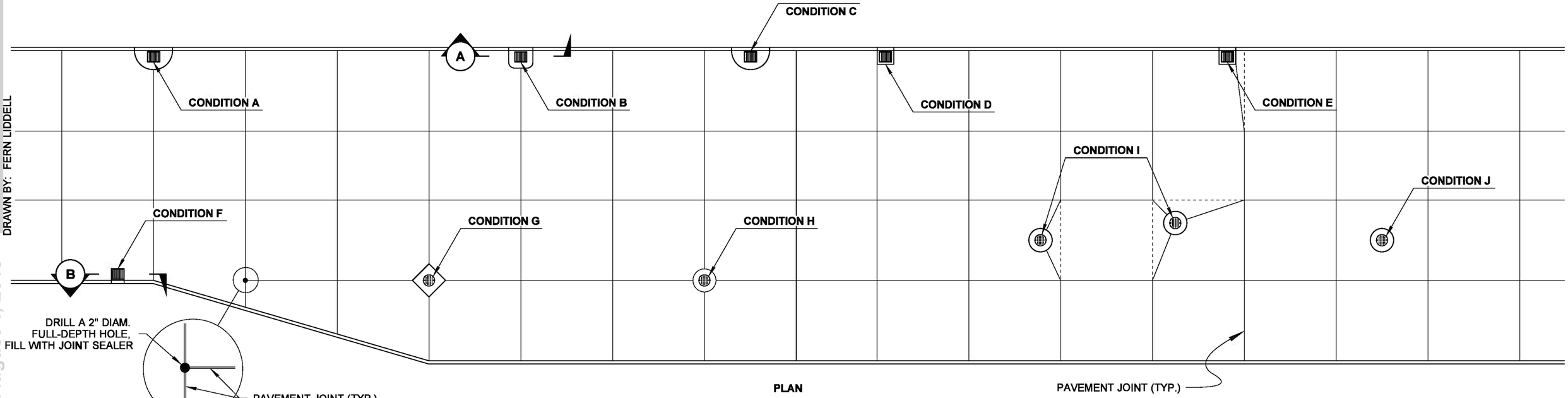

PLAN

TYPICAL APPLICATIONS

T - JOINT DETAIL

TYPICAL ISOLATION JOINT GUIDELINES

CONDITION	FEATURE	EDGES, FLANGES OR LIPS IN THE PAVEMENT SECTION ◇1	CONTINUOUS VERTICAL FACE THROUGH THE PAVEMENT SECTION ◇2	DISTANCE FROM NEAREST TRANSVERSE JOINT
A	CATCH BASIN OR COMBINATION GRATE	USE	----	----
B	CATCH BASIN OR COMBINATION GRATE	USE	----	----
C	CATCH BASIN OR COMBINATION GRATE	USE	----	> 4 FT FROM JOINT
D	GRATE INLET, CATCH BASIN OR CONCRETE INLET ★	----	USE	< 4 FT FROM JOINT
E	GRATE INLET, CATCH BASIN OR CONCRETE INLET ★	----	USE	< 4 FT FROM JOINT
F	GRATE INLET, CATCH BASIN OR CONCRETE INLET ★	----	USE	> 4 FT FROM JOINT
G	MANHOLE OR CATCH BASIN TYPE 2	USE	----	----
H	MANHOLE OR CATCH BASIN TYPE 2	USE	----	----
I	MANHOLE OR CATCH BASIN TYPE 2	USE	----	< 4 FT FROM JOINT
J	MANHOLE OR CATCH BASIN TYPE 2	USE	----	> 4 FT FROM JOINT

★ WITH RECTANGULAR GRATE CAST INTO ADJUSTMENT SECTION.

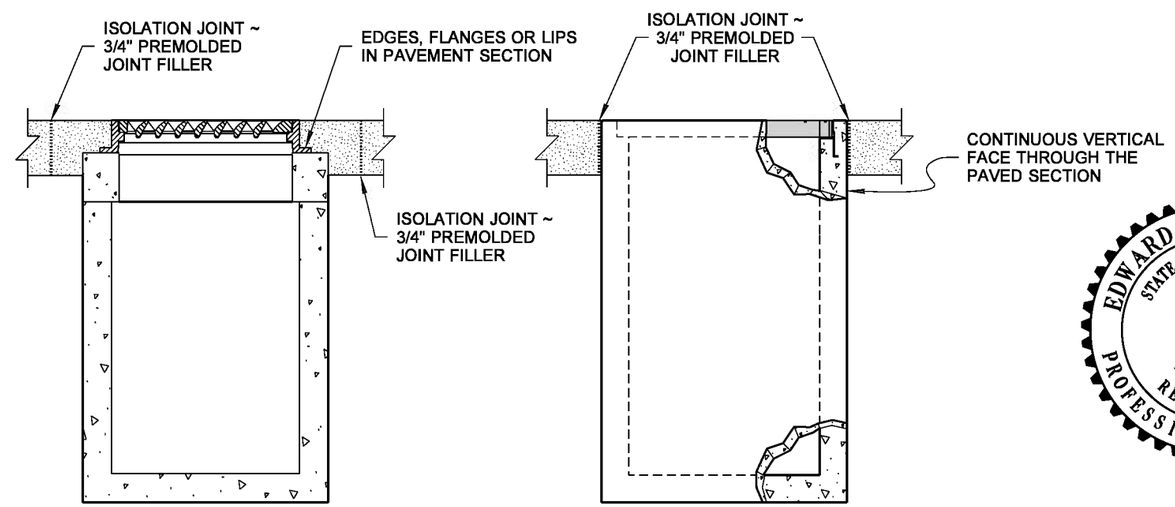

SECTION A

SECTION B

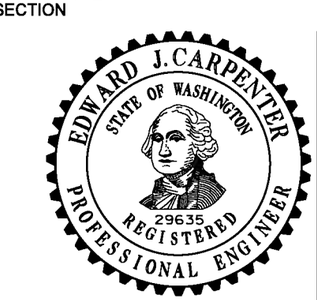

NOTE: THIS PLAN IS NOT A LEGAL ENGINEERING DOCUMENT BUT AN ELECTRONIC DUPLICATE. THE ORIGINAL, SIGNED BY THE ENGINEER AND APPROVED FOR PUBLICATION, IS KEPT ON FILE AT THE WASHINGTON STATE DEPARTMENT OF TRANSPORTATION. A COPY MAY BE OBTAINED UPON REQUEST.

PCC PAVEMENT ISOLATION JOINTS

STANDARD PLAN A-40.15-00

SHEET 2 OF 2 SHEETS

APPROVED FOR PUBLICATION

Pasco Bakotich III — STATE DESIGN ENGINEER

08-11-09 — DATE

Washington State Department of Transportation

EFFECTIVE: AUGUST 6, 2012 TO August 4, 2013
EFFECTIVE: AUGUST 6, 2012 TO August 4, 2013
EFFECTIVE: AUGUST 6, 2012 TO August 4, 2013
EFFECTIVE: AUGUST 6, 2012 TO August 4, 2013

EFFECTIVE: AUGUST 6, 2012 TO August 4, 2013

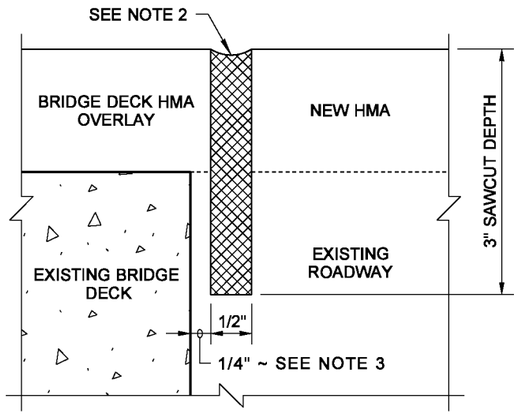

DETAIL 1
1/2" JOINT SEAL
BRIDGE DECK WITH HMA OVERLAY

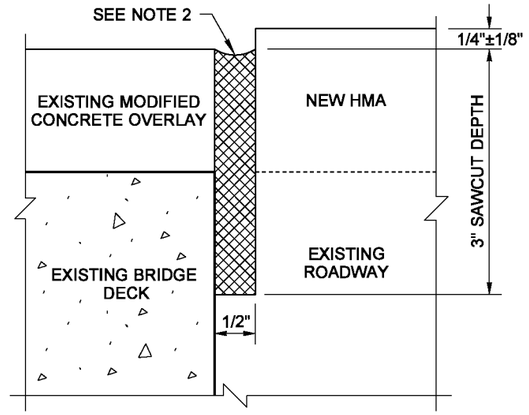

DETAIL 2
1/2" JOINT SEAL
BRIDGE DECK WITH CONCRETE OVERLAY

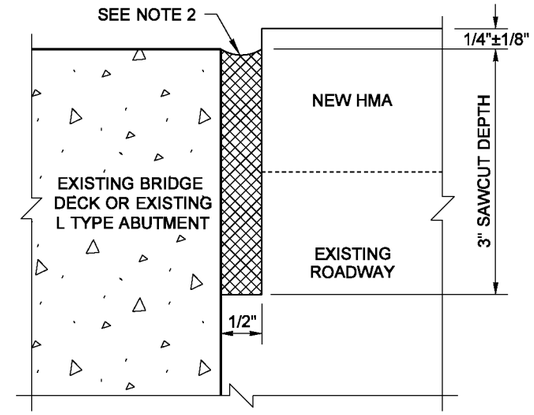

DETAIL 3
1/2" JOINT SEAL
BRIDGE DECK OR L TYPE ABUTMENT

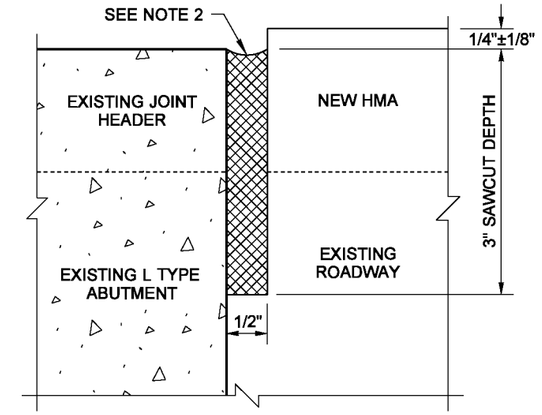

DETAIL 4
1/2" JOINT SEAL
L TYPE ABUTMENT WITH HEADER

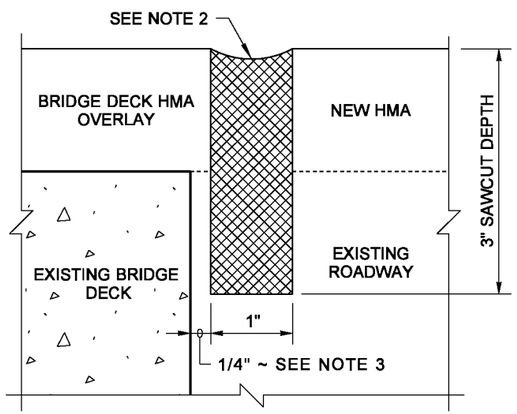

DETAIL 5
1" JOINT SEAL
BRIDGE DECK WITH HMA OVERLAY

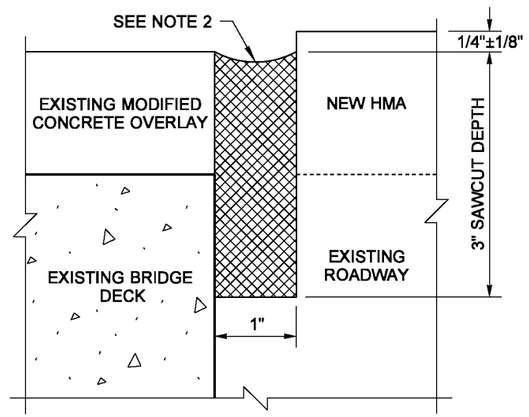

DETAIL 6
1" JOINT SEAL
BRIDGE DECK WITH CONCRETE OVERLAY

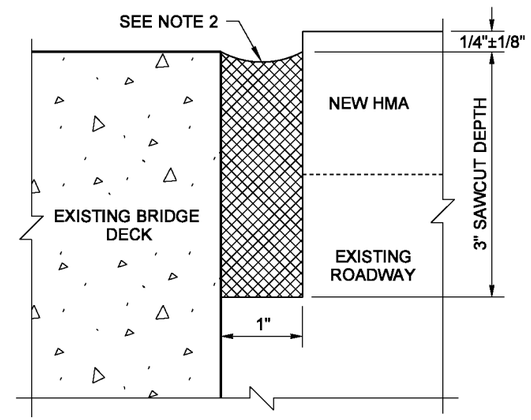

DETAIL 7
1" JOINT SEAL
BRIDGE DECK

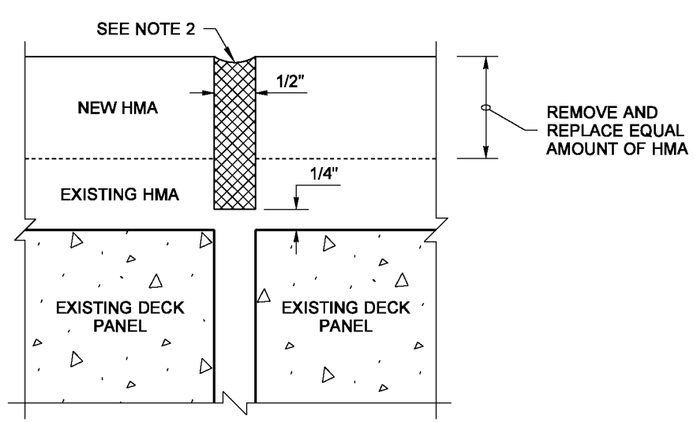

DETAIL 8
1/2" JOINT SEAL
BRIDGE DECK PANELS WITH HMA OVERLAY

NOTES

1. Use the 1/2" joint details for bridges with a length less than 100' and for bridges with L type abutments. Use the 1" joint details for other applications. Use DETAIL 8 on steel trusses and timber bridges with concrete deck panels.

2. Sawcut shall be filled with hot-poured compound in accordance with **Standard Specification 9-04.2(1)** and sealed in accordance with **Standard Specification 5-05.3(8)B**.

3. The contractor shall avoid sawing existing concrete. The construction tolerance to locate the saw cut is ±1/4" (0 min. to 1/2" max.) from the existing concrete (DETAILs 1 and 5).

NOTE: THIS PLAN IS NOT A LEGAL ENGINEERING DOCUMENT BUT AN ELECTRONIC DUPLICATE. THE ORIGINAL, SIGNED BY THE ENGINEER AND APPROVED FOR PUBLICATION, IS KEPT ON FILE AT THE WASHINGTON STATE DEPARTMENT OF TRANSPORTATION. A COPY MAY BE OBTAINED UPON REQUEST.

BRIDGE TRANSVERSE JOINT SEALS FOR HMA

STANDARD PLAN A-40.20-01

SHEET 1 OF 1 SHEET

APPROVED FOR PUBLICATION

Pasco Bakotich III — STATE DESIGN ENGINEER
02-07-12 — DATE

Washington State Department of Transportation

DRAWN BY: BILL BERENS

EFFECTIVE: AUGUST 6, 2012 TO August 4, 2013

EFFECTIVE: AUGUST 6, 2012 TO August 4, 2013

DRAWN BY: FERN LIDDELL

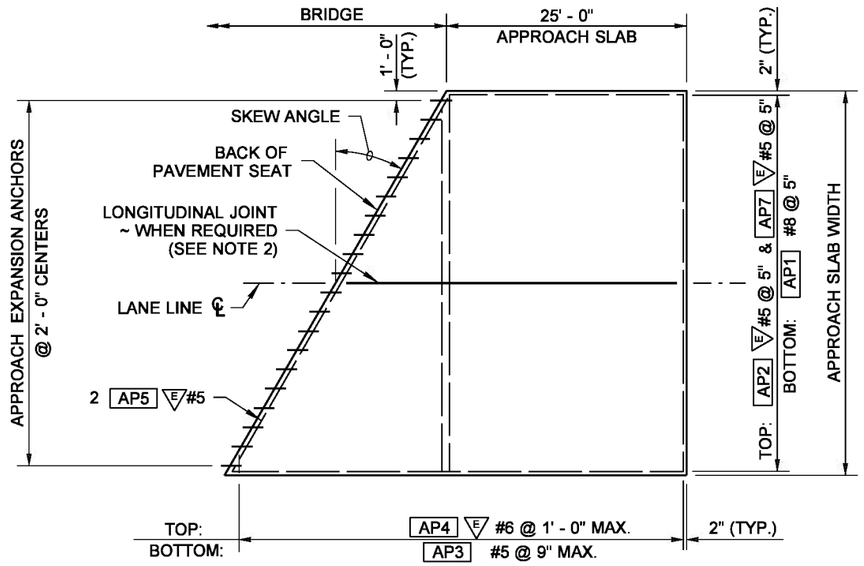

PLAN

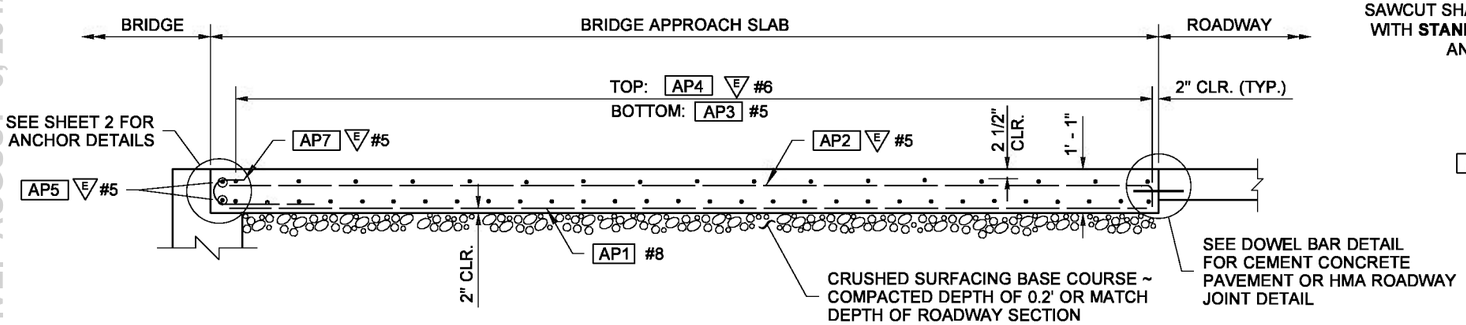

LONGITUDINAL SECTION

BENDING DIAGRAM

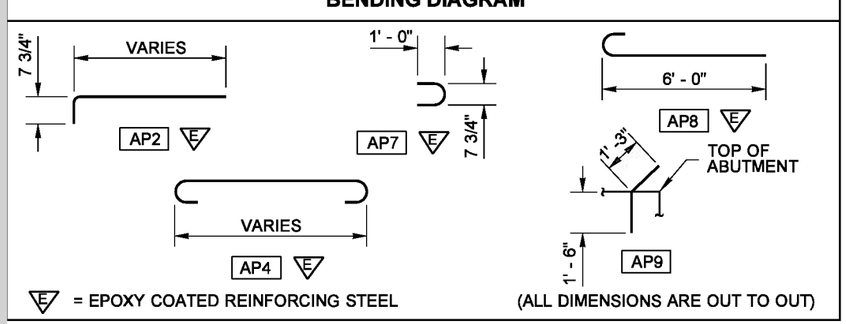

EFFECTIVE: AUGUST 6, 2012 TO August 4, 2013

NOTES

1. All edges of the approach slab shall have 1/2" radii except the longitudinal edge of the preceeding placement of a LONGITUDINAL CONSTRUCTION JOINT.

2. Longitudinal joints shall be placed on lane lines and shall be constructed and sealed in accordance with **Standard Specification Section 5-05.3(8).** Joints may be either a sawcut crack control joint or a construction joint. Sawcut joints shall terminate 1' - 0" before reaching edge of slab and must be saw cut as soon as possible after placement of concrete.

   (A) Approach slabs less than 40' wide -- no joint is required.

   (B) Approach slabs wider than 40' -- one or more joints are required to divide the slab into approximately 24' wide sections.

3. The minimum lap splice of #5 is 2' - 0". E #5 is 2' - 6". E #6 is 3' - 0". And #8 is 3' - 3". All lap splices shall be stagged so that no more than 50% of rebar is spliced at the same location. Lap splices shall be located within the middle half of the bridge approach slab. Optional splices are allowed for AP4 E #6.

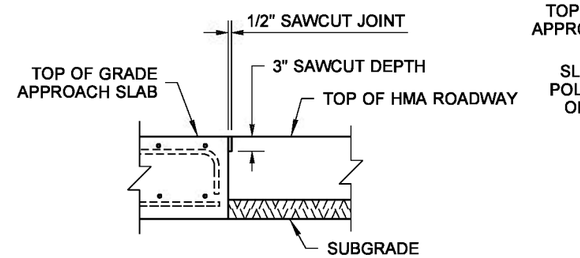

SAWCUT SHALL BE FILLED WITH HOT- POURED COMPONENT IN ACCORDANCE WITH **STANDARD SPECIFICATION SECTION 9-04.2(1)** AND SEALED IN ACCORDANCE WITH **STANDARD SPECIFICATION SECTION 5-05.3(8)B**

HMA ROADWAY JOINT DETAIL

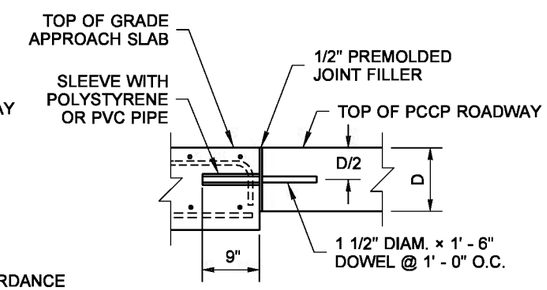

INSERT DOWELS PARALLEL TO CENTER LINE ALONG TRANSVERSE CONSTRUCTION JOINT

DOWEL BAR DETAIL FOR CEMENT CONCRETE PAVEMENT

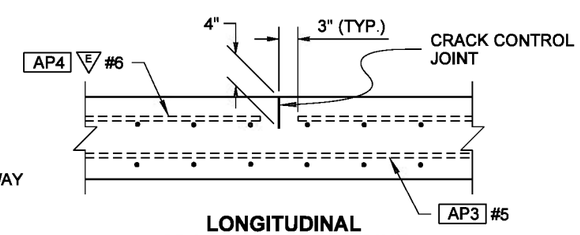

LONGITUDINAL CRACK CONTROL JOINT

SEE NOTE 2

FOR LOCAL AGENCY USE ONLY

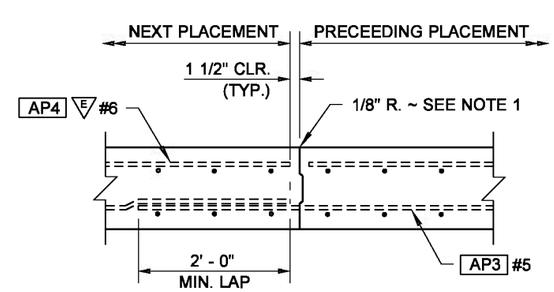

EDGE PRECEEDING PLACEMENT ONLY WITH 1/8" RADIUS

ALTERNATE LONGITUDINAL JOINT DETAIL

SEE NOTE 2

NOTE: THIS PLAN IS NOT A LEGAL ENGINEERING DOCUMENT BUT AN ELECTRONIC DUPLICATE. THE ORIGINAL, SIGNED BY THE ENGINEER AND APPROVED FOR PUBLICATION, IS KEPT ON FILE AT THE WASHINGTON STATE DEPARTMENT OF TRANSPORTATION. A COPY MAY BE OBTAINED UPON REQUEST.

BRIDGE APPROACH SLAB

STANDARD PLAN A-40.50-01

SHEET 1 OF 2 SHEETS

APPROVED FOR PUBLICATION

Pasco Bakotich III — STATE DESIGN ENGINEER — *06-02-11* — DATE

Washington State Department of Transportation

EFFECTIVE: AUGUST 6, 2012 TO August 4, 2013

EFFECTIVE: AUGUST 6, 2012 TO August 4, 2013
EFFECTIVE: AUGUST 6, 2012 TO August 4, 2013

DRAWN BY: FERN LIDDELL

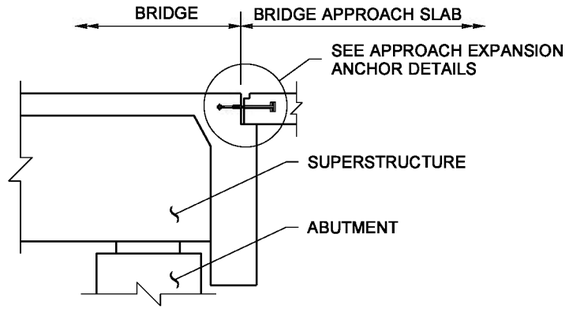

LONGITUDAL SECTION

SEMI-INTEGRAL TYPE ABUTMENT

NOTE

PAINT THE METAL COMPONENTS OF THE APPROACH EXPANSION ANCHOR WITH ONE COAT OF INORGANIC ZINC PAINT CONFORMING TO EITHER **STANDARD SPECIFICATION SECTION 9-08.1(2)F** OR BE GALVANIZED IN ACCORDANCE WITH **AASHTO M 232.**

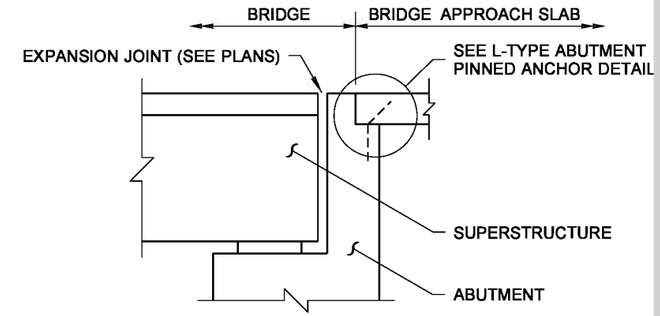

LONGITUDAL SECTION

L - TYPE ABUTMENT

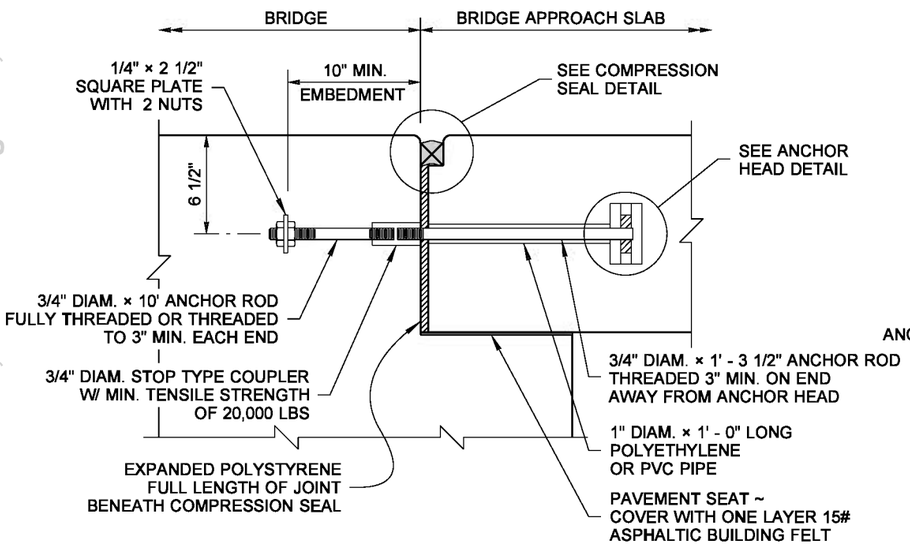

APPROACH EXPANSION ANCHOR ~ METHOD A

SEMI-INTEGRAL TYPE ONLY

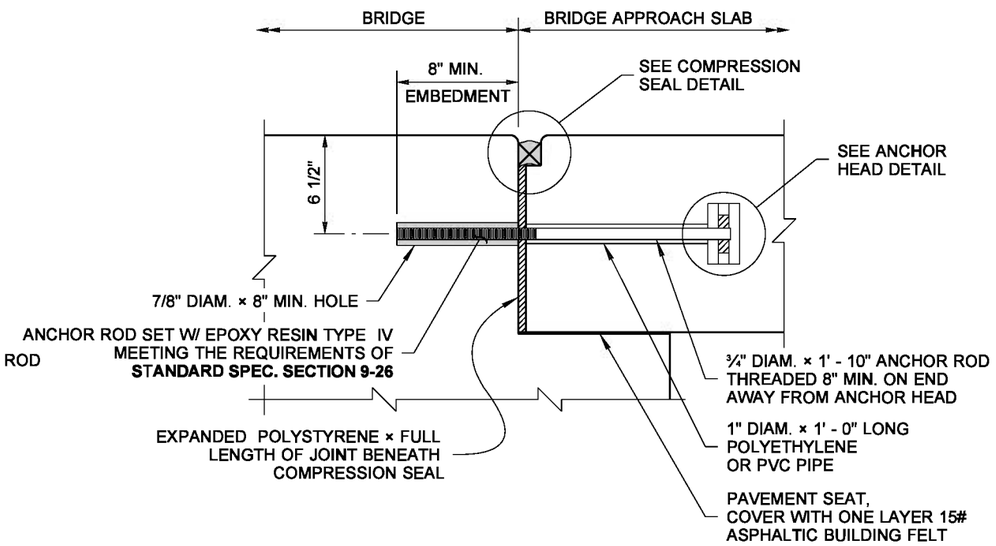

APPROACH EXPANSION ANCHOR ~ METHOD B

SEMI-INTEGRAL TYPE ONLY

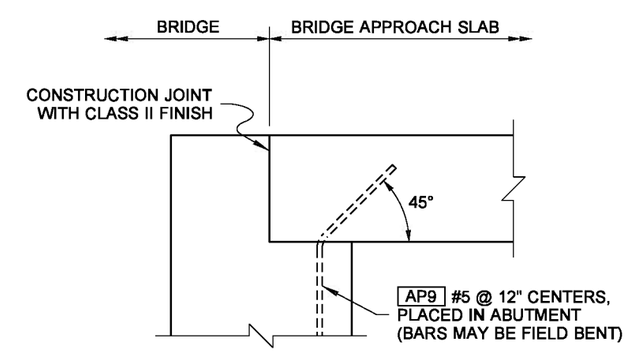

L - TYPE ABUTMENT PINNED ANCHOR DETAIL

FOR LOCAL AGENCY USE ONLY

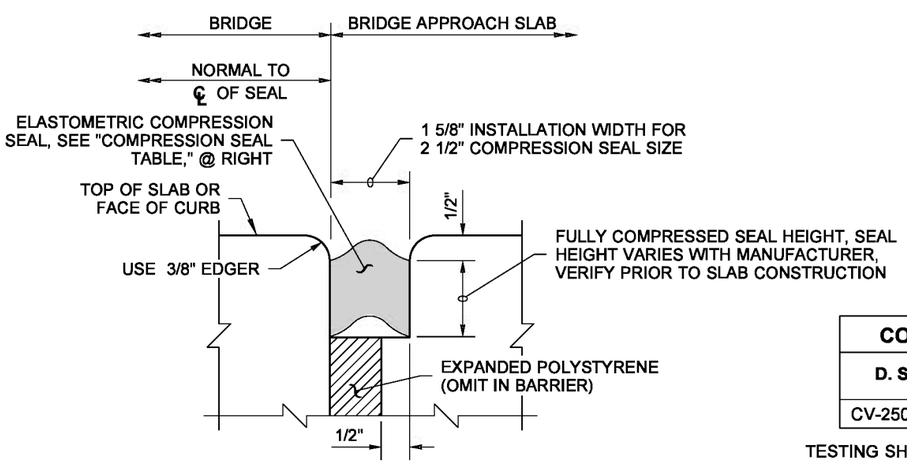

COMPRESSION SEAL DETAIL

COMPRESSION SEAL TABLE			
D. S. BROWN		WATSON BOWMAN ACME	
CV-2502	2 1/2	WA-250	2 1/2

TESTING SHALL BE PER AASHTO M-220 PRIOR TO USE

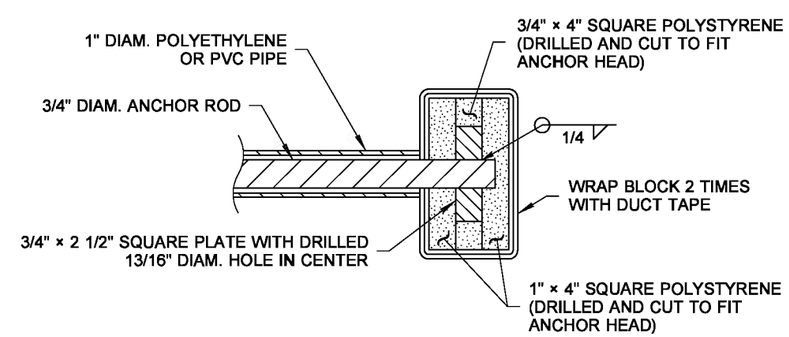

ANCHOR HEAD DETAIL

NOTE: THIS PLAN IS NOT A LEGAL ENGINEERING DOCUMENT BUT AN ELECTRONIC DUPLICATE. THE ORIGINAL, SIGNED BY THE ENGINEER AND APPROVED FOR PUBLICATION, IS KEPT ON FILE AT THE WASHINGTON STATE DEPARTMENT OF TRANSPORTATION. A COPY MAY BE OBTAINED UPON REQUEST.

BRIDGE APPROACH SLAB

STANDARD PLAN A-40.50-01

SHEET 2 OF 2 SHEETS

APPROVED FOR PUBLICATION

Pasco Bakotich III — STATE DESIGN ENGINEER

06-02-11 — DATE

Washington State Department of Transportation

EFFECTIVE: AUGUST 6, 2012 TO August 4, 2013
EFFECTIVE: AUGUST 6, 2012 TO August 4, 2013
EFFECTIVE: AUGUST 6, 2012 TO August 4, 2013
EFFECTIVE: AUGUST 6, 2012 TO August 4, 2013

EFFECTIVE: AUGUST 6, 2012 TO August 4, 2013
EFFECTIVE: AUGUST 6, 2012 TO August 4, 2013

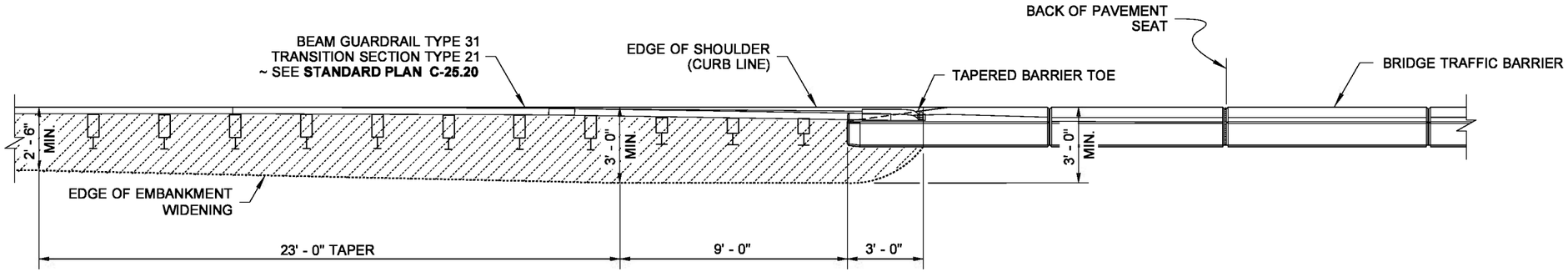

PLAN

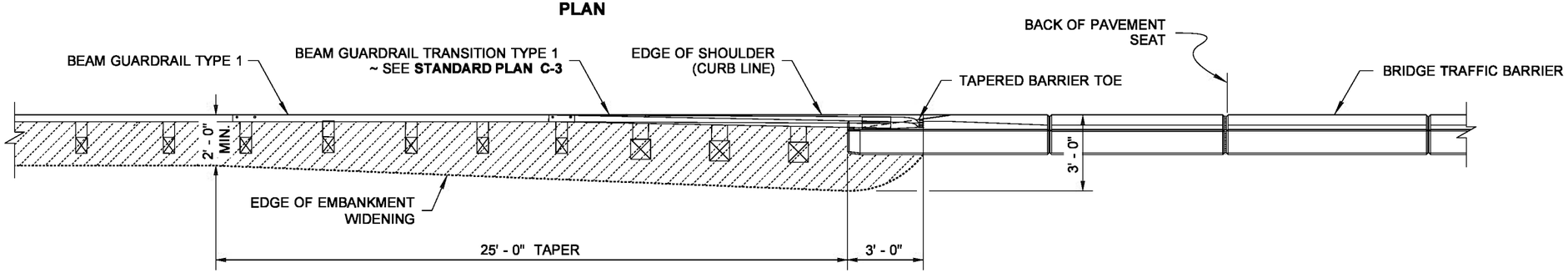

PLAN

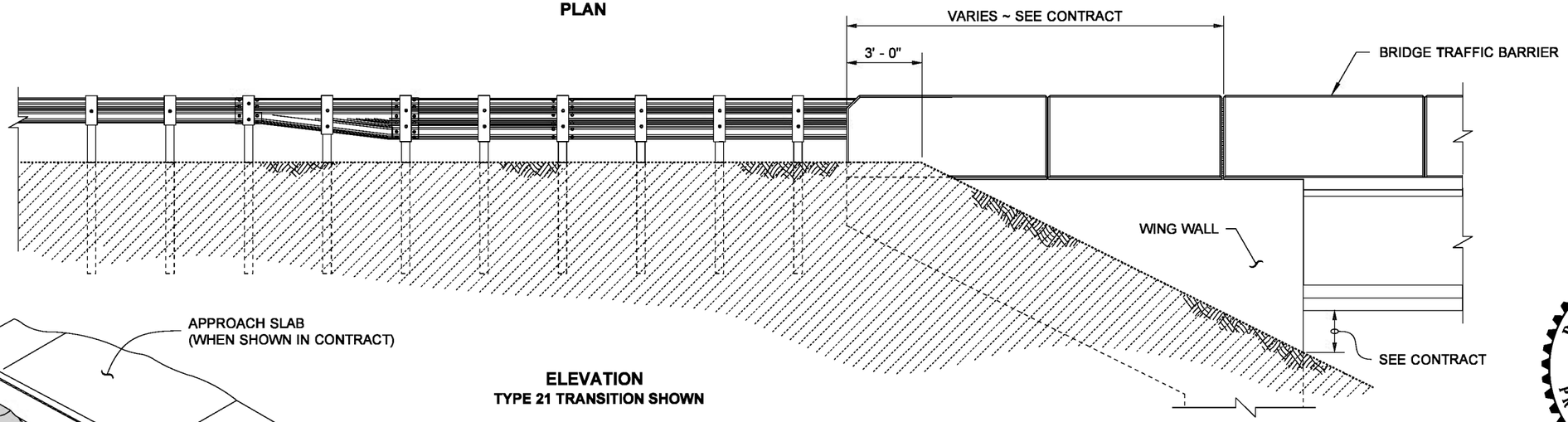

ELEVATION
TYPE 21 TRANSITION SHOWN

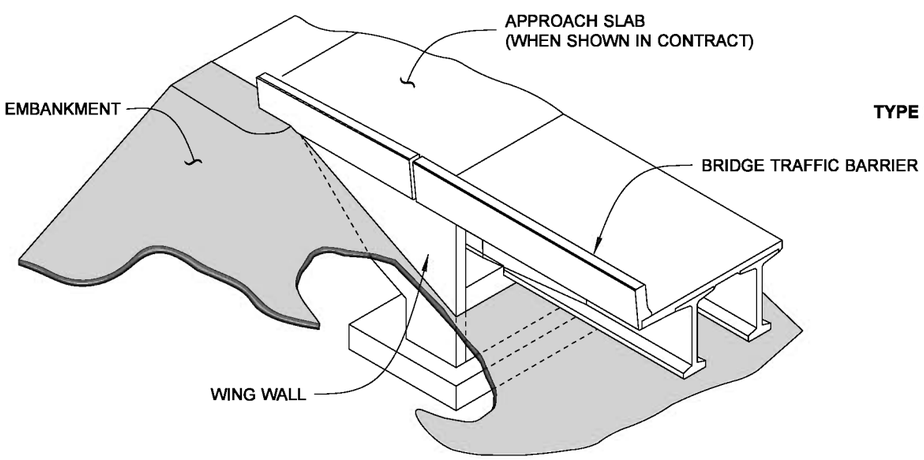

ISOMETRIC VIEW

NOTE: THIS PLAN IS NOT A LEGAL ENGINEERING DOCUMENT BUT AN ELECTRONIC DUPLICATE. THE ORIGINAL, SIGNED BY THE ENGINEER AND APPROVED FOR PUBLICATION, IS KEPT ON FILE AT THE WASHINGTON STATE DEPARTMENT OF TRANSPORTATION. A COPY MAY BE OBTAINED UPON REQUEST.

EMBANKMENT WIDENING AT BRIDGE END WITH WING WALL
STANDARD PLAN A-50.10-00

SHEET 1 OF 2 SHEETS

APPROVED FOR PUBLICATION

Pasco Bakotich III — STATE DESIGN ENGINEER
11-17-08 — DATE

Washington State Department of Transportation

DRAWN BY: FERN LIDDELL

BEAM GUARDRAIL CONNECTION TO BRIDGE TRAFFIC BARRIER

EFFECTIVE: AUGUST 6, 2012 TO August 4, 2013
EFFECTIVE: AUGUST 6, 2012 TO August 4, 2013
EFFECTIVE: AUGUST 6, 2012 TO August 4, 2013
EFFECTIVE: AUGUST 6, 2012 TO August 4, 2013

EFFECTIVE: AUGUST 6, 2012 TO August 4, 2013
EFFECTIVE: AUGUST 6, 2012 TO August 4, 2013

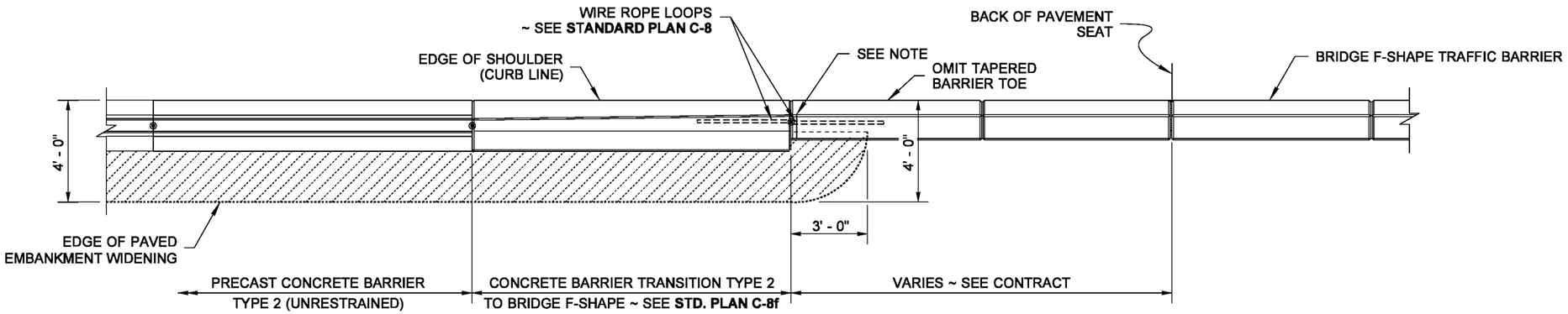

PLAN
WITH TYPE 2 UNRESTRAINED BARRIER

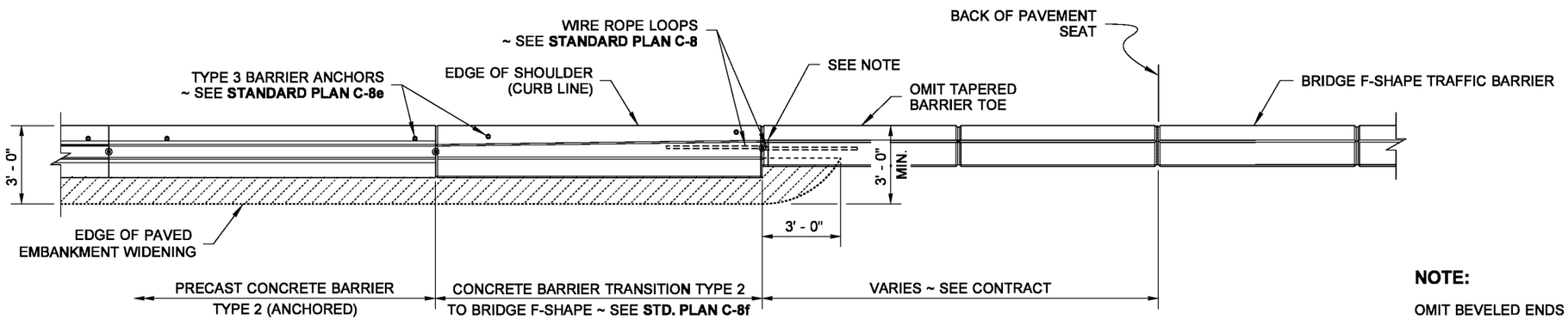

PLAN
WITH ANCHORED BARRIER

NOTE:

OMIT BEVELED ENDS ON TOP OF BRIDGE TRAFFIC BARRIER WHEN CONNECTING TO CONCRETE BARRIERS.

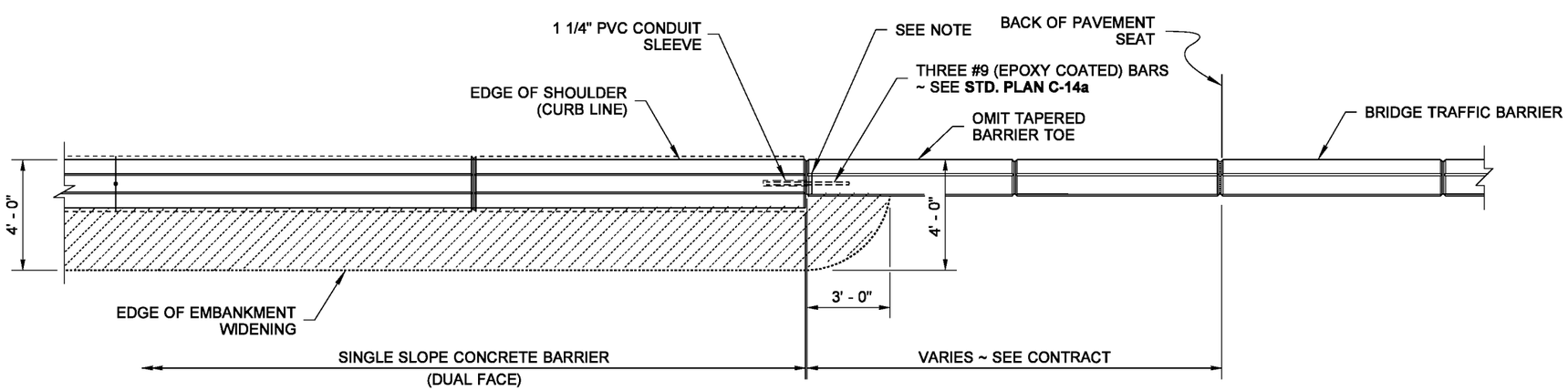

PLAN
WITH SINGLE SLOPE BARRIER

CONCRETE BARRIER CONNECTION TO BRIDGE TRAFFIC BARRIER

NOTE: THIS PLAN IS NOT A LEGAL ENGINEERING DOCUMENT BUT AN ELECTRONIC DUPLICATE. THE ORIGINAL, SIGNED BY THE ENGINEER AND APPROVED FOR PUBLICATION, IS KEPT ON FILE AT THE WASHINGTON STATE DEPARTMENT OF TRANSPORTATION. A COPY MAY BE OBTAINED UPON REQUEST.

EMBANKMENT WIDENING FOR BRIDGE END WITH WING WALL STANDARD PLAN A-50.10-00

SHEET 2 OF 2 SHEETS

APPROVED FOR PUBLICATION

Pasco Bakotich III — STATE DESIGN ENGINEER
11-17-08 — DATE

Washington State Department of Transportation

DRAWN BY: FERN LIDDELL

EFFECTIVE: AUGUST 6, 2012 TO August 4, 2013
EFFECTIVE: AUGUST 6, 2012 TO August 4, 2013
EFFECTIVE: AUGUST 6, 2012 TO August 4, 2013
EFFECTIVE: AUGUST 6, 2012 TO August 4, 2013

EFFECTIVE: AUGUST 6, 2012 TO August 4, 2013
EFFECTIVE: AUGUST 6, 2012 TO August 4, 2013

DRAWN BY: FERN LIDDELL

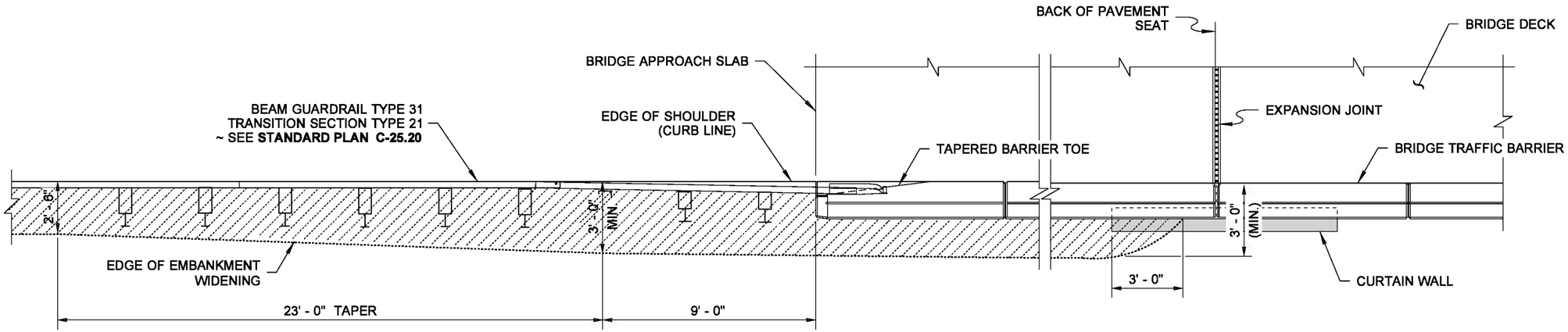

PLAN

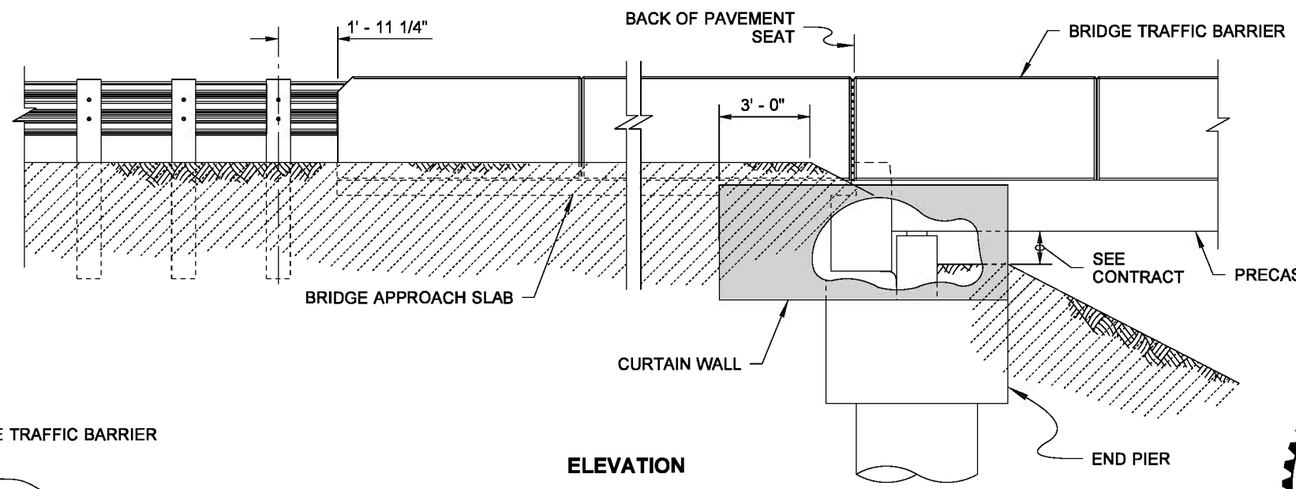

ELEVATION

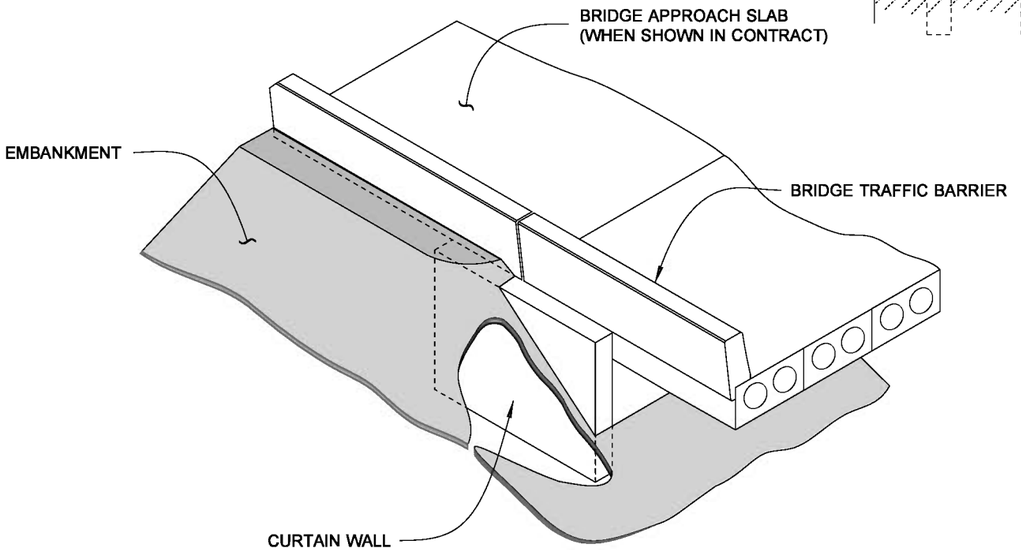

ISOMETRIC VIEW

NOTE: THIS PLAN IS NOT A LEGAL ENGINEERING DOCUMENT BUT AN ELECTRONIC DUPLICATE. THE ORIGINAL, SIGNED BY THE ENGINEER AND APPROVED FOR PUBLICATION, IS KEPT ON FILE AT THE WASHINGTON STATE DEPARTMENT OF TRANSPORTATION. A COPY MAY BE OBTAINED UPON REQUEST.

EMBANKMENT WIDENING AT BRIDGE END WITH CURTAIN WALL STANDARD PLAN A-50.20-01

SHEET 1 OF 2 SHEETS

APPROVED FOR PUBLICATION

Pasco Bakotich III — STATE DESIGN ENGINEER

09-22-09 — DATE

Washington State Department of Transportation

BEAM GUARDRAIL CONNECTION TO BRIDGE TRAFFIC BARRIER

EFFECTIVE: AUGUST 6, 2012 TO August 4, 2013
EFFECTIVE: AUGUST 6, 2012 TO August 4, 2013
EFFECTIVE: AUGUST 6, 2012 TO August 4, 2013
EFFECTIVE: AUGUST 6, 2012 TO August 4, 2013

EFFECTIVE: AUGUST 6, 2012 TO August 4, 2013
EFFECTIVE: AUGUST 6, 2012 TO August 4, 2013

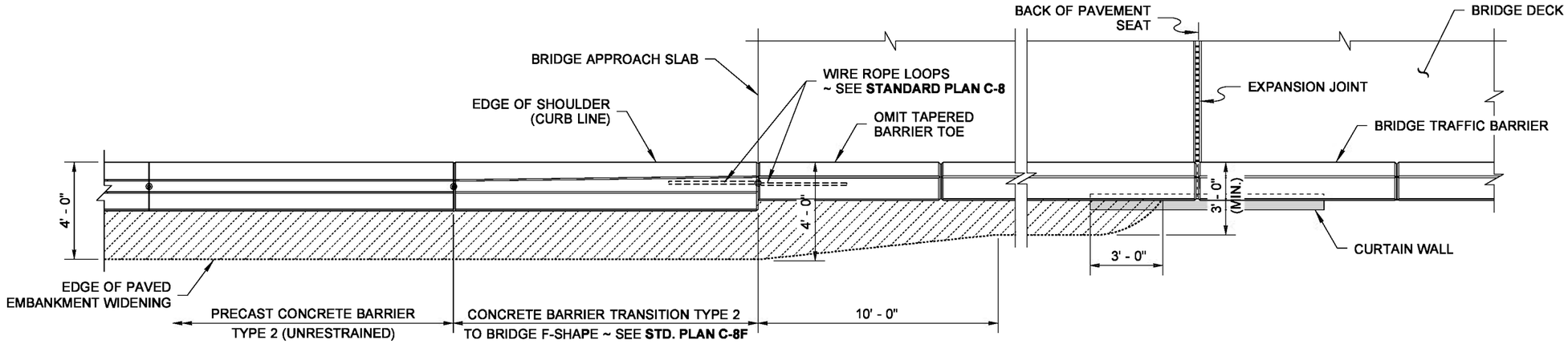

PLAN
WITH UNRESTRAINED BARRIER

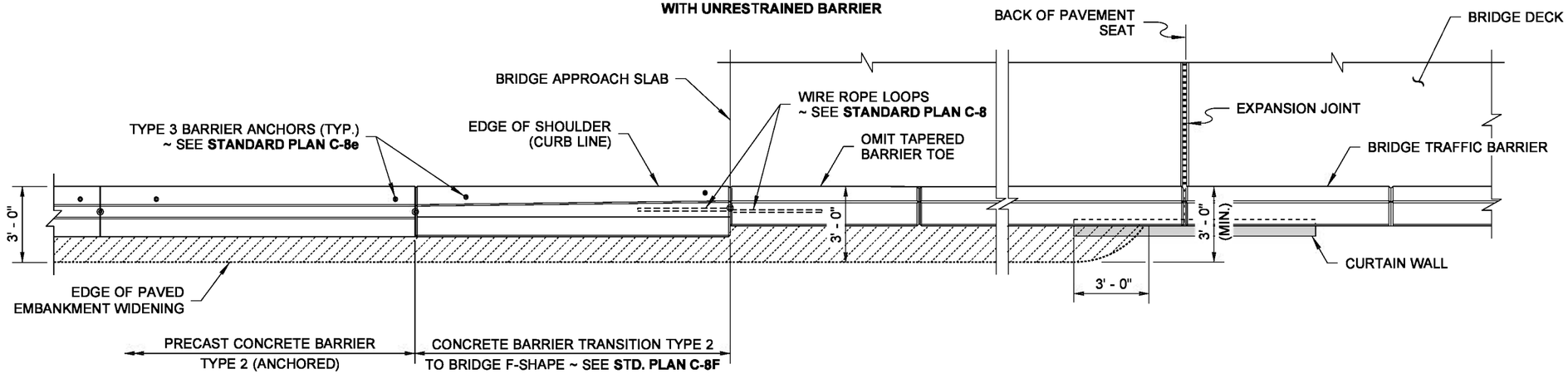

PLAN
WITH ANCHORED BARRIER

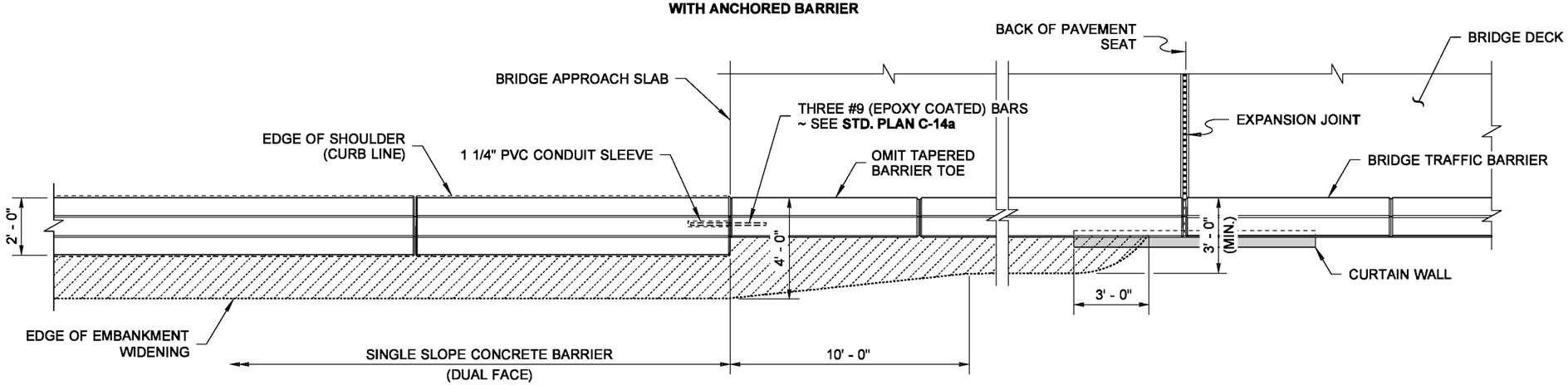

PLAN
WITH ANCHORED BARRIER

CONCRETE BARRIER CONNECTION TO BRIDGE TRAFFIC BARRIER

NOTE: THIS PLAN IS NOT A LEGAL ENGINEERING DOCUMENT BUT AN ELECTRONIC DUPLICATE. THE ORIGINAL, SIGNED BY THE ENGINEER AND APPROVED FOR PUBLICATION, IS KEPT ON FILE AT THE WASHINGTON STATE DEPARTMENT OF TRANSPORTATION. A COPY MAY BE OBTAINED UPON REQUEST.

EMBANKMENT WIDENING AT BRIDGE END WITH CURTAIN WALL

STANDARD PLAN A-50.20-01

SHEET 2 OF 2 SHEETS

APPROVED FOR PUBLICATION

Pasco Bakotich III — STATE DESIGN ENGINEER
09-22-09 — DATE

Washington State Department of Transportation

DRAWN BY: FERN LIDDELL

EFFECTIVE: AUGUST 6, 2012 TO August 4, 2013
EFFECTIVE: AUGUST 6, 2012 TO August 4, 2013
EFFECTIVE: AUGUST 6, 2012 TO August 4, 2013
EFFECTIVE: AUGUST 6, 2012 TO August 4, 2013

EFFECTIVE: AUGUST 6, 2012 TO August 4, 2013
EFFECTIVE: AUGUST 6, 2012 TO August 4, 2013

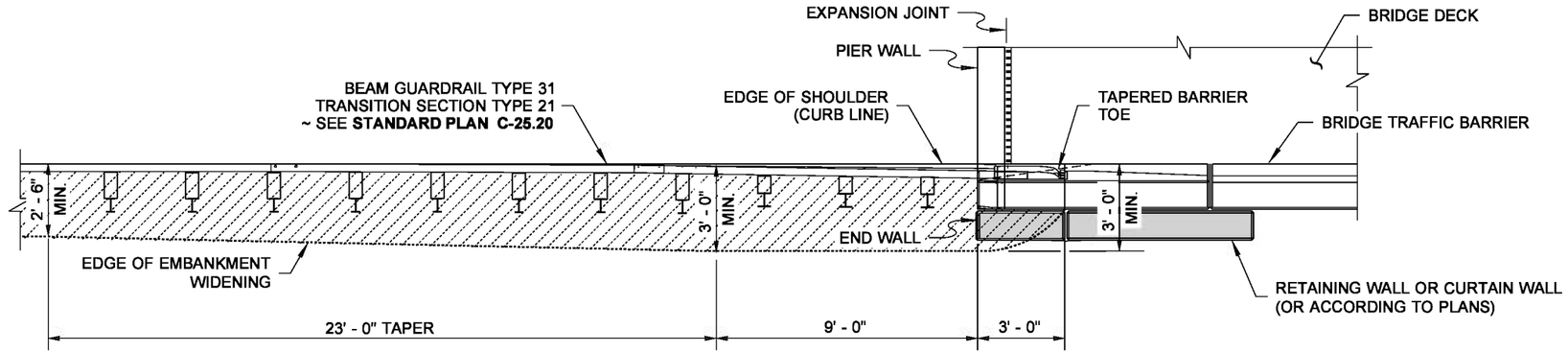

PLAN

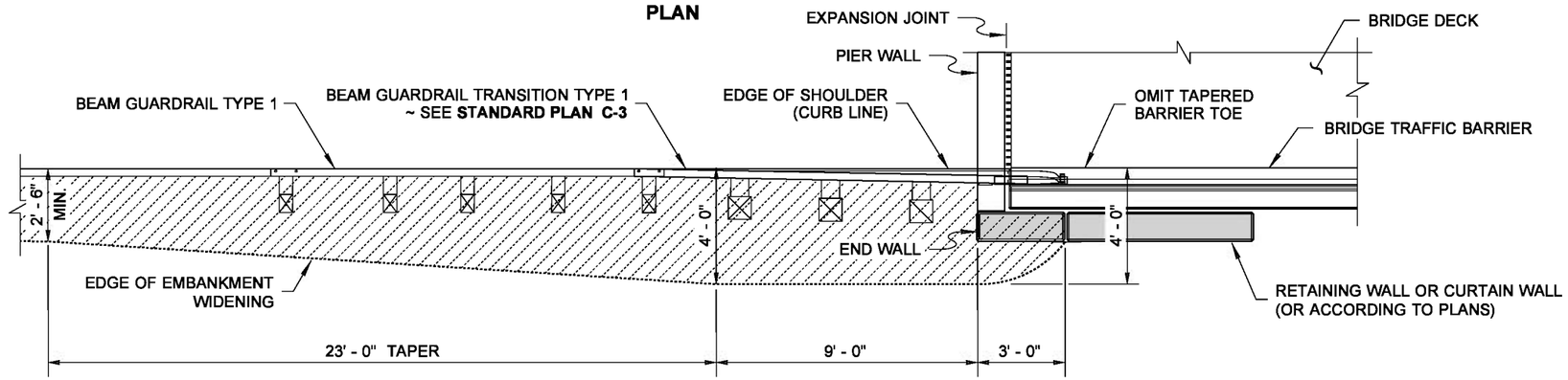

PLAN

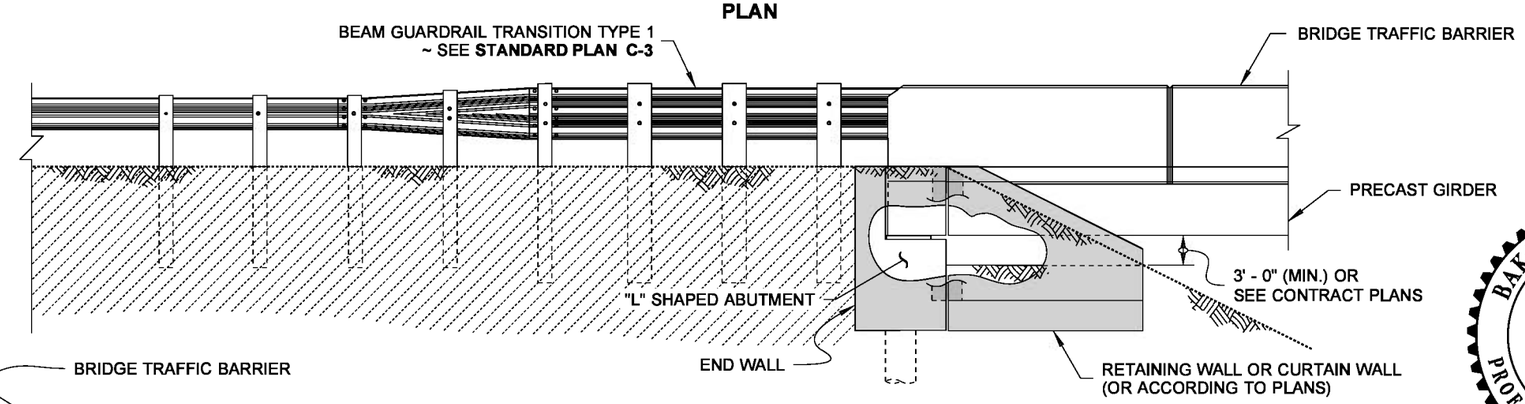

ELEVATION

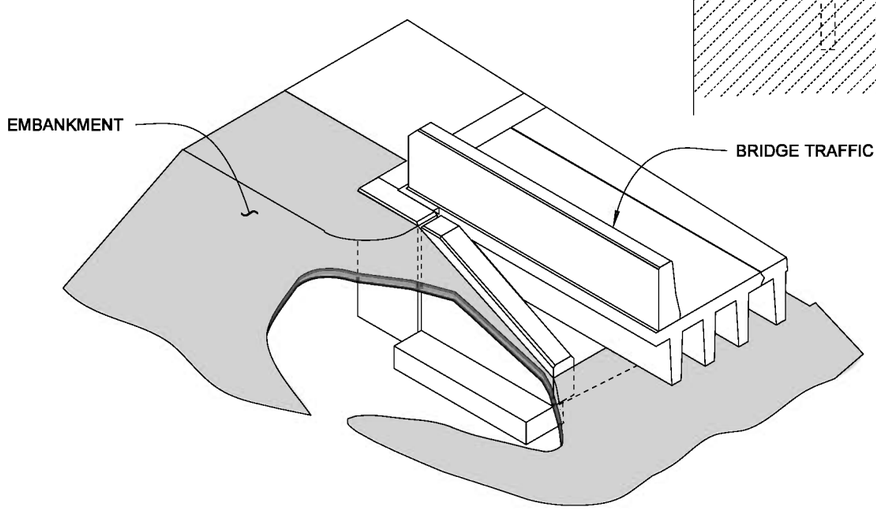

ISOMETRIC VIEW

BAKOTICH, PASCO III
STATE OF WASHINGTON
24557
REGISTERED
PROFESSIONAL ENGINEER

NOTE: THIS PLAN IS NOT A LEGAL ENGINEERING DOCUMENT BUT AN ELECTRONIC DUPLICATE. THE ORIGINAL, SIGNED BY THE ENGINEER AND APPROVED FOR PUBLICATION, IS KEPT ON FILE AT THE WASHINGTON STATE DEPARTMENT OF TRANSPORTATION. A COPY MAY BE OBTAINED UPON REQUEST.

EMBANKMENT WIDENING AT BRIDGE END WITH "L" SHAPED ABUTMENT STANDARD PLAN A-50.30-00

SHEET 1 OF 2 SHEETS

APPROVED FOR PUBLICATION

Pasco Bakotich III — STATE DESIGN ENGINEER

11-17-08 — DATE

Washington State Department of Transportation

DRAWN BY: FERN LIDDELL

BEAM GUARDRAIL CONNECTION TO BRIDGE TRAFFIC BARRIER

EFFECTIVE: AUGUST 6, 2012 TO August 4, 2013
EFFECTIVE: AUGUST 6, 2012 TO August 4, 2013
EFFECTIVE: AUGUST 6, 2012 TO August 4, 2013
EFFECTIVE: AUGUST 6, 2012 TO August 4, 2013

EFFECTIVE: AUGUST 6, 2012 TO August 4, 2013
EFFECTIVE: AUGUST 6, 2012 TO August 4, 2013

DRAWN BY: FERN LIDDELL

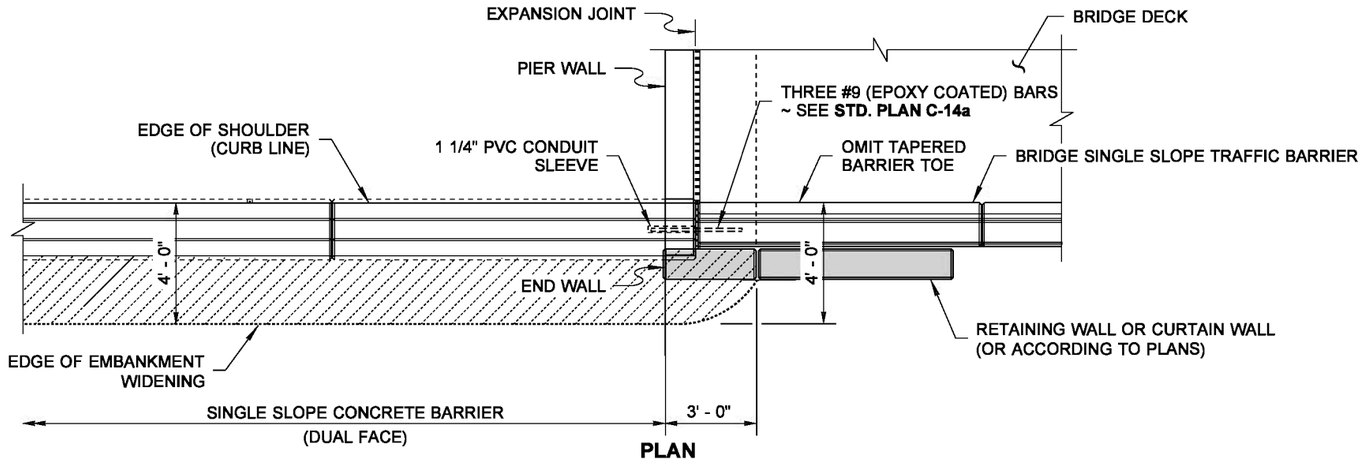

PLAN

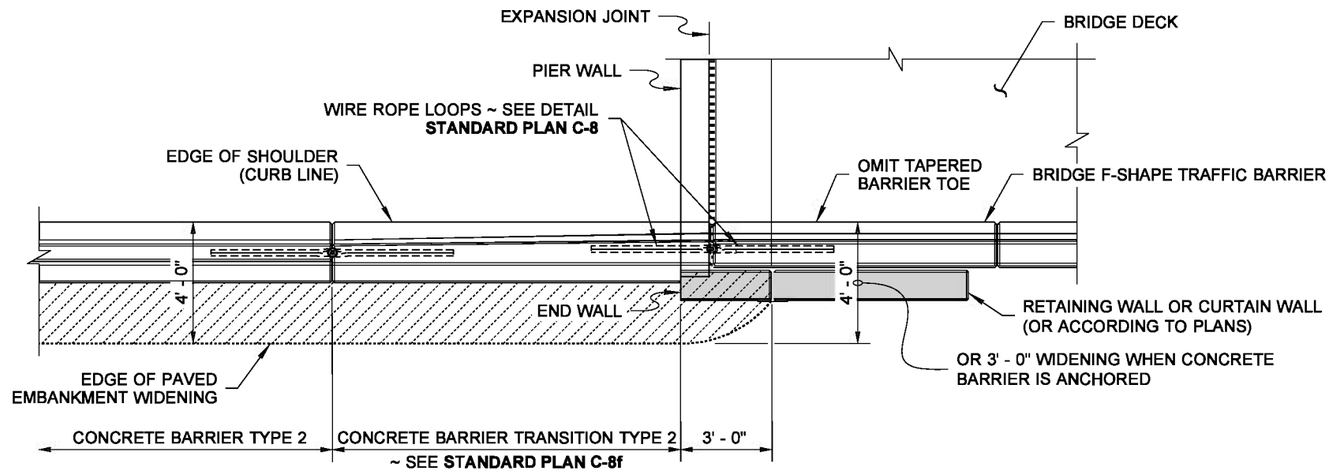

PLAN

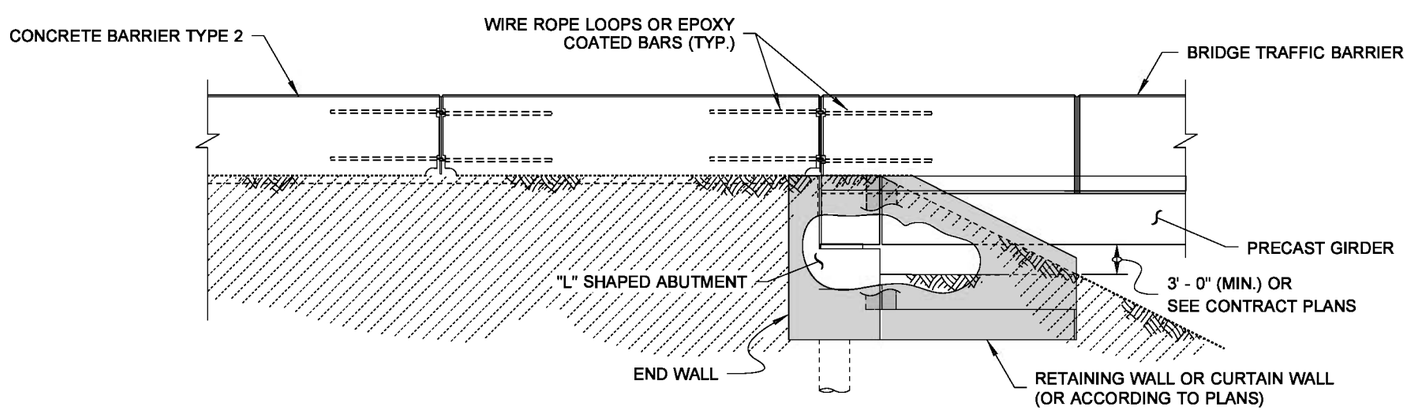

ELEVATION

CONCRETE BARRIER CONNECTION TO BRIDGE TRAFFIC BARRIER

NOTE: THIS PLAN IS NOT A LEGAL ENGINEERING DOCUMENT BUT AN ELECTRONIC DUPLICATE. THE ORIGINAL, SIGNED BY THE ENGINEER AND APPROVED FOR PUBLICATION, IS KEPT ON FILE AT THE WASHINGTON STATE DEPARTMENT OF TRANSPORTATION. A COPY MAY BE OBTAINED UPON REQUEST.

EMBANKMENT WIDENING AT BRIDGE END WITH "L" SHAPED ABUTMENT

STANDARD PLAN A-50.30-00

SHEET 2 OF 2 SHEETS

APPROVED FOR PUBLICATION

Pasco Bakotich III — STATE DESIGN ENGINEER

11-17-08 — DATE

Washington State Department of Transportation

EFFECTIVE: AUGUST 6, 2012 TO August 4, 2013
EFFECTIVE: AUGUST 6, 2012 TO August 4, 2013
EFFECTIVE: AUGUST 6, 2012 TO August 4, 2013
EFFECTIVE: AUGUST 6, 2012 TO August 4, 2013

EFFECTIVE: AUGUST 6, 2012 TO August 4, 2013
EFFECTIVE: AUGUST 6, 2012 TO August 4, 2013

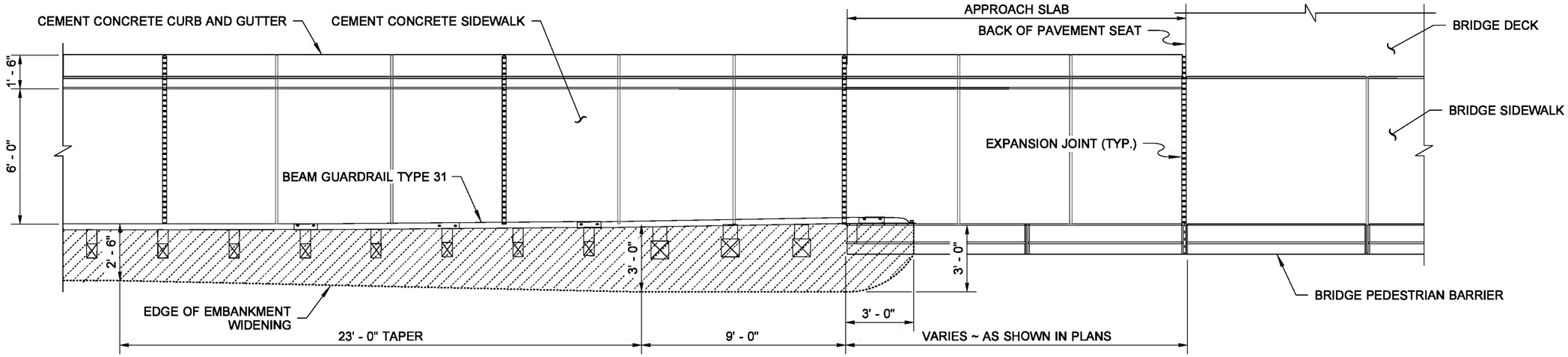

PLAN
WITH GUARDRAIL

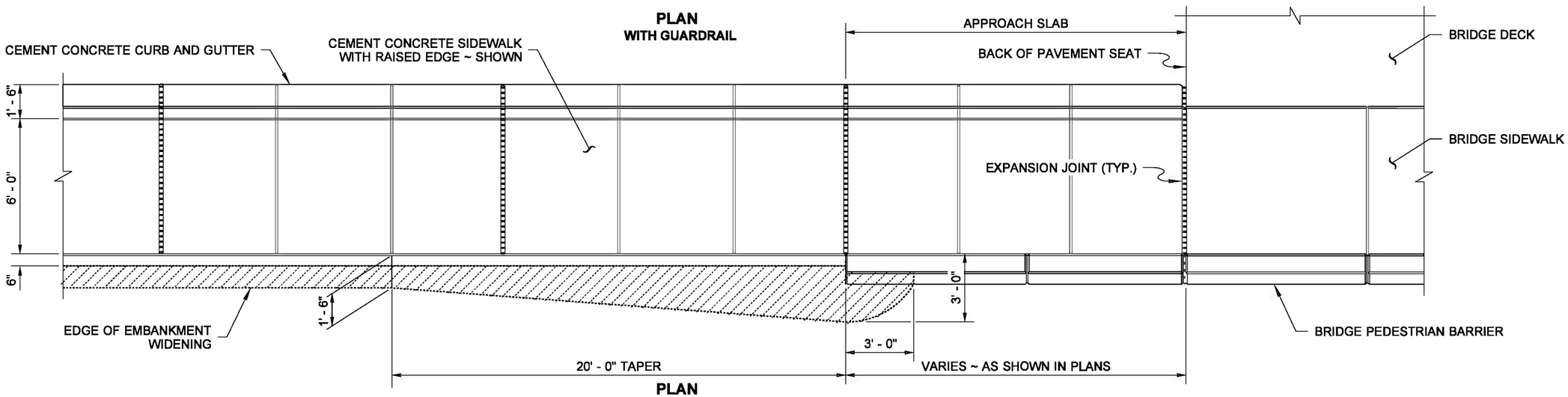

PLAN
WITH PEDESTRIAN RAILING

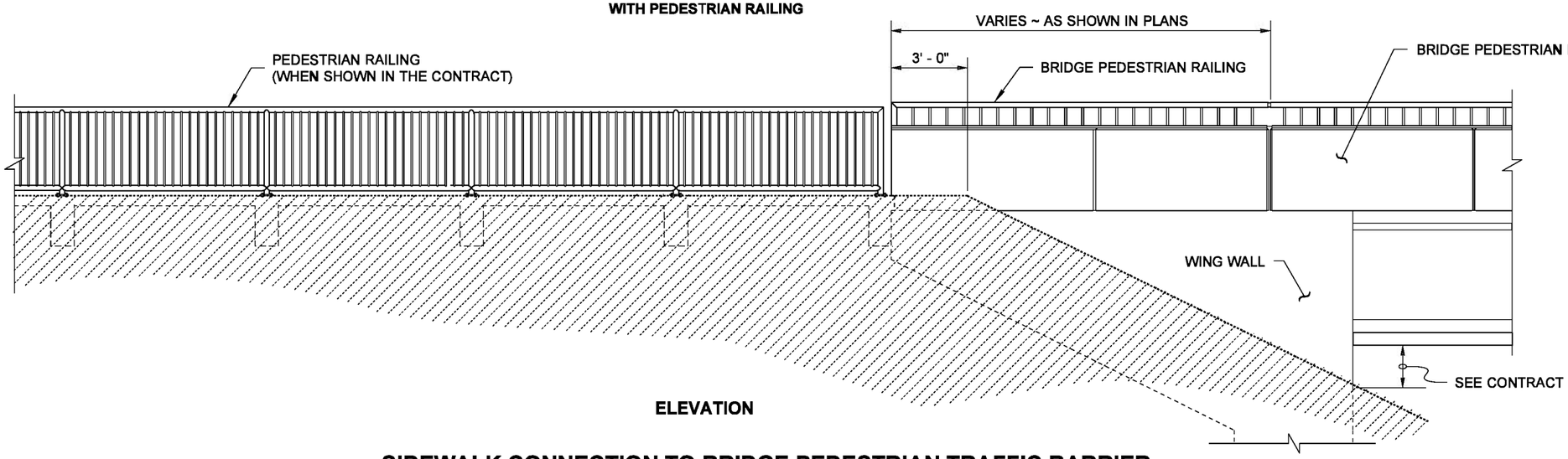

ELEVATION

SIDEWALK CONNECTION TO BRIDGE PEDESTRIAN TRAFFIC BARRIER

NOTE: THIS PLAN IS NOT A LEGAL ENGINEERING DOCUMENT BUT AN ELECTRONIC DUPLICATE. THE ORIGINAL, SIGNED BY THE ENGINEER AND APPROVED FOR PUBLICATION, IS KEPT ON FILE AT THE WASHINGTON STATE DEPARTMENT OF TRANSPORTATION. A COPY MAY BE OBTAINED UPON REQUEST.

EMBANKMENT WIDENING AT BRIDGE END WITH SIDEWALK
STANDARD PLAN A-50.40-00

SHEET 1 OF 1 SHEET

APPROVED FOR PUBLICATION

Pasco Bakotich III	*11-17-08*
STATE DESIGN ENGINEER	DATE

Washington State Department of Transportation

DRAWN BY: FERN LIDDELL

EFFECTIVE: AUGUST 6, 2012 TO August 4, 2013
EFFECTIVE: AUGUST 6, 2012 TO August 4, 2013
EFFECTIVE: AUGUST 6, 2012 TO August 4, 2013
EFFECTIVE: AUGUST 6, 2012 TO August 4, 2013

EFFECTIVE: AUGUST 6, 2012 TO August 4, 2013
EFFECTIVE: AUGUST 6, 2012 TO August 4, 2013

DRAWN BY: FERN LIDDELL

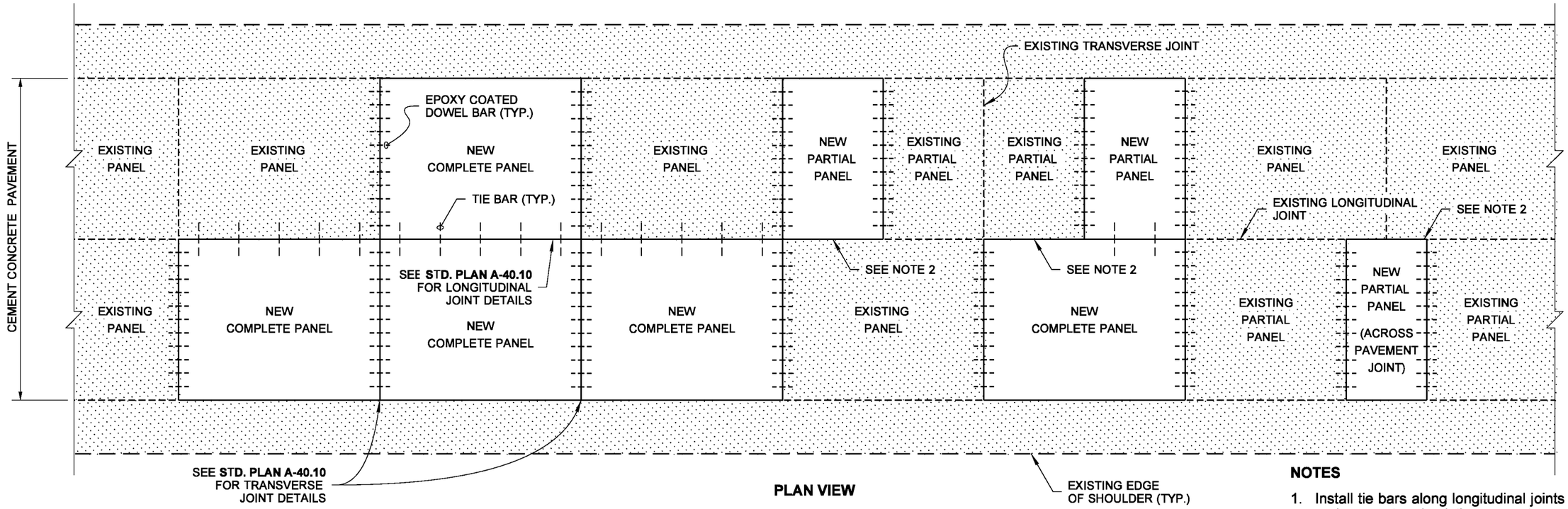

PLAN VIEW

PANEL REPLACEMENT

NOTES

1. Install tie bars along longitudinal joints between full panel replacement and existing cement concrete pavement. Tie bars are not installed between cement concrete pavement and hot mix asphalt shoulders.
2. Place polyethylene film (per AASHTO M171) or building paper along the longitudinal joint between partial panel replacement and existing panel.
3. Place new dowel bars between existing dowel bars. Don't place any dowel bars closer than 1' - 0" from edge of concrete panel.

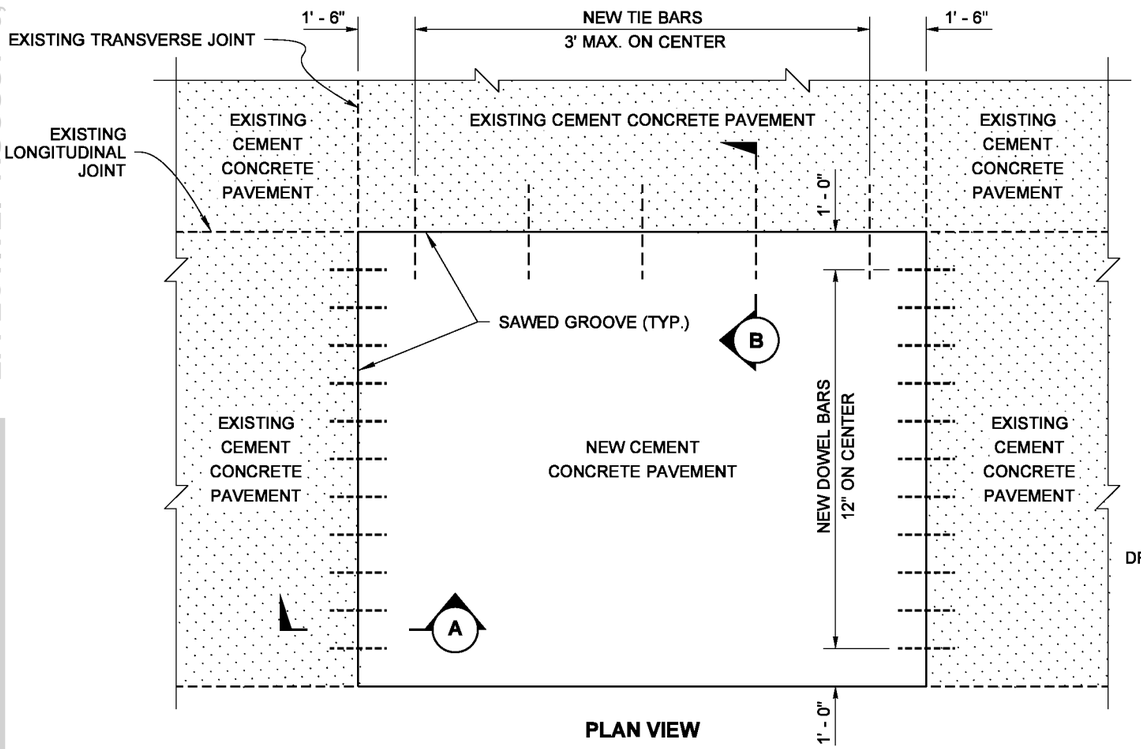

PLAN VIEW

COMPLETE PANEL REPLACEMENT DETAIL

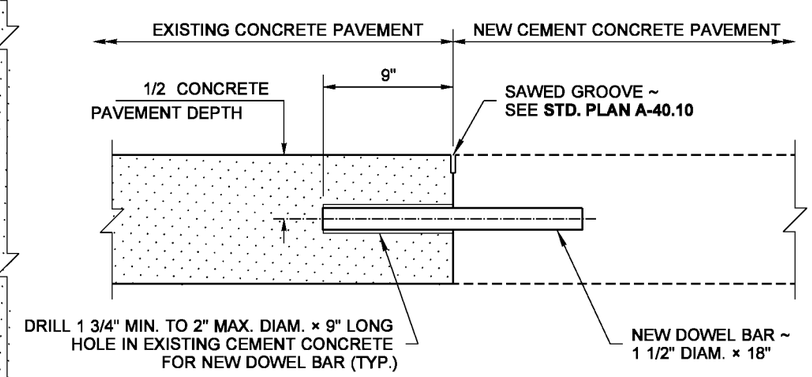

SECTION A

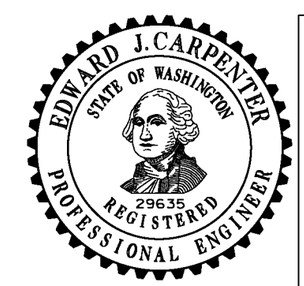

NOTE: THIS PLAN IS NOT A LEGAL ENGINEERING DOCUMENT BUT AN ELECTRONIC DUPLICATE. THE ORIGINAL, SIGNED BY THE ENGINEER AND APPROVED FOR PUBLICATION, IS KEPT ON FILE AT THE WASHINGTON STATE DEPARTMENT OF TRANSPORTATION. A COPY MAY BE OBTAINED UPON REQUEST.

CEMENT CONCRETE PAVEMENT REPAIR

STANDARD PLAN A-60.10-01

SHEET 1 OF 2 SHEETS

APPROVED FOR PUBLICATION

Pasco Bakotich III — STATE DESIGN ENGINEER

10-14-09 — DATE

Washington State Department of Transportation

EFFECTIVE: AUGUST 6, 2012 TO August 4, 2013
EFFECTIVE: AUGUST 6, 2012 TO August 4, 2013
EFFECTIVE: AUGUST 6, 2012 TO August 4, 2013
EFFECTIVE: AUGUST 6, 2012 TO August 4, 2013

EFFECTIVE: AUGUST 6, 2012 TO August 4, 2013

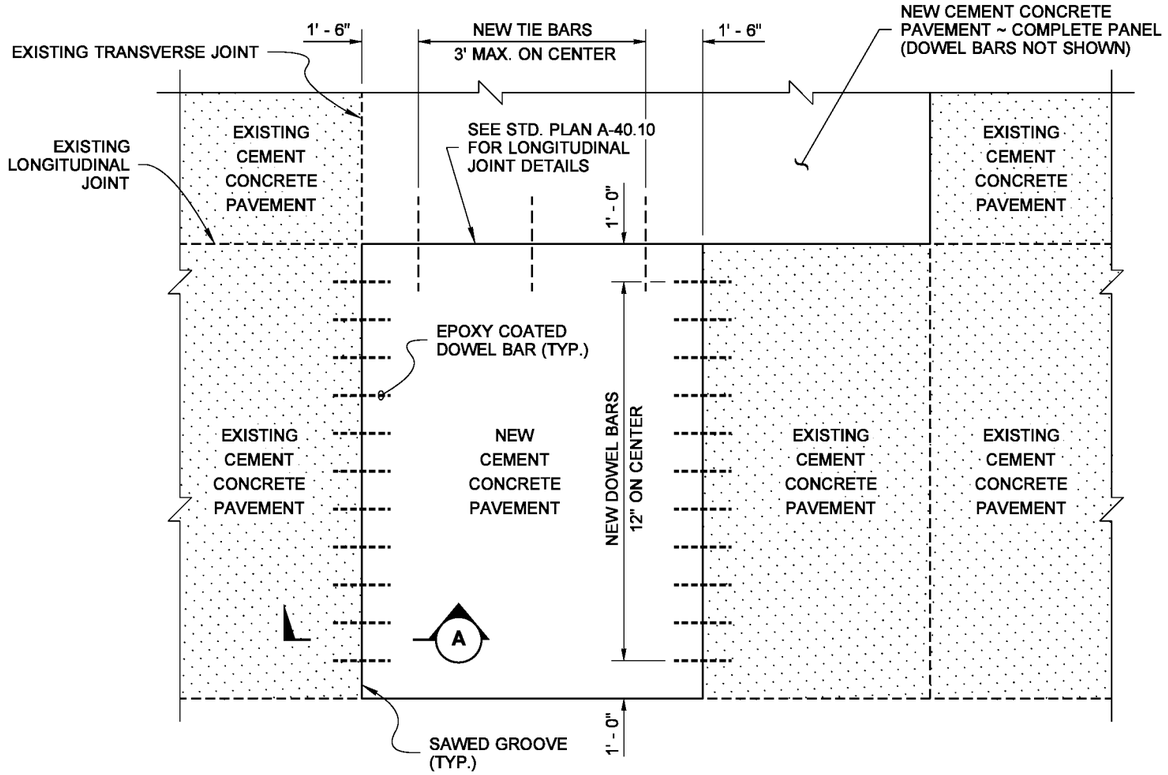

PLAN VIEW

PARTIAL PANEL REPLACEMENT
WITH TIE BARS

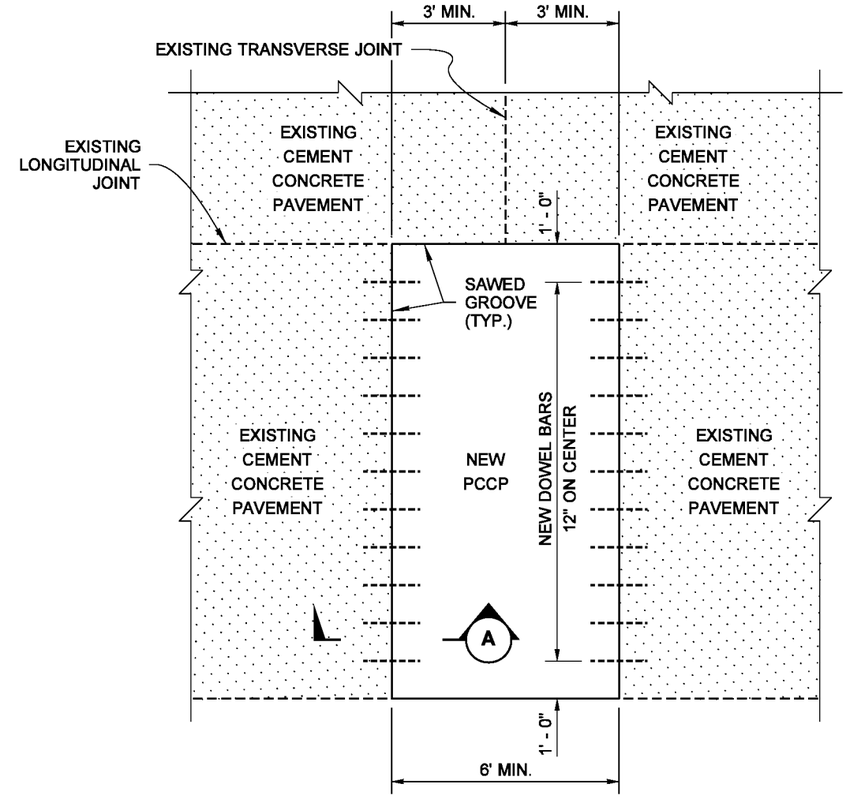

PLAN VIEW

PARTIAL PANEL REPLACEMENT
WITHOUT TIE BARS

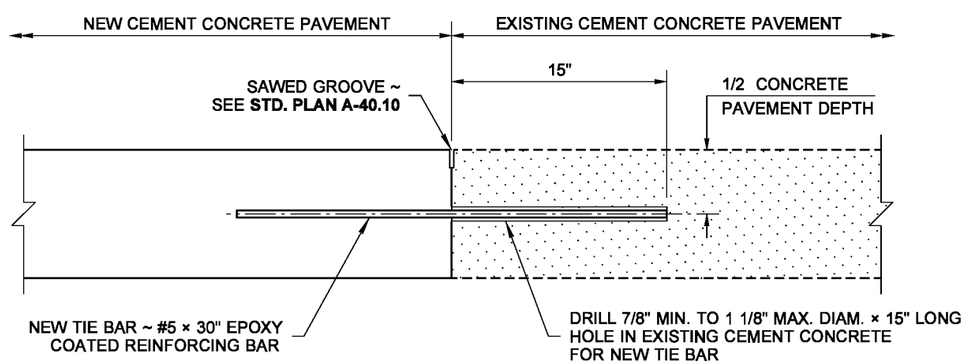

SECTION B

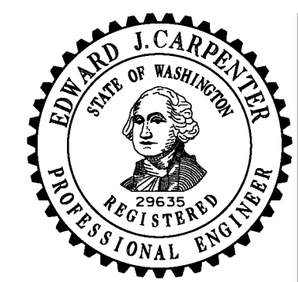

NOTE: THIS PLAN IS NOT A LEGAL ENGINEERING DOCUMENT BUT AN ELECTRONIC DUPLICATE. THE ORIGINAL, SIGNED BY THE ENGINEER AND APPROVED FOR PUBLICATION, IS KEPT ON FILE AT THE WASHINGTON STATE DEPARTMENT OF TRANSPORTATION. A COPY MAY BE OBTAINED UPON REQUEST.

CEMENT CONCRETE PAVEMENT REPAIR

STANDARD PLAN A-60.10-01

SHEET 2 OF 2 SHEETS

APPROVED FOR PUBLICATION

Pasco Bakotich III — STATE DESIGN ENGINEER
10-14-09 — DATE

Washington State Department of Transportation

EFFECTIVE: AUGUST 6, 2012 TO August 4, 2013

EFFECTIVE: AUGUST 6, 2012 TO August 4, 2013
EFFECTIVE: AUGUST 6, 2012 TO August 4, 2013

DRAWN BY: FERN LIDDELL

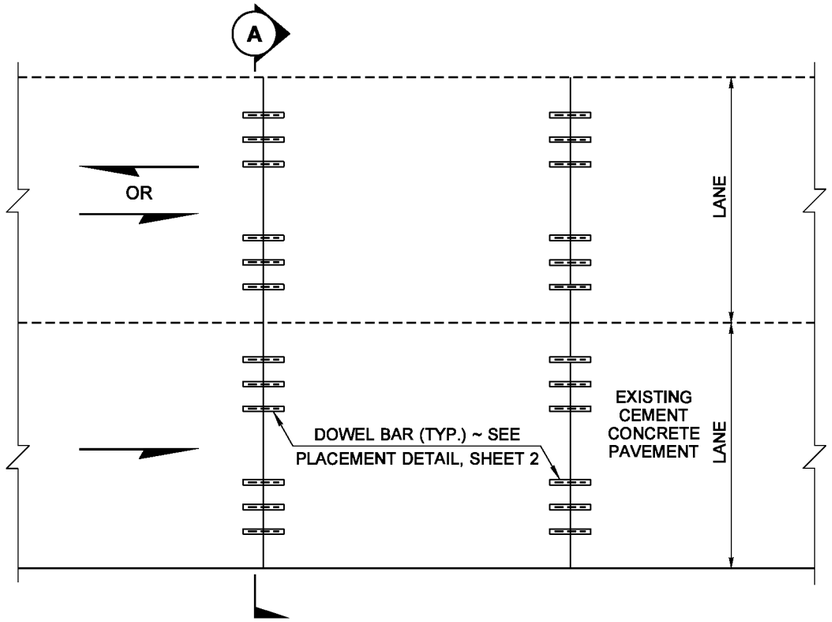

PLAN VIEW

DOWEL BAR RETROFIT

FOR TWO LANE DIVIDED HIGHWAY (ONE WAY TRAFFIC)
FOR EACH LANE IN UNDIVIDED HIGHWAY (TWO WAY TRAFFIC)

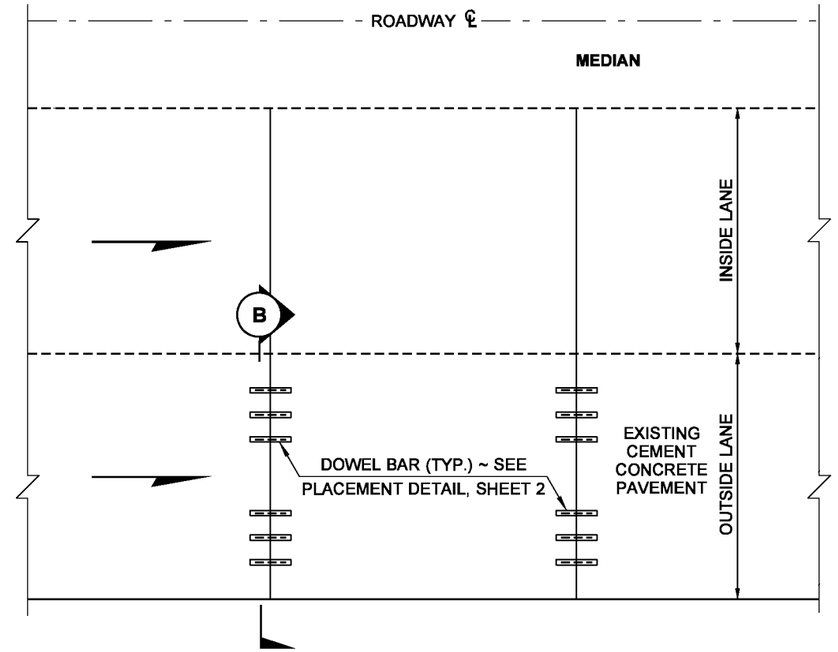

PLAN VIEW

DOWEL BAR RETROFIT FOR ONE LANE

DIVIDED HIGHWAY (ONE WAY TRAFFIC)

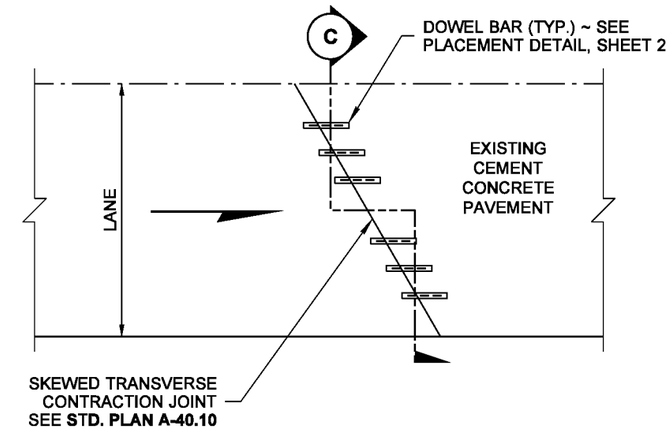

PLAN VIEW

SKEWED JOINT DETAIL

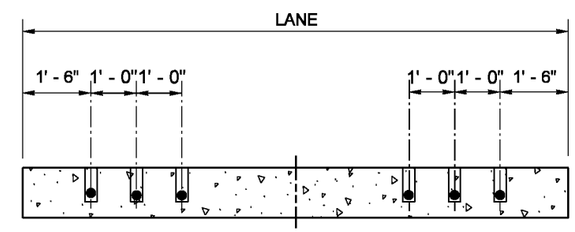

SECTION C

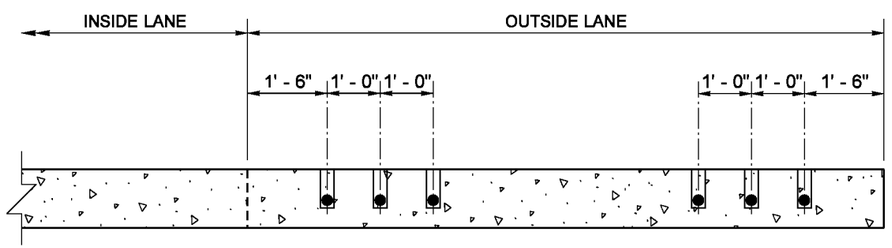

SECTION B

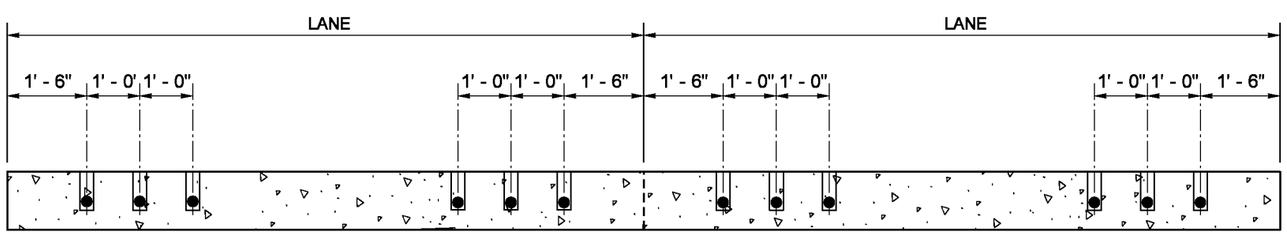

SECTION A

NOTE: THIS PLAN IS NOT A LEGAL ENGINEERING DOCUMENT BUT AN ELECTRONIC DUPLICATE. THE ORIGINAL, SIGNED BY THE ENGINEER AND APPROVED FOR PUBLICATION, IS KEPT ON FILE AT THE WASHINGTON STATE DEPARTMENT OF TRANSPORTATION. A COPY MAY BE OBTAINED UPON REQUEST.

DOWEL BAR RETROFIT FOR CEMENT CONCRETE PAVEMENT STANDARD PLAN A-60.20-02

SHEET 1 OF 2 SHEETS

APPROVED FOR PUBLICATION

Pasco Bakotich III — STATE DESIGN ENGINEER
06-02-11 — DATE

Washington State Department of Transportation

EFFECTIVE: AUGUST 6, 2012 TO August 4, 2013
EFFECTIVE: AUGUST 6, 2012 TO August 4, 2013
EFFECTIVE: AUGUST 6, 2012 TO August 4, 2013
EFFECTIVE: AUGUST 6, 2012 TO August 4, 2013
EFFECTIVE: AUGUST 6, 2012 TO August 4, 2013
EFFECTIVE: AUGUST 6, 2012 TO August 4, 2013

EFFECTIVE: AUGUST 6, 2012 TO August 4, 2013
EFFECTIVE: AUGUST 6, 2012 TO August 4, 2013

DRAWN BY: FERN LIDDELL

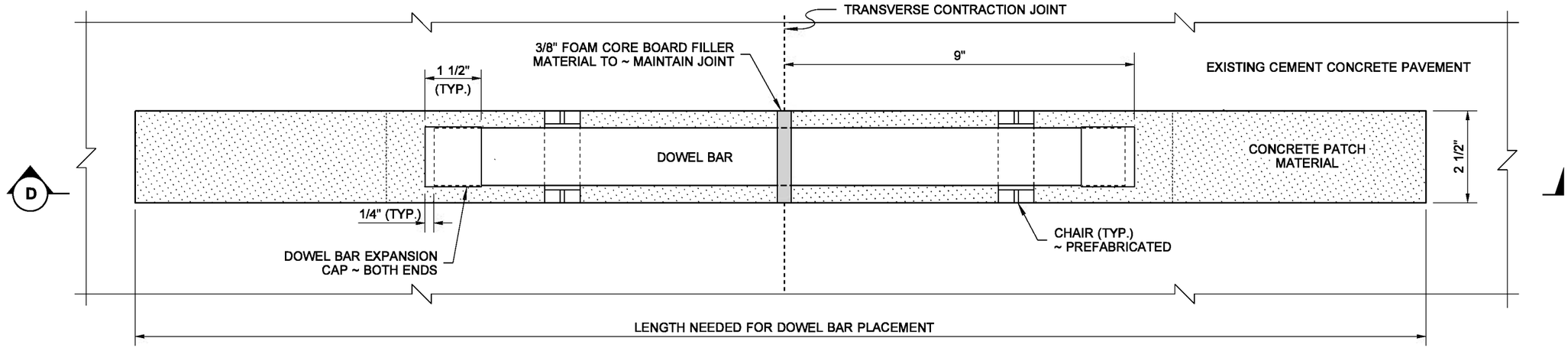

PLAN VIEW

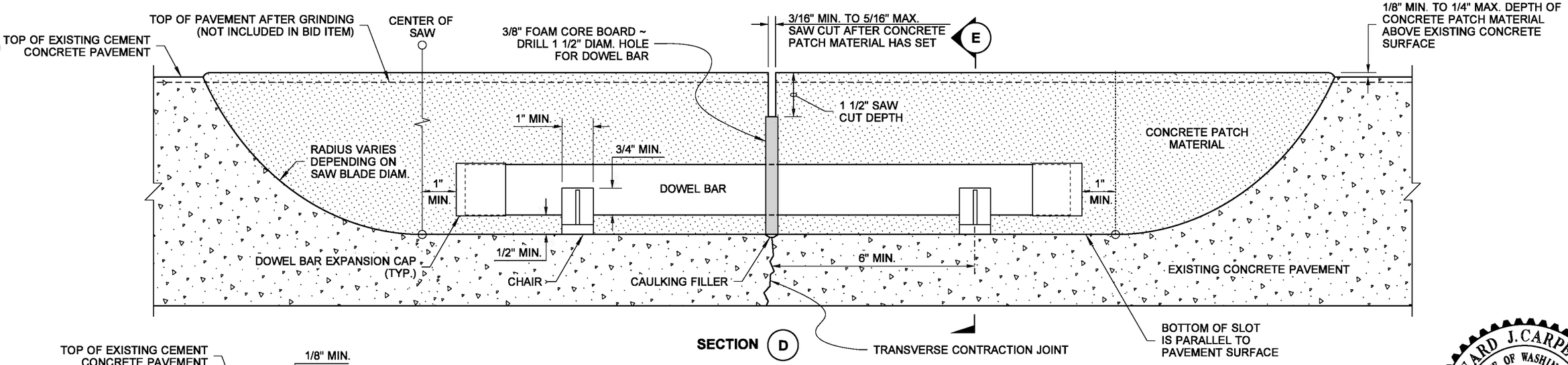

SECTION D

DOWEL BAR PLACEMENT DETAIL

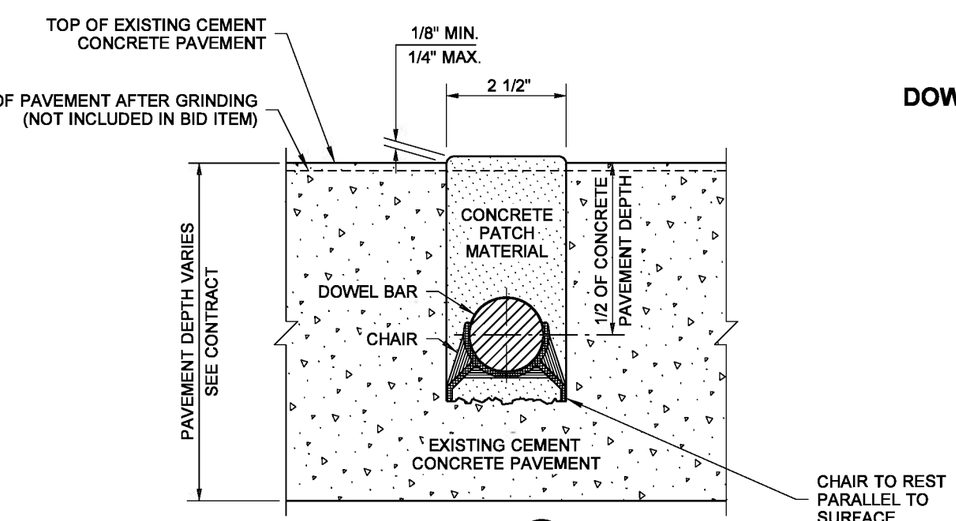

SECTION E

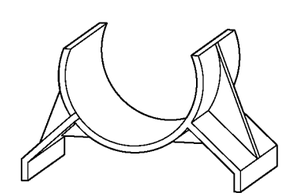

CHAIR DETAIL

EDWARD J. CARPENTER
STATE OF WASHINGTON
29635
REGISTERED
PROFESSIONAL ENGINEER

NOTE: THIS PLAN IS NOT A LEGAL ENGINEERING DOCUMENT BUT AN ELECTRONIC DUPLICATE. THE ORIGINAL, SIGNED BY THE ENGINEER AND APPROVED FOR PUBLICATION, IS KEPT ON FILE AT THE WASHINGTON STATE DEPARTMENT OF TRANSPORTATION. A COPY MAY BE OBTAINED UPON REQUEST.

DOWEL BAR RETROFIT FOR CEMENT CONCRETE PAVEMENT STANDARD PLAN A-60.20-02

SHEET 2 OF 2 SHEETS

APPROVED FOR PUBLICATION

Pasco Bakotich III — STATE DESIGN ENGINEER

06-02-11 — DATE

Washington State Department of Transportation

EFFECTIVE: AUGUST 6, 2012 TO August 4, 2013
EFFECTIVE: AUGUST 6, 2012 TO August 4, 2013
EFFECTIVE: AUGUST 6, 2012 TO August 4, 2013
EFFECTIVE: AUGUST 6, 2012 TO August 4, 2013

EFFECTIVE: AUGUST 6, 2012 TO August 4, 2013
EFFECTIVE: AUGUST 6, 2012 TO August 4, 2013

DRAWN BY: MARK SUJKA

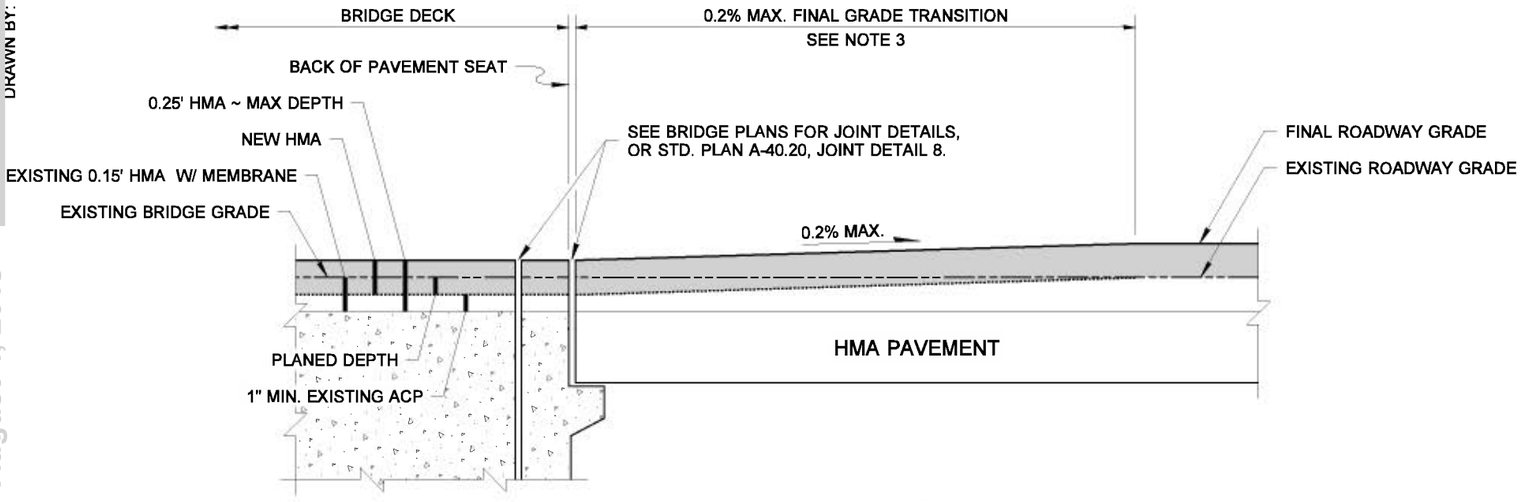

ELEVATION VIEW

HMA OVERLAY WITHOUT BRIDGE APPROACH SLAB

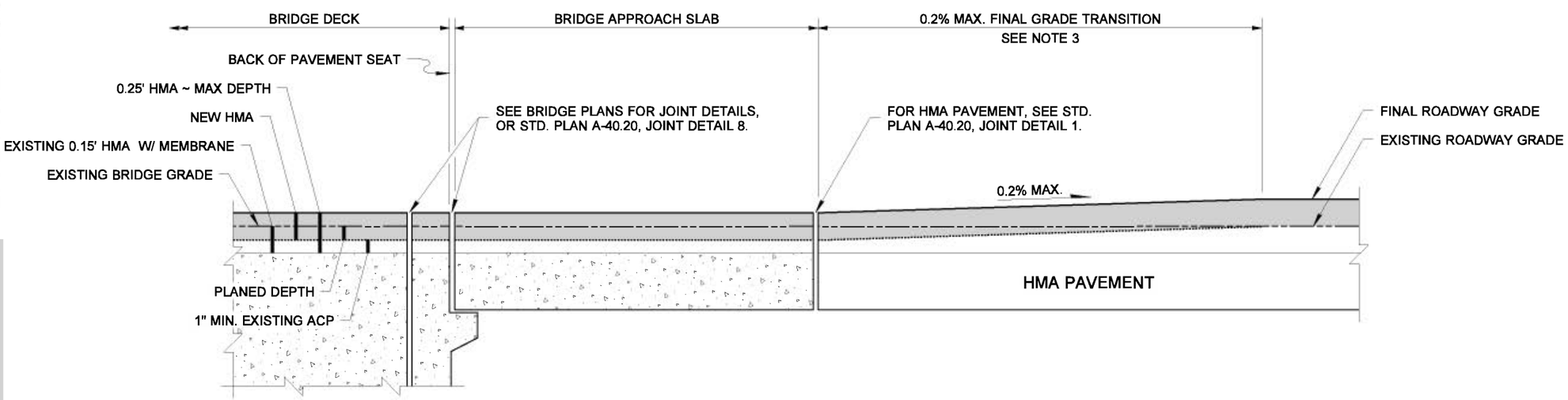

ELEVATION VIEW

HMA OVERLAY WITH BRIDGE APPROACH SLAB

NOTES

1. A typical bridge overlay will remove 0.07 feet of Asphaltic Concrete Pavement (ACP) and place 0.15 feet of new Hot Mixed Asphalt (HMA). Depth of removal and placement will vary for each bridge. Total depth of HMA on the bridge shall not exceed 0.25 feet, unless shown otherwise in the plans.
2. If the existing depth of asphalt on the bridge deck is 0.25 feet, then the overlay will remove 0.15 feet of ACP and place 0.15 feet of new HMA. The existing bridge grade will remain unchanged.
3. FINAL GRADE TRANSITION: The maximum longitudinal taper slope to transition an increase in roadway grade to the new or existing bridge grade will be at most 1 inch rise to 40 feet run (1V:480H or flatter) (0.2% maximum). If several overlays are present, extended taper lengths shall be required to maintain the transition slope (1V:480H or flatter) (0.2% maximum).
4. If the ACP and membrane is to be removed from the bridge deck, see GSP 023106 for deck preparation before placing new membrane.
5. In accordance with Standard Specification 5-05.3(12), when pavement abuts bridges, the finished pavement parallel to centerline shall be uniform to a degree that no variations greater than 1/8-inch are present when tested with a 10-foot straightedge.

NOTE: THIS PLAN IS NOT A LEGAL ENGINEERING DOCUMENT BUT AN ELECTRONIC DUPLICATE. THE ORIGINAL, SIGNED BY THE ENGINEER AND APPROVED FOR PUBLICATION, IS KEPT ON FILE AT THE WASHINGTON STATE DEPARTMENT OF TRANSPORTATION. A COPY MAY BE OBTAINED UPON REQUEST.

BRIDGE DECK TRANSITION FOR HMA OVERLAY

STANDARD PLAN A-60.30-00

SHEET 1 OF 1 SHEET

APPROVED FOR PUBLICATION

Pasco Bakotich III — STATE DESIGN ENGINEER

11-8-07 — DATE

Washington State Department of Transportation

EFFECTIVE: AUGUST 6, 2012 TO August 4, 2013
EFFECTIVE: AUGUST 6, 2012 TO August 4, 2013
EFFECTIVE: AUGUST 6, 2012 TO August 4, 2013
EFFECTIVE: AUGUST 6, 2012 TO August 4, 2013

EFFECTIVE: AUGUST 6, 2012 TO August 4, 2013
EFFECTIVE: AUGUST 6, 2012 TO August 4, 2013

DRAWN BY: TERN LIDDELL

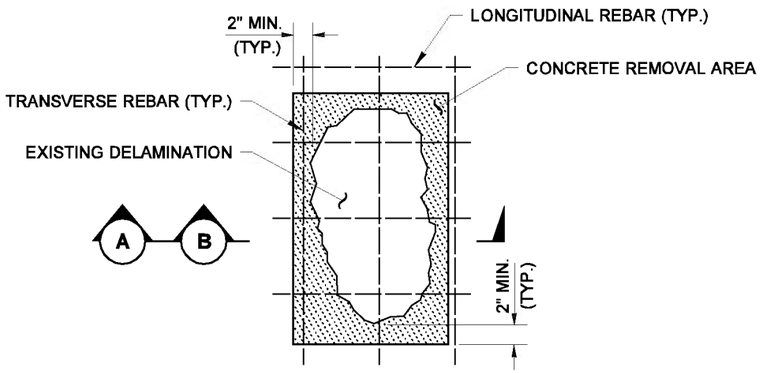

PLAN VIEW

FOR DELAMINATION AND FULL DEPTH REPAIR

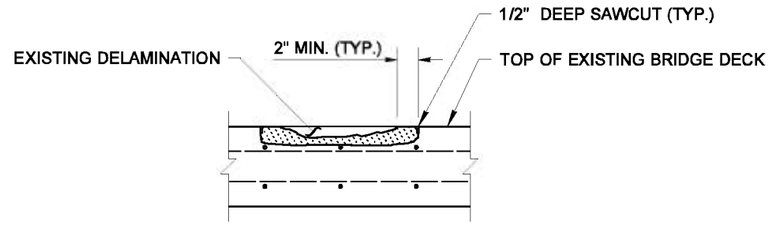

DELAMINATION SECTION (A)

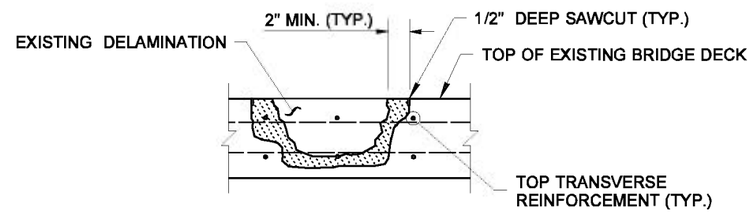

FULL DEPTH REPAIR SECTION (B)

DELAMINATION AND FULL DEPTH REPAIR

NOTES

1. If a zone has rebar section loss or full depth repairs, then the concrete deck repair in each zone shall achieve 3,000 PSI before progressing to the adjacent zone.
2. Remove all concrete 3/4" minimum clearance around all exposed reinforcement bars in accordance with Standard Specification 6-09.3(6).
3. For tension zones of continuous structures, when a longitudinal reinforcement bar has greater than 20% section loss (or damage), remove concrete a minimum of 3' - 6" on each side of section loss and place 2 supplemental reinforcement bars, adjacent and parallel to the deficient bar, extending 3' - 0" beyond each side having 20% section loss. Mechanical splices may be used to facilitate placement of #4 reinforcement bars.
4. For typical rebar repairs, when the reinforcement has greater than 20% section loss (or damage), remove concrete a minimum of 2' - 6" on each side of section loss, and replace with new supplemental reinforcement, same diameter as original, adjacent and parallel to the deficient bar, extending 2' - 3" beyond each end of section having 20% section loss.

LEGEND

CONCRETE REMOVAL AREA

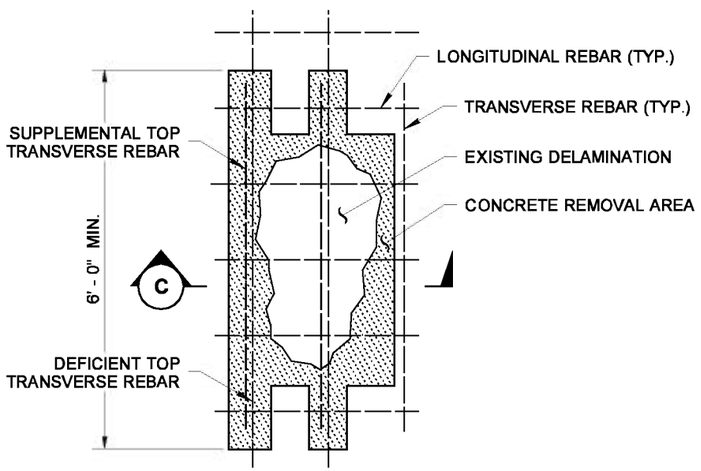

PLAN VIEW

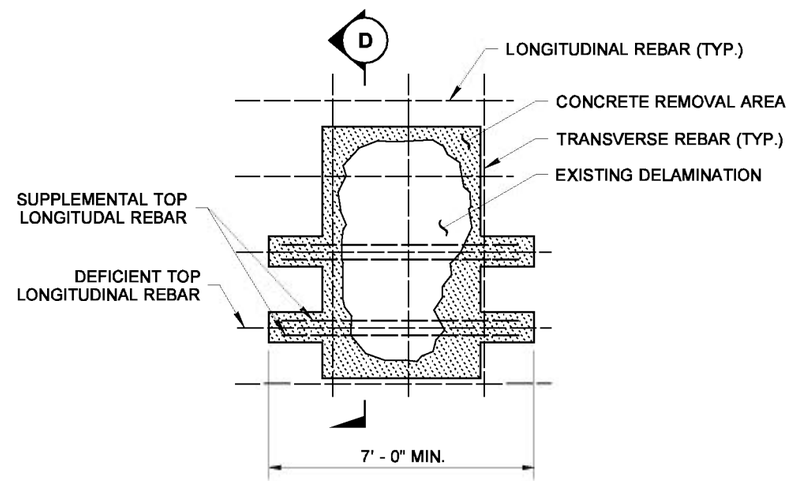

PLAN VIEW

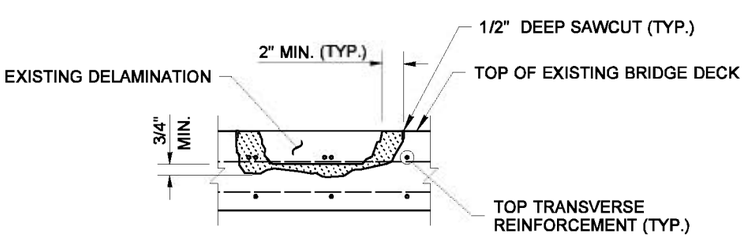

SECTION (C)

TRANSVERSE REBAR REPAIR

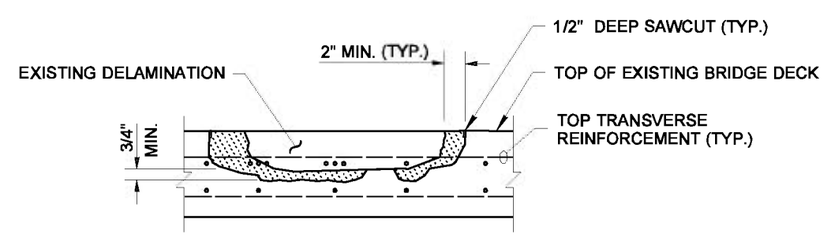

SECTION (D)

LONGITUDINAL REBAR REPAIR

(FOR CONTINUOUS STRUCTURES)

EXPIRES AUGUST 23, 2008

NOTE: THIS PLAN IS NOT A LEGAL ENGINEERING DOCUMENT BUT AN ELECTRONIC DUPLICATE. THE ORIGINAL, SIGNED BY THE ENGINEER AND APPROVED FOR PUBLICATION, IS KEPT ON FILE AT THE WASHINGTON STATE DEPARTMENT OF TRANSPORTATION. A COPY MAY BE OBTAINED UPON REQUEST.

HMA OVERLAY FURTHER DECK PREPARATION

STANDARD PLAN A-60.40.00

SHEET 1 OF 1 SHEET

APPROVED FOR PUBLICATION

Pasco Bakotich III — STATE DESIGN ENGINEER

08-31-07 — DATE

Washington State Department of Transportation

EFFECTIVE: AUGUST 6, 2012 TO August 4, 2013
EFFECTIVE: AUGUST 6, 2012 TO August 4, 2013
EFFECTIVE: AUGUST 6, 2012 TO August 4, 2013
EFFECTIVE: AUGUST 6, 2012 TO August 4, 2013

EFFECTIVE: AUGUST 6, 2012 TO August 4, 2013
EFFECTIVE: AUGUST 6, 2012 TO August 4, 2013

DRAWN BY: LISA CYFORD

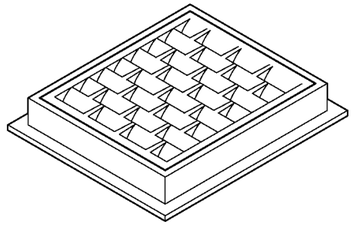

FRAME AND VANED GRATE

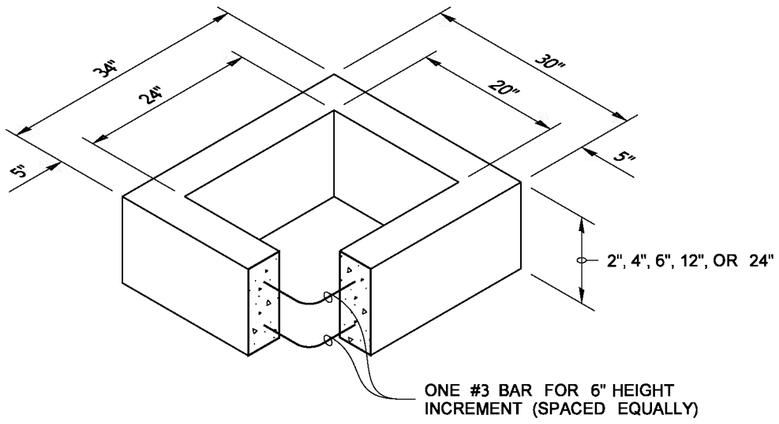

RECTANGULAR ADJUSTMENT SECTION

PIPE ALLOWANCES	
PIPE MATERIAL	MAXIMUM INSIDE DIAMETER
REINFORCED OR PLAIN CONCRETE	12"
ALL METAL PIPE	15"
CPSSP * (STD. SPEC. 9-05.20)	12"
SOLID WALL PVC (STD. SPEC. 9-05.12(1))	15"
PROFILE WALL PVC (STD. SPEC. 9-05.12(2))	15"

* CORRUGATED POLYETHYLENE STORM SEWER PIPE

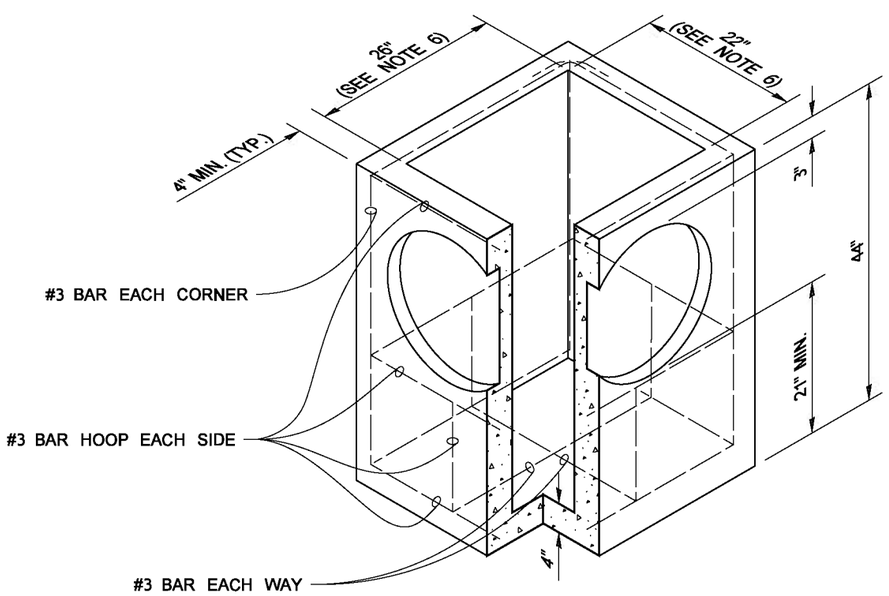

PRECAST BASE SECTION

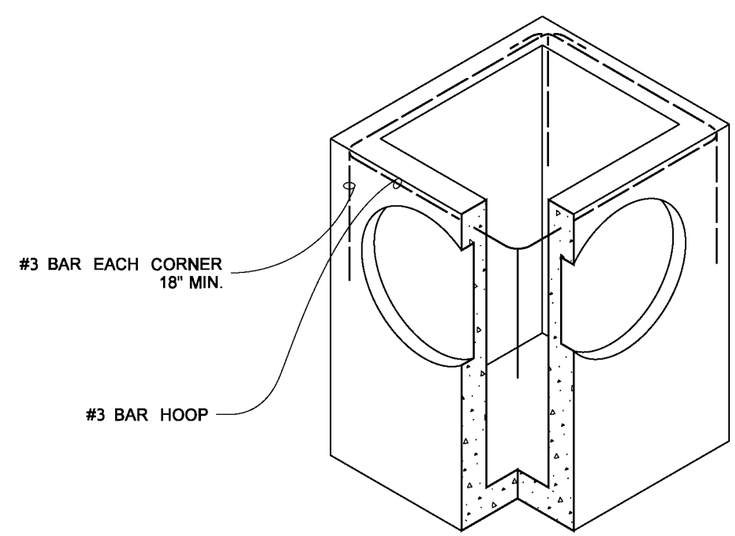

(SEE NOTE 1)

ALTERNATIVE PRECAST BASE SECTION

NOTES

1. As acceptable alternatives to the rebar shown in the PRECAST BASE SECTION, fibers (placed according to the Standard Specifications), or wire mesh having a minimum area of 0.12 square inches per foot shall be used with the minimum required rebar shown in the ALTERNATIVE PRECAST BASE SECTION. Wire mesh shall not be placed in the knockouts.
2. The knockout diameter shall not be greater than 20". Knockouts shall have a wall thickness of 2" minimum to 2.5" maximum. Provide a 1.5" minimum gap between the knockout wall and the outside of the pipe. After the pipe is installed, fill the gap with joint mortar in accordance with Standard Specification 9-04.3.
3. The maximum depth from the finished grade to the lowest pipe invert shall be 5'.
4. The frame and grate may be installed with the flange down, or integrally cast into the adjustment section with flange up.
5. The Precast Base Section may have a rounded floor, and the walls may be sloped at a rate of 1:24 or steeper.
6. The opening shall be measured at the top of the Precast Base Section.
7. All pickup holes shall be grouted full after the basin has been placed.

NOTE: THIS PLAN IS NOT A LEGAL ENGINEERING DOCUMENT BUT AN ELECTRONIC DUPLICATE. THE ORIGINAL, SIGNED BY THE ENGINEER AND APPROVED FOR PUBLICATION, IS KEPT ON FILE AT THE WASHINGTON STATE DEPARTMENT OF TRANSPORTATION. A COPY MAY BE OBTAINED UPON REQUEST.

CATCH BASIN TYPE 1

STANDARD PLAN B-5.20-01

SHEET 1 OF 1 SHEET

APPROVED FOR PUBLICATION

Pasco Bakotich III — 06-16-11

STATE DESIGN ENGINEER — DATE

Washington State Department of Transportation

EFFECTIVE: AUGUST 6, 2012 TO August 4, 2013
EFFECTIVE: AUGUST 6, 2012 TO August 4, 2013
EFFECTIVE: AUGUST 6, 2012 TO August 4, 2013
EFFECTIVE: AUGUST 6, 2012 TO August 4, 2013

EFFECTIVE: AUGUST 6, 2012 TO August 4, 2013
EFFECTIVE: AUGUST 6, 2012 TO August 4, 2013

DRAWN BY: LISA CYFORD

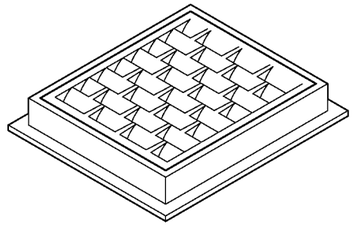

FRAME AND VANED GRATE

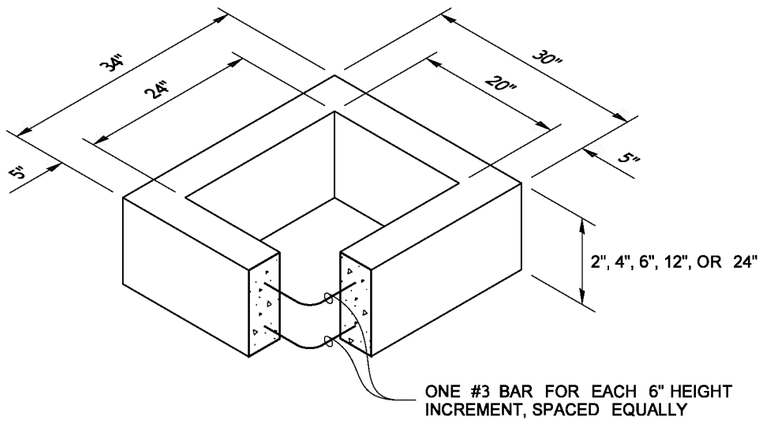

RECTANGULAR ADJUSTMENT SECTION

PIPE ALLOWANCES	
PIPE MATERIAL	MAXIMUM INSIDE DIAMETER
REINFORCED OR PLAIN CONCRETE	18"
ALL METAL PIPE	21"
CPSSP * (STD. SPEC. 9-05.20)	18"
SOLID WALL PVC (STD. SPEC. 9-05.12(1))	21"
PROFILE WALL PVC (STD. SPEC. 9-05.12(2))	21"

* CORRUGATED POLYETHYLENE STORM SEWER PIPE

NOTES

1. As acceptable alternatives to the rebar shown in the **PRECAST BASE SECTION**, fibers (placed according to the Standard Specifications), or wire mesh having a minimum area of 0.12 square inches per foot, shall be used with the minimum required rebar shown in the ALTERNATIVE **PRECAST BASE SECTION**. Wire mesh shall not be placed in the knockouts.
2. The knockout shall not be greater than 26", in any direction. Knockouts shall have a wall thickness of 2" minimum to 2.5" maximum. Provide a 1.5" minimum gap between the knockout wall and the outside of the pipe. After the pipe is installed, fill the gap with joint mortar in accordance with **Standard Specification 9-04.3**.
3. The maximum depth from the finished grade to the lowest pipe invert shall be 5'.
4. The frame and grate may be installed with the flange down or integrally cast into the adjustment section with flange up.
5. The Precast Base Section may have a rounded floor, and the walls may be sloped at a rate of 1:24 or steeper.
6. The opening shall be measured at the top of the Precast Base Section.
7. All pickup holes shall be grouted full after the basin has been placed.

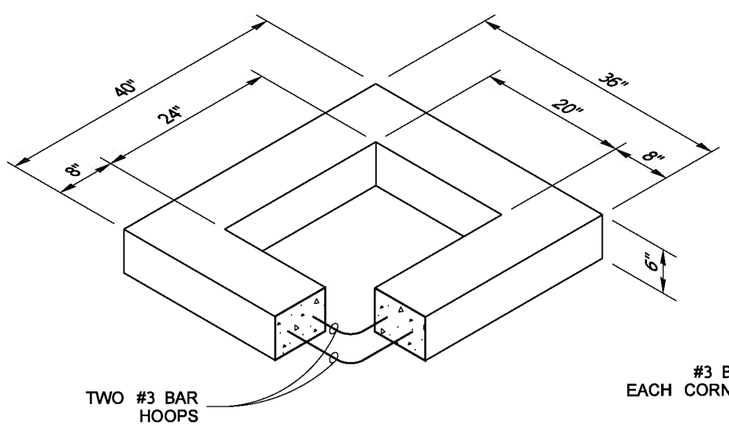

REDUCING SECTION

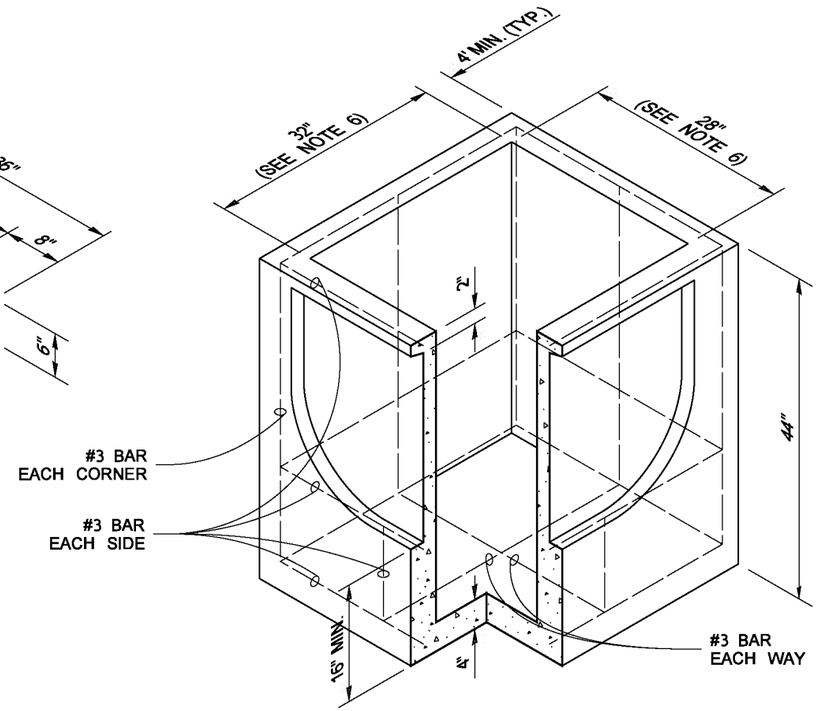

PRECAST BASE SECTION

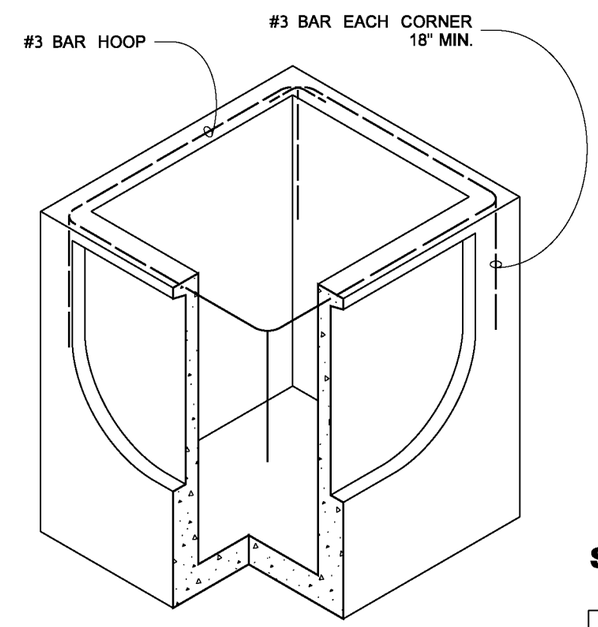

(SEE NOTE 1)

ALTERNATIVE PRECAST BASE SECTION

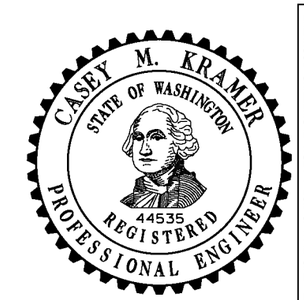

NOTE: THIS PLAN IS NOT A LEGAL ENGINEERING DOCUMENT BUT AN ELECTRONIC DUPLICATE. THE ORIGINAL, SIGNED BY THE ENGINEER AND APPROVED FOR PUBLICATION, IS KEPT ON FILE AT THE WASHINGTON STATE DEPARTMENT OF TRANSPORTATION. A COPY MAY BE OBTAINED UPON REQUEST.

CATCH BASIN TYPE 1L

STANDARD PLAN B-5.40-01

SHEET 1 OF 1 SHEET

APPROVED FOR PUBLICATION

Pasco Bakotich III — 06-16-11

STATE DESIGN ENGINEER — DATE

Washington State Department of Transportation

EFFECTIVE: AUGUST 6, 2012 TO August 4, 2013
EFFECTIVE: AUGUST 6, 2012 TO August 4, 2013
EFFECTIVE: AUGUST 6, 2012 TO August 4, 2013
EFFECTIVE: AUGUST 6, 2012 TO August 4, 2013

EFFECTIVE: AUGUST 6, 2012 TO August 4, 2013
EFFECTIVE: AUGUST 6, 2012 TO August 4, 2013

DRAWN BY: LISA CYFORD

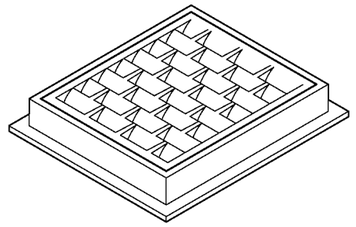

FRAME AND VANED GRATE

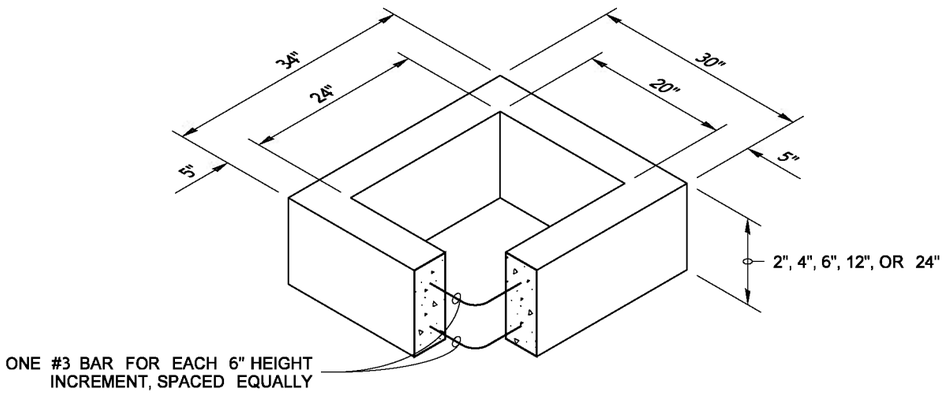

RECTANGULAR ADJUSTMENT SECTION

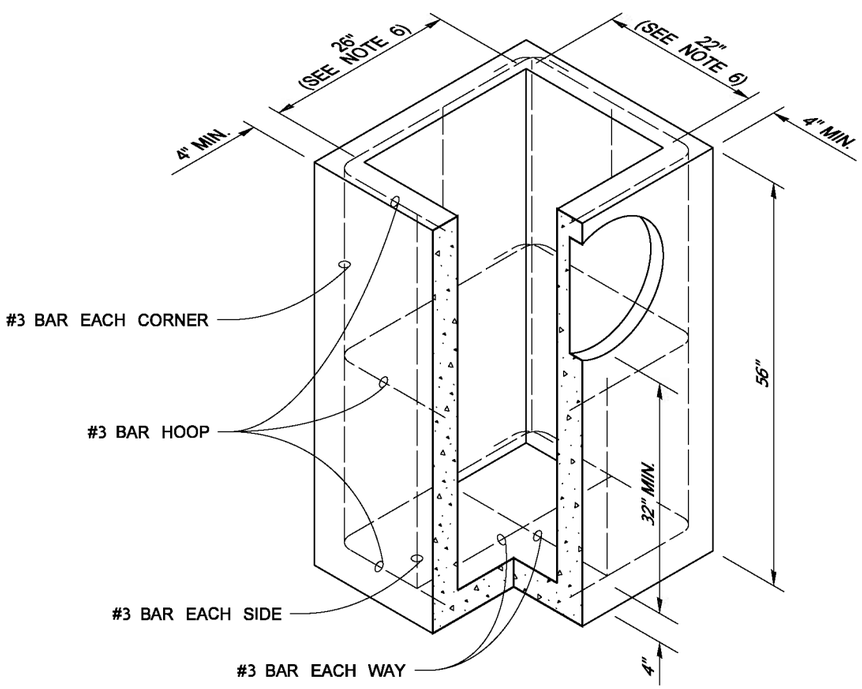

PRECAST BASE SECTION

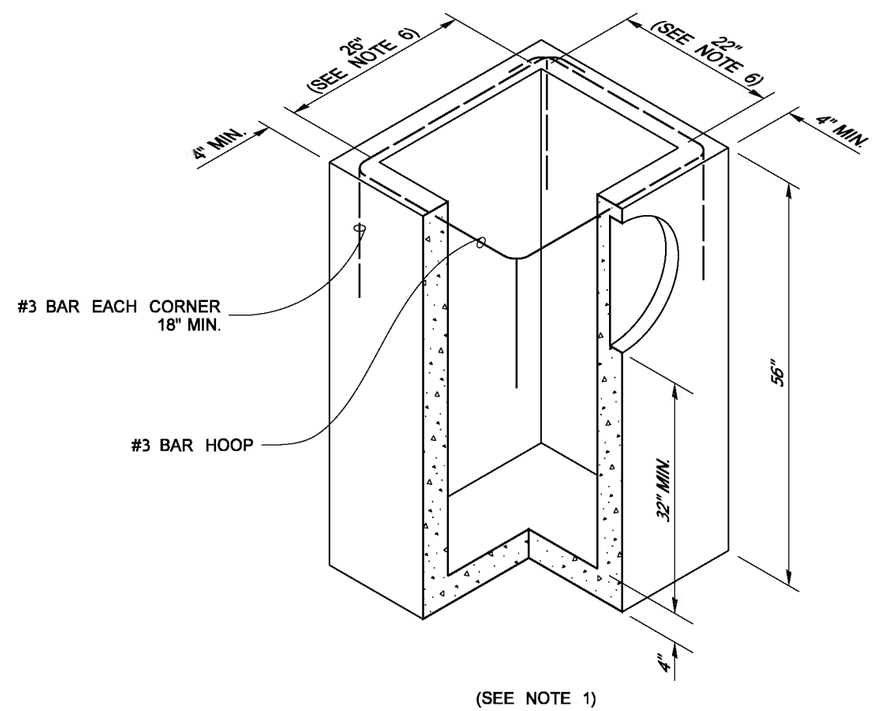

ALTERNATIVE PRECAST BASE SECTION

NOTES

1. As acceptable alternatives to the rebar shown in the **PRECAST BASE SECTION**, fibers (placed according to the Standard Specifications), or wire mesh having a minimum area of 0.12 square inches per foot, shall be used with the minimum required rebar shown in the ALTERNATIVE **PRECAST BASE SECTION**. Wire mesh shall not be placed in the knockouts.

2. The knockout diameter shall not be greater than 18". Knockouts shall have a wall thickness of 2" minimum to 2.5" maximum. Provide a 1.5" minimum gap between the knockout wall and the outside of the pipe. After the pipe is installed, fill the gap with joint mortar in accordance with **Standard Specification 9-04.3**.

3. The maximum depth from the finished grade to the lowest pipe invert shall be 5'.

4. The frame and grate may be installed with the flange down, or integrally cast into the adjustment section with flange up.

5. The Precast Base Section may have a rounded floor, and the walls may be sloped at a rate of 1:24 or steeper.

6. The opening shall be measured at the top of the Precast Base Section.

7. All pickup holes shall be grouted full after the basin has been placed.

NOTE: THIS PLAN IS NOT A LEGAL ENGINEERING DOCUMENT BUT AN ELECTRONIC DUPLICATE. THE ORIGINAL, SIGNED BY THE ENGINEER AND APPROVED FOR PUBLICATION, IS KEPT ON FILE AT THE WASHINGTON STATE DEPARTMENT OF TRANSPORTATION. A COPY MAY BE OBTAINED UPON REQUEST.

CATCH BASIN TYPE 1P (FOR PARKING LOT)

STANDARD PLAN B-5.60-01

SHEET 1 OF 1 SHEET

APPROVED FOR PUBLICATION

Pasco Bakotich III — STATE DESIGN ENGINEER
06-16-11 — DATE

Washington State Department of Transportation

EFFECTIVE: AUGUST 6, 2012 TO August 4, 2013
EFFECTIVE: AUGUST 6, 2012 TO August 4, 2013
EFFECTIVE: AUGUST 6, 2012 TO August 4, 2013
EFFECTIVE: AUGUST 6, 2012 TO August 4, 2013

EFFECTIVE: AUGUST 6, 2012 TO August 4, 2013
EFFECTIVE: AUGUST 6, 2012 TO August 4, 2013

DRAWN BY: LISA CYFORD

NOTES

1. No steps are required when height is 4' or less.
2. The bottom of the precast catch basin may be sloped to facilitate cleaning.
3. The rectangular frame and grate may be installed with the flange up or down. The frame may be cast into the adjustment section.
4. Knockouts shall have a wall thickness of 2" minimum to 2.5" maximum. Provide a 1.5" minimum gap between the knockout wall and the outside of the pipe. After the pipe is installed, fill the gap with joint mortar in accordance with **Standard Specification 9-04.3.**

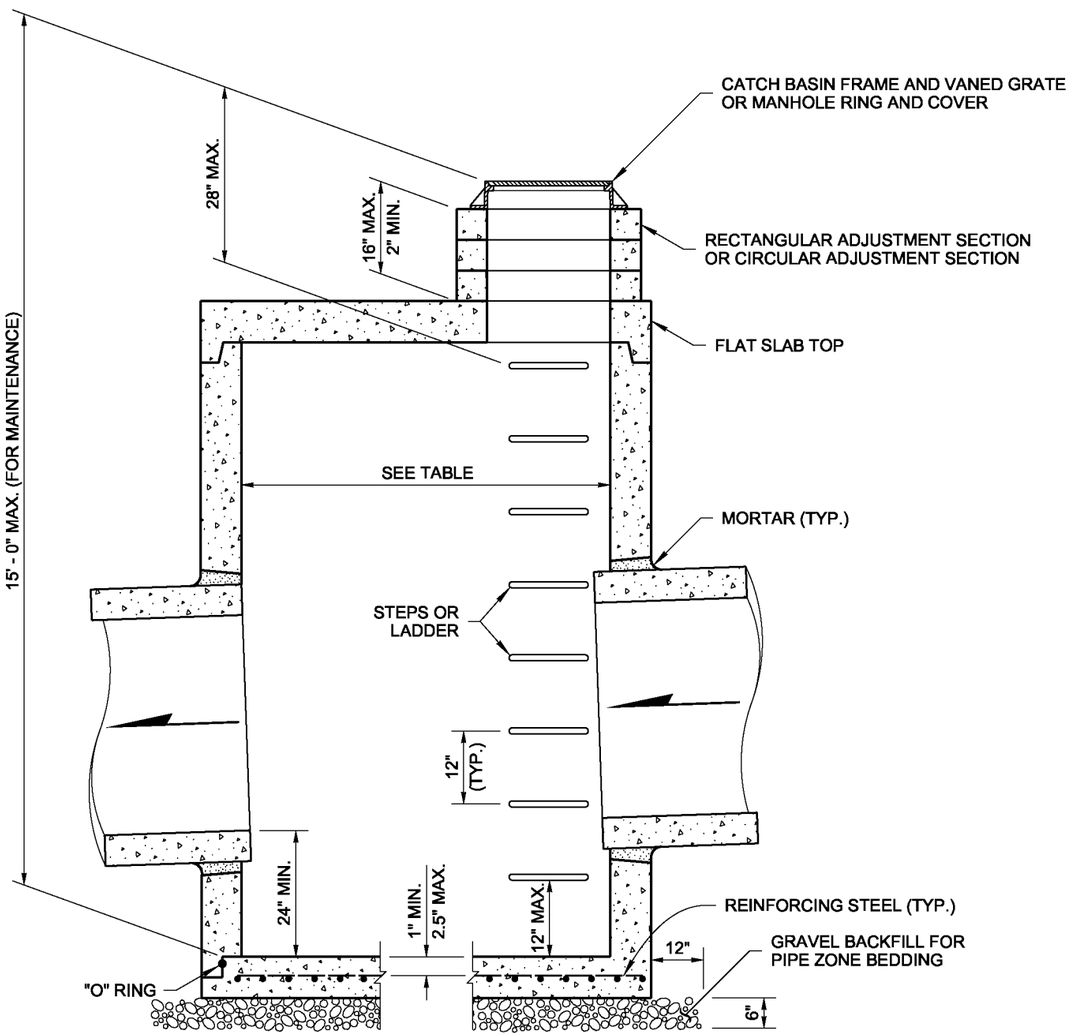

CATCH BASIN DIMENSIONS

CATCH BASIN DIAMETER	MIN. WALL THICKNESS	MIN. BASE THICKNESS	MAXIMUM KNOCKOUT SIZE	MINIMUM DISTANCE BETWEEN KNOCKOUTS
48"	4"	6"	36"	8"
54"	4.5"	8"	42"	8"
60"	5"	8"	48"	8"
72"	6"	8"	60"	12"
84"	8"	12"	72"	12"
96"	8"	12"	84"	12"
120"	10"	12"	96"	12"
144"	12"	12"	108"	12"

PIPE ALLOWANCES

CATCH BASIN DIAMETER	PIPE MATERIAL WITH MAXIMUM INSIDE DIAMETER				
	CONCRETE	ALL METAL	CPSSP ①	SOLID WALL PVC ②	PROFILE WALL PVC ③
48"	24"	30"	24"	30"	30"
54"	30"	36"	30"	36"	36"
60"	36"	42"	36"	42"	42"
72"	42"	54"	42"	48"	48"
84"	54"	60"	54"	48"	48"
96"	60"	72"	60"	48"	48"
120"	66"	84"	60"	48"	48"
144"	78"	96"	60"	48"	48"

① Corrugated Polyethylene Storm Sewer Pipe **(Standard Specification 9-05.20)**
② **(Standard Specification 9-05.12(1))**
③ **(Standard Specification 9-05.12(2))**

NOTE: THIS PLAN IS NOT A LEGAL ENGINEERING DOCUMENT BUT AN ELECTRONIC DUPLICATE. THE ORIGINAL, SIGNED BY THE ENGINEER AND APPROVED FOR PUBLICATION, IS KEPT ON FILE AT THE WASHINGTON STATE DEPARTMENT OF TRANSPORTATION. A COPY MAY BE OBTAINED UPON REQUEST.

CATCH BASIN TYPE 2

STANDARD PLAN B-10.20-01

SHEET 1 OF 1 SHEET

APPROVED FOR PUBLICATION

Pasco Bakotich III — STATE DESIGN ENGINEER
02-07-12 — DATE

Washington State Department of Transportation

EFFECTIVE: AUGUST 6, 2012 TO August 4, 2013
EFFECTIVE: AUGUST 6, 2012 TO August 4, 2013
EFFECTIVE: AUGUST 6, 2012 TO August 4, 2013
EFFECTIVE: AUGUST 6, 2012 TO August 4, 2013

EFFECTIVE: AUGUST 6, 2012 TO August 4, 2013
EFFECTIVE: AUGUST 6, 2012 TO August 4, 2013

DRAWN BY: MARK SUJKA

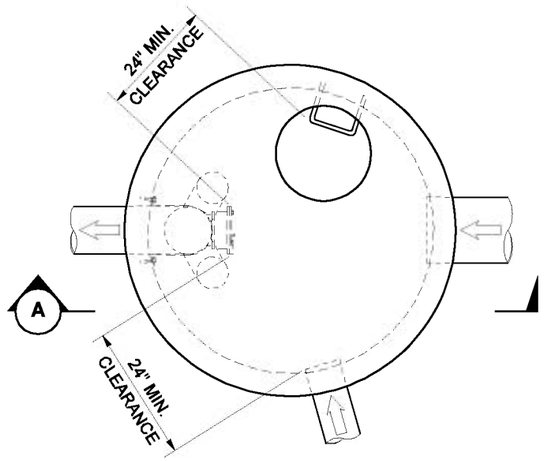

PLAN VIEW

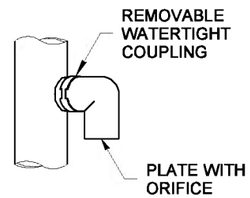

ELBOW DETAIL

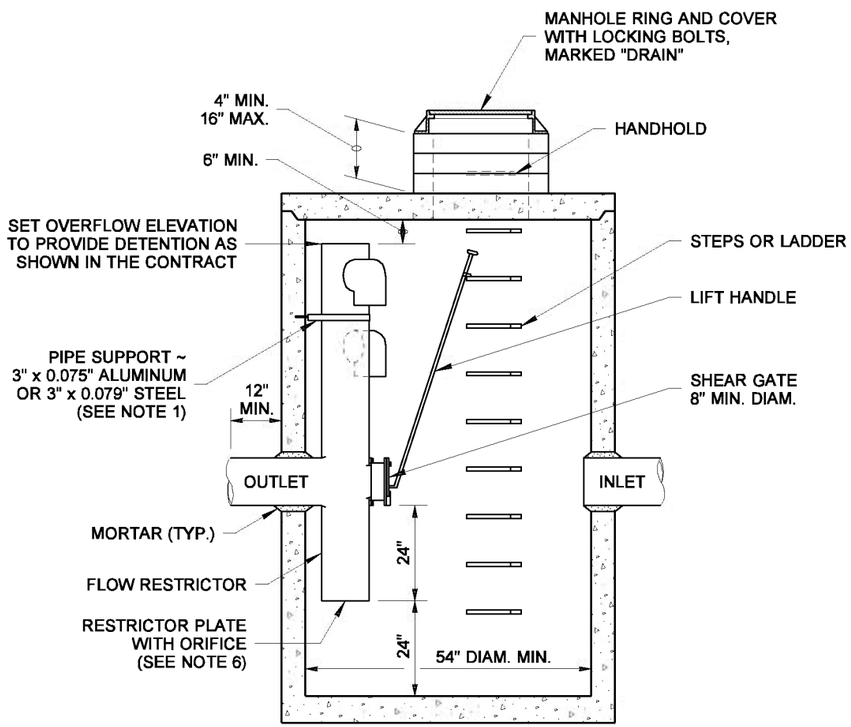

VIEW (A)

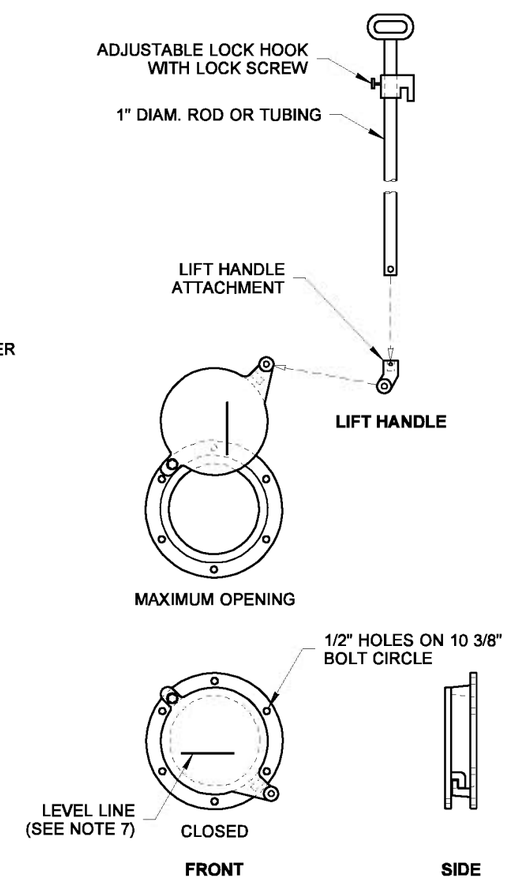

SHEAR GATE DETAILS

NOTES

1. The pipe supports and the flow restrictor shall be constructed of the same material and be anchored at a maximum spacing of 36". Attach the pipe supports to the manhole with 5/8" stainless steel expansion bolts or embed the supports into the manhole wall 2".
2. The vertical riser stem of the flow restrictor shall be the same diameter as the horizontal outlet pipe with a minimum diameter of 8".
3. The flow restrictor shall be fabricated from one of the following materials:

   0.060" Corrugated Aluminum Alloy Drain Pipe
   0.064" Corrugated Galvanized Steel Drain Pipe with Treatment 1
   0.064" Corrugated Aluminized Steel Drain Pipe
   0.060" Aluminum alloy flat sheet, in accordance with ASTM B 209, 5052 H32 or EPS
   High Density Polyethylene Storm Sewer Pipe
4. The frame and ladder or steps are to be offset so that: the shear gate is visible from the top; the climb-down space is clear of the riser and gate; the frame is clear of the curb.
5. The multi-orifice elbows may be located as shown, or all placed on one side of the riser to assure ladder clearance. The size of the elbows and their placement shall be specified in the Contract.
6. Restrictor plate with orifice as specified in the Contract. The opening is to be cut round and smooth.
7. The shear gate shall be made of aluminum alloy in accordance with ASTM B 26 and ASTM B 275, designation ZG32A; or cast iron in accordance with ASTM A 48, Class 30B.

   The lift handle shall be made of a similar metal to the gate (to prevent galvanic corrosion), it may be of solid rod or hollow tubing, with adjustable hook as required.

   A neoprene rubber gasket is required between the riser mounting flange and the gate flange.

   Install the gate so that the level-line mark is level when the gate is closed.

   The mating surfaces of the lid and the body shall be machined for proper fit.

   All shear gate bolts shall be stainless steel.
8. The shear gate maximum opening shall be controlled by limited hinge movement, a stop tab, or some other device.
9. Alternative shear gate designs are acceptable if material specifications are met and flange bolt pattern matches.

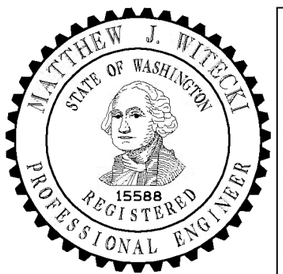

EXPIRES JULY 1, 2007

NOTE: THIS PLAN IS NOT A LEGAL ENGINEERING DOCUMENT BUT AN ELECTRONIC DUPLICATE. THE ORIGINAL, SIGNED BY THE ENGINEER AND APPROVED FOR PUBLICATION, IS KEPT ON FILE AT THE WASHINGTON STATE DEPARTMENT OF TRANSPORTATION. A COPY MAY BE OBTAINED UPON REQUEST.

CATCH BASIN TYPE 2 WITH FLOW RESTRICTOR

STANDARD PLAN B-10.40-00

SHEET 1 OF 1 SHEET

APPROVED FOR PUBLICATION

Harold J. Peterfeso — STATE DESIGN ENGINEER
06-01-06 — DATE

Washington State Department of Transportation

EFFECTIVE: AUGUST 6, 2012 TO August 4, 2013
EFFECTIVE: AUGUST 6, 2012 TO August 4, 2013
EFFECTIVE: AUGUST 6, 2012 TO August 4, 2013
EFFECTIVE: AUGUST 6, 2012 TO August 4, 2013

EFFECTIVE: AUGUST 6, 2012 TO August 4, 2013
EFFECTIVE: AUGUST 6, 2012 TO August 4, 2013

DRAWN BY: ADAM COCHRAN

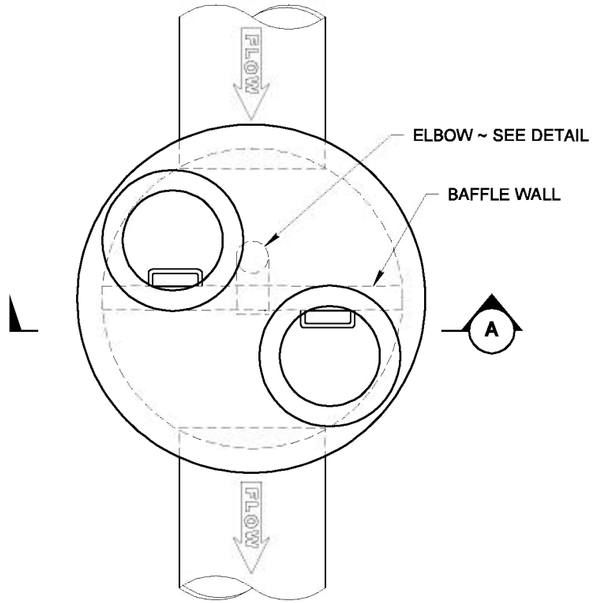

PLAN

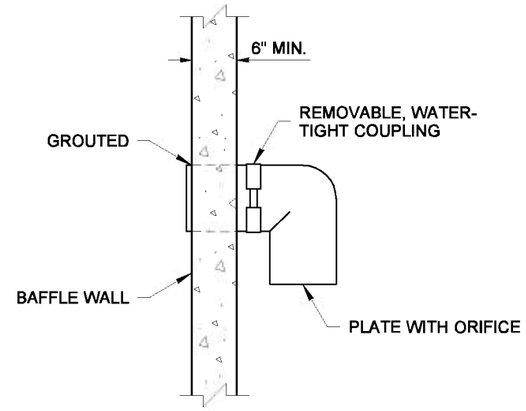

ELBOW DETAIL

NOTES

1. See Contract for size and location of all pipes and orifices.
2. Baffle wall shall have #4 Bar at 12" spacing each way.
3. Precast baffle shall be keyed and grouted in place.
4. Bottom orifice plate shall be galvanized steel with a minimum thickness of 1/4". Attach orifice with 1/2" stainless steel bolts.
5. Upper flow orifice plates and elbows shall be aluminum, aluminized steel or galvanized steel. Galvanized steel shall have Treatment 1.

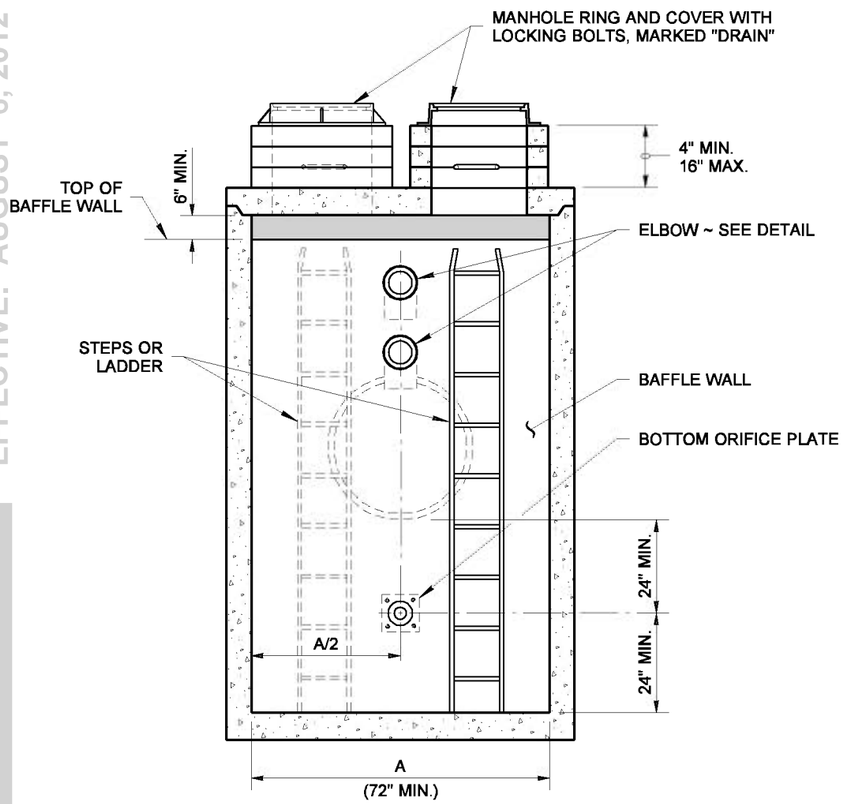

SECTION A

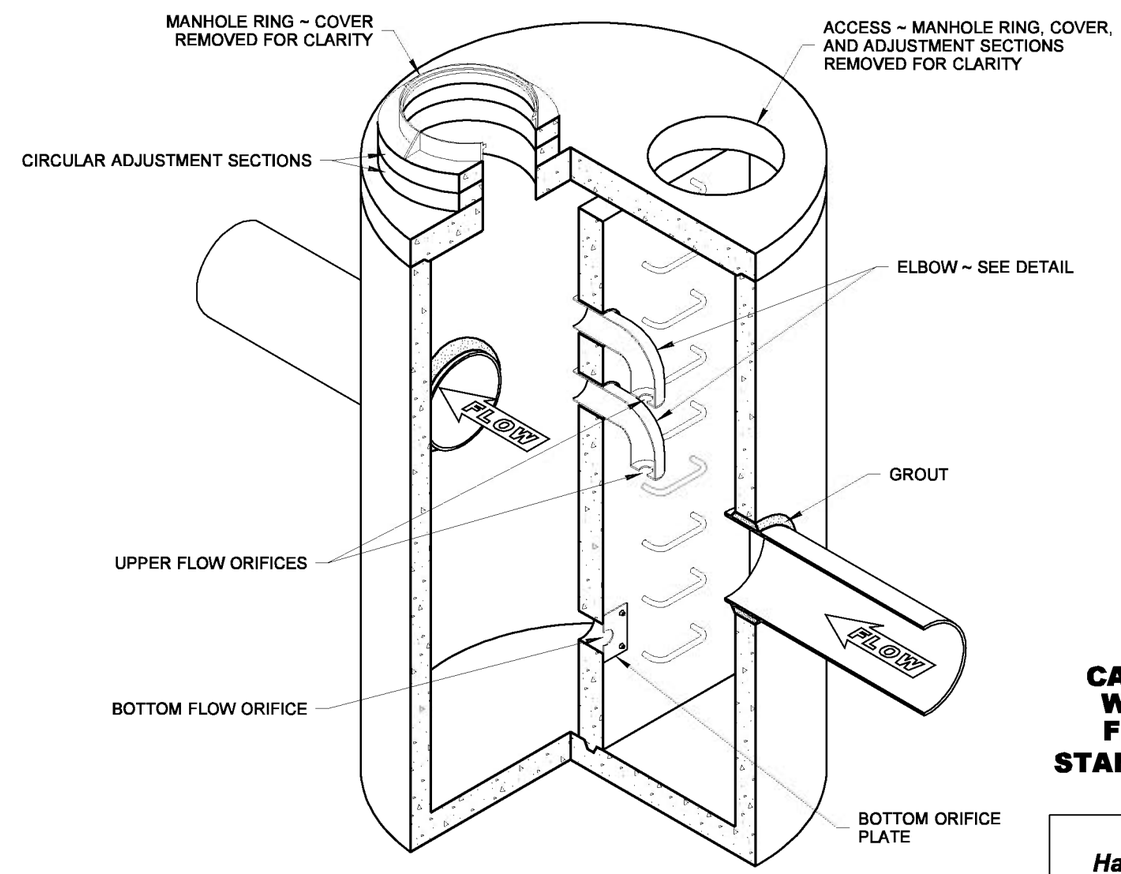

ISOMETRIC CUTAWAY

EXPIRES JULY 1, 2007

NOTE: THIS PLAN IS NOT A LEGAL ENGINEERING DOCUMENT BUT AN ELECTRONIC DUPLICATE. THE ORIGINAL, SIGNED BY THE ENGINEER AND APPROVED FOR PUBLICATION, IS KEPT ON FILE AT THE WASHINGTON STATE DEPARTMENT OF TRANSPORTATION. A COPY MAY BE OBTAINED UPON REQUEST.

CATCH BASIN TYPE 2 WITH BAFFLE TYPE FLOW RESTRICTOR STANDARD PLAN B-10.60-00

SHEET 1 OF 1 SHEET

APPROVED FOR PUBLICATION

Harold J. Peterfeso — STATE DESIGN ENGINEER

06-08-06 — DATE

Washington State Department of Transportation

EFFECTIVE: AUGUST 6, 2012 TO August 4, 2013
EFFECTIVE: AUGUST 6, 2012 TO August 4, 2013
EFFECTIVE: AUGUST 6, 2012 TO August 4, 2013
EFFECTIVE: AUGUST 6, 2012 TO August 4, 2013

EFFECTIVE: AUGUST 6, 2012 TO August 4, 2013
EFFECTIVE: AUGUST 6, 2012 TO August 4, 2013

DRAWN BY: LISA CYFORD

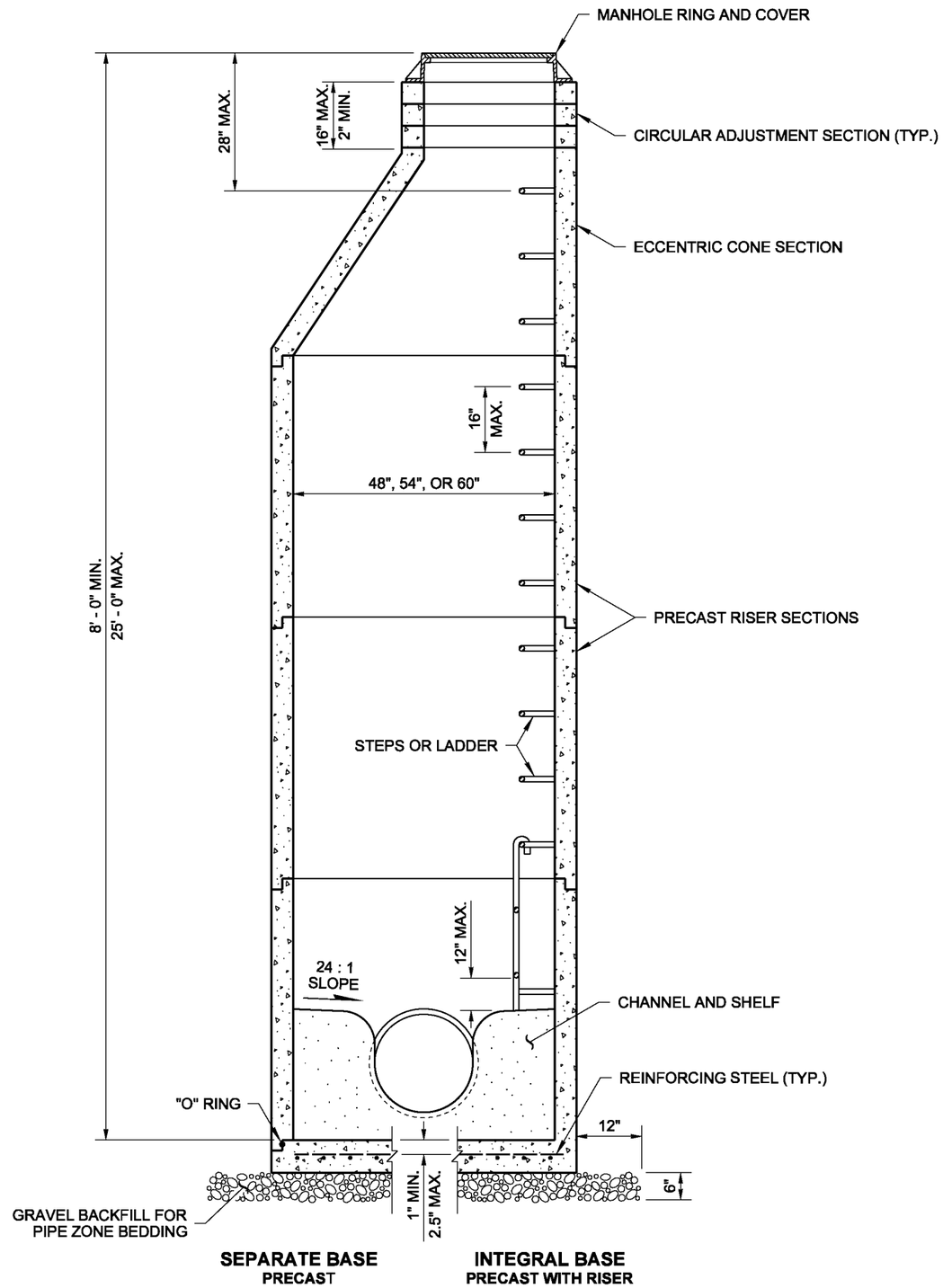

NOTES

1. Knockouts shall have a wall thickness of 2" minimum to 2.5" maximum.
2. For pipe allowances, see **Standard Plan B-10.20.**

MANHOLE DIMENSION TABLE

DIAM.	MIN. WALL THICKNESS	MIN. BASE THICKNESS	MAXIMUM KNOCKOUT SIZE	MINIMUM DISTANCE BETWEEN KNOCKOUTS
48"	4"	6"	36"	8"
54"	4.5"	8"	42"	8"
60"	5"	8"	48"	8"

NOTE: THIS PLAN IS NOT A LEGAL ENGINEERING DOCUMENT BUT AN ELECTRONIC DUPLICATE. THE ORIGINAL, SIGNED BY THE ENGINEER AND APPROVED FOR PUBLICATION, IS KEPT ON FILE AT THE WASHINGTON STATE DEPARTMENT OF TRANSPORTATION. A COPY MAY BE OBTAINED UPON REQUEST.

MANHOLE TYPE 1

STANDARD PLAN B-15.20-01

SHEET 1 OF 1 SHEET

APPROVED FOR PUBLICATION

Pasco Bakotich III — STATE DESIGN ENGINEER

02-07-12 — DATE

Washington State Department of Transportation

EFFECTIVE: AUGUST 6, 2012 TO August 4, 2013
EFFECTIVE: AUGUST 6, 2012 TO August 4, 2013
EFFECTIVE: AUGUST 6, 2012 TO August 4, 2013
EFFECTIVE: AUGUST 6, 2012 TO August 4, 2013

EFFECTIVE: AUGUST 6, 2012 TO August 4, 2013
EFFECTIVE: AUGUST 6, 2012 TO August 4, 2013

DRAWN BY: LISA CYFORD

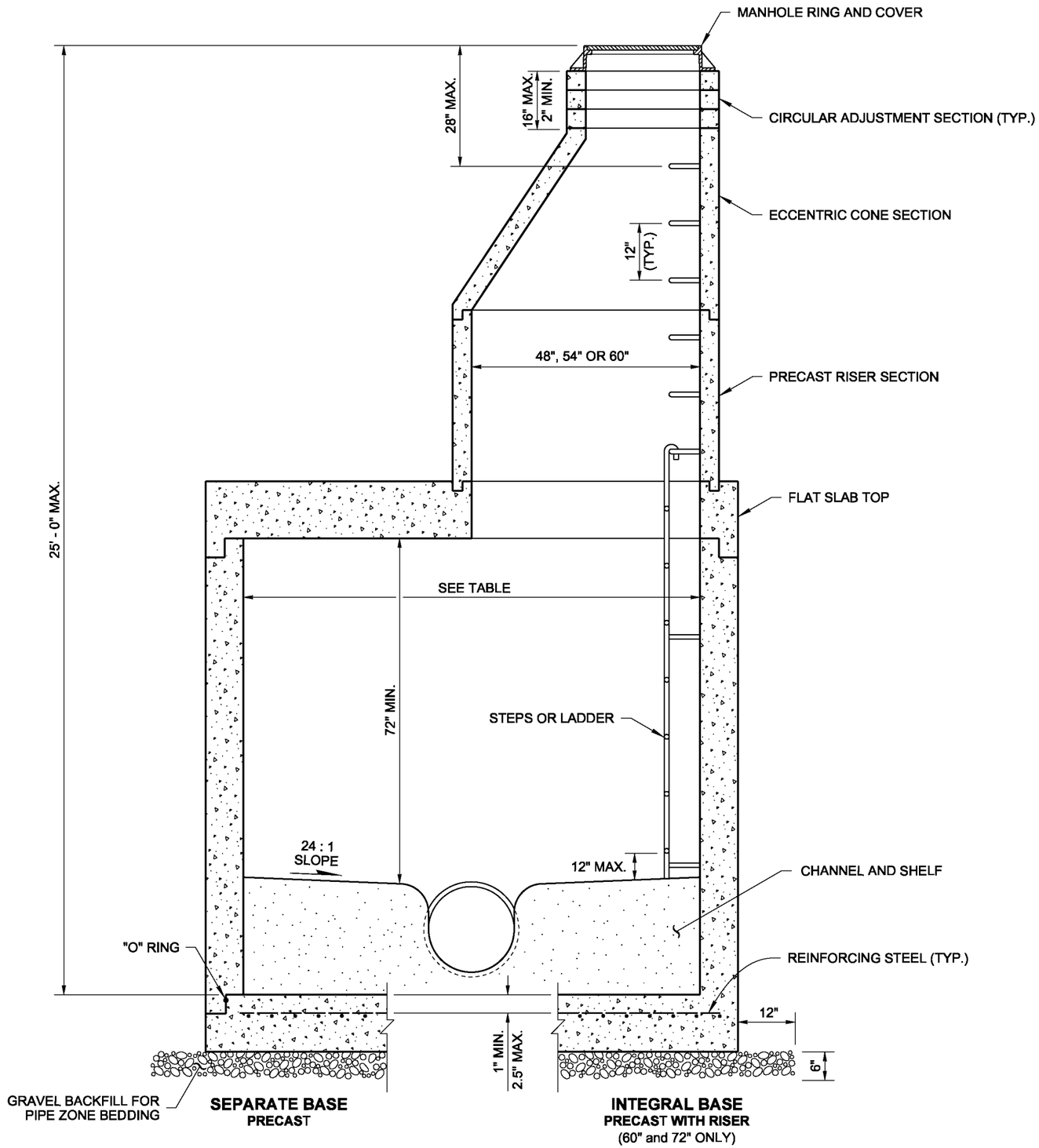

NOTES

1. Knockouts shall have a wall thickness of 2" minimum to 2.5" maximum.
2. For pipe allowances, see **Standard Plan B-10.20.**

MANHOLE DIMENSION TABLE

DIAM.	MIN. WALL THICKNESS	MIN. BASE THICKNESS	MAXIMUM KNOCKOUT SIZE	MINIMUM DISTANCE BETWEEN KNOCKOUTS
60"	5"	8"	48"	8"
72"	6"	8"	60"	12"
84"	8"	12"	72"	12"
96"	8"	12"	84"	12"
120"	10"	12"	96"	12"
144"	12"	12"	108"	12"

NOTE: THIS PLAN IS NOT A LEGAL ENGINEERING DOCUMENT BUT AN ELECTRONIC DUPLICATE. THE ORIGINAL, SIGNED BY THE ENGINEER AND APPROVED FOR PUBLICATION, IS KEPT ON FILE AT THE WASHINGTON STATE DEPARTMENT OF TRANSPORTATION. A COPY MAY BE OBTAINED UPON REQUEST.

MANHOLE TYPE 2

STANDARD PLAN B-15.40-01

SHEET 1 OF 1 SHEET

APPROVED FOR PUBLICATION

Pasco Bakotich III — STATE DESIGN ENGINEER

02-07-12 — DATE

Washington State Department of Transportation

EFFECTIVE: AUGUST 6, 2012 TO August 4, 2013
EFFECTIVE: AUGUST 6, 2012 TO August 4, 2013
EFFECTIVE: AUGUST 6, 2012 TO August 4, 2013
EFFECTIVE: AUGUST 6, 2012 TO August 4, 2013

EFFECTIVE: AUGUST 6, 2012 TO August 4, 2013
EFFECTIVE: AUGUST 6, 2012 TO August 4, 2013

DRAWN BY: LISA CYFORD

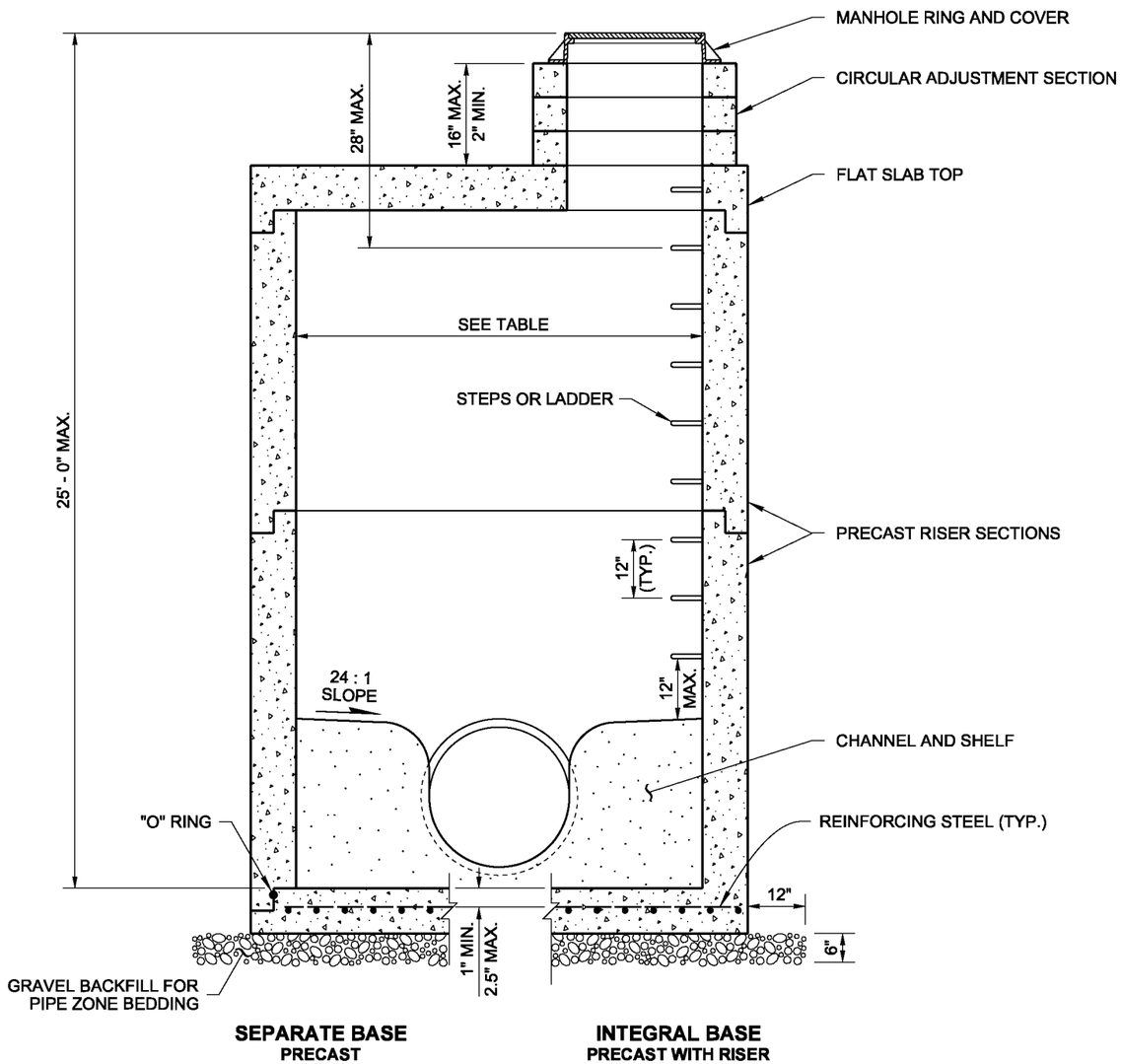

NOTES

1. Knockouts shall have a wall thickness of 2" minimum to 2.5" maximum.
2. For pipe allowances, see **Standard Plan B-10.20.**
3. No steps are required when height is 4' or less.

MANHOLE DIMENSION TABLE

DIAM.	MIN. WALL THICKNESS	MIN. BASE THICKNESS	MAXIMUM KNOCKOUT SIZE	MINIMUM DISTANCE BETWEEN KNOCKOUTS
48"	4"	6"	36"	8"
54"	4.5"	8"	42"	8"
60"	5"	8"	48"	8"
72"	6"	8"	60"	12"
84"	8"	12"	72"	12"
96"	8"	12"	84"	12"
120"	10"	12"	42"	12"
144"	12"	12"	108"	12"

NOTE: THIS PLAN IS NOT A LEGAL ENGINEERING DOCUMENT BUT AN ELECTRONIC DUPLICATE. THE ORIGINAL, SIGNED BY THE ENGINEER AND APPROVED FOR PUBLICATION, IS KEPT ON FILE AT THE WASHINGTON STATE DEPARTMENT OF TRANSPORTATION. A COPY MAY BE OBTAINED UPON REQUEST.

MANHOLE TYPE 3

STANDARD PLAN B-15.60-01

SHEET 1 OF 1 SHEET

APPROVED FOR PUBLICATION

Pasco Bakotich III — STATE DESIGN ENGINEER

02-07-12 — DATE

Washington State Department of Transportation

EFFECTIVE: AUGUST 6, 2012 TO August 4, 2013
EFFECTIVE: AUGUST 6, 2012 TO August 4, 2013
EFFECTIVE: AUGUST 6, 2012 TO August 4, 2013
EFFECTIVE: AUGUST 6, 2012 TO August 4, 2013
EFFECTIVE: AUGUST 6, 2012 TO August 4, 2013

EFFECTIVE: AUGUST 6, 2012 TO August 4, 2013
EFFECTIVE: AUGUST 6, 2012 TO August 4, 2013

NOTES

1. Precast concrete cone sections may be eccentric or concentric.
2. Seepage port orientation varies among manufacturers.
3. When necessary, knockouts on precast cone, drywell base and riser sections shall have a wall thickness of 1 1/2" minimum and 2" maximum.

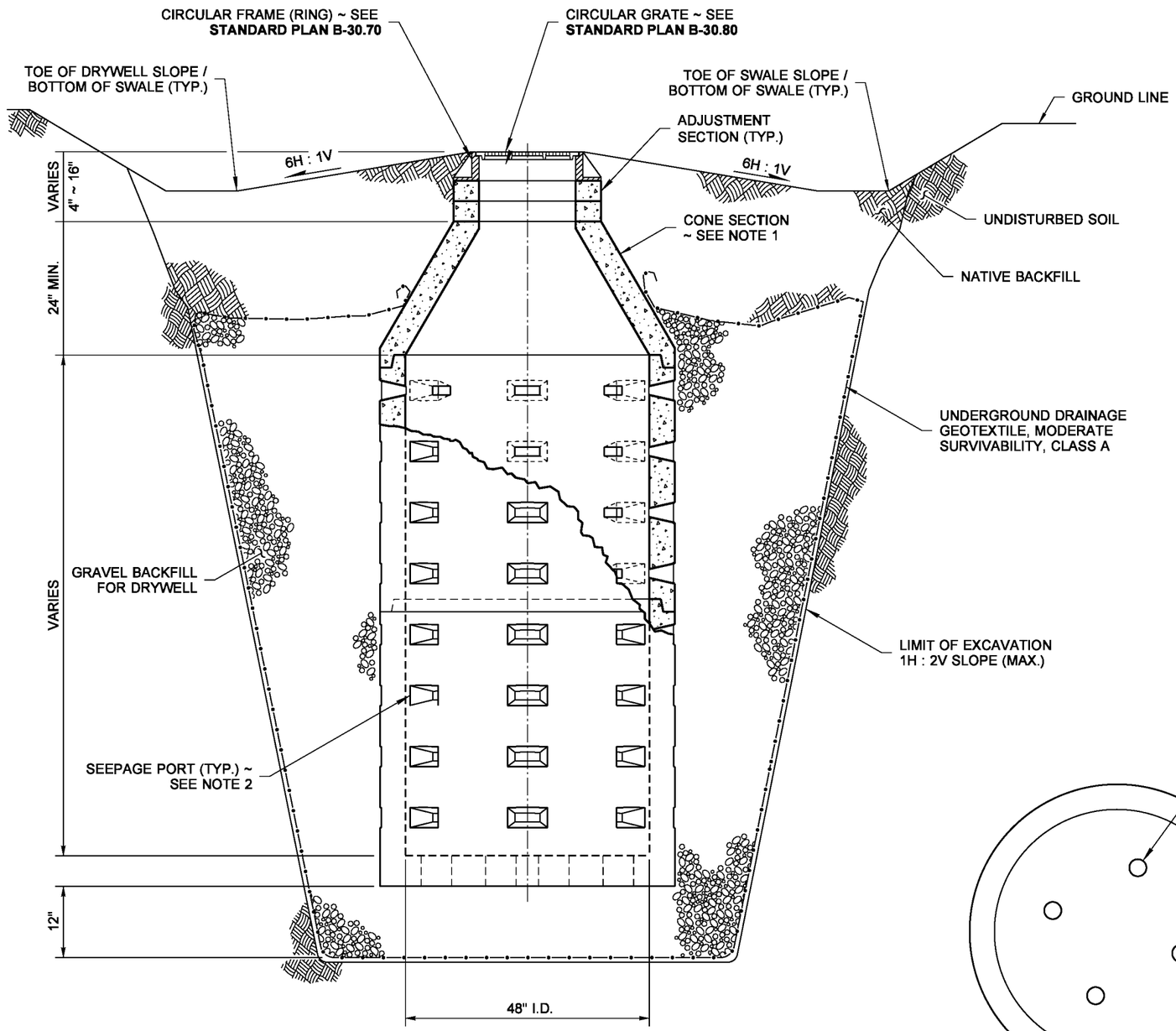

CUTAWAY ELEVATION VIEW

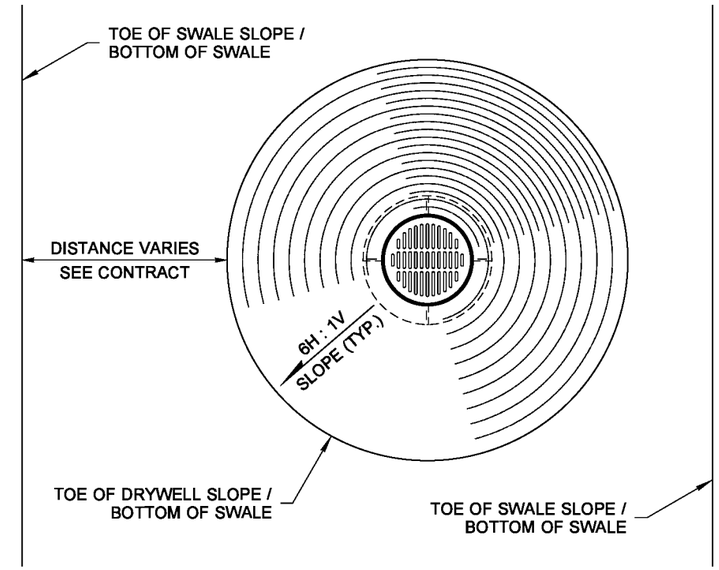

PLAN VIEW

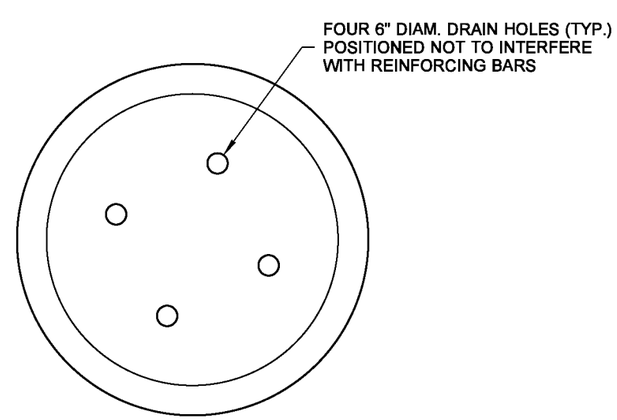

INTEGRAL BASE DETAIL

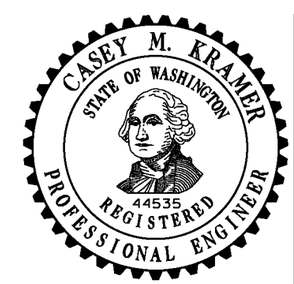

NOTE: THIS PLAN IS NOT A LEGAL ENGINEERING DOCUMENT BUT AN ELECTRONIC DUPLICATE. THE ORIGINAL, SIGNED BY THE ENGINEER AND APPROVED FOR PUBLICATION, IS KEPT ON FILE AT THE WASHINGTON STATE DEPARTMENT OF TRANSPORTATION. A COPY MAY BE OBTAINED UPON REQUEST.

DRYWELL TYPE 1 (FOR SWALE)

STANDARD PLAN B-20.20-02

SHEET 1 OF 1 SHEET

APPROVED FOR PUBLICATION

Pasco Bakotich III — STATE DESIGN ENGINEER

03-16-12 — DATE

Washington State Department of Transportation

DRAWN BY: FERN LIDDELL

EFFECTIVE: AUGUST 6, 2012 TO August 4, 2013
EFFECTIVE: AUGUST 6, 2012 TO August 4, 2013
EFFECTIVE: AUGUST 6, 2012 TO August 4, 2013
EFFECTIVE: AUGUST 6, 2012 TO August 4, 2013

EFFECTIVE: AUGUST 6, 2012 TO August 4, 2013
EFFECTIVE: AUGUST 6, 2012 TO August 4, 2013

NOTES

1. Precast concrete cone sections may be eccentric or concentric.
2. Seepage port orientation varies among manufacturers.
3. Connect inlet pipe to structure using precast hole or core drilled hole.
4. For depths over 16' - 2" use 72" x 8" Alternative Precast Footing.
5. When necessary, knockouts on precast cone, drywell base and riser sections shall have a wall thickness of 1 1/2" minimum and 2" maximum.

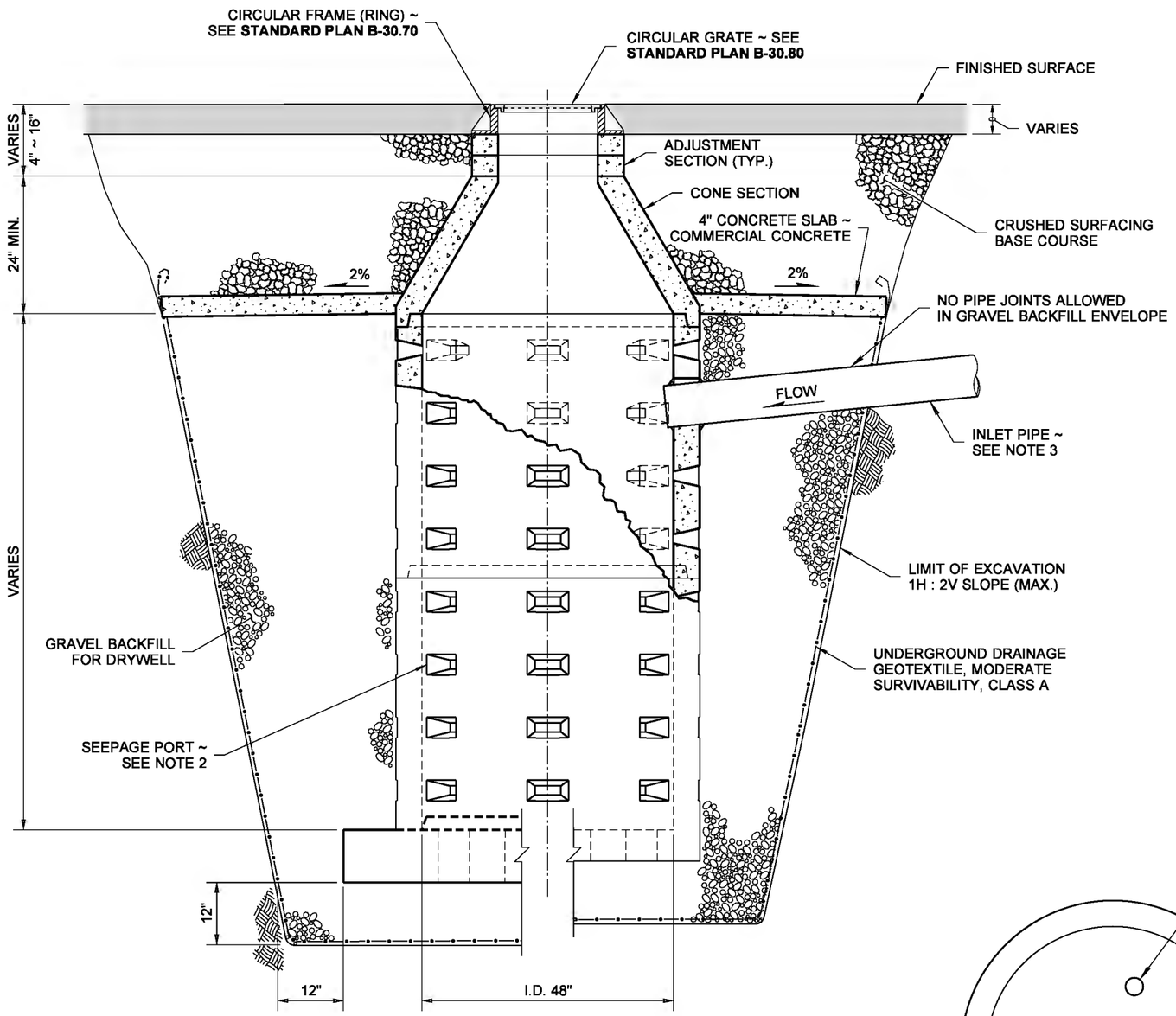

ALTERNATIVE FOOTING
PRECAST

INTEGRAL BASE
PRECAST WITH RISER

CUTAWAY ELEVATION VIEW

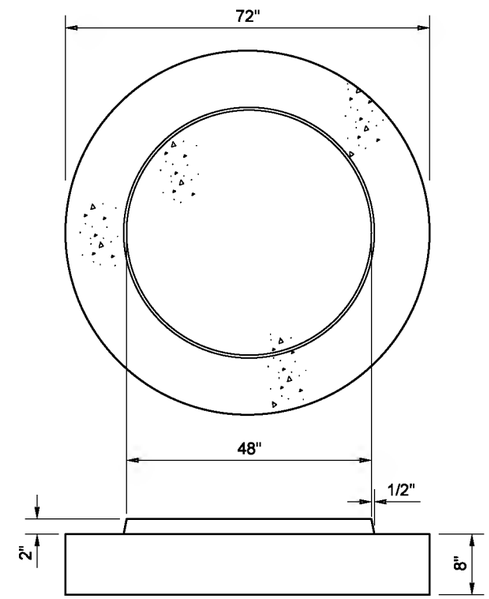

ALTERNATIVE PRECAST FOOTING DETAIL

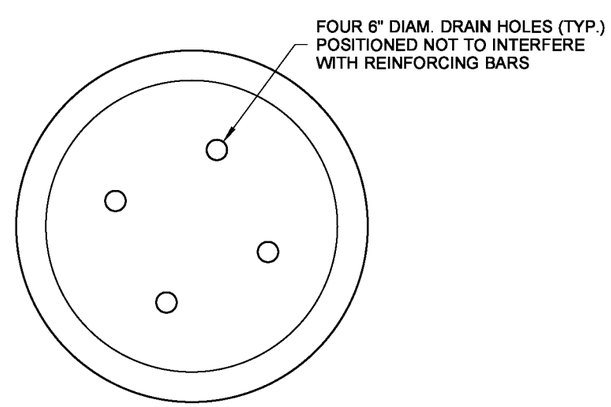

INTEGRAL BASE DETAIL

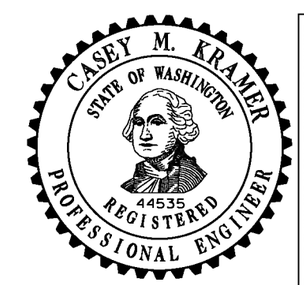

NOTE: THIS PLAN IS NOT A LEGAL ENGINEERING DOCUMENT BUT AN ELECTRONIC DUPLICATE. THE ORIGINAL, SIGNED BY THE ENGINEER AND APPROVED FOR PUBLICATION, IS KEPT ON FILE AT THE WASHINGTON STATE DEPARTMENT OF TRANSPORTATION. A COPY MAY BE OBTAINED UPON REQUEST.

DRYWELL TYPE 2
(WITH PIPE INLET)

STANDARD PLAN B-20.40-03

SHEET 1 OF 1 SHEET

APPROVED FOR PUBLICATION

Pasco Bakotich III — STATE DESIGN ENGINEER
03-16-12 — DATE

Washington State Department of Transportation

DRAWN BY: FERN LIDDELL

EFFECTIVE: AUGUST 6, 2012 TO August 4, 2013
EFFECTIVE: AUGUST 6, 2012 TO August 4, 2013
EFFECTIVE: AUGUST 6, 2012 TO August 4, 2013
EFFECTIVE: AUGUST 6, 2012 TO August 4, 2013

EFFECTIVE: AUGUST 6, 2012 TO August 4, 2013
EFFECTIVE: AUGUST 6, 2012 TO August 4, 2013

NOTES

1. Precast concrete cone sections may be eccentric or concentric.
2. Seepage port orientation varies among manufacturers.
3. For depths over 16' - 2" use 72" x 8" Alternative Precast Footing.
4. When necessary, knockouts on precast cone, drywell base and riser sections shall have a wall thickness of 1 1/2" minimum and 2" maximum.

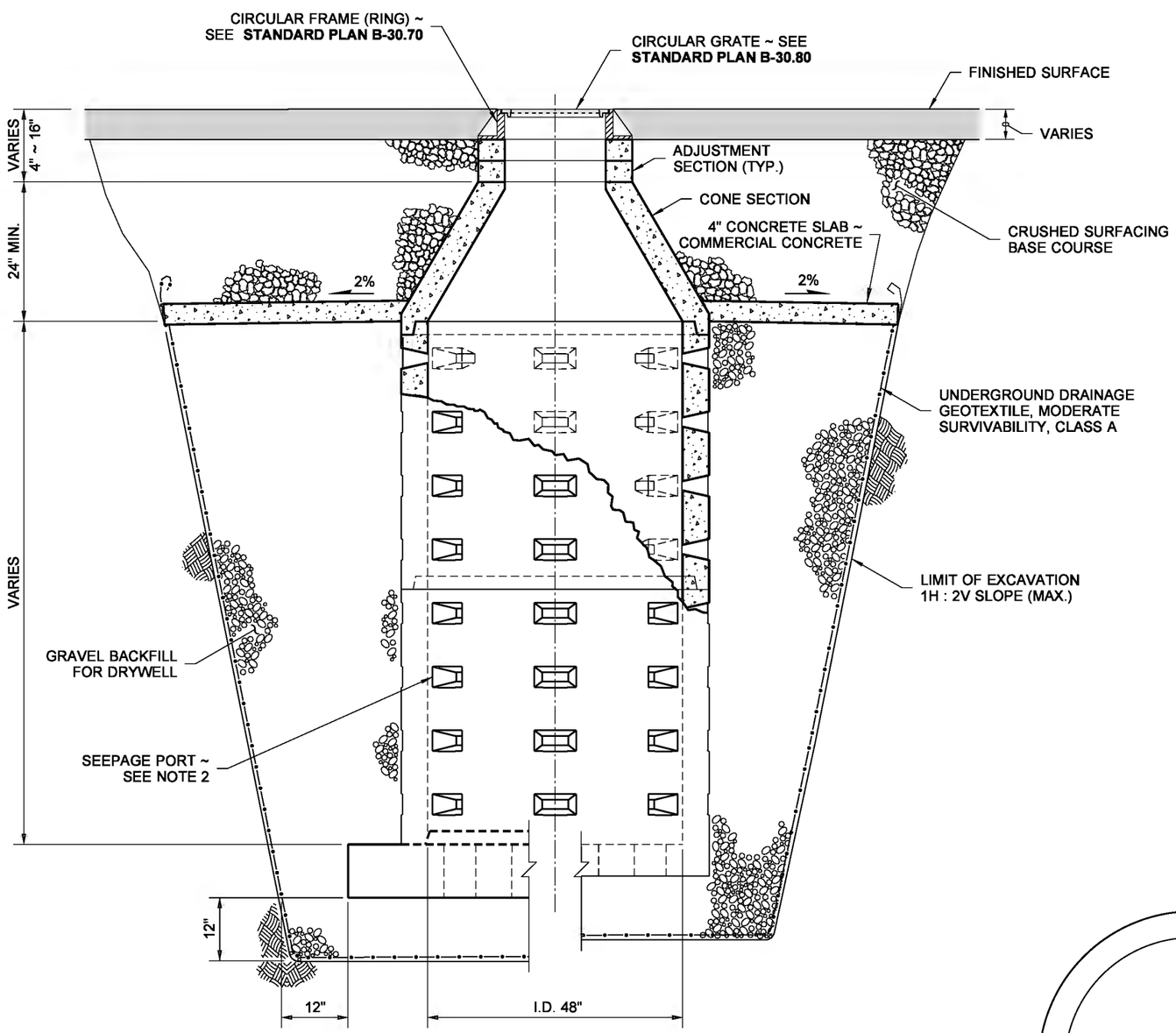

ALTERNATIVE FOOTING
PRECAST

INTEGRAL BASE
PRECAST WITH RISER

CUTAWAY ELEVATION VIEW

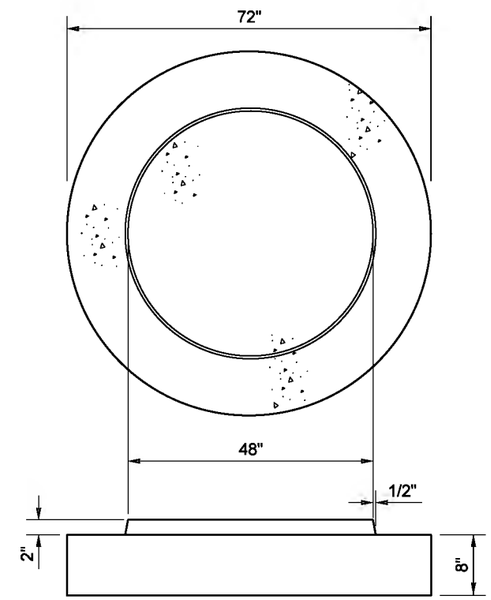

ALTERNATIVE PRECAST FOOTING DETAIL

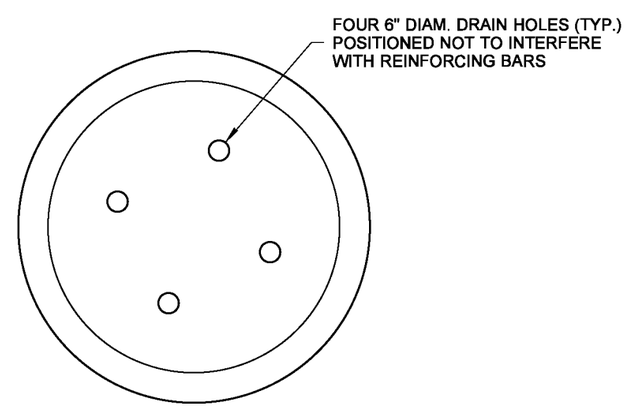

INTEGRAL BASE DETAIL

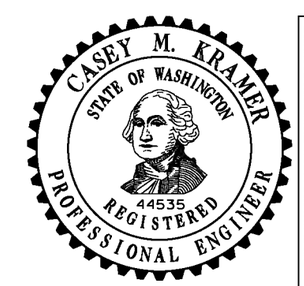

NOTE: THIS PLAN IS NOT A LEGAL ENGINEERING DOCUMENT BUT AN ELECTRONIC DUPLICATE. THE ORIGINAL, SIGNED BY THE ENGINEER AND APPROVED FOR PUBLICATION, IS KEPT ON FILE AT THE WASHINGTON STATE DEPARTMENT OF TRANSPORTATION. A COPY MAY BE OBTAINED UPON REQUEST.

DRYWELL TYPE 3
(WITH AT-GRADE INLET)

STANDARD PLAN B-20.60-03

SHEET 1 OF 1 SHEET

APPROVED FOR PUBLICATION

Pasco Bakotich III — STATE DESIGN ENGINEER
03-15-12 — DATE

Washington State Department of Transportation

DRAWN BY: FERN LIDDELL

EFFECTIVE: AUGUST 6, 2012 TO August 4, 2013
EFFECTIVE: AUGUST 6, 2012 TO August 4, 2013
EFFECTIVE: AUGUST 6, 2012 TO August 4, 2013
EFFECTIVE: AUGUST 6, 2012 TO August 4, 2013

EFFECTIVE: AUGUST 6, 2012 TO August 4, 2013
EFFECTIVE: AUGUST 6, 2012 TO August 4, 2013

DRAWN BY: FERN LIDDELL

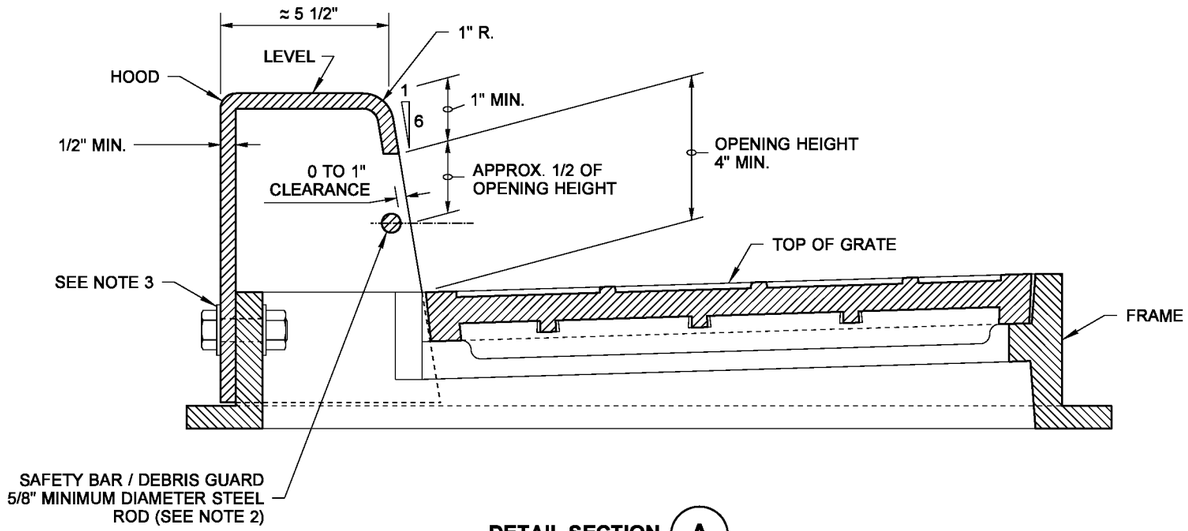

DETAIL SECTION (A)

NOTES

1. This inlet requires the precast catch basin unit to be rotated 90 degrees so that the narrow side is parallel to the curb line. When calculating offsets from curb to CL of the precast catch basin, please note that the CL of the grate is not the CL of the precast catch basin. See **Section A**
2. The dimensions of the frame and hood may vary slightly among different manufacturers. The Frame may have cast features intended to support a debris guard. Hood units may be mounted inside or outside of the frame. The methods for fastening the safety bar / debris guard rod to the hood may vary. The hood may include casting lugs. The top of the hood may be cast with a pattern.
3. Attach the hood to the frame with two 3/4" × 2" hex head bolts, nuts, and oversize washers. The washers shall have diameters adequate to ensure full bearing across the slots.
4. Bolt-down capability is required on all frames, grates and covers, unless specified in the Contract. Provide two holes in the Frame that are vertically aligned with the grate slots. The frame shall accept the 5/8" × 11 NC × 2" allen head cap screw by being tapped, or other approved mechanism. The location of bolt-down holes varies among manufacturers. See BOLT-DOWN DETAIL, **Standard Plan B-30.10.**
5. Only ductile iron Vaned Grates shall be used. See **Standard Plans B-30.30 and B-30.40** for grate details. Refer to **Standard Specification 9-05.15(2)** for additional requirements.
6. This plan is intended to show the installation details of a manufactured product. This plan is not intended to show the specific details necessary to fabricate the castings depicted in this drawing.

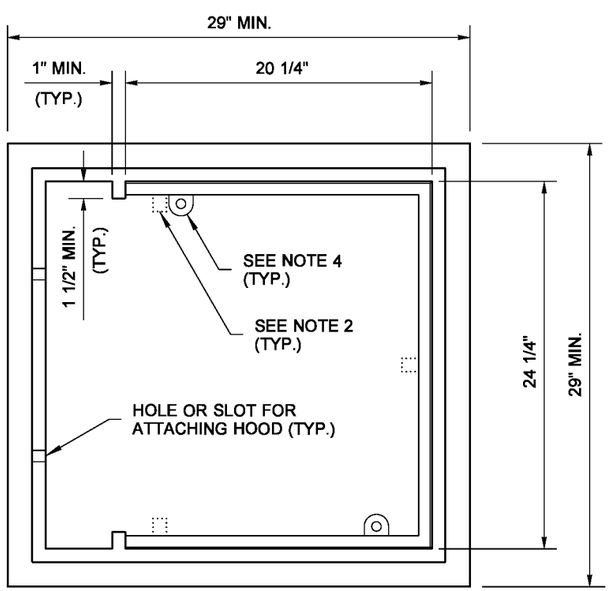

TOP VIEW

FRAME DETAIL

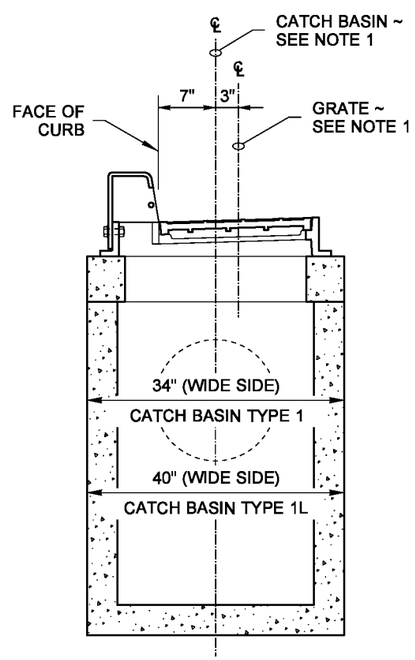

SECTION (A)

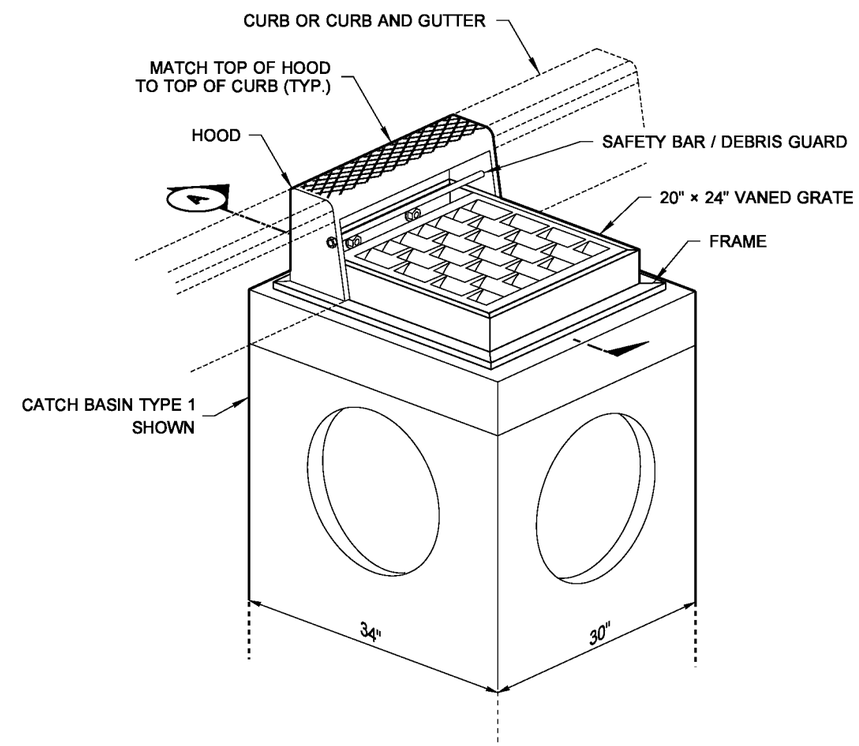

ISOMETRIC VIEW

COMBINATION INLET
FRAME, HOOD, AND VANED GRATE

NOTE: THIS PLAN IS NOT A LEGAL ENGINEERING DOCUMENT BUT AN ELECTRONIC DUPLICATE. THE ORIGINAL, SIGNED BY THE ENGINEER AND APPROVED FOR PUBLICATION, IS KEPT ON FILE AT THE WASHINGTON STATE DEPARTMENT OF TRANSPORTATION. A COPY MAY BE OBTAINED UPON REQUEST.

COMBINATION INLET

STANDARD PLAN B-25.20-01

SHEET 1 OF 1 SHEET

APPROVED FOR PUBLICATION

Pasco Bakotich III — STATE DESIGN ENGINEER
03-15-12 — DATE

Washington State Department of Transportation

EFFECTIVE: AUGUST 6, 2012 TO August 4, 2013
EFFECTIVE: AUGUST 6, 2012 TO August 4, 2013
EFFECTIVE: AUGUST 6, 2012 TO August 4, 2013
EFFECTIVE: AUGUST 6, 2012 TO August 4, 2013

EFFECTIVE: AUGUST 6, 2012 TO August 4, 2013
EFFECTIVE: AUGUST 6, 2012 TO August 4, 2013

DRAWN BY: MARK SUJKA

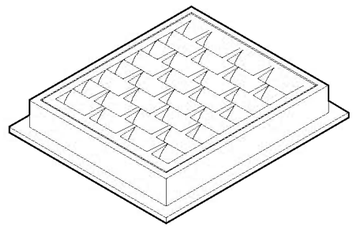

FRAME AND VANED GRATE

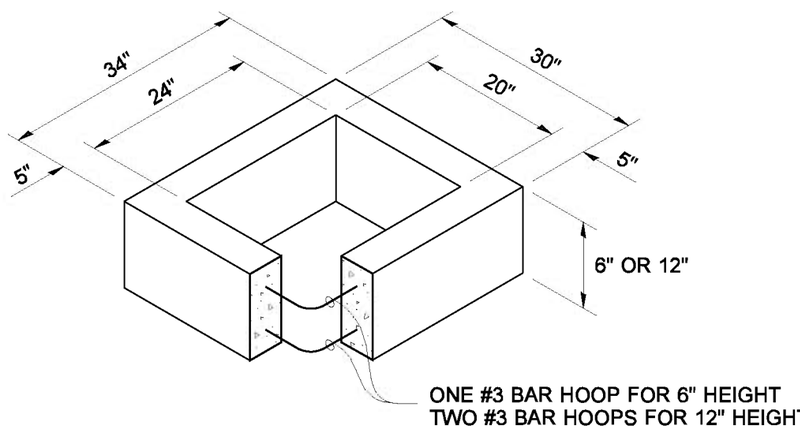

RECTANGULAR ADJUSTMENT SECTION

PIPE ALLOWANCES	
PIPE MATERIAL	**MAXIMUM INSIDE DIAMETER**
REINFORCED OR PLAIN CONCRETE	12"
ALL METAL PIPE	15"
CPSSP * (STD. SPEC. 9-05.20)	12"
SOLID WALL PVC (STD. SPEC. 9-05.12(1))	15"
PROFILE WALL PVC (STD. SPEC. 9-05.12(2))	15"

* CORRUGATED POLYETHYLENE STORM SEWER PIPE

NOTES

1. As acceptable alternatives to the rebar shown in the **PRECAST BASE SECTION**, fibers (placed according to the Standard Specifications), or wire mesh having a minimum area of 0.12 square inches per foot shall be used with the minimum required rebar shown in the **ALTERNATIVE PRECAST BASE SECTION**. Wire mesh shall not be placed in the knockouts.
2. The knockout diameter shall not be greater than 18". Knockouts shall have a wall thickness of 2" minimum to 2.5" maximum. Provide a 1.5" minimum gap between the knockout wall and the outside of the pipe. After the pipe is installed, fill the gap with joint mortar in accordance with Standard Specification 9-04.3.
3. The maximum depth from the finished grade to the lowest pipe invert shall be 5'.
4. The frame and grate may be installed with the flange up or down. The frame may be cast into the adjustment section.
5. The Precast Base Section may have a rounded floor, and the walls may be sloped at a rate of 1:24 or steeper.
6. The opening shall be measured at the top of the precast base section.
7. All pickup holes shall be grouted full after the inlet has been placed.

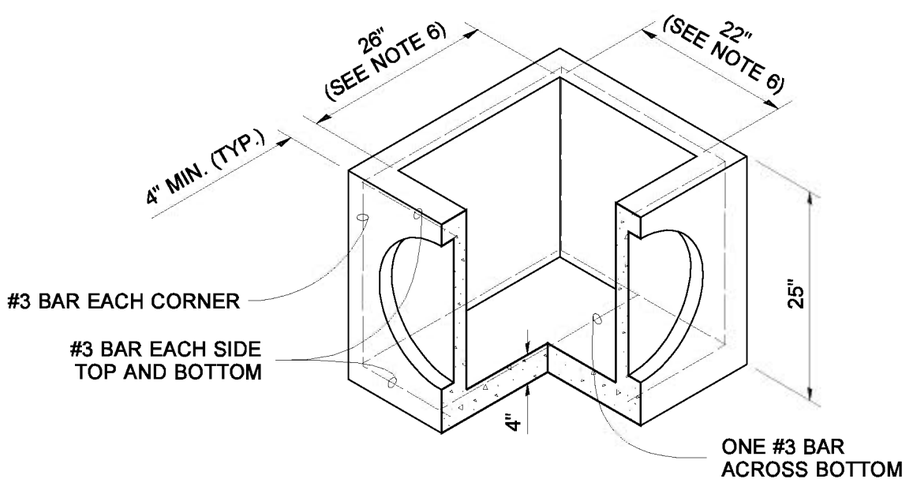

PRECAST BASE SECTION

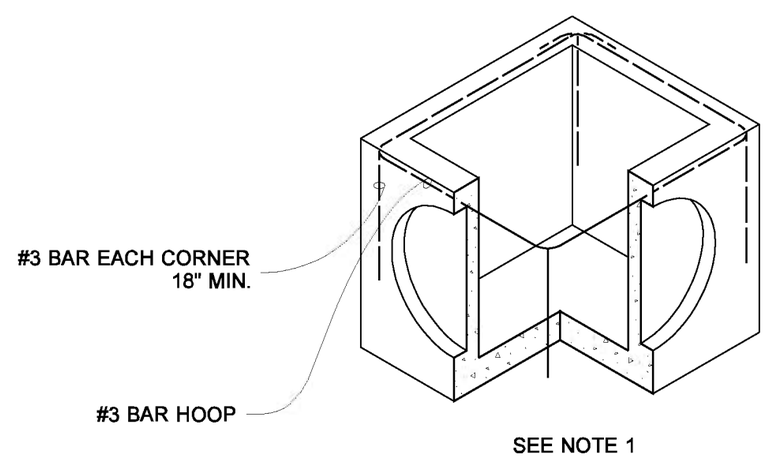

ALTERNATIVE PRECAST BASE SECTION

EXPIRES JULY 1, 2007

NOTE: THIS PLAN IS NOT A LEGAL ENGINEERING DOCUMENT BUT AN ELECTRONIC DUPLICATE. THE ORIGINAL, SIGNED BY THE ENGINEER AND APPROVED FOR PUBLICATION, IS KEPT ON FILE AT THE WASHINGTON STATE DEPARTMENT OF TRANSPORTATION. A COPY MAY BE OBTAINED UPON REQUEST.

CONCRETE INLET

STANDARD PLAN B-25.60-00

SHEET 1 OF 1 SHEET

APPROVED FOR PUBLICATION

Harold J. Peterfeso — STATE DESIGN ENGINEER

06-01-06 — DATE

Washington State Department of Transportation

EFFECTIVE: AUGUST 6, 2012 TO August 4, 2013
EFFECTIVE: AUGUST 6, 2012 TO August 4, 2013

EFFECTIVE: AUGUST 6, 2012 TO August 4, 2013
EFFECTIVE: AUGUST 6, 2012 TO August 4, 2013

DRAWN BY: LISA CYFORD

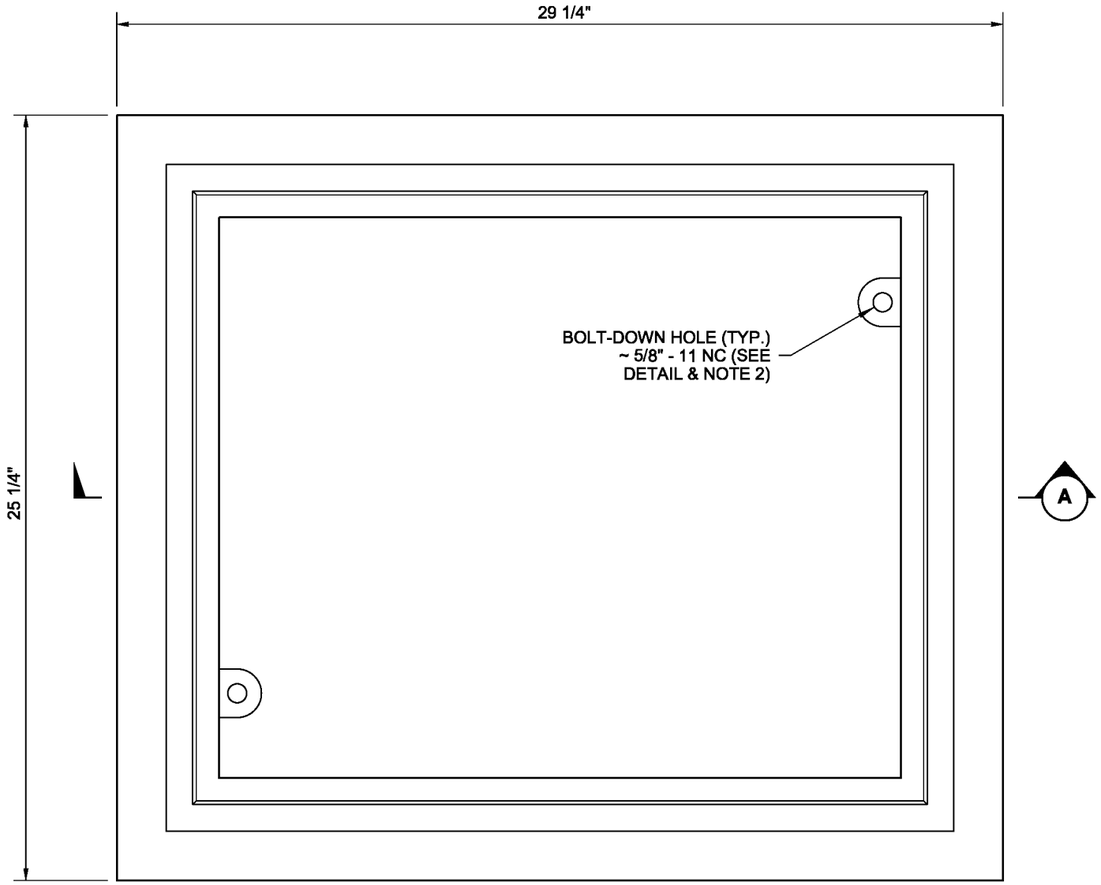

TOP

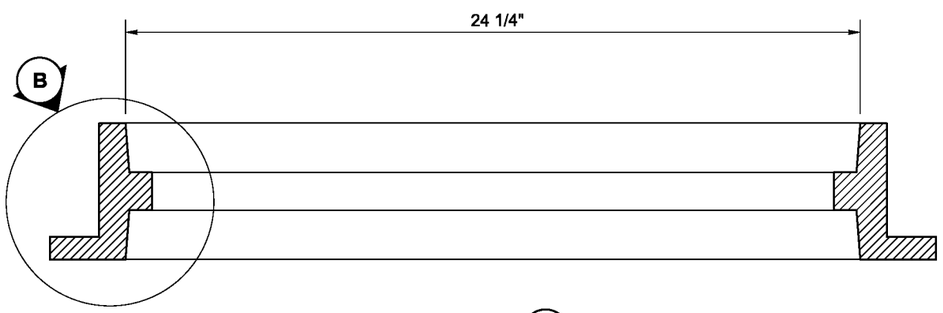

SECTION (A)

NOTES

1. This frame is designed to accommodate 20" × 24" grates or covers as shown on Standard Plans **B-30.20, B-30.30, B-30.40,** and **B-30.50**.
2. Bolt-down capability is required on all frames, grates, and covers, unless specified otherwise in the Contract. Provide 2 holes in the frame that are vertically aligned with the grate or cover slots. The frame shall accept the 5/8" - 11 NC × 2" Allen head cap screw by being tapped, or other approved mechanism. Location of bolt-down holes varies by manufacturer.
3. Refer to **Standard Specification 9-05.15(2)** for additional requirements.

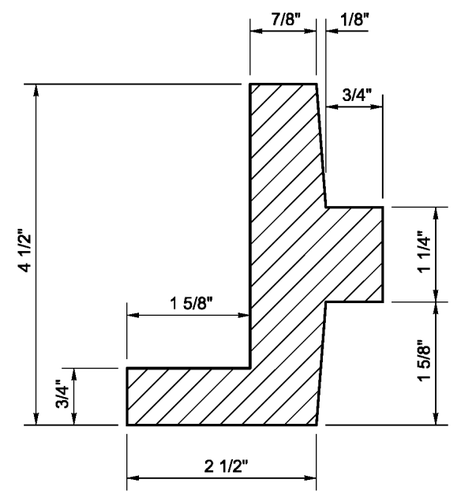

DETAIL (B)

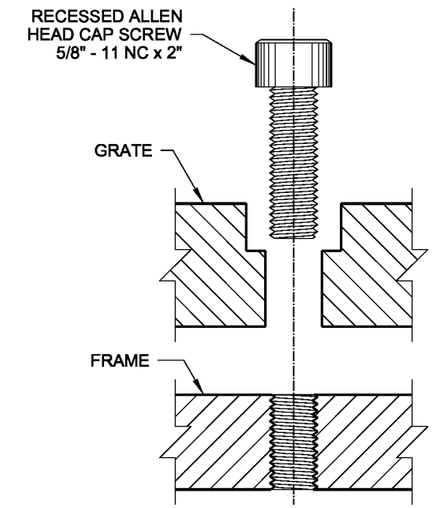

SECTION

BOLT-DOWN DETAIL
SEE NOTE 2

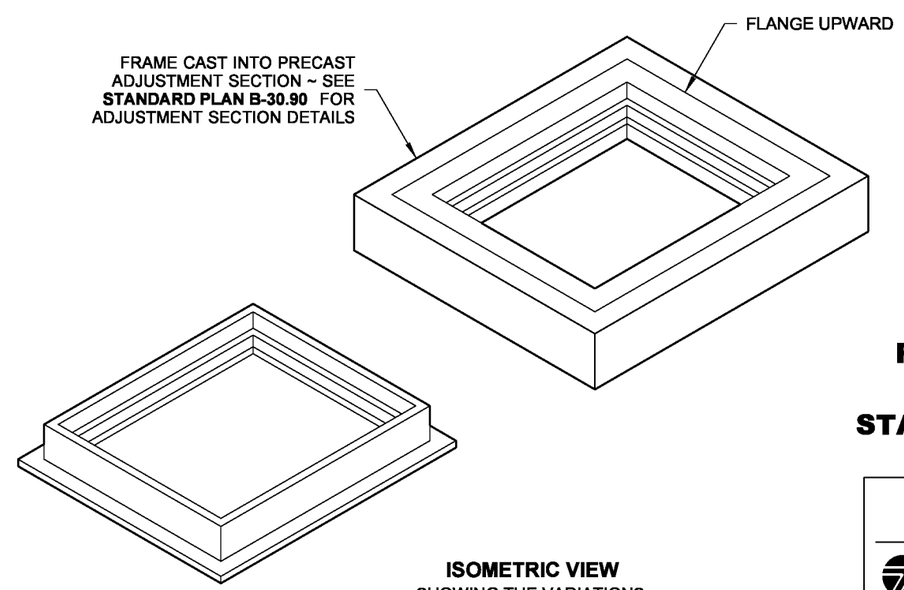

ISOMETRIC VIEW
SHOWING THE VARIATIONS

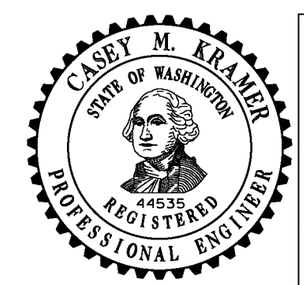

NOTE: THIS PLAN IS NOT A LEGAL ENGINEERING DOCUMENT BUT AN ELECTRONIC DUPLICATE. THE ORIGINAL, SIGNED BY THE ENGINEER AND APPROVED FOR PUBLICATION, IS KEPT ON FILE AT THE WASHINGTON STATE DEPARTMENT OF TRANSPORTATION. A COPY MAY BE OBTAINED UPON REQUEST.

RECTANGULAR FRAME (REVERSIBLE)

STANDARD PLAN B-30.10-01

SHEET 1 OF 1 SHEET

APPROVED FOR PUBLICATION

Pasco Bakotich III — STATE DESIGN ENGINEER
04/26/12 — DATE

Washington State Department of Transportation

EFFECTIVE: AUGUST 6, 2012 TO August 4, 2013
EFFECTIVE: AUGUST 6, 2012 TO August 4, 2013
EFFECTIVE: AUGUST 6, 2012 TO August 4, 2013
EFFECTIVE: AUGUST 6, 2012 TO August 4, 2013

EFFECTIVE: AUGUST 6, 2012 TO August 4, 2013
EFFECTIVE: AUGUST 6, 2012 TO August 4, 2013

DRAWN BY: LISA GYFORD

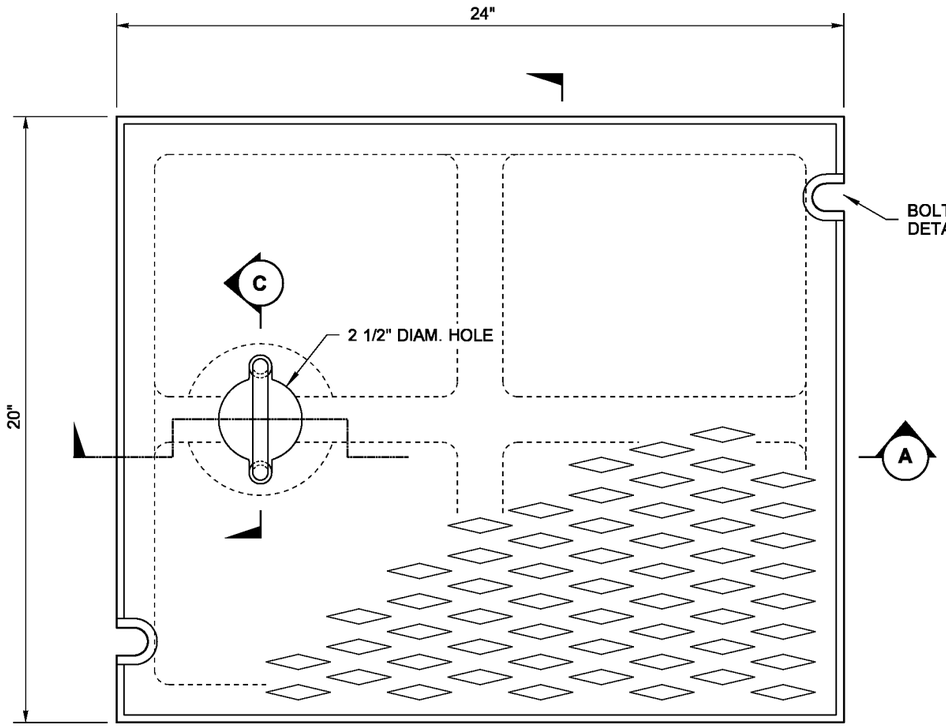

TOP

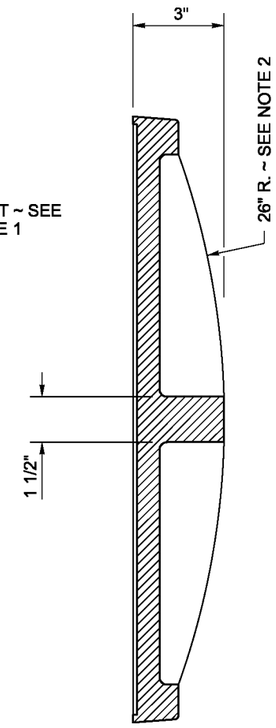

SECTION B

NOTES

1. Bolt-down capability is required on all frames, grates, and covers, unless specified otherwise in the Contract. Provide 2 holes in the frame that are vertically aligned with the grate or cover slots. The frame shall accept the 5/8" - 11 NC × 2" Allen head cap screw by being tapped, or other approved mechanism. Location of bolt-down holes varies by manufacturer.
2. Alternative reinforcing designs are acceptable in lieu of the rib design.
3. Refer to **Standard Specification 9-05.15(2)** for additional requirements.
4. For frame details, see **Standard Plan B-30.10.**

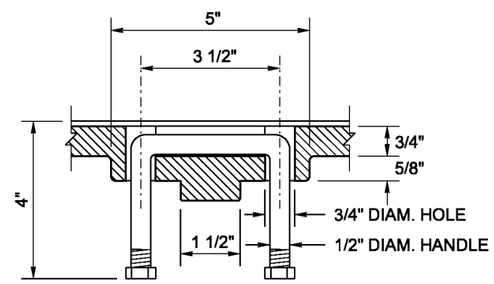

SECTION C

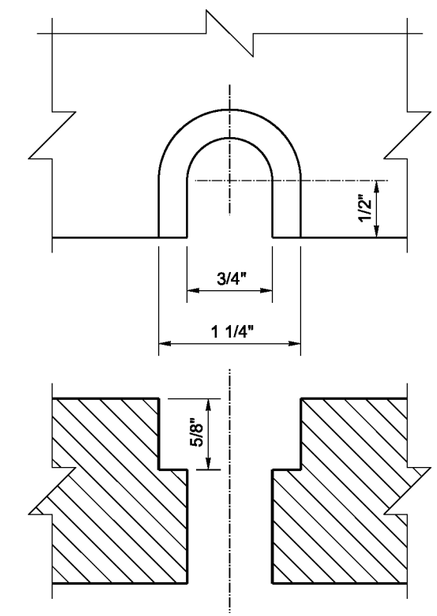

BOLT-DOWN SLOT DETAIL
SEE NOTE 1

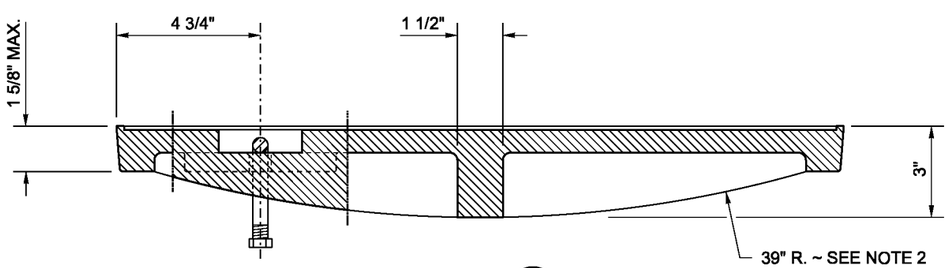

SECTION A

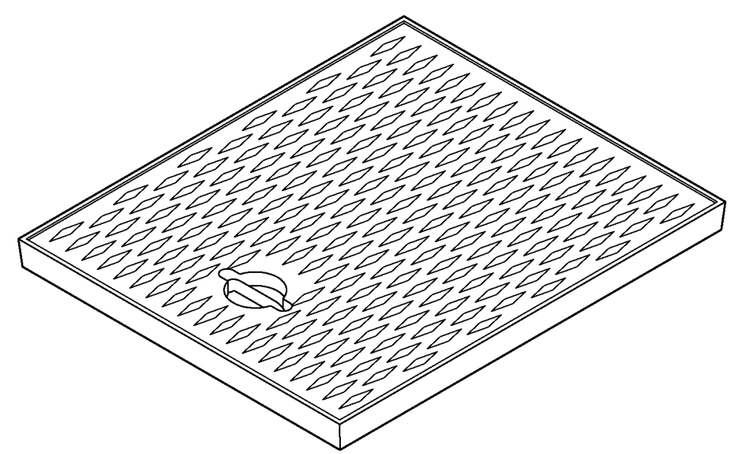

ISOMETRIC

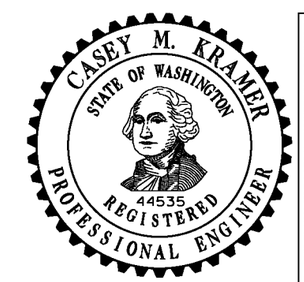

NOTE: THIS PLAN IS NOT A LEGAL ENGINEERING DOCUMENT BUT AN ELECTRONIC DUPLICATE. THE ORIGINAL, SIGNED BY THE ENGINEER AND APPROVED FOR PUBLICATION, IS KEPT ON FILE AT THE WASHINGTON STATE DEPARTMENT OF TRANSPORTATION. A COPY MAY BE OBTAINED UPON REQUEST.

RECTANGULAR SOLID METAL COVER

STANDARD PLAN B-30.20-02

SHEET 1 OF 1 SHEET

APPROVED FOR PUBLICATION

Pasco Bakotich III — STATE DESIGN ENGINEER
04/26/12 — DATE

Washington State Department of Transportation

EFFECTIVE: AUGUST 6, 2012 TO August 4, 2013
EFFECTIVE: AUGUST 6, 2012 TO August 4, 2013
EFFECTIVE: AUGUST 6, 2012 TO August 4, 2013
EFFECTIVE: AUGUST 6, 2012 TO August 4, 2013

EFFECTIVE: AUGUST 6, 2012 TO August 4, 2013
EFFECTIVE: AUGUST 6, 2012 TO August 4, 2013

DRAWN BY: LISA GYFORD

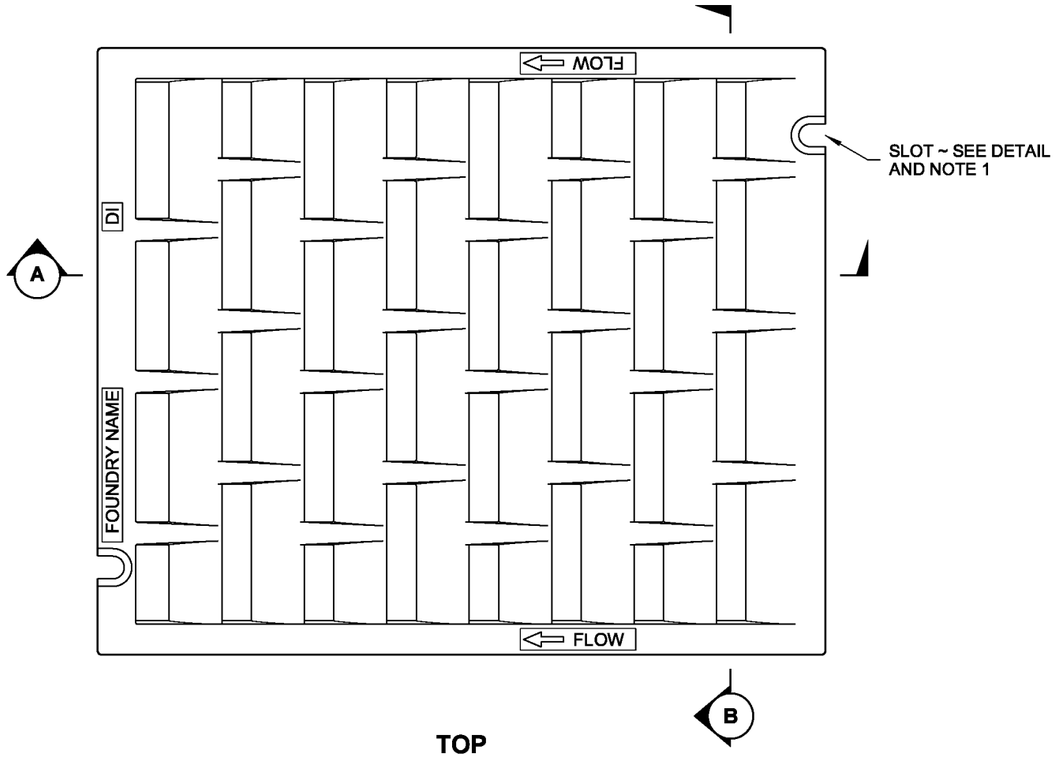

TOP

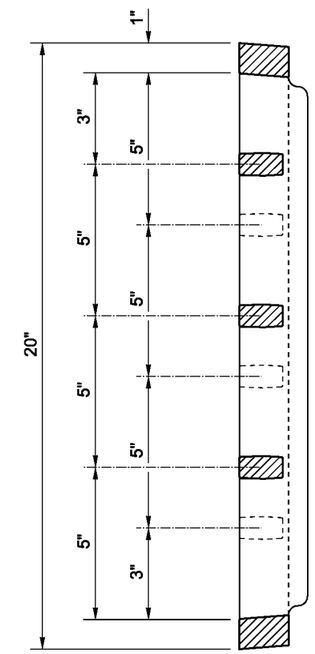

SECTION B

NOTES

1. Bolt-down capability is required on all frames, grates, and covers, unless specified otherwise in the Contract. Provide 2 holes in the frame that are vertically aligned with the grate or cover slots. The frame shall accept the 5/8" - 11 NC × 2" Allen head cap screw by being tapped, or other approved mechanism. Location of bolt-down holes varies by manufacturer.
2. For frame details, see **Standard Plan B-30.10.**
3. Refer to **Standard Specification 9-05.15(2)** for additional requirements.

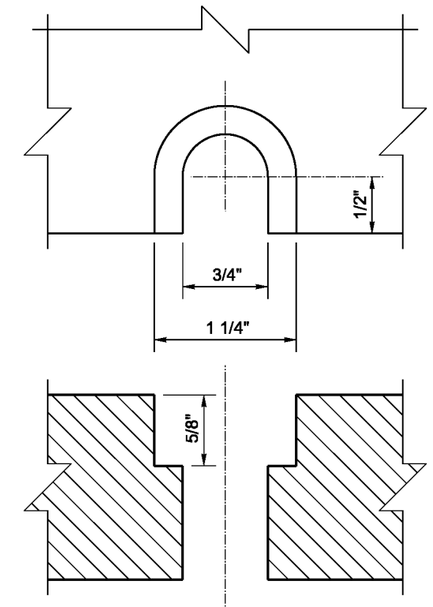

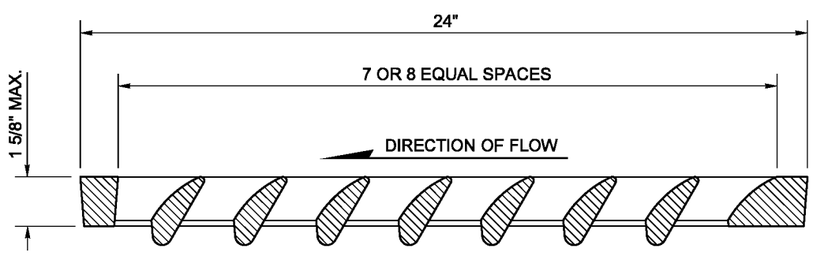

SECTION A

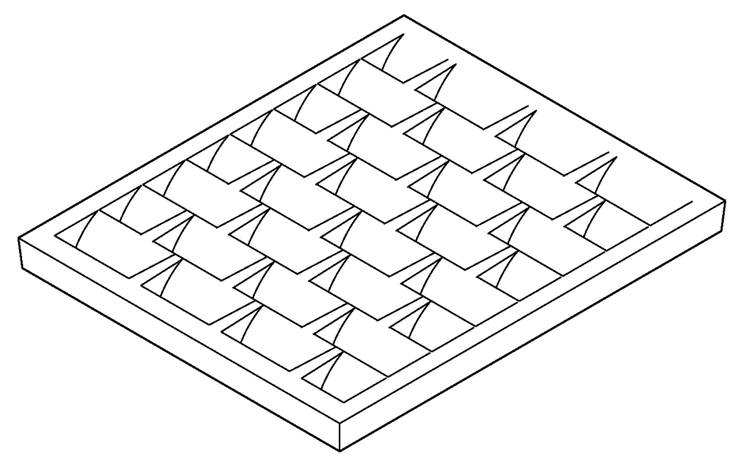

ISOMETRIC

NOTE: THIS PLAN IS NOT A LEGAL ENGINEERING DOCUMENT BUT AN ELECTRONIC DUPLICATE. THE ORIGINAL, SIGNED BY THE ENGINEER AND APPROVED FOR PUBLICATION, IS KEPT ON FILE AT THE WASHINGTON STATE DEPARTMENT OF TRANSPORTATION. A COPY MAY BE OBTAINED UPON REQUEST.

RECTANGULAR VANED GRATE

STANDARD PLAN B-30.30-01

SHEET 1 OF 1 SHEET

APPROVED FOR PUBLICATION

Pasco Bakotich III — STATE DESIGN ENGINEER

04/26/12 — DATE

Washington State Department of Transportation

EFFECTIVE: AUGUST 6, 2012 TO August 4, 2013
EFFECTIVE: AUGUST 6, 2012 TO August 4, 2013
EFFECTIVE: AUGUST 6, 2012 TO August 4, 2013
EFFECTIVE: AUGUST 6, 2012 TO August 4, 2013

EFFECTIVE: AUGUST 6, 2012 TO August 4, 2013
EFFECTIVE: AUGUST 6, 2012 TO August 4, 2013

DRAWN BY: LISA GYFORD

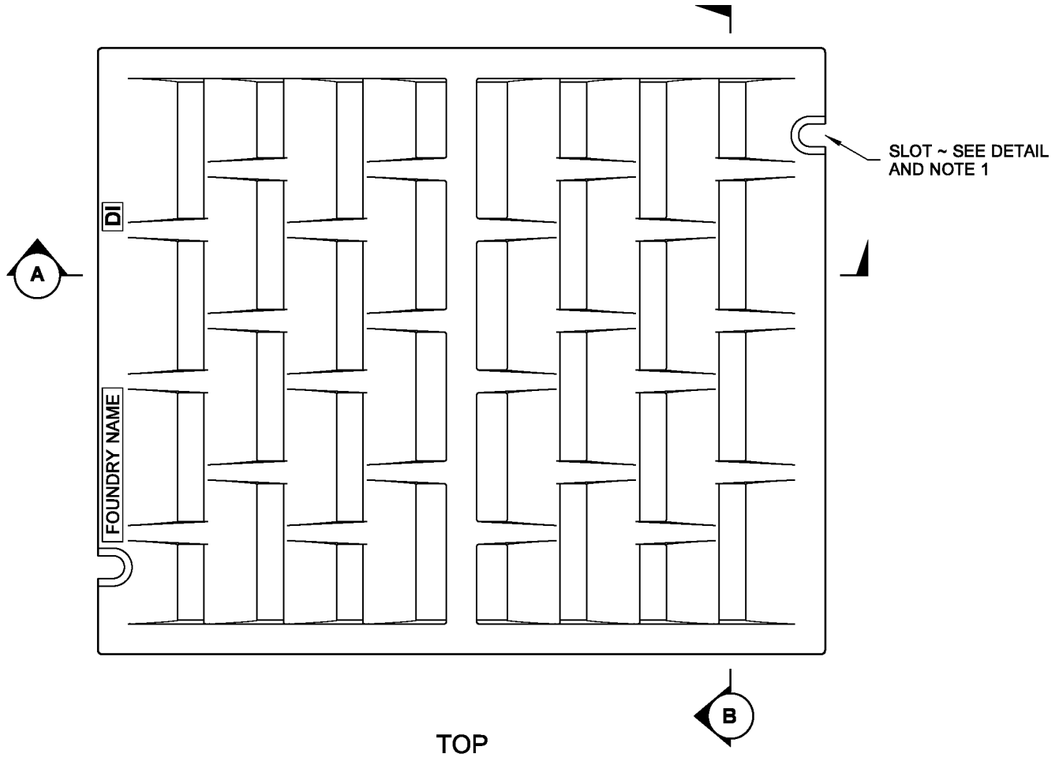

TOP

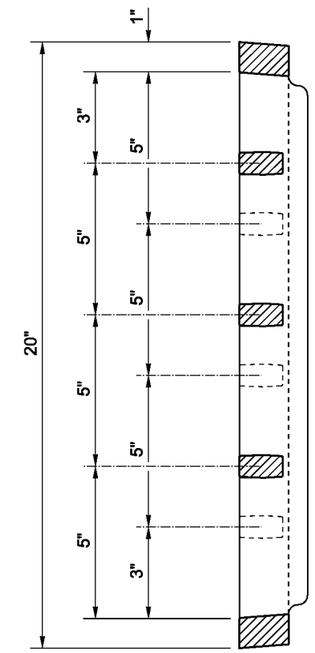

SECTION B

NOTES

1. Bolt-down capability is required on all frames, grates, and covers, unless specified otherwise in the Contract. Provide 2 holes in the frame that are vertically aligned with the grate or cover slots. The frame shall accept the 5/8" - 11 NC × 2" Allen head cap screw by being tapped, or other approved mechanism. Location of bolt-down holes varies by manufacturer.
2. Refer to **Standard Specification 9-05.15(2)** for additional requirements.
3. For frame details, see **Standard Plan B-30.10.**

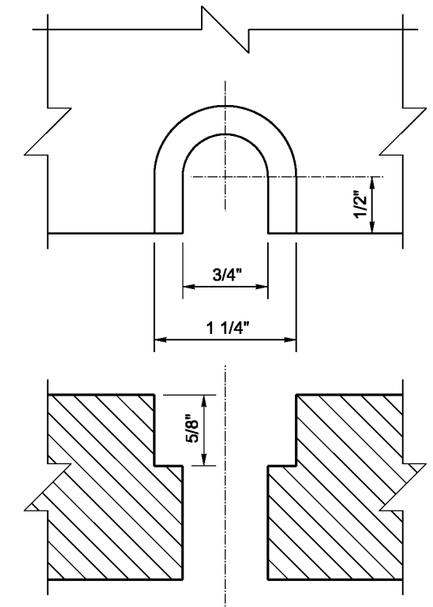

BOLT-DOWN SLOT DETAIL
SEE NOTE 1

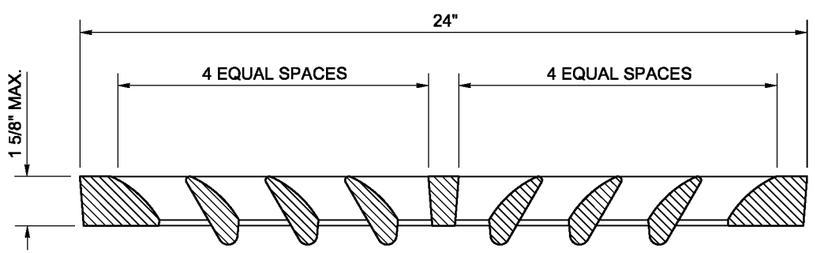

SECTION A

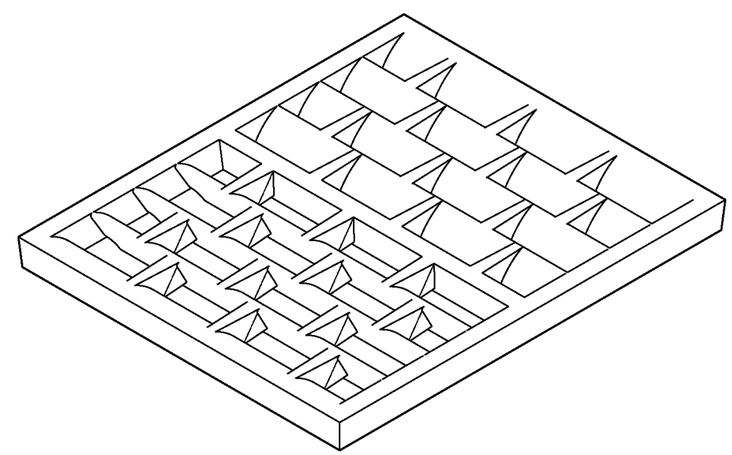

ISOMETRIC

NOTE: THIS PLAN IS NOT A LEGAL ENGINEERING DOCUMENT BUT AN ELECTRONIC DUPLICATE. THE ORIGINAL, SIGNED BY THE ENGINEER AND APPROVED FOR PUBLICATION, IS KEPT ON FILE AT THE WASHINGTON STATE DEPARTMENT OF TRANSPORTATION. A COPY MAY BE OBTAINED UPON REQUEST.

RECTANGULAR BI-DIRECTIONAL VANED GRATE

STANDARD PLAN B-30.40-01

SHEET 1 OF 1 SHEET

APPROVED FOR PUBLICATION

Pasco Bakotich III — STATE DESIGN ENGINEER
04/26/12 — DATE

Washington State Department of Transportation

EFFECTIVE: AUGUST 6, 2012 TO August 4, 2013
EFFECTIVE: AUGUST 6, 2012 TO August 4, 2013
EFFECTIVE: AUGUST 6, 2012 TO August 4, 2013
EFFECTIVE: AUGUST 6, 2012 TO August 4, 2013

EFFECTIVE: AUGUST 6, 2012 TO August 4, 2013
EFFECTIVE: AUGUST 6, 2012 TO August 4, 2013

DRAWN BY: LISA GYFORD

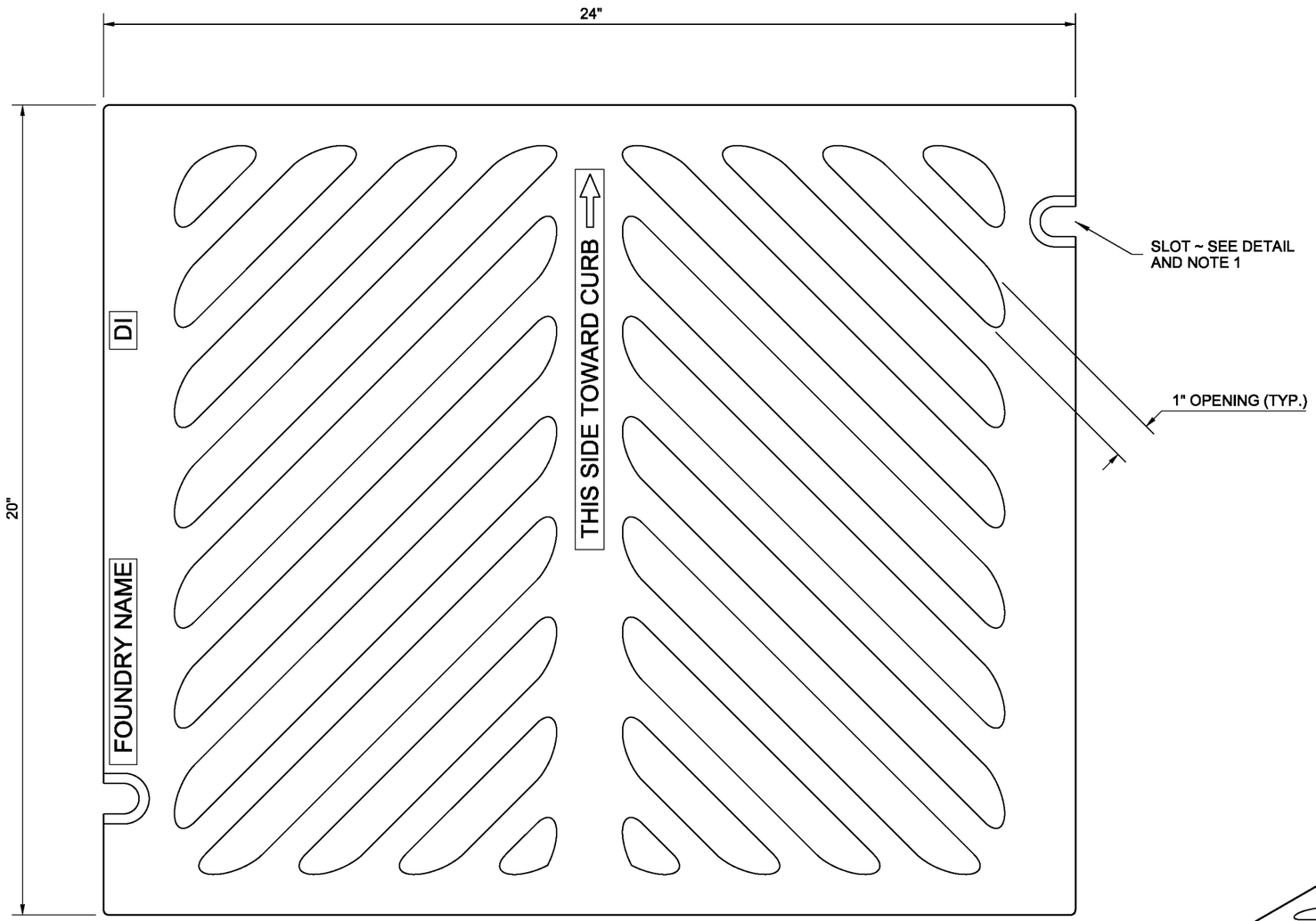

TOP

NOTES

1. Bolt-down capability is required on all frames, grates, and covers, unless specified otherwise in the Contract. Provide 2 holes in the frame that are vertically aligned with the grate or cover slots. The frame shall accept the 5/8" - 11 NC × 2" Allen head cap screw by being tapped, or other approved mechanism. Location of bolt-down holes varies by manufacturer.
2. Refer to **Standard Specification 9-05.15(2)** for additional requirements.
3. For frame details, see **Standard Plan B-30.10**.
4. The thickness of the grate shall not exceed 1 5/8".

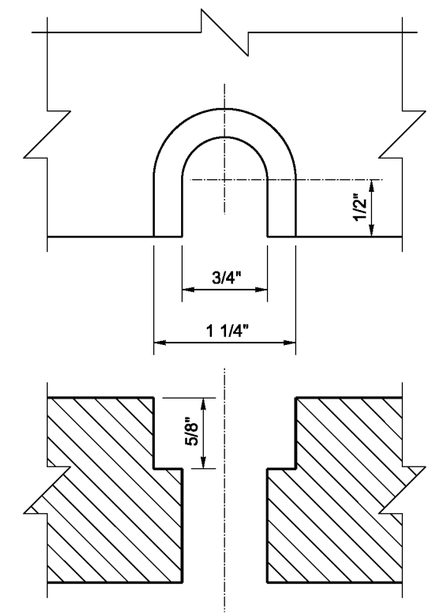

BOLT-DOWN SLOT DETAIL
SEE NOTE 1

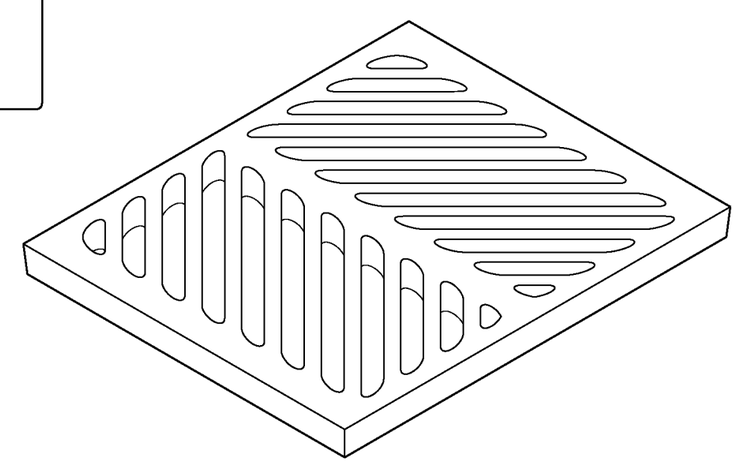

ISOMETRIC

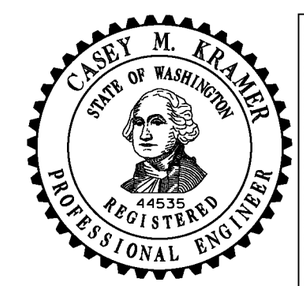

NOTE: THIS PLAN IS NOT A LEGAL ENGINEERING DOCUMENT BUT AN ELECTRONIC DUPLICATE. THE ORIGINAL, SIGNED BY THE ENGINEER AND APPROVED FOR PUBLICATION, IS KEPT ON FILE AT THE WASHINGTON STATE DEPARTMENT OF TRANSPORTATION. A COPY MAY BE OBTAINED UPON REQUEST.

RECTANGULAR HERRINGBONE GRATE

STANDARD PLAN B-30.50-01

SHEET 1 OF 1 SHEET

APPROVED FOR PUBLICATION

Pasco Bakotich III — STATE DESIGN ENGINEER
04/26/12 — DATE

Washington State Department of Transportation

EFFECTIVE: AUGUST 6, 2012 TO August 4, 2013
EFFECTIVE: AUGUST 6, 2012 TO August 4, 2013
EFFECTIVE: AUGUST 6, 2012 TO August 4, 2013
EFFECTIVE: AUGUST 6, 2012 TO August 4, 2013

EFFECTIVE: AUGUST 6, 2012 TO August 4, 2013
EFFECTIVE: AUGUST 6, 2012 TO August 4, 2013

DRAWN BY: LISA CYFORD

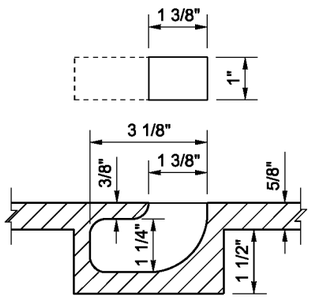

BLIND PICK NOTCH
DETAIL "A"

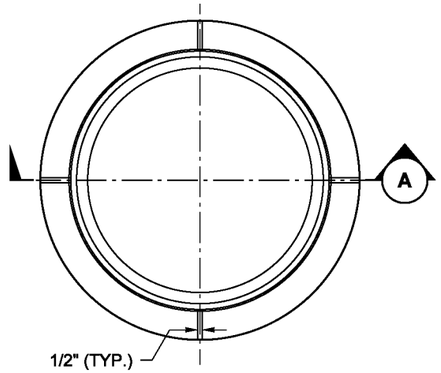

RING PLAN

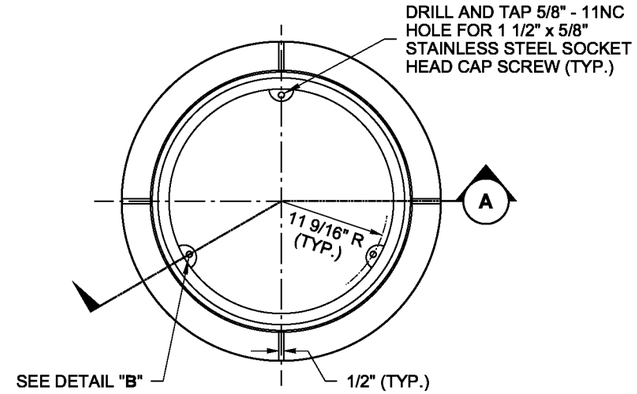

RING PLAN

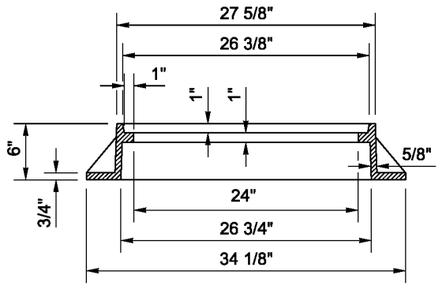

RING SECTION (A)

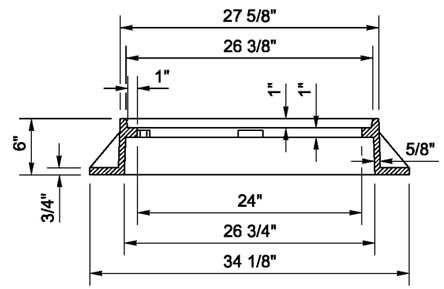

RING SECTION (A)

NOTES

1. The gasket and groove may be in the seat (frame) or in the underside of the cover. The gasket may be "T" shaped in section. The groove may be cast or machined.
2. Bolt-down capability is required on all frames, grates, and covers, unless specified otherwise in the Contract. Provide 3 holes in the frame that are vertically aligned with the grate or cover slots. The frame shall accept the 5/8" - 1 NC × 2" Allen head cap screw by being tapped, or other approved mechanism. Location of bolt down holes varies by manufacturer.
3. For bolt-down manhole ring and covers that are not designated "Watertight," the neoprene gasket, groove, and washer are not required.
4. Washer shall be neoprene (Detail "B").
5. In lieu of blind pick notch for manhole covers, a single 1" pick hole is acceptable. Hole location and number of holes may vary by manufacturer.
6. Alternative reinforcing designs are acceptable in lieu of the rib design.
7. For clarity, the vertical scale of the Cover Section has been exaggerated, it is 1.5 times the horizontal scale (1H:1.5V).

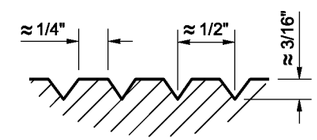

SKID GROOVE PATTERN DETAIL

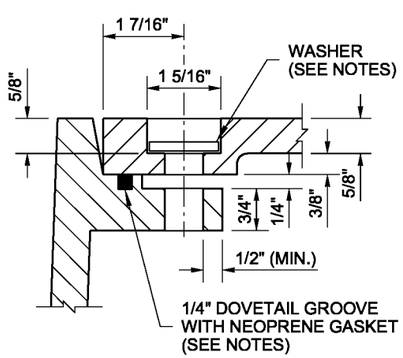

BOLT-DOWN / WATERTIGHT
DETAIL "B"

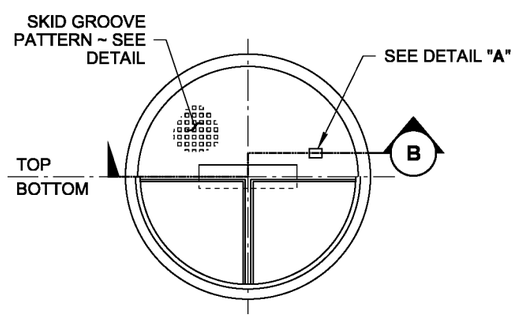

COVER PLAN

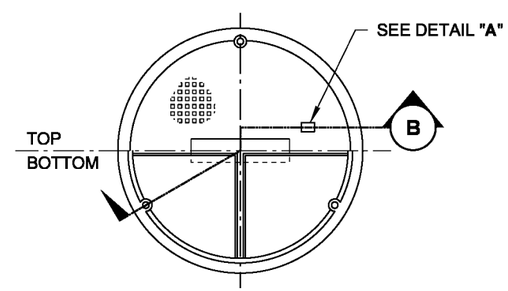

COVER PLAN

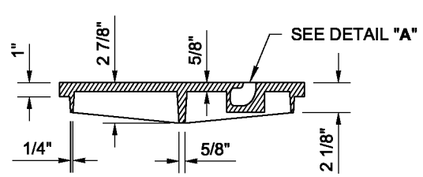

COVER SECTION (B)

(SEE NOTE 7)

STANDARD

TYPE 1

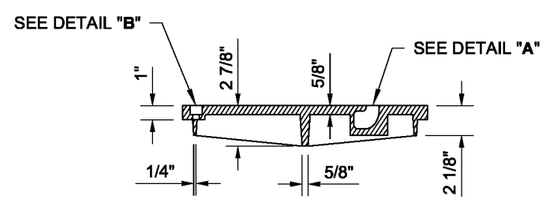

COVER SECTION (B)

(SEE NOTE 7)

BOLT-DOWN / WATERTIGHT

TYPE 2

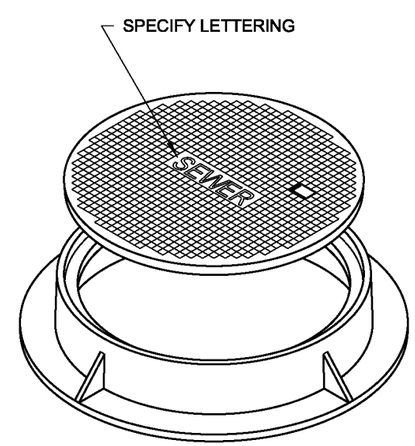

ISOMETRIC VIEW

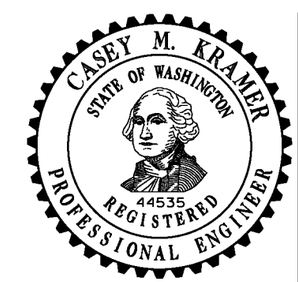

NOTE: THIS PLAN IS NOT A LEGAL ENGINEERING DOCUMENT BUT AN ELECTRONIC DUPLICATE. THE ORIGINAL, SIGNED BY THE ENGINEER AND APPROVED FOR PUBLICATION, IS KEPT ON FILE AT THE WASHINGTON STATE DEPARTMENT OF TRANSPORTATION. A COPY MAY BE OBTAINED UPON REQUEST.

CIRCULAR FRAME (RING) AND COVER

STANDARD PLAN B-30.70-03

SHEET 1 OF 1 SHEET

APPROVED FOR PUBLICATION

Pasco Bakotich III — STATE DESIGN ENGINEER — *04/26/12* — DATE

Washington State Department of Transportation

EFFECTIVE: AUGUST 6, 2012 TO August 4, 2013
EFFECTIVE: AUGUST 6, 2012 TO August 4, 2013
EFFECTIVE: AUGUST 6, 2012 TO August 4, 2013
EFFECTIVE: AUGUST 6, 2012 TO August 4, 2013

EFFECTIVE: AUGUST 6, 2012 TO August 4, 2013
EFFECTIVE: AUGUST 6, 2012 TO August 4, 2013

DRAWN BY: ADAM COCHRAN

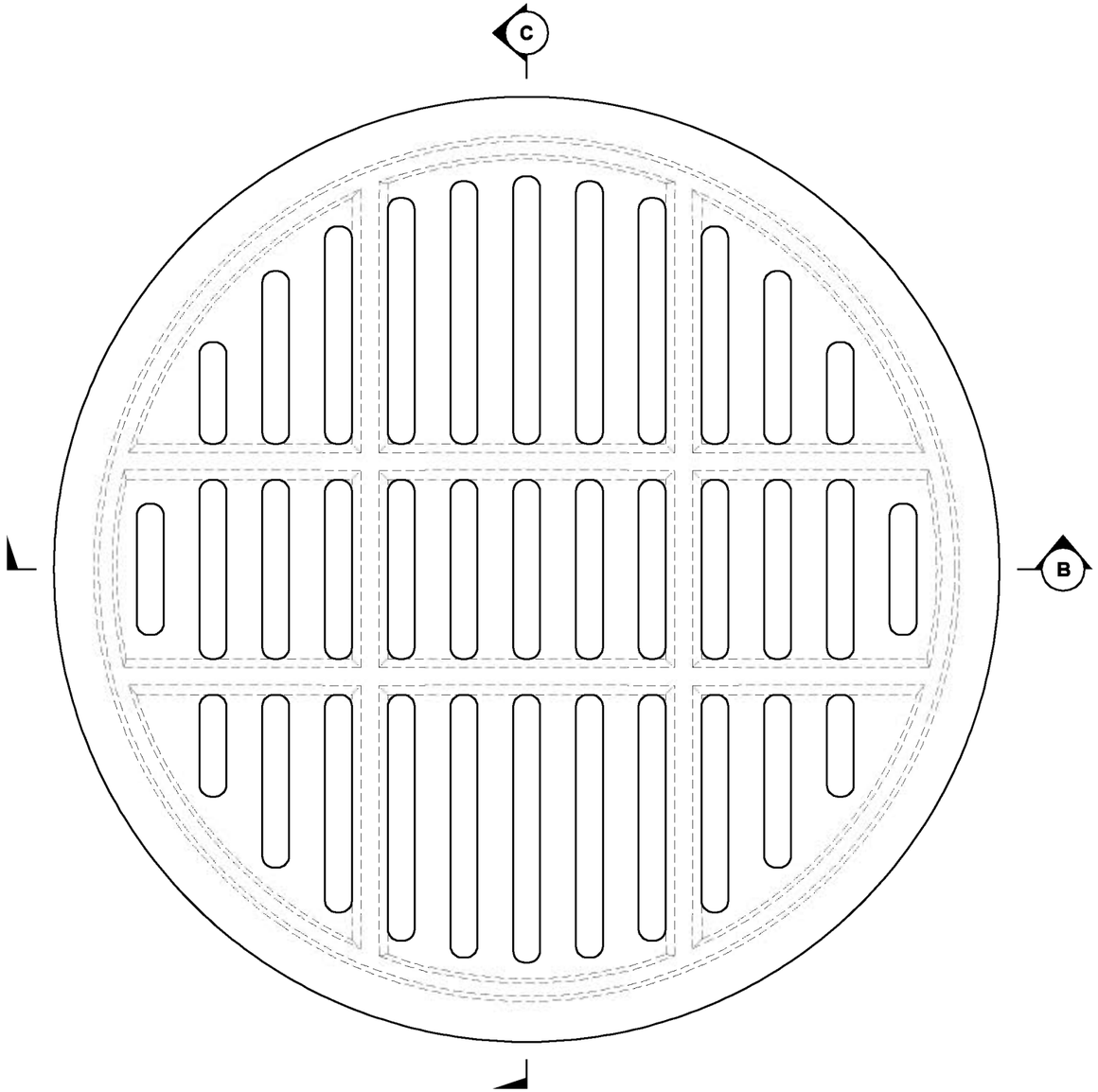

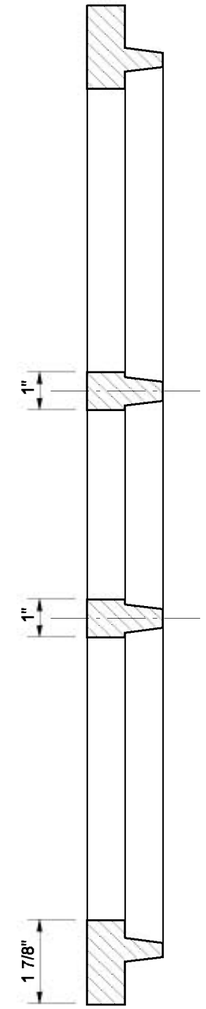

SECTION C

NOTES

1. For use with Circular Frames (rings) detailed in Standard Plan B-30.70.
2. Slotted Manhole Covers are intended for use with Drywells only. See Standard Plans B-20.20 and B-20.60.

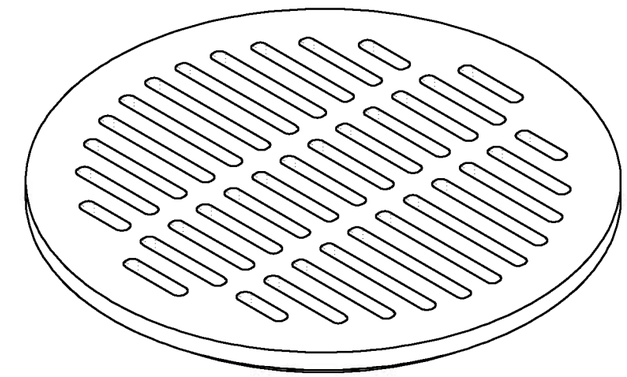

ISOMETRIC VIEW

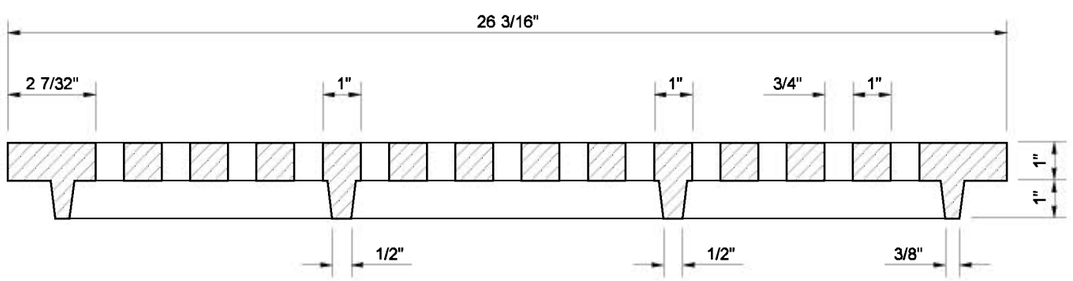

SECTION B

EXPIRES JULY 1, 2007

NOTE: THIS PLAN IS NOT A LEGAL ENGINEERING DOCUMENT BUT AN ELECTRONIC DUPLICATE. THE ORIGINAL, SIGNED BY THE ENGINEER AND APPROVED FOR PUBLICATION, IS KEPT ON FILE AT THE WASHINGTON STATE DEPARTMENT OF TRANSPORTATION. A COPY MAY BE OBTAINED UPON REQUEST.

CIRCULAR GRATE

STANDARD PLAN B-30.80-00

SHEET 1 OF 1 SHEET

APPROVED FOR PUBLICATION

Harold J. Peterfeso — STATE DESIGN ENGINEER

06-08-06 — DATE

Washington State Department of Transportation

EFFECTIVE: AUGUST 6, 2012 TO August 4, 2013
EFFECTIVE: AUGUST 6, 2012 TO August 4, 2013
EFFECTIVE: AUGUST 6, 2012 TO August 4, 2013
EFFECTIVE: AUGUST 6, 2012 TO August 4, 2013

EFFECTIVE: AUGUST 6, 2012 TO August 4, 2013

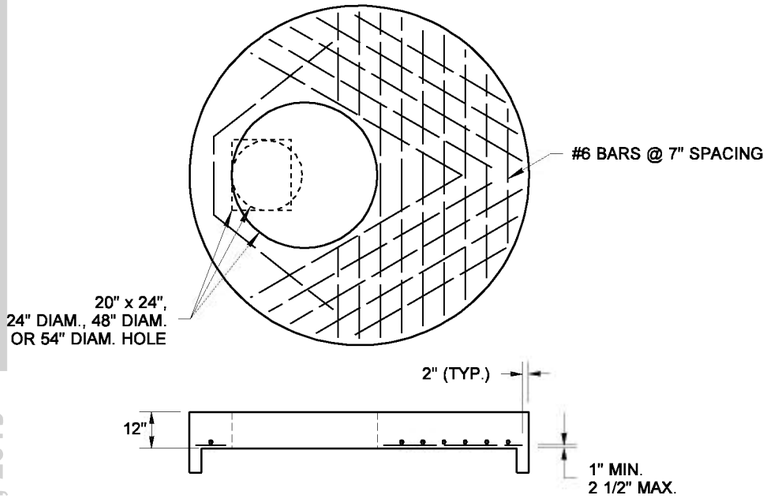

84" or 96" FLAT SLAB TOP

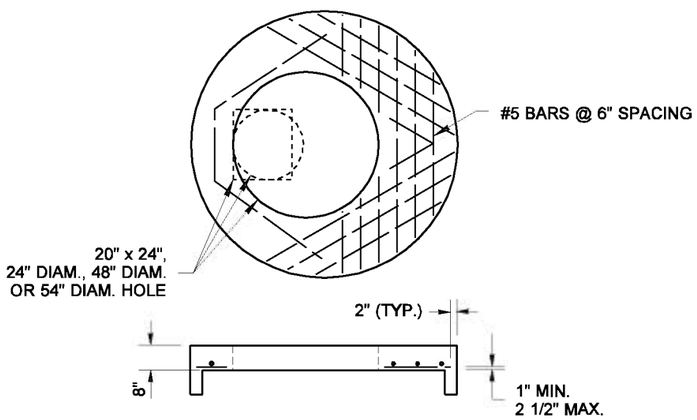

72" FLAT SLAB TOP

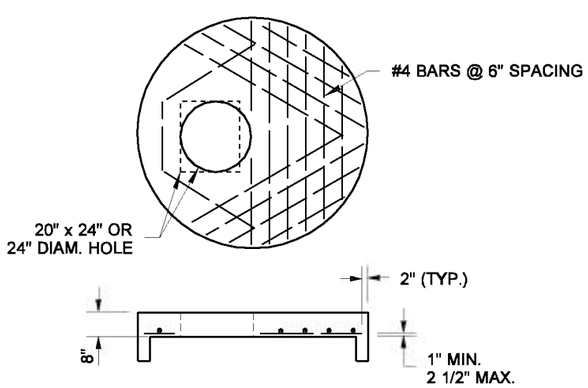

48", 54", or 60" FLAT SLAB TOP

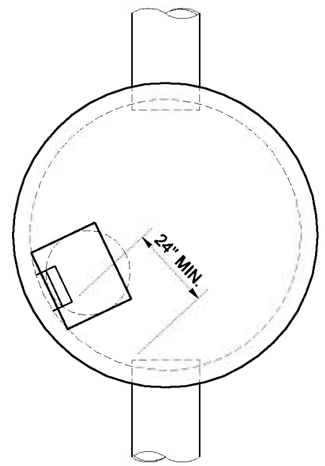

TYPICAL ORIENTATION FOR ACCESS AND STEPS

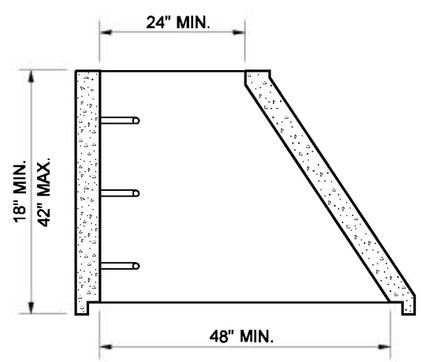

ECCENTRIC CONE SECTION

EFFECTIVE: AUGUST 6, 2012 TO August 4, 2013

NOTE

Ladder rungs for manholes and catch basins shall meet the requirements of AASHTO M 199.

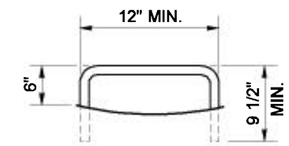

STEP

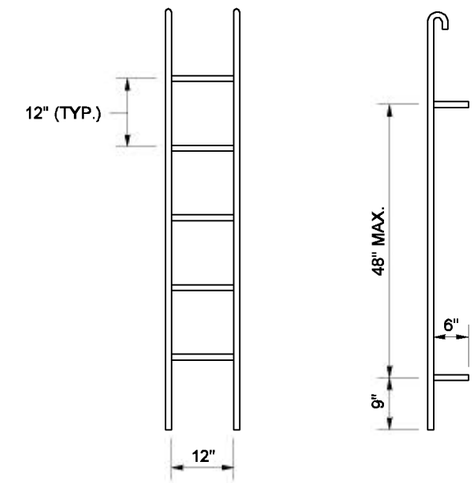

PREFABRICATED LADDER

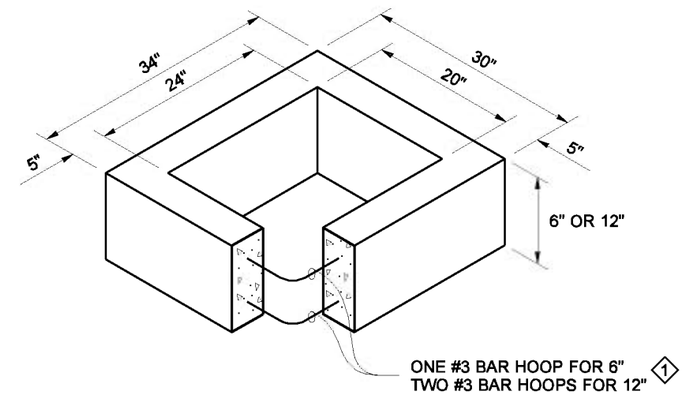

RECTANGULAR ADJUSTMENT SECTION

1 As an acceptable alternative to rebar, wire mesh having a minimum area of 0.12 square inches per foot may be used for adjustment sections.

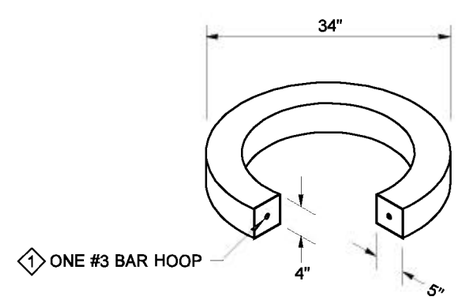

CIRCULAR ADJUSTMENT SECTION

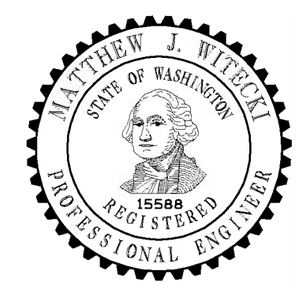

EXPIRES JULY 1, 2009

NOTE: THIS PLAN IS NOT A LEGAL ENGINEERING DOCUMENT BUT AN ELECTRONIC DUPLICATE. THE ORIGINAL, SIGNED BY THE ENGINEER AND APPROVED FOR PUBLICATION, IS KEPT ON FILE AT THE WASHINGTON STATE DEPARTMENT OF TRANSPORTATION. A COPY MAY BE OBTAINED UPON REQUEST.

MISCELLANEOUS DETAILS FOR DRAINAGE STRUCTURES STANDARD PLAN B-30.90-01

SHEET 1 OF 1 SHEET

APPROVED FOR PUBLICATION

Pasco Bakotich III — STATE DESIGN ENGINEER

09-20-07 — DATE

Washington State Department of Transportation

EFFECTIVE: AUGUST 6, 2012 TO August 4, 2013

EFFECTIVE: AUGUST 6, 2012 TO August 4, 2013
EFFECTIVE: AUGUST 6, 2012 TO August 4, 2013

DRAWN BY: MARK SUJKA

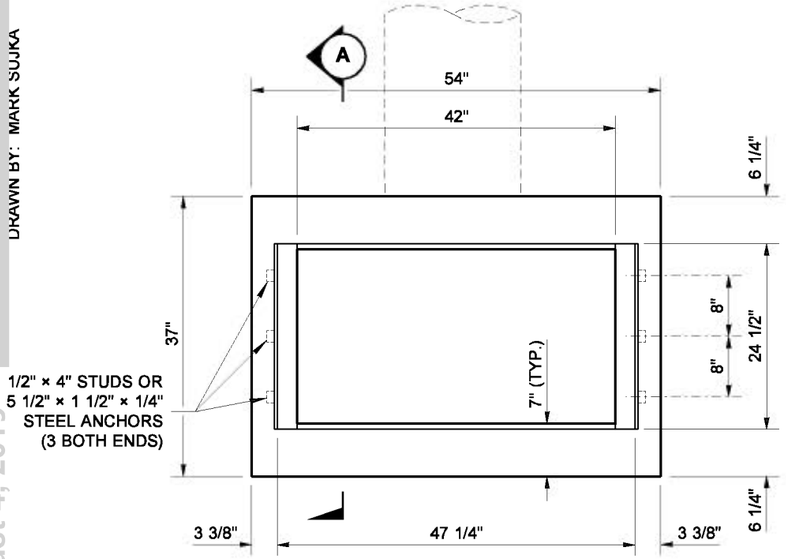

TOP VIEW

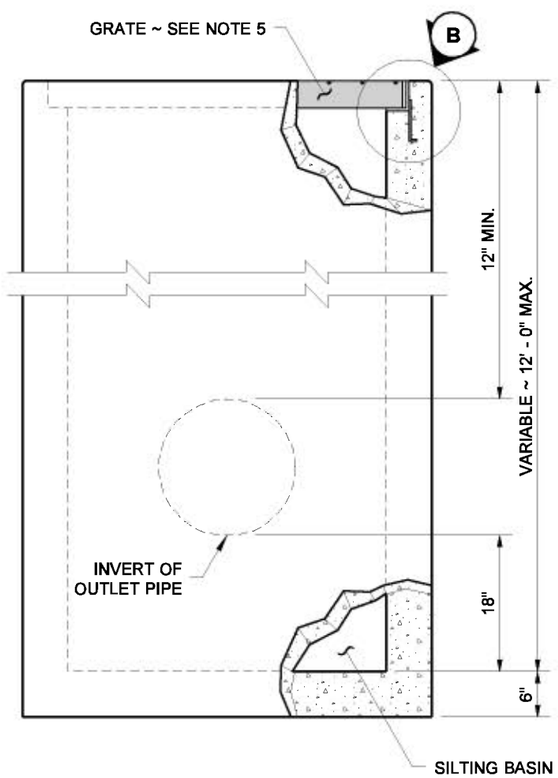

SIDE VIEW

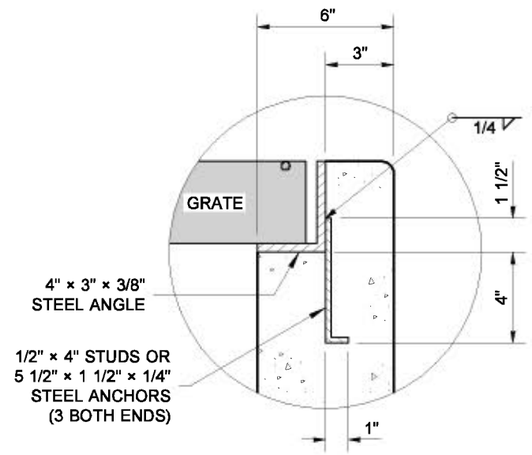

DETAIL B

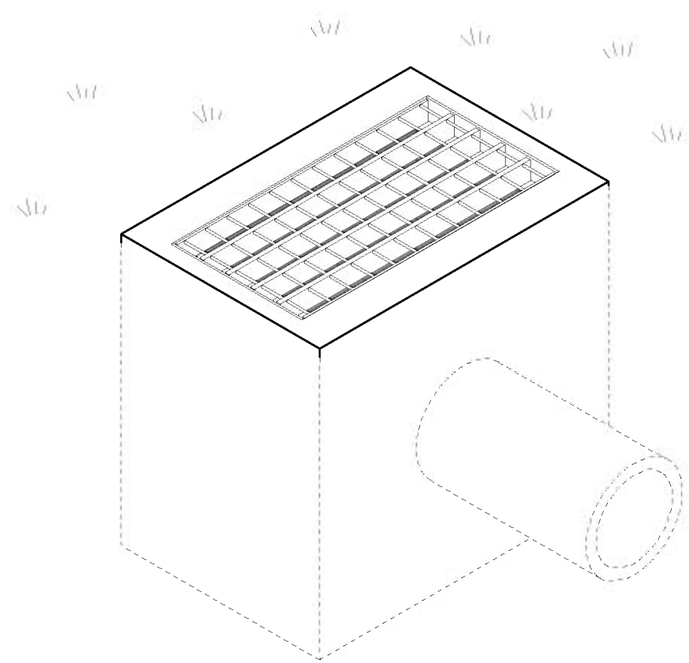

ISOMETRIC VIEW

NOTES

1. The Steel Angles shall be set so that each bearing bar of prefabricated grate shall have full bearing on both ends. The finished top of concrete shall be even with the grate surface.
2. All exposed concrete shall be finished with a 1/2" radius.
3. The grade line of the top inside of any pipe shall enter no lower than the grade line of the top inside of the outlet pipe.
4. Pipes may enter through the knockouts on any side at any reasonable angle, provided the outside of the pipe can be contained between two opposite walls.
5. See contract for type of grate specified. See Standard Plan B-40.20 and B-40.40 for grate details.

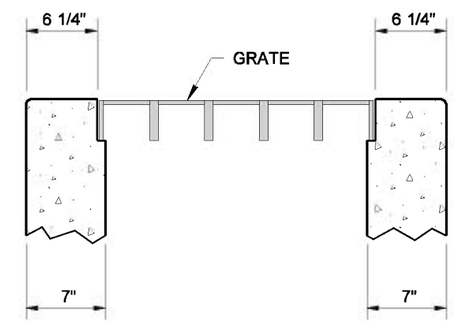

SECTION A

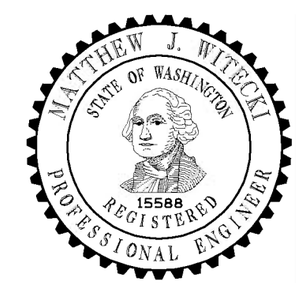

EXPIRES JULY 1, 2007

NOTE: THIS PLAN IS NOT A LEGAL ENGINEERING DOCUMENT BUT AN ELECTRONIC DUPLICATE. THE ORIGINAL, SIGNED BY THE ENGINEER AND APPROVED FOR PUBLICATION, IS KEPT ON FILE AT THE WASHINGTON STATE DEPARTMENT OF TRANSPORTATION. A COPY MAY BE OBTAINED UPON REQUEST.

GRATE INLET TYPE 1 (CAST-IN-PLACE)

STANDARD PLAN B-35.20-00

SHEET 1 OF 1 SHEET

APPROVED FOR PUBLICATION

Harold J. Peterfeso — STATE DESIGN ENGINEER

06-08-06 — DATE

Washington State Department of Transportation

EFFECTIVE: AUGUST 6, 2012 TO August 4, 2013
EFFECTIVE: AUGUST 6, 2012 TO August 4, 2013
EFFECTIVE: AUGUST 6, 2012 TO August 4, 2013
EFFECTIVE: AUGUST 6, 2012 TO August 4, 2013

EFFECTIVE: AUGUST 6, 2012 TO August 4, 2013
EFFECTIVE: AUGUST 6, 2012 TO August 4, 2013

DRAWN BY: ADAM COCHRAN

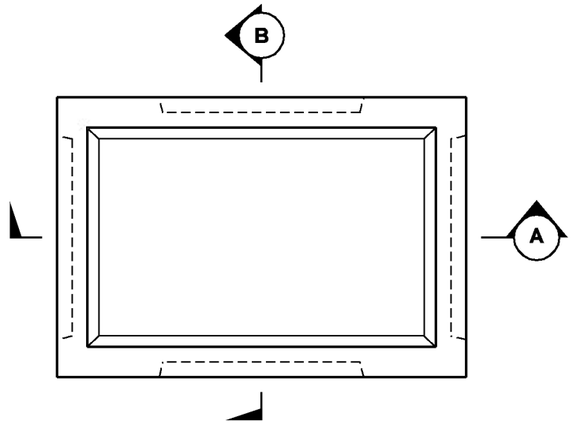

TOP VIEW

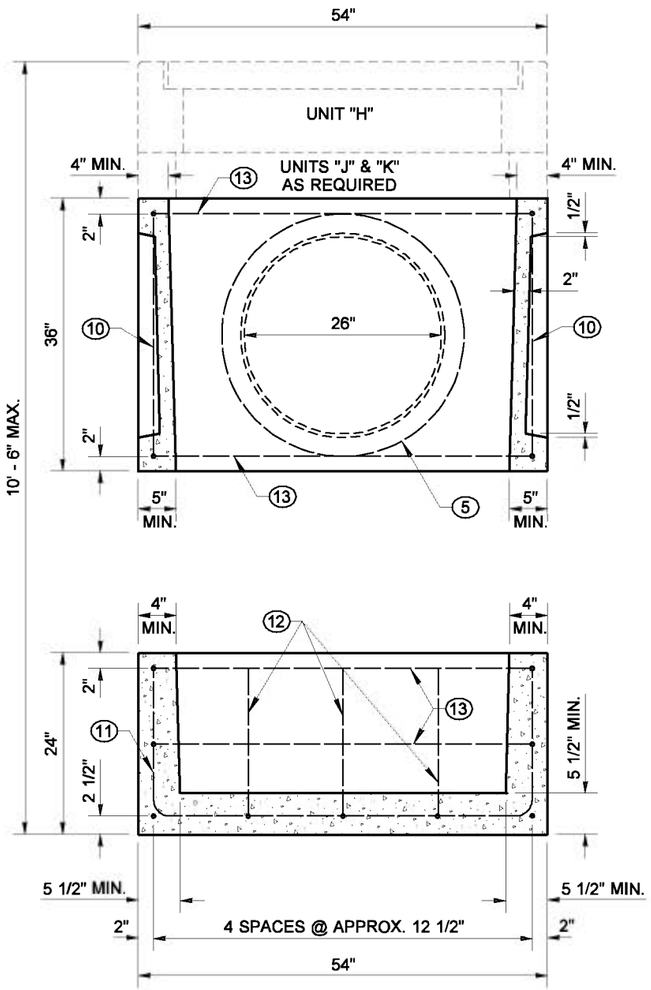

SECTION (A) TWO PIECE BASE

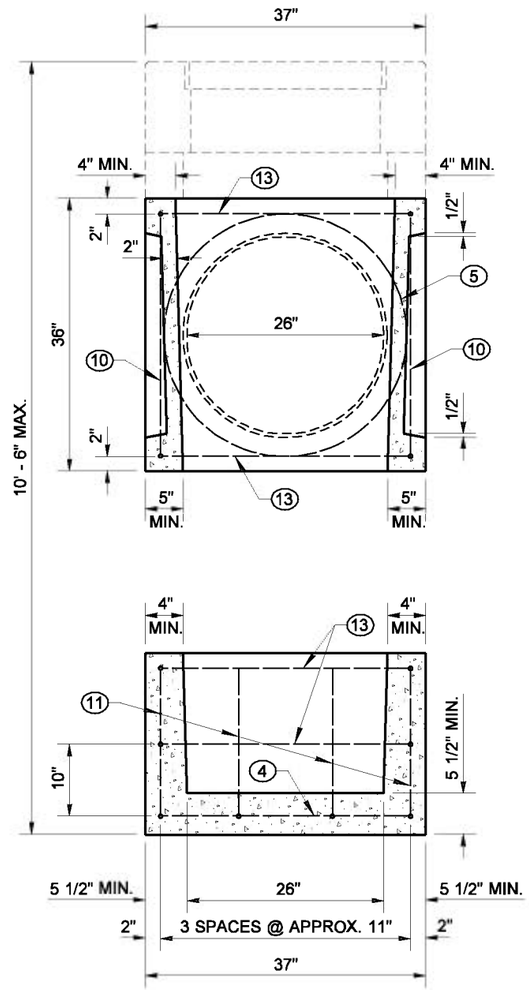

SECTION (B) TWO PIECE BASE

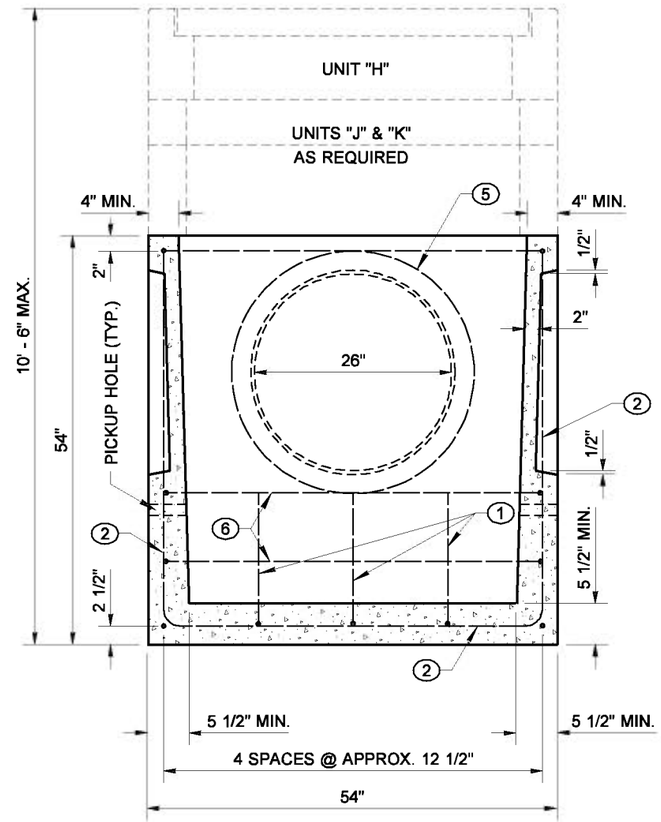

SECTION (A) ONE PIECE BASE

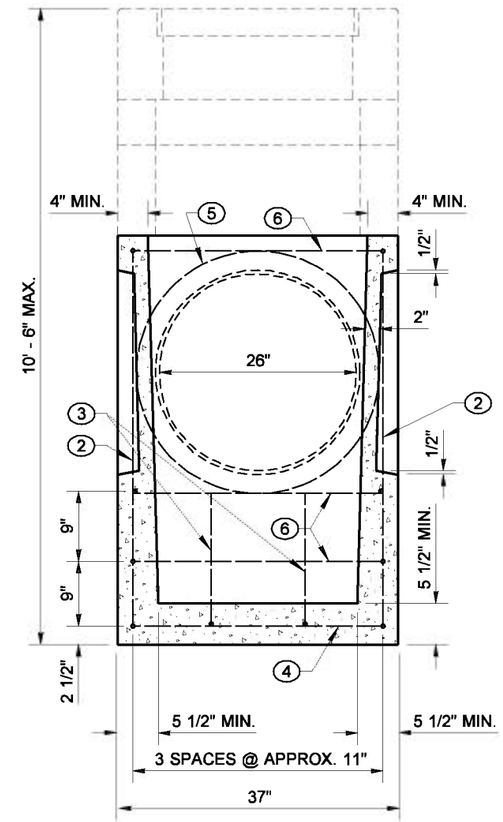

SECTION (B) ONE PIECE BASE

PIPE ALLOWANCES

PIPE MATERIAL	MAXIMUM INSIDE DIAMETER
REINFORCED OR PLAIN CONCRETE	18"
ALL METAL PIPE	21"
CPSSP * (STD. SPEC. 9-05.20)	18"
SOLID WALL PVC (STD. SPEC. 9-05.12(1))	21"
PROFILE WALL PVC (STD. SPEC. 9-05.12(2))	21"

* CORRUGATED POLYETHYLENE STORM SEWER PIPE

NOTE: THIS PLAN IS NOT A LEGAL ENGINEERING DOCUMENT BUT AN ELECTRONIC DUPLICATE. THE ORIGINAL, SIGNED BY THE ENGINEER AND APPROVED FOR PUBLICATION, IS KEPT ON FILE AT THE WASHINGTON STATE DEPARTMENT OF TRANSPORTATION. A COPY MAY BE OBTAINED UPON REQUEST.

GRATE INLET TYPE 2

STANDARD PLAN B-35.40-00

SHEET 1 OF 2 SHEETS

APPROVED FOR PUBLICATION

Harold J. Peterfeso — STATE DESIGN ENGINEER

06-08-06 — DATE

Washington State Department of Transportation

EFFECTIVE: AUGUST 6, 2012 TO August 4, 2013
EFFECTIVE: AUGUST 6, 2012 TO August 4, 2013
EFFECTIVE: AUGUST 6, 2012 TO August 4, 2013
EFFECTIVE: AUGUST 6, 2012 TO August 4, 2013

EFFECTIVE: AUGUST 6, 2012 TO August 4, 2013

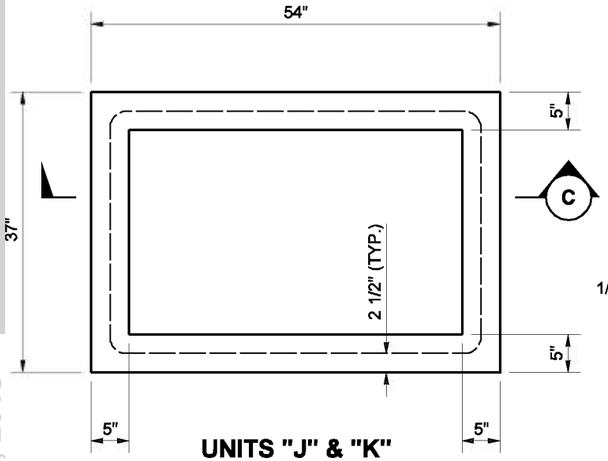

UNITS "J" & "K"

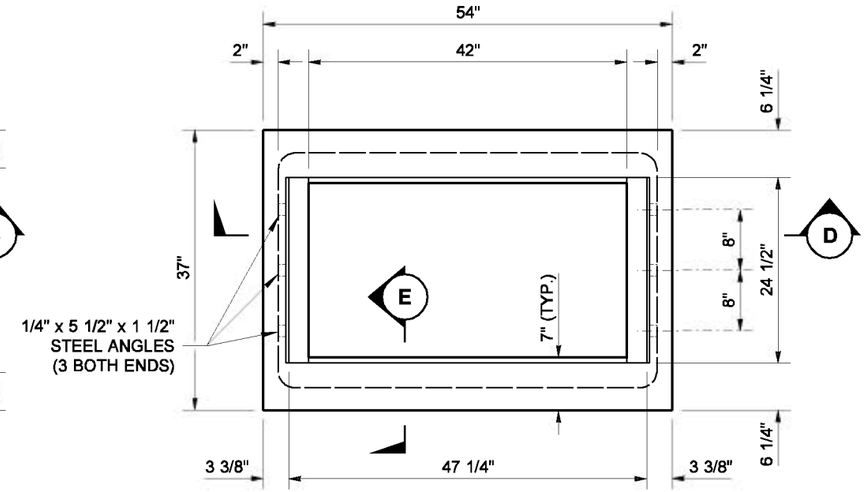

UNIT "H"

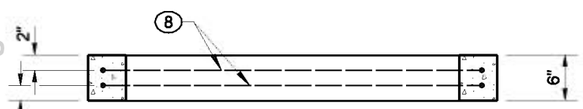

SECTION (C) UNIT "J"

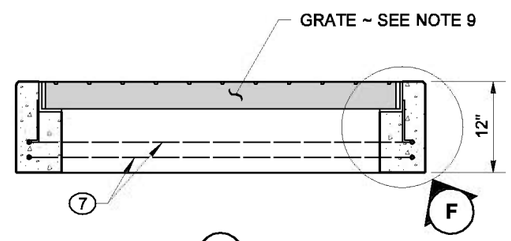

SECTION (D) UNIT "H"

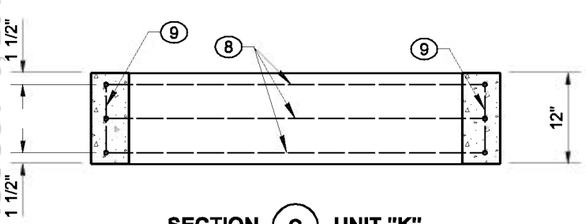

SECTION (C) UNIT "K"

NOTES

1. The Steel Angles shall be set so that each bearing bar of prefabricated grate shall have full bearing on both ends. The finished top of concrete shall be even with the grate surface.
2. Top of inlet grate shall be placed at ground level to present an unobstructed ditch or median section.
3. All exposed concrete edges shall be finished with a 1/2" radius.
4. Pipes may enter through the knockouts on any side at any reasonable angle, provided the outside of the pipe can be contained between two opposite walls.
5. The flow line of the outlet pipe shall be 18" minimum above the inside bottom of the inlet structure.
6. The grade line of the top inside of any inlet pipe shall enter no lower than the grade line of the top inside of the outlet pipe.
7. Unit "H" and optional extension units "J" and "K" shall be grouted in place to the satisfaction of the Engineer.
8. All pickup holes shall be grouted full after the basin has been placed.
9. See contract for type of grate specified. See Standard Plan B-40.20 and B-40.40 for grate details.

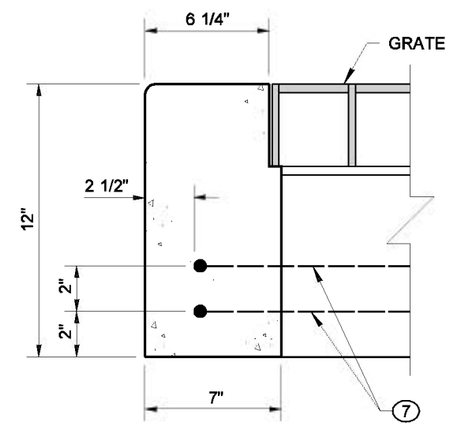

SECTION (E) UNIT "H"

BAR LIST

MARK	LOCATION	QTY.	SIZE	LENGTH	DESCRIPTION
1	BOTTOM SLAB AND SIDE WALL	3	3	5' - 9"	
2	BOTTOM SLAB AND SIDE WALL	2		12' - 5"	
3	BOTTOM SLAB AND SIDE WALL	2		7' - 2"	
4	BOTTOM SLAB AND SIDE WALL	2		2' - 9"	STRAIGHT
5	WALL	4		9' - 1"	HOOP
6	SIDE WALL	3		14' - 6"	HOOP
7	UNIT H	2		14' - 2"	HOOP
8	UNIT J	2		14' - 2"	HOOP
8	UNIT K	3		14' - 2"	HOOP
9	UNIT K	4		0' - 9"	STRAIGHT
10	SIDE WALL	8		2' - 8"	STRAIGHT
11	BOTTOM SLAB AND SIDE WALL	4		7' - 5"	
12	BOTTOM SLAB AND SIDE WALL	3		6' - 0"	
13	SIDE WALL	4		14' - 6"	HOOP

BENDING DIAGRAM
(ALL DIMENSIONS ARE OUT TO OUT)

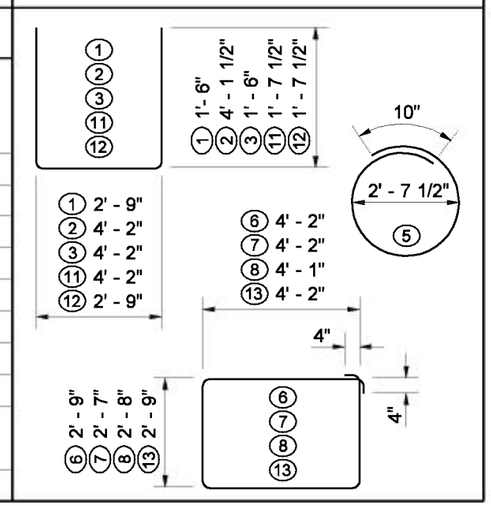

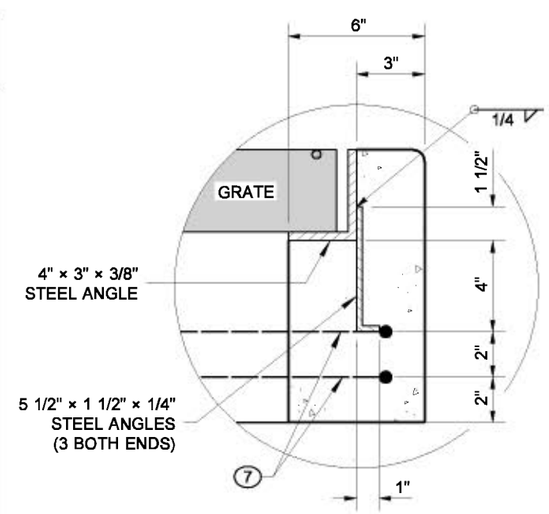

DETAIL (F)

NOTE: THIS PLAN IS NOT A LEGAL ENGINEERING DOCUMENT BUT AN ELECTRONIC DUPLICATE. THE ORIGINAL, SIGNED BY THE ENGINEER AND APPROVED FOR PUBLICATION, IS KEPT ON FILE AT THE WASHINGTON STATE DEPARTMENT OF TRANSPORTATION. A COPY MAY BE OBTAINED UPON REQUEST.

GRATE INLET TYPE 2

STANDARD PLAN B-35.40-00

SHEET 2 OF 2 SHEETS

APPROVED FOR PUBLICATION

Harold J. Peterfeso — STATE DESIGN ENGINEER

06-08-06 — DATE

Washington State Department of Transportation

EFFECTIVE: AUGUST 6, 2012 TO August 4, 2013

EFFECTIVE: AUGUST 6, 2012 TO August 4, 2013

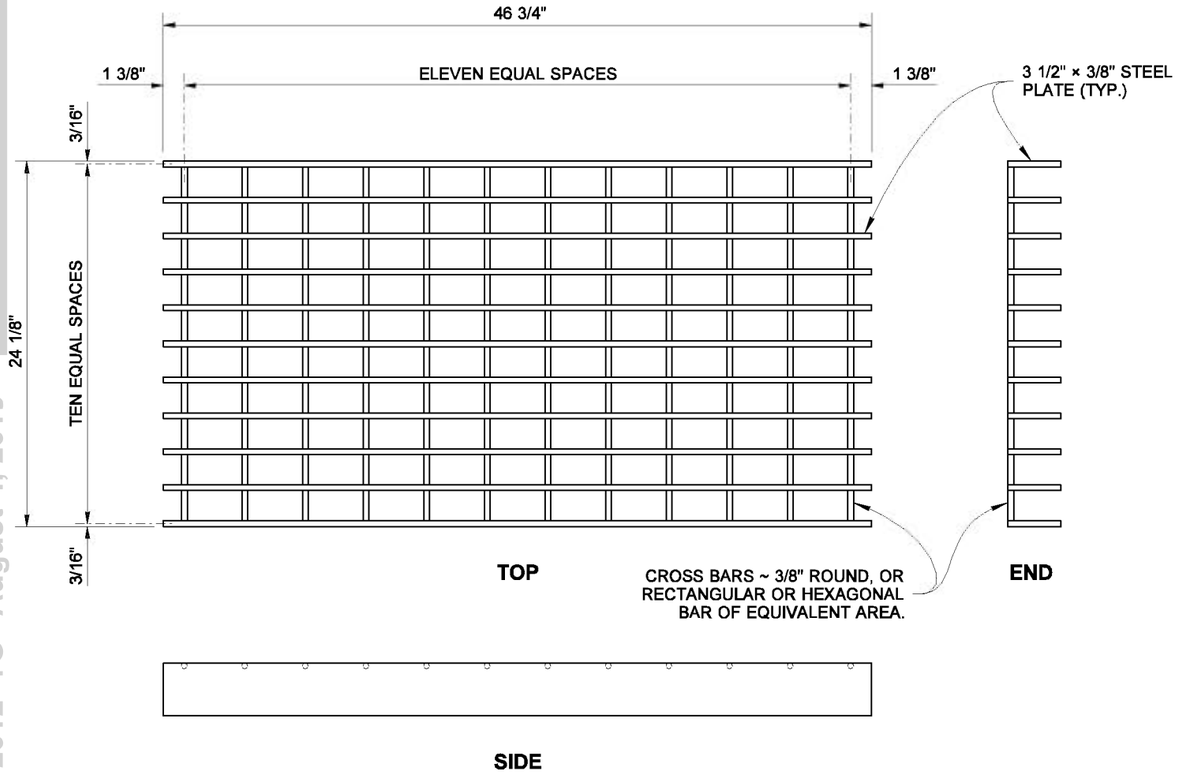

GRATE "A"
(APPROXIMATE WEIGHT 215 LBS)

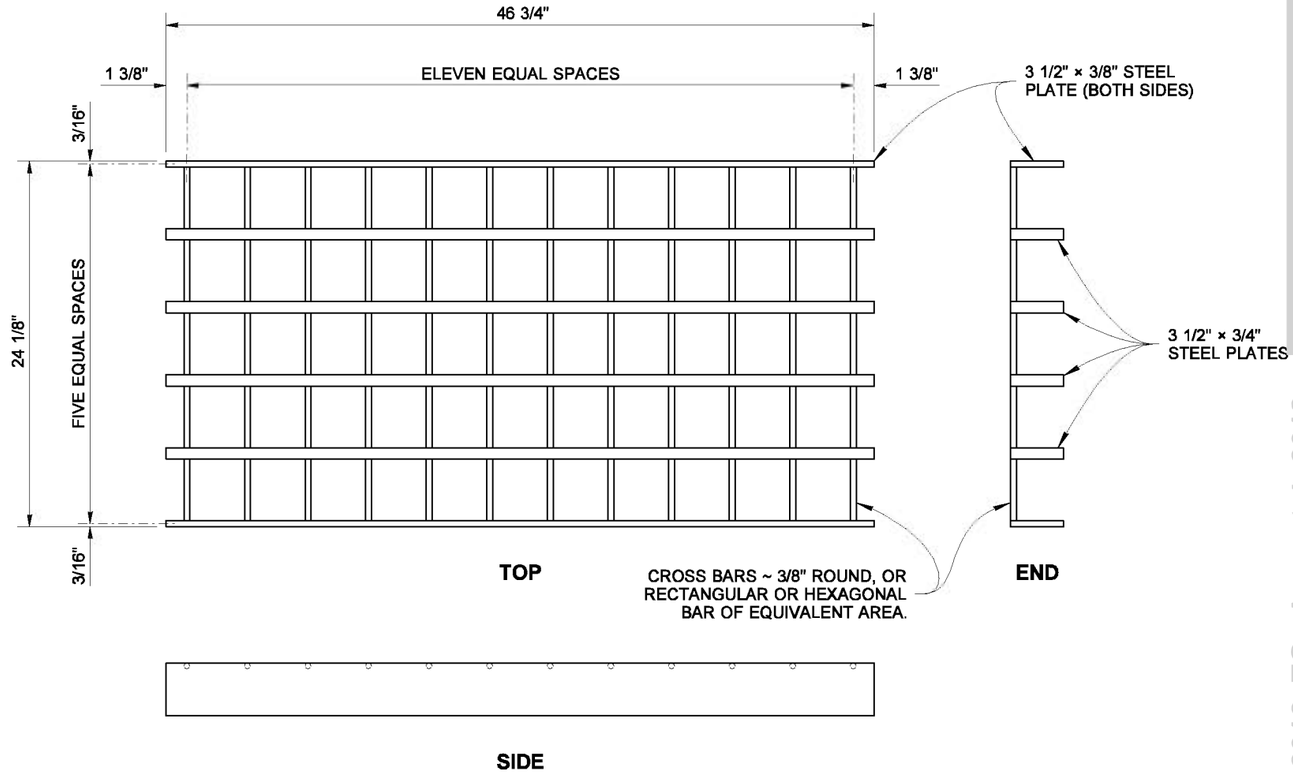

GRATE "B"
(APPROXIMATE WEIGHT 215 LBS)

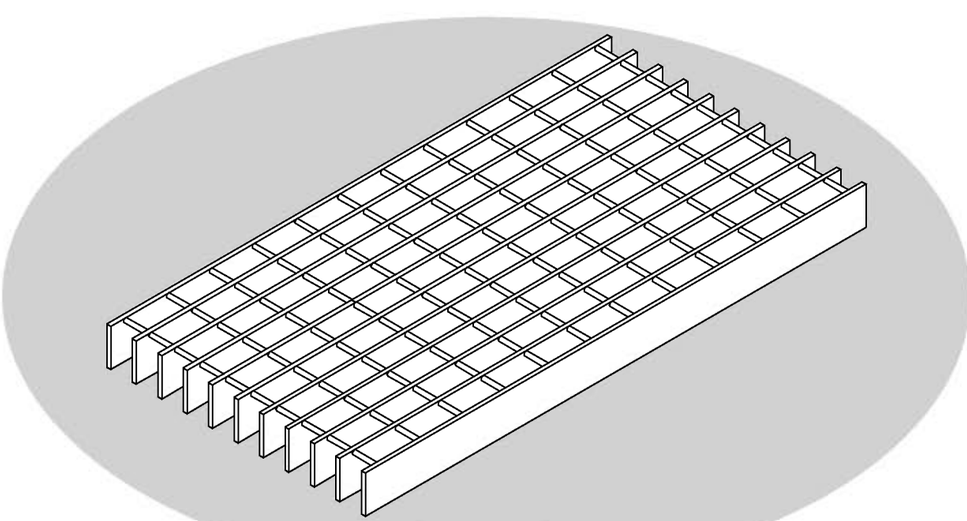

ISOMETRIC

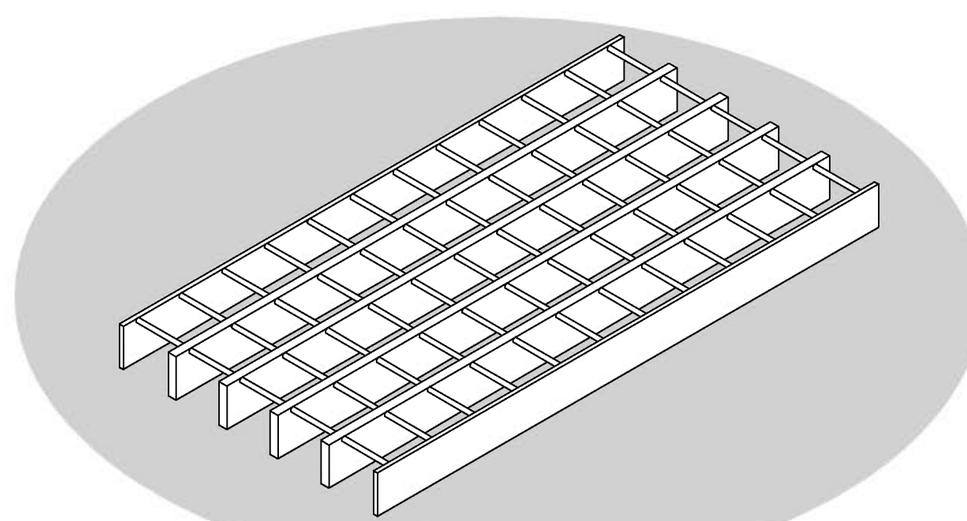

ISOMETRIC

DRAWN BY: MARK SUJKA

MATTHEW J. WITECKI
STATE OF WASHINGTON
15588
REGISTERED
PROFESSIONAL ENGINEER

EXPIRES JULY 1, 2007

NOTE: THIS PLAN IS NOT A LEGAL ENGINEERING DOCUMENT BUT AN ELECTRONIC DUPLICATE. THE ORIGINAL, SIGNED BY THE ENGINEER AND APPROVED FOR PUBLICATION, IS KEPT ON FILE AT THE WASHINGTON STATE DEPARTMENT OF TRANSPORTATION. A COPY MAY BE OBTAINED UPON REQUEST.

WELDED GRATES FOR GRATE INLET

STANDARD PLAN B-40.20-00

SHEET 1 OF 1 SHEET

APPROVED FOR PUBLICATION

Harold J. Peterfeso — STATE DESIGN ENGINEER
06-01-06 — DATE

Washington State Department of Transportation

EFFECTIVE: AUGUST 6, 2012 TO August 4, 2013

EFFECTIVE: AUGUST 6, 2012 TO August 4, 2013
EFFECTIVE: AUGUST 6, 2012 TO August 4, 2013

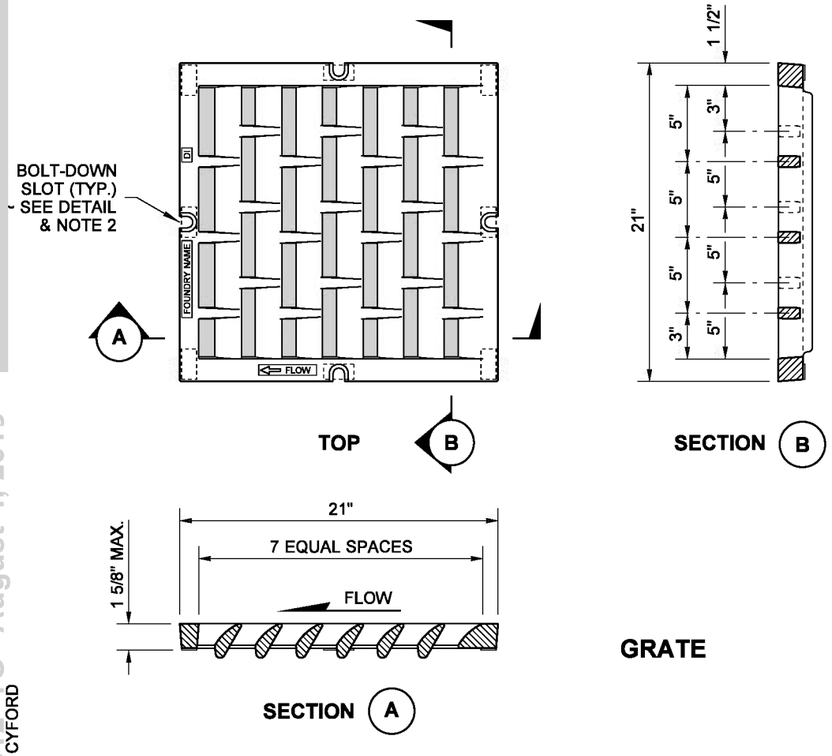

GRATE

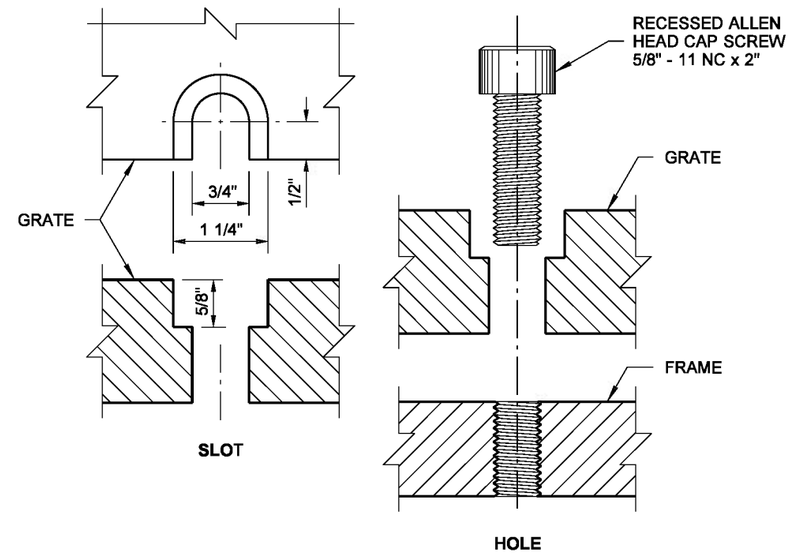

BOLT-DOWN DETAILS
SEE NOTE 2

NOTES

1. The Contract may specify a rotated inlet installation. Orient the Grates in the Frame so they intercept flow.
2. When bolt-down grates are specified in the Contract, provide two slots in the grate that are centered with the holes in the frame. Location of bolt-down slots varies among different manufacturers.
3. Refer to Standard Specification 9-05.15(2) for additional requirements.
4. Frame and Grates shall be Ductile Iron.

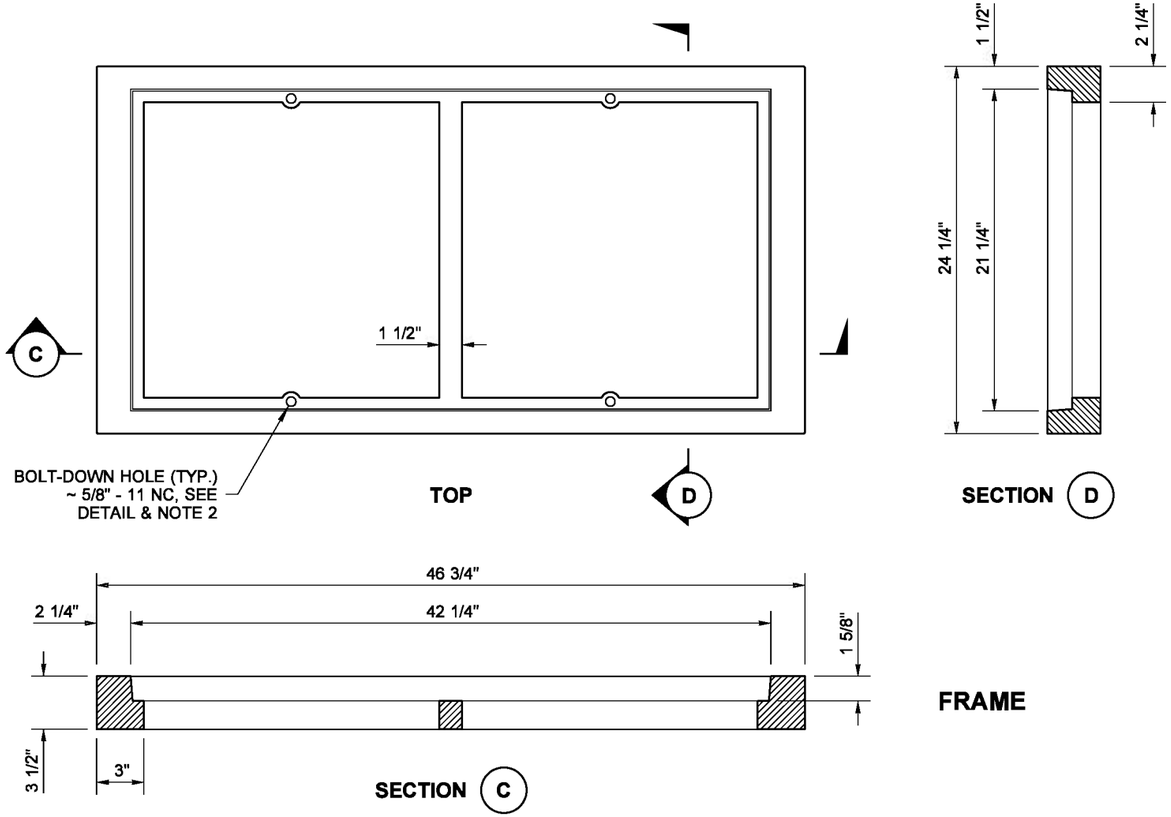

FRAME

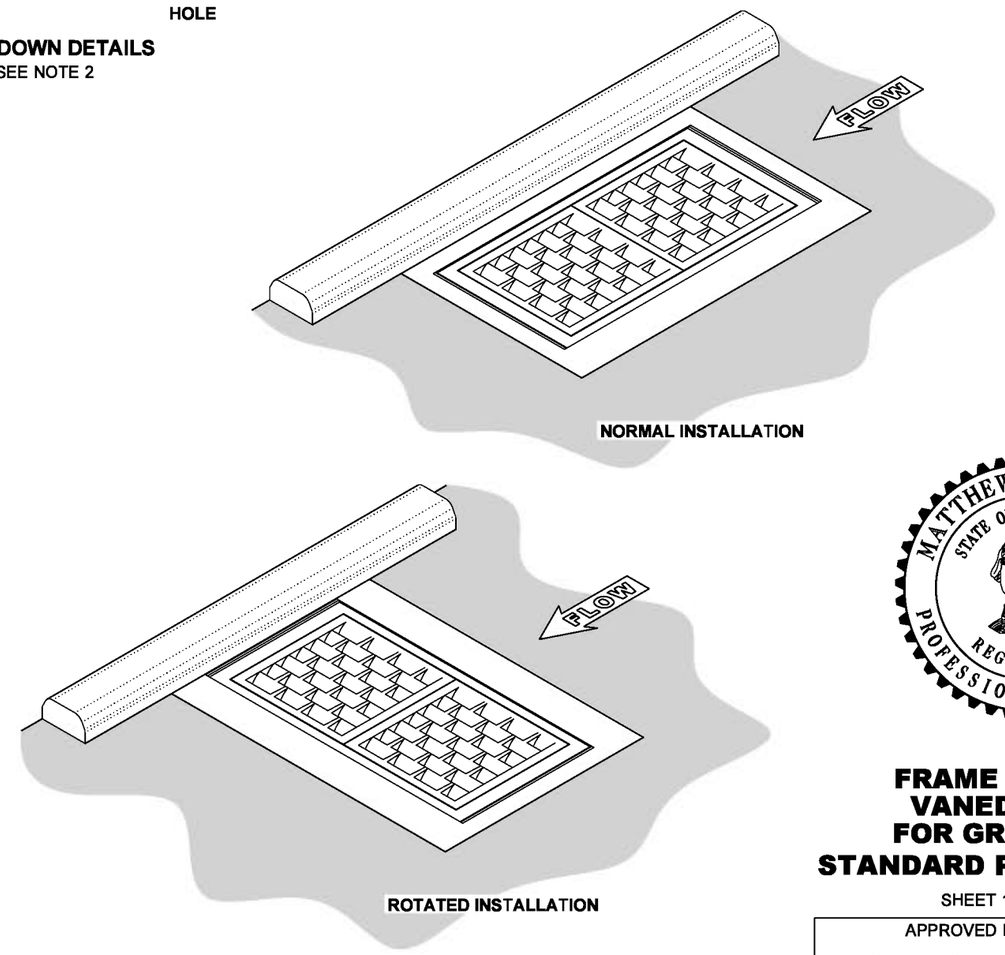

ISOMETRIC VIEWS
SEE NOTE 1

MATTHEW J. WITECKI
STATE OF WASHINGTON
15588
REGISTERED
PROFESSIONAL ENGINEER

NOTE: THIS PLAN IS NOT A LEGAL ENGINEERING DOCUMENT BUT AN ELECTRONIC DUPLICATE. THE ORIGINAL, SIGNED BY THE ENGINEER AND APPROVED FOR PUBLICATION, IS KEPT ON FILE AT THE WASHINGTON STATE DEPARTMENT OF TRANSPORTATION. A COPY MAY BE OBTAINED UPON REQUEST.

FRAME AND DUAL VANED GRATES FOR GRATE INLET
STANDARD PLAN B-40.40-01

SHEET 1 OF 1 SHEET

APPROVED FOR PUBLICATION

Pasco Bakotich III — STATE DESIGN ENGINEER
06-16-10 — DATE

Washington State Department of Transportation

DRAWN BY: LISA CYFORD

EFFECTIVE: AUGUST 6, 2012 TO August 4, 2013
EFFECTIVE: AUGUST 6, 2012 TO August 4, 2013
EFFECTIVE: AUGUST 6, 2012 TO August 4, 2013
EFFECTIVE: AUGUST 6, 2012 TO August 4, 2013

EFFECTIVE: AUGUST 6, 2012 TO August 4, 2013
EFFECTIVE: AUGUST 6, 2012 TO August 4, 2013

DRAWN BY: MARK SUJKA

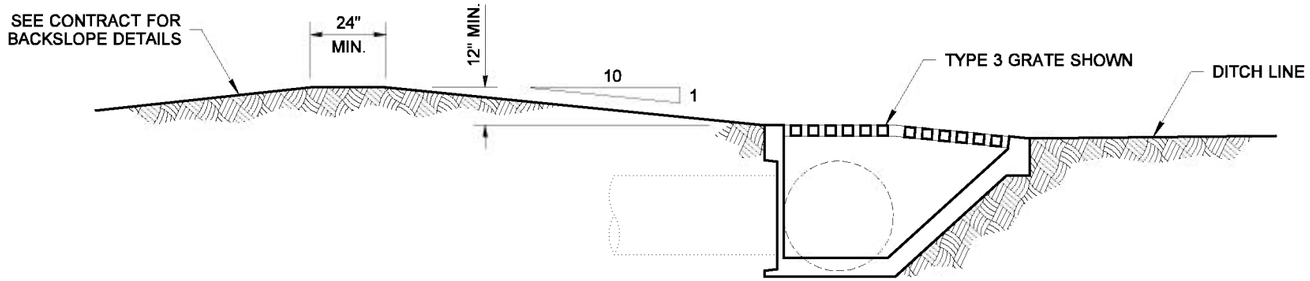

SECTION ON DITCH LINE

DIKE INSTALLATION FOR PREFERRED SLOPE

NOTES

1. The top of the inlet shall be placed at ground level to present an unobstructed ditch or median section.
2. Bevel or round exposed concrete edges 1/2".
3. Pipes may enter through the knockouts at any reasonable angle provided the outside of the pipe can be contained within the knockout provided.
4. The grade line of the lowest inlet pipe shall enter the structure at an elevation equal to or higher than the grade line of the outlet pipe.
5. All pickup holes shall be grouted full after the inlet has been placed.
6. The steel angles shall be set so that each bearing bar of the grate shall have full seating on both ends. The finished top of concrete shall be even with the grate surface. For grates, see Standard Plan B-50-20.
7. The amount, type, and grade of reinforcing steel is the responsibility of the manufacturer.
8. The inside wall taper for form removal shall not result in any wall section thinner than 6" except in pipe knockout areas.
9. Precast inlets shall be marked with the manufacturer's identification on the inside of the structure in some readily accessible location.

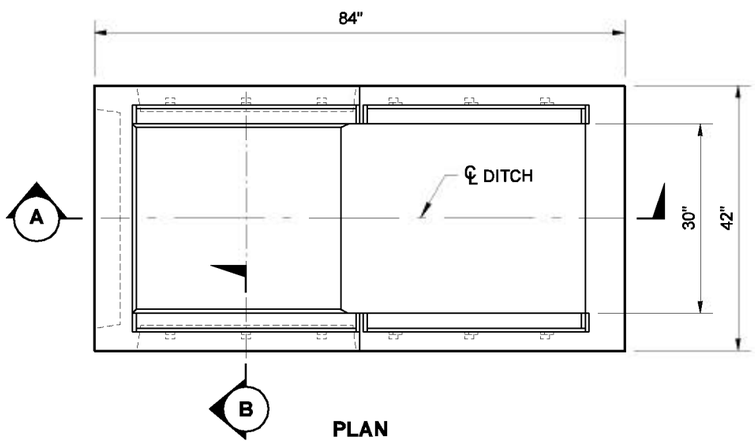

PLAN

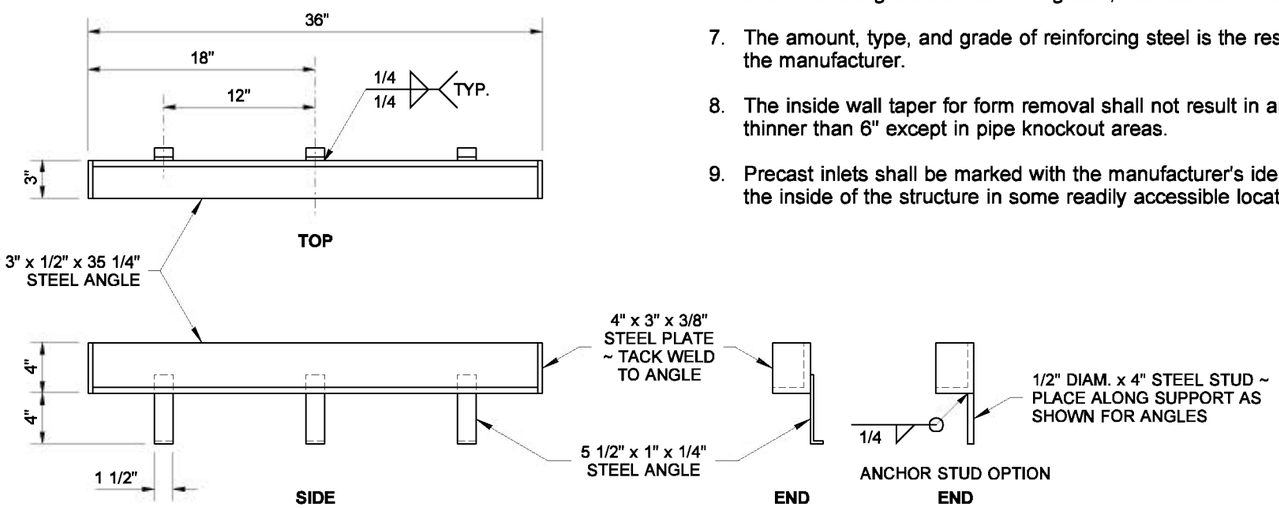

GRATE SUPPORT DETAIL
(FOUR SUPPORTS REQUIRED)

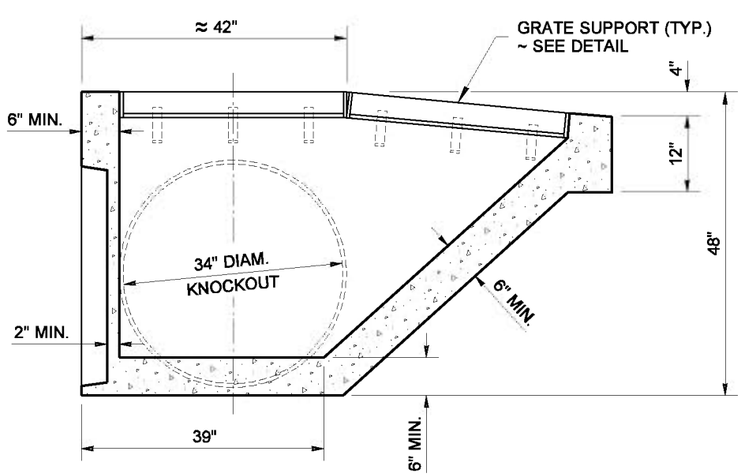

SECTION A

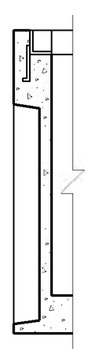

SECTION B

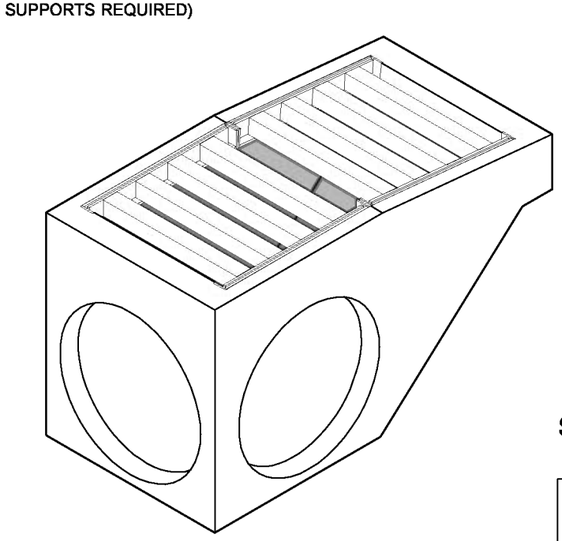

ISOMETRIC
(SHOWN WITH TYPE 1 GRATE)

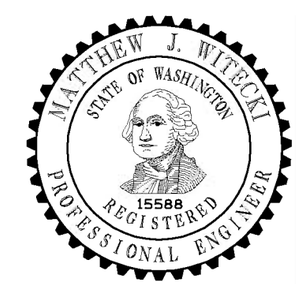

EXPIRES JULY 1, 2007

NOTE: THIS PLAN IS NOT A LEGAL ENGINEERING DOCUMENT BUT AN ELECTRONIC DUPLICATE. THE ORIGINAL, SIGNED BY THE ENGINEER AND APPROVED FOR PUBLICATION, IS KEPT ON FILE AT THE WASHINGTON STATE DEPARTMENT OF TRANSPORTATION. A COPY MAY BE OBTAINED UPON REQUEST.

DROP INLET TYPE 1

STANDARD PLAN B-45.20-00

SHEET 1 OF 1 SHEET

APPROVED FOR PUBLICATION

Harold J. Peterfeso — STATE DESIGN ENGINEER
06-01-06 — DATE

Washington State Department of Transportation

EFFECTIVE: AUGUST 6, 2012 TO August 4, 2013
EFFECTIVE: AUGUST 6, 2012 TO August 4, 2013
EFFECTIVE: AUGUST 6, 2012 TO August 4, 2013
EFFECTIVE: AUGUST 6, 2012 TO August 4, 2013

EFFECTIVE: AUGUST 6, 2012 TO August 4, 2013
EFFECTIVE: AUGUST 6, 2012 TO August 4, 2013

DRAWN BY: MARK SUJKA

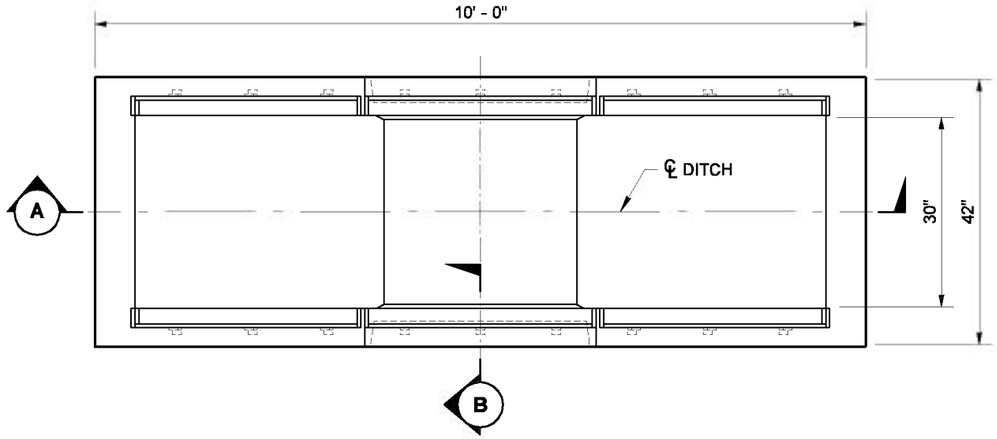

PLAN

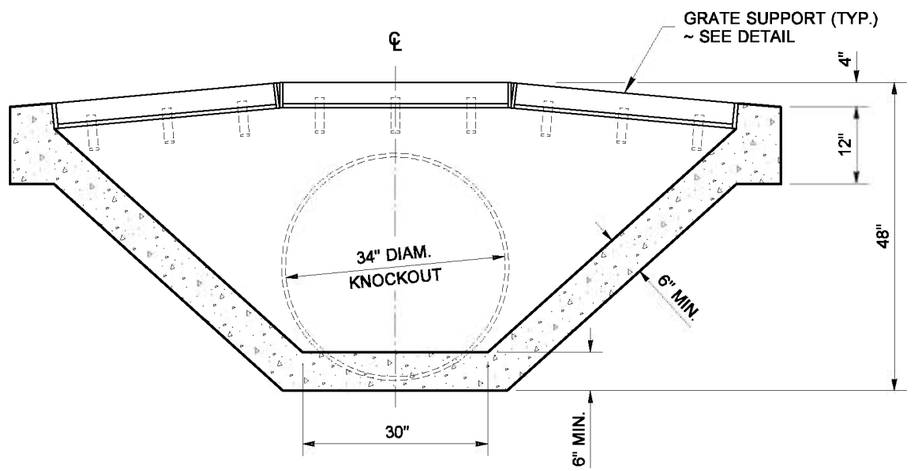

SECTION A

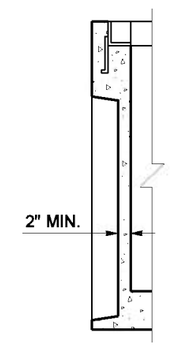

SECTION B

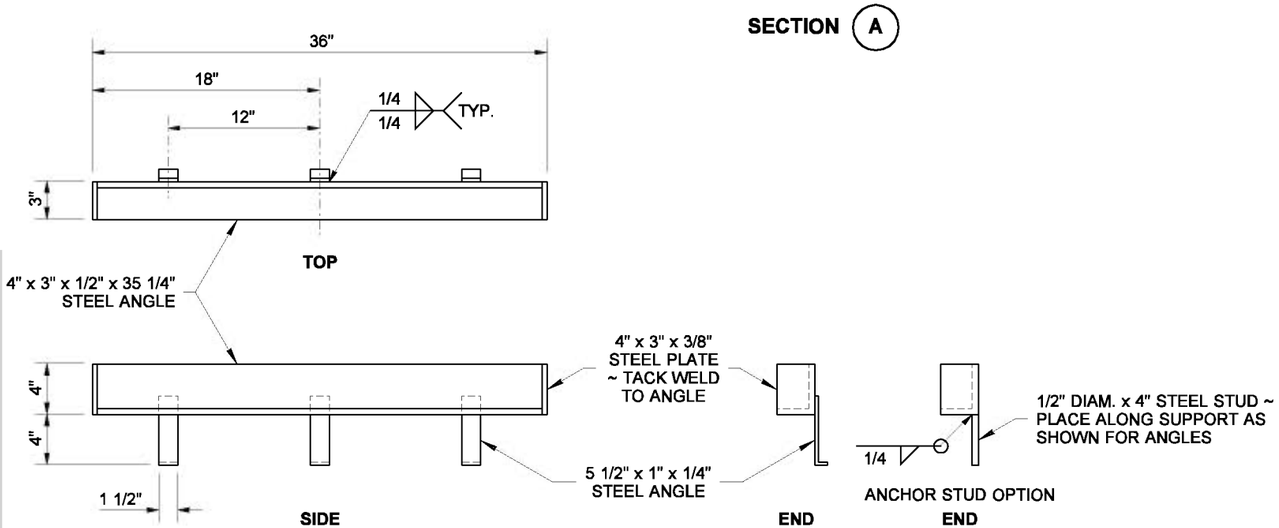

GRATE SUPPORT DETAIL
(SIX SUPPORTS REQUIRED)

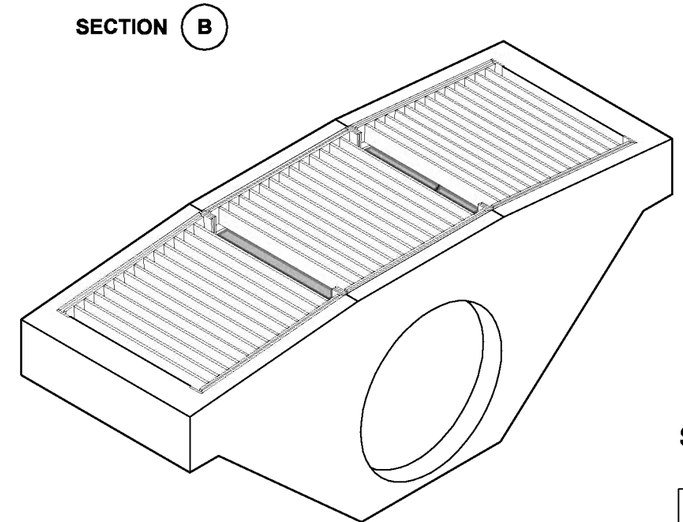

ISOMETRIC
(SHOWN WITH TYPE 2 GRATE)

NOTES

1. The top of the inlet shall be placed at ground level to present an unobstructed ditch or median section.
2. Bevel or round exposed concrete edges 1/2".
3. Pipes may enter through the knockouts at any reasonable angle provided the outside of the pipe can be contained within the knockout provided.
4. The grade line of the lowest inlet pipe shall enter the structure at an elevation equal to or higher than the grade line of the outlet pipe.
5. All pickup holes shall be grouted full after the inlet has been placed.
6. The steel angles shall be set so that each bearing bar of the grate shall have full seating on both ends. The finished top of concrete shall be even with the grate surface. For grates, see Standard Plan B-50.20.
7. The amount, type, and grade of reinforcing steel is the responsibility of the manufacturer.
8. The inside wall taper for form removal shall not result in any wall section thinner than 6" except in pipe knockout areas.
9. Precast inlets shall be marked with the manufacturer's identification on the inside of the structure in some readily accessible location.

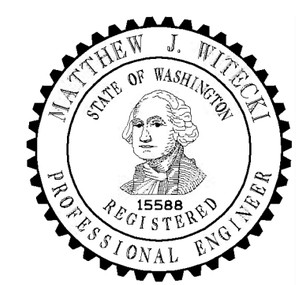

EXPIRES JULY 1, 2007

NOTE: THIS PLAN IS NOT A LEGAL ENGINEERING DOCUMENT BUT AN ELECTRONIC DUPLICATE. THE ORIGINAL, SIGNED BY THE ENGINEER AND APPROVED FOR PUBLICATION, IS KEPT ON FILE AT THE WASHINGTON STATE DEPARTMENT OF TRANSPORTATION. A COPY MAY BE OBTAINED UPON REQUEST.

DROP INLET TYPE 2

STANDARD PLAN B-45.40-00

SHEET 1 OF 1 SHEET

APPROVED FOR PUBLICATION

Harold J. Peterfeso — STATE DESIGN ENGINEER
06-01-06 — DATE

Washington State Department of Transportation

EFFECTIVE: AUGUST 6, 2012 TO August 4, 2013
EFFECTIVE: AUGUST 6, 2012 TO August 4, 2013
EFFECTIVE: AUGUST 6, 2012 TO August 4, 2013
EFFECTIVE: AUGUST 6, 2012 TO August 4, 2013

EFFECTIVE: AUGUST 6, 2012 TO August 4, 2013
EFFECTIVE: AUGUST 6, 2012 TO August 4, 2013

DRAWN BY: MARK SUJKA

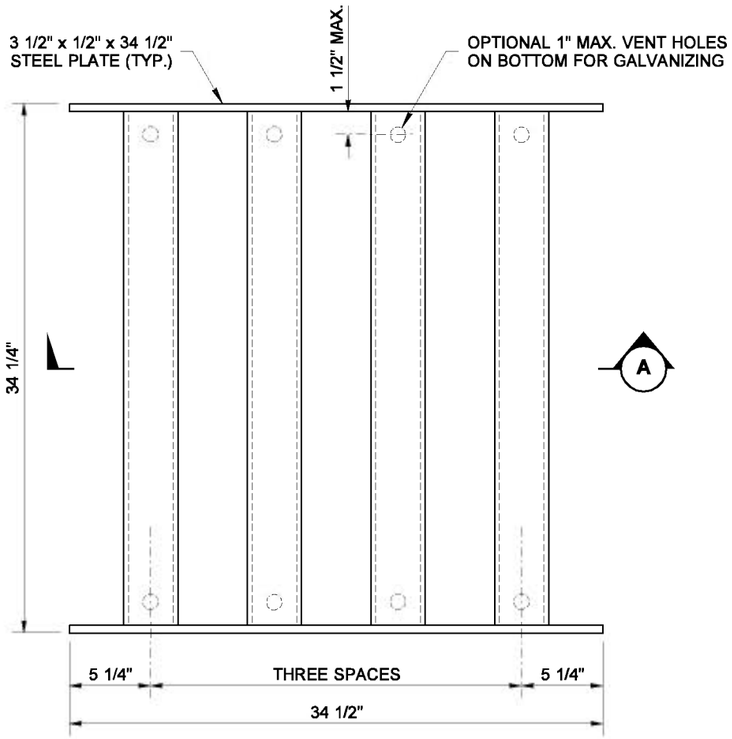

TYPE 1

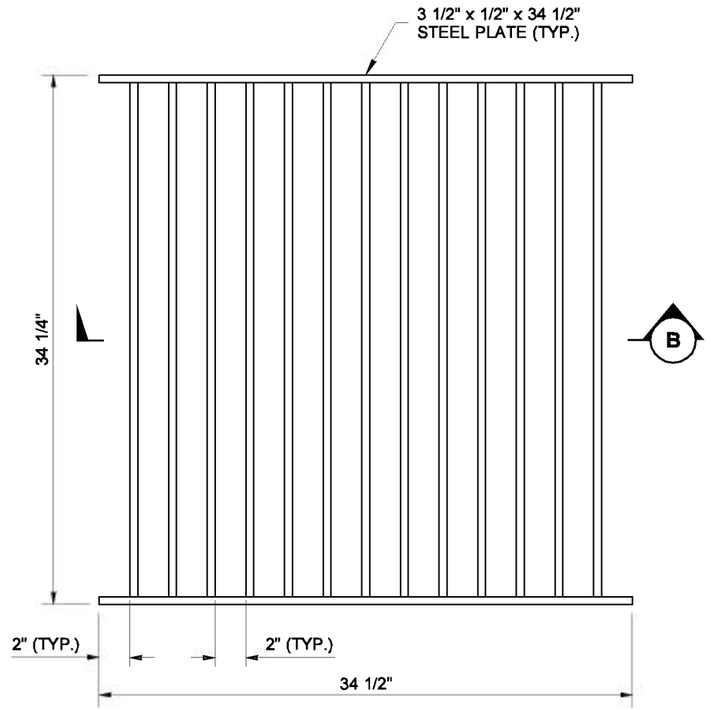

TYPE 2

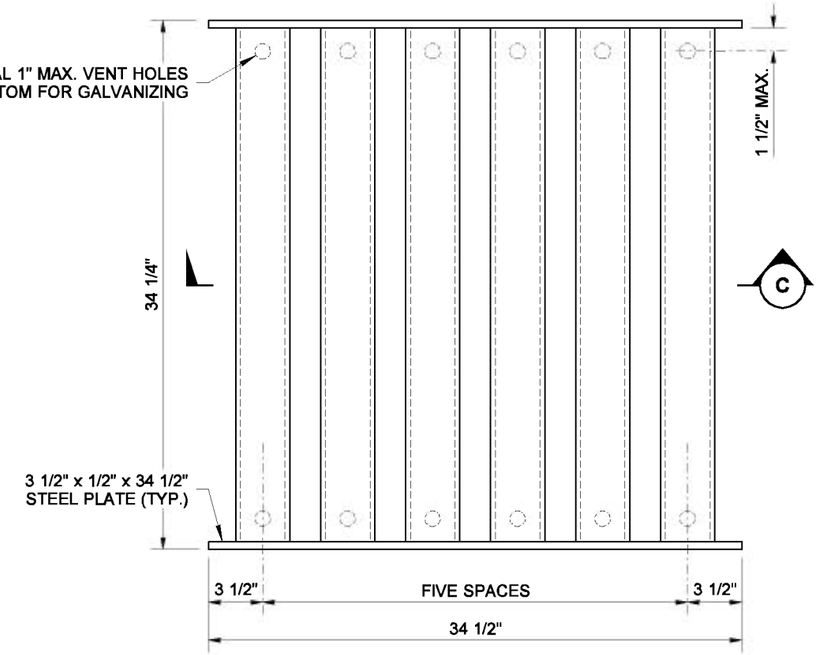

TYPE 3

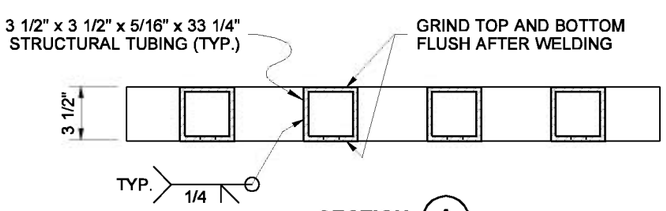

SECTION A

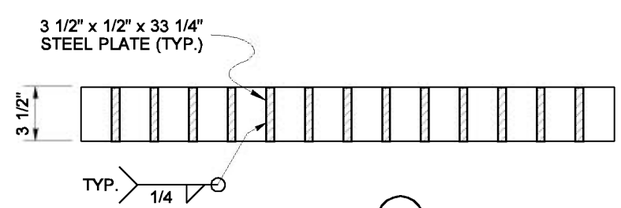

SECTION B

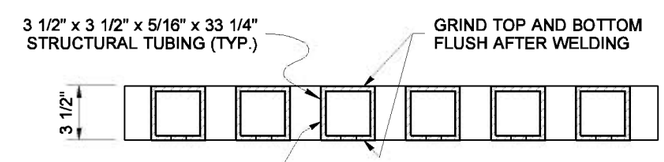

SECTION C

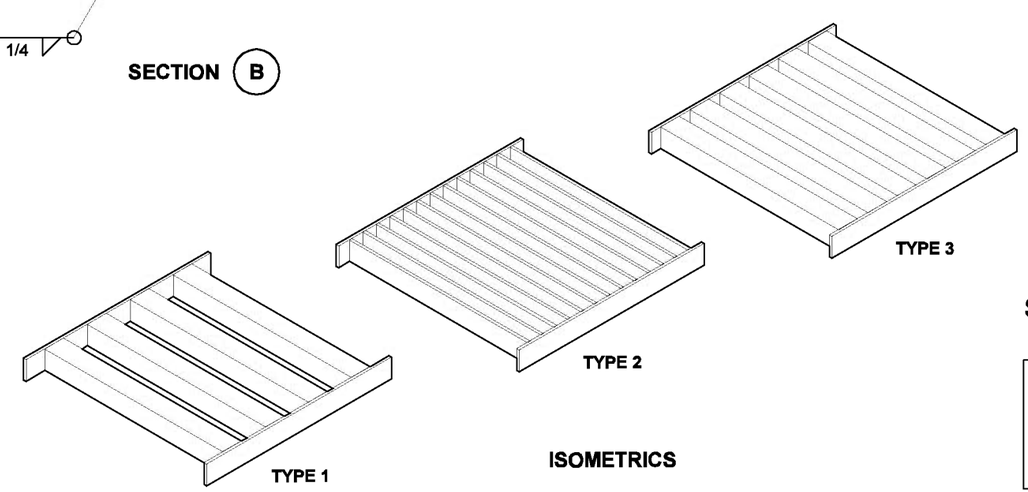

ISOMETRICS

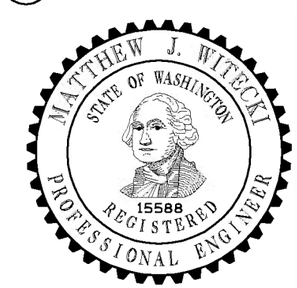

EXPIRES JULY 1, 2007

NOTE: THIS PLAN IS NOT A LEGAL ENGINEERING DOCUMENT BUT AN ELECTRONIC DUPLICATE. THE ORIGINAL, SIGNED BY THE ENGINEER AND APPROVED FOR PUBLICATION, IS KEPT ON FILE AT THE WASHINGTON STATE DEPARTMENT OF TRANSPORTATION. A COPY MAY BE OBTAINED UPON REQUEST.

GRATES FOR DROP INLET

STANDARD PLAN B-50.20-00

SHEET 1 OF 1 SHEET

APPROVED FOR PUBLICATION

Harold J. Peterfeso — STATE DESIGN ENGINEER

06-01-06 — DATE

Washington State Department of Transportation

EFFECTIVE: AUGUST 6, 2012 TO August 4, 2013
EFFECTIVE: AUGUST 6, 2012 TO August 4, 2013
EFFECTIVE: AUGUST 6, 2012 TO August 4, 2013
EFFECTIVE: AUGUST 6, 2012 TO August 4, 2013

EFFECTIVE: AUGUST 6, 2012 TO August 4, 2013
EFFECTIVE: AUGUST 6, 2012 TO August 4, 2013

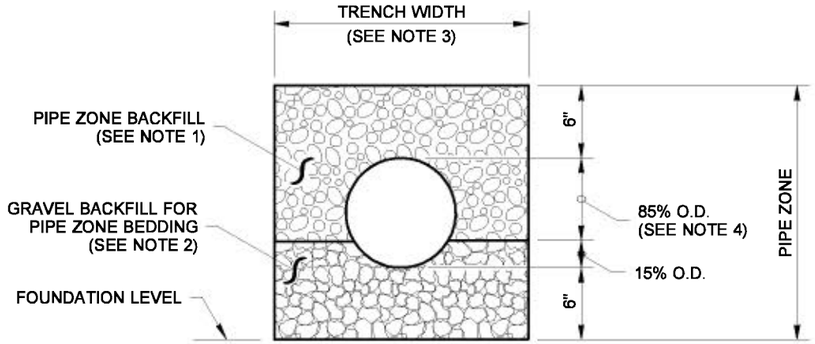

CONCRETE AND DUCTILE IRON PIPE

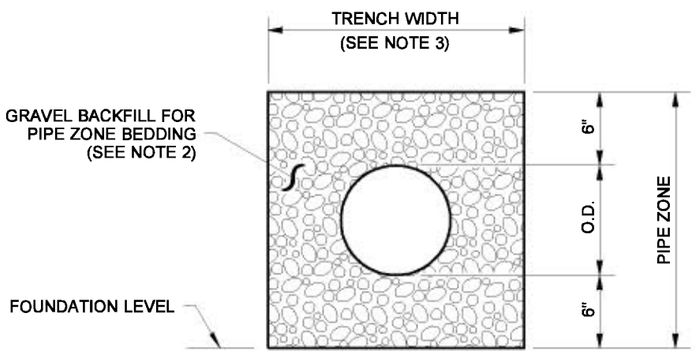

THERMOPLASTIC PIPE

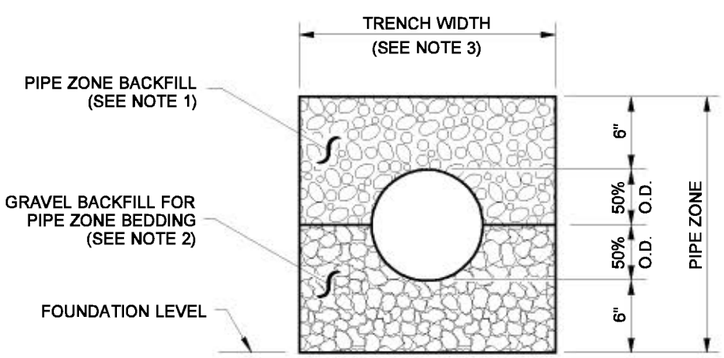

METAL PIPE

NOTES

1. See Standard Specifications Section 7-08.3(3) for Pipe Zone Backfill.
2. See Standard Specifications Section 9-03.12(3) for Gravel Backfill for Pipe Zone Bedding.
3. See Standard Specifications Section 2-09.4 for Measurement of Trench Width.
4. For sanitary sewer installation, concrete pipe shall be bedded to spring line.

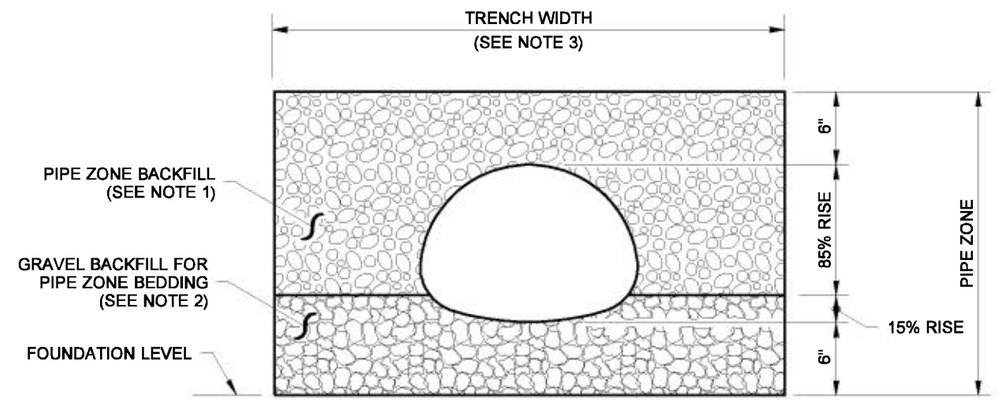

PIPE ARCHES

CLEARANCE BETWEEN PIPES FOR MULTIPLE INSTALLATIONS		
PIPE	**SIZE**	**MINIMUM DISTANCE BETWEEN BARRELS**
CIRCULAR PIPE (DIAMETER)	12" to 24"	12"
	30" to 96"	DIAM. /2
	102" to 180"	48"
PIPE ARCH (SPAN) METAL ONLY	18" to 36"	12"
	43" to 142"	SPAN /3
	148" to 200"	48"

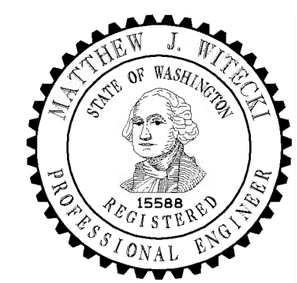

EXPIRES JULY 1, 2007

NOTE: THIS PLAN IS NOT A LEGAL ENGINEERING DOCUMENT BUT AN ELECTRONIC DUPLICATE. THE ORIGINAL, SIGNED BY THE ENGINEER AND APPROVED FOR PUBLICATION, IS KEPT ON FILE AT THE WASHINGTON STATE DEPARTMENT OF TRANSPORTATION. A COPY MAY BE OBTAINED UPON REQUEST.

PIPE ZONE BEDDING AND BACKFILL

STANDARD PLAN B-55.20-00

SHEET 1 OF 1 SHEET

APPROVED FOR PUBLICATION

Harold J. Peterfeso — STATE DESIGN ENGINEER

06-01-06 — DATE

Washington State Department of Transportation

EFFECTIVE: AUGUST 6, 2012 TO August 4, 2013
EFFECTIVE: AUGUST 6, 2012 TO August 4, 2013
EFFECTIVE: AUGUST 6, 2012 TO August 4, 2013
EFFECTIVE: AUGUST 6, 2012 TO August 4, 2013

EFFECTIVE: AUGUST 6, 2012 TO August 4, 2013
EFFECTIVE: AUGUST 6, 2012 TO August 4, 2013

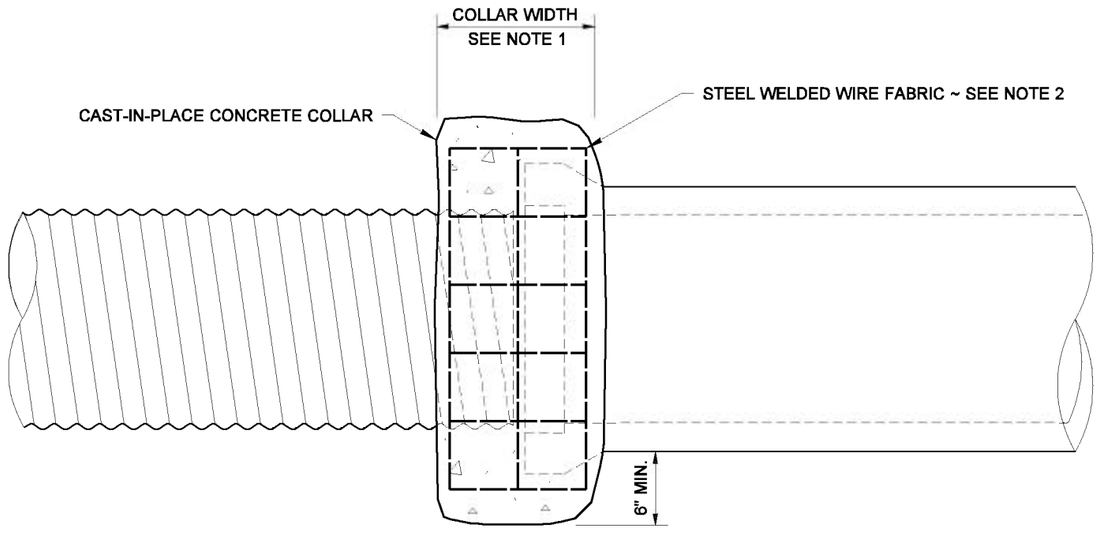

CONCRETE COLLAR OPTION

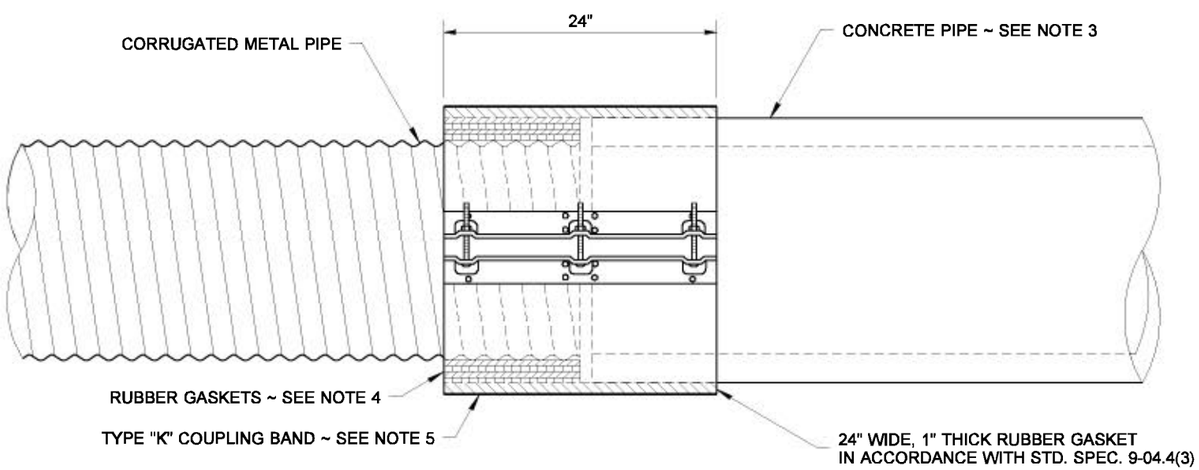

COUPLING BAND OPTION

NOTES

1. The Concrete Collar width shall be one half of the outside pipe diameter of the largest pipe. The minimum Concrete Collar width shall be 12". Concrete Collars may be used with all pipe materials and diameters. The Concrete Collar option shall only be used to extend existing pipes.

2. Steel Welded Wire Fabric shall be in accordance with Standard Specification 9-07.7. Install two wraps for size 6 × 6 W1.4 × W1.4 (10 Gage) Steel Welded Wire Fabric or one wrap for any of the following sizes:
   6 × 6 W2.1 × W2.1 (8 Gage)
   6 × 6 W2.9 × W2.9 (6 Gage)
   4 × 4 W2.9 × W2.9 (6 Gage)
   4 × 4 W4.0 × W4.0 (4 Gage)

3. When a Coupling Band connection requires attachment to the bell end of a concrete pipe, the bell end of the pipe shall be removed before the connection is installed.

4. Increase the outside diameter of the metal pipe to match the outside diameter of the concrete pipe by installing 12" wide rubber gaskets, thickness as required (Coupling Band only). The rubber gaskets shall be in accordance with Standard Specification 9-04.4(3).

5. Use a flat Type K Coupling Band. Type K Coupling Bands with dimples are not allowed for the installation detail shown. The Coupling Band option shall only be used for extending existing pipes that have an inside diameter of 36" or less.

EXPIRES JULY 1, 2007

NOTE: THIS PLAN IS NOT A LEGAL ENGINEERING DOCUMENT BUT AN ELECTRONIC DUPLICATE. THE ORIGINAL, SIGNED BY THE ENGINEER AND APPROVED FOR PUBLICATION, IS KEPT ON FILE AT THE WASHINGTON STATE DEPARTMENT OF TRANSPORTATION. A COPY MAY BE OBTAINED UPON REQUEST.

CONNECTION DETAILS FOR DISSIMILAR CULVERT PIPE

STANDARD PLAN B-60.20-00

SHEET 1 OF 1 SHEET

APPROVED FOR PUBLICATION

Harold J. Peterfeso — STATE DESIGN ENGINEER
06-08-06 — DATE

Washington State Department of Transportation

EFFECTIVE: AUGUST 6, 2012 TO August 4, 2013
EFFECTIVE: AUGUST 6, 2012 TO August 4, 2013
EFFECTIVE: AUGUST 6, 2012 TO August 4, 2013
EFFECTIVE: AUGUST 6, 2012 TO August 4, 2013
EFFECTIVE: AUGUST 6, 2012 TO August 4, 2013

EFFECTIVE: AUGUST 6, 2012 TO August 4, 2013
EFFECTIVE: AUGUST 6, 2012 TO August 4, 2013

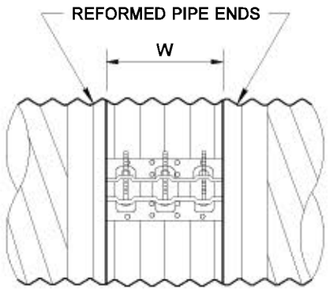

TYPE D
ANNULAR CORRUGATED BAND

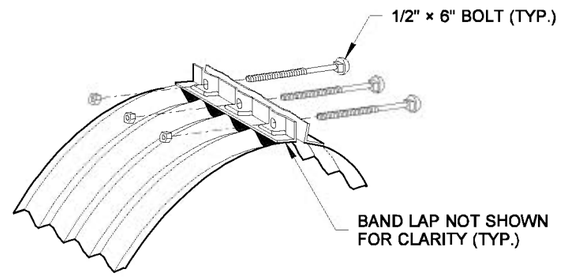

TYPE D
BAND ANGLE CONNECTOR DETAIL

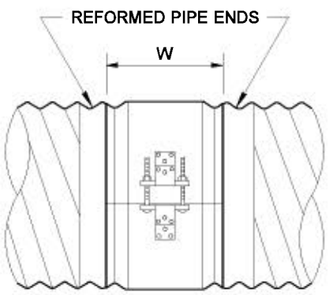

TYPE F
SEMI-CORRUGATED BAND

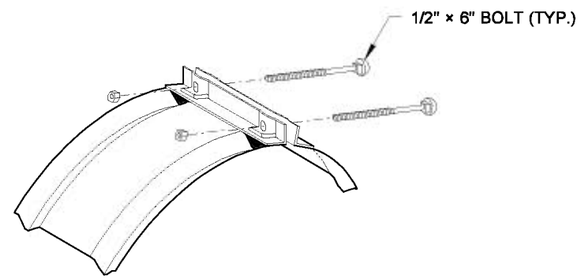

TYPE F
BAND ANGLE CONNECTOR DETAIL

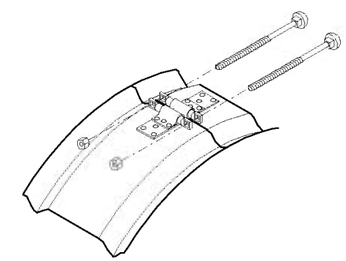

TYPE F
BAR & STRAP CONNECTOR DETAIL

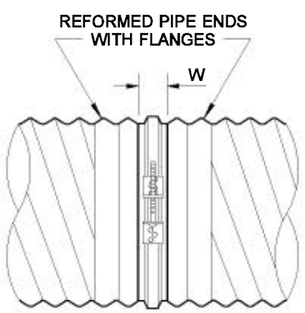

TYPE J
FLANGE BAND

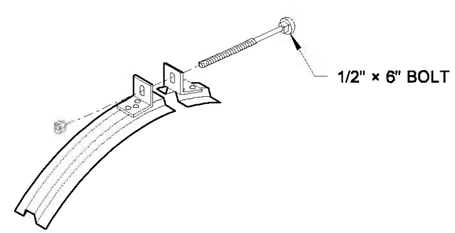

TYPE J
BAND ANGLE CONNECTOR DETAIL

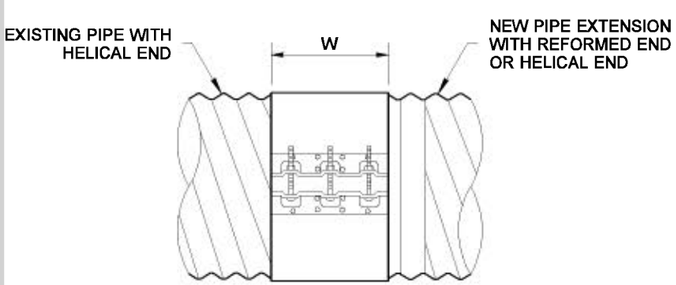

TYPE K
FLAT BAND OR DIMPLE BAND

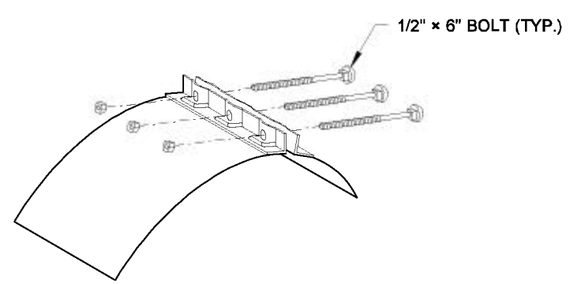

TYPE K
BAND ANGLE CONNECTOR DETAIL

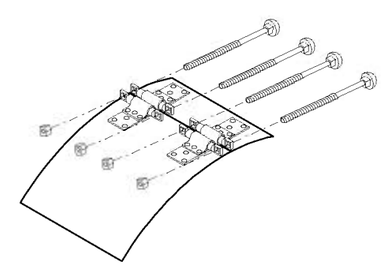

TYPE K
DOUBLE BAR & STRAP CONNECTOR DETAIL

COUPLING BAND DIMENSION TABLE
(ALL DIMENSIONS ARE IN INCHES)

BAND TYPE		CORRUGATION PITCH × DEPTH	PIPE DIAM.	MIN. W	GASKET TYPE
STEEL	D	2 2/3 × 1/2 OR 3 × 1 REFORMED TO 2 2/3 × 1/2	12 ~ 84	12	SLEEVE
		3 × 1 REFORMED TO 2 2/3 × 1/2	90 ~ 144	24	SLEEVE
	F	2 2/3 × 1/2 OR 3 × 1 REFORMED TO 2 2/3 × 1/2	12 ~ 84	10 1/2	O-RING
	J	2 2/3 × 1/2	12 ~ 48	2 3/4	BUTYL
	K	2 2/3 × 1/2	12 ~ 48	12	SLEEVE
			54 ~ 84	24	
		* 3 × 1	54 ~ 144	24	
ALUMINUM	D	2 2/3 × 1/2	12 ~ 72	12	SLEEVE
		3 × 1	36 ~ 60	12	
		REFORMED TO 2 2/3 × 1/2	66 ~ 108	24	
	F	2 2/3 x 1/2	12 ~ 48	10 1/2	O-RING
	K	2 2/3 x 1/2	12 ~ 48	12	SLEEVE
			54 ~ 84	24	
		* 3 × 1	54 ~ 96	24	

* PIPE ARCH ONLY

EXPIRES JULY 1, 2007

NOTE: THIS PLAN IS NOT A LEGAL ENGINEERING DOCUMENT BUT AN ELECTRONIC DUPLICATE. THE ORIGINAL, SIGNED BY THE ENGINEER AND APPROVED FOR PUBLICATION, IS KEPT ON FILE AT THE WASHINGTON STATE DEPARTMENT OF TRANSPORTATION. A COPY MAY BE OBTAINED UPON REQUEST.

COUPLING BANDS FOR CORRUGATED METAL PIPE

STANDARD PLAN B-60.40-00

SHEET 1 OF 1 SHEET

APPROVED FOR PUBLICATION

Harold J. Peterfeso — STATE DESIGN ENGINEER
06-01-06 — DATE

Washington State Department of Transportation

EFFECTIVE: AUGUST 6, 2012 TO August 4, 2013
EFFECTIVE: AUGUST 6, 2012 TO August 4, 2013
EFFECTIVE: AUGUST 6, 2012 TO August 4, 2013
EFFECTIVE: AUGUST 6, 2012 TO August 4, 2013

EFFECTIVE: AUGUST 6, 2012 TO August 4, 2013
EFFECTIVE: AUGUST 6, 2012 TO August 4, 2013

DRAWN BY: BILL BEKENS

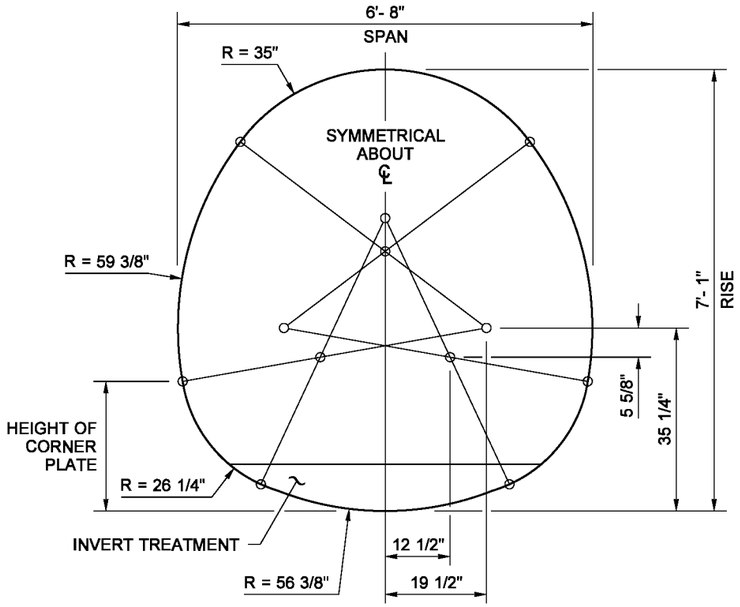

SECTION

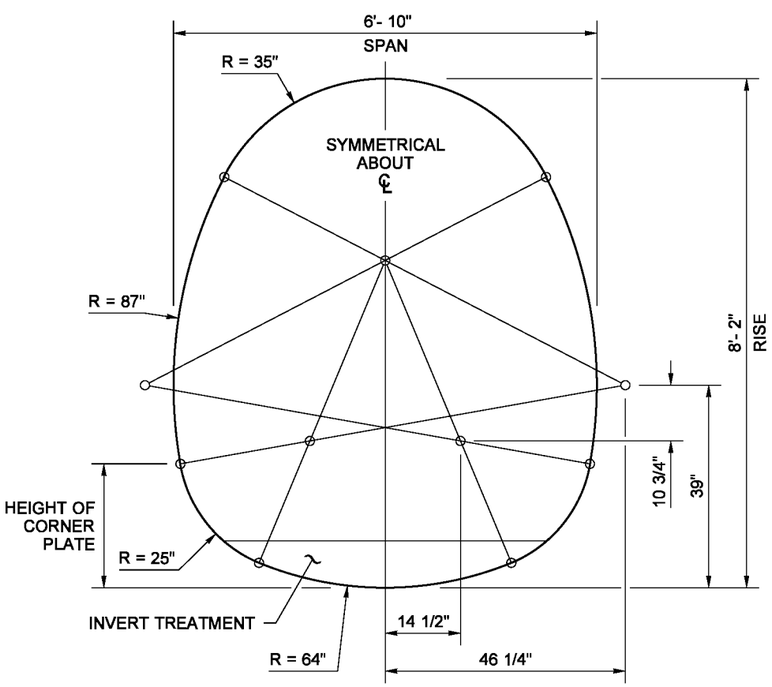

SECTION

NOTES

1. Span and rise dimensions are nominal and are measured to the inside crests of corrugations.
2. Allowable heights of cover shall be within the limits indicated in the table included hereon. Minimums and maximums are shown.
3. Unless indicated otherwise a 10" depth (over the inside crests of corrugatons) of earth shall be placed in the invert of the Structural Plate Underpass, Design 1, for its full width and length. The earth shall consist of naturally occurring materials available in the vicinity of the structural plate underpass installation. See **Standard Specification 7-03.3(4).**
4. Designed for H-20 live load and maximum allowable soil pressure of 6 Kips per square foot.

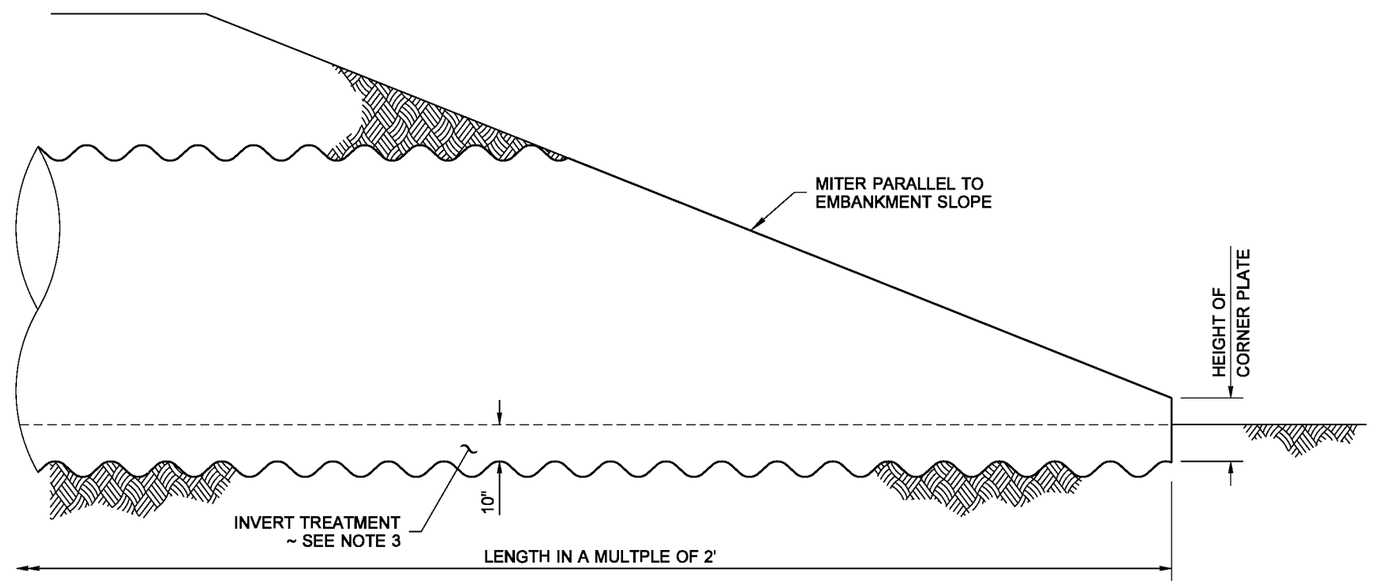

SIDE VIEW ~ PLACEMENT

ALLOWABLE HEIGHTS OF COVER			
SPAN	RISE	12 GAGE THICK CORRUGATED METAL	
		COVER	
		MIN.	MAX.
6' - 8"	7' - 1"	4'	26'
6' - 10"	8' - 2"	5'	25'

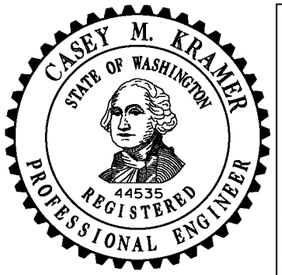

NOTE: THIS PLAN IS NOT A LEGAL ENGINEERING DOCUMENT BUT AN ELECTRONIC DUPLICATE. THE ORIGINAL, SIGNED BY THE ENGINEER AND APPROVED FOR PUBLICATION, IS KEPT ON FILE AT THE WASHINGTON STATE DEPARTMENT OF TRANSPORTATION. A COPY MAY BE OBTAINED UPON REQUEST.

ANIMAL UNDERPASS

STANDARD PLAN B-65.20-01

SHEET 1 OF 1 SHEET

APPROVED FOR PUBLICATION

Pasco Bakotich III — STATE DESIGN ENGINEER

04/26/12 — DATE

Washington State Department of Transportation

EFFECTIVE: AUGUST 6, 2012 TO August 4, 2013
EFFECTIVE: AUGUST 6, 2012 TO August 4, 2013
EFFECTIVE: AUGUST 6, 2012 TO August 4, 2013
EFFECTIVE: AUGUST 6, 2012 TO August 4, 2013

EFFECTIVE: AUGUST 6, 2012 TO August 4, 2013
EFFECTIVE: AUGUST 6, 2012 TO August 4, 2013

DRAWN BY: MARK SUJKA

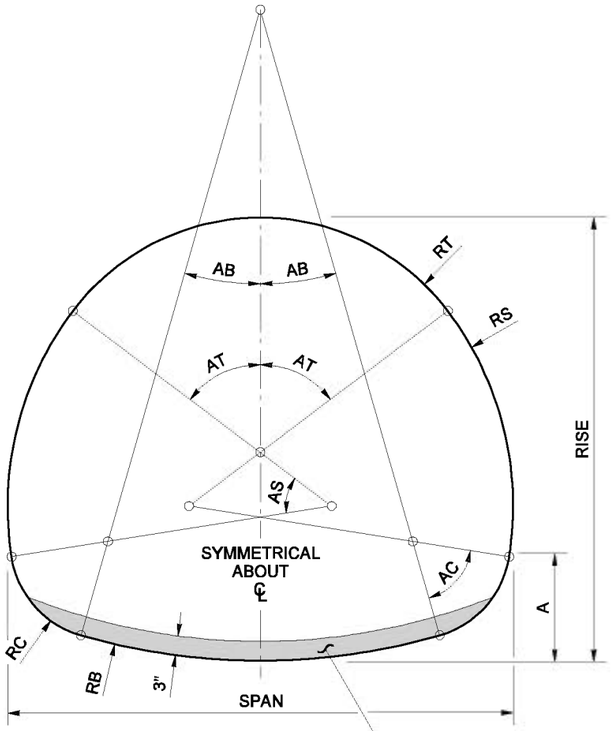

SECTION

NOTES

Span and rise dimensions are measured to the inside crests of corrugations and may vary slightly depending on manufacturer.

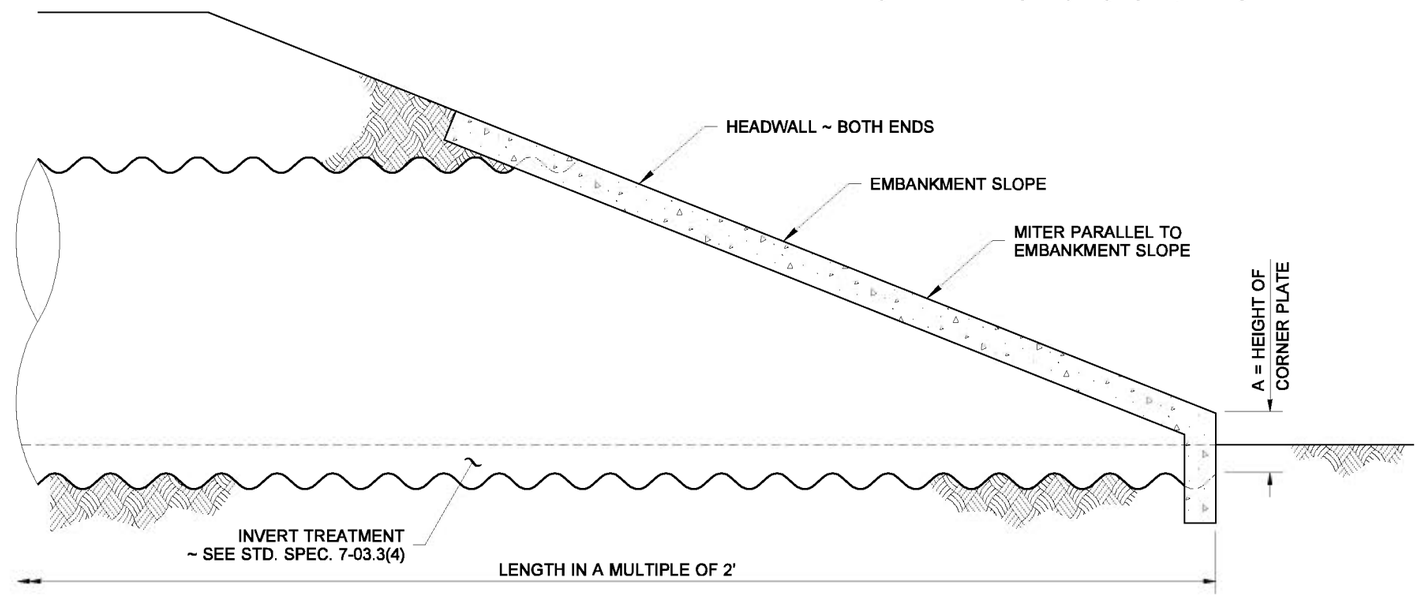

SIDE VIEW ~ PLACEMENT

DIMENSIONS											ALLOWABLE HEIGHTS OF COVER					
											CORRUGATED METAL THICKNESS					
SPAN	RISE	ANGLES (DEGREES)				RADII (INCHES)				A (INCHES)	12 GAGE		10 GAGE		8 GAGE	
		AT	AS	AC	AB	RT	RS	RC	RB		MIN.	MAX.	MIN.	MAX.	MIN.	MAX.
12' - 2"	11' - 0"	52	42	65	21	68	93	38	134	44	3'	14'	3'	20'	3'	26'
12' - 11"	11' - 3"	52	41	65	21	73	95	38	144	45	3'	13'	3'	19'	3'	25'
13' - 2"	11' - 11"	52	43	65	19	73	103	38	159	43	4'	13'	4'	19'	4'	24'
13' - 10"	12' - 3"	53	41	65	20	77	108	38	164	45	4'	12'	4'	18'	4'	23'
14' - 1"	12' - 10"	53	44	65	18	77	115	38	182	43	4'	12'	4'	18'	4'	23'
14' - 6"	13' - 6"	56	38	65	21	78	131	38	174	46	4'	11'	4'	17'	4'	22'
14' - 10"	14' - 0"	55	41	65	19	79	136	38	192	44	4'	11'	4'	17'	4'	21'
15' - 6"	14' - 4"	55	40	65	19	84	138	38	201	46	4'	11'	4'	16'	4'	20'
15' - 9"	15' - 1"	56	41	65	18	83	150	38	212	45	---	---	4'	16'	4'	20'
16' - 4"	15' - 5"	57	39	65	19	86	157	38	215	47	---	---	4'	15'	4'	19'
16' - 5"	16' - 1"	58	42	65	14	88	158	38	271	41	---	---	4'	15'	4'	19'
16' - 9"	16' - 3"	58	40	65	17	89	167	38	247	43	---	---	4'	15'	4'	19'
17' - 3"	17' - 0"	57	38	65	19	90	174	47	215	55	---	---	4'	14'	4'	18'
18' - 4"	16' - 11"	55	42	65	18	99	157	47	249	53	---	---	4'	13'	4'	18'
19' - 2"	17' - 2"	54	43	65	18	105	156	47	264	53	---	---	---	---	4'	17'
19' - 6"	17' - 7"	53	46	65	16	107	158	47	297	50	---	---	---	---	4'	17'
20' - 4"	17' - 10"	53	46	65	16	113	156	47	314	52	---	---	---	---	4'	16'

EXPIRES JULY 1, 2007

NOTE: THIS PLAN IS NOT A LEGAL ENGINEERING DOCUMENT BUT AN ELECTRONIC DUPLICATE. THE ORIGINAL, SIGNED BY THE ENGINEER, AND APPROVED FOR PUBLICATION, IS KEPT ON FILE AT THE WASHINGTON STATE DEPARTMENT OF TRANSPORTATION. A COPY MAY BE OBTAINED UPON REQUEST.

EQUIPMENT UNDERPASS

STANDARD PLAN B-65.40-00

SHEET 1 OF 1 SHEET

APPROVED FOR PUBLICATION

Harold J. Peterfeso — STATE DESIGN ENGINEER

06-01-06 — DATE

Washington State Department of Transportation

EFFECTIVE: AUGUST 6, 2012 TO August 4, 2013
EFFECTIVE: AUGUST 6, 2012 TO August 4, 2013
EFFECTIVE: AUGUST 6, 2012 TO August 4, 2013
EFFECTIVE: AUGUST 6, 2012 TO August 4, 2013

EFFECTIVE: AUGUST 6, 2012 TO August 4, 2013
EFFECTIVE: AUGUST 6, 2012 TO August 4, 2013

NOTES

1. The culvert ends shall be beveled to match the embankment or ditch slope and shall not be beveled flatter than 4H:1V. When slopes are between 4H:1V and 6H:1V, shape the slope in the vicintiy of the culvert end to ensure that no part of the culvert protrudes more than 4" above the ground line.

2. Field cutting of culvert ends is permitted when approved by the Engineer. All field-cut culvert pipe shall be treated with treatment as shown in the Standard Specifications or General Special Provisions.

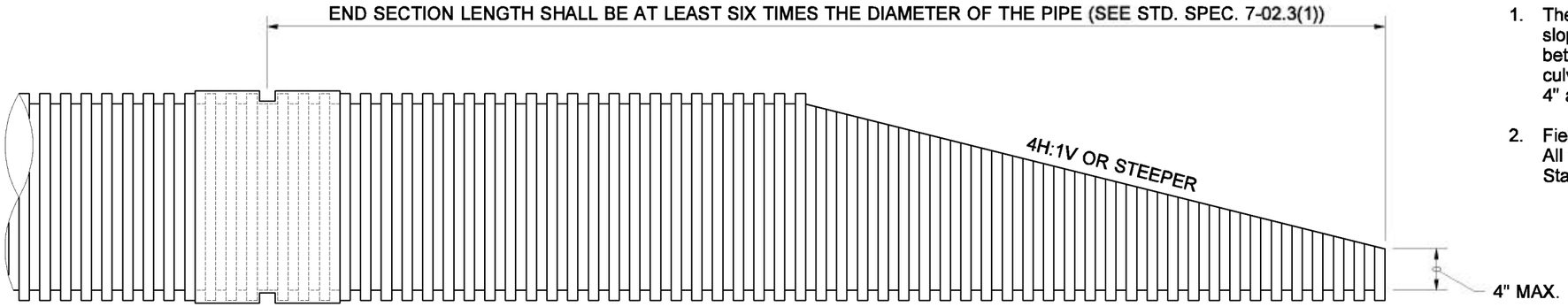

THERMOPLASTIC PIPE

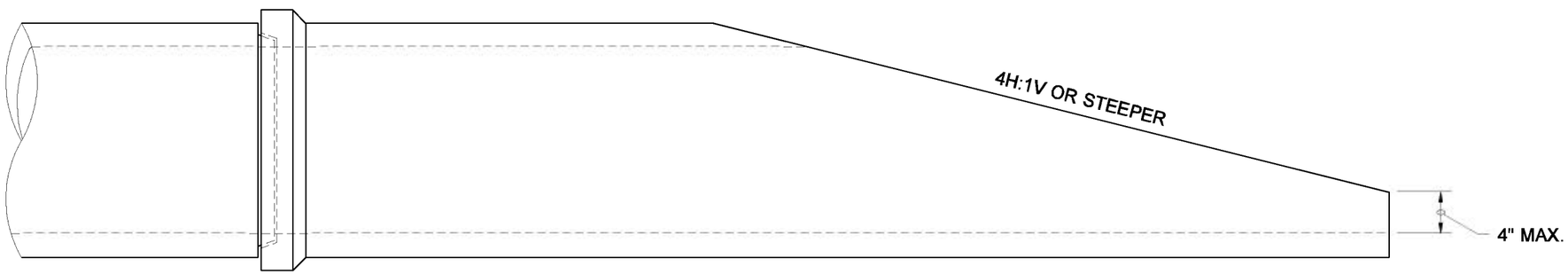

CONCRETE PIPE

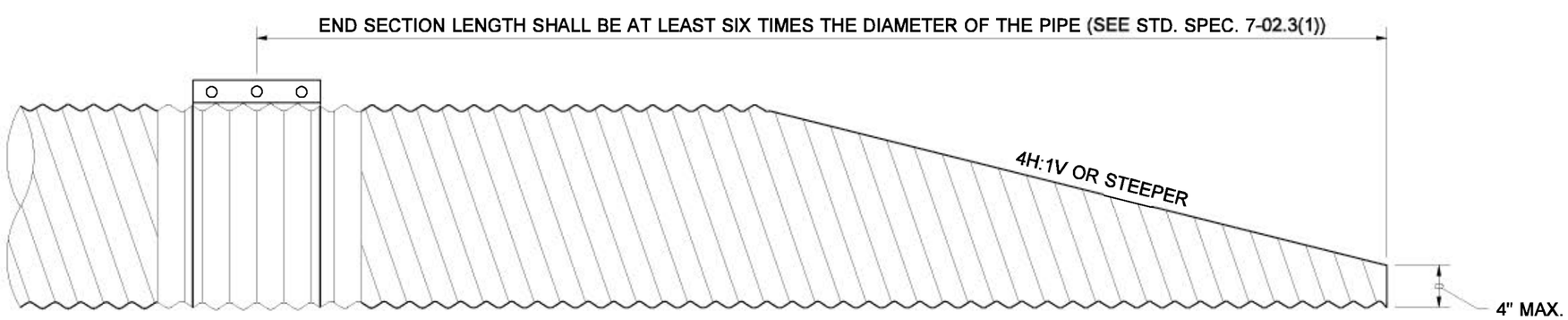

METAL PIPE

FOR CULVERTS 30" DIAMETER OR LESS

EXPIRES JULY 1, 2007

NOTE: THIS PLAN IS NOT A LEGAL ENGINEERING DOCUMENT BUT AN ELECTRONIC DUPLICATE. THE ORIGINAL, SIGNED BY THE ENGINEER AND APPROVED FOR PUBLICATION, IS KEPT ON FILE AT THE WASHINGTON STATE DEPARTMENT OF TRANSPORTATION. A COPY MAY BE OBTAINED UPON REQUEST.

BEVELED END SECTIONS

STANDARD PLAN B-70.20-00

SHEET 1 OF 1 SHEET

APPROVED FOR PUBLICATION

Harold J. Peterfeso — STATE DESIGN ENGINEER

06-01-06 — DATE

Washington State Department of Transportation

EFFECTIVE: AUGUST 6, 2012 TO August 4, 2013
EFFECTIVE: AUGUST 6, 2012 TO August 4, 2013
EFFECTIVE: AUGUST 6, 2012 TO August 4, 2013
EFFECTIVE: AUGUST 6, 2012 TO August 4, 2013

EFFECTIVE: AUGUST 6, 2012 TO August 4, 2013
EFFECTIVE: AUGUST 6, 2012 TO August 4, 2013

DRAWN BY: MARK SUJKA

PIPE ARCH											
PIPE ARCH DIMENSION (INCHES)		THICKNESS (INCHES)		DIMENSIONS (INCHES)						SKIRT	END SECTION SLOPE (H:V)
				A	B	H	L	W	T		
SPAN	RISE	STEEL	ALUM.	TOL. ± 1"	MAX.	TOL. ± 1"	TOL. ± 1 1/2"	TOL. ± 2"	TOL. ± 2"		
17	13	0.064	0.060	7	9	6	19	30	40	1 PC.	2 1/2 : 1
21	15	0.064	0.060	7	10	6	23	36	46	1 PC.	2 1/2 : 1
24	18	0.064	0.060	8	12	6	28	42	52	1 PC.	2 1/2 : 1
28	20	0.064	0.075	9	14	6	32	48	58	1 PC.	2 1/2 : 1
35	24	0.079	0.075	10	16	6	39	60	70	1 PC.	2 1/2 : 1
42	29	0.079	0.105	12	18	8	46	75	85	2 PC.	2 1/2 : 1
49	33	0.109	0.105	13	21	9	53	85	103	2 PC.	2 1/2 : 1
57	38	0.109 0.138	0.105	18	26	12	63	90	114	3 PC.	2 1/2 : 1
64	43	0.109 0.138	0.105	18	30	12	70	102	130	3 PC.	2 1/2 : 1
71	47	0.109 0.138	0.135	18	33	12	77	114	146	3 PC.	2 1/2 : 1
77	52	0.109 0.138	-----	18	36	12	77	126	152	3 PC.	1 3/4 : 1
83	57	0.109 0.138	-----	18	39	12	77	138	158	3 PC.	1 1/2 : 1

PIPE										
PIPE DIAM. (INCHES)	THICKNESS (INCHES)		DIMENSIONS (INCHES)						SKIRT	END SECTION SLOPE (H:V)
			A	B	H	L	W	T		
	STEEL	ALUM.	TOL. ± 1"	MAX.	TOL. ± 1"	TOL. ± 1 1/2"	TOL. ± 2"	TOL. ± 2"		
12	0.064	0.060	6	6	6	21	24	34	1 PC.	2 1/2 : 1
15	0.064	0.060	7	8	6	26	30	40	1 PC.	2 1/2 : 1
18	0.064	0.060	8	10	6	31	36	46	1 PC.	2 1/2 : 1
21	0.064	0.060	9	12	6	36	42	52	1 PC.	2 1/2 : 1
24	0.064	0.075	10	13	6	41	48	58	1 PC.	2 1/2 : 1
30	0.079	0.075	12	16	8	51	60	70	2 PC.	2 1/2 : 1
36	0.079	0.105	14	19	9	60	72	94	2 PC.	2 1/2 : 1
42	0.109	0.105	16	22	11	69	84	106	2 PC.	2 1/2 : 1
48	0.109	0.105	18	27	12	78	90	112	2 PC.	2 1/2 : 1
54	0.109	-----	18	30	12	84	102	122	2 PC.	2 1/2 : 1
60	0.109 0.138	-----	18	33	12	87	114	134	3 PC.	1 3/4 : 1
66	0.109 0.138	-----	18	36	12	87	120	142	3 PC.	1 1/2 : 1
72	0.109 0.138	-----	18	39	12	87	126	146	3 PC.	1 1/3 : 1
78	0.109 0.138	-----	18	42	12	87	132	152	3 PC.	1 1/4 : 1
84	0.109 0.138	-----	18	45	12	87	138	158	3 PC.	1 1/6 : 1

NOTES

1. The diameter of the end section of Design B shall match the inside diameter of the concrete pipe.
2. Skirt sections shall be made in one piece for round pipe with a diameter of 12" to 24" inclusive and for pipe arches with a rise of 13" to 20" inclusive. Skirt sections for larger sizes of pipes may be multiple pieces in conformance with the tabulated values shown.
3. Design A end sections for 42" thru 84" diameter and 49" x 33" thru 83" x 57" arch with annular corrugations and all helically corrugated pipe arch include one foot of pipe length as a connector section. The connector section shall be attached to the end section by welds, rivets or bolts and shall be the same thickness as the end section.
4. Design C may be used in lieu of Design A for all metal pipe sizes except as noted. Coupling bands may be any acceptable type for the pipe specified.
5. Multiple panel skirts shall have 2" lap seams tightly joined by 3/8" stainless steel rivets or galvanized bolts on 6" max. centers.
6. The reinforced edges of the following size End Sections shall be supplemented with galvanized steel stiffener angles:

   60" thru 72" diameter pipe ..... 2" x 2" x 1/4" angle

   78" and 84" diameter pipe, and
   77" x 52" & 83" x 57" pipe arch ..... 2 1/2" x 2 1/2" x 1/4" angle

   The above galvanized angles shall be attached by 3/8" galvanized nuts and bolts.
7. Galvanized steel angle reinforcement will be placed under the center panel seams on the 72" thru 84" diam. pipe and 77" x 52" & 83" x 57" pipe arch End Sections.
8. As an alternative to the connector lug and threaded rod used on 12" thru 24" culvert pipe, the attachment may be made with a 1" wide strap, 16 gage galvanized steel fastened with a 1/2" diam., 6" long galvanized bolt and one squarehead nut.

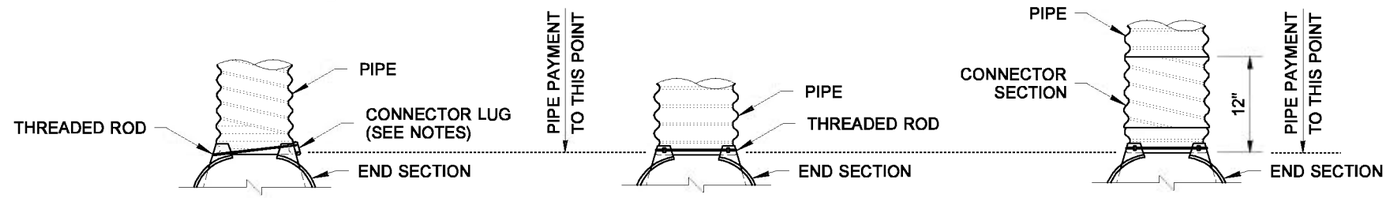

FOR 12" THRU 24" PIPE AND 17" x 13" THRU 28" x 20" PIPE ARCH WITH ANNULAR END CORRUGATIONS

TYPE 1

FOR 30" THRU 84" PIPE AND 35" x 24" THRU 83" x 57" PIPE ARCH WITH ANNULAR END CORRUGATIONS

TYPE 2

FOR 42" THRU 84" PIPE AND 49" x 33" THRU 83" x 57" PIPE ARCH WITH ANNULAR END CORRUGATIONS, AND ALL HELICAL END CORRUGATED PIPE AND PIPE ARCH

TYPE 3

DESIGN A
CONNECTION TO METAL PIPE

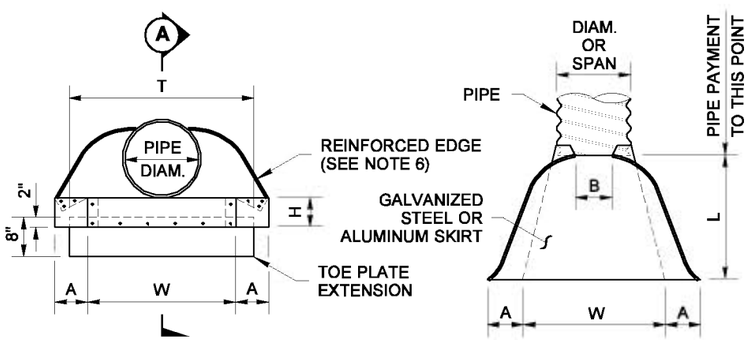

PIPE ~ ELEVATION

PIPE & PIPE ARCH ~ PLAN

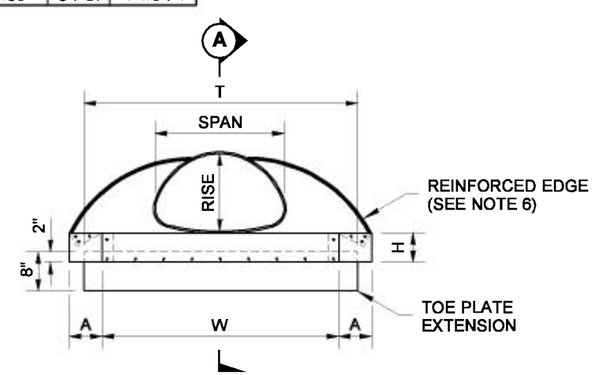

PIPE ARCH ~ ELEVATION

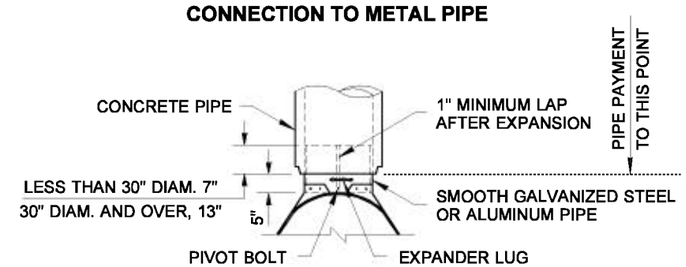

DESIGN B
CONNECTION TO CONCRETE PIPE INLET END ONLY

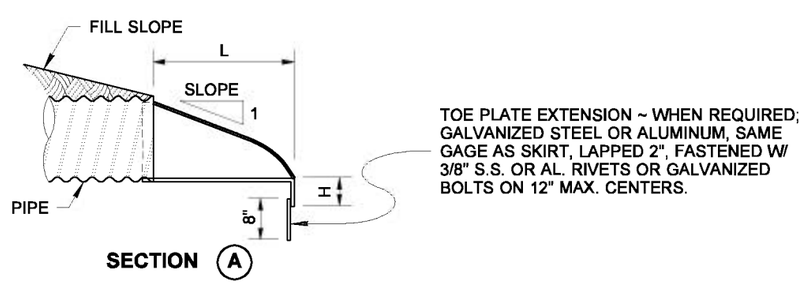

SECTION (A)

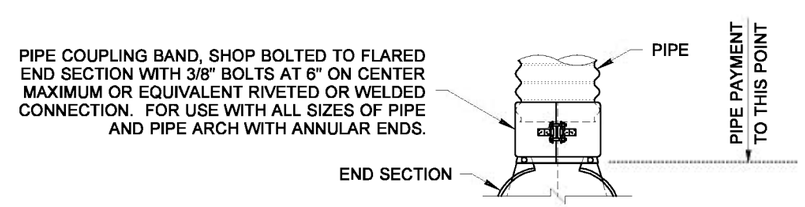

DESIGN C
CONNECTION TO METAL OR CONCRETE PIPE OUTLET ONLY

EXPIRES JULY 1, 2007

NOTE: THIS PLAN IS NOT A LEGAL ENGINEERING DOCUMENT BUT AN ELECTRONIC DUPLICATE. THE ORIGINAL, SIGNED BY THE ENGINEER AND APPROVED FOR PUBLICATION, IS KEPT ON FILE AT THE WASHINGTON STATE DEPARTMENT OF TRANSPORTATION. A COPY MAY BE OBTAINED UPON REQUEST.

FLARED END SECTIONS

STANDARD PLAN B-70.60-00

SHEET 1 OF 1 SHEET

APPROVED FOR PUBLICATION

Harold J. Peterfeso — STATE DESIGN ENGINEER — *06-01-06* — DATE

Washington State Department of Transportation

EFFECTIVE: AUGUST 6, 2012 TO August 4, 2013
EFFECTIVE: AUGUST 6, 2012 TO August 4, 2013
EFFECTIVE: AUGUST 6, 2012 TO August 4, 2013
EFFECTIVE: AUGUST 6, 2012 TO August 4, 2013

EFFECTIVE: AUGUST 6, 2012 TO August 4, 2013
EFFECTIVE: AUGUST 6, 2012 TO August 4, 2013

DRAWN BY: LISA CYFORD

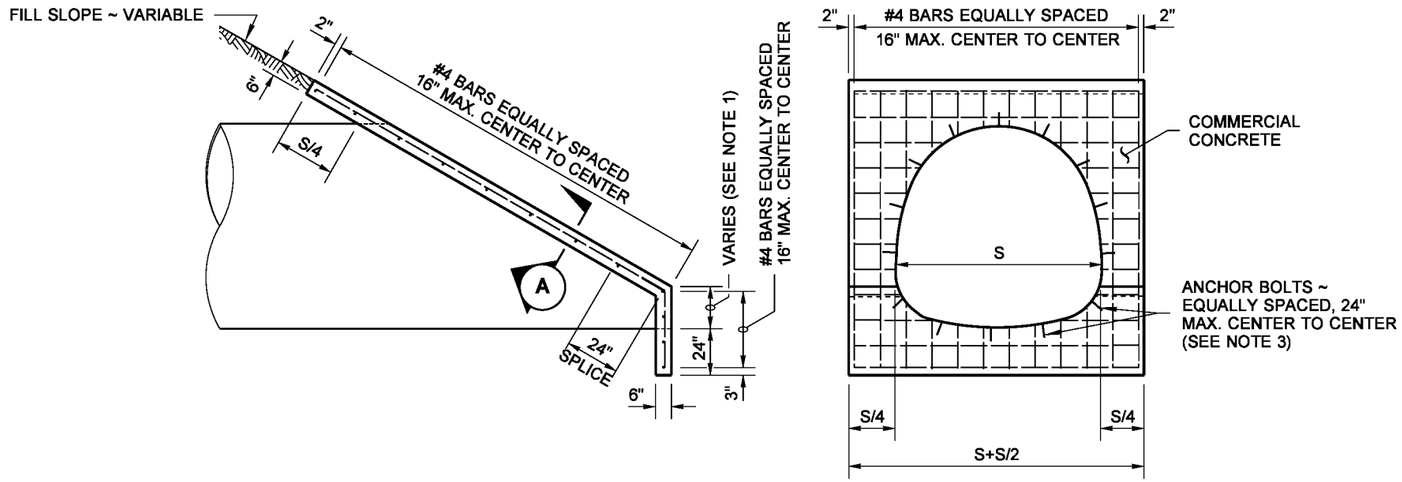

STRUCTURAL PLATE PIPE ARCHES AND UNDERPASSES

NOTES

1. The variable dimension indicated for the height of step for step mitered pipes shall conform to the manufacturers recommendations unless specified differently on the plans or in the Special Provisions.
2. Reinforcing steel shall have 1 1/2" min. clear cover to all concrete surfaces.
3. Headwalls for concrete culvert pipe may omit anchor bolt attachment.
4. When steel pipe safety bars ar used, headwall thickness shall be increased to 8".

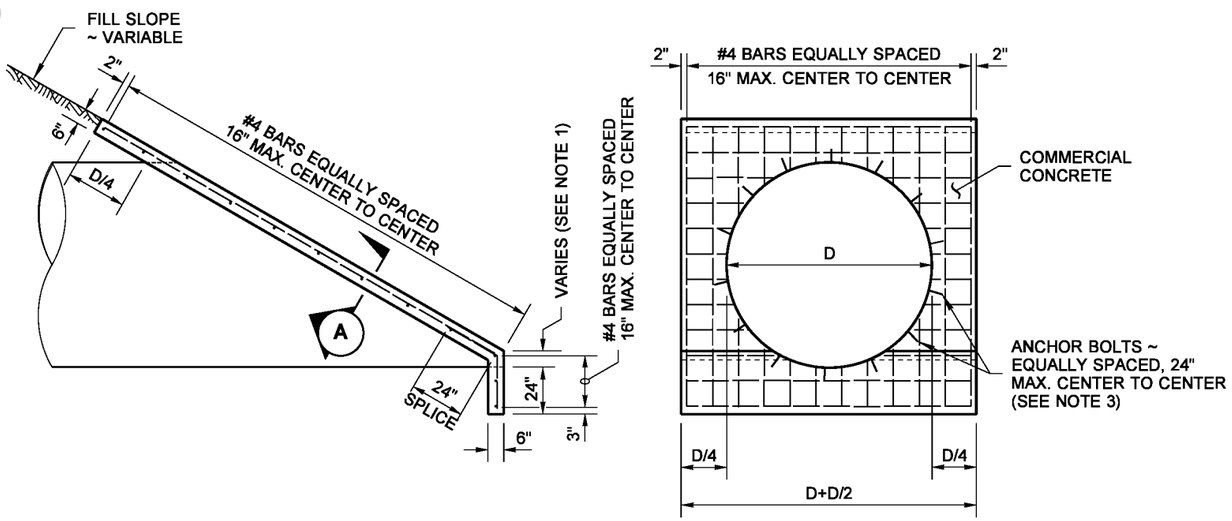

STEP MITERED PIPE

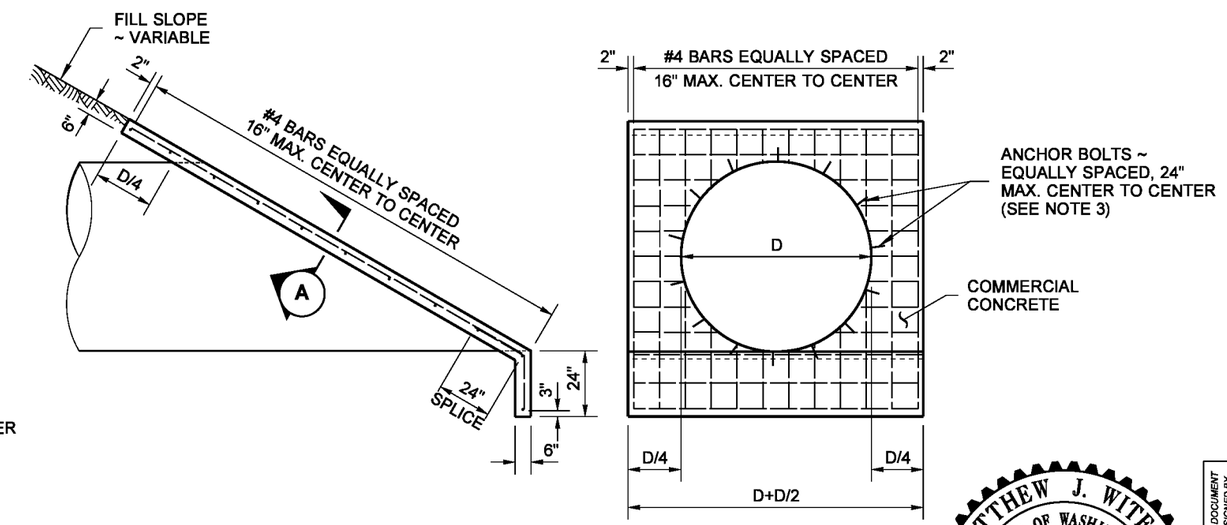

FULL MITERED PIPE

PIPES AND STRUCTURAL PLATE PIPES

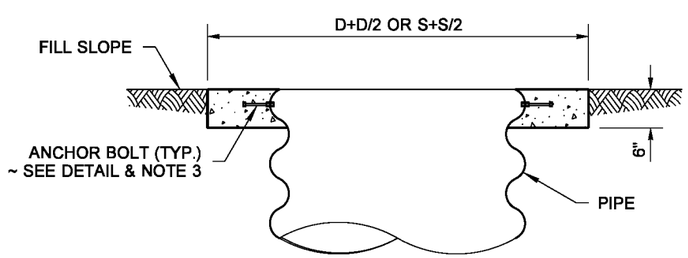

SECTION (A)

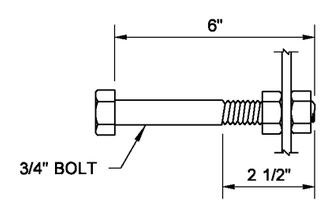

ANCHOR BOLT DETAIL

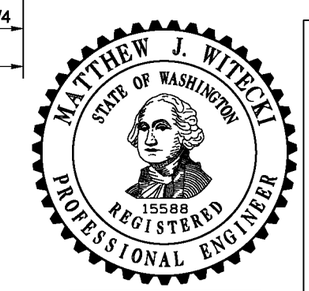

EXPIRES JULY 1, 2009

NOTE: THIS PLAN IS NOT A LEGAL ENGINEERING DOCUMENT BUT AN ELECTRONIC DUPLICATE. THE ORIGINAL, SIGNED BY THE ENGINEER AND APPROVED FOR PUBLICATION, IS KEPT ON FILE AT THE WASHINGTON STATE DEPARTMENT OF TRANSPORTATION. A COPY MAY BE OBTAINED UPON REQUEST.

HEADWALLS FOR CULVERT PIPE AND UNDERPASS

STANDARD PLAN B-75.20-01

SHEET 1 OF 1 SHEET

APPROVED FOR PUBLICATION

Pasco Bakotich III — STATE DESIGN ENGINEER

06-10-08 — DATE

Washington State Department of Transportation

EFFECTIVE: AUGUST 6, 2012 TO August 4, 2013
EFFECTIVE: AUGUST 6, 2012 TO August 4, 2013
EFFECTIVE: AUGUST 6, 2012 TO August 4, 2013
EFFECTIVE: AUGUST 6, 2012 TO August 4, 2013

EFFECTIVE: AUGUST 6, 2012 TO August 4, 2013

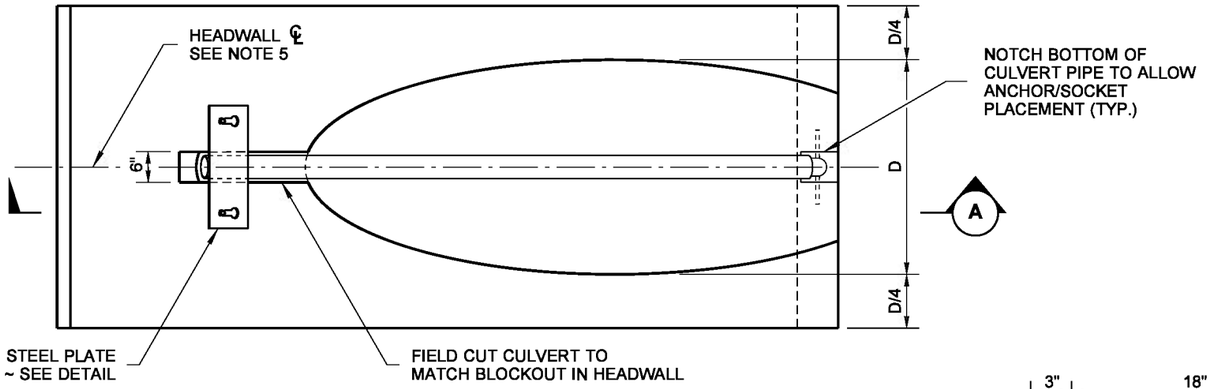

TOP VIEW

CULVERT IS PERPENDICULAR TO ROADWAY

CULVERT DIAM.	NUMBER OF BARS REQUIRED
UP TO 36"	NONE
42" ~ 60"	1
66" ~ 90"	2
96" ~ 120"	3

NOTES

1. Sockets shall be 3" extra strong steel pipe (3 1/2" O.D.). Sockets must be the proper angle and height so that safety bars are parallel with headwall and side slope, and are easily removable.
2. Safety Bars shall be 4" extra strong steel pipe (4 1/2" O.D.), or 4 1/2" O.D. (.250" wall thickness) steel tubing. Length (20' maximum) shall be the minimum required to achieve Resin Bonded Anchor placement in full depth concrete. When multiple bars are required (see table) place bars at equal spacing (30" max.).
3. Bevel culvert pipe to match side slope.
4. Resin bonded anchors shall be 7" in length (5" embedment).
5. Centerline of headwall shall be normal to roadway centerline.

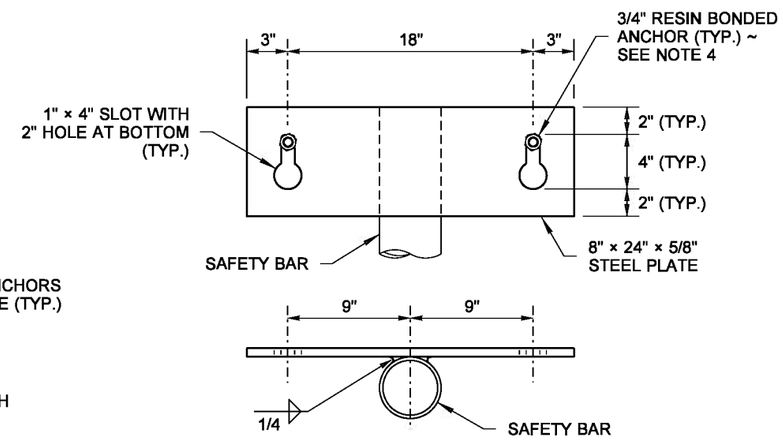

STEEL PLATE DETAIL

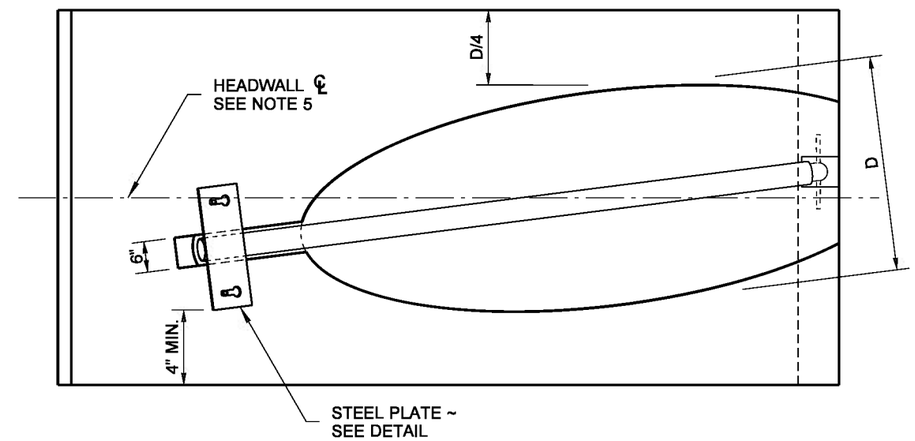

TOP VIEW

CULVERT IS SKEWED TO ROADWAY

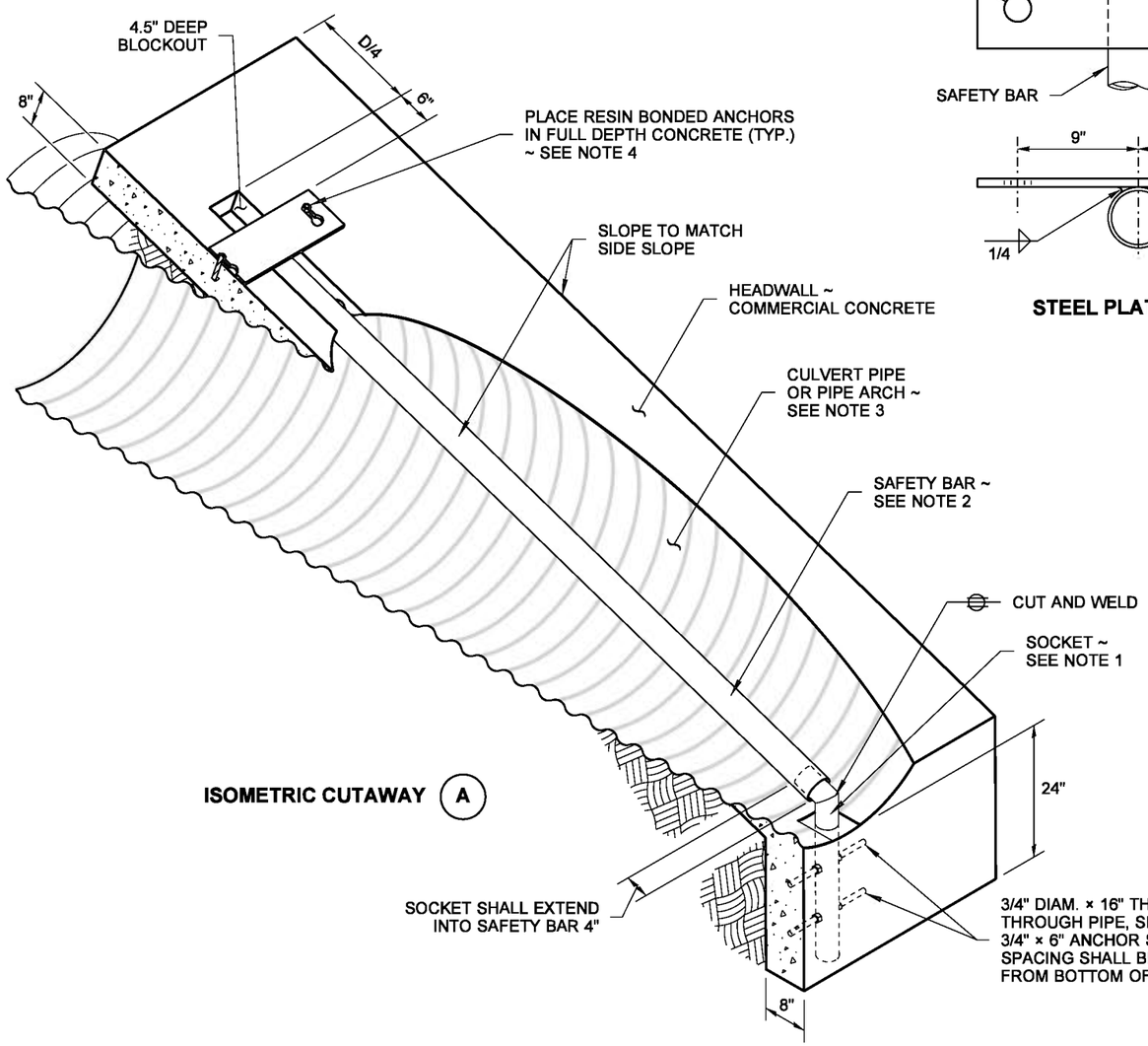

ISOMETRIC CUTAWAY (A)

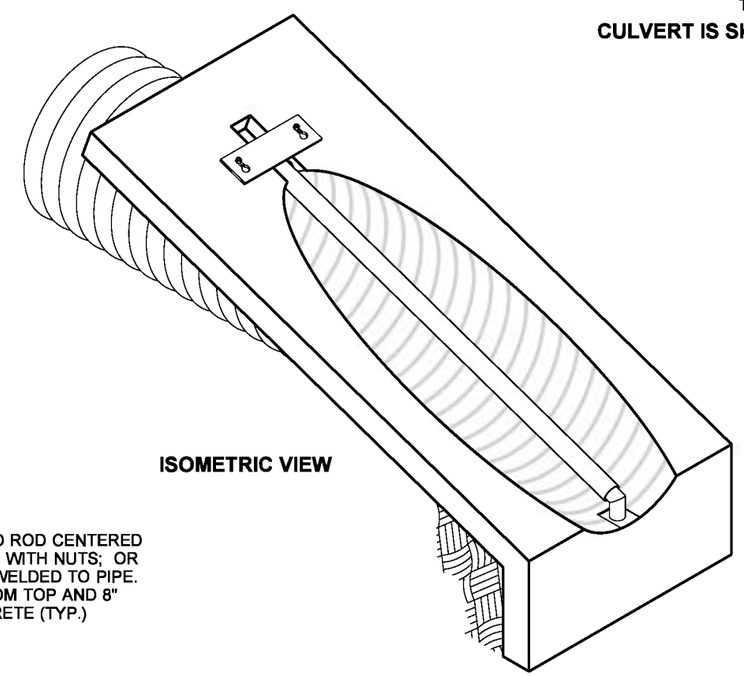

ISOMETRIC VIEW

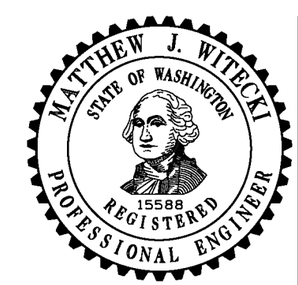

EXPIRES JULY 1, 2009

NOTE: THIS PLAN IS NOT A LEGAL ENGINEERING DOCUMENT BUT AN ELECTRONIC DUPLICATE. THE ORIGINAL, SIGNED BY THE ENGINEER AND APPROVED FOR PUBLICATION, IS KEPT ON FILE AT THE WASHINGTON STATE DEPARTMENT OF TRANSPORTATION. A COPY MAY BE OBTAINED UPON REQUEST.

TYPE 1 SAFETY BARS FOR STEPPED CULVERT PIPE OR PIPE ARCH

STANDARD PLAN B-75.50-01

SHEET 1 OF 1 SHEET

APPROVED FOR PUBLICATION

Pasco Bakotich III — STATE DESIGN ENGINEER

06-10-08 — DATE

Washington State Department of Transportation

DRAWN BY: LISA CYFORD

EFFECTIVE: AUGUST 6, 2012 TO August 4, 2013

EFFECTIVE: AUGUST 6, 2012 TO August 4, 2013
EFFECTIVE: AUGUST 6, 2012 TO August 4, 2013

DRAWN BY: ADAM COCHRAN

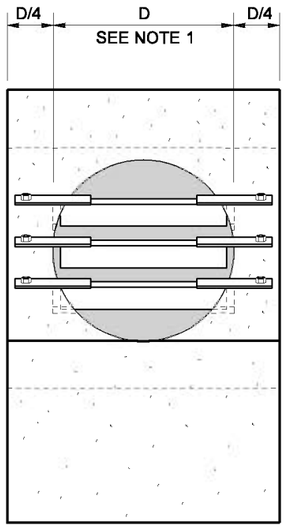

FRONT VIEW

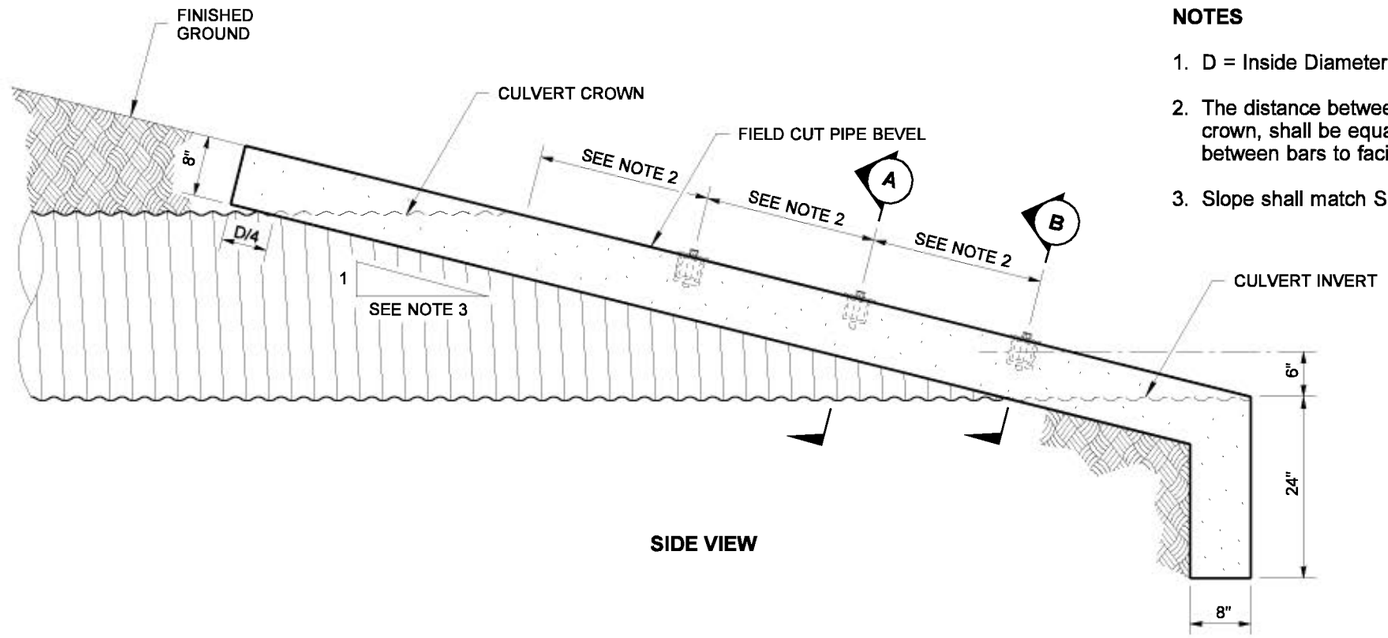

SIDE VIEW

NOTES

1. D = Inside Diameter of Culvert Pipe, or Pipe Arch Span Width, 36" maximum.
2. The distance between the safety bars, and between the top bar and the culvert crown, shall be equal spaces of no more than 24". The distance may vary ±1" between bars to facilitate placement.
3. Slope shall match Side Slope; 6H:1V preferred, not steeper than 4H:1V.

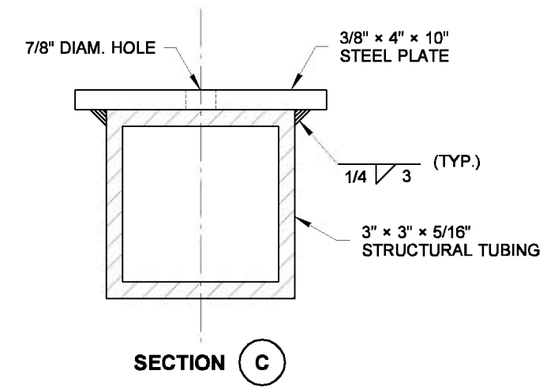

SECTION C

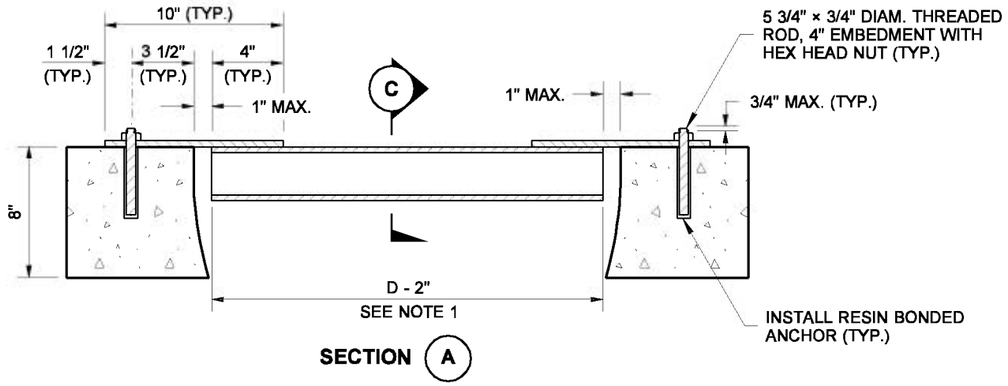

SECTION A

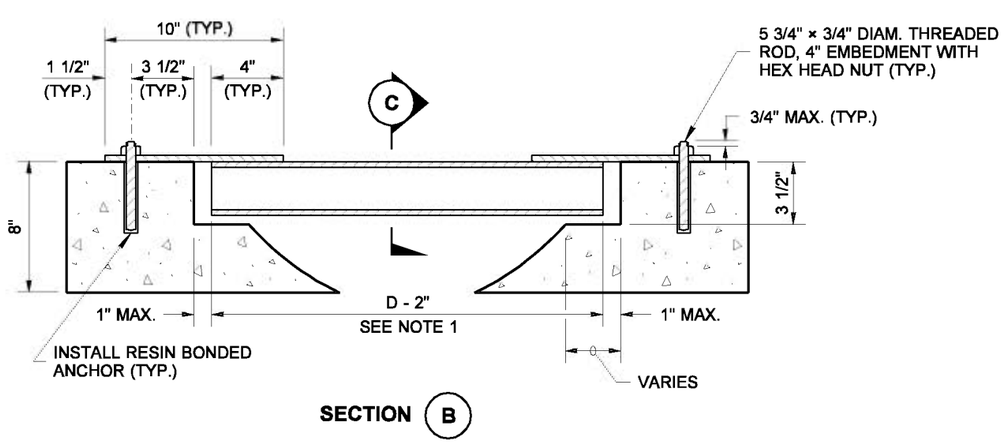

SECTION B

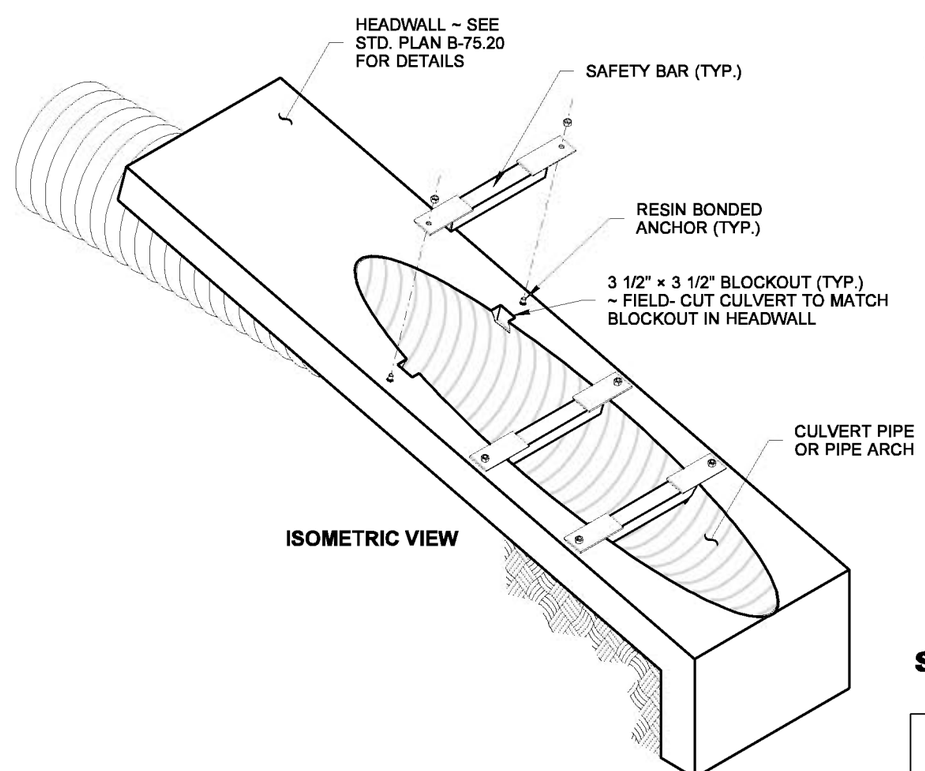

ISOMETRIC VIEW

MATTHEW J. WITECKI
STATE OF WASHINGTON
15588
REGISTERED
PROFESSIONAL ENGINEER

EXPIRES JULY 1, 2007

NOTE: THIS PLAN IS NOT A LEGAL ENGINEERING DOCUMENT BUT AN ELECTRONIC DUPLICATE. THE ORIGINAL, SIGNED BY THE ENGINEER AND APPROVED FOR PUBLICATION, IS KEPT ON FILE AT THE WASHINGTON STATE DEPARTMENT OF TRANSPORTATION. A COPY MAY BE OBTAINED UPON REQUEST.

TYPE 2 SAFETY BARS FOR CULVERT PIPE OR PIPE ARCH (ON CROSS ROAD) STANDARD PLAN B-75.60-00

SHEET 1 OF 1 SHEET

APPROVED FOR PUBLICATION

Harold J. Peterfeso — STATE DESIGN ENGINEER
06-08-06 — DATE

Washington State Department of Transportation

EFFECTIVE: AUGUST 6, 2012 TO August 4, 2013
EFFECTIVE: AUGUST 6, 2012 TO August 4, 2013
EFFECTIVE: AUGUST 6, 2012 TO August 4, 2013
EFFECTIVE: AUGUST 6, 2012 TO August 4, 2013

EFFECTIVE: AUGUST 6, 2012 TO August 4, 2013
EFFECTIVE: AUGUST 6, 2012 TO August 4, 2013

DRAWN BY: ADAM COCHRAN

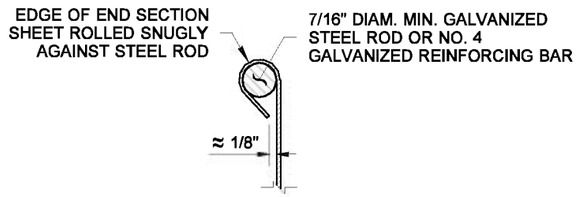

REINFORCED EDGE SECTION

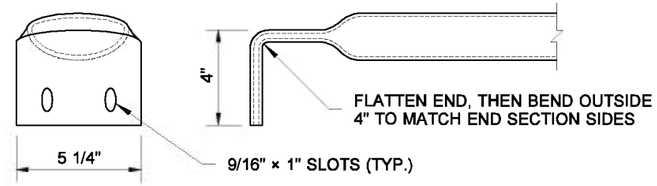

SAFETY BAR END TREATMENT DETAIL

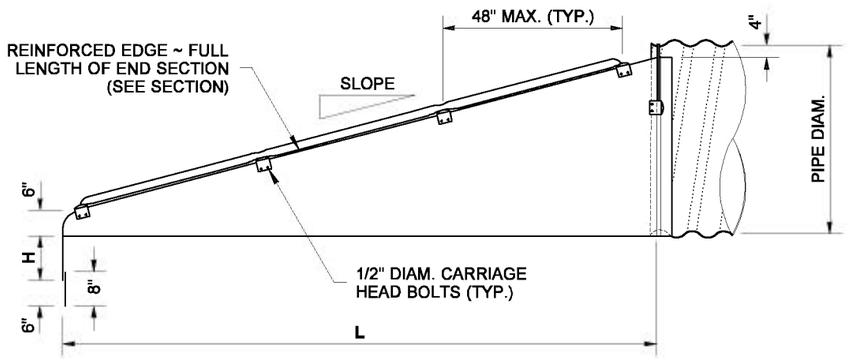

SIDE VIEW

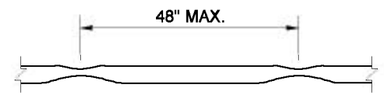

CROSS DRAINAGE BAR DETAIL

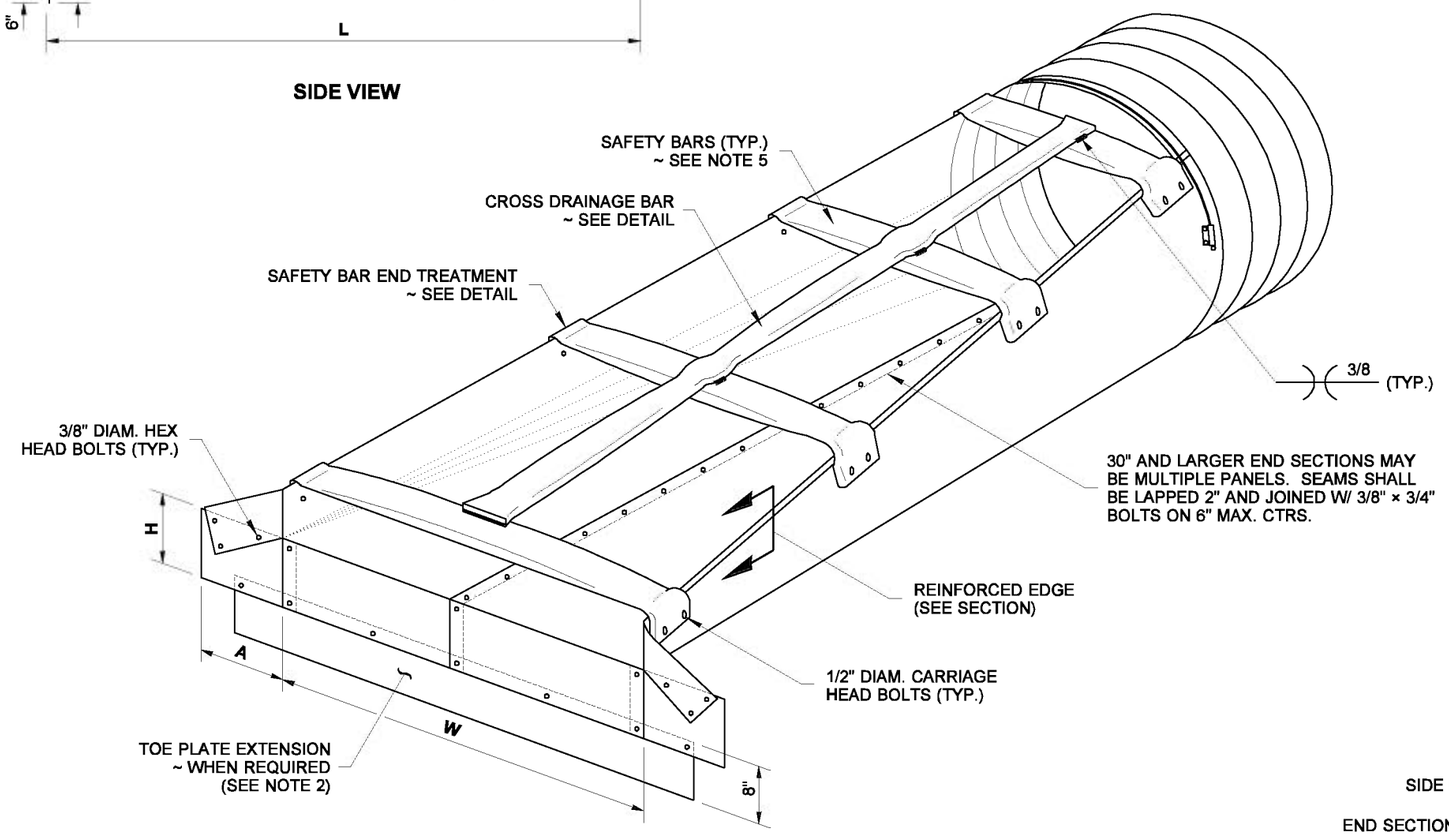

ISOMETRIC VIEW

CROSS DRAINAGE STRUCTURE

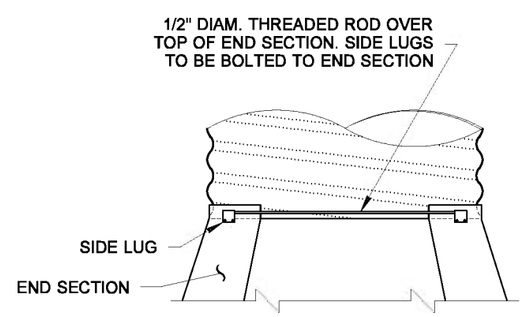

TOP VIEW

CONNECTOR DETAIL

NOTES

1. All pipes or pipe arches shall be attached as shown in **CONNECTOR DETAIL**.
2. When a Toe Plate Extension is required, it shall be the same gage as the End Section. The dimensions shall be 8" high, and 6" less than the overall width. Install centered, and lapped 2"; fasten with 3/8" × 3/4" galvanized bolts on 12" maximum centers.
3. Cross Drainage Bar and Safety Bars shall be 3" Schedule 40 galvanized steel pipe. Cross Drainage Bars shall be placed a maximum 30" apart.
4. Slotted holes for safety bar attachment shall be provided on end sections.
5. Number of Safety Bars required will vary depending upon the length of the end section.

METAL END SECTIONS FOR CIRCULAR PIPES

PIPE DIAM. (INCHES)	MINIMUM THICKNESS		DIMENSIONS (INCHES)					
	INCHES	GAGE	A	H	W	OVERALL WIDTH	L SLOPE 4:1	L SLOPE 6:1
36	0.109	12	12	9	42	66	104	156
42	0.109	12	16	12	48	80	128	192
48	0.109	12	16	12	54	86	152	228
54	0.109	12	16	12	60	92	176	264
60	0.109	12	16	12	66	98	200	300

METAL END SECTIONS FOR ARCHED PIPES

EQUIV. DIAM. (INCHES)	PIPE ARCH DIMENSIONS		MINIMUM THICKNESS		DIMENSIONS (INCHES)					
	SPAN (IN.)	RISE (IN.)	INCHES	GAGE	A	H	W	OVERALL WIDTH	L SLOPE 4:1	L SLOPE 6:1
30	*35	24	0.079	14	12	9	*41	65	56	84
36	42	29	0.109	12	12	9	48	72	76	114
42	49	33	0.109	12	16	12	55	87	92	138
48	57	38	0.109	12	16	12	63	95	112	168
54	64	43	0.109	12	16	12	70	102	132	198
60	71	47	0.109	12	16	12	77	109	148	222
72	83	57	0.109	12	16	12	89	121	188	282

* SAFETY BARS ARE INSTALLED ON END SECTION WHEN SPAN IS GREATER THAN 36"

EXPIRES JULY 1, 2007

NOTE: THIS PLAN IS NOT A LEGAL ENGINEERING DOCUMENT BUT AN ELECTRONIC DUPLICATE. THE ORIGINAL, SIGNED BY THE ENGINEER AND APPROVED FOR PUBLICATION, IS KEPT ON FILE AT THE WASHINGTON STATE DEPARTMENT OF TRANSPORTATION. A COPY MAY BE OBTAINED UPON REQUEST.

TAPERED END SECTION WITH TYPE 3 SAFETY BARS

STANDARD PLAN B-80.20-00

SHEET 1 OF 1 SHEET

APPROVED FOR PUBLICATION

Harold J. Peterfeso — STATE DESIGN ENGINEER — *06-08-06* — DATE

Washington State Department of Transportation

EFFECTIVE: AUGUST 6, 2012 TO August 4, 2013
EFFECTIVE: AUGUST 6, 2012 TO August 4, 2013
EFFECTIVE: AUGUST 6, 2012 TO August 4, 2013
EFFECTIVE: AUGUST 6, 2012 TO August 4, 2013

EFFECTIVE: AUGUST 6, 2012 TO August 4, 2013
EFFECTIVE: AUGUST 6, 2012 TO August 4, 2013

DRAWN BY: ADAM COCHRAN

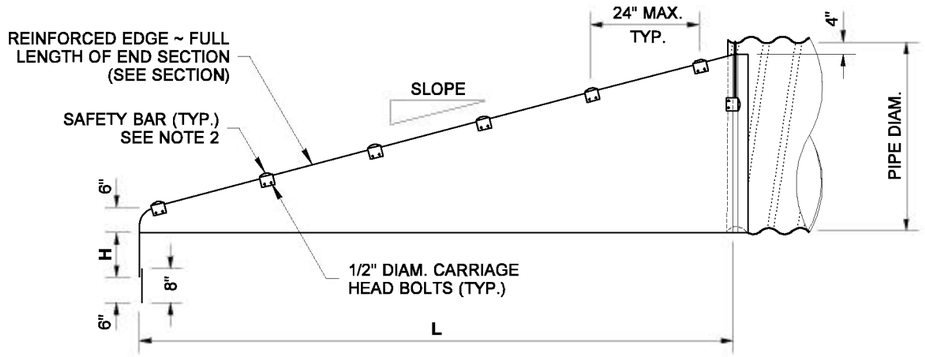

SIDE VIEW

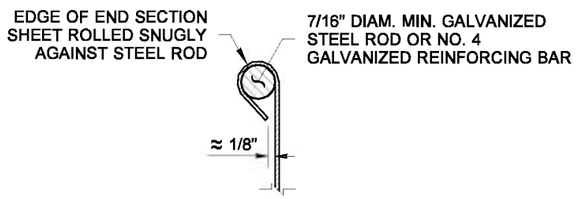

REINFORCED EDGE SECTION

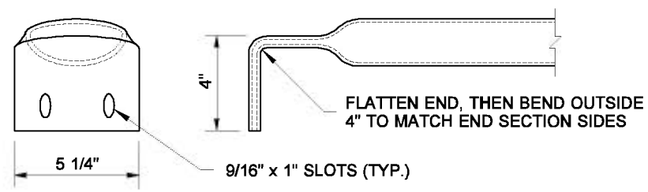

SAFETY BAR END TREATMENT DETAIL

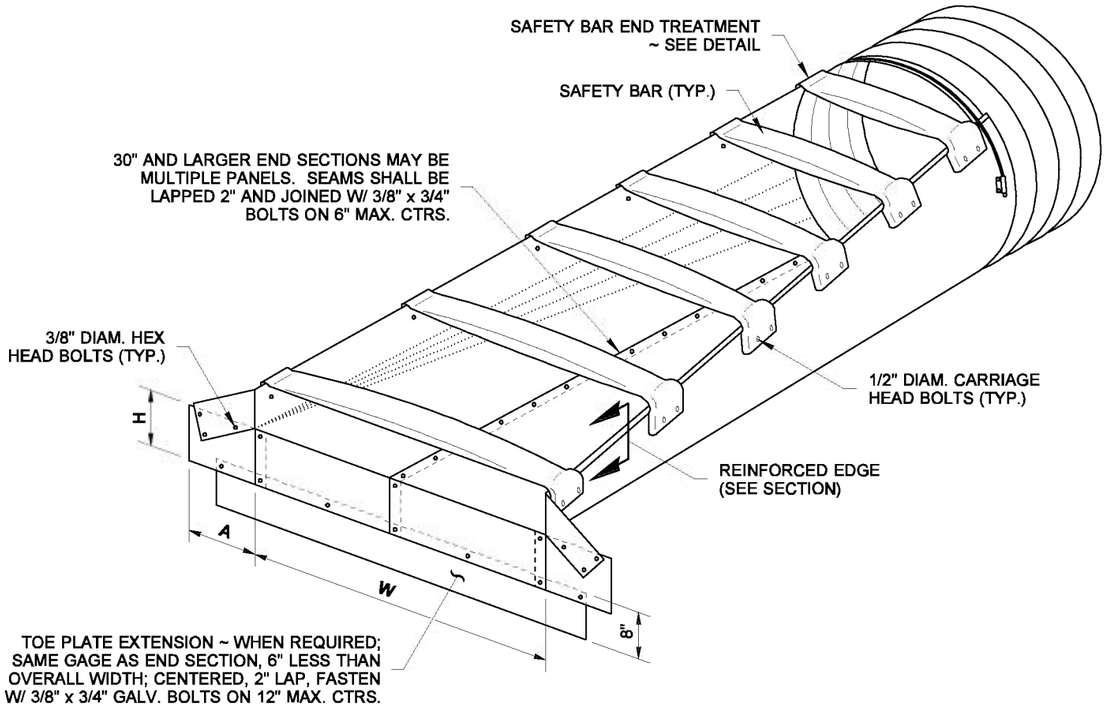

ISOMETRIC VIEW

CROSS ROAD DRAINAGE STRUCTURE

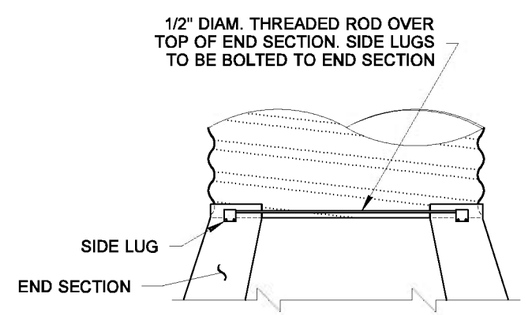

TOP VIEW

CONNECTOR DETAIL

NOTES

1. As an alternative connection on 15" through 24" pipe, a 1" wide strap of 16 gage or 12 gage galvanized steel, fastened with a 1/2" diam., 6" long galvanized bolt and square head nut, may be used.
2. Number of safety bars required will vary depending upon the length of the end section.

METAL END SECTIONS FOR CIRCULAR PIPES

PIPE DIAM. (INCHES)	MINIMUM THICKNESS		DIMENSIONS (INCHES)					
	INCHES	GAGE	A	H	W	OVERALL WIDTH	L SLOPE 4:1	L SLOPE 6:1
15	.064	16	8	6	21	37	20	30
18	.064	16	8	6	24	40	32	48
21	.064	16	8	6	27	43	44	66
24	.064	16	8	6	30	46	56	84
30	.109	12	12	9	36	60	80	120
36	.109	12	12	9	42	66	104	156
42	.109	12	16	12	48	80	128	192
48	.109	12	16	12	54	86	152	228
54	.109	12	16	12	60	92	176	264
60	.109	12	16	12	66	98	200	300

METAL END SECTIONS FOR ARCHED PIPES

EQUIV. DIAM. (INCHES)	PIPE ARCH DIMENSIONS		MINIMUM THICKNESS		DIMENSIONS (INCHES)					
	SPAN (IN.)	RISE (IN.)	INCHES	GAGE	A	H	W	OVERALL WIDTH	L SLOPE 4:1	L SLOPE 6:1
18	21	15	.064	16	8	6	27	43	20	30
21	24	18	.064	16	8	6	30	46	32	48
24	28	20	.064	16	8	6	34	50	40	60
30	35	24	.079	14	12	9	41	65	56	84
36	42	29	.109	12	12	9	48	72	76	114
42	49	33	.109	12	16	12	55	87	92	138
48	57	38	.109	12	16	12	63	95	112	168
54	64	43	.109	12	16	12	70	102	132	198
60	71	47	.109	12	16	12	77	109	148	222
72	83	57	.109	12	16	12	89	121	188	282

EXPIRES JULY 1, 2007

NOTE: THIS PLAN IS NOT A LEGAL ENGINEERING DOCUMENT BUT AN ELECTRONIC DUPLICATE. THE ORIGINAL, SIGNED BY THE ENGINEER AND APPROVED FOR PUBLICATION, IS KEPT ON FILE AT THE WASHINGTON STATE DEPARTMENT OF TRANSPORTATION. A COPY MAY BE OBTAINED UPON REQUEST.

TAPERED END SECTION WITH TYPE 4 SAFETY BARS (ON CROSS ROAD)

STANDARD PLAN B-80.40-00

SHEET 1 OF 1 SHEET

APPROVED FOR PUBLICATION

Harold J. Peterfeso — STATE DESIGN ENGINEER

06-01-06 — DATE

Washington State Department of Transportation

EFFECTIVE: AUGUST 6, 2012 TO August 4, 2013
EFFECTIVE: AUGUST 6, 2012 TO August 4, 2013
EFFECTIVE: AUGUST 6, 2012 TO August 4, 2013
EFFECTIVE: AUGUST 6, 2012 TO August 4, 2013

EFFECTIVE: AUGUST 6, 2012 TO August 4, 2013
EFFECTIVE: AUGUST 6, 2012 TO August 4, 2013

DRAWN BY: ADAM COCHRAN

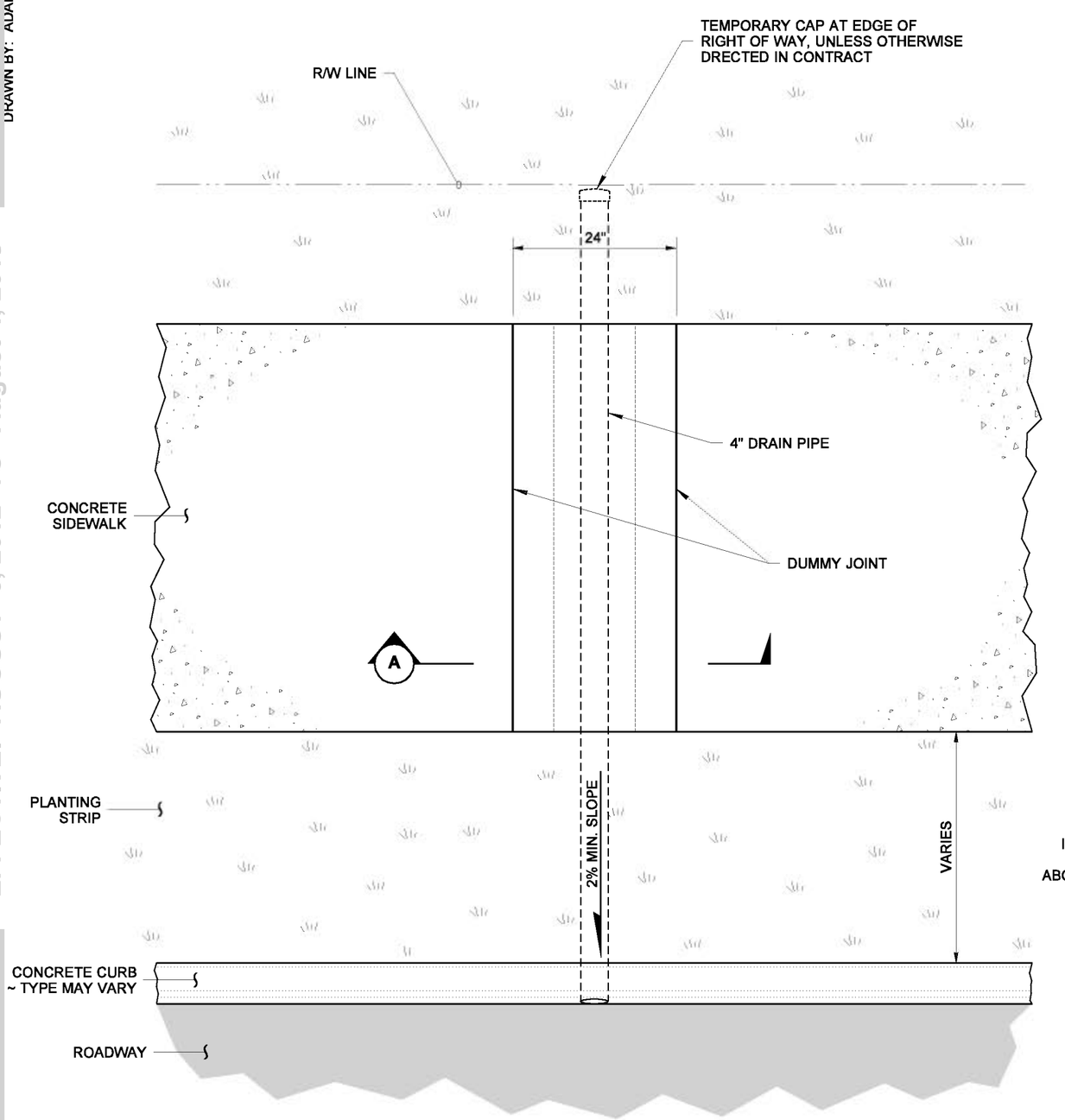

(REINFORCEMENT NOT SHOWN)

PLAN

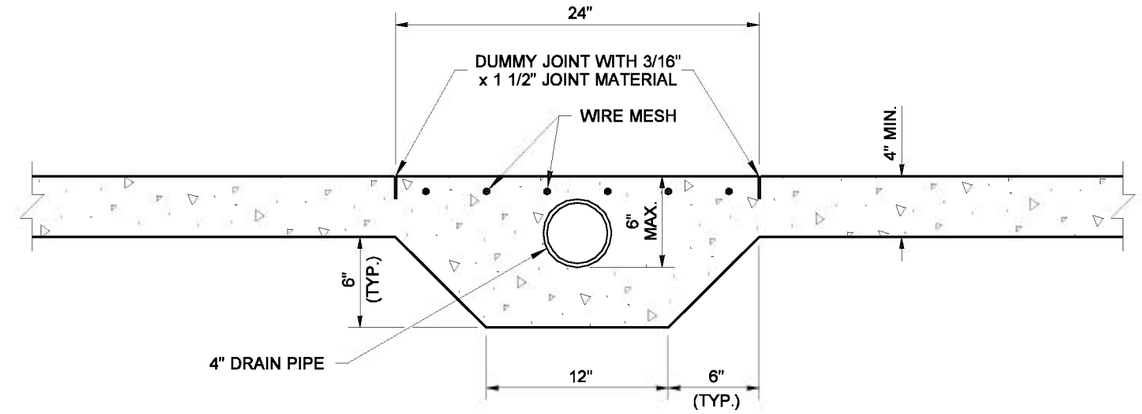

SECTION A

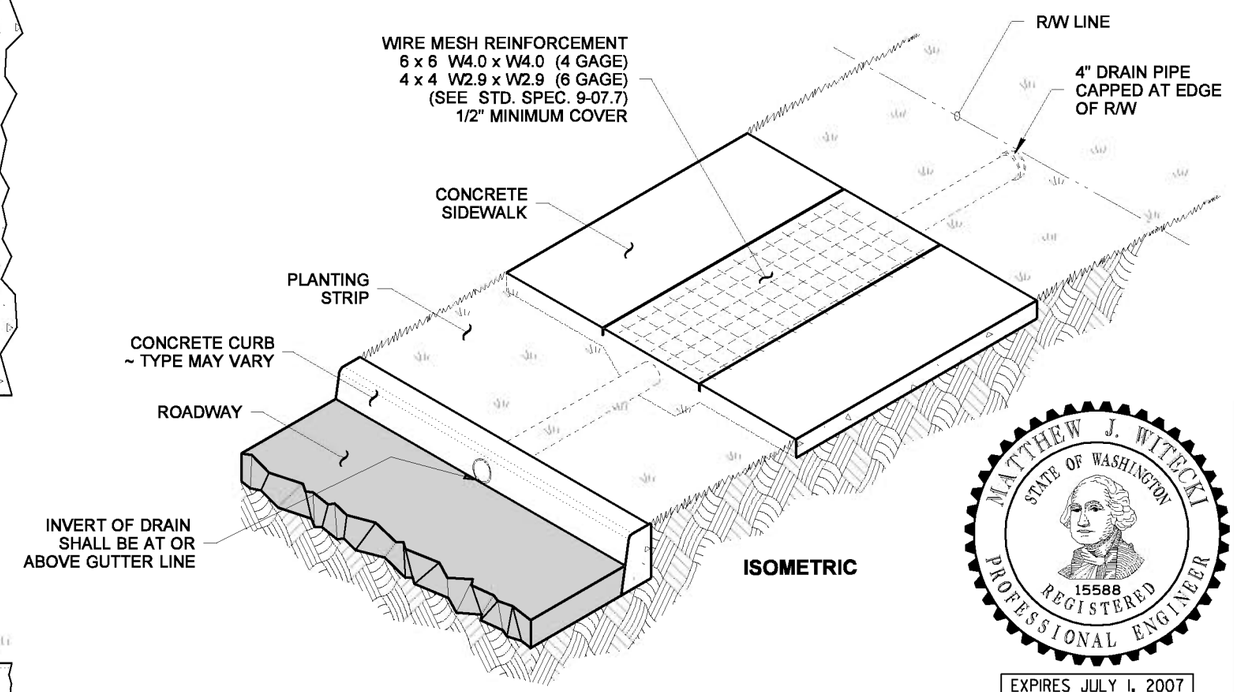

ISOMETRIC

EXPIRES JULY 1, 2007

NOTE: THIS PLAN IS NOT A LEGAL ENGINEERING DOCUMENT BUT AN ELECTRONIC DUPLICATE. THE ORIGINAL, SIGNED BY THE ENGINEER AND APPROVED FOR PUBLICATION, IS KEPT ON FILE AT THE WASHINGTON STATE DEPARTMENT OF TRANSPORTATION. A COPY MAY BE OBTAINED UPON REQUEST.

RESIDENTIAL STORM DRAIN, UNDER SIDEWALK

STANDARD PLAN B-82.20-00

SHEET 1 OF 1 SHEET

APPROVED FOR PUBLICATION

Harold J. Peterfeso — STATE DESIGN ENGINEER

06-01-06 — DATE

Washington State Department of Transportation

EFFECTIVE: AUGUST 6, 2012 TO August 4, 2013
EFFECTIVE: AUGUST 6, 2012 TO August 4, 2013
EFFECTIVE: AUGUST 6, 2012 TO August 4, 2013
EFFECTIVE: AUGUST 6, 2012 TO August 4, 2013

EFFECTIVE: AUGUST 6, 2012 TO August 4, 2013
EFFECTIVE: AUGUST 6, 2012 TO August 4, 2013

DRAWN BY: LISA CYFORD

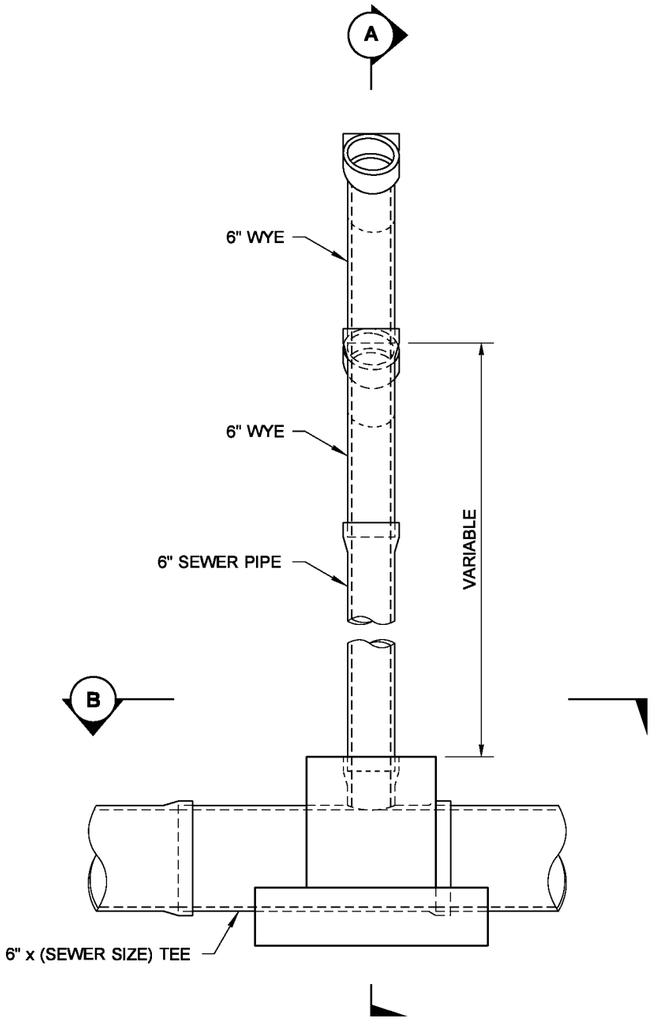

ELEVATION

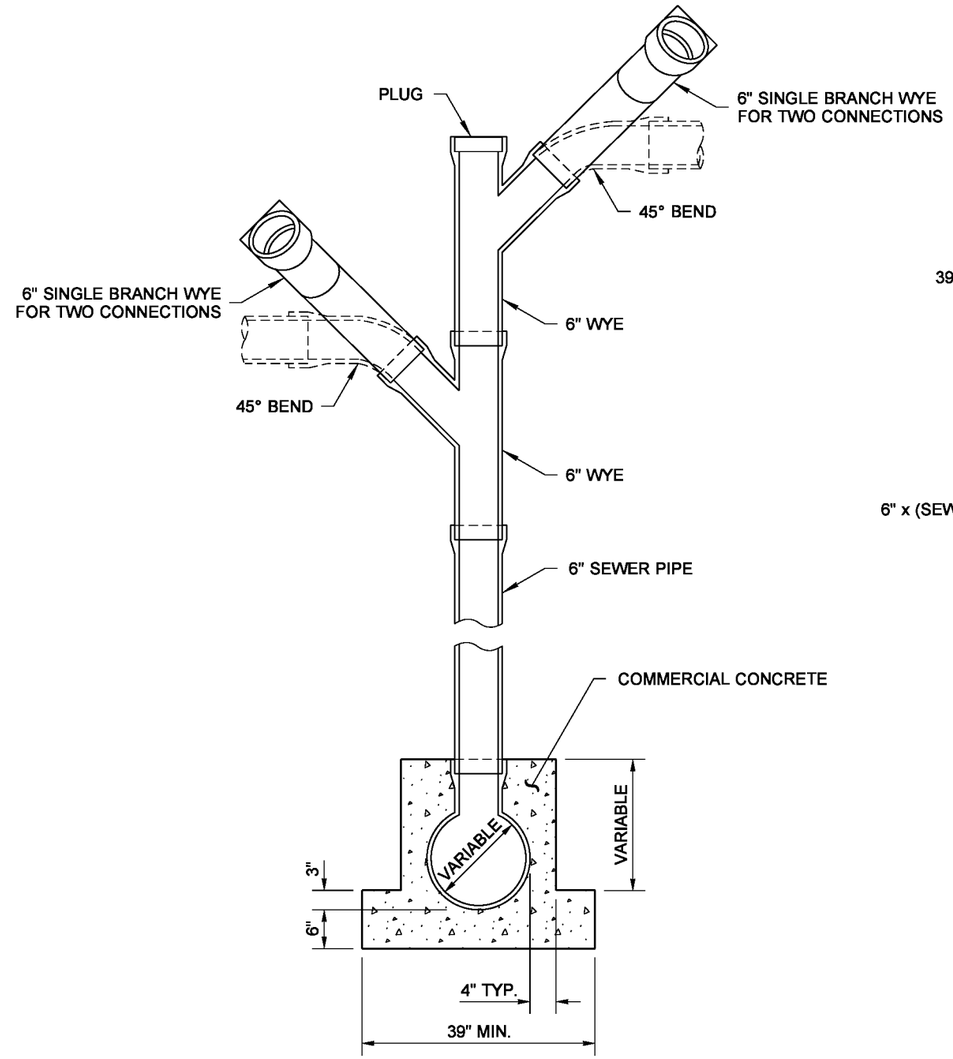

SECTION A

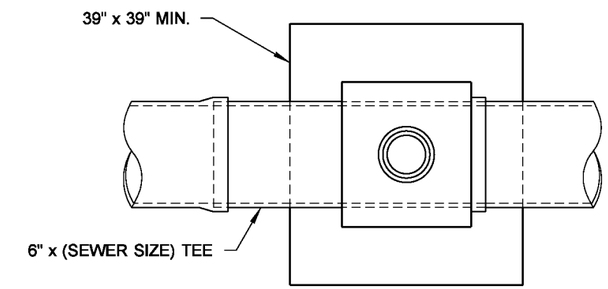

SECTION B

FOR SANITARY SEWER USE

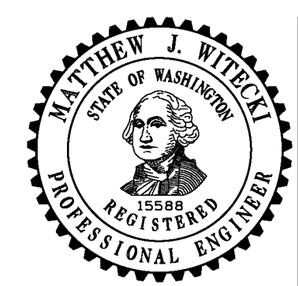

EXPIRES JULY 1, 2009

NOTE: THIS PLAN IS NOT A LEGAL ENGINEERING DOCUMENT BUT AN ELECTRONIC DUPLICATE. THE ORIGINAL, SIGNED BY THE ENGINEER AND APPROVED FOR PUBLICATION, IS KEPT ON FILE AT THE WASHINGTON STATE DEPARTMENT OF TRANSPORTATION. A COPY MAY BE OBTAINED UPON REQUEST.

VERTICAL CONNECTION

STANDARD PLAN B-85.10-01

SHEET 1 OF 1 SHEET

APPROVED FOR PUBLICATION

Pasco Bakotich III — STATE DESIGN ENGINEER

06-10-08 — DATE

Washington State Department of Transportation

EFFECTIVE: AUGUST 6, 2012 TO August 4, 2013
EFFECTIVE: AUGUST 6, 2012 TO August 4, 2013
EFFECTIVE: AUGUST 6, 2012 TO August 4, 2013
EFFECTIVE: AUGUST 6, 2012 TO August 4, 2013

EFFECTIVE: AUGUST 6, 2012 TO August 4, 2013
EFFECTIVE: AUGUST 6, 2012 TO August 4, 2013

DRAWN BY: ADAM COCHRAN

NOTES

1. Install sewer saddle with gasket and stainless steel clamps for connection to existing sewers. Install wye or tee sewer fitting with gaskets for new sewer installations.
2. Mark location of sewer stub in accordance with Contracting Agency requirements.

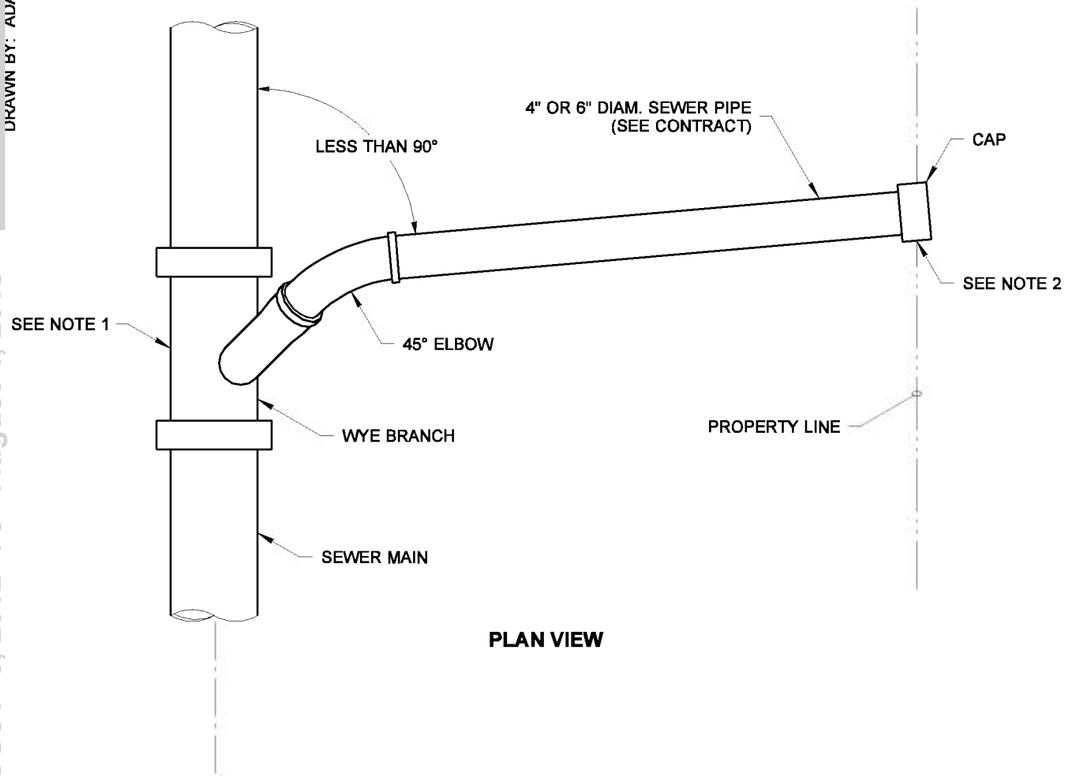

PLAN VIEW

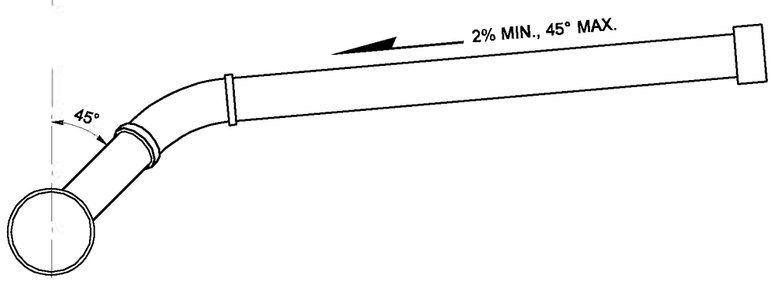

ELEVATION VIEW

WYE CONNECTION

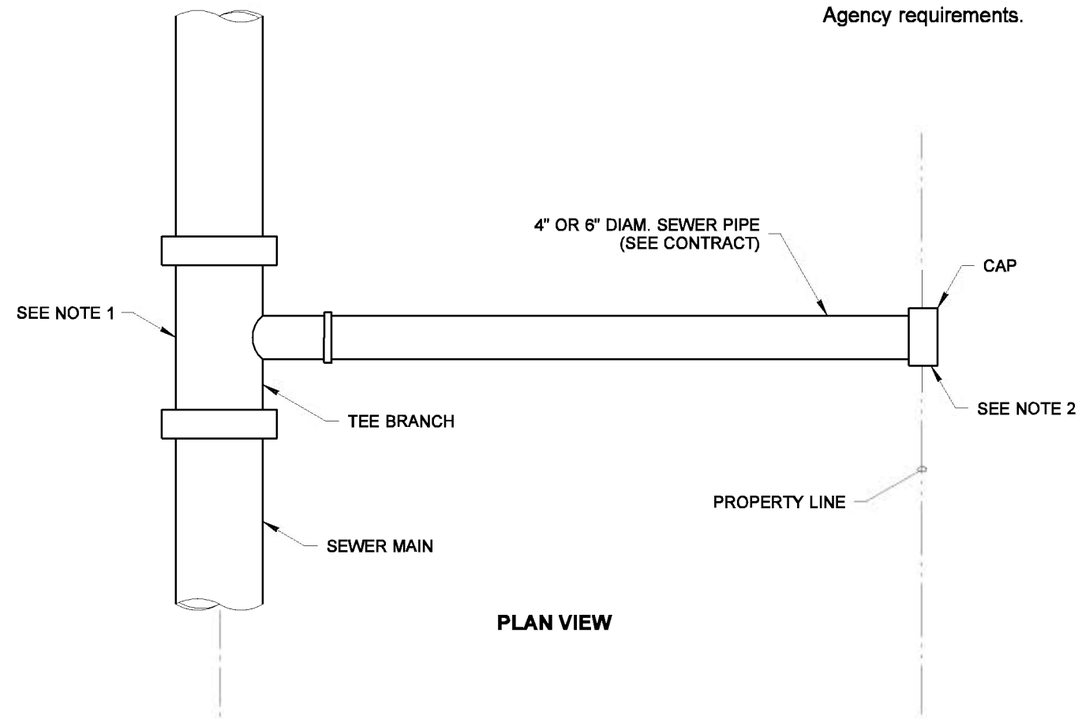

PLAN VIEW

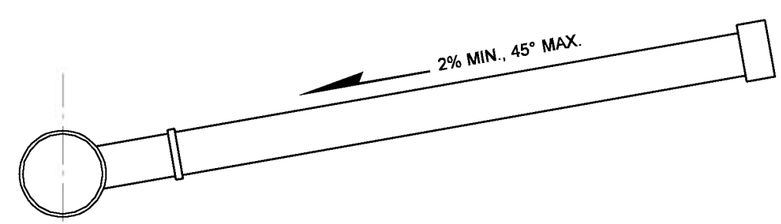

ELEVATION VIEW

TEE CONNECTION

FOR SANITARY SEWER USE

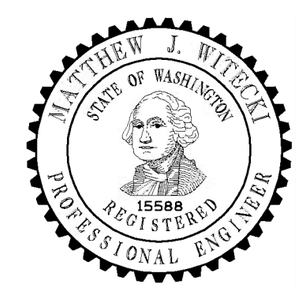

EXPIRES JULY 1, 2007

NOTE: THIS PLAN IS NOT A LEGAL ENGINEERING DOCUMENT BUT AN ELECTRONIC DUPLICATE. THE ORIGINAL, SIGNED BY THE ENGINEER AND APPROVED FOR PUBLICATION, IS KEPT ON FILE AT THE WASHINGTON STATE DEPARTMENT OF TRANSPORTATION. A COPY MAY BE OBTAINED UPON REQUEST.

SIDE SEWER CONNECTION

STANDARD PLAN B-85.20-00

SHEET 1 OF 1 SHEET

APPROVED FOR PUBLICATION

Harold J. Peterfeso — STATE DESIGN ENGINEER

06-01-06 — DATE

Washington State Department of Transportation

EFFECTIVE: AUGUST 6, 2012 TO August 4, 2013
EFFECTIVE: AUGUST 6, 2012 TO August 4, 2013
EFFECTIVE: AUGUST 6, 2012 TO August 4, 2013
EFFECTIVE: AUGUST 6, 2012 TO August 4, 2013

EFFECTIVE: AUGUST 6, 2012 TO August 4, 2013
EFFECTIVE: AUGUST 6, 2012 TO August 4, 2013

DRAWN BY: ADAM COCHRAN

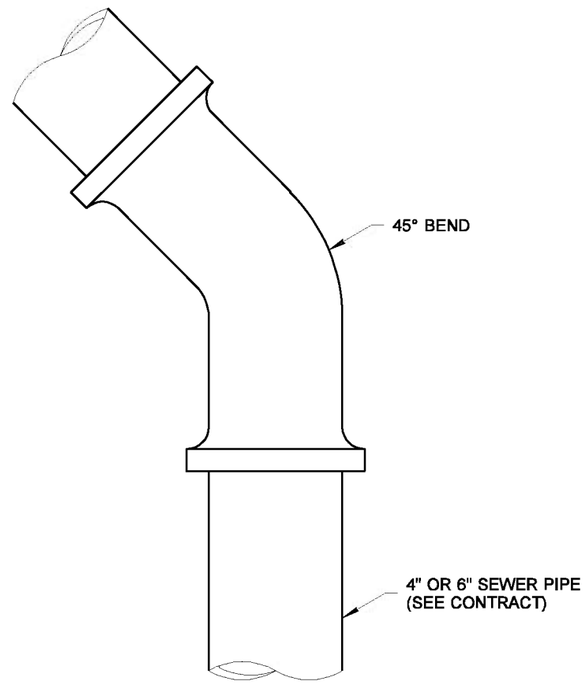

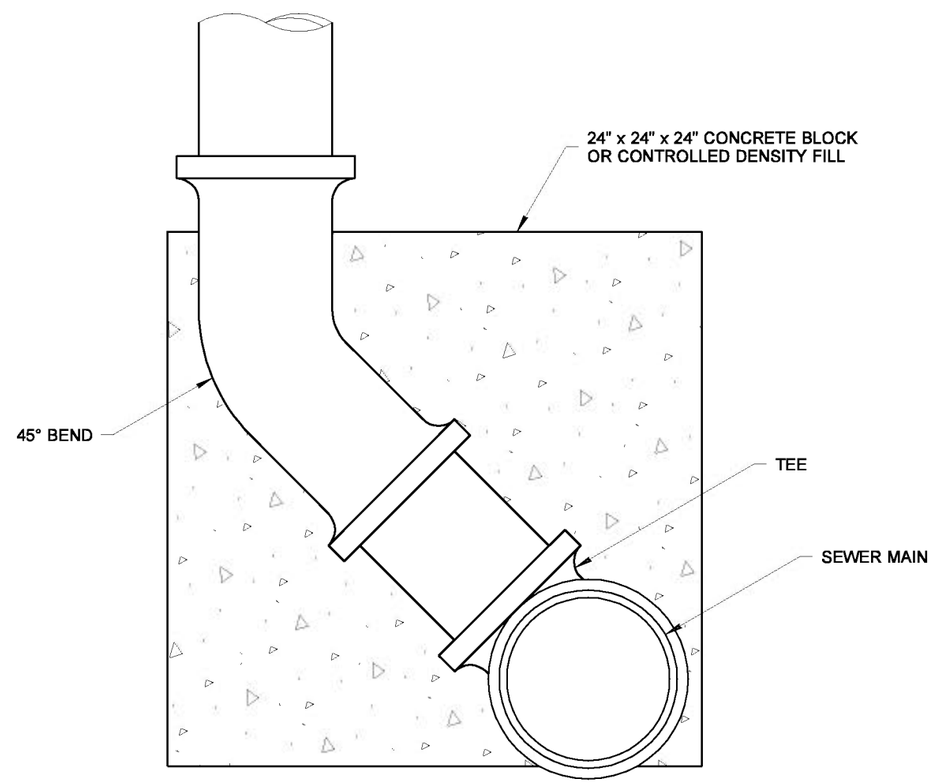

FOR SANITARY SEWER USE

MATTHEW J. WITECKI
STATE OF WASHINGTON
15588
REGISTERED
PROFESSIONAL ENGINEER

EXPIRES JULY 1, 2007

NOTE: THIS PLAN IS NOT A LEGAL ENGINEERING DOCUMENT BUT AN ELECTRONIC DUPLICATE. THE ORIGINAL, SIGNED BY THE ENGINEER AND APPROVED FOR PUBLICATION, IS KEPT ON FILE AT THE WASHINGTON STATE DEPARTMENT OF TRANSPORTATION. A COPY MAY BE OBTAINED UPON REQUEST.

STANDING SIDE SEWER CONNECTION

STANDARD PLAN B-85.30-00

SHEET 1 OF 1 SHEET

APPROVED FOR PUBLICATION

Harold J. Peterfeso — STATE DESIGN ENGINEER

06-01-06 — DATE

Washington State Department of Transportation

EFFECTIVE: AUGUST 6, 2012 TO August 4, 2013
EFFECTIVE: AUGUST 6, 2012 TO August 4, 2013
EFFECTIVE: AUGUST 6, 2012 TO August 4, 2013
EFFECTIVE: AUGUST 6, 2012 TO August 4, 2013

EFFECTIVE: AUGUST 6, 2012 TO August 4, 2013
EFFECTIVE: AUGUST 6, 2012 TO August 4, 2013

DRAWN BY: ADAM COCHRAN

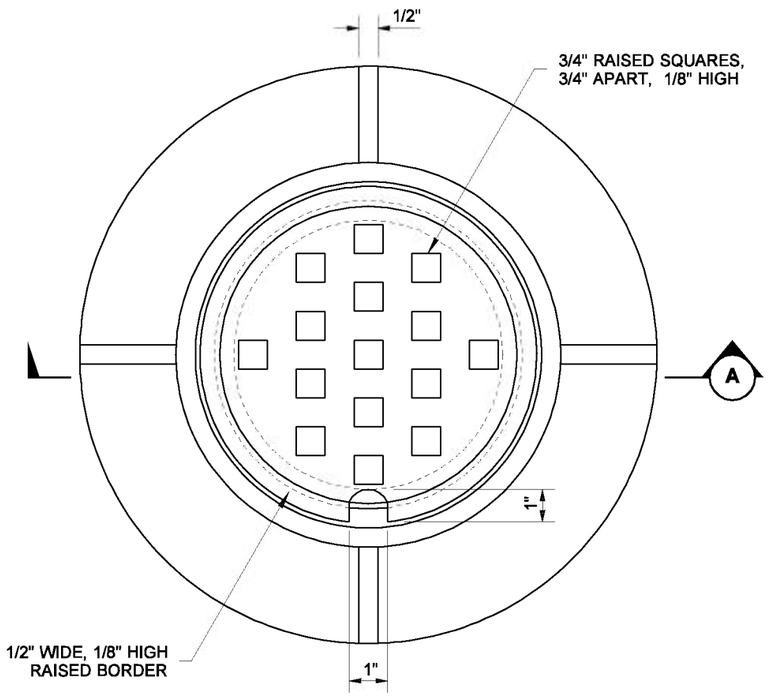

PLAN

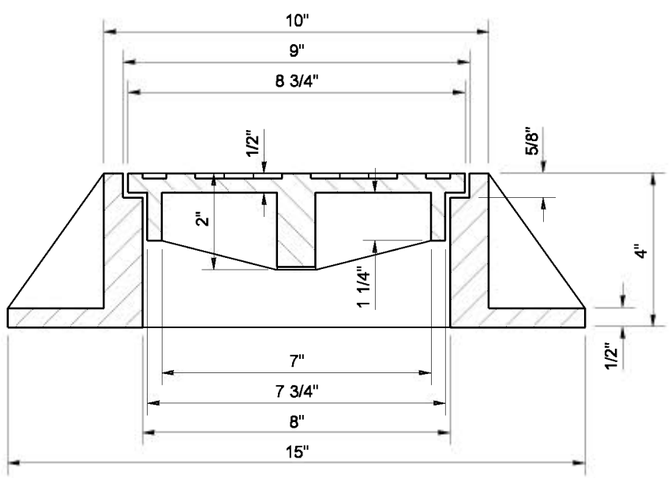

SECTION (A)

CAST IRON RING AND COVER

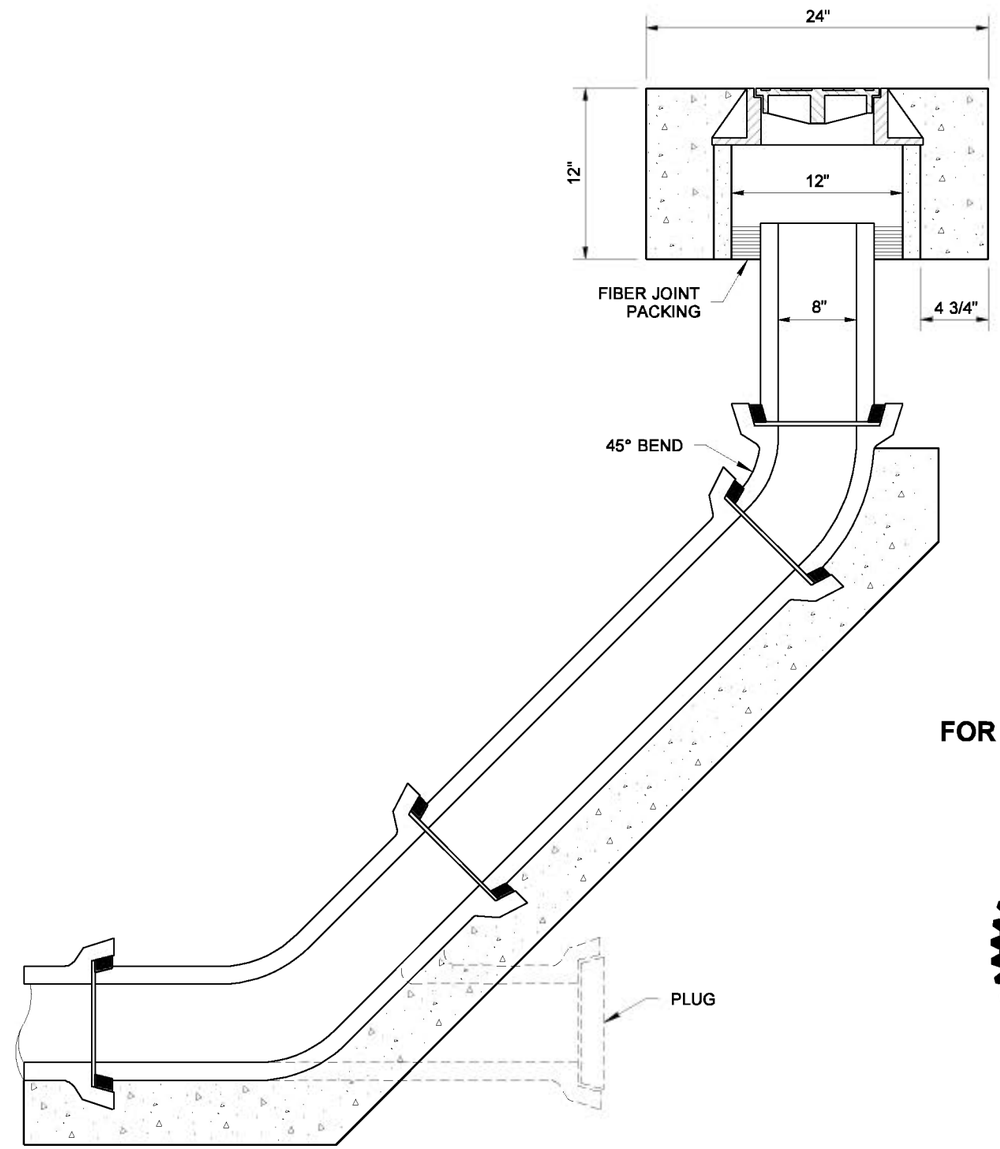

FOR SANITARY SEWER USE

EXPIRES JULY 1, 2007

NOTE: THIS PLAN IS NOT A LEGAL ENGINEERING DOCUMENT BUT AN ELECTRONIC DUPLICATE. THE ORIGINAL, SIGNED BY THE ENGINEER AND APPROVED FOR PUBLICATION, IS KEPT ON FILE AT THE WASHINGTON STATE DEPARTMENT OF TRANSPORTATION. A COPY MAY BE OBTAINED UPON REQUEST.

8 INCH SEWER CLEAN-OUT

STANDARD PLAN B-85.40-00

SHEET 1 OF 1 SHEET

APPROVED FOR PUBLICATION

Harold J. Peterfeso — STATE DESIGN ENGINEER

06-08-06 — DATE

Washington State Department of Transportation

EFFECTIVE: AUGUST 6, 2012 TO August 4, 2013
EFFECTIVE: AUGUST 6, 2012 TO August 4, 2013
EFFECTIVE: AUGUST 6, 2012 TO August 4, 2013
EFFECTIVE: AUGUST 6, 2012 TO August 4, 2013

EFFECTIVE: AUGUST 6, 2012 TO August 4, 2013
EFFECTIVE: AUGUST 6, 2012 TO August 4, 2013

DRAWN BY: LISA CYFORD

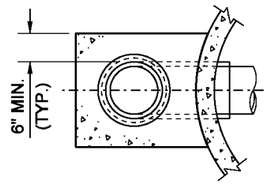

SECTION A

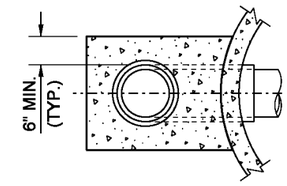

SECTION B

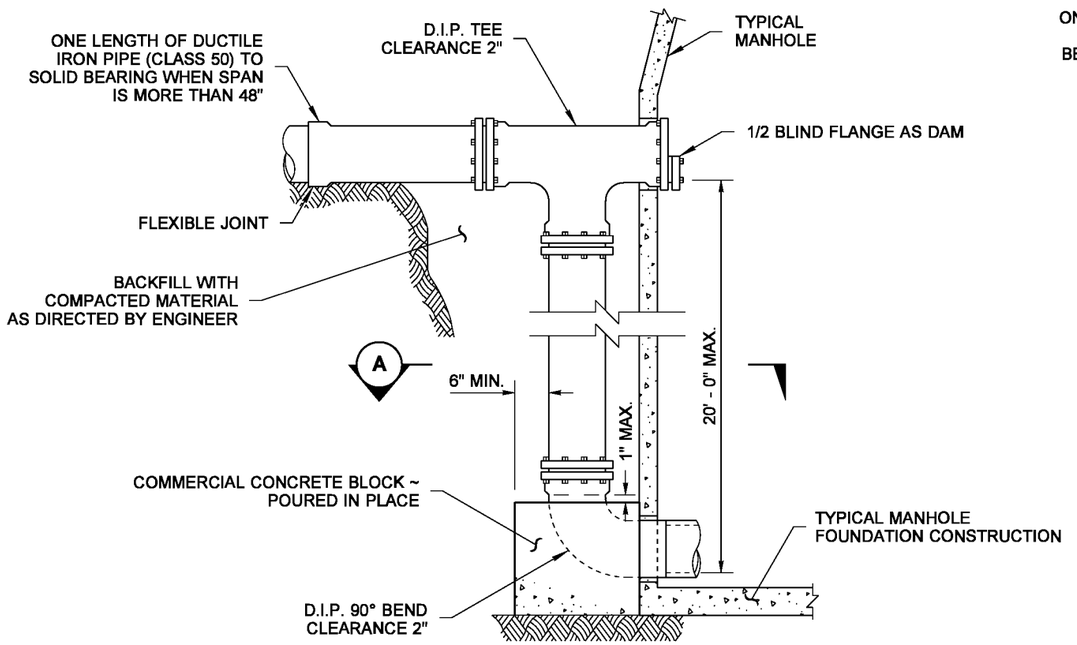

ELEVATION

DUCTILE IRON DROP CONNECTION

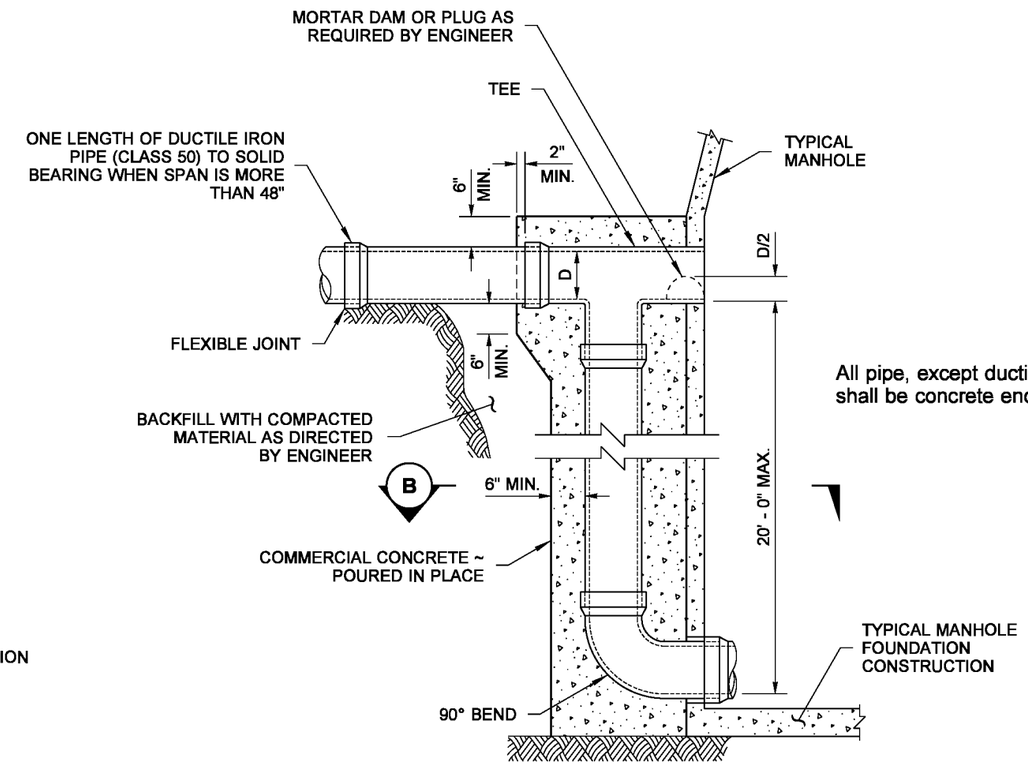

ELEVATION

CONCRETE ENCASED DROP CONNECTION

All pipe, except ductile iron pipe, shall be concrete encased.

FOR SANITARY SEWER USE

EXPIRES JULY 1, 2009

NOTE: THIS PLAN IS NOT A LEGAL ENGINEERING DOCUMENT BUT AN ELECTRONIC DUPLICATE. THE ORIGINAL, SIGNED BY THE ENGINEER AND APPROVED FOR PUBLICATION, IS KEPT ON FILE AT THE WASHINGTON STATE DEPARTMENT OF TRANSPORTATION. A COPY MAY BE OBTAINED UPON REQUEST.

DROP CONNECTIONS

STANDARD PLAN B-85.50-01

SHEET 1 OF 1 SHEET

APPROVED FOR PUBLICATION

Pasco Bakotich III — STATE DESIGN ENGINEER

06-10-08 — DATE

Washington State Department of Transportation

EFFECTIVE: AUGUST 6, 2012 TO August 4, 2013
EFFECTIVE: AUGUST 6, 2012 TO August 4, 2013
EFFECTIVE: AUGUST 6, 2012 TO August 4, 2013
EFFECTIVE: AUGUST 6, 2012 TO August 4, 2013

EFFECTIVE: AUGUST 6, 2012 TO August 4, 2013
EFFECTIVE: AUGUST 6, 2012 TO August 4, 2013

DRAWN BY: MARK SUJKA

NOTES

1. Steel tie rods to be heavily coated with asphalt after installation.
2. Restrained joints may be substituted for tie rods.
3. Surface of ground within 36" of hydrant shall be smooth.

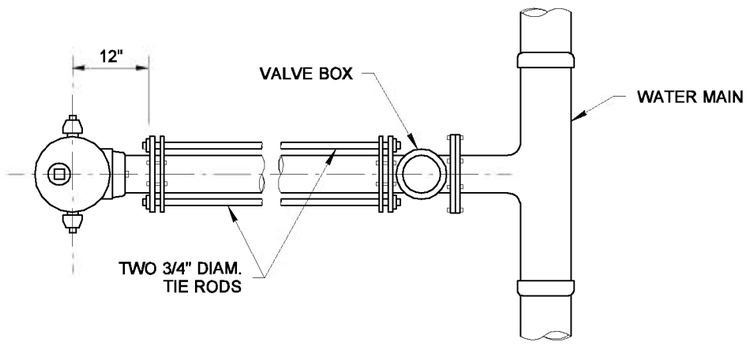

PLAN

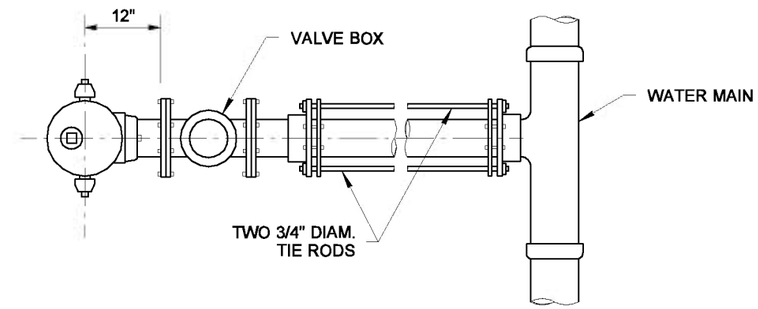

PLAN

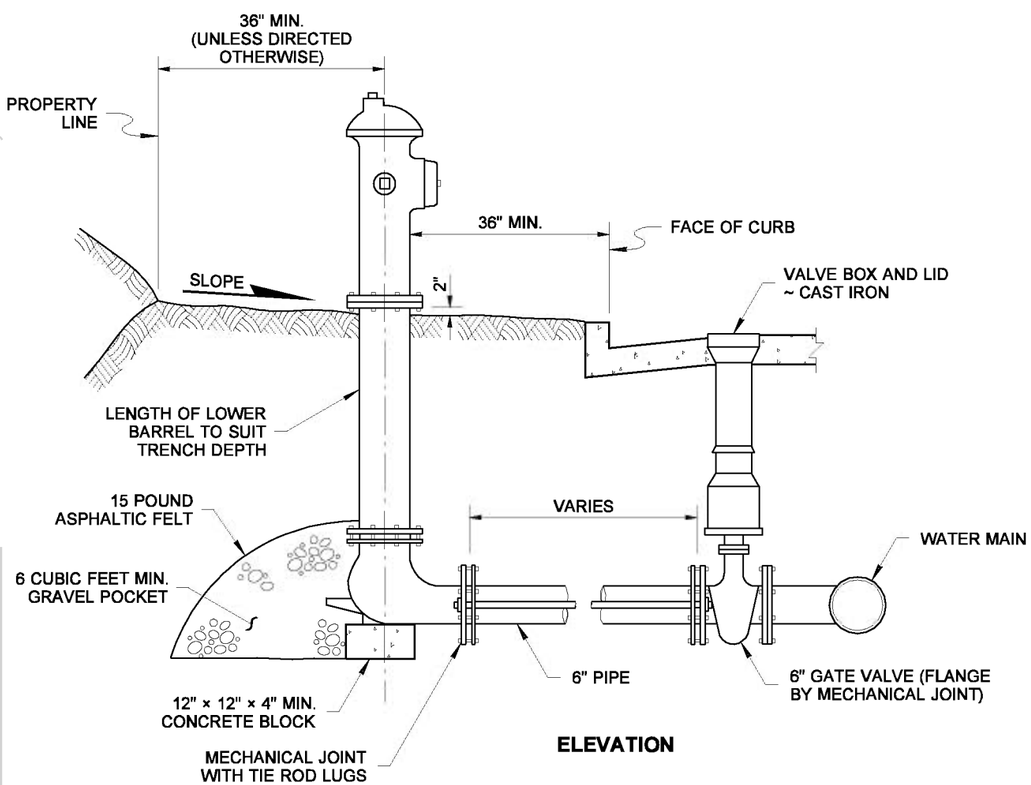

ELEVATION

TYPE A

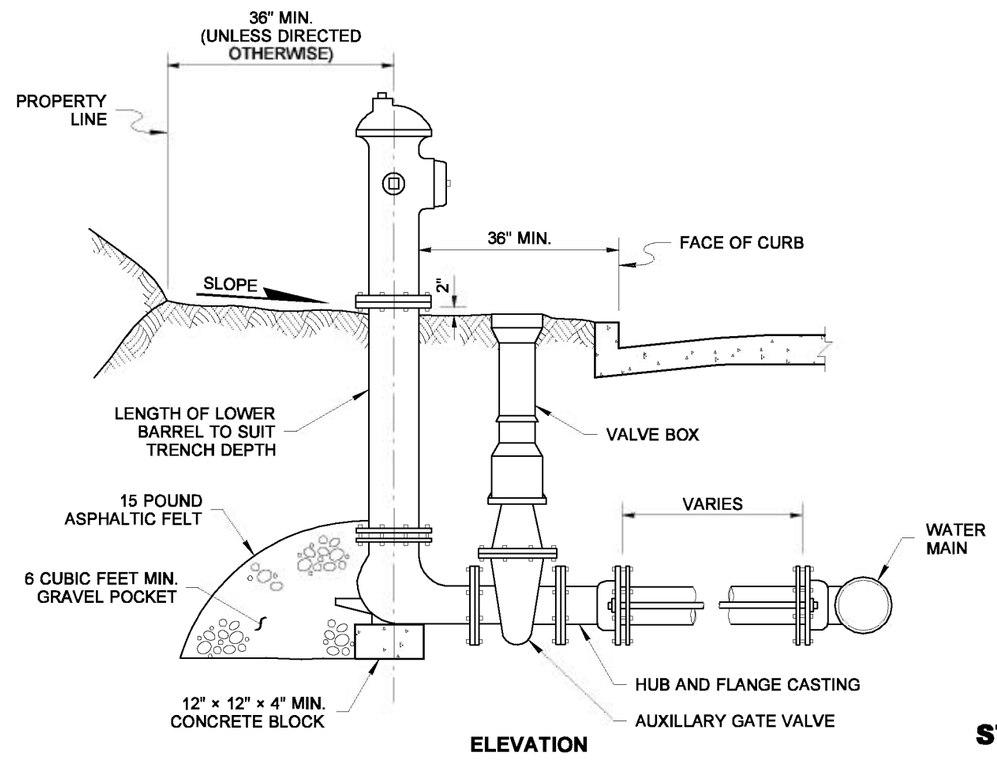

ELEVATION

TYPE B

EXPIRES JULY 1, 2007

NOTE: THIS PLAN IS NOT A LEGAL ENGINEERING DOCUMENT BUT AN ELECTRONIC DUPLICATE. THE ORIGINAL, SIGNED BY THE ENGINEER AND APPROVED FOR PUBLICATION, IS KEPT ON FILE AT THE WASHINGTON STATE DEPARTMENT OF TRANSPORTATION. A COPY MAY BE OBTAINED UPON REQUEST.

HYDRANT SETTING TYPES A AND B

STANDARD PLAN B-90.10-00

SHEET 1 OF 1 SHEET

APPROVED FOR PUBLICATION

Harold J. Peterfeso — STATE DESIGN ENGINEER

06-08-06 — DATE

Washington State Department of Transportation

EFFECTIVE: AUGUST 6, 2012 TO August 4, 2013
EFFECTIVE: AUGUST 6, 2012 TO August 4, 2013
EFFECTIVE: AUGUST 6, 2012 TO August 4, 2013
EFFECTIVE: AUGUST 6, 2012 TO August 4, 2013

EFFECTIVE: AUGUST 6, 2012 TO August 4, 2013
EFFECTIVE: AUGUST 6, 2012 TO August 4, 2013

DRAWN BY: MARK SUJKA

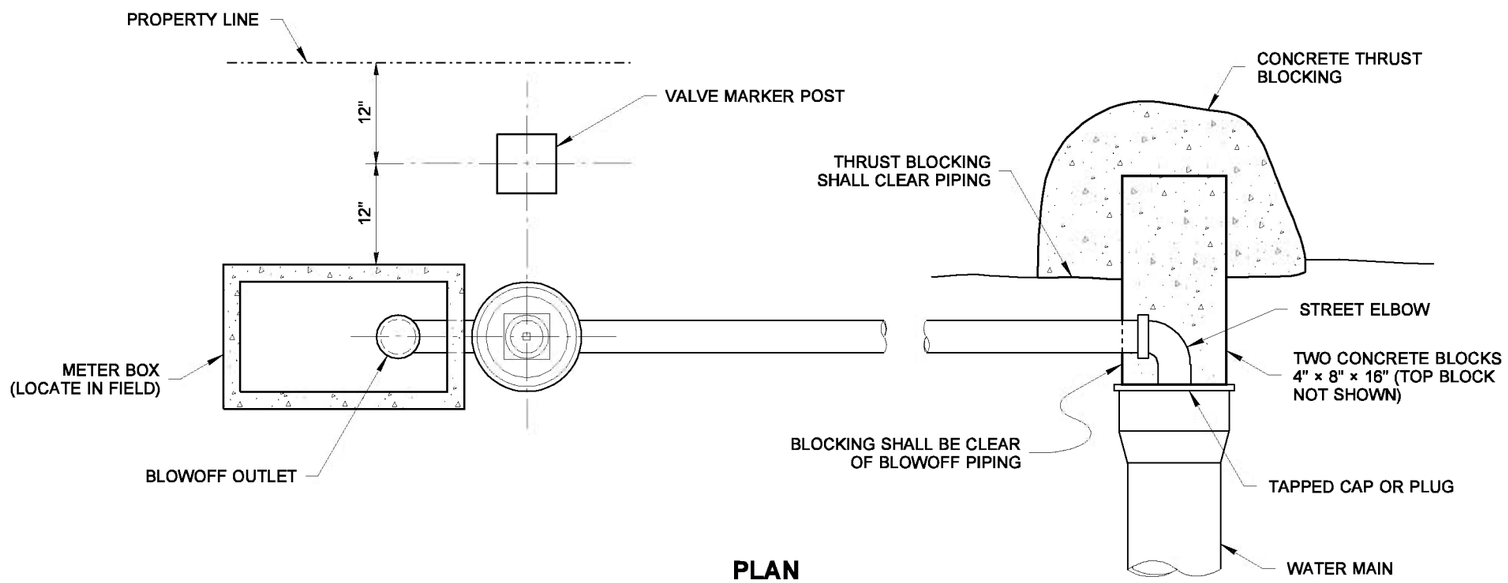

PLAN

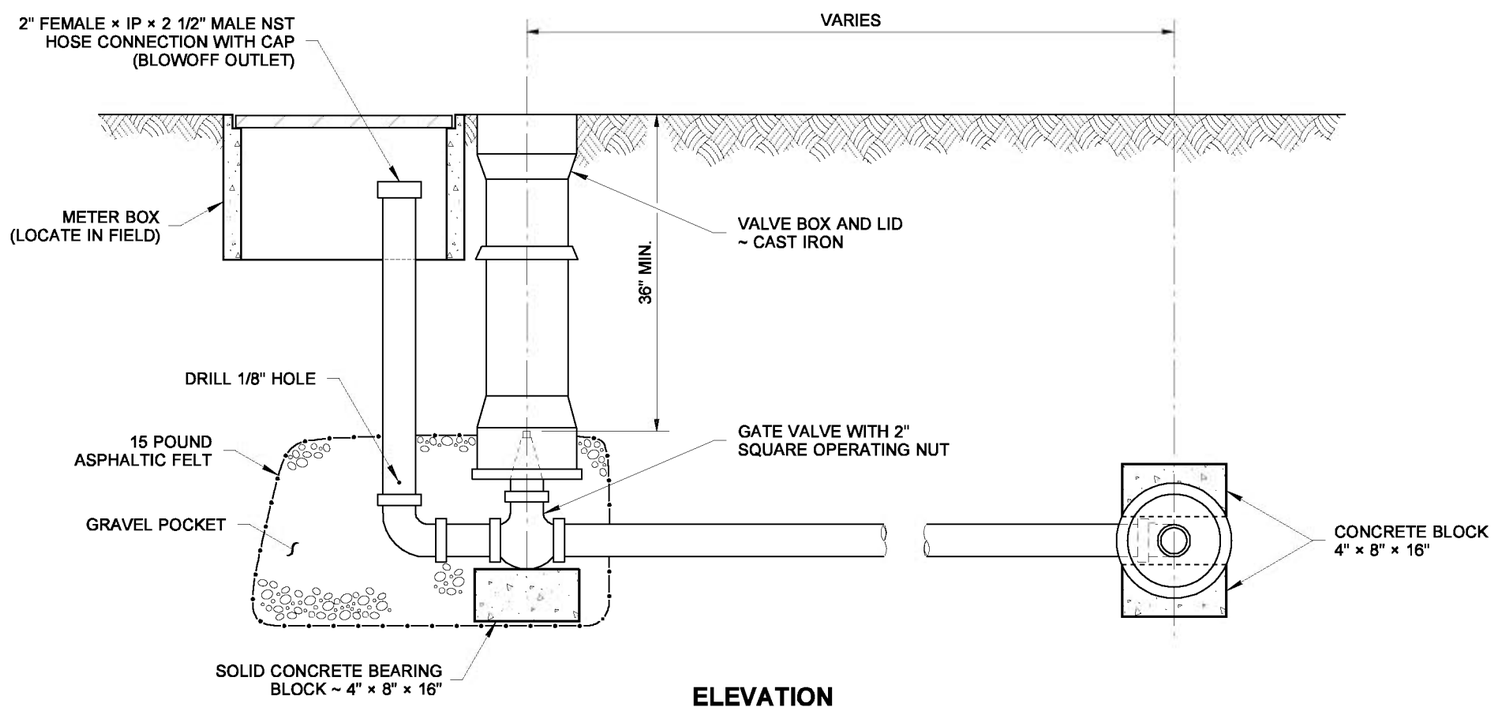

ELEVATION

NOTES

1. Coat the pipe threads with asphalt after assembly.
2. All piping shall be galvanized steel.
3. Valve and piping to valve shall be 2" unless otherwise noted in the Contract.
4. Locate blowoff outlet near property corner if possible.

EXPIRES JULY 1, 2007

NOTE: THIS PLAN IS NOT A LEGAL ENGINEERING DOCUMENT BUT AN ELECTRONIC DUPLICATE. THE ORIGINAL, SIGNED BY THE ENGINEER AND APPROVED FOR PUBLICATION, IS KEPT ON FILE AT THE WASHINGTON STATE DEPARTMENT OF TRANSPORTATION. A COPY MAY BE OBTAINED UPON REQUEST.

2 INCH BLOWOFF ASSEMBLY

STANDARD PLAN B-90.20-00

SHEET 1 OF 1 SHEET

APPROVED FOR PUBLICATION

Harold J. Peterfeso — STATE DESIGN ENGINEER

06-08-06 — DATE

Washington State Department of Transportation

EFFECTIVE: AUGUST 6, 2012 TO August 4, 2013
EFFECTIVE: AUGUST 6, 2012 TO August 4, 2013
EFFECTIVE: AUGUST 6, 2012 TO August 4, 2013
EFFECTIVE: AUGUST 6, 2012 TO August 4, 2013

EFFECTIVE: AUGUST 6, 2012 TO August 4, 2013
EFFECTIVE: AUGUST 6, 2012 TO August 4, 2013

DRAWN BY: ADAM COCHRAN

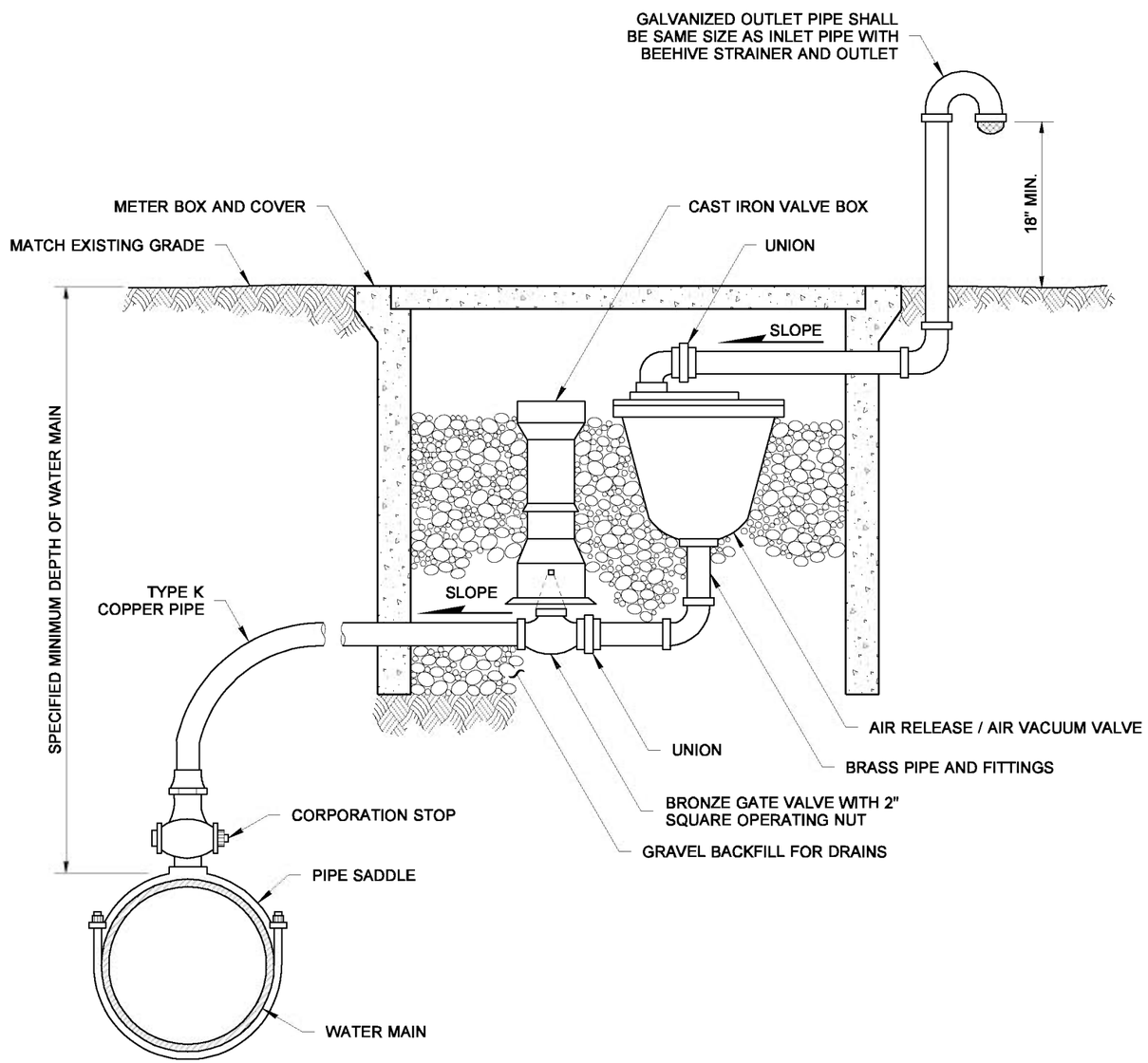

NOTES

1. The size of the combination air release / air vacuum valve shall be specified in the Contract. The piping and valves shall be the same size as the combination air release / air vacuum valve.
2. Locate at the high point of the main, tap top of main.

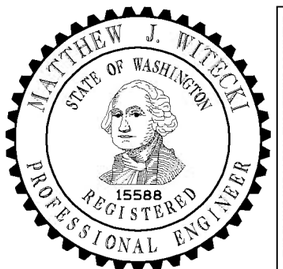

EXPIRES JULY 1, 2007

NOTE: THIS PLAN IS NOT A LEGAL ENGINEERING DOCUMENT BUT AN ELECTRONIC DUPLICATE. THE ORIGINAL, SIGNED BY THE ENGINEER AND APPROVED FOR PUBLICATION, IS KEPT ON FILE AT THE WASHINGTON STATE DEPARTMENT OF TRANSPORTATION. A COPY MAY BE OBTAINED UPON REQUEST.

COMBINATION AIR RELEASE / AIR VACUUM VALVE ASSEMBLY

STANDARD PLAN B-90.30-00

SHEET 1 OF 1 SHEET

APPROVED FOR PUBLICATION

Harold J. Peterfeso — STATE DESIGN ENGINEER

06-08-06 — DATE

Washington State Department of Transportation

EFFECTIVE: AUGUST 6, 2012 TO August 4, 2013
EFFECTIVE: AUGUST 6, 2012 TO August 4, 2013
EFFECTIVE: AUGUST 6, 2012 TO August 4, 2013
EFFECTIVE: AUGUST 6, 2012 TO August 4, 2013

EFFECTIVE: AUGUST 6, 2012 TO August 4, 2013
EFFECTIVE: AUGUST 6, 2012 TO August 4, 2013

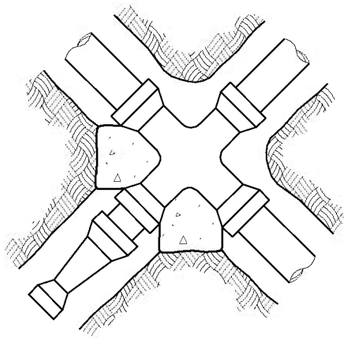

PLAN VIEW

UNBALANCED CROSS

(USE COLUMN **A**)

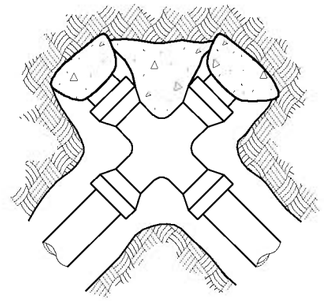

PLAN VIEW

PLUGGED CROSS

(USE COLUMN **B**)

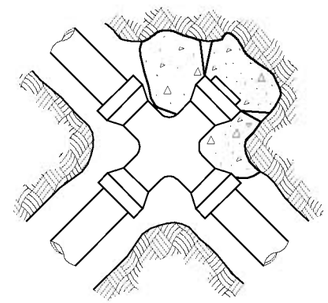

PLAN VIEW

PLUGGED CROSS

(USE COLUMN **A**)

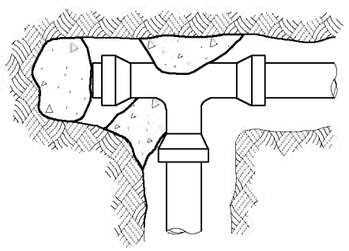

PLAN VIEW

PLUGGED TEE

(USE COLUMN **B**)

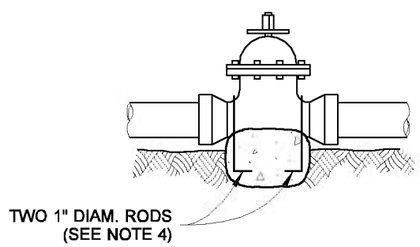

PROFILE VIEW

VALVE

(USE COLUMN **A**)

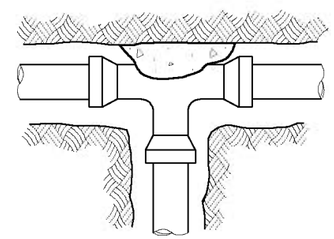

PLAN VIEW

TEE

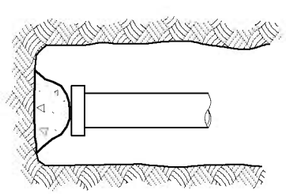

PLAN VIEW

DEAD END

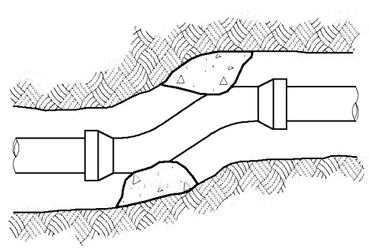

OFFSET

(USE COLUMNS **B ~ E**)

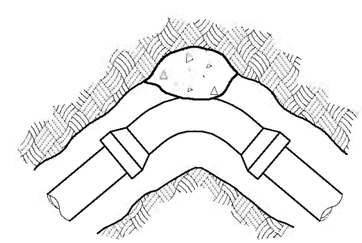

BEND

NOTES

1. Contractor to provide blocking adequate to withstand full test pressure.
2. Divide thrust by safe bearing load to determine required area (in square feet) of concrete to distribute load.
3. Areas to be adjusted for other pressure conditions.
4. Provide two 1" minimum diameter rods on valves up through 10" diameter. Valves larger than 10" require special tie rod design.

SIZE	TEST PRESSURE (PSI)	THRUST AT FITTINGS IN POUNDS				
		A	B	C	D	E
		TEE AND DEAD ENDS	90° BEND	45° BEND	22.5° BEND	11.25° BEND
4"	250	3,140	4,440	2,405	1,225	615
6"	250	7,070	9,995	5,410	2,760	1,385
8"	250	12,565	17,770	9,620	4,905	2,465
10"	250	19,635	27,770	15,030	7,660	3,850
12"	250	28,275	39,985	21,640	11,030	5,545
14"	250	38,485	54,425	29,455	15,015	7,545
16"	250	50,265	71,085	38,470	19,615	9,855

SOIL TYPE	SAFE BEARING LOAD (PSF)
MUCK, PEAT, ETC.	0
SOFT CLAY	1,000
SAND	2,000
SAND AND GRAVEL	3,000
SAND AND GRAVEL CEMENTED WITH CLAY	4,000
HARD SHALE	10,000

EXPIRES JULY 1, 2007

NOTE: THIS PLAN IS NOT A LEGAL ENGINEERING DOCUMENT BUT AN ELECTRONIC DUPLICATE. THE ORIGINAL, SIGNED BY THE ENGINEER AND APPROVED FOR PUBLICATION, IS KEPT ON FILE AT THE WASHINGTON STATE DEPARTMENT OF TRANSPORTATION. A COPY MAY BE OBTAINED UPON REQUEST.

CONCRETE THRUST BLOCK

STANDARD PLAN B-90.40-00

SHEET 1 OF 1 SHEET

APPROVED FOR PUBLICATION

Harold J. Peterfeso — STATE DESIGN ENGINEER

06-08-06 — DATE

Washington State Department of Transportation

EFFECTIVE: AUGUST 6, 2012 TO August 4, 2013
EFFECTIVE: AUGUST 6, 2012 TO August 4, 2013
EFFECTIVE: AUGUST 6, 2012 TO August 4, 2013
EFFECTIVE: AUGUST 6, 2012 TO August 4, 2013

EFFECTIVE: AUGUST 6, 2012 TO August 4, 2013
EFFECTIVE: AUGUST 6, 2012 TO August 4, 2013

NOTE

Steel tie rods to be heavily coated with asphalt after installation.

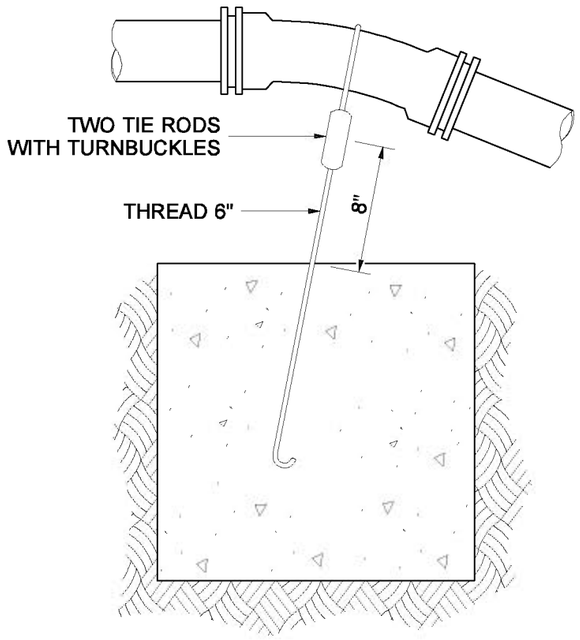

BLOCKING FOR 11.25° OR 22.5° VERTICAL BENDS

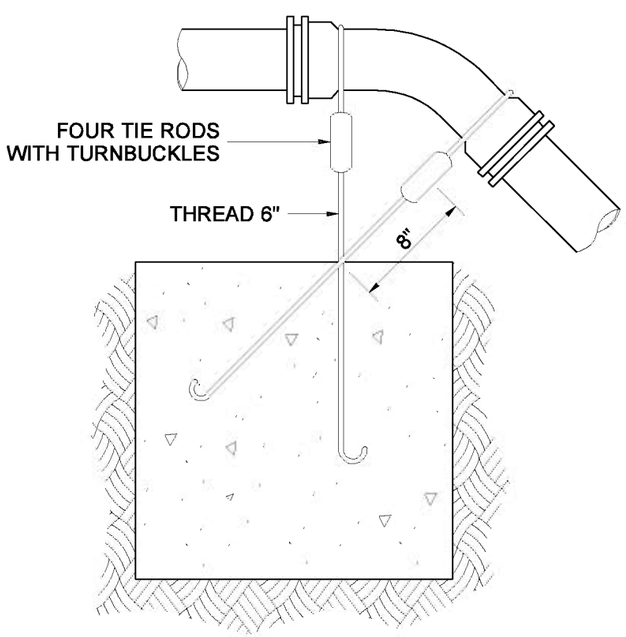

BLOCKING FOR 45° VERTICAL BENDS

DIMENSION TABLE

PIPE DIAM.	TEST PRESSURE (PSI)	BEND ANGLE	CONCRETE VOLUME (Ft^3)	CUBE SIZE (Ft)	TIE ROD DIAM.	TIE ROD EMBEDMENT
4"	250	11.25°	6	1.8	5/8"	17"
		22.5°	12	2.3		
		45°	22	2.8		
6"	250	11.25°	14	2.4	5/8"	17"
		22.5°	27	3.0		
		45°	50	3.7		
8"	250	11.25°	25	2.9	5/8"	17"
		22.5°	48	3.6		
		45°	89	4.5		
10"	250	11.25°	38	3.4	5/8"	17"
		22.5°	75	4.2		
		45°	139	5.2		
12"	250	11.25°	55	3.8	5/8"	17"
		22.5°	108	4.8		
		45°	200	5.8	7/8"	24"
14"	250	11.25°	75	4.2	5/8"	17"
		22.5°	147	5.3	3/4"	20"
		45°	272	6.5	1"	27"
16"	250	11.25°	98	4.6	5/8"	17"
		22.5°	192	5.8	7/8"	24"
		45°	355	7.1	1 1/8"	30"

EXPIRES JULY 1, 2007

NOTE: THIS PLAN IS NOT A LEGAL ENGINEERING DOCUMENT BUT AN ELECTRONIC DUPLICATE. THE ORIGINAL, SIGNED BY THE ENGINEER AND APPROVED FOR PUBLICATION, IS KEPT ON FILE AT THE WASHINGTON STATE DEPARTMENT OF TRANSPORTATION. A COPY MAY BE OBTAINED UPON REQUEST.

CONCRETE THRUST BLOCK FOR CONVEX VERTICAL BENDS
STANDARD PLAN B-90.50-00

SHEET 1 OF 1 SHEET

APPROVED FOR PUBLICATION

Harold J. Peterfeso — STATE DESIGN ENGINEER
06-08-06 — DATE

Washington State Department of Transportation

EFFECTIVE: AUGUST 6, 2012 TO August 4, 2013
EFFECTIVE: AUGUST 6, 2012 TO August 4, 2013
EFFECTIVE: AUGUST 6, 2012 TO August 4, 2013
EFFECTIVE: AUGUST 6, 2012 TO August 4, 2013

EFFECTIVE: AUGUST 6, 2012 TO August 4, 2013
EFFECTIVE: AUGUST 6, 2012 TO August 4, 2013

DRAWN BY: BILL BEKENS

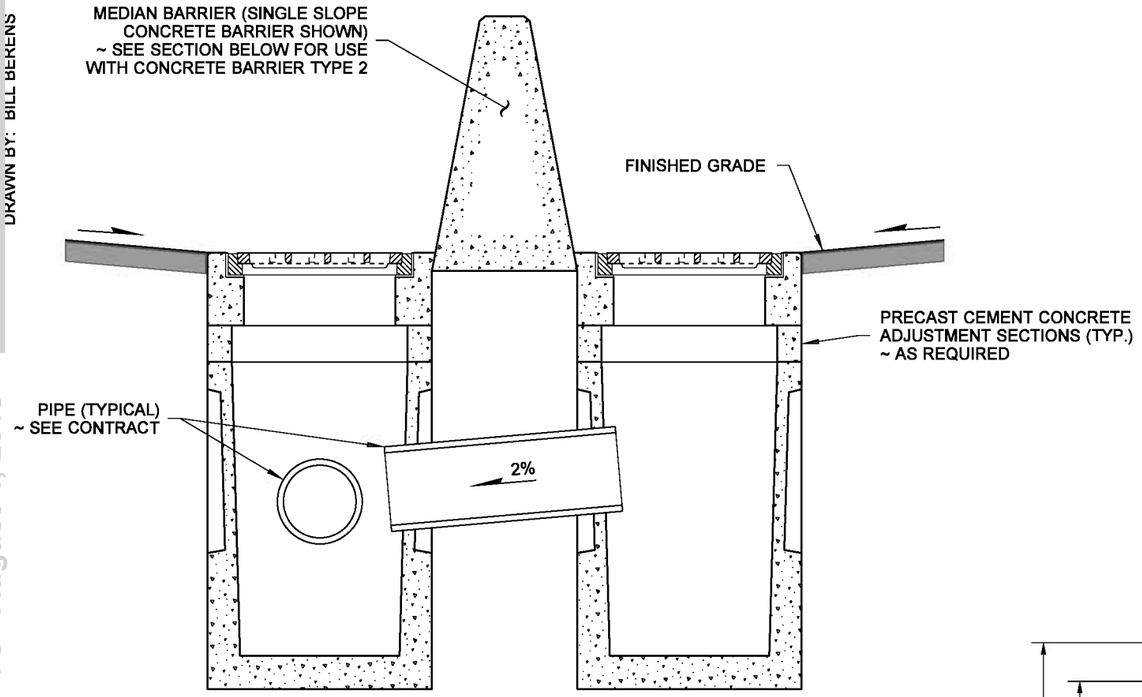

SECTION A

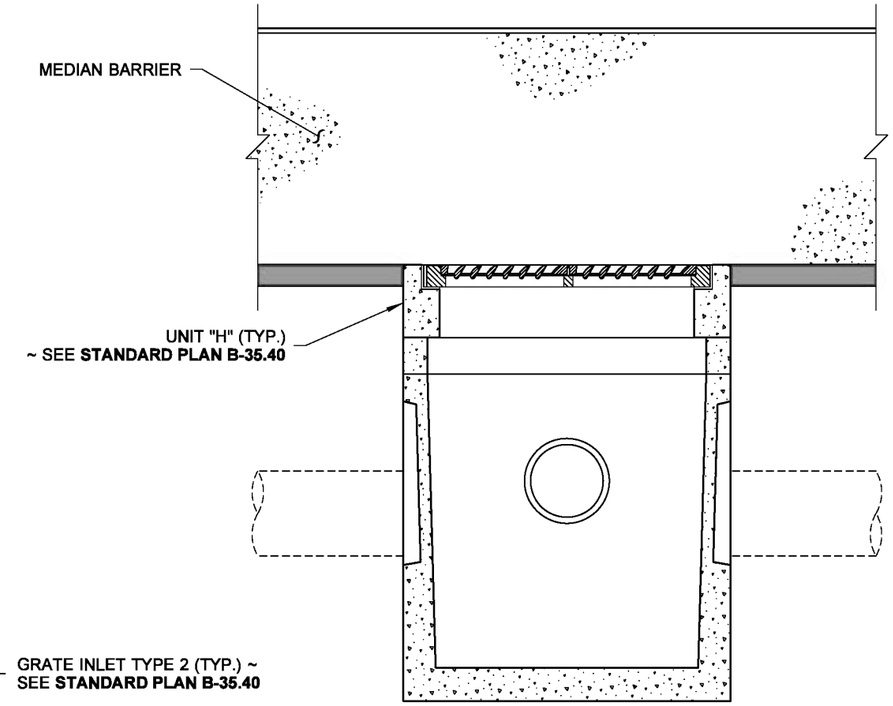

SECTION B

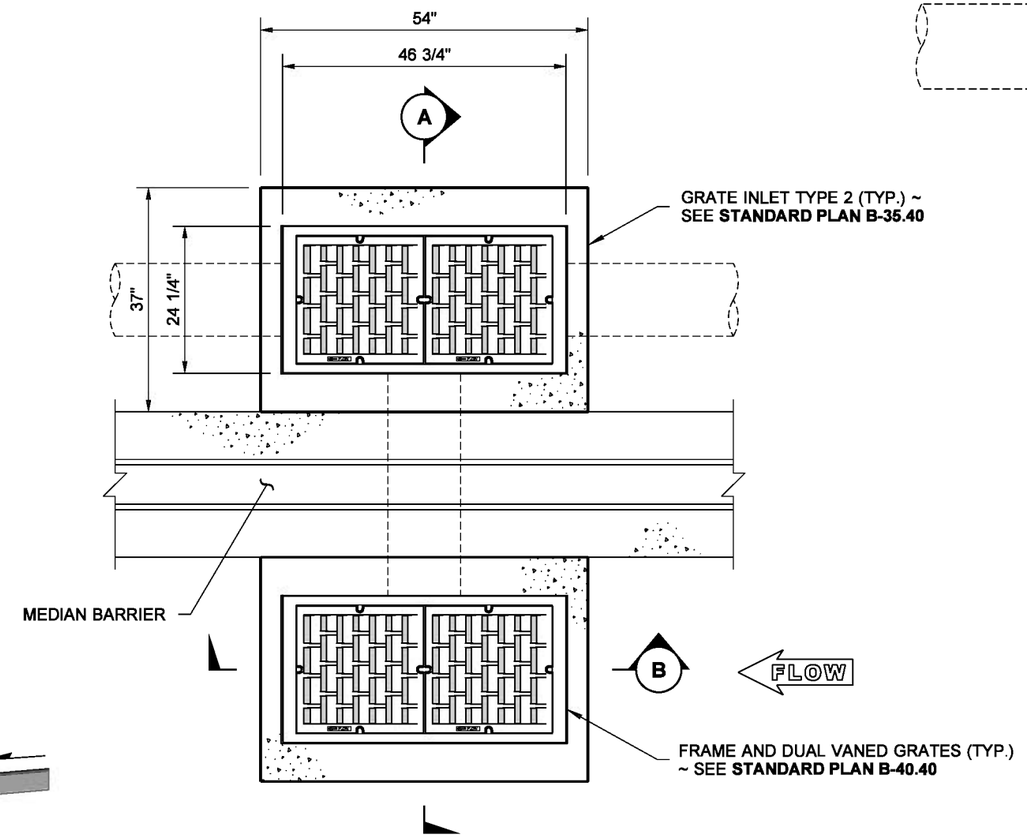

PLAN VIEW

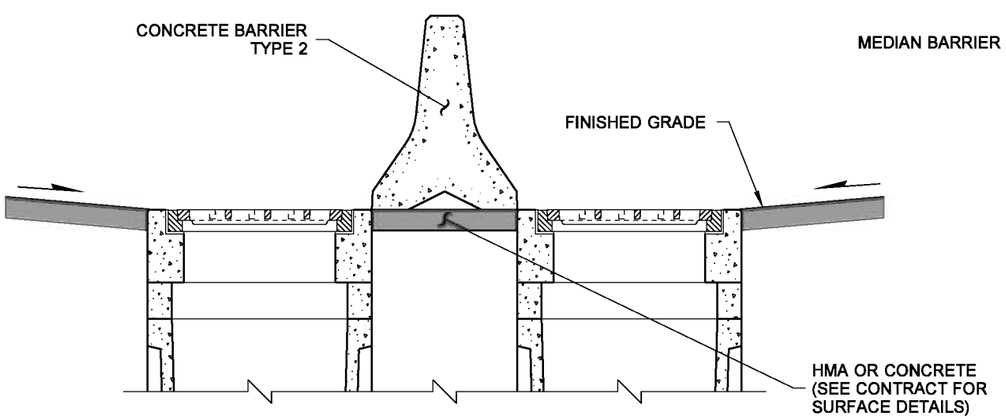

CONCRETE BARRIER TYPE 2 SECTION

SEE SECTION A

NOTE: THIS PLAN IS NOT A LEGAL ENGINEERING DOCUMENT BUT AN ELECTRONIC DUPLICATE. THE ORIGINAL, SIGNED BY THE ENGINEER AND APPROVED FOR PUBLICATION, IS KEPT ON FILE AT THE WASHINGTON STATE DEPARTMENT OF TRANSPORTATION. A COPY MAY BE OBTAINED UPON REQUEST.

MEDIAN BARRIER DRAINAGE INSTALLATION

STANDARD PLAN B-95.20-01

SHEET 1 OF 1 SHEET

APPROVED FOR PUBLICATION

Pasco Bakotich III — STATE DESIGN ENGINEER

02-03-09 — DATE

Washington State Department of Transportation

EFFECTIVE: AUGUST 6, 2012 TO August 4, 2013
EFFECTIVE: AUGUST 6, 2012 TO August 4, 2013
EFFECTIVE: AUGUST 6, 2012 TO August 4, 2013
EFFECTIVE: AUGUST 6, 2012 TO August 4, 2013

EFFECTIVE: AUGUST 6, 2012 TO August 4, 2013
EFFECTIVE: AUGUST 6, 2012 TO August 4, 2013

DRAWN BY: ADAM COCHRAN

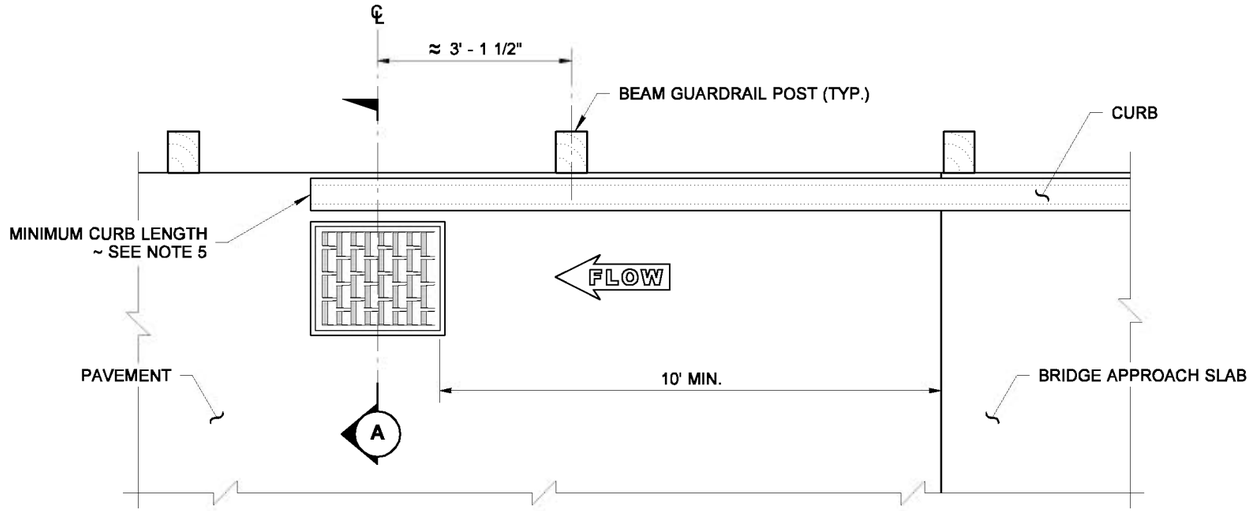

BEAM GUARDRAIL BLOCKS AND RAIL ELEMENTS NOT SHOWN FOR CLARITY

PLAN

NOTES

1. The beam guardrail type, post type, beam guardrail transition section type, connection type, and bridge traffic barrier shape may vary from that shown on this plan.
2. The Catch Basin or Grate Inlet shall be centered between the Beam Guardrail Posts.
3. With Beam Guardrail Transition Section Types 2, 4, and 5, use Extruded Curb Types 1, 2, 4, 4a, 5, or 5a.
4. With Beam Guardrail Transition Section Types 1, 1A, 1B, 10, 11, and 12, use Extruded Curb Type 2 (Extruded Asphalt Concrete Curb).
5. See Contract Plans for length of Curb.

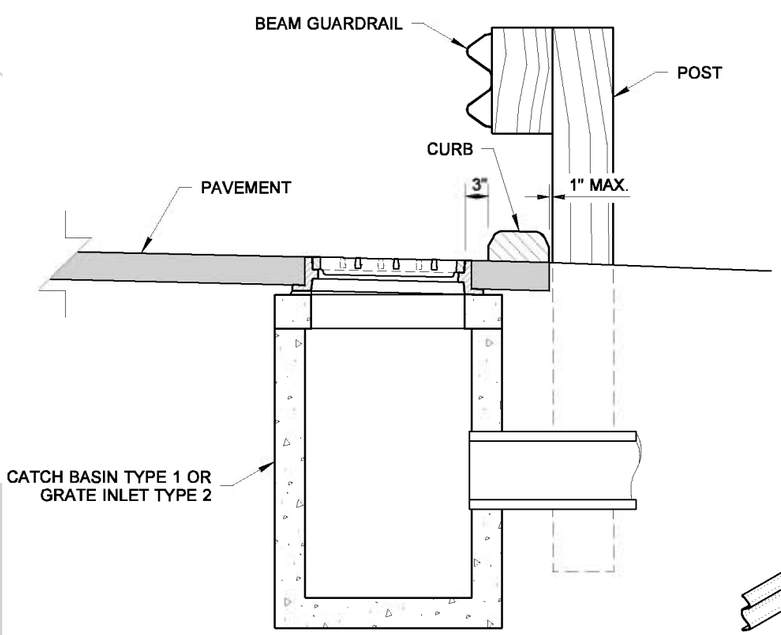

SECTION (A)

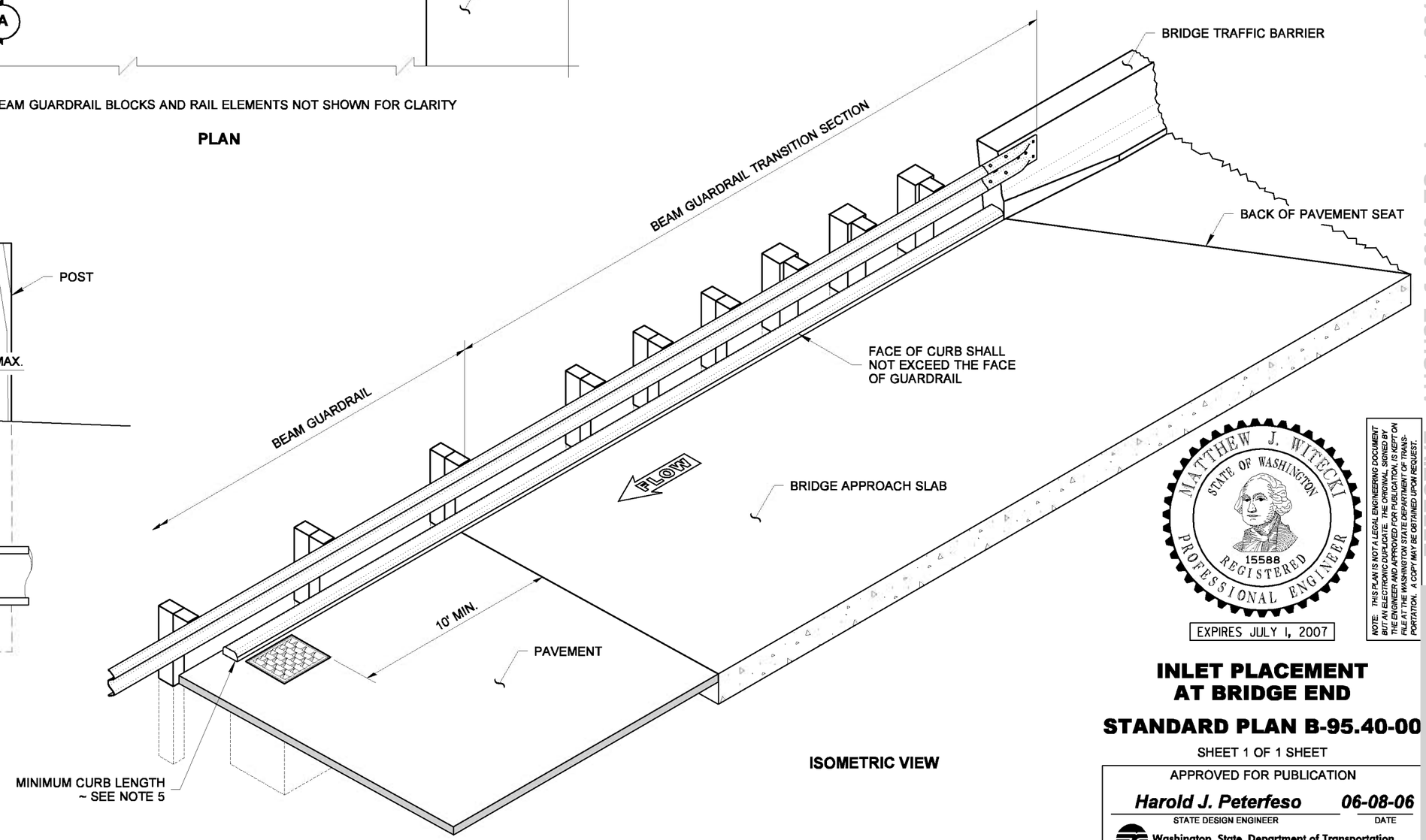

ISOMETRIC VIEW

NOTE: THIS PLAN IS NOT A LEGAL ENGINEERING DOCUMENT BUT AN ELECTRONIC DUPLICATE. THE ORIGINAL, SIGNED BY THE ENGINEER AND APPROVED FOR PUBLICATION, IS KEPT ON FILE AT THE WASHINGTON STATE DEPARTMENT OF TRANSPORTATION. A COPY MAY BE OBTAINED UPON REQUEST.

INLET PLACEMENT AT BRIDGE END

STANDARD PLAN B-95.40-00

SHEET 1 OF 1 SHEET

APPROVED FOR PUBLICATION

Harold J. Peterfeso — STATE DESIGN ENGINEER

06-08-06 — DATE

Washington State Department of Transportation

EFFECTIVE: AUGUST 6, 2012 TO August 4, 2013
EFFECTIVE: AUGUST 6, 2012 TO August 4, 2013
EFFECTIVE: AUGUST 6, 2012 TO August 4, 2013
EFFECTIVE: AUGUST 6, 2012 TO August 4, 2013

EFFECTIVE: AUGUST 6, 2012 TO August 4, 2013

DRAWN BY: FERN LIDDELL

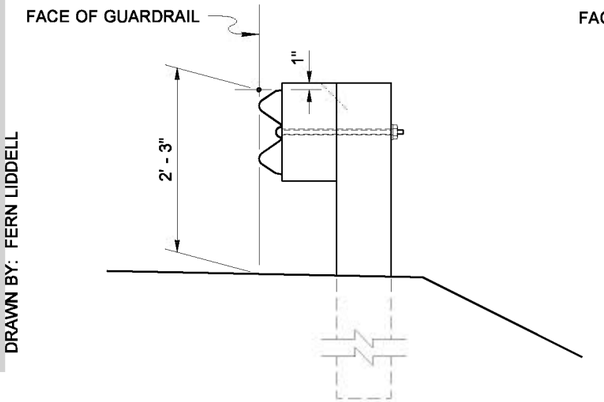

TYPE 1

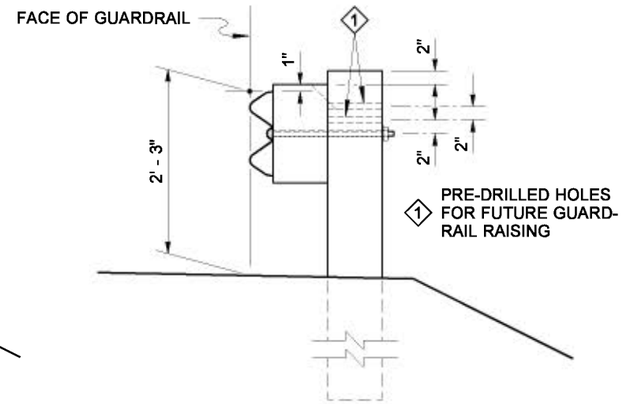

INITIAL INSTALLATION

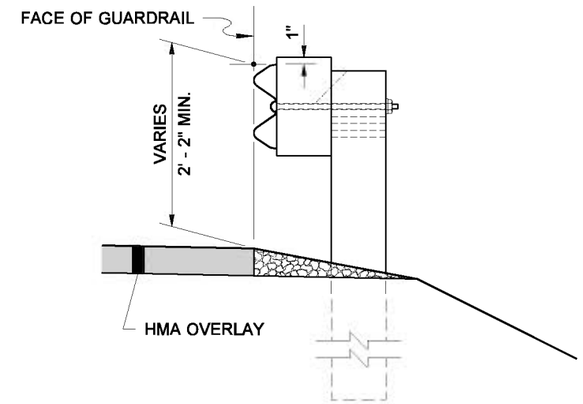

RAIL ELEMENT RAISED

TYPE 1 ALTERNATIVE

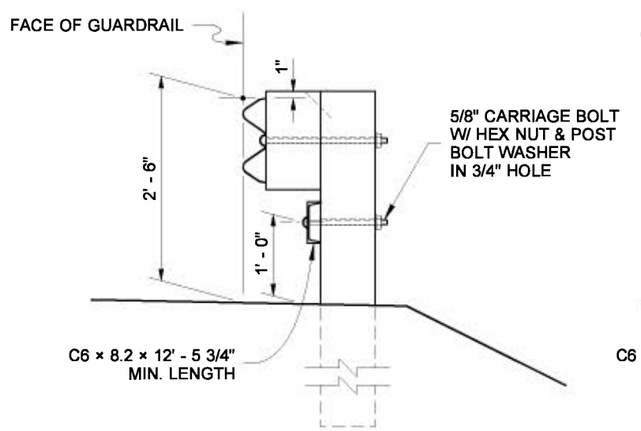

TYPE 2

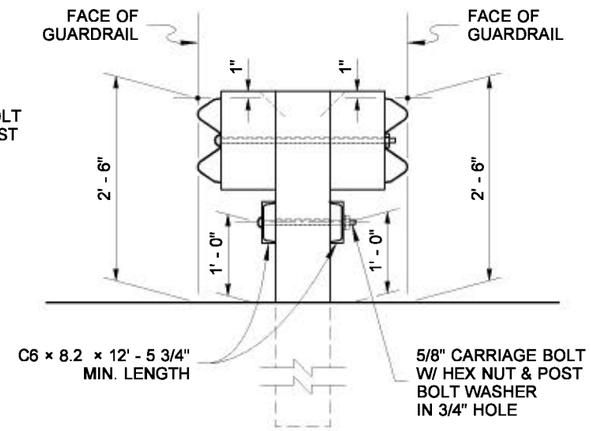

TYPE 3

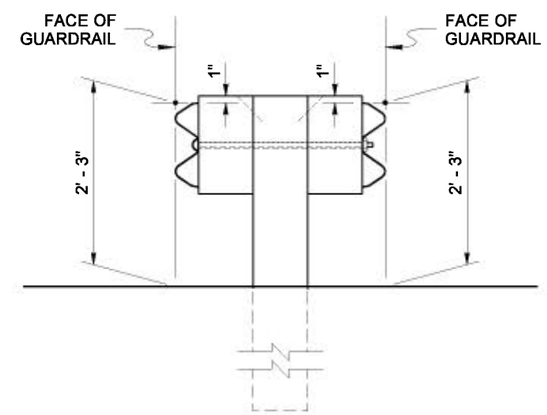

TYPE 4

NOTES

1. When required by the Contract, a Snow Load Post Washer shall be used on the backside of the post (in lieu of the 1 3/4" Post Bolt Washer) and a Snow Load Rail Washer shall be placed on the face side of Beam Guardrail Types 1 and 2. Snow Load Rail Washers shall not be installed on terminals.
2. Rail Washers, also called "Snow Load Rail Washers" are not required on new installation except as called for in Note 1. Unnecessary Rail washers need not be removed from existing installations, except those on posts 2 through 8 of a BCT installation shall be removed.
3. Beam Guardrail post spacing for Types 1 through 4 shall be 6' - 3" on centers.
4. Timber blocks shall be toe-nailed to the post with a16d galvanized nail to prevent block rotation.
5. For post and block details, see **Standard Plan C-1b**.
6. When "Beam Guardrail Type - ___ Ft. Long Post" is specified in the Contract, the post length shall be stamped with numbers, 1 1/2" min. high and 3/4" wide at the location where the letter "H" is shown in the ASSEMBLY DETAIL. For wood post applications, the letter shall be stamped to a minimum depth of 1/4". For steel post applications, the letter shall be legible after the post is galvanized. After post installation, it shall be the Contractor's responsibility to ensure that the stamped numbers remain visible.
7. Existing posts shall not be raised. Replace posts as necessary to achieve required guardrail height.

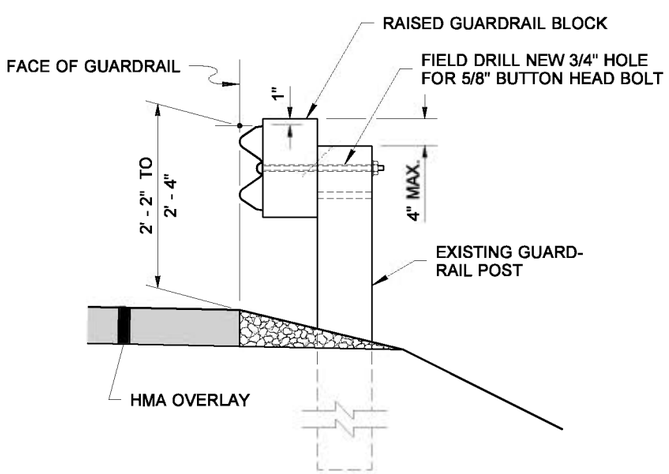

BEAM GUARDRAIL RAISING FOR HMA OVERLAYS

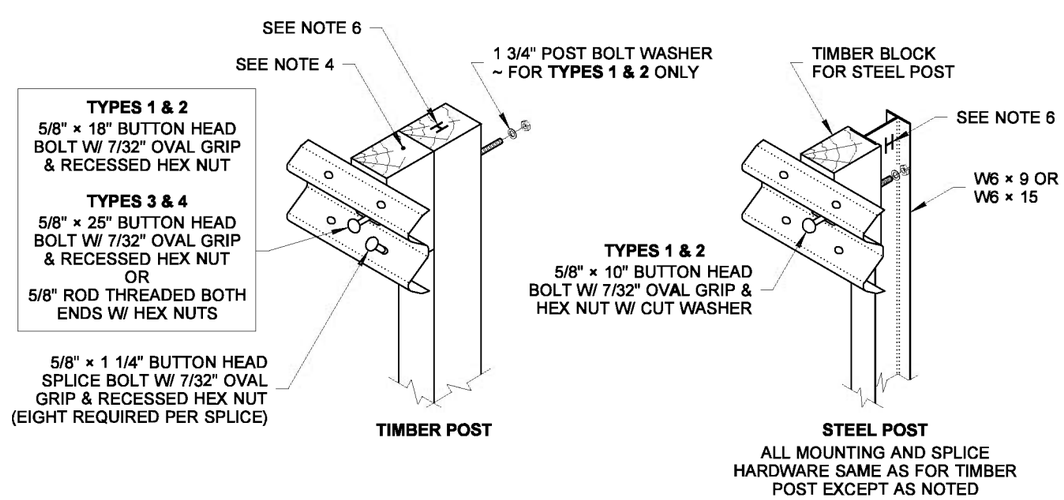

ASSEMBLY DETAIL

NOTE: THIS PLAN IS NOT A LEGAL ENGINEERING DOCUMENT BUT AN ELECTRONIC DUPLICATE. THE ORIGINAL, SIGNED BY THE ENGINEER AND APPROVED FOR PUBLICATION, IS KEPT ON FILE AT THE WASHINGTON STATE DEPARTMENT OF TRANSPORTATION. A COPY MAY BE OBTAINED UPON REQUEST.

BEAM GUARDRAIL TYPES 1 ~ 4 (W-BEAM) STANDARD PLAN C-1

SHEET 1 OF 2 SHEETS

APPROVED FOR PUBLICATION

Pasco Bakotich III — STATE DESIGN ENGINEER

06-16-11 — DATE

Washington State Department of Transportation

EFFECTIVE: AUGUST 6, 2012 TO August 4, 2013

EFFECTIVE: AUGUST 6, 2012 TO August 4, 2013
EFFECTIVE: AUGUST 6, 2012 TO August 4, 2013

DRAWN BY: FERN LIDDELL

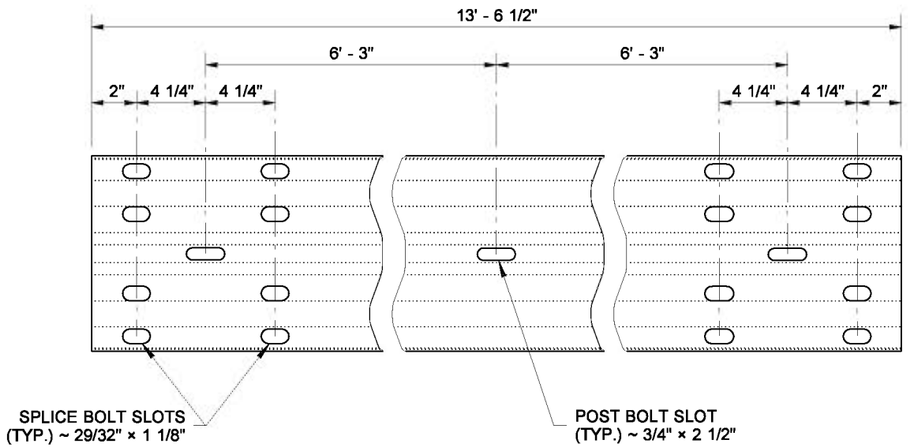

TYPICAL RAIL ELEMENT

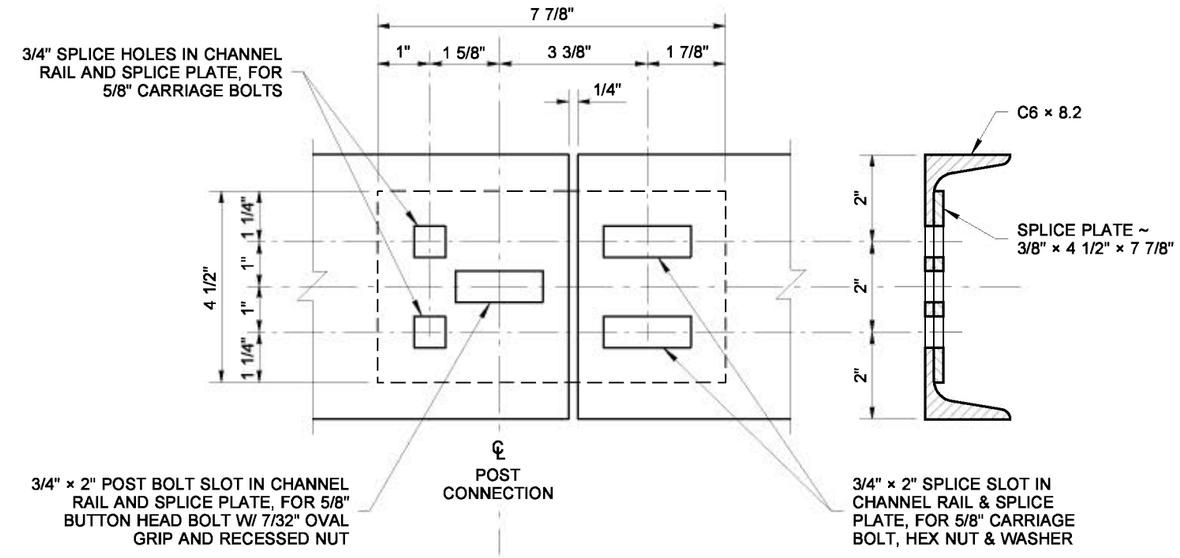

CHANNEL RAIL SPLICE

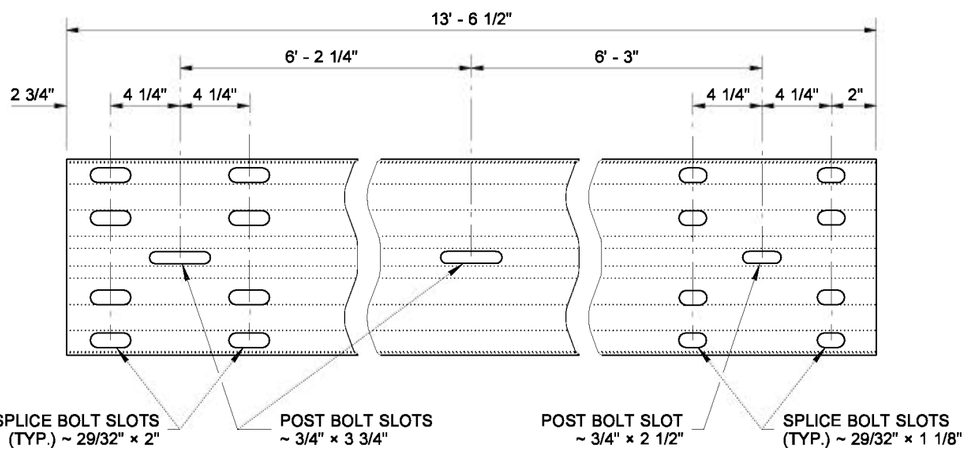

EXPANSION SECTION

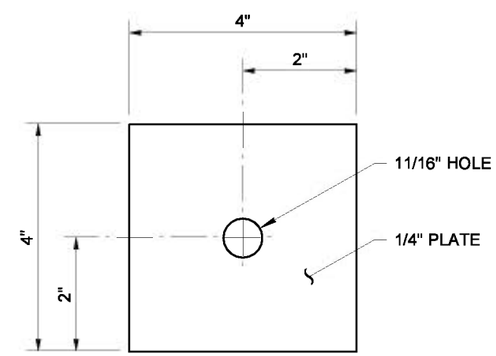

SNOW LOAD POST WASHER
SEE NOTE 1

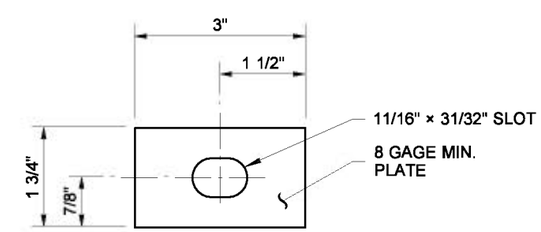

SNOW LOAD RAIL WASHER
SEE NOTES 1 & 2

NOTE: THIS PLAN IS NOT A LEGAL ENGINEERING DOCUMENT BUT AN ELECTRONIC DUPLICATE. THE ORIGINAL, SIGNED BY THE ENGINEER AND APPROVED FOR PUBLICATION, IS KEPT ON FILE AT THE WASHINGTON STATE DEPARTMENT OF TRANSPORTATION. A COPY MAY BE OBTAINED UPON REQUEST.

BEAM GUARDRAIL TYPES 1 ~ 4 (W-BEAM) STANDARD PLAN C-1

SHEET 2 OF 2 SHEETS

APPROVED FOR PUBLICATION

Pasco Bakotich III — STATE DESIGN ENGINEER
06-16-11 — DATE

Washington State Department of Transportation

EFFECTIVE: AUGUST 6, 2012 TO August 4, 2013
EFFECTIVE: AUGUST 6, 2012 TO August 4, 2013
EFFECTIVE: AUGUST 6, 2012 TO August 4, 2013
EFFECTIVE: AUGUST 6, 2012 TO August 4, 2013

EFFECTIVE: AUGUST 6, 2012 TO August 4, 2013
EFFECTIVE: AUGUST 6, 2012 TO August 4, 2013

DRAWN BY: BILL BERENS

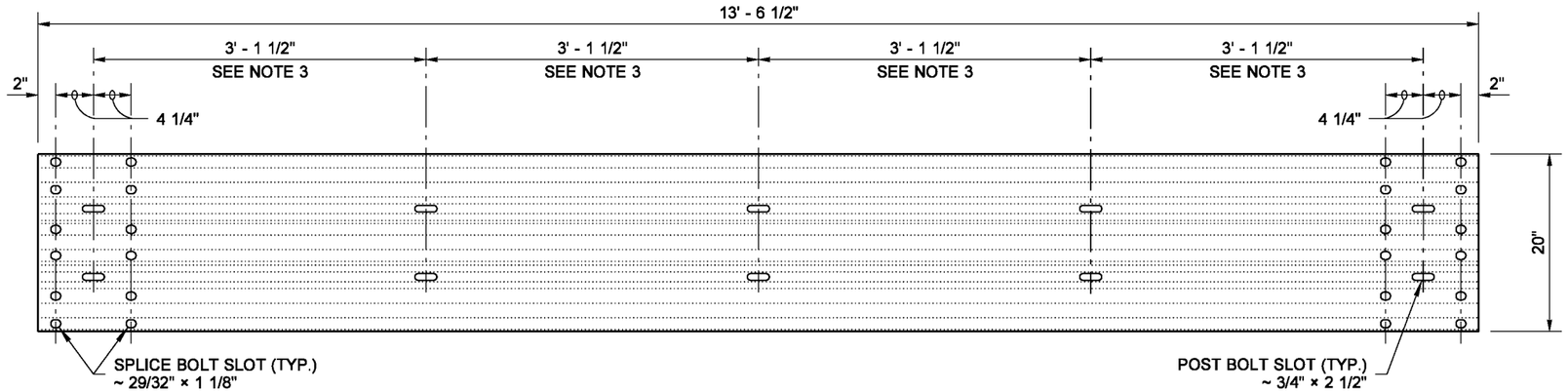

TYPICAL RAIL ELEMENT

NOTES

1. Type 10 post shall be 6×8 timber or W6×9.
   Type 11 post shall be 10×10 timber or W6×15.
   For additional details see **Standard Plan C-1b.**
2. Type 10 guardrail post spacing shall be 6' - 3" on center.
   Type 11 shall be a maximum of 3' - 1 1/2 " on center.
3. Spacing may vary depending on application. See **Standard Specification Section 9-16.3(1)** for rail element requirements.

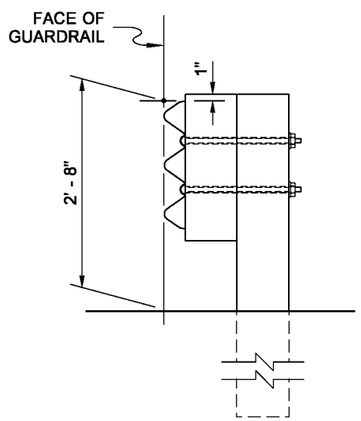

RAIL ASSEMBLY

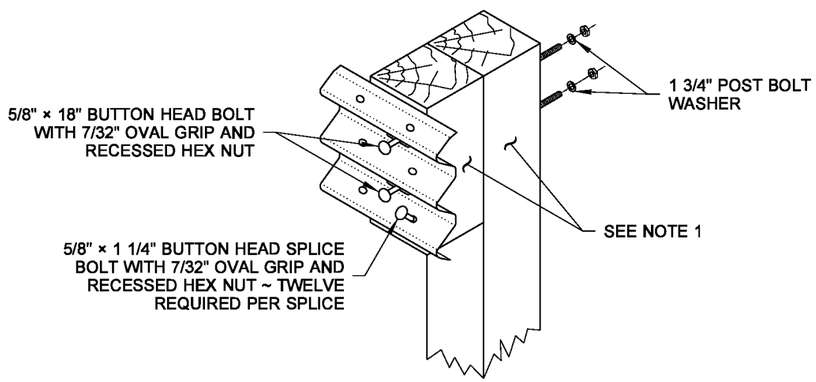

WOOD POST ASSEMBLY

TYPE 10

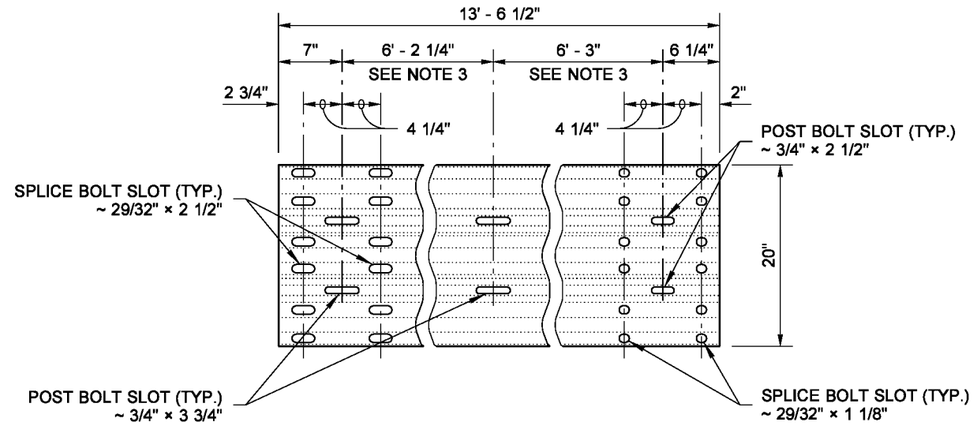

EXPANSION SECTION

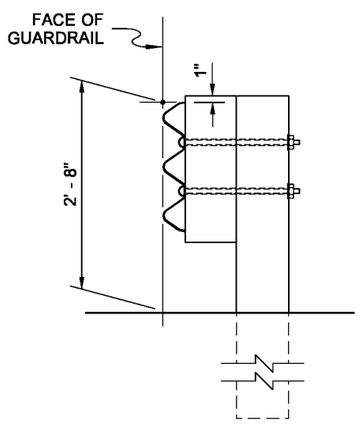

RAIL ASSEMBLY

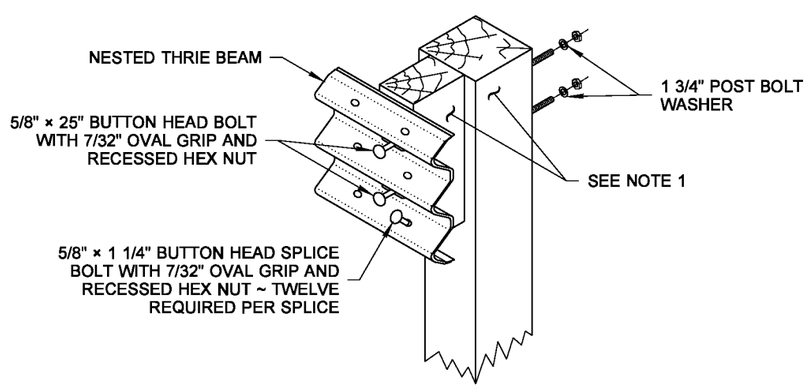

WOOD POST ASSEMBLY

TYPE 11

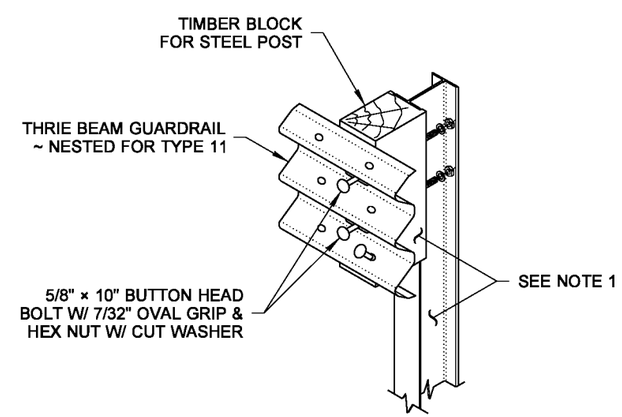

STEEL POST ASSEMBLY

TYPE 10 AND 11

TERRY L. BERENDS
STATE OF WASHINGTON
32350
REGISTERED
PROFESSIONAL ENGINEER

NOTE: THIS PLAN IS NOT A LEGAL ENGINEERING DOCUMENT BUT AN ELECTRONIC DUPLICATE. THE ORIGINAL, SIGNED BY THE ENGINEER AND APPROVED FOR PUBLICATION, IS KEPT ON FILE AT THE WASHINGTON STATE DEPARTMENT OF TRANSPORTATION. A COPY MAY BE OBTAINED UPON REQUEST.

BEAM GUARDRAIL (THRIE BEAM)

STANDARD PLAN C-1a

SHEET 1 OF 1 SHEET

APPROVED FOR PUBLICATION

Pasco Bakotich III — STATE DESIGN ENGINEER

10-14-09 — DATE

Washington State Department of Transportation

EFFECTIVE: AUGUST 6, 2012 TO August 4, 2013
EFFECTIVE: AUGUST 6, 2012 TO August 4, 2013
EFFECTIVE: AUGUST 6, 2012 TO August 4, 2013
EFFECTIVE: AUGUST 6, 2012 TO August 4, 2013

EFFECTIVE: AUGUST 6, 2012 TO August 4, 2013
EFFECTIVE: AUGUST 6, 2012 TO August 4, 2013

DRAWN BY: FERN LIDDELL

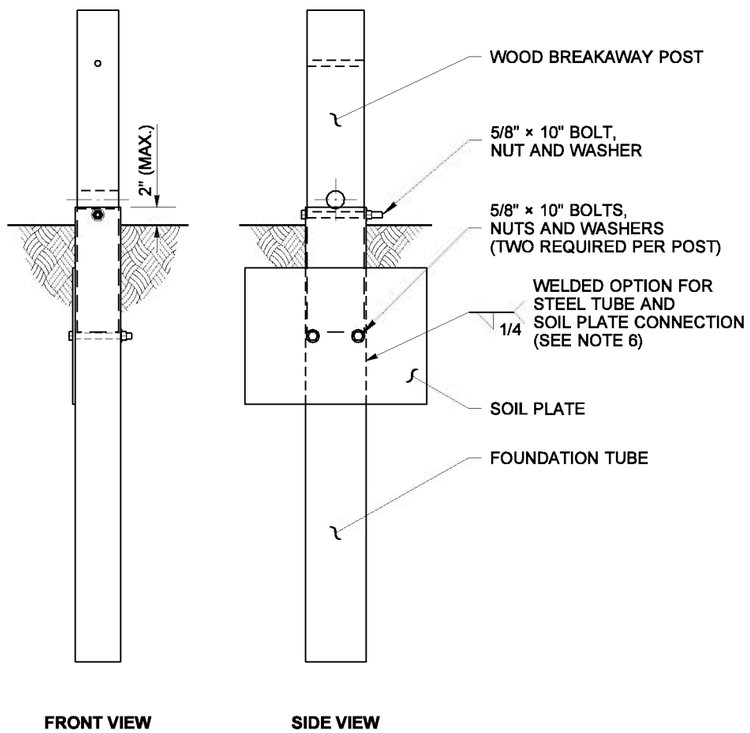

ANCHOR POST ASSEMBLY

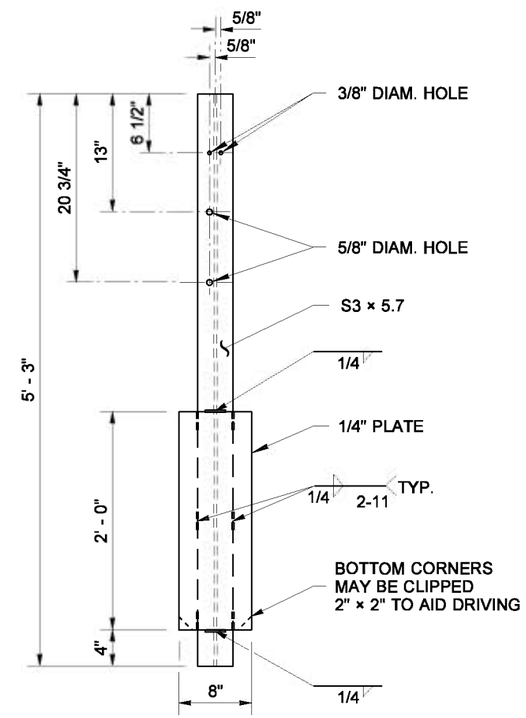

G-2 POST

NOTES

1. Wood posts for all guardrail placement plans shall be 6 × 8 except where noted otherwise.
2. Lower hole is for Rub Rail of Type 2 and Type 3 Beam Guardrail.
3. W6×9 steel posts and timber blocks are alternates for 6 × 8 timber posts and blocks. W6×15 steel posts and timber blocks are alternates for 10 × 10 timber posts and blocks.
4. Holes shall be located on approaching traffic side of web.
5. When "Beam Guardrail Type - _ _ Ft. Long Post" is specified in the Contract, the post length shall be stamped with numbers, 1 1/2" min. high and 3/4" wide at the location where the letter "H" is shown in the ASSEMBLY DETAIL. For wood post applications, the letter shall be stamped to a minimum depth of 1/4". For steel post applications, the letter shall be legible after the post is galvanized. After post installation, it shall be the Contractor's responsibility to ensure that the stamped numbers remain visible.
6. Soil plate may be welded to foundation tube. If so, holes in soil plate and foundation tube may be omitted.

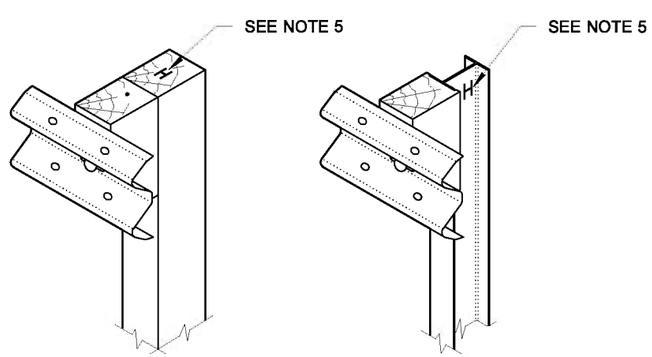

PARTIAL ASSEMBLY DETAIL

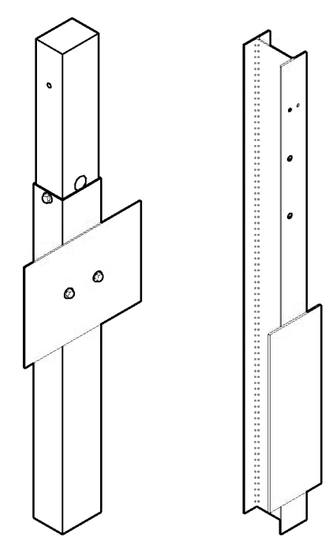

ISOMETRIC

NOTE: THIS PLAN IS NOT A LEGAL ENGINEERING DOCUMENT BUT AN ELECTRONIC DUPLICATE. THE ORIGINAL, SIGNED BY THE ENGINEER AND APPROVED FOR PUBLICATION, IS KEPT ON FILE AT THE WASHINGTON STATE DEPARTMENT OF TRANSPORTATION. A COPY MAY BE OBTAINED UPON REQUEST.

BEAM GUARDRAIL POSTS AND BLOCKS

STANDARD PLAN C-1b

SHEETS 1 OF 2 SHEETS

APPROVED FOR PUBLICATION

Pasco Bakotich III — STATE DESIGN ENGINEER

06-16-11 — DATE

Washington State Department of Transportation

EFFECTIVE: AUGUST 6, 2012 TO August 4, 2013
EFFECTIVE: AUGUST 6, 2012 TO August 4, 2013
EFFECTIVE: AUGUST 6, 2012 TO August 4, 2013
EFFECTIVE: AUGUST 6, 2012 TO August 4, 2013

EFFECTIVE: AUGUST 6, 2012 TO August 4, 2013
EFFECTIVE: AUGUST 6, 2012 TO August 4, 2013

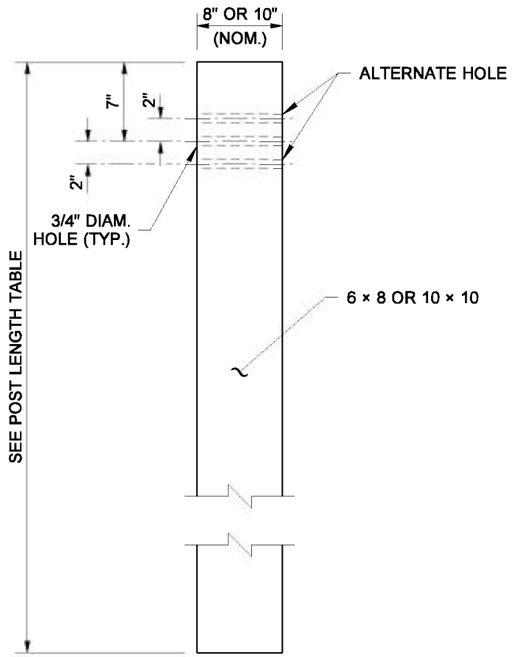

W-BEAM

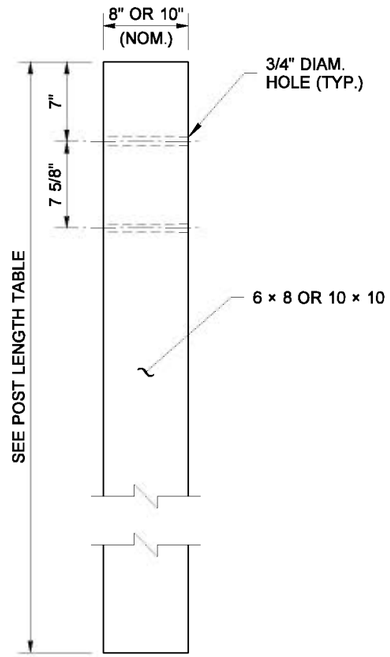

THRIE BEAM

WOOD POST

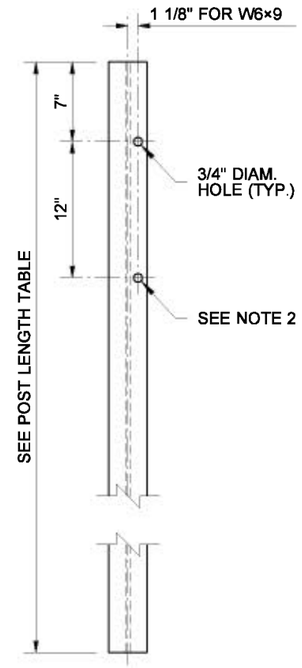

W-BEAM

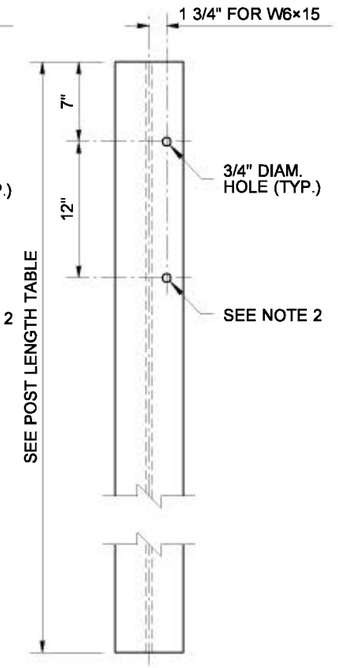

THRIE BEAM

STEEL POST
SEE NOTES 3 AND 4

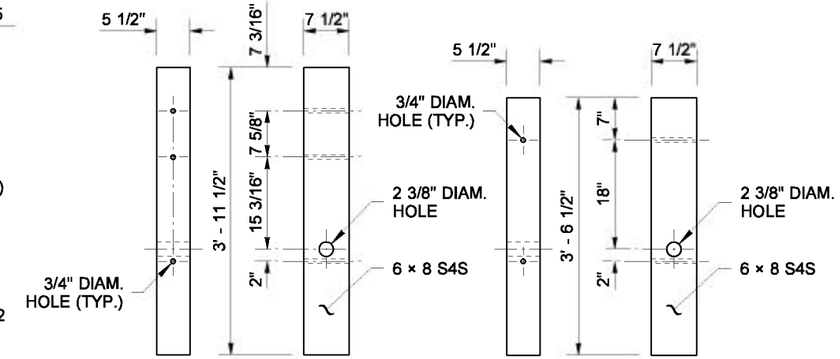

THRIE BEAM

W-BEAM

WOOD BREAKAWAY POST

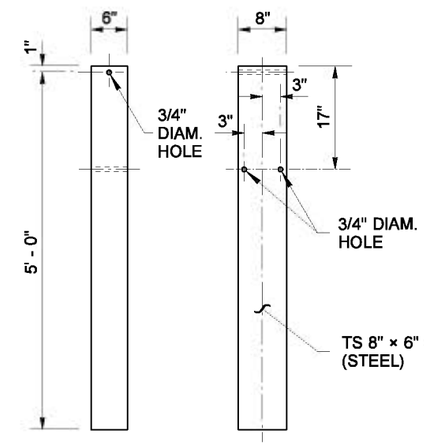

FOUNDATION TUBE

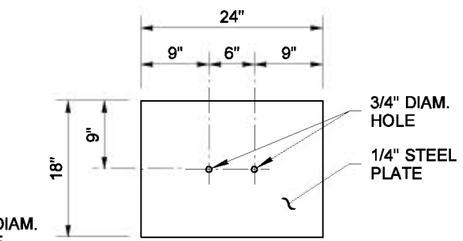

SOIL PLATE

POST LENGTH TABLE	
GUARDRAIL TYPE	LENGTH
1 through 4 & 31	6' - 0"
10 or 11	6' - 6"

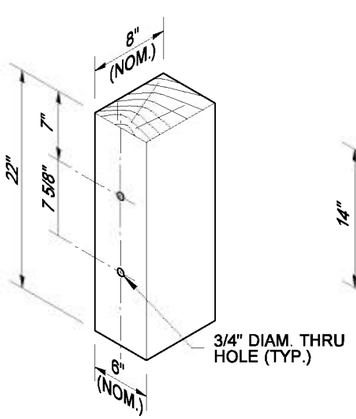

THRIE BEAM WOOD BLOCK
FOR WOOD POST

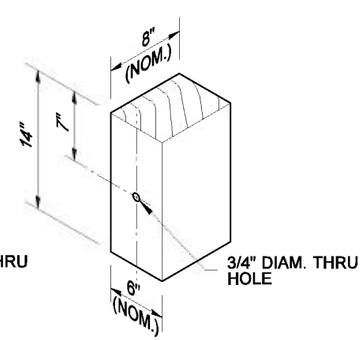

W-BEAM WOOD BLOCK
FOR WOOD POSTS

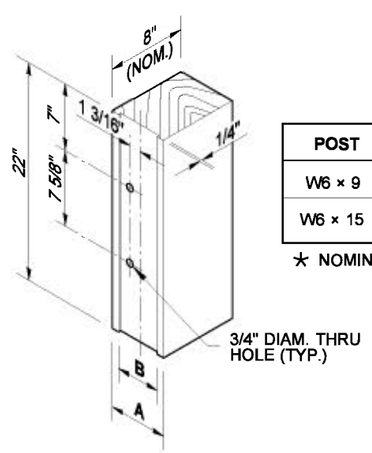

POST	A	B
W6 × 9	6"*	4 1/4"
W6 × 15	8"*	6 1/4"

* NOMINAL (NOM.)

THRIE BEAM WOOD BLOCK
FOR STEEL POST

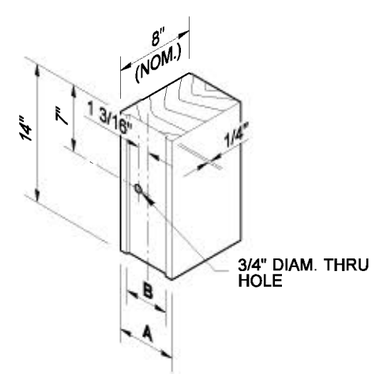

W-BEAM WOOD BLOCK
FOR STEEL POST

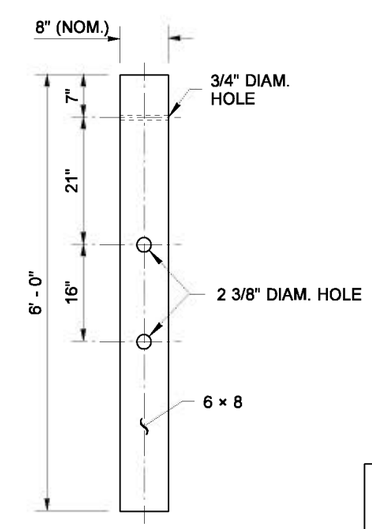

CONTROLLED RELEASING
TERMINAL (CRT) POST

NOTE: THIS PLAN IS NOT A LEGAL ENGINEERING DOCUMENT BUT AN ELECTRONIC DUPLICATE. THE ORIGINAL, SIGNED BY THE ENGINEER AND APPROVED FOR PUBLICATION, IS KEPT ON FILE AT THE WASHINGTON STATE DEPARTMENT OF TRANSPORTATION. A COPY MAY BE OBTAINED UPON REQUEST.

BEAM GUARDRAIL POSTS AND BLOCKS

STANDARD PLAN C-1b

SHEETS 2 OF 2 SHEETS

APPROVED FOR PUBLICATION

Pasco Bakotich III — STATE DESIGN ENGINEER

06-16-11 — DATE

Washington State Department of Transportation

DRAWN BY: FERN LIDDELL

EFFECTIVE: AUGUST 6, 2012 TO August 4, 2013
EFFECTIVE: AUGUST 6, 2012 TO August 4, 2013
EFFECTIVE: AUGUST 6, 2012 TO August 4, 2013
EFFECTIVE: AUGUST 6, 2012 TO August 4, 2013

EFFECTIVE: AUGUST 6, 2012 TO August 4, 2013
EFFECTIVE: AUGUST 6, 2012 TO August 4, 2013

NOTES

1. For post details see Standard Plan, "Beam Guardrail Posts and Blocks".

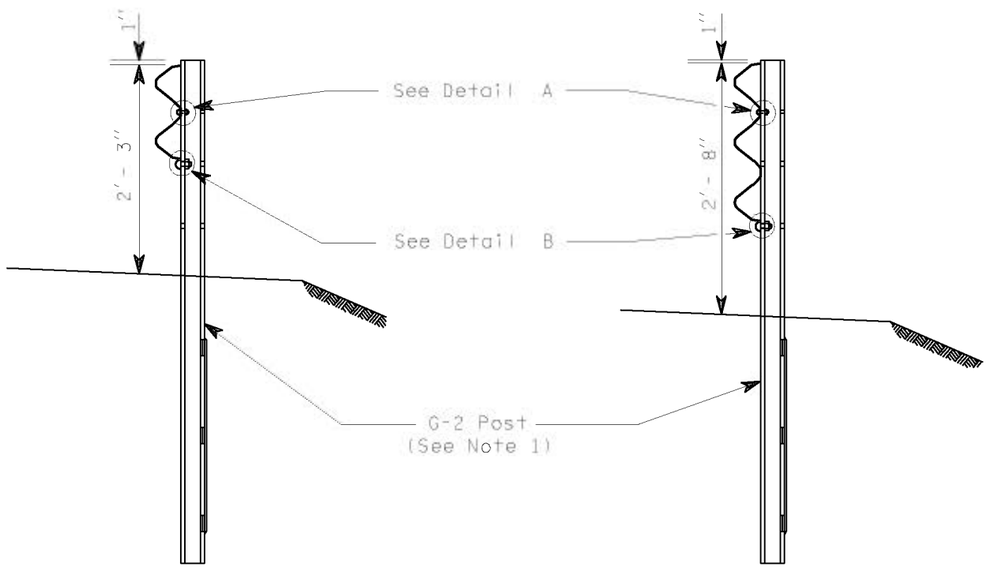

TYPE 20

TYPE 21

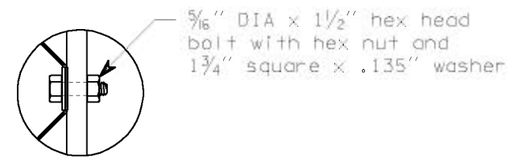

DETAIL A

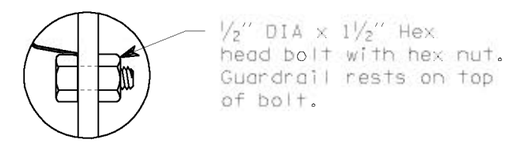

DETAIL B

BEAM GUARDRAIL

NOTE: THIS PLAN IS NOT A LEGAL ENGINEERING DOCUMENT BUT AN ELECTRONIC DUPLICATE. THE ORIGINAL IS INDEXED IN THE INDEX OF STANDARD PLANS, AND MAY BE SEEN ON FILE AT THE WASHINGTON STATE DEPARTMENT OF TRANSPORTATION. A COPY MAY BE OBTAINED UPON REQUEST.

STANDARD PLAN C-1c

APPROVED FOR PUBLICATION

Donald K. Nelson — STATE DESIGN ENGINEER

5/30/97 — DATE

WASHINGTON STATE DEPARTMENT OF TRANSPORTATION
OLYMPIA, WASHINGTON

EFFECTIVE: AUGUST 6, 2012 TO August 4, 2013
EFFECTIVE: AUGUST 6, 2012 TO August 4, 2013
EFFECTIVE: AUGUST 6, 2012 TO August 4, 2013
EFFECTIVE: AUGUST 6, 2012 TO August 4, 2013

EFFECTIVE: AUGUST 6, 2012 TO August 4, 2013
EFFECTIVE: AUGUST 6, 2012 TO August 4, 2013

NOTES

1. For wood posts, saw top of post and block to 1" above thrie beam guardrail reducer section. For steel posts, drive post down to 1" maximum above the thrie beam guardrail reducer section.

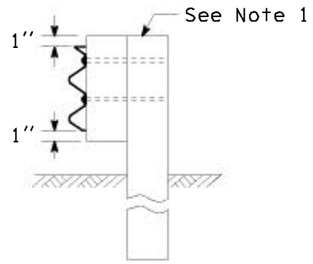

INTERMEDIATE GUARDRAIL
POST CONNECTION DETAILS
(Type A shown)

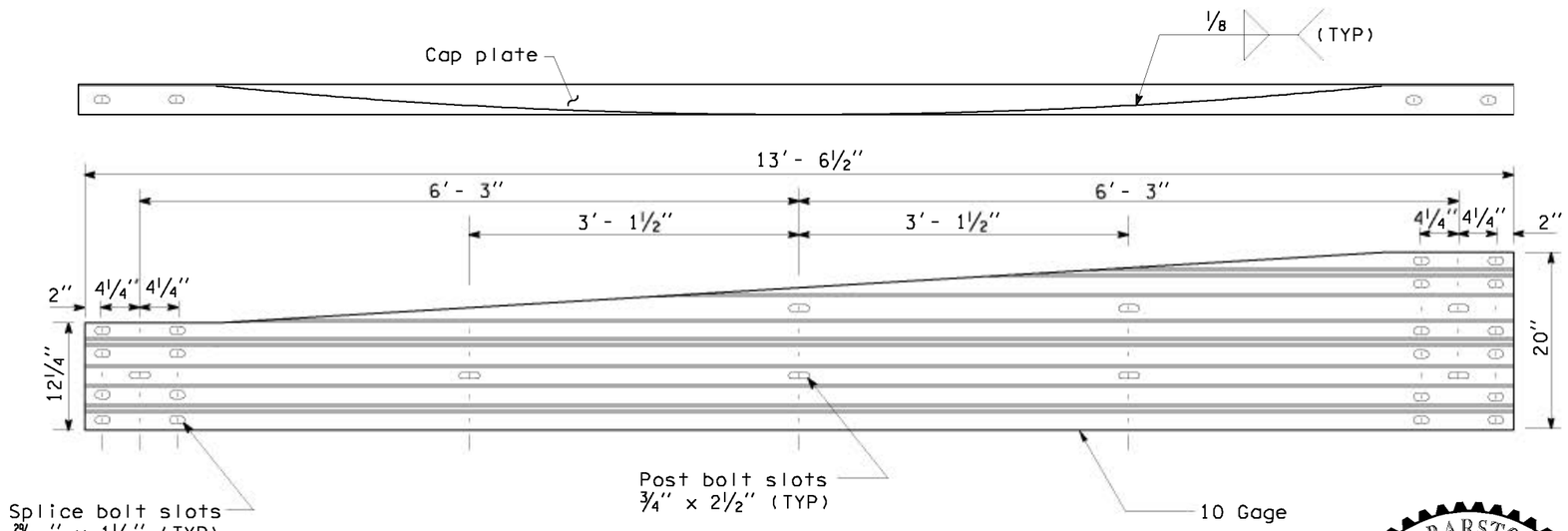

THRIE BEAM GUARDRAIL REDUCER SECTION
TYPE A

(Left section shown, right section reversed)

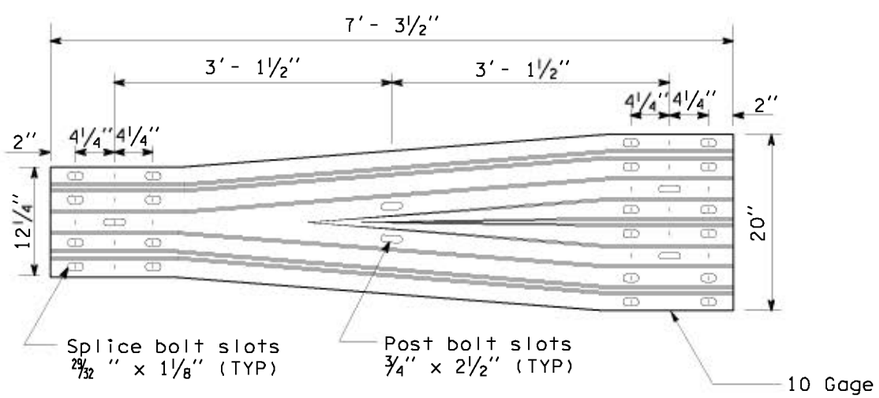

THRIE BEAM GUARDRAIL REDUCER SECTION
TYPE B

EXPIRES JULY 24, 2004

NOTE: THIS PLAN IS NOT A LEGAL ENGINEERING DOCUMENT BUT AN ELECTRONIC DUPLICATE. THE ORIGINAL, SIGNED BY THE ENGINEER AND APPROVED FOR PUBLICATION, IS KEPT ON FILE AT THE WASHINGTON STATE DEPARTMENT OF TRANSPORTATION. A COPY MAY BE OBTAINED UPON REQUEST.

THRIE BEAM GUARDRAIL REDUCER SECTION

STANDARD PLAN C-1d

SHEET 1 OF 1 SHEET

APPROVED FOR PUBLICATION

Harold J. Peterfeso — STATE DESIGN ENGINEER
10-31-03 — DATE

Washington State Department of Transportation

DATE	REVISION	BY
09/2003	ADDED 10 GAGE STEEL DESIGNATION; REV. NOTE 1	RG

EFFECTIVE: AUGUST 6, 2012 TO August 4, 2013
EFFECTIVE: AUGUST 6, 2012 TO August 4, 2013
EFFECTIVE: AUGUST 6, 2012 TO August 4, 2013
EFFECTIVE: AUGUST 6, 2012 TO August 4, 2013

EFFECTIVE: AUGUST 6, 2012 TO August 4, 2013
EFFECTIVE: AUGUST 6, 2012 TO August 4, 2013

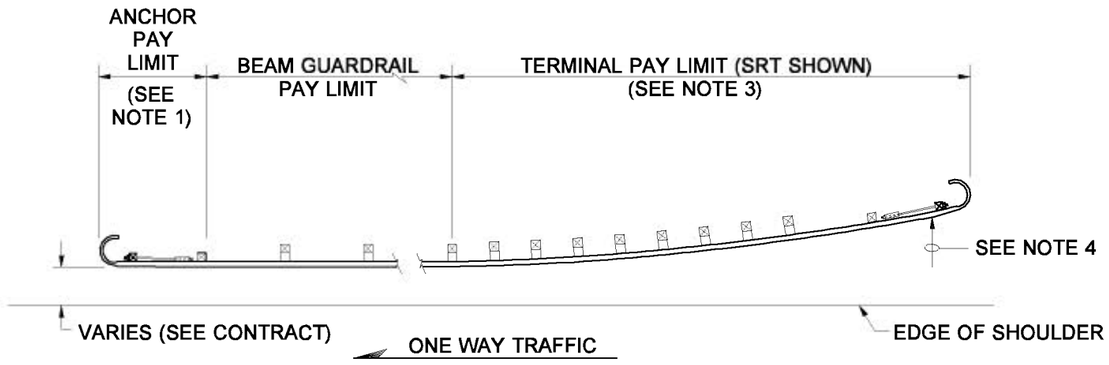

CASE 1

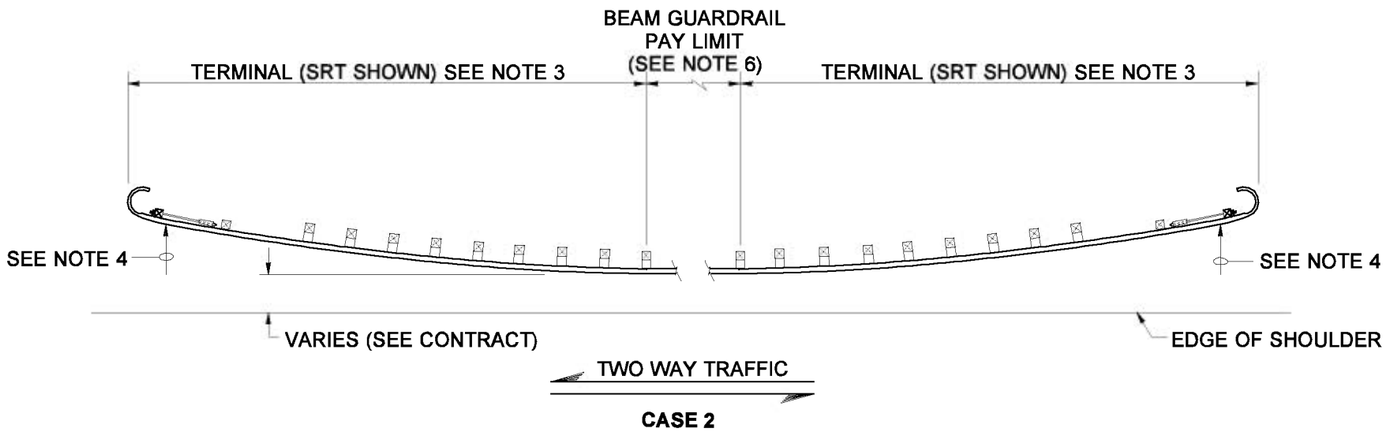

CASE 2

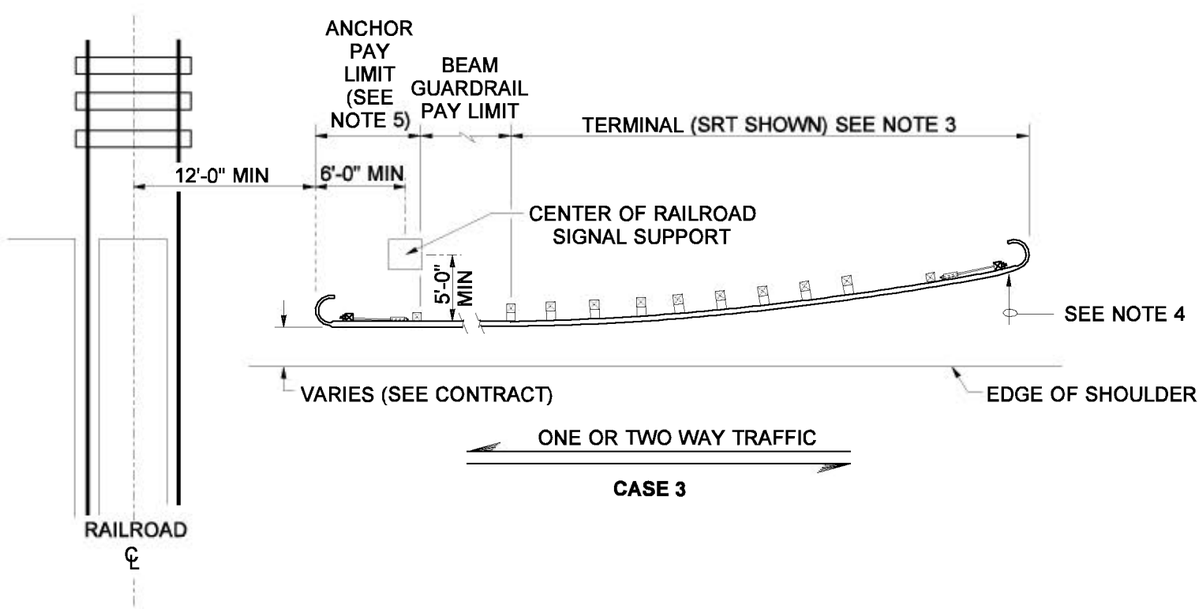

CASE 3

NOTES

1. Type 4 anchor required. For details, see Standard Plan C-6c.
2. Post spacing is 6'-3" unless otherwise shown.
3. For Terminal type and details, see Contract Plans and applicable Standard Plan(s).
4. The slope from the edge of the shoulder into the face of the guardrail should not exceed 10:1 when the face of the guardrail is less than 12'-0" from the edge of the shoulder.
5. For one-way traffic, use Type 4 anchor. For two-way traffic, use Type 1 anchor. See applicable Standard Plan(s) for details.
6. When Beam Guardrail Flared Terminals are used on both ends a minimum of 25'-0" of Beam Guardrail shall be installed.

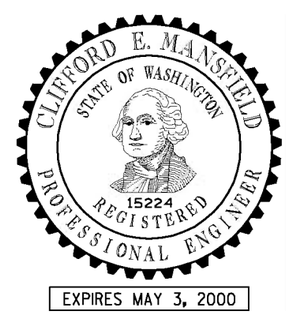

NOTE: THIS PLAN IS NOT A LEGAL ENGINEERING DOCUMENT BUT AN ELECTRONIC DUPLICATE. THE ORIGINAL, SIGNED BY THE ENGINEER AND APPROVED FOR PUBLICATION, IS KEPT ON FILE AT THE WASHINGTON STATE DEPARTMENT OF TRANSPORTATION. A COPY MAY BE OBTAINED UPON REQUEST.

GUARDRAIL PLACEMENT

STANDARD PLAN C-2

APPROVED FOR PUBLICATION

Clifford E. Mansfield — STATE DESIGN ENGINEER — *01-06-00* DATE

Washington State Department of Transportation

DATE	REVISION	BY
12/99	ADDED NOTE 6. MODIFIED THE END SECTIONS TO DESIGN "C".	TWS

EFFECTIVE: AUGUST 6, 2012 TO August 4, 2013
EFFECTIVE: AUGUST 6, 2012 TO August 4, 2013
EFFECTIVE: AUGUST 6, 2012 TO August 4, 2013
EFFECTIVE: AUGUST 6, 2012 TO August 4, 2013

EFFECTIVE: AUGUST 6, 2012 TO August 4, 2013
EFFECTIVE: AUGUST 6, 2012 TO August 4, 2013

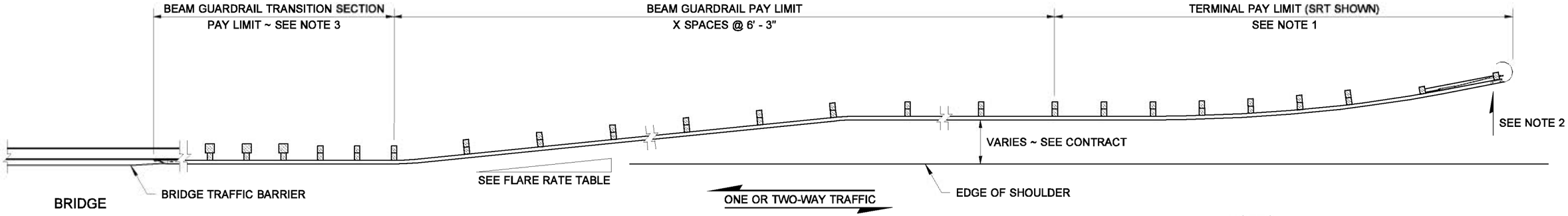

CASE 4

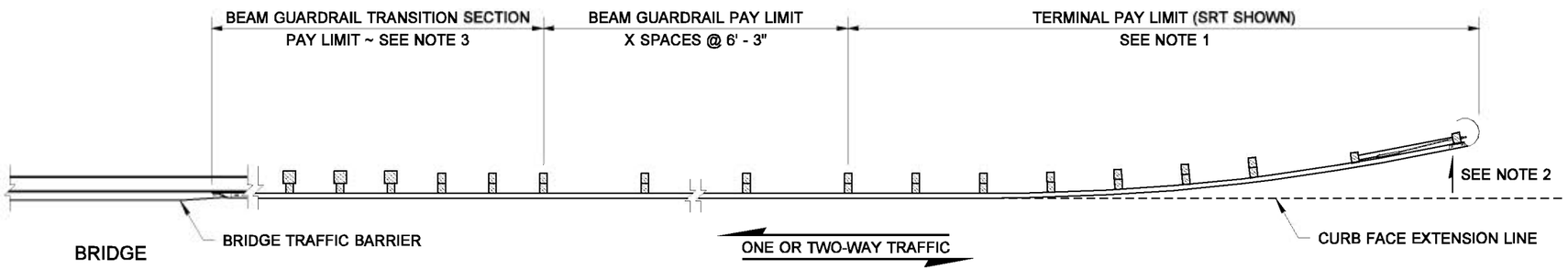

CASE 5

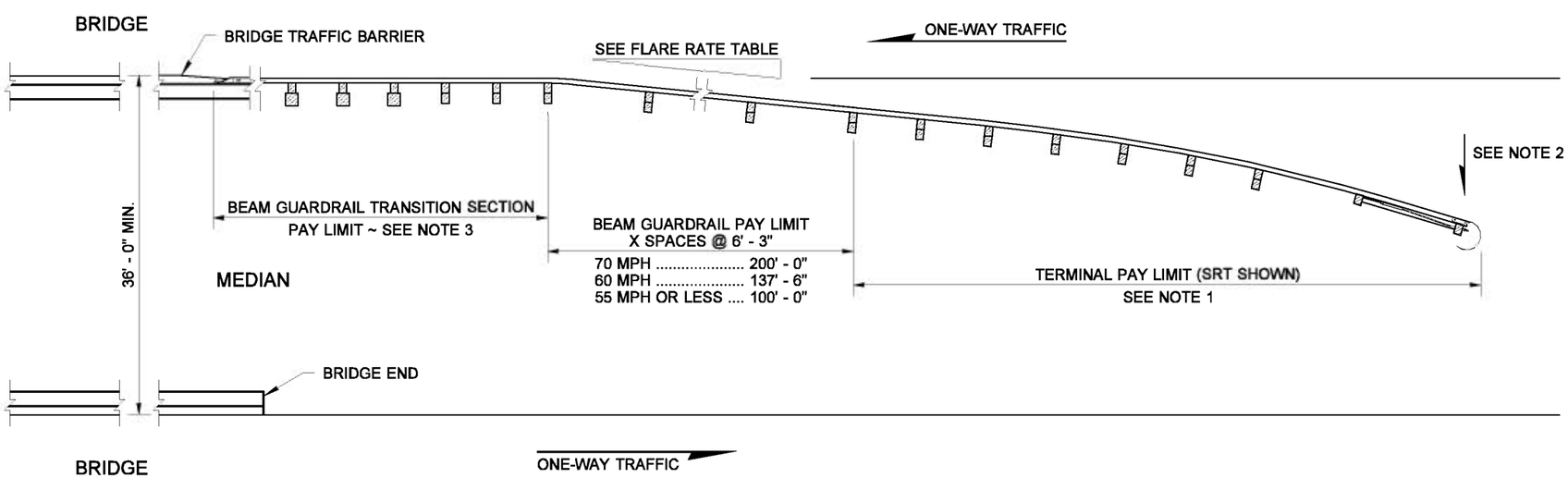

CASE 6

NOTES

1. For terminal type and details, see Contract and applicable Standard Plan(s).
2. The slope from the edge of the shoulder into the face of the guardrail should not be steeper than 10H:1V when the guardrail is within 12' - 0" from the edge of the shoulder.
3. See Contract for Beam Guardrail Transition Section type and Connection to Bridge Traffic Barrier or Concrete Barrier.

FLARE RATE TABLE

POSTED SPEED (MPH)	RATE
70	15 : 1
60	14 : 1
55	12 : 1
50	11 : 1
45	10 : 1
40 OR LESS	9 : 1

EXPIRES JULY 24, 2006

NOTE: THIS PLAN IS NOT A LEGAL ENGINEERING DOCUMENT BUT AN ELECTRONIC DUPLICATE. THE ORIGINAL, SIGNED BY THE ENGINEER AND APPROVED FOR PUBLICATION, IS KEPT ON FILE AT THE WASHINGTON STATE DEPARTMENT OF TRANSPORTATION. A COPY MAY BE OBTAINED UPON REQUEST.

GUARDRAIL PLACEMENT

STANDARD PLAN C-2a

SHEET 1 OF 1 SHEET

APPROVED FOR PUBLICATION

Harold J. Peterfeso — STATE DESIGN ENGINEER — *06-21-06* — DATE

Washington State Department of Transportation

DATE	REVISION	BY
05/2006	APPLIED CURRENT DRAFTING STANDARDS	MAS

DRAWN BY: MARK SUJKA

EFFECTIVE: AUGUST 6, 2012 TO August 4, 2013
EFFECTIVE: AUGUST 6, 2012 TO August 4, 2013
EFFECTIVE: AUGUST 6, 2012 TO August 4, 2013
EFFECTIVE: AUGUST 6, 2012 TO August 4, 2013

EFFECTIVE: AUGUST 6, 2012 TO August 4, 2013
EFFECTIVE: AUGUST 6, 2012 TO August 4, 2013

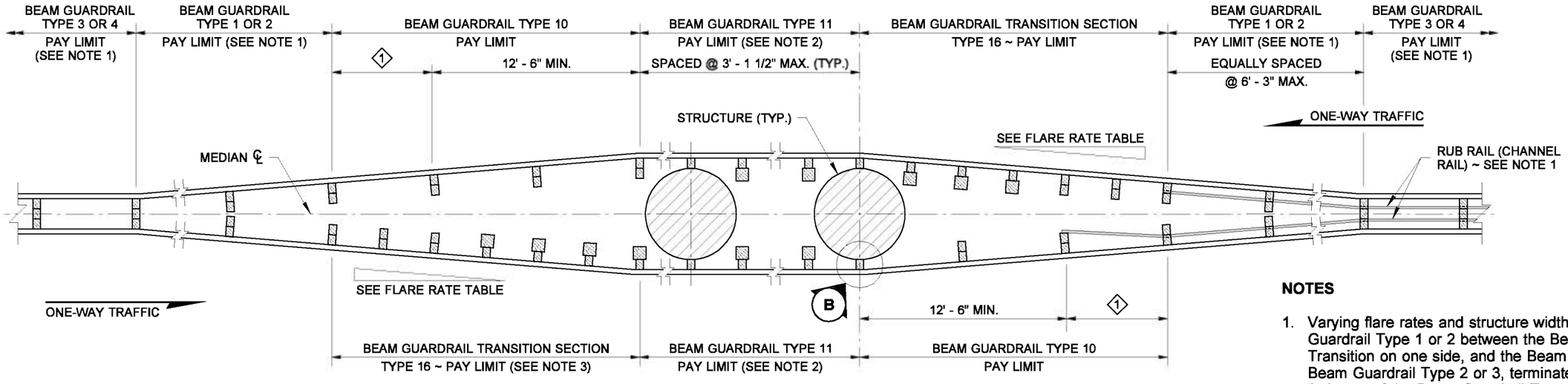

PLAN VIEW
(WOOD POST AND BLOCK SHOWN)

CASE 7

FLARE RATE TABLE	
POSTED SPEED (MPH)	RATE
70	15 : 1
60	14 : 1
55	12 : 1
50	11 : 1
45	10 : 1
40 OR LESS	9 : 1

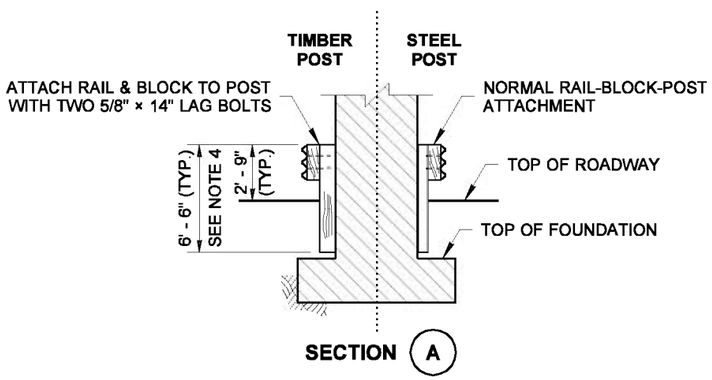

SECTION A

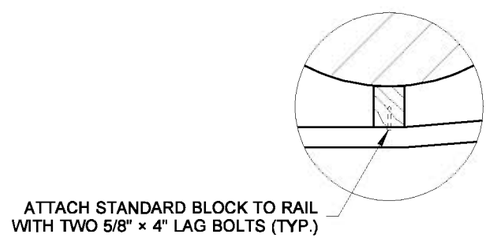

DETAIL B

1 THRIE BEAM GUARDRAIL REDUCER SECTION TYPE B

NOTES

1. Varying flare rates and structure widths may require a length of Beam Guardrail Type 1 or 2 between the Beam Guardrail Type 3 or 4 and the Transition on one side, and the Beam Guardrail Type 10 on the other. For Beam Guardrail Type 2 or 3, terminate the rub rail (channel rail) at the first 6×8 post of the Beam Guardrail Transition Section Type 16, and by lapping it behind the second 6×8 post on the Beam Guardrail Type 10 side, or as approved by the Engineer.
2. Use the minimum number of nested 12' - 6" thrie beam sections needed to span the structure. This run may extend past the end of the structure, and an excess of 6' - 3" maximum is acceptable. If the last 12' - 6" section extends more than 6' - 3" (but less than 12' - 6"), use a nested 6' - 3" thrie beam section in its place.
3. The Beam Guardrail Transition Section Type 16 on this end shall terminate at a 10×10 post. Place nested thrie beam with 10×10 posts at 3' - 1 1/2" maximum spacing between the end of the transition and the structure.
4. If full post depth cannot be achieved due to the structure foundation, post length shall be adjusted to the top of foundation. The Beam Guardrail Type 11 post height shall be 2' - 9".

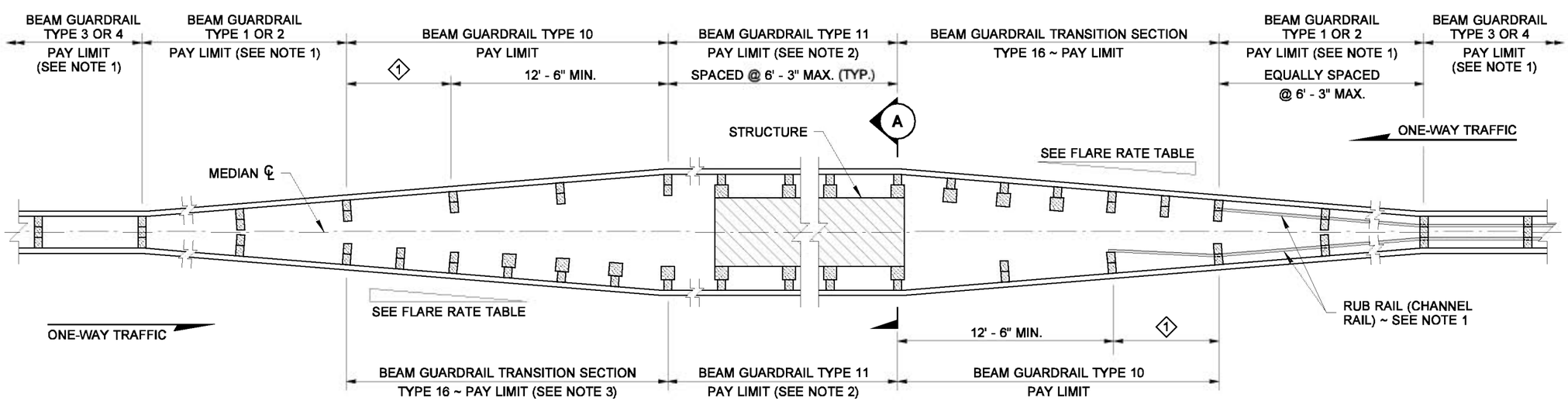

PLAN VIEW
(WOOD POST AND BLOCK SHOWN)

CASE 8

NOTE: THIS PLAN IS NOT A LEGAL ENGINEERING DOCUMENT BUT AN ELECTRONIC DUPLICATE. THE ORIGINAL, SIGNED BY THE ENGINEER AND APPROVED FOR PUBLICATION, IS KEPT ON FILE AT THE WASHINGTON STATE DEPARTMENT OF TRANSPORTATION. A COPY MAY BE OBTAINED UPON REQUEST.

GUARDRAIL PLACEMENT

STANDARD PLAN C-2b

SHEET 1 OF 1 SHEET

APPROVED FOR PUBLICATION

Harold J. Peterfeso — STATE DESIGN ENGINEER — *06-21-06* DATE

Washington State Department of Transportation

DATE	REVISION	BY
05/2006	OMITTED ATTACHMENT TO STRUCTURE (NOTE 1)	EAB

DRAWN BY: ELENA BRUNSTEIN

EFFECTIVE: AUGUST 6, 2012 TO August 4, 2013
EFFECTIVE: AUGUST 6, 2012 TO August 4, 2013
EFFECTIVE: AUGUST 6, 2012 TO August 4, 2013
EFFECTIVE: AUGUST 6, 2012 TO August 4, 2013

EFFECTIVE: AUGUST 6, 2012 TO August 4, 2013
EFFECTIVE: AUGUST 6, 2012 TO August 4, 2013

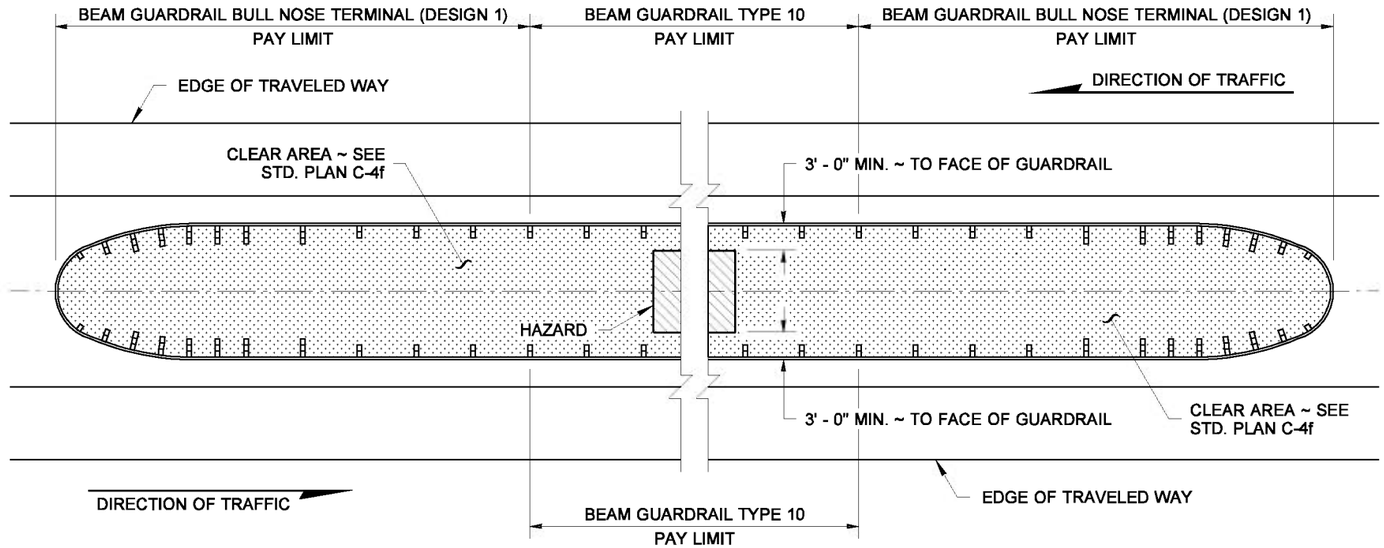

CASE 9A

NOTE

1. **CASE 9C:** Thrie Beam Guardrail is used when the distance from the end of the Bullnose Terminal to the beginning of the transition of the Bridge Rail is less than 100 feet.

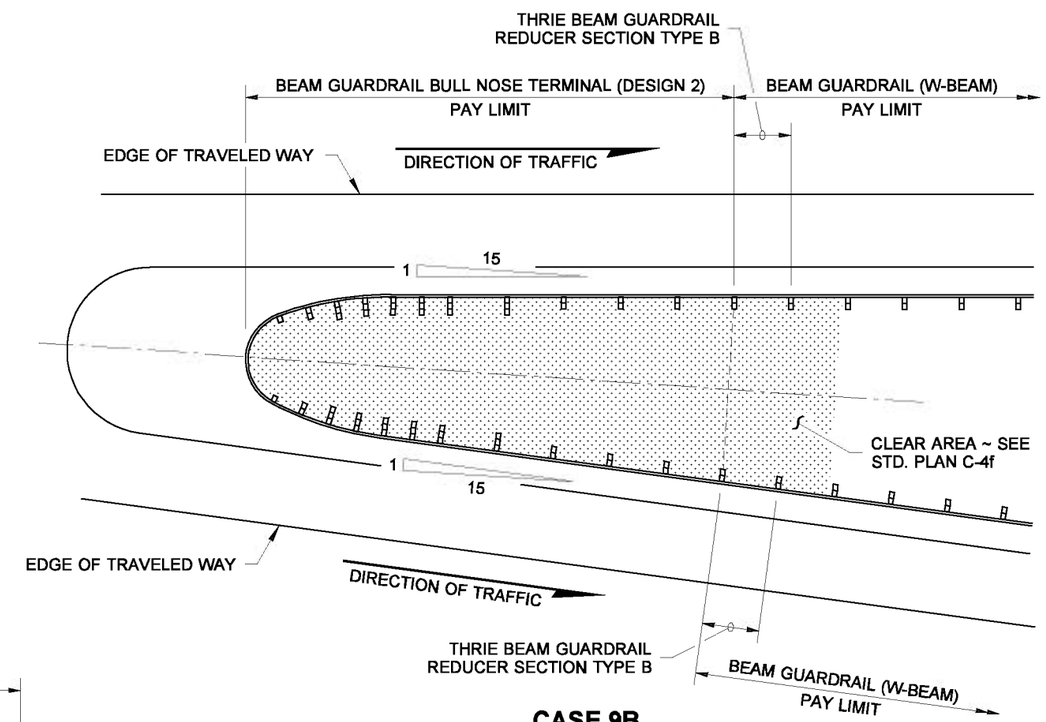

CASE 9B

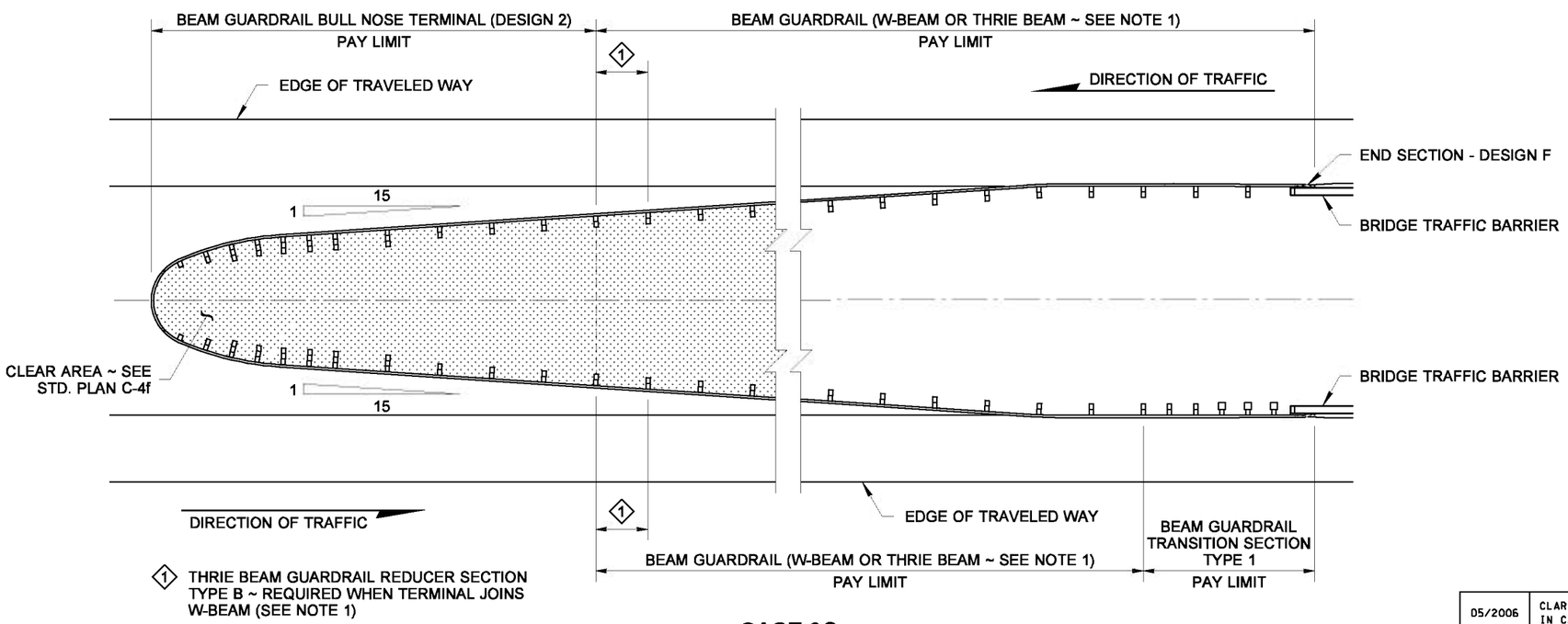

CASE 9C

EXPIRES JULY 24, 2006

NOTE: THIS PLAN IS NOT A LEGAL ENGINEERING DOCUMENT BUT AN ELECTRONIC DUPLICATE. THE ORIGINAL, SIGNED BY THE ENGINEER AND APPROVED FOR PUBLICATION, IS KEPT ON FILE AT THE WASHINGTON STATE DEPARTMENT OF TRANSPORTATION. A COPY MAY BE OBTAINED UPON REQUEST.

GUARDRAIL PLACEMENT MEDIAN BULL NOSE

STANDARD PLAN C-2c

SHEET 1 OF 1 SHEET

APPROVED FOR PUBLICATION

Harold J. Peterfeso — STATE DESIGN ENGINEER — *06-21-06* — DATE

Washington State Department of Transportation

DATE	REVISION	BY
05/2006	CLARIFIED DIMENSION OF CLEARANCE TO HAZARD IN CASE 9A	WJB

DRAWN BY: BILL BERENS

EFFECTIVE: AUGUST 6, 2012 TO August 4, 2013
EFFECTIVE: AUGUST 6, 2012 TO August 4, 2013
EFFECTIVE: AUGUST 6, 2012 TO August 4, 2013
EFFECTIVE: AUGUST 6, 2012 TO August 4, 2013

EFFECTIVE: AUGUST 6, 2012 TO August 4, 2013
EFFECTIVE: AUGUST 6, 2012 TO August 4, 2013

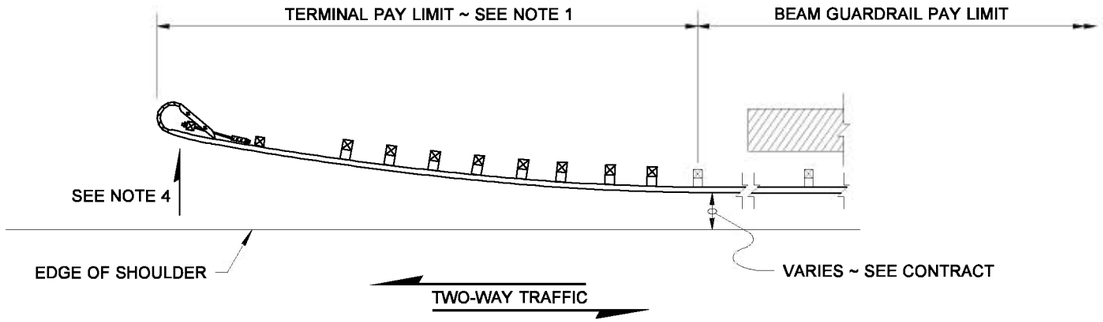

CASE 10A

NOTES

1. SRT Terminal shown, for terminal type and details, see Contract or applicable Standard Plan(s).
2. Post spacing is 6' - 3" except where noted.
3. Type 4 anchor required. See applicable Standard Plan(s).
4. The slope from the edge of the shoulder into the face of the guardrail should not exceed 10H:1V when the guardrail is within 12' - 0" from the edge of the shoulder.

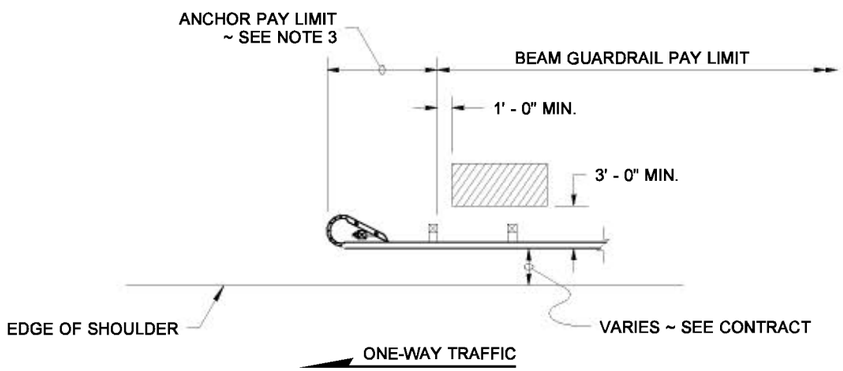

CASE 10B

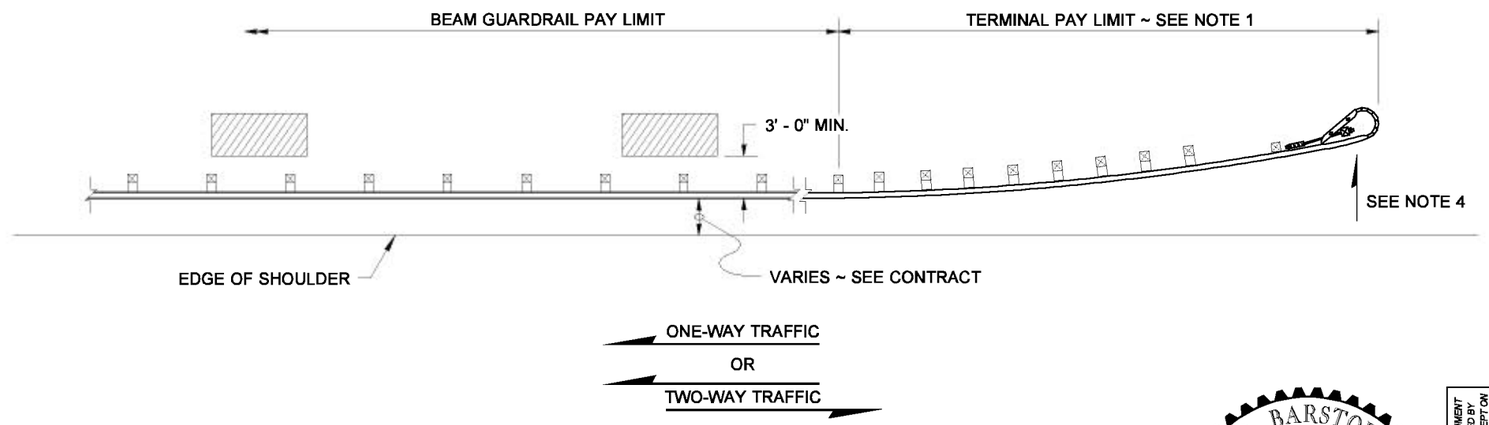

CASE 10 A, B, or C

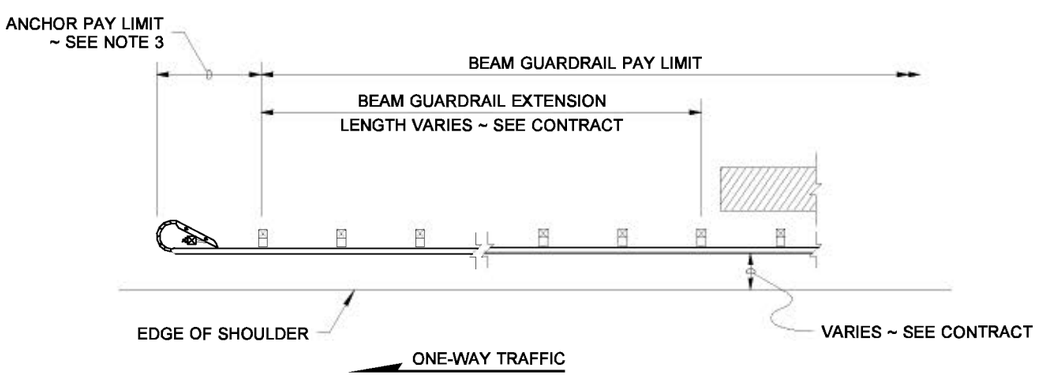

CASE 10C

NOTE: THIS PLAN IS NOT A LEGAL ENGINEERING DOCUMENT BUT AN ELECTRONIC DUPLICATE. THE ORIGINAL, SIGNED BY THE ENGINEER AND APPROVED FOR PUBLICATION, IS KEPT ON FILE AT THE WASHINGTON STATE DEPARTMENT OF TRANSPORTATION. A COPY MAY BE OBTAINED UPON REQUEST.

GUARDRAIL PLACEMENT

STANDARD PLAN C-2d

SHEET 1 OF 1 SHEET

APPROVED FOR PUBLICATION

Harold J. Peterfeso *06-21-06*

STATE DESIGN ENGINEER DATE

Washington State Department of Transportation

DATE	REVISION	BY
05/2006	CLARIFIED DIMENSION OF CLEARANCE FOR HAZARD	MAS

EFFECTIVE: AUGUST 6, 2012 TO August 4, 2013
EFFECTIVE: AUGUST 6, 2012 TO August 4, 2013
EFFECTIVE: AUGUST 6, 2012 TO August 4, 2013
EFFECTIVE: AUGUST 6, 2012 TO August 4, 2013

EFFECTIVE: AUGUST 6, 2012 TO August 4, 2013
EFFECTIVE: AUGUST 6, 2012 TO August 4, 2013

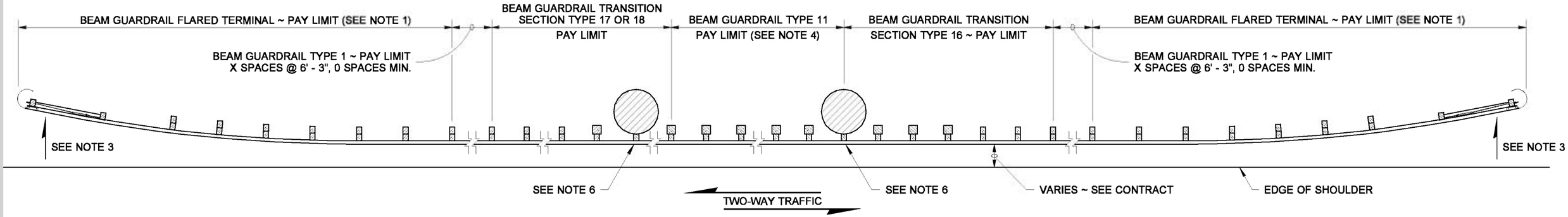

CASE 11A

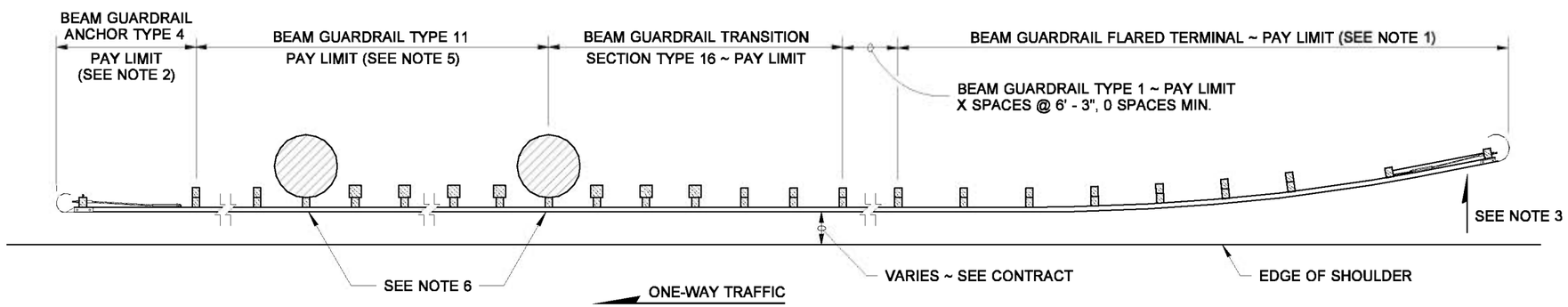

CASE 11B

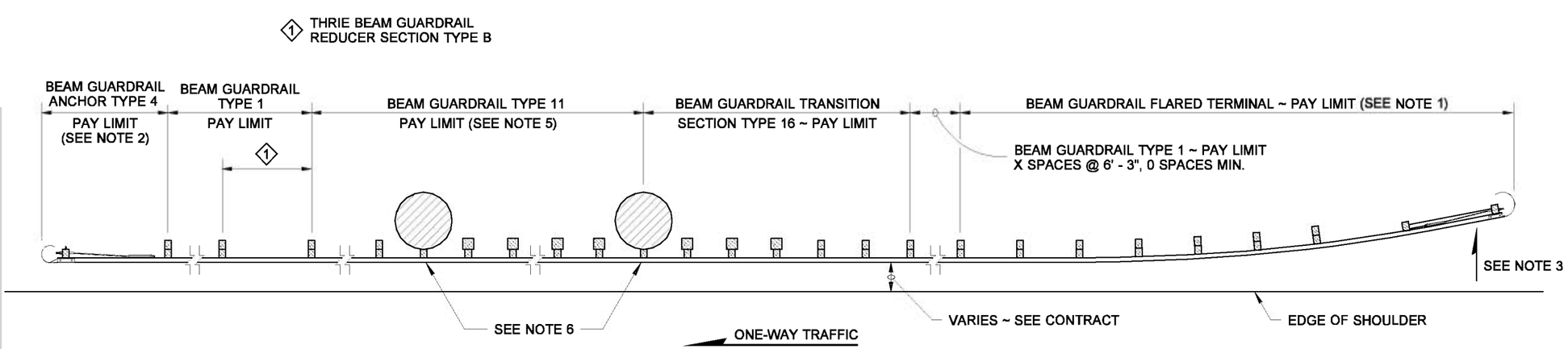

CASE 11C

NOTES

1. SRT Terminal shown. For terminal type and details see Contract and applicable Standard Plan(s).
2. Beam Guardrail Anchor Type 4 (W-Beam) or Type 4 (Thrie Beam) required.
3. The slope from the edge of the shoulder into the face of the guardrail should not exceed 10H:1V when the guardrail is within 12' - 0" from the edge of the shoulder.
4. If the distance from end of Beam Guardrail Type 11 to the structure exceeds 6' - 3" using 12' - 6" thrie beam sections, add a 6' - 3" nested section of thrie beam with 10×10 posts, spaced at 3' - 1 1/2" maximum, and begin transition.
5. Guardrail post spacing for Beam Guardrail Type 11 past the end of the structure shall be spaced at 6' - 3" maximum with 6×8 post and standard block.
6. Attach the standard wood block to the rail using two 5/8" × 4" lag bolts.

EXPIRES JULY 24, 2006

NOTE: THIS PLAN IS NOT A LEGAL ENGINEERING DOCUMENT BUT AN ELECTRONIC DUPLICATE. THE ORIGINAL, SIGNED BY THE ENGINEER AND APPROVED FOR PUBLICATION, IS KEPT ON FILE AT THE WASHINGTON STATE DEPARTMENT OF TRANSPORTATION. A COPY MAY BE OBTAINED UPON REQUEST.

GUARDRAIL PLACEMENT

STANDARD PLAN C-2e

SHEET 1 OF 1 SHEET

APPROVED FOR PUBLICATION

Harold J. Peterfeso — STATE DESIGN ENGINEER — *06-21-06* DATE

Washington State Department of Transportation

DATE	REVISION	BY
05/2006	OMITTED ATTACHMENT TO STRUCTURE (NOTE 2)	EAB

DRAWN BY: ELENA BRUNSTEIN

EFFECTIVE: AUGUST 6, 2012 TO August 4, 2013
EFFECTIVE: AUGUST 6, 2012 TO August 4, 2013
EFFECTIVE: AUGUST 6, 2012 TO August 4, 2013
EFFECTIVE: AUGUST 6, 2012 TO August 4, 2013

EFFECTIVE: AUGUST 6, 2012 TO August 4, 2013
EFFECTIVE: AUGUST 6, 2012 TO August 4, 2013

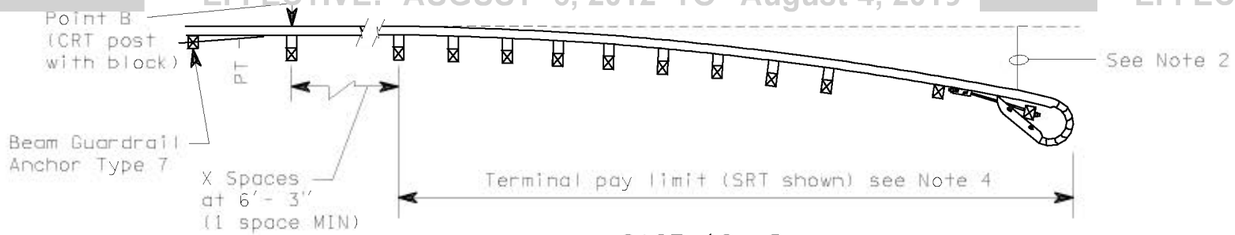

CASE 12 _D
(see Note 7)

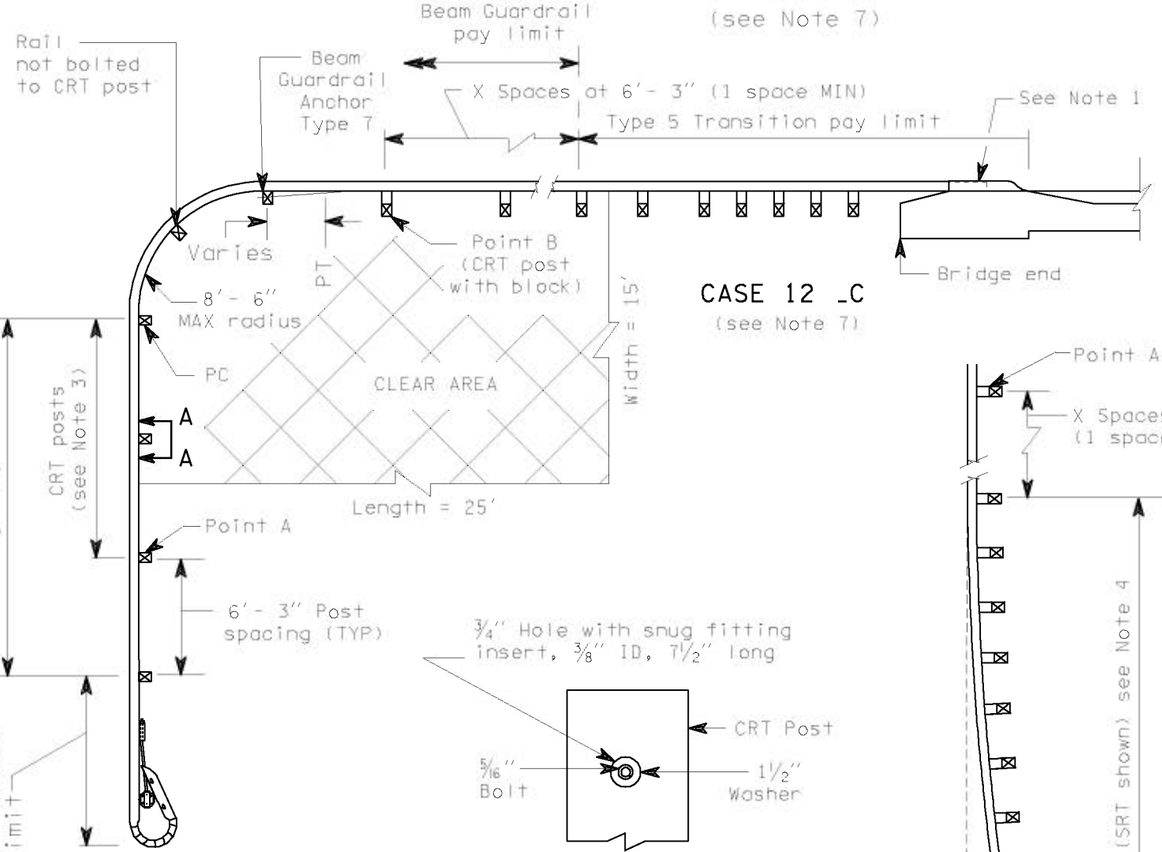

CASE 12 _C
(see Note 7)

CASE 12 A_
(see Note 8)

SECTION A-A

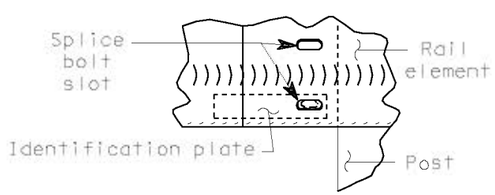

IDENTIFICATION PLATE
MOUNTING DETAIL
(see Note 6)

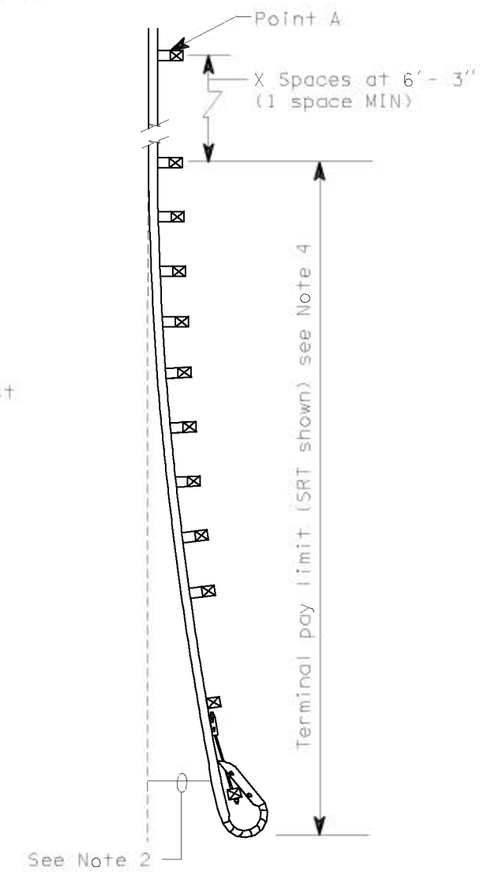

CASE 12 B_
(see Note 7)

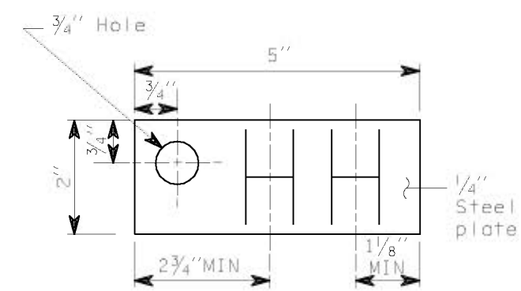

IDENTIFICATION PLATE
(see Note 5)

NOTES

1. See Contract for guardrail connection to bridge rail and concrete barrier.
2. The slope from the edge of the shoulder into the face of the guardrail should not be steeper than 10:1.
3. Attach to rail with 5/16" x 9" long bolt, nut and 1½" washer on back of post.
4. For terminal type and details, see Contract and applicable Standard Plan(s).
5. Radius dimensions shall be etched into plate replacing the letters "HH", shown on the Identification Plate Detail. Digits shall be 1½" MIN height and ¾" MAX width. The plate shall be galvanized after etching.
6. The guardrail radius Identification Plate shall be mounted on the back side of the Rail Element using the lowest splice bolt at the P.C. of the guardrail radius.
7. First letter of case designation placement indicates end treatment on side road. Second letter indicates end treatment on main road. For instance, a Type 5 Anchor on the side road and a bridge connection on the main road would be Case 12 AC.
8. For the 8'- 6" radius, five CRT posts are required including the CRT post at point B.
9. For CRT post details, see Standard Plan "Beam Guardrail Posts and Blocks".

GUARDRAIL PLACEMENT
WEAK POST INTERSECTION DESIGN (8'- 6" MAX RADIUS)

NOTE: THIS PLAN IS NOT A LEGAL ENGINEERING DOCUMENT BUT AN ELECTRONIC FACSIMILE. THE ORIGINAL EXHIBIT IS THE SEALED AND SIGNED PAPER COPY ON FILE AT THE WASHINGTON STATE DEPARTMENT OF TRANSPORTATION. A COPY MAY BE OBTAINED UPON REQUEST.

STANDARD PLAN C-2f

APPROVED FOR PUBLICATION

Donald K. Nelson — STATE DESIGN ENGINEER
3/14/97 — DATE

WASHINGTON STATE DEPARTMENT OF TRANSPORTATION
OLYMPIA, WASHINGTON

EFFECTIVE: AUGUST 6, 2012 TO August 4, 2013
EFFECTIVE: AUGUST 6, 2012 TO August 4, 2013
EFFECTIVE: AUGUST 6, 2012 TO August 4, 2013
EFFECTIVE: AUGUST 6, 2012 TO August 4, 2013

EFFECTIVE: AUGUST 6, 2012 TO August 4, 2013
EFFECTIVE: AUGUST 6, 2012 TO August 4, 2013

DRAWN BY: MARK SUJKA

REQUIREMENTS			
RADIUS	NUMBER OF CRT POSTS (SEE NOTE 3)	CLEAR AREA	
		L	W
17'- 0"	6	30'	15'
25'- 6"	8	40'	20'
35'- 0"	11	50'	20'

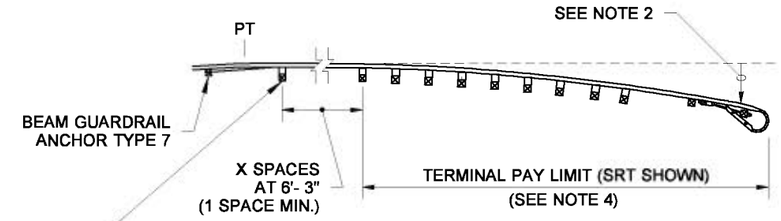

CASE 13 _D
(SEE NOTE 7)

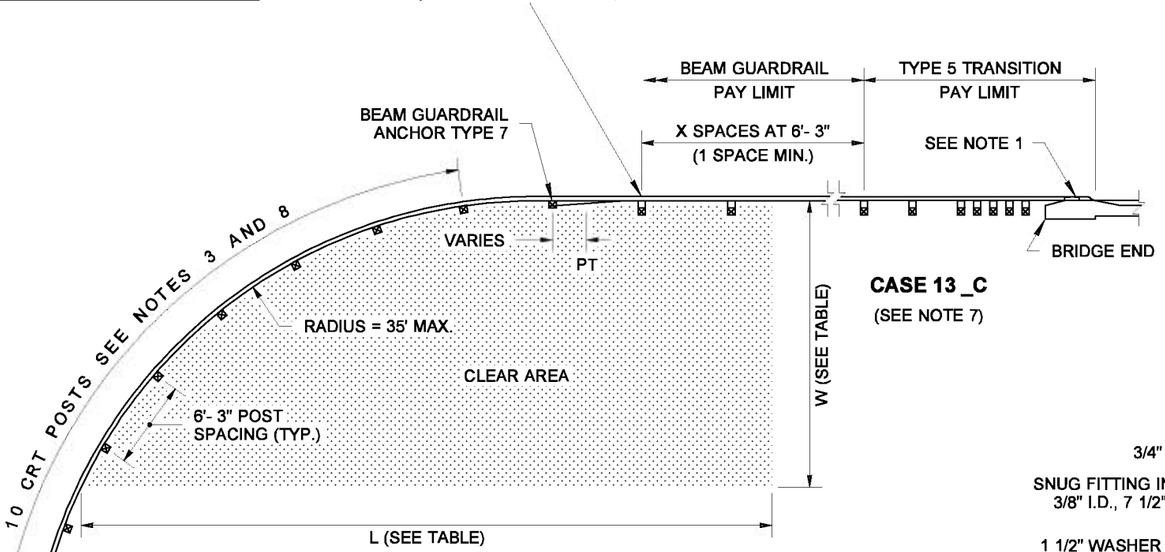

CASE 13 _C
(SEE NOTE 7)

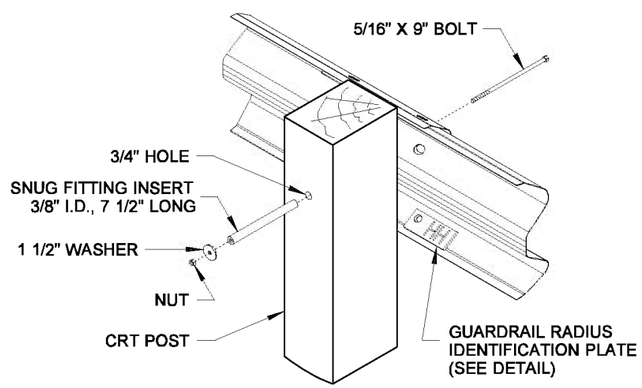

(SEE NOTES 3, 6 & 8)

VIEW A

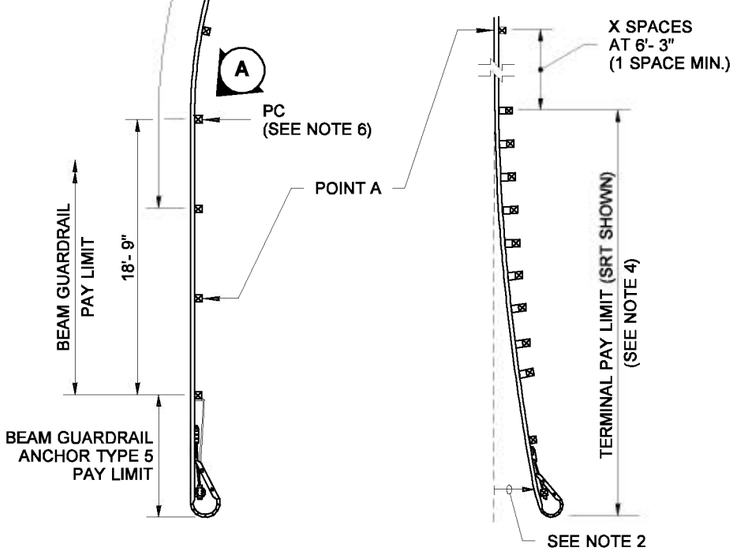

CASE 13 A_
(SEE NOTE 7)

CASE 13 B_
(SEE NOTE 7)

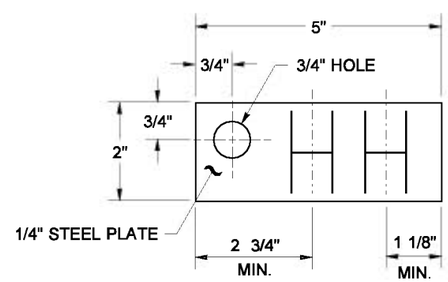

(SEE NOTE 5)

GUARDRAIL RADIUS IDENTIFICATION PLATE DETAIL

NOTES

1. See Contract Plans for guardrail connection to bridge rail and concrete barrier.
2. The slope from the edge of the shoulder into the face of the guardrail should not be steeper than 10:1.
3. Fewer CRT posts are required for smaller radii; include CRT Post at Point B. Attach guardrail to post with a 5/16" x 9" long bolt, a 3/8" I.D. x 7 1/2" snug fitting insert and a 1 1/2" washer with nut on back of post.
4. For terminal type and details, see Contract and applicable Standard Plan(s).
5. Radius dimensions shall be etched into plate replacing the letters "HH", shown on the GUARDRAIL RADIUS IDENTIFICATION PLATE DETAIL. Digits shall be 1 1/2" minimum height and 3/4" maximum width. Plate shall be galvanized after etching.
6. The guardrail radius Identification Plate shall be mounted on the back side of the rail element using the lowest splice bolt nearest the PC of the guardrail radius (See View A).
7. The first letter of the Case Designation indicates the end treatment on the side road. The second letter indicates the end treatment on the main road. For example, a Type 5 Anchor on the side road with a bridge connection on the main road would be Case 13 AC, the combination shown.
8. For CRT post details, see Standard Plan C-1b.

EXPIRES MAY 3, 2002

NOTE: THIS PLAN IS NOT A LEGAL ENGINEERING DOCUMENT BUT AN ELECTRONIC DUPLICATE. THE ORIGINAL, SIGNED BY THE ENGINEER AND APPROVED FOR PUBLICATION, IS KEPT ON FILE AT THE WASHINGTON STATE DEPARTMENT OF TRANSPORTATION. A COPY MAY BE OBTAINED UPON REQUEST.

GUARDRAIL PLACEMENT WEAK POST INTERSECTION DESIGN (35' MAX. RADIUS)

STANDARD PLAN C-2g

APPROVED FOR PUBLICATION

Clifford E. Mansfield — STATE DESIGN ENGINEER — *07-27-01* — DATE

Washington State Department of Transportation

DATE	REVISION	BY
7/01	CORRECTED NOTES; ADDED "VIEW A"	MAS

EFFECTIVE: AUGUST 6, 2012 TO August 4, 2013
EFFECTIVE: AUGUST 6, 2012 TO August 4, 2013
EFFECTIVE: AUGUST 6, 2012 TO August 4, 2013
EFFECTIVE: AUGUST 6, 2012 TO August 4, 2013

EFFECTIVE: AUGUST 6, 2012 TO August 4, 2013
EFFECTIVE: AUGUST 6, 2012 TO August 4, 2013

NOTES

1. For Service Level 1, Weak Post Bridge Rail System, see Contract.
2. SRT Terminal shown. For Terminal type and details, see Contract and applicable Standard Plan(s).
3. The slope from the edge of the shoulder into the face of the guardrail should not be steeper than 10:1.
4. See Standard Plan "Beam Guardrail Posts and Blocks".

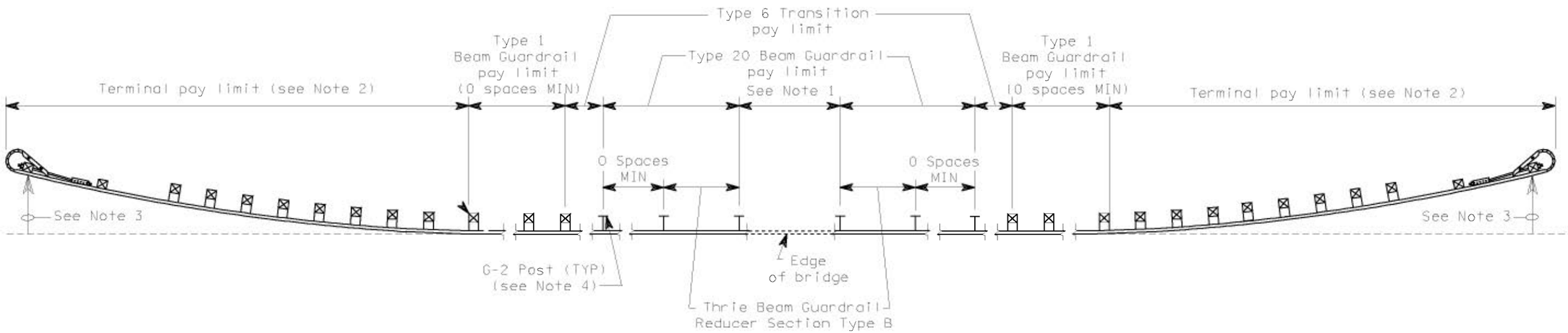

Direction of Traffic

CASE 14

GUARDRAIL PLACEMENT

EXPIRES MAY 3, 1998

NOTE: THIS PLAN IS NOT A LEGAL ENGINEERING DOCUMENT BUT AN ELECTRONIC DUPLICATE. THE ORIGINAL IS KEPT IN THE WASHINGTON STATE DEPARTMENT OF TRANSPORTATION FILE AT THE WASHINGTON STATE DEPARTMENT OF TRANSPORTATION. A COPY MAY BE OBTAINED UPON REQUEST.

STANDARD PLAN C-2h

APPROVED FOR PUBLICATION

Donald K. Nelson — 3/28/97

STATE DESIGN ENGINEER — DATE

WASHINGTON STATE DEPARTMENT OF TRANSPORTATION
OLYMPIA, WASHINGTON

EFFECTIVE: AUGUST 6, 2012 TO August 4, 2013
EFFECTIVE: AUGUST 6, 2012 TO August 4, 2013
EFFECTIVE: AUGUST 6, 2012 TO August 4, 2013
EFFECTIVE: AUGUST 6, 2012 TO August 4, 2013

EFFECTIVE: AUGUST 6, 2012 TO August 4, 2013
EFFECTIVE: AUGUST 6, 2012 TO August 4, 2013

NOTES

1. SRT Terminal shown. For Terminal type and details, see Contract and applicable Standard Plan(s).
2. The slope from the edge of the shoulder into the face of the guardrail should not be steeper than 10:1 .
3. See Standard Plan for Box Culvert Guardrail Steel Post.
4. For spans up to 18′- 9″, see Standard Plan for Guardrail Placement Cases 19, 20, and 21.

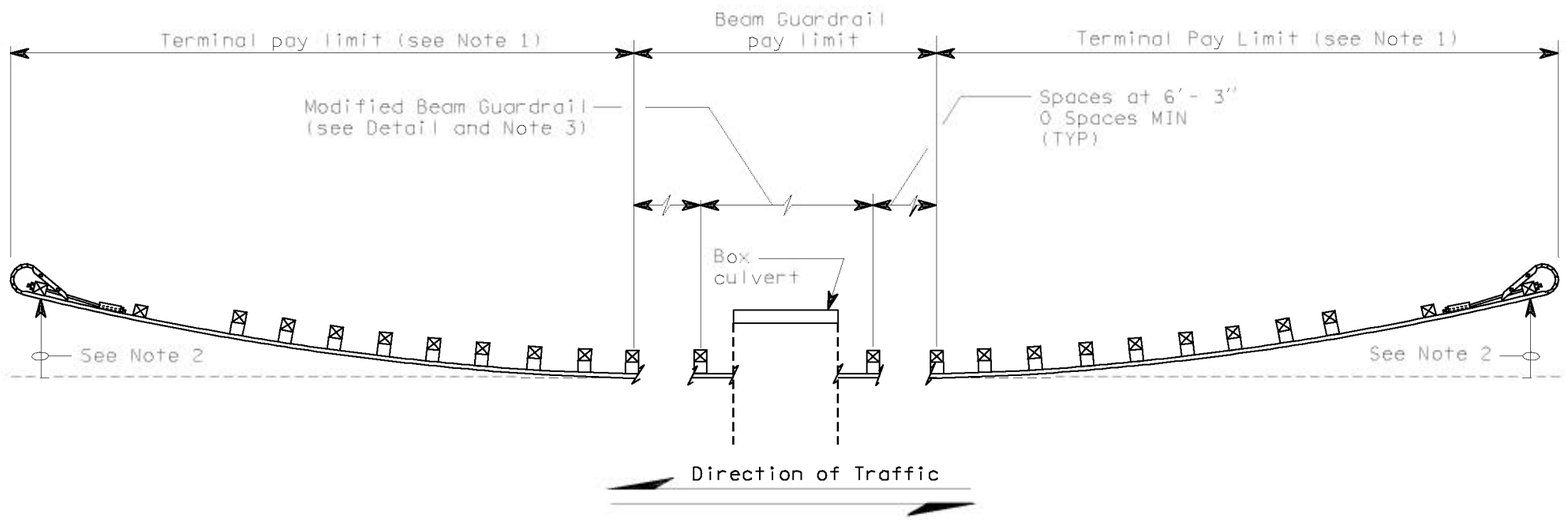

CASE 15

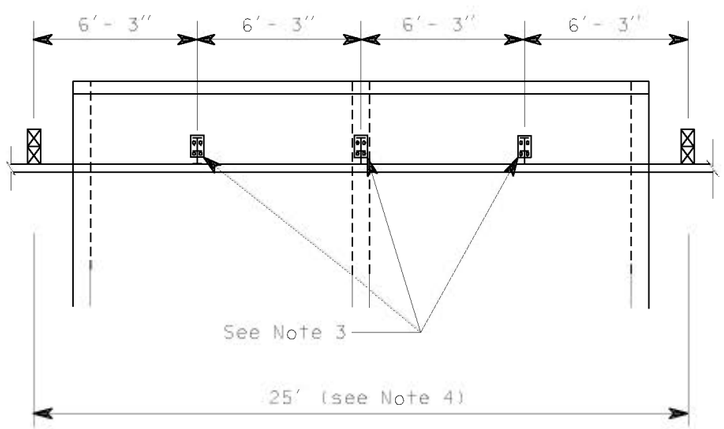

DETAIL

GUARDRAIL PLACEMENT

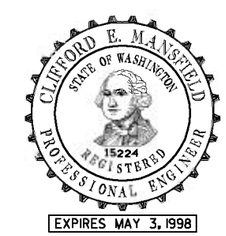

NOTE: THIS PLAN IS NOT A LEGAL ENGINEERING DOCUMENT BUT AN EXACT COPY OF THE ORIGINAL DOCUMENT SIGNED BY THE ENGINEER AND APPROVED FOR PUBLICATION, IS KEPT ON FILE AT THE WASHINGTON STATE DEPARTMENT OF TRANSPORTATION. A COPY MAY BE OBTAINED UPON REQUEST.

STANDARD PLAN C-2i

APPROVED FOR PUBLICATION

Donald K. Nelson — 3/28/97

STATE DESIGN ENGINEER — DATE

WASHINGTON STATE DEPARTMENT OF TRANSPORTATION
OLYMPIA, WASHINGTON

EFFECTIVE: AUGUST 6, 2012 TO August 4, 2013
EFFECTIVE: AUGUST 6, 2012 TO August 4, 2013
EFFECTIVE: AUGUST 6, 2012 TO August 4, 2013
EFFECTIVE: AUGUST 6, 2012 TO August 4, 2013

EFFECTIVE: AUGUST 6, 2012 TO August 4, 2013
EFFECTIVE: AUGUST 6, 2012 TO August 4, 2013

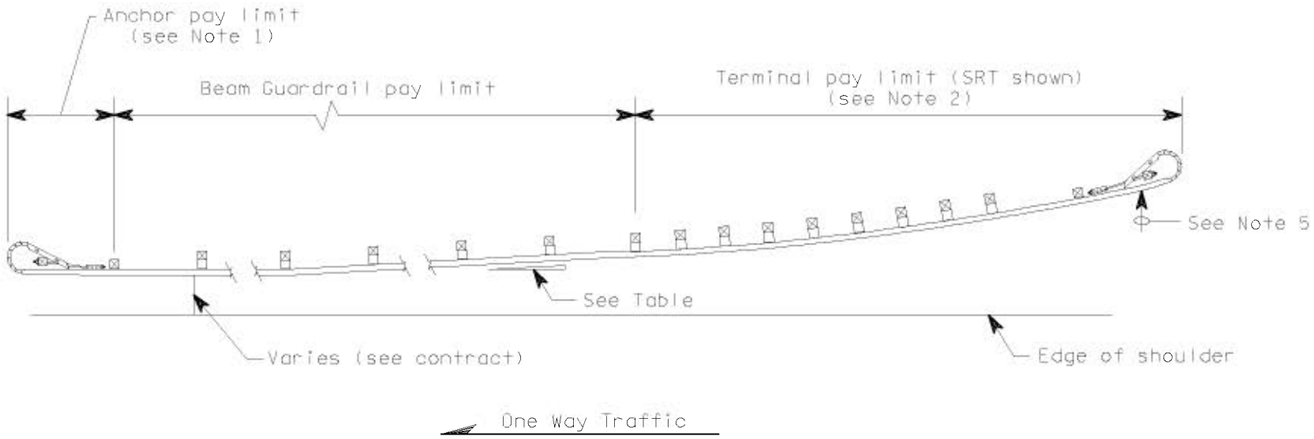

CASE 16

NOTES

1. Type 4 anchor required. For details, see applicable Standard Plan(s).
2. For terminal type and details, see contract and applicable Standard Plan(s).
3. Post spacing is 6'-3" except where noted.
4. For guardrail to bridge rail connection see applicable Standard Plan(s) or Contract.
5. The slope from the edge of the shoulder into the face of the guardrail should not be steeper than 10:1 when the guardrail is within 12'-0" from the edge of the shoulder. Beyond 12'-0", the slope shall not be steeper than 6:1.

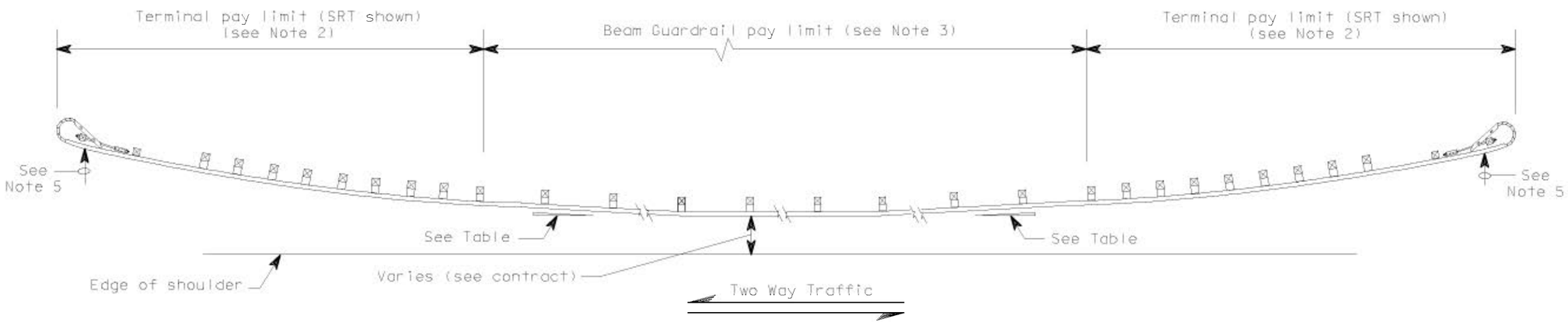

CASE 17

FLARE RATE TABLE	
Rate	Posted Speed (MPH)
15:1	70
14:1	60
12:1	55
11:1	50
10:1	45
9:1	40 or less

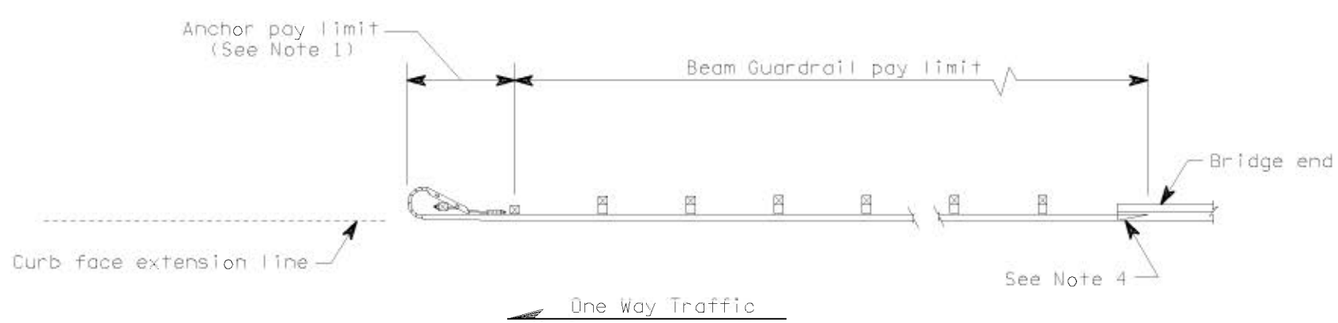

CASE 18

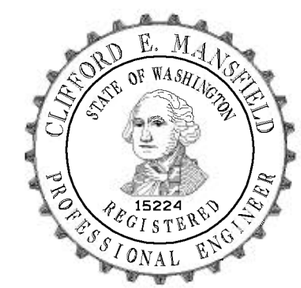

EXPIRES MAY 3, 2000

NOTE: THIS PLAN IS NOT A LEGAL ENGINEERING DOCUMENT BUT AN ELECTRONIC DUPLICATE. THE ORIGINAL, SIGNED BY THE ENGINEER AND APPROVED FOR PUBLICATION, IS KEPT ON FILE AT THE WASHINGTON STATE DEPARTMENT OF TRANSPORTATION. A COPY MAY BE OBTAINED UPON REQUEST.

GUARDRAIL PLACEMENT

STANDARD PLAN C-2j

DATE	REVISION	BY
5/98	Revise Flair Rate Table.	RBA

APPROVED FOR PUBLICATION

Clifford E. Mansfield — *6/12/98*

DEPUTY STATE DESIGN ENGINEER — DATE

WASHINGTON STATE DEPARTMENT OF TRANSPORTATION
OLYMPIA, WASHINGTON

EFFECTIVE: AUGUST 6, 2012 TO August 4, 2013
EFFECTIVE: AUGUST 6, 2012 TO August 4, 2013
EFFECTIVE: AUGUST 6, 2012 TO August 4, 2013
EFFECTIVE: AUGUST 6, 2012 TO August 4, 2013

EFFECTIVE: AUGUST 6, 2012 TO August 4, 2013
EFFECTIVE: AUGUST 6, 2012 TO August 4, 2013

DRAWN BY: MARK SUJKA

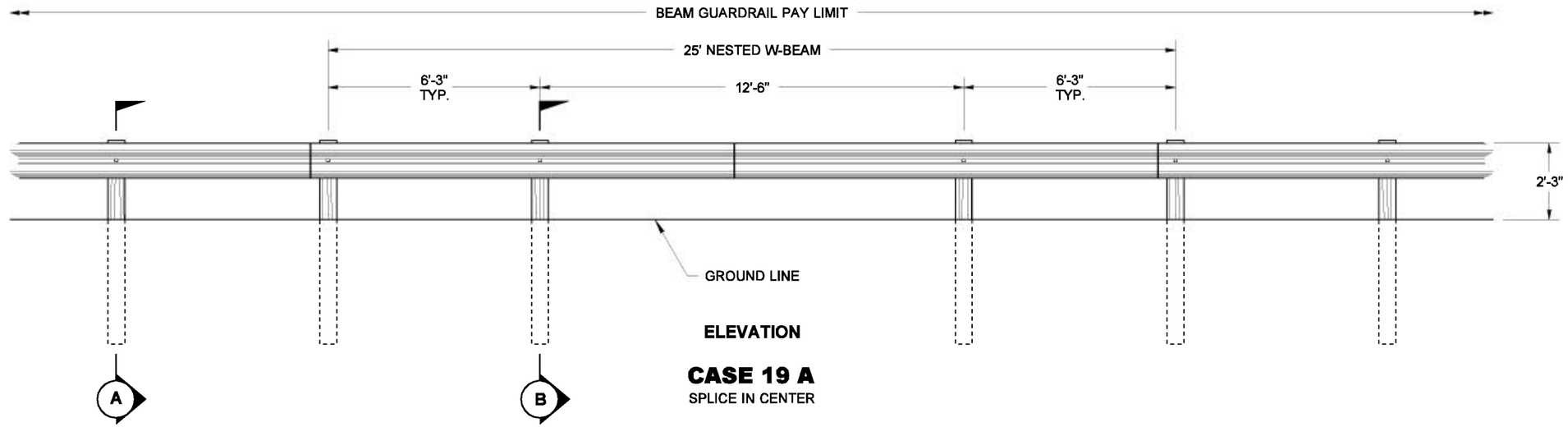

ELEVATION

CASE 19 A

SPLICE IN CENTER

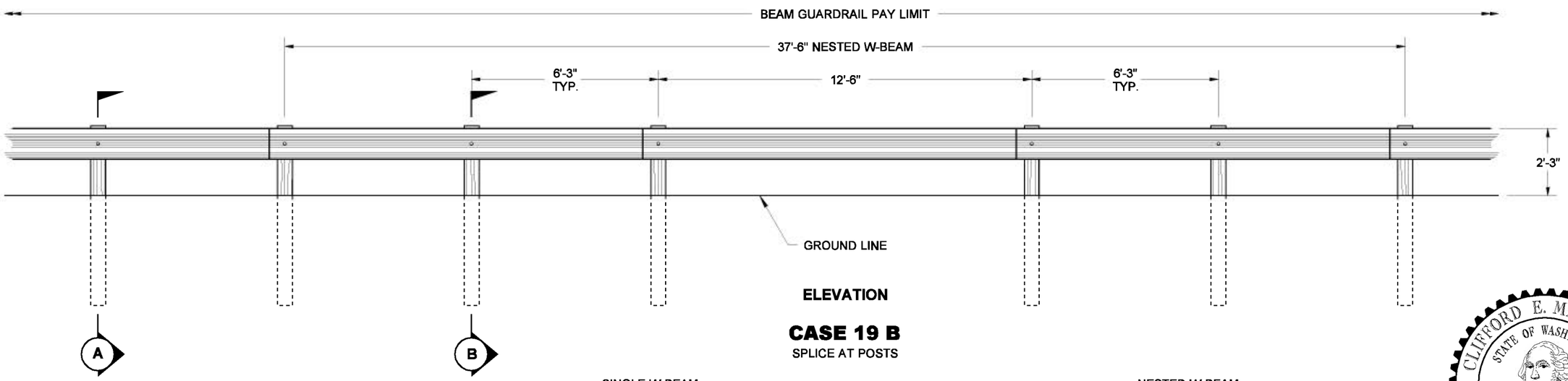

ELEVATION

CASE 19 B

SPLICE AT POSTS

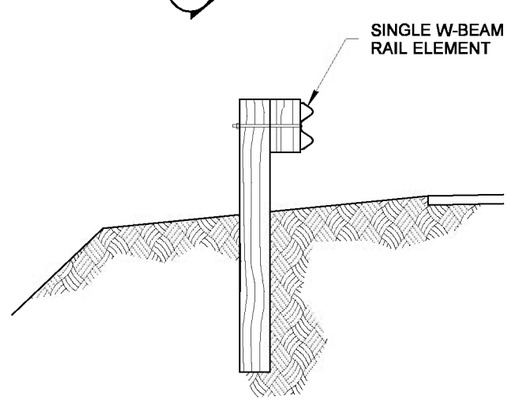

SECTION A

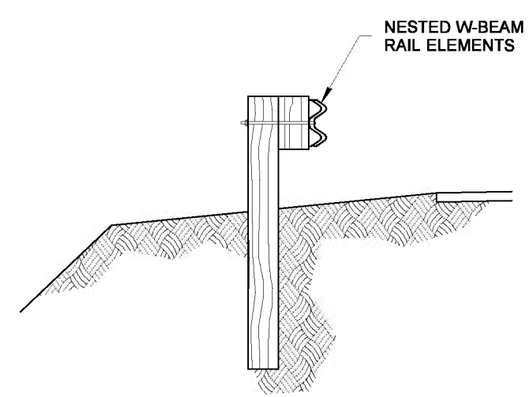

SECTION B

EXPIRES MAY 3, 2002

NOTE: THIS PLAN IS NOT A LEGAL ENGINEERING DOCUMENT BUT AN ELECTRONIC DUPLICATE. THE ORIGINAL, SIGNED BY THE ENGINEER AND APPROVED FOR PUBLICATION, IS KEPT ON FILE AT THE WASHINGTON STATE DEPARTMENT OF TRANSPORTATION. A COPY MAY BE OBTAINED UPON REQUEST.

GUARDRAIL PLACEMENT 12'-6" SPAN

STANDARD PLAN C-2k

APPROVED FOR PUBLICATION

Clifford E. Mansfield — STATE DESIGN ENGINEER

07-27-01 — DATE

Washington State Department of Transportation

EFFECTIVE: AUGUST 6, 2012 TO August 4, 2013
EFFECTIVE: AUGUST 6, 2012 TO August 4, 2013
EFFECTIVE: AUGUST 6, 2012 TO August 4, 2013
EFFECTIVE: AUGUST 6, 2012 TO August 4, 2013

EFFECTIVE: AUGUST 6, 2012 TO August 4, 2013
EFFECTIVE: AUGUST 6, 2012 TO August 4, 2013

DRAWN BY: MARK SUJKA

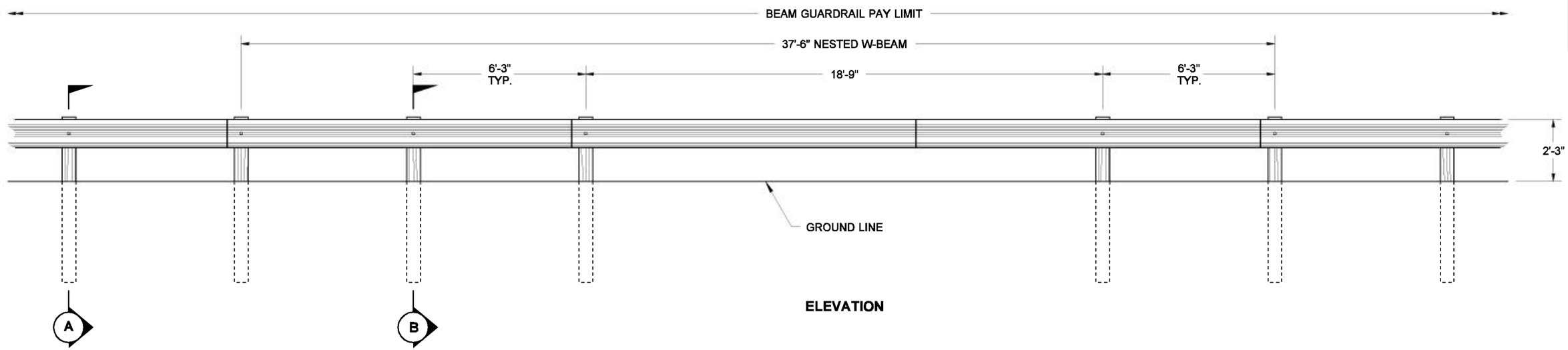

ELEVATION

CASE 20

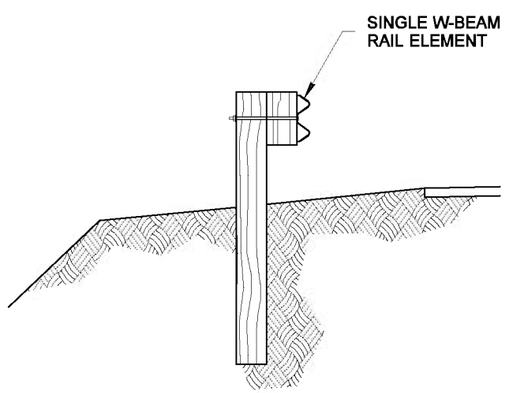

SECTION A

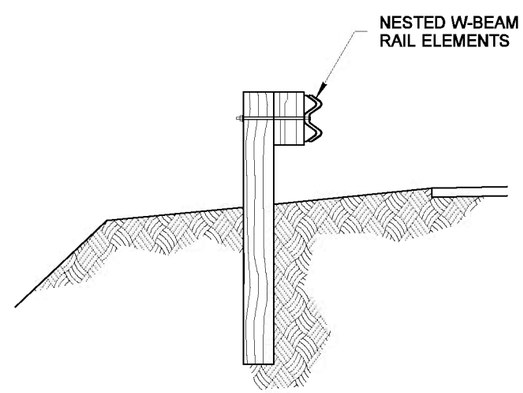

SECTION B

CLIFFORD E. MANSFIELD
STATE OF WASHINGTON
15224
REGISTERED
PROFESSIONAL ENGINEER

EXPIRES MAY 3, 2002

NOTE: THIS PLAN IS NOT A LEGAL ENGINEERING DOCUMENT BUT AN ELECTRONIC DUPLICATE. THE ORIGINAL, SIGNED BY THE ENGINEER AND APPROVED FOR PUBLICATION, IS KEPT ON FILE AT THE WASHINGTON STATE DEPARTMENT OF TRANSPORTATION. A COPY MAY BE OBTAINED UPON REQUEST.

GUARDRAIL PLACEMENT 18'-9" SPAN

STANDARD PLAN C-2n

APPROVED FOR PUBLICATION

Clifford E. Mansfield — STATE DESIGN ENGINEER

07-27-01 — DATE

Washington State Department of Transportation

EFFECTIVE: AUGUST 6, 2012 TO August 4, 2013
EFFECTIVE: AUGUST 6, 2012 TO August 4, 2013
EFFECTIVE: AUGUST 6, 2012 TO August 4, 2013
EFFECTIVE: AUGUST 6, 2012 TO August 4, 2013

EFFECTIVE: AUGUST 6, 2012 TO August 4, 2013
EFFECTIVE: AUGUST 6, 2012 TO August 4, 2013

DRAWN BY: MARK SUJKA

NOTES

1. See Standard Plan C-1b for additional details.
2. One-way traffic layouts are identical to the two-way layout with the exception that only the posts trailing the span need to be CRT's with double blocks.

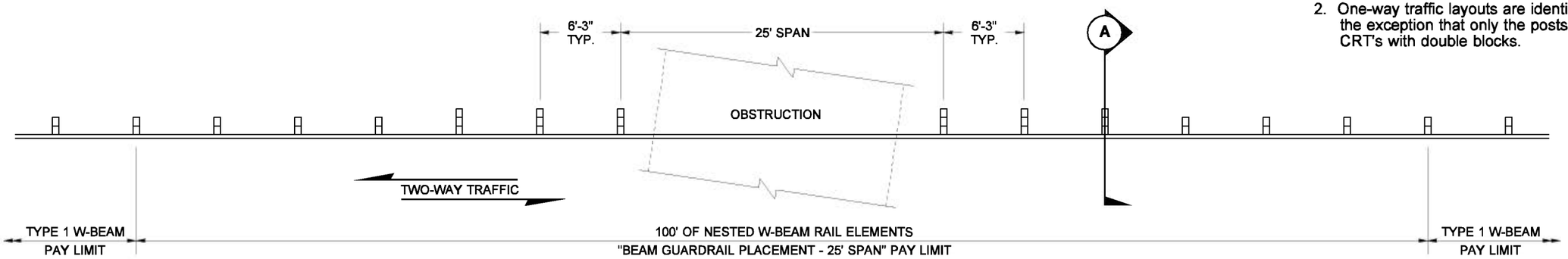

PLAN

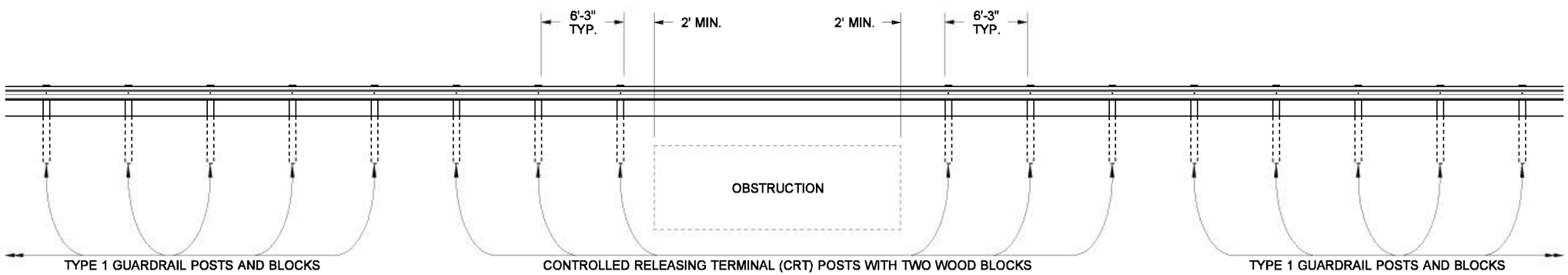

ELEVATION

CASE 21

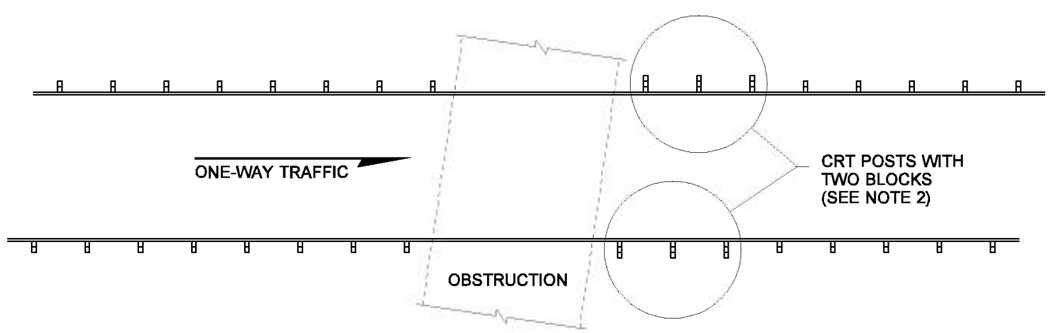

ONE-WAY TRAFFIC LAYOUT

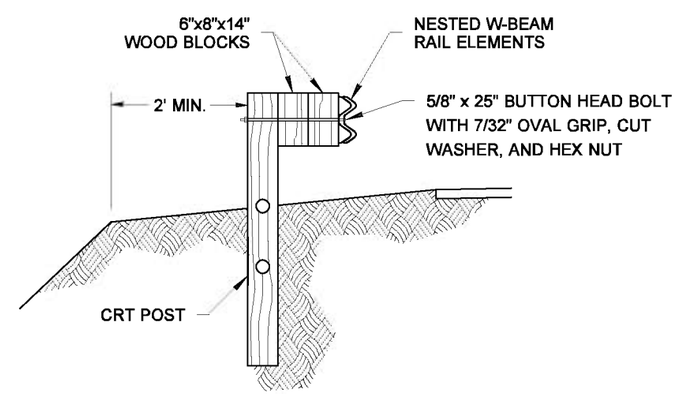

SECTION A

EXPIRES MAY 3, 2002

NOTE: THIS PLAN IS NOT A LEGAL ENGINEERING DOCUMENT BUT AN ELECTRONIC DUPLICATE. THE ORIGINAL, SIGNED BY THE ENGINEER AND APPROVED FOR PUBLICATION, IS KEPT ON FILE AT THE WASHINGTON STATE DEPARTMENT OF TRANSPORTATION. A COPY MAY BE OBTAINED UPON REQUEST.

GUARDRAIL PLACEMENT 25' SPAN

STANDARD PLAN C-2o

APPROVED FOR PUBLICATION

Clifford E. Mansfield — STATE DESIGN ENGINEER

07-13-01 — DATE

Washington State Department of Transportation

EFFECTIVE: AUGUST 6, 2012 TO August 4, 2013
EFFECTIVE: AUGUST 6, 2012 TO August 4, 2013
EFFECTIVE: AUGUST 6, 2012 TO August 4, 2013
EFFECTIVE: AUGUST 6, 2012 TO August 4, 2013

EFFECTIVE: AUGUST 6, 2012 TO August 4, 2013

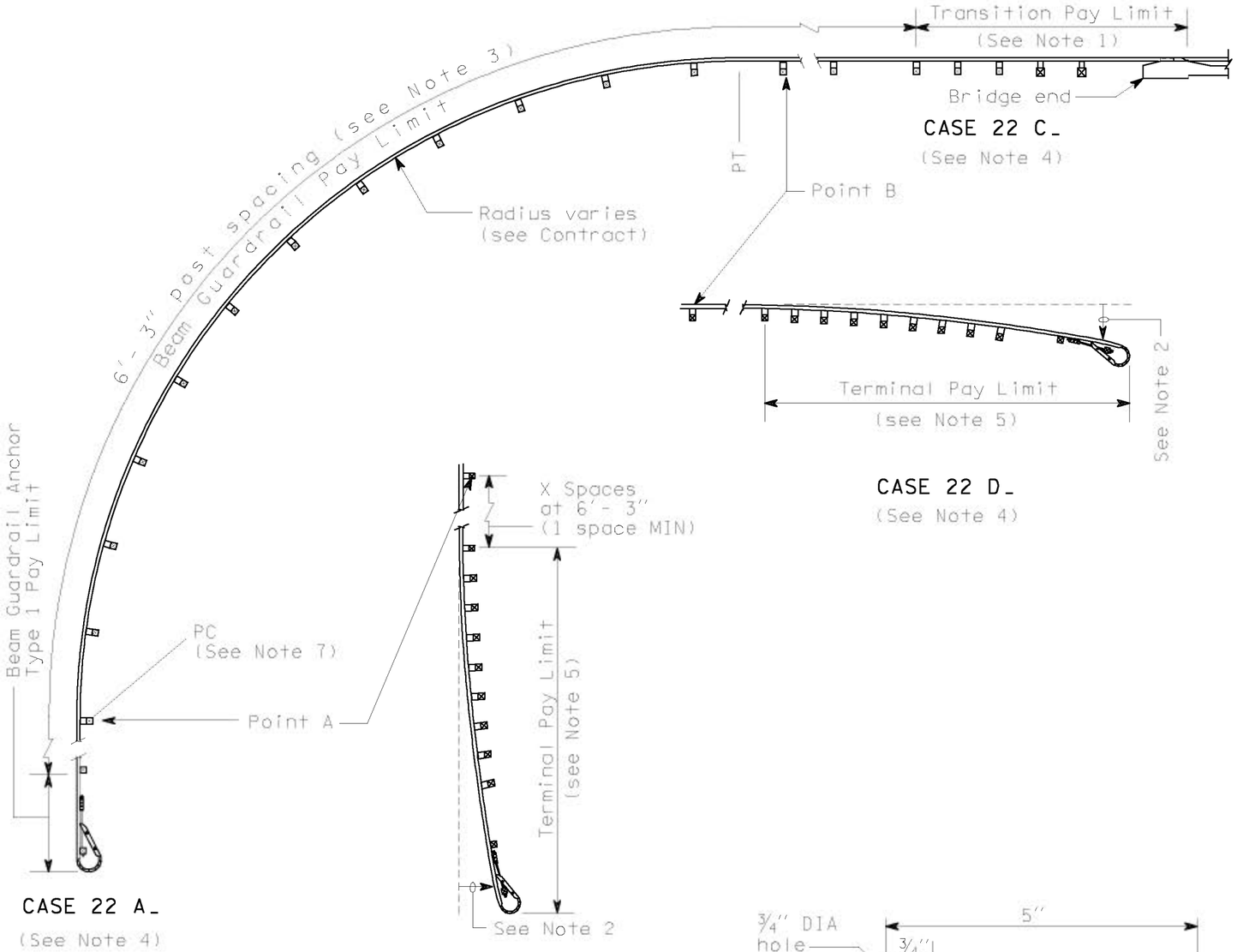

NOTES

1. See Contract for transition and connection type.
2. The slope from the edge of the shoulder into the face of the guardrail should not be steeper than 10:1.
3. Guardrail installation shall be Beam Guardrail Type 1 with standard post and block.
4. First letter of case designation indicates end treatment on side road. Second letter indicates end treatment on main road. For instance a terminal on the side road and a bridge connection on the main road would be Case 22 BC.
5. For terminal type and details, see Contract and applicable Standard Plan(s).
6. Radius dimensions shall be etched into plate replacing the letters "HH" shown on the Identification Plate Detail. Digits shall be 1½" MIN height and ¾" MAX width. Plate shall be galvanized after etching.
7. The guardrail Identification Plate shall be mounted at the lower splice bolt on the back side of the rail element at the PC of the guardrail radius.

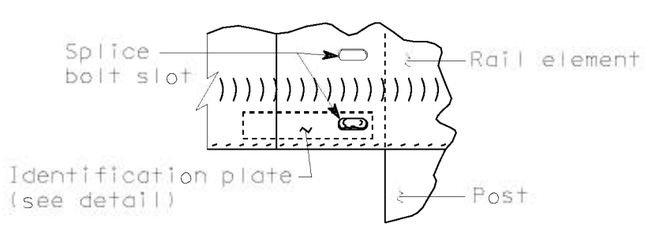

IDENTIFICATION PLATE MOUNTING DETAIL
(See Note 7)

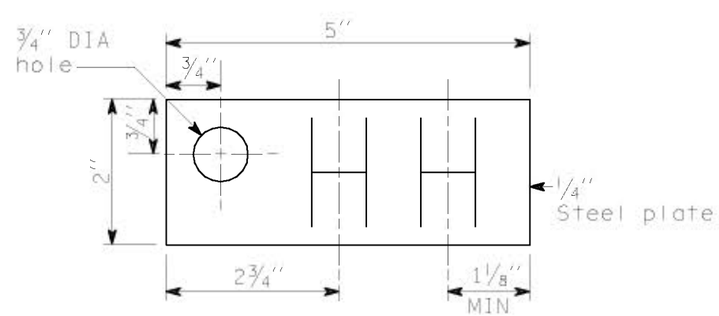

IDENTIFICATION PLATE DETAIL
(See Note 6)

EXPIRES JULY 24, 2004

NOTE: THIS PLAN IS NOT A LEGAL ENGINEERING DOCUMENT BUT AN ELECTRONIC DUPLICATE. THE ORIGINAL, SIGNED BY THE ENGINEER AND APPROVED FOR PUBLICATION, IS KEPT ON FILE AT THE WASHINGTON STATE DEPARTMENT OF TRANSPORTATION. A COPY MAY BE OBTAINED UPON REQUEST.

GUARDRAIL PLACEMENT
STRONG POST
INTERSECTION DESIGN
STANDARD PLAN C-2p

SHEET 1 OF 1 SHEET

APPROVED FOR PUBLICATION

Harold J. Peterfeso — STATE DESIGN ENGINEER
10-31-03 — DATE

Washington State Department of Transportation

DATE	REVISION	BY
09/2003	CORRECTED REFERENCES TO NOTES.	MHG

EFFECTIVE: AUGUST 6, 2012 TO August 4, 2013

EFFECTIVE: AUGUST 6, 2012 TO August 4, 2013
EFFECTIVE: AUGUST 6, 2012 TO August 4, 2013

DRAWN BY: TERN LIDDELL

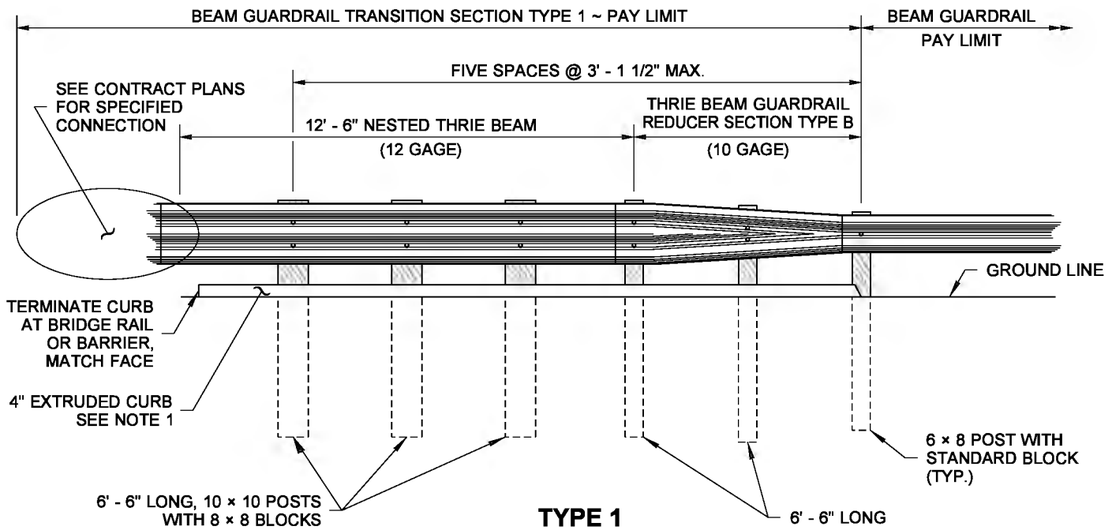

TYPE 1

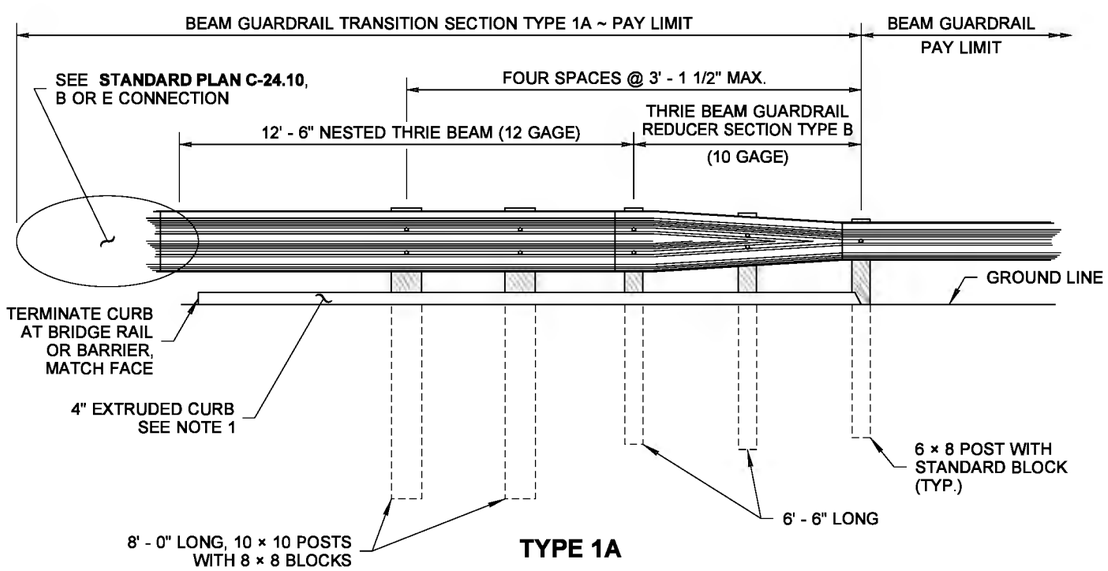

TYPE 1A

NOTE

1. Install Extruded Curb at face of Guardrail. See **Standard Plan F-10.40** for details.

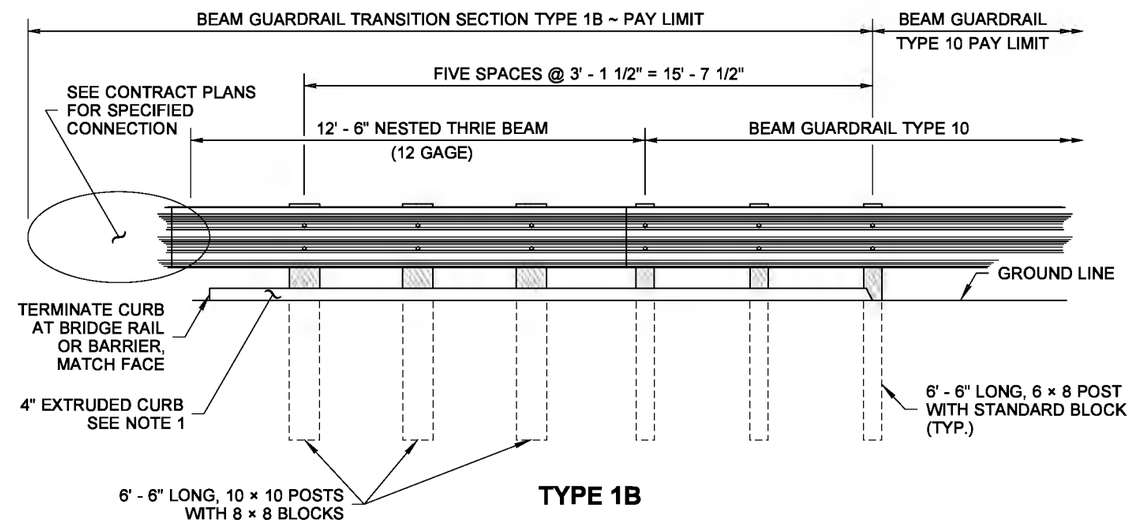

TYPE 1B

NOTE: THIS PLAN IS NOT A LEGAL ENGINEERING DOCUMENT BUT AN ELECTRONIC DUPLICATE. THE ORIGINAL, SIGNED BY THE ENGINEER AND APPROVED FOR PUBLICATION, IS KEPT ON FILE AT THE WASHINGTON STATE DEPARTMENT OF TRANSPORTATION. A COPY MAY BE OBTAINED UPON REQUEST.

BEAM GUARDRAIL TRANSITION SECTIONS

STANDARD PLAN C-3

SHEET 1 OF 1 SHEET

APPROVED FOR PUBLICATION

Pasco Bakotich III — STATE DESIGN ENGINEER

07/2/12 — DATE

Washington State Department of Transportation

EFFECTIVE: AUGUST 6, 2012 TO August 4, 2013
EFFECTIVE: AUGUST 6, 2012 TO August 4, 2013
EFFECTIVE: AUGUST 6, 2012 TO August 4, 2013
EFFECTIVE: AUGUST 6, 2012 TO August 4, 2013

EFFECTIVE: AUGUST 6, 2012 TO August 4, 2013
EFFECTIVE: AUGUST 6, 2012 TO August 4, 2013

DRAWN BY: MARK SUJKA

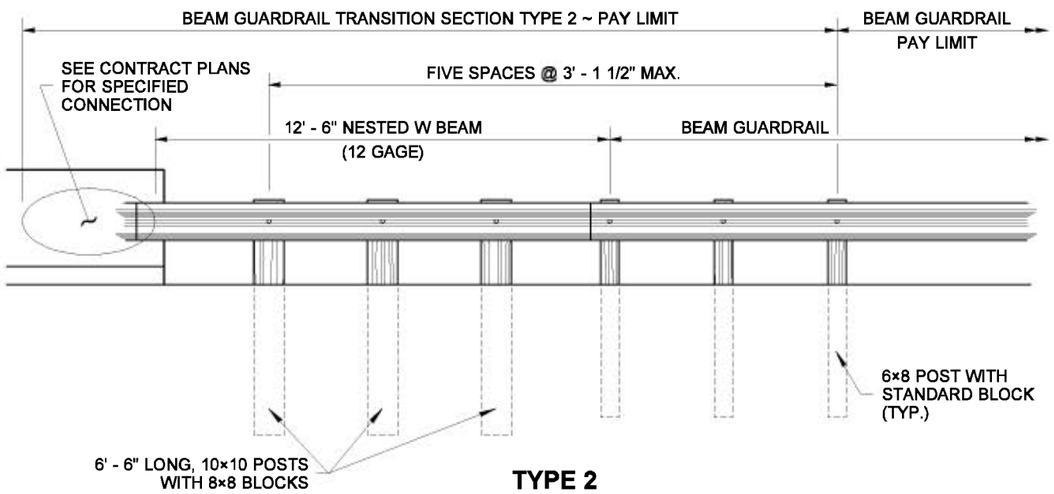

TYPE 2

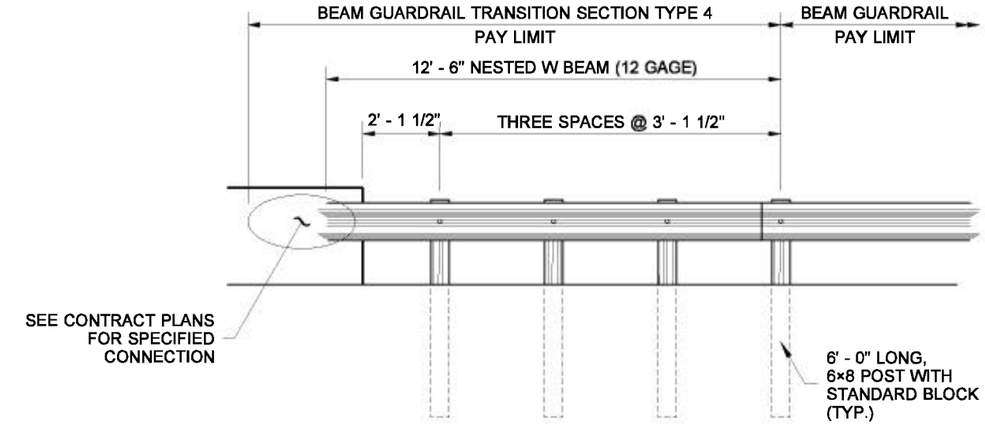

TYPE 4
FOR 45 MPH AND BELOW

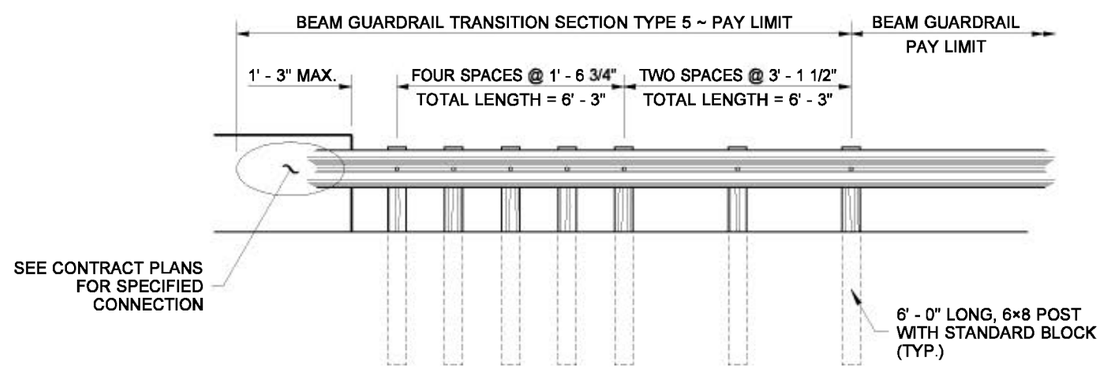

TYPE 5

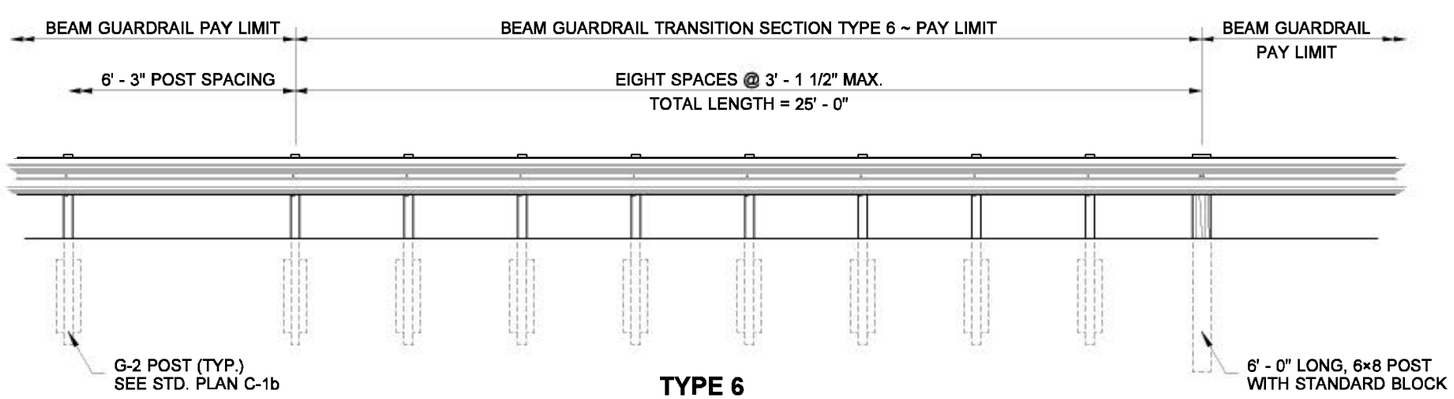

TYPE 6

EXPIRES JULY 24, 2006

NOTE: THIS PLAN IS NOT A LEGAL ENGINEERING DOCUMENT BUT AN ELECTRONIC DUPLICATE. THE ORIGINAL, SIGNED BY THE ENGINEER AND APPROVED FOR PUBLICATION, IS KEPT ON FILE AT THE WASHINGTON STATE DEPARTMENT OF TRANSPORTATION. A COPY MAY BE OBTAINED UPON REQUEST.

BEAM GUARDRAIL TRANSITION SECTIONS

STANDARD PLAN C-3a

SHEET 1 OF 1 SHEET

APPROVED FOR PUBLICATION

Harold J. Peterfeso — STATE DESIGN ENGINEER
10-04-05 — DATE

Washington State Department of Transportation

EFFECTIVE: AUGUST 6, 2012 TO August 4, 2013
EFFECTIVE: AUGUST 6, 2012 TO August 4, 2013
EFFECTIVE: AUGUST 6, 2012 TO August 4, 2013
EFFECTIVE: AUGUST 6, 2012 TO August 4, 2013

EFFECTIVE: AUGUST 6, 2012 TO August 4, 2013
EFFECTIVE: AUGUST 6, 2012 TO August 4, 2013

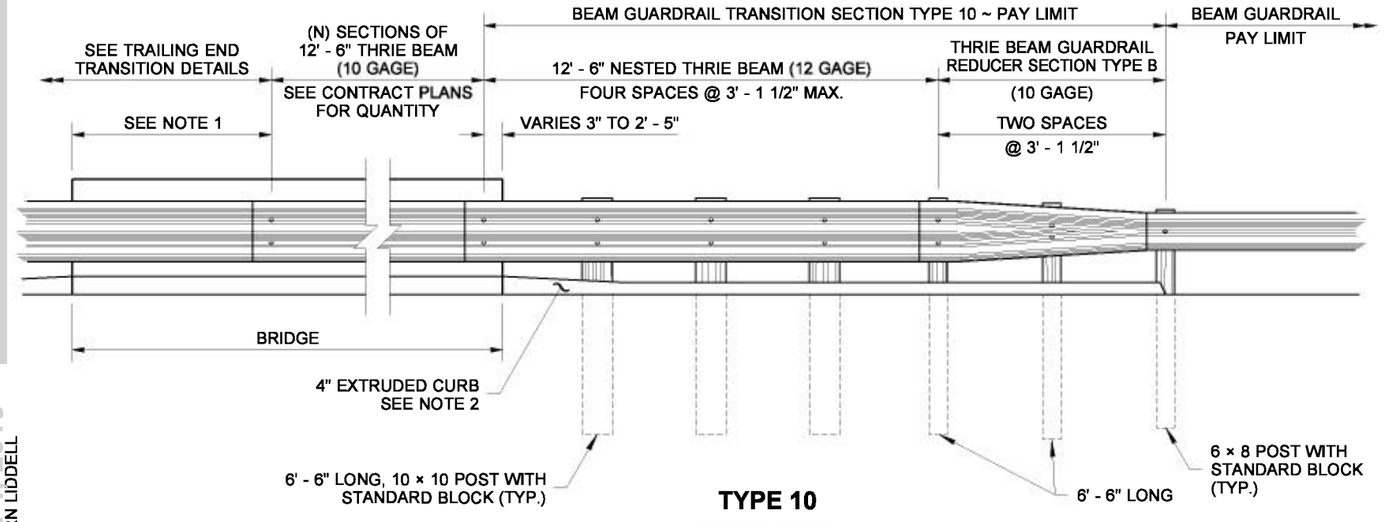

TYPE 10

APPROACH END

THRIE BEAM INSTALLED AT FACE OF BRIDGE CURB

NOTES

1. If the distance from the end of the bridge to the end of the thrie beam bridge rail section exceeds 6' - 3" using 12' - 6" thrie beam sections, add a 6' - 3" section of thrie beam bridge rail to reduce the length to less than 6' - 3".

2. When thrie beam is installed at the face of the bridge curb, install Extruded Curb at face of Guardrail. See **Standard Plan F-10.40** for details. Match the height of existing bridge curb with a 20H : 1V transition.

3. When thrie beam is installed at the face of rigid bridge rail, an HMA ramp is required from the roadway surface to the top of the bridge curb or sidewalk. The slope of the ramp shall be 20H : 1V or flatter.

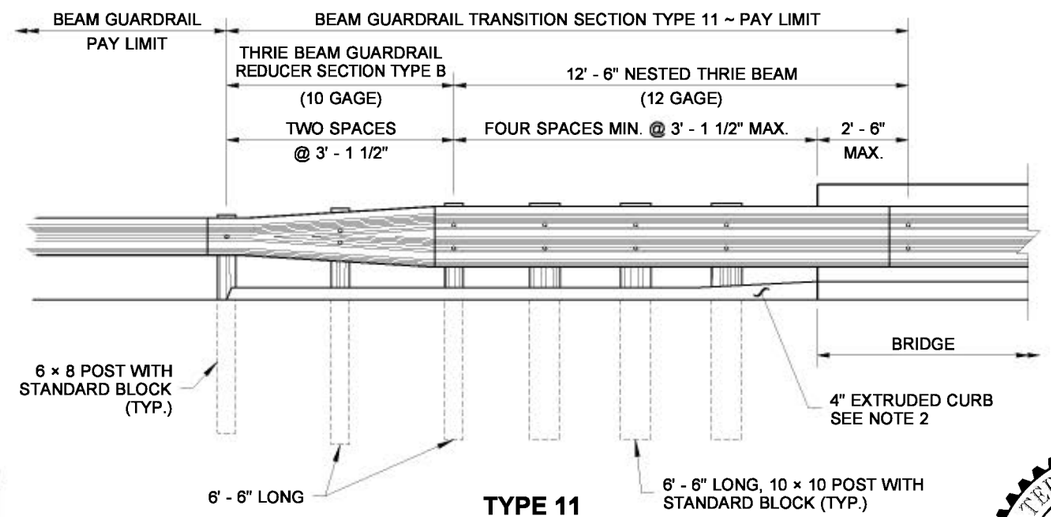

TYPE 11

TRAILING END

THRIE BEAM INSTALLED AT FACE OF BRIDGE CURB

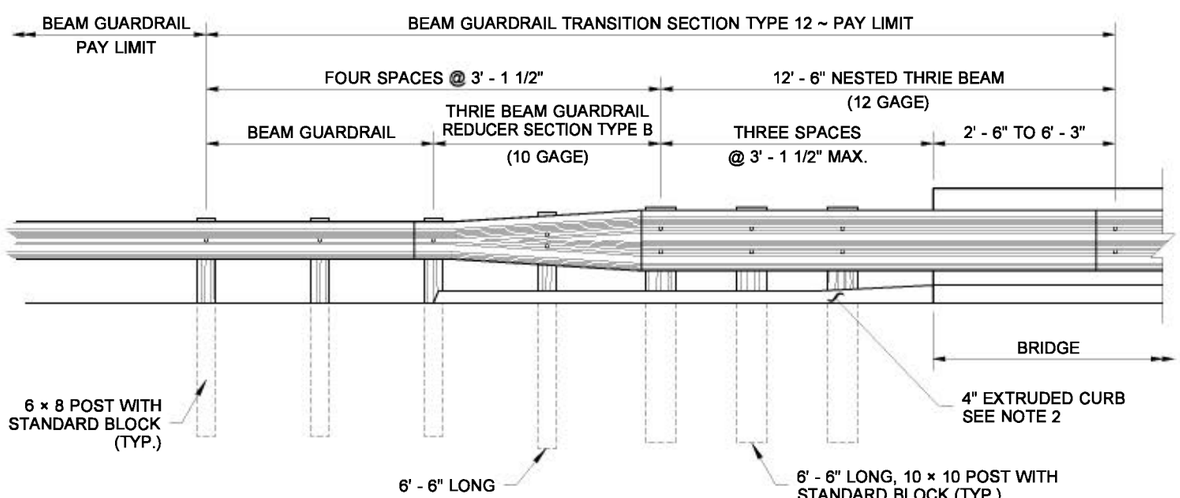

TYPE 12

TRAILING END

THRIE BEAM INSTALLED AT FACE OF BRIDGE CURB

NOTE: THIS PLAN IS NOT A LEGAL ENGINEERING DOCUMENT BUT AN ELECTRONIC DUPLICATE. THE ORIGINAL, SIGNED BY THE ENGINEER AND APPROVED FOR PUBLICATION, IS KEPT ON FILE AT THE WASHINGTON STATE DEPARTMENT OF TRANSPORTATION. A COPY MAY BE OBTAINED UPON REQUEST.

BEAM GUARDRAIL TRANSITION SECTIONS

STANDARD PLAN C-3b

SHEET 1 OF 2 SHEETS

APPROVED FOR PUBLICATION

Pasco Bakotich III — STATE DESIGN ENGINEER

06-27-11 — DATE

Washington State Department of Transportation

DRAWN BY: FERN LIDDELL

EFFECTIVE: AUGUST 6, 2012 TO August 4, 2013
EFFECTIVE: AUGUST 6, 2012 TO August 4, 2013
EFFECTIVE: AUGUST 6, 2012 TO August 4, 2013
EFFECTIVE: AUGUST 6, 2012 TO August 4, 2013

EFFECTIVE: AUGUST 6, 2012 TO August 4, 2013
EFFECTIVE: AUGUST 6, 2012 TO August 4, 2013

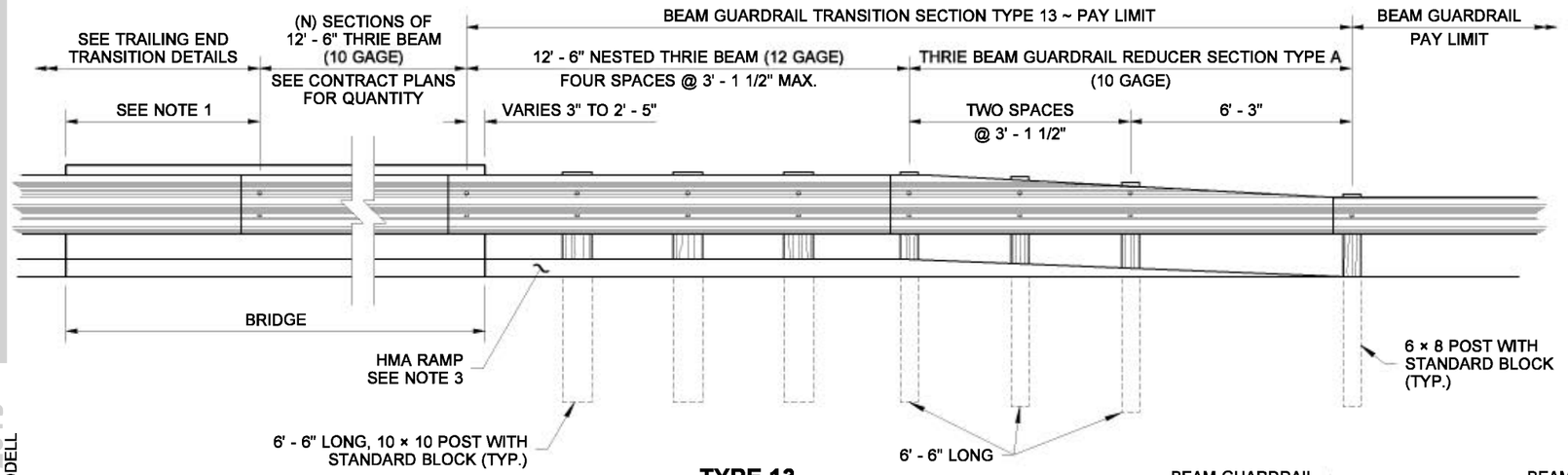

TYPE 13

APPROACH END

THRIE BEAM INSTALLED AT FACE OF BRIDGE RAIL

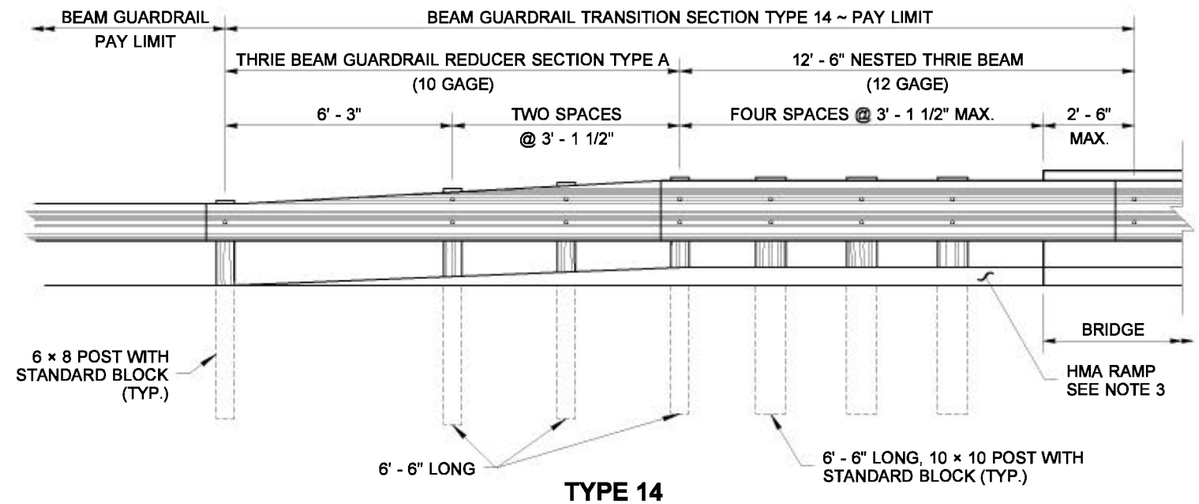

TYPE 14

TRAILING END

THRIE BEAM INSTALLED AT FACE OF BRIDGE RAIL

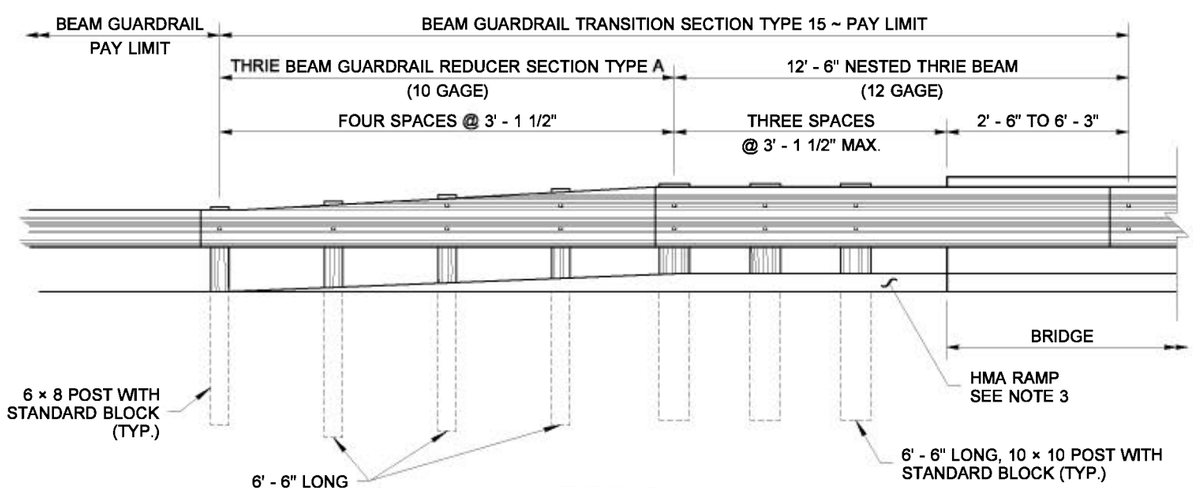

TYPE 15

TRAILING END

THRIE BEAM INSTALLED AT FACE OF BRIDGE RAIL

NOTE: THIS PLAN IS NOT A LEGAL ENGINEERING DOCUMENT BUT AN ELECTRONIC DUPLICATE. THE ORIGINAL, SIGNED BY THE ENGINEER AND APPROVED FOR PUBLICATION, IS KEPT ON FILE AT THE WASHINGTON STATE DEPARTMENT OF TRANSPORTATION. A COPY MAY BE OBTAINED UPON REQUEST.

DRAWN BY: FERN LIDDELL

BEAM GUARDRAIL TRANSITION SECTIONS

STANDARD PLAN C-3b

SHEET 2 OF 2 SHEETS

APPROVED FOR PUBLICATION

Pasco Bakotich III — STATE DESIGN ENGINEER

06-27-11 — DATE

Washington State Department of Transportation

EFFECTIVE: AUGUST 6, 2012 TO August 4, 2013
EFFECTIVE: AUGUST 6, 2012 TO August 4, 2013
EFFECTIVE: AUGUST 6, 2012 TO August 4, 2013
EFFECTIVE: AUGUST 6, 2012 TO August 4, 2013

EFFECTIVE: AUGUST 6, 2012 TO August 4, 2013

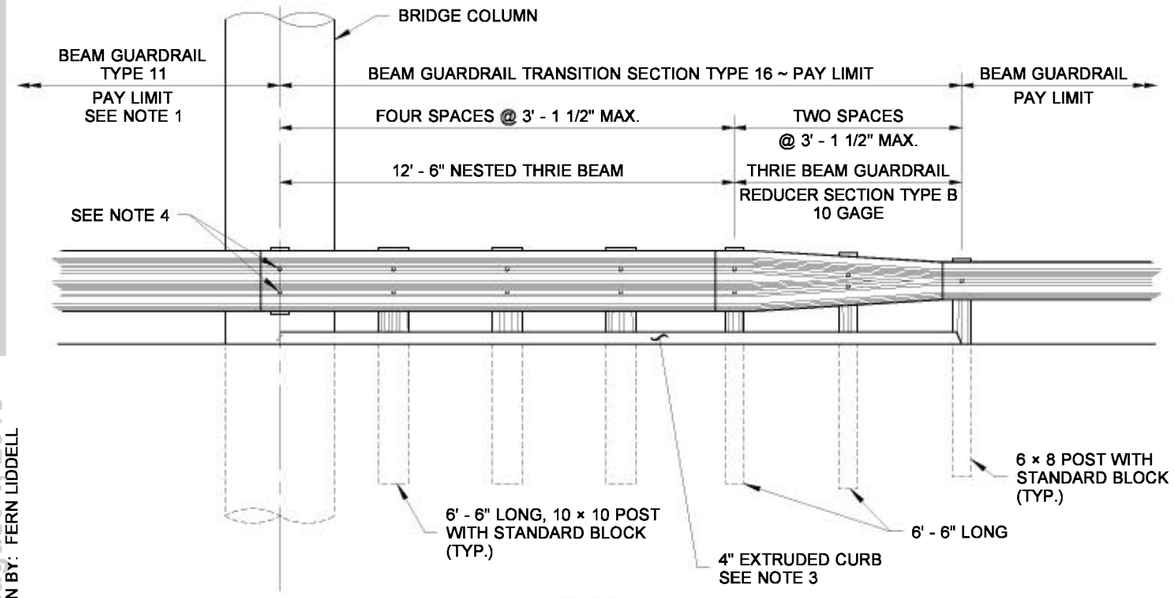

TYPE 16

APPROACH END

DRAWN BY: FERN LIDDELL

NOTES

1. See Contract for the number of thrie beam sections for Beam Guardrail Type 11.
2. If the distance from the end of the Beam Guardrail Type 11 to the column/structure exceeds 6' - 3" using 12' - 6" thrie beam sections, add a 6' - 3" nested section of thrie beam to reduce the distance to less than 6' - 3".
3. Install Extruded Curb (See **Standard Plan F-10.40)** at face of Guardrail.
4. Attach the standard block to the rail using two 5/8" × 4" lag bolts.

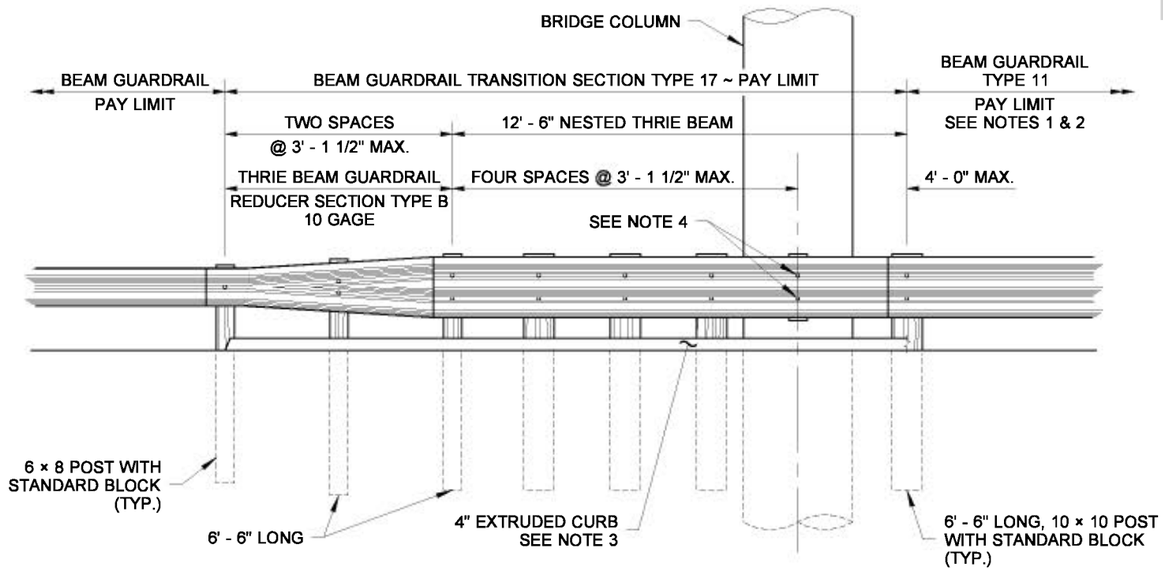

TYPE 17

TRAILING END

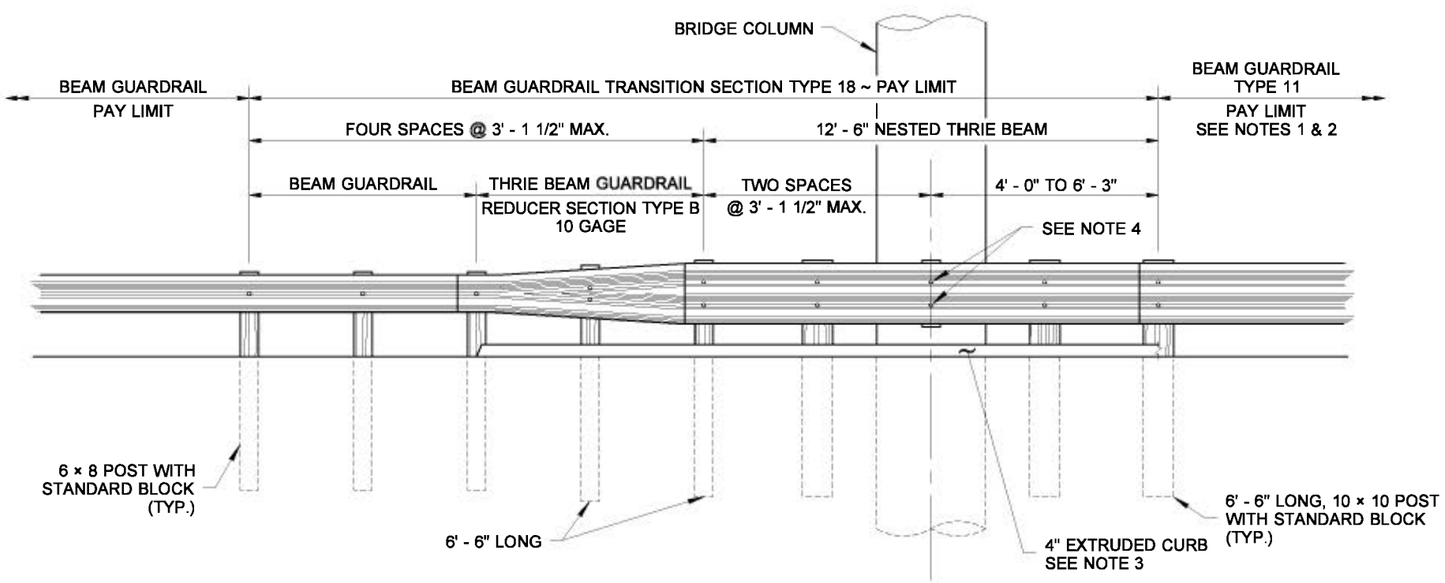

TYPE 18

TRAILING END

NOTE: THIS PLAN IS NOT A LEGAL ENGINEERING DOCUMENT BUT AN ELECTRONIC DUPLICATE. THE ORIGINAL, SIGNED BY THE ENGINEER AND APPROVED FOR PUBLICATION, IS KEPT ON FILE AT THE WASHINGTON STATE DEPARTMENT OF TRANSPORTATION. A COPY MAY BE OBTAINED UPON REQUEST.

BEAM GUARDRAIL TRANSITION SECTIONS

STANDARD PLAN C-3c

SHEET 1 OF 1 SHEET

APPROVED FOR PUBLICATION

Pasco Bakotich III — STATE DESIGN ENGINEER

06-27-11 — DATE

Washington State Department of Transportation

EFFECTIVE: AUGUST 6, 2012 TO August 4, 2013

EFFECTIVE: AUGUST 6, 2012 TO August 4, 2013
EFFECTIVE: AUGUST 6, 2012 TO August 4, 2013

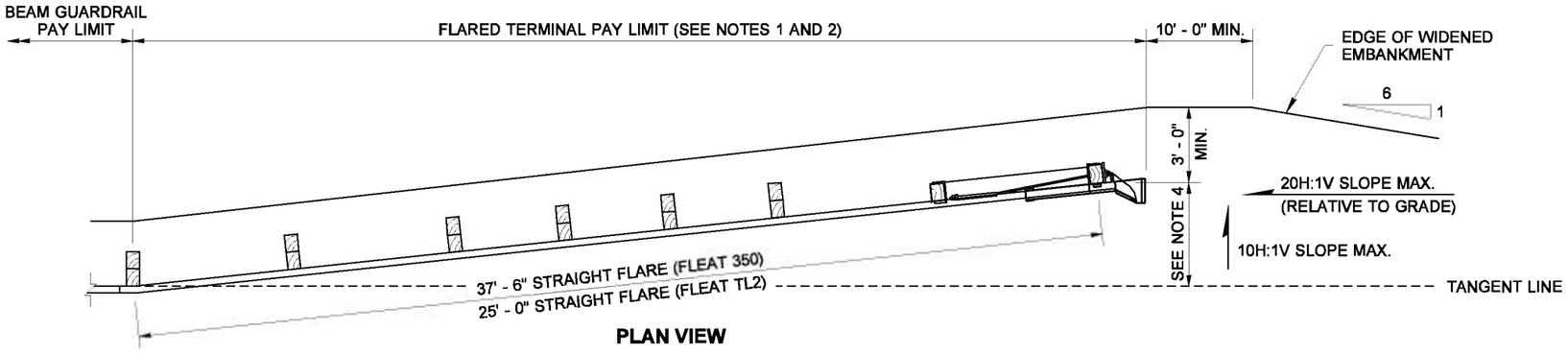

PLAN VIEW

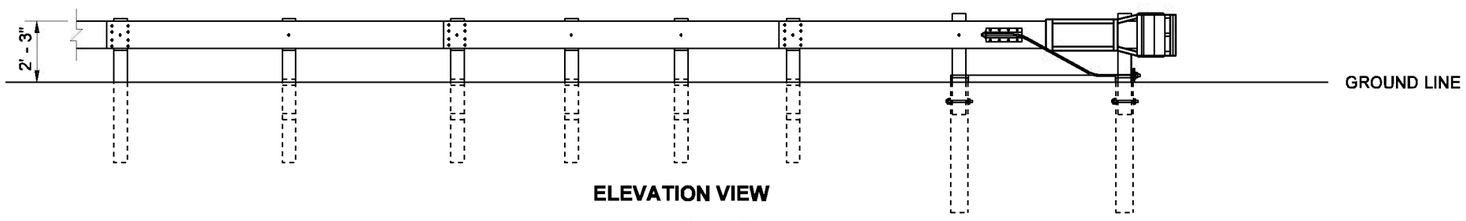

ELEVATION VIEW

FLEAT OPTION

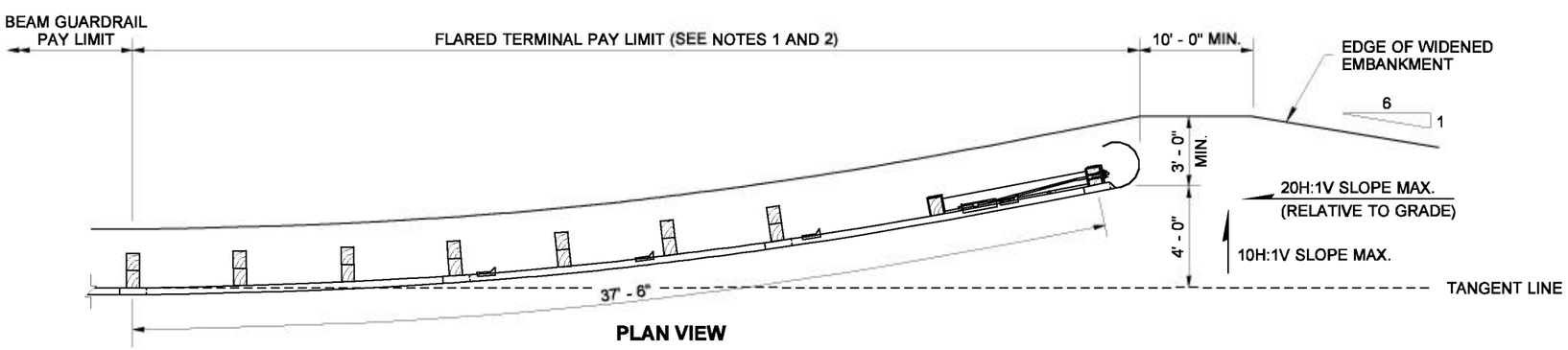

PLAN VIEW

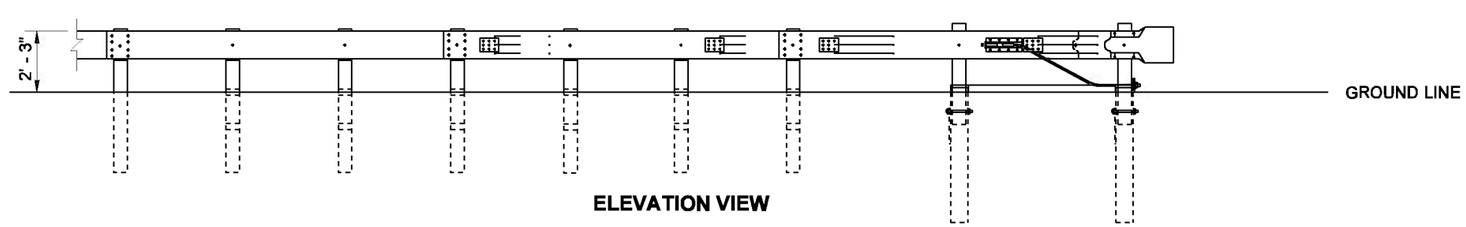

ELEVATION VIEW

SRT OPTION

NOTES

1. Unless otherwise indicated in the contract, the SRT - 350 (12.5, 8 Post) as manufactured by Trinity Industries, Inc., or a FLEAT 350 as manufactured by Road Systems Inc., shall be installed per manufacturer's recommendations. If specified in the Contract, the FLEAT TL2 as manufactured by Road Systems, Inc. shall be installed per manufacturers recommendations.
2. Where terminal is placed on a curve, and post offsets would result in the rail encroaching onto the shoulder (e.g., the inside of a curve), the posts shall be installed so that the faceof the rail is at the edge of the shoulder.
3. When snow load post washers and snow load rail washers are called for in the contract, the snow load rail washers must be omitted within the terminal limits.
4. Offset distances:
   FLEAT 350 ..... 4' - 0"
   FLEAT TL2 ..... 1' - 8" minimum

RICHARD BARSTOW ALBIN
STATE OF WASHINGTON
34042
REGISTERED
PROFESSIONAL ENGINEER
EXPIRES JULY 24, 2006

NOTE: THIS PLAN IS NOT A LEGAL ENGINEERING DOCUMENT BUT AN ELECTRONIC DUPLICATE. THE ORIGINAL, SIGNED BY THE ENGINEER AND APPROVED FOR PUBLICATION, IS KEPT ON FILE AT THE WASHINGTON STATE DEPARTMENT OF TRANSPORTATION. A COPY MAY BE OBTAINED UPON REQUEST.

BEAM GUARDRAIL FLARED TERMINAL

STANDARD PLAN C-4b

SHEET 1 OF 1 SHEET

APPROVED FOR PUBLICATION

Harold J. Peterfeso — STATE DESIGN ENGINEER — *06-08-06* — DATE

Washington State Department of Transportation

DATE	REVISION	BY
04/2006	Revised FLEAT Flare Lengths	AMC

EFFECTIVE: AUGUST 6, 2012 TO August 4, 2013
EFFECTIVE: AUGUST 6, 2012 TO August 4, 2013
EFFECTIVE: AUGUST 6, 2012 TO August 4, 2013
EFFECTIVE: AUGUST 6, 2012 TO August 4, 2013

EFFECTIVE: AUGUST 6, 2012 TO August 4, 2013
EFFECTIVE: AUGUST 6, 2012 TO August 4, 2013

NOTES

1. An ET-PLUS (TL3) as manufactured by Trinity Industries, Inc. or an SKT-350 as manufactured by Road Systems Inc. shall be installed according to manufacturer's recommendations. When a TL2 terminal is specified in the contract an ET-PLUS (TL2) as manufactured by Trinity Industries, Inc., or an SKT-TL2 as manufactured by Road Systems, Inc. shall be installed according to manufacturer's recommendations.

2. A reflectorized object marker shall be installed according to manufacturer's recommendations.

3. When snow load post washers and snow load rail washers are required by the contract, the snow load rail washers must not be installed within the terminal limits.

4. Terminal shall be installed at a taper, ensuring that end piece is entirely off shoulder.

5. Length for ET-PLUS (TL3) and SKT-350 is 50'. Length for ET-PLUS (TL2) and SKT-TL2 is 25'.

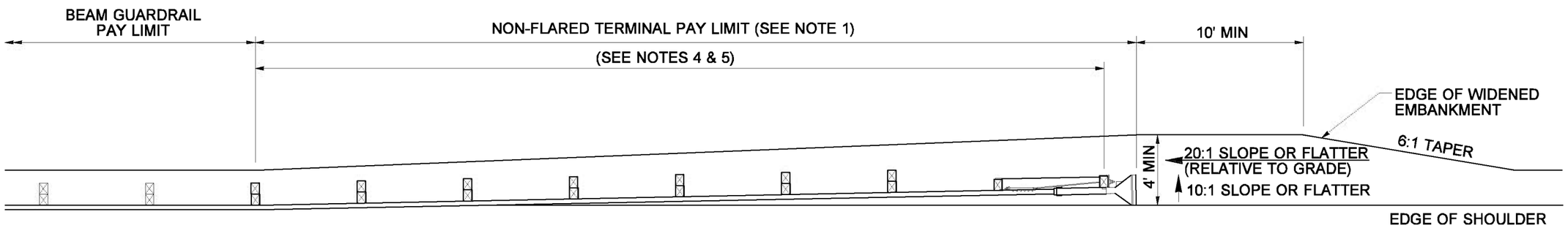

PLAN

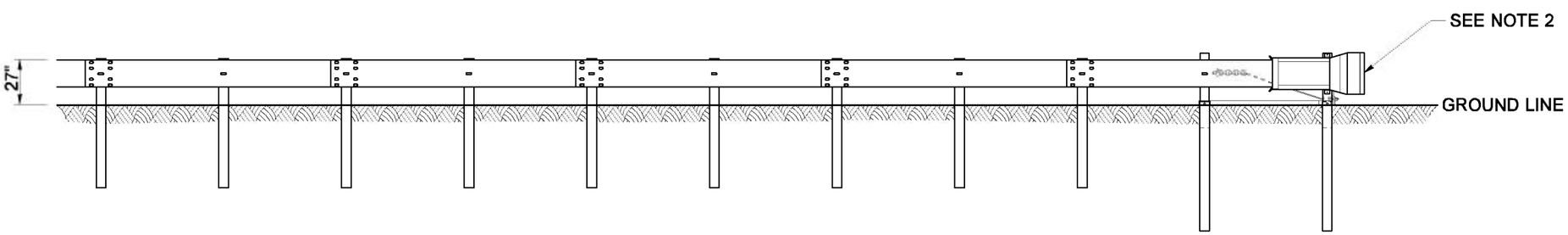

ELEVATION

EXPIRES JULY 24, 2004

NOTE: THIS PLAN IS NOT A LEGAL ENGINEERING DOCUMENT BUT AN ELECTRONIC DUPLICATE. THE ORIGINAL, SIGNED BY THE ENGINEER AND APPROVED FOR PUBLICATION, IS KEPT ON FILE AT THE WASHINGTON STATE DEPARTMENT OF TRANSPORTATION. A COPY MAY BE OBTAINED UPON REQUEST.

BEAM GUARDRAIL
NON-FLARED TERMINAL

STANDARD PLAN C-4e

SHEET 1 OF 1 SHEET

APPROVED FOR PUBLICATION

Harold J. Peterfeso — STATE DESIGN ENGINEER
02-20-03 — DATE

Washington State Department of Transportation

DATE	REVISION	BY
01/2003	REVISED NOTES 1 & 5; ADDED SLOPES.	RG

EFFECTIVE: AUGUST 6, 2012 TO August 4, 2013
EFFECTIVE: AUGUST 6, 2012 TO August 4, 2013
EFFECTIVE: AUGUST 6, 2012 TO August 4, 2013
EFFECTIVE: AUGUST 6, 2012 TO August 4, 2013

EFFECTIVE: AUGUST 6, 2012 TO August 4, 2013
EFFECTIVE: AUGUST 6, 2012 TO August 4, 2013

DRAWN BY: TERN LIDDELL

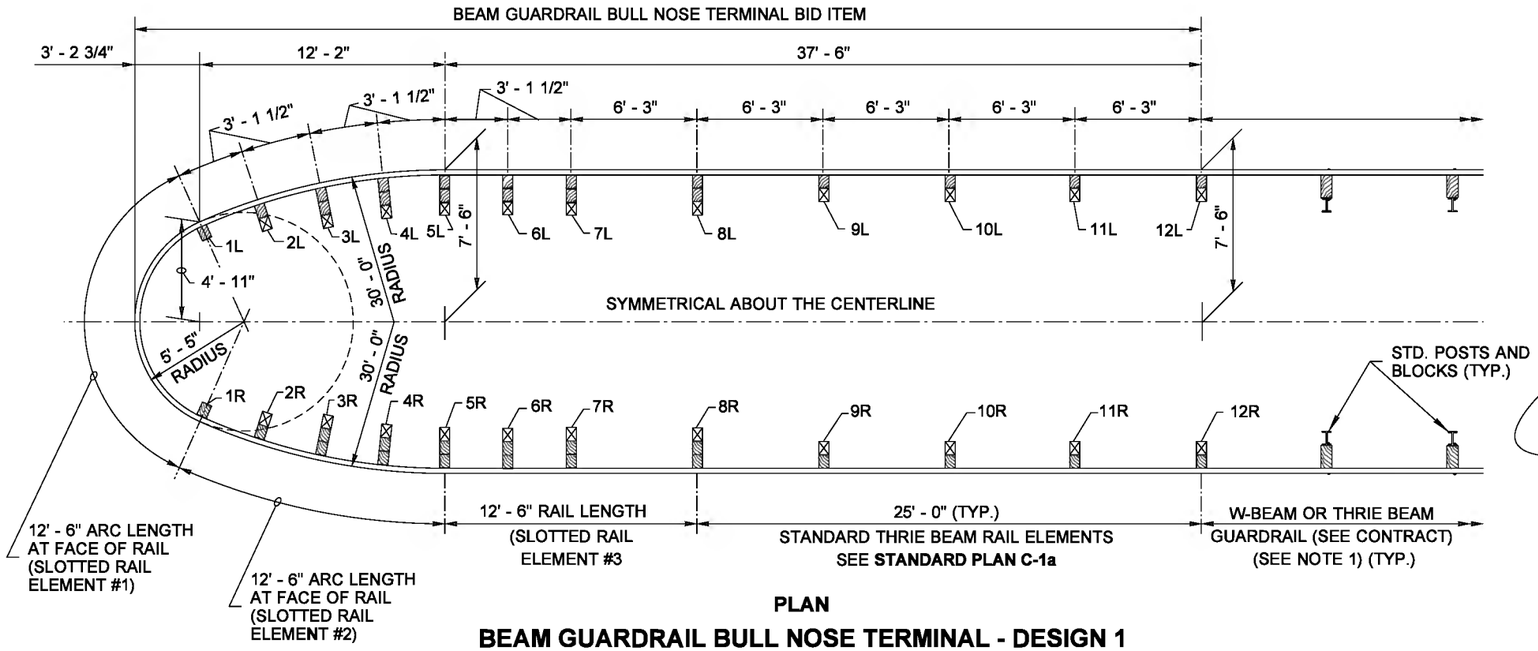

PLAN

BEAM GUARDRAIL BULL NOSE TERMINAL - DESIGN 1

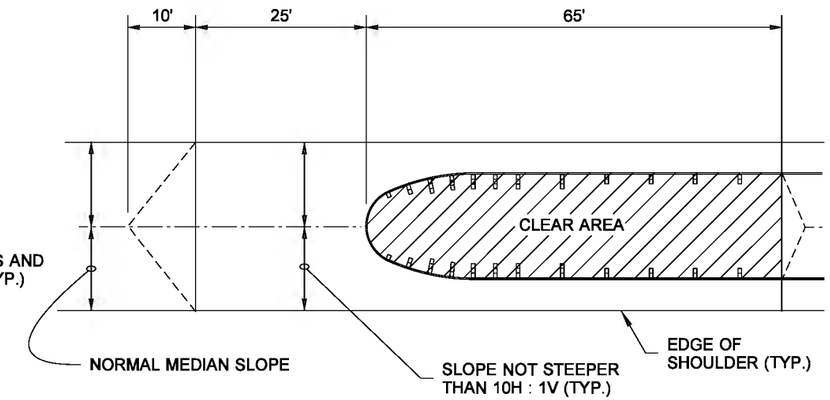

BULL NOSE GRADING PLAN

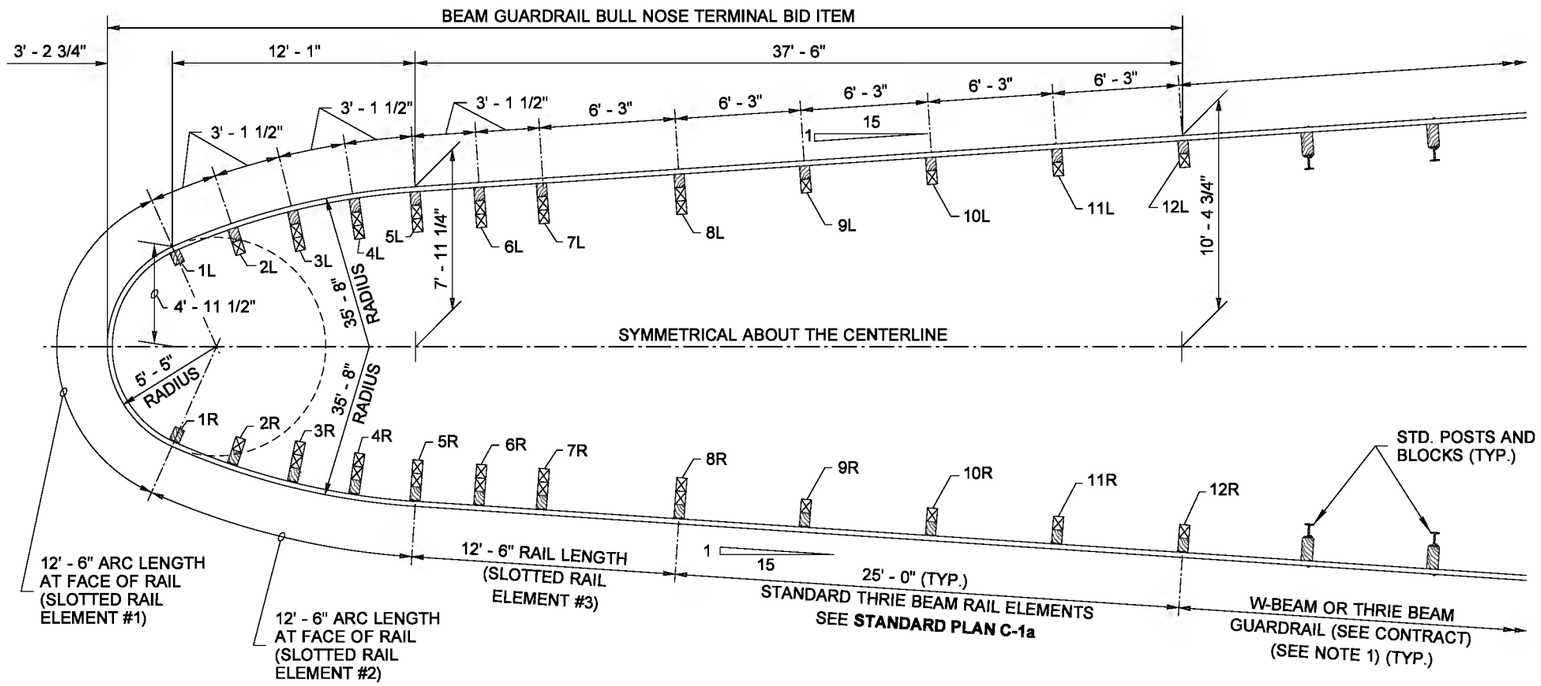

PLAN

BEAM GUARDRAIL BULL NOSE TERMINAL - DESIGN 2

NOTE

1. For W-Beam applications extend the rail from the bullnose terminal by using a "Reducer Element Type C" followed by a standard Post and Block, spaced at 3' - 1 1/2". Continue runs with standard 6' - 3" post spacing. For additional Details see **Standard Plans C-20.10 and C-25.20.**

NOTE: THIS PLAN IS NOT A LEGAL ENGINEERING DOCUMENT BUT AN ELECTRONIC DUPLICATE. THE ORIGINAL, SIGNED BY THE ENGINEER AND APPROVED FOR PUBLICATION, IS KEPT ON FILE AT THE WASHINGTON STATE DEPARTMENT OF TRANSPORTATION. A COPY MAY BE OBTAINED UPON REQUEST.

BEAM GUARDRAIL BULL NOSE TERMINAL

STANDARD PLAN C-4f

SHEET 1 OF 4 SHEETS

APPROVED FOR PUBLICATION

Pasco Bakotich III — STATE DESIGN ENGINEER

07/2/12 — DATE

Washington State Department of Transportation

EFFECTIVE: AUGUST 6, 2012 TO August 4, 2013
EFFECTIVE: AUGUST 6, 2012 TO August 4, 2013
EFFECTIVE: AUGUST 6, 2012 TO August 4, 2013
EFFECTIVE: AUGUST 6, 2012 TO August 4, 2013

EFFECTIVE: AUGUST 6, 2012 TO August 4, 2013
EFFECTIVE: AUGUST 6, 2012 TO August 4, 2013

DRAWN BY: FERN LIDDELL

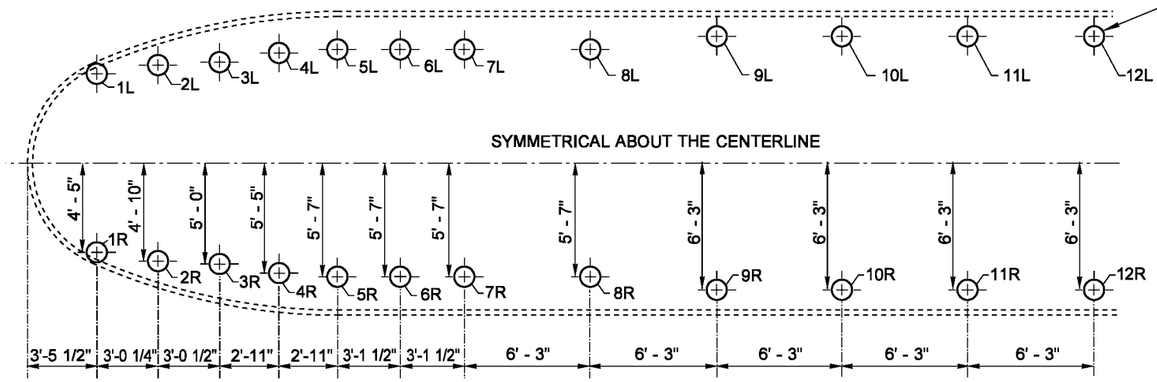

PLAN
GUARDRAIL POST LAYOUT - DESIGN 1

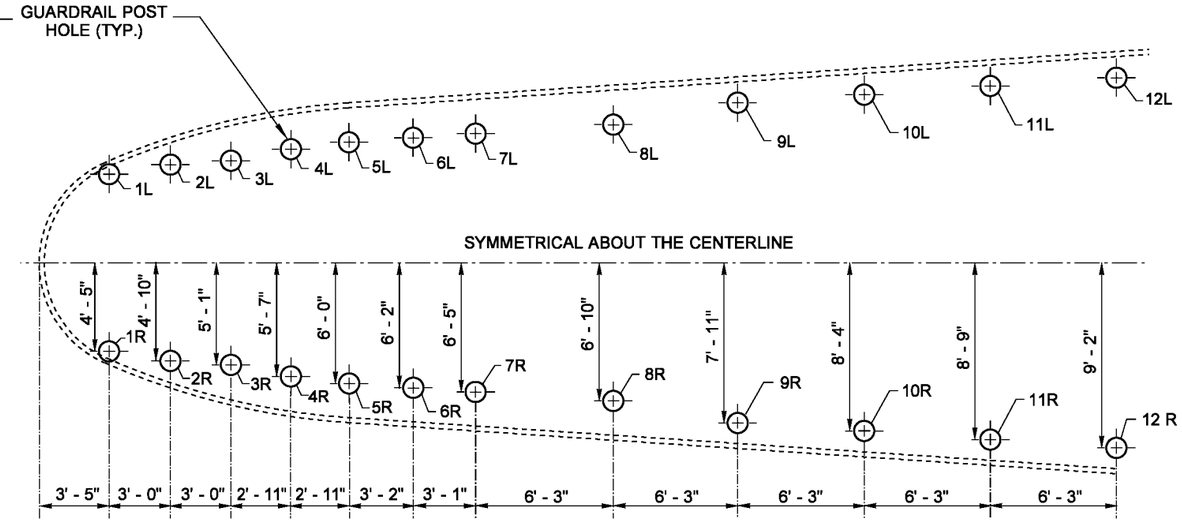

PLAN
GUARDRAIL POST LAYOUT - DESIGN 2

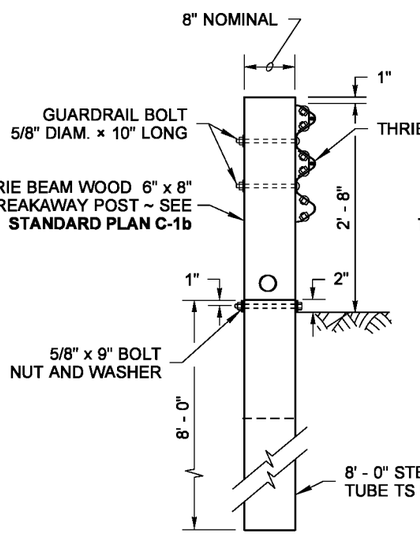

POST
1R & 1L

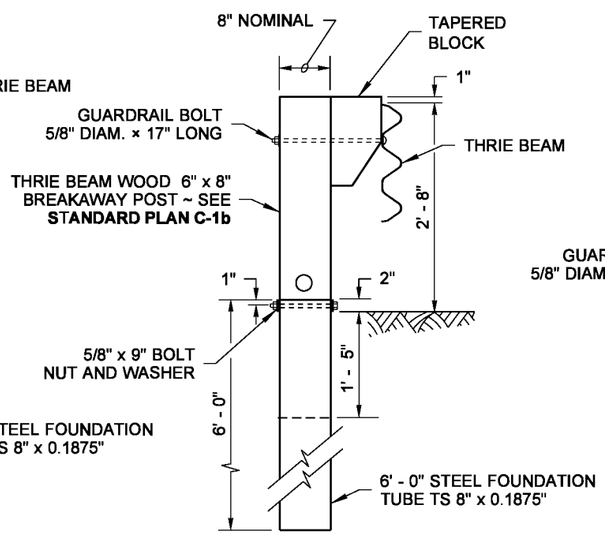

POST
2R & 2L

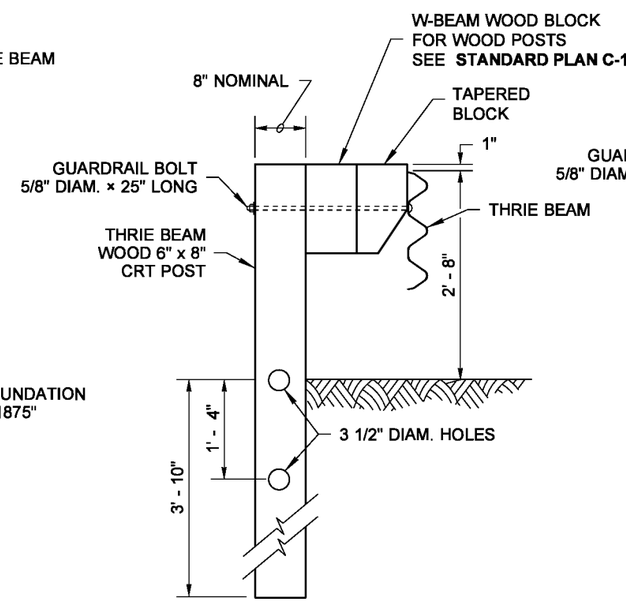

POST
3R TO 8R
3L TO 8L

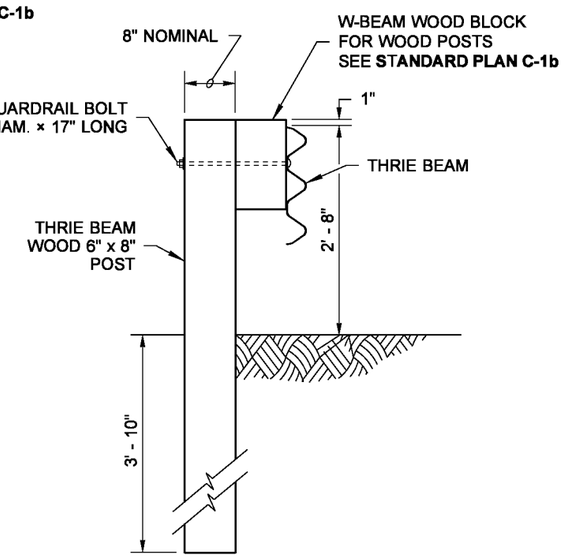

POST
9R TO 12R
9L TO 12L

NOTE : CABLE BEARING
PLATE NOT SHOWN

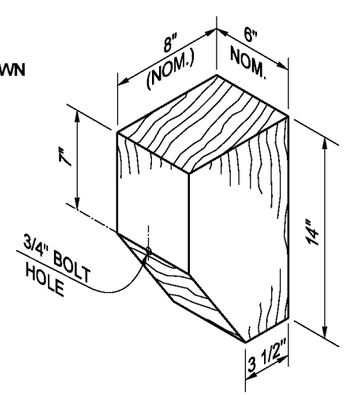

TAPERED BLOCK

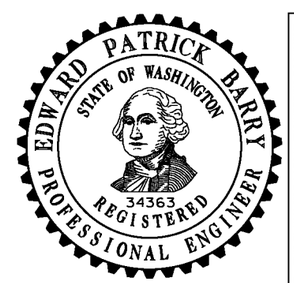

NOTE: THIS PLAN IS NOT A LEGAL ENGINEERING DOCUMENT BUT AN ELECTRONIC DUPLICATE. THE ORIGINAL, SIGNED BY THE ENGINEER AND APPROVED FOR PUBLICATION, IS KEPT ON FILE AT THE WASHINGTON STATE DEPARTMENT OF TRANSPORTATION. A COPY MAY BE OBTAINED UPON REQUEST.

BEAM GUARDRAIL
BULL NOSE TERMINAL

STANDARD PLAN C-4f

SHEET 2 OF 4 SHEETS

APPROVED FOR PUBLICATION

Pasco Bakotich III — STATE DESIGN ENGINEER
07/2/12 — DATE

Washington State Department of Transportation

EFFECTIVE: AUGUST 6, 2012 TO August 4, 2013
EFFECTIVE: AUGUST 6, 2012 TO August 4, 2013
EFFECTIVE: AUGUST 6, 2012 TO August 4, 2013
EFFECTIVE: AUGUST 6, 2012 TO August 4, 2013

EFFECTIVE: AUGUST 6, 2012 TO August 4, 2013
EFFECTIVE: AUGUST 6, 2012 TO August 4, 2013

DRAWN BY: FERN LIDDELL

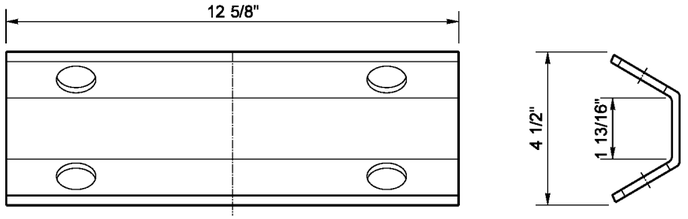

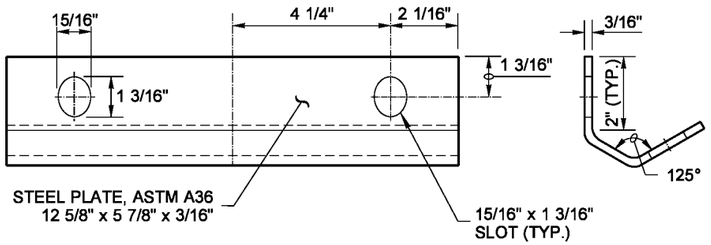

NOSE CABLE ANCHOR PLATE

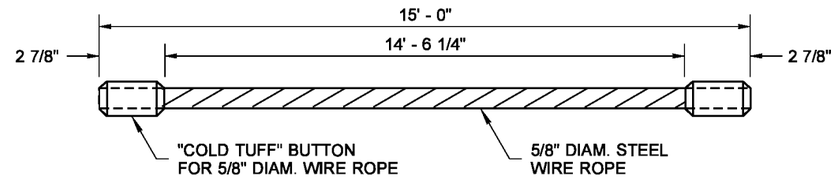

NOSE CABLE

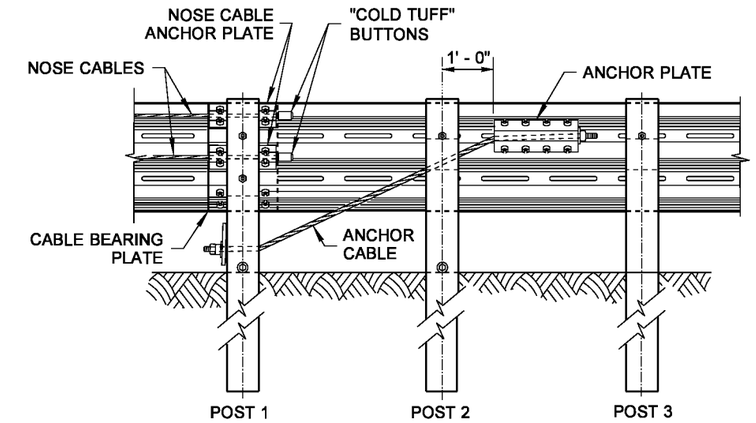

CABLE ANCHOR & BRACKET ASSEMBLY

FOR ANCHOR PLATE, CABLE END PLATE, AND ANCHOR CABLE ~ SEE **STANDARD PLAN C-6f**

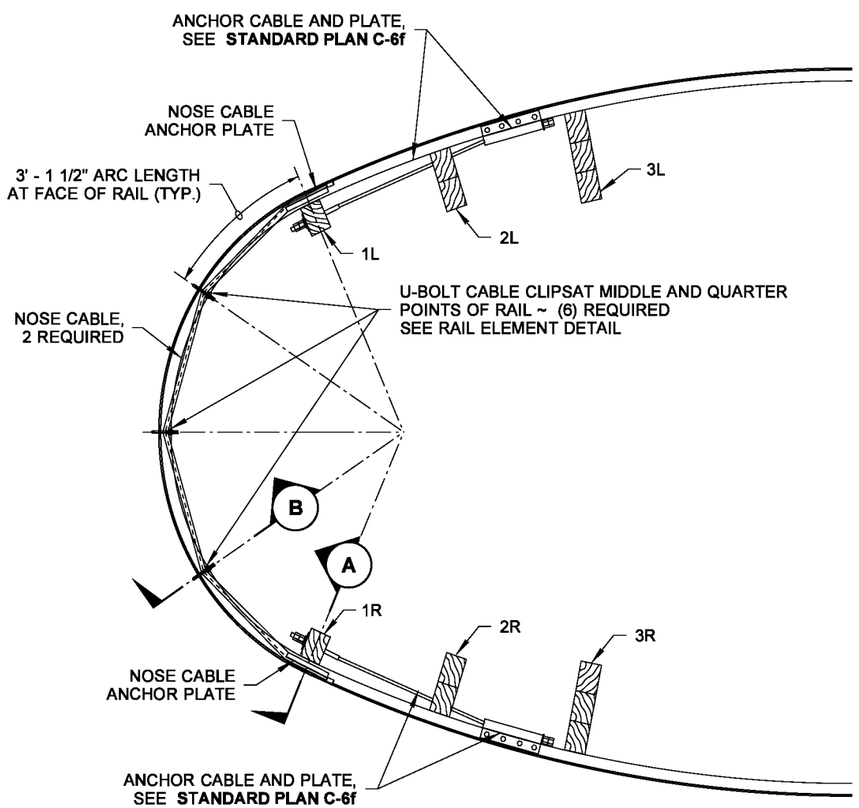

PLAN - THRIE BEAM NOSE

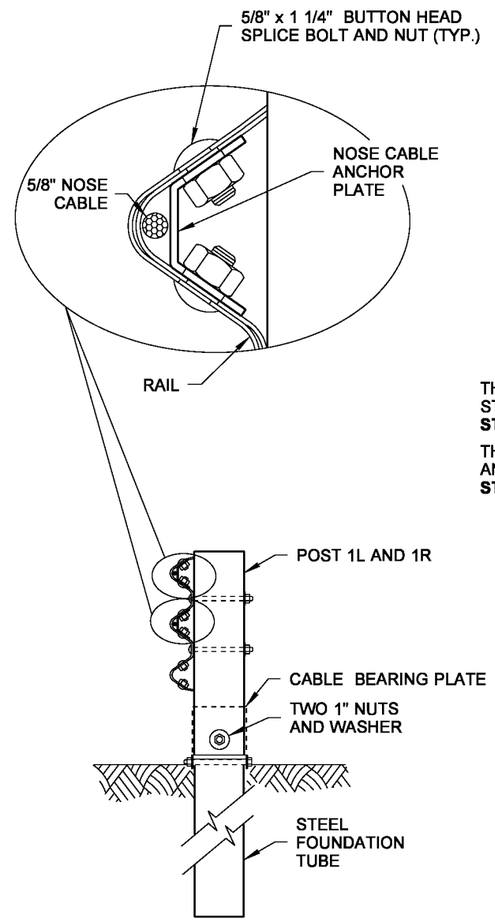

NOSE CABLE ASSEMBLY

SECTION (A)

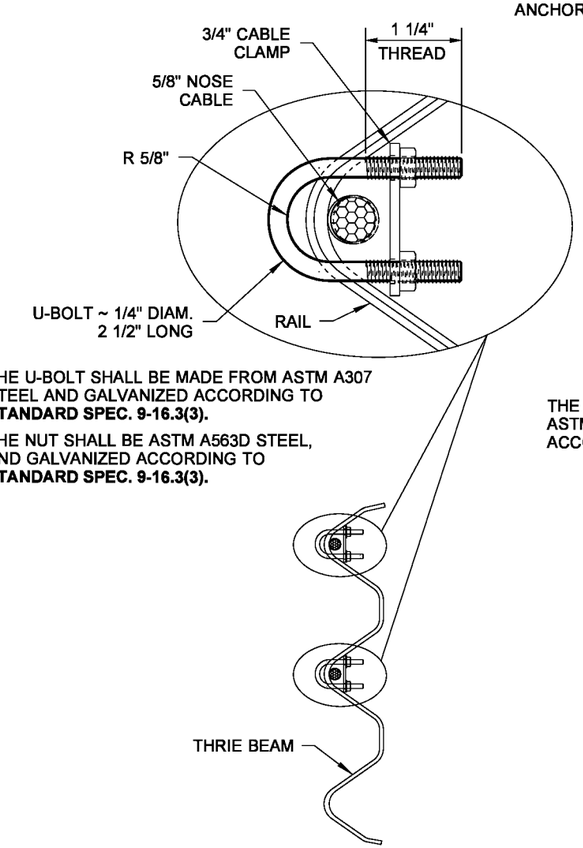

THE U-BOLT SHALL BE MADE FROM ASTM A307 STEEL AND GALVANIZED ACCORDING TO **STANDARD SPEC. 9-16.3(3).**

THE NUT SHALL BE ASTM A563D STEEL, AND GALVANIZED ACCORDING TO **STANDARD SPEC. 9-16.3(3).**

U-BOLT CABLE CLIP ASSEMBLY

SECTION (B)

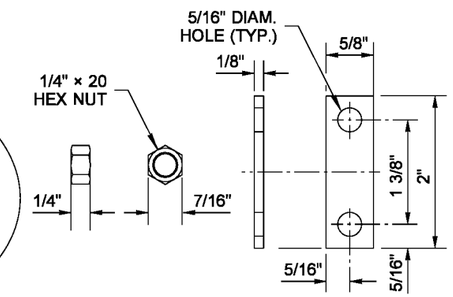

U-BOLT PLATE WASHER

THE U-BOLT PLATE WASHER SHALL BE MADE FROM ASTM A36 OR A36M PLATE STEEL, AND GALVANIZED ACCORDING TO **STANDARD SPEC. 9-16.3(3).**

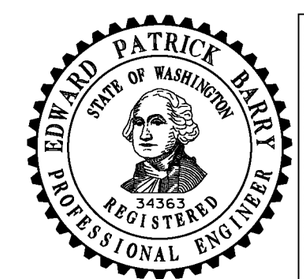

NOTE: THIS PLAN IS NOT A LEGAL ENGINEERING DOCUMENT BUT AN ELECTRONIC DUPLICATE. THE ORIGINAL, SIGNED BY THE ENGINEER AND APPROVED FOR PUBLICATION, IS KEPT ON FILE AT THE WASHINGTON STATE DEPARTMENT OF TRANSPORTATION. A COPY MAY BE OBTAINED UPON REQUEST.

BEAM GUARDRAIL BULL NOSE TERMINAL

STANDARD PLAN C-4f

SHEET 3 OF 4 SHEETS

APPROVED FOR PUBLICATION

Pasco Bakotich III — STATE DESIGN ENGINEER

07/2/12 — DATE

Washington State Department of Transportation

EFFECTIVE: AUGUST 6, 2012 TO August 4, 2013
EFFECTIVE: AUGUST 6, 2012 TO August 4, 2013
EFFECTIVE: AUGUST 6, 2012 TO August 4, 2013
EFFECTIVE: AUGUST 6, 2012 TO August 4, 2013

EFFECTIVE: AUGUST 6, 2012 TO August 4, 2013
EFFECTIVE: AUGUST 6, 2012 TO August 4, 2013

DRAWN BY: FERN LIDDELL

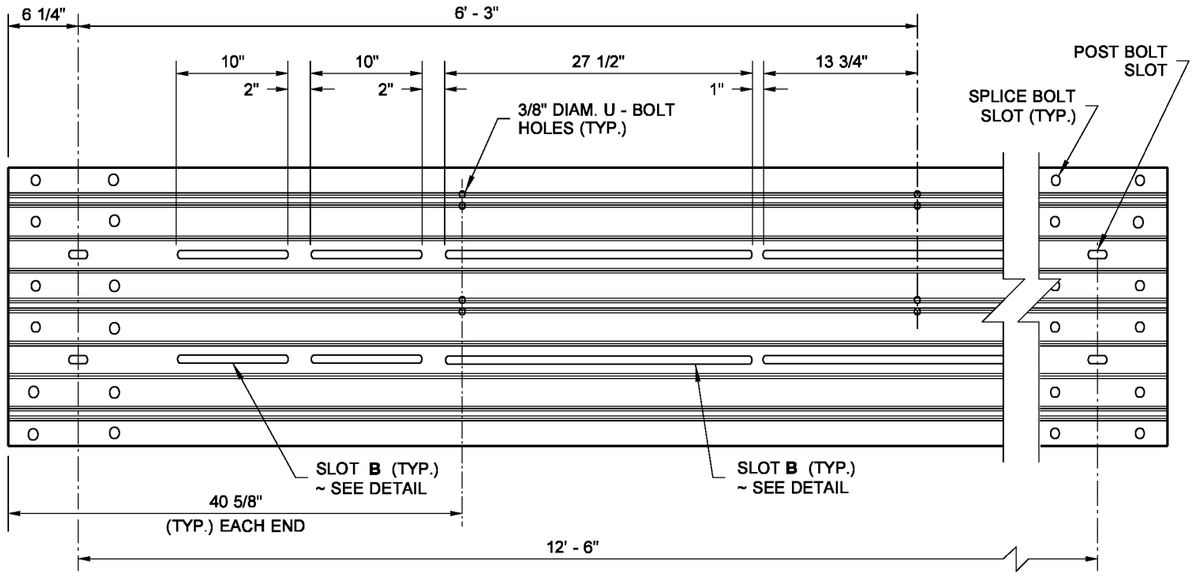

SLOTTED THRIE BEAM RAIL ELEMENT #1

SEE **STANDARD PLAN C-1a** FOR RAIL ELEMENT DETAILS

(RAIL DIMENSIONS SHOWN ARE BEFORE BENDING TO RADIUS SHOWN IN PLAN)

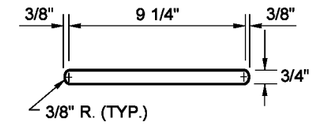

SLOT A DETAIL

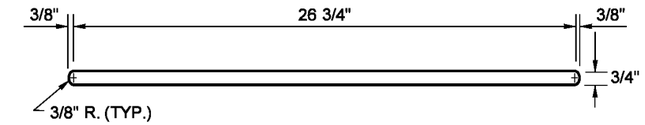

SLOT B DETAIL

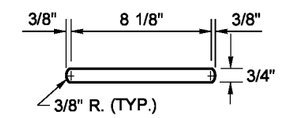

SLOT C DETAIL

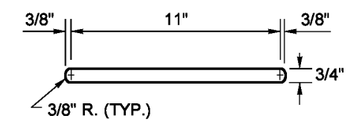

SLOT D DETAIL

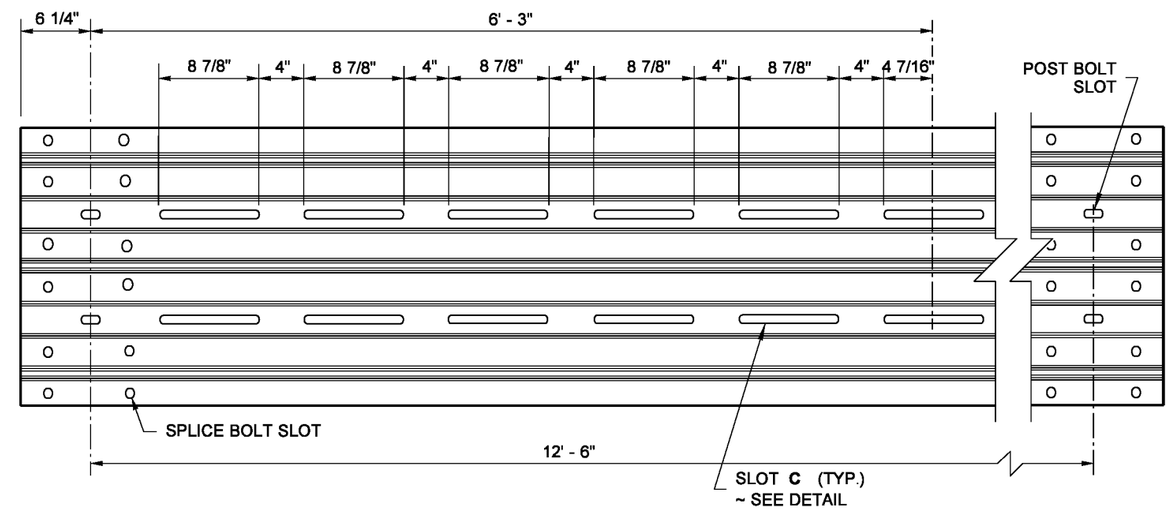

SLOTTED THRIE BEAM RAIL ELEMENT #2

SEE **STANDARD PLAN C-1a** FOR RAIL ELEMENT DETAILS

(RAIL DIMENSIONS SHOWN ARE BEFORE BENDING TO RADIUS SHOWN IN PLAN)

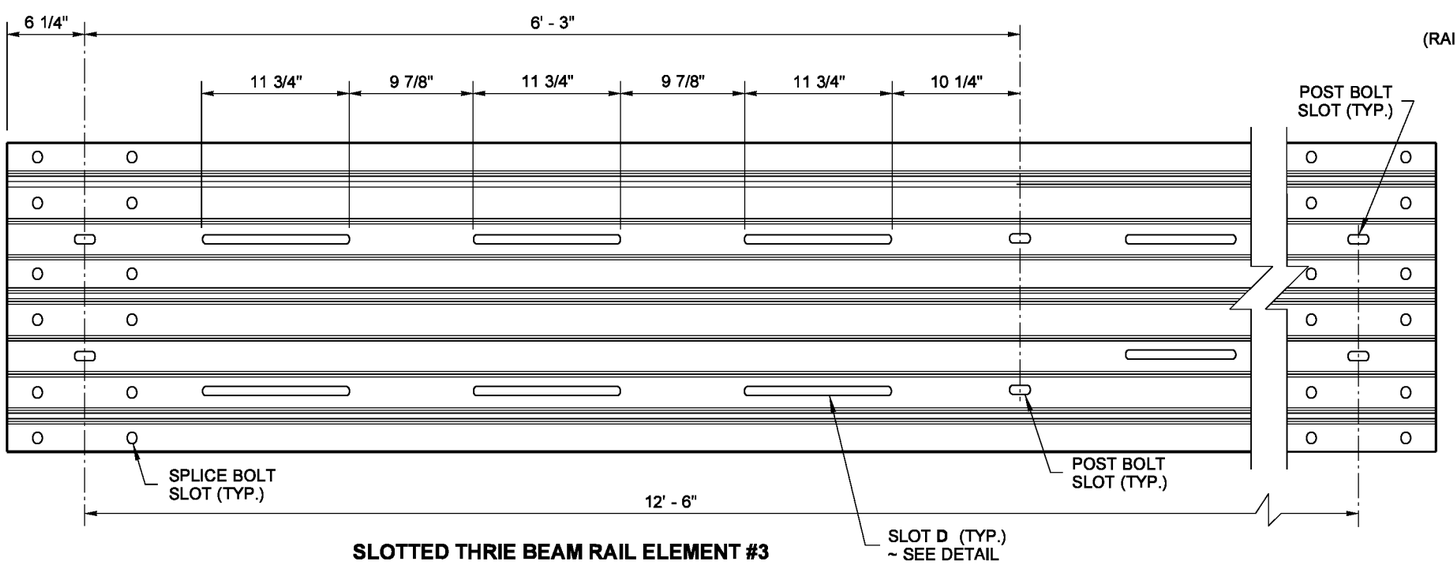

SLOTTED THRIE BEAM RAIL ELEMENT #3

SEE **STANDARD PLAN C-1a** FOR RAIL ELEMENT DETAILS

NOTE: THIS PLAN IS NOT A LEGAL ENGINEERING DOCUMENT BUT AN ELECTRONIC DUPLICATE. THE ORIGINAL, SIGNED BY THE ENGINEER AND APPROVED FOR PUBLICATION, IS KEPT ON FILE AT THE WASHINGTON STATE DEPARTMENT OF TRANSPORTATION. A COPY MAY BE OBTAINED UPON REQUEST.

BEAM GUARDRAIL BULL NOSE TERMINAL

STANDARD PLAN C-4f

SHEET 4 OF 4 SHEETS

APPROVED FOR PUBLICATION

Pasco Bakotich III — STATE DESIGN ENGINEER

07/2/12 — DATE

Washington State Department of Transportation

EFFECTIVE: AUGUST 6, 2012 TO August 4, 2013
EFFECTIVE: AUGUST 6, 2012 TO August 4, 2013
EFFECTIVE: AUGUST 6, 2012 TO August 4, 2013
EFFECTIVE: AUGUST 6, 2012 TO August 4, 2013

EFFECTIVE: AUGUST 6, 2012 TO August 4, 2013
EFFECTIVE: AUGUST 6, 2012 TO August 4, 2013

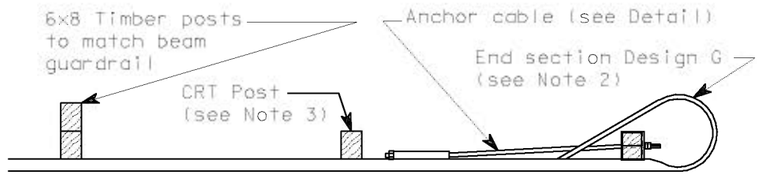

PLAN

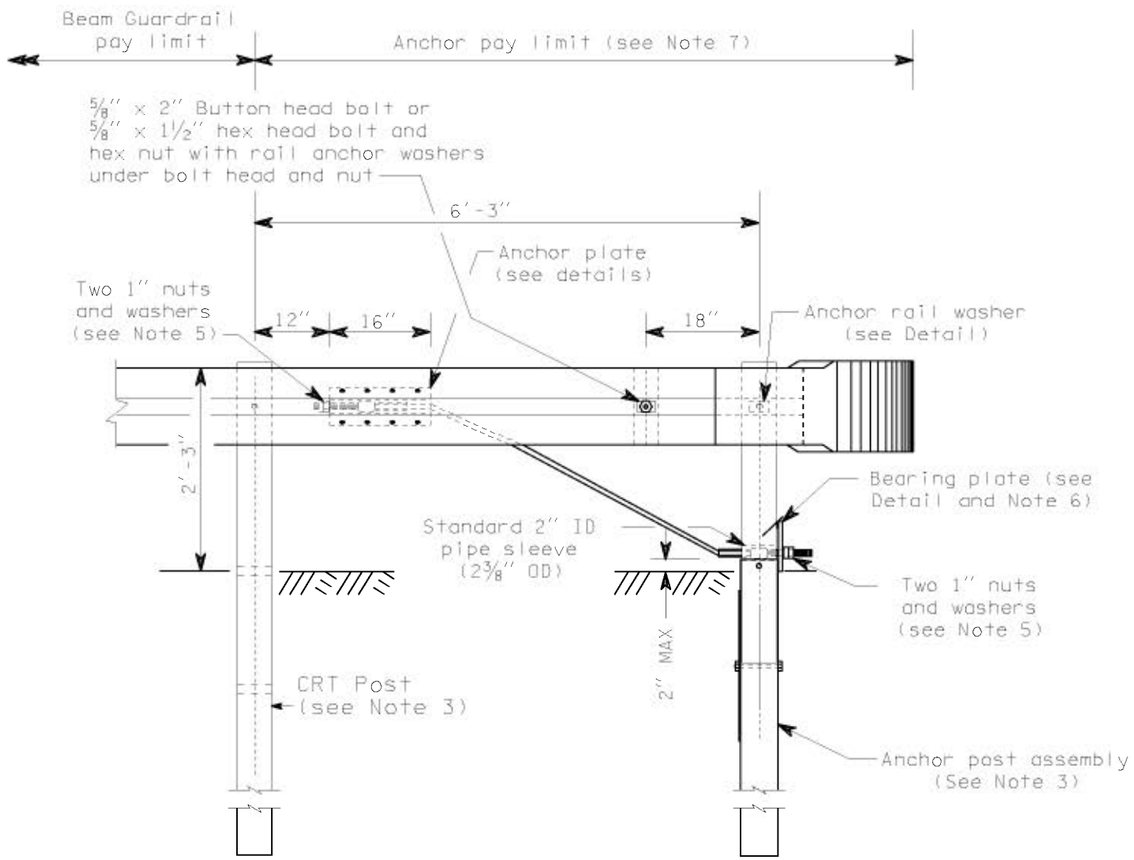

TYPE 1 ANCHOR

NOTES

1. Anchor plate may be constructed from 1/4" plates welded to equal strength and dimensions as shown.
2. For end section details see Standard Plan "Beam Guardrail End Sections".
3. For post details, see Standard Plan "Beam Guardrail Posts and Blocks".
4. Eight 5/8" x 1 1/2" machine bolts with hex nut and washer. Place washer on face side of rail.
5. Outside nut shall be torqued against inside nut a minimum of 100 ft-lbs.
6. Toenail bearing plate with 10d nail at corners to prevent turning.
7. Anchor pay limit does not apply when anchor is included in a Beam Guardrail Terminal.

BEAM GUARDRAIL ANCHOR
TYPE 1

CLIFFORD E. MANSFIELD
STATE OF WASHINGTON
15224
REGISTERED
PROFESSIONAL ENGINEER
EXPIRES MAY 3, 1998

NOTE: THIS PLAN IS NOT A LEGAL ENGINEERING DOCUMENT BUT AN EXECUTIVE SUMMARY OF THE ORIGINAL DOCUMENT. THE ORIGINAL DOCUMENT WITH WET SEAL IS ON FILE AT THE WASHINGTON STATE DEPARTMENT OF TRANSPORTATION. A COPY MAY BE OBTAINED UPON REQUEST.

STANDARD PLAN C-6

APPROVED FOR PUBLICATION

Donald K. Nelson — 05/30/97
STATE DESIGN ENGINEER — DATE

WASHINGTON STATE DEPARTMENT OF TRANSPORTATION
OLYMPIA, WASHINGTON

Sheet 1 of 2 Sheets

EFFECTIVE: AUGUST 6, 2012 TO August 4, 2013
EFFECTIVE: AUGUST 6, 2012 TO August 4, 2013
EFFECTIVE: AUGUST 6, 2012 TO August 4, 2013
EFFECTIVE: AUGUST 6, 2012 TO August 4, 2013

EFFECTIVE: AUGUST 6, 2012 TO August 4, 2013
EFFECTIVE: AUGUST 6, 2012 TO August 4, 2013

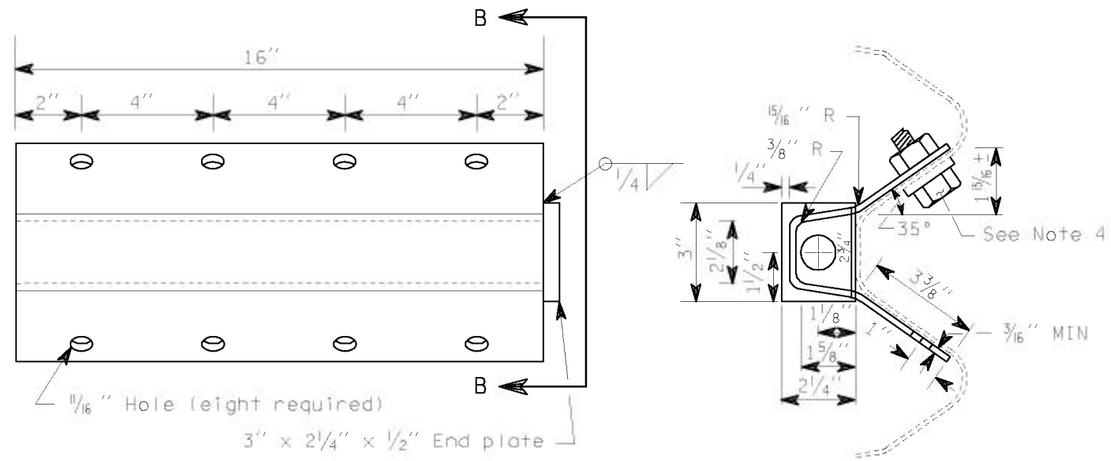

ELEVATION

SECTION B-B

ANCHOR PLATE
(See Note 1)

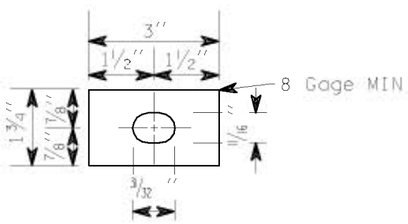

ANCHOR RAIL WASHER

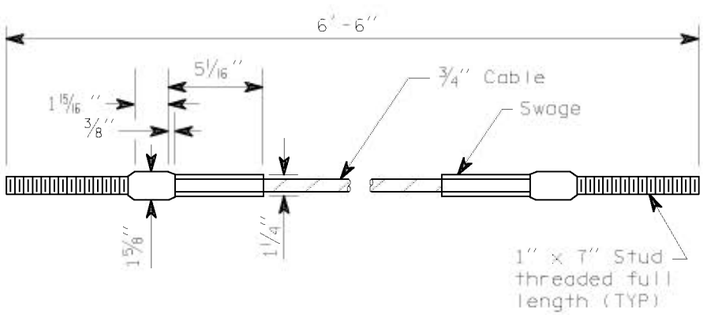

ANCHOR CABLE

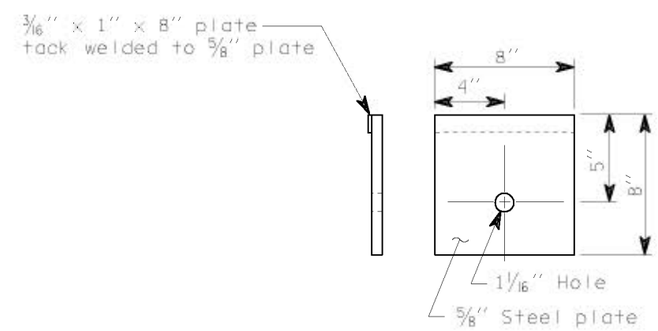

BEARING PLATE

BEAM GUARDRAIL ANCHOR
TYPE 1

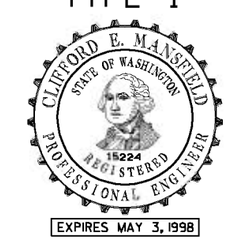

NOTE: THIS PLAN IS NOT A LEGAL ENGINEERING DOCUMENT BUT AN ELECTRONIC COPY OF THE ORIGINAL SEALED DOCUMENT ON FILE AT THE WASHINGTON STATE DEPARTMENT OF TRANSPORTATION. A COPY MAY BE OBTAINED UPON REQUEST.

STANDARD PLAN C-6

APPROVED FOR PUBLICATION

Donald K. Nelson — STATE DESIGN ENGINEER

05/30/97 — DATE

WASHINGTON STATE DEPARTMENT OF TRANSPORTATION
OLYMPIA, WASHINGTON

Sheet 2 of 2 Sheets

EFFECTIVE: AUGUST 6, 2012 TO August 4, 2013
EFFECTIVE: AUGUST 6, 2012 TO August 4, 2013
EFFECTIVE: AUGUST 6, 2012 TO August 4, 2013
EFFECTIVE: AUGUST 6, 2012 TO August 4, 2013

EFFECTIVE: AUGUST 6, 2012 TO August 4, 2013
EFFECTIVE: AUGUST 6, 2012 TO August 4, 2013

DRAWN BY: BILL BERENS

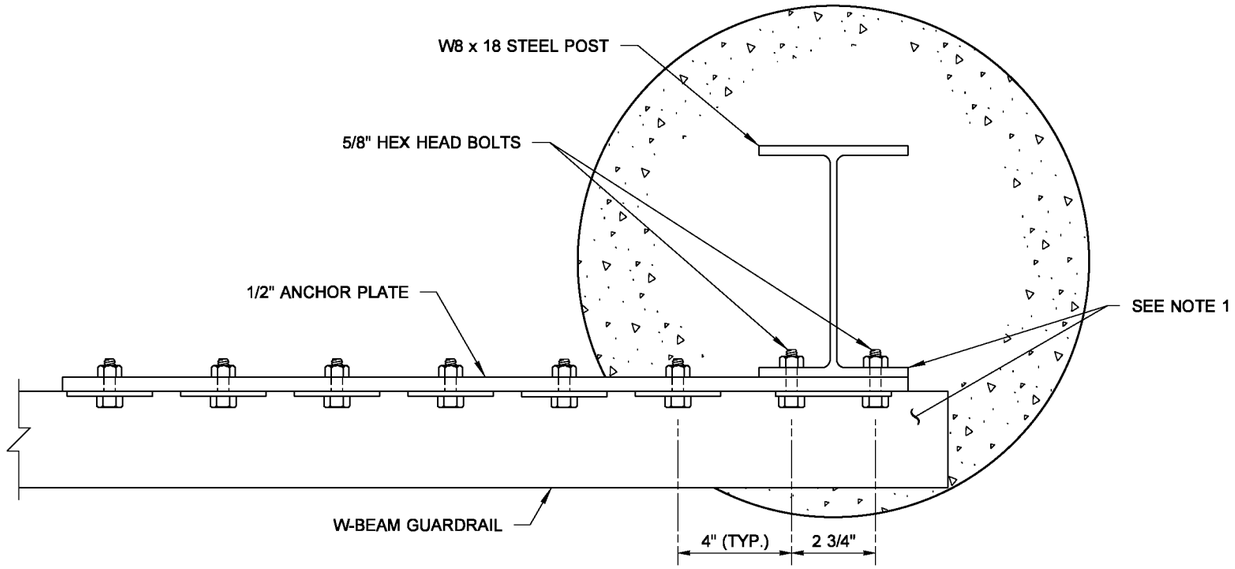

PLAN

NOTES

1. Rail section and W8 x 18 steel post shall be fabricated to receive 5/8" hex head bolts as shown.
2. All bolts shall be high strength 5/8" hex head bolts with anchor rail washers.

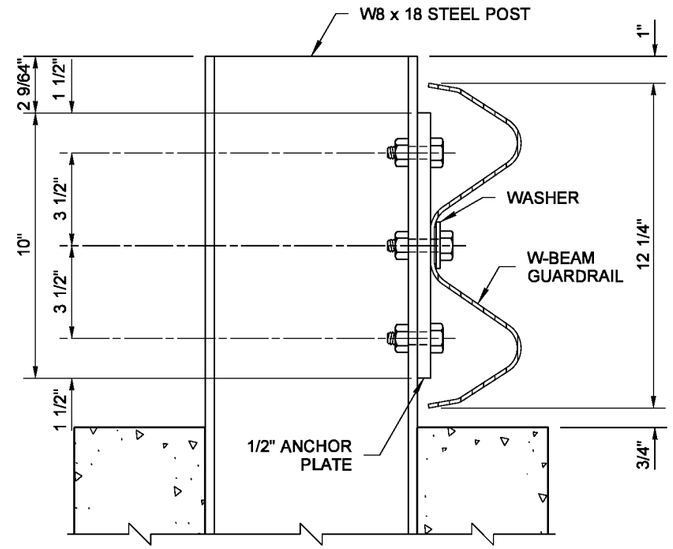

SECTION B

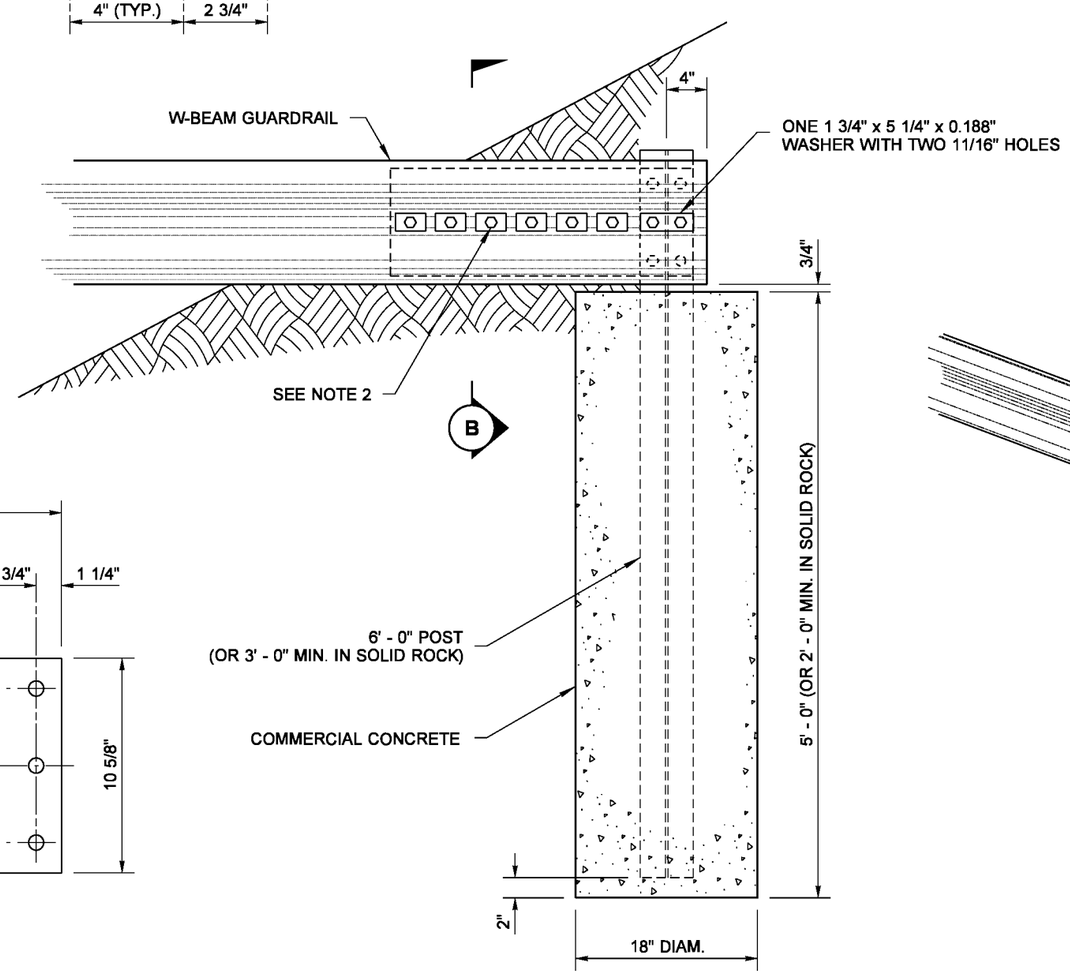

ELEVATION

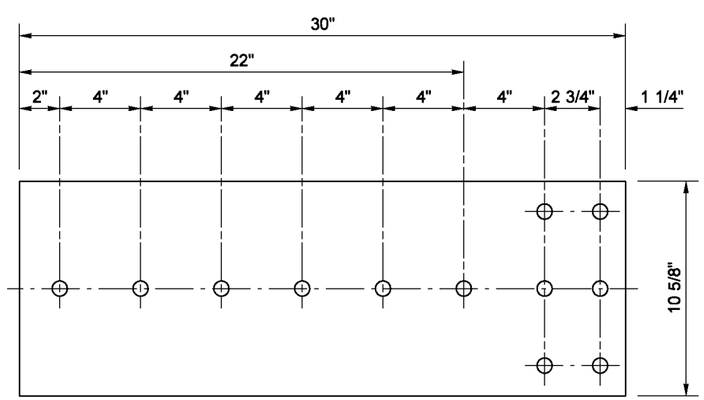

BACKING PLATE

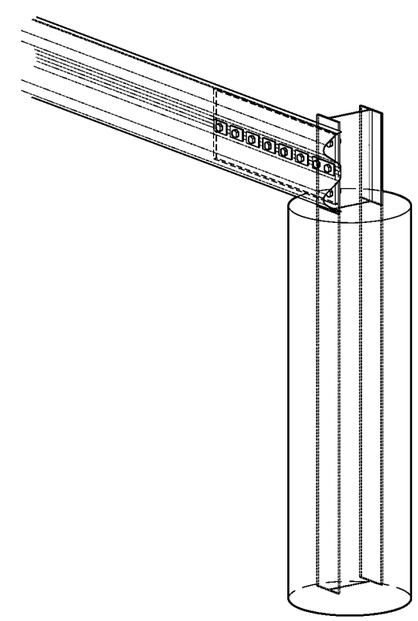

ISOMETRIC

TERRY L. BERENDS
STATE OF WASHINGTON
32350
REGISTERED
PROFESSIONAL ENGINEER

NOTE: THIS PLAN IS NOT A LEGAL ENGINEERING DOCUMENT BUT AN ELECTRONIC DUPLICATE. THE ORIGINAL, SIGNED BY THE ENGINEER AND APPROVED FOR PUBLICATION, IS KEPT ON FILE AT THE WASHINGTON STATE DEPARTMENT OF TRANSPORTATION. A COPY MAY BE OBTAINED UPON REQUEST.

BEAM GUARDRAIL ANCHOR TYPE 2

STANDARD PLAN C-6a

SHEET 1 OF 1 SHEET

APPROVED FOR PUBLICATION

Pasco Bakotich III — STATE DESIGN ENGINEER

10-14-09 — DATE

Washington State Department of Transportation

EFFECTIVE: AUGUST 6, 2012 TO August 4, 2013
EFFECTIVE: AUGUST 6, 2012 TO August 4, 2013
EFFECTIVE: AUGUST 6, 2012 TO August 4, 2013
EFFECTIVE: AUGUST 6, 2012 TO August 4, 2013

EFFECTIVE: AUGUST 6, 2012 TO August 4, 2013
EFFECTIVE: AUGUST 6, 2012 TO August 4, 2013

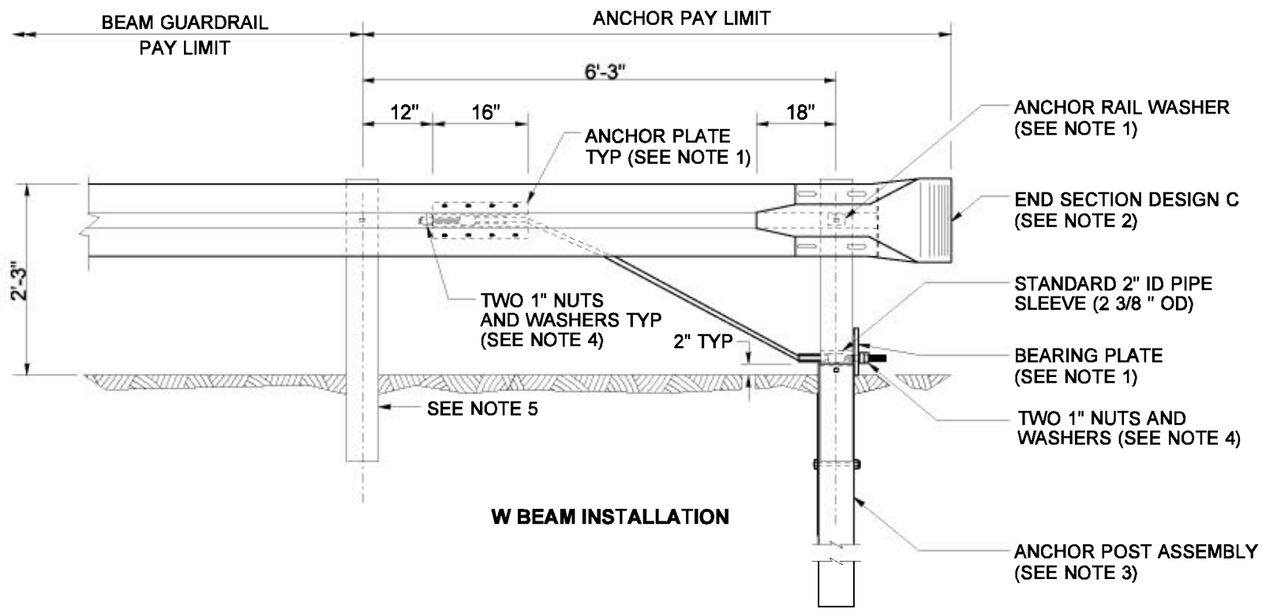

W BEAM INSTALLATION

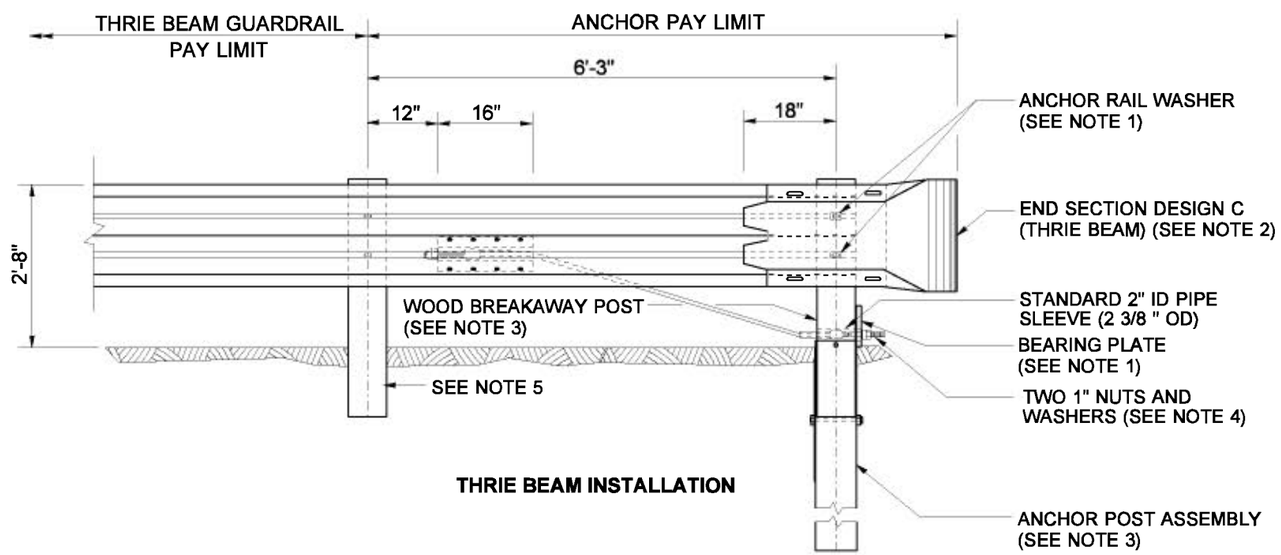

THRIE BEAM INSTALLATION

NOTES

1. For details, see Standard Plan C-6.
2. For end section details see Standard Plan C-7 or C-7a.
3. For details, see Standard Plan C-1b.
4. Outside nut shall be torqued against inside nut a minimum of 100 ft.-lbs.
5. Post and block shall match beam guardrail posts.

NOTE: THIS PLAN IS NOT A LEGAL ENGINEERING DOCUMENT BUT AN ELECTRONIC DUPLICATE. THE ORIGINAL, SIGNED BY THE ENGINEER AND APPROVED FOR PUBLICATION, IS KEPT ON FILE AT THE WASHINGTON STATE DEPARTMENT OF TRANSPORTATION. A COPY MAY BE OBTAINED UPON REQUEST.

BEAM GUARDRAIL ANCHOR TYPE 4

STANDARD PLAN C-6c

DATE	REVISION	BY
12/99	MODIFIED "END SECTIONS" TO DESIGN "C", CHANGED NOTE 2 AND DETAIL TITLES.	TWS

APPROVED FOR PUBLICATION

Clifford E. Mansfield — *01/06/00*

DEPUTY STATE DESIGN ENGINEER — DATE

WASHINGTON STATE DEPARTMENT OF TRANSPORTATION
OLYMPIA, WASHINGTON

EFFECTIVE: AUGUST 6, 2012 TO August 4, 2013
EFFECTIVE: AUGUST 6, 2012 TO August 4, 2013
EFFECTIVE: AUGUST 6, 2012 TO August 4, 2013
EFFECTIVE: AUGUST 6, 2012 TO August 4, 2013

EFFECTIVE: AUGUST 6, 2012 TO August 4, 2013
EFFECTIVE: AUGUST 6, 2012 TO August 4, 2013

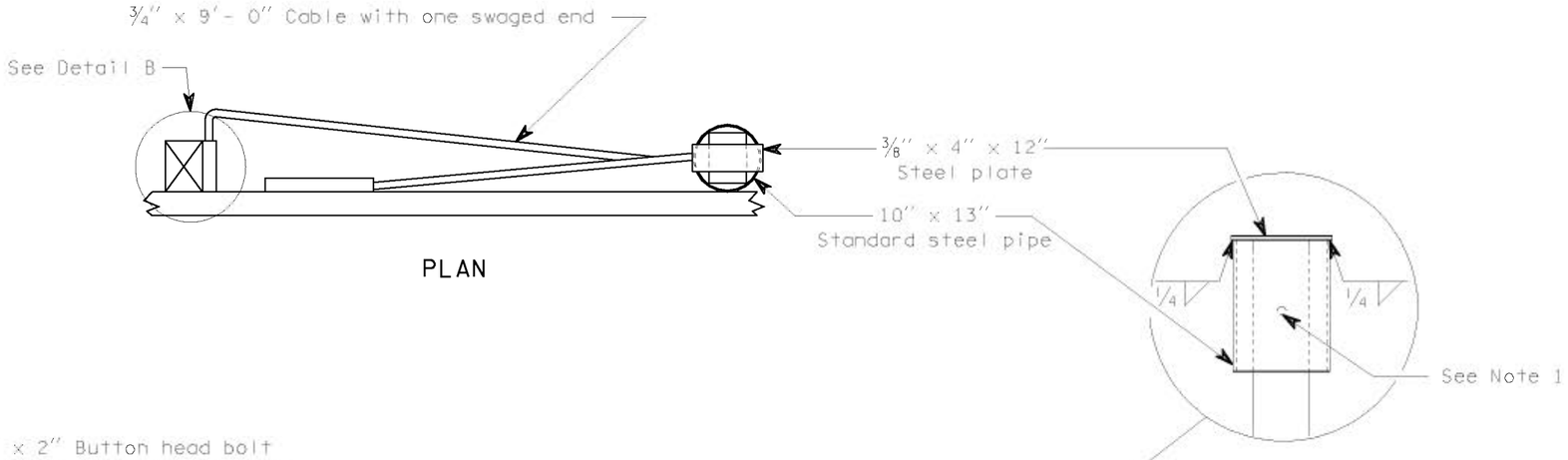

PLAN

NOTES

1. Attach W-beam to steel pipe with 5/8" x 1 1/4" button head bolt with no washer. No connection to the post is required.
2. For end section details see Standard Plan, "Beam Guardrail End Sections".
3. For details see Standard Plan, "Beam Guardrail Anchor Type 1".
4. For details see Standard Plan, "Beam Guardrail Posts".
5. Outside nut shall be torqued against inside nut a minimum of 100 ft/lbs.

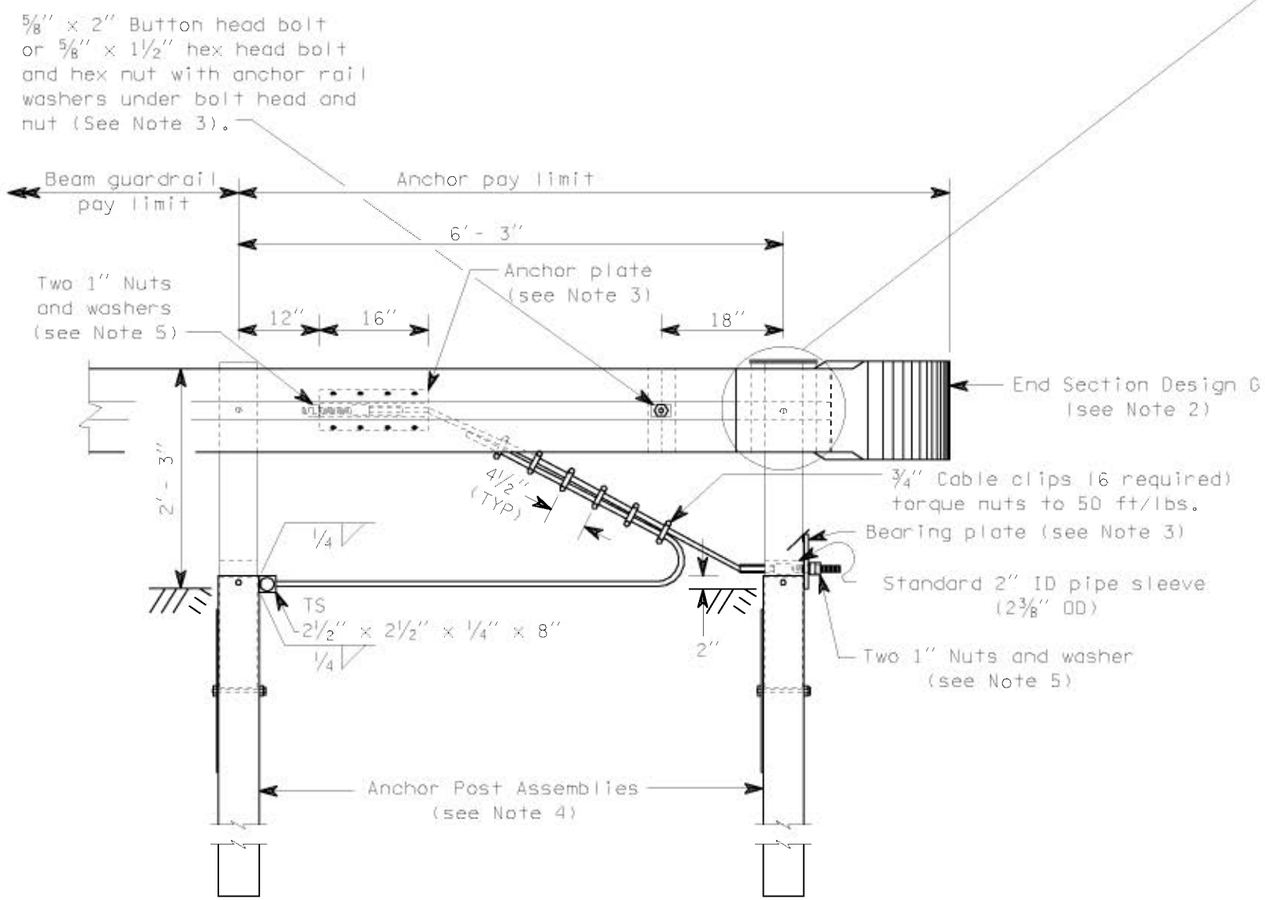

TYPE 5 ANCHOR

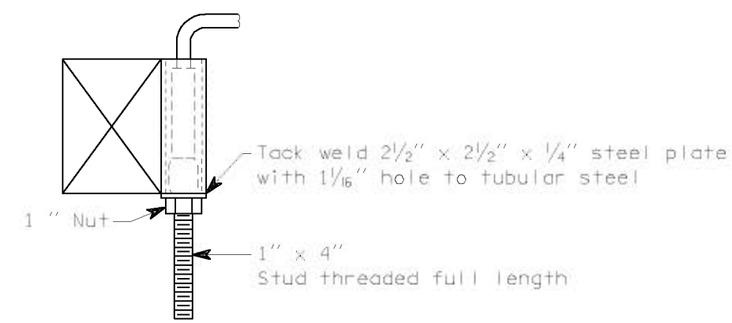

DETAIL B

BEAM GUARDRAIL ANCHOR
TYPE 5

CLIFFORD E. MANSFIELD
STATE OF WASHINGTON
15224
REGISTERED
PROFESSIONAL ENGINEER
EXPIRES MAY 3, 1998

NOTE: THIS PLAN IS NOT A LEGAL ENGINEERING DOCUMENT BUT WAS SEALED AND DATED ON THE ORIGINAL. SIGNED BY CLIFFORD E. MANSFIELD. THE ORIGINAL IS KEPT ON FILE AT THE WASHINGTON STATE DEPARTMENT OF TRANSPORTATION. A COPY MAY BE OBTAINED UPON REQUEST.

STANDARD PLAN C-6d

APPROVED FOR PUBLICATION

Donald K. Nelson — 05/30/97
STATE DESIGN ENGINEER — DATE

WASHINGTON STATE DEPARTMENT OF TRANSPORTATION
OLYMPIA, WASHINGTON

EFFECTIVE: AUGUST 6, 2012 TO August 4, 2013
EFFECTIVE: AUGUST 6, 2012 TO August 4, 2013
EFFECTIVE: AUGUST 6, 2012 TO August 4, 2013
EFFECTIVE: AUGUST 6, 2012 TO August 4, 2013

EFFECTIVE: AUGUST 6, 2012 TO August 4, 2013
EFFECTIVE: AUGUST 6, 2012 TO August 4, 2013

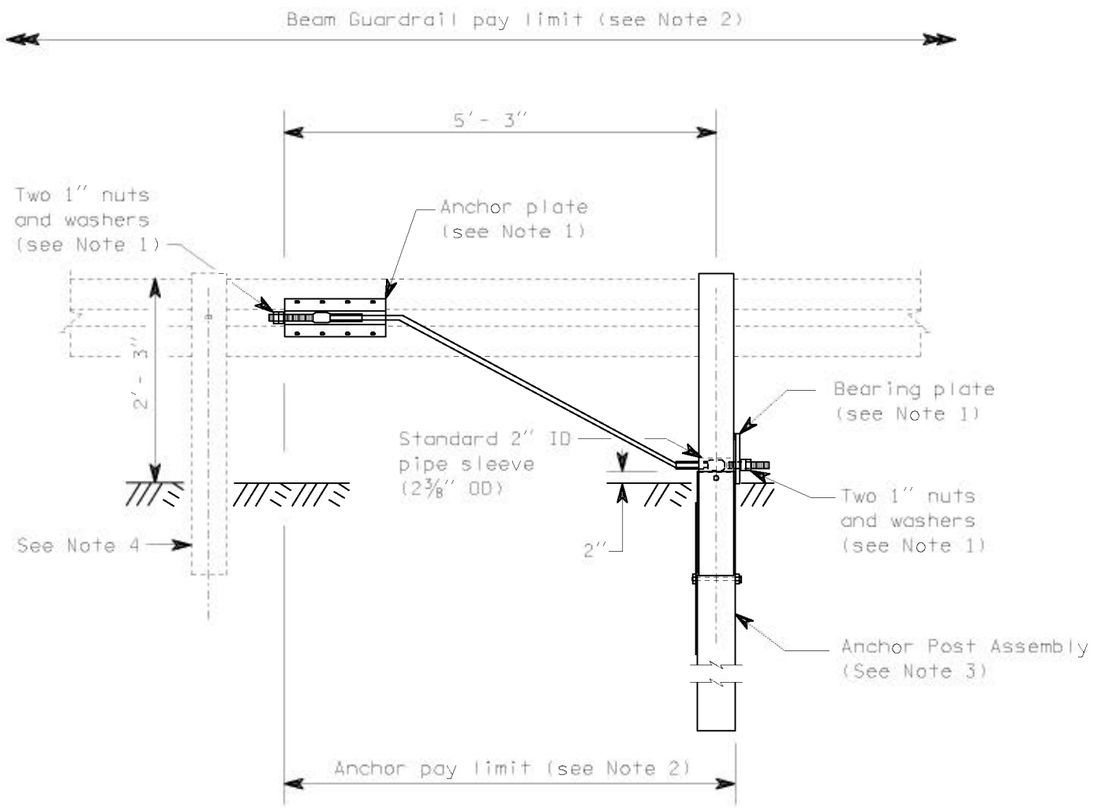

TYPE 7 ANCHOR

NOTES

1. For details, see Standard Plan, "Beam Guardrail Anchor Type 1".

2. The rail element is to be included in the "Beam Guardrail" pay item. The "Anchor" pay item includes the anchor post, anchor plate, anchor cable, bearing plate, nuts and washers.

3. For details, see Standard Plan, "Beam Guardrail Posts and Blocks".

4. Post shall match beam guardrail posts.

BEAM GUARDRAIL ANCHOR
TYPE 7

CLIFFORD E. MANSFIELD
STATE OF WASHINGTON
15224
REGISTERED
PROFESSIONAL ENGINEER
EXPIRES MAY 3, 1998

NOTE: THIS PLAN IS NOT A LEGAL ENGINEERING DOCUMENT BUT AN EXCERPT OF THE ORIGINAL DOCUMENT. THE ORIGINAL IS KEPT IN THE ENGINEERING DOCUMENT DISTRIBUTION SUBJECT ON FILE AT THE WASHINGTON STATE DEPARTMENT OF TRANSPORTATION. A COPY MAY BE OBTAINED UPON REQUEST.

STANDARD PLAN C-6f

APPROVED FOR PUBLICATION

Donald K. Nelson — 07/25/97
STATE DESIGN ENGINEER — DATE

WASHINGTON STATE DEPARTMENT OF TRANSPORTATION
OLYMPIA, WASHINGTON

EFFECTIVE: AUGUST 6, 2012 TO August 4, 2013
EFFECTIVE: AUGUST 6, 2012 TO August 4, 2013
EFFECTIVE: AUGUST 6, 2012 TO August 4, 2013
EFFECTIVE: AUGUST 6, 2012 TO August 4, 2013

EFFECTIVE: AUGUST 6, 2012 TO August 4, 2013
EFFECTIVE: AUGUST 6, 2012 TO August 4, 2013

DRAWN BY: FERN LIDDELL

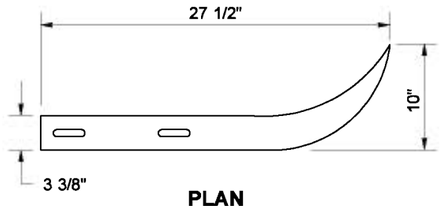

PLAN

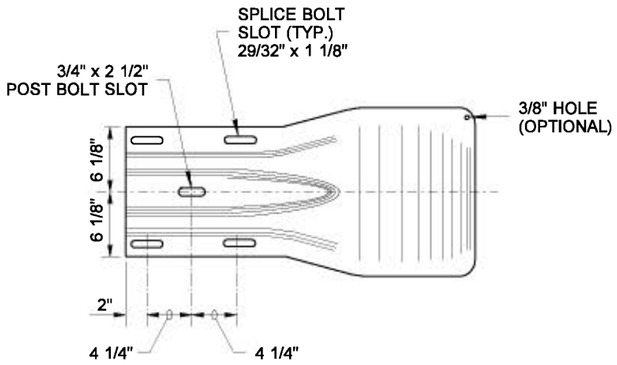

ELEVATION

DESIGN A

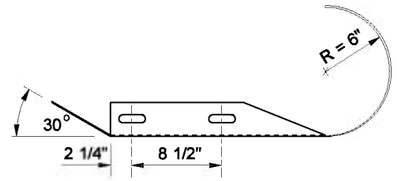

PLAN

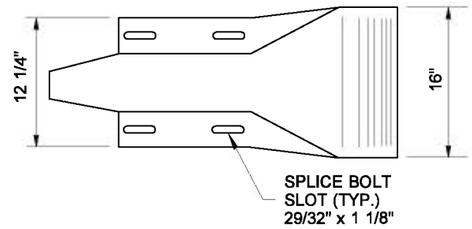

ELEVATION

DESIGN C

NOTES

1. End Section Design G shall be used except where noted on the plans or contract.
2. Attach guardrail to bridge rail or concrete barrier with 7/8" diameter bolts (five minimum) **Standard Spec. 9-06.5(4),** with thin slab ferrule inserts or resin bonded anchors. See the Contract Plans.
3. A single piece having similar dimensional shape to Design G and mating with the W-beam guardrail is an alternate.
4. In cases where Design "F" end section is lapped on the outside of the guardrail, a galvanized 1" ID, 2" OD, 0.134" thick, narrow Type A Plain Washer or a anchor rail washer shall be placed under the splice bolt heads.

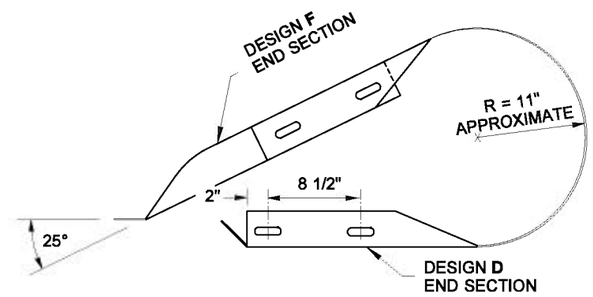

PLAN

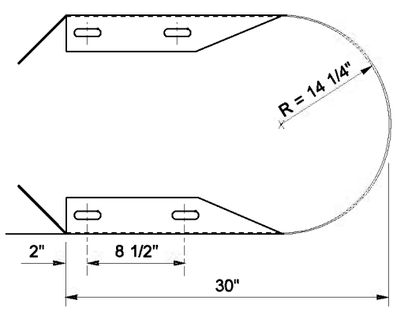

PLAN

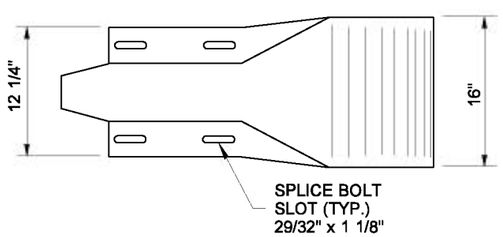

ELEVATION

DESIGN D

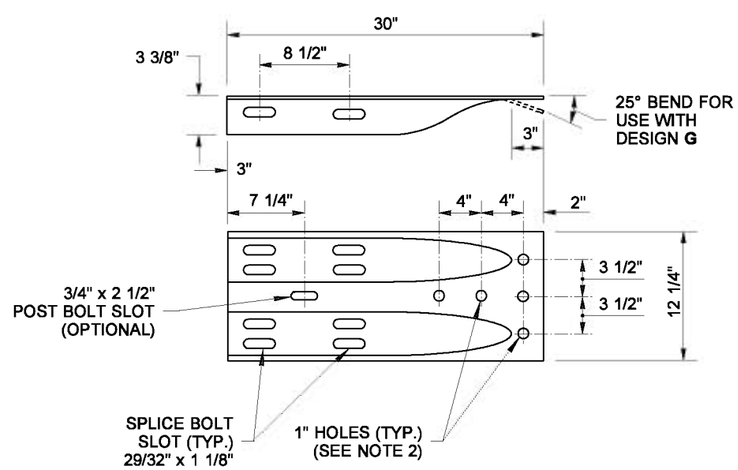

ELEVATION

DESIGN F

(SEE NOTE 4)

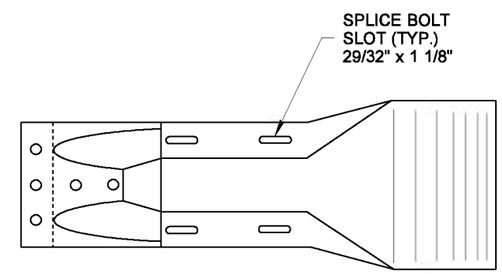

ELEVATION

DESIGN G

(SEE NOTE 3)

NOTE: THIS PLAN IS NOT A LEGAL ENGINEERING DOCUMENT BUT AN ELECTRONIC DUPLICATE. THE ORIGINAL, SIGNED BY THE ENGINEER AND APPROVED FOR PUBLICATION, IS KEPT ON FILE AT THE WASHINGTON STATE DEPARTMENT OF TRANSPORTATION. A COPY MAY BE OBTAINED UPON REQUEST.

BEAM GUARDRAIL END SECTIONS

STANDARD PLAN C-7

SHEET 1 OF 1 SHEET

APPROVED FOR PUBLICATION

Pasco Bakotich III — STATE DESIGN ENGINEER

06-16-11 — DATE

Washington State Department of Transportation

EFFECTIVE: AUGUST 6, 2012 TO August 4, 2013
EFFECTIVE: AUGUST 6, 2012 TO August 4, 2013
EFFECTIVE: AUGUST 6, 2012 TO August 4, 2013
EFFECTIVE: AUGUST 6, 2012 TO August 4, 2013

EFFECTIVE: AUGUST 6, 2012 TO August 4, 2013
EFFECTIVE: AUGUST 6, 2012 TO August 4, 2013

DRAWN BY: FERN LIDDELL

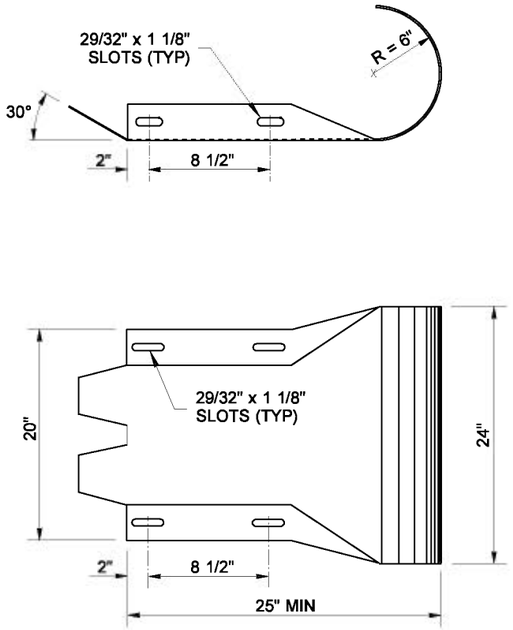

DESIGN C (THRIE BEAM)

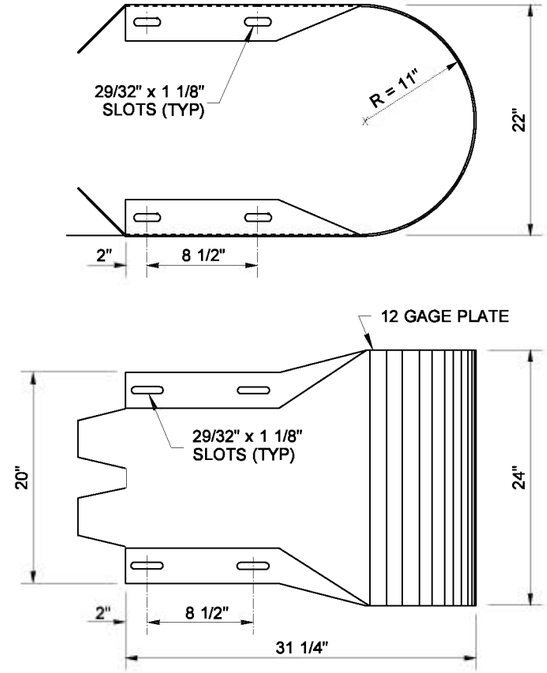

DESIGN D (THRIE BEAM)

NOTES

1. Attach guardrail to bridge rail or concrete barrier with 7/8" diameter bolts (five minimum) **Standard Spec. 9-06.5(4),** with thin slab ferrule inserts or resin bonded anchors. See the Contract Plans.

2. In cases where Design F End Section is lapped on the outside of the guardrail, a galvanized 1" ID, 2" OD, 0.134" thick, narrow Type A Plain Washer or an anchor rail washer will be placed under the splice bolt heads.

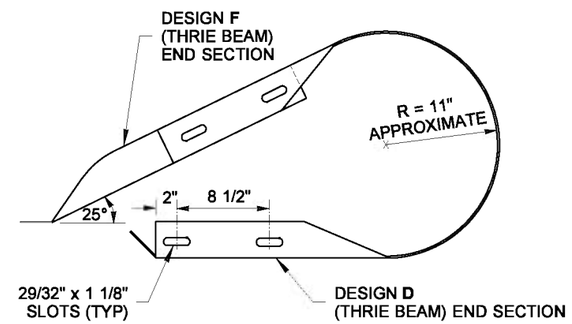

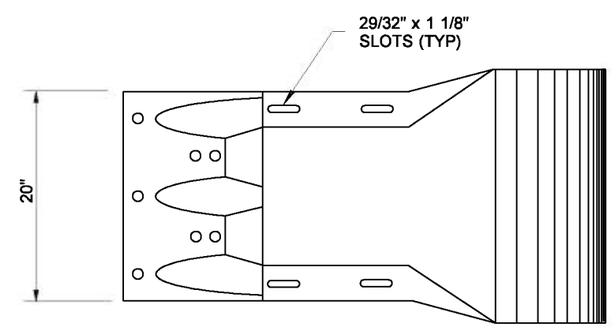

DESIGN G (THRIE BEAM)

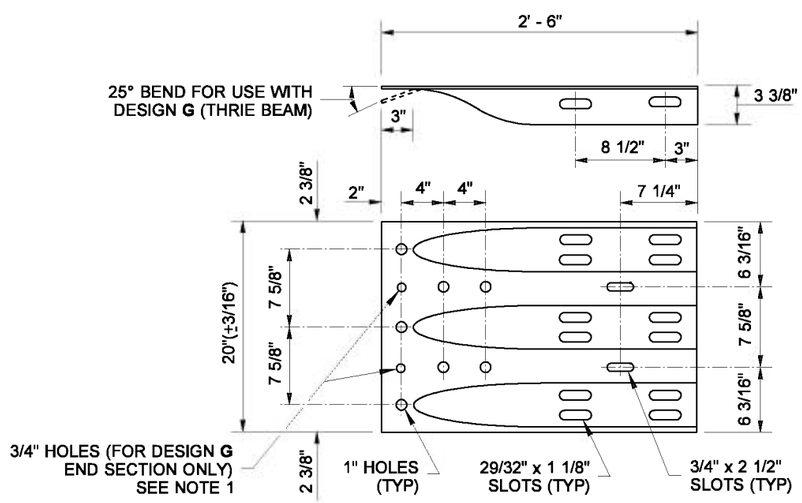

DESIGN F (THRIE BEAM)

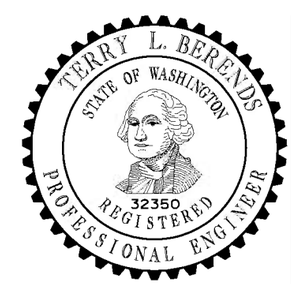

NOTE: THIS PLAN IS NOT A LEGAL ENGINEERING DOCUMENT BUT AN ELECTRONIC DUPLICATE. THE ORIGINAL, SIGNED BY THE ENGINEER AND APPROVED FOR PUBLICATION, IS KEPT ON FILE AT THE WASHINGTON STATE DEPARTMENT OF TRANSPORTATION. A COPY MAY BE OBTAINED UPON REQUEST.

THRIE BEAM
END SECTIONS

STANDARD PLAN C-7a

SHEET 1 OF 1 SHEET

APPROVED FOR PUBLICATION

Pasco Bakotich III — STATE DESIGN ENGINEER
06-16-11 — DATE

Washington State Department of Transportation

EFFECTIVE: AUGUST 6, 2012 TO August 4, 2013
EFFECTIVE: AUGUST 6, 2012 TO August 4, 2013
EFFECTIVE: AUGUST 6, 2012 TO August 4, 2013
EFFECTIVE: AUGUST 6, 2012 TO August 4, 2013

EFFECTIVE: AUGUST 6, 2012 TO August 4, 2013
EFFECTIVE: AUGUST 6, 2012 TO August 4, 2013

DRAWN BY: MARK SUJKA

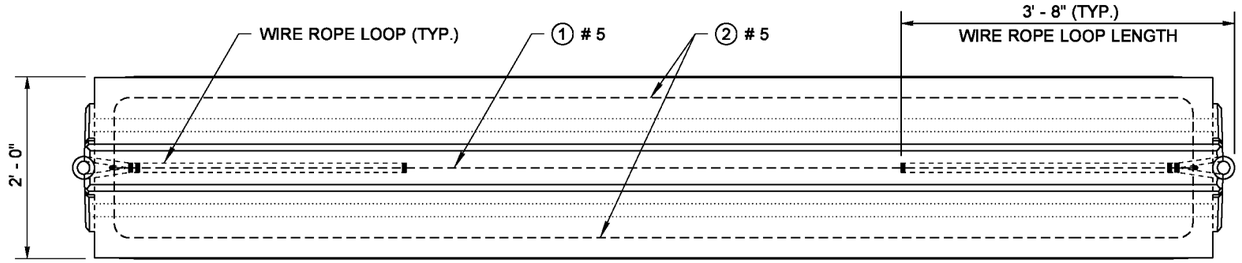

TOP VIEW

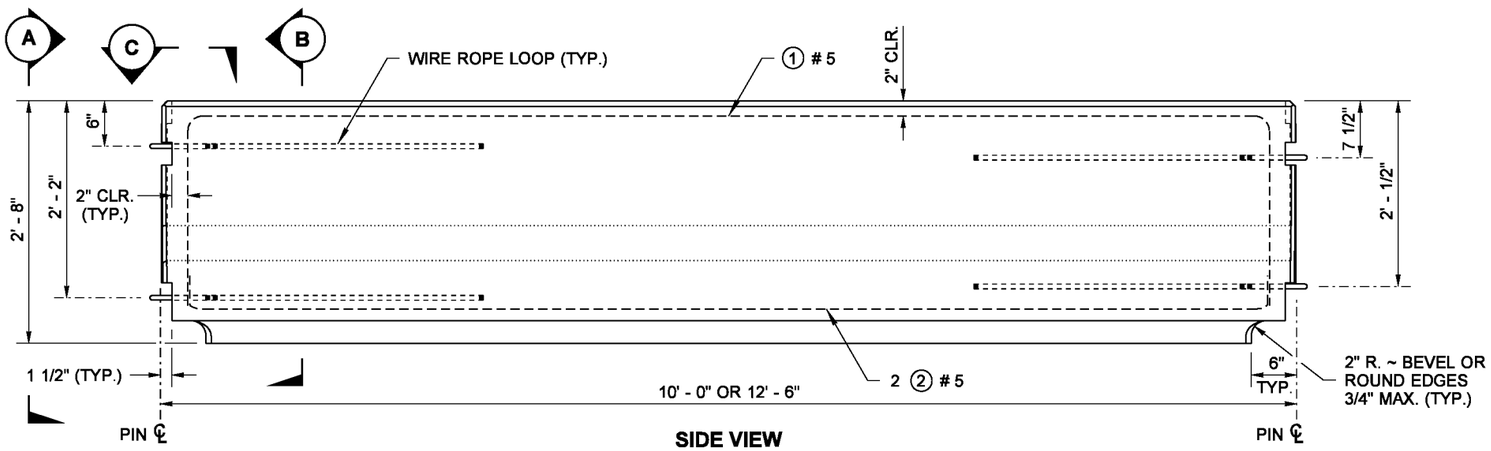

SIDE VIEW

BARRIER SECTION

NOTES

1. Wire rope loops shall be 3' - 8" long, except for the top loop of the Barrier Terminal, which shall be 2' - 0" long.
2. Except for the locations of the wire rope loops, the dimensions shown in END VIEW "A" are typical for both ends of a Barrier Section or opposing ends of Barrier Terminals.
3. Connecting and Drift Pin head designs vary among different manufacturers. Pin designs that are shaped differently than those shown in the detail are acceptable, if the bearing surface is within the minimum and maximum widths specified.
4. The vertical spacing of the Wire Rope Loops in a Barrier Terminal is determined by the end of the Barrier Segment to which it is being connected. See BARRIER CONNECTION DETAIL (Sheet 2).

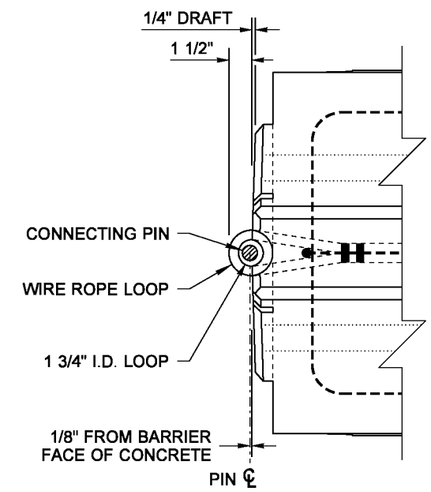

DETAIL C

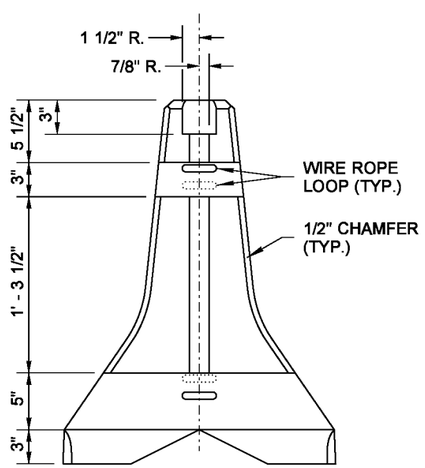

SEE NOTE 2

END VIEW (A)

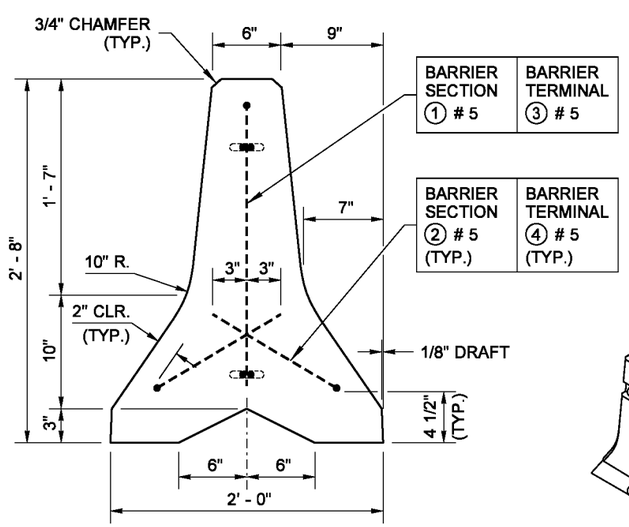

SECTION (B)

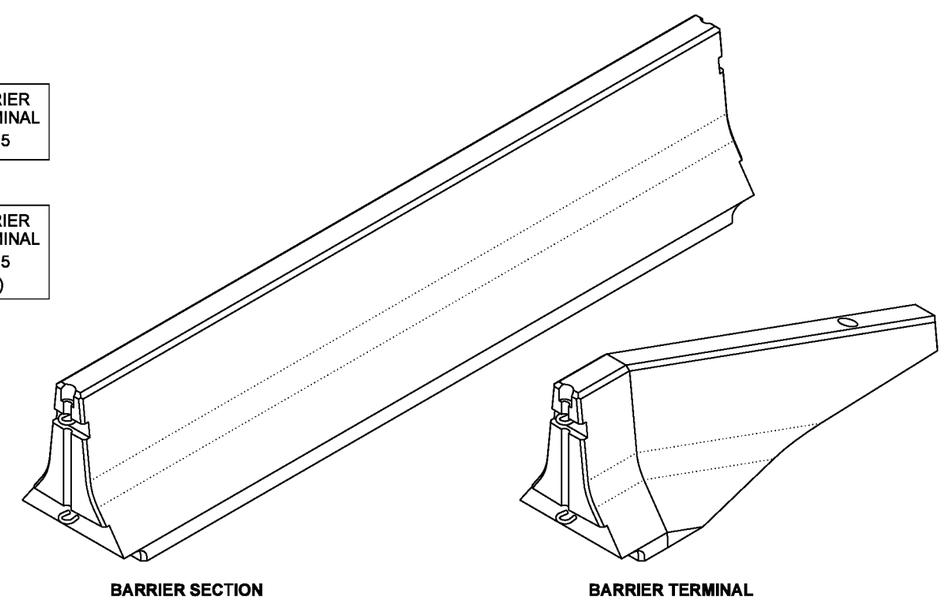

ISOMETRIC VIEWS

MICHAEL S. FLEMING
STATE OF WASHINGTON
38777
REGISTERED
PROFESSIONAL ENGINEER

NOTE: THIS PLAN IS NOT A LEGAL ENGINEERING DOCUMENT BUT AN ELECTRONIC DUPLICATE. THE ORIGINAL, SIGNED BY THE ENGINEER AND APPROVED FOR PUBLICATION, IS KEPT ON FILE AT THE WASHINGTON STATE DEPARTMENT OF TRANSPORTATION. A COPY MAY BE OBTAINED UPON REQUEST.

CONCRETE BARRIER TYPE 2

STANDARD PLAN C-8

SHEET 1 OF 2 SHEETS

APPROVED FOR PUBLICATION

Pasco Bakotich III — STATE DESIGN ENGINEER

02-10-09 — DATE

Washington State Department of Transportation

EFFECTIVE: AUGUST 6, 2012 TO August 4, 2013
EFFECTIVE: AUGUST 6, 2012 TO August 4, 2013
EFFECTIVE: AUGUST 6, 2012 TO August 4, 2013
EFFECTIVE: AUGUST 6, 2012 TO August 4, 2013

EFFECTIVE: AUGUST 6, 2012 TO August 4, 2013
EFFECTIVE: AUGUST 6, 2012 TO August 4, 2013

DRAWN BY: MARK SUJKA

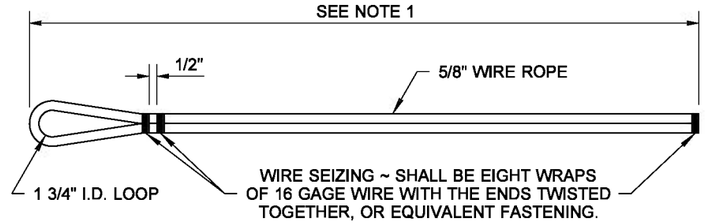

WIRE ROPE LOOP DETAIL

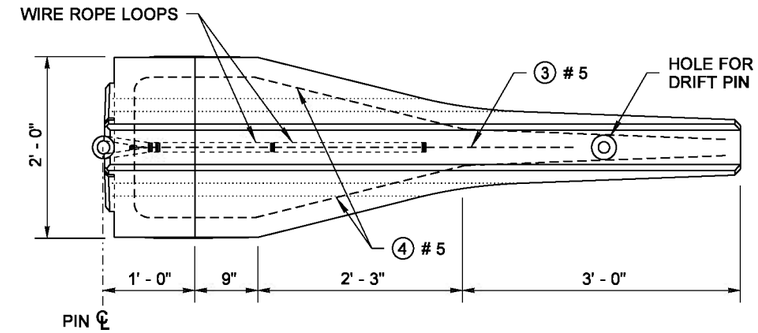

TOP VIEW

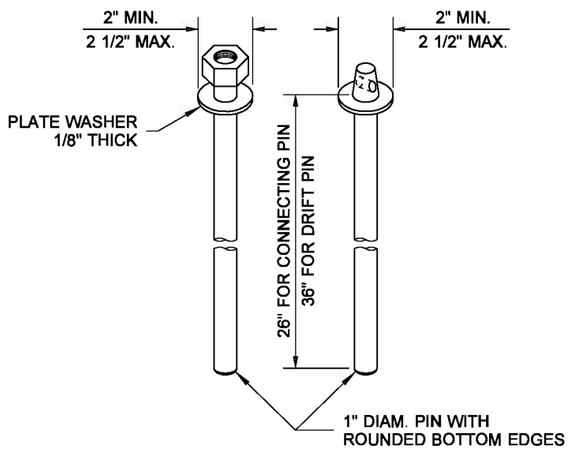

SEE NOTE 3

CONNECTING PINS AND DRIFT PINS

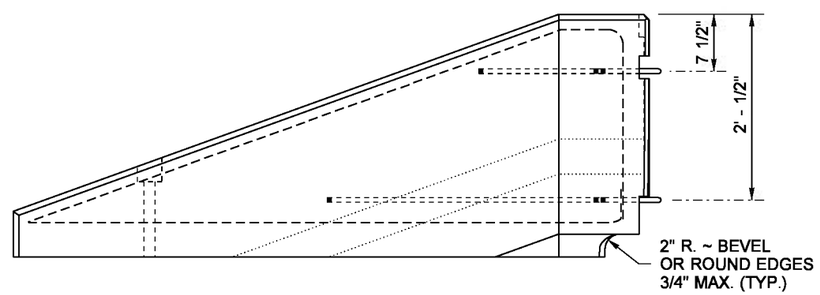

SIDE VIEW

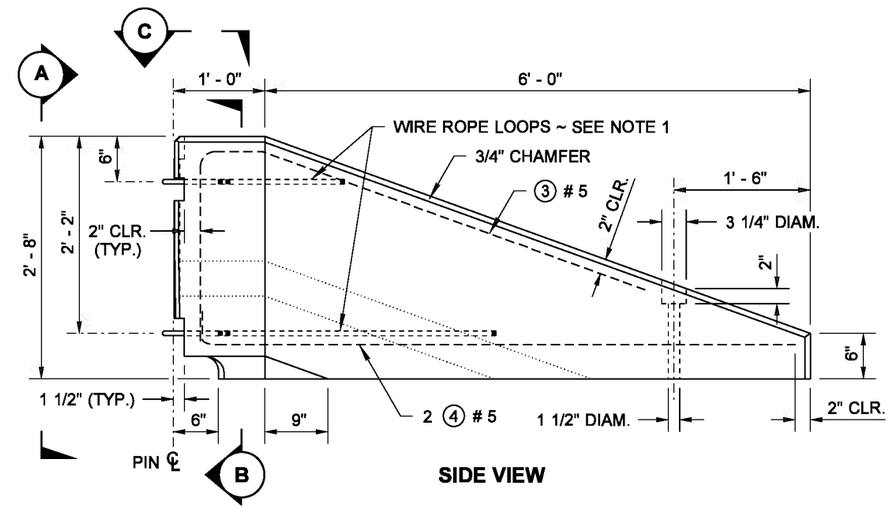

SIDE VIEW

SEE NOTE 4

BARRIER TERMINAL

BARRIER SECTION REINFORCING STEEL BENDING DIAGRAM

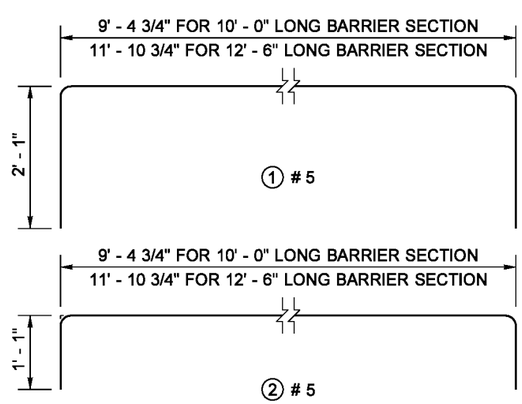

BARRIER TERMINAL REINFORCING STEEL BENDING DIAGRAM

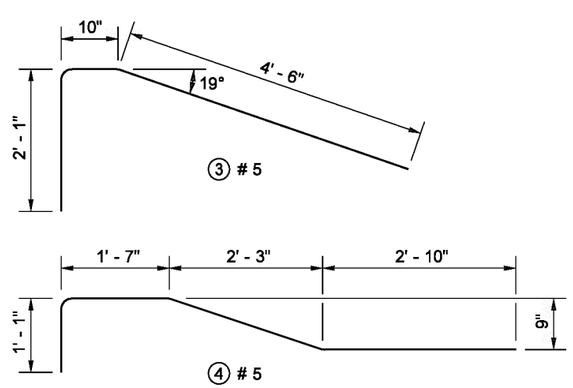

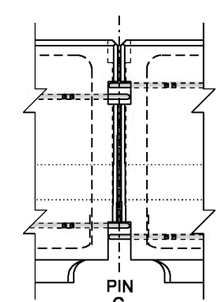

BARRIER CONNECTION DETAIL

NOTE: THIS PLAN IS NOT A LEGAL ENGINEERING DOCUMENT BUT AN ELECTRONIC DUPLICATE. THE ORIGINAL, SIGNED BY THE ENGINEER AND APPROVED FOR PUBLICATION, IS KEPT ON FILE AT THE WASHINGTON STATE DEPARTMENT OF TRANSPORTATION. A COPY MAY BE OBTAINED UPON REQUEST.

CONCRETE BARRIER TYPE 2

STANDARD PLAN C-8

SHEET 2 OF 2 SHEETS

APPROVED FOR PUBLICATION

Pasco Bakotich III — STATE DESIGN ENGINEER

02-10-09 — DATE

Washington State Department of Transportation

EFFECTIVE: AUGUST 6, 2012 TO August 4, 2013
EFFECTIVE: AUGUST 6, 2012 TO August 4, 2013
EFFECTIVE: AUGUST 6, 2012 TO August 4, 2013
EFFECTIVE: AUGUST 6, 2012 TO August 4, 2013

EFFECTIVE: AUGUST 6, 2012 TO August 4, 2013

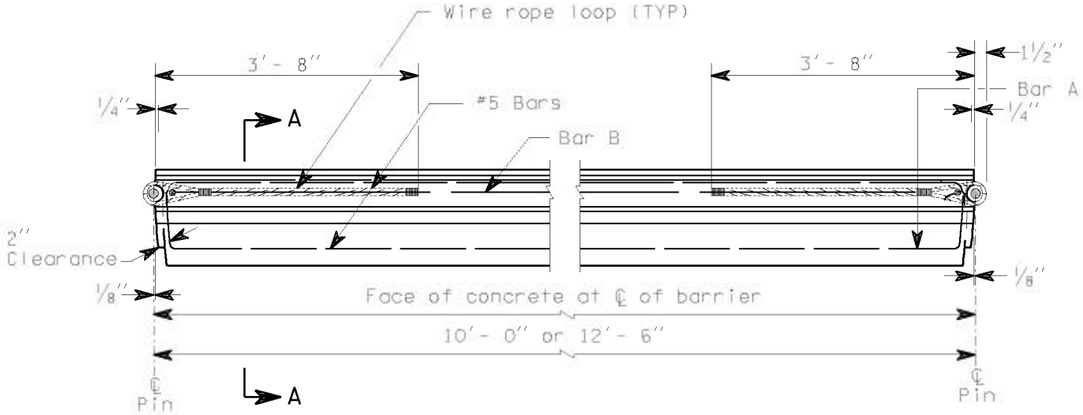

INTERMEDIATE PLAN

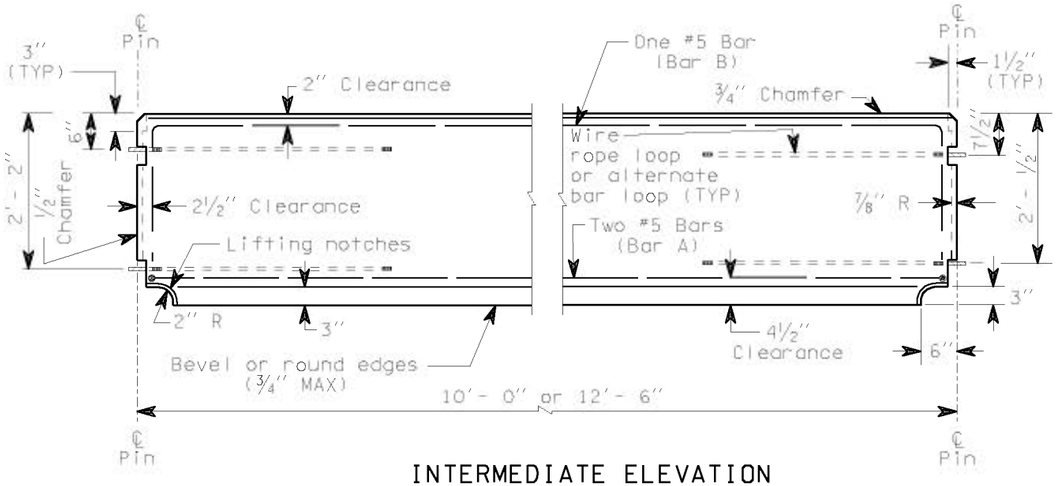

INTERMEDIATE ELEVATION

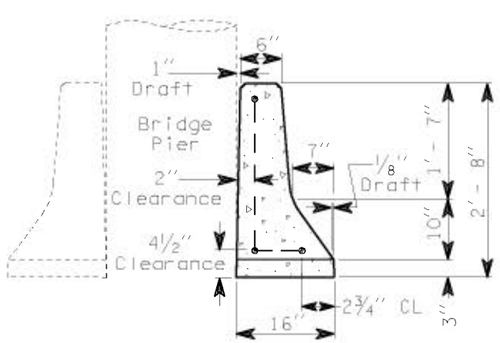

SECTION A-A
TYPE 4

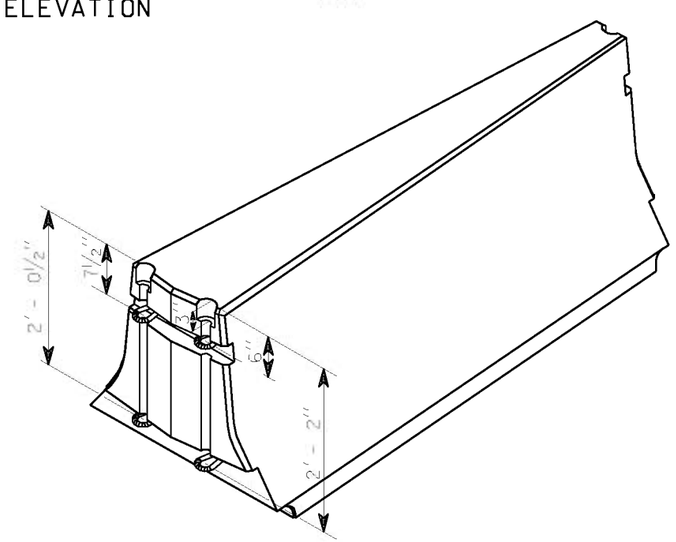

TRANSITION END VIEW

EFFECTIVE: AUGUST 6, 2012 TO August 4, 2013

NOTE

1. For details on wire rope loop, connecting pin and end notches see Standard Plan "Concrete Barrier Type 2."

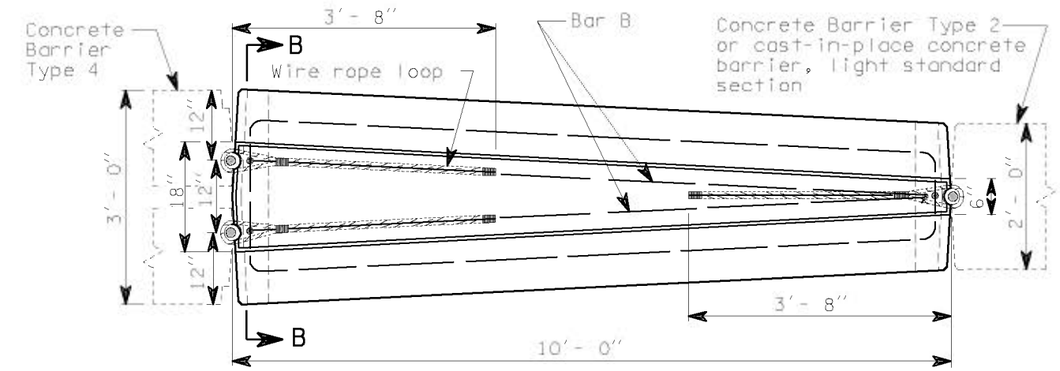

TRANSITION PLAN

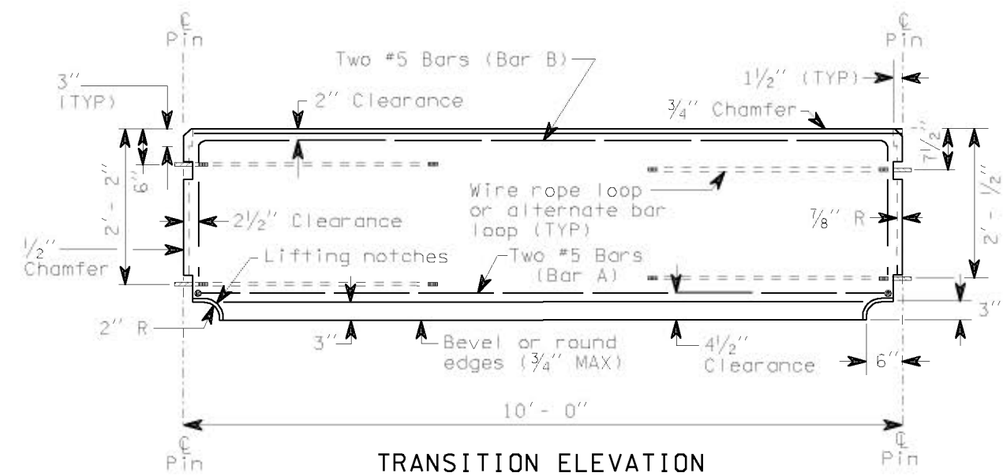

TRANSITION ELEVATION

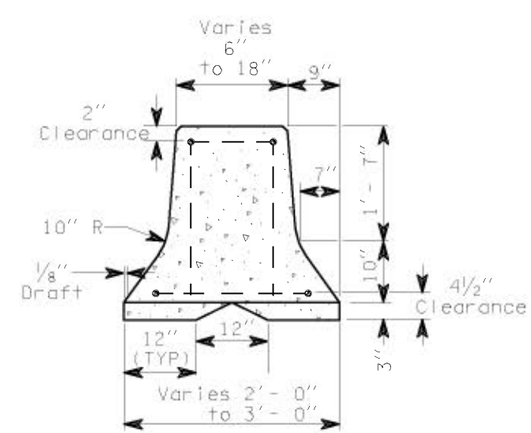

SECTION B-B
TRANSITION SECTION

CONCRETE BARRIER TYPE 4 AND TRANSITION SECTION

CLIFFORD E. MANSFIELD
STATE OF WASHINGTON
15224
REGISTERED PROFESSIONAL ENGINEER
EXPIRES MAY 3, 1998

NOTE: THIS PLAN IS NOT A LEGAL ENGINEERING DOCUMENT BUT IS RESTRICTED TO ELECTRONIC MEDIA. THE ORIGINAL OF THE ENGINEER AND APPROVED FOR PUBLICATION, IS KEPT ON FILE AT THE WASHINGTON STATE DEPARTMENT OF TRANSPORTATION. A COPY MAY BE OBTAINED UPON REQUEST.

STANDARD PLAN C-8a

APPROVED FOR PUBLICATION

Donald K. Nelson — STATE DESIGN ENGINEER
07/25/97 — DATE

WASHINGTON STATE DEPARTMENT OF TRANSPORTATION
OLYMPIA, WASHINGTON

EFFECTIVE: AUGUST 6, 2012 TO August 4, 2013

EFFECTIVE: AUGUST 6, 2012 TO August 4, 2013

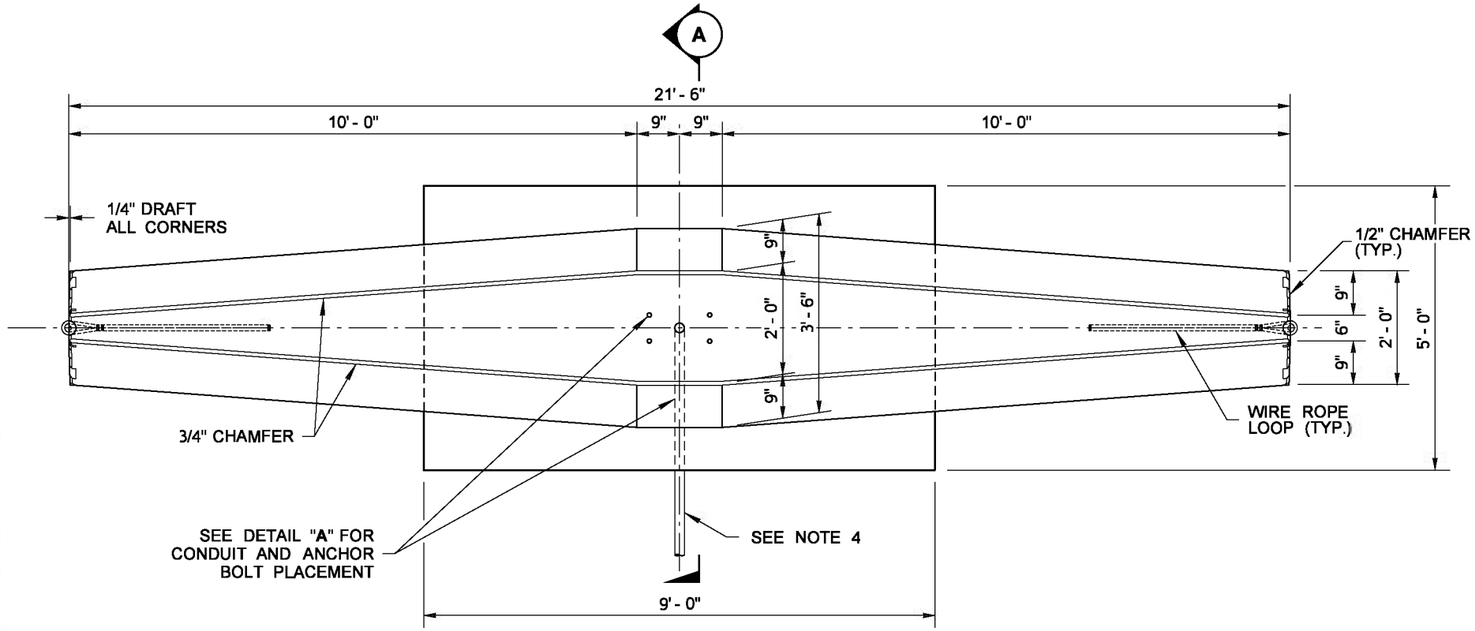

PLAN

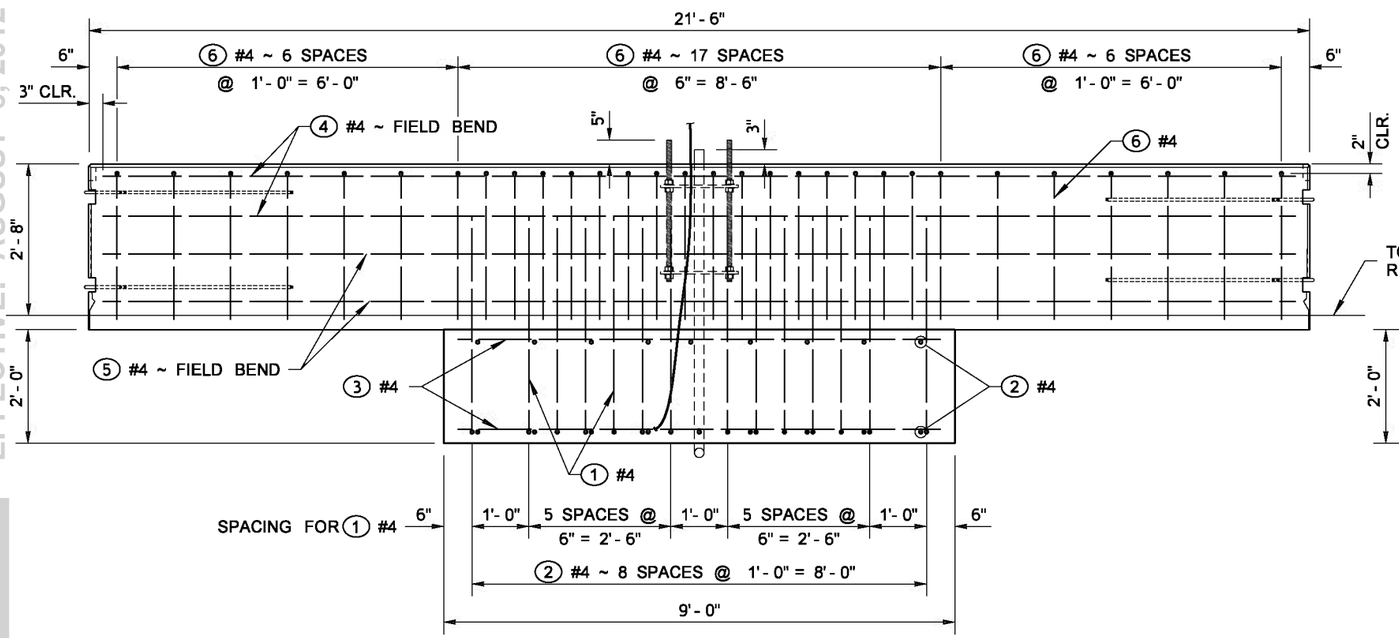

ELEVATION

NOTES

1. This plan shall be used for 40' and 50' Light Standards with 16' max. length double mast arms
2. See **Standard Plan C-8** for details on barrier ends, Wire Rope Loops, and Connecting Pins.
3. Grounding Conductor shall be non-insulated #4 AWG stranded copper, provide 3' - 0" min. slack. Clamp steel reinforcing bar with connnector suitable for use embedded in concrete.
4. See the Contract Plans for conduit placement.
5. Concrete shall be Class 4000.

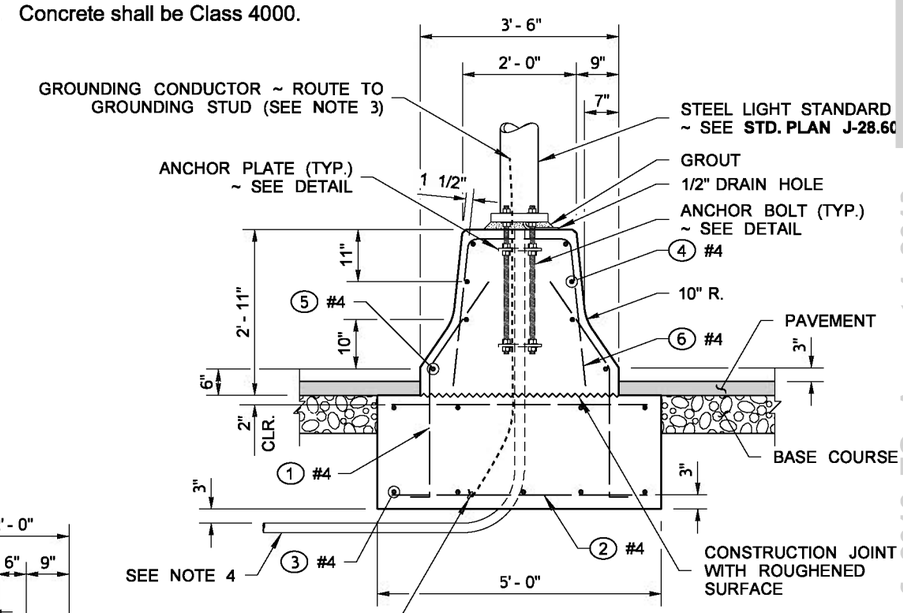

SECTION A

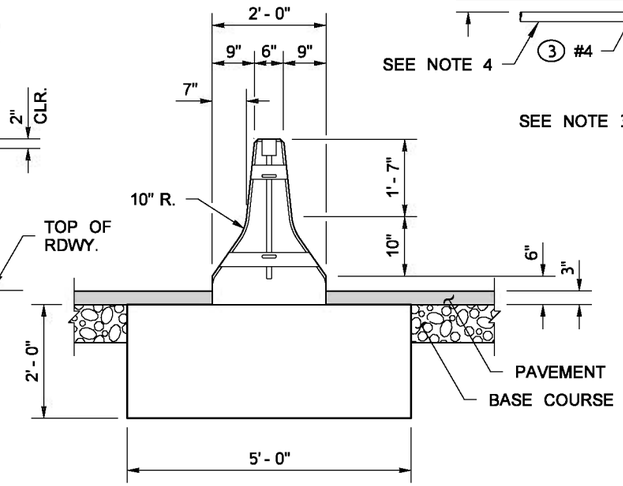

END

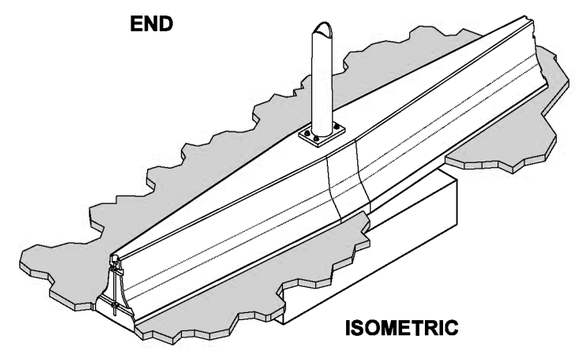

ISOMETRIC

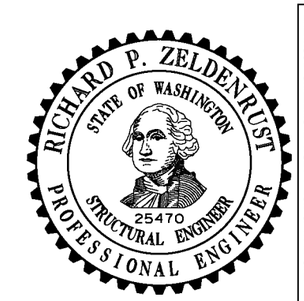

NOTE: THIS PLAN IS NOT A LEGAL ENGINEERING DOCUMENT BUT AN ELECTRONIC DUPLICATE. THE ORIGINAL, SIGNED BY THE ENGINEER AND APPROVED FOR PUBLICATION, IS KEPT ON FILE AT THE WASHINGTON STATE DEPARTMENT OF TRANSPORTATION. A COPY MAY BE OBTAINED UPON REQUEST.

CONCRETE BARRIER LIGHT STANDARD SECTION

STANDARD PLAN C-8b

SHEET 1 OF 2 SHEETS

APPROVED FOR PUBLICATION

Pasco Bakotich III — 06-27-11

STATE DESIGN ENGINEER — DATE

Washington State Department of Transportation

DRAWN BY: LISA CYFORD

EFFECTIVE: AUGUST 6, 2012 TO August 4, 2013

EFFECTIVE: AUGUST 6, 2012 TO August 4, 2013
EFFECTIVE: AUGUST 6, 2012 TO August 4, 2013

DRAWN BY: LISA CYFORD

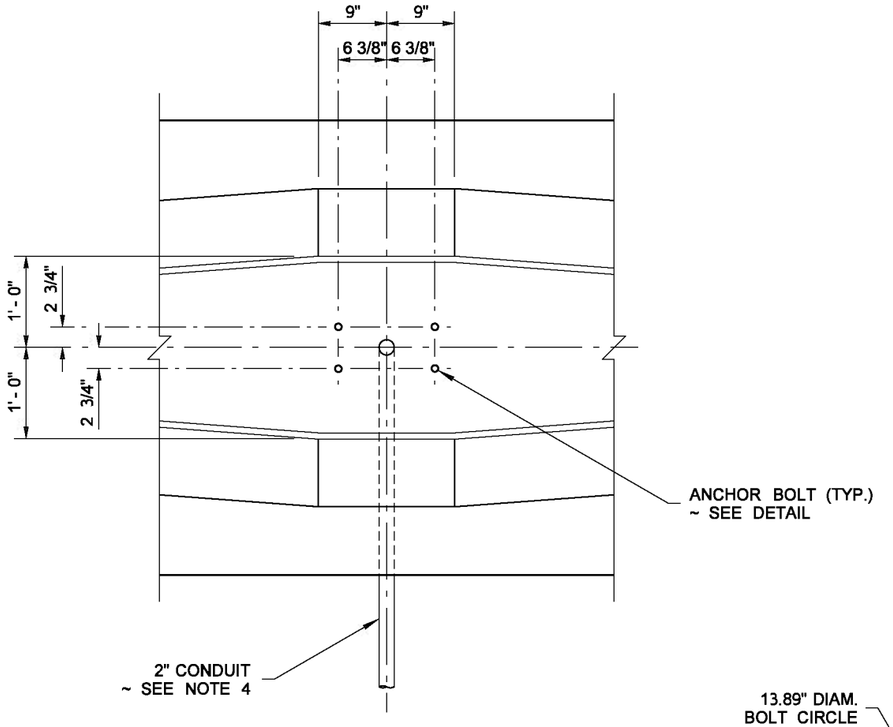

DETAIL "A"

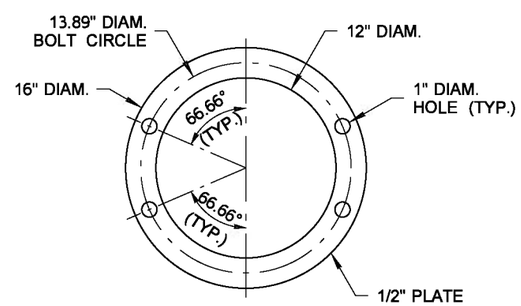

ANCHOR PLATE

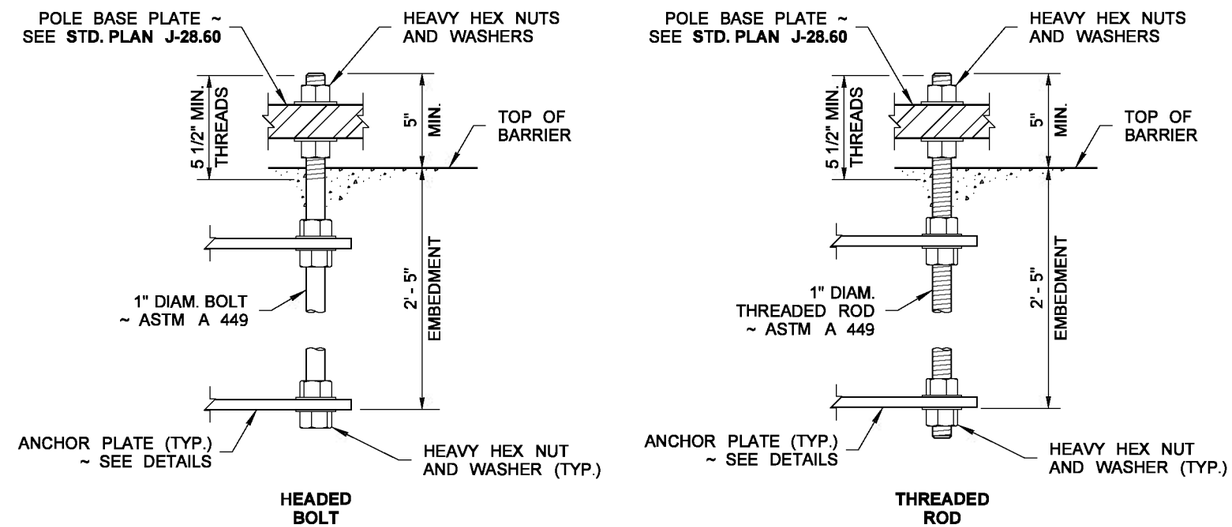

ANCHOR BOLT DETAIL

GALVANIZE EXPOSED ANCHOR ROD END 1' - 0" MIN.

BAR LIST					BENDING DIAGRAM
MARK	LOCATION	QTY.	SIZE	LENGTH	(ALL DIMENSIONS ARE OUT TO OUT)
1	FOOTING - DOWEL	28	#4	4' - 3"	
2	FOOTING	18		4' - 8"	
3	FOOTING	9		8' - 8"	
4	BARRIER	4		21' - 0"	
5	BARRIER	4		21' - 0"	
6	BARRIER	30		5' - 3" TO 6' - 9"	

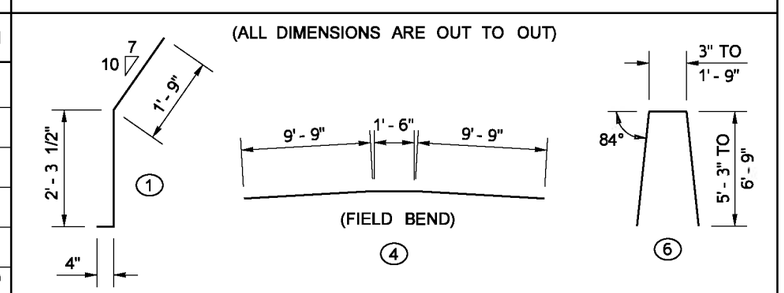

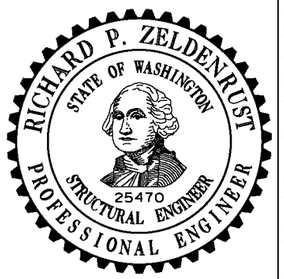

NOTE: THIS PLAN IS NOT A LEGAL ENGINEERING DOCUMENT BUT AN ELECTRONIC DUPLICATE. THE ORIGINAL, SIGNED BY THE ENGINEER AND APPROVED FOR PUBLICATION, IS KEPT ON FILE AT THE WASHINGTON STATE DEPARTMENT OF TRANSPORTATION. A COPY MAY BE OBTAINED UPON REQUEST.

CONCRETE BARRIER LIGHT STANDARD SECTION

STANDARD PLAN C-8b

SHEET 2 OF 2 SHEETS

APPROVED FOR PUBLICATION

Pasco Bakotich III — 06-27-11

STATE DESIGN ENGINEER — DATE

Washington State Department of Transportation

EFFECTIVE: AUGUST 6, 2012 TO August 4, 2013
EFFECTIVE: AUGUST 6, 2012 TO August 4, 2013
EFFECTIVE: AUGUST 6, 2012 TO August 4, 2013
EFFECTIVE: AUGUST 6, 2012 TO August 4, 2013

EFFECTIVE: AUGUST 6, 2012 TO August 4, 2013
EFFECTIVE: AUGUST 6, 2012 TO August 4, 2013

DRAWN BY: MARK SUJKA

NOTES

1. The intended use of this plan is for the permanent anchoring of Precast Concrete Barrier Type 2 (see Standard Plan C-8) on hot mix asphalt pavement.
2. Remove the Type 3 Anchors by first driving the steel pins down through the barrier further into the pavement to allow lifting the barrier without interference, then remove the pins from the pavement.
3. After removing the Type 3 Anchors, clean the pin holes and fill them with sealant according to Standard Specification 9-04.2.

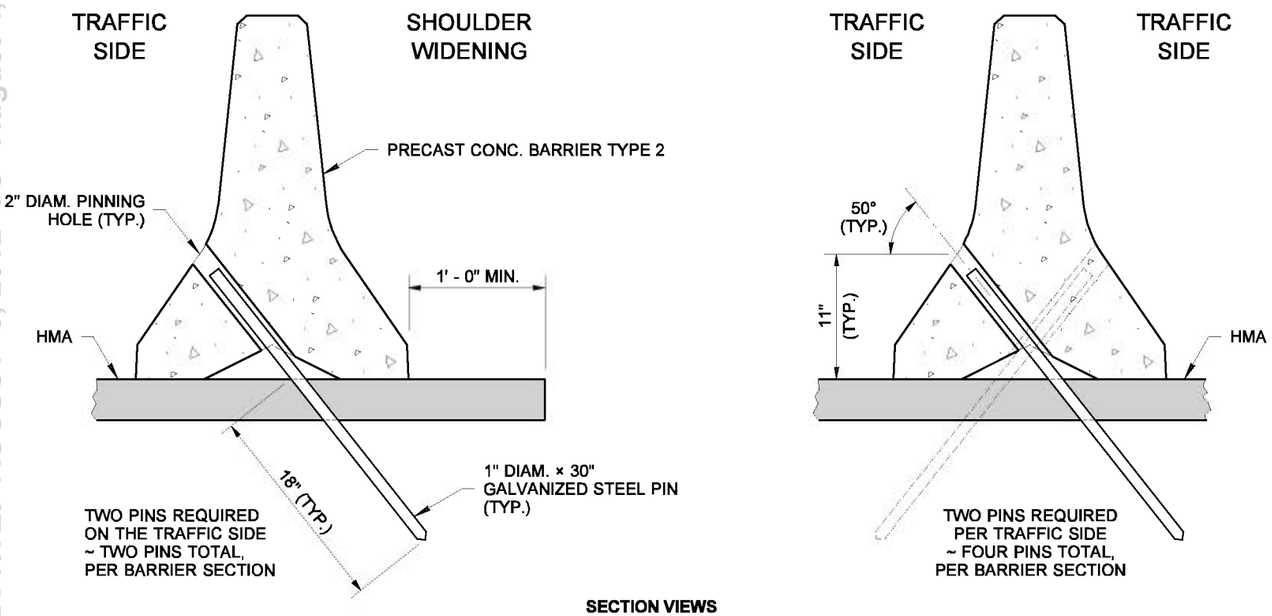

SECTION VIEWS

TYPE 3 ANCHOR
PIN LOCATIONS

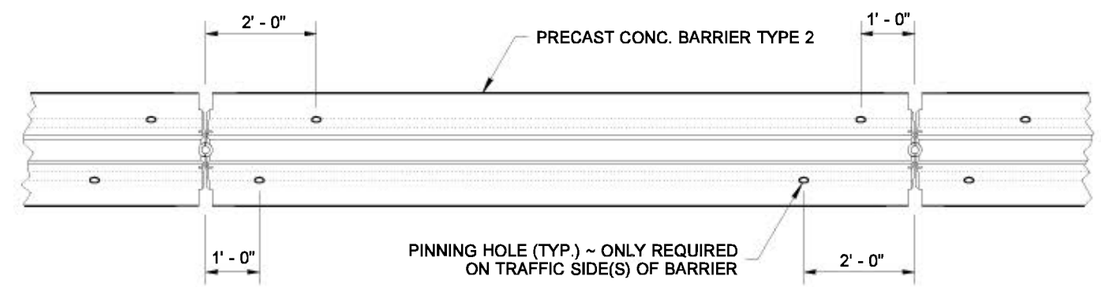

PLAN VIEW

TYPE 3 ANCHOR
PIN LOCATIONS

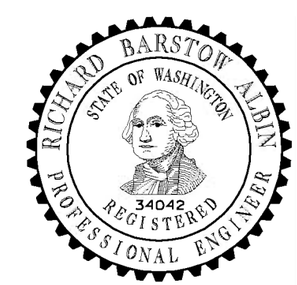

EXPIRES JULY 24, 2008

NOTE: THIS PLAN IS NOT A LEGAL ENGINEERING DOCUMENT BUT AN ELECTRONIC DUPLICATE. THE ORIGINAL, SIGNED BY THE ENGINEER AND APPROVED FOR PUBLICATION, IS KEPT ON FILE AT THE WASHINGTON STATE DEPARTMENT OF TRANSPORTATION. A COPY MAY BE OBTAINED UPON REQUEST.

PRECAST CONC. BARRIER ANCHOR ~ TYPE 3 (PERMANENT) STANDARD PLAN C-8e

SHEET 1 OF 1 SHEET

APPROVED FOR PUBLICATION

Ken L. Smith — STATE DESIGN ENGINEER — *02-21-07* DATE

Washington State Department of Transportation

DATE	REVISION	BY
02/2007	REMOVED TEMPORARY ANCHORS	MAS

EFFECTIVE: AUGUST 6, 2012 TO August 4, 2013
EFFECTIVE: AUGUST 6, 2012 TO August 4, 2013
EFFECTIVE: AUGUST 6, 2012 TO August 4, 2013
EFFECTIVE: AUGUST 6, 2012 TO August 4, 2013

EFFECTIVE: AUGUST 6, 2012 TO August 4, 2013
EFFECTIVE: AUGUST 6, 2012 TO August 4, 2013

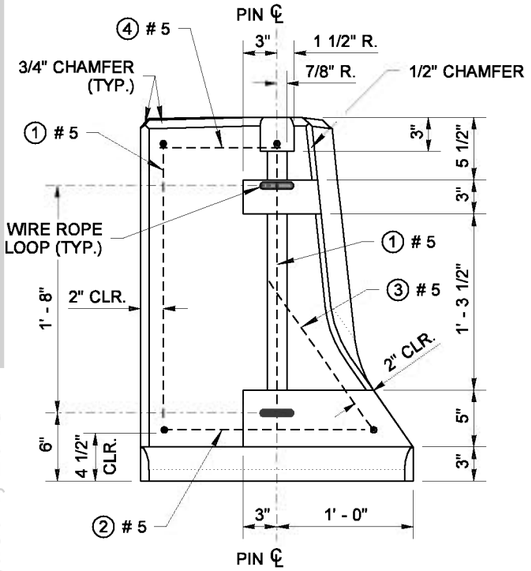

CONCRETE BARRIER TYPE 2 (NJ-SHAPE)

END VIEW

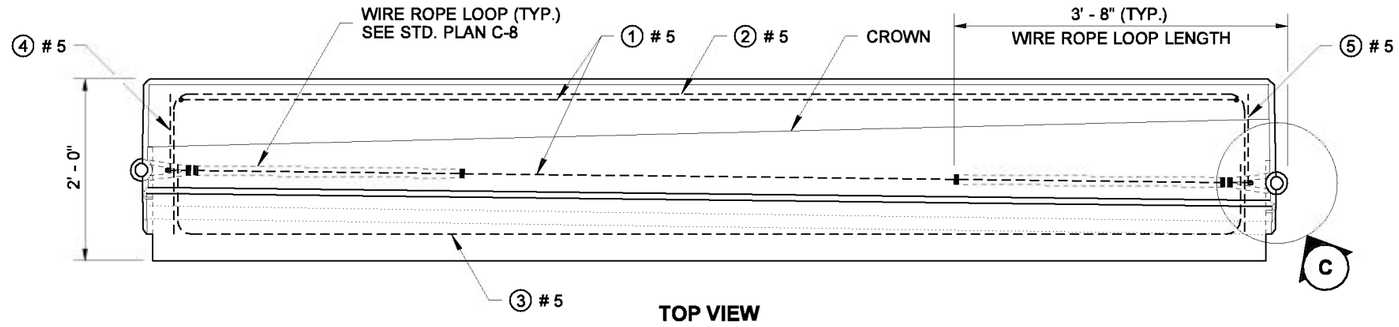

TOP VIEW

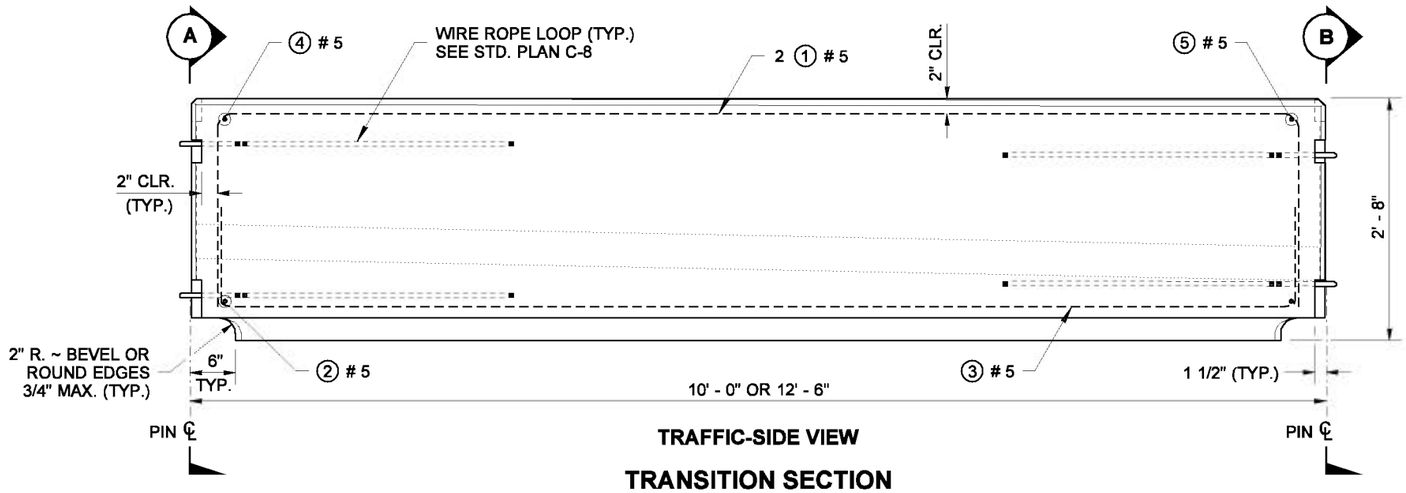

TRAFFIC-SIDE VIEW

TRANSITION SECTION

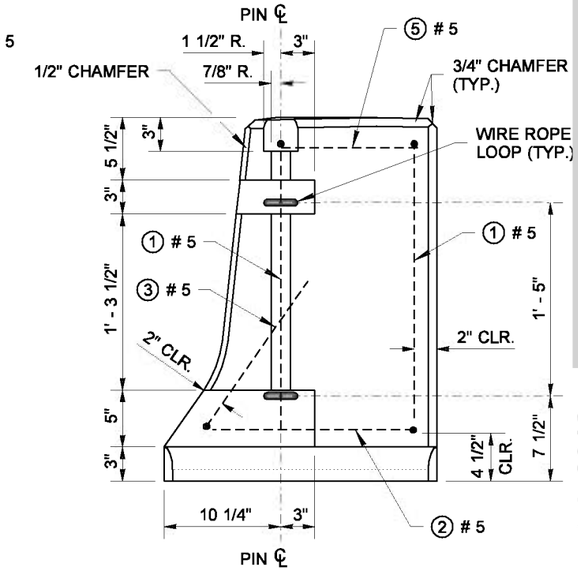

BRIDGE F-SHAPE TRAFFIC BARRIER

END VIEW

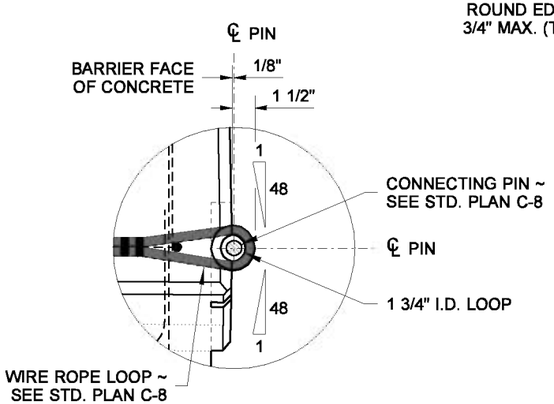

TYPICAL ~ BOTH ENDS

DETAIL C

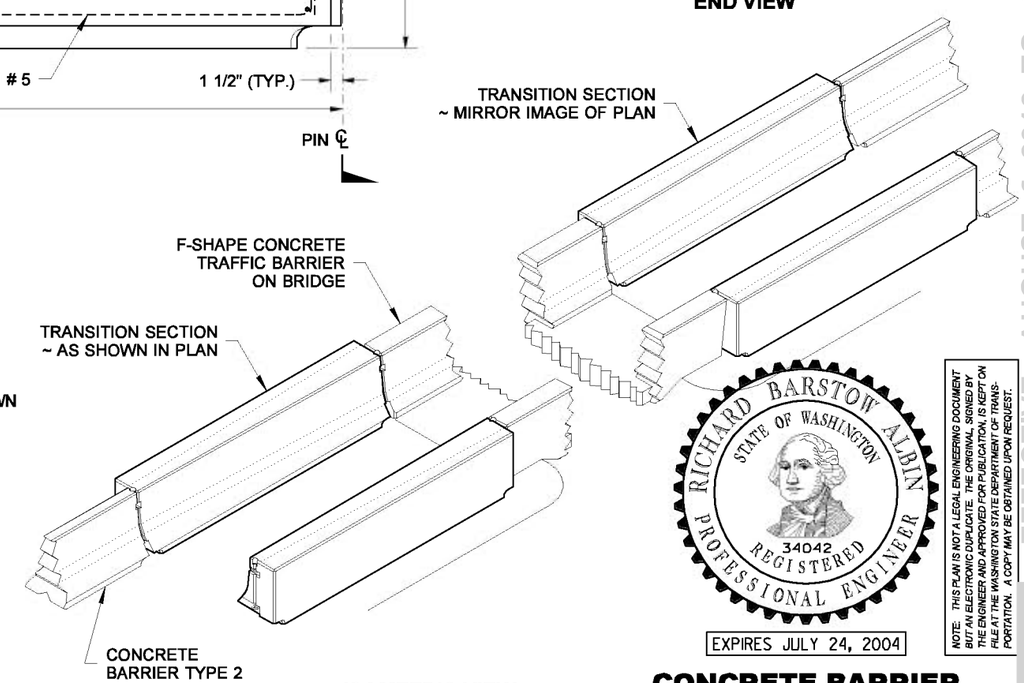

ISOMETRIC VIEW

REINFORCING STEEL BENDING DIAGRAM

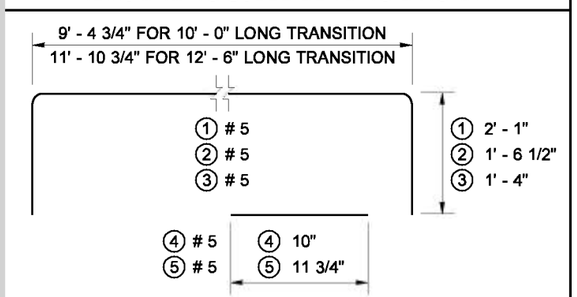

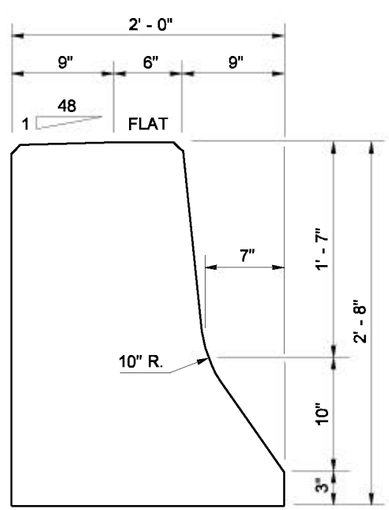

CONCRETE BARRIER TYPE 2 (NJ-SHAPE)

SECTION A

(SHOWN AT LIMIT OF TRANSITION)

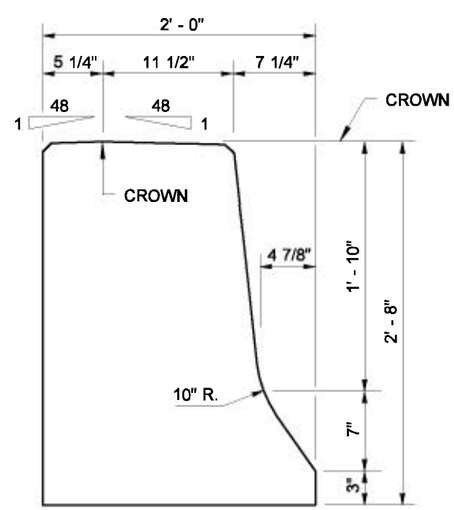

BRIDGE F-SHAPE TRAFFIC BARRIER

SECTION B

(SHOWN AT LIMIT OF TRANSITION)

NOTE

The vertical locations of the Wire Rope Loops at one end compose a set that shall not vary; however, which set is applied to an end is determined by the end to which it is being connected. A set with loops 1' - 5" apart connects to a set with loops 1' - 8" apart. See Standard Plan C-8, BARRIER CONNECTION DETAIL.

RICHARD BARSTOW ALBIN
STATE OF WASHINGTON
34042
REGISTERED PROFESSIONAL ENGINEER

EXPIRES JULY 24, 2004

NOTE: THIS PLAN IS NOT A LEGAL ENGINEERING DOCUMENT BUT AN ELECTRONIC DUPLICATE. THE ORIGINAL, SIGNED BY THE ENGINEER AND APPROVED FOR PUBLICATION, IS KEPT ON FILE AT THE WASHINGTON STATE DEPARTMENT OF TRANSPORTATION. A COPY MAY BE OBTAINED UPON REQUEST.

CONCRETE BARRIER TRANSITION TYPE 2 TO BRIDGE F-SHAPE STANDARD PLAN C-8f

SHEET 1 OF 1 SHEET

APPROVED FOR PUBLICATION

Harold J. Peterfeso — STATE DESIGN ENGINEER

06-30-04 — DATE

Washington State Department of Transportation

DRAWN BY: MARK SUJKA

EFFECTIVE: AUGUST 6, 2012 TO August 4, 2013
EFFECTIVE: AUGUST 6, 2012 TO August 4, 2013
EFFECTIVE: AUGUST 6, 2012 TO August 4, 2013
EFFECTIVE: AUGUST 6, 2012 TO August 4, 2013

EFFECTIVE: AUGUST 6, 2012 TO August 4, 2013
EFFECTIVE: AUGUST 6, 2012 TO August 4, 2013

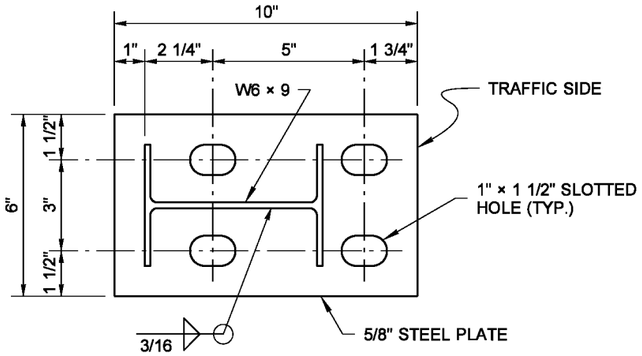

POST BASE PLATE DETAIL

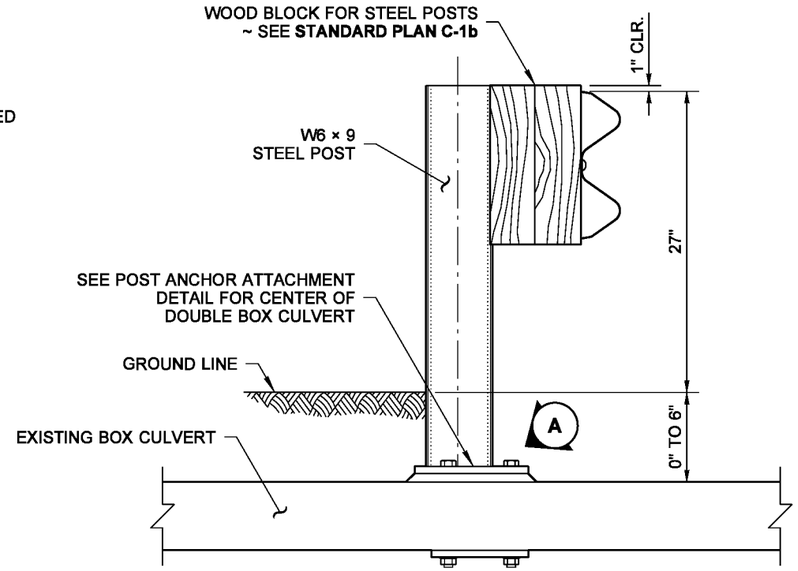

BOX CULVERT GUARDRAIL STEEL POST TYPE 2

(0" TO 6" GROUND COVER)

NOTES

1. Length of W8 × 35 and W6 × 9 shall be determined by measurement from top of ground to top of grout pad. This distance shall be verified by the Contractor.
2. Attach Guardrail Post to Box Culvert with 3/4" diameter high strength bolts with resin bonded anchors.
3. Drill 1 1/4" diameter hole in concrete slab for 7/8" diameter high strength bolt. Length of bolt is determined by top slab of Box Culvert thickness which shall be verified by the Contractor.
4. For details of post attachment to Double Box Culvert, see **Standard Plan C-2i**.

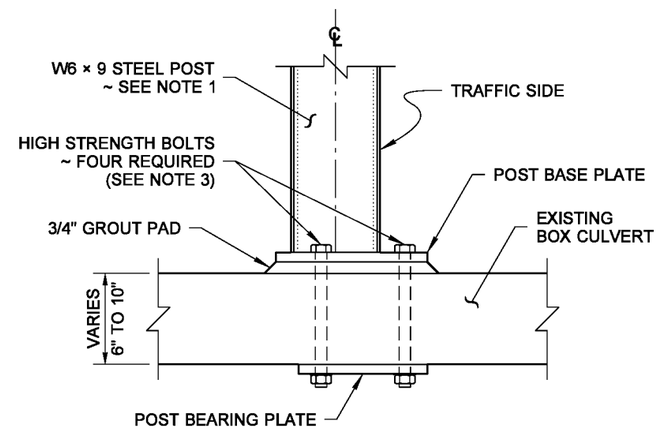

DETAIL A

POST BASE ATTACHMENT

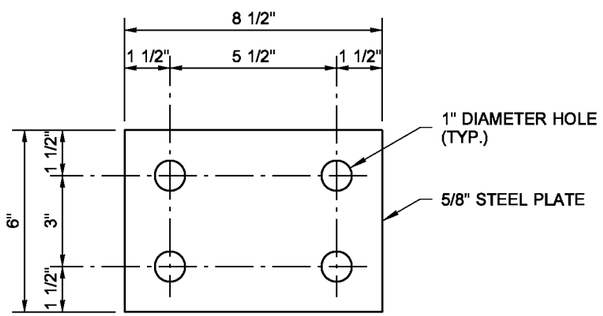

POST BEARING PLATE DETAIL

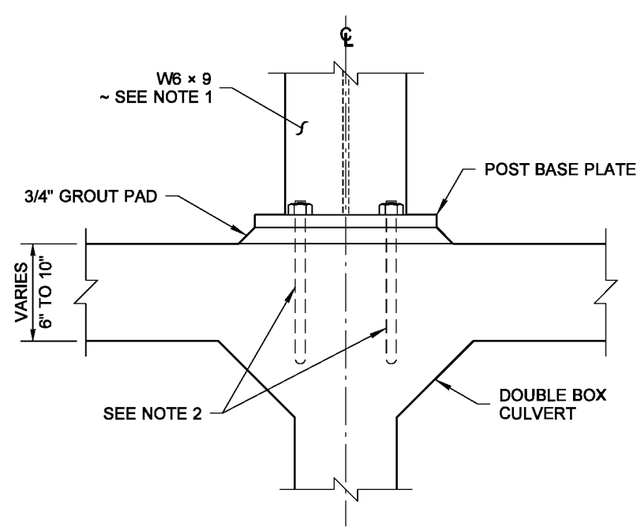

POST ANCHOR ATTACHMENT DETAIL

(SEE NOTE 4)

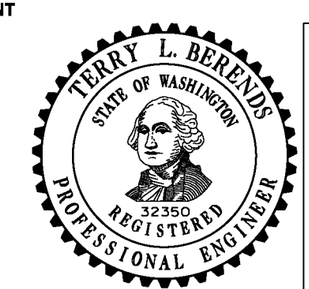

NOTE: THIS PLAN IS NOT A LEGAL ENGINEERING DOCUMENT BUT AN ELECTRONIC DUPLICATE. THE ORIGINAL, SIGNED BY THE ENGINEER AND APPROVED FOR PUBLICATION, IS KEPT ON FILE AT THE WASHINGTON STATE DEPARTMENT OF TRANSPORTATION. A COPY MAY BE OBTAINED UPON REQUEST.

BOX CULVERT GUARDRAIL STEEL POST

STANDARD PLAN C-10

SHEET 1 OF 2 SHEETS

APPROVED FOR PUBLICATION

Pasco Bakotich III — STATE DESIGN ENGINEER

06-03-10 — DATE

Washington State Department of Transportation

DRAWN BY: LISA CYFORD

EFFECTIVE: AUGUST 6, 2012 TO August 4, 2013
EFFECTIVE: AUGUST 6, 2012 TO August 4, 2013
EFFECTIVE: AUGUST 6, 2012 TO August 4, 2013
EFFECTIVE: AUGUST 6, 2012 TO August 4, 2013

EFFECTIVE: AUGUST 6, 2012 TO August 4, 2013
EFFECTIVE: AUGUST 6, 2012 TO August 4, 2013

DRAWN BY: LISA CYFORD

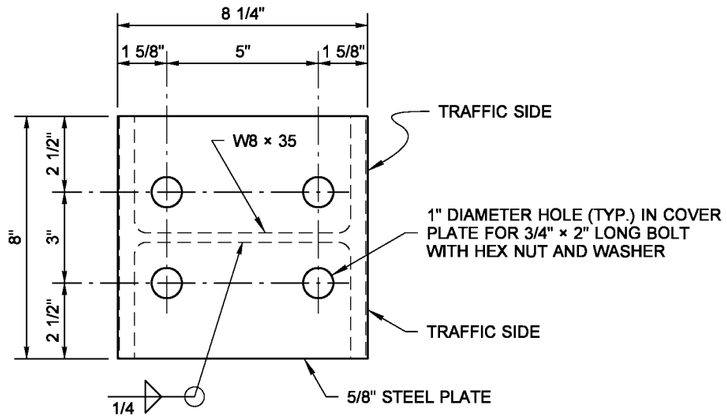

COVER PLATE DETAIL

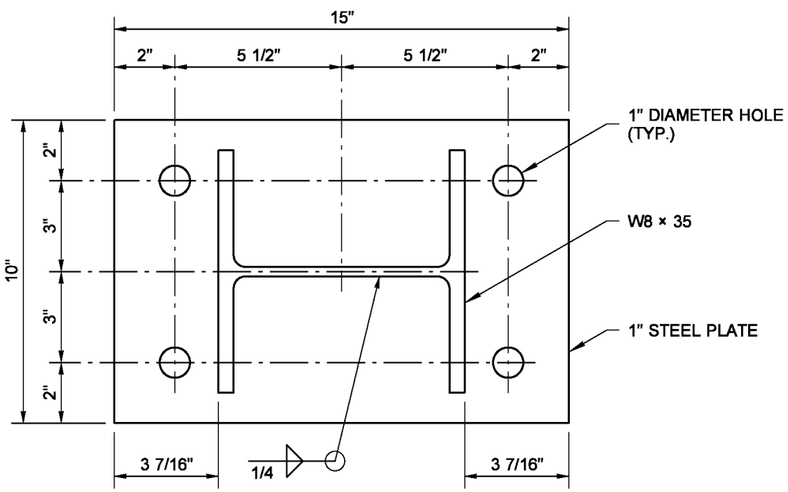

BASE PLATE DETAIL

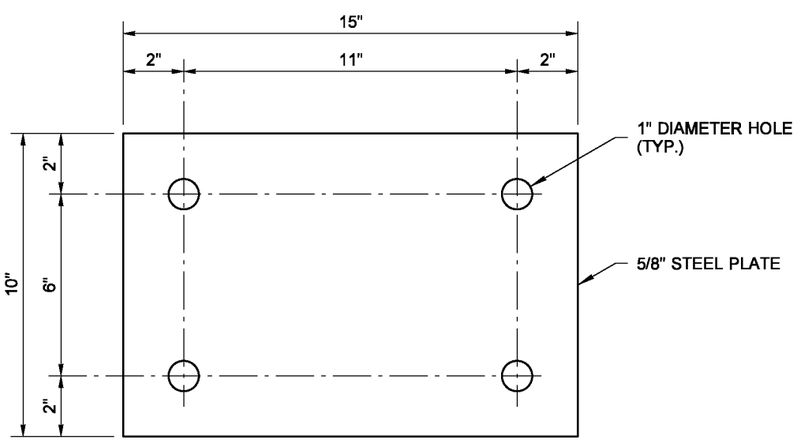

BEARING PLATE DETAIL

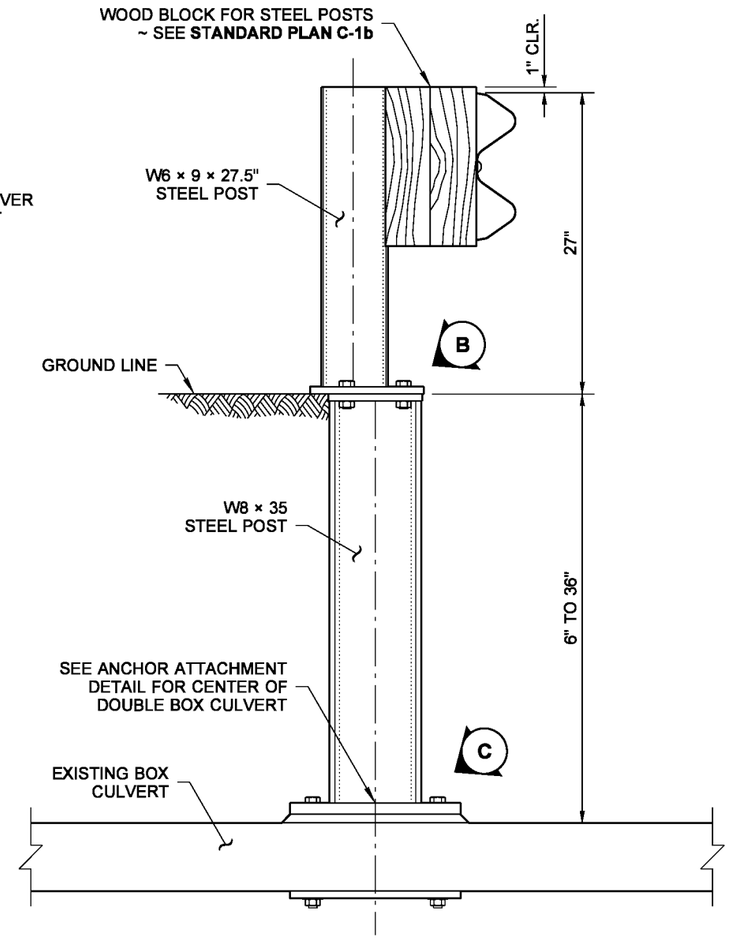

BOX CULVERT GUARDRAIL STEEL POST TYPE 1

(6" TO 36" GROUND COVER)

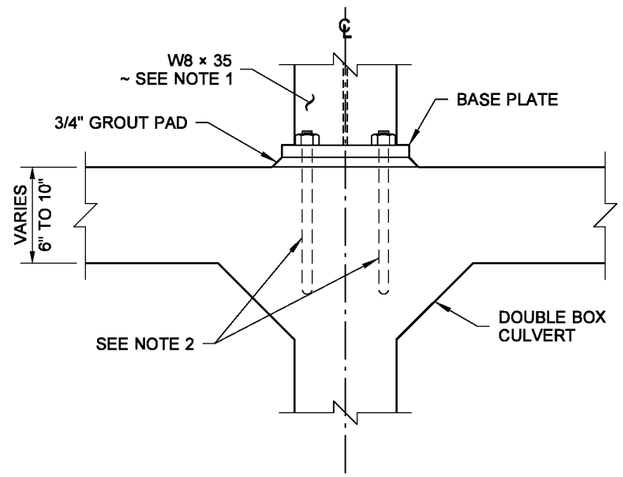

ANCHOR ATTACHMENT DETAIL

(SEE NOTE 4)

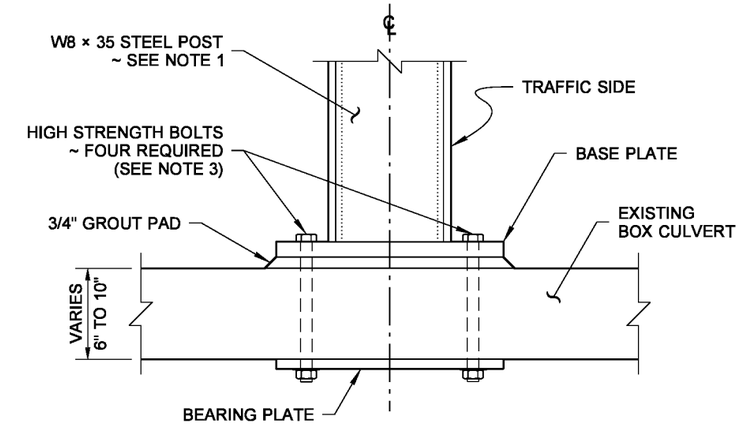

DETAIL C

POST ATTACHMENT

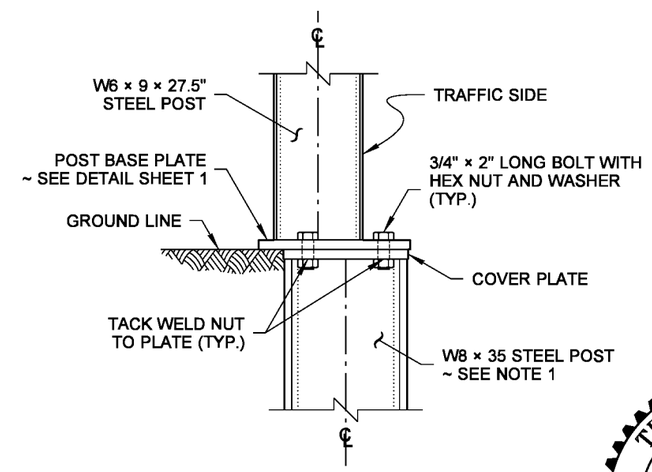

DETAIL B

BASE ATTACHMENT

NOTE: THIS PLAN IS NOT A LEGAL ENGINEERING DOCUMENT BUT AN ELECTRONIC DUPLICATE. THE ORIGINAL, SIGNED BY THE ENGINEER AND APPROVED FOR PUBLICATION, IS KEPT ON FILE AT THE WASHINGTON STATE DEPARTMENT OF TRANSPORTATION. A COPY MAY BE OBTAINED UPON REQUEST.

BOX CULVERT GUARDRAIL STEEL POST

STANDARD PLAN C-10

SHEET 2 OF 2 SHEETS

APPROVED FOR PUBLICATION

Pasco Bakotich III — STATE DESIGN ENGINEER

06-03-10 — DATE

Washington State Department of Transportation

EFFECTIVE: AUGUST 6, 2012 TO August 4, 2013
EFFECTIVE: AUGUST 6, 2012 TO August 4, 2013
EFFECTIVE: AUGUST 6, 2012 TO August 4, 2013
EFFECTIVE: AUGUST 6, 2012 TO August 4, 2013

EFFECTIVE: AUGUST 6, 2012 TO August 4, 2013
EFFECTIVE: AUGUST 6, 2012 TO August 4, 2013

DRAWN BY: LISA CYFORD

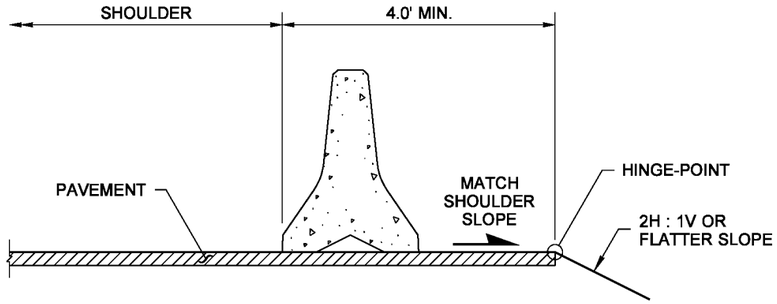

PRECAST CONC. BARRIER TYPE 2

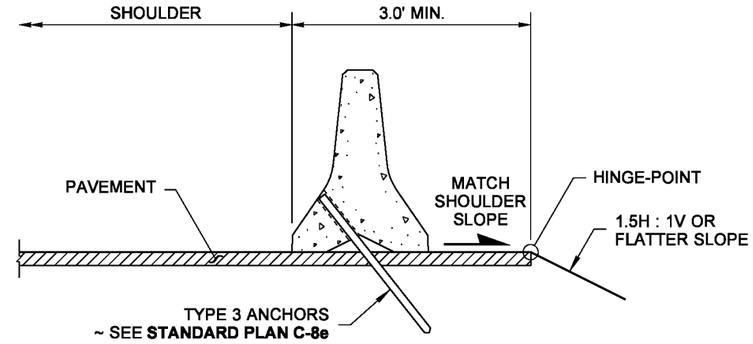

ANCHORED PRECAST CONC. BARRIER TYPE 2

NOTE

1. For W-Beam Type 31 shoulder application, see **Standard Plan C-28.40.**

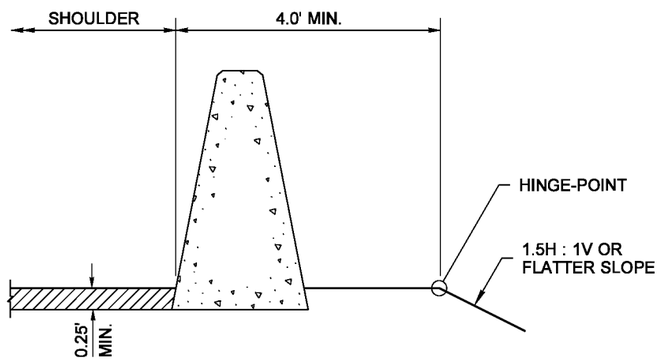

SINGLE SLOPE CONC. BARRIER CAST-IN-PLACE

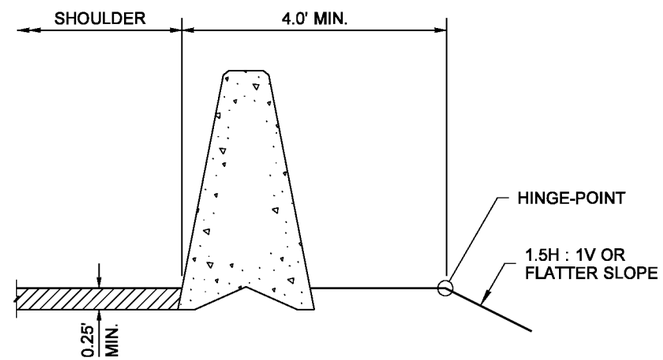

SINGLE SLOPE CONC. BARRIER PRECAST

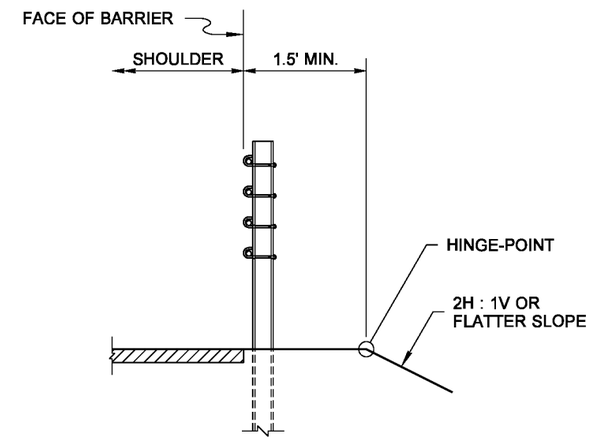

CABLE BARRIER

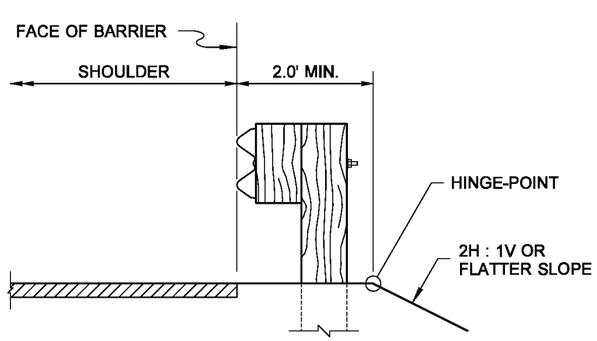

BEAM GUARDRAIL TYPE 1
(SEE NOTE 1)

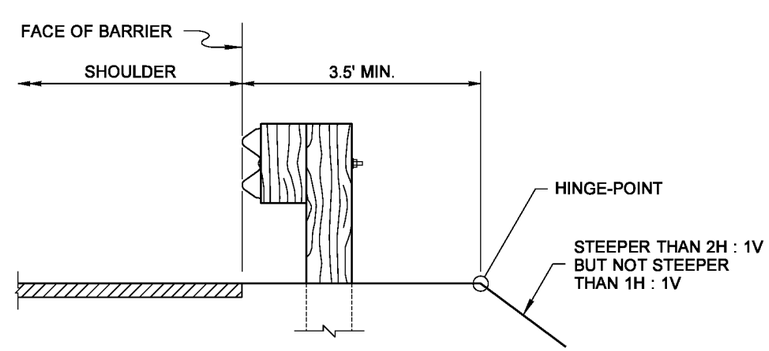

BEAM GUARDRAIL TYPE 1 ON STEEP SLOPES
(SEE NOTE 1)

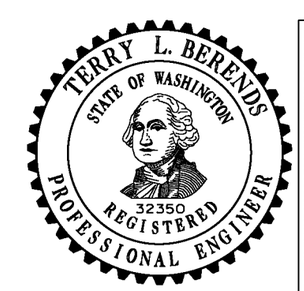

NOTE: THIS PLAN IS NOT A LEGAL ENGINEERING DOCUMENT BUT AN ELECTRONIC DUPLICATE. THE ORIGINAL, SIGNED BY THE ENGINEER AND APPROVED FOR PUBLICATION, IS KEPT ON FILE AT THE WASHINGTON STATE DEPARTMENT OF TRANSPORTATION. A COPY MAY BE OBTAINED UPON REQUEST.

TRAFFIC BARRIER SHOULDER WIDENING ~ FOR SHOULDERS 8.0' AND WIDER
STANDARD PLAN C-16a

SHEET 1 OF 1 SHEET

APPROVED FOR PUBLICATION

Pasco Bakotich III — STATE DESIGN ENGINEER
06-03-10 — DATE

Washington State Department of Transportation

EFFECTIVE: AUGUST 6, 2012 TO August 4, 2013
EFFECTIVE: AUGUST 6, 2012 TO August 4, 2013
EFFECTIVE: AUGUST 6, 2012 TO August 4, 2013
EFFECTIVE: AUGUST 6, 2012 TO August 4, 2013

EFFECTIVE: AUGUST 6, 2012 TO August 4, 2013
EFFECTIVE: AUGUST 6, 2012 TO August 4, 2013

DRAWN BY: LISA CYFORD

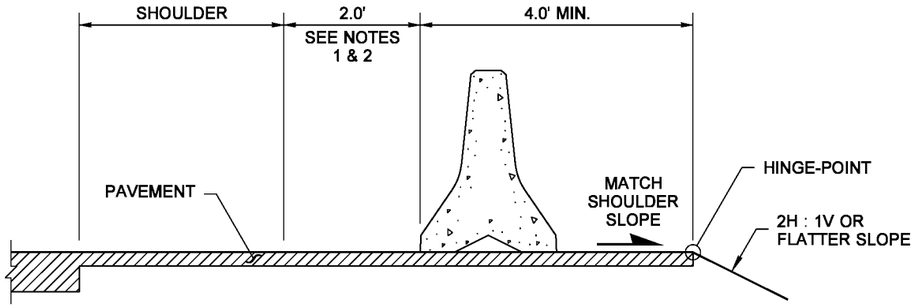

PRECAST CONC. BARRIER TYPE 2

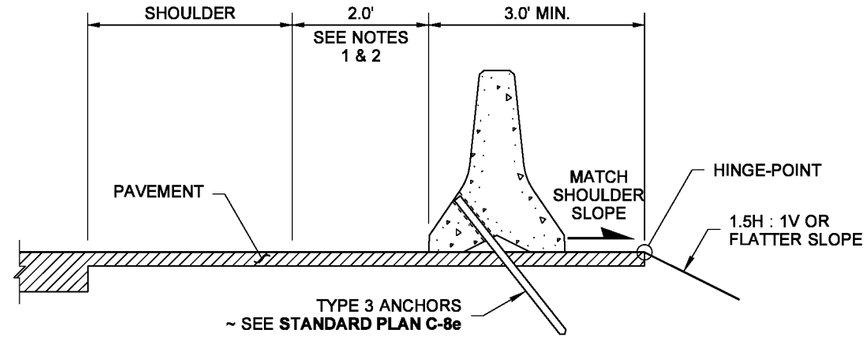

ANCHORED PRECAST CONC. BARRIER TYPE 2

NOTES

1. An additional width for shy distance is required when the existing roadway is to be widened.
2. The additional width for shy distance may be less than 2.0' when it, combined with the existing shoulder width, totals 8.0' or more.
3. For W-Beam Type 31 shoulder application, see **Standard Plan C-28.40.**

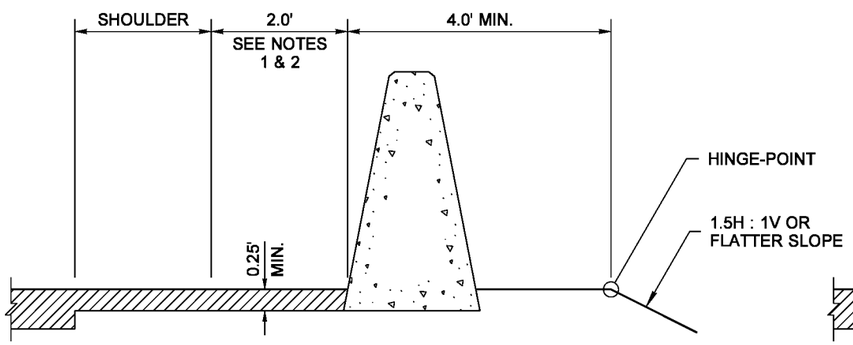

SINGLE SLOPE CONC. BARRIER CAST-IN-PLACE

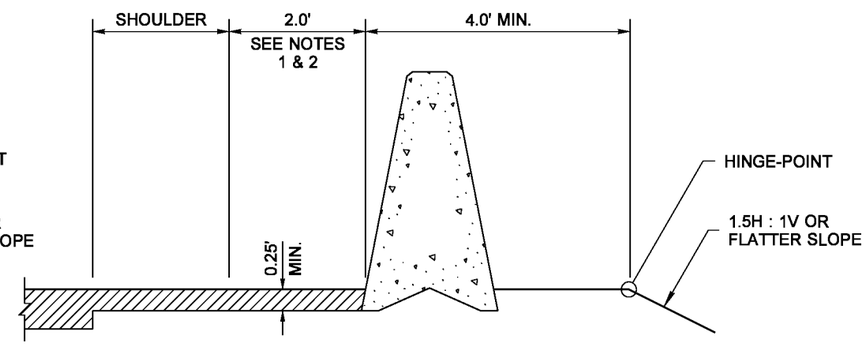

SINGLE SLOPE CONC. BARRIER PRECAST

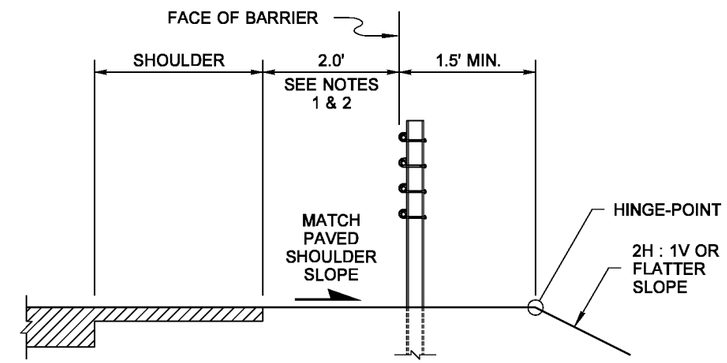

CABLE BARRIER

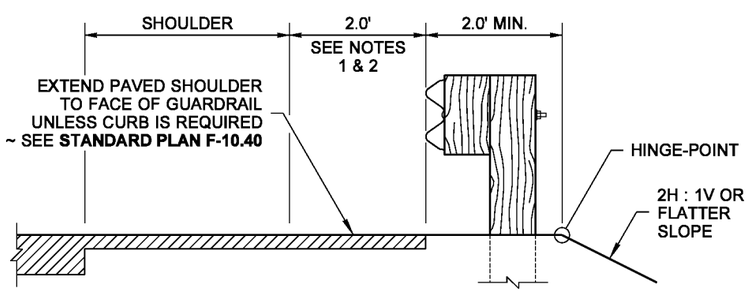

BEAM GUARDRAIL TYPE 1
(SEE NOTE 3)

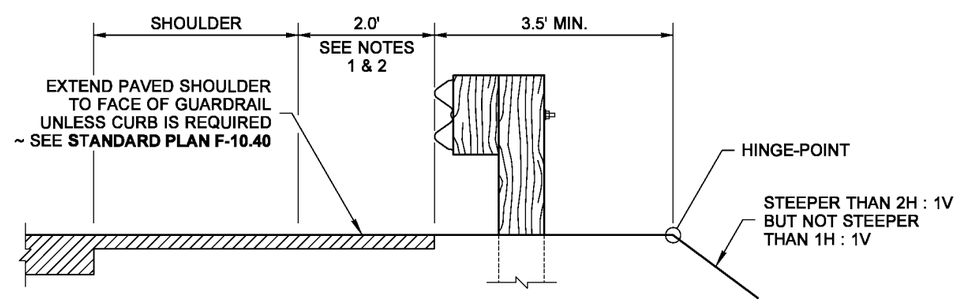

BEAM GUARDRAIL TYPE 1 ON STEEP SLOPES
(SEE NOTE 3)

NOTE: THIS PLAN IS NOT A LEGAL ENGINEERING DOCUMENT BUT AN ELECTRONIC DUPLICATE. THE ORIGINAL, SIGNED BY THE ENGINEER AND APPROVED FOR PUBLICATION, IS KEPT ON FILE AT THE WASHINGTON STATE DEPARTMENT OF TRANSPORTATION. A COPY MAY BE OBTAINED UPON REQUEST.

TRAFFIC BARRIER SHOULDER WIDENING ~ FOR SHOULDERS LESS THAN 8.0' WIDE
STANDARD PLAN C-16b

SHEET 1 OF 1 SHEET

APPROVED FOR PUBLICATION

Pasco Bakotich III — STATE DESIGN ENGINEER
06-03-10 — DATE

Washington State Department of Transportation

EFFECTIVE: AUGUST 6, 2012 TO August 4, 2013
EFFECTIVE: AUGUST 6, 2012 TO August 4, 2013
EFFECTIVE: AUGUST 6, 2012 TO August 4, 2013
EFFECTIVE: AUGUST 6, 2012 TO August 4, 2013

EFFECTIVE: AUGUST 6, 2012 TO August 4, 2013
EFFECTIVE: AUGUST 6, 2012 TO August 4, 2013

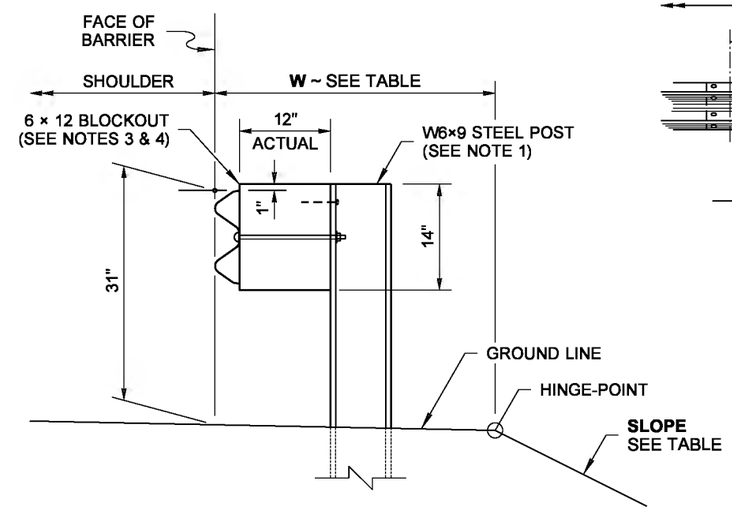

TYPICAL SECTION ~ WITHOUT CURB
(6' - 0" LONG POSTS)

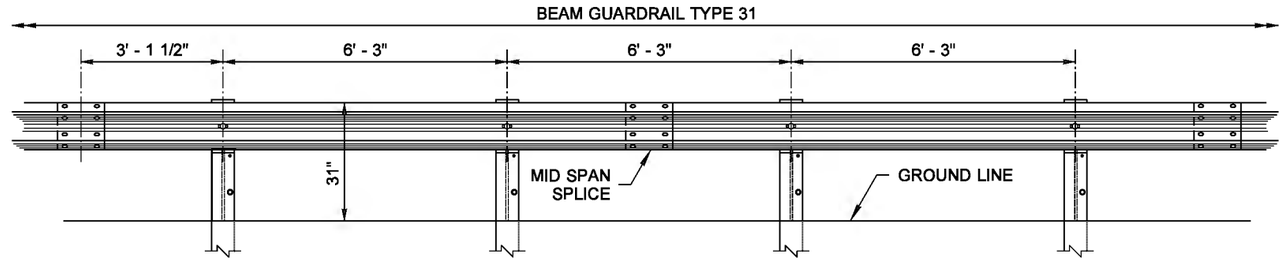

TYPICAL ELEVATION

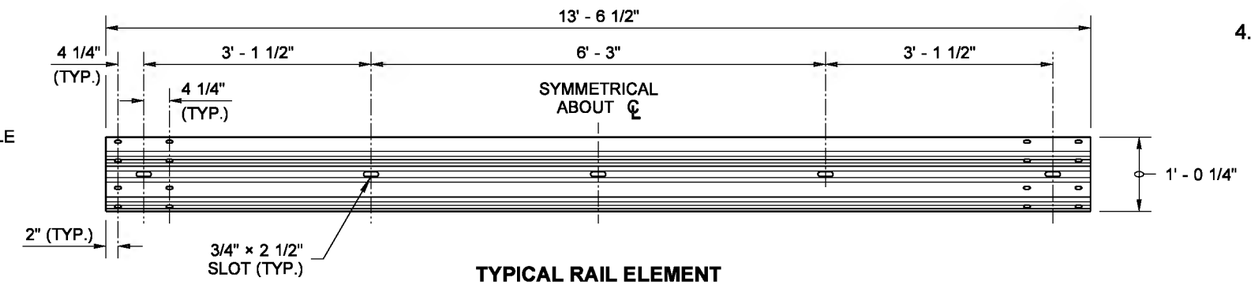

TYPICAL RAIL ELEMENT

NOTES

1. Refer to **Standard Plan C-1** and **C-1b** for additional details not shown on this plan.
2. Extend shoulder pavement to provide a base for the extruded curb. See Contract Plans for exceptions to distances shown.
3. Use a single combination of blocks (no more than 2) to achieve the actual 12" offset. See **Standard Specification 9-16.3(2)**. Wood blocks shall be toe-nailed to post and blocks, (if block combinations are utilized) with a 16d galvanized nail to prevent block rotation.
4. Wood blocks are shown. Blocks of an approved alternative material may be used. **See Standard Specification 9-16.3(2).**

SLOPE \ EMBANKMENT TABLE	
SLOPE	**W**
2H : 1V OR FLATTER	2.5' MIN.
STEEPER THAN 2H : 1V BUT NOT STEEPER THAN 1H : 1V	4.0' MIN.

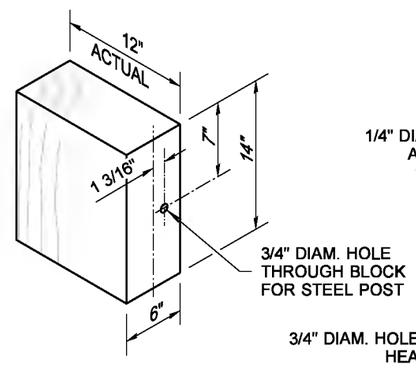

WOOD BLOCK

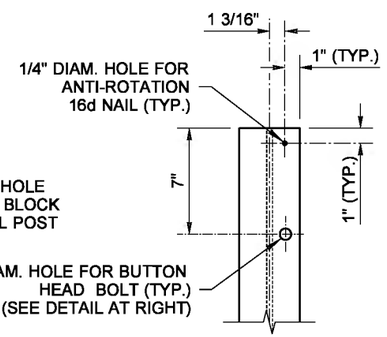

STEEL POST

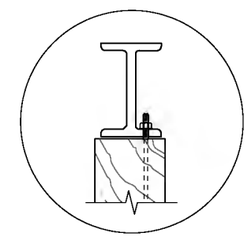

DETAIL

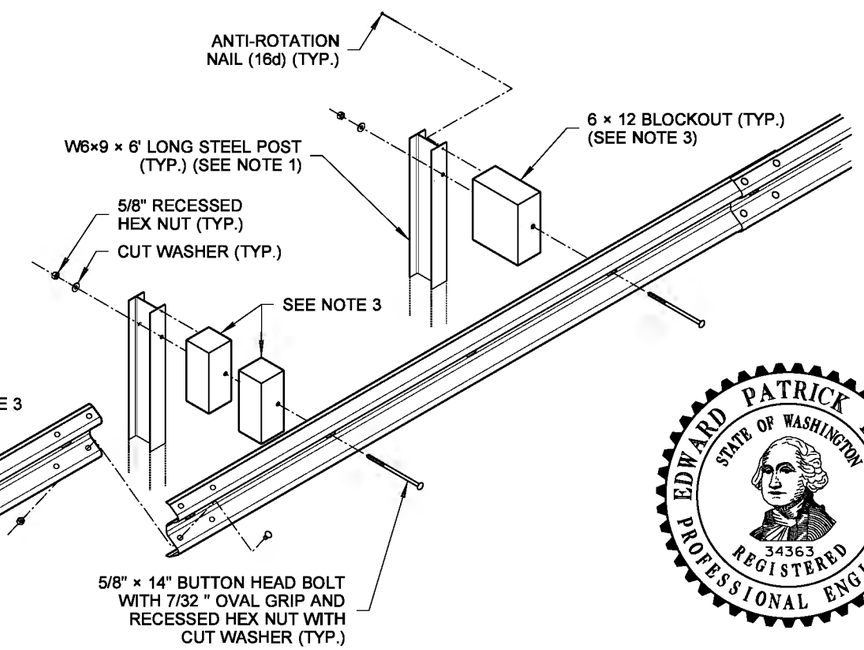

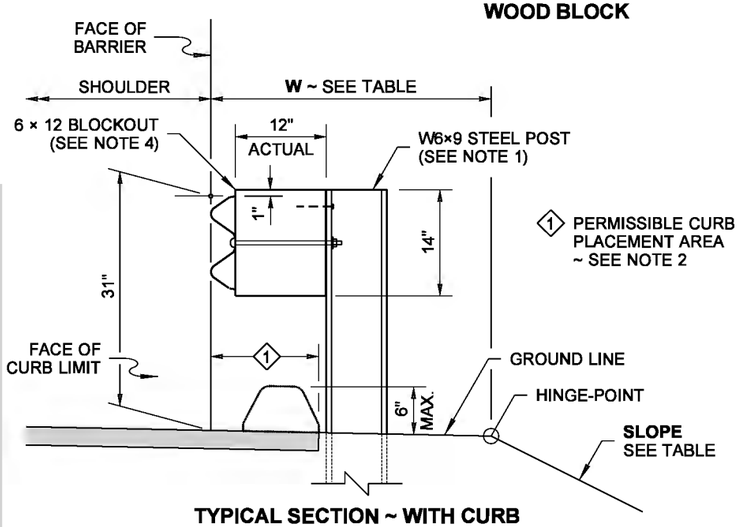

TYPICAL SECTION ~ WITH CURB
(6' - 0" LONG POSTS)

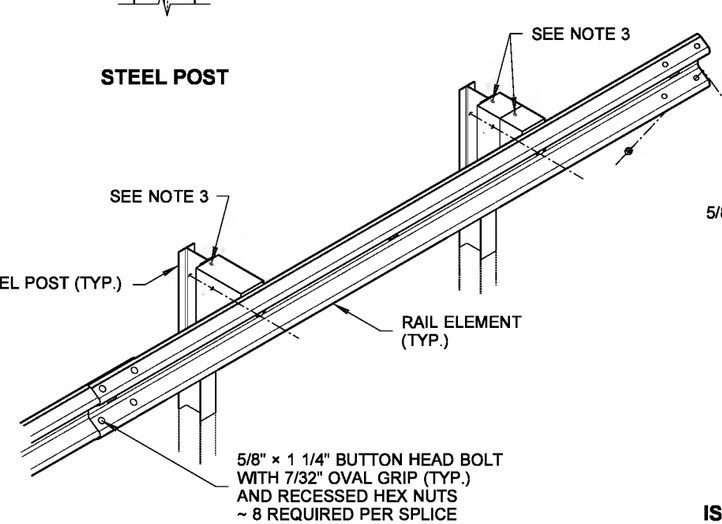

ISOMETRIC VIEW

NOTE: THIS PLAN IS NOT A LEGAL ENGINEERING DOCUMENT BUT AN ELECTRONIC DUPLICATE. THE ORIGINAL, SIGNED BY THE ENGINEER AND APPROVED FOR PUBLICATION, IS KEPT ON FILE AT THE WASHINGTON STATE DEPARTMENT OF TRANSPORTATION. A COPY MAY BE OBTAINED UPON REQUEST.

BEAM GUARDRAIL TYPE 31

STANDARD PLAN C-20.10-00

SHEET 1 OF 1 SHEET

APPROVED FOR PUBLICATION

Pasco Bakotich III — STATE DESIGN ENGINEER
07/2/12 — DATE

Washington State Department of Transportation

DRAWN BY: FERN LIDDELL

EFFECTIVE: AUGUST 6, 2012 TO August 4, 2013
EFFECTIVE: AUGUST 6, 2012 TO August 4, 2013
EFFECTIVE: AUGUST 6, 2012 TO August 4, 2013
EFFECTIVE: AUGUST 6, 2012 TO August 4, 2013

EFFECTIVE: AUGUST 6, 2012 TO August 4, 2013
EFFECTIVE: AUGUST 6, 2012 TO August 4, 2013

DRAWN BY: TERN LIDDELL

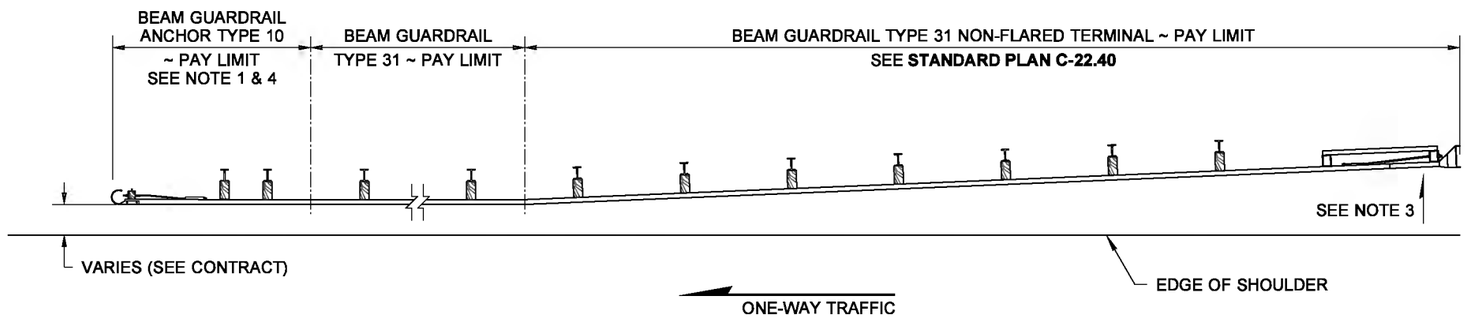

CASE 1-31

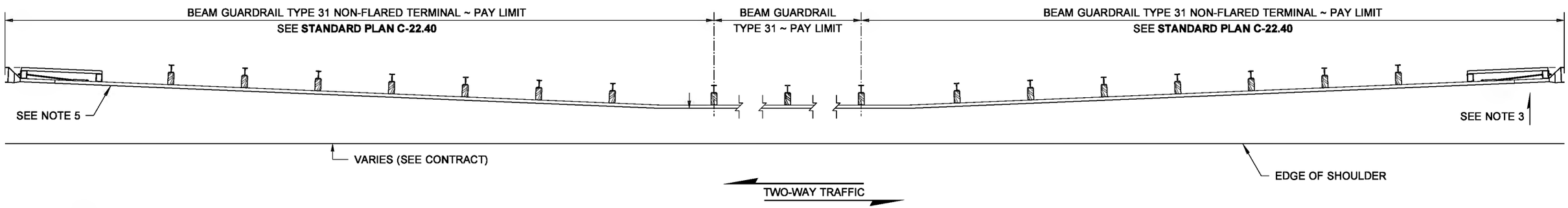

CASE 2-31

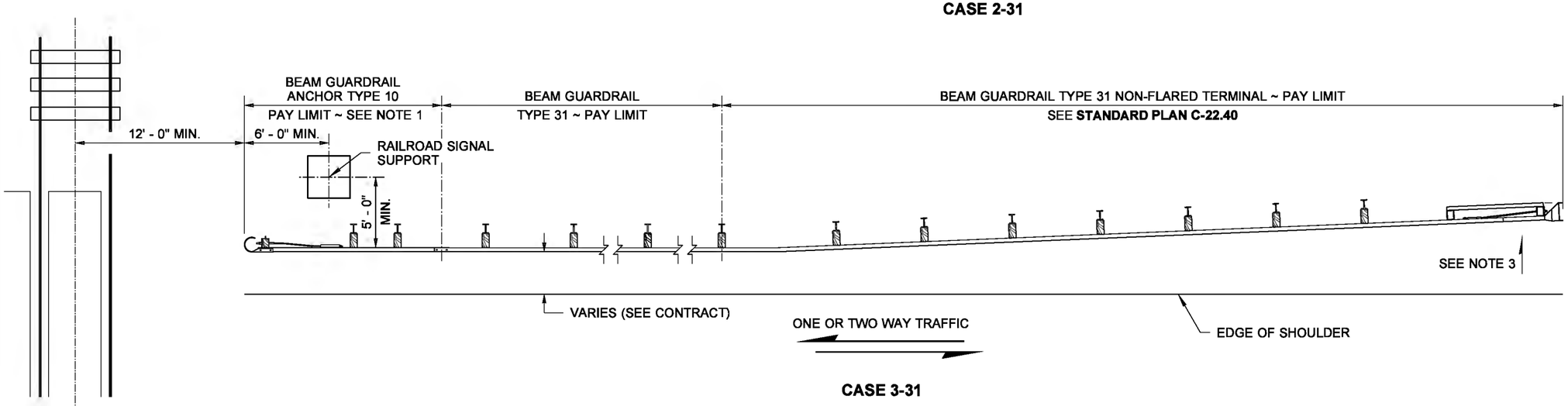

CASE 3-31

NOTES

1. For component details, see **Standard Plan C-23.60**.
2. For terminal type and details, see Contract Plans and applicable drawings.
3. The slope from the edge of the shoulder into the face of the guardrail cannot exceed 10H : 1V when the face of the guardrail is less than 12' - 0" from the edge of the shoulder.
4. For one-way traffic and where a crashworthy terminal is not required, use the Beam Guardrail Anchor Type 10, see **Standard Plan C-23.60**.
5. Where a crashworthy terminal is required use a Beam Guardrail Type 31 Non-Flared Terminal, see **Standard Plan C-22.40**.

NOTE: THIS PLAN IS NOT A LEGAL ENGINEERING DOCUMENT BUT AN ELECTRONIC DUPLICATE. THE ORIGINAL, SIGNED BY THE ENGINEER AND APPROVED FOR PUBLICATION, IS KEPT ON FILE AT THE WASHINGTON STATE DEPARTMENT OF TRANSPORTATION. A COPY MAY BE OBTAINED UPON REQUEST.

BEAM GUARDRAIL TYPE 31 PLACEMENT (CASES 1-31, 2-31, & 3-31) STANDARD PLAN C-20.14-02

SHEET 1 OF 1 SHEET

APPROVED FOR PUBLICATION

Pasco Bakotich III — STATE DESIGN ENGINEER
07/2/12 — DATE

Washington State Department of Transportation

EFFECTIVE: AUGUST 6, 2012 TO August 4, 2013
EFFECTIVE: AUGUST 6, 2012 TO August 4, 2013
EFFECTIVE: AUGUST 6, 2012 TO August 4, 2013
EFFECTIVE: AUGUST 6, 2012 TO August 4, 2013

EFFECTIVE: AUGUST 6, 2012 TO August 4, 2013
EFFECTIVE: AUGUST 6, 2012 TO August 4, 2013

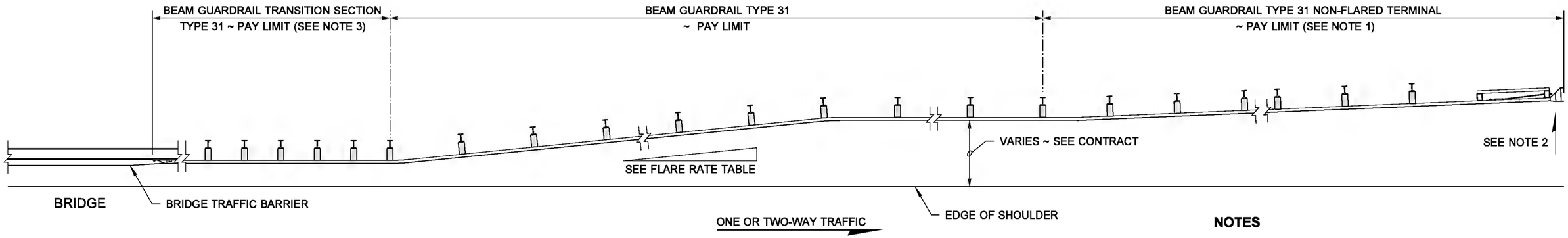

CASE 4 - 31

NOTES

1. For details, see **Standard Plan C-22.40**.
2. The slope from the edge of the shoulder into the face of the guardrail should not be steeper than 10H : 1V when the guardrail is within 12' - 0" from the edge of the shoulder.
3. See Contract for Beam Guardrail Transition Section type and Connection to Bridge Traffic Barrier or Concrete Barrier. See **Standard Plan C-24.10** for connection details.

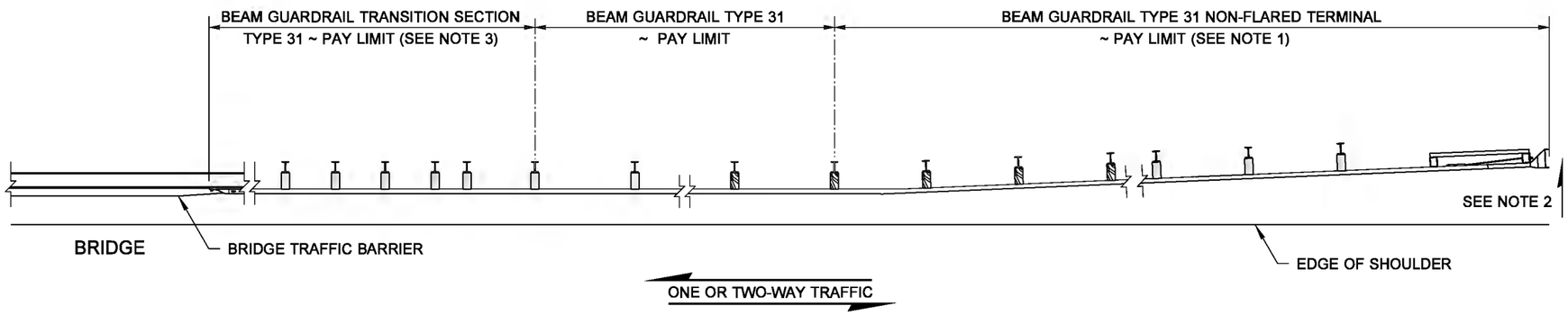

CASE 5 - 31

FLARE RATE TABLE	
POSTED SPEED (MPH)	RATE
70	15 : 1
60	14 : 1
55	12 : 1
50	11 : 1
45	10 : 1
40 OR LESS	9 : 1

NOTE: THIS PLAN IS NOT A LEGAL ENGINEERING DOCUMENT BUT AN ELECTRONIC DUPLICATE. THE ORIGINAL, SIGNED BY THE ENGINEER AND APPROVED FOR PUBLICATION, IS KEPT ON FILE AT THE WASHINGTON STATE DEPARTMENT OF TRANSPORTATION. A COPY MAY BE OBTAINED UPON REQUEST.

BEAM GUARDRAIL TYPE 31 PLACEMENT (CASES 4-31 & 5-31)

STANDARD PLAN C-20.15-01

SHEET 1 OF 1 SHEET

APPROVED FOR PUBLICATION

Pasco Bakotich III — STATE DESIGN ENGINEER

07/2/12 — DATE

Washington State Department of Transportation

DRAWN BY: FERN LIDDELL

EFFECTIVE: AUGUST 6, 2012 TO August 4, 2013
EFFECTIVE: AUGUST 6, 2012 TO August 4, 2013
EFFECTIVE: AUGUST 6, 2012 TO August 4, 2013
EFFECTIVE: AUGUST 6, 2012 TO August 4, 2013

EFFECTIVE: AUGUST 6, 2012 TO August 4, 2013
EFFECTIVE: AUGUST 6, 2012 TO August 4, 2013

DRAWN BY: TERN LIDDELL

NOTES

1. The slope from the edge of the shoulder into the face of the guardrail should not exceed 10H : 1V when the guardrail is within 12' - 0" from the edge of the shoulder.
2. For details, See **Standard Plan C-23.60**.
3. For details, See **Standard Plan C-22.40**.

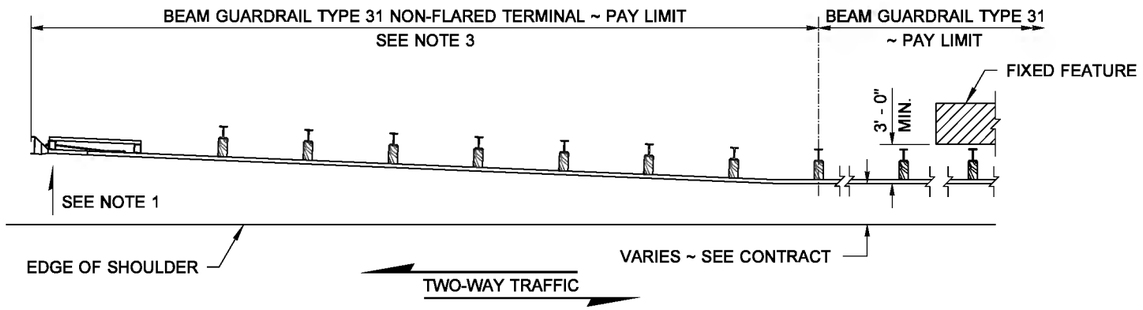

CASE 10A - 31
(TRAILING END)

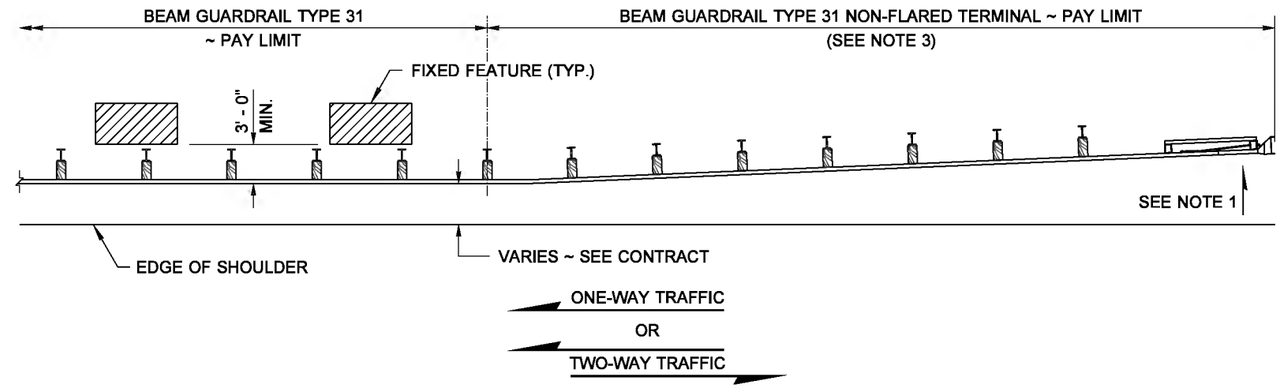

CASE 10A-31, 10B-31, OR 10C-31
(APPROACH END)

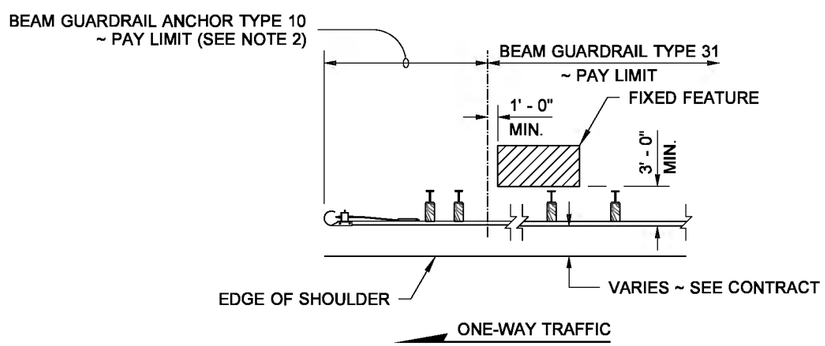

CASE 10B-31
(TRAILING END)

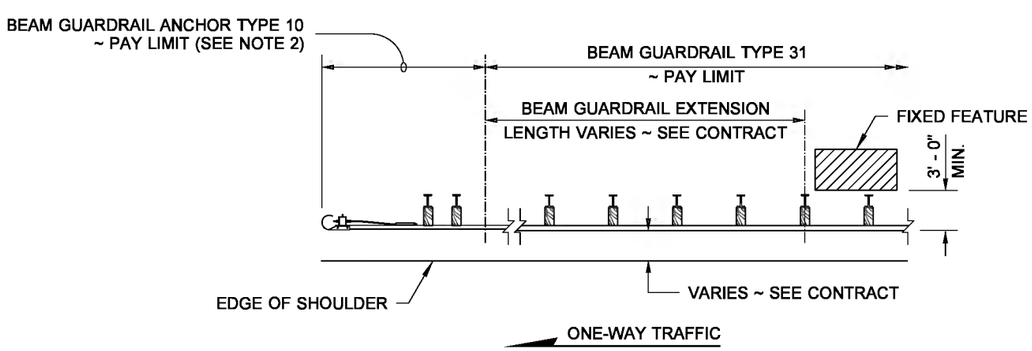

CASE 10C-31
(TRAILING END)

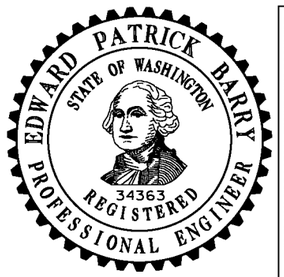

NOTE: THIS PLAN IS NOT A LEGAL ENGINEERING DOCUMENT BUT AN ELECTRONIC DUPLICATE. THE ORIGINAL, SIGNED BY THE ENGINEER AND APPROVED FOR PUBLICATION, IS KEPT ON FILE AT THE WASHINGTON STATE DEPARTMENT OF TRANSPORTATION. A COPY MAY BE OBTAINED UPON REQUEST.

BEAM GUARDRAIL TYPE 31 PLACEMENT (CASES 10A-31, 10B-31 & 10C-31)
STANDARD PLAN C-20.18-01

SHEET 1 OF 1 SHEET

APPROVED FOR PUBLICATION

Pasco Bakotich III — STATE DESIGN ENGINEER
07/2/12 — DATE

Washington State Department of Transportation

EFFECTIVE: AUGUST 6, 2012 TO August 4, 2013
EFFECTIVE: AUGUST 6, 2012 TO August 4, 2013
EFFECTIVE: AUGUST 6, 2012 TO August 4, 2013
EFFECTIVE: AUGUST 6, 2012 TO August 4, 2013

EFFECTIVE: AUGUST 6, 2012 TO August 4, 2013
EFFECTIVE: AUGUST 6, 2012 TO August 4, 2013

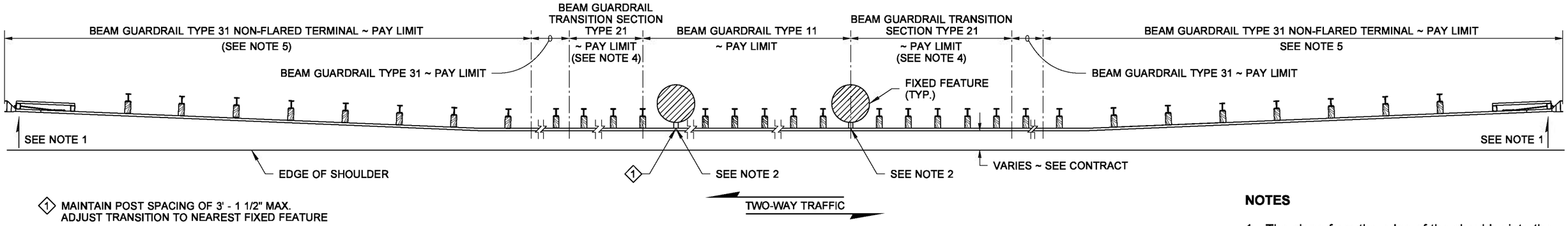

1 MAINTAIN POST SPACING OF 3' - 1 1/2" MAX.
ADJUST TRANSITION TO NEAREST FIXED FEATURE

CASE 11A-31

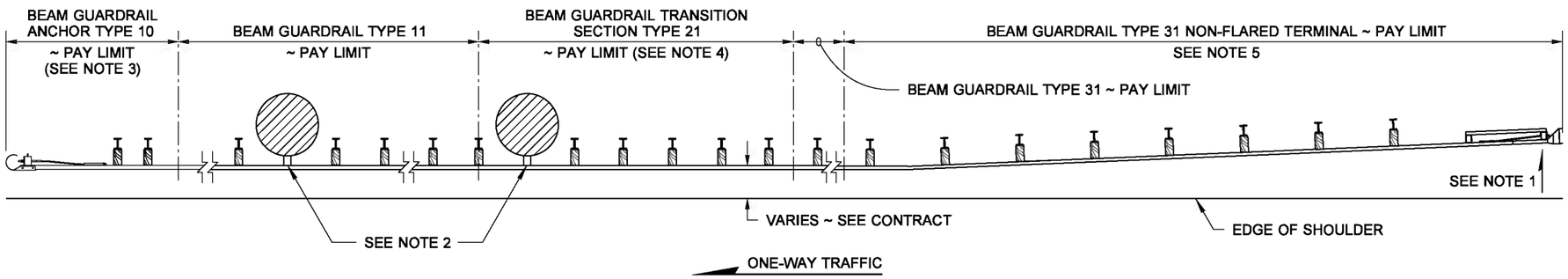

CASE 11B-31

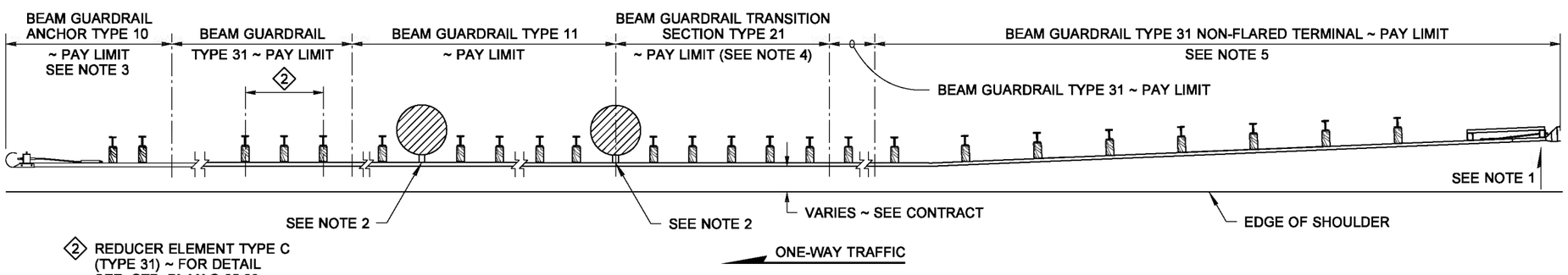

2 REDUCER ELEMENT TYPE C
(TYPE 31) ~ FOR DETAIL
SEE **STD. PLAN C-25.20**

CASE 11C-31

NOTES

1. The slope from the edge of the shoulder into the face of the guardrail should not exceed 10H : 1V when the guardrail is within 12' - 0" from the edge of the shoulder.
2. Attach the standard wood block to the rail using two 5/8" × 4" lag bolts.
3. Beam Guardrail Anchor Type 10 (W-Beam) or Type 10 (Thrie Beam) required. For details, see **Standard Plan C-23.60**.
4. For details, see **Standard Plan C-25.20**.
5. For details, see **Standard Plan C-22.40**.

NOTE: THIS PLAN IS NOT A LEGAL ENGINEERING DOCUMENT BUT AN ELECTRONIC DUPLICATE. THE ORIGINAL, SIGNED BY THE ENGINEER AND APPROVED FOR PUBLICATION, IS KEPT ON FILE AT THE WASHINGTON STATE DEPARTMENT OF TRANSPORTATION. A COPY MAY BE OBTAINED UPON REQUEST.

BEAM GUARDRAIL TYPE 31 PLACEMENT (CASES 11A-31, 11B-31 & 11C-31)
STANDARD PLAN C-20.19-01

SHEET 1 OF 1 SHEET

APPROVED FOR PUBLICATION

Pasco Bakotich III — STATE DESIGN ENGINEER
7/2/12 — DATE

Washington State Department of Transportation

DRAWN BY: FERN LIDDELL

EFFECTIVE: AUGUST 6, 2012 TO August 4, 2013
EFFECTIVE: AUGUST 6, 2012 TO August 4, 2013
EFFECTIVE: AUGUST 6, 2012 TO August 4, 2013
EFFECTIVE: AUGUST 6, 2012 TO August 4, 2013

EFFECTIVE: AUGUST 6, 2012 TO August 4, 2013
EFFECTIVE: AUGUST 6, 2012 TO August 4, 2013

DRAWN BY: TERN LIDDELL

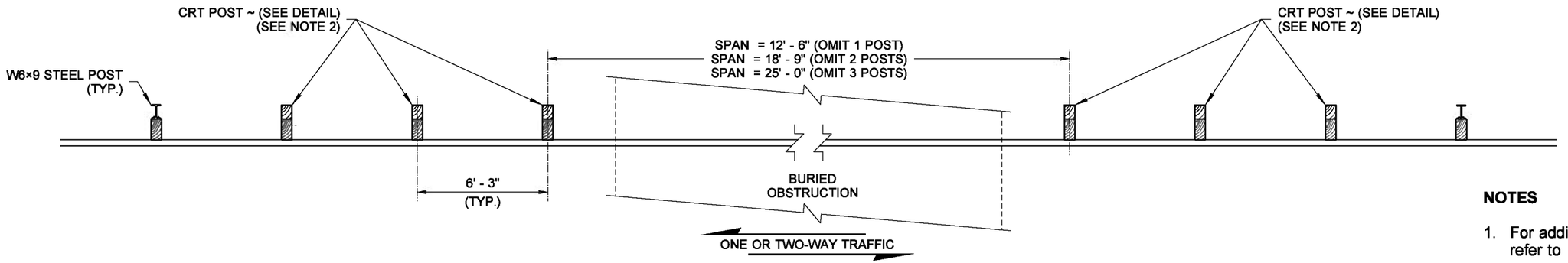

PLAN VIEW

NOTES

1. For additional details not shown on this plan, refer to **Standard Plan C-20.10.**
2. CRT post to be wood only.

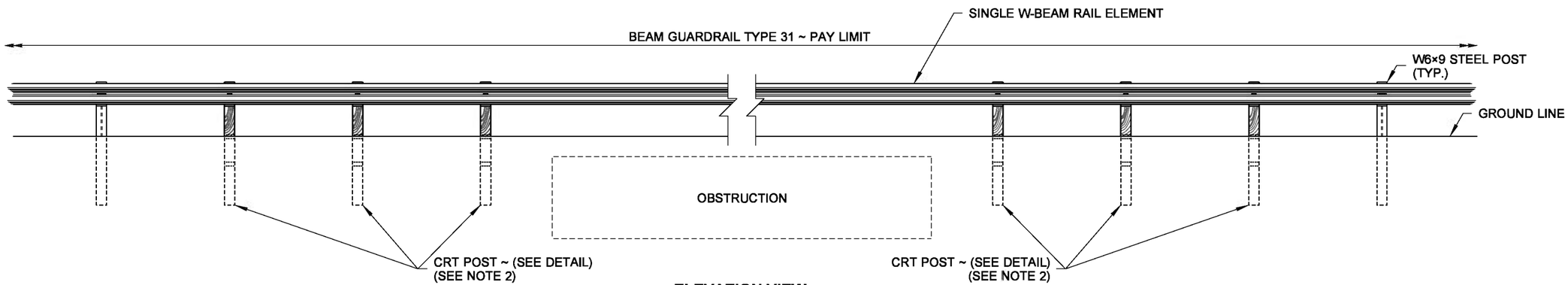

ELEVATION VIEW

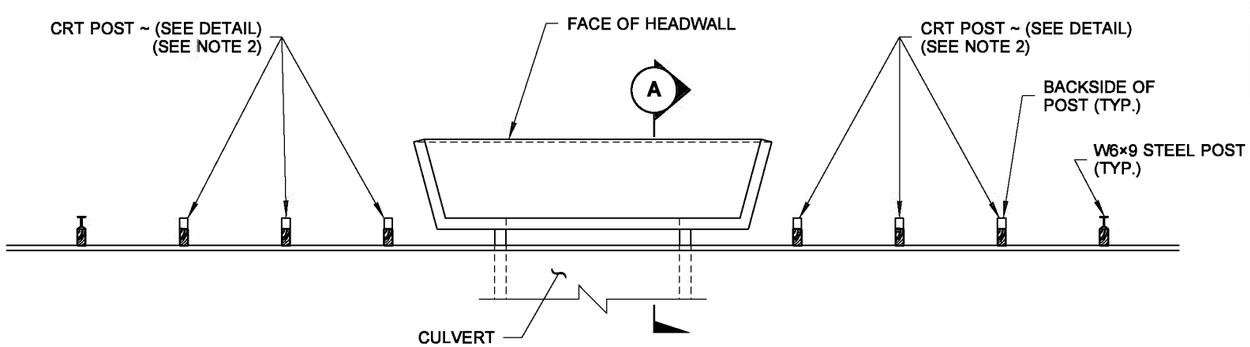

SPAN WITH HEADWALL DETAIL

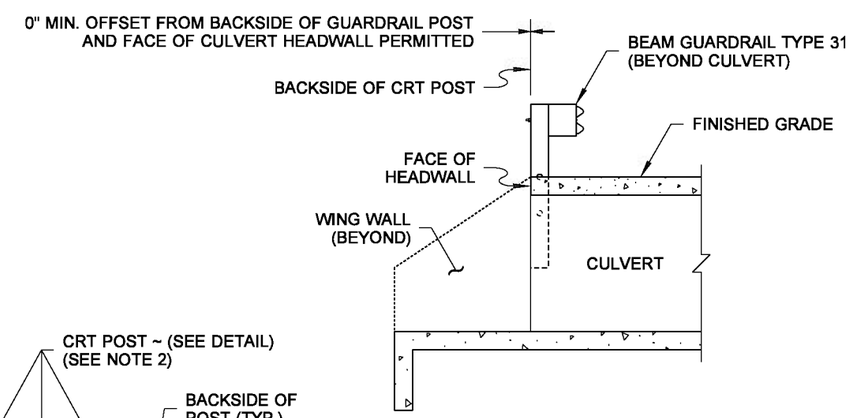

SECTION A

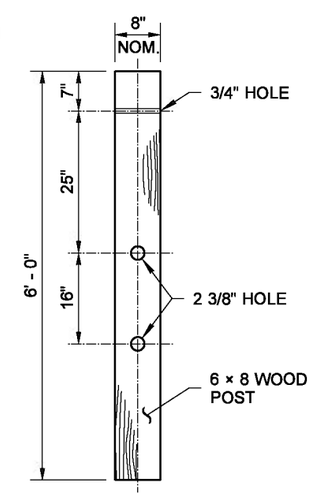

CONTROLLED RELEASING TERMINAL (CRT) POST DETAIL

NOTE: THIS PLAN IS NOT A LEGAL ENGINEERING DOCUMENT BUT AN ELECTRONIC DUPLICATE. THE ORIGINAL, SIGNED BY THE ENGINEER AND APPROVED FOR PUBLICATION, IS KEPT ON FILE AT THE WASHINGTON STATE DEPARTMENT OF TRANSPORTATION. A COPY MAY BE OBTAINED UPON REQUEST.

BEAM GUARDRAIL TYPE 31 PLACEMENT 12' - 6", 18' - 9" OR 25' - 0" SPAN

STANDARD PLAN C-20.40-03

SHEET 1 OF 1 SHEET

APPROVED FOR PUBLICATION

Pasco Bakotich III — STATE DESIGN ENGINEER

07/2/12 — DATE

Washington State Department of Transportation

EFFECTIVE: AUGUST 6, 2012 TO August 4, 2013
EFFECTIVE: AUGUST 6, 2012 TO August 4, 2013
EFFECTIVE: AUGUST 6, 2012 TO August 4, 2013
EFFECTIVE: AUGUST 6, 2012 TO August 4, 2013

EFFECTIVE: AUGUST 6, 2012 TO August 4, 2013
EFFECTIVE: AUGUST 6, 2012 TO August 4, 2013

DRAWN BY: BILL BEKENS

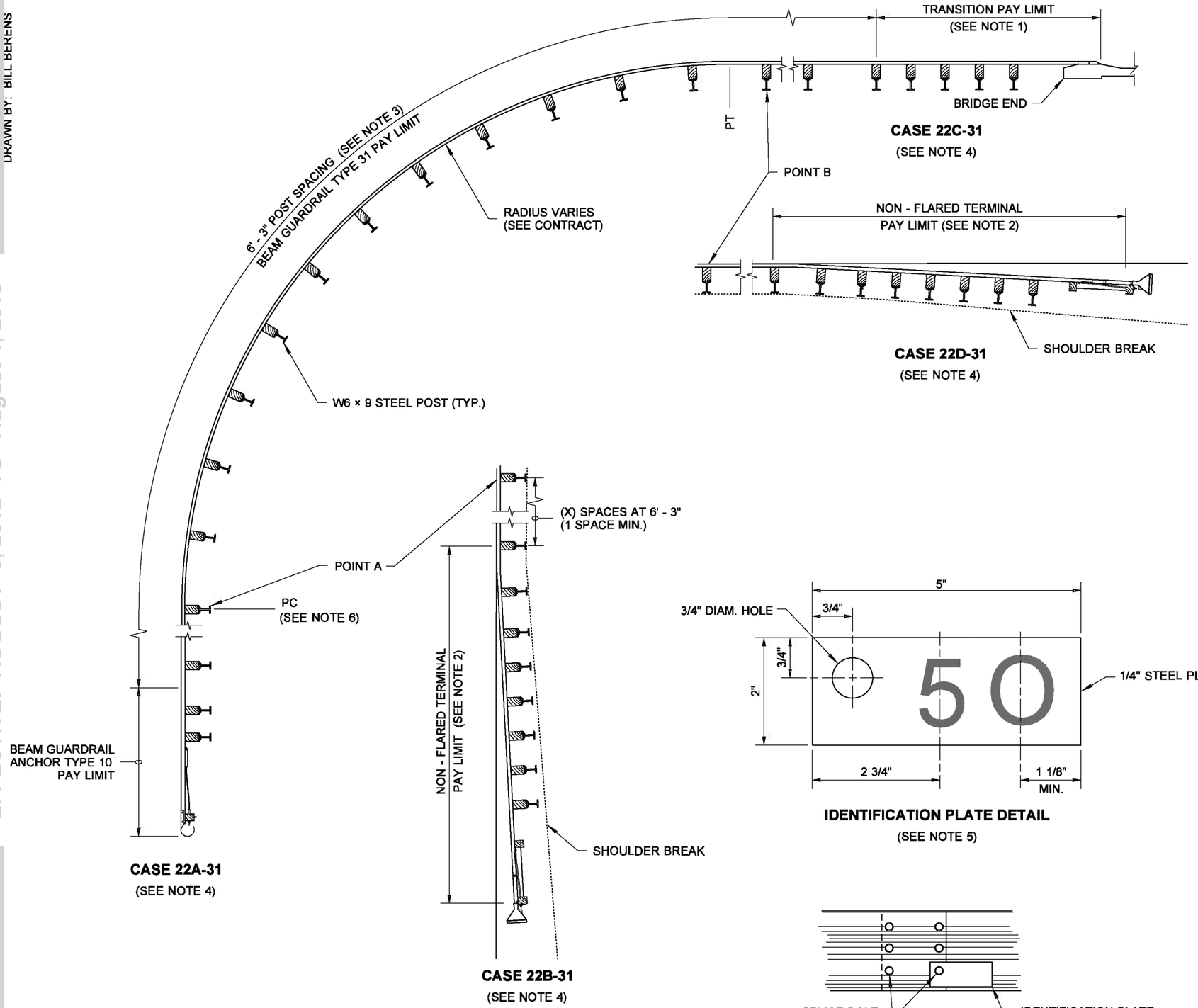

IDENTIFICATION PLATE DETAIL

(SEE NOTE 5)

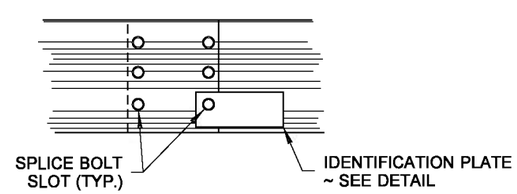

IDENTIFICATION PLATE MOUNTING DETAIL

(SEE NOTE 6)

NOTES

1. See Contract for transition and connection type.
2. For additional installation requirements for Non-Flared Terminal placement see **Standard Plan C-22.40.**
3. Guardrail installation shall be Beam Guardrail Type 31 with standard post and block. See **Standard Plan C-20.10** for additional details.
4. The first letter of case designation indicates the end treatment on the side road. The second letter indicates the end treatment on the main road. For instance, a terminal on a side road and a bridge connection on the main road would be Case 22BC-31.
5. The radius dimension shall be etched into the plate as shown in the example on the Identification Plate Detail. Numerals shall be 1 1/2" high minimum, and 3/4" wide maximum. Plate shall be galvanized after etching and the letter shall remain permanently legible.
6. The guardrail Identification Plate shall be mounted at the lower splice bolt on the back side of the rail element at the PC of the guardrail radius.

NOTE: THIS PLAN IS NOT A LEGAL ENGINEERING DOCUMENT BUT AN ELECTRONIC DUPLICATE. THE ORIGINAL, SIGNED BY THE ENGINEER AND APPROVED FOR PUBLICATION, IS KEPT ON FILE AT THE WASHINGTON STATE DEPARTMENT OF TRANSPORTATION. A COPY MAY BE OBTAINED UPON REQUEST.

GUARDRAIL PLACEMENT STRONG POST ~ TYPE 31 INTERSECTION DESIGN STANDARD PLAN C-20.42-03

SHEET 1 OF 1 SHEET

APPROVED FOR PUBLICATION

Pasco Bakotich III — STATE DESIGN ENGINEER

07/2/12 — DATE

Washington State Department of Transportation

EFFECTIVE: AUGUST 6, 2012 TO August 4, 2013
EFFECTIVE: AUGUST 6, 2012 TO August 4, 2013
EFFECTIVE: AUGUST 6, 2012 TO August 4, 2013
EFFECTIVE: AUGUST 6, 2012 TO August 4, 2013

EFFECTIVE: AUGUST 6, 2012 TO August 4, 2013
EFFECTIVE: AUGUST 6, 2012 TO August 4, 2013

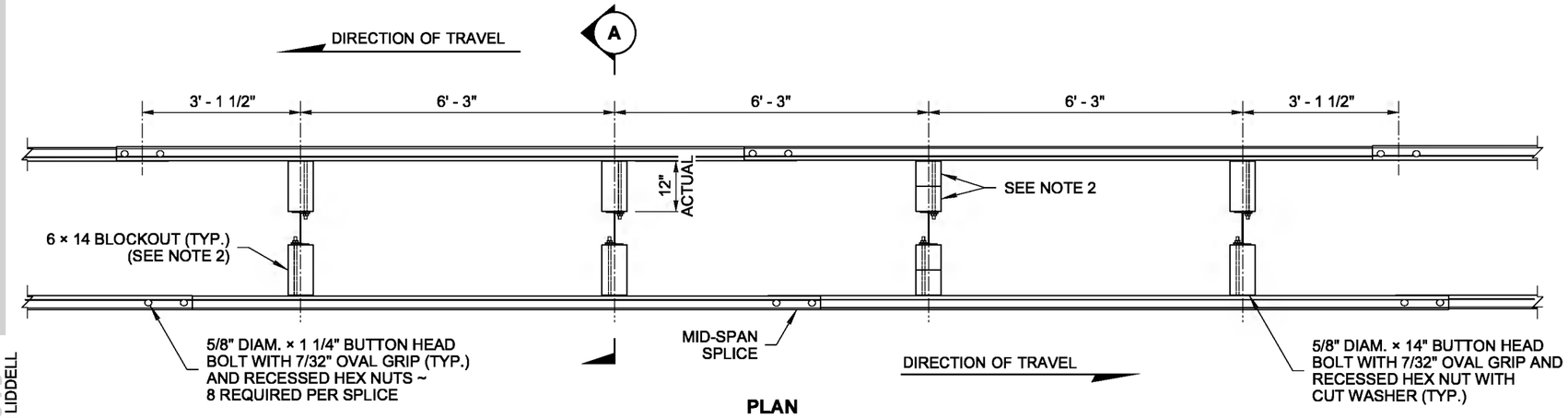

PLAN

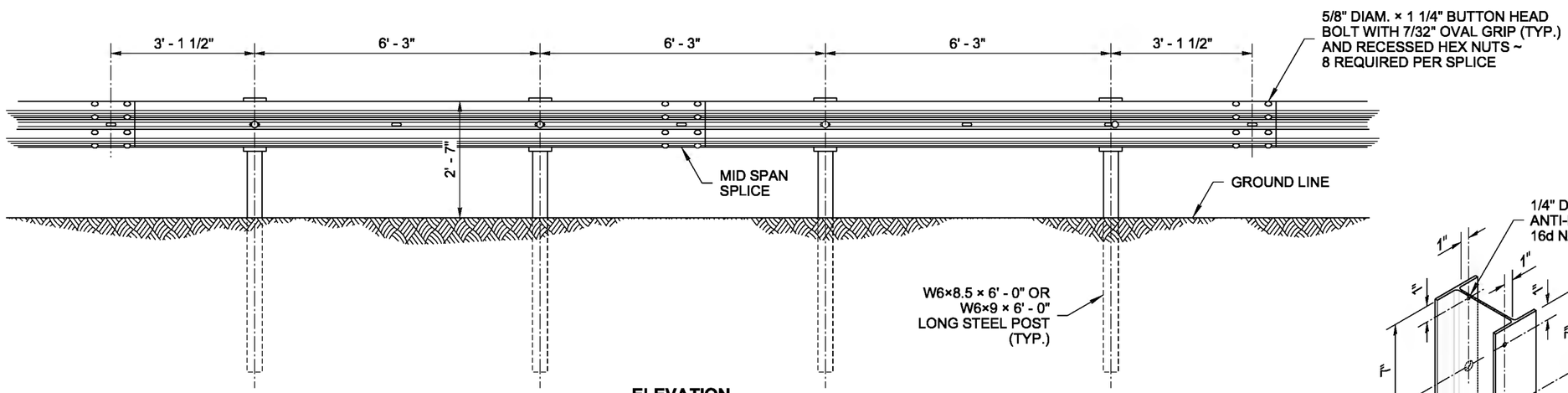

ELEVATION

NOTES

1. Beam Guardrail post spacing shall be 6' - 3" on centers.
2. Use a single or combination of blocks to achieve the actual 12" offset. See **Standard Specification 9-16.3(2)**. Wood blocks shall be toe-nailed to post (and blocks, if block combinations are used) with 16d galvanized nails to prevent block rotation.
3. Attach blockouts to steel posts using bolt holes on approaching traffic side of post web.
4. For details not shown, see **Standard Plan C-20.10.**
5. Wood blocks shown. Blocks of alternate material may be used. See **Standard Specification 9-16.3(2).**

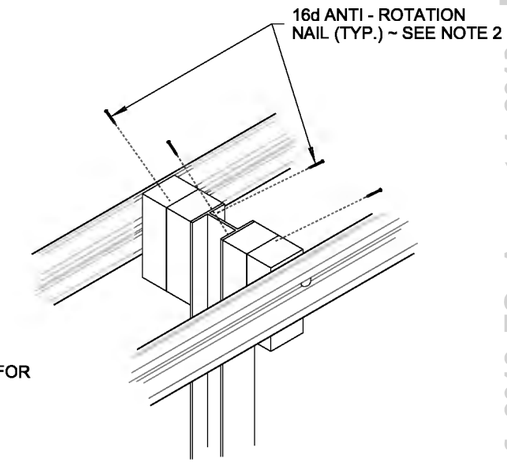

ANTI-ROTATION NAIL DETAIL

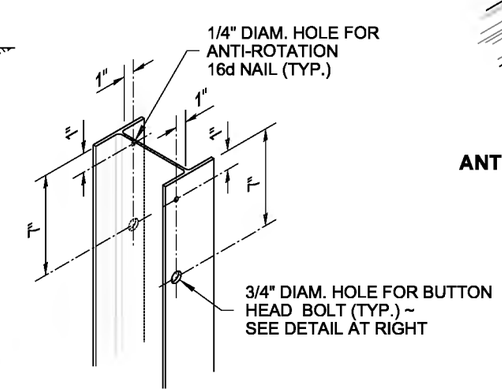

STEEL POST

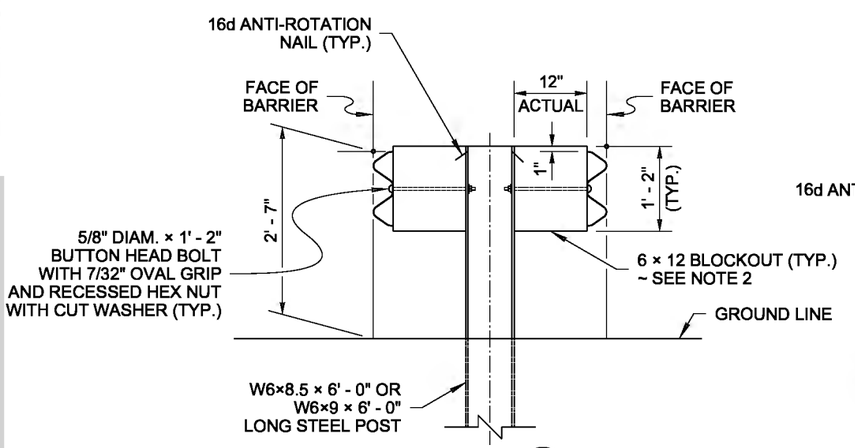

SECTION A

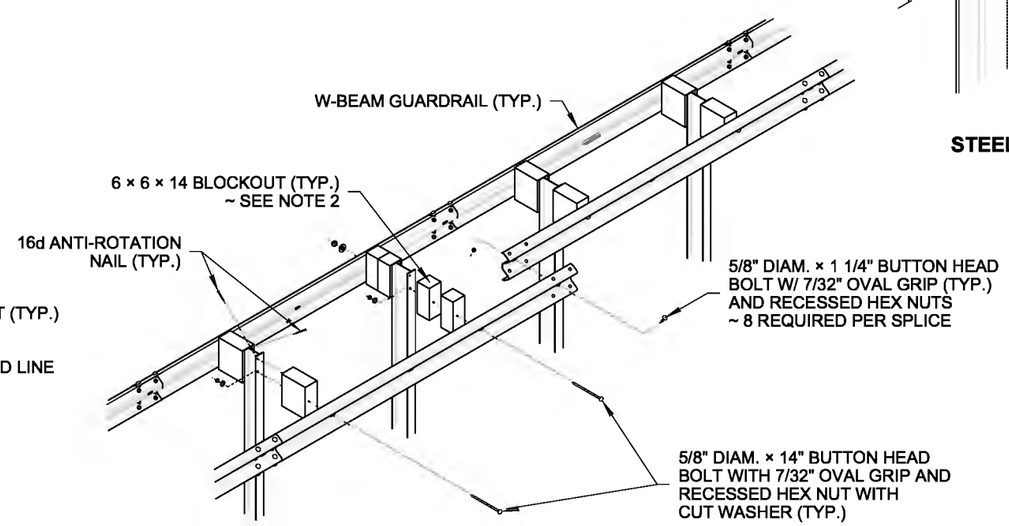

ISOMETRIC

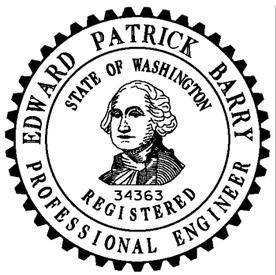

NOTE: THIS PLAN IS NOT A LEGAL ENGINEERING DOCUMENT BUT AN ELECTRONIC DUPLICATE. THE ORIGINAL, SIGNED BY THE ENGINEER AND APPROVED FOR PUBLICATION, IS KEPT ON FILE AT THE WASHINGTON STATE DEPARTMENT OF TRANSPORTATION. A COPY MAY BE OBTAINED UPON REQUEST.

BEAM GUARDRAIL TYPE 31 DS (DOUBLE SIDED) (W-BEAM)

STANDARD PLAN C-20.45-01

SHEET 1 OF 1 SHEET

APPROVED FOR PUBLICATION

Pasco Bakotich III — STATE DESIGN ENGINEER

07/2/12 — DATE

Washington State Department of Transportation

DRAWN BY: FERN LIDDELL

EFFECTIVE: AUGUST 6, 2012 TO August 4, 2013
EFFECTIVE: AUGUST 6, 2012 TO August 4, 2013
EFFECTIVE: AUGUST 6, 2012 TO August 4, 2013
EFFECTIVE: AUGUST 6, 2012 TO August 4, 2013

EFFECTIVE: AUGUST 6, 2012 TO August 4, 2013
EFFECTIVE: AUGUST 6, 2012 TO August 4, 2013

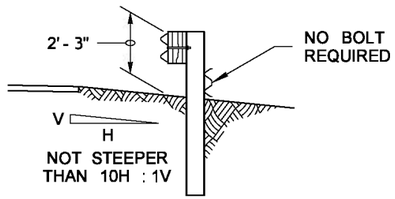

SECTION (A)

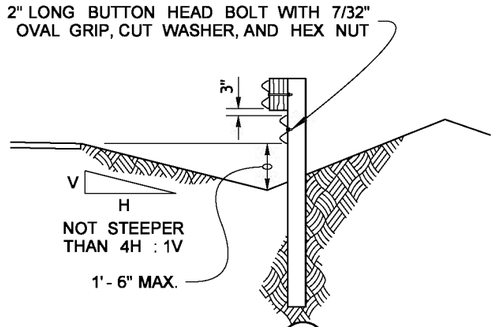

SECTION (B)

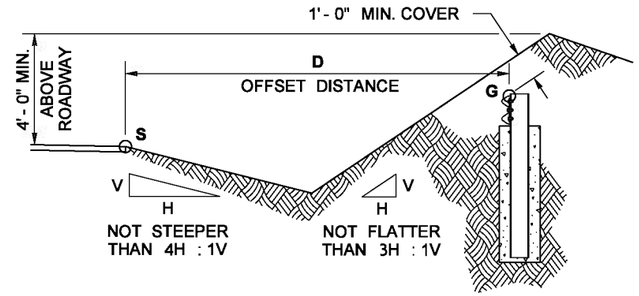

SECTION (C)

SEE NOTE 3

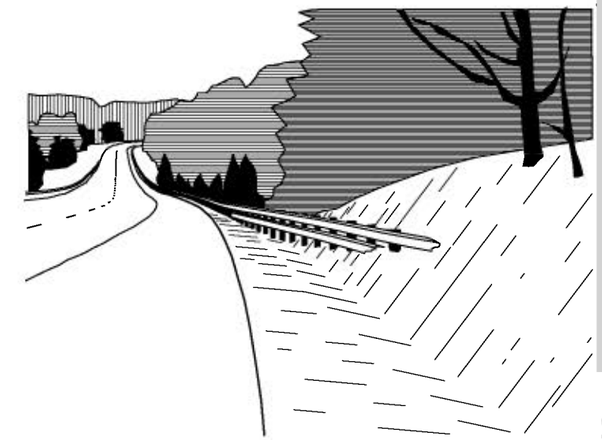

PERSPECTIVE

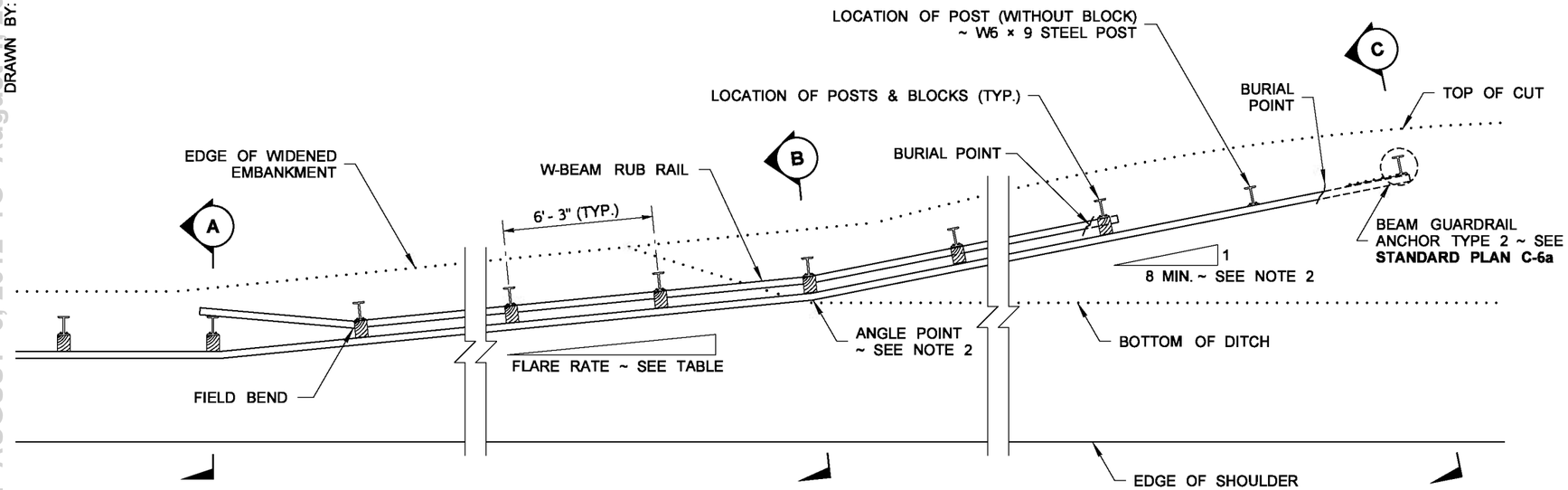

PLAN

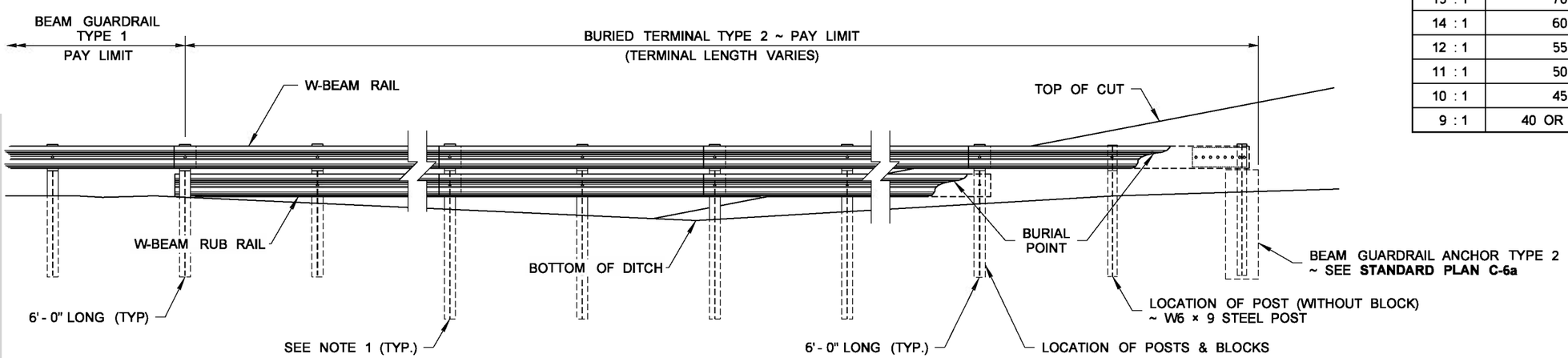

ELEVATION
(PROFILE ALONG RAIL)

NOTES

1. Posts installed on shoulder slopes steeper than 10H : 1V shall be 8' long.
2. The flare rate of the guardrail may be increased after crossing the ditch bottom to shorten the length of the terminal.
3. Determine the height of the W-Beam at the Anchor (**G**) by first calculating the perpendicular offset distance (**D**) from the edge of shoulder (**S**) to the Anchor (on station). Multiply that distance by 0.1, then subtract the product from the elevation of the same point (**S**) on the edge of shoulder used to obtain the offset distance (at the same station). Add Beam Guardrail design height (27") to that remainder for a sum that equals the elevation of the top of the W-Beam at the Anchor.

Refer to SECTION "C":

$$\text{Elevation}_{G} = (\text{Elevation}_{S} - D\ (0.1)) + 27$$

FLARE RATE TABLE	
RATE	POSTED SPEED (mph)
15 : 1	70
14 : 1	60
12 : 1	55
11 : 1	50
10 : 1	45
9 : 1	40 OR LESS

TERRY L. BERENDS
STATE OF WASHINGTON
32350
REGISTERED
PROFESSIONAL ENGINEER

NOTE: THIS PLAN IS NOT A LEGAL ENGINEERING DOCUMENT BUT AN ELECTRONIC DUPLICATE. THE ORIGINAL, SIGNED BY THE ENGINEER AND APPROVED FOR PUBLICATION, IS KEPT ON FILE AT THE WASHINGTON STATE DEPARTMENT OF TRANSPORTATION. A COPY MAY BE OBTAINED UPON REQUEST.

BEAM GUARDRAIL TYPE 1
BURIED TERMINAL TYPE 2

STANDARD PLAN C-22.14-02

SHEET 1 OF 1 SHEET

APPROVED FOR PUBLICATION

Pasco Bakotich III — STATE DESIGN ENGINEER
06-16-11 — DATE

Washington State Department of Transportation

DRAWN BY: LISA CYFORD

EFFECTIVE: AUGUST 6, 2012 TO August 4, 2013
EFFECTIVE: AUGUST 6, 2012 TO August 4, 2013
EFFECTIVE: AUGUST 6, 2012 TO August 4, 2013
EFFECTIVE: AUGUST 6, 2012 TO August 4, 2013

EFFECTIVE: AUGUST 6, 2012 TO August 4, 2013
EFFECTIVE: AUGUST 6, 2012 TO August 4, 2013

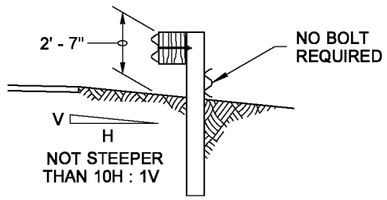

SECTION A

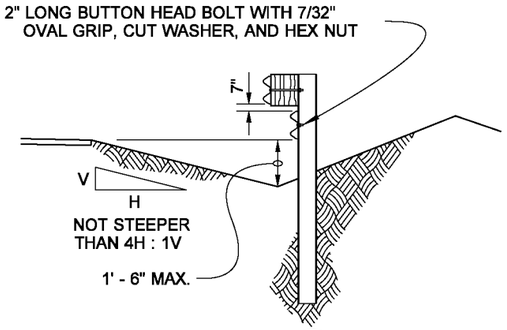

SECTION B

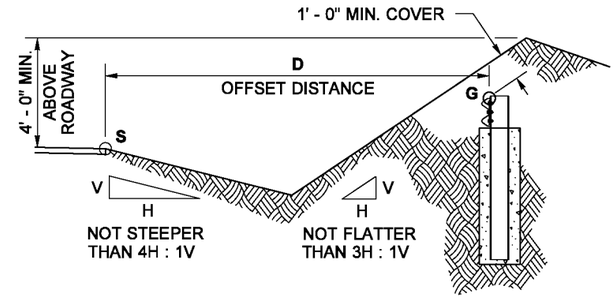

SECTION C

SEE NOTE 3

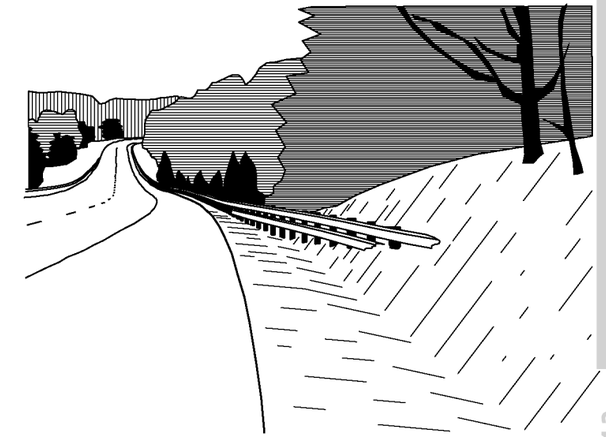

PERSPECTIVE

DRAWN BY: BILL BERENS

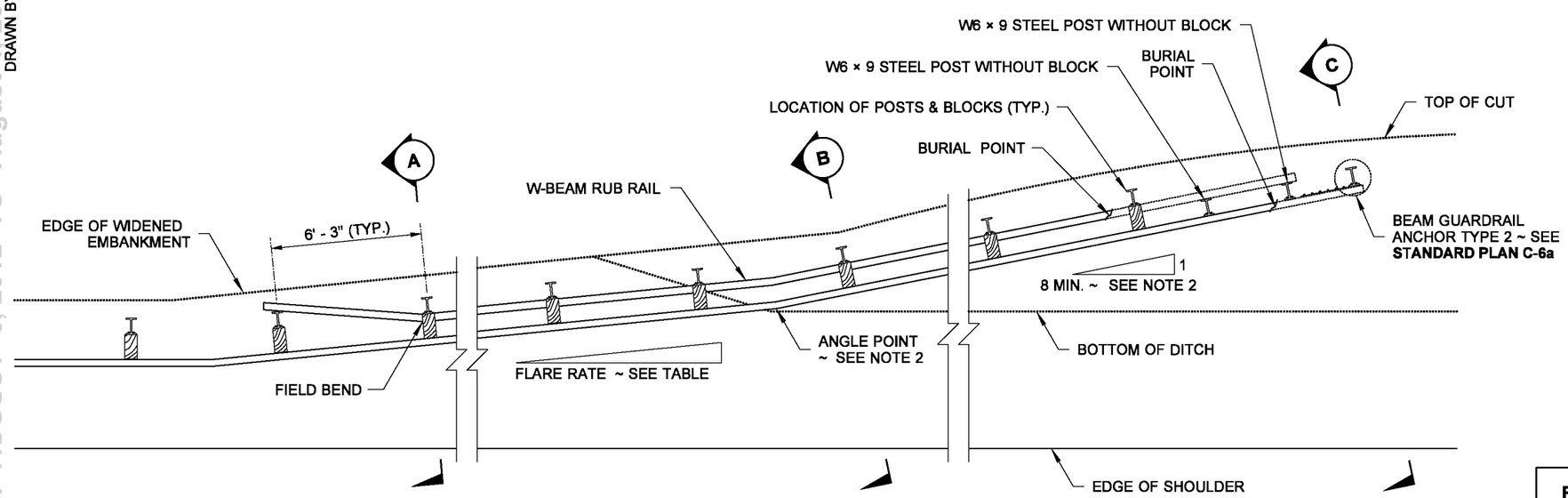

PLAN

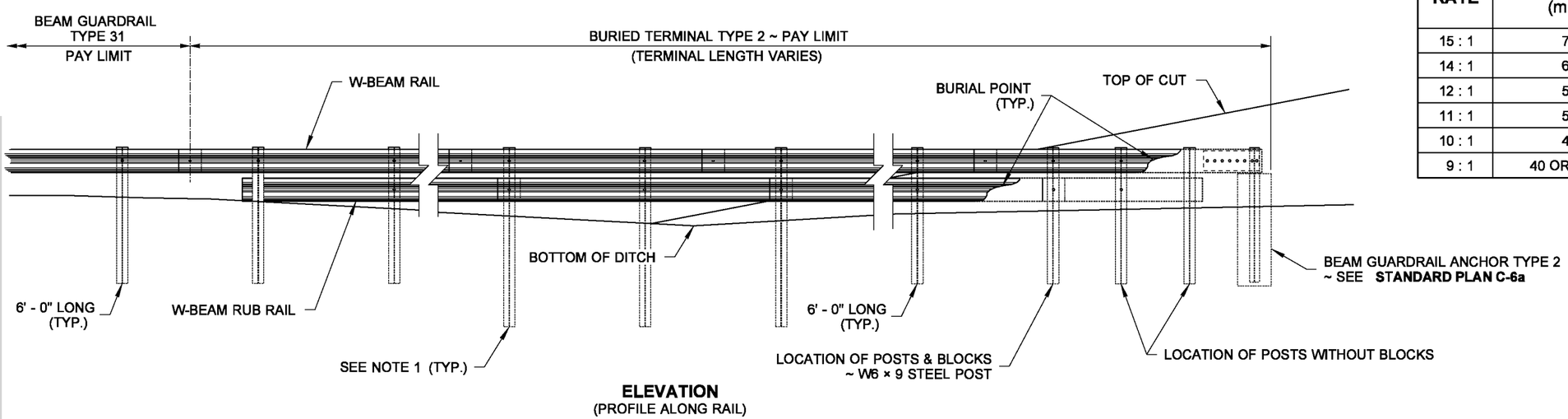

ELEVATION
(PROFILE ALONG RAIL)

NOTES

1. Posts installed on shoulder slopes steeper than 10H : 1V shall be 8' long.
2. The flare rate of the guardrail may be increased after crossing the ditch bottom to shorten the length of the terminal.
3. Determine the height of the W-Beam at the Anchor (**G**) by first calculating the perpendicular offset distance (**D**) from the edge of shoulder (**S**) to the Anchor (on station). Multiply that distance by 0.1, then subtract the product from the elevation of the same point (**S**) on the edge of shoulder used to obtain the offset distance (at the same station). Add Beam Guardrail design height (31") to that remainder for a sum that equals the elevation of the top of the W-Beam at the Anchor.

   Refer to SECTION "C":

   $\text{Elevation}_{G} = (\text{Elevation}_{S} - D(0.1)) + 31$

FLARE RATE TABLE	
RATE	POSTED SPEED (mph)
15 : 1	70
14 : 1	60
12 : 1	55
11 : 1	50
10 : 1	45
9 : 1	40 OR LESS

NOTE: THIS PLAN IS NOT A LEGAL ENGINEERING DOCUMENT BUT AN ELECTRONIC DUPLICATE. THE ORIGINAL, SIGNED BY THE ENGINEER AND APPROVED FOR PUBLICATION, IS KEPT ON FILE AT THE WASHINGTON STATE DEPARTMENT OF TRANSPORTATION. A COPY MAY BE OBTAINED UPON REQUEST.

BEAM GUARDRAIL TYPE 31
BURIED TERMINAL TYPE 2

STANDARD PLAN C-22.16-03

SHEET 1 OF 1 SHEET

APPROVED FOR PUBLICATION

Pasco Bakotich III — STATE DESIGN ENGINEER — *04/18/12* — DATE

Washington State Department of Transportation

EFFECTIVE: AUGUST 6, 2012 TO August 4, 2013
EFFECTIVE: AUGUST 6, 2012 TO August 4, 2013
EFFECTIVE: AUGUST 6, 2012 TO August 4, 2013
EFFECTIVE: AUGUST 6, 2012 TO August 4, 2013

EFFECTIVE: AUGUST 6, 2012 TO August 4, 2013
EFFECTIVE: AUGUST 6, 2012 TO August 4, 2013

DRAWN BY: LISA CYFORD

NOTES

1. These terminals are FHWA accepted at Test Level Three (TL-3) and may be used for all posted speeds.
2. An ET-31 (Steel) as manufactured by Trinity Industries, Inc. or an SKT-SP-MGS as manufactured by Road Systems Inc. shall be installed according to manufacturer's recommendations.
3. A reflectorized object marker shall be installed according to manufacturer's recommendations.
4. When snow load post washers and snow load rail washers are required by the contract, the snow load rail washers shall not be installed within the terminal limits.
5. Terminal shall be installed at a widening, ensuring that the end piece is entirely off the shoulder. While these terminals do not require an offset at the end, a flare is recommended. A maximum flare of 25 : 1, or flatter over the length of the terminal is allowed for either the ET-31 (Steel) or the SKT-SP-MGS, with a maximum offset of 24" (in.) over 50' (ft.).
6. For Terminal details, see WSDOT approved manufacturer's drawings.

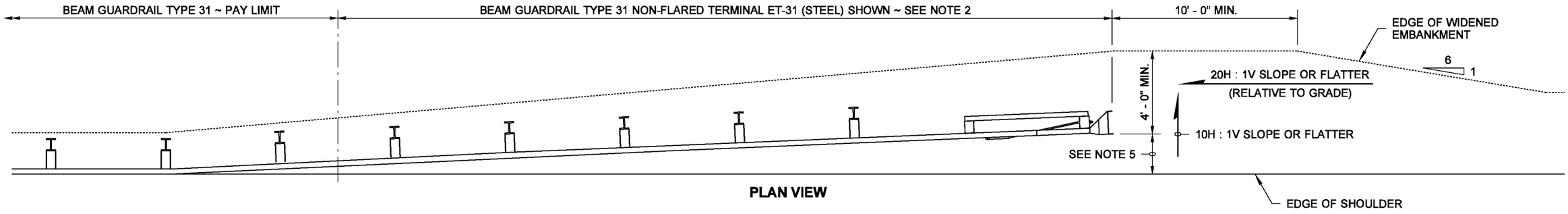

PLAN VIEW

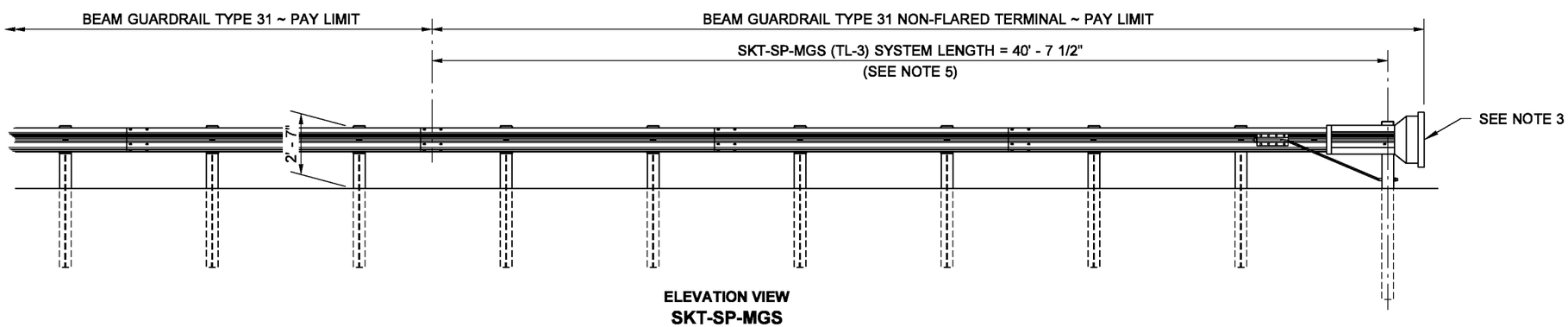

ELEVATION VIEW
SKT-SP-MGS

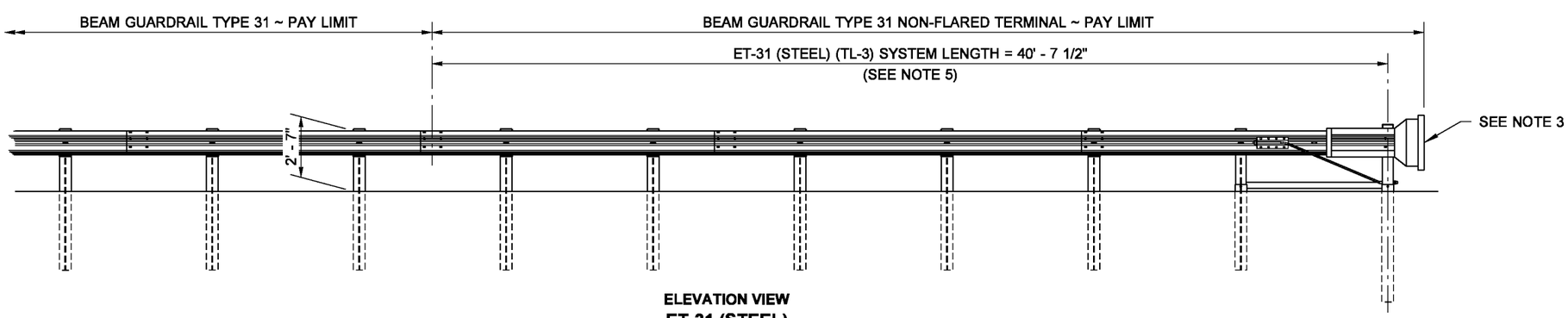

ELEVATION VIEW
ET-31 (STEEL)

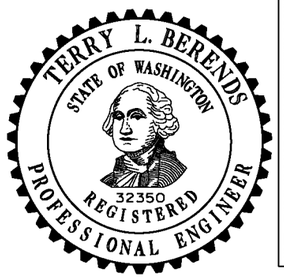

NOTE: THIS PLAN IS NOT A LEGAL ENGINEERING DOCUMENT BUT AN ELECTRONIC DUPLICATE. THE ORIGINAL, SIGNED BY THE ENGINEER AND APPROVED FOR PUBLICATION, IS KEPT ON FILE AT THE WASHINGTON STATE DEPARTMENT OF TRANSPORTATION. A COPY MAY BE OBTAINED UPON REQUEST.

BEAM GUARDRAIL TYPE 31 NON-FLARED TERMINAL STEEL POSTS (ALL POSTED SPEEDS)

STANDARD PLAN C-22.40-02

SHEET 1 OF 1 SHEET

APPROVED FOR PUBLICATION

Pasco Bakotich III — STATE DESIGN ENGINEER
06-16-10 — DATE

Washington State Department of Transportation

EFFECTIVE: AUGUST 6, 2012 TO August 4, 2013
EFFECTIVE: AUGUST 6, 2012 TO August 4, 2013
EFFECTIVE: AUGUST 6, 2012 TO August 4, 2013
EFFECTIVE: AUGUST 6, 2012 TO August 4, 2013

EFFECTIVE: AUGUST 6, 2012 TO August 4, 2013
EFFECTIVE: AUGUST 6, 2012 TO August 4, 2013

DRAWN BY: LISA CYFORD

NOTES

1. These Terminals are FHWA accepted at Test Level Two (TL-2) and may be used in applications with speeds of 40 MPH or less.
2. An ET-31 (TL-2) as manufactured by Trinity Industries, Inc. or an SKT-SP-MGS (TL-2) as manufactured by Road Systems Inc. shall be installed according to manufacturers' recommendations.
3. A reflectorized object marker shall be installed according to manufacturers' recommendations.
4. When snow load post washers and snow load rail washers are required by the Contract, the snow load rail washers shall not be installed within the Terminal limits.
5. Terminal shall be installed at a widening, ensuring the end piece is entirely off the shoulder. While these Terminals do not require an offset at the end, a flare is recommended. A maximum flare of 25 : 1 or flatter over the length of the Terminal is allowed for either the ET-31 (TL-2) or the SKT-SP-MGS (TL-2), with a maximum offset of 24" (in.) over 50' (ft.).
6. For Terminal details, see WSDOT-approved manufacturers' drawings.

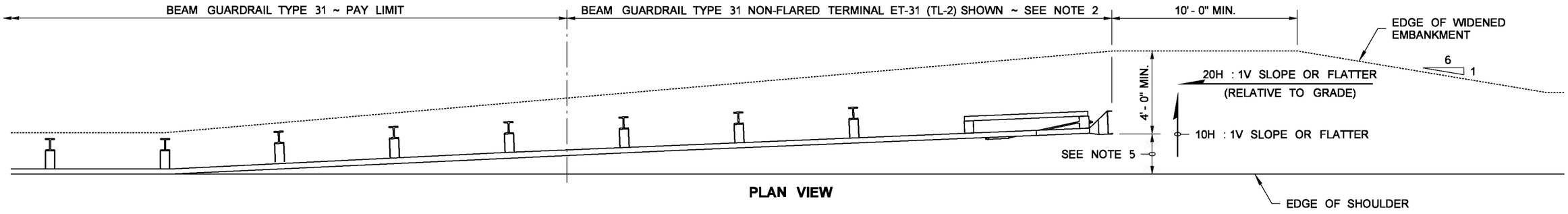

PLAN VIEW

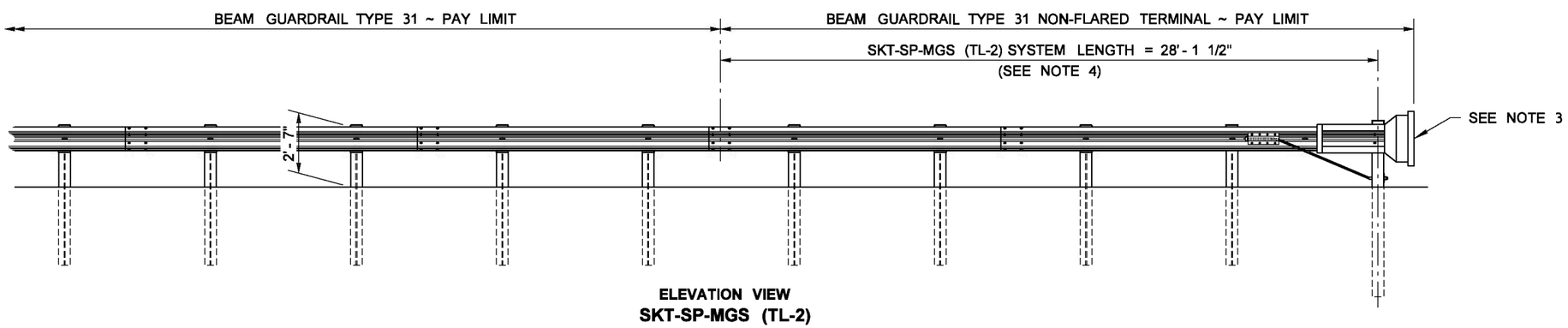

ELEVATION VIEW
SKT-SP-MGS (TL-2)

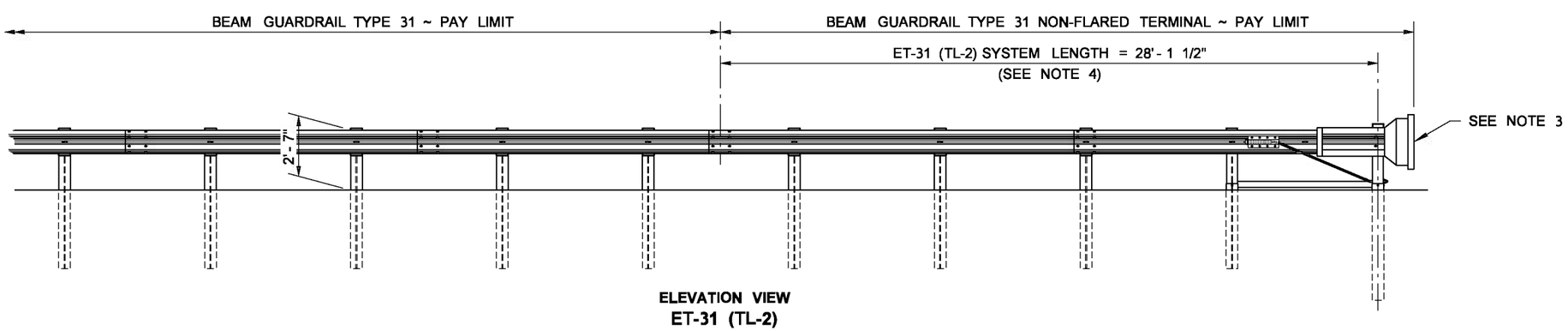

ELEVATION VIEW
ET-31 (TL-2)

TERRY L. BERENDS
STATE OF WASHINGTON
32350
REGISTERED
PROFESSIONAL ENGINEER

NOTE: THIS PLAN IS NOT A LEGAL ENGINEERING DOCUMENT BUT AN ELECTRONIC DUPLICATE. THE ORIGINAL, SIGNED BY THE ENGINEER AND APPROVED FOR PUBLICATION, IS KEPT ON FILE AT THE WASHINGTON STATE DEPARTMENT OF TRANSPORTATION. A COPY MAY BE OBTAINED UPON REQUEST.

BEAM GUARDRAIL TYPE 31 NON-FLARED TERMINAL STEEL POSTS (POSTED SPEED ~ 40 MPH AND BELOW)

STANDARD PLAN C-22.45-00

SHEET 1 OF 1 SHEET

APPROVED FOR PUBLICATION

Pasco Bakotich III — STATE DESIGN ENGINEER
06-16-11 — DATE

Washington State Department of Transportation

EFFECTIVE: AUGUST 6, 2012 TO August 4, 2013
EFFECTIVE: AUGUST 6, 2012 TO August 4, 2013
EFFECTIVE: AUGUST 6, 2012 TO August 4, 2013
EFFECTIVE: AUGUST 6, 2012 TO August 4, 2013

EFFECTIVE: AUGUST 6, 2012 TO August 4, 2013
EFFECTIVE: AUGUST 6, 2012 TO August 4, 2013

NOTES

1. For use on the end of guardrail runs when a crashworthy terminal is not required.
2. For additional details not shown, see **Standard Plan C-6c**.
3. For end section details, see **Standard Plans C-7** and **C-7a**.
4. Use details for Wood Breakaway post shown on this plan and components shown on **Standard Plan C-1b**.
5. Fasten the Anchor Cable using two 1" nuts and washer, at both ends of cable. Outside nut shall be torqued against inside nut a minimum of 100 ft.-lbs.
6. Wood blocks shown. Blocks of alternate material may be used. See **Standard Specification 9-16.3(2)**.

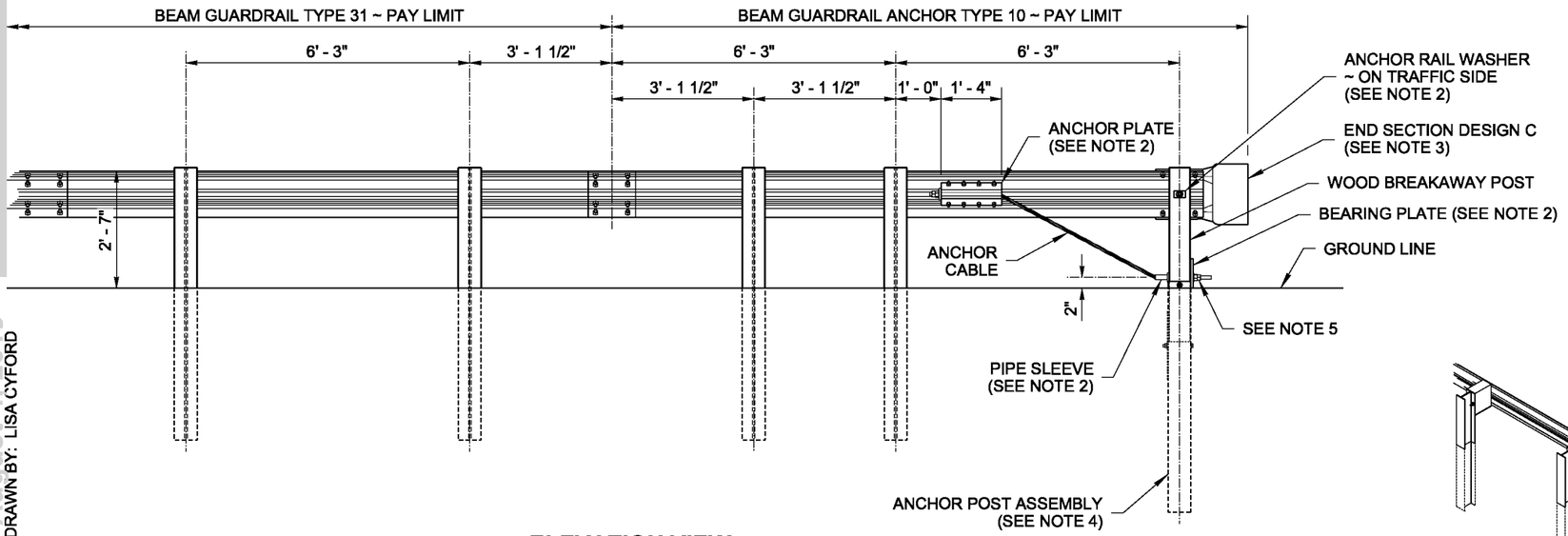

ELEVATION VIEW
W-BEAM

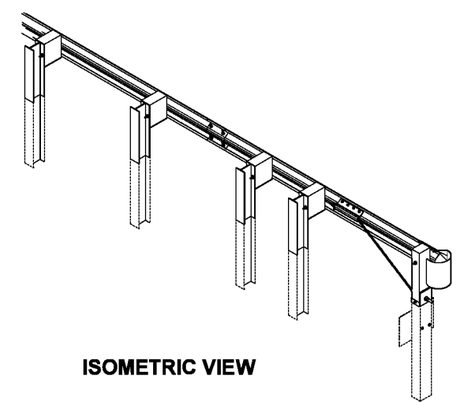

ISOMETRIC VIEW

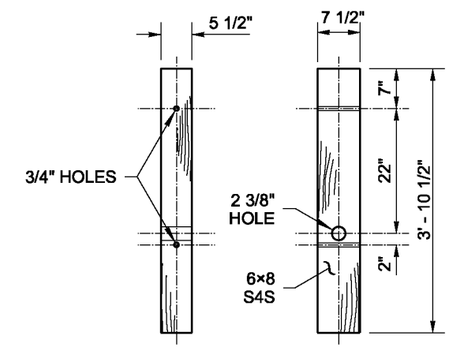

WOOD BREAKAWAY POST DETAIL

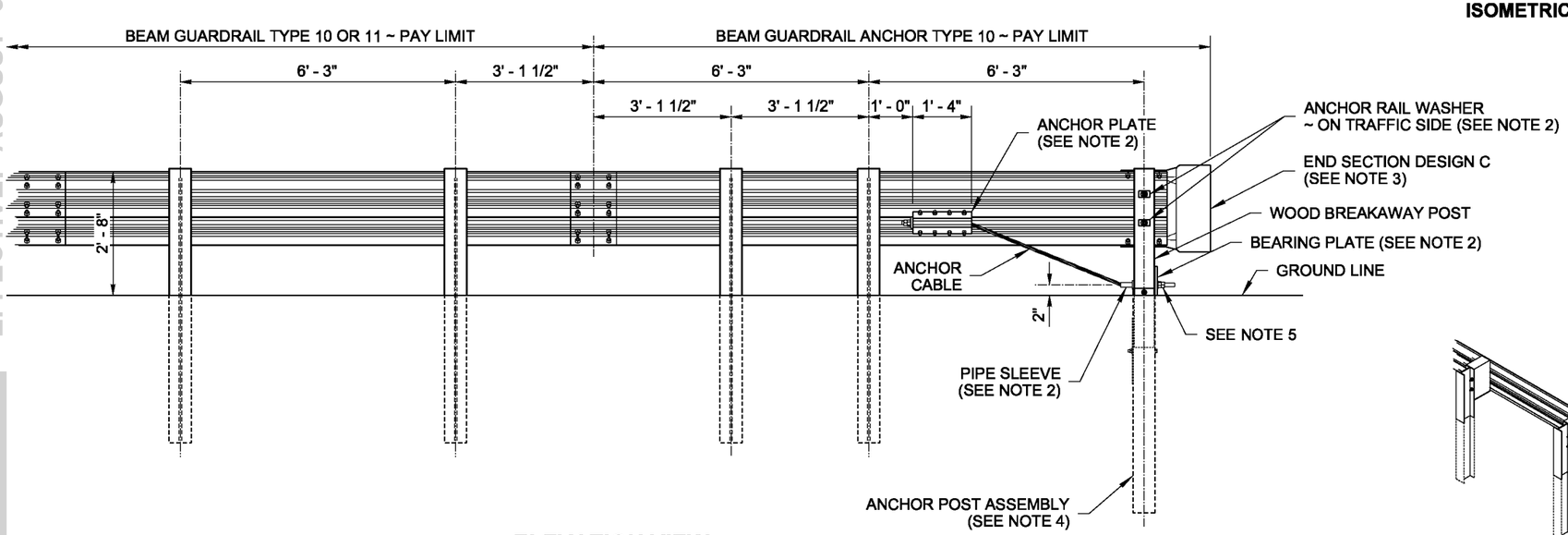

ELEVATION VIEW
THRIE BEAM

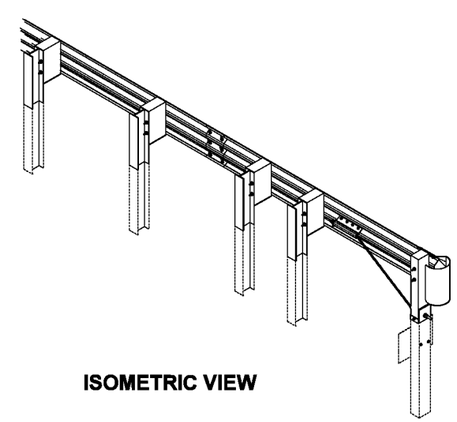

ISOMETRIC VIEW

NOTE: THIS PLAN IS NOT A LEGAL ENGINEERING DOCUMENT BUT AN ELECTRONIC DUPLICATE. THE ORIGINAL, SIGNED BY THE ENGINEER AND APPROVED FOR PUBLICATION, IS KEPT ON FILE AT THE WASHINGTON STATE DEPARTMENT OF TRANSPORTATION. A COPY MAY BE OBTAINED UPON REQUEST.

BEAM GUARDRAIL (TYPE 31)
ANCHOR TYPE 10

STANDARD PLAN C-23.60-02

SHEET 1 OF 1 SHEET

APPROVED FOR PUBLICATION

Pasco Bakotich III — STATE DESIGN ENGINEER
06/21/12 — DATE

Washington State Department of Transportation

DRAWN BY: LISA CYFORD

EFFECTIVE: AUGUST 6, 2012 TO August 4, 2013
EFFECTIVE: AUGUST 6, 2012 TO August 4, 2013
EFFECTIVE: AUGUST 6, 2012 TO August 4, 2013
EFFECTIVE: AUGUST 6, 2012 TO August 4, 2013

EFFECTIVE: AUGUST 6, 2012 TO August 4, 2013
EFFECTIVE: AUGUST 6, 2012 TO August 4, 2013

DRAWN BY: FERN LIDDELL

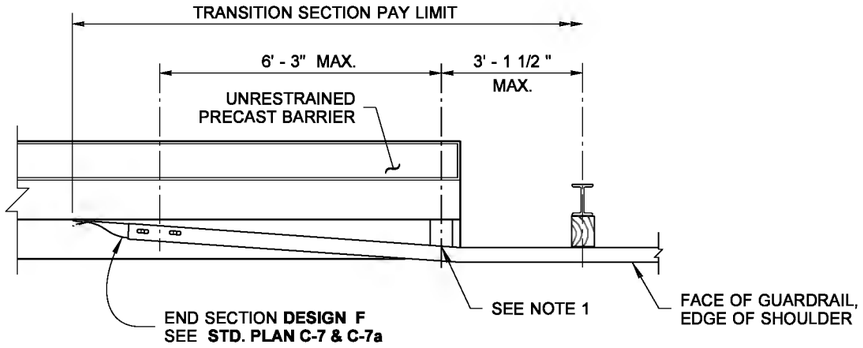

PLAN

A CONNECTION

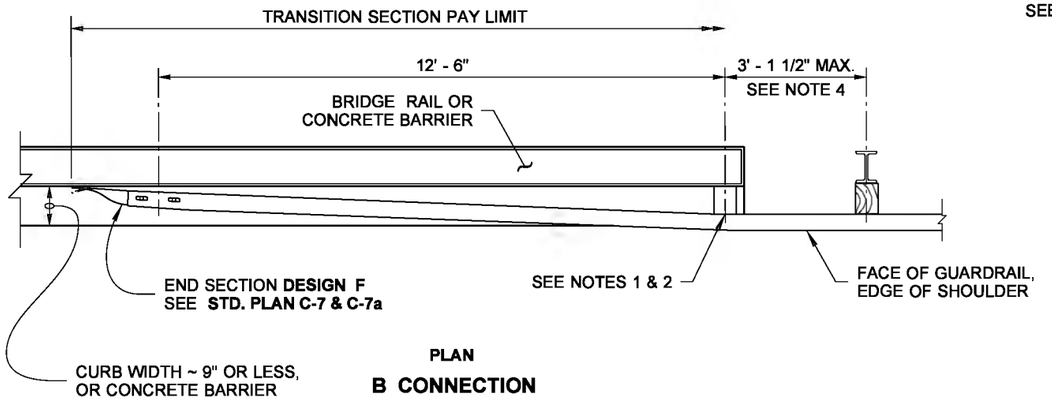

PLAN

B CONNECTION

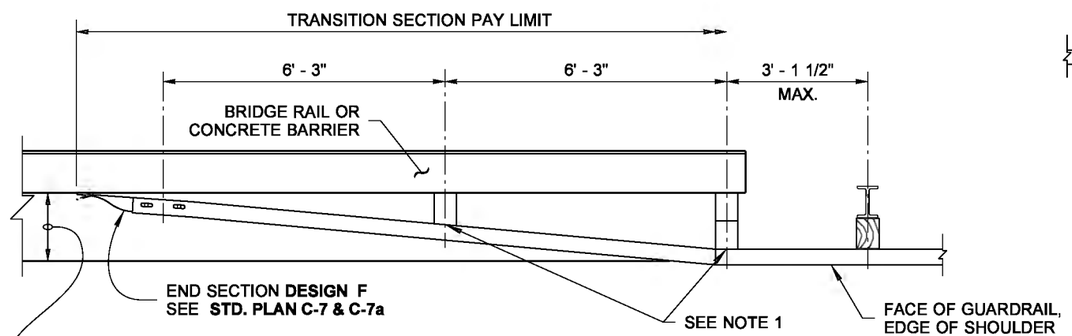

PLAN

C CONNECTION

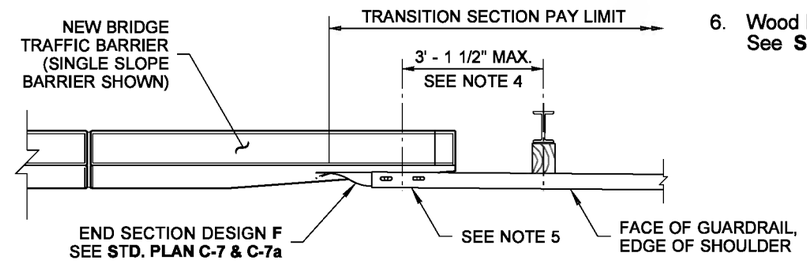

PLAN

D CONNECTION

(SEE NOTE 3)

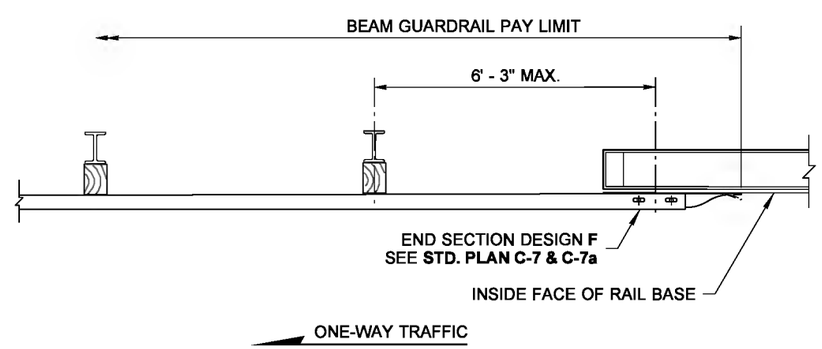

PLAN

F CONNECTION

NOTES

1. Attach guardrail to bridge rail or concrete barrier with 7/8" diameter bolts in accordance with **Standard Spec. 9-06.5(4),** with thin slab ferrule inserts or resin bonded anchors. See Contract Plans.
2. If the last guardrail post is 3" or less from the end of the bridge barrier, this attachment and blockout is not necessary.
3. This case is also applicable for F-shape and vertical faces with no curbs.
4. When B connection is used with Type 1A Transition, the maximum spacing between bolts is 6' - 3".
5. See Bridge Plans for additional connection details.
6. Wood blocks shown. Blocks of alternate material may be used. See **Standard Specification 9-16.3 (2).**

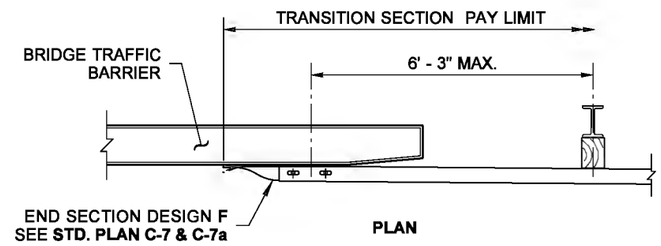

PLAN

E CONNECTION

NOTE: THIS PLAN IS NOT A LEGAL ENGINEERING DOCUMENT BUT AN ELECTRONIC DUPLICATE. THE ORIGINAL, SIGNED BY THE ENGINEER AND APPROVED FOR PUBLICATION, IS KEPT ON FILE AT THE WASHINGTON STATE DEPARTMENT OF TRANSPORTATION. A COPY MAY BE OBTAINED UPON REQUEST.

GUARDRAIL CONNECTION TO BRIDGE RAIL OR CONCRETE BARRIER STANDARD PLAN C-24.10-00

SHEET 1 OF 1 SHEET

APPROVED FOR PUBLICATION

Pasco Bakotich III — STATE DESIGN ENGINEER

07/2/12 — DATE

Washington State Department of Transportation

EFFECTIVE: AUGUST 6, 2012 TO August 4, 2013
EFFECTIVE: AUGUST 6, 2012 TO August 4, 2013
EFFECTIVE: AUGUST 6, 2012 TO August 4, 2013
EFFECTIVE: AUGUST 6, 2012 TO August 4, 2013

EFFECTIVE: AUGUST 6, 2012 TO August 4, 2013
EFFECTIVE: AUGUST 6, 2012 TO August 4, 2013

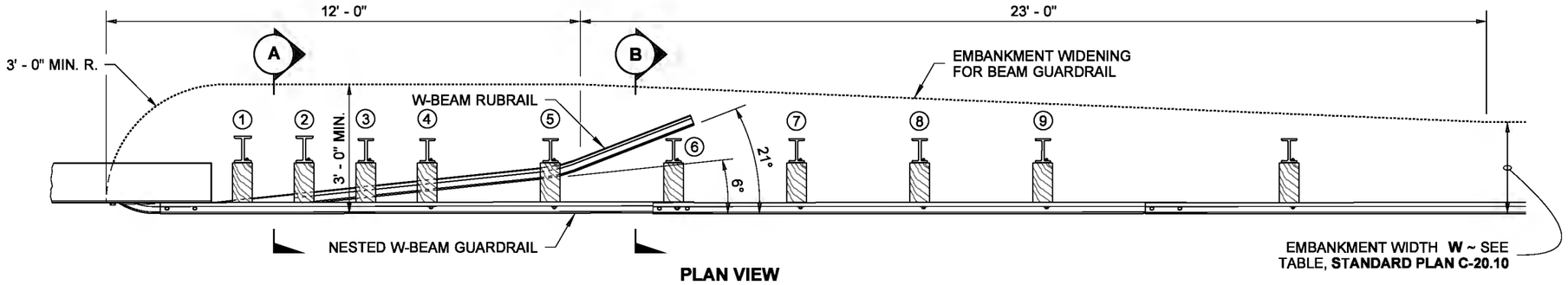

PLAN VIEW

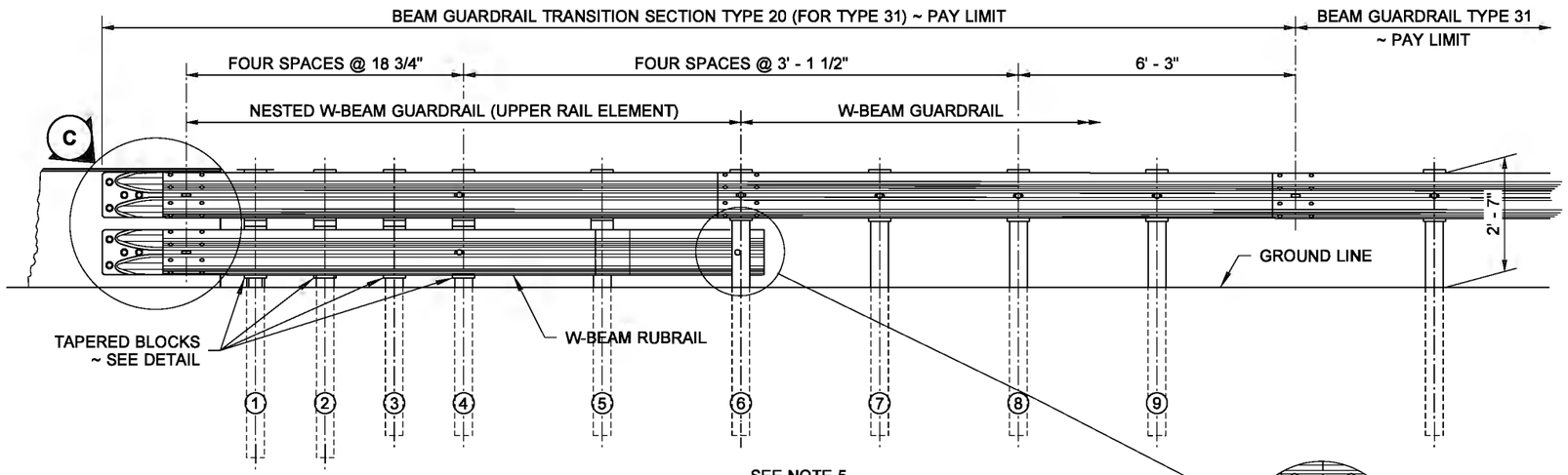

ELEVATION VIEW

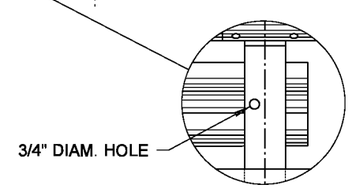

BOLT LOCATION DETAIL FOR STEEL POST

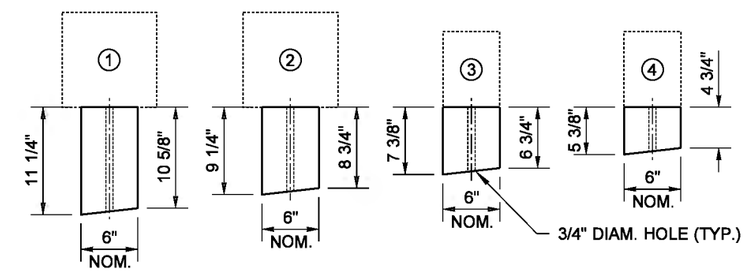

PLAN VIEW
TAPERED BLOCKS FOR RUBRAIL DETAIL
14" LONG (TYP.)

NOTES

1. For additional details not shown in this plan, refer to **Standard Plan C-20.10.**
2. This guardrail transition is for connection to a vertical concrete shape or single slope barrier and cannot be connected directly to a concrete safety shape.
3. Do not bolt nested W-Beam or rubrail W-Beam to posts and blocks on posts 1,2,3 and 5. Bolt tapered blocks directly to posts.
4. The rubrail W-Beam can be shop bent to facilitate installation.
5. Posts 1,2,3,4 and 6 require an additional hole to attach tapered blocks and/or rubrail.
6. Posts 1 and 2 are W6×15 steel posts ~ 7' - 6" long. Posts 3 through 9 are W6 × 9 steel posts ~ 6' - 0" long.
7. Wood blocks shown. Blocks of alternate material may be used. See **Standard Specificdation 9-16.3(2).**

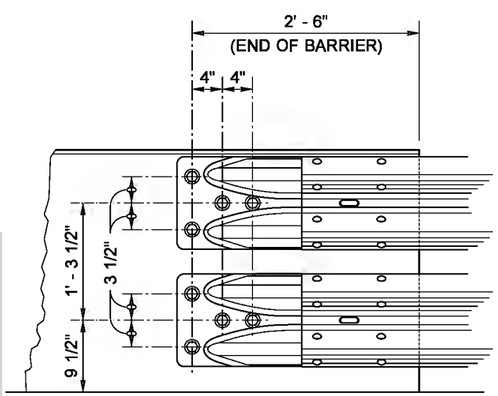

DETAIL C

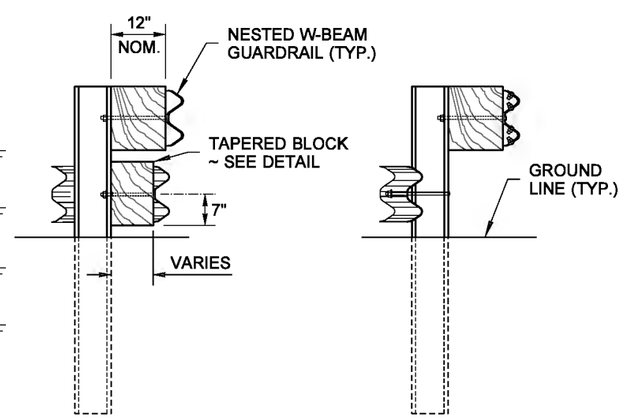

SECTION A
(STEEL POST)

(OR)

SECTION B
(STEEL POST)

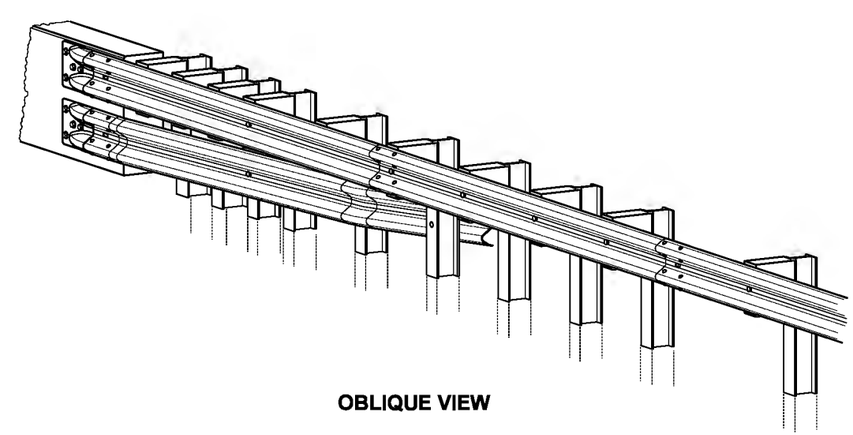

OBLIQUE VIEW

NOTE: THIS PLAN IS NOT A LEGAL ENGINEERING DOCUMENT BUT AN ELECTRONIC DUPLICATE. THE ORIGINAL, SIGNED BY THE ENGINEER AND APPROVED FOR PUBLICATION, IS KEPT ON FILE AT THE WASHINGTON STATE DEPARTMENT OF TRANSPORTATION. A COPY MAY BE OBTAINED UPON REQUEST.

BEAM GUARDRAIL (TYPE 31) TRANSITION SECTION TYPE 20
STANDARD PLAN C-25.18-03

SHEET 1 OF 1 SHEET

APPROVED FOR PUBLICATION

Pasco Bakotich III — STATE DESIGN ENGINEER
07/2/12 — DATE

Washington State Department of Transportation

DRAWN BY: FERN LIDDELL

EFFECTIVE: AUGUST 6, 2012 TO August 4, 2013
EFFECTIVE: AUGUST 6, 2012 TO August 4, 2013
EFFECTIVE: AUGUST 6, 2012 TO August 4, 2013
EFFECTIVE: AUGUST 6, 2012 TO August 4, 2013

EFFECTIVE: AUGUST 6, 2012 TO August 4, 2013
EFFECTIVE: AUGUST 6, 2012 TO August 4, 2013

DRAWN BY: FERN LIDDELL

NOTES

1. This guardrail transition is for connection to a vertical concrete shape, a single slope, or a safety shape barrier. The toe of the single slope and the safety shaped barrier shall be tapered or the barrier blocked out so that the toe of the barrier does not project past the face of the approach guardrail.
2. See **Standard Plan C-24.10** for details regarding connection to Bridge rail or traffic barrier.
3. For details of typical components, see **Standard Plans C-1b** and **C-20.10**.

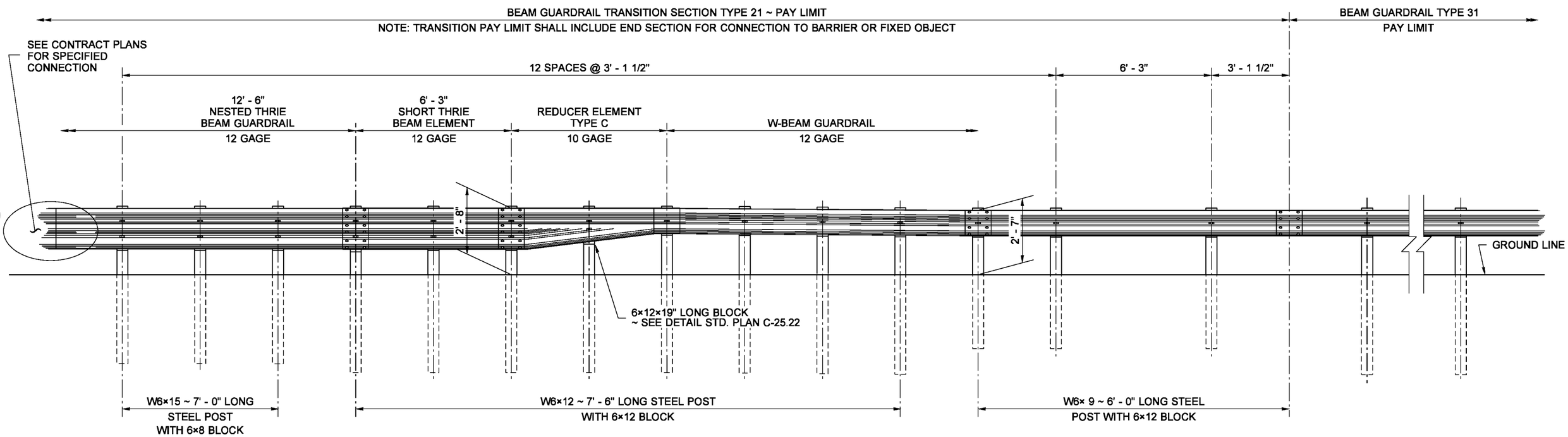

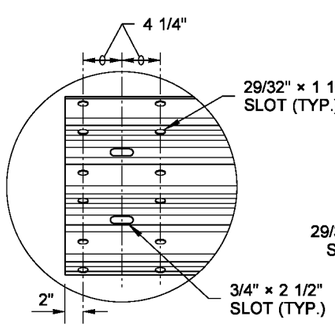

DETAIL (A)

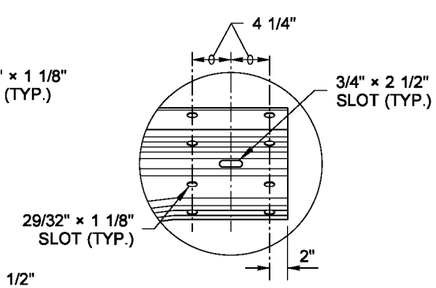

DETAIL (B)

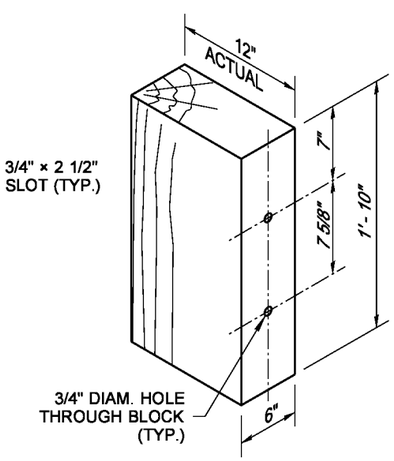

THRIE BEAM WOOD BLOCK

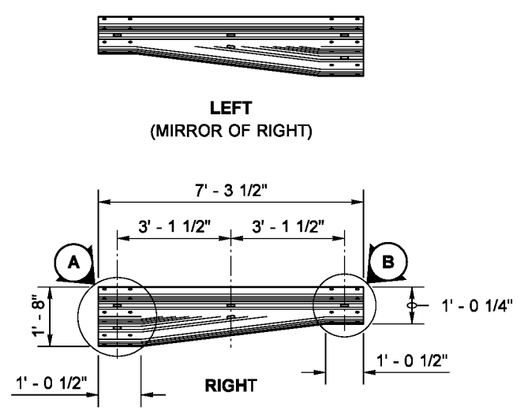

REDUCER ELEMENT TYPE C

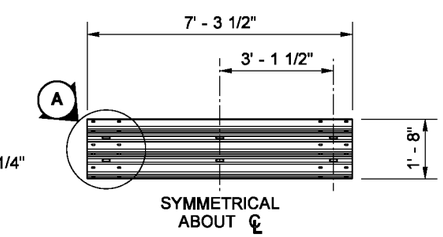

SHORT THRIE BEAM ELEMENT

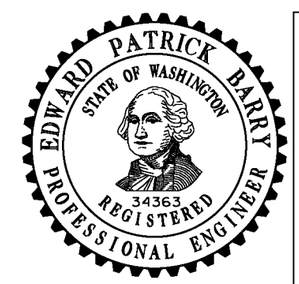

NOTE: THIS PLAN IS NOT A LEGAL ENGINEERING DOCUMENT BUT AN ELECTRONIC DUPLICATE. THE ORIGINAL, SIGNED BY THE ENGINEER AND APPROVED FOR PUBLICATION, IS KEPT ON FILE AT THE WASHINGTON STATE DEPARTMENT OF TRANSPORTATION. A COPY MAY BE OBTAINED UPON REQUEST.

BEAM GUARDRAIL (TYPE 31) TRANSITION SECTION TYPE 21

STANDARD PLAN C-25.20-05

SHEET 1 OF 1 SHEET

APPROVED FOR PUBLICATION

Pasco Bakotich III — STATE DESIGN ENGINEER — *07/2/12* — DATE

Washington State Department of Transportation

EFFECTIVE: AUGUST 6, 2012 TO August 4, 2013
EFFECTIVE: AUGUST 6, 2012 TO August 4, 2013
EFFECTIVE: AUGUST 6, 2012 TO August 4, 2013
EFFECTIVE: AUGUST 6, 2012 TO August 4, 2013

EFFECTIVE: AUGUST 6, 2012 TO August 4, 2013
EFFECTIVE: AUGUST 6, 2012 TO August 4, 2013

DRAWN BY: BILL BEKENS

NOTES

1. See **Standard Plans C-1b, C-1d, C-20.10** and **C-25.20** for rail elements and thrie beam block details.
2. When a transition is required on the trailing end of the bridge, use a mirror image of this plan.

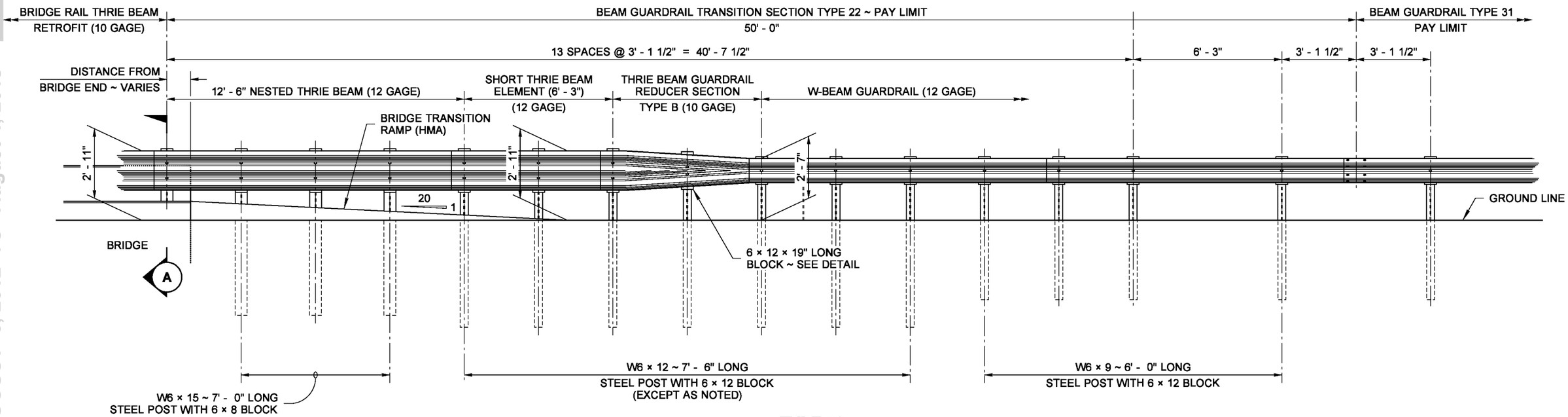

TYPE 22

APPROACH END (SHOWN - SEE NOTE 2)

THRIE BEAM INSTALLED AT FACE OF BRIDGE RAIL

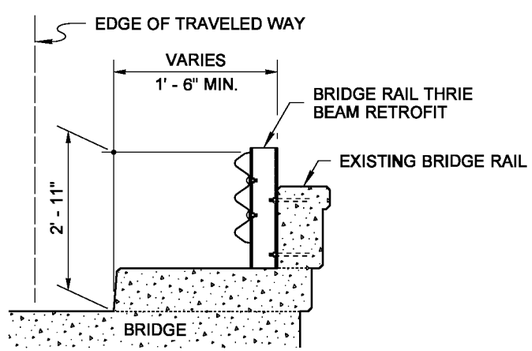

SECTION A

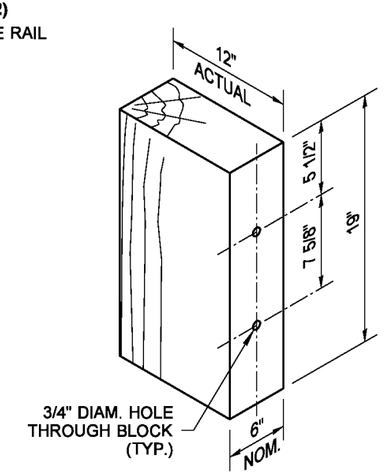

THRIE BEAM REDUCER WOOD BLOCK

NOTE: THIS PLAN IS NOT A LEGAL ENGINEERING DOCUMENT BUT AN ELECTRONIC DUPLICATE. THE ORIGINAL, SIGNED BY THE ENGINEER AND APPROVED FOR PUBLICATION, IS KEPT ON FILE AT THE WASHINGTON STATE DEPARTMENT OF TRANSPORTATION. A COPY MAY BE OBTAINED UPON REQUEST.

BEAM GUARDRAIL (TYPE 31) TRANSITION SECTION TYPE 22

STANDARD PLAN C-25.22-04

SHEET 1 OF 1 SHEET

APPROVED FOR PUBLICATION

Pasco Bakotich III — STATE DESIGN ENGINEER

07/2/12 — DATE

Washington State Department of Transportation

EFFECTIVE: AUGUST 6, 2012 TO August 4, 2013
EFFECTIVE: AUGUST 6, 2012 TO August 4, 2013
EFFECTIVE: AUGUST 6, 2012 TO August 4, 2013
EFFECTIVE: AUGUST 6, 2012 TO August 4, 2013

EFFECTIVE: AUGUST 6, 2012 TO August 4, 2013
EFFECTIVE: AUGUST 6, 2012 TO August 4, 2013

DRAWN BY: TERN LIDDELL

NOTES

1. See **Standard Plan C-1b, C-20.10** and **C-25.20** for rail elements and thrie beam block details.
2. When a transition is required on the trailing end of the bridge, use a mirror image of this plan.
3. For additional alternatives not shown, see Contract Plans.

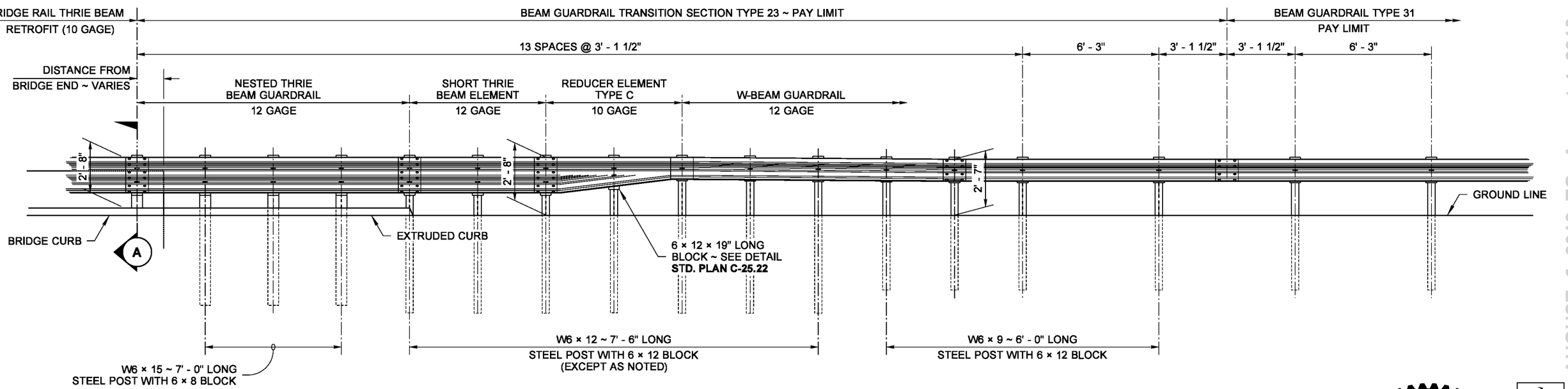

TYPE 23

APPROACH END (SHOWN - SEE NOTE 2)

THRIE BEAM INSTALLED AT FACE OF CURB

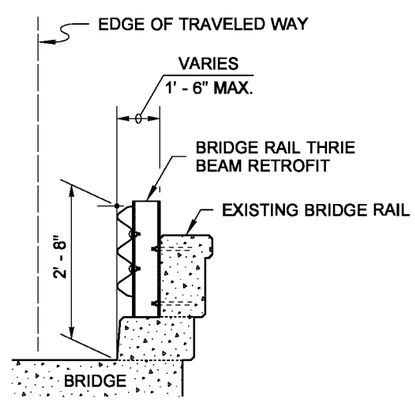

SECTION (A)

ALTERNATIVE 1

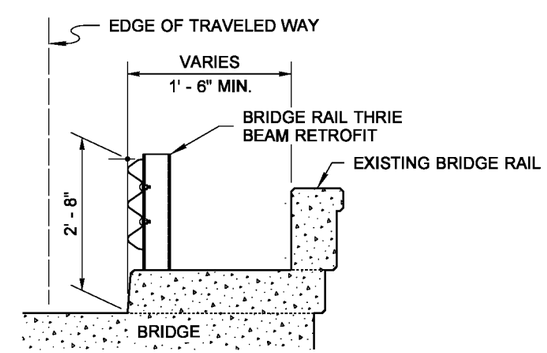

SECTION (A)

ALTERNATIVE 2

NOTE: THIS PLAN IS NOT A LEGAL ENGINEERING DOCUMENT BUT AN ELECTRONIC DUPLICATE. THE ORIGINAL, SIGNED BY THE ENGINEER AND APPROVED FOR PUBLICATION, IS KEPT ON FILE AT THE WASHINGTON STATE DEPARTMENT OF TRANSPORTATION. A COPY MAY BE OBTAINED UPON REQUEST.

BEAM GUARDRAIL (TYPE 31)
TRANSITION SECTION
TYPE 23

STANDARD PLAN C-25.26-02

SHEET 1 OF 1 SHEET

APPROVED FOR PUBLICATION

Pasco Bakotich III — STATE DESIGN ENGINEER
07/2/12 — DATE

Washington State Department of Transportation

EFFECTIVE: AUGUST 6, 2012 TO August 4, 2013
EFFECTIVE: AUGUST 6, 2012 TO August 4, 2013
EFFECTIVE: AUGUST 6, 2012 TO August 4, 2013
EFFECTIVE: AUGUST 6, 2012 TO August 4, 2013
EFFECTIVE: AUGUST 6, 2012 TO August 4, 2013

EFFECTIVE: AUGUST 6, 2012 TO August 4, 2013
EFFECTIVE: AUGUST 6, 2012 TO August 4, 2013

DRAWN BY: TERN LIDDELL

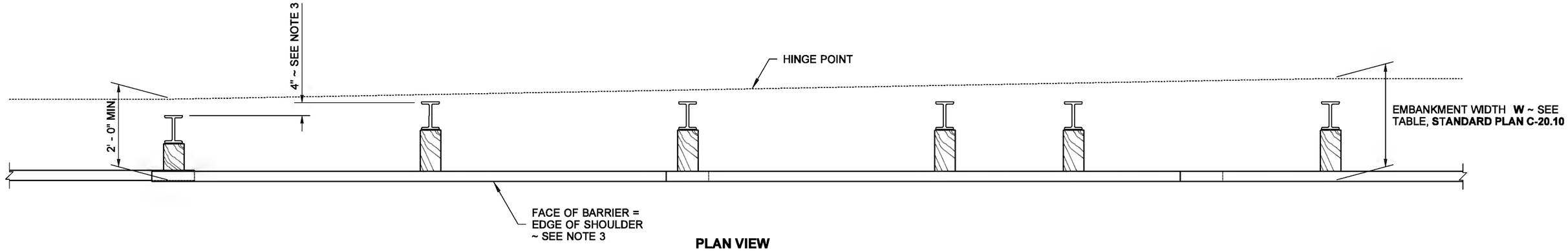

PLAN VIEW

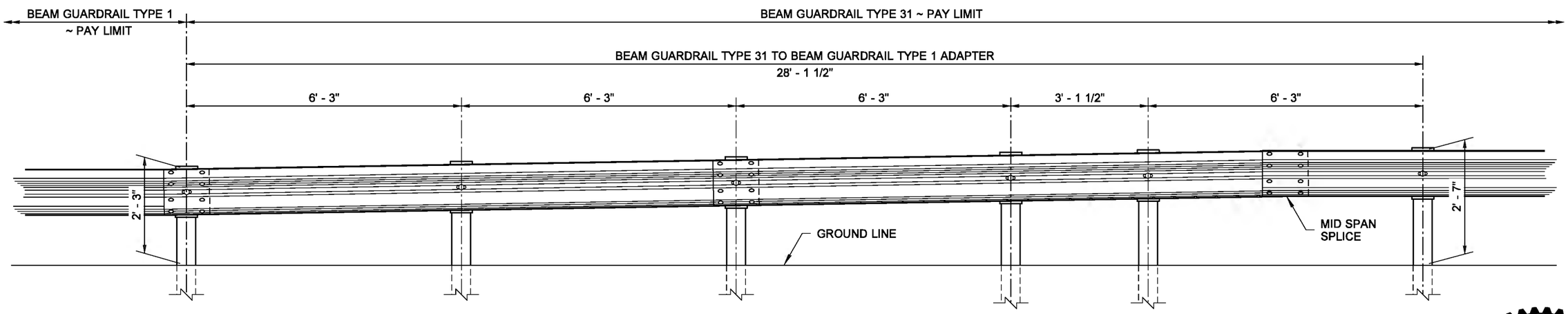

ELEVATION VIEW ~ PROFILE TAPER

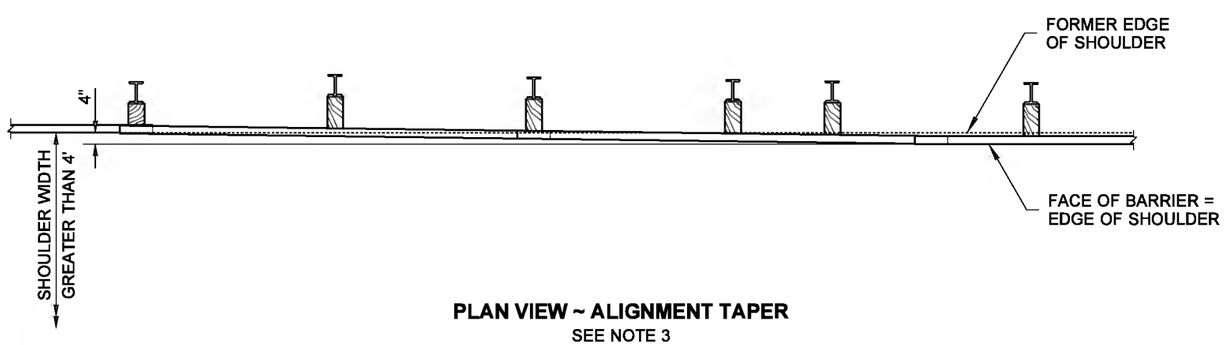

PLAN VIEW ~ ALIGNMENT TAPER

SEE NOTE 3

NOTES

1. Refer to **Standard Plan C-1** and **C-1b** for component details for Beam Guardrail Type 1 not shown on this plan.
2. Refer to **Standard Plan C-20.10** for component details for Beam Guardrail Type 31 not shown on this plan.
3. Where post off-set is constrained, and when the existing shoulder will not be widened and is wider than 4 feet, the existing shoulder may be reduced up to 4" to accomodate the 12" blockouts of the Beam Guardrail Type 31. See **PLAN VIEW ~ ALIGNMENT TAPER**.
4. Wood blocks shown. Blocks of alternate material may be used. See **Standard Specification 9-16.3(2).**

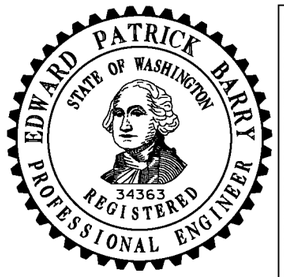

NOTE: THIS PLAN IS NOT A LEGAL ENGINEERING DOCUMENT BUT AN ELECTRONIC DUPLICATE. THE ORIGINAL, SIGNED BY THE ENGINEER AND APPROVED FOR PUBLICATION, IS KEPT ON FILE AT THE WASHINGTON STATE DEPARTMENT OF TRANSPORTATION. A COPY MAY BE OBTAINED UPON REQUEST.

BEAM GUARDRAIL TYPE 31 TO BEAM GUARDRAIL TYPE 1 ADAPTER

STANDARD PLAN C-25.80-02

SHEET 1 OF 1 SHEET

APPROVED FOR PUBLICATION

Pasco Bakotich III — STATE DESIGN ENGINEER

07/2/12 — DATE

Washington State Department of Transportation

EFFECTIVE: AUGUST 6, 2012 TO August 4, 2013
EFFECTIVE: AUGUST 6, 2012 TO August 4, 2013
EFFECTIVE: AUGUST 6, 2012 TO August 4, 2013
EFFECTIVE: AUGUST 6, 2012 TO August 4, 2013

EFFECTIVE: AUGUST 6, 2012 TO August 4, 2013
EFFECTIVE: AUGUST 6, 2012 TO August 4, 2013

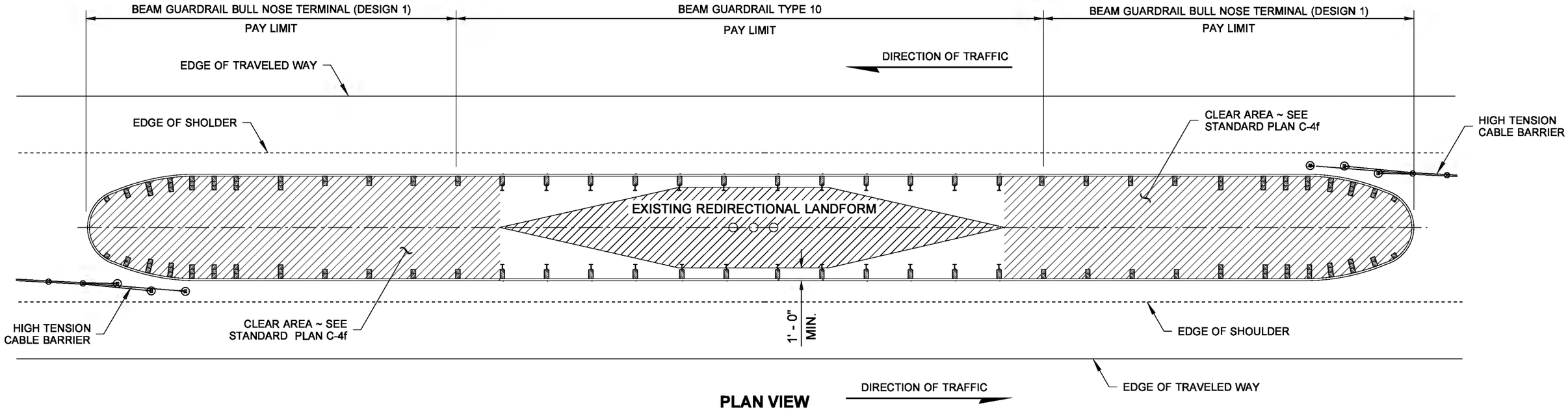

PLAN VIEW

CASE 9A

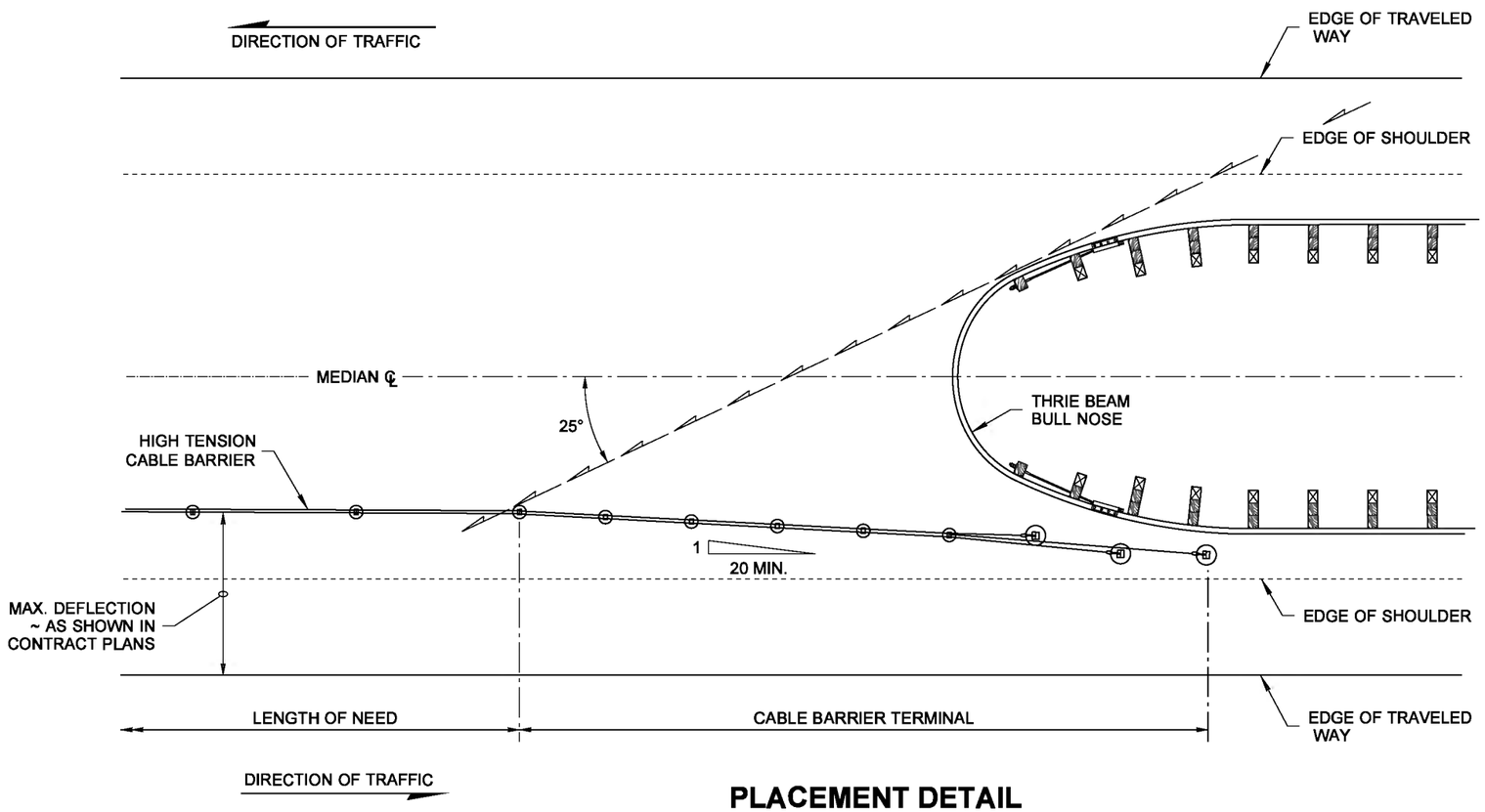

PLACEMENT DETAIL

LEGEND

Design Layout Line

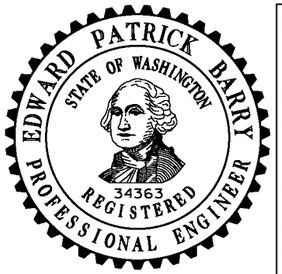

NOTE: THIS PLAN IS NOT A LEGAL ENGINEERING DOCUMENT BUT AN ELECTRONIC DUPLICATE. THE ORIGINAL, SIGNED BY THE ENGINEER AND APPROVED FOR PUBLICATION, IS KEPT ON FILE AT THE WASHINGTON STATE DEPARTMENT OF TRANSPORTATION. A COPY MAY BE OBTAINED UPON REQUEST.

BARRIER PLACEMENT CABLE TO THRIE BEAM BULL NOSE CONNECTION

STANDARD PLAN C-40.14-02

SHEET 1 OF 1 SHEET

APPROVED FOR PUBLICATION

Pasco Bakotich III — STATE DESIGN ENGINEER

07/2/12 — DATE

Washington State Department of Transportation

DRAWN BY: FERN LIDDELL

EFFECTIVE: AUGUST 6, 2012 TO August 4, 2013
EFFECTIVE: AUGUST 6, 2012 TO August 4, 2013
EFFECTIVE: AUGUST 6, 2012 TO August 4, 2013
EFFECTIVE: AUGUST 6, 2012 TO August 4, 2013

EFFECTIVE: AUGUST 6, 2012 TO August 4, 2013
EFFECTIVE: AUGUST 6, 2012 TO August 4, 2013

DRAWN BY: FERN LIDDELL

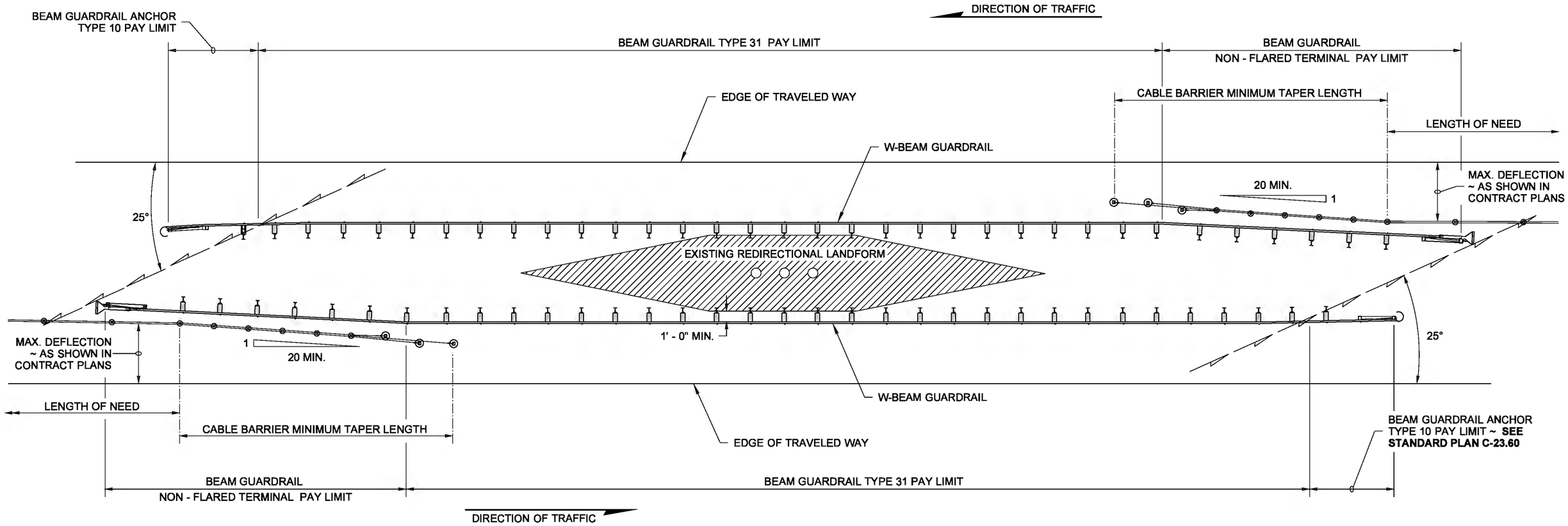

PLAN VIEW

LEGEND

Design Layout Line

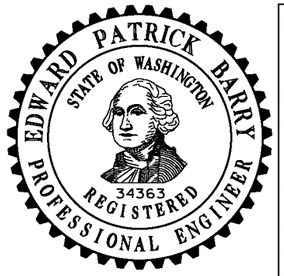

NOTE: THIS PLAN IS NOT A LEGAL ENGINEERING DOCUMENT BUT AN ELECTRONIC DUPLICATE. THE ORIGINAL, SIGNED BY THE ENGINEER AND APPROVED FOR PUBLICATION, IS KEPT ON FILE AT THE WASHINGTON STATE DEPARTMENT OF TRANSPORTATION. A COPY MAY BE OBTAINED UPON REQUEST.

BARRIER PLACEMENT ~ CABLE TO W-BEAM SHIELDING FOR REDIRECTIONAL LANDFORM STANDARD PLAN C-40.16-02

SHEET 1 OF 1 SHEET

APPROVED FOR PUBLICATION

Pasco Bakotich III — STATE DESIGN ENGINEER

07/2/12 — DATE

Washington State Department of Transportation

EFFECTIVE: AUGUST 6, 2012 TO August 4, 2013
EFFECTIVE: AUGUST 6, 2012 TO August 4, 2013
EFFECTIVE: AUGUST 6, 2012 TO August 4, 2013
EFFECTIVE: AUGUST 6, 2012 TO August 4, 2013

EFFECTIVE: AUGUST 6, 2012 TO August 4, 2013
EFFECTIVE: AUGUST 6, 2012 TO August 4, 2013

DRAWN BY: FERN LIDDELL

LEGEND

Design Layout Line

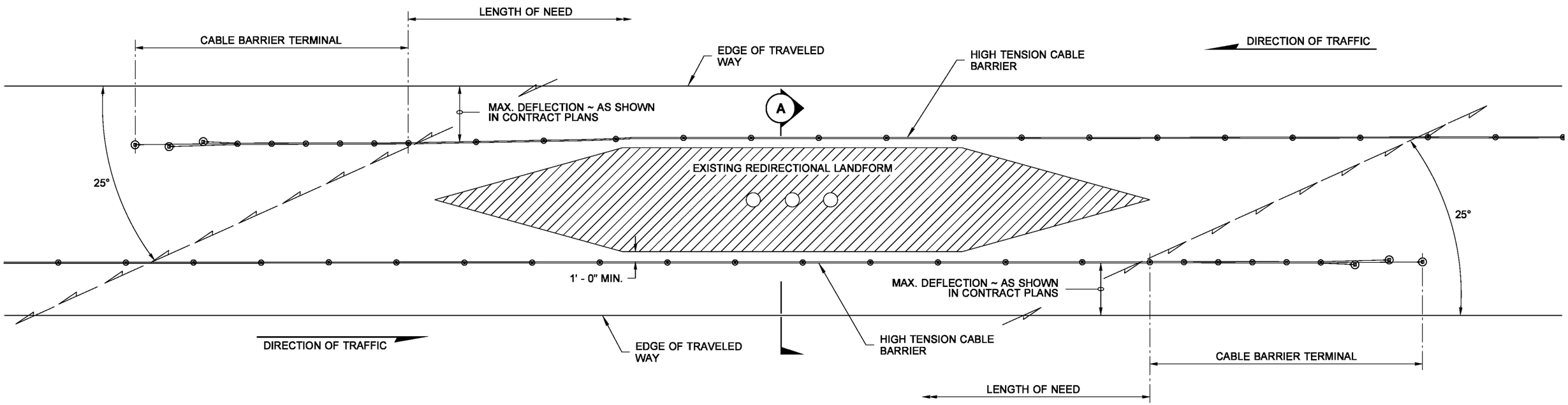

PLAN VIEW

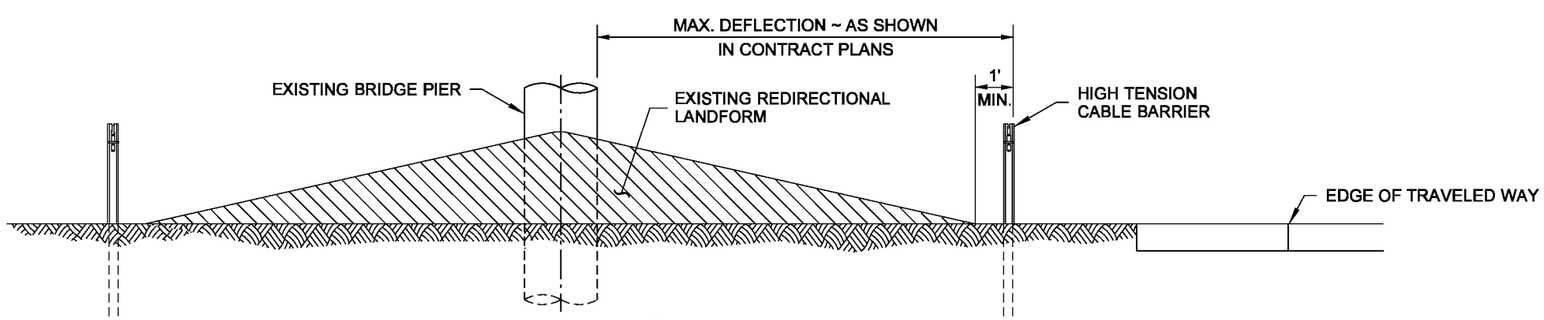

SECTION A

EDWARD PATRICK BARRY
STATE OF WASHINGTON
34363
REGISTERED
PROFESSIONAL ENGINEER

NOTE: THIS PLAN IS NOT A LEGAL ENGINEERING DOCUMENT BUT AN ELECTRONIC DUPLICATE. THE ORIGINAL, SIGNED BY THE ENGINEER AND APPROVED FOR PUBLICATION, IS KEPT ON FILE AT THE WASHINGTON STATE DEPARTMENT OF TRANSPORTATION. A COPY MAY BE OBTAINED UPON REQUEST.

BARRIER PLACEMENT ~ CABLE BARRIER SHIELDING FOR REDIRECTIONAL LANDFORM
STANDARD PLAN C-40.18-02

SHEET 1 OF 1 SHEET

APPROVED FOR PUBLICATION

Pasco Bakotich III — STATE DESIGN ENGINEER

07/2/12 — DATE

Washington State Department of Transportation

EFFECTIVE: AUGUST 6, 2012 TO August 4, 2013
EFFECTIVE: AUGUST 6, 2012 TO August 4, 2013
EFFECTIVE: AUGUST 6, 2012 TO August 4, 2013
EFFECTIVE: AUGUST 6, 2012 TO August 4, 2013

EFFECTIVE: AUGUST 6, 2012 TO August 4, 2013
EFFECTIVE: AUGUST 6, 2012 TO August 4, 2013

DRAWN BY: LISA CYFORD

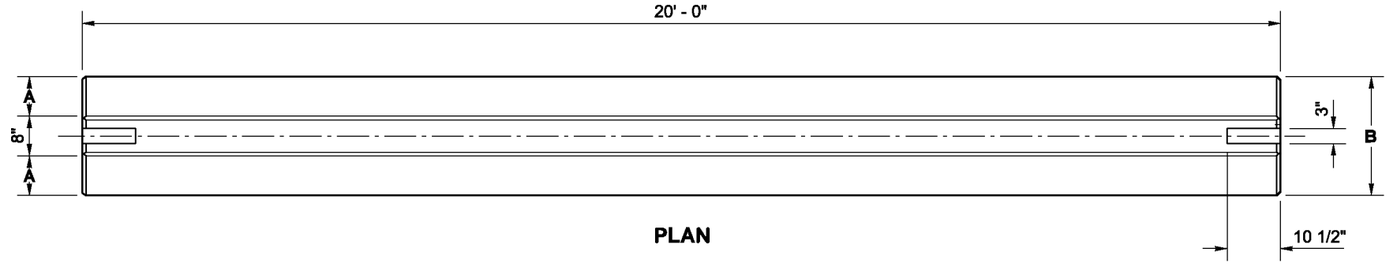

PLAN

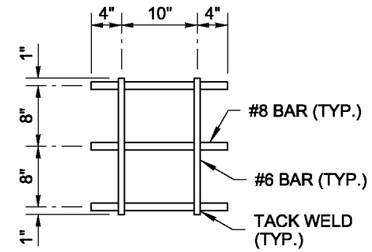

REBAR GRID DETAIL
FOR PERMANENT INSTALLATION

NOTES

1. PERMANENT INSTALLATION requirements: Embed barrier 3" minimum, install 1/4" Premolded Joint Filler between segments, fill the Connection Blockout with grout, centering the Rebar Grid in the blockout before adding grout.
2. TEMPORARY INSTALLATION requirement: Place a Rebar Grid in the Connection Blockout between barrier segments.
3. Installation on a horizontal curve with a radius less than 2000' requires a modified end design.
4. For Barrier with a 2' - 10" reveal, see sheet 2. For High-Performance Barrier with a 3' - 6" reveal, see sheet 3.

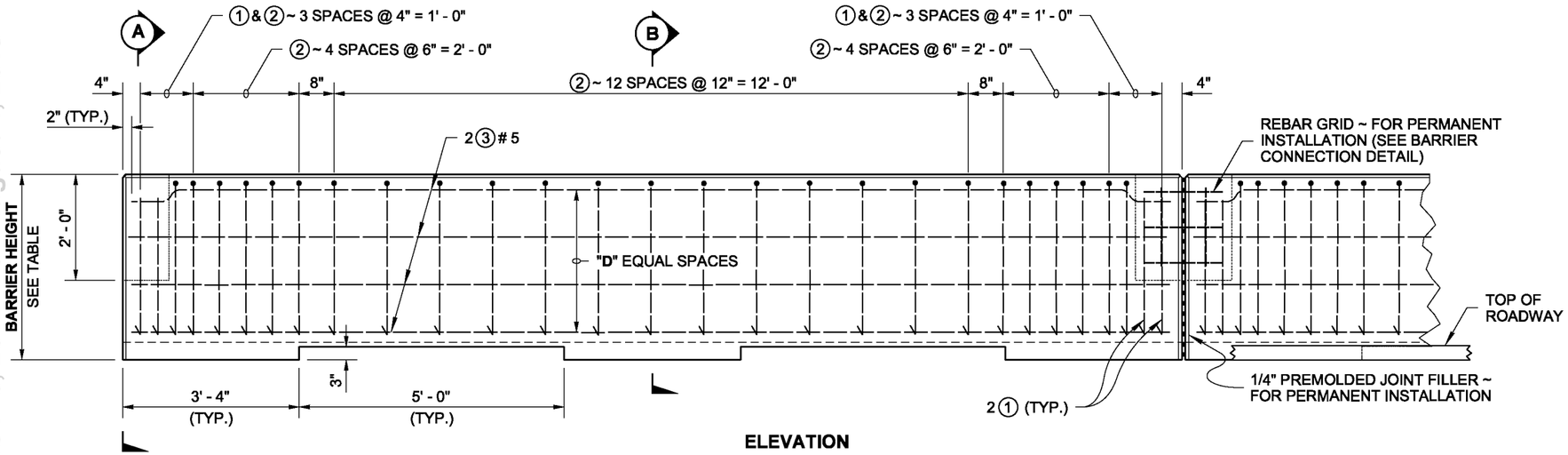

ELEVATION

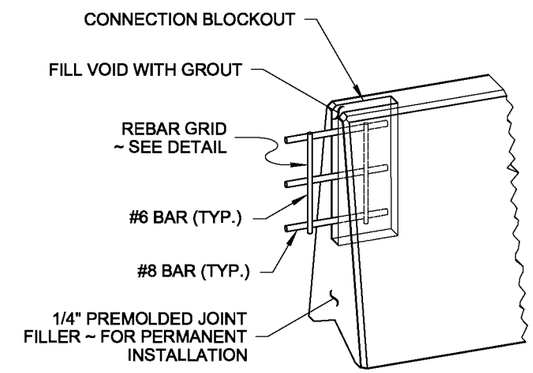

BARRIER CONNECTION DETAIL
FOR PERMANENT INSTALLATION

* WELDED WIRE REINFORCING SUBSTITUTION OPTION TABLE		
MARK	REINFORCING SIZE	WELDED WIRE REINFORCING
①	# 4	D - 20
②	# 4	D - 20
③	# 5	D - 31

* WELDED WIRE REINFORCMENTS SHALL CONFORM TO **STANDARD SPECIFICATION SECTIONS 6-10** and **9-07**

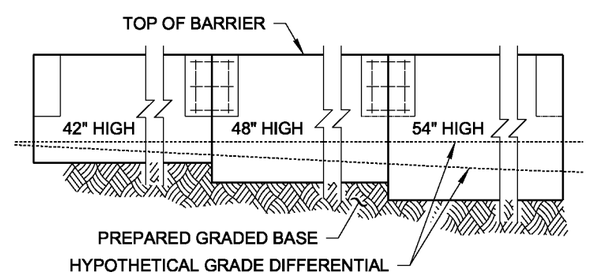

BARRIER TRANSITION DETAIL

REINFORCING STEEL BENDING DIAGRAM

SEE **STD. SPEC. 9-07.1(2)** FOR BENDING DIAMETERS

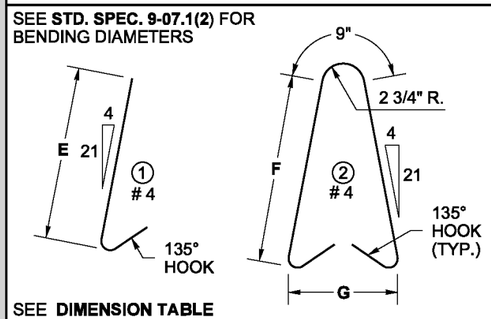

SEE **DIMENSION TABLE**

DIMENSION TABLE							
BARRIER HEIGHT	A	B	D	E	F	G	HORIZONTAL BARS (QTY.)
3' - 6"	8"	2' - 0"	3	2' - 8"	2' - 10"	1' - 7"	8
4' - 0"	9 1/8"	2' - 2 1/4"	4	3' - 2"	3' - 4"	1' - 9"	10
4' - 6"	10 1/4"	2' - 4 1/2"	5	3' - 8"	3' - 10"	1' - 11"	12

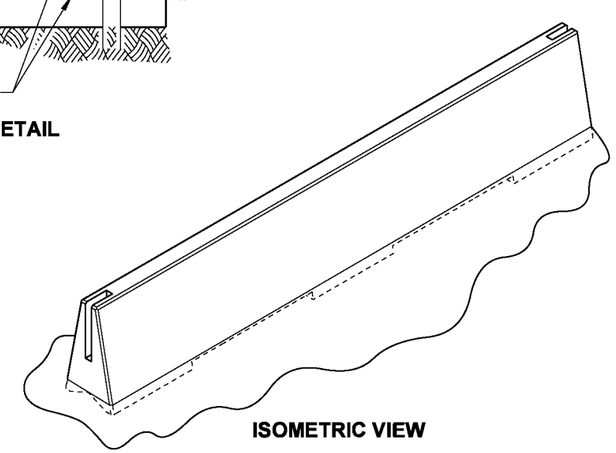

ISOMETRIC VIEW

NOTE: THIS PLAN IS NOT A LEGAL ENGINEERING DOCUMENT BUT AN ELECTRONIC DUPLICATE. THE ORIGINAL, SIGNED BY THE ENGINEER AND APPROVED FOR PUBLICATION, IS KEPT ON FILE AT THE WASHINGTON STATE DEPARTMENT OF TRANSPORTATION. A COPY MAY BE OBTAINED UPON REQUEST.

SINGLE-SLOPE CONCRETE BARRIER (PRECAST)

STANDARD PLAN C-70.10-00

SHEET 1 OF 3 SHEETS

APPROVED FOR PUBLICATION

Pasco Bakotich III — STATE DESIGN ENGINEER
04/18/12 — DATE

Washington State Department of Transportation

EFFECTIVE: AUGUST 6, 2012 TO August 4, 2013
EFFECTIVE: AUGUST 6, 2012 TO August 4, 2013
EFFECTIVE: AUGUST 6, 2012 TO August 4, 2013
EFFECTIVE: AUGUST 6, 2012 TO August 4, 2013

EFFECTIVE: AUGUST 6, 2012 TO August 4, 2013
EFFECTIVE: AUGUST 6, 2012 TO August 4, 2013

DRAWN BY: LISA CYFORD

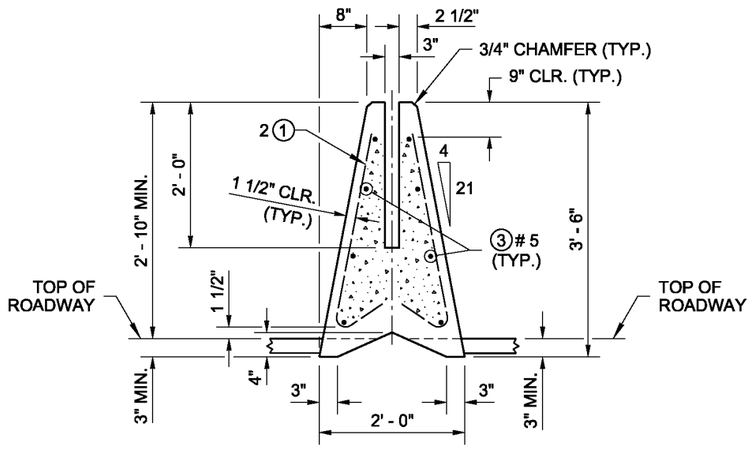

SECTION (A)

3' - 6" BARRIER SHOWN LEVEL

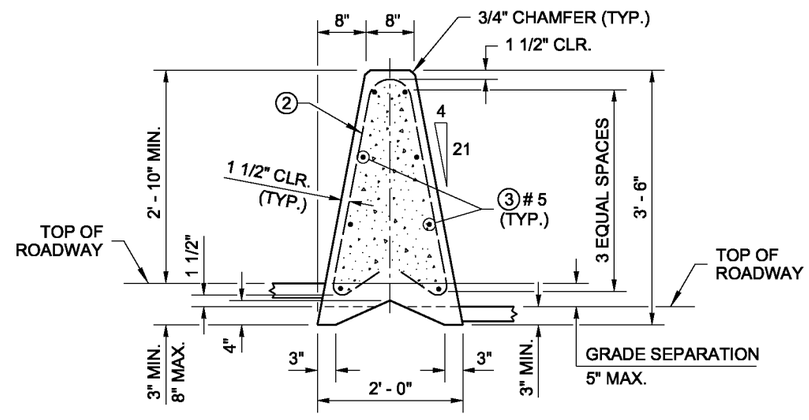

SECTION (B)

3' - 6" BARRIER FOR USE WITH A 0" TO 5" MAX. GRADE SEPARATION

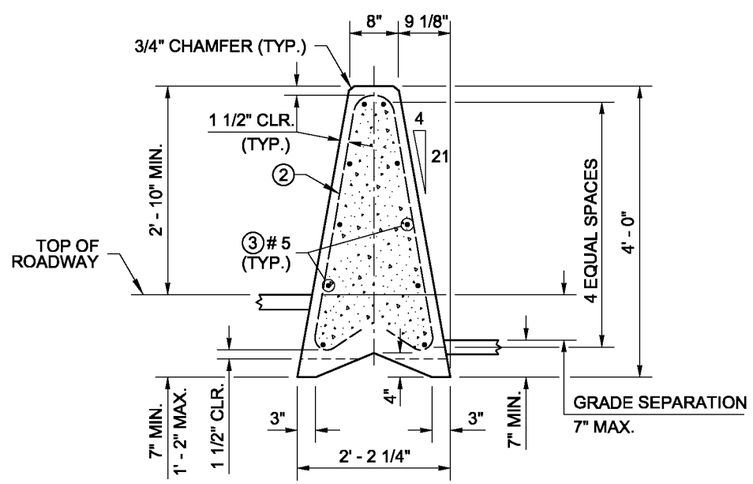

SECTION (B)

4' - 0" BARRIER FOR USE WITH A GREATER THAN 5" TO 7" MAX. GRADE SEPARATION

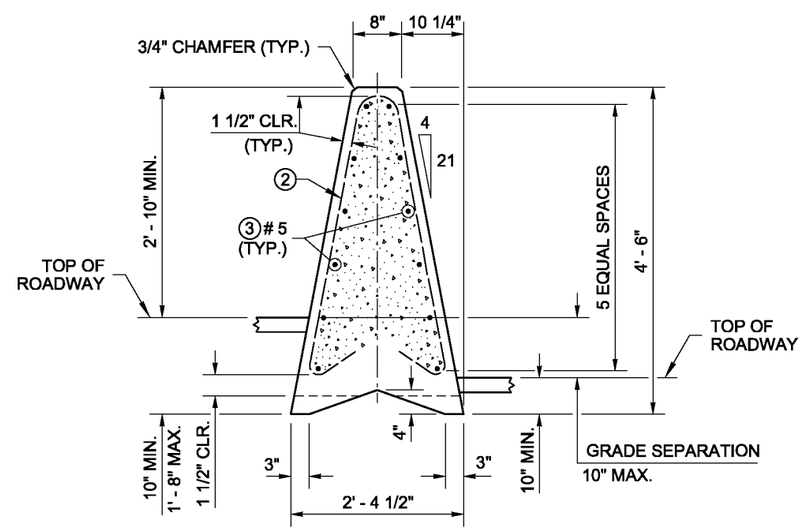

SECTION (B)

4' - 6" BARRIER FOR USE WITH A GREATER THAN 7" TO 10" MAX. GRADE SEPARATION

STANDARD MOUNTING HEIGHT

TERRY L. BERENDS
STATE OF WASHINGTON
32350
REGISTERED
PROFESSIONAL ENGINEER

NOTE: THIS PLAN IS NOT A LEGAL ENGINEERING DOCUMENT BUT AN ELECTRONIC DUPLICATE. THE ORIGINAL, SIGNED BY THE ENGINEER AND APPROVED FOR PUBLICATION, IS KEPT ON FILE AT THE WASHINGTON STATE DEPARTMENT OF TRANSPORTATION. A COPY MAY BE OBTAINED UPON REQUEST.

SINGLE-SLOPE CONCRETE BARRIER (PRECAST)

STANDARD PLAN C-70.10-00

SHEET 2 OF 3 SHEETS

APPROVED FOR PUBLICATION

Pasco Bakotich III — STATE DESIGN ENGINEER
04/18/12 — DATE

Washington State Department of Transportation

EFFECTIVE: AUGUST 6, 2012 TO August 4, 2013
EFFECTIVE: AUGUST 6, 2012 TO August 4, 2013
EFFECTIVE: AUGUST 6, 2012 TO August 4, 2013
EFFECTIVE: AUGUST 6, 2012 TO August 4, 2013

EFFECTIVE: AUGUST 6, 2012 TO August 4, 2013
EFFECTIVE: AUGUST 6, 2012 TO August 4, 2013

DRAWN BY: LISA CYFORD

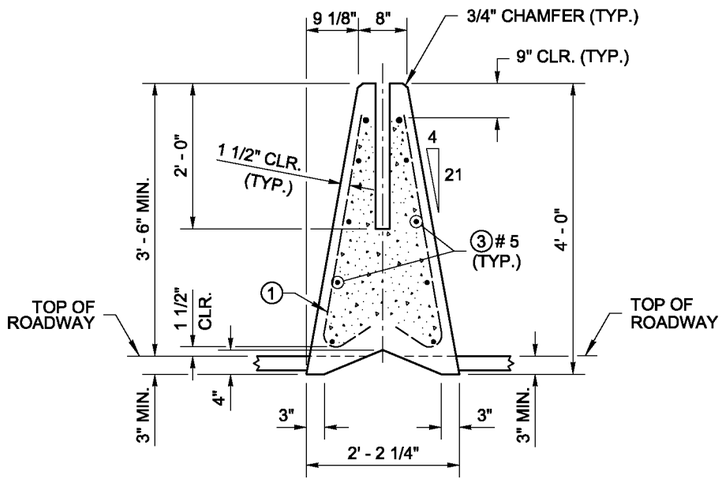

SECTION (A)

4' - 0" BARRIER
SHOWN LEVEL

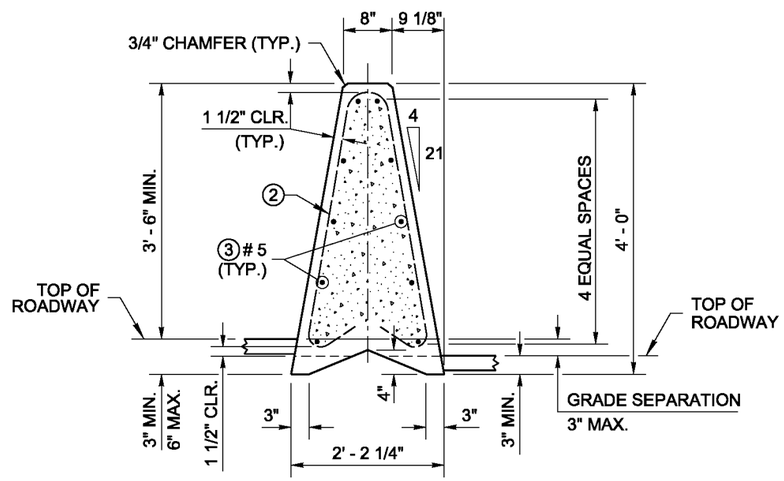

SECTION (B)

4' - 0" BARRIER FOR USE WITH A
0" TO 3" MAX. GRADE SEPARATION

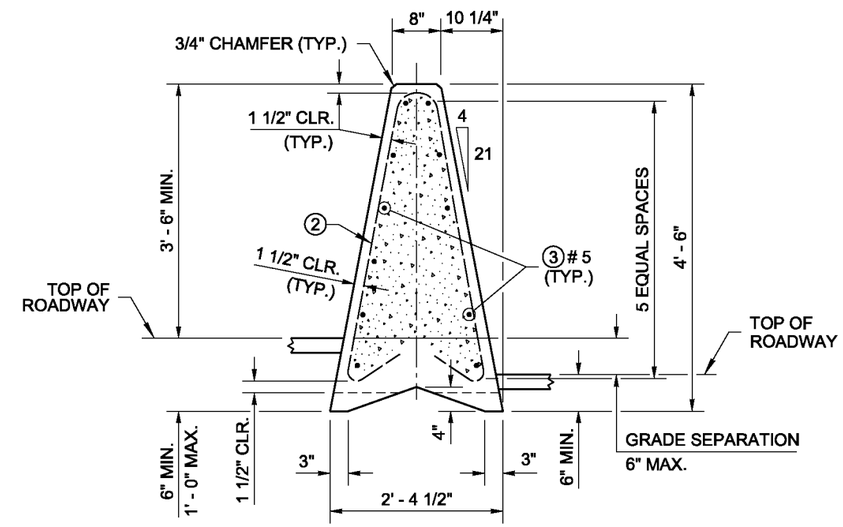

SECTION (B)

4' - 6" BARRIER FOR USE WITH A
GREATER THAN 3" TO 6" MAX.
GRADE SEPARATION

NOTE: THIS PLAN IS NOT A LEGAL ENGINEERING DOCUMENT BUT AN ELECTRONIC DUPLICATE. THE ORIGINAL, SIGNED BY THE ENGINEER AND APPROVED FOR PUBLICATION, IS KEPT ON FILE AT THE WASHINGTON STATE DEPARTMENT OF TRANSPORTATION. A COPY MAY BE OBTAINED UPON REQUEST.

SINGLE-SLOPE CONCRETE BARRIER (PRECAST)

STANDARD PLAN C-70.10-00

SHEET 3 OF 3 SHEETS

APPROVED FOR PUBLICATION

Pasco Bakotich III — STATE DESIGN ENGINEER

04/18/12 — DATE

Washington State Department of Transportation

HIGH-PERFORMANCE BARRIER

EFFECTIVE: AUGUST 6, 2012 TO August 4, 2013
EFFECTIVE: AUGUST 6, 2012 TO August 4, 2013
EFFECTIVE: AUGUST 6, 2012 TO August 4, 2013
EFFECTIVE: AUGUST 6, 2012 TO August 4, 2013

EFFECTIVE: AUGUST 6, 2012 TO August 4, 2013

DRAWN BY: LISA CYFORD

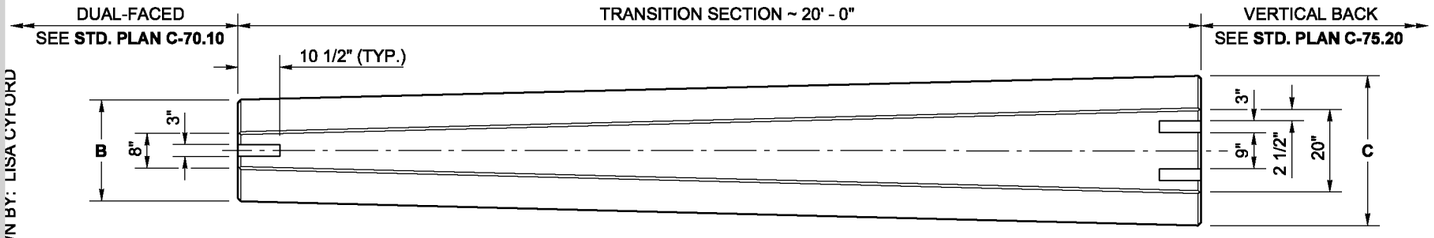

PLAN

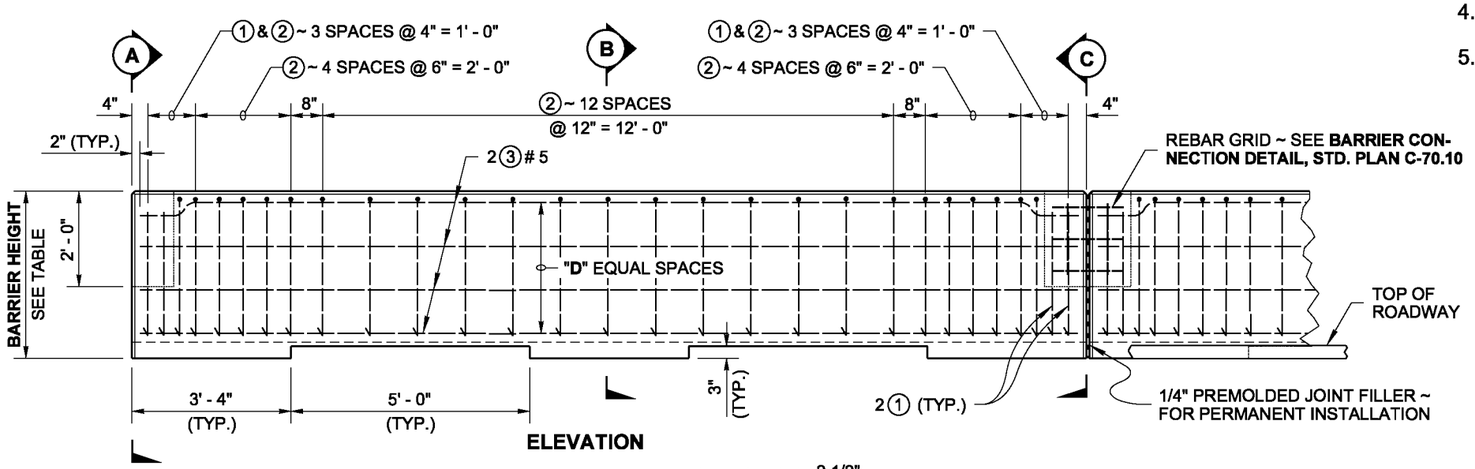

ELEVATION

NOTES

1. PERMANENT INSTALLATION requirements: Embed barrier 3" minimum, install 1/4" Pre-molded Joint Filler between segments, fill the Connection Blockout with grout, centering the Rebar Grid in the blockout before adding grout.
2. TEMPORARY INSTALLATION requirement: Place a Rebar Grid in the Connection Blockout between barrier segments.
3. See **Standard Plan C-70.10** for REBAR GRID DETAIL and BARRIER CONNECTION DETAIL.
4. This plan is for transitions to precast concrete barriers only.
5. When **High-Performance Concrete Barrier** is specified in the Contract, use the dimensions given in the H/P row in the DIMENSION TABLE, with a minimum height above roadway of 3' - 6" and a minimum imbedment of 3".

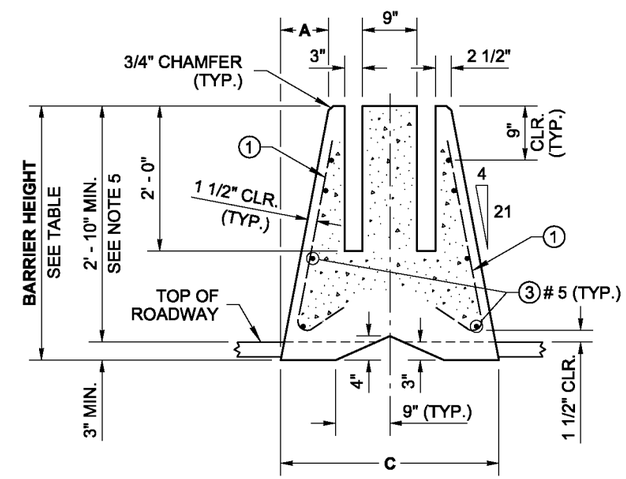

SECTION (C)

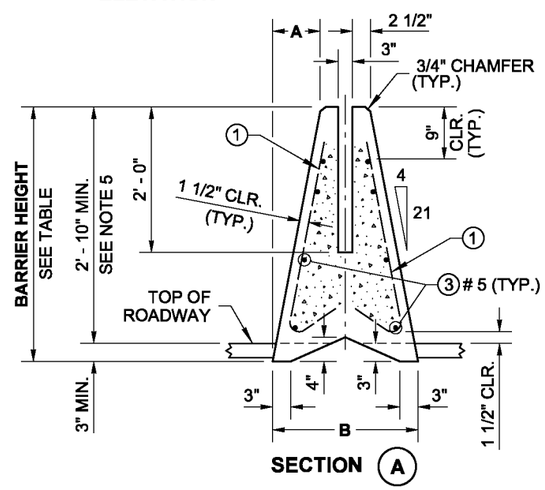

SECTION (A)

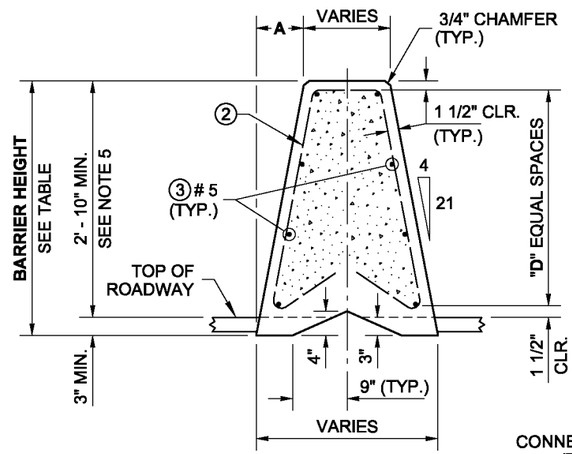

SECTION (B)

* WELDED WIRE REINFORCING SUBSTITUTION OPTION TABLE		
MARK	REINFORCING SIZE	WELDED WIRE REINFORCING
①	# 4	D - 20
②	# 4	D - 20
③	# 5	D - 31

* WELDED WIRE REINFORCMENTS SHALL CONFORM TO **STANDARD SPECIFICATION SECTIONS 6-10** and **9-07**

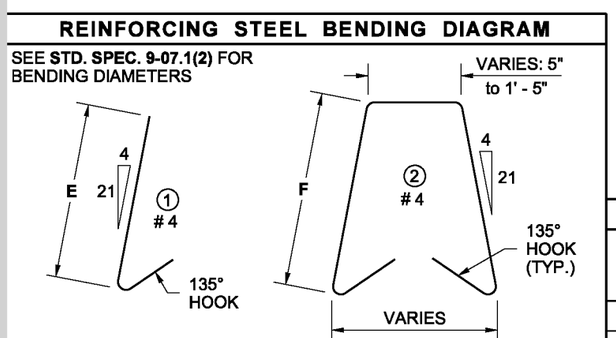

DIMENSION TABLE								SEE NOTE 5
	BARRIER HEIGHT	A	B	C	D	E	F	HORIZONTAL BARS (QTY.)
STD.	3' - 6"	8"	2' - 0"	3' - 0"	3	2' - 8"	2' - 9"	8
H/P	4' - 0"	9 1/8"	2' - 2 1/4"	3' - 2 1/4"	4	3' - 2"	3' - 3"	10

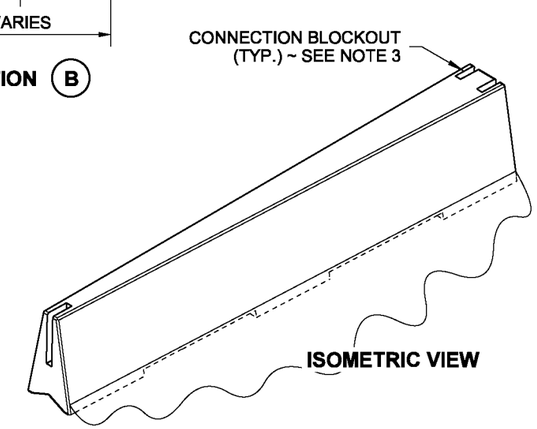

ISOMETRIC VIEW

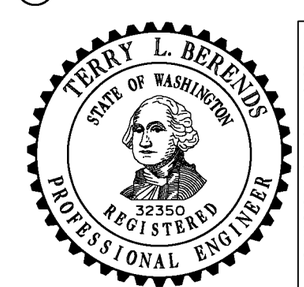

NOTE: THIS PLAN IS NOT A LEGAL ENGINEERING DOCUMENT BUT AN ELECTRONIC DUPLICATE. THE ORIGINAL, SIGNED BY THE ENGINEER AND APPROVED FOR PUBLICATION, IS KEPT ON FILE AT THE WASHINGTON STATE DEPARTMENT OF TRANSPORTATION. A COPY MAY BE OBTAINED UPON REQUEST.

SINGLE-SLOPE CONCRETE BARRIER (PRECAST) TRANSITION SECTION

STANDARD PLAN C-75.10-00

SHEET 1 OF 1 SHEET

APPROVED FOR PUBLICATION

Pasco Bakotich III — STATE DESIGN ENGINEER

04/18/12 — DATE

Washington State Department of Transportation

EFFECTIVE: AUGUST 6, 2012 TO August 4, 2013

EFFECTIVE: AUGUST 6, 2012 TO August 4, 2013
EFFECTIVE: AUGUST 6, 2012 TO August 4, 2013

DRAWN BY: LISA CYFORD

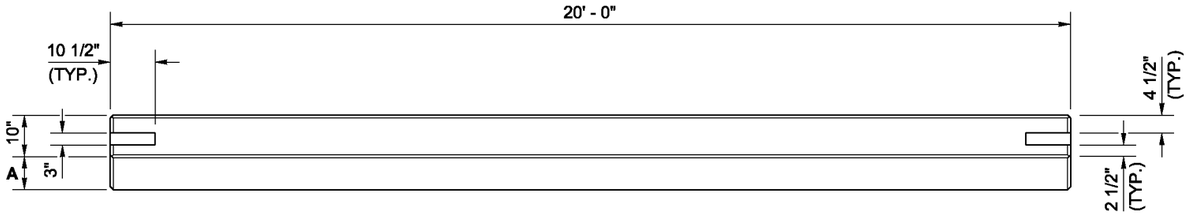

PLAN

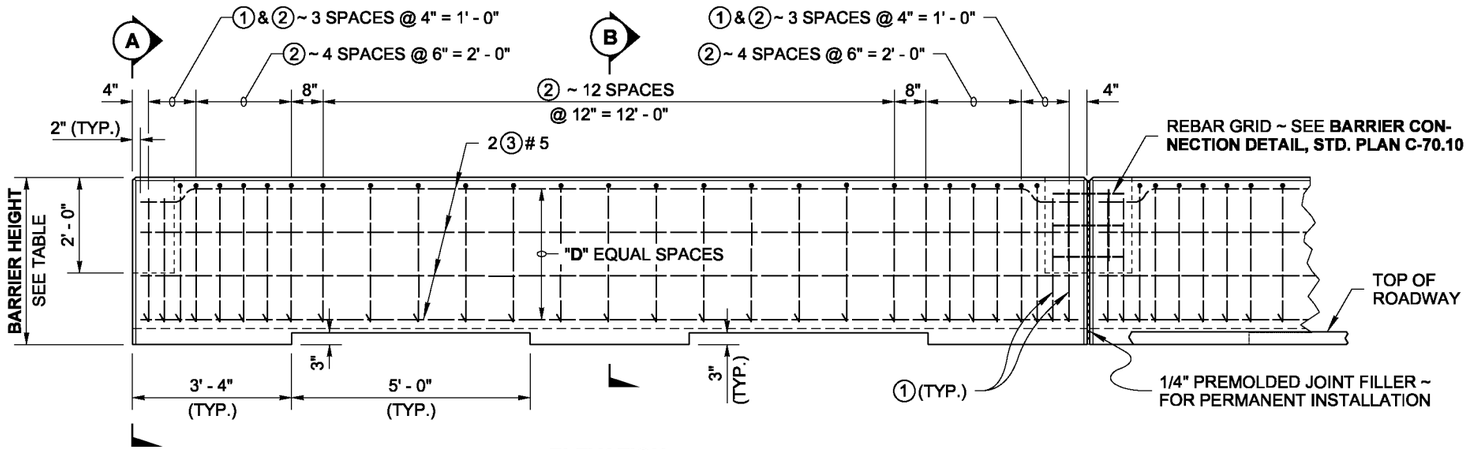

ELEVATION

NOTES

1. PERMANENT INSTALLATION requirements: Embed barrier 3" minimum, install 1/4" Pre-molded Joint Filler between segments, fill the Connection Blockout with grout, centering the Rebar Grid in the blockout before adding grout.
2. TEMPORARY INSTALLATION requirement: Place a Rebar Grid in the Connection Blockout between barrier segments.
3. See **Standard Plan C-70.10** for REBAR GRID DETAIL and BARRIER CONNECTION DETAIL.
4. Vertical Back barrier is used only in the configurations shown in **Standard Plans C-85.10** and **C-85.20**, and when placed against a retaining wall.
5. When **High-Performance Concrete Barrier** is specified in the Contract, use the dimensions given in the H/P row in the DIMENSION TABLE, with a minimum height above roadway of 3' - 6", and a minimum embedment of 3".

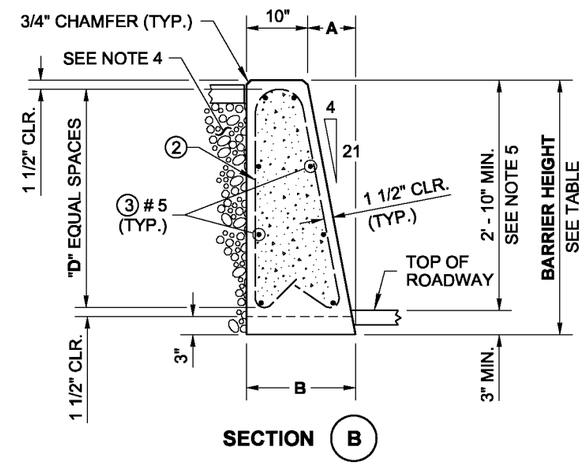

SECTION (B)

* WELDED WIRE REINFORCING SUBSTITUTION OPTION TABLE		
MARK	REINFORCING SIZE	WELDED WIRE REINFORCING
①	# 4	D - 20
②	# 4	D - 20
③	# 5	D - 31

* WELDED WIRE REINFORCMENTS SHALL CONFORM TO **STANDARD SPECIFICATION SECTIONS 6-10** and **9-07**

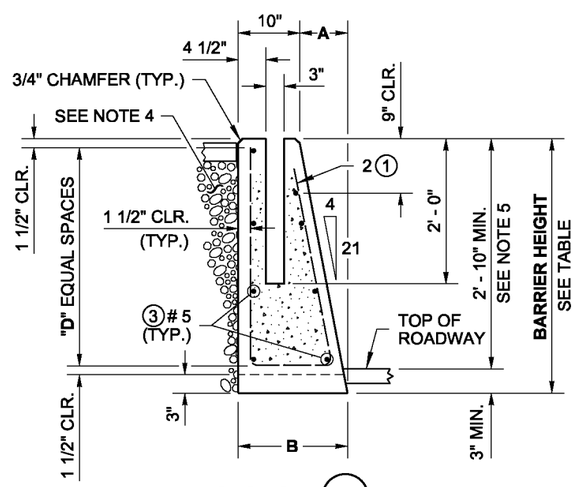

SECTION (A)

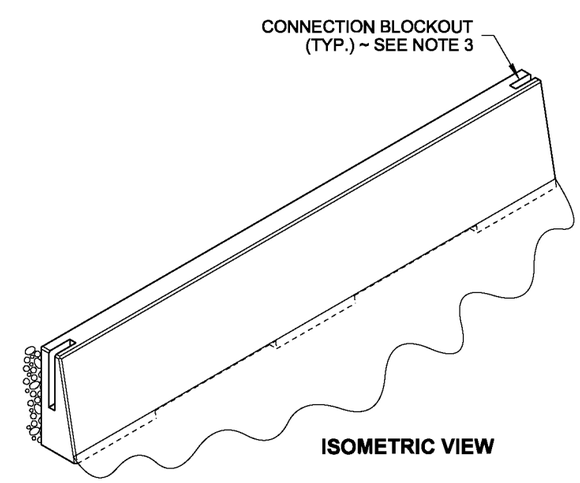

ISOMETRIC VIEW

REINFORCING STEEL BENDING DIAGRAM

SEE **STD. SPEC. 9-07.1(2)** FOR BENDING DIAMETERS

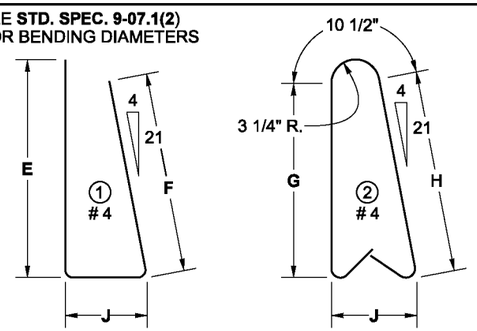

DIMENSION TABLE										SEE NOTE 5
	BARRIER HEIGHT	A	B	D	E	F	G	H	J	HORIZONTAL BARS (QTY.)
STD.	3' - 6"	8"	1' - 6"	3	3' - 0"	2' - 8 1/2"	2' - 8"	2' - 9 1/2"	1' - 2"	8
H/P	4' - 0"	9 1/8"	1' - 7 1/8"	4	3' - 6"	3' - 2 1/2"	3' - 2"	3' - 3 1/2"	1' - 3"	10

NOTE: THIS PLAN IS NOT A LEGAL ENGINEERING DOCUMENT BUT AN ELECTRONIC DUPLICATE. THE ORIGINAL, SIGNED BY THE ENGINEER AND APPROVED FOR PUBLICATION, IS KEPT ON FILE AT THE WASHINGTON STATE DEPARTMENT OF TRANSPORTATION. A COPY MAY BE OBTAINED UPON REQUEST.

SINGLE-SLOPE CONCRETE BARRIER (PRECAST) VERTICAL BACK

STANDARD PLAN C-75.20-00

SHEET 1 OF 1 SHEET

APPROVED FOR PUBLICATION

Pasco Bakotich III — STATE DESIGN ENGINEER — *04/18/12* — DATE

Washington State Department of Transportation

EFFECTIVE: AUGUST 6, 2012 TO August 4, 2013
EFFECTIVE: AUGUST 6, 2012 TO August 4, 2013
EFFECTIVE: AUGUST 6, 2012 TO August 4, 2013
EFFECTIVE: AUGUST 6, 2012 TO August 4, 2013

EFFECTIVE: AUGUST 6, 2012 TO August 4, 2013

DRAWN BY: LISA CYFORD

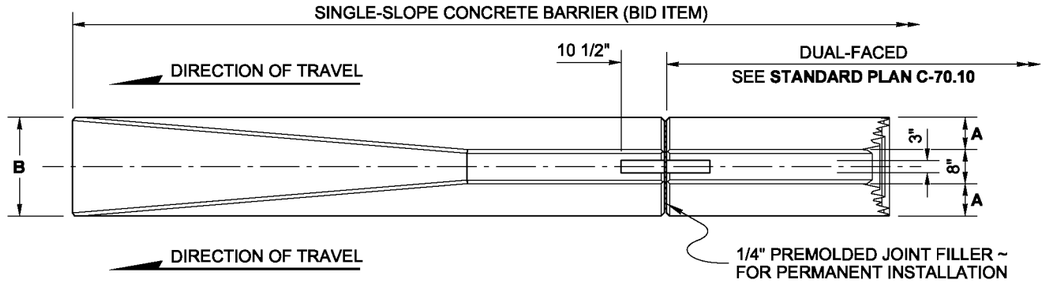

PLAN

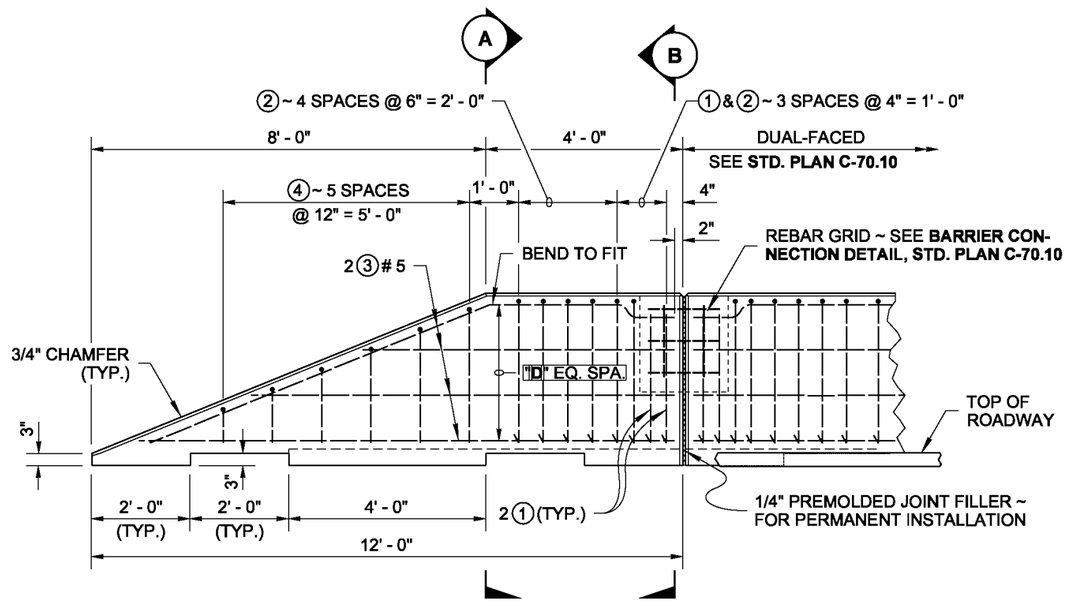

ELEVATION

NOTES

1. PERMANENT INSTALLATION requirements: Embed barrier 3" minimum, install 1/4" Premolded Joint Filler between segments, fill the Connection Blockout with grout, centering the Rebar Grid in the blockout before adding grout.
2. TEMPORARY INSTALLATION requirement: Place a Rebar Grid in the Connection Blockout between barrier segments.
3. See **Standard Plan C-70.10** for REBAR GRID DETAIL and BARRIER CONNECTION DETAIL.
4. The Terminal is used only on the trailing end of a barrier, unless otherwise shown in the Contract.
5. When **High-Performance Concrete Barrier** is specified in the Contract, use the dimensions given in the H/P row in the DIMENSION TABLE, with a minimum height above roadway of 3' - 6", and a minimum embedment of 3".

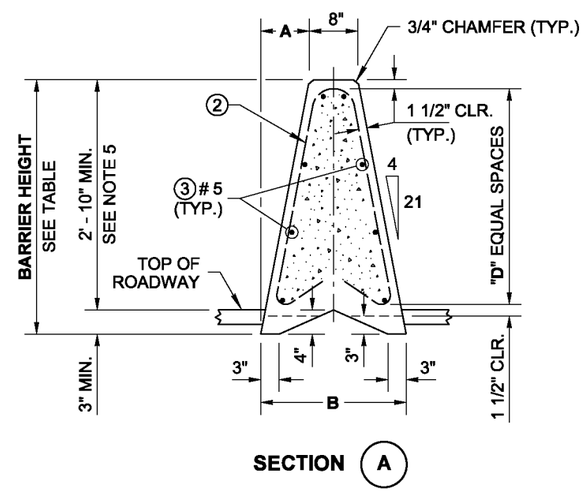

SECTION (A)

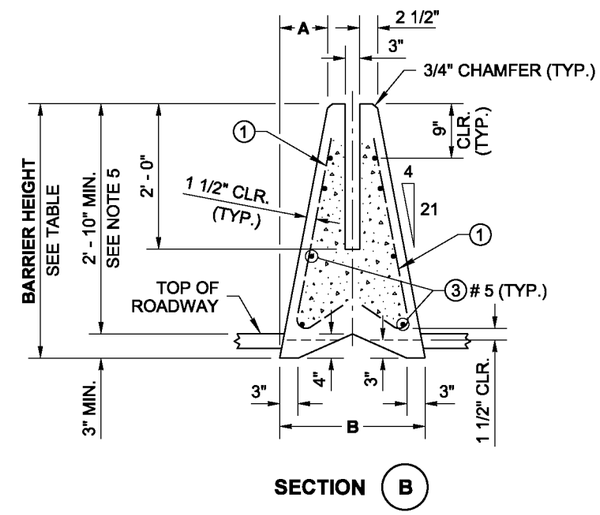

SECTION (B)

* WELDED WIRE REINFORCING SUBSTITUTION OPTION TABLE		
MARK	REINFORCING SIZE	WELDED WIRE REINFORCING
①	# 4	D - 20
②	# 4	D - 20
③	# 5	D - 31

* WELDED WIRE REINFORCMENTS SHALL CONFORM TO **STANDARD SPECIFICATION SECTIONS 6-10** and **9-07**

REINFORCING STEEL BENDING DIAGRAM

SEE **STD. SPEC. 9-07.1(2)** FOR BENDING DIAMETERS

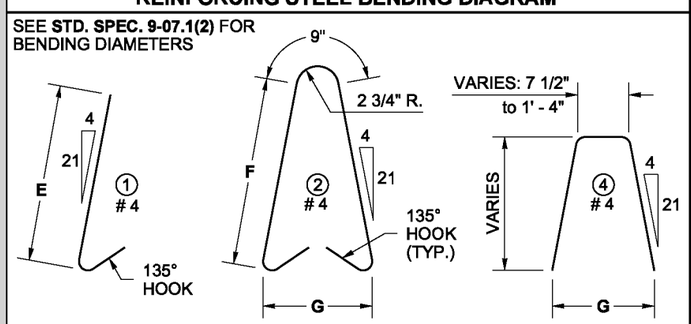

DIMENSION TABLE								SEE NOTE 5
	BARRIER HEIGHT	A	B	D	E	F	G	HORIZONTAL BARS (QTY.)
STD.	3' - 6"	8"	2' - 0"	3	2' - 8"	2' - 9"	1' - 7"	8
H/P	4' - 0"	9 1/8"	2' - 2 1/4"	4	3' - 2"	3' - 3"	1' - 9"	10

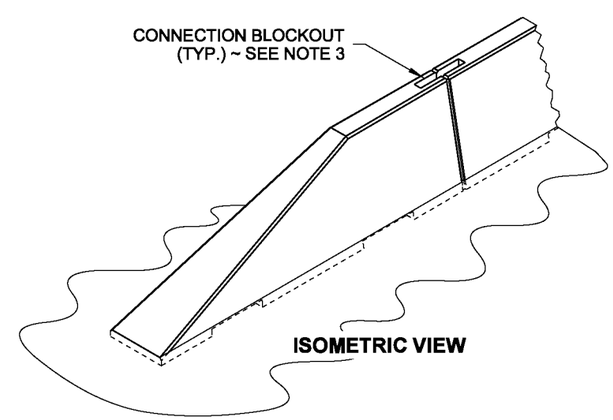

ISOMETRIC VIEW

NOTE: THIS PLAN IS NOT A LEGAL ENGINEERING DOCUMENT BUT AN ELECTRONIC DUPLICATE. THE ORIGINAL, SIGNED BY THE ENGINEER AND APPROVED FOR PUBLICATION, IS KEPT ON FILE AT THE WASHINGTON STATE DEPARTMENT OF TRANSPORTATION. A COPY MAY BE OBTAINED UPON REQUEST.

SINGLE-SLOPE CONCRETE BARRIER (PRECAST) TERMINAL

STANDARD PLAN C-75.30-00

SHEET 1 OF 1 SHEET

APPROVED FOR PUBLICATION

Pasco Bakotich III — *04/18/12*

STATE DESIGN ENGINEER — DATE

Washington State Department of Transportation

EFFECTIVE: AUGUST 6, 2012 TO August 4, 2013

EFFECTIVE: AUGUST 6, 2012 TO August 4, 2013
EFFECTIVE: AUGUST 6, 2012 TO August 4, 2013

DRAWN BY: LISA CYFORD

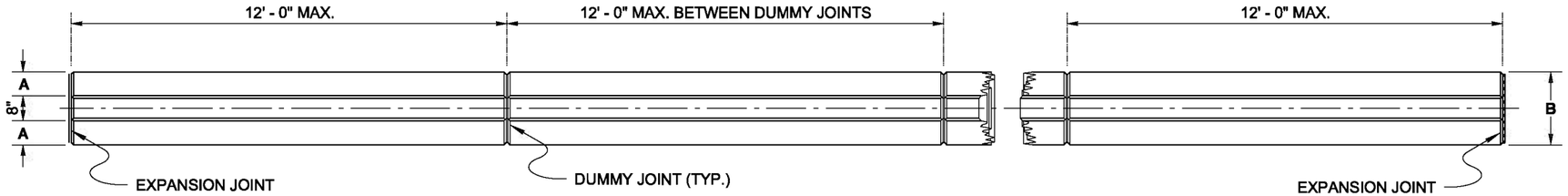

PLAN

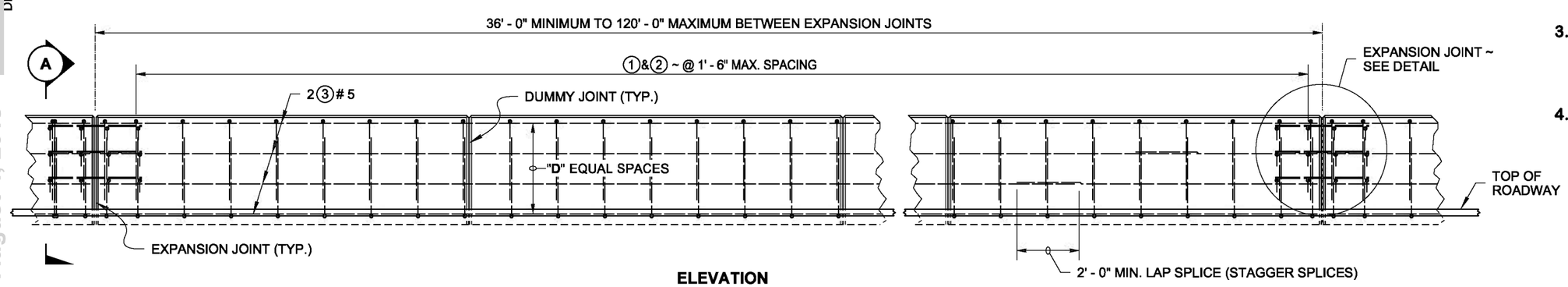

ELEVATION

NOTES

1. Reinforcing steel dimensions and clearances are shown for stationary form construction. When slipform construction is used, increase reinforcing steel clearances to the outside surfaces of the barrier to 2 1/2" and adjust the rebar dimensions as required.
2. When connecting between cast-in-place and pre-cast single-slope barrier, provide a Blockout, Rebar Grid, and added rebar, as shown in **Standard Plan C-70.10.**
3. The actual dimensions will vary as the grades change and the barrier transitions in height and width. The dimensions may be interpolated for intermediate barrier heights.
4. For Barrier with a 2' - 10" reveal, see Sheet 2. For High-Performance Barrier with a 3' - 6" reveal, see Sheet 3.

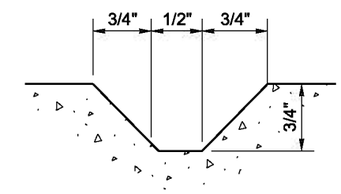

TYPICAL SECTION

DUMMY JOINT DETAIL

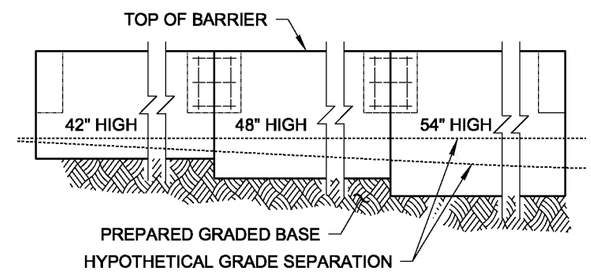

BARRIER TRANSITION DETAIL

* WELDED WIRE REINFORCING SUBSTITUTION OPTION TABLE

MARK	REINFORCING SIZE	WELDED WIRE REINFORCING
①	# 4	D - 20
②	# 4	D - 20
③	# 5	D - 31

* WELDED WIRE REINFORCMENTS SHALL CONFORM TO **STANDARD SPECIFICATION SECTIONS 6-10** and **9-07**

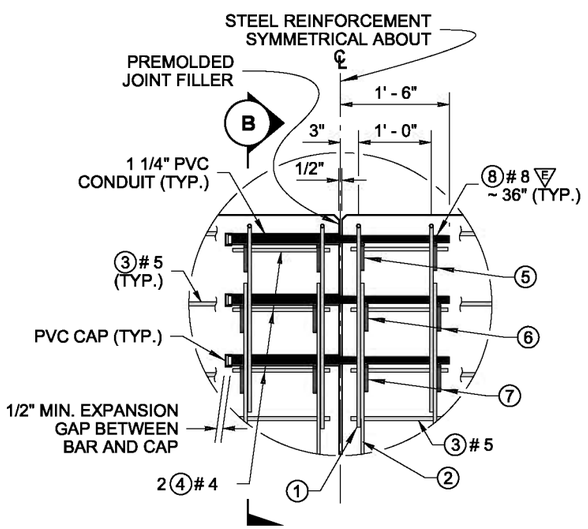

ENSURE THAT NO CEMENT CONCRETE ENTERS THE PVC CONDUIT WHEN POURING

E = EPOXY COATED

EXPANSION JOINT DETAIL

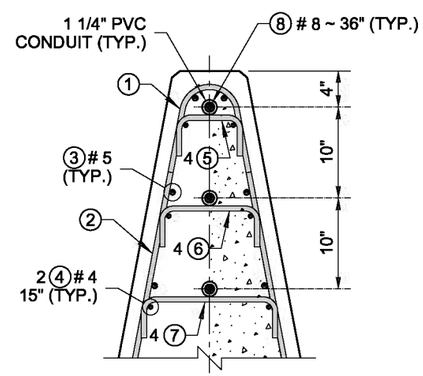

SECTION (B)

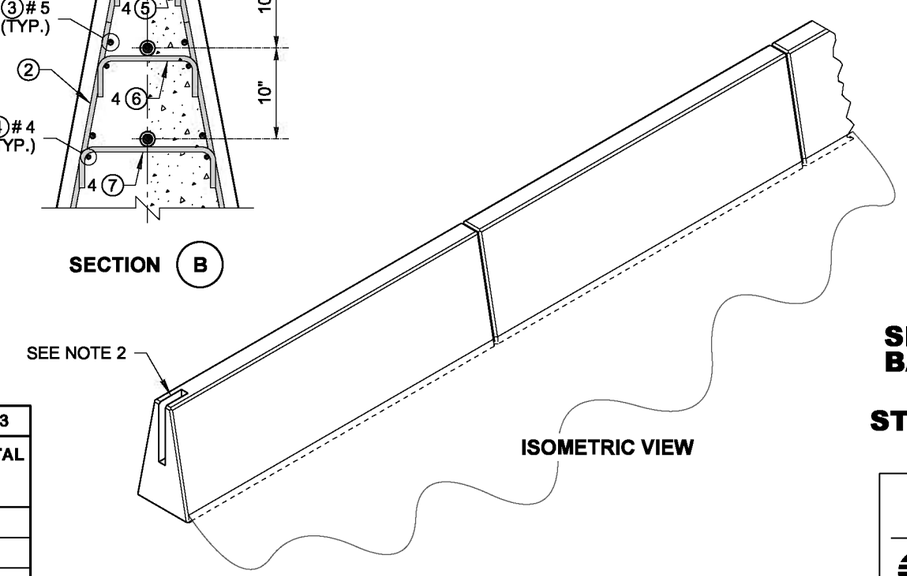

ISOMETRIC VIEW

REINFORCING STEEL BENDING DIAGRAM

SEE **STD. SPEC. 9-07.1(2)** FOR BENDING DIAMETERS

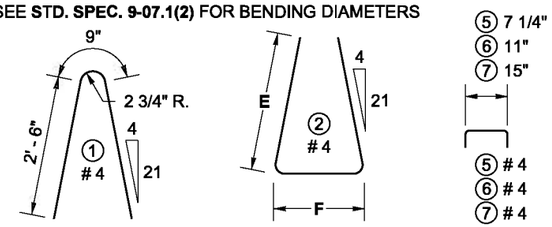

SEE NOTE 3

DIMENSION TABLE — SEE NOTE 3

BARRIER HEIGHT	A	B	D	E	F	HORIZONTAL BARS (QTY.)
3' - 6"	8"	2' - 0"	3	2' - 6"	1' - 8"	8
4' - 0"	9 1/8"	2' - 2 1/4"	4	3' - 0"	1' - 10"	10
4' - 6"	10 1/4"	2' - 4 1/2"	5	3' - 6 1/2"	2' - 0"	12

NOTE: THIS PLAN IS NOT A LEGAL ENGINEERING DOCUMENT BUT AN ELECTRONIC DUPLICATE. THE ORIGINAL, SIGNED BY THE ENGINEER AND APPROVED FOR PUBLICATION, IS KEPT ON FILE AT THE WASHINGTON STATE DEPARTMENT OF TRANSPORTATION. A COPY MAY BE OBTAINED UPON REQUEST.

SINGLE-SLOPE CONCRETE BARRIER (CAST-IN-PLACE) DUAL-FACED

STANDARD PLAN C-80.10-00

SHEET 1 OF 3 SHEETS

APPROVED FOR PUBLICATION

Pasco Bakotich III — STATE DESIGN ENGINEER — *04/18/12* — DATE

Washington State Department of Transportation

EFFECTIVE: AUGUST 6, 2012 TO August 4, 2013
EFFECTIVE: AUGUST 6, 2012 TO August 4, 2013

EFFECTIVE: AUGUST 6, 2012 TO August 4, 2013
EFFECTIVE: AUGUST 6, 2012 TO August 4, 2013

DRAWN BY: LISA CYFORD

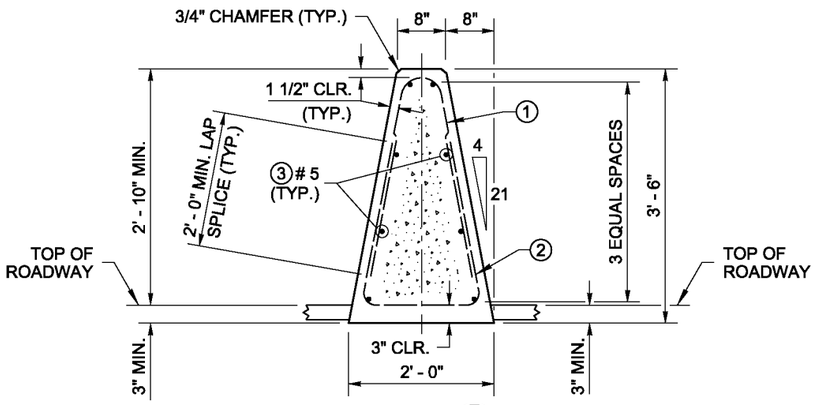

SECTION (A)

3' - 6" BARRIER
SHOWN LEVEL

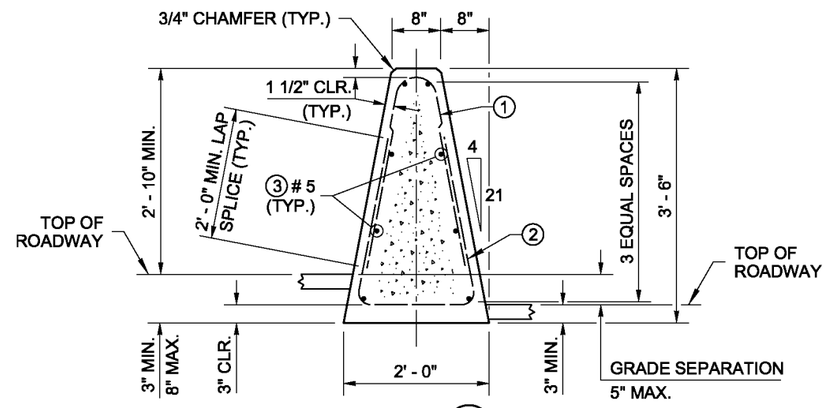

SECTION (A)

3' - 6" BARRIER FOR USE WITH A
0" TO 5" MAX. GRADE SEPARATION
(SEE NOTE 3)

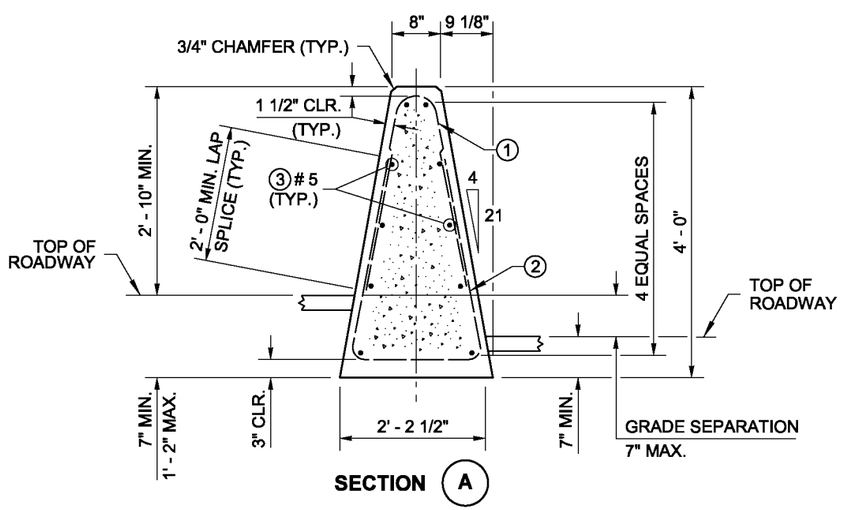

SECTION (A)

4' - 0" BARRIER FOR USE WITH A
GREATER THAN 5" TO 7" MAX.
GRADE SEPARATION
(SEE NOTE 3)

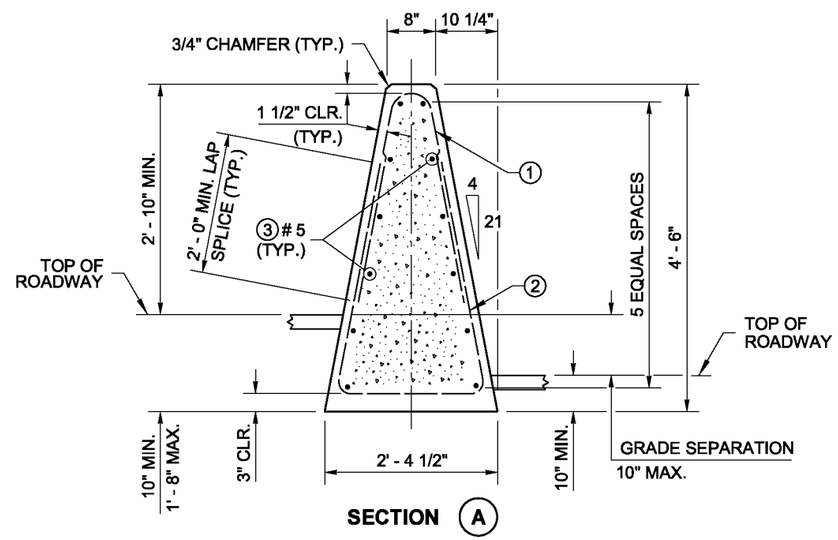

SECTION (A)

4' - 6" BARRIER FOR USE WITH A
GREATER THAN 7" TO 10" MAX.
GRADE SEPARATION
(SEE NOTE 3)

STANDARD MOUNTING HEIGHT

NOTE: THIS PLAN IS NOT A LEGAL ENGINEERING DOCUMENT BUT AN ELECTRONIC DUPLICATE. THE ORIGINAL, SIGNED BY THE ENGINEER AND APPROVED FOR PUBLICATION, IS KEPT ON FILE AT THE WASHINGTON STATE DEPARTMENT OF TRANSPORTATION. A COPY MAY BE OBTAINED UPON REQUEST.

SINGLE-SLOPE CONCRETE BARRIER (CAST-IN-PLACE) DUAL-FACED

STANDARD PLAN C-80.10-00

SHEET 2 OF 3 SHEETS

APPROVED FOR PUBLICATION

Pasco Bakotich III — STATE DESIGN ENGINEER

04/18/12 — DATE

Washington State Department of Transportation

EFFECTIVE: AUGUST 6, 2012 TO August 4, 2013
EFFECTIVE: AUGUST 6, 2012 TO August 4, 2013
EFFECTIVE: AUGUST 6, 2012 TO August 4, 2013
EFFECTIVE: AUGUST 6, 2012 TO August 4, 2013

EFFECTIVE: AUGUST 6, 2012 TO August 4, 2013
EFFECTIVE: AUGUST 6, 2012 TO August 4, 2013

DRAWN BY: LISA CYFORD

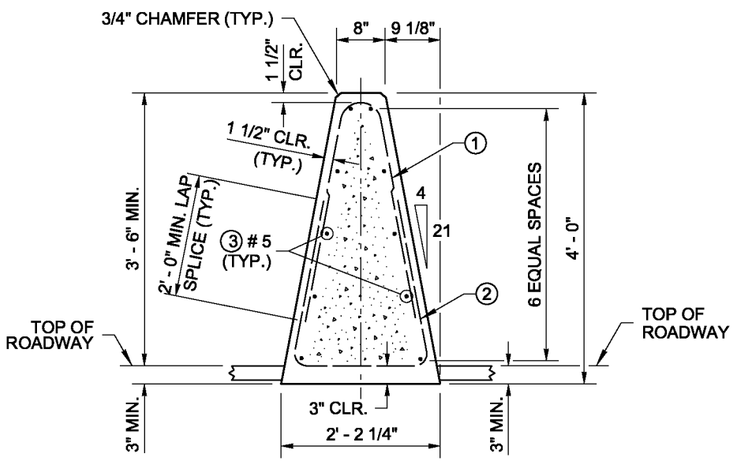

SECTION A

4' - 0" BARRIER SHOWN LEVEL

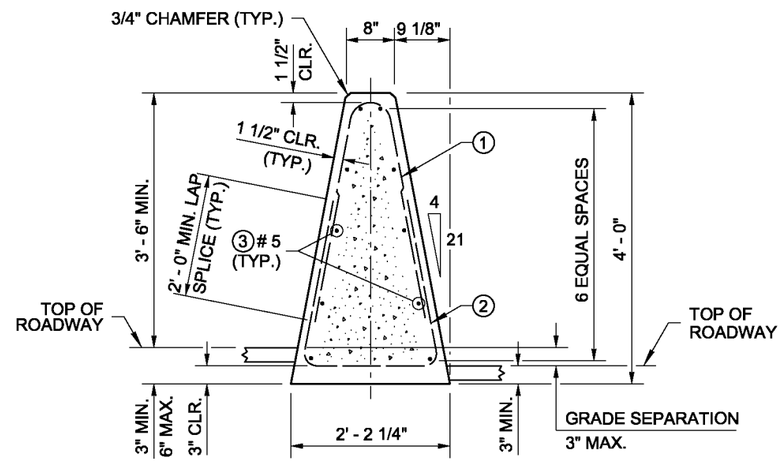

SECTION A

4' - 0" BARRIER FOR USE WITH A 0" TO 3" MAX. GRADE SEPARATION (SEE NOTE 3)

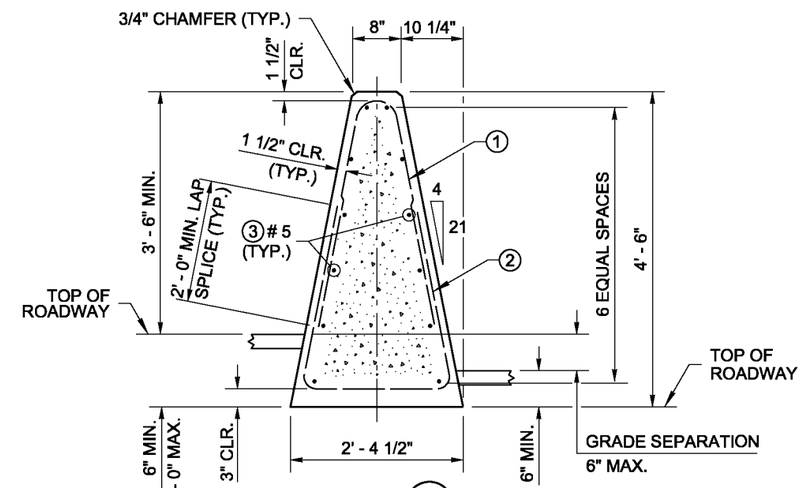

SECTION A

4' - 6" BARRIER FOR USE WITH A GREATER THAN 3" TO 6" MAX. GRADE SEPARATION (SEE NOTE 3)

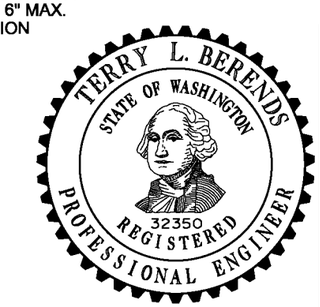

NOTE: THIS PLAN IS NOT A LEGAL ENGINEERING DOCUMENT BUT AN ELECTRONIC DUPLICATE. THE ORIGINAL, SIGNED BY THE ENGINEER AND APPROVED FOR PUBLICATION, IS KEPT ON FILE AT THE WASHINGTON STATE DEPARTMENT OF TRANSPORTATION. A COPY MAY BE OBTAINED UPON REQUEST.

SINGLE-SLOPE CONCRETE BARRIER (CAST-IN-PLACE) DUAL-FACED

STANDARD PLAN C-80.10-00

SHEET 3 OF 3 SHEETS

APPROVED FOR PUBLICATION

Pasco Bakotich III — STATE DESIGN ENGINEER

04/18/12 — DATE

Washington State Department of Transportation

HIGH-PERFORMANCE BARRIER

EFFECTIVE: AUGUST 6, 2012 TO August 4, 2013
EFFECTIVE: AUGUST 6, 2012 TO August 4, 2013
EFFECTIVE: AUGUST 6, 2012 TO August 4, 2013
EFFECTIVE: AUGUST 6, 2012 TO August 4, 2013

EFFECTIVE: AUGUST 6, 2012 TO August 4, 2013
EFFECTIVE: AUGUST 6, 2012 TO August 4, 2013

DRAWN BY: LISA CYFORD

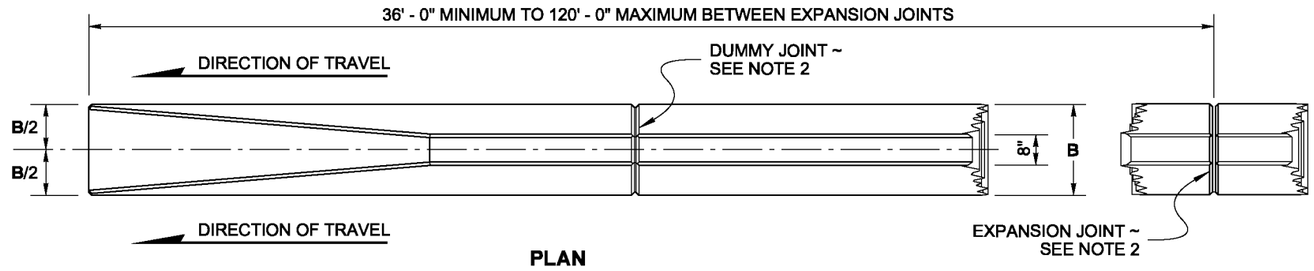

PLAN

NOTES

1. The Terminal is used only on the trailing end of a barrier, unless otherwise shown in the Contract.
2. See **Standard Plan C-80.10**, Sheet 1, for EXPANSION JOINT and DUMMY JOINT details.
3. When **High-Performance Concrete Barrier** is specified in the Contract, use the dimensions given in the H/P row in the DIMENSION TABLE, with a minimum height above roadway of 3' - 6", and a minimum embedment of 3".

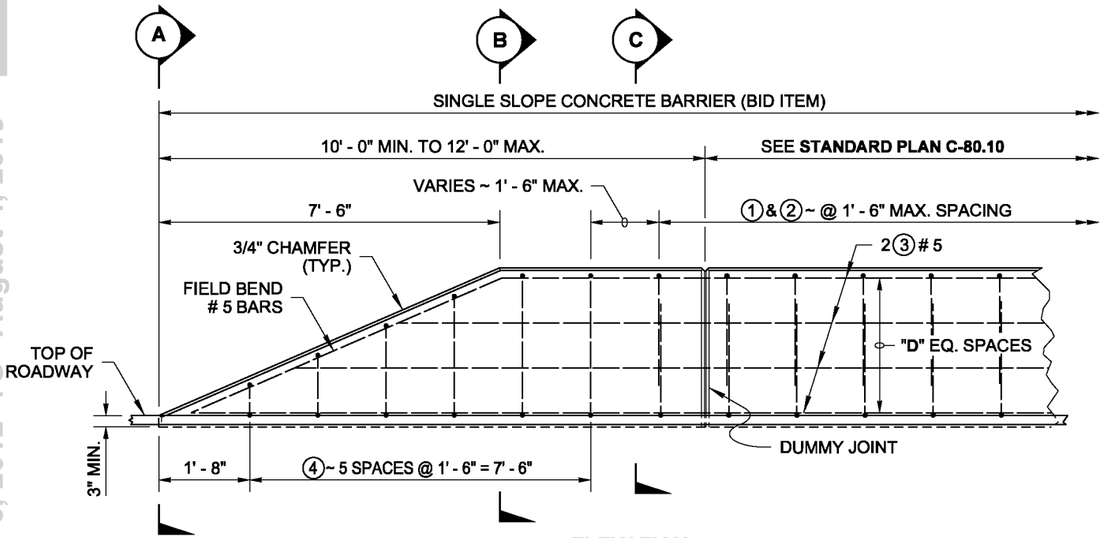

ELEVATION

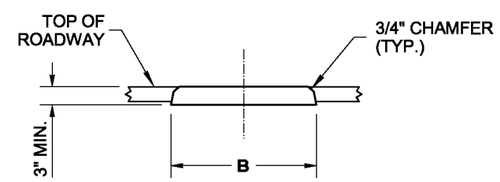

SECTION A

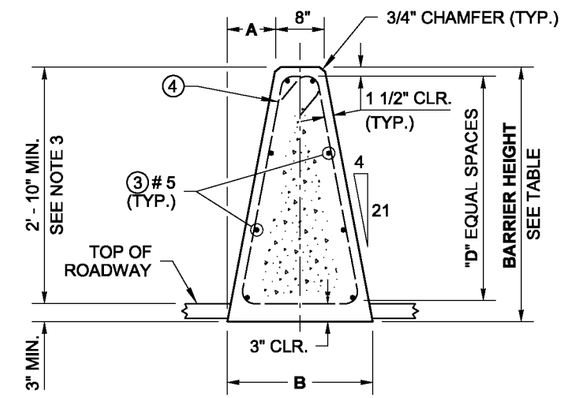

SECTION B

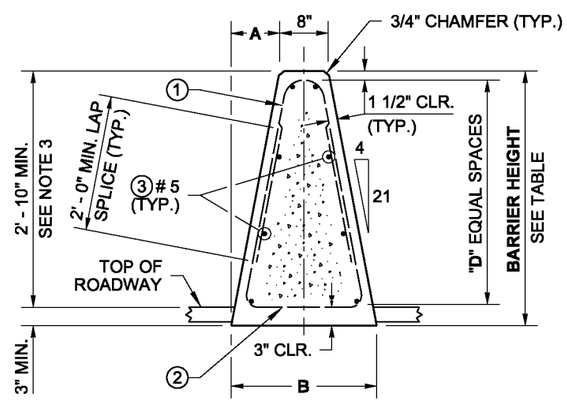

SECTION C

* WELDED WIRE REINFORCING SUBSTITUTION OPTION TABLE		
MARK	REINFORCING SIZE	WELDED WIRE REINFORCING
①	# 4	D - 20
②	# 4	D - 20
③	# 5	D - 31

* WELDED WIRE REINFORCMENTS SHALL CONFORM TO **STANDARD SPECIFICATION SECTIONS 6-10** and **9-07**

REINFORCING STEEL BENDING DIAGRAM

SEE **STD. SPEC. 9-07.1(2)** FOR BENDING DIAMETERS

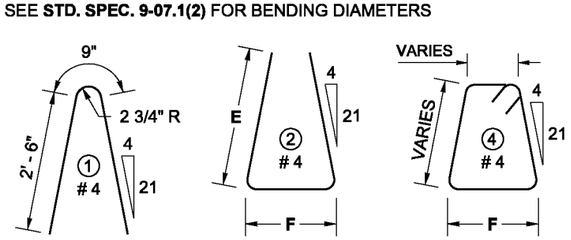

DIMENSION TABLE							SEE NOTE 3
	BARRIER HEIGHT	A	B	D	E	F	HORIZONTAL BARS (QTY.)
STD.	3' - 6"	8"	2' - 0"	3	2' - 6"	1' - 8"	8
H/P	4' - 0"	9 1/8"	2' - 2 1/4"	4	3' - 0"	1' - 10"	10

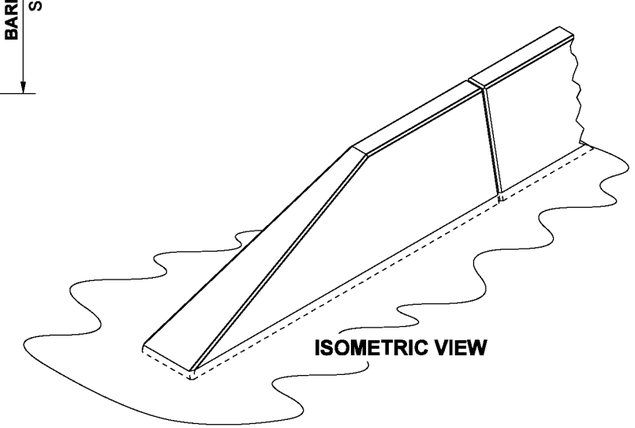

ISOMETRIC VIEW

NOTE: THIS PLAN IS NOT A LEGAL ENGINEERING DOCUMENT BUT AN ELECTRONIC DUPLICATE. THE ORIGINAL, SIGNED BY THE ENGINEER AND APPROVED FOR PUBLICATION, IS KEPT ON FILE AT THE WASHINGTON STATE DEPARTMENT OF TRANSPORTATION. A COPY MAY BE OBTAINED UPON REQUEST.

SINGLE-SLOPE CONCRETE BARRIER (CAST-IN-PLACE) TERMINAL

STANDARD PLAN C-80.20-00

SHEET 1 OF 1 SHEET

APPROVED FOR PUBLICATION

Pasco Bakotich III *04/18/12*

STATE DESIGN ENGINEER DATE

Washington State Department of Transportation

EFFECTIVE: AUGUST 6, 2012 TO August 4, 2013
EFFECTIVE: AUGUST 6, 2012 TO August 4, 2013
EFFECTIVE: AUGUST 6, 2012 TO August 4, 2013
EFFECTIVE: AUGUST 6, 2012 TO August 4, 2013

EFFECTIVE: AUGUST 6, 2012 TO August 4, 2013
EFFECTIVE: AUGUST 6, 2012 TO August 4, 2013

DRAWN BY: LISA CYFORD

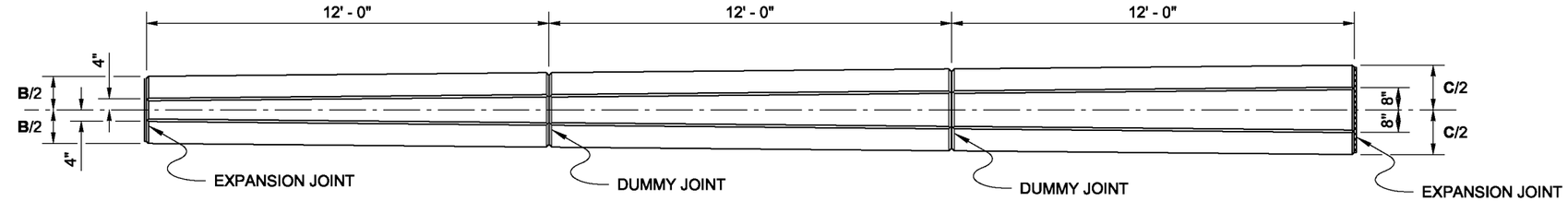

PLAN

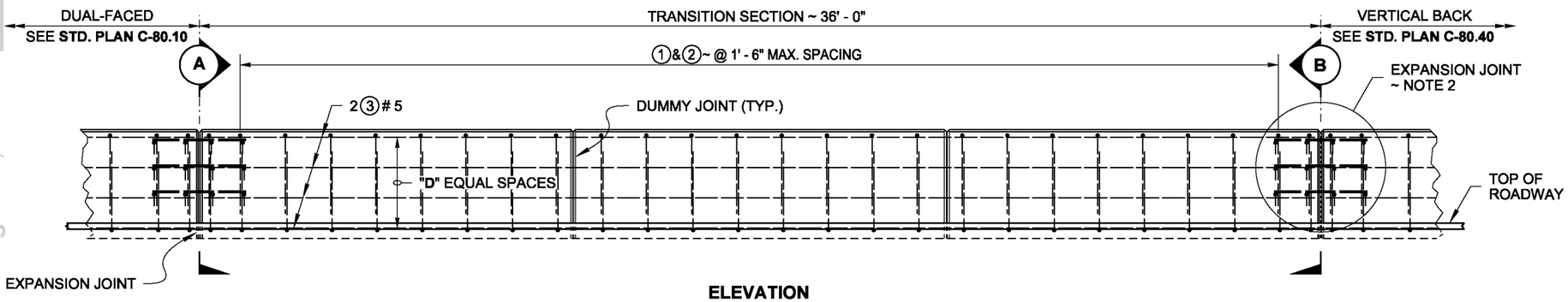

ELEVATION

NOTES

1. The Transition Section is used in the configurations shown in **Standard Plans C-85.10** and **C-85.11.**
2. See Standard **Plan C-80.10**, Sheet 1, for EXPANSION JOINT and DUMMY JOINT details. Modify rebar on wider end as shown in EXPANSION JOINT MODIFICATION.
3. Reinforcing steel dimensions and clearances are shown for sta tionary form construction. When slip-form construction is used increase reinforcing steel clearances to the outside surfaces of the barrier to 2 1/2" and adjust steel dimensions as required.
4. When **High-Performance Concrete Barrier** is specified in the Contract, use the dimensions given in the H/P row in the DIMENSION TABLE, with a minimum height above roadway of 3' - 6" and a minimum embedment of 3".

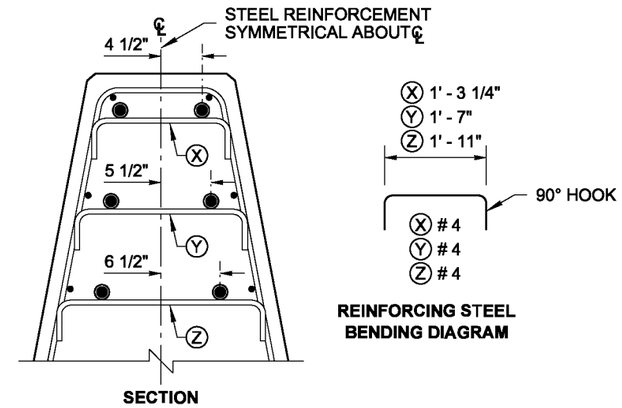

EXPANSION JOINT MODIFICATION
SEE NOTE 2

* WELDED WIRE REINFORCING SUBSTITUTION OPTION TABLE		
MARK	REINFORCING SIZE	WELDED WIRE REINFORCING
①	#4	D - 20
②	#4	D - 20
③	#5	D - 31

* WELDED WIRE REINFORCMENTS SHALL CONFORM TO **STANDARD SPECIFICATION SECTIONS 6-10** and **9-07**

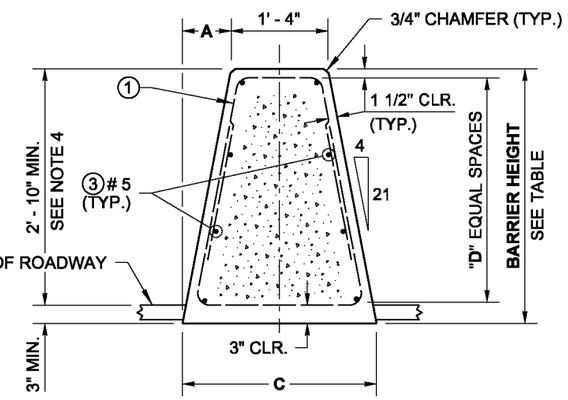

SECTION (B)

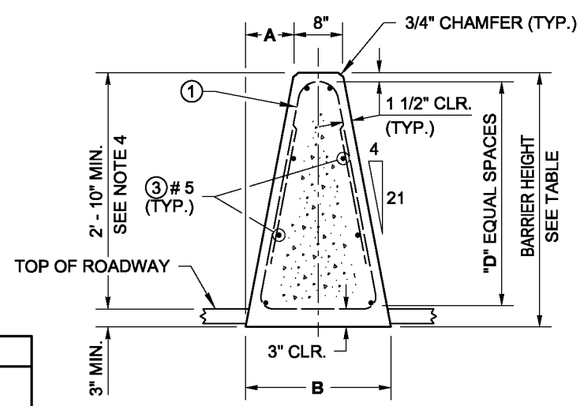

SECTION (A)

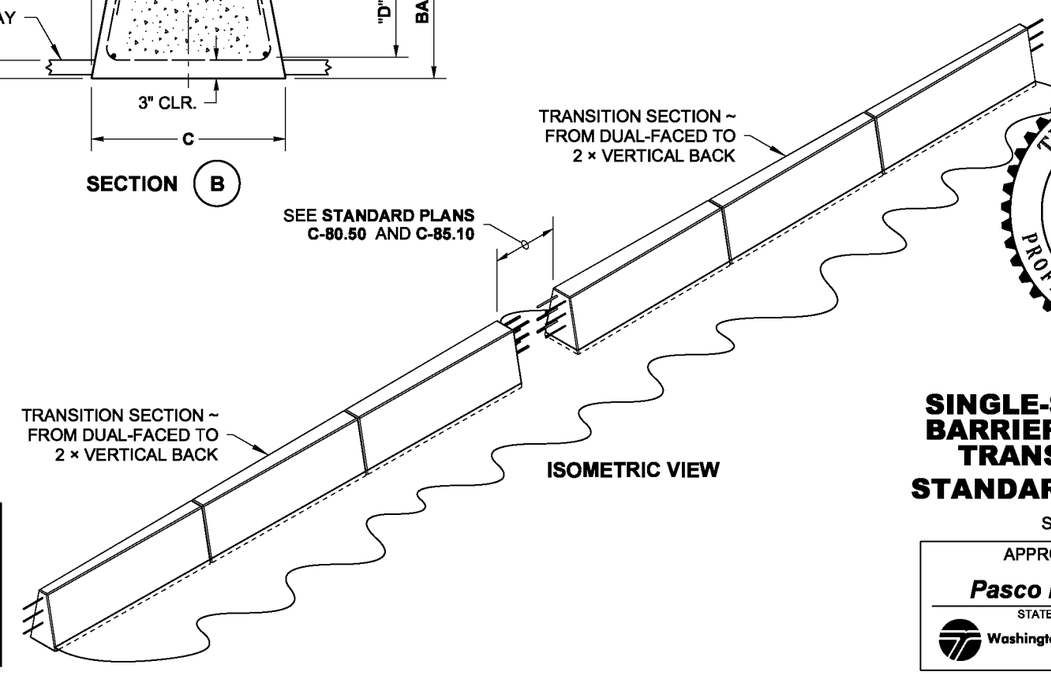

ISOMETRIC VIEW

REINFORCING STEEL BENDING DIAGRAM

SEE **STD. SPEC. 9-07.1(2)** FOR BENDING DIAMETERS

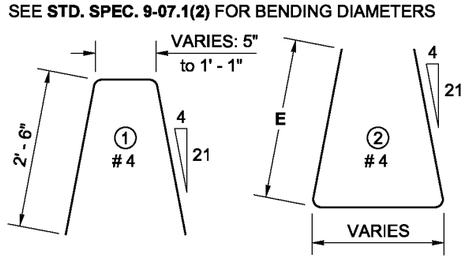

DIMENSION TABLE							SEE NOTE 4
	BARRIER HEIGHT	A	B	C	D	E	HORIZONTAL BARS (QTY.)
STD.	3' - 6"	8"	2' - 0"	2' - 8"	3	2' - 6"	8
H/P	4' - 0"	9 1/8"	2' - 2 1/4"	2' - 10 1/4"	4	3' - 0"	10

TERRY L. BERENDS
STATE OF WASHINGTON
32350
REGISTERED
PROFESSIONAL ENGINEER

NOTE: THIS PLAN IS NOT A LEGAL ENGINEERING DOCUMENT BUT AN ELECTRONIC DUPLICATE. THE ORIGINAL, SIGNED BY THE ENGINEER AND APPROVED FOR PUBLICATION, IS KEPT ON FILE AT THE WASHINGTON STATE DEPARTMENT OF TRANSPORTATION. A COPY MAY BE OBTAINED UPON REQUEST.

SINGLE-SLOPE CONCRETE BARRIER (CAST-IN-PLACE) TRANSITION SECTION

STANDARD PLAN C-80.30-00

SHEET 1 OF 1 SHEET

APPROVED FOR PUBLICATION

Pasco Bakotich III — STATE DESIGN ENGINEER
04/18/12 — DATE

Washington State Department of Transportation

EFFECTIVE: AUGUST 6, 2012 TO August 4, 2013
EFFECTIVE: AUGUST 6, 2012 TO August 4, 2013
EFFECTIVE: AUGUST 6, 2012 TO August 4, 2013
EFFECTIVE: AUGUST 6, 2012 TO August 4, 2013

EFFECTIVE: AUGUST 6, 2012 TO August 4, 2013
EFFECTIVE: AUGUST 6, 2012 TO August 4, 2013

DRAWN BY: LISA CYFORD

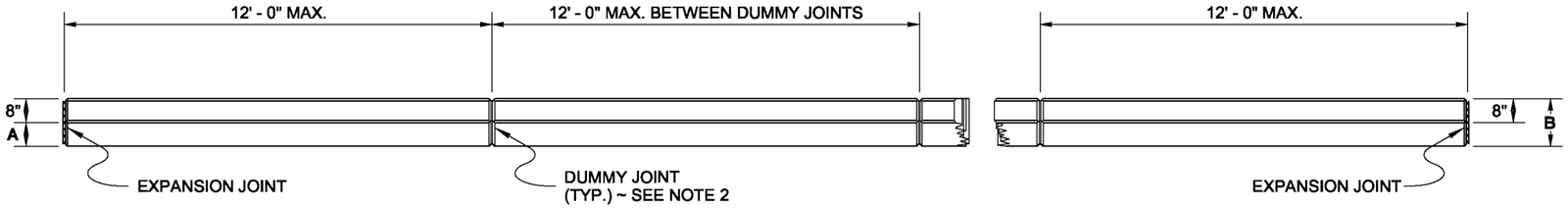

PLAN

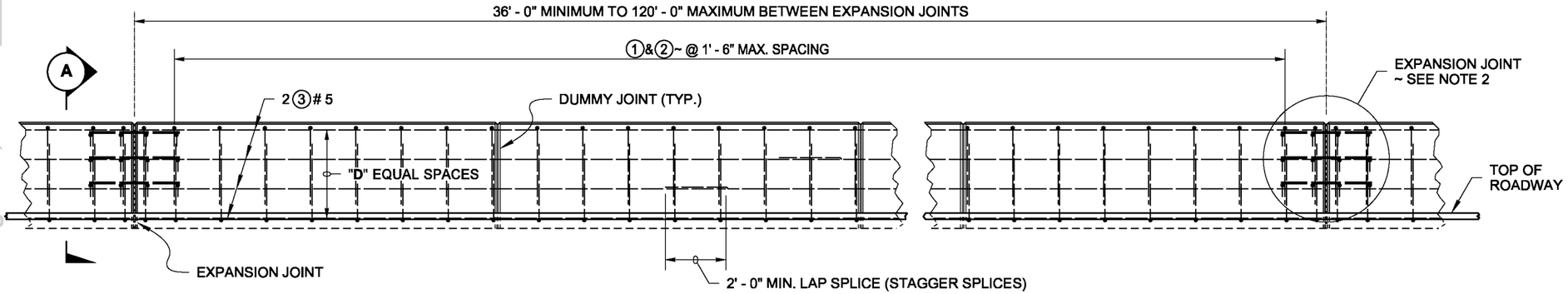

ELEVATION

NOTES

1. The Vertical Back barrier is used only in the configurations shown in **Standard Plans C-85.10** and **C-85.11,** and when placed against a retaining wall.
2. See **Standard Plan C-80.10,** Sheet 1, for EXPANSION JOINT and DUMMY JOINT details. Modify rebar as shown in EXPANSION JOINT MODIFICATION.
3. Reinforcing steel dimensions and clearances are shown for stationary form construction. When slip-form construction is used, increase reinforcing steel clearances to the outside surfaces of the barrier to 2 1/2" and adjust steel dimensions as required.
4. When **High-Performance Concrete Barrier** is specified in the Contract, use the dimensions given in the H/P row in the DIMENSION TABLE, with a minimum height above roadway of 3' - 6" and a minimum embedment of 3".

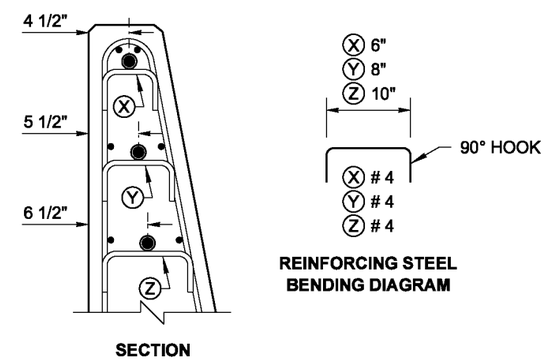

EXPANSION JOINT MODIFICATION

SEE NOTE 2

* WELDED WIRE REINFORCING SUBSTITUTION OPTION TABLE		
MARK	REINFORCING SIZE	WELDED WIRE REINFORCING
①	# 4	D - 20
②	# 4	D - 20
③	# 5	D - 31

* WELDED WIRE REINFORCMENTS SHALL CONFORM TO **STANDARD SPECIFICATION SECTIONS 6-10** and **9-07**

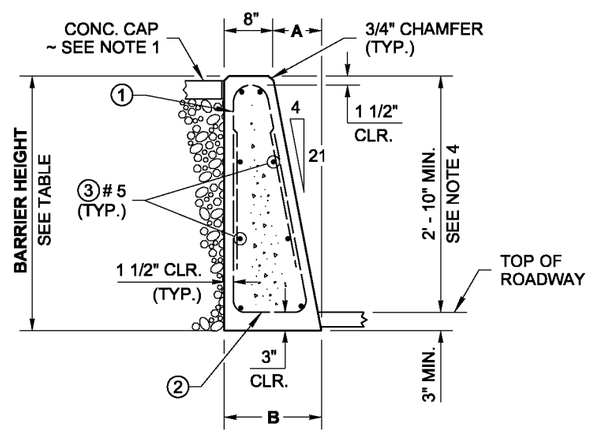

SECTION (A)

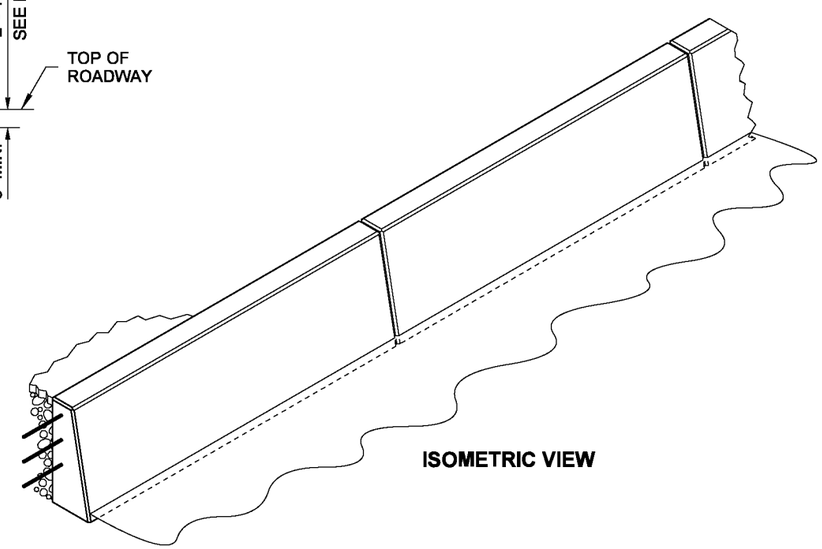

ISOMETRIC VIEW

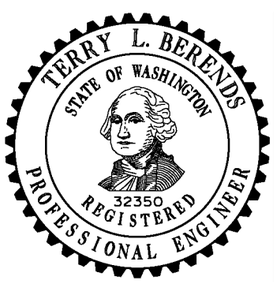

NOTE: THIS PLAN IS NOT A LEGAL ENGINEERING DOCUMENT BUT AN ELECTRONIC DUPLICATE. THE ORIGINAL, SIGNED BY THE ENGINEER AND APPROVED FOR PUBLICATION, IS KEPT ON FILE AT THE WASHINGTON STATE DEPARTMENT OF TRANSPORTATION. A COPY MAY BE OBTAINED UPON REQUEST.

REINFORCING STEEL BENDING DIAGRAM

SEE STD. SPEC. 9-07.1(2) FOR BENDING DIAMETERS

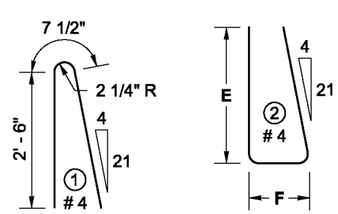

DIMENSION TABLE							SEE NOTE 4
	BARRIER HEIGHT	A	B	D	E	F	HORIZONTAL BARS (QTY.)
STD.	3' - 6"	8"	1' - 4"	3	2' - 6"	1' - 0 1/4"	8
H/P	4' - 0"	9 1/8"	1' - 5 1/8"	4	3' - 0"	1' - 1 1/2"	10

SINGLE-SLOPE CONCRETE BARRIER (CAST-IN-PLACE) VERTICAL BACK

STANDARD PLAN C-80.40-00

SHEET 1 OF 1 SHEET

APPROVED FOR PUBLICATION

Pasco Bakotich III — STATE DESIGN ENGINEER

04/18/12 — DATE

Washington State Department of Transportation

EFFECTIVE: AUGUST 6, 2012 TO August 4, 2013
EFFECTIVE: AUGUST 6, 2012 TO August 4, 2013
EFFECTIVE: AUGUST 6, 2012 TO August 4, 2013
EFFECTIVE: AUGUST 6, 2012 TO August 4, 2013

EFFECTIVE: AUGUST 6, 2012 TO August 4, 2013
EFFECTIVE: AUGUST 6, 2012 TO August 4, 2013

DRAWN BY: LISA CYFORD

NOTE

This plan is for transitions to Precast Concrete Barrier Type 2 only. See contract for transitions to other barrier shapes and bridge rails.

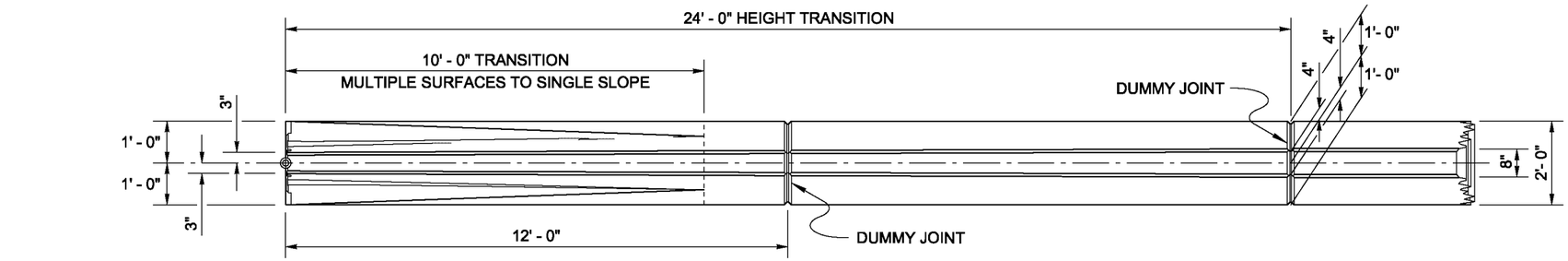

PLAN

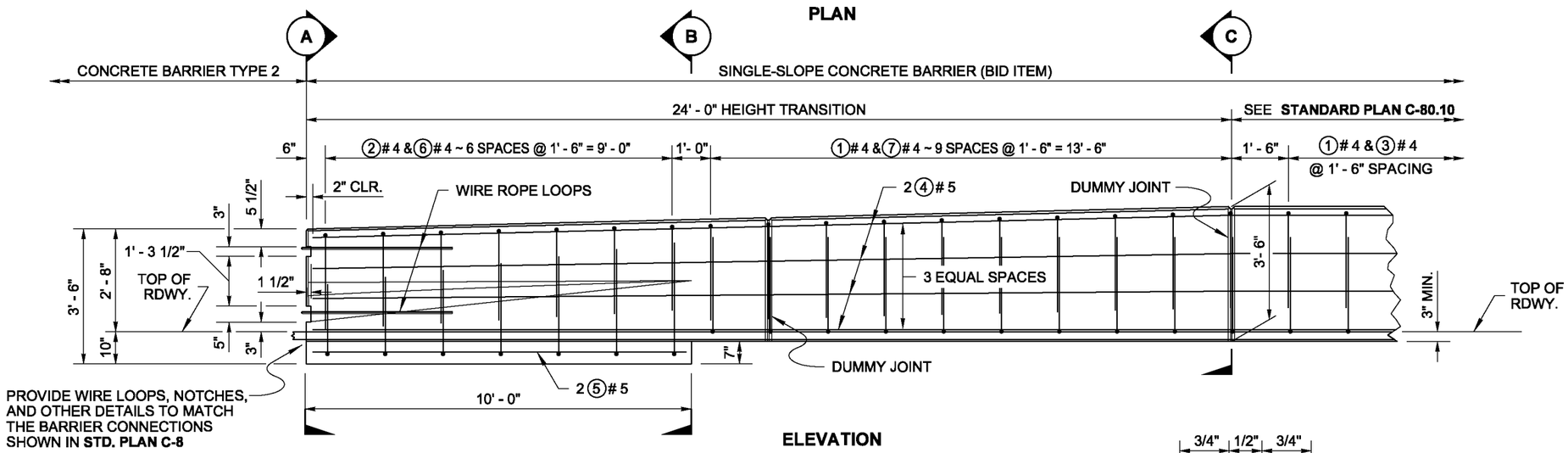

ELEVATION

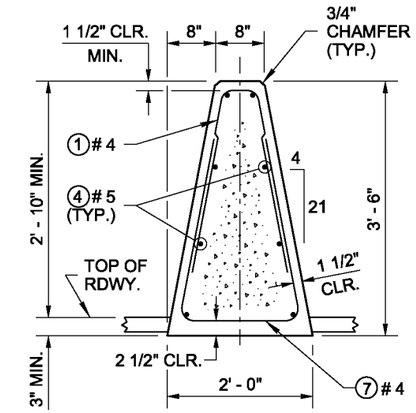

SECTION C

DUMMY JOINT

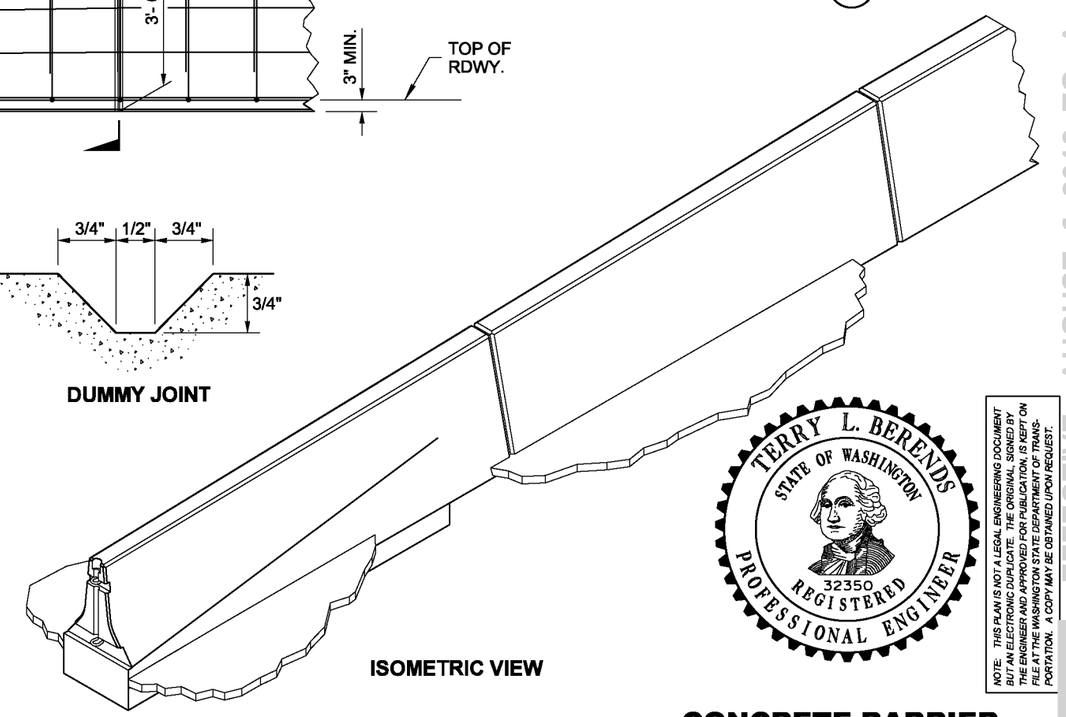

ISOMETRIC VIEW

REINFORCING STEEL BENDING DIAGRAM

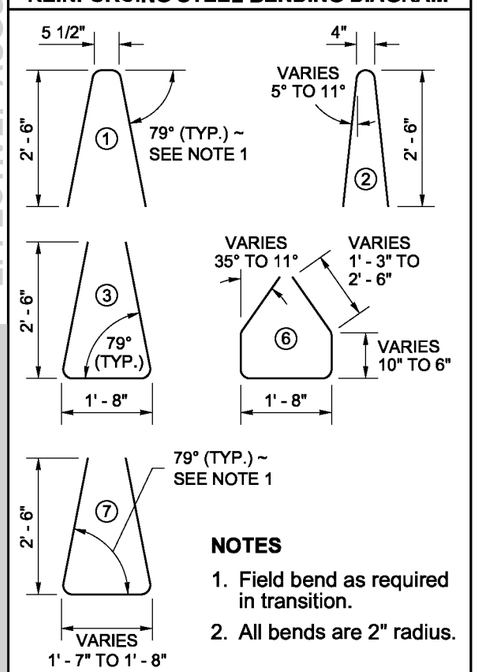

NOTES

1. Field bend as required in transition.
2. All bends are 2" radius.

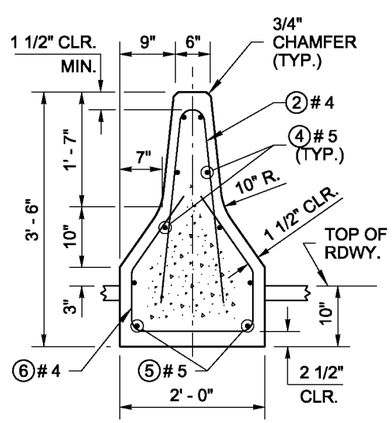

SECTION A

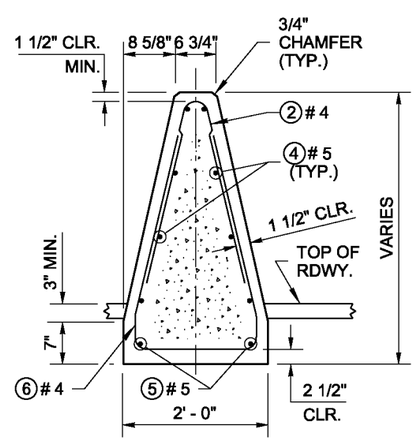

SECTION B

NOTE: THIS PLAN IS NOT A LEGAL ENGINEERING DOCUMENT BUT AN ELECTRONIC DUPLICATE. THE ORIGINAL, SIGNED BY THE ENGINEER AND APPROVED FOR PUBLICATION, IS KEPT ON FILE AT THE WASHINGTON STATE DEPARTMENT OF TRANSPORTATION. A COPY MAY BE OBTAINED UPON REQUEST.

CONCRETE BARRIER TRANSITION TYPE 2 TO SINGLE-SLOPE

STANDARD PLAN C-80.50-00

SHEET 1 OF 1 SHEET

APPROVED FOR PUBLICATION

Pasco Bakotich III — STATE DESIGN ENGINEER

04/18/12 — DATE

Washington State Department of Transportation

EFFECTIVE: AUGUST 6, 2012 TO August 4, 2013
EFFECTIVE: AUGUST 6, 2012 TO August 4, 2013

EFFECTIVE: AUGUST 6, 2012 TO August 4, 2013
EFFECTIVE: AUGUST 6, 2012 TO August 4, 2013

DRAWN BY: LISA CYFORD

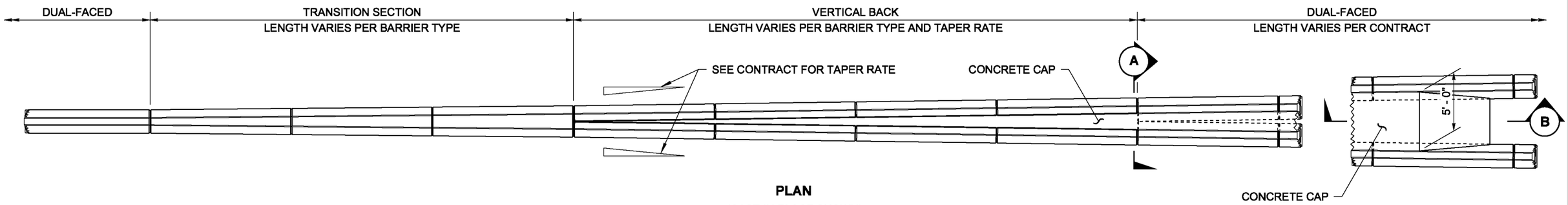

PLAN

(CAST-IN-PLACE SHOWN)

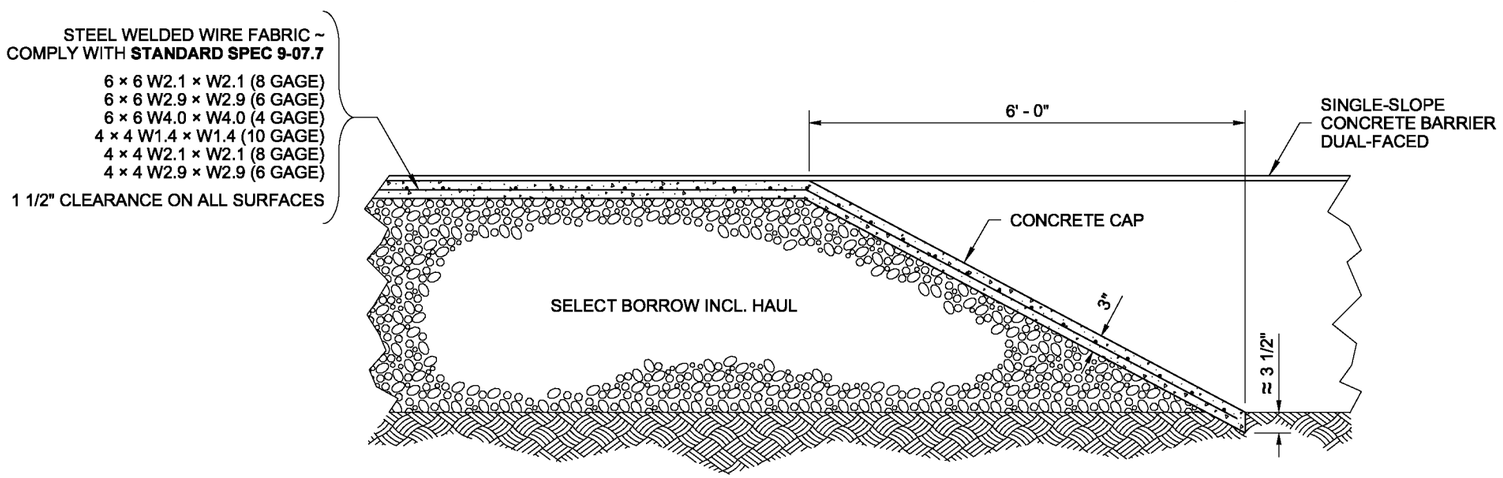

SECTION (B)

NOTES

1. Use the barrier type, precast or cast-in-place, as specified in the Contract.
2. For Single-Slope Concrete Barrier details, see **Standard Plan series C-70's** (precast) or **C-80's** (cast-in-place).

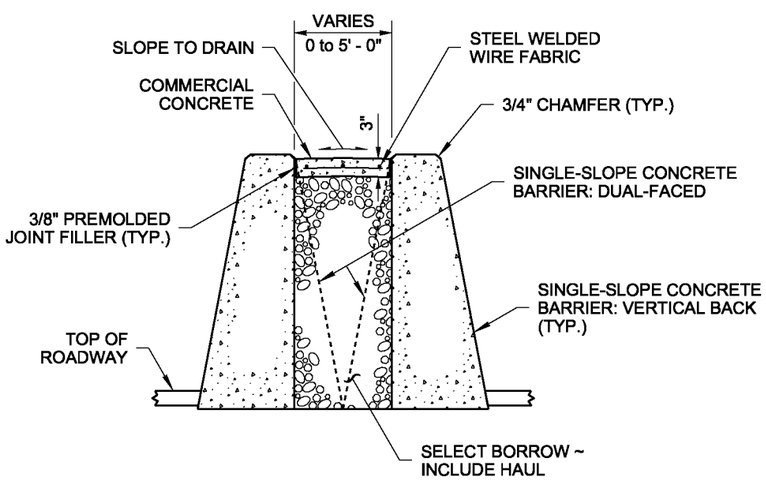

SECTION (A)

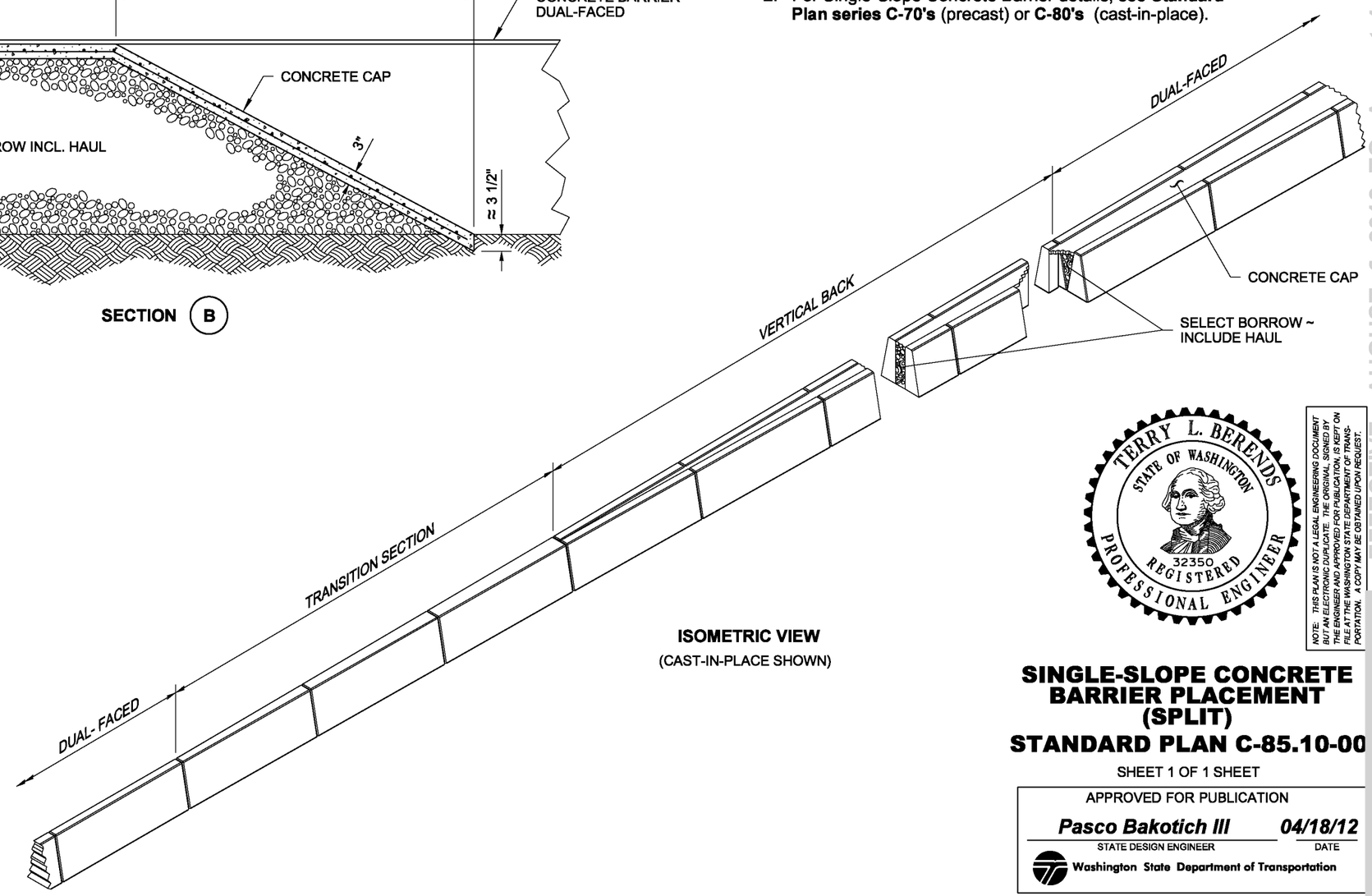

ISOMETRIC VIEW

(CAST-IN-PLACE SHOWN)

NOTE: THIS PLAN IS NOT A LEGAL ENGINEERING DOCUMENT BUT AN ELECTRONIC DUPLICATE. THE ORIGINAL, SIGNED BY THE ENGINEER AND APPROVED FOR PUBLICATION, IS KEPT ON FILE AT THE WASHINGTON STATE DEPARTMENT OF TRANSPORTATION. A COPY MAY BE OBTAINED UPON REQUEST.

SINGLE-SLOPE CONCRETE BARRIER PLACEMENT (SPLIT)

STANDARD PLAN C-85.10-00

SHEET 1 OF 1 SHEET

APPROVED FOR PUBLICATION

Pasco Bakotich III — STATE DESIGN ENGINEER

04/18/12 — DATE

Washington State Department of Transportation

EFFECTIVE: AUGUST 6, 2012 TO August 4, 2013
EFFECTIVE: AUGUST 6, 2012 TO August 4, 2013
EFFECTIVE: AUGUST 6, 2012 TO August 4, 2013
EFFECTIVE: AUGUST 6, 2012 TO August 4, 2013

EFFECTIVE: AUGUST 6, 2012 TO August 4, 2013
EFFECTIVE: AUGUST 6, 2012 TO August 4, 2013

DRAWN BY: LISA CYFORD

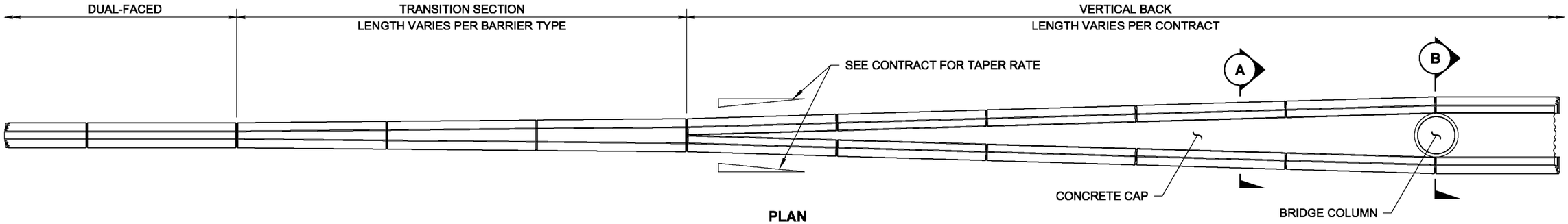

PLAN

(CAST-IN-PLACE SHOWN)

NOTES

1. Use the barrier type, precast or cast-in-place, as specified in the Contract.
2. For Single-Slope Concrete Barrier details, see **Standard Plan series C-70's** (precast) or **C-80's** (cast-in-place).

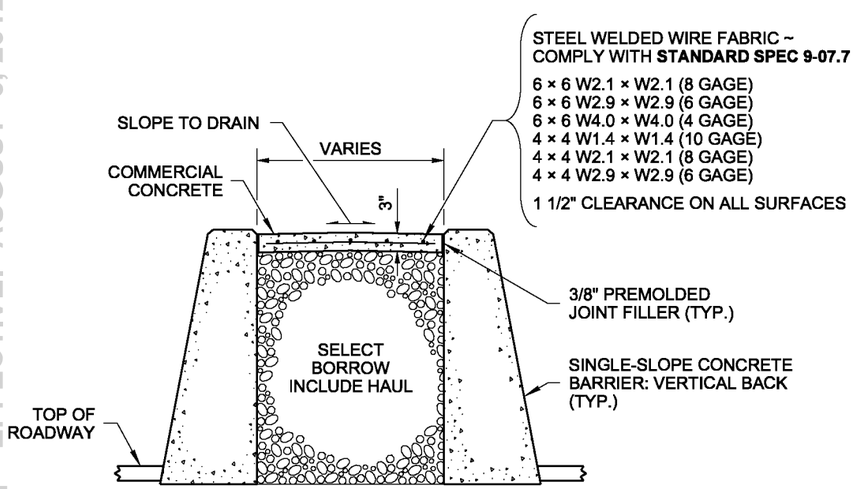

SECTION A

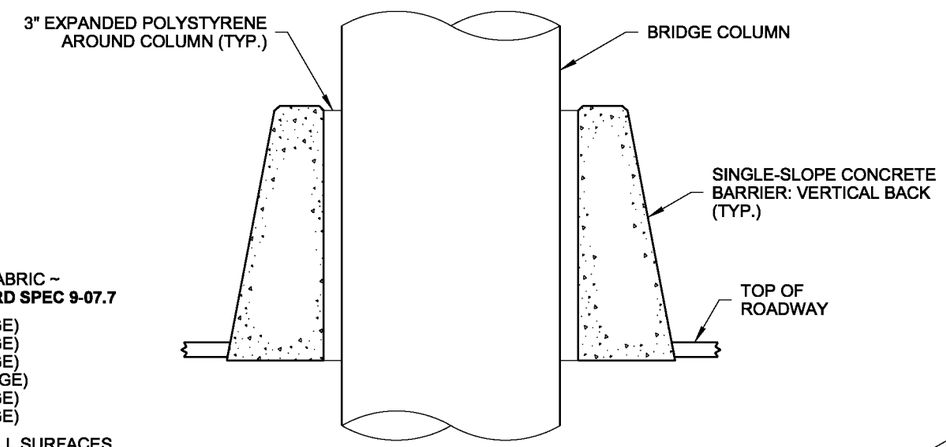

SECTION B

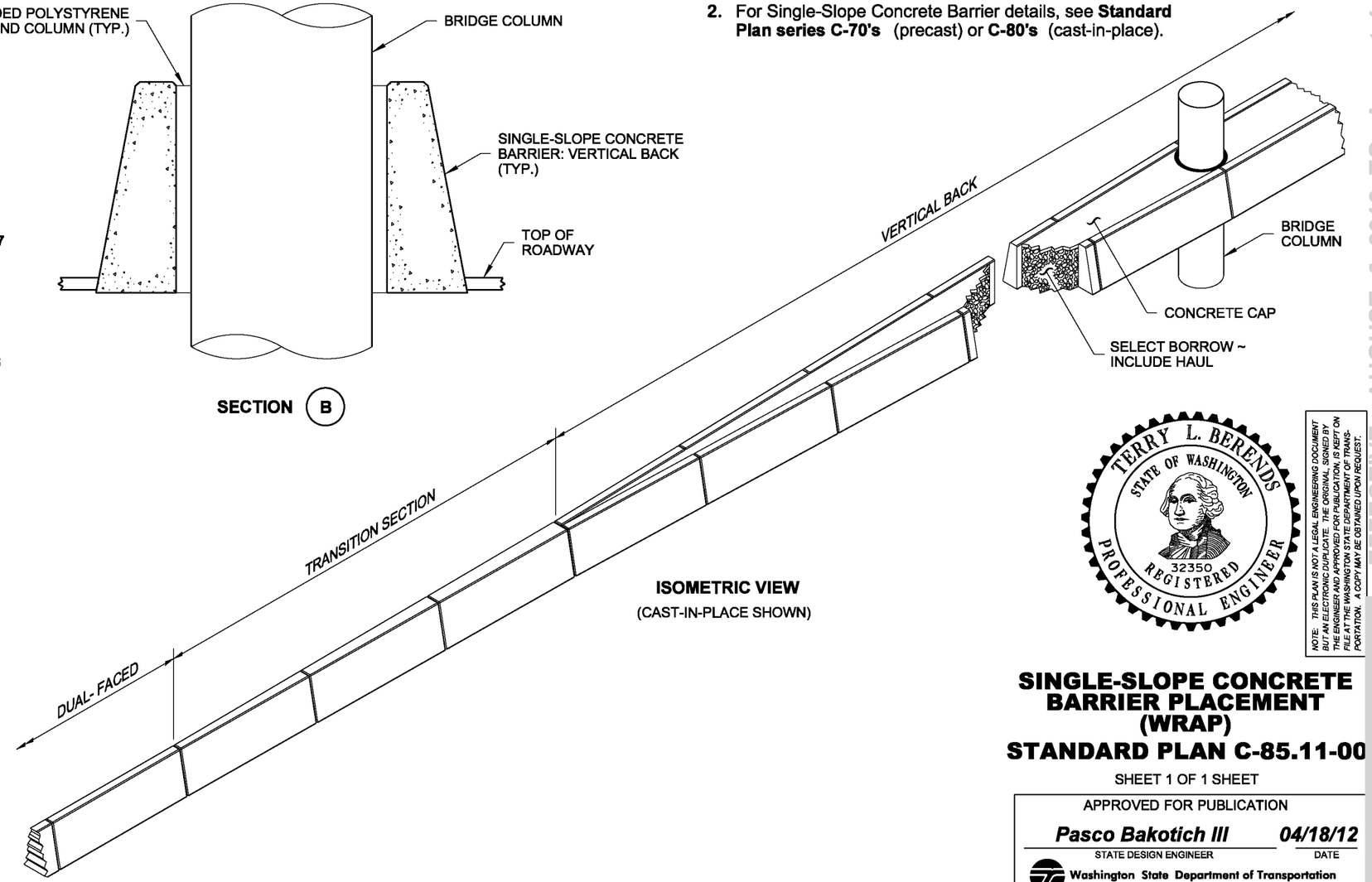

ISOMETRIC VIEW

(CAST-IN-PLACE SHOWN)

NOTE: THIS PLAN IS NOT A LEGAL ENGINEERING DOCUMENT BUT AN ELECTRONIC DUPLICATE. THE ORIGINAL, SIGNED BY THE ENGINEER AND APPROVED FOR PUBLICATION, IS KEPT ON FILE AT THE WASHINGTON STATE DEPARTMENT OF TRANSPORTATION. A COPY MAY BE OBTAINED UPON REQUEST.

SINGLE-SLOPE CONCRETE BARRIER PLACEMENT (WRAP)

STANDARD PLAN C-85.11-00

SHEET 1 OF 1 SHEET

APPROVED FOR PUBLICATION

Pasco Bakotich III — STATE DESIGN ENGINEER

04/18/12 — DATE

Washington State Department of Transportation

EFFECTIVE: AUGUST 6, 2012 TO August 4, 2013
EFFECTIVE: AUGUST 6, 2012 TO August 4, 2013
EFFECTIVE: AUGUST 6, 2012 TO August 4, 2013
EFFECTIVE: AUGUST 6, 2012 TO August 4, 2013

EFFECTIVE: AUGUST 6, 2012 TO August 4, 2013

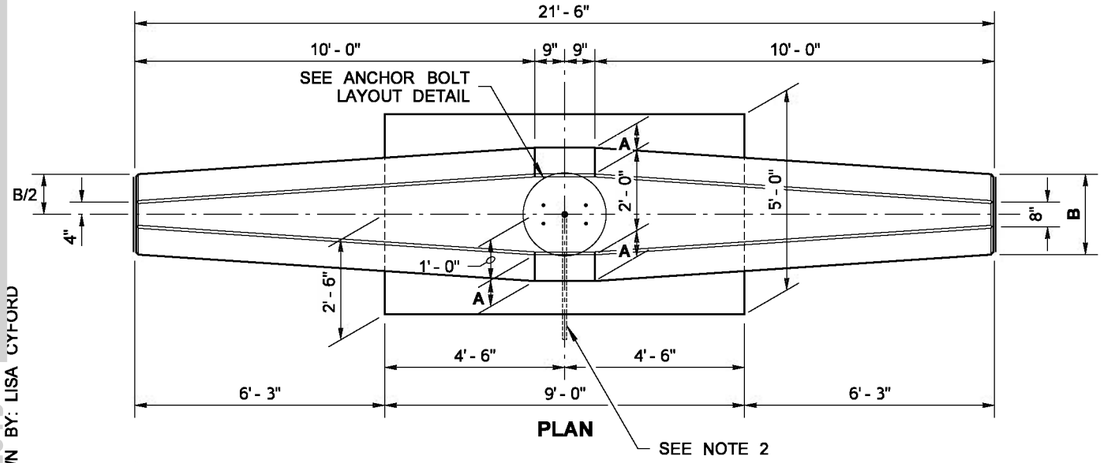

PLAN

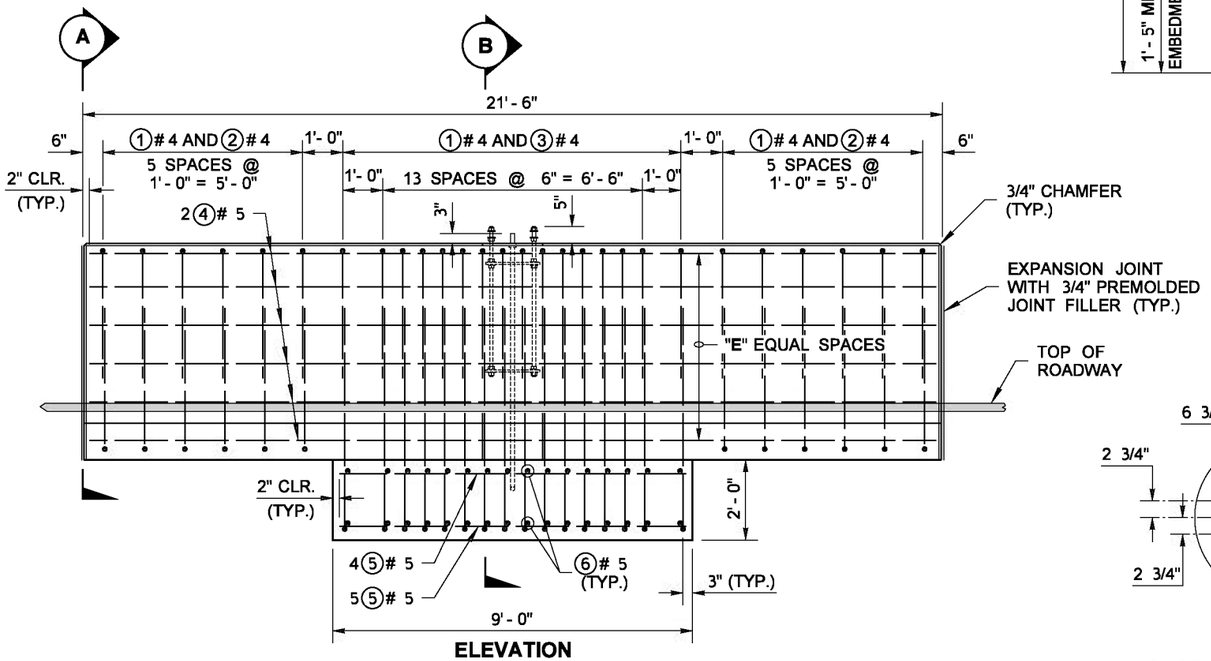

ELEVATION

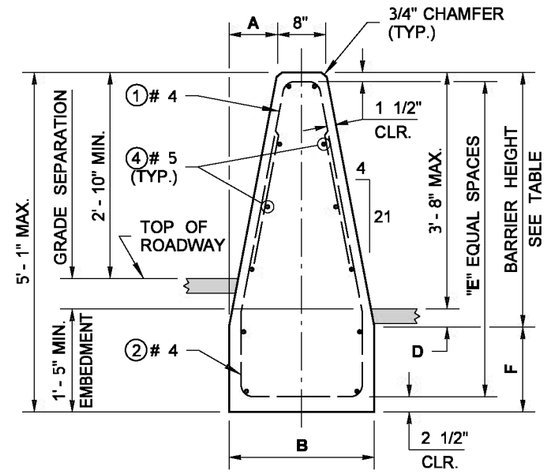

SECTION (A)

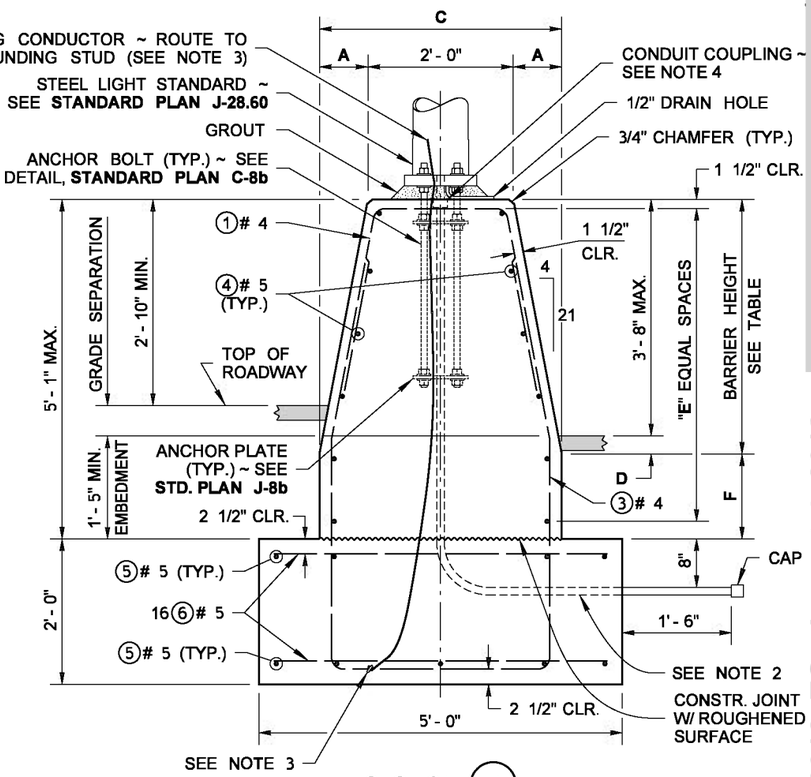

SECTION (B)

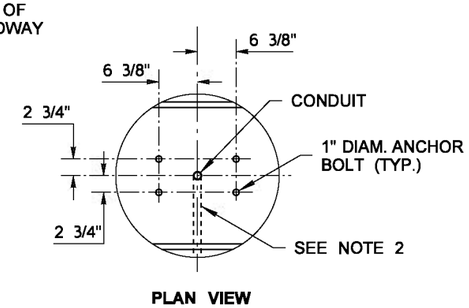

PLAN VIEW

ANCHOR BOLT LAYOUT DETAIL

NOTES

1. When connecting between cast-in-place and precast Single-Slope Barrier, provide a Connection Blockout and Rebar Grid as shown on **Standard Plan C-13.**
2. See the Contract Plans for conduit placement.
3. Grounding Conductor shall be non-insulated #4 AWG stranded copper, provide 3' - 0" min. slack. Clamp steel reinforcing bar with connector suitable for use embedded in concrete.
4. Install Conduit Coupling flush with top of foundation. Do not glue PVC stubout.
5. This plan shall be used for 40' and 50' Light Standards with 16' max. length double mast arms.
6. Concrete shall be Class 4000.

ALL DIMENSIONS ARE OUT TO OUT
ALL BENDS ARE 2" RADIUS

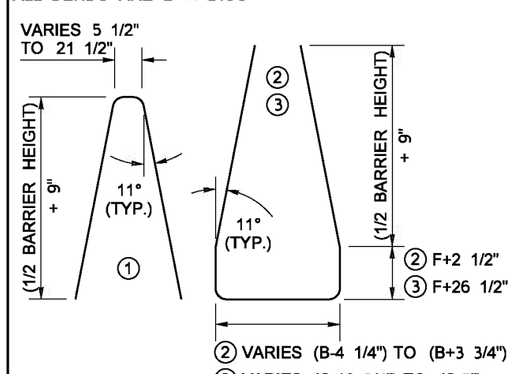

BAR LIST

MARK NO.	LOCATION	SIZE	QUANTITY
①	BARRIER ~ TOP VERTICAL	# 4	28
②	BARRIER ~ BOTTOM VERTICAL	# 4	12
③	FND. & BARRIER ~ VERTICAL	# 4	16
④	BARRIER ~ HORIZONTAL	# 5	"Q"
⑤	FOUNDATION	# 5	9
⑥	FOUNDATION	# 5	32

TABLE

GRADE SEPARATION	BARRIER HEIGHT	A	B	C	D	E	F	Q
0 TO 5"	3' - 6"	8"	2' - 0"	3' - 4"	3" MIN.	5	1' - 2"	12
UP TO 7"	4' - 0"	9 1/8"	2' - 2 1/4"	3' - 6 1/4"	7" MIN.	5	10"	12
UP TO 10"	4' - 6"	10 1/4"	2' - 4 1/2"	3' - 8 1/2"	10" MIN.	6	7"	14

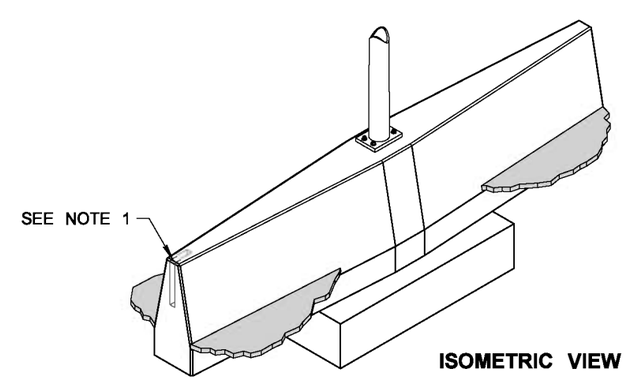

ISOMETRIC VIEW

RICHARD P. ZELDENRUST
STATE OF WASHINGTON
25470
STRUCTURAL ENGINEER
PROFESSIONAL ENGINEER

NOTE: THIS PLAN IS NOT A LEGAL ENGINEERING DOCUMENT BUT AN ELECTRONIC DUPLICATE. THE ORIGINAL, SIGNED BY THE ENGINEER AND APPROVED FOR PUBLICATION, IS KEPT ON FILE AT THE WASHINGTON STATE DEPARTMENT OF TRANSPORTATION. A COPY MAY BE OBTAINED UPON REQUEST.

SINGLE-SLOPE CONCRETE BARRIER LIGHT STANDARD FOUNDATION

STANDARD PLAN C-85.14-00

SHEET 1 OF 1 SHEET

APPROVED FOR PUBLICATION

Pasco Bakotich III — 06-16-11
STATE DESIGN ENGINEER — DATE

Washington State Department of Transportation

DRAWN BY: LISA CYFORD

EFFECTIVE: AUGUST 6, 2012 TO August 4, 2013

EFFECTIVE: AUGUST 6, 2012 TO August 4, 2013

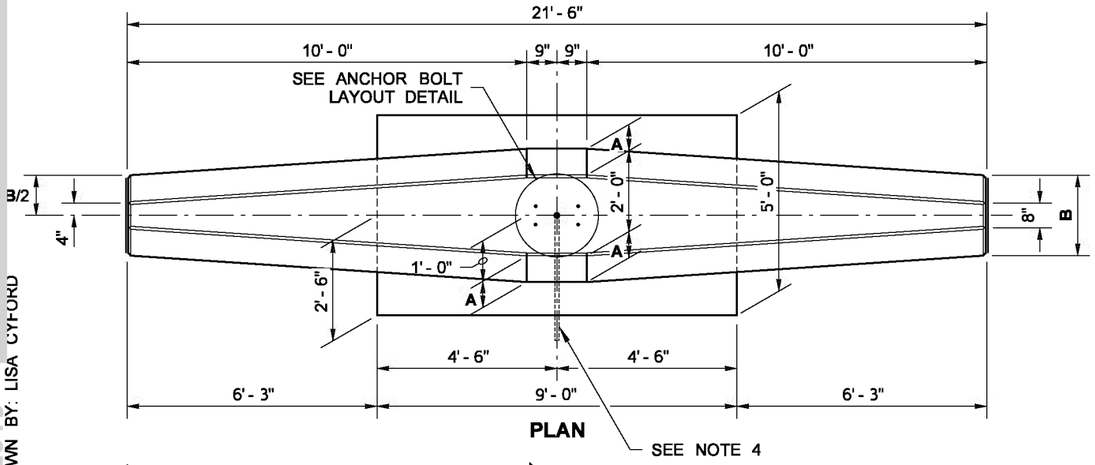

PLAN

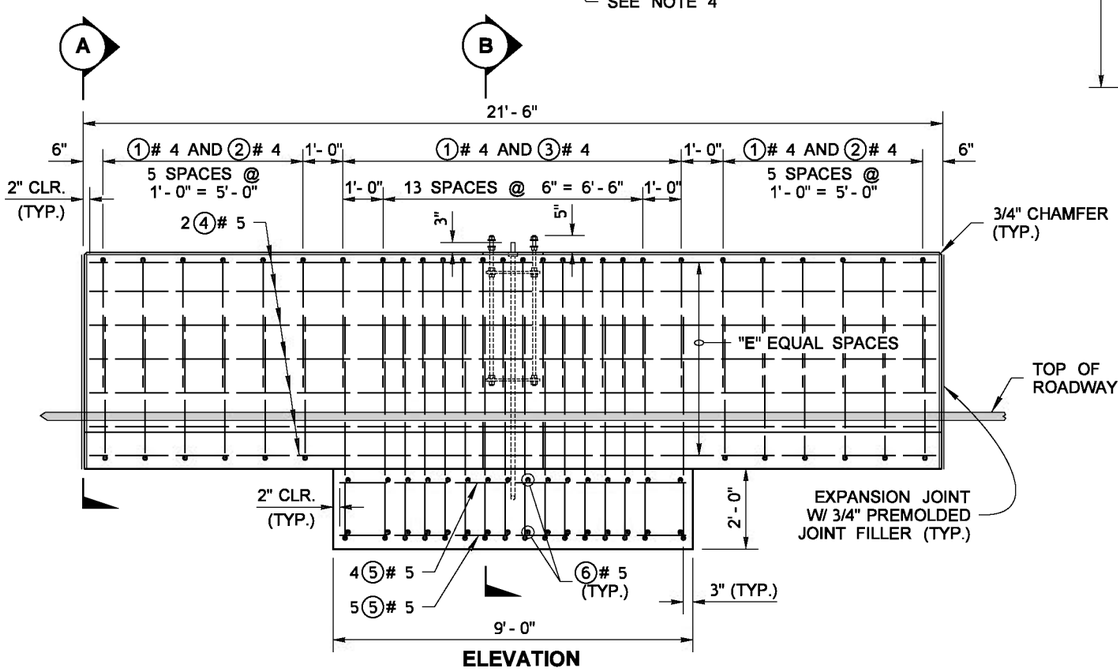

ELEVATION

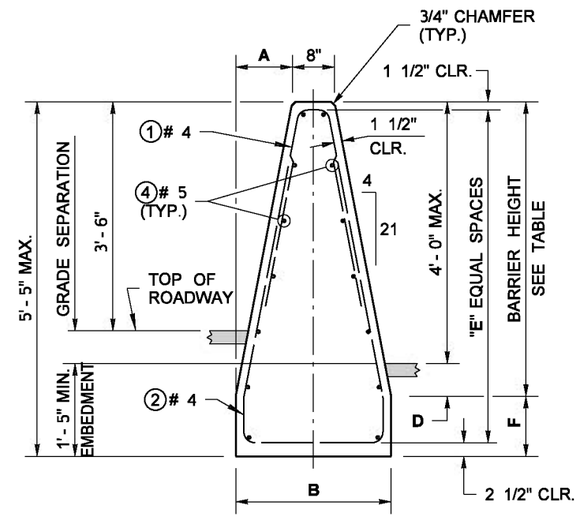

SECTION (A)

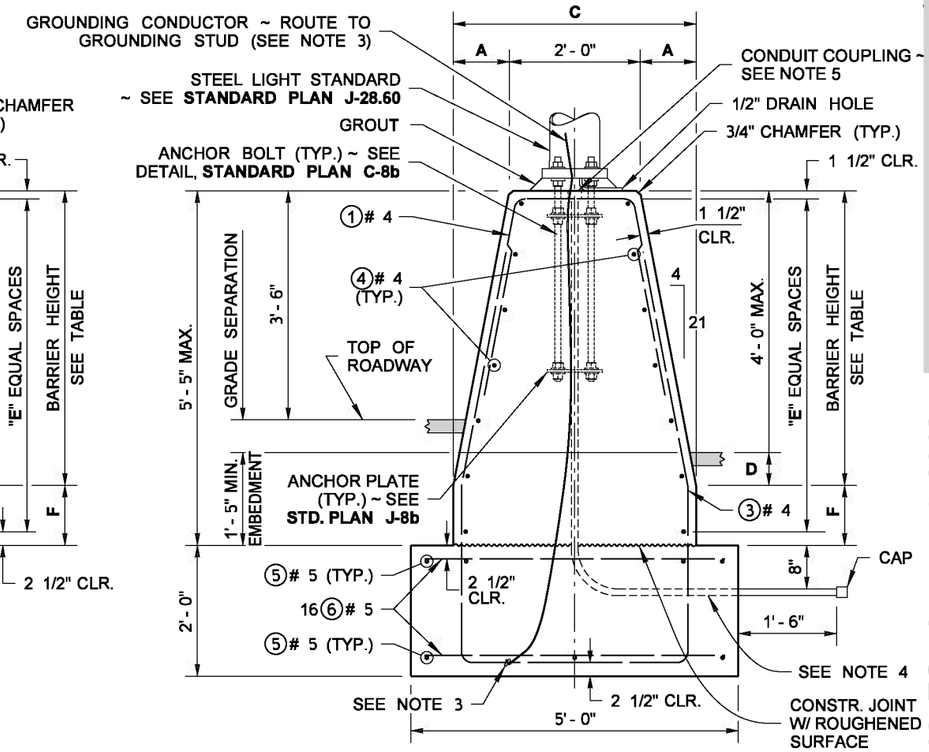

SECTION (B)

NOTES

1. This Barrier/Foundation combination has been designed in accordance with AASHTO LRFD Test Level 4 requirements. The horizontal vehicle impact force at the top of the barrier is taken at 54 kips for Strength and Extreme Limit States, and 10 kips for footing stability (overturning and sliding) in the Service Limit State.
2. When connecting between cast-in-place and precast Single-Slope Barrier, provide a Connection Blockout and Rebar Grid as shown on **Standard Plan C-13.**
3. Grounding conductor shall be non-insulated #4 AWG stranded copper, provide a 3' - 0" min. slack. Clamp steel reinforcing bar with connector suitable for use embedded in concrete.
4. See the Contract Plans for conduit placement.
5. Install Conduit Coupling flush with top of foundation. Do not glue PVC stubout.
6. This plan shall be used for 40' and 50' Light Standards with 16' max. length double mast arms.
7. Concrete shall be Class 4000.

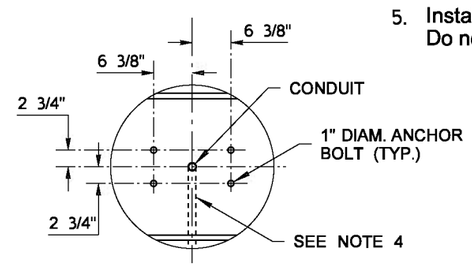

PLAN VIEW

ANCHOR BOLT LAYOUT DETAIL

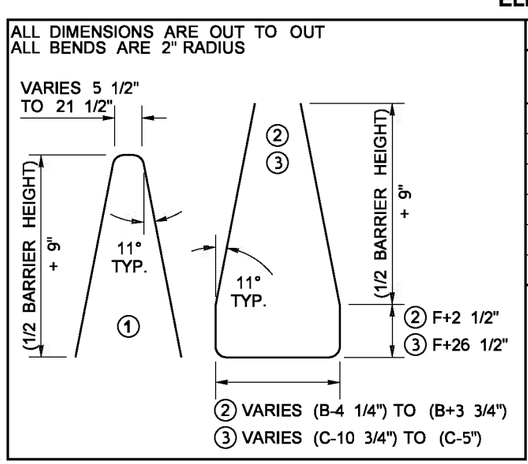

BAR LIST

MARK NO.	LOCATION	SIZE	QUANTITY
①	BARRIER ~ TOP VERTICAL	# 4	28
②	BARRIER ~ BOTTOM VERTICAL	# 4	12
③	FND. & BARRIER ~ VERTICAL	# 4	16
④	BARRIER ~ HORIZONTAL	# 5	"Q"
⑤	FOUNDATION	# 5	9
⑥	FOUNDATION	# 5	32

TABLE

GRADE SEPARATION	BARRIER HEIGHT	A	B	C	D	E	F	Q
0 TO 3"	4' - 0"	9 1/8"	2' - 2 1/4"	3' - 6 1/4"	VARIES 6" TO 9"	6	1' - 2"	14
UP TO 6" MAX.	4' - 6"	10 1/4"	2' - 4 1/2"	3' - 8 1/2"	VARIES 6" TO 9"	6	11"	14

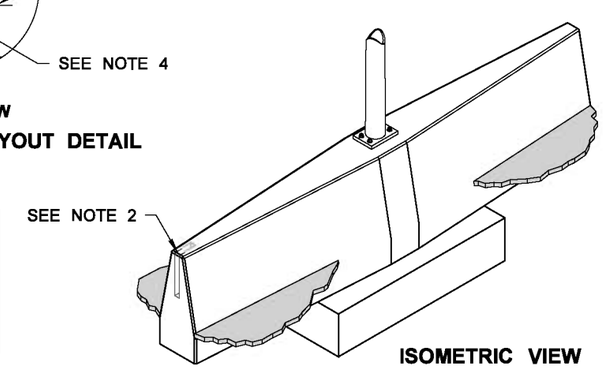

ISOMETRIC VIEW

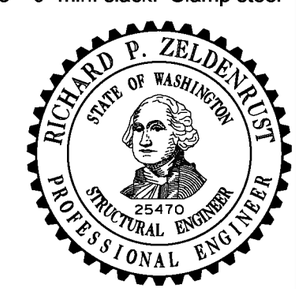

NOTE: THIS PLAN IS NOT A LEGAL ENGINEERING DOCUMENT BUT AN ELECTRONIC DUPLICATE. THE ORIGINAL, SIGNED BY THE ENGINEER AND APPROVED FOR PUBLICATION, IS KEPT ON FILE AT THE WASHINGTON STATE DEPARTMENT OF TRANSPORTATION. A COPY MAY BE OBTAINED UPON REQUEST.

SINGLE-SLOPE CONCRETE BARRIER (42")
LIGHT STANDARD FOUNDATION
STANDARD PLAN C-85.15-00

SHEET 1 OF 1 SHEET

APPROVED FOR PUBLICATION

Pasco Bakotich III — 06-16-11

STATE DESIGN ENGINEER — DATE

Washington State Department of Transportation

DRAWN BY: LISA CYFORD

EFFECTIVE: AUGUST 6, 2012 TO August 4, 2013

EFFECTIVE: AUGUST 6, 2012 TO August 4, 2013
EFFECTIVE: AUGUST 6, 2012 TO August 4, 2013

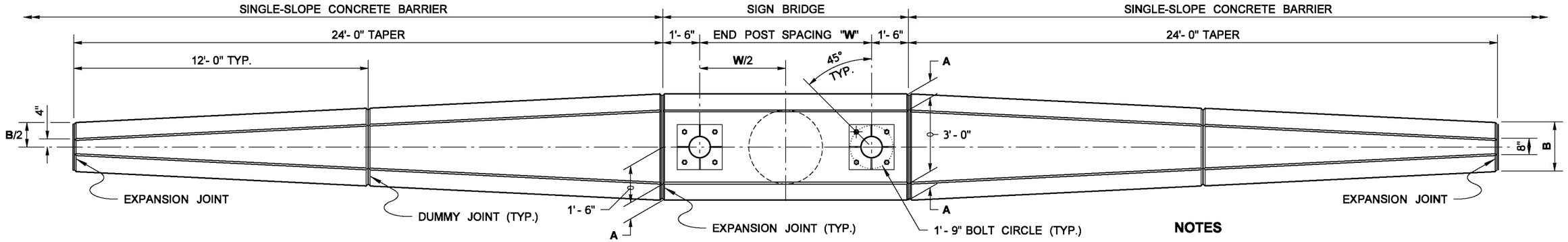

PLAN

NOTES

1. When connecting between Cast-in-Place and Precast Single-Slope Barrier, provide a Connection Blockout and Rebar Grid as shown in **Standard Plan C-13.**
2. Grounding Conductor shall be non-insulated #4 AWG stranded copper, provide a 3' - 0" slack. Clamp steel reinforcing bar with connector suitable for use embeded in concrete.
3. Install Conduit Coupling flush with top of Barrier. Do not glue PVC stubout.
4. Concrete shall be Class 4000, unless otherwise noted.

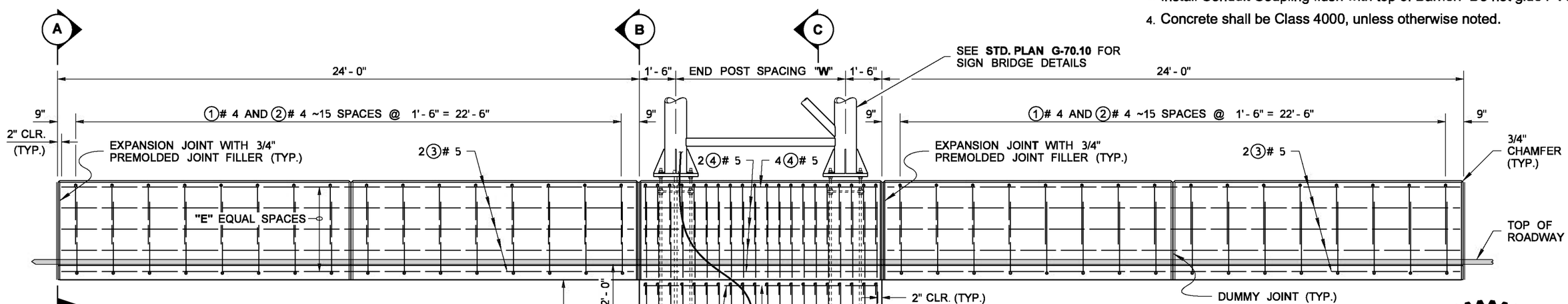

ELEVATION

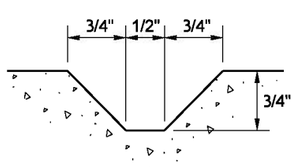

DUMMY JOINT

DIMENSIONS "W" AND "Z"		
SIGN BRIDGE SPAN LENGTH	W	Z
60' OR LESS	4' - 0"	11' - 6"
61' TO 91'	5' - 0"	13' - 6"
91' TO 120'	6' - 0"	15' - 0"
121' TO 150'	7' - 0"	16' - 6"

SHAFT DEPTH "Z" IS BASED ON ALLOWABLE LATERAL BEARING PRESSURE IN EXCESS OF 1500 PSF.

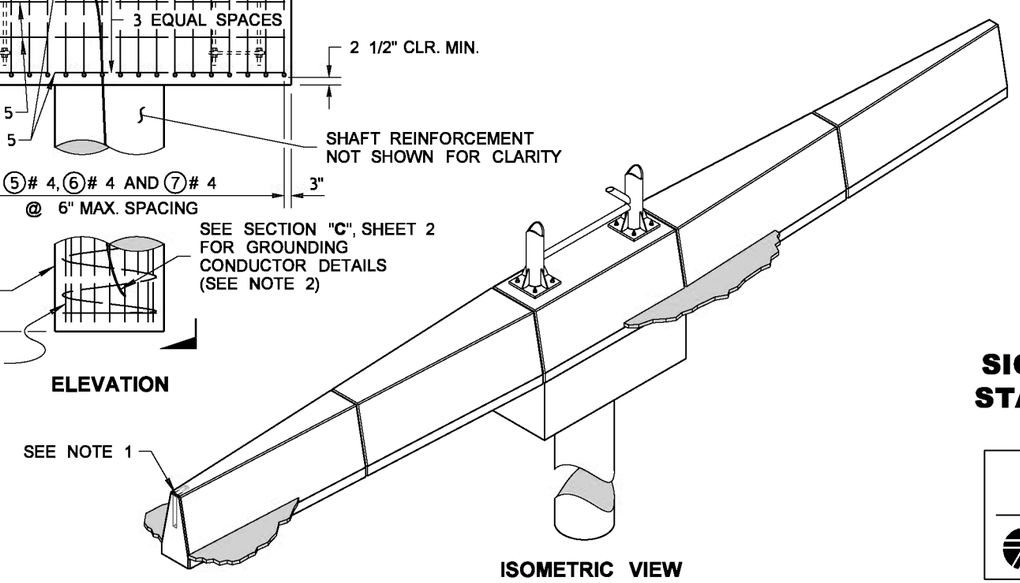

ISOMETRIC VIEW

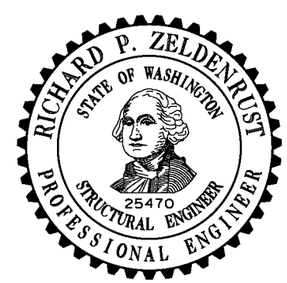

NOTE: THIS PLAN IS NOT A LEGAL ENGINEERING DOCUMENT BUT AN ELECTRONIC DUPLICATE. THE ORIGINAL, SIGNED BY THE ENGINEER AND APPROVED FOR PUBLICATION, IS KEPT ON FILE AT THE WASHINGTON STATE DEPARTMENT OF TRANSPORTATION. A COPY MAY BE OBTAINED UPON REQUEST.

SINGLE-SLOPE CONCRETE BARRIER SIGN BRIDGE FOUNDATION

STANDARD PLAN C-85.16-00

SHEET 1 OF 2 SHEETS

APPROVED FOR PUBLICATION

Pasco Bakotich III — STATE DESIGN ENGINEER
06-16-11 — DATE

Washington State Department of Transportation

DRAWN BY: LISA CYFORD

EFFECTIVE: AUGUST 6, 2012 TO August 4, 2013
EFFECTIVE: AUGUST 6, 2012 TO August 4, 2013
EFFECTIVE: AUGUST 6, 2012 TO August 4, 2013
EFFECTIVE: AUGUST 6, 2012 TO August 4, 2013

EFFECTIVE: AUGUST 6, 2012 TO August 4, 2013

DRAWN BY: LISA CYFORD

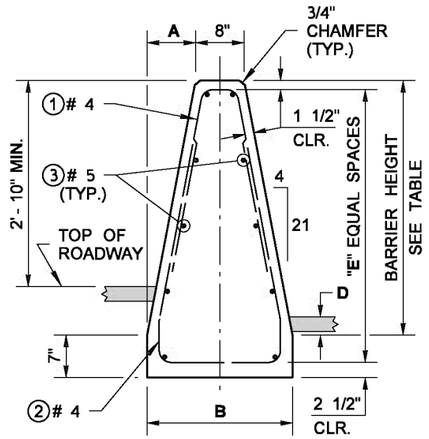

SECTION (A)

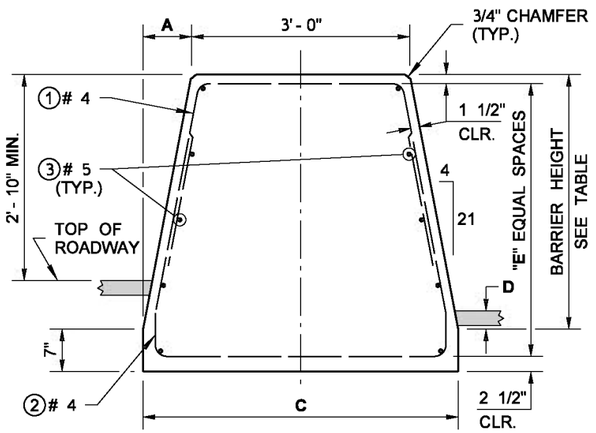

SECTION (B)

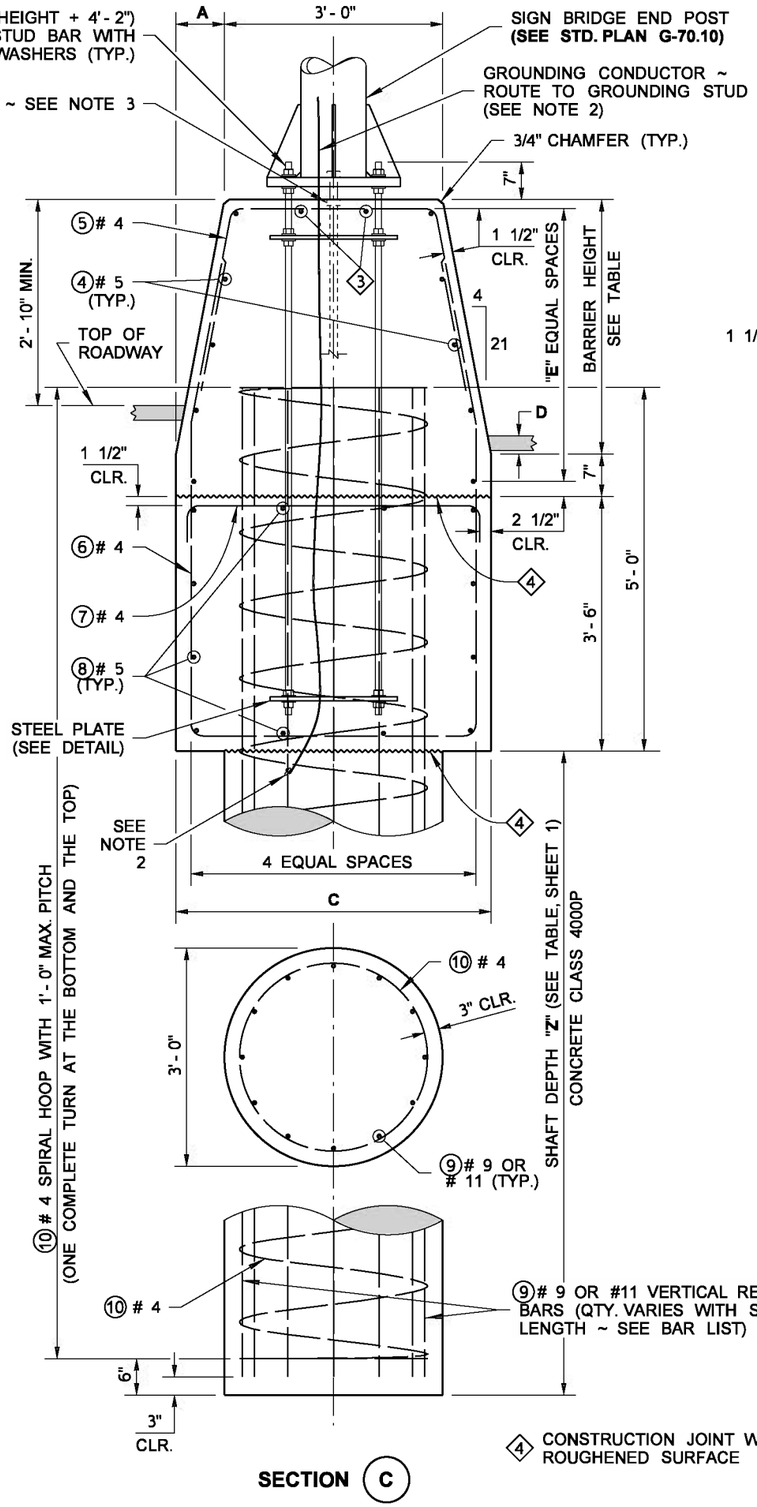

SECTION (C)

④ CONSTRUCTION JOINT WITH ROUGHENED SURFACE

TABLE							
GRADE SEPARATION	BARRIER HEIGHT	A	B	C	D	E	Q
0 TO 5"	3' - 6"	8"	2' - 0"	4' - 4"	3" MIN.	4	10 ◇3
UP TO 7"	4' - 0"	9 1/8"	2' - 2 1/4"	4' - 6 1/4"	7" MIN.	5	12 ◇3
UP TO 10"	4' - 6"	10 1/4"	2' - 4 1/2"	4' - 8 1/2"	10" MIN.	6	14 ◇3

◇3 ADD TWO ④ # 5 BARS, EQUALLY SPACED, AT THE TOP OF THE FOUNDATION BARRIER

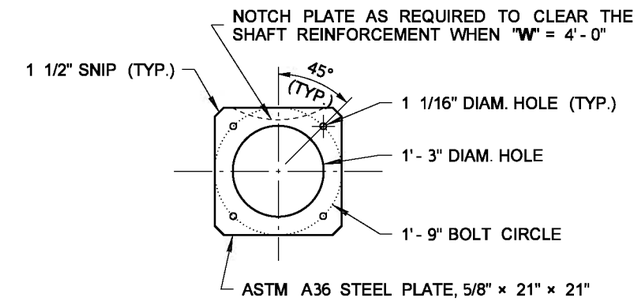

STEEL PLATE DETAIL

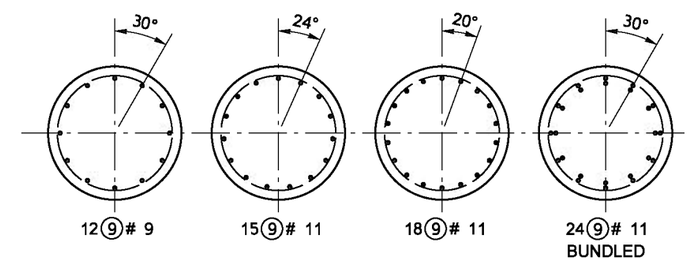

VERTICAL SHAFT STEEL LAYOUT

BAR LIST									
MARK NO.	LOCATION	SPAN LENGTH							
		60' OR LESS		61' TO 91'		91' TO 120'		121' TO 150'	
		SIZE	QTY.	SIZE	QTY.	SIZE	QTY.	SIZE	QTY.
①	BARRIER ~ TOP VERTICAL	# 4	32	# 4	32	# 4	32	# 4	32
②	BARRIER ~ BOTTOM VERTICAL	# 4	28	# 4	28	# 4	28	# 4	28
③	BARRIER ~ HORIZONTAL	# 5	◇1	# 5	◇1	# 5	◇1	# 5	◇1
④	BARRIER ~ HORIZONTAL	# 5	◇1	# 5	◇1	# 5	◇1	# 5	◇1
⑤	BARRIER ~ TOP VERTICAL	# 4	14	# 4	16	# 4	18	# 4	20
⑥	CAP & BARRIER ~ VERTICAL	# 4	14	# 4	16	# 4	18	# 4	20
⑦	CAP ~ TOP TRANSVERSE	# 4	14	# 4	16	# 4	18	# 4	20
⑧	CAP ~ HORIZONTAL	# 5	12	# 5	12	# 5	12	# 5	12
⑨	SHAFT ~ VERTICAL	# 9	12	# 11	15	# 11	18	# 11	24
⑩	SHAFT ~ SPIRAL	# 4	1◇2	# 4	1◇2	# 4	1◇2	# 4	1◇2

◇1 SEE TABLE, THIS SHEET, COLUMN "Q"

◇2 IF JOINING TWO SPIRALS, SEE LAP SPLICE DETAIL

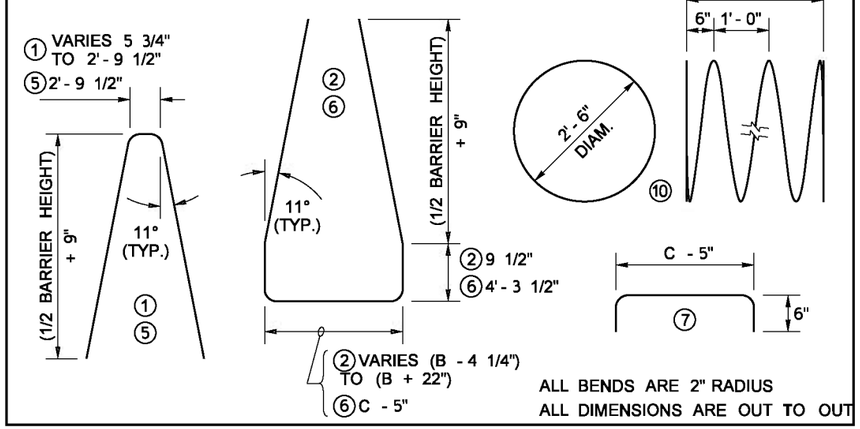

ALL BENDS ARE 2" RADIUS

ALL DIMENSIONS ARE OUT TO OUT

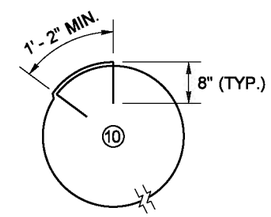

LAP SPLICE DETAIL

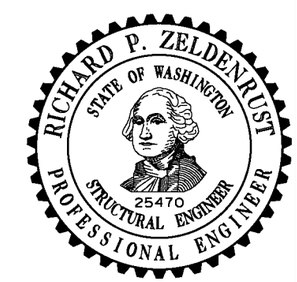

NOTE: THIS PLAN IS NOT A LEGAL ENGINEERING DOCUMENT BUT AN ELECTRONIC DUPLICATE. THE ORIGINAL, SIGNED BY THE ENGINEER AND APPROVED FOR PUBLICATION, IS KEPT ON FILE AT THE WASHINGTON STATE DEPARTMENT OF TRANSPORTATION. A COPY MAY BE OBTAINED UPON REQUEST.

SINGLE-SLOPE CONCRETE BARRIER SIGN BRIDGE FOUNDATION

STANDARD PLAN C-85.16-00

SHEET 2 OF 2 SHEETS

APPROVED FOR PUBLICATION

Pasco Bakotich III — 06-16-11

STATE DESIGN ENGINEER — DATE

Washington State Department of Transportation

EFFECTIVE: AUGUST 6, 2012 TO August 4, 2013

EFFECTIVE: AUGUST 6, 2012 TO August 4, 2013
EFFECTIVE: AUGUST 6, 2012 TO August 4, 2013

DRAWN BY: LISA CYFORD

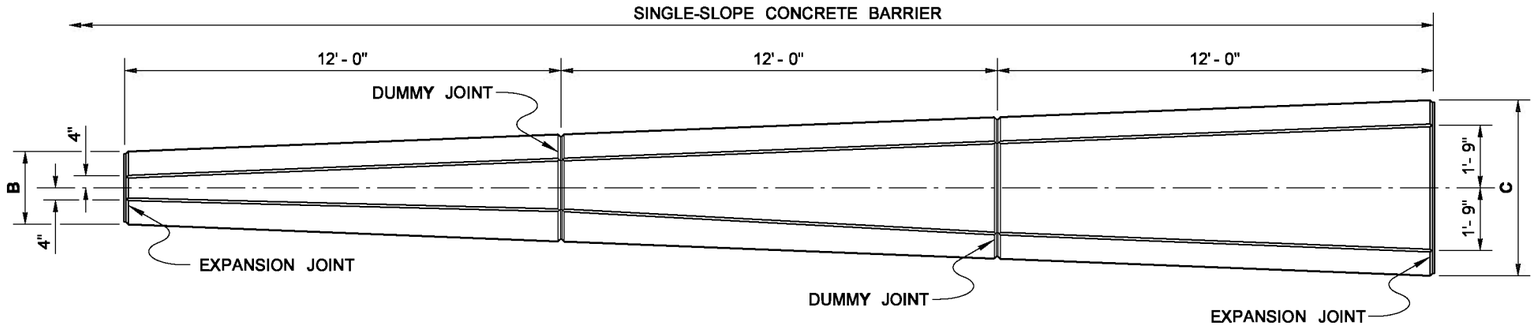

PLAN

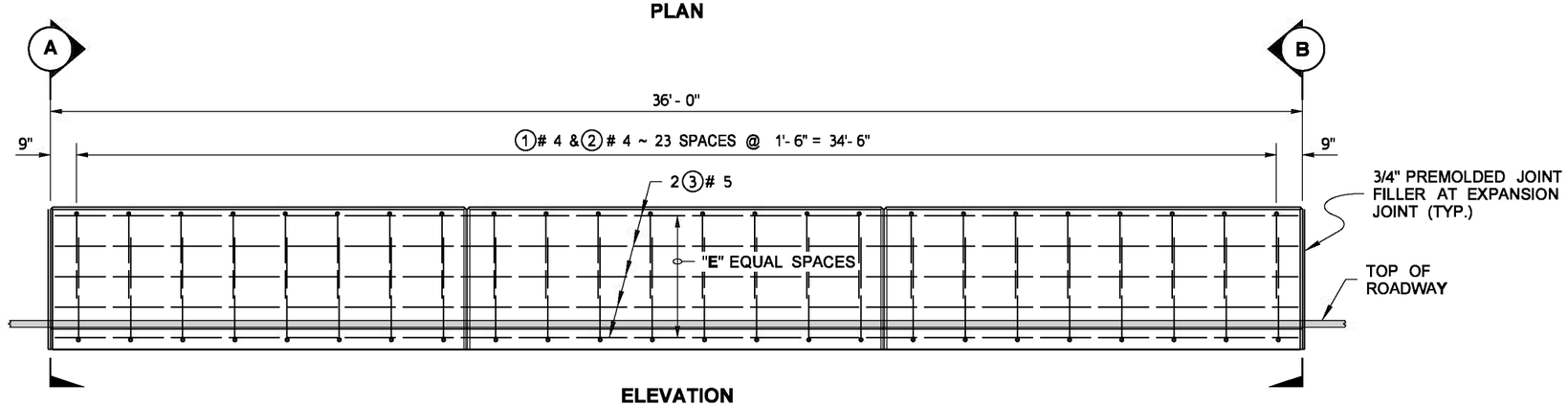

ELEVATION

NOTES

1. When connecting between Cast-in-Place and Precast Single-Slope Barrier, provide a Connection Blockout and Rebar Grid as shown in **Standard Plan C-13**
2. All concrete shall be class 4000.

BAR LIST

MARK NO.	LOCATION	SIZE	QTY.
①	BARRIER ~ TOP VERTICAL	# 4	24
②	BARRIER ~ BOTTOM VERTICAL	# 4	24
③	BARRIER ~ HORIZONTAL	# 5	◇1

◇1 SEE DIMENSION TABLE ~ NOT COUNTING SPLICES

ALL DIMENSIONS ARE OUT TO OUT
ALL BENDS ARE 2" RADIUS

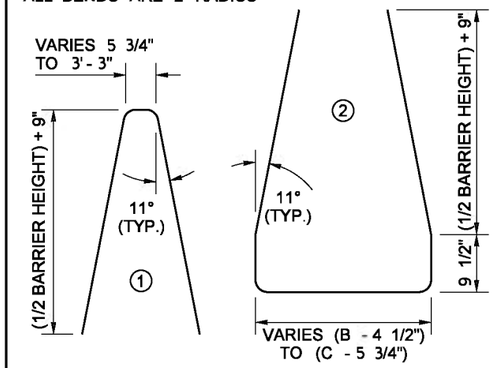

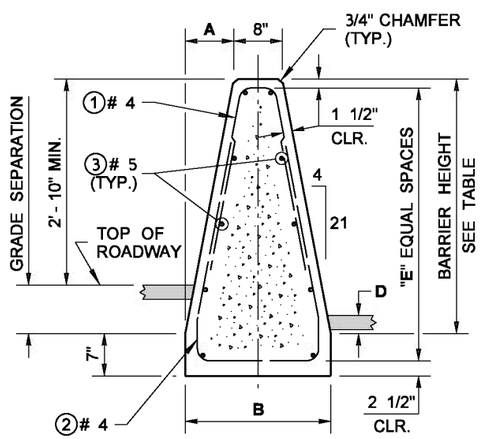

SECTION (A)

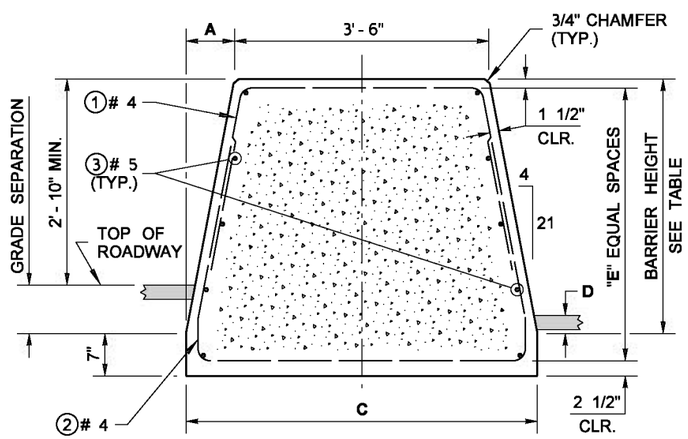

SECTION (B)

DUMMY JOINT

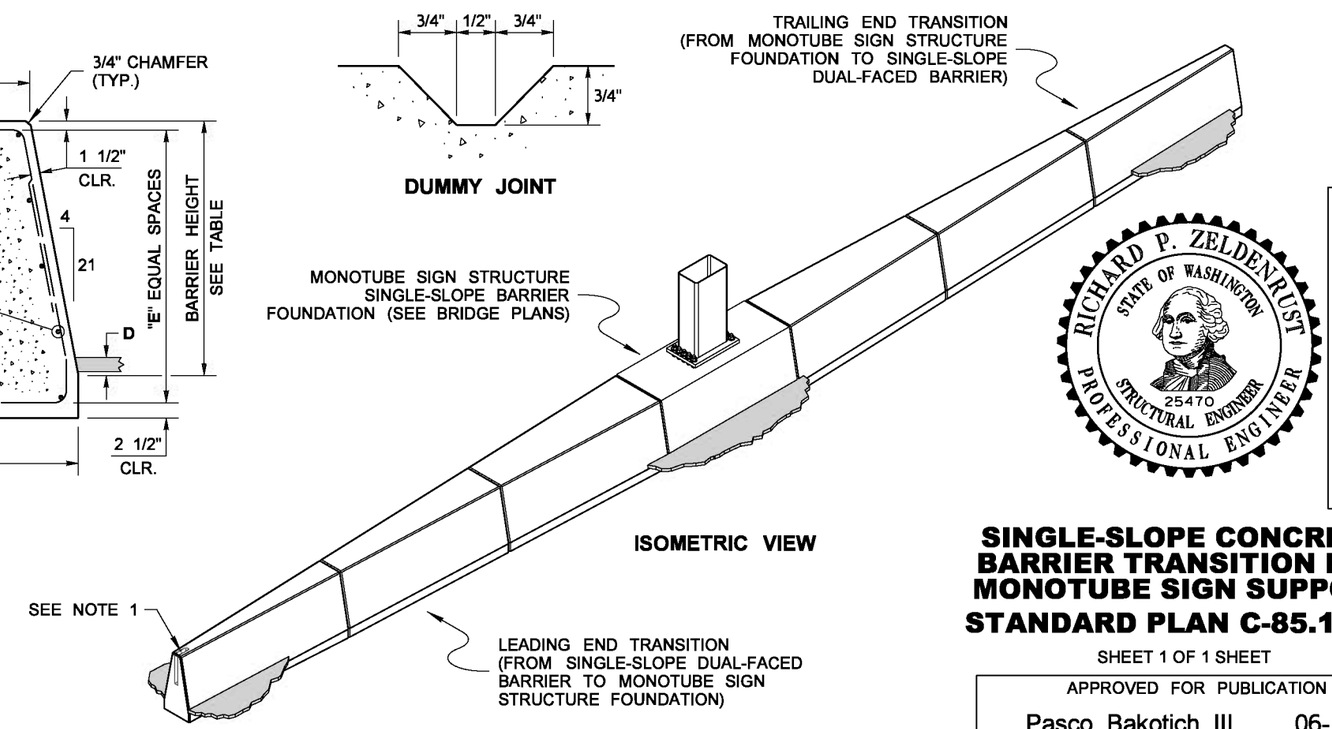

ISOMETRIC VIEW

TABLE

GRADE SEPARATION	BARRIER HEIGHT	A	B	C	D	E	HORIZONTAL BARS (QTY.)
0 TO 5"	3' - 6"	8"	2' - 0"	4' - 10"	3" MIN.	4	10
UP TO 7"	4' - 0"	9 1/8"	2' - 2 1/4"	5' - 0 1/4"	7" MIN.	5	12
UP TO 10"	4' - 6"	10 1/4"	2' - 4 1/2"	5' - 2 1/2"	10" MIN.	6	14

NOTE: THIS PLAN IS NOT A LEGAL ENGINEERING DOCUMENT BUT AN ELECTRONIC DUPLICATE. THE ORIGINAL, SIGNED BY THE ENGINEER AND APPROVED FOR PUBLICATION, IS KEPT ON FILE AT THE WASHINGTON STATE DEPARTMENT OF TRANSPORTATION. A COPY MAY BE OBTAINED UPON REQUEST.

SINGLE-SLOPE CONCRETE BARRIER TRANSITION FOR MONOTUBE SIGN SUPPORT

STANDARD PLAN C-85.18-00

SHEET 1 OF 1 SHEET

APPROVED FOR PUBLICATION

Pasco Bakotich III — STATE DESIGN ENGINEER
06-16-11 — DATE

Washington State Department of Transportation

EFFECTIVE: AUGUST 6, 2012 TO August 4, 2013
EFFECTIVE: AUGUST 6, 2012 TO August 4, 2013
EFFECTIVE: AUGUST 6, 2012 TO August 4, 2013
EFFECTIVE: AUGUST 6, 2012 TO August 4, 2013

EFFECTIVE: AUGUST 6, 2012 TO August 4, 2013
EFFECTIVE: AUGUST 6, 2012 TO August 4, 2013

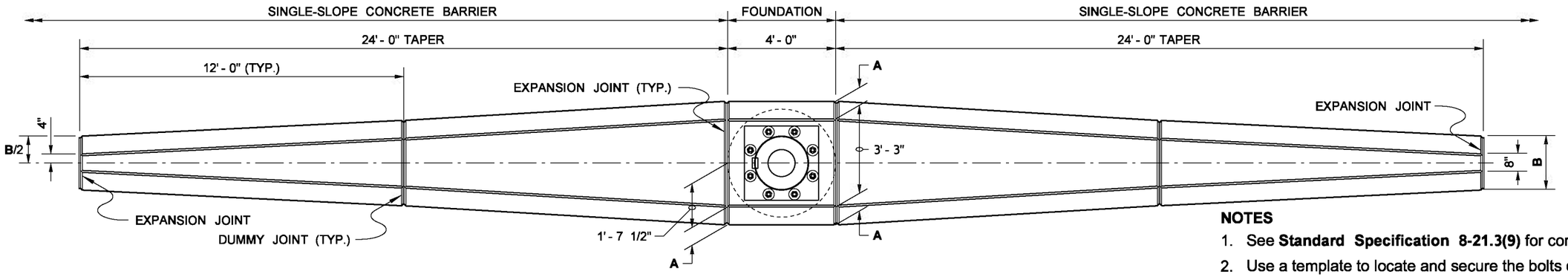

PLAN

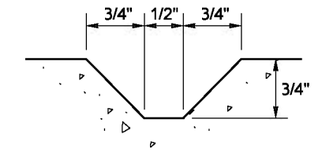

DUMMY JOINT

NOTES

1. See **Standard Specification 8-21.3(9)** for construction requirements.
2. Use a template to locate and secure the bolts during foundation installation.
3. When connecting between cast-in-place and precast Single-Slope Barrier, provide a Connection Blockout and Rebar Grid as shown in **Standard Plan C-13.**
4. Grounding Conductor shall be non-insulated #4 AWG stranded copper, provide a 3' - 0" slack. Clamp steel reinforcing bar with connector suitable for use embedded in concrete.
5. Install Conduit Coupling flush with top of Barrier. Do not glue PVC stubout.

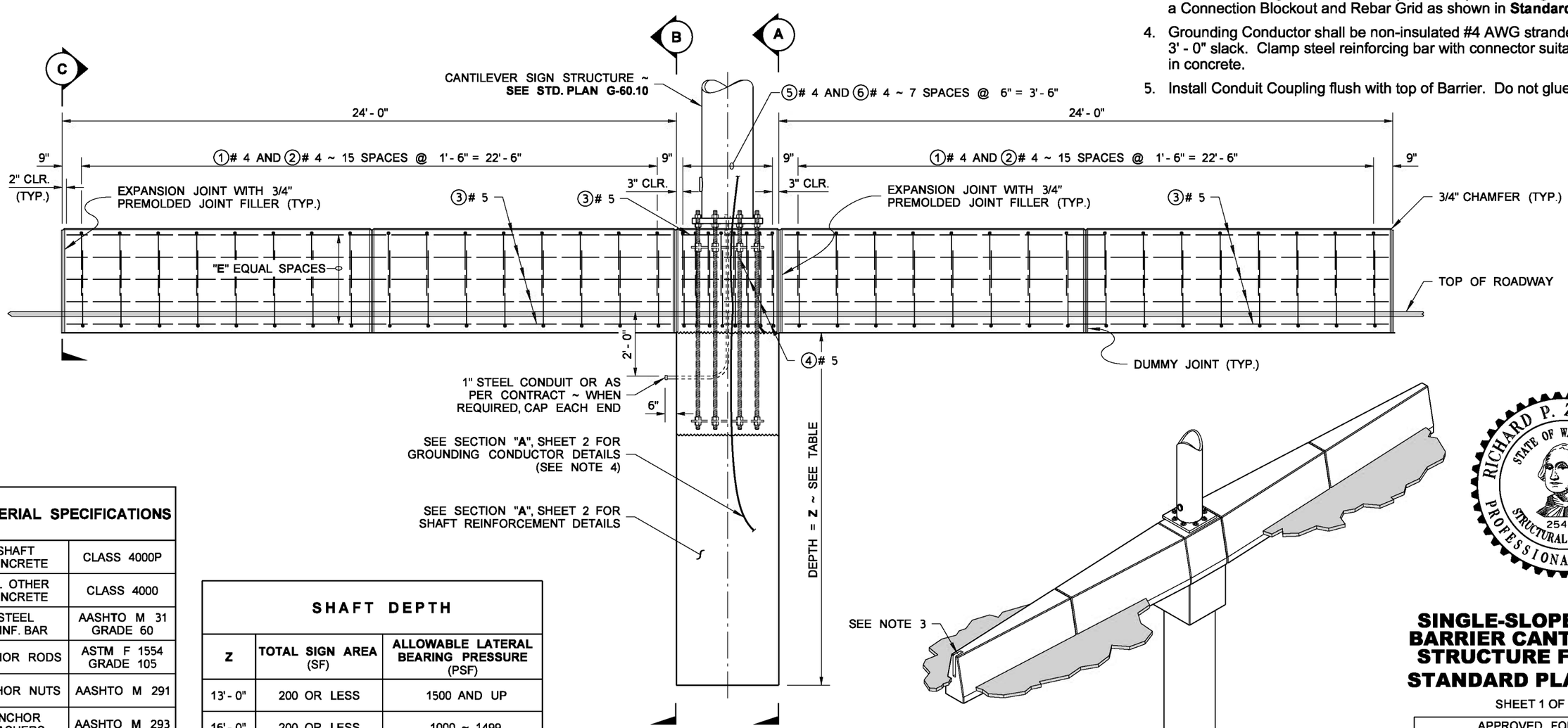

ELEVATION

ISOMETRIC

MATERIAL SPECIFICATIONS	
SHAFT CONCRETE	CLASS 4000P
ALL OTHER CONCRETE	CLASS 4000
STEEL REINF. BAR	AASHTO M 31 GRADE 60
ANCHOR RODS	ASTM F 1554 GRADE 105
ANCHOR NUTS	AASHTO M 291
ANCHOR WASHERS	AASHTO M 293
ANCHORAGE GALVANIZING	AASHTO M 232
STEEL PLATE	ASTM A 36

SHAFT DEPTH		
Z	TOTAL SIGN AREA (SF)	ALLOWABLE LATERAL BEARING PRESSURE (PSF)
13' - 0"	200 OR LESS	1500 AND UP
16' - 0"	200 OR LESS	1000 ~ 1499
18' - 0"	200 ~ 400	1500 AND UP
22' - 0"	200 ~ 400	1000 ~ 1499

RICHARD P. ZELDENRUST
STATE OF WASHINGTON
25470
STRUCTURAL ENGINEER
PROFESSIONAL ENGINEER

NOTE: THIS PLAN IS NOT A LEGAL ENGINEERING DOCUMENT BUT AN ELECTRONIC DUPLICATE. THE ORIGINAL, SIGNED BY THE ENGINEER AND APPROVED FOR PUBLICATION, IS KEPT ON FILE AT THE WASHINGTON STATE DEPARTMENT OF TRANSPORTATION. A COPY MAY BE OBTAINED UPON REQUEST.

SINGLE-SLOPE CONCRETE BARRIER CANTILEVER SIGN STRUCTURE FOUNDATION

STANDARD PLAN C-85.20-00

SHEET 1 OF 2 SHEETS

APPROVED FOR PUBLICATION

Pasco Bakotich III — STATE DESIGN ENGINEER
06-16-11 — DATE

Washington State Department of Transportation

DRAWN BY: LISA CYFORD

EFFECTIVE: AUGUST 6, 2012 TO August 4, 2013
EFFECTIVE: AUGUST 6, 2012 TO August 4, 2013
EFFECTIVE: AUGUST 6, 2012 TO August 4, 2013
EFFECTIVE: AUGUST 6, 2012 TO August 4, 2013

EFFECTIVE: AUGUST 6, 2012 TO August 4, 2013

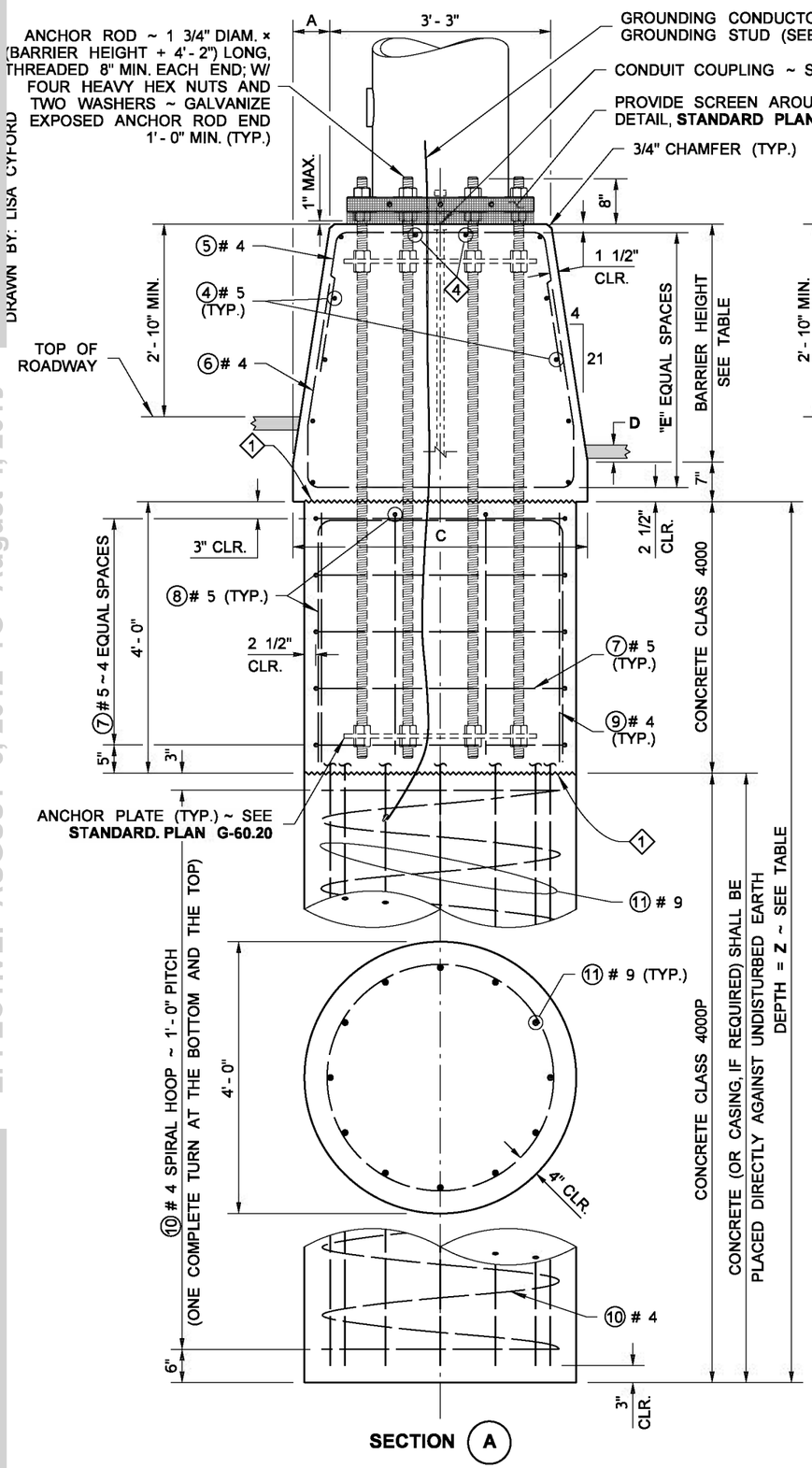

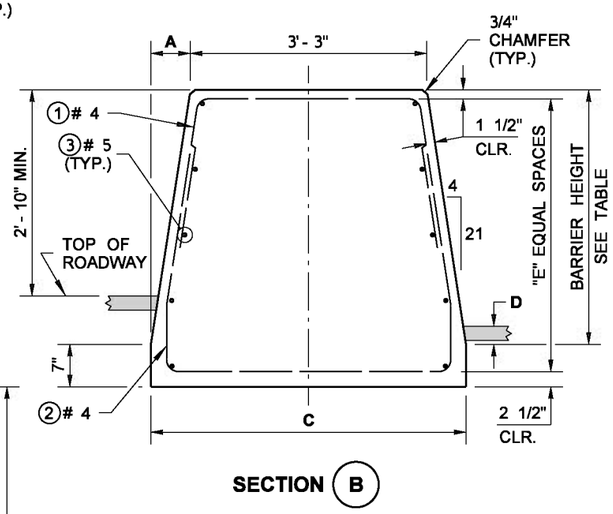

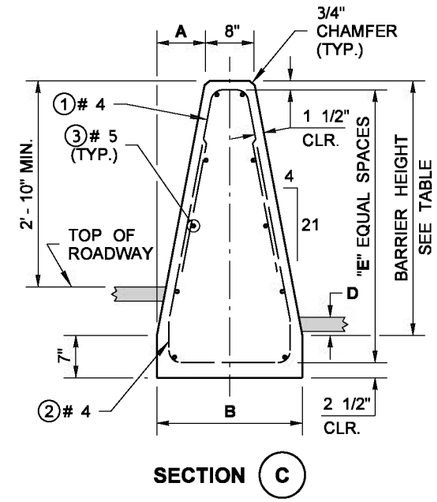

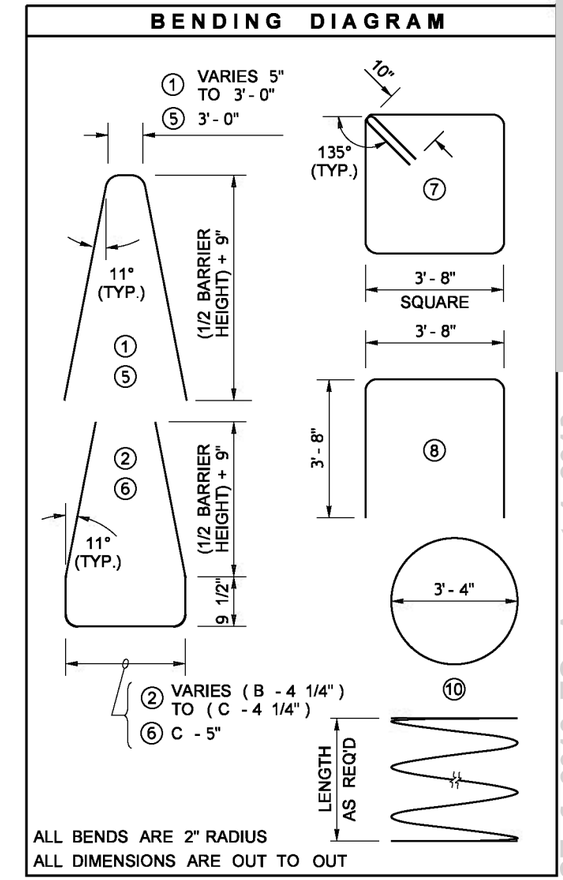

TABLE

GRADE SEPARATION	BARRIER HEIGHT	A	B	C	D	E	Q
0 TO 5"	3' - 6"	8"	2' - 0"	4' - 7"	3" MIN.	4	10 ◇4
UP TO 7"	4' - 0"	9 1/8"	2' - 2 1/4"	4' - 9 1/4"	7" MIN.	5	12 ◇4
UP TO 10"	4' - 6"	10 1/4"	2' - 4 1/2"	4' - 11 1/2"	10" MIN.	6	14 ◇4

BAR LIST

MARK NO.	LOCATION	QTY.	LENGTH	SIZE	TYPE
①	BARRIER ~ TOP VERTICAL	32	VARIES	# 4	
②	BARRIER ~ BOTTOM VERTICAL	32	VARIES	# 4	
③	BARRIER ~ HORIZONTAL	◇2	23' - 8"	# 5	STR.
④	BARRIER ~ HORIZONTAL	◇2	3' - 8"	# 5	STR.
⑤	BARRIER ~ TOP VERTICAL	8	VARIES	# 4	
⑥	BARRIER ~ BOTTOM VERTICAL	8	VARIES	# 4	
⑦	CAP ~ HOOP	5	15' - 9"	# 5	
⑧	CAP ~ TOP	4	10' - 10"	# 5	
⑨	CAP ~ VERTICAL, EACH CORNER	4	3' - 4"	# 4	STR.
⑩	SHAFT ~ SPIRAL	1 ◇3	AS REQ'D	# 4	
⑪	SHAFT ~ VERTICAL	12	"Z" MINUS CLEARANCES	# 9	STR.

◇1 CONSTRUCTION JOINT WITH ROUGHENED SURFACE

◇2 SEE TABLE, THIS SHEET, COLUMN "Q"

◇3 IF JOINING TWO SPIRALS, SEE LAP SPLICE DETAIL, **STANDARD PLAN G-60.20, SHEET 2**

◇4 ADD TWO ④ #5 BARS, EQUALLY SPACED, AT THE TOP OF THE FOUNDATION BARRIER

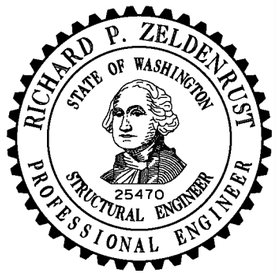

NOTE: THIS PLAN IS NOT A LEGAL ENGINEERING DOCUMENT BUT AN ELECTRONIC DUPLICATE. THE ORIGINAL, SIGNED BY THE ENGINEER AND APPROVED FOR PUBLICATION, IS KEPT ON FILE AT THE WASHINGTON STATE DEPARTMENT OF TRANSPORTATION. A COPY MAY BE OBTAINED UPON REQUEST.

SINGLE-SLOPE CONCRETE BARRIER CANTILEVER SIGN STRUCTURE FOUNDATION

STANDARD PLAN C-85.20-00

SHEET 2 OF 2 SHEETS

APPROVED FOR PUBLICATION

Pasco Bakotich III — STATE DESIGN ENGINEER

06-16-11 — DATE

Washington State Department of Transportation

DRAWN BY: LISA CYFORD

EFFECTIVE: AUGUST 6, 2012 TO August 4, 2013

EFFECTIVE: AUGUST 6, 2012 TO August 4, 2013
EFFECTIVE: AUGUST 6, 2012 TO August 4, 2013

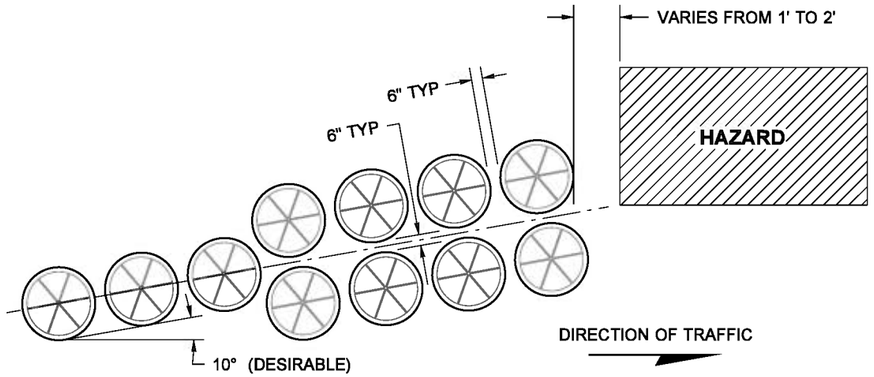

ROADSIDE INSTALLATION DETAIL

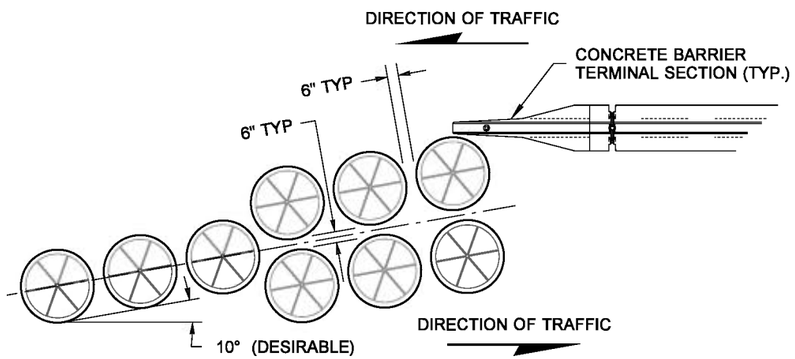

MEDIAN INSTALLATION DETAIL

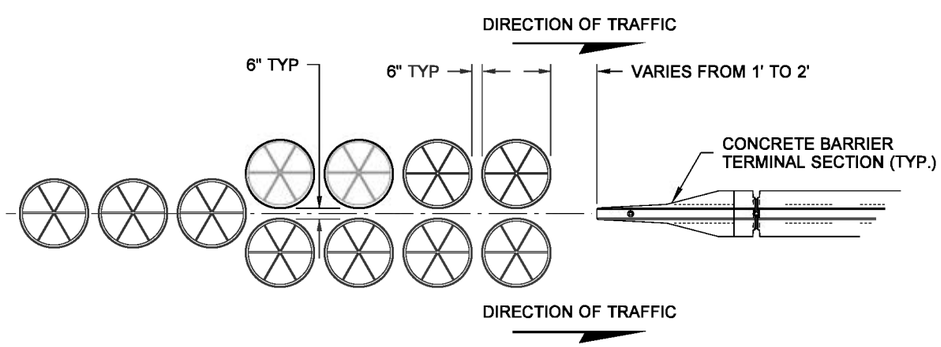

GORE INSTALLATION DETAIL

INSTALLATION DETAILS

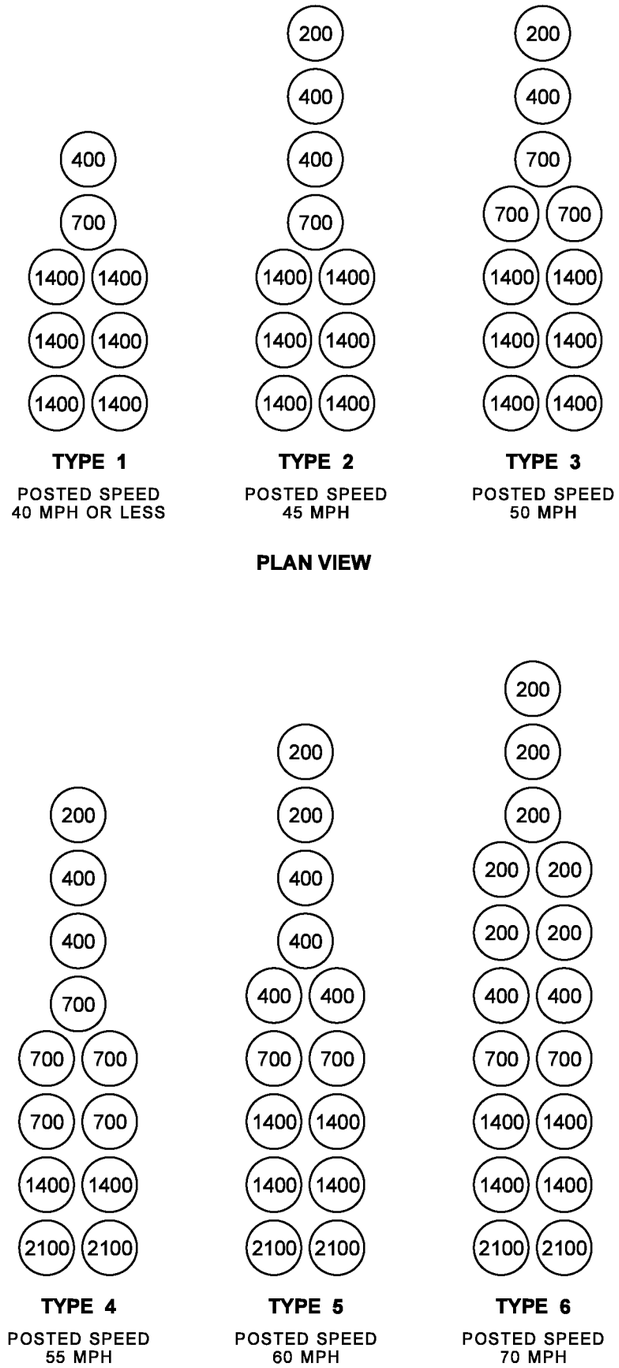

ATTENUATOR CONFIGURATIONS

(NUMBERS INSIDE BARRELS INDICATE LBS.)

NOTES

1. Approved Inertial Barrier Systems (sand barrel arrays) are listed in the Qualified Products List and shall be installed in accordance with the manufacturer's recommendations. When products not listed on the Qualified Products List are considered, a Request of Approval of Materials (RAM) form is required.
2. For temporary installations, the inertial barriers may be placed on wood pallets that are 4" or less in height.

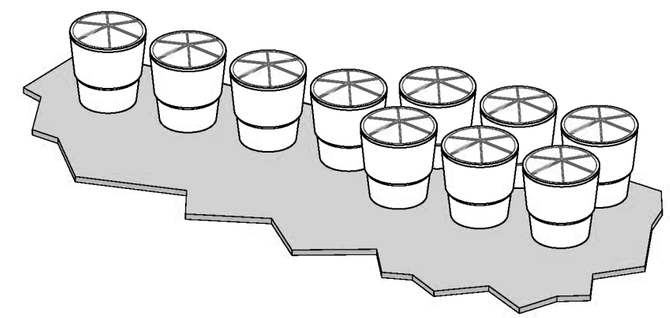

EXAMPLE CONFIGURATION

NOTE: THIS PLAN IS NOT A LEGAL ENGINEERING DOCUMENT BUT AN ELECTRONIC DUPLICATE. THE ORIGINAL, SIGNED BY THE ENGINEER AND APPROVED FOR PUBLICATION, IS KEPT ON FILE AT THE WASHINGTON STATE DEPARTMENT OF TRANSPORTATION. A COPY MAY BE OBTAINED UPON REQUEST.

IMPACT ATTENUATOR INERTIAL BARRIER CONFIGURATIONS

STANDARD PLAN C-90.10-00

SHEET 1 OF 1 SHEET

APPROVED FOR PUBLICATION

Pasco Bakotich III — STATE DESIGN ENGINEER

07-03-08 — DATE

Washington State Department of Transportation

EFFECTIVE: AUGUST 6, 2012 TO August 4, 2013
EFFECTIVE: AUGUST 6, 2012 TO August 4, 2013
EFFECTIVE: AUGUST 6, 2012 TO August 4, 2013
EFFECTIVE: AUGUST 6, 2012 TO August 4, 2013

EFFECTIVE: AUGUST 6, 2012 TO August 4, 2013
EFFECTIVE: AUGUST 6, 2012 TO August 4, 2013

DRAWN BY: ADAM COCHRAN

WALL HT H	TYPE 2A W	TYPE 2A t	TYPE 2A BARS "A"&"F"	TYPE 2A BAR "B"	TYPE 2A BARS "D"&"E"	TYPE 2B W	TYPE 2B t	TYPE 2B BARS "A"&"F"	TYPE 2B BAR "B"	TYPE 2B BARS "D"&"E"	TYPE 2C W	TYPE 2C t	TYPE 2C BARS "A"&"F"	TYPE 2C BAR "B"	TYPE 2C BARS "D"&"E"	TYPE 2D W	TYPE 2D t	TYPE 2D BARS "A"&"F"	TYPE 2D BAR "B"	TYPE 2D BARS "D"&"E"	WALL HT H
6' - 0"	2' - 0"	5"	3 ~ #4	#4 @ 18"	#3 @ 15"	2' - 3"	5"	3 ~ #4	#4 @ 18"	#3 @ 12"	2' - 0"	5"	3 ~ #4	#4 @ 18"	#3 @ 15"	2' - 6"	5"	3 ~ #4	#4 @ 18"	#3 @ 11"	6' - 0"
8' - 0"	2' - 3"	5"	3 ~ #4	#4 @ 18"	#3 @ 12"	2' - 9"	5"	3 ~ #4	#4 @ 18"	#4 @ 15"	2' - 6"	5"	3 ~ #4	#4 @ 18"	#3 @ 10"	3' - 3"	5"	5 ~ #4	#4 @ 18"	#4 @ 12"	8' - 0"
10' - 0"	2' - 6"	5"	3 ~ #4	#4 @ 18"	#3 @ 9"	3' - 3"	5"	5 ~ #4	#4 @ 18"	#4 @ 10"	2' - 9"	5"	3 ~ #4	#4 @ 18"	#4 @ 12"	3' - 6"	5"	5 ~ #4	#4 @ 18"	#4 @ 10"	10' - 0"
12' - 0"	3' - 0"	5"	3 ~ #4	#4 @ 18"	#4 @ 12"	3' - 9"	5"	5 ~ #4	#4 @ 18"	#4 @ 10"	3' - 3"	5"	3 ~ #4	#4 @ 18"	#4 @ 10"	4' - 3"	5"	5 ~ #4	#4 @ 18"	#5 @ 12"	12' - 0"
14' - 0"	3' - 3"	5"	3 ~ #4	#4 @ 18"	#4 @ 10"	4' - 3"	5"	5 ~ #4	#4 @ 18"	#5 @ 11"	3' - 9"	5"	3 ~ #4	#4 @ 18"	#4 @ 9"	4' - 9"	5"	5 ~ #4	#4 @ 18"	#5 @ 8"	14' - 0"
16' - 0"	3' - 9"	5"	5 ~ #4	#4 @ 18"	#4 @ 9"	4' - 9"	5"	5 ~ #4	#4 @ 18"	#6 @ 12"	4' - 3"	5"	5 ~ #4	#4 @ 18"	#5 @ 11"	5' - 6"	5"	5 ~ #4	#4 @ 18"	#6 @ 9"	16' - 0"
18' - 0"	4' - 0"	5"	5 ~ #4	#4 @ 18"	#5 @ 11"	5' - 3"	5"	5 ~ #4	#4 @ 18"	#6 @ 9"	4' - 6"	5"	5 ~ #4	#4 @ 18"	#6 @ 12"	6' - 0"	6"	5 ~ #4	#4 @ 18"	#6 @ 9"	18' - 0"
20' - 0"	5' - 0"	5"	5 ~ #4	#4 @ 18"	#5 @ 9"	6' - 0"	6"	5 ~ #4	#4 @ 18"	#6 @ 9"	5' - 3"	5"	5 ~ #4	#4 @ 18"	#6 @ 10"	6' - 6"	6"	5 ~ #4	#4 @ 12"	#6 @ 7 1/4"	20' - 0"
22' - 0"	5' - 6"	5"	5 ~ #4	#4 @ 18"	#5 @ 7"	6' - 3"	6"	5 ~ #4	#4 @ 12"	#6 @ 8"	5' - 9"	6"	5 ~ #4	#4 @ 18"	#6 @ 9"	7' - 0"	7"	5 ~ #4	#4 @ 11"	#6 @ 7"	22' - 0"
24' - 0"	6' - 0"	5"	5 ~ #4	#4 @ 15"	#5 @ 6"	6' - 9"	7"	5 ~ #4	#4 @ 11"	#6 @ 8"	6' - 3"	6"	5 ~ #4	#4 @ 12"	#6 @ 8"	7' - 6"	7"	5 ~ #4	#4 @ 9"	#6 @ 6 1/4"	24' - 0"

t = WALL THICKNESS

NOTES

1. Wall to be designated Noise Barrier Wall Type 2A, 2B, 2C or 2D. The Contract specifies actual wall designations.
2. For intermediate wall heights not listed, use the next higher H.
3. Panels shall have at least 3 feet of level ground on each side.
4. Construction joints in the footing shall be spaced at 120 feet maximum.

WIND EXPOSURE & VELOCITY		
NOISE BARRIER TYPE	WIND EXPOSURE	WIND VELOCITY (MPH)
2A	B1	80
2B	B1	90
2C	B2	80
2D	B2	90

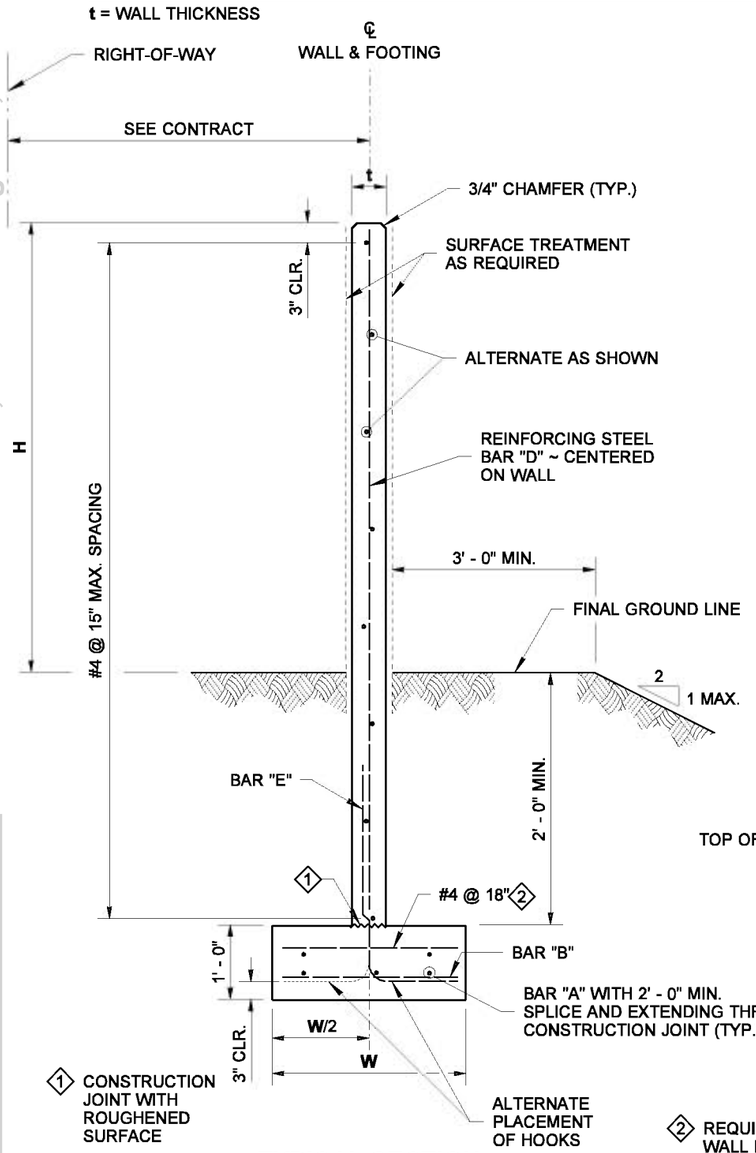

TYPICAL SECTION

2 REQUIRED FOR WALLS 24' - 0" ~ TYPE 2C, WALL HEIGHT 22' - 0" & 24' - 0" ~ TYPE 2B & WALLS 20' - 0", 22' - 0" & 24' - 0" ~ TYPE 2D

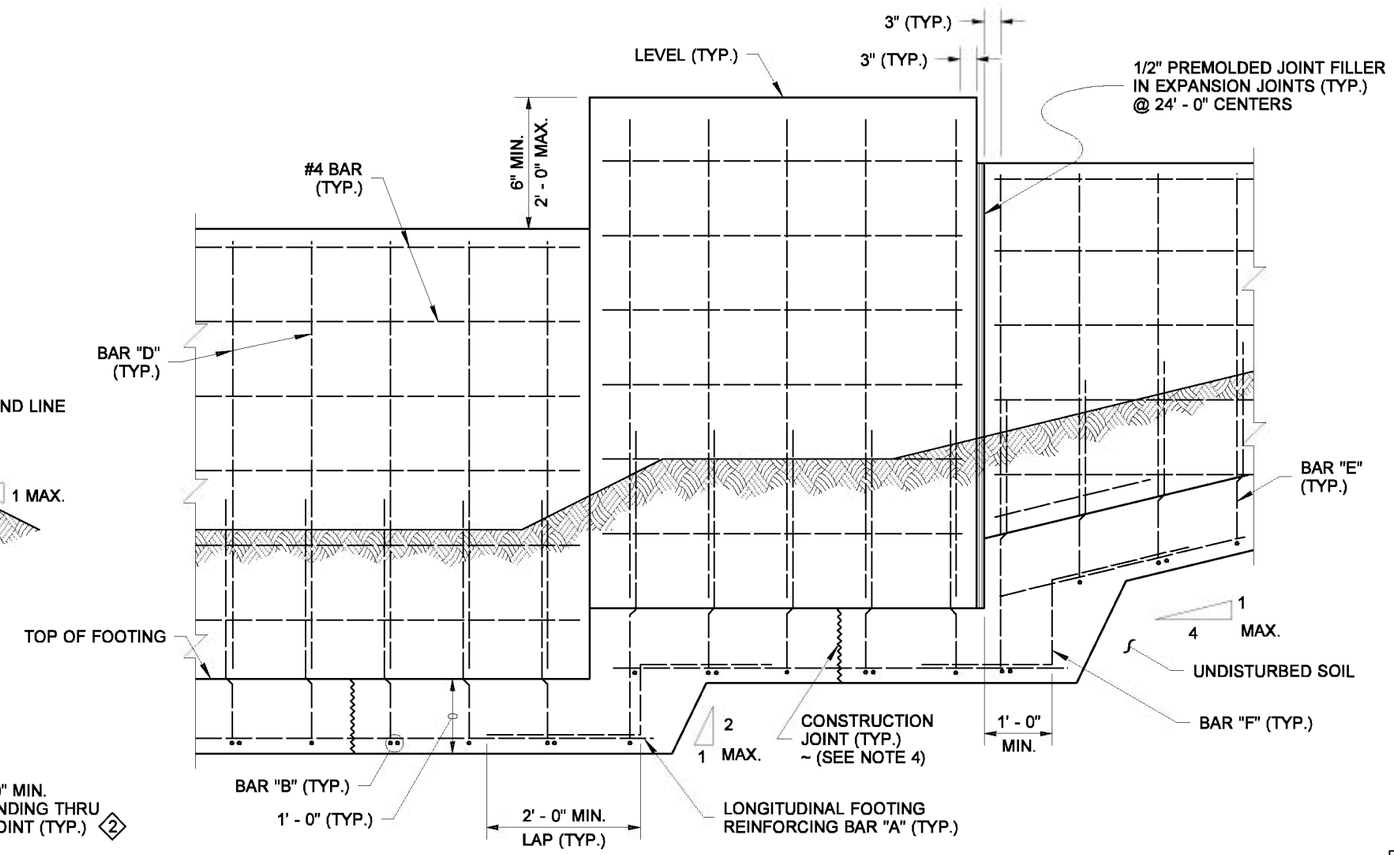

ELEVATION

CAST-IN-PLACE CONCRETE WALL ON SPREAD FOOTING

EXPIRES AUGUST 23, 2006

NOTE: THIS PLAN IS NOT A LEGAL ENGINEERING DOCUMENT BUT AN ELECTRONIC DUPLICATE. THE ORIGINAL, SIGNED BY THE ENGINEER AND APPROVED FOR PUBLICATION, IS KEPT ON FILE AT THE WASHINGTON STATE DEPARTMENT OF TRANSPORTATION. A COPY MAY BE OBTAINED UPON REQUEST.

NOISE BARRIER WALL TYPE 2

STANDARD PLAN D-2.04-00

SHEET 1 OF 2 SHEETS

APPROVED FOR PUBLICATION

Harold J. Peterfeso — STATE DESIGN ENGINEER

11-10-05 — DATE

Washington State Department of Transportation

EFFECTIVE: AUGUST 6, 2012 TO August 4, 2013
EFFECTIVE: AUGUST 6, 2012 TO August 4, 2013
EFFECTIVE: AUGUST 6, 2012 TO August 4, 2013
EFFECTIVE: AUGUST 6, 2012 TO August 4, 2013

EFFECTIVE: AUGUST 6, 2012 TO August 4, 2013
EFFECTIVE: AUGUST 6, 2012 TO August 4, 2013

DRAWN BY: ADAM COCHRAN

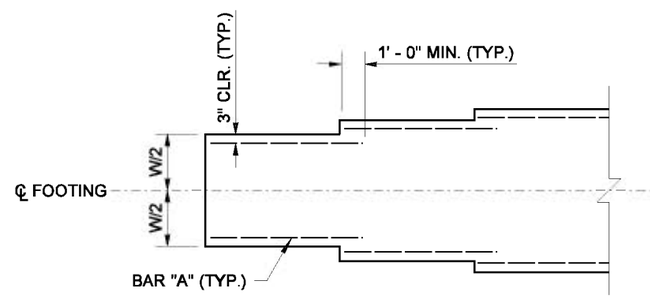

(TRANSVERSE BARS NOT SHOWN)

FOOTING WIDTH TRANSITION DETAIL
FOR LOCATIONS WITHOUT FOOTING STEP

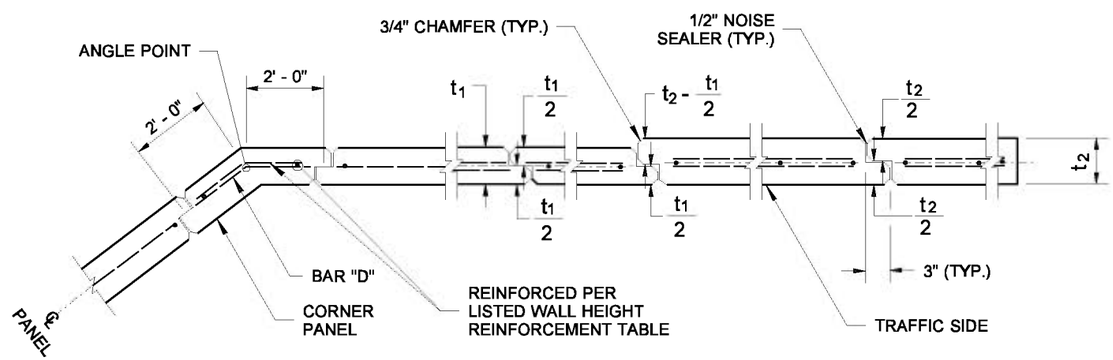

JOINT AND CORNER DETAIL

CAST-IN-PLACE CONCRETE WALL ON SPREAD FOOTING

EXPIRES AUGUST 23, 2006

NOTE: THIS PLAN IS NOT A LEGAL ENGINEERING DOCUMENT BUT AN ELECTRONIC DUPLICATE. THE ORIGINAL, SIGNED BY THE ENGINEER AND APPROVED FOR PUBLICATION, IS KEPT ON FILE AT THE WASHINGTON STATE DEPARTMENT OF TRANSPORTATION. A COPY MAY BE OBTAINED UPON REQUEST.

NOISE BARRIER WALL TYPE 2

STANDARD PLAN D-2.04-00

SHEET 2 OF 2 SHEETS

APPROVED FOR PUBLICATION

Harold J. Peterfeso — STATE DESIGN ENGINEER
11-10-05 — DATE

Washington State Department of Transportation

EFFECTIVE: AUGUST 6, 2012 TO August 4, 2013
EFFECTIVE: AUGUST 6, 2012 TO August 4, 2013
EFFECTIVE: AUGUST 6, 2012 TO August 4, 2013
EFFECTIVE: AUGUST 6, 2012 TO August 4, 2013

EFFECTIVE: AUGUST 6, 2012 TO August 4, 2013
EFFECTIVE: AUGUST 6, 2012 TO August 4, 2013

DRAWN BY: ADAM COCHRAN

WALL HT H	TYPE 3A W	TYPE 3A t	TYPE 3A BARS "A"&"F"	TYPE 3A BAR "B"	TYPE 3A BARS "D"&"E"	TYPE 3B W	TYPE 3B t	TYPE 3B BARS "A"&"F"	TYPE 3B BAR "B"	TYPE 3B BARS "D"&"E"	TYPE 3C W	TYPE 3C t	TYPE 3C BARS "A"&"F"	TYPE 3C BAR "B"	TYPE 3C BARS "D"&"E"	TYPE 3D W	TYPE 3D t	TYPE 3D BARS "A"&"F"	TYPE 3D BAR "B"	TYPE 3D BARS "D"&"E"	WALL HT H
6' - 0"	2' - 0"	5"	3 ~ #4	#4 @ 18"	#3 @ 15"	2' - 3"	5"	3 ~ #4	#4 @ 18"	#3 @ 12"	2' - 0"	5"	3 ~ #4	#4 @ 18"	#3 @ 15"	2' - 6"	5"	3 ~ #4	#4 @ 18"	#3 @ 11"	6' - 0"
8' - 0"	2' - 3"	5"	3 ~ #4	#4 @ 18"	#3 @ 12"	2' - 9"	5"	3 ~ #4	#4 @ 18"	#4 @ 15"	2' - 6"	5"	3 ~ #4	#4 @ 18"	#3 @ 10"	3' - 3"	5"	5 ~ #4	#4 @ 18"	#4 @ 12"	8' - 0"
10' - 0"	2' - 6"	5"	3 ~ #4	#4 @ 18"	#3 @ 9"	3' - 3"	5"	5 ~ #4	#4 @ 18"	#4 @ 10"	2' - 9"	5"	3 ~ #4	#4 @ 18"	#4 @ 12"	3' - 6"	5"	5 ~ #4	#4 @ 18"	#4 @ 10"	10' - 0"
12' - 0"	3' - 0"	5"	3 ~ #4	#4 @ 18"	#4 @ 12"	3' - 9"	5"	5 ~ #4	#4 @ 18"	#4 @ 10"	3' - 3"	5"	3 ~ #4	#4 @ 18"	#4 @ 10"	4' - 3"	5"	5 ~ #4	#4 @ 18"	#5 @ 12"	12' - 0"
14' - 0"	3' - 3"	5"	3 ~ #4	#4 @ 18"	#4 @ 10"	4' - 3"	5"	5 ~ #4	#4 @ 18"	#5 @ 11"	3' - 9"	5"	5 ~ #4	#4 @ 18"	#4 @ 9"	5' - 3"	5"	5 ~ #4	#4 @ 18"	#5 @ 8"	14' - 0"
16' - 0"	3' - 9"	5"	5 ~ #4	#4 @ 18"	#4 @ 9"	5' - 3"	5"	5 ~ #4	#4 @ 18"	#6 @ 12"	4' - 3"	5"	5 ~ #4	#4 @ 18"	#5 @ 11"	6' - 3"	5"	5 ~ #4	#4 @ 18"	#6 @ 9"	16' - 0"
18' - 0"	4' - 0"	5"	5 ~ #4	#4 @ 18"	#5 @ 11"	6' - 0"	5"	5 ~ #4	#4 @ 18"	#6 @ 9"	5' - 0"	5"	5 ~ #4	#4 @ 18"	#6 @ 12"	7' - 0"	6"	5 ~ #4	#4 @ 18"	#6 @ 9"	18' - 0"
20' - 0"	5' - 0"	5"	5 ~ #4	#4 @ 18"	#6 @ 12"	7' - 0"	6"	5 ~ #4	#4 @ 18"	#6 @ 9"	5' - 9"	5"	5 ~ #4	#4 @ 18"	#6 @ 9"	8' - 0"	6"	6 ~ #4	#4 @ 12"	#6 @ 6"	20' - 0"
22' - 0"	5' - 6"	5"	5 ~ #4	#4 @ 18"	#6 @ 9"	7' - 9"	6"	6 ~ #4	#4 @ 12"	#6 @ 6"	6' - 6"	6"	5 ~ #4	#4 @ 18"	#6 @ 9"	9' - 0"	7"	7 ~ #4	#4 @ 12"	#6 @ 6"	22' - 0"
24' - 0"	6' - 3"	5"	5 ~ #4	#4 @ 18"	#6 @ 9"	8' - 6"	7"	6 ~ #4	#4 @ 12"	#6 @ 6"	7' - 6"	6"	6 ~ #4	#4 @ 12"	#6 @ 6"	9' - 9"	7"	7 ~ #4	#4 @ 15"	#6 @ 6"	24' - 0"

t = WALL THICKNESS

NOTES

1. Wall to be designated Noise Barrier Wall Type 3A, 3B, 3C or 3D. The Contract specifies actual wall designations.
2. For intermediate wall heights not listed, use the next higher H.
3. Panels shall have at least 3 feet of level ground on each side.
4. Construction joints in the footing shall be spaced at 120 feet maximum.

WIND EXPOSURE & VELOCITY		
NOISE BARRIER TYPE	WIND EXPOSURE	WIND VELOCITY (MPH)
3A	B1	80
3B	B1	90
3C	B2	80
3D	B2	90

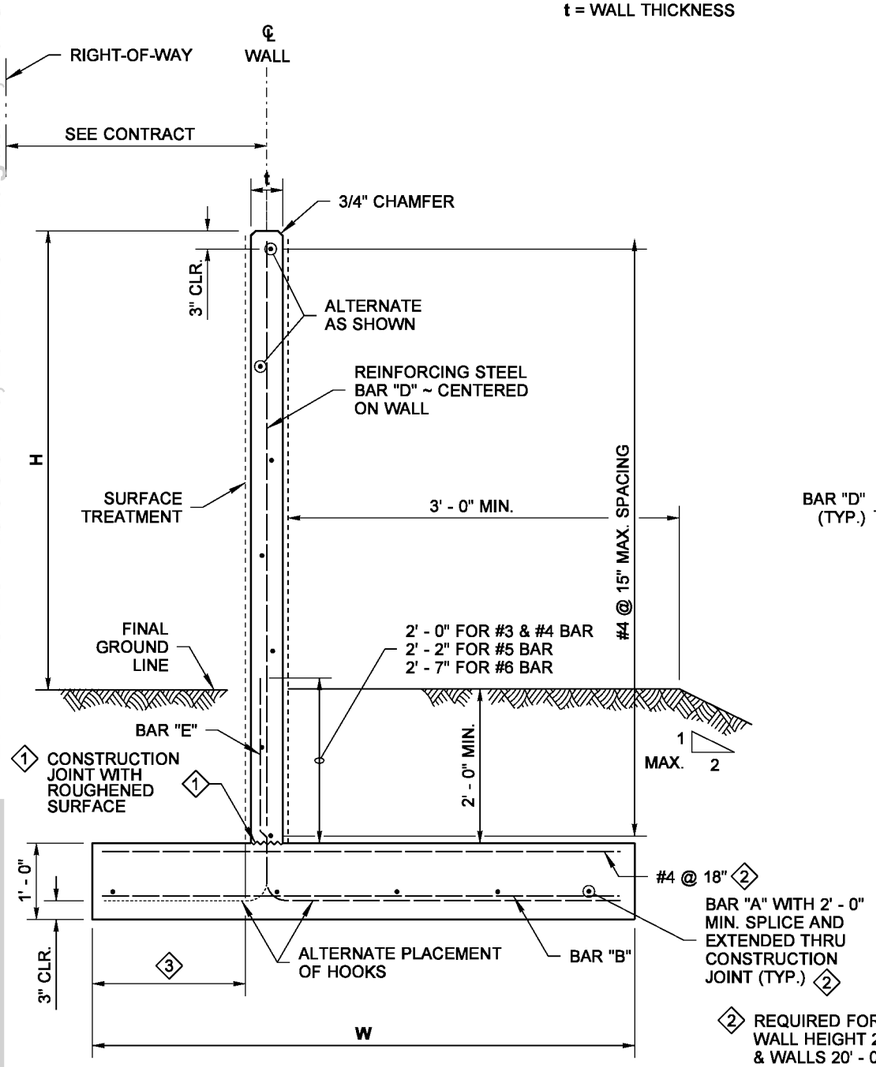

TYPICAL SECTION

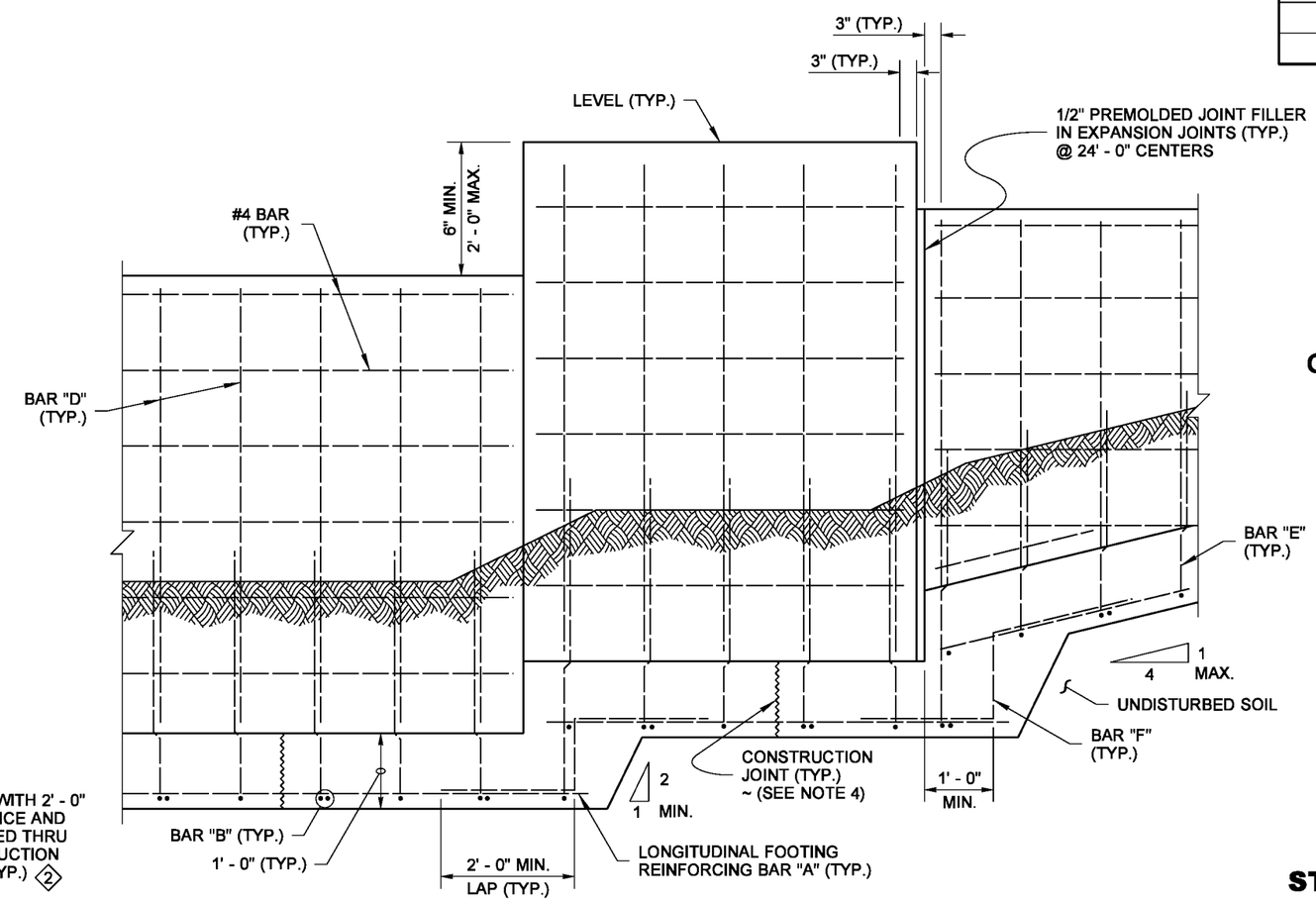

ELEVATION

2 REQUIRED FOR WALLS 24' - 0" ~ TYPE 3C, WALL HEIGHT 22' - 0" & 24' - 0" ~ TYPE 3B, & WALLS 20' - 0", 22' - 0" & 24' - 0" ~ TYPE 3D

3 WHEN W IS : < 2' - 6" ..... CENTER WALL ON FOOTING
2' - 6' ≤ W < 4' - 6" ..... DIM. = 1' - 0"
≥ 4' - 6" ..... DIM. = 2' - 0"

CAST-IN-PLACE CONCRETE WALL ON OFFSET SPREAD FOOTING

NOTE: THIS PLAN IS NOT A LEGAL ENGINEERING DOCUMENT BUT AN ELECTRONIC DUPLICATE. THE ORIGINAL, SIGNED BY THE ENGINEER AND APPROVED FOR PUBLICATION, IS KEPT ON FILE AT THE WASHINGTON STATE DEPARTMENT OF TRANSPORTATION. A COPY MAY BE OBTAINED UPON REQUEST.

NOISE BARRIER WALL TYPE 3

STANDARD PLAN D-2.06-01

SHEET 1 OF 2 SHEETS

APPROVED FOR PUBLICATION

Pasco Bakotich III — STATE DESIGN ENGINEER

01-06-09 — DATE

Washington State Department of Transportation

EFFECTIVE: AUGUST 6, 2012 TO August 4, 2013
EFFECTIVE: AUGUST 6, 2012 TO August 4, 2013
EFFECTIVE: AUGUST 6, 2012 TO August 4, 2013
EFFECTIVE: AUGUST 6, 2012 TO August 4, 2013

EFFECTIVE: AUGUST 6, 2012 TO August 4, 2013
EFFECTIVE: AUGUST 6, 2012 TO August 4, 2013

DRAWN BY: ADAM COCHRAN

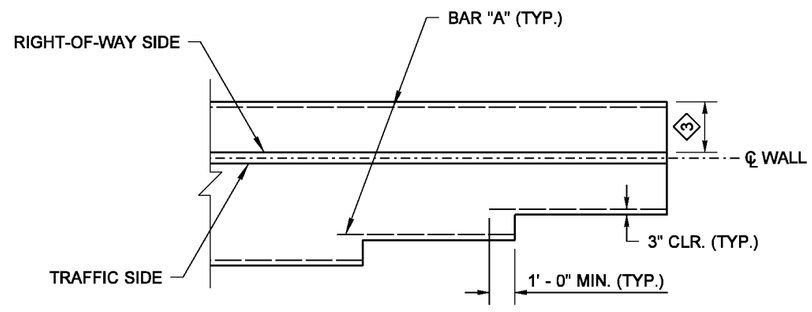

(TRANSVERSE BARS NOT SHOWN)

FOOTING WIDTH TRANSITION DETAIL
FOR LOCATIONS WITHOUT FOOTING STEP

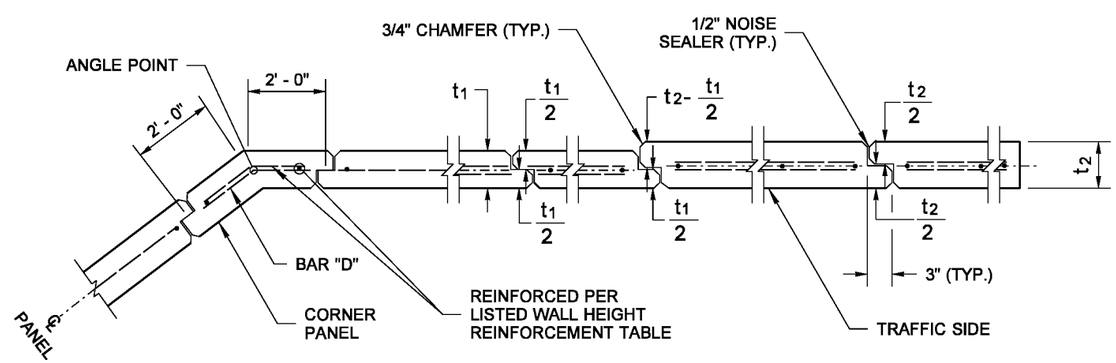

JOINT AND CORNER DETAIL

CAST-IN-PLACE CONCRETE WALL ON OFFSET SPREAD FOOTING

BIJAN KHALEGHI
STATE OF WASHINGTON
27695
STRUCTURAL ENGINEER
PROFESSIONAL ENGINEER

NOTE: THIS PLAN IS NOT A LEGAL ENGINEERING DOCUMENT BUT AN ELECTRONIC DUPLICATE. THE ORIGINAL, SIGNED BY THE ENGINEER AND APPROVED FOR PUBLICATION, IS KEPT ON FILE AT THE WASHINGTON STATE DEPARTMENT OF TRANSPORTATION. A COPY MAY BE OBTAINED UPON REQUEST.

NOISE BARRIER WALL TYPE 3

STANDARD PLAN D-2.06-01

SHEET 2 OF 2 SHEETS

APPROVED FOR PUBLICATION

Pasco Bakotich III — STATE DESIGN ENGINEER
01-06-09 — DATE

Washington State Department of Transportation

EFFECTIVE: AUGUST 6, 2012 TO August 4, 2013
EFFECTIVE: AUGUST 6, 2012 TO August 4, 2013
EFFECTIVE: AUGUST 6, 2012 TO August 4, 2013
EFFECTIVE: AUGUST 6, 2012 TO August 4, 2013

EFFECTIVE: AUGUST 6, 2012 TO August 4, 2013
EFFECTIVE: AUGUST 6, 2012 TO August 4, 2013

DRAWN BY: ADAM COCHRAN

WALL HT H	TYPE 4A t	TYPE 4A SHAFT DIAM. D	TYPE 4A DEPTH D1	TYPE 4A DEPTH D2	TYPE 4A SHAFT REINF. BAR"P"	TYPE 4A BARS "C"&"D"	TYPE 4B t	TYPE 4B SHAFT DIAM. D	TYPE 4B DEPTH D1	TYPE 4B DEPTH D2	TYPE 4B SHAFT REINF. BAR"P"	TYPE 4B BARS "C"&"D"
6' - 0"	5"	12"	5' - 3"	4' - 9"	6 ~ #5	#3 @ 15"	5"	12"	6' - 0"	5' - 3"	6 ~ #5	#3 @ 15"
8' - 0"	5"	12"	6' - 0"	5' - 3"	6 ~ #5	#3 @ 15"	5"	12"	7' - 0"	6' - 0"	6 ~ #5	#3 @ 12"
10' - 0"	5"	12"	6' - 9"	5' - 9"	6 ~ #5	#3 @ 13"	5"	12"	7' - 9"	6' - 9"	6 ~ #6	#4 @ 15"
12' - 0"	5"	12"	7' - 3"	6' - 3"	6 ~ #5	#3 @ 9"	5"	12"	8' - 6"	7' - 3"	6 ~ #7	#4 @ 10"
14' - 0"	5"	12"	7' - 9"	6' - 9"	6 ~ #6	#4 @ 12"	5"	14"	8' - 6"	7' - 3"	8 ~ #7	#4 @ 9"
16' - 0"	5"	12"	8' - 6"	7' - 3"	6 ~ #7	#4 @ 10"	5"	16"	9' - 3"	8' - 0"	8 ~ #7	#5 @ 11"
18' - 0"	5"	12"	9' - 0"	7' - 9"	6 ~ #8	#4 @ 9"	5"	16"	9' - 3"	8' - 0"	6 ~ #8	#5 @ 8"
20' - 0"	5"	12"	9' - 3"	7' - 9"	6 ~ #9	#4 @ 7"	5"	16"	10' - 0"	8' - 6"	8 ~ #7	#5 @ 7"
22' - 0"	5"	14"	9' - 3"	7' - 9"	8 ~ #7	#4 @ 6"	6"	16"	10' - 6"	9' - 0"	8 ~ #8	#5 @ 6"
24' - 0"	5"	14"	9' - 9"	8' - 3"	8 ~ #8	#5 @ 8"	6"	16"	11' - 3"	9' - 6"	8 ~ #8	#6 @ 7"

WALL HT H	TYPE 4C t	TYPE 4C SHAFT DIAM. D	TYPE 4C DEPTH D1	TYPE 4C DEPTH D2	TYPE 4C SHAFT REINF. BAR"P"	TYPE 4C BARS "C"&"D"	TYPE 4D t	TYPE 4D SHAFT DIAM. D	TYPE 4D DEPTH D1	TYPE 4D DEPTH D2	TYPE 4D SHAFT REINF. BAR"P"	TYPE 4D BARS "C"&"D"
6' - 0"	5"	12"	5' - 9"	5' - 0"	6 ~ #5	#3 @ 15"	5"	12"	6' - 6"	5' - 9"	6 ~ #5	#3 @ 15"
8' - 0"	5"	12"	6' - 6"	5' - 6"	6 ~ #5	#3 @ 15"	5"	12"	7' - 6"	6' - 6"	6 ~ #6	#3 @ 10"
10' - 0"	5"	12"	7' - 3"	6' - 3"	6 ~ #5	#3 @ 10"	5"	12"	8' - 3"	7' - 0"	6 ~ #7	#4 @ 12"
12' - 0"	5"	12"	7' - 9"	6' - 9"	6 ~ #6	#4 @ 12"	5"	14"	8' - 6"	7' - 3"	8 ~ #7	#4 @ 10"
14' - 0"	5"	12"	8' - 6"	7' - 3"	6 ~ #7	#4 @ 10"	5"	14"	9' - 3"	8' - 0"	8 ~ #7	#5 @ 11"
16' - 0"	5"	14"	8' - 6"	7' - 3"	8 ~ #6	#4 @ 9"	5"	16"	9' - 6"	8' - 0"	8 ~ #8	#5 @ 8"
18' - 0"	5"	14"	9' - 0"	7' - 9"	8 ~ #7	#5 @ 11"	5"	16"	10' - 0"	8' - 6"	8 ~ #8	#6 @ 9"
20' - 0"	5"	14"	9' - 9"	8' - 3"	8 ~ #8	#5 @ 8"	6"	16"	10' - 9"	9' - 3"	8 ~ #9	#6 @ 9"
22' - 0"	5"	14"	10' - 3"	8' - 9"	8 ~ #9	#5 @ 8"	6"	16"	11' - 6"	9' - 9"	8 ~ #10	#6 @ 7"
24' - 0"	6"	16"	10' - 3"	8' - 9"	8 ~ #8	#6 @ 7"	7"	18"	11' - 6"	9' - 9"	8 ~ #10	#6 @ 7"

t = WALL THICKNESS

WIND EXPOSURE & VELOCITY		
NOISE BARRIER TYPE	WIND EXPOSURE	WIND VELOCITY (MPH)
4A	B1	80
4B	B1	90
4C	B2	80
4D	B2	90

SOIL TYPE	
SOIL TYPE	ANGLE OF INTERNAL FRICTION ϕ (DEGREES)
D1	32
D2	38

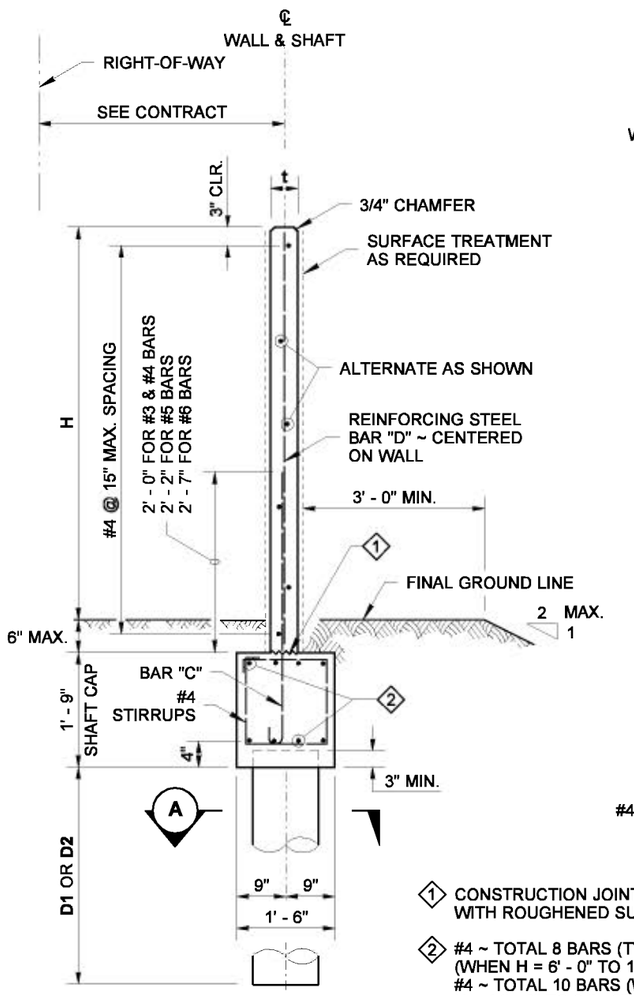

TYPICAL SECTION

1 CONSTRUCTION JOINT WITH ROUGHENED SURFACE

2 #4 ~ TOTAL 8 BARS (TYP.) (WHEN H = 6' - 0" TO 12' - 0") #4 ~ TOTAL 10 BARS (WHEN H = 14' - 0" TO 24' - 0") WITH 2' - 0" MIN. LAP SPLICE

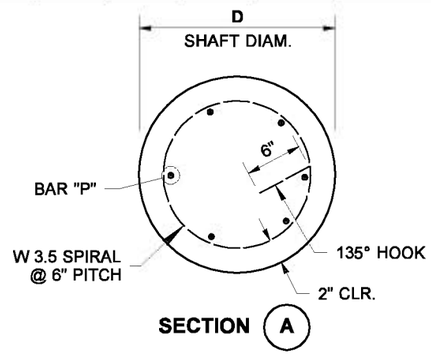

SECTION A

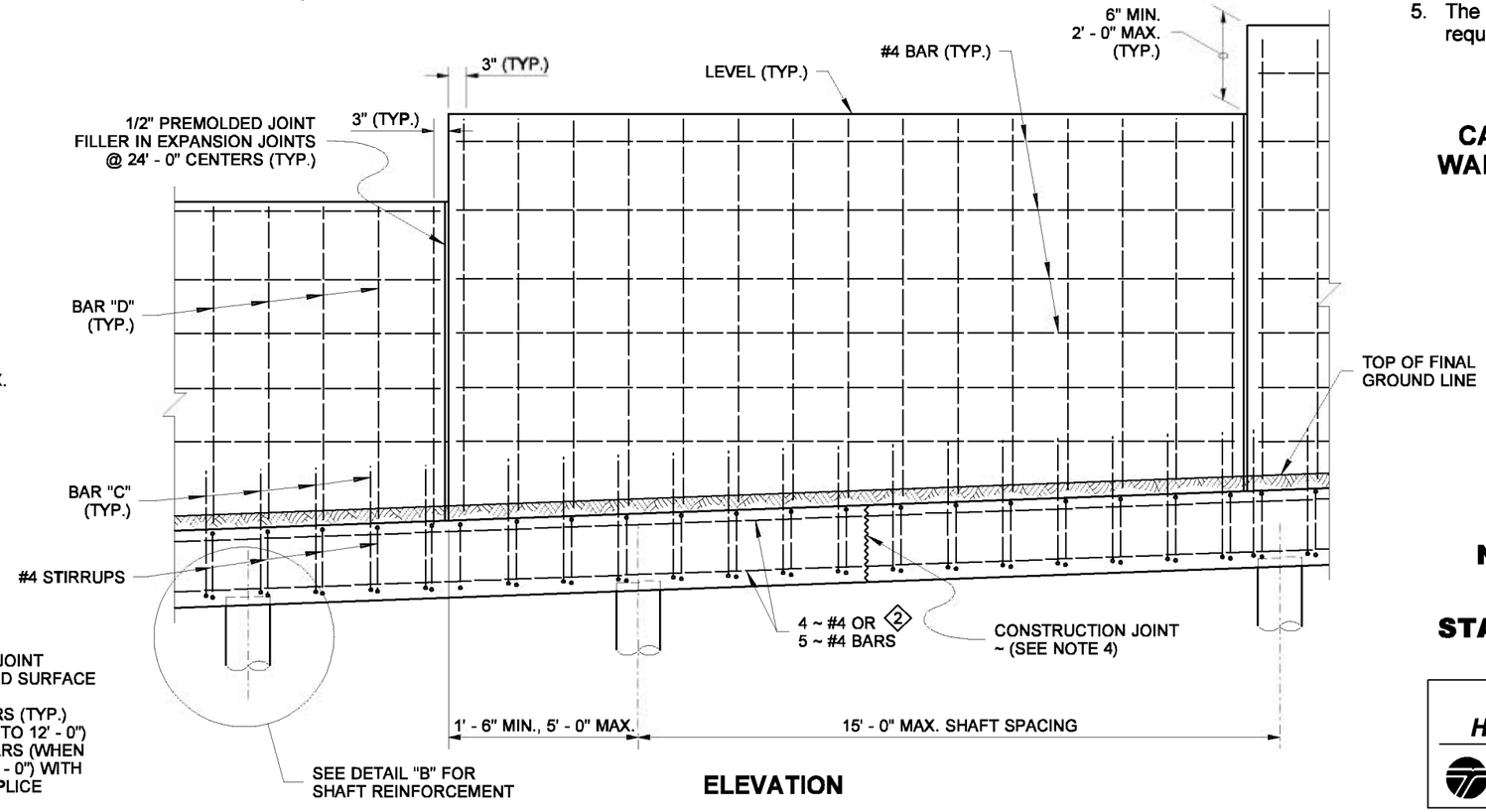

ELEVATION

NOTES

1. Wall to be designated Noise Barrier Wall Type 4A, 4B, 4C or 4D. The Contract specifies actual wall designations.
2. For intermediate wall heights, see next higher H.
3. Panels shall have at least 3 feet of level ground on each side.
4. Construction joints in the shaft cap shall be spaced at 120 feet maximum.
5. The Contract specifies actual foundation requirements D1 or D2.

CAST-IN-PLACE CONCRETE WALL ON SHAFT FOUNDATION

EXPIRES AUGUST 23, 2006

NOTE: THIS PLAN IS NOT A LEGAL ENGINEERING DOCUMENT BUT AN ELECTRONIC DUPLICATE. THE ORIGINAL, SIGNED BY THE ENGINEER AND APPROVED FOR PUBLICATION, IS KEPT ON FILE AT THE WASHINGTON STATE DEPARTMENT OF TRANSPORTATION. A COPY MAY BE OBTAINED UPON REQUEST.

NOISE BARRIER WALL TYPE 4

STANDARD PLAN D-2.08-00

SHEET 1 OF 2 SHEETS

APPROVED FOR PUBLICATION

Harold J. Peterfeso — STATE DESIGN ENGINEER

11-10-05 — DATE

Washington State Department of Transportation

EFFECTIVE: AUGUST 6, 2012 TO August 4, 2013
EFFECTIVE: AUGUST 6, 2012 TO August 4, 2013
EFFECTIVE: AUGUST 6, 2012 TO August 4, 2013
EFFECTIVE: AUGUST 6, 2012 TO August 4, 2013

EFFECTIVE: AUGUST 6, 2012 TO August 4, 2013
EFFECTIVE: AUGUST 6, 2012 TO August 4, 2013

DRAWN BY: ADAM COCHRAN

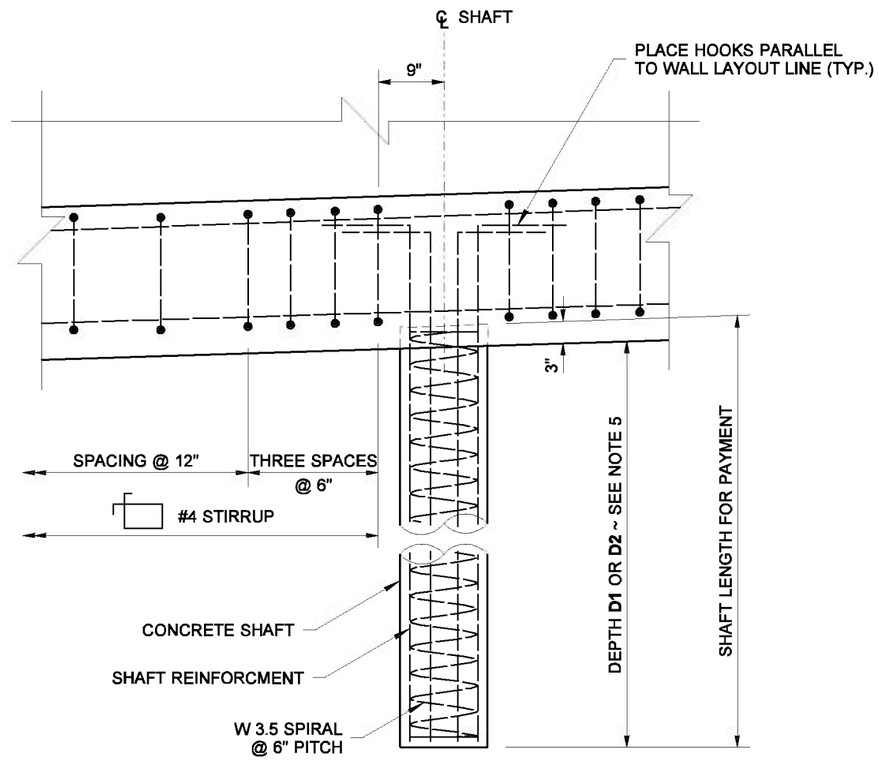

DETAIL "B"

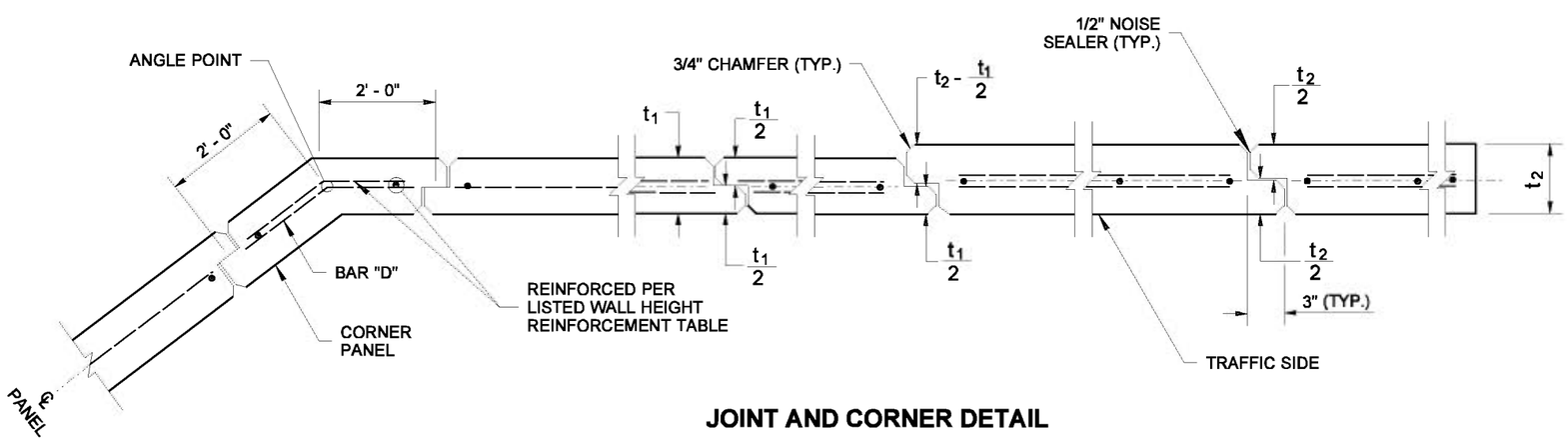

JOINT AND CORNER DETAIL

CAST-IN-PLACE CONCRETE WALL ON SHAFT FOUNDATION

BIJAN KHALEGHI
STATE OF WASHINGTON
27695
REGISTERED
PROFESSIONAL ENGINEER

EXPIRES AUGUST 23, 2006

NOTE: THIS PLAN IS NOT A LEGAL ENGINEERING DOCUMENT BUT AN ELECTRONIC DUPLICATE. THE ORIGINAL, SIGNED BY THE ENGINEER AND APPROVED FOR PUBLICATION, IS KEPT ON FILE AT THE WASHINGTON STATE DEPARTMENT OF TRANSPORTATION. A COPY MAY BE OBTAINED UPON REQUEST.

NOISE BARRIER WALL TYPE 4

STANDARD PLAN D-2.08-00

SHEET 2 OF 2 SHEETS

APPROVED FOR PUBLICATION

Harold J. Peterfeso — STATE DESIGN ENGINEER
11-10-05 — DATE

Washington State Department of Transportation

EFFECTIVE: AUGUST 6, 2012 TO August 4, 2013
EFFECTIVE: AUGUST 6, 2012 TO August 4, 2013
EFFECTIVE: AUGUST 6, 2012 TO August 4, 2013
EFFECTIVE: AUGUST 6, 2012 TO August 4, 2013

EFFECTIVE: AUGUST 6, 2012 TO August 4, 2013
EFFECTIVE: AUGUST 6, 2012 TO August 4, 2013

DRAWN BY: ADAM COCHRAN

WALL HT H	TYPE 6A W	TYPE 6A X	TYPE 6A BARS "B"&"C"	TYPE 6A BARS "D"&"E"	TYPE 6B W	TYPE 6B X	TYPE 6B BARS "B"&"C"	TYPE 6B BARS "D"&"E"	TYPE 6C W	TYPE 6C X	TYPE 6C BARS "B"&"C"	TYPE 6C BARS "D"&"E"	TYPE 6D W	TYPE 6D X	TYPE 6D BARS "B"&"C"	TYPE 6D BARS "D"&"E"	WALL HT H
6' - 0"	5' - 6"	3"	#4 @ 12"	#4 @ 12"	5' - 6"	3"	#4 @ 12"	#4 @ 12"	5' - 6"	3"	#4 @ 12"	#4 @ 12"	5' - 6"	3"	#4 @ 12"	#4 @ 12"	6' - 0"
8' - 0"	5' - 3"	3"	#4 @ 12"	#4 @ 12"	5' - 3"	3"	#4 @ 12"	#4 @ 12"	5' - 3"	3"	#4 @ 12"	#4 @ 12"	5' - 3"	3"	#4 @ 12"	#4 @ 12"	8' - 0"
10' - 0"	5' - 3"	3"	#4 @ 12"	#4 @ 12"	5' - 3"	3"	#4 @ 12"	#4 @ 12"	5' - 3"	3"	#4 @ 12"	#4 @ 12"	5' - 3"	3"	#4 @ 12"	#4 @ 12"	10' - 0"
12' - 0"	5' - 0"	3"	#4 @ 12"	#4 @ 12"	5' - 0"	3"	#4 @ 12"	#4 @ 12"	5' - 0"	3"	#4 @ 12"	#4 @ 12"	5' - 0"	3"	#4 @ 12"	#4 @ 12"	12' - 0"
14' - 0"	4' - 9"	3"	#4 @ 12"	#4 @ 12"	5' - 0"	3"	#4 @ 11"	#4 @ 11"	4' - 9"	3"	#4 @ 12"	#4 @ 12"	5' - 3"	3"	#4 @ 10"	#4 @ 10"	14' - 0"
16' - 0"	5' - 0"	3"	#4 @ 12"	#4 @ 12"	5' - 0"	3"	#4 @ 10"	#4 @ 10"	5' - 0"	3"	#4 @ 10"	#4 @ 10"	5' - 6"	3"	#4 @ 12"	#5 @ 12"	16' - 0"
18' - 0"	5' - 0"	3"	#4 @ 10"	#4 @ 10"	5' - 3"	3' - 0"	#4 @ 12"	#5 @ 12"	5' - 0"	3' - 0"	#4 @ 10"	#4 @ 10"	5' - 9"	3"	#4 @ 9"	#5 @ 9"	18' - 0"

WIND EXPOSURE & VELOCITY		
NOISE BARRIER TYPE	WIND EXPOSURE	WIND VELOCITY (MPH)
6A	B1	80
6B	B1	90
6C	B2	80
6D	B2	90

NOTES

1. Wall to be designated Noise Barrier Wall Type 6A, 6B, 6C or 6D. The Contract specifies actual wall designations.
2. For intermediate wall heights, use the next higher H.
3. Panels shall have at least 3 feet of level ground on each side.
4. Construction joints in the foundation shall be spaced at 120 feet maximum.

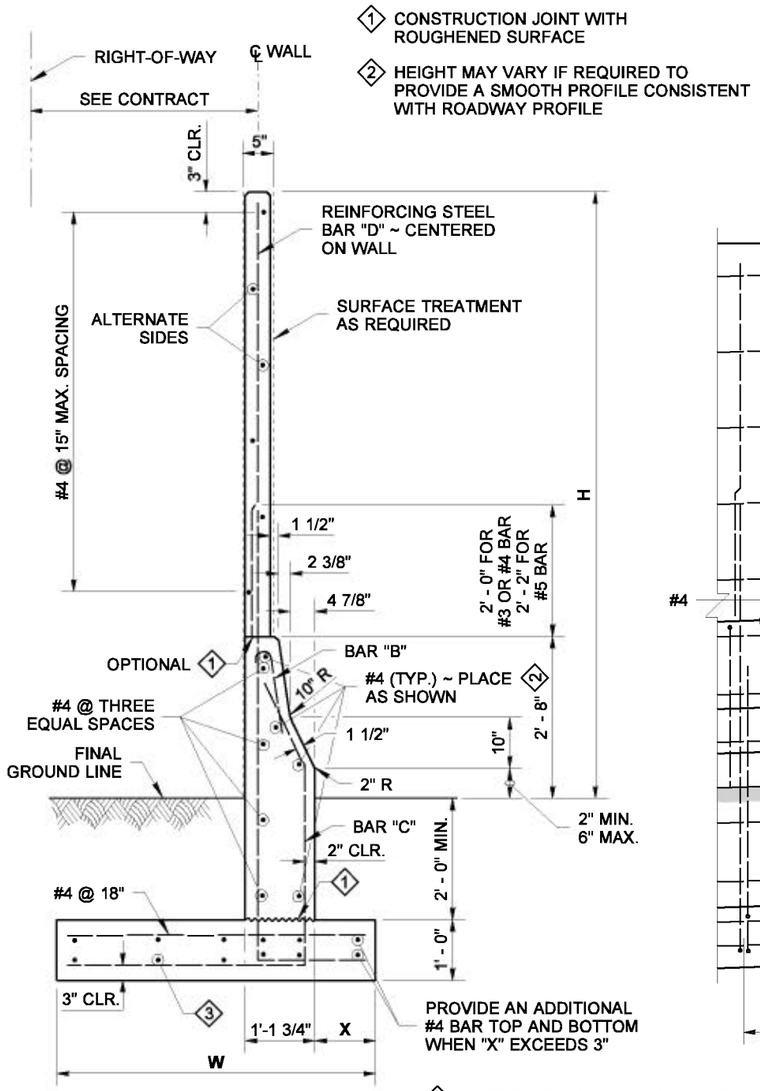

1 CONSTRUCTION JOINT WITH ROUGHENED SURFACE

2 HEIGHT MAY VARY IF REQUIRED TO PROVIDE A SMOOTH PROFILE CONSISTENT WITH ROADWAY PROFILE

3 #4 (TYP.) PLACE AS SHOWN WITH 2' - 0" SPLICE AND EXTENDING THRU CONSTRUCTION JOINTS

TYPICAL SECTION

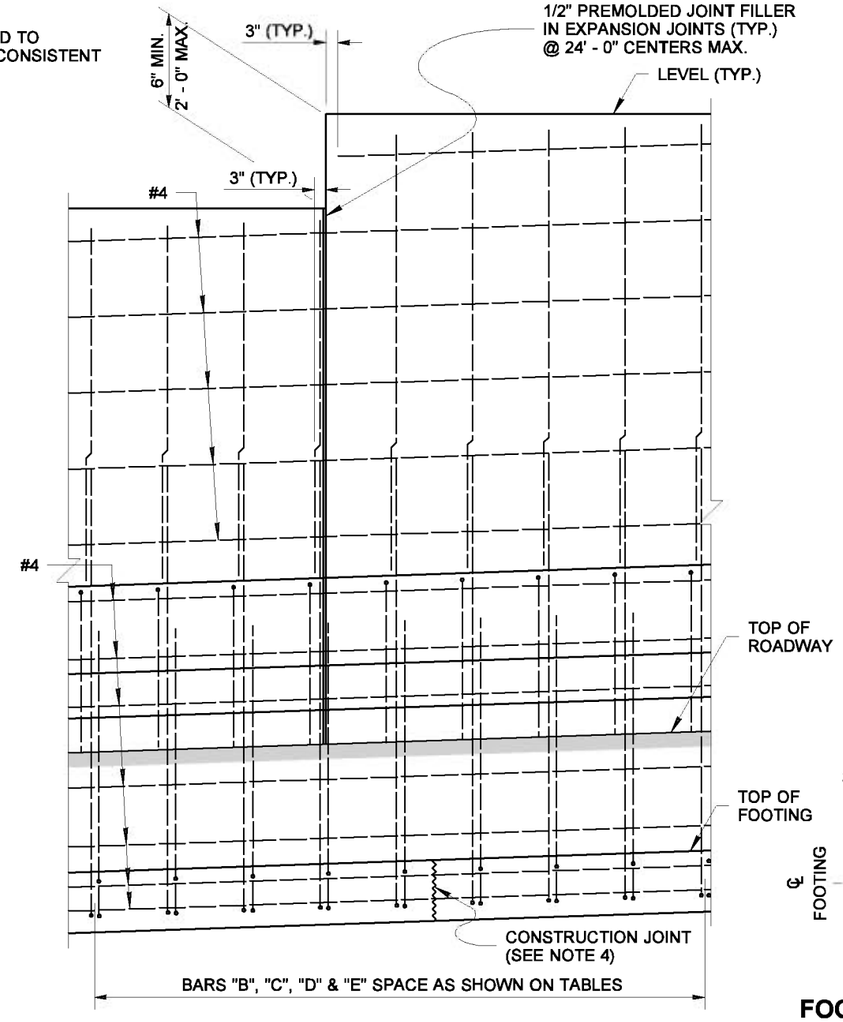

ELEVATION

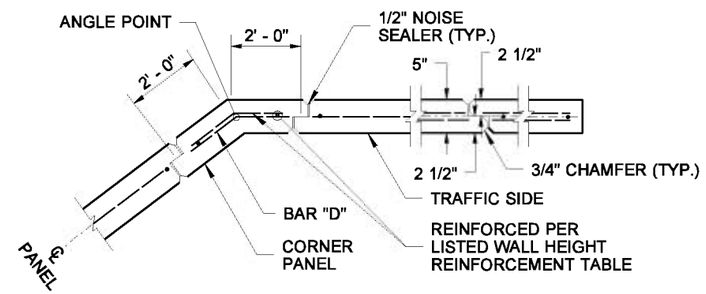

JOINT AND CORNER DETAIL

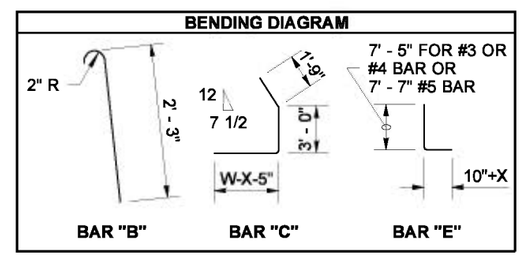

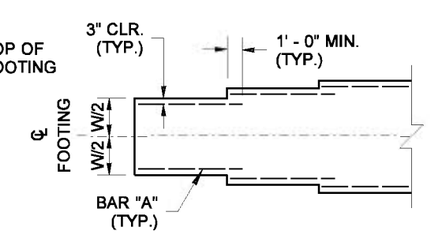

FOOTING WIDTH TRANSITION DETAIL

(FOR LOCATIONS WITHOUT FOOTING STEP)

CAST-IN-PLACE CONCRETE WALL W/ TRAFFIC BARRIER ON SPREAD FOOTING

BIJAN KHALEGHI
STATE OF WASHINGTON
27695
REGISTERED PROFESSIONAL ENGINEER

EXPIRES AUGUST 23, 2006

NOTE: THIS PLAN IS NOT A LEGAL ENGINEERING DOCUMENT BUT AN ELECTRONIC DUPLICATE. THE ORIGINAL, SIGNED BY THE ENGINEER AND APPROVED FOR PUBLICATION, IS KEPT ON FILE AT THE WASHINGTON STATE DEPARTMENT OF TRANSPORTATION. A COPY MAY BE OBTAINED UPON REQUEST.

NOISE BARRIER WALL TYPE 6

STANDARD PLAN D-2.14-00

SHEET 1 OF 1 SHEET

APPROVED FOR PUBLICATION

Harold J. Peterfeso — STATE DESIGN ENGINEER

11-10-05 — DATE

Washington State Department of Transportation

EFFECTIVE: AUGUST 6, 2012 TO August 4, 2013
EFFECTIVE: AUGUST 6, 2012 TO August 4, 2013
EFFECTIVE: AUGUST 6, 2012 TO August 4, 2013
EFFECTIVE: AUGUST 6, 2012 TO August 4, 2013

EFFECTIVE: AUGUST 6, 2012 TO August 4, 2013
EFFECTIVE: AUGUST 6, 2012 TO August 4, 2013

DRAWN BY: ADAM COCHRAN

WALL HT H	TYPE 6SSA W	TYPE 6SSA X	TYPE 6SSA BARS "B"&"C"	TYPE 6SSA BARS "D"&"E"	TYPE 6SSB W	TYPE 6SSB X	TYPE 6SSB BARS "B"&"C"	TYPE 6SSB BARS "D"&"E"	TYPE 6SSC W	TYPE 6SSC X	TYPE 6SSC BARS "B"&"C"	TYPE 6SSC BARS "D"&"E"	TYPE 6SSD W	TYPE 6SSD X	TYPE 6SSD BARS "B"&"C"	TYPE 6SSD BARS "D"&"E"	WALL HT H
6' - 0"	5' - 6"	3"	#4 @ 12"	#4 @ 12"	5' - 6"	3"	#4 @ 12"	#4 @ 12"	5' - 6"	3"	#4 @ 12"	#4 @ 12"	5' - 6"	3"	#4 @ 12"	#4 @ 12"	6' - 0"
8' - 0"	5' - 3"	3"	#4 @ 12"	#4 @ 12"	5' - 3"	3"	#4 @ 12"	#4 @ 12"	5' - 3"	3"	#4 @ 12"	#4 @ 12"	5' - 3"	3"	#4 @ 12"	#4 @ 12"	8' - 0"
10' - 0"	5' - 3"	3"	#4 @ 12"	#4 @ 12"	5' - 3"	3"	#4 @ 12"	#4 @ 12"	5' - 3"	3"	#4 @ 12"	#4 @ 12"	5' - 3"	3"	#4 @ 12"	#4 @ 12"	10' - 0"
12' - 0"	5' - 0"	3"	#4 @ 12"	#4 @ 12"	5' - 0"	3"	#4 @ 12"	#4 @ 12"	5' - 0"	3"	#4 @ 12"	#4 @ 12"	5' - 0"	3"	#4 @ 12"	#4 @ 12"	12' - 0"
14' - 0"	4' - 9"	3"	#4 @ 12"	#4 @ 12"	5' - 0"	3"	#4 @ 11"	#4 @ 11"	4' - 9"	3"	#4 @ 12"	#4 @ 12"	5' - 3"	3"	#4 @ 10"	#4 @ 10"	14' - 0"
16' - 0"	5' - 0"	3"	#4 @ 12"	#4 @ 12"	5' - 0"	3"	#4 @ 10"	#4 @ 10"	5' - 0"	3"	#4 @ 10"	#4 @ 10"	5' - 6"	3"	#4 @ 12"	#5 @ 12"	16' - 0"
18' - 0"	5' - 0"	3"	#4 @ 10"	#4 @ 10"	5' - 3"	3' - 0"	#4 @ 12"	#5 @ 12"	5' - 0"	3' - 0"	#4 @ 10"	#4 @ 10"	5' - 9"	3"	#4 @ 9"	#5 @ 9"	18' - 0"

WIND EXPOSURE & VELOCITY		
NOISE BARRIER TYPE	WIND EXPOSURE	WIND VELOCITY (MPH)
6SSA	B1	80
6SSB	B1	90
6SSC	B2	80
6SSD	B2	90

NOTES

1. Wall to be designated Noise Barrier Wall Type 6SSA, 6SSB, 6SSC or 6SSD. The Contract specifies actual wall designations.
2. For intermediate wall heights, use the next higher H.
3. Panels shall have at least 3 feet of level ground on each side.
4. Construction joints in the foundation shall be spaced at 120 feet maximum.

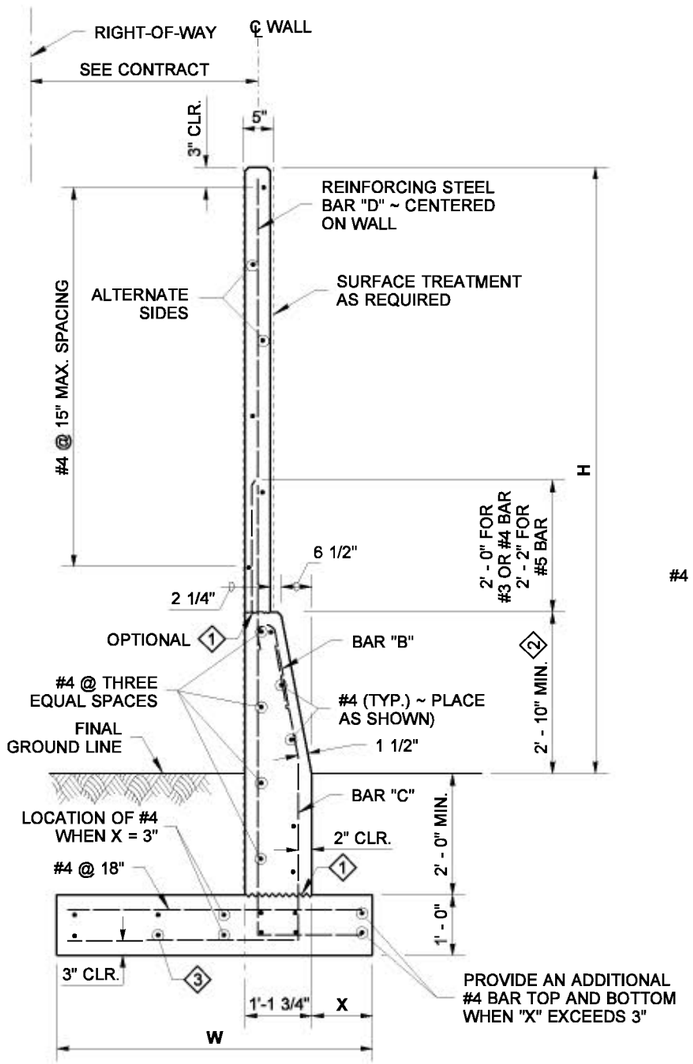

TYPICAL SECTION

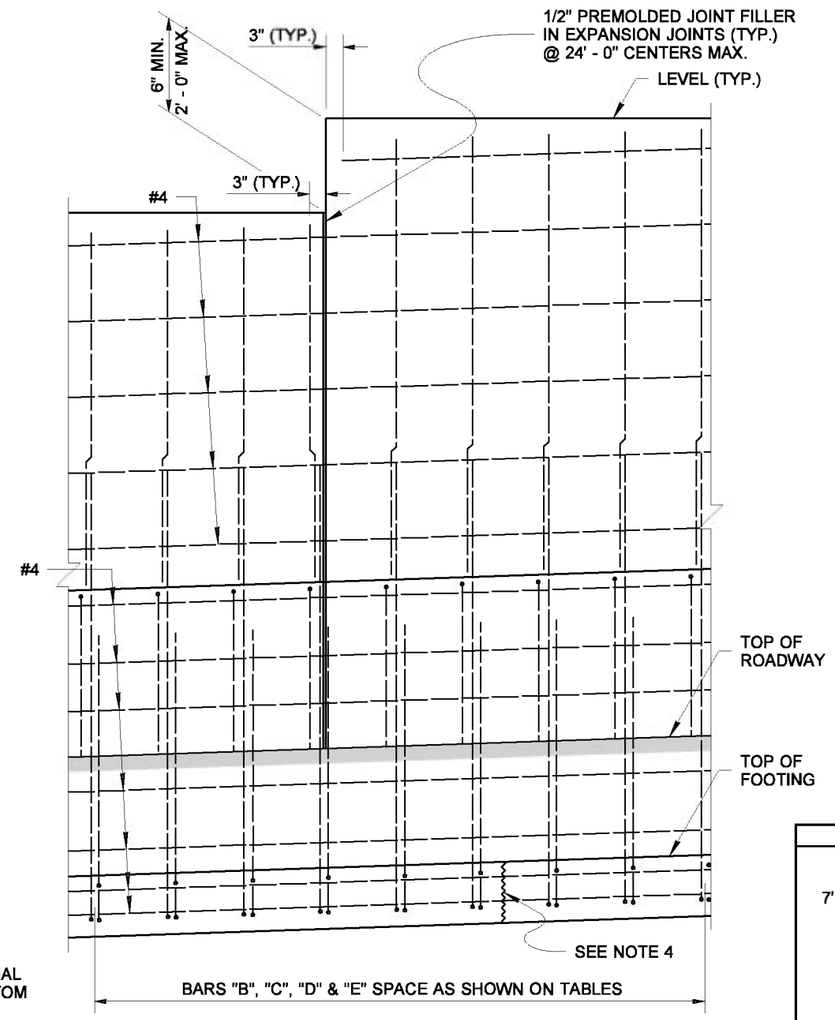

ELEVATION

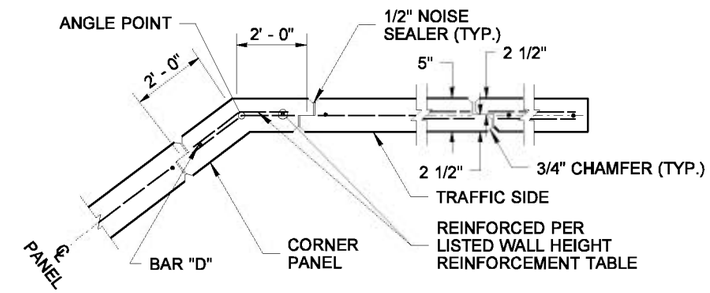

JOINT AND CORNER DETAIL

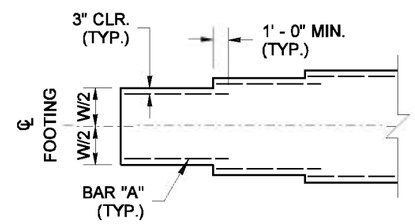

FOOTING WIDTH TRANSITION DETAIL

(FOR LOCATIONS WITHOUT FOOTING STEP)

CAST-IN-PLACE CONC. WALL W/ SINGLE SLOPE TRAFFIC BARRIER ON SPREAD FOOTING

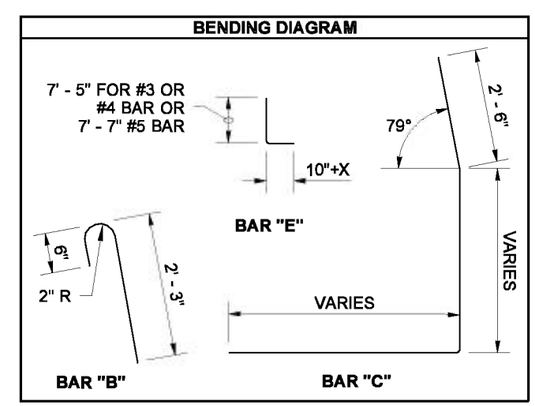

BIJAN KHALEGHI
STATE OF WASHINGTON
27695
REGISTERED PROFESSIONAL ENGINEER
EXPIRES AUGUST 23, 2006

NOTE: THIS PLAN IS NOT A LEGAL ENGINEERING DOCUMENT BUT AN ELECTRONIC DUPLICATE. THE ORIGINAL, SIGNED BY THE ENGINEER AND APPROVED FOR PUBLICATION, IS KEPT ON FILE AT THE WASHINGTON STATE DEPARTMENT OF TRANSPORTATION. A COPY MAY BE OBTAINED UPON REQUEST.

NOISE BARRIER WALL TYPE 6SS

STANDARD PLAN D-2.16-00

SHEET 1 OF 1 SHEET

APPROVED FOR PUBLICATION

Harold J. Peterfeso — STATE DESIGN ENGINEER
11-10-05 — DATE

Washington State Department of Transportation

1. CONSTRUCTION JOINT WITH ROUGHENED SURFACE
2. HEIGHT MAY VARY IF REQUIRED TO PROVIDE A SMOOTH PROFILE CONSISTENT WITH ROADWAY PROFILE
3. #4 (TYP.) PLACE AS SHOWN WITH 2' - 0" SPLICE AND EXTENDING THRU CONSTRUCTION JOINTS

EFFECTIVE: AUGUST 6, 2012 TO August 4, 2013
EFFECTIVE: AUGUST 6, 2012 TO August 4, 2013
EFFECTIVE: AUGUST 6, 2012 TO August 4, 2013
EFFECTIVE: AUGUST 6, 2012 TO August 4, 2013

EFFECTIVE: AUGUST 6, 2012 TO August 4, 2013
EFFECTIVE: AUGUST 6, 2012 TO August 4, 2013

DRAWN BY: ADAM COCHRAN

WALL HT H	TYPE 7A BARS "B"&"C"	TYPE 7B BARS "B"&"C"	TYPE 7C BARS "B"&"C"	TYPE 7D BARS "B"&"C"	WALL HT H
6' - 0"	#4 @ 15"	#4 @ 15"	#4 @ 15"	#4 @ 15"	6' - 0"
8' - 0"	#4 @ 15"	#4 @ 15"	#4 @ 15"	#4 @ 15"	8' - 0"
10' - 0"	#4 @ 15"	#4 @ 15"	#4 @ 15"	#4 @ 15"	10' - 0"
12' - 0"	#4 @ 15"	#4 @ 15"	#4 @ 15"	#4 @ 12"	12' - 0"
14' - 0"	#4 @ 15"	#4 @ 11"	#4 @ 14"	#4 @ 10"	14' - 0"
16' - 0"	#4 @ 14"	#4 @ 10"	#4 @ 10"	#5 @ 12"	16' - 0"
18' - 0"	#4 @ 12"	#5 @ 12"	#4 @ 10"	#5 @ 9"	18' - 0"

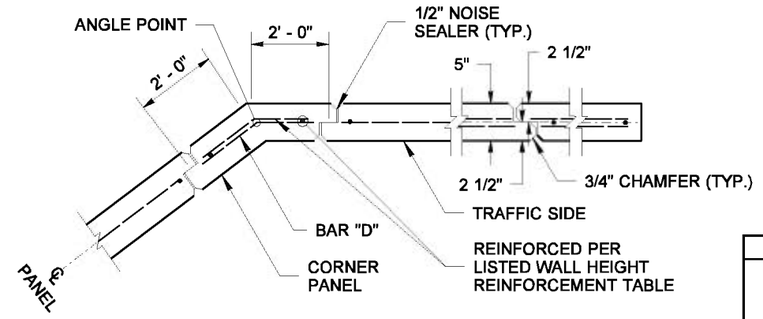

JOINT AND CORNER DETAIL

NOTES

1. Wall to be designated Noise Barrier Wall Type 7A, 7B, 7C or 7D. The Contract specifies actual wall designations.
2. For intermediate wall heights, use the next higher H.
3. Panels shall have at least 3 feet of level ground on each side.
4. The Contract specifies actual foundation requirements D1 or D2.

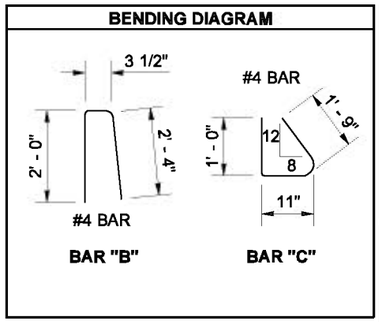

WIND EXPOSURE & VELOCITY		
NOISE BARRIER TYPE	WIND EXPOSURE	WIND VELOCITY (MPH)
7A	B1	80
7B	B1	90
7C	B2	80
7D	B2	90

SOIL TYPE	
SOIL TYPE	ANGLE OF INTERNAL FRICTION ϕ (DEGREES)
D1	32
D2	38

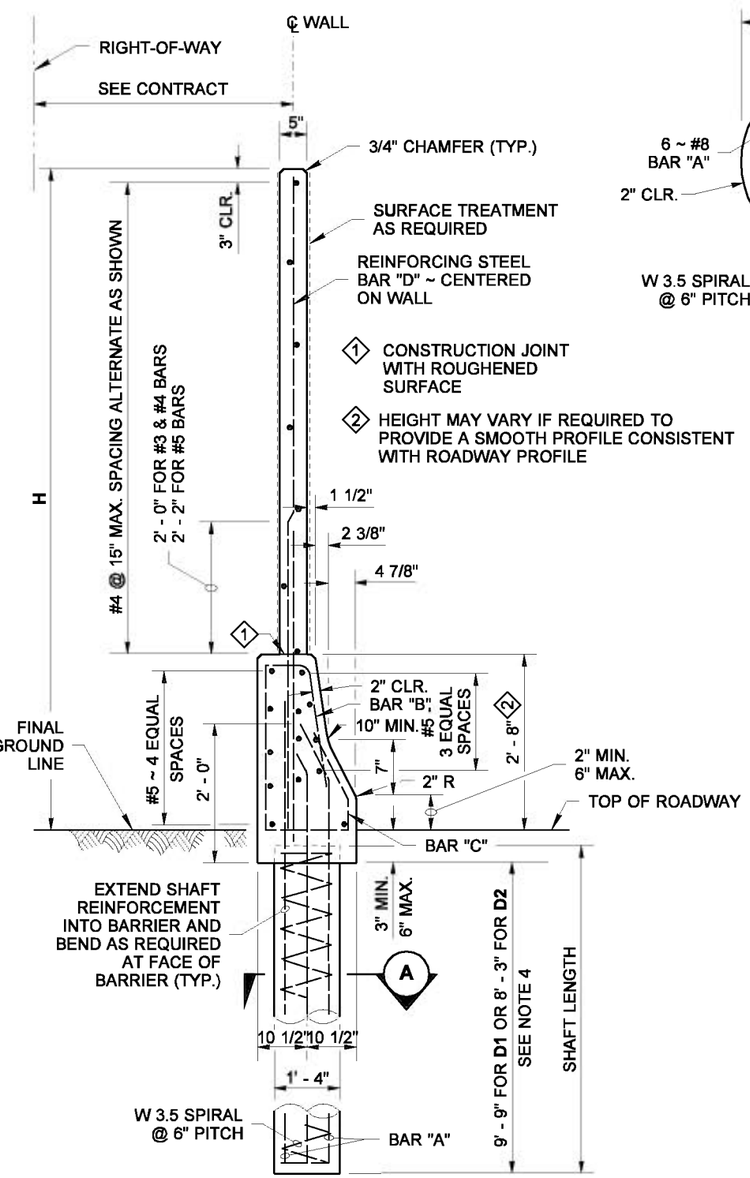

SECTION

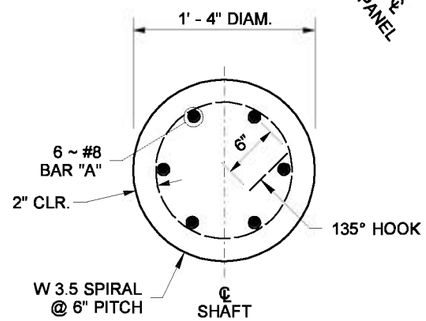

SECTION A

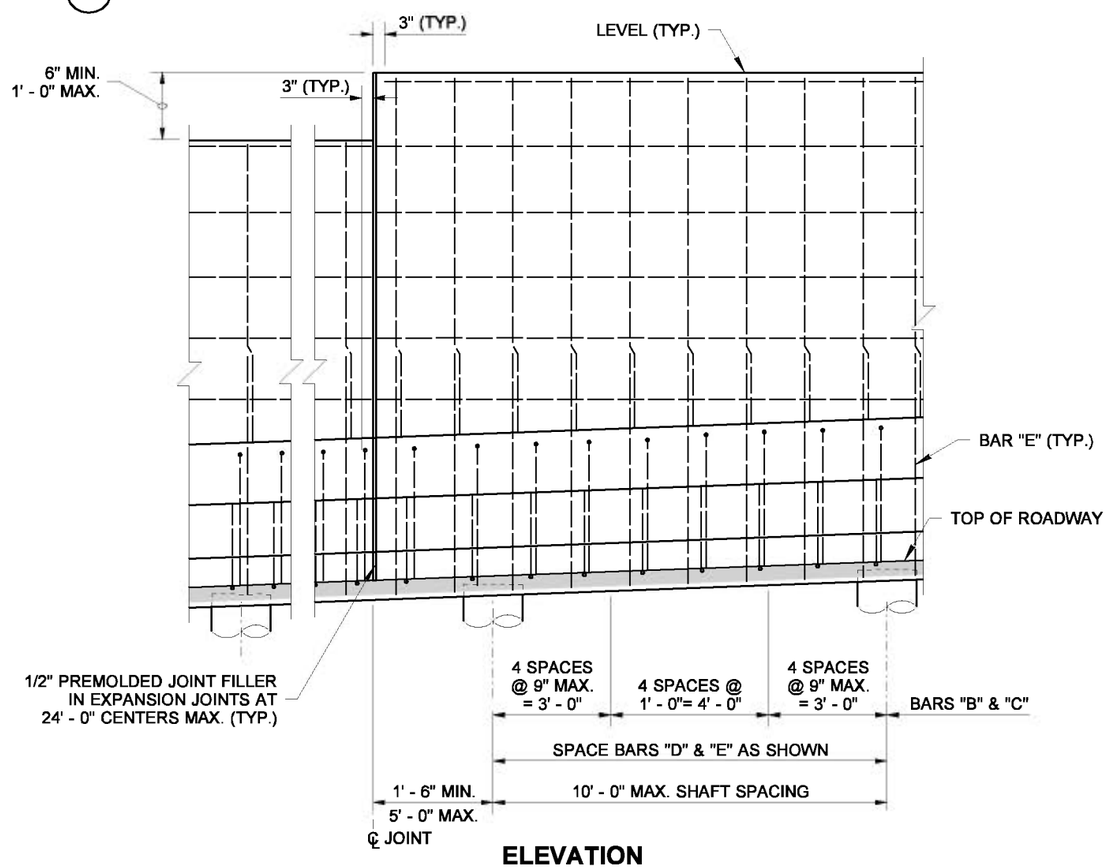

ELEVATION

CAST-IN-PLACE CONCRETE WALL W/ TRAFFIC BARRIER ON SHAFT FOUNDATION

EXPIRES AUGUST 23, 2006

NOTE: THIS PLAN IS NOT A LEGAL ENGINEERING DOCUMENT BUT AN ELECTRONIC DUPLICATE. THE ORIGINAL, SIGNED BY THE ENGINEER AND APPROVED FOR PUBLICATION, IS KEPT ON FILE AT THE WASHINGTON STATE DEPARTMENT OF TRANSPORTATION. A COPY MAY BE OBTAINED UPON REQUEST.

NOISE BARRIER WALL TYPE 7

STANDARD PLAN D-2.18-00

SHEET 1 OF 1 SHEET

APPROVED FOR PUBLICATION

Harold J. Peterfeso — STATE DESIGN ENGINEER

11-10-05 — DATE

Washington State Department of Transportation

EFFECTIVE: AUGUST 6, 2012 TO August 4, 2013
EFFECTIVE: AUGUST 6, 2012 TO August 4, 2013
EFFECTIVE: AUGUST 6, 2012 TO August 4, 2013
EFFECTIVE: AUGUST 6, 2012 TO August 4, 2013

EFFECTIVE: AUGUST 6, 2012 TO August 4, 2013
EFFECTIVE: AUGUST 6, 2012 TO August 4, 2013

DRAWN BY: ADAM COCHRAN

WALL HT H	TYPE 7SSA BARS "B"&"C"	TYPE 7SSB BARS "B"&"C"	TYPE 7SSC BARS "B"&"C"	TYPE 7SSD BARS "B"&"C"	WALL HT H
6' - 0"	#4 @ 15"	#4 @ 15"	#4 @ 15"	#4 @ 15"	6' - 0"
8' - 0"	#4 @ 15"	#4 @ 15"	#4 @ 15"	#4 @ 15"	8' - 0"
10' - 0"	#4 @ 15"	#4 @ 15"	#4 @ 15"	#4 @ 15"	10' - 0"
12' - 0"	#4 @ 15"	#4 @ 15"	#4 @ 15"	#4 @ 12"	12' - 0"
14' - 0"	#4 @ 15"	#4 @ 11"	#4 @ 14"	#4 @ 10"	14' - 0"
16' - 0"	#4 @ 14"	#4 @ 10"	#4 @ 10"	#5 @ 12"	16' - 0"
18' - 0"	#4 @ 12"	#5 @ 12"	#4 @ 10"	#5 @ 9"	18' - 0"

BENDING DIAGRAM

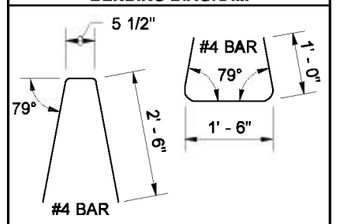

WIND EXPOSURE & VELOCITY		
NOISE BARRIER TYPE	WIND EXPOSURE	WIND VELOCITY (MPH)
7SSA	B1	80
7SSB	B1	90
7SSC	B2	80
7SSD	B2	90

SOIL TYPE	
SOIL TYPE	ANGLE OF INTERNAL FRICTION ϕ (DEGREES)
D1	32
D2	38

NOTES

1. Wall to be designated Noise Barrier Wall Type 7SSA, 7SSB, 7SSC or 7SSD. The Contract specifies actual wall designations.
2. For intermediate wall heights, use the next higher H.
3. Panels shall have at least 3 feet of level ground on each side.
4. The Contract specifies actual foundation requirements D1 or D2.

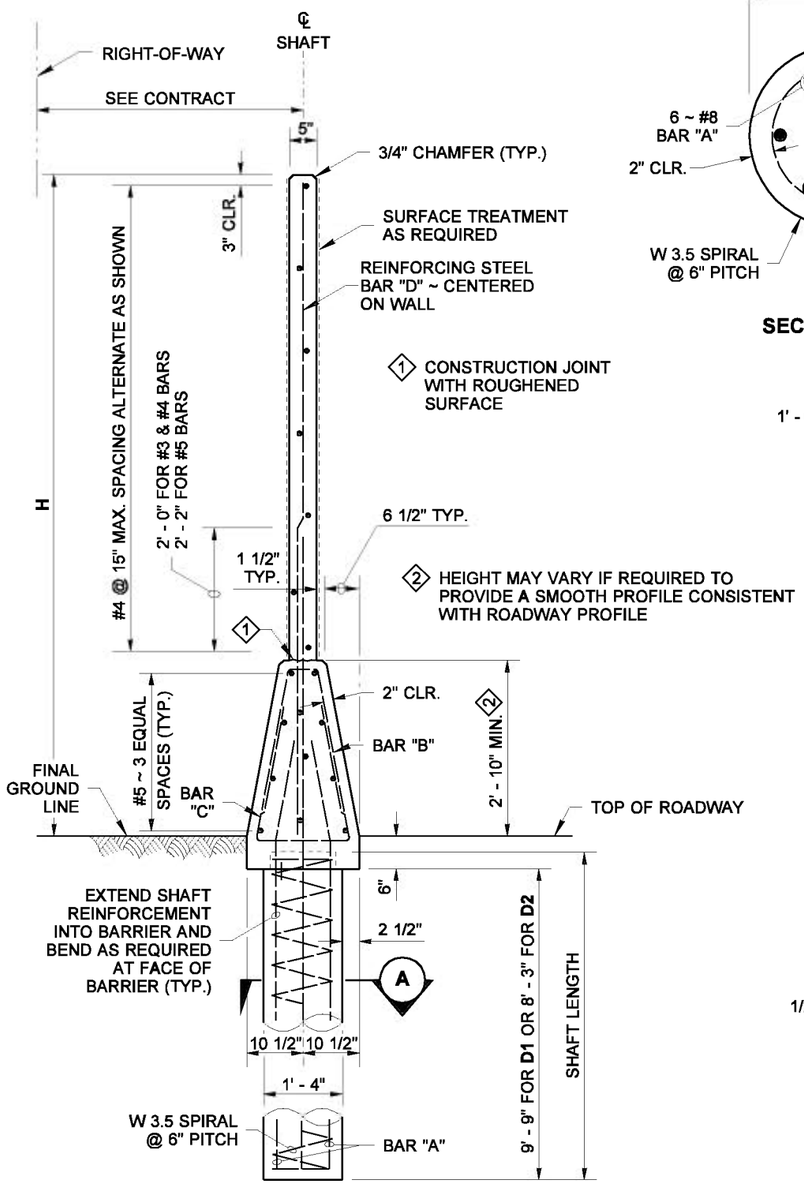

SECTION

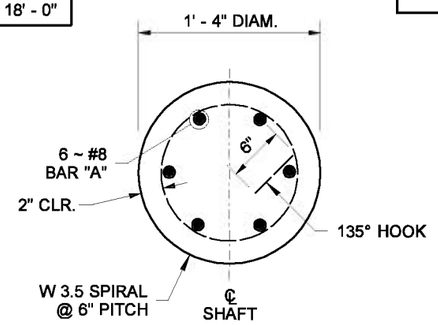

SECTION (A)

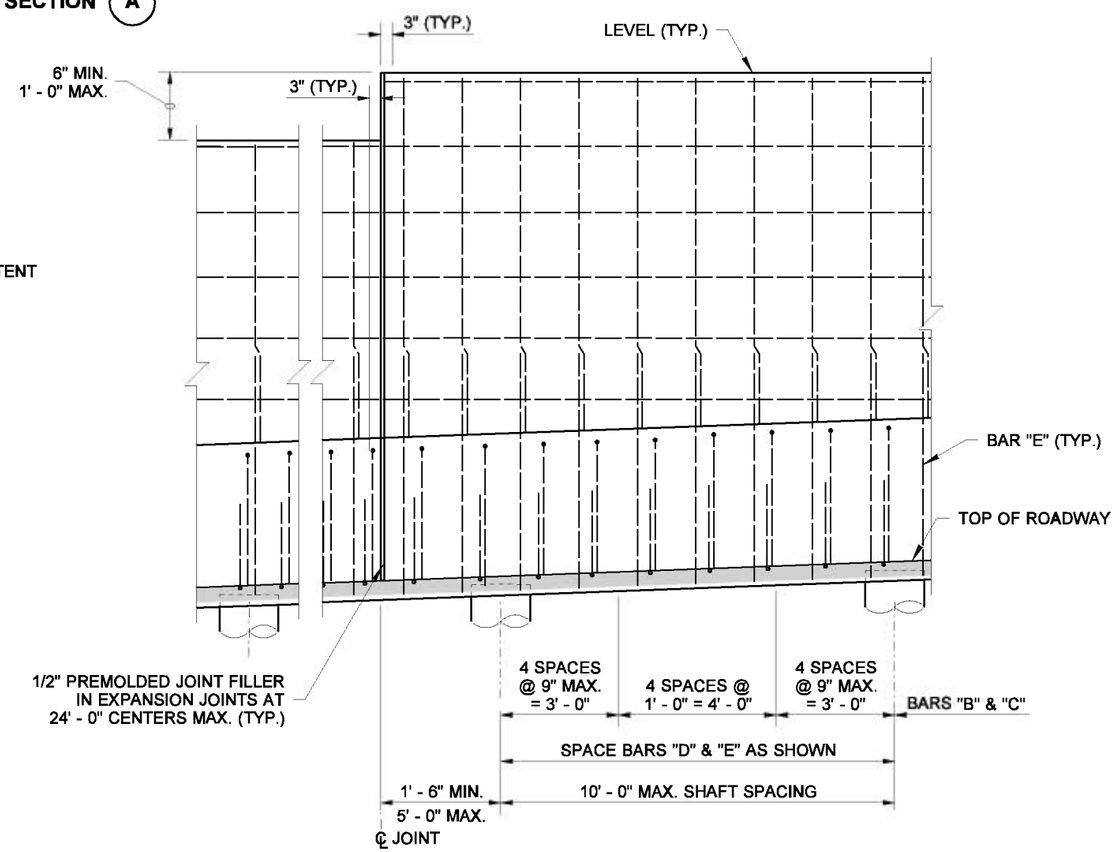

ELEVATION

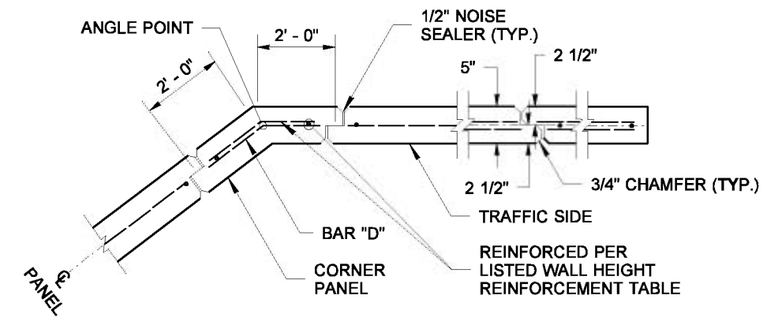

JOINT AND CORNER DETAIL

CAST-IN-PLACE CONC. WALL W/ SINGLE SLOPE TRAFFIC BARRIER ON SHAFT FOUNDATION

NOTE: THIS PLAN IS NOT A LEGAL ENGINEERING DOCUMENT BUT AN ELECTRONIC DUPLICATE. THE ORIGINAL, SIGNED BY THE ENGINEER AND APPROVED FOR PUBLICATION, IS KEPT ON FILE AT THE WASHINGTON STATE DEPARTMENT OF TRANSPORTATION. A COPY MAY BE OBTAINED UPON REQUEST.

NOISE BARRIER WALL TYPE 7SS

STANDARD PLAN D-2.20-00

SHEET 1 OF 1 SHEET

APPROVED FOR PUBLICATION

Harold J. Peterfeso — STATE DESIGN ENGINEER
11-10-05 — DATE

Washington State Department of Transportation

EFFECTIVE: AUGUST 6, 2012 TO August 4, 2013
EFFECTIVE: AUGUST 6, 2012 TO August 4, 2013
EFFECTIVE: AUGUST 6, 2012 TO August 4, 2013
EFFECTIVE: AUGUST 6, 2012 TO August 4, 2013

EFFECTIVE: AUGUST 6, 2012 TO August 4, 2013
EFFECTIVE: AUGUST 6, 2012 TO August 4, 2013

DRAWN BY: ADAM COCHRAN

WALL HT H	TYPE 9A W	TYPE 9A BARS "A"&"F"	TYPE 9A t	TYPE 9A BAR "B"	TYPE 9A SPIRAL BAR "G"	TYPE 9A BARS "D"&"H"	TYPE 9B W	TYPE 9B BARS "A"&"F"	TYPE 9B t	TYPE 9B BAR "B"	TYPE 9B SPIRAL BAR "G"	TYPE 9B BARS "D"&"H"
6' - 0"	2' - 0"	3 ~ #4	5"	#4 @ 18"	W2.0 @ 2"	#3 @ 15"	2' - 3"	3 ~ #4	5"	#4 @ 18"	W2.0 @ 2"	#3 @ 12"
8' - 0"	2' - 3"	3 ~ #4	5"	#4 @ 18"	W2.0 @ 2"	#3 @ 12"	2' - 9"	3 ~ #4	5"	#4 @ 18"	W3.0 @ 2"	#4 @ 15"
10' - 0"	2' - 6"	3 ~ #4	5"	#4 @ 18"	W2.0 @ 2"	#3 @ 9"	3' - 3"	5 ~ #4	5"	#4 @ 18"	W3.0 @ 2"	#4 @ 10"
12' - 0"	3' - 0"	5 ~ #4	5"	#4 @ 18"	W3.0 @ 2"	#4 @ 12"	3' - 9"	5 ~ #4	5"	#4 @ 18"	W3.0 @ 2"	#4 @ 10"
14' - 0"	3' - 3"	5 ~ #4	5"	#4 @ 18"	W3.0 @ 2"	#4 @ 10"	4' - 3"	5 ~ #4	5"	#4 @ 18"	W3.0 @ 1 3/4"	#5 @ 11"
16' - 0"	3' - 9"	5 ~ #4	5"	#4 @ 18"	W3.0 @ 2"	#4 @ 9"	4' - 9"	5 ~ #4	5"	#4 @ 18"	W4.0 @ 2"	#6 @ 12"
18' - 0"	4' - 0"	5 ~ #4	5"	#4 @ 18"	W3.0 @ 1 3/4"	#5 @ 11"	5' - 3"	5 ~ #4	5"	#4 @ 18"	W4.0 @ 2"	#6 @ 9"
20' - 0"	5' - 0"	5 ~ #4	5"	#4 @ 18"	W3.0 @ 1 1/2"	#5 @ 9"	6' - 0"	5 ~ #4	6"	#4 @ 18"	W4.0 @ 2"	#6 @ 9"
22' - 0"	5' - 6"	5 ~ #4	5"	#4 @ 18"	W3.0 @ 1 1/2"	#5 @ 7"	6' - 3"	5 ~ #4	6"	#4 @ 12"	W4.0 @ 1 3/4"	#6 @ 8"
24' - 0"	6' - 0"	5 ~ #4	5"	#4 @ 15"	W3.0 @ 1 1/2"	#5 @ 6"	6' - 9"	5 ~ #4	7"	#4 @ 11"	W4.0 @ 1 3/4"	#6 @ 8"

WALL HT H	TYPE 9C W	TYPE 9C BARS "A"&"F"	TYPE 9C t	TYPE 9C BAR "B"	TYPE 9C SPIRAL BAR "G"	TYPE 9C BARS "D"&"H"	TYPE 9D W	TYPE 9D BARS "A"&"F"	TYPE 9D t	TYPE 9D BAR "B"	TYPE 9D SPIRAL BAR "G"	TYPE 9D BARS D & H
6' - 0"	2' - 0"	3 ~ #4	5"	#4 @ 18"	W2.0 @ 2"	#3 @ 15"	2' - 6"	3 ~ #4	5"	#4 @ 18"	W2.0 @ 2"	#3 @ 11"
8' - 0"	2' - 6"	3 ~ #4	5"	#4 @ 18"	W2.0 @ 2"	#3 @ 10"	3' - 3"	5 ~ #4	5"	#4 @ 18"	W3.0 @ 2"	#4 @ 12"
10' - 0"	2' - 9"	3 ~ #4	5"	#4 @ 18"	W3.0 @ 2"	#4 @ 12"	3' - 6"	5 ~ #4	5"	#4 @ 18"	W3.0 @ 2"	#4 @ 10"
12' - 0"	3' - 3"	5 ~ #4	5"	#4 @ 18"	W3.0 @ 2"	#4 @ 10"	4' - 3"	5 ~ #4	5"	#4 @ 18"	W3.0 @ 1 3/4"	#5 @ 12"
14' - 0"	3' - 9"	5 ~ #4	5"	#4 @ 18"	W3.0 @ 2"	#4 @ 9"	4' - 9"	5 ~ #4	5"	#4 @ 18"	W3.0 @ 1 3/4"	#5 @ 8"
16' - 0"	4' - 3"	5 ~ #4	5"	#4 @ 18"	W3.0 @ 1 3/4"	#5 @ 11"	5' - 6"	5 ~ #4	5"	#4 @ 18"	W4.0 @ 2"	#6 @ 9"
18' - 0"	4' - 6"	5 ~ #4	5"	#4 @ 18"	W4.0 @ 2"	#6 @ 12"	6' - 0"	5 ~ #4	6"	#4 @ 18"	W4.0 @ 2"	#6 @ 9"
20' - 0"	5' - 3"	5 ~ #4	5"	#4 @ 18"	W4.0 @ 2"	#6 @ 10"	6' - 6"	6 ~ #4	6"	#4 @ 12"	W4.0 @ 1 3/4"	#6 @ 7"
22' - 0"	5' - 9"	5 ~ #4	6"	#4 @ 18"	W4.0 @ 2"	#6 @ 9"	7' - 0"	6 ~ #4	7"	#4 @ 12"	W4.0 @ 1 3/4"	#6 @ 7"
24' - 0"	6' - 3"	5 ~ #4	6"	#4 @ 12"	W4.0 @ 1 3/4"	#6 @ 8"	7' - 6"	6 ~ #4	7"	#4 @ 15"	W4.0 @ 1 1/2"	#6 @ 6"

t = WALL THICKNESS

WIND EXPOSURE & VELOCITY		
NOISE BARRIER TYPE	WIND EXPOSURE	WIND VELOCITY (MPH)
9A	B1	80
9B	B1	90
9C	B2	80
9D	B2	90

BENDING DIAGRAM

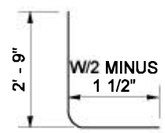

BAR "H"

NOTES

1. Wall to be designated Noise Barrier Wall Type 9A, 9B, 9C or 9D. The Contract specifies actual wall designation.
2. For intermediate wall heights, use the next higher H.
3. Panels shall have at least 3' - 0" of level ground on each side.
4. Construction joints in the footing shall be spaced at 120 feet maximum.
5. All joints shall be in full contact and sealed.

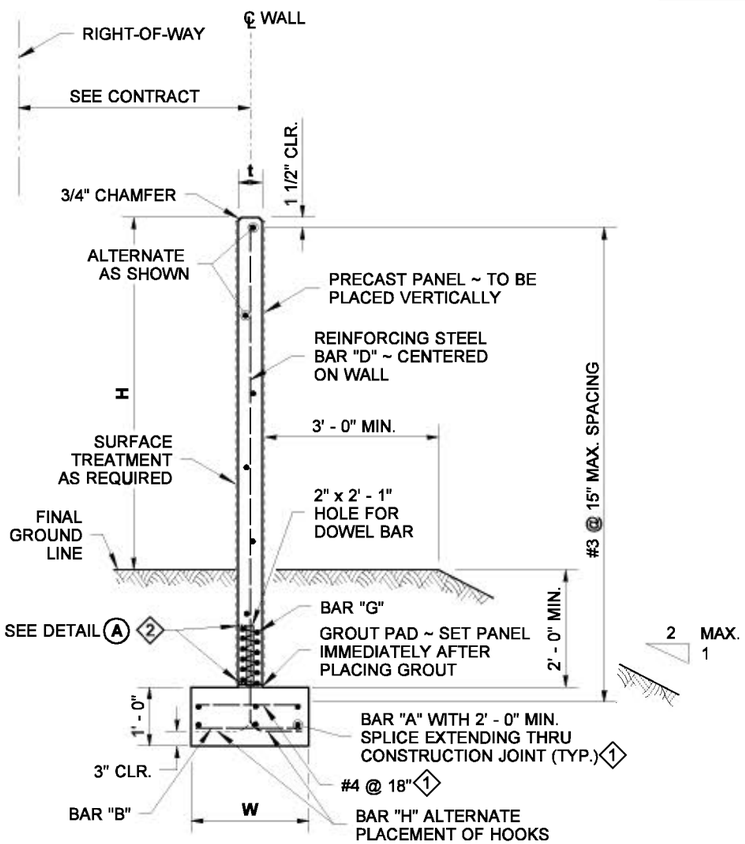

TYPICAL SECTION

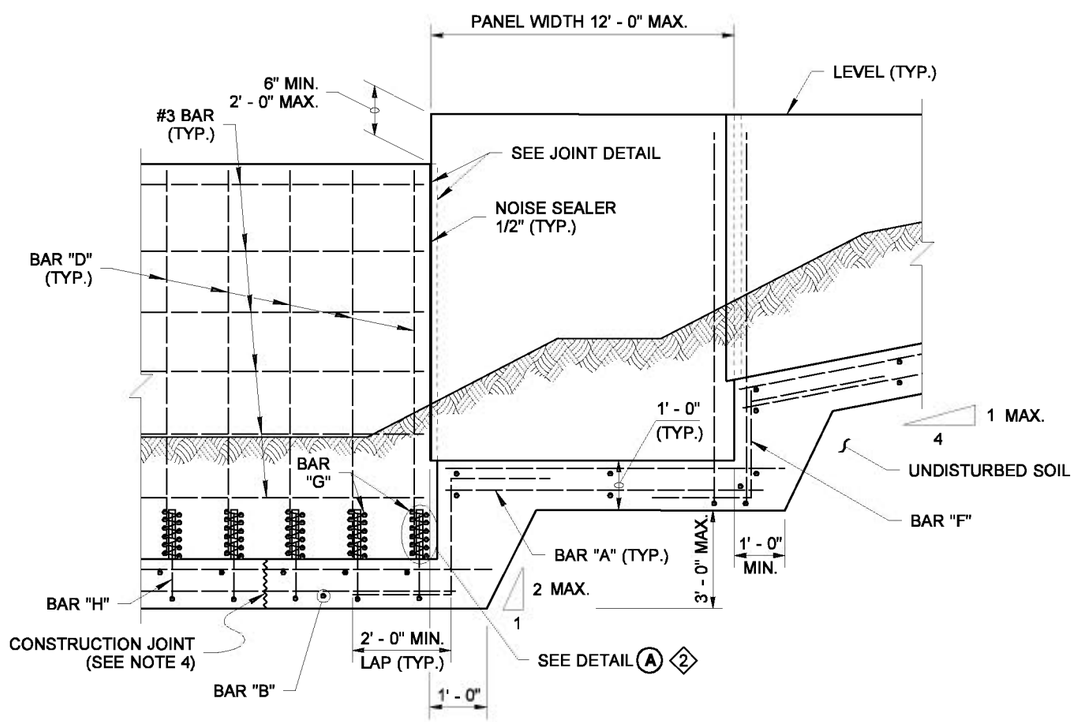

ELEVATION

1 REQUIRED FOR WALL HEIGHT 24' - 0" ~ TYPE 9C, WALLS 22' - 0" & 24' - 0" ~ TYPE 9B & WALLS 20' - 0", 22' - 0" & 24' - 0" ~ TYPE 9D.

PRECAST CONCRETE WALL ON SPREAD FOOTING

NOTE: THIS PLAN IS NOT A LEGAL ENGINEERING DOCUMENT BUT AN ELECTRONIC DUPLICATE. THE ORIGINAL, SIGNED BY THE ENGINEER AND APPROVED FOR PUBLICATION, IS KEPT ON FILE AT THE WASHINGTON STATE DEPARTMENT OF TRANSPORTATION. A COPY MAY BE OBTAINED UPON REQUEST.

NOISE BARRIER WALL TYPE 9

STANDARD PLAN D-2.32-00

SHEET 1 OF 2 SHEETS

APPROVED FOR PUBLICATION

Harold J. Peterfeso — STATE DESIGN ENGINEER

11-10-05 — DATE

Washington State Department of Transportation

EFFECTIVE: AUGUST 6, 2012 TO August 4, 2013
EFFECTIVE: AUGUST 6, 2012 TO August 4, 2013
EFFECTIVE: AUGUST 6, 2012 TO August 4, 2013
EFFECTIVE: AUGUST 6, 2012 TO August 4, 2013

EFFECTIVE: AUGUST 6, 2012 TO August 4, 2013
EFFECTIVE: AUGUST 6, 2012 TO August 4, 2013

DRAWN BY: ADAM COCHRAN

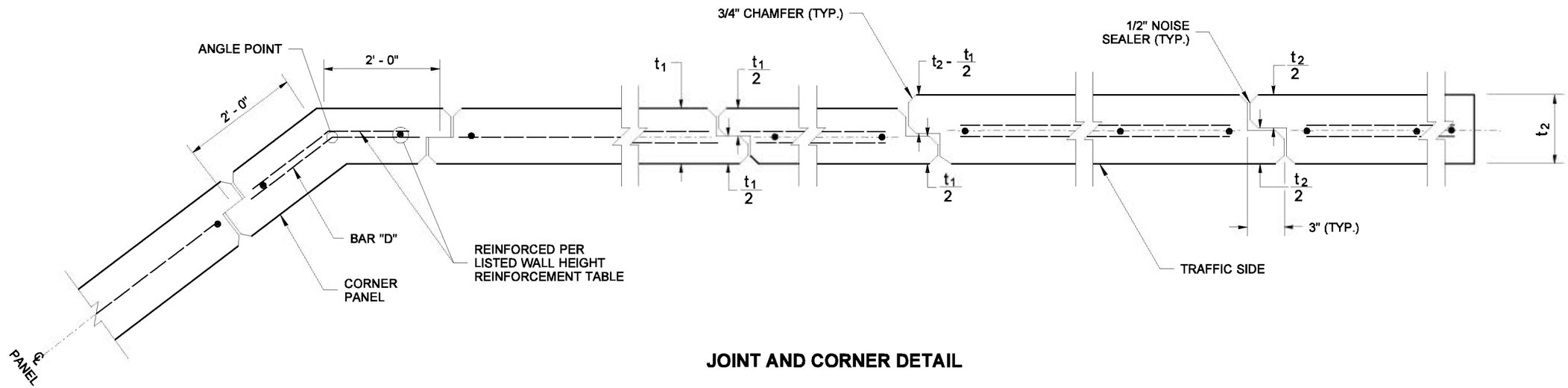

JOINT AND CORNER DETAIL

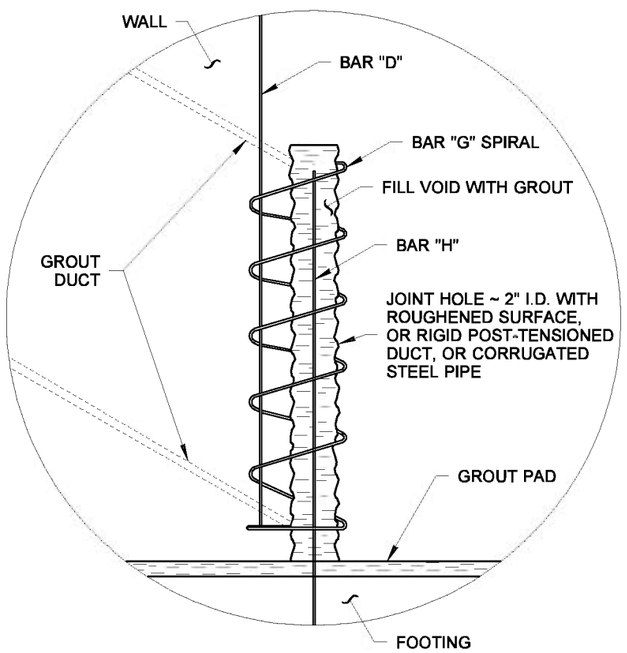

2 FILL THE JOINT HOLE WITH GROUT USING DUCTS. DUCTS SHALL BE LOCATED ON PANEL FACE OPPOSITE TRAFFIC

DETAIL A

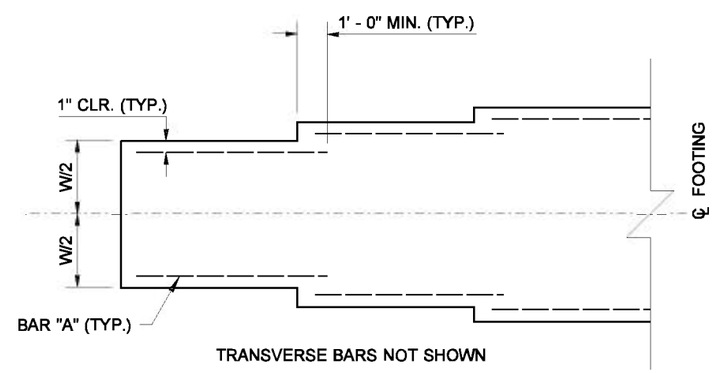

TRANSVERSE BARS NOT SHOWN

FOOTING WIDTH TRANSITION DETAIL

FOR LOCATIONS WITHOUT FOOTING STEP

PRECAST CONCRETE WALL ON SPREAD FOOTING

BIJAN KHALEGHI
STATE OF WASHINGTON
27695
REGISTERED
PROFESSIONAL ENGINEER

EXPIRES AUGUST 23, 2006

NOTE: THIS PLAN IS NOT A LEGAL ENGINEERING DOCUMENT BUT AN ELECTRONIC DUPLICATE. THE ORIGINAL, SIGNED BY THE ENGINEER AND APPROVED FOR PUBLICATION, IS KEPT ON FILE AT THE WASHINGTON STATE DEPARTMENT OF TRANSPORTATION. A COPY MAY BE OBTAINED UPON REQUEST.

NOISE BARRIER WALL TYPE 9

STANDARD PLAN D-2.32-00

SHEET 2 OF 2 SHEETS

APPROVED FOR PUBLICATION

Harold J. Peterfeso — STATE DESIGN ENGINEER
11-10-05 — DATE

Washington State Department of Transportation

EFFECTIVE: AUGUST 6, 2012 TO August 4, 2013
EFFECTIVE: AUGUST 6, 2012 TO August 4, 2013
EFFECTIVE: AUGUST 6, 2012 TO August 4, 2013
EFFECTIVE: AUGUST 6, 2012 TO August 4, 2013

EFFECTIVE: AUGUST 6, 2012 TO August 4, 2013
EFFECTIVE: AUGUST 6, 2012 TO August 4, 2013

DRAWN BY: ADAM COCHRAN

WALL HT H	TYPE 10A W	TYPE 10A BARS "A"&"F"	TYPE 10A t	TYPE 10A BAR "B"	TYPE 10A SPIRAL BAR "G"	TYPE 10A BARS "D"&"H"	TYPE 10B W	TYPE 10B BARS "A"&"F"	TYPE 10B t	TYPE 10B BAR "B"	TYPE 10B SPIRAL BAR "G"	TYPE 10B BARS "D"&"H"
6' - 0"	2' - 0"	3 ~ #4	5"	#4 @ 18"	W2.0 @ 2"	#3 @ 15"	2' - 3"	3 ~ #4	5"	#4 @ 18"	W2.0 @ 2"	#3 @ 12"
8' - 0"	2' - 3"	3 ~ #4	5"	#4 @ 18"	W2.0 @ 2"	#3 @ 12"	2' - 9"	3 ~ #4	5"	#4 @ 18"	W3.0 @ 2"	#4 @ 15"
10' - 0"	2' - 6"	3 ~ #4	5"	#4 @ 18"	W2.0 @ 2"	#3 @ 9"	3' - 3"	5 ~ #4	5"	#4 @ 18"	W3.0 @ 2"	#4 @ 10"
12' - 0"	3' - 0"	5 ~ #4	5"	#4 @ 18"	W3.0 @ 2"	#4 @ 12"	3' - 9"	5 ~ #4	5"	#4 @ 18"	W3.0 @ 2"	#4 @ 10"
14' - 0"	3' - 3"	5 ~ #4	5"	#4 @ 18"	W3.0 @ 2"	#4 @ 10"	4' - 3"	5 ~ #4	5"	#4 @ 18"	W3.0 @ 1 3/4"	#5 @ 11"
16' - 0"	3' - 9"	5 ~ #4	5"	#4 @ 18"	W3.0 @ 2"	#4 @ 9"	5' - 3"	5 ~ #4	5"	#4 @ 18"	W4.0 @ 2"	#6 @ 12"
18' - 0"	4' - 0"	5 ~ #4	5"	#4 @ 18"	W3.0 @ 1 3/4"	#5 @ 11"	6' - 0"	5 ~ #4	5"	#4 @ 18"	W4.0 @ 2"	#6 @ 9"
20' - 0"	5' - 0"	5 ~ #4	5"	#4 @ 18"	W3.0 @ 1 1/2"	#5 @ 9"	7' - 0"	5 ~ #4	6"	#4 @ 18"	W4.0 @ 2"	#6 @ 9"
22' - 0"	5' - 6"	5 ~ #4	5"	#4 @ 18"	W3.0 @ 1 1/2"	#5 @ 7"	7' - 9"	5 ~ #4	6"	#4 @ 12"	W4.0 @ 1 3/4"	#6 @ 8"
24' - 0"	6' - 3"	5 ~ #4	5"	#4 @ 15"	W3.0 @ 1 1/2"	#5 @ 6"	8' - 6"	5 ~ #4	7"	#4 @ 11"	W4.0 @ 1 3/4"	#6 @ 8"

WALL HT H	TYPE 10C W	TYPE 10C BARS "A"&"F"	TYPE 10C t	TYPE 10C BAR "B"	TYPE 10C SPIRAL BAR "G"	TYPE 10C BARS "D"&"H"	TYPE 10D W	TYPE 10D BARS "A"&"F"	TYPE 10D t	TYPE 10D BAR "B"	TYPE 10D SPIRAL BAR "G"	TYPE 10D BARS "D"&"H"
6' - 0"	2' - 0"	3 ~ #4	5"	#4 @ 18"	W2.0 @ 2"	#3 @ 15"	2' - 6"	3 ~ #4	5"	#4 @ 18"	W2.0 @ 2"	#3 @ 11"
8' - 0"	2' - 6"	3 ~ #4	5"	#4 @ 18"	W2.0 @ 2"	#3 @ 10"	3' - 3"	5 ~ #4	5"	#4 @ 18"	W3.0 @ 2"	#4 @ 12"
10' - 0"	2' - 9"	3 ~ #4	5"	#4 @ 18"	W3.0 @ 2"	#4 @ 12"	3' - 6"	5 ~ #4	5"	#4 @ 18"	W3.0 @ 2"	#4 @ 10"
12' - 0"	3' - 3"	5 ~ #4	5"	#4 @ 18"	W3.0 @ 2"	#4 @ 10"	4' - 3"	5 ~ #4	5"	#4 @ 18"	W3.0 @ 1 3/4"	#5 @ 12"
14' - 0"	3' - 9"	5 ~ #4	5"	#4 @ 18"	W3.0 @ 2"	#4 @ 9"	5' - 3"	5 ~ #4	5"	#4 @ 18"	W3.0 @ 1 3/4"	#5 @ 8"
16' - 0"	4' - 3"	5 ~ #4	5"	#4 @ 18"	W3.0 @ 1 3/4"	#5 @ 11"	6' - 3"	5 ~ #4	5"	#4 @ 18"	W4.0 @ 2"	#6 @ 9"
18' - 0"	5' - 0"	5 ~ #4	5"	#4 @ 18"	W4.0 @ 2"	#6 @ 12"	7' - 0"	5 ~ #4	6"	#4 @ 18"	W4.0 @ 2"	#6 @ 9"
20' - 0"	5' - 9"	5 ~ #4	5"	#4 @ 18"	W4.0 @ 2"	#6 @ 10"	8' - 0"	6 ~ #4	6"	#4 @ 12"	W4.0 @ 1 3/4"	#6 @ 7"
22' - 0"	6' - 6"	5 ~ #4	6"	#4 @ 18"	W4.0 @ 2"	#6 @ 9"	9' - 0"	6 ~ #4	7"	#4 @ 12"	W4.0 @ 1 3/4"	#6 @ 7"
24' - 0"	7' - 6"	5 ~ #4	6"	#4 @ 12"	W4.0 @ 1 3/4"	#6 @ 8"	9' - 9"	6 ~ #4	7"	#4 @ 15"	W4.0 @ 1 3/4"	#6 @ 6"

t = WALL THICKNESS

BENDING DIAGRAM

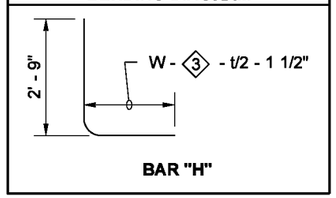

WIND EXPOSURE & VELOCITY

NOISE BARRIER TYPE	WIND EXPOSURE	WIND VELOCITY (MPH)
10A	B1	80
10B	B1	90
10C	B2	80
10D	B2	90

NOTES

1. Wall to be designated Noise Barrier Wall Type 10A, 10B, 10C or 10D. The Contract specifies actual wall designation.
2. For intermediate wall heights, use the next higher H.
3. Panels shall have at least 3' - 0" of level ground on each side.
4. Construction joints in the footing shall be spaced at 120 feet maximum.
5. All joints shall be in full contact and sealed.

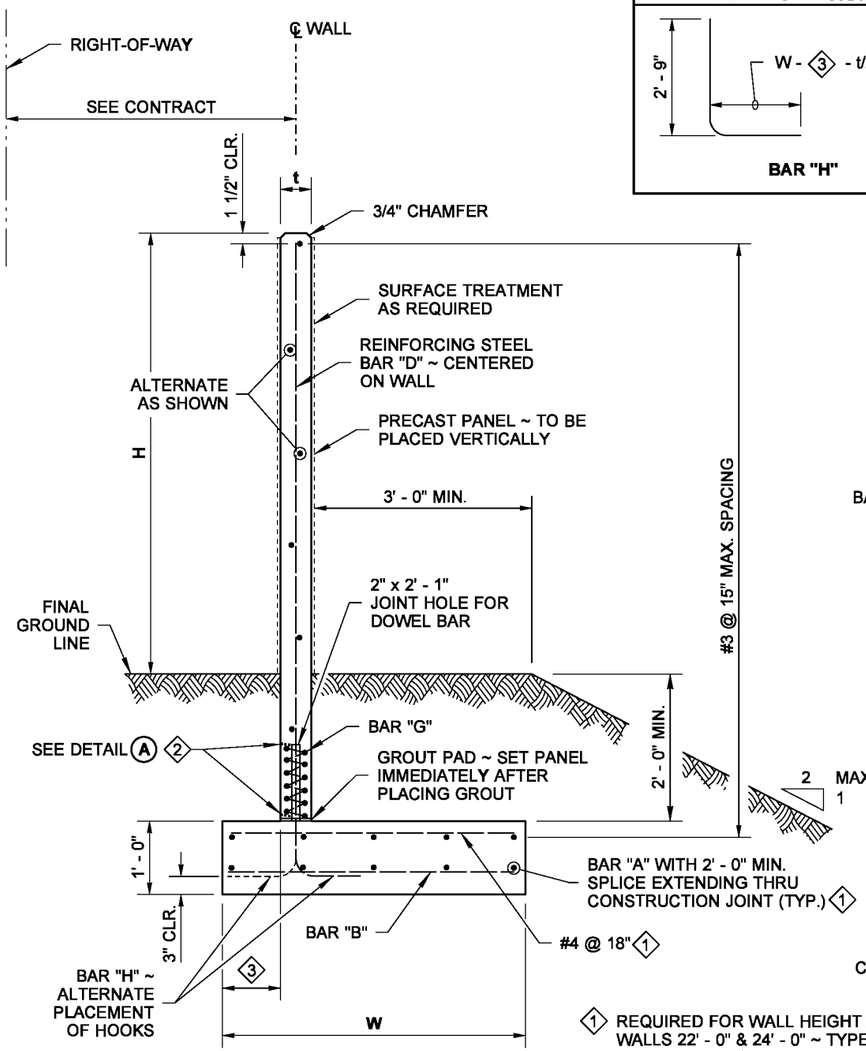

TYPICAL SECTION

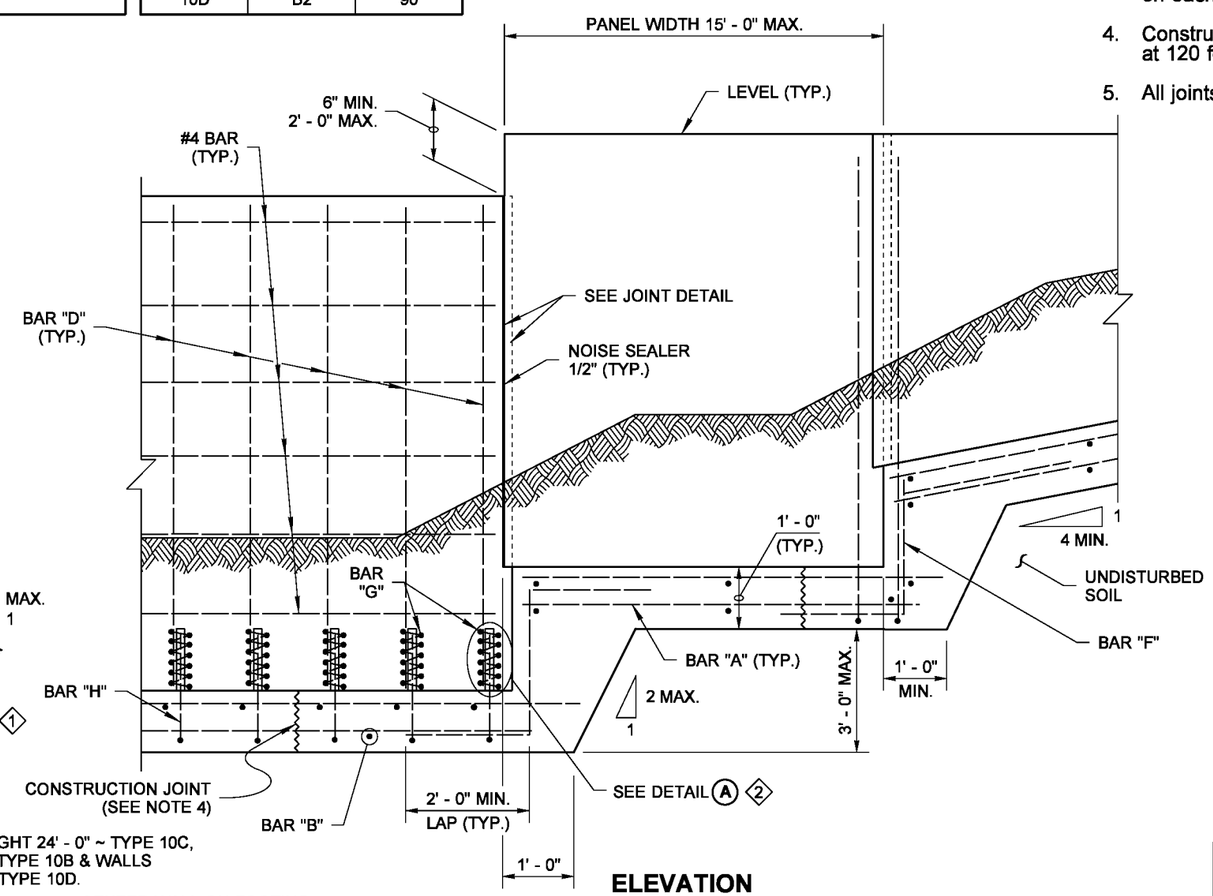

ELEVATION

1 REQUIRED FOR WALL HEIGHT 24' - 0" ~ TYPE 10C, WALLS 22' - 0" & 24' - 0" ~ TYPE 10B & WALLS 20' - 0", 22' - 0" & 24' - 0" ~ TYPE 10D.

3 WHEN **W** IS : < 2' - 6" ..... CENTER WALL ON FOOTING
2' - 6' ≤ W < 4' - 6" ..... DIM. = 1' - 0"
≥ 4' - 6" ..... DIM. = 2' - 0"

PRECAST CONCRETE WALL ON OFFSET SPREAD FOOTING

NOTE: THIS PLAN IS NOT A LEGAL ENGINEERING DOCUMENT BUT AN ELECTRONIC DUPLICATE. THE ORIGINAL, SIGNED BY THE ENGINEER AND APPROVED FOR PUBLICATION, IS KEPT ON FILE AT THE WASHINGTON STATE DEPARTMENT OF TRANSPORTATION. A COPY MAY BE OBTAINED UPON REQUEST.

NOISE BARRIER WALL TYPE 10

STANDARD PLAN D-2.34-01

SHEET 1 OF 2 SHEETS

APPROVED FOR PUBLICATION

Pasco Bakotich III — STATE DESIGN ENGINEER
01-06-09 — DATE

Washington State Department of Transportation

EFFECTIVE: AUGUST 6, 2012 TO August 4, 2013
EFFECTIVE: AUGUST 6, 2012 TO August 4, 2013
EFFECTIVE: AUGUST 6, 2012 TO August 4, 2013
EFFECTIVE: AUGUST 6, 2012 TO August 4, 2013

EFFECTIVE: AUGUST 6, 2012 TO August 4, 2013
EFFECTIVE: AUGUST 6, 2012 TO August 4, 2013

DRAWN BY: ADAM COCHRAN

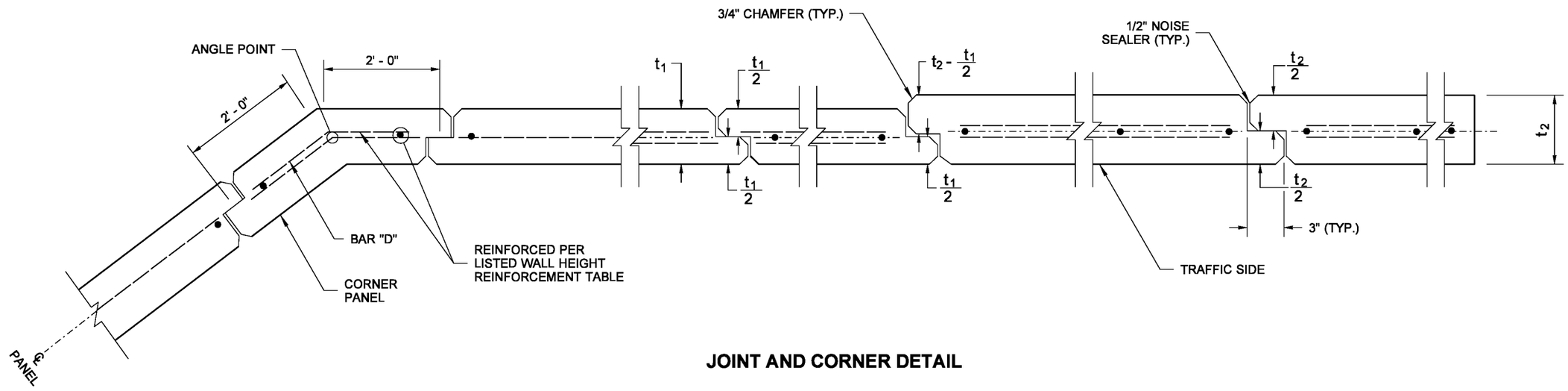

JOINT AND CORNER DETAIL

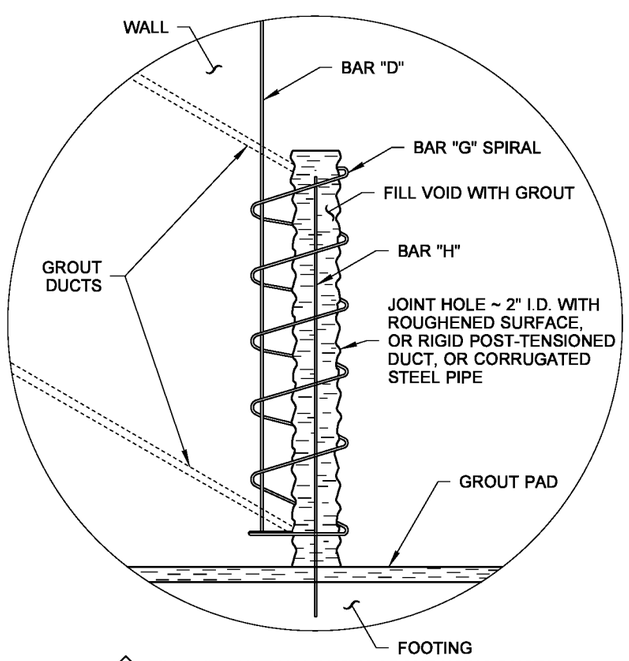

2 FILL THE JOINT HOLE WITH GROUT USING DUCTS. DUCTS SHALL BE LOCATED ON PANEL FACE OPPOSITE TRAFFIC

DETAIL A

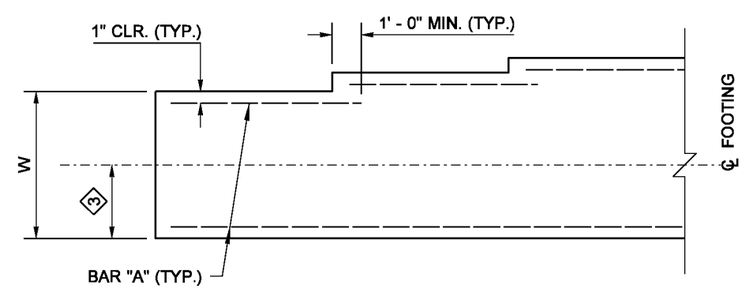

(TRANSVERSE BARS NOT SHOWN)

FOOTING WIDTH TRANSITION DETAIL

FOR LOCATIONS WITHOUT FOOTING STEP

PRECAST CONCRETE WALL ON OFFSET SPREAD FOOTING

BIJAN KHALEGHI
STATE OF WASHINGTON
27695
STRUCTURAL ENGINEER
PROFESSIONAL ENGINEER

NOTE: THIS PLAN IS NOT A LEGAL ENGINEERING DOCUMENT BUT AN ELECTRONIC DUPLICATE. THE ORIGINAL, SIGNED BY THE ENGINEER AND APPROVED FOR PUBLICATION, IS KEPT ON FILE AT THE WASHINGTON STATE DEPARTMENT OF TRANSPORTATION. A COPY MAY BE OBTAINED UPON REQUEST.

NOISE BARRIER WALL TYPE 10

STANDARD PLAN D-2.34-01

SHEET 2 OF 2 SHEETS

APPROVED FOR PUBLICATION

Pasco Bakotich III — STATE DESIGN ENGINEER
01-06-09 — DATE

Washington State Department of Transportation

EFFECTIVE: AUGUST 6, 2012 TO August 4, 2013
EFFECTIVE: AUGUST 6, 2012 TO August 4, 2013
EFFECTIVE: AUGUST 6, 2012 TO August 4, 2013
EFFECTIVE: AUGUST 6, 2012 TO August 4, 2013

EFFECTIVE: AUGUST 6, 2012 TO August 4, 2013
EFFECTIVE: AUGUST 6, 2012 TO August 4, 2013

DRAWN BY: MARK SUJKA

WALL HT H	TYPE 11A DEPTH D1	TYPE 11A DEPTH D2	TYPE 11A BAR "A"	TYPE 11A BAR "B"	TYPE 11A Y	TYPE 11A ANCHOR BOLT DIAM.	TYPE 11B DEPTH D1	TYPE 11B DEPTH D2	TYPE 11B BAR "A"	TYPE 11B BAR "B"	TYPE 11B Y	TYPE 11B ANCHOR BOLT DIAM.	TYPE 11C DEPTH D1	TYPE 11C DEPTH D2	TYPE 11C BAR "A"	TYPE 11C BAR "B"	TYPE 11C Y	TYPE 11C ANCHOR BOLT DIAM.	TYPE 11D DEPTH D1	TYPE 11D DEPTH D2	TYPE 11D BAR "A"	TYPE 11D BAR "B"	TYPE 11D Y	TYPE 11D ANCHOR BOLT DIAM.	WALL HEIGHT H
6' - 0"	5' - 0"	4' - 6"	4 ~ #3	4 ~ #7	3' - 4"	3/4"	5' - 9"	5' - 0"	4 ~ #3	4 ~ #7	3' - 4"	3/4"	5' - 3"	4' - 9"	4 ~ #3	4 ~ #7	3' - 4"	1"	6' - 3"	5' - 3"	4 ~ #3	4 ~ #7	3' - 4"	3/4"	6' - 0"
8' - 0"	5' - 6"	5' - 0"	4 ~ #3	4 ~ #7	3' - 4"	3/4"	6' - 6"	5' - 9"	4 ~ #3	4 ~ #7	3' - 4"	3/4"	6' - 0"	5' - 3"	4 ~ #3	4 ~ #7	3' - 4"	1"	7' - 0"	6' - 0"	4 ~ #3	4 ~ #7	3' - 4"	3/4"	8' - 0"
10' - 0"	6' - 3"	5' - 3"	4 ~ #3	4 ~ #7	3' - 4"	3/4"	7' - 3"	6' - 3"	4 ~ #4	4 ~ #7	3' - 4"	3/4"	6' - 9"	5' - 9"	4 ~ #3	4 ~ #7	3' - 4"	1"	8' - 0"	6' - 9"	4 ~ #4	4 ~ #7	3' - 4"	3/4"	10' - 0"
12' - 0"	6' - 9"	5' - 9"	4 ~ #3	4 ~ #7	3' - 4"	3/4"	8' - 0"	6' - 9"	4 ~ #4	4 ~ #7	3' - 4"	3/4"	7' - 6"	6' - 3"	4 ~ #4	4 ~ #7	3' - 4"	1"	8' - 9"	7' - 3"	4 ~ #5	4 ~ #7	3' - 4"	3/4"	12' - 0"
14' - 0"	7' - 3"	6' - 3"	4 ~ #4	4 ~ #7	3' - 4"	3/4"	8' - 9"	7' - 6"	4 ~ #5	4 ~ #7	3' - 4"	3/4"	8' - 0"	6' - 9"	4 ~ #4	4 ~ #7	3' - 4"	1"	9' - 6"	8' - 0"	4 ~ #5	4 ~ #9	5' - 6"	1"	14' - 0"
16' - 0"	7' - 9"	6' - 9"	4 ~ #4	4 ~ #7	3' - 4"	1"	9' - 6"	8' - 0"	4 ~ #6	4 ~ #7	3' - 4"	1"	8' - 9"	7' - 3"	4 ~ #5	4 ~ #9	5' - 6"	1"	10' - 3"	8' - 6"	4 ~ #6	4 ~ #9	5' - 6"	1"	16' - 0"
18' - 0"	8' - 6"	7' - 0"	4 ~ #5	4 ~ #9	5' - 6"	1"	10' - 3"	8' - 6"	4 ~ #6	4 ~ #9	5' - 6"	1"	9' - 3"	7' - 9"	4 ~ #6	4 ~ #9	5' - 6"	1"	11' - 0"	9' - 3"	4 ~ #7	4 ~ #11	8' - 5"	1"	18' - 0"
20' - 0"	9' - 0"	7' - 6"	4 ~ #5	4 ~ #9	8' - 5"	1"	10' - 9"	9' - 0"	4 ~ #7	4 ~ #9	8' - 5"	1"	10' - 0"	8' - 3"	4 ~ #6	4 ~ #11	8' - 5"	1"	11' - 9"	9' - 9"	4 ~ #8	6 ~ #11	8' - 5"	1"	20' - 0"
22' - 0"	9' - 6"	8' - 0"	4 ~ #6	6 ~ #11	8' - 5"	1"	11' - 6"	9' - 6"	4 ~ #8	6 ~ #11	8' - 5"	1"	10' - 6"	8' - 9"	4 ~ #7	6 ~ #11	8' - 5"	1"	12' - 6"	10' - 3"	4 ~ #8	SPECIAL DESIGN REQUIRED			22' - 0"
24' - 0"	10' - 0"	8' - 3"	4 ~ #6	SPECIAL DESIGN REQUIRED			12' - 0"	10' - 0"	4 ~ #8	SPECIAL DESIGN REQUIRED			11' - 3"	9' - 3"	4 ~ #7	SPECIAL DESIGN REQUIRED			13' - 3"	11' - 0"	4 ~ #9	SPECIAL DESIGN REQUIRED			24' - 0"

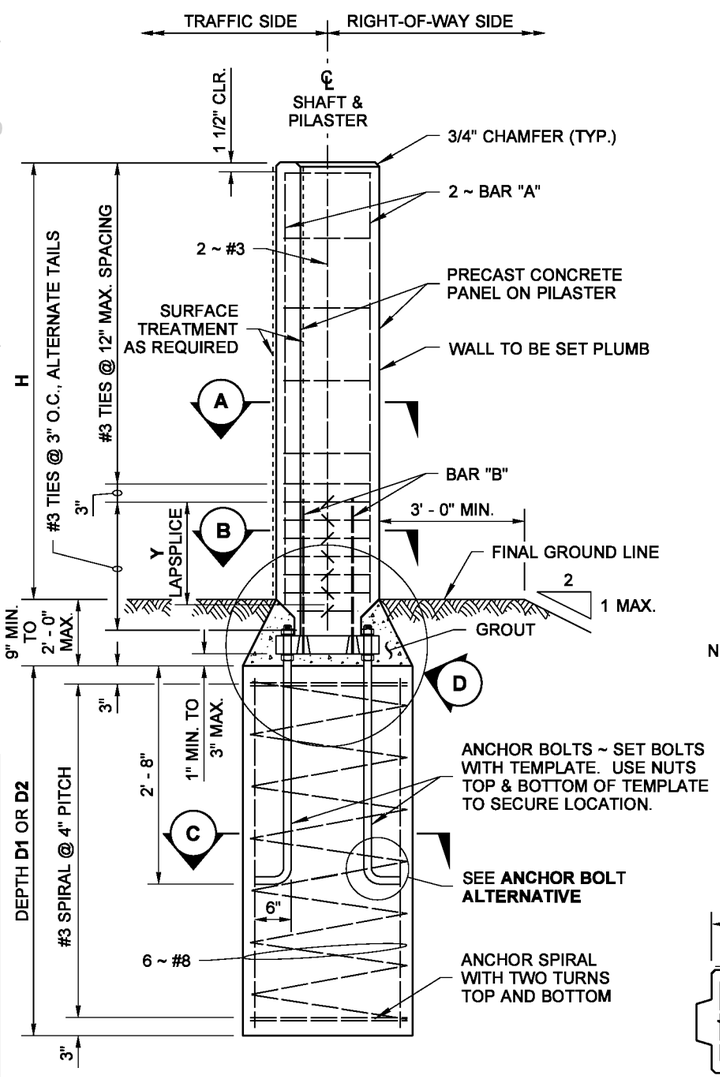

TYPICAL SECTION

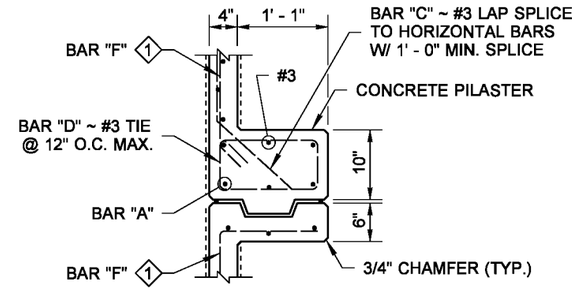

SECTION A

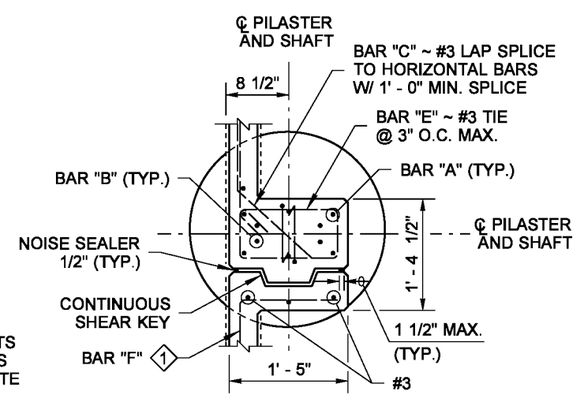

SECTION B

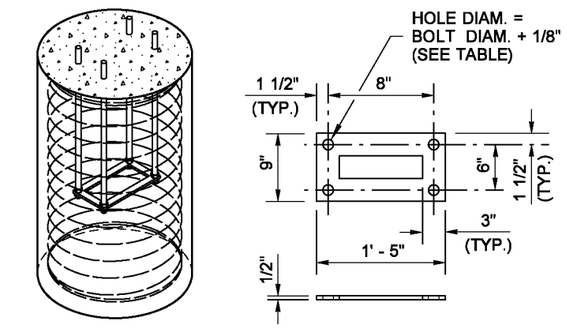

ISOMETRIC VIEW
SHOWN FOR INSTALLATION

PLATE DETAIL

ANCHOR BOLT ALTERNATIVE
THREADED ROD WITH NUTS TOP AND BOTTOM

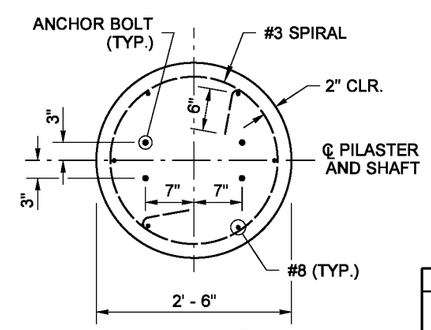

SECTION C

1 BAR "F" ~ #3 @ 12" BOTH DIRECTIONS, OR 6 × 6-W5.5 × W5.5, OR 12 × 12-W9.5 × W6.5, OR W9.5 (D10) HORIZONTAL @ 12" O.C. WITH W6 (D6) VERTICAL @ 12" O.C. OR EQUIVALENT. CENTER HORIZONTAL BAR ON WALL. ALTERNATE VERTICAL BARS AS SHOWN.

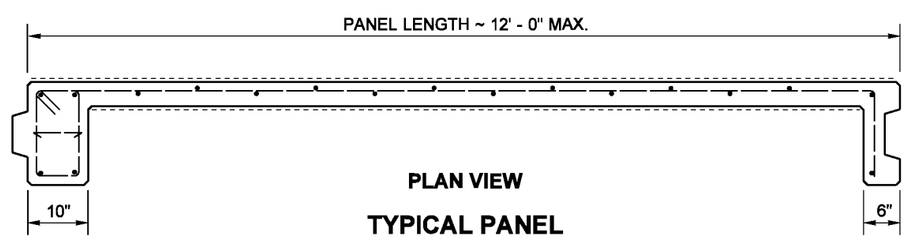

PLAN VIEW

TYPICAL PANEL

NOTES

1. Wall to be designated Noise Barrier Wall Type 11A, 11B, 11C or 11D. The Contract specifies actual wall dimensions.
2. For intermediate wall heights, use the next higher H.
3. Panels shall have at least 3 feet of level ground on each side.
4. The Contract specifies actual foundation requirements D1 or D2.
5. Maximum Panel length shall be 12 feet.

WIND EXPOSURE & VELOCITY		
NOISE BARRIER TYPE	WIND EXPOSURE	WIND VELOCITY (MPH)
11A	B1	80
11B	B1	90
11C	B2	80
11D	B2	90

SOIL TYPE	
SOIL TYPE	ANGLE OF INTERNAL FRICTION Φ (DEGREES)
D1	32
D2	38

PRECAST CONCRETE WALL ON SHAFT FOUNDATION

NOTE: THIS PLAN IS NOT A LEGAL ENGINEERING DOCUMENT BUT AN ELECTRONIC DUPLICATE. THE ORIGINAL, SIGNED BY THE ENGINEER AND APPROVED FOR PUBLICATION, IS KEPT ON FILE AT THE WASHINGTON STATE DEPARTMENT OF TRANSPORTATION. A COPY MAY BE OBTAINED UPON REQUEST.

NOISE BARRIER WALL TYPE 11

STANDARD PLAN D-2.36-02

SHEET 1 OF 3 SHEETS

APPROVED FOR PUBLICATION

Pasco Bakotich III — STATE DESIGN ENGINEER
01-06-09 — DATE

Washington State Department of Transportation

EFFECTIVE: AUGUST 6, 2012 TO August 4, 2013
EFFECTIVE: AUGUST 6, 2012 TO August 4, 2013
EFFECTIVE: AUGUST 6, 2012 TO August 4, 2013
EFFECTIVE: AUGUST 6, 2012 TO August 4, 2013

EFFECTIVE: AUGUST 6, 2012 TO August 4, 2013

NOTE

THE BOTTOM 9" OF **BAR "B"** SHALL BE PAINTED WITH ONE COAT OF FORMULA A-6-86 ZINC DUST OXIDE PRIMER OR, ONE COAT OF FORMULA A-11-99 PRIMER.

DIMENSION TABLE			
S	A ◇1	F ◇1	T
#7	1 21/32"	1 1/8"	1 1/2"
#9	2"	1 3/8"	1 3/4"
#11	2 15/32"	1 21/32"	2 1/4"

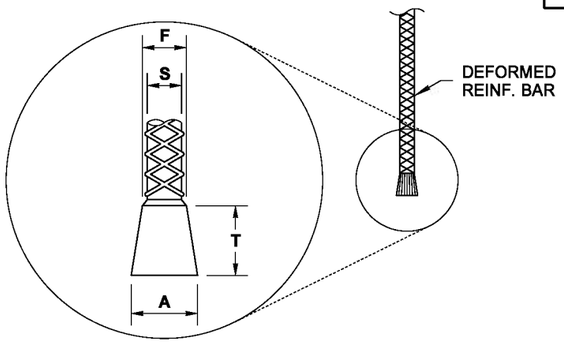

BAR "B"

THE WEDGE HEAD SHALL BEAR FIRMLY AND UNIFORMLY AGAINST THE BASE PLATE. **BAR "B"** SHALL BE HELD SECURE DURING CONCRETE PLACEMENT TO PREVENT GAPS BETWEEN THE WEDGE HEAD AND THE BASE PLATE.

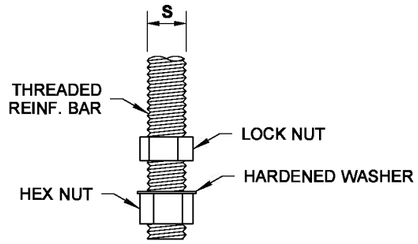

BAR "B"

THREADED BAR OPTION

◇1 NO TAPER IS REQUIRED ON THE **BASE PLATE** WHEN USING THE **THREADED BAR OPTION**, USE DIAM. **F** HOLES

NOTE

ANCHOR BOLTS, NUTS, WASHERS, BASE PLATE, AND BAR "B" SHALL HAVE A PROTECTIVE COATING OF ONE OF THE FOLLOWING: HOT DIPPED GALVANIZING AASHTO M 232 FOR HARDWARE; AASHTO M 111 FOR WASHERS AND PLATES: MECHANICAL GALVANIZING AASHTO M 298 CL 55, OR ZINC RICH PAINT, PAINT THREADS AND NUTS AFTER INSTALLATION.

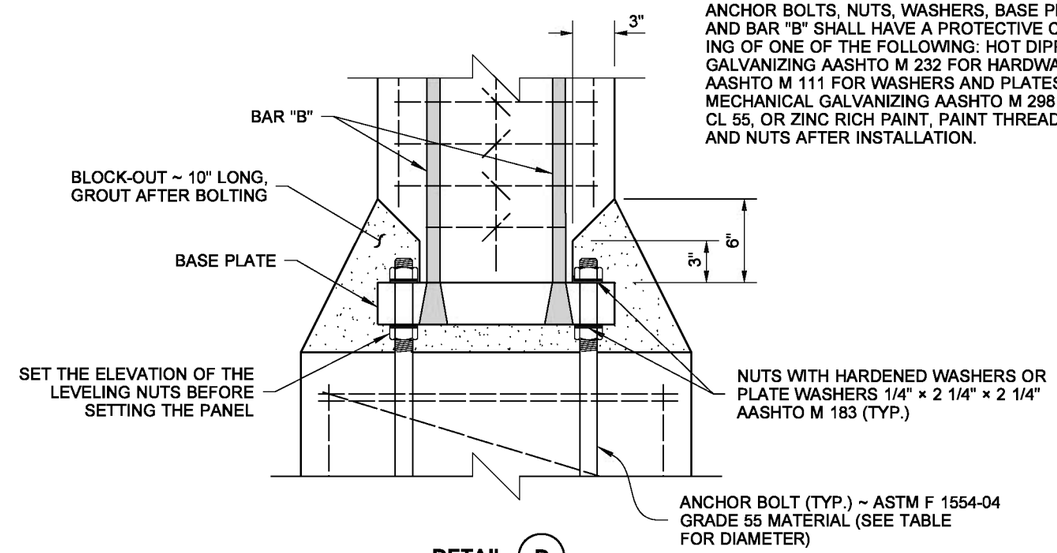

DETAIL D

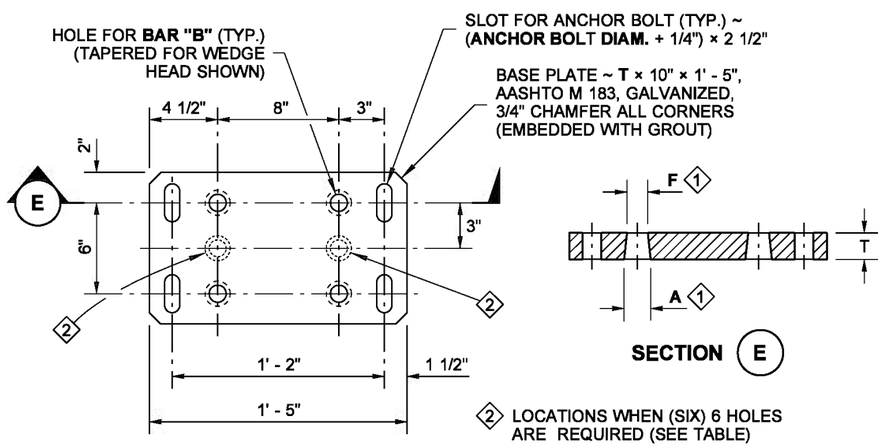

BASE PLATE

BAR "B" AND BASE PLATE DETAILS

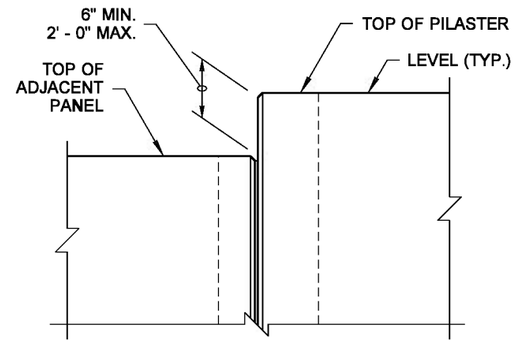

ELEVATION VIEW

STEP DETAIL

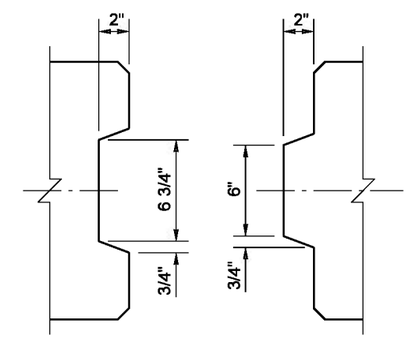

PLAN VIEW

SHEAR-KEY DETAIL

BENDING DIAGRAM

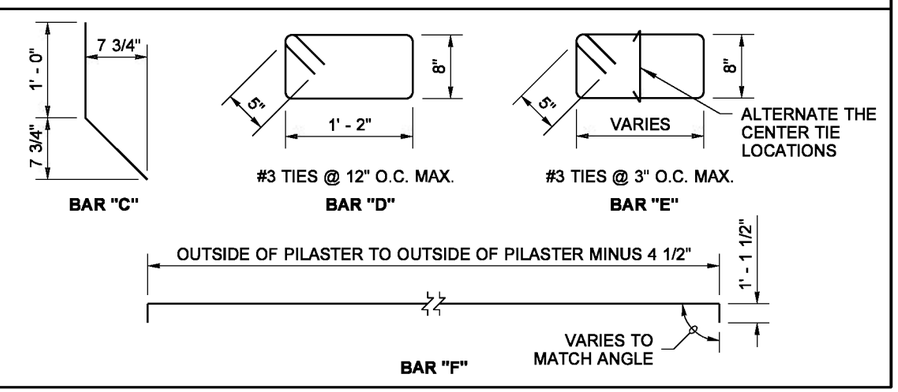

PRECAST CONCRETE WALL ON SHAFT FOUNDATION

NOTE: THIS PLAN IS NOT A LEGAL ENGINEERING DOCUMENT BUT AN ELECTRONIC DUPLICATE. THE ORIGINAL, SIGNED BY THE ENGINEER AND APPROVED FOR PUBLICATION, IS KEPT ON FILE AT THE WASHINGTON STATE DEPARTMENT OF TRANSPORTATION. A COPY MAY BE OBTAINED UPON REQUEST.

NOISE BARRIER WALL TYPE 11

STANDARD PLAN D-2.36-02

SHEET 2 OF 3 SHEETS

APPROVED FOR PUBLICATION

Pasco Bakotich III — STATE DESIGN ENGINEER

01-06-09 — DATE

Washington State Department of Transportation

DRAWN BY: MARK SUJKA

EFFECTIVE: AUGUST 6, 2012 TO August 4, 2013

EFFECTIVE: AUGUST 6, 2012 TO August 4, 2013
EFFECTIVE: AUGUST 6, 2012 TO August 4, 2013

DRAWN BY: MARK SUJKA

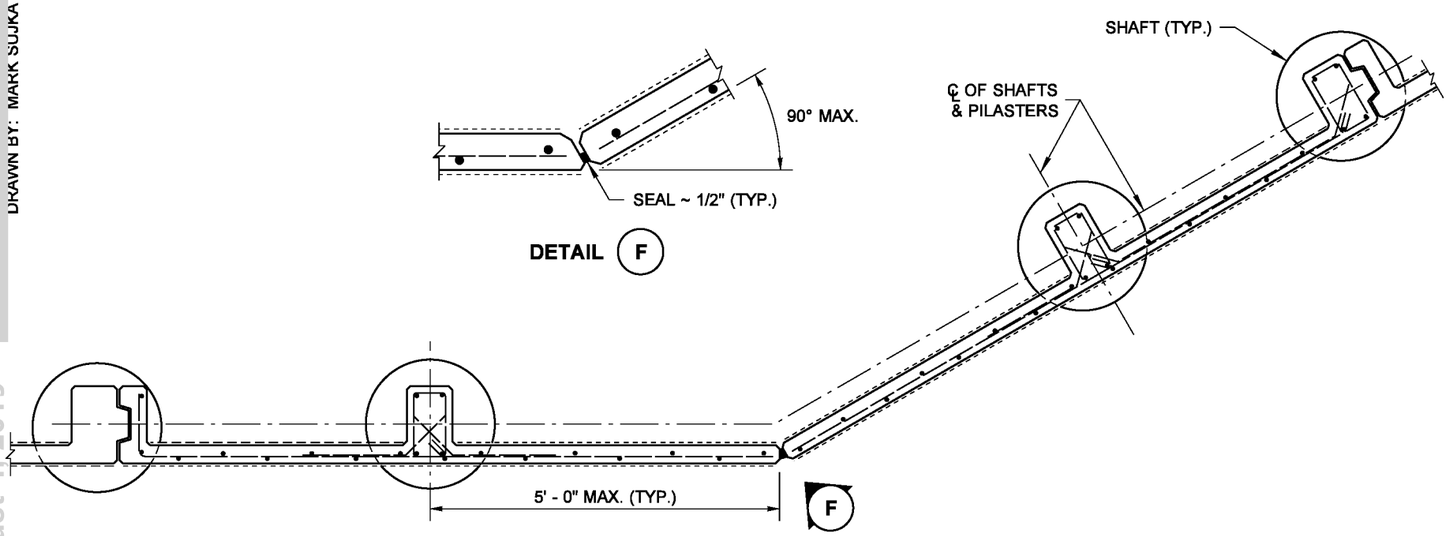

ANGLE POINT ~ CANTILEVERED

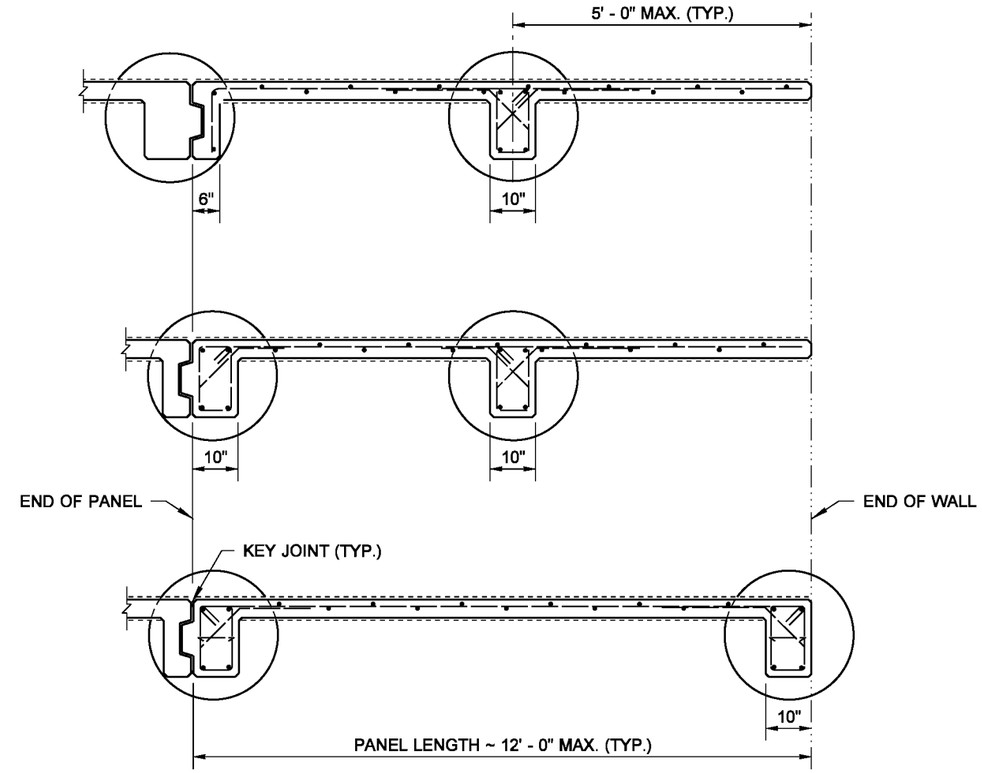

END-PANEL OPTIONS

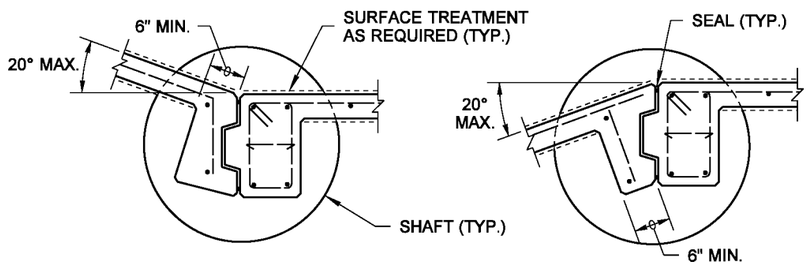

ANGLE POINT ~ ON SHAFT

ANGLE 20° OR LESS

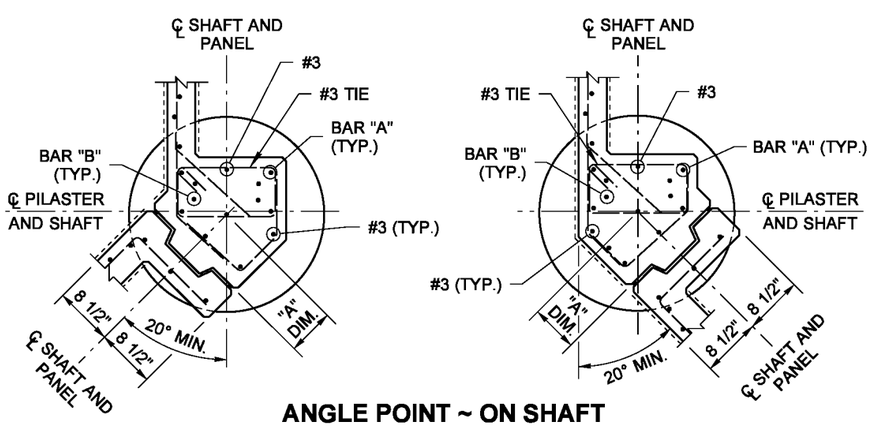

ANGLE POINT ~ ON SHAFT

ANGLE 20° TO 90°

ANGLE	"A" DIMENSION
30°	4 1/2"
40°	5 1/2"
50°	6 1/2"
60°	7 1/4"
70°	7 3/4"
80°	8"
90°	9 1/4"

PRECAST CONCRETE WALL ON SHAFT FOUNDATION

NOTE: THIS PLAN IS NOT A LEGAL ENGINEERING DOCUMENT BUT AN ELECTRONIC DUPLICATE. THE ORIGINAL, SIGNED BY THE ENGINEER AND APPROVED FOR PUBLICATION, IS KEPT ON FILE AT THE WASHINGTON STATE DEPARTMENT OF TRANSPORTATION. A COPY MAY BE OBTAINED UPON REQUEST.

NOISE BARRIER WALL TYPE 11

STANDARD PLAN D-2.36-02

SHEET 3 OF 3 SHEETS

APPROVED FOR PUBLICATION

Pasco Bakotich III — STATE DESIGN ENGINEER

01-06-09 — DATE

Washington State Department of Transportation

EFFECTIVE: AUGUST 6, 2012 TO August 4, 2013
EFFECTIVE: AUGUST 6, 2012 TO August 4, 2013
EFFECTIVE: AUGUST 6, 2012 TO August 4, 2013
EFFECTIVE: AUGUST 6, 2012 TO August 4, 2013

EFFECTIVE: AUGUST 6, 2012 TO August 4, 2013
EFFECTIVE: AUGUST 6, 2012 TO August 4, 2013

DRAWN BY: ADAM COCHRAN

WALL HT H	TYPE 13A W	TYPE 13A X	TYPE 13A BARS "B"&"C"	TYPE 13A BAR "E"	TYPE 13A BAR "D"	TYPE 13A BAR "J"	TYPE 13B W	TYPE 13B X	TYPE 13B BARS "B"&"C"	TYPE 13B BAR "E"	TYPE 13B BAR "D"	TYPE 13B BAR "J"
6' - 0"	5' - 6"	1"	#4 @ 15"	#4 @ 15"	#3 @ 15"	#5 @ 15"	5' - 6"	1"	#4 @ 15"	#4 @ 15"	#3 @ 15"	#5 @ 15"
8' - 0"	5' - 3"	1"	#4 @ 15"	#4 @ 15"	#3 @ 15"	#5 @ 15"	5' - 3"	1"	#4 @ 15"	#4 @ 15"	#3 @ 15"	#5 @ 15"
10' - 0"	5' - 3"	1"	#4 @ 15"	#4 @ 15"	#3 @ 15"	#5 @ 15"	5' - 3"	1"	#4 @ 15"	#4 @ 15"	#3 @ 15"	#5 @ 15"
12' - 0"	5' - 0"	1"	#4 @ 15"	#4 @ 15"	#3 @ 15"	#5 @ 15"	5' - 0"	1"	#4 @ 10"	#4 @ 10"	#3 @ 10"	#5 @ 10"
14' - 0"	4' - 9"	1"	#4 @ 11"	#4 @ 11"	#3 @ 11"	#5 @ 11"	5' - 0"	1"	#4 @ 12"	#5 @ 12"	#4 @ 12"	#5 @ 12"
16' - 0"	5' - 0"	10"	#4 @ 12"	#5 @ 12"	#4 @ 12"	#5 @ 12"	5' - 0"	10"	#4 @ 10"	#5 @ 10"	#4 @ 10"	#5 @ 10"
18' - 0"	5' - 0"	10"	#4 @ 10"	#5 @ 10"	#4 @ 10"	#5 @ 10"	5' - 3"	1' - 6"	#4 @ 12"	#5 @ 12"	#5 @ 12"	#5 @ 12"

WALL HT H	TYPE 13C W	TYPE 13C X	TYPE 13C BARS "B"&"C"	TYPE 13C BAR "E"	TYPE 13C BAR "D"	TYPE 13C BAR "J"	TYPE 13D W	TYPE 13D X	TYPE 13D BARS "B"&"C"	TYPE 13D BAR "E"	TYPE 13D BAR "D"	TYPE 13D BAR "J"
6' - 0"	5' - 6"	1"	#4 @ 15"	#4 @ 15"	#3 @ 15"	#5 @ 15"	5' - 6"	1"	#4 @ 15"	#4 @ 15"	#3 @ 15"	#5 @ 15"
8' - 0"	5' - 3"	1"	#4 @ 15"	#4 @ 15"	#3 @ 15"	#5 @ 15"	5' - 3"	1"	#4 @ 15"	#4 @ 15"	#3 @ 15"	#5 @ 15"
10' - 0"	5' - 3"	1"	#4 @ 15"	#4 @ 15"	#3 @ 15"	#5 @ 15"	5' - 3"	1"	#4 @ 12"	#4 @ 12"	#3 @ 12"	#5 @ 12"
12' - 0"	5' - 0"	1"	#4 @ 12"	#4 @ 12"	#3 @ 12"	#5 @ 15"	5' - 0"	1"	#4 @ 12"	#5 @ 12"	#4 @ 12"	#5 @ 12"
14' - 0"	4' - 9"	1"	#4 @ 12"	#5 @ 12"	#4 @ 12"	#5 @ 11"	5' - 3"	10"	#4 @ 10"	#5 @ 10"	#4 @ 10"	#5 @ 10"
16' - 0"	5' - 0"	10"	#4 @ 10"	#5 @ 10"	#4 @ 10"	#5 @ 12"	5' - 6"	1' - 6"	#4 @ 13"	#5 @ 13"	#5 @ 13"	#5 @ 13"
18' - 0"	5' - 0"	1' - 0"	#4 @ 10"	#5 @ 10"	#4 @ 10"	#5 @ 10"	5' - 9"	1 - 9"	#4 @ 9"	#5 @ 9"	#5 @ 9"	#5 @ 9"

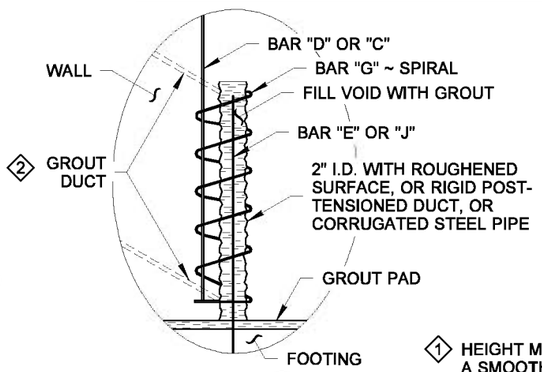

DETAIL A

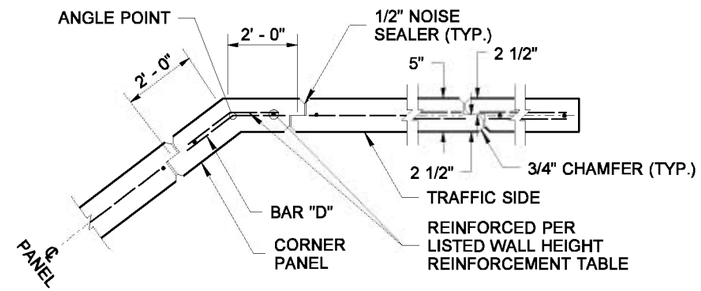

JOINT AND CORNER DETAIL

1 HEIGHT MAY VARY IF REQUIRED TO PROVIDE A SMOOTH PROFILE CONSISTENT WITH THE ROADWAY PROFILE

2 FILL THE JOINT HOLE WITH GROUT USING DUCTS. DUCTS SHALL BE LOCATED ON PANEL FACE OPPOSITE TRAFFIC

WIND EXPOSURE & VELOCITY		
NOISE BARRIER TYPE	WIND EXPOSURE	WIND VELOCITY (MPH)
13A	B1	80
13B	B1	90
13C	B2	80
13D	B2	90

NOTES

1. Wall to be designated Noise Barrier Wall Type 13A, 13B, 13C or 13D. The Contract specifies actual wall designations.
2. For intermediate wall heights, use the next higher H.
3. Panels shall have at least 3 feet of level ground on each side.
4. Construction joints in the footing shall be spaced at 120 feet max.
5. All joints shall be in full contact and sealed.
6. The Contract specifies actual foundation requirements D1 or D2.

BENDING DIAGRAM

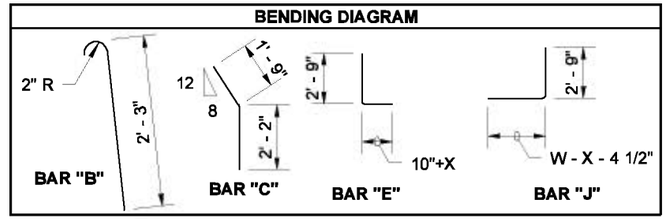

PRECAST CONCRETE WALL W/ TRAFFIC BARRIER ON SPREAD FOOTING

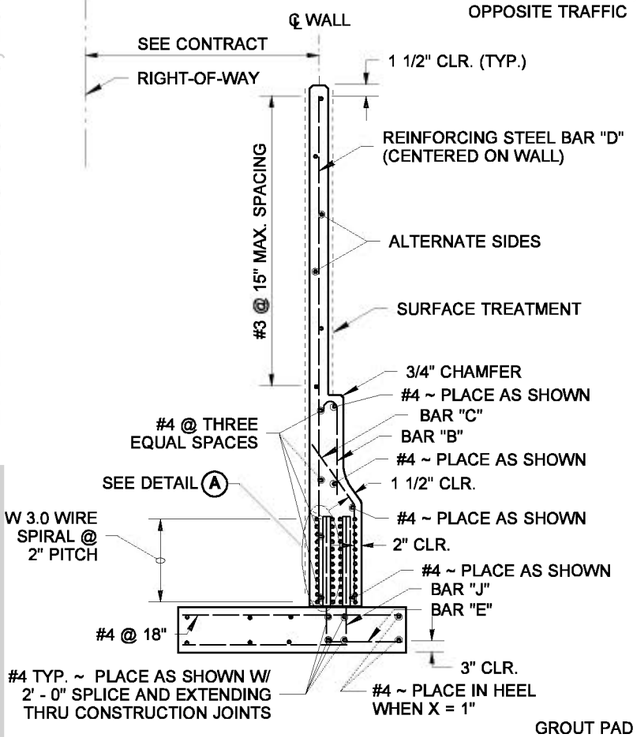

REINFORCEMENT SECTION

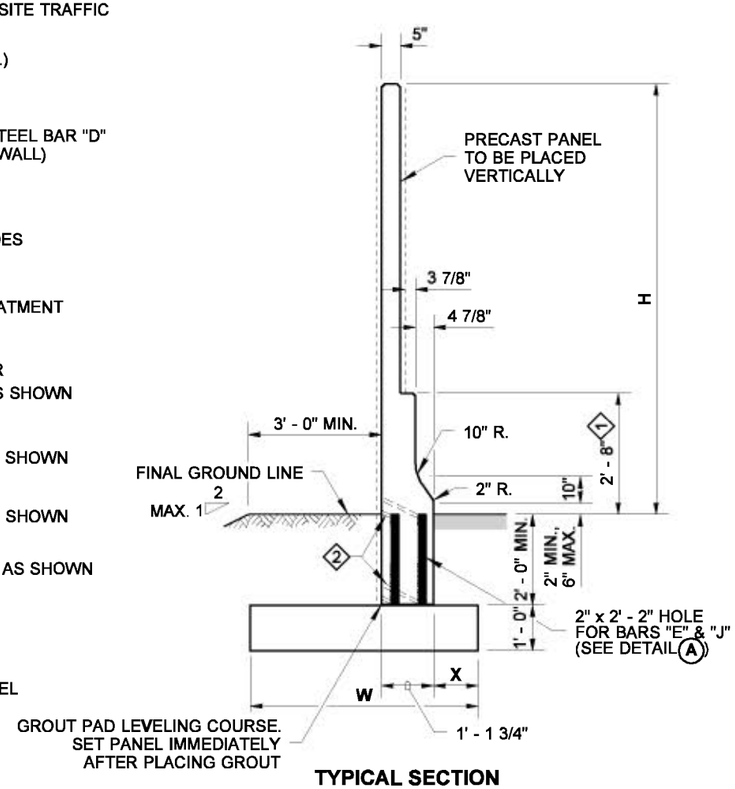

TYPICAL SECTION

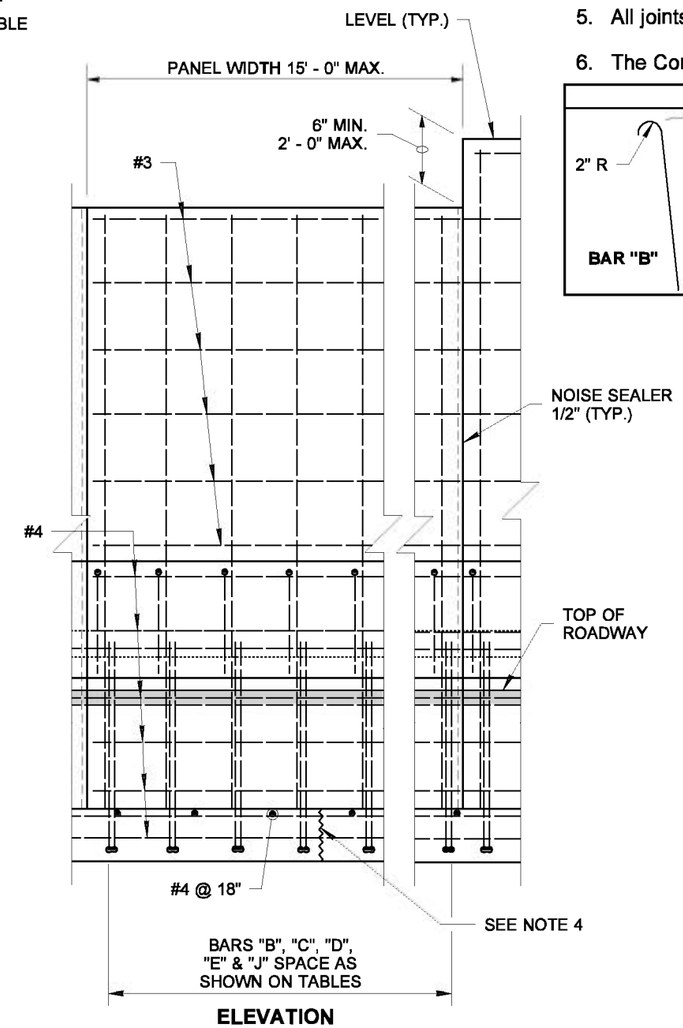

ELEVATION

NOTE: THIS PLAN IS NOT A LEGAL ENGINEERING DOCUMENT BUT AN ELECTRONIC DUPLICATE. THE ORIGINAL, SIGNED BY THE ENGINEER AND APPROVED FOR PUBLICATION, IS KEPT ON FILE AT THE WASHINGTON STATE DEPARTMENT OF TRANSPORTATION. A COPY MAY BE OBTAINED UPON REQUEST.

NOISE BARRIER WALL TYPE 13

STANDARD PLAN D-2.42-00

SHEET 1 OF 1 SHEET

APPROVED FOR PUBLICATION

Harold J. Peterfeso — STATE DESIGN ENGINEER

11-10-05 — DATE

Washington State Department of Transportation

EFFECTIVE: AUGUST 6, 2012 TO August 4, 2013
EFFECTIVE: AUGUST 6, 2012 TO August 4, 2013
EFFECTIVE: AUGUST 6, 2012 TO August 4, 2013
EFFECTIVE: AUGUST 6, 2012 TO August 4, 2013

EFFECTIVE: AUGUST 6, 2012 TO August 4, 2013
EFFECTIVE: AUGUST 6, 2012 TO August 4, 2013

DRAWN BY: ADAM COCHRAN

WALL HT H	TYPE 13SSA W	TYPE 13SSA X	TYPE 13SSA BARS "B"&"C"	TYPE 13SSA BAR "E"	TYPE 13SSA BAR "D"	TYPE 13SSA BAR "J"	TYPE 13SSB W	TYPE 13SSB X	TYPE 13SSB BARS "B"&"C"	TYPE 13SSB BAR "E"	TYPE 13SSB BAR "D"	TYPE 13SSB BAR "J"
6' - 0"	5' - 6"	1"	#4 @ 15"	#4 @ 15"	#3 @ 15"	#5 @ 15"	5' - 6"	1"	#4 @ 15"	#4 @ 15"	#3 @ 15"	#5 @ 15"
8' - 0"	5' - 3"	1"	#4 @ 15"	#4 @ 15"	#3 @ 15"	#5 @ 15"	5' - 3"	1"	#4 @ 15"	#4 @ 15"	#3 @ 15"	#5 @ 15"
10' - 0"	5' - 3"	1"	#4 @ 15"	#4 @ 15"	#3 @ 15"	#5 @ 15"	5' - 3"	1"	#4 @ 15"	#4 @ 15"	#3 @ 15"	#5 @ 15"
12' - 0"	5' - 0"	1"	#4 @ 15"	#4 @ 15"	#3 @ 15"	#5 @ 15"	5' - 0"	1"	#4 @ 10"	#4 @ 10"	#3 @ 10"	#5 @ 10"
14' - 0"	4' - 9"	1"	#4 @ 11"	#4 @ 11"	#3 @ 11"	#5 @ 11"	5' - 0"	1"	#4 @ 12"	#5 @ 12"	#4 @ 12"	#5 @ 12"
16' - 0"	5' - 0"	10"	#4 @ 12"	#5 @ 12"	#4 @ 12"	#5 @ 12"	5' - 0"	10"	#4 @ 10"	#5 @ 10"	#4 @ 10"	#5 @ 10"
18' - 0"	5' - 0"	10"	#4 @ 10"	#5 @ 10"	#4 @ 10"	#5 @ 10"	5' - 3"	1' - 6"	#4 @ 12"	#5 @ 12"	#5 @ 12"	#5 @ 12"

WALL HT H	TYPE 13SSC W	TYPE 13SSC X	TYPE 13SSC BARS "B"&"C"	TYPE 13SSC BAR "E"	TYPE 13SSC BAR "D"	TYPE 13SSC BAR "J"	TYPE 13SSD W	TYPE 13SSD X	TYPE 13SSD BARS "B"&"C"	TYPE 13SSD BAR "E"	TYPE 13SSD BAR "D"	TYPE 13SSD BAR "J"
6' - 0"	5' - 6"	1"	#4 @ 15"	#4 @ 15"	#3 @ 15"	#5 @ 15"	5' - 6"	1"	#4 @ 15"	#4 @ 15"	#3 @ 15"	#5 @ 15"
8' - 0"	5' - 3"	1"	#4 @ 15"	#4 @ 15"	#3 @ 15"	#5 @ 15"	5' - 3"	1"	#4 @ 15"	#4 @ 15"	#3 @ 15"	#5 @ 15"
10' - 0"	5' - 3"	1"	#4 @ 15"	#4 @ 15"	#3 @ 15"	#5 @ 15"	5' - 3"	1"	#4 @ 12"	#4 @ 12"	#3 @ 12"	#5 @ 12"
12' - 0"	5' - 0"	1"	#4 @ 12"	#4 @ 12"	#3 @ 12"	#5 @ 15"	5' - 0"	1"	#4 @ 12"	#5 @ 12"	#4 @ 12"	#5 @ 12"
14' - 0"	4' - 9"	1"	#4 @ 12"	#5 @ 12"	#4 @ 12"	#5 @ 11"	5' - 3"	10"	#4 @ 10"	#5 @ 10"	#4 @ 10"	#5 @ 10"
16' - 0"	5' - 0"	10"	#4 @ 10"	#5 @ 10"	#4 @ 10"	#5 @ 12"	5' - 6"	1' - 6"	#4 @ 13"	#5 @ 13"	#5 @ 13"	#5 @ 13"
18' - 0"	5' - 0"	1' - 0"	#4 @ 10"	#5 @ 10"	#4 @ 10"	#5 @ 10"	5' - 9"	1 - 9"	#4 @ 9"	#5 @ 9"	#5 @ 9"	#5 @ 9"

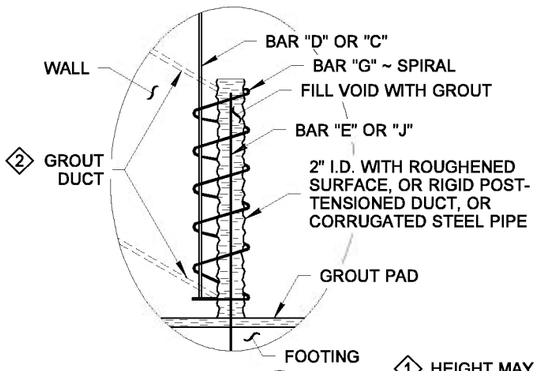

DETAIL (A)

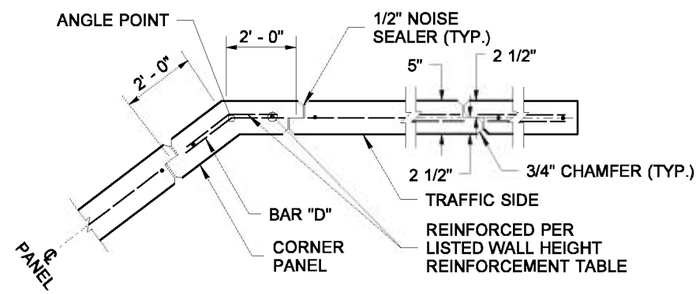

JOINT AND CORNER DETAIL

WIND EXPOSURE & VELOCITY		
NOISE BARRIER TYPE	WIND EXPOSURE	WIND VELOCITY (MPH)
13SSA	B1	80
13SSB	B1	90
13SSC	B2	80
13SSD	B2	90

NOTES

1. Wall to be designated Noise Barrier Wall Type 13SSA, 13SSB, 13SSC or 13SSD. The Contract specifies actual wall designations.
2. For intermediate wall heights, use the next higher H.
3. Panels shall have at least 3 feet of level ground on each side.
4. Construction joints in the footing shall be spaced at 120 feet maximum.
5. All joints shall be in full contact and sealed.
6. The Contract specifies actual foundation requirements D1 or D2.

1 HEIGHT MAY VARY IF REQUIRED TO PROVIDE A SMOOTH PROFILE CONSISTENT WITH THE ROADWAY PROFILE

2 FILL THE JOINT HOLE WITH GROUT USING DUCTS. DUCTS SHALL BE LOCATED ON PANEL FACE OPPOSITE TRAFFIC

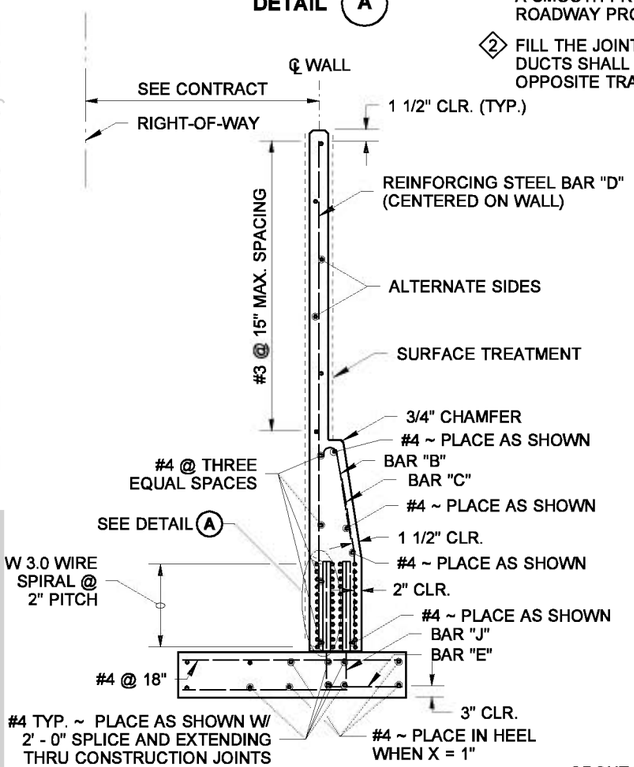

REINFORCEMENT SECTION

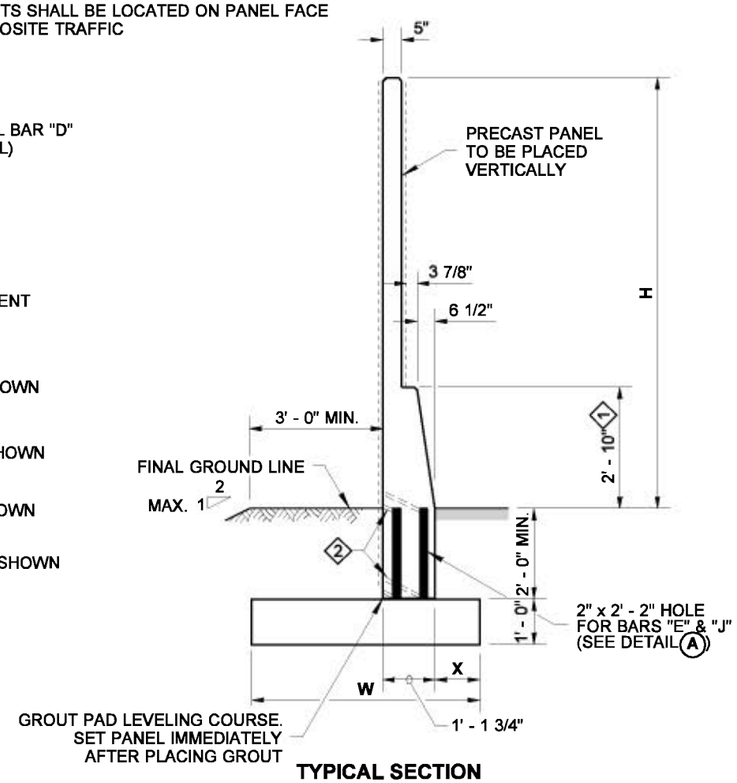

TYPICAL SECTION

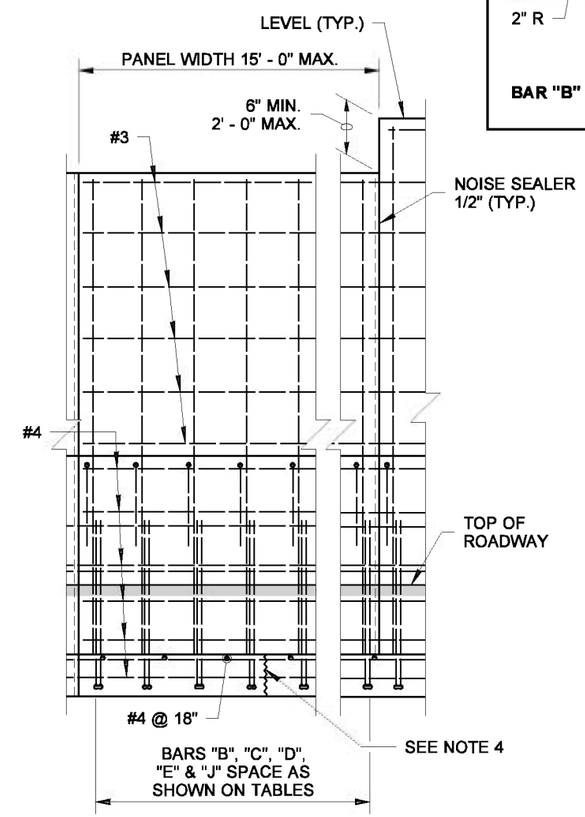

ELEVATION

BENDING DIAGRAM

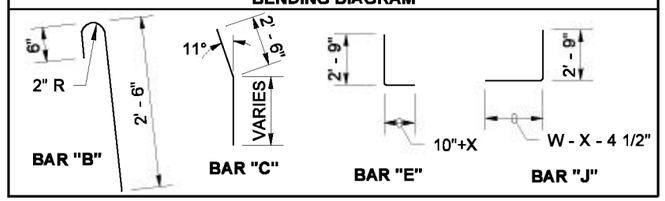

PRECAST CONCRETE WALL W/ SINGLE SLOPE TRAFFIC BARRIER ON SPREAD FOOTING

EXPIRES AUGUST 23, 2006

NOTE: THIS PLAN IS NOT A LEGAL ENGINEERING DOCUMENT BUT AN ELECTRONIC DUPLICATE. THE ORIGINAL, SIGNED BY THE ENGINEER AND APPROVED FOR PUBLICATION, IS KEPT ON FILE AT THE WASHINGTON STATE DEPARTMENT OF TRANSPORTATION. A COPY MAY BE OBTAINED UPON REQUEST.

NOISE BARRIER WALL TYPE 13SS

STANDARD PLAN D-2.44-00

SHEET 1 OF 1 SHEET

APPROVED FOR PUBLICATION

Harold J. Peterfeso — STATE DESIGN ENGINEER — *11-10-05* — DATE

Washington State Department of Transportation

EFFECTIVE: AUGUST 6, 2012 TO August 4, 2013
EFFECTIVE: AUGUST 6, 2012 TO August 4, 2013
EFFECTIVE: AUGUST 6, 2012 TO August 4, 2013
EFFECTIVE: AUGUST 6, 2012 TO August 4, 2013

EFFECTIVE: AUGUST 6, 2012 TO August 4, 2013

DRAWN BY: ADAM COCHRAN

WALL HT H	TYPE 14A BAR "A"	TYPE 14B BAR "A"	TYPE 14C BAR "A"	TYPE 14D BAR "A"	WALL HT H
6' - 0"	#4 @ 15"	#4 @ 15"	#4 @ 15"	#4 @ 15"	6' - 0"
8' - 0"	#4 @ 15"	#4 @ 15"	#4 @ 15"	#4 @ 15"	8' - 0"
10' - 0"	#4 @ 15"	#4 @ 15"	#4 @ 15"	#4 @ 15"	10' - 0"
12' - 0"	#4 @ 15"	#4 @ 15"	#4 @ 15"	#4 @ 15"	12' - 0"
14' - 0"	#4 @ 15"	#4 @ 11"	#4 @ 15"	#4 @ 10"	14' - 0"
16' - 0"	#4 @ 10"	#4 @ 10"	#4 @ 10"	#5 @ 12"	16' - 0"
18' - 0"	#4 @ 10"	#5 @ 12"	#4 @ 10"	#5 @ 12"	18' - 0"

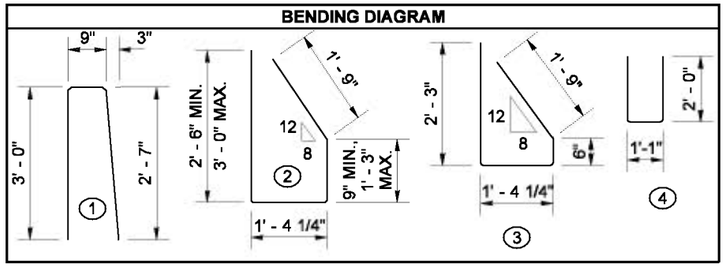

WIND EXPOSURE & VELOCITY		
NOISE BARRIER TYPE	WIND EXPOSURE	WIND VELOCITY (MPH)
14A	B1	80
14B	B1	90
14C	B2	80
14D	B2	90

NOTES

1. Wall to be designated Noise Barrier Wall Type 14A, 14B, 14C or 14D. The Contract specifies actual wall designations.
2. For intermediate wall heights, use the next higher H.
3. Panels shall have at least 3 feet level ground on each side.
4. All joints shall be in full contact and sealed.
5. Anchor Bolts, Nuts, Washers, Base Plate, and Bar "B" shall have a Protective Coating of one of the following: Hot Dipped Galvanizing AASHTO M 232 for Hardware; AASHTO M 111 for Washers and Plates: Mechanical Galvanizing AASHTO M 298 CL 55, or Zinc Rich Paint, Paint threads and nuts after installation.
6. The bottom 9" of Bar "B" shall be painted with one coat of Formula A-6-86 Zinc Dust Oxide Primer OR, one coat of Formula A-11-99 Primer.
7. The Contract specifies actual foundation requirements D1 or D2.

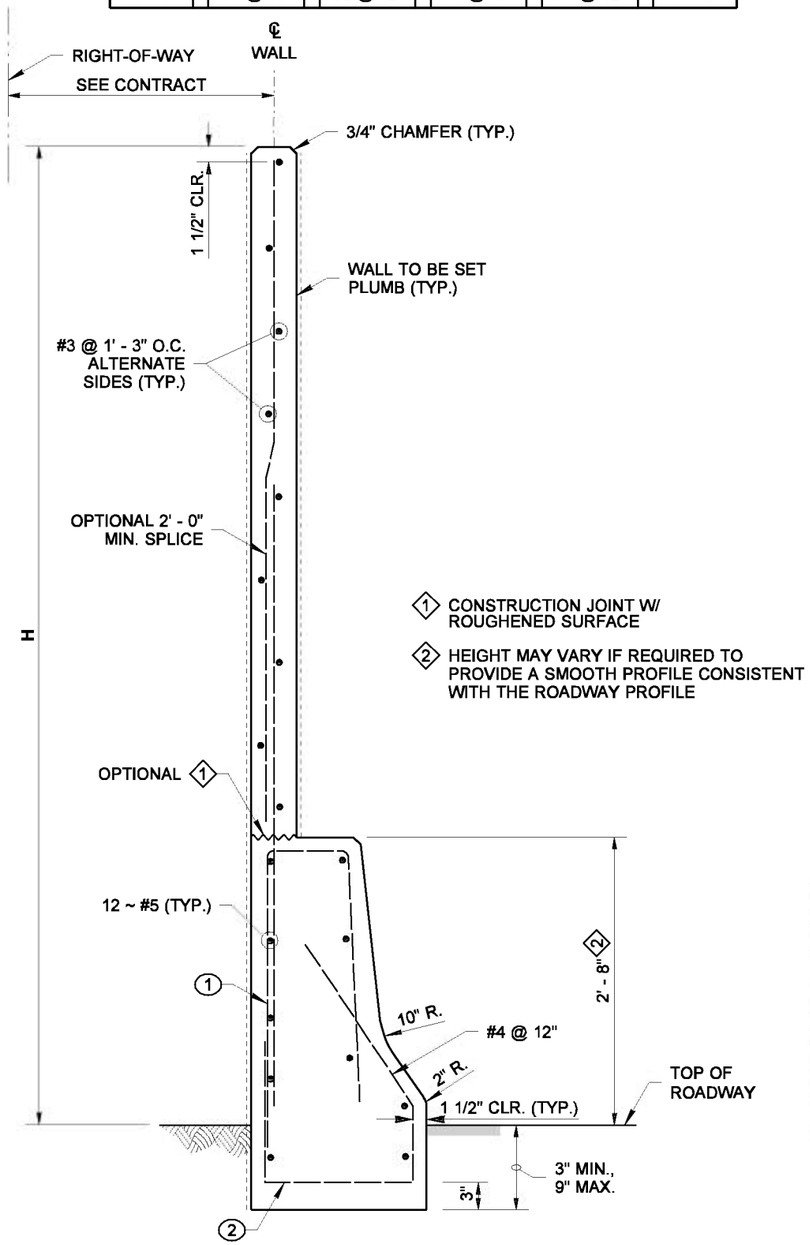

TYPICAL SECTION

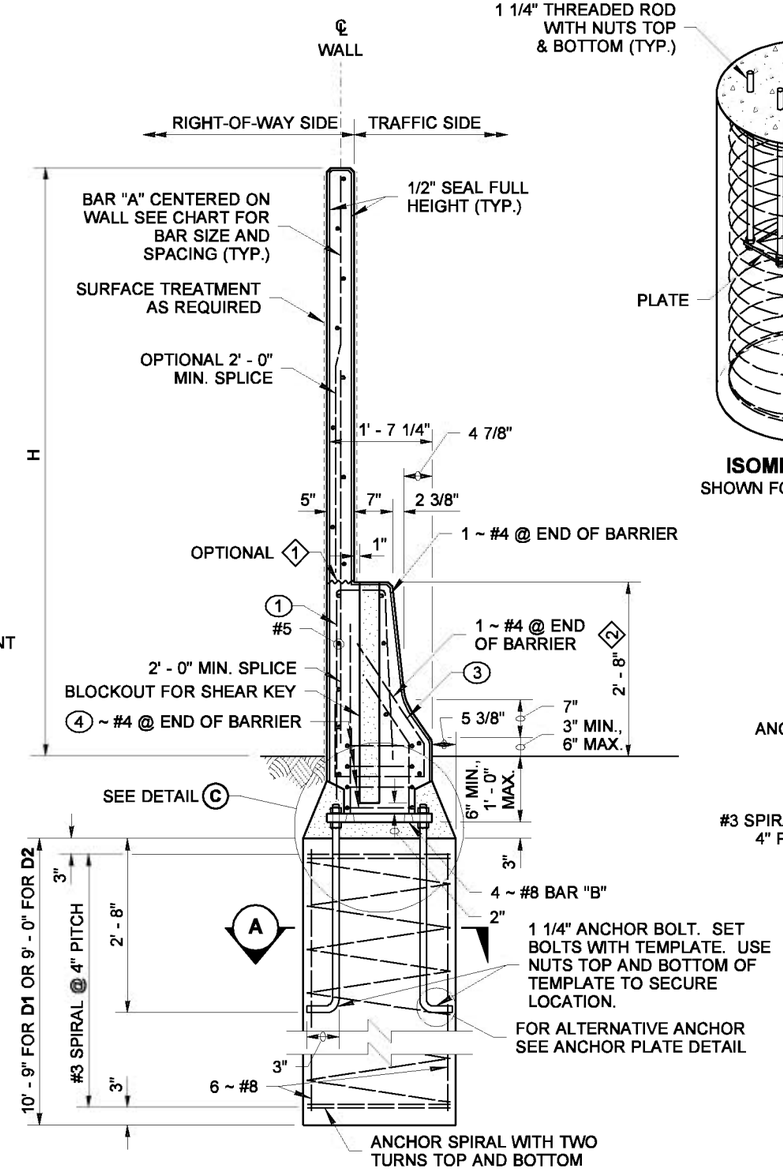

SECTION AT SHAFT SUPPORT

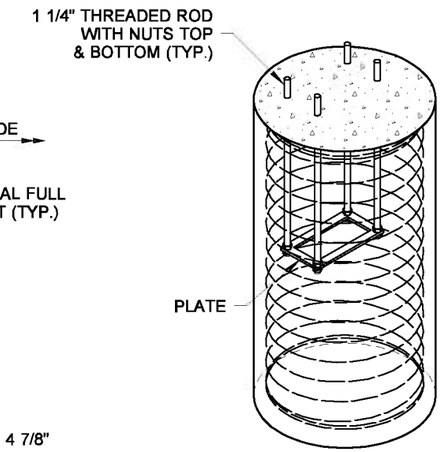

ISOMETRIC VIEW
SHOWN FOR INSTALLATION

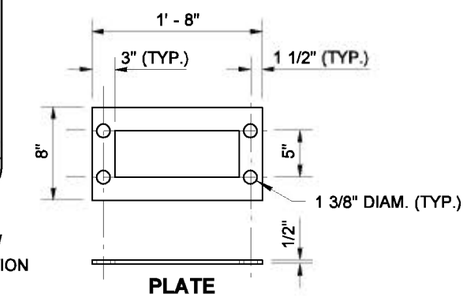

PLATE

ANCHOR PLATE DETAIL

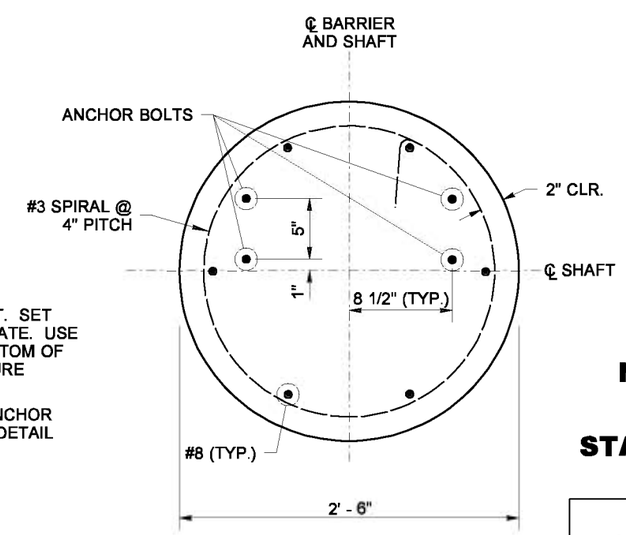

SECTION A

PRECAST CONCRETE WALL W/ TRAFFIC BARRIER ON SHAFT FOUNDATION

EXPIRES AUGUST 23, 2006

NOTE: THIS PLAN IS NOT A LEGAL ENGINEERING DOCUMENT BUT AN ELECTRONIC DUPLICATE. THE ORIGINAL, SIGNED BY THE ENGINEER AND APPROVED FOR PUBLICATION, IS KEPT ON FILE AT THE WASHINGTON STATE DEPARTMENT OF TRANSPORTATION. A COPY MAY BE OBTAINED UPON REQUEST.

NOISE BARRIER WALL TYPE 14

STANDARD PLAN D-2.46-00

SHEET 1 OF 2 SHEETS

APPROVED FOR PUBLICATION

Harold J. Peterfeso — STATE DESIGN ENGINEER
11-10-05 — DATE

Washington State Department of Transportation

EFFECTIVE: AUGUST 6, 2012 TO August 4, 2013

EFFECTIVE: AUGUST 6, 2012 TO August 4, 2013
EFFECTIVE: AUGUST 6, 2012 TO August 4, 2013

DRAWN BY: ADAM COCHRAN

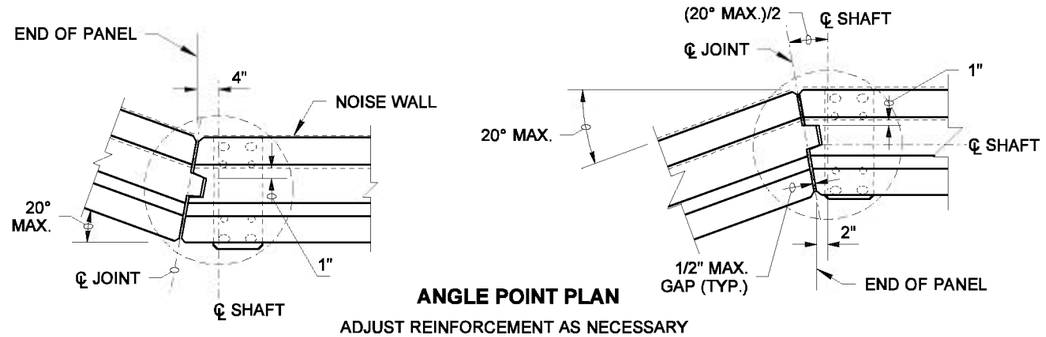

ANGLE POINT PLAN

ADJUST REINFORCEMENT AS NECESSARY TO ACCOMODATE ANGLE POINT

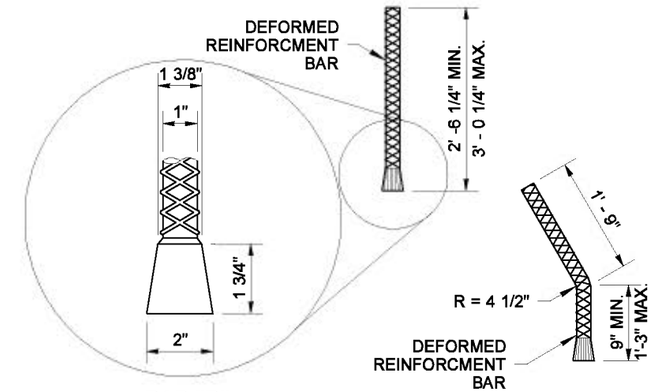

BAR "B"

WEDGE HEAD SHALL BEAR FIRMLY AND UNIFORMLY AGAINST BASE PLATE. BAR "B" SHALL BE HELD SECURE DURING CONCRETE PLACEMENT TO PREVENT GAPS BETWEEN WEDGE HEAD AND BASE PLATE.

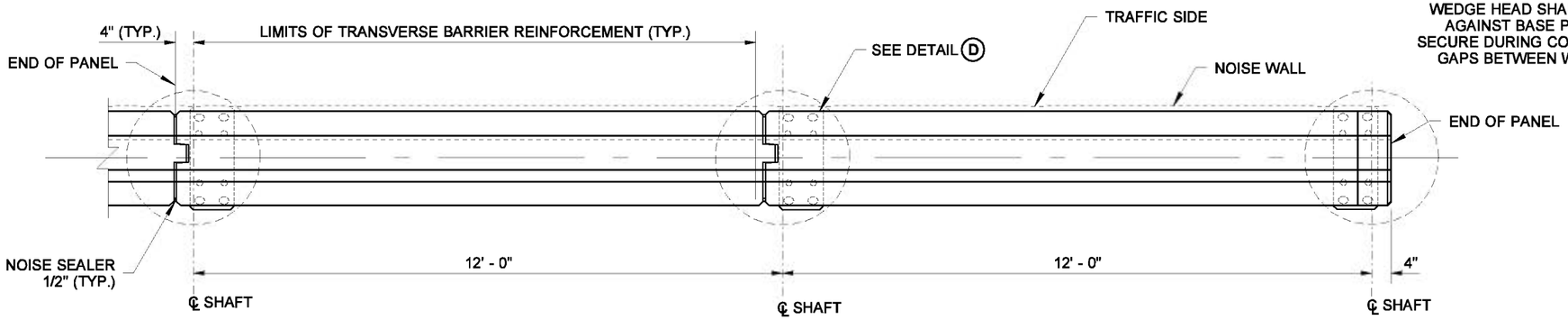

TYPICAL INTERMEDIATE AND END PANEL

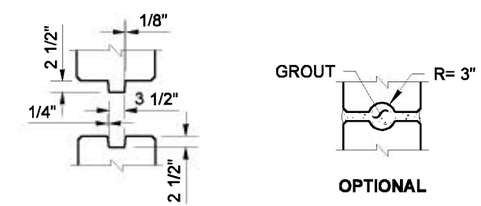

SHEAR-KEY DETAIL

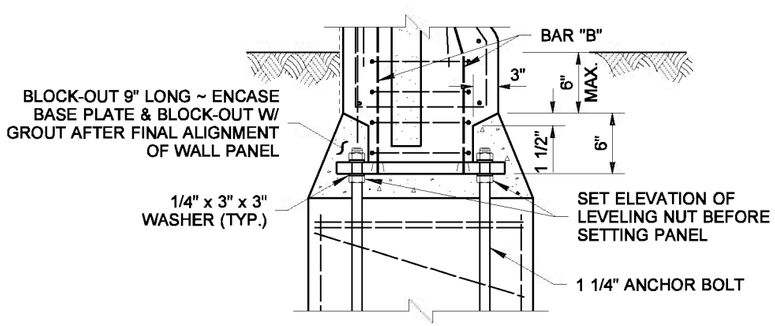

DETAIL C

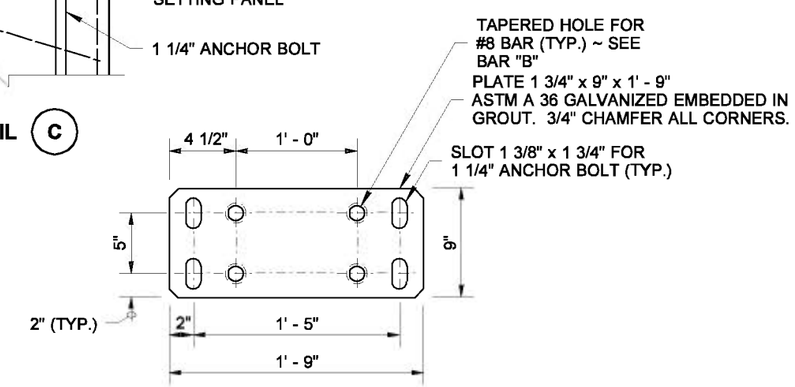

BASE PLATE DETAIL

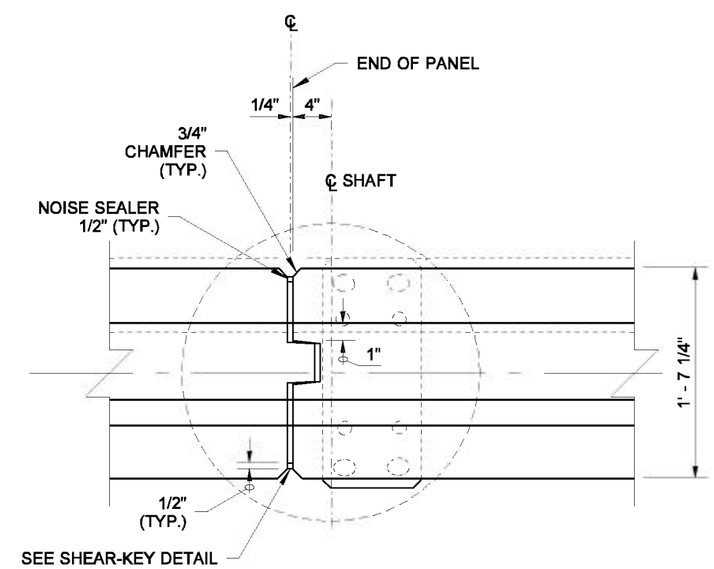

DETAIL D

PRECAST CONCRETE WALL W/ TRAFFIC BARRIER ON SHAFT FOUNDATION

BIJAN KHALEGHI
STATE OF WASHINGTON
27695
REGISTERED PROFESSIONAL ENGINEER

EXPIRES AUGUST 23, 2006

NOTE: THIS PLAN IS NOT A LEGAL ENGINEERING DOCUMENT BUT AN ELECTRONIC DUPLICATE. THE ORIGINAL, SIGNED BY THE ENGINEER AND APPROVED FOR PUBLICATION, IS KEPT ON FILE AT THE WASHINGTON STATE DEPARTMENT OF TRANSPORTATION. A COPY MAY BE OBTAINED UPON REQUEST.

NOISE BARRIER WALL TYPE 14

STANDARD PLAN D-2.46-00

SHEET 2 OF 2 SHEETS

APPROVED FOR PUBLICATION

Harold J. Peterfeso — STATE DESIGN ENGINEER
11-10-05 — DATE

Washington State Department of Transportation

EFFECTIVE: AUGUST 6, 2012 TO August 4, 2013
EFFECTIVE: AUGUST 6, 2012 TO August 4, 2013
EFFECTIVE: AUGUST 6, 2012 TO August 4, 2013
EFFECTIVE: AUGUST 6, 2012 TO August 4, 2013

EFFECTIVE: AUGUST 6, 2012 TO August 4, 2013
EFFECTIVE: AUGUST 6, 2012 TO August 4, 2013

DRAWN BY: ADAM COCHRAN

WALL HT H	TYPE 14SSA BAR "A"	TYPE 14SSB BAR "A"	TYPE 14SSC BAR "A"	TYPE 14SSD BAR "A"	WALL HT H
6' - 0"	#4 @ 15"	#4 @ 15"	#4 @ 15"	#4 @ 15"	6' - 0"
8' - 0"	#4 @ 15"	#4 @ 15"	#4 @ 15"	#4 @ 15"	8' - 0"
10' - 0"	#4 @ 15"	#4 @ 15"	#4 @ 15"	#4 @ 15"	10' - 0"
12' - 0"	#4 @ 15"	#4 @ 15"	#4 @ 15"	#4 @ 15"	12' - 0"
14' - 0"	#4 @ 15"	#4 @ 11"	#4 @ 15"	#4 @ 10"	14' - 0"
16' - 0"	#4 @ 10"	#4 @ 10"	#4 @ 10"	#5 @ 12"	16' - 0"
18' - 0"	#4 @ 10"	#5 @ 12"	#4 @ 10"	#5 @ 12"	18' - 0"

BENDING DIAGRAM

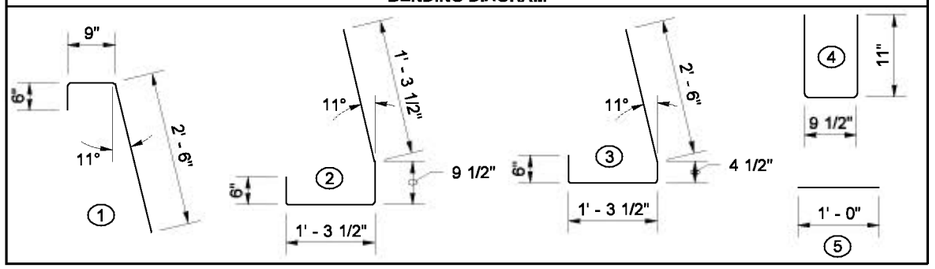

NOTES

1. Wall to be designated Noise Barrier Wall Type 14SSA, 14SSB, 14SSC or 14SSD. The Contract specifies actual wall designations.
2. For intermediate wall heights, use the next higher H.
3. Panels shall have at least 3 feet level ground on each side.
4. All joints shall be in full contact and sealed.
5. Anchor Bolts, Nuts, Washers, Base Plate, and Bar B shall have a Protective Coating of one of the following: Hot Dipped Galvanizing AASHTO M 232 for Hardware; AASHTO M 111 for Washers and Plates: Mechanical Galvanizing AASHTO M 298 CL 55, or Zinc Rich Paint, Paint threads and nuts after installation.
6. The bottom 9" of Bar "B" shall be painted with one coat of Formula A-6-86 Zinc Dust Oxide Primer OR, one coat of Formula A-11-99 Primer.
7. The Contract specifies actual foundation requirements D1 or D2.

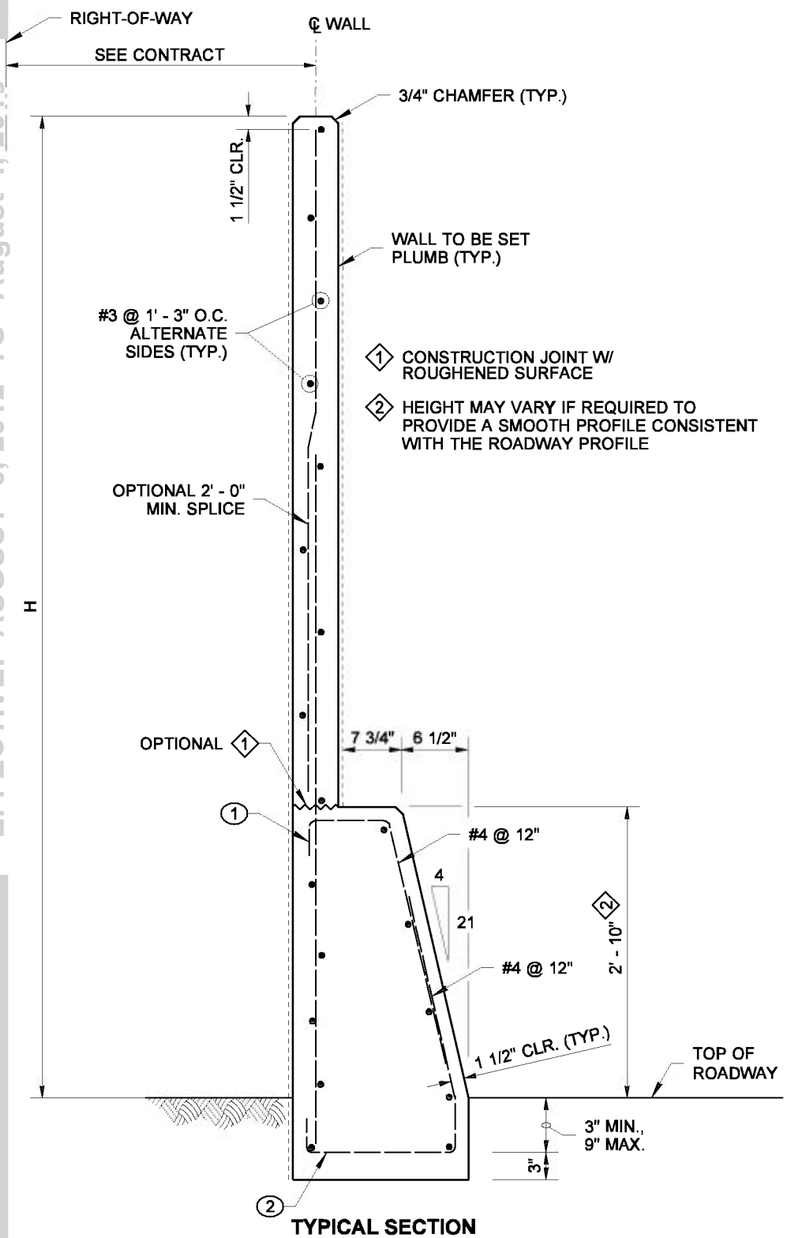

TYPICAL SECTION

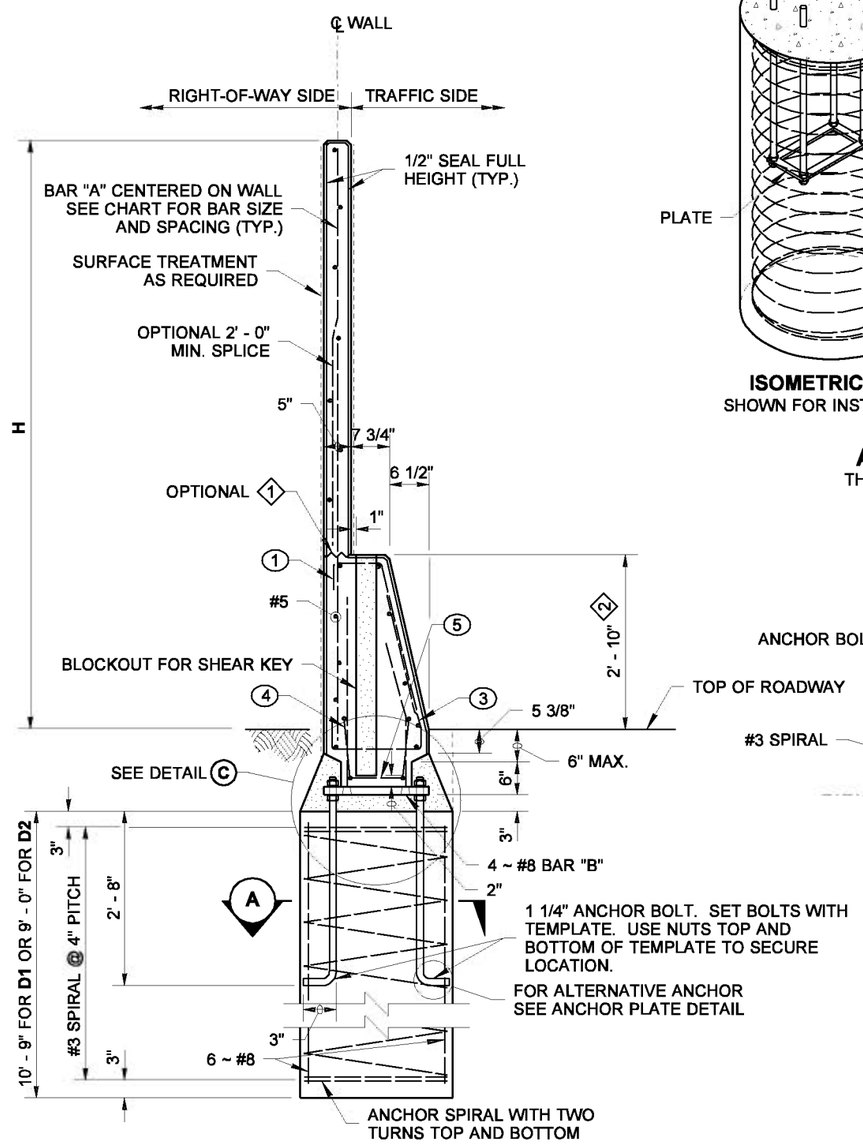

SECTION AT SHAFT SUPPORT

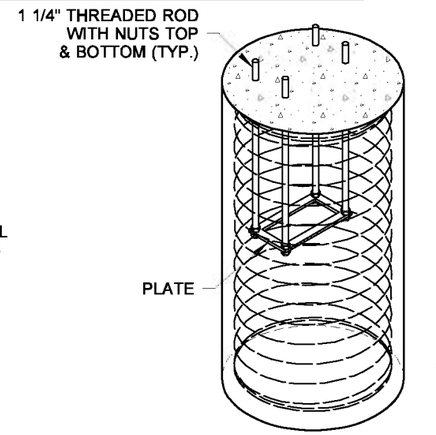

ISOMETRIC VIEW
SHOWN FOR INSTALLATION

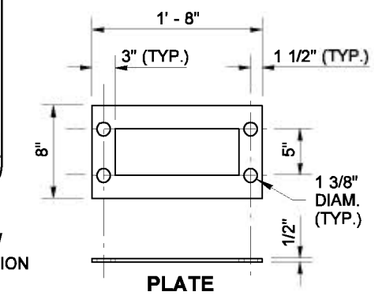

PLATE

ALTERNATE ANCHOR DETAIL
THREADED ROD WITH NUTS TOP AND BOTTOM

WIND EXPOSURE & VELOCITY		
NOISE BARRIER TYPE	WIND EXPOSURE	WIND VELOCITY (MPH)
14SSA	B1	80
14SSB	B1	90
14SSC	B2	80
14SSD	B2	90

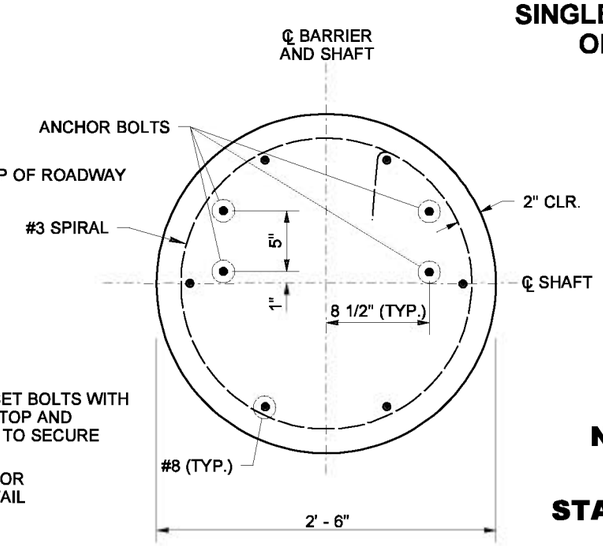

SECTION A

PRECAST CONCRETE WALL W/ SINGLE SLOPE TRAFFIC BARRIER ON SHAFT FOUNDATION

EXPIRES AUGUST 23, 2006

NOTE: THIS PLAN IS NOT A LEGAL ENGINEERING DOCUMENT BUT AN ELECTRONIC DUPLICATE. THE ORIGINAL, SIGNED BY THE ENGINEER AND APPROVED FOR PUBLICATION, IS KEPT ON FILE AT THE WASHINGTON STATE DEPARTMENT OF TRANSPORTATION. A COPY MAY BE OBTAINED UPON REQUEST.

NOISE BARRIER WALL TYPE 14SS

STANDARD PLAN D-2.48-00

SHEET 1 OF 2 SHEETS

APPROVED FOR PUBLICATION

Harold J. Peterfeso — STATE DESIGN ENGINEER
11-10-05 — DATE

Washington State Department of Transportation

EFFECTIVE: AUGUST 6, 2012 TO August 4, 2013
EFFECTIVE: AUGUST 6, 2012 TO August 4, 2013
EFFECTIVE: AUGUST 6, 2012 TO August 4, 2013
EFFECTIVE: AUGUST 6, 2012 TO August 4, 2013

EFFECTIVE: AUGUST 6, 2012 TO August 4, 2013
EFFECTIVE: AUGUST 6, 2012 TO August 4, 2013

DRAWN BY: ADAM COCHRAN

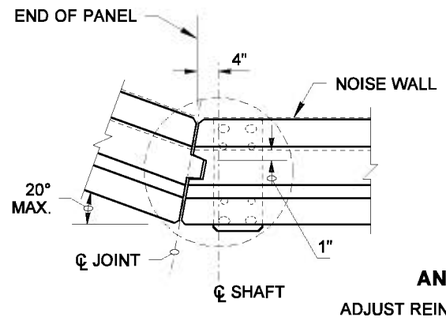

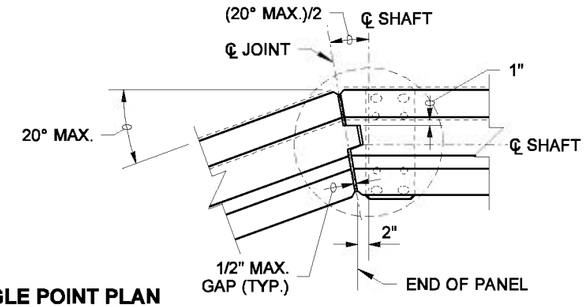

ANGLE POINT PLAN

ADJUST REINFORCEMENT AS NECESSARY TO ACCOMODATE ANGLE POINT

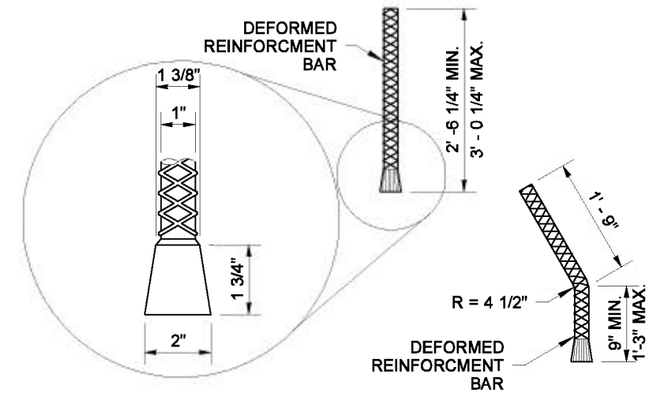

BAR "B"

WEDGE HEAD SHALL BEAR FIRMLY AND UNIFORMLY AGAINST BASE PLATE. BAR "B" SHALL BE HELD SECURE DURING CONCRETE PLACEMENT TO PREVENT GAPS BETWEEN WEDGE HEAD AND BASE PLATE.

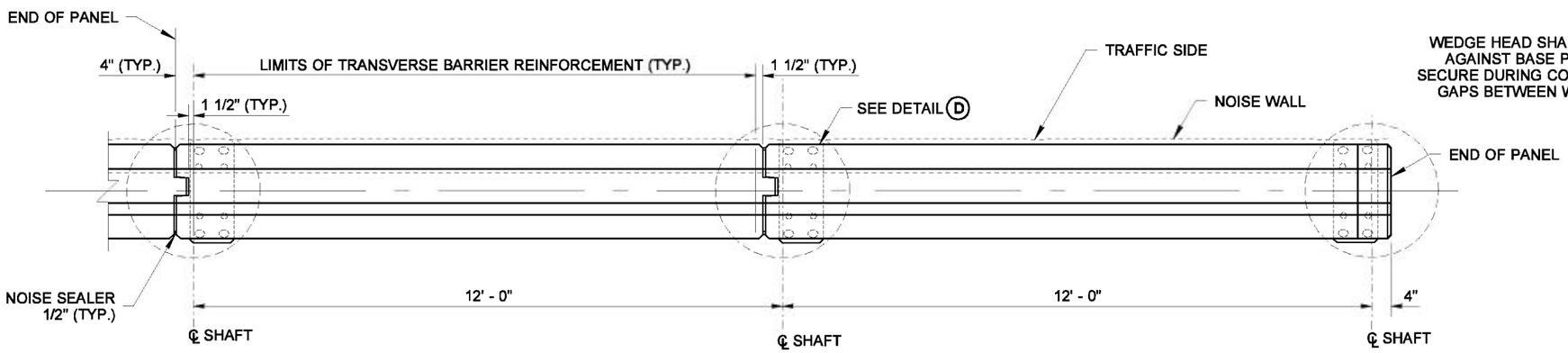

TYPICAL INTERMEDIATE AND END PANEL

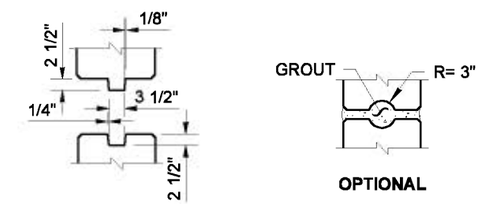

SHEAR-KEY DETAIL

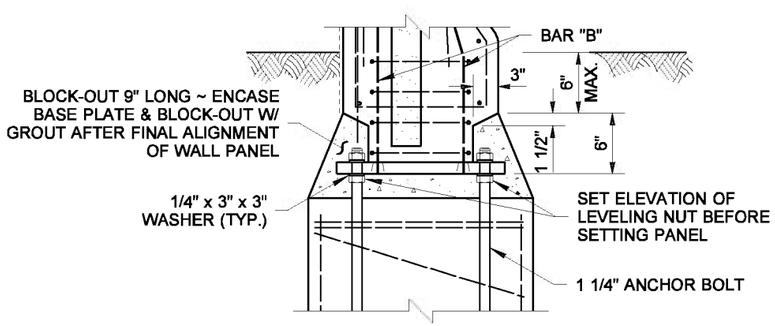

DETAIL C

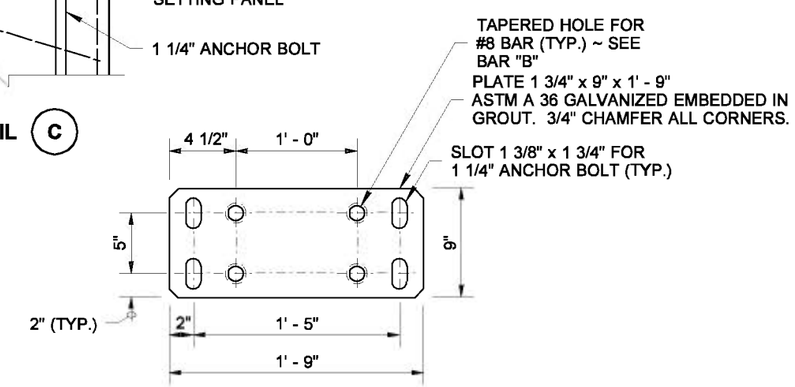

BASE PLATE DETAIL

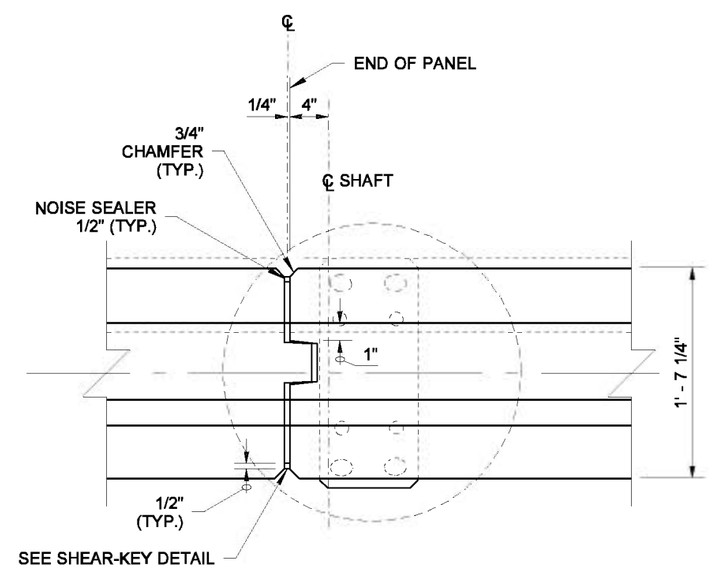

DETAIL D

PRECAST CONCRETE WALL W/ SINGLE SLOPE TRAFFIC BARRIER ON SHAFT FOUNDATION

EXPIRES AUGUST 23, 2006

NOTE: THIS PLAN IS NOT A LEGAL ENGINEERING DOCUMENT BUT AN ELECTRONIC DUPLICATE. THE ORIGINAL, SIGNED BY THE ENGINEER AND APPROVED FOR PUBLICATION, IS KEPT ON FILE AT THE WASHINGTON STATE DEPARTMENT OF TRANSPORTATION. A COPY MAY BE OBTAINED UPON REQUEST.

NOISE BARRIER WALL TYPE 14SS

STANDARD PLAN D-2.48-00

SHEET 2 OF 2 SHEETS

APPROVED FOR PUBLICATION

Harold J. Peterfeso — STATE DESIGN ENGINEER

11-10-05 — DATE

Washington State Department of Transportation

EFFECTIVE: AUGUST 6, 2012 TO August 4, 2013
EFFECTIVE: AUGUST 6, 2012 TO August 4, 2013
EFFECTIVE: AUGUST 6, 2012 TO August 4, 2013
EFFECTIVE: AUGUST 6, 2012 TO August 4, 2013

EFFECTIVE: AUGUST 6, 2012 TO August 4, 2013
EFFECTIVE: AUGUST 6, 2012 TO August 4, 2013

DRAWN BY: ADAM COCHRAN

WIND EXPOSURE & VELOCITY		
NOISE BARRIER TYPE	WIND EXPOSURE	WIND VELOCITY (MPH)
16A	B1	80
16B	B1	90
16C	B2	80
16D	B2	90

SOIL TYPE	
SOIL TYPE	ANGLE OF INTERNAL FRICTION ϕ (DEGREES)
D1	32
D2	38

CMU = CONCRETE MASONRY UNIT

WALL HT H	TYPE 16A CMU WIDTH	X	DEPTH D1	DEPTH D2	BAR "C"	BAR "D"
6' - 0"	8"	—	3' - 3"	3' - 0"	—	#6 @ 48"
8' - 0"	8"	—	3' - 6"	3' - 4"	—	#6 @ 48"
10' - 0"	8"	—	3' - 10"	3' - 6"	—	#6 @ 48"
12' - 0"	8"	—	4' - 7"	3' - 8"	—	#6 @ 48"
14' - 0"	8"	—	4' - 4"	3' - 10"	—	#6 @ 32"
16' - 0"	8"	—	4' - 7"	4' - 1"	—	#6 @ 24"
18' - 0"	10"	5' - 4"	4' - 10"	4' - 3"	#6 @ 48"	#6 @ 48"
20' - 0"	10"	6' - 0"	5' - 3"	4' - 9"	#6 @ 32"	#6 @ 32"
22' - 0"	10"	6' - 8"	5' - 6"	5' - 0"	#6 @ 24"	#6 @ 24"
24' - 0"	10"	7' - 4"	5' - 9"	5' - 3"	#6 @ 18"	#6 @ 18"

WALL HT H	TYPE 16B CMU WIDTH	X	DEPTH D1	DEPTH D2	BAR "C"	BAR "D"
6' - 0"	8"	—	3' - 8"	3' - 4"	—	#6 @ 48"
8' - 0"	8"	—	4' - 0"	3' - 8"	—	#6 @ 48"
10' - 0"	8"	—	4' - 4"	3' - 10"	—	#6 @ 48"
12' - 0"	8"	—	4' - 8"	4' - 2"	—	#6 @ 40"
14' - 0"	10"	4' - 0"	4' - 11"	4' - 5"	#6 @ 40"	#6 @ 40"
16' - 0"	10"	4' - 8"	5' - 3"	4' - 8"	#6 @ 32"	#6 @ 32"
18' - 0"	10"	5' - 4"	5' - 6"	4' - 10"	#6 @ 24"	#6 @ 24"
20' - 0"	10"	6' - 0"	4' - 9"	5' - 3"	#7 @ 24"	#7 @ 24"
22' - 0"	10"	8' - 0"	6' - 0"	5' - 6"	#7 @ 16"	#7 @ 16"
24' - 0"	10"	10' - 0"	6' - 3"	5' - 9"	#8 @ 16"	#8 @ 16"

WALL HT H	TYPE 16C CMU WIDTH	X	DEPTH D1	DEPTH D2	BAR "C"	BAR "D"
6' - 0"	8"	—	3' - 6"	3' - 3"	—	#6 @ 48"
8' - 0"	8"	—	3' - 9"	3' - 5"	—	#6 @ 48"
10' - 0"	8"	—	4' - 7"	3' - 8"	—	#6 @ 48"
12' - 0"	8"	—	4' - 4"	3' - 11"	—	#6 @ 32"
14' - 0"	8"	—	4' - 8"	4' - 2"	—	#6 @ 24"
16' - 0"	10"	4' - 0"	4' - 11"	4' - 5"	#6 @ 40"	#6 @ 40"
18' - 0"	10"	4' - 8"	5' - 3"	4' - 8"	#6 @ 32"	#6 @ 32"
20' - 0"	10"	5' - 4"	5' - 6"	5' - 0"	#6 @ 24"	#6 @ 24"
22' - 0"	10"	6' - 0"	5' - 9"	5' - 3"	#6 @ 16"	#6 @ 16"
24' - 0"	10"	7' - 8"	6' - 0"	5' - 6"	#7 @ 16"	#7 @ 16"

WALL HT H	TYPE 16D CMU WIDTH	X	DEPTH D1	DEPTH D2	BAR "C"	BAR "D"
6' - 0"	8"	—	3' - 10"	3' - 5"	—	#6 @ 48"
8' - 0"	8"	—	4' - 2"	3' - 9"	—	#6 @ 48"
10' - 0"	8"	—	4' - 5"	4' - 0"	—	#6 @ 32"
12' - 0"	10"	4' - 0"	4' - 10"	4' - 4"	#6 @ 48"	#6 @ 48"
14' - 0"	10"	4' - 0"	5' - 3"	4' - 7"	#6 @ 32"	#6 @ 32"
16' - 0"	10"	4' - 8"	5' - 7"	4' - 11"	#6 @ 24"	#6 @ 24"
18' - 0"	10"	5' - 4"	5' - 10"	5' - 1"	#6 @ 18"	#6 @ 18"
20' - 0"	10"	7' - 4"	6' - 0"	5' - 6"	#7 @ 18"	#7 @ 18"
22' - 0"	10"	9' - 8"	6' - 6"	5' - 9"	#8 @ 18"	#8 @ 18"
24' - 0"	10"	12' - 0"	6' - 9"	6' - 0"	#9 @ 18"	#9 @ 18"

NOTES

1. Wall to be designated Noise Barrier Wall Type 16A, 16B, 16C or 16D. The Contract specifies actual wall designations.
2. For intermediate wall heights, use the next higher H.
3. All masonry shall be hollow unit and installed as running bond.
4. All masonry is to be specially inspected.
5. All Concrete Masonry Unit (CMU) cells that have vertical steel reinforcing bars or bond beam units shall be filled with grout.
6. Panels shall have at least 3 feet of level ground on each side.
7. Construction joints in the trench footing shall be spaced at 120 feet maximum.
8. See "Masonry Wall Finishes and Details" sheet for masonry block finishes, special shapes, sizes and layouts.
9. The Contract specifies actual foundation requirements D1 or D2.

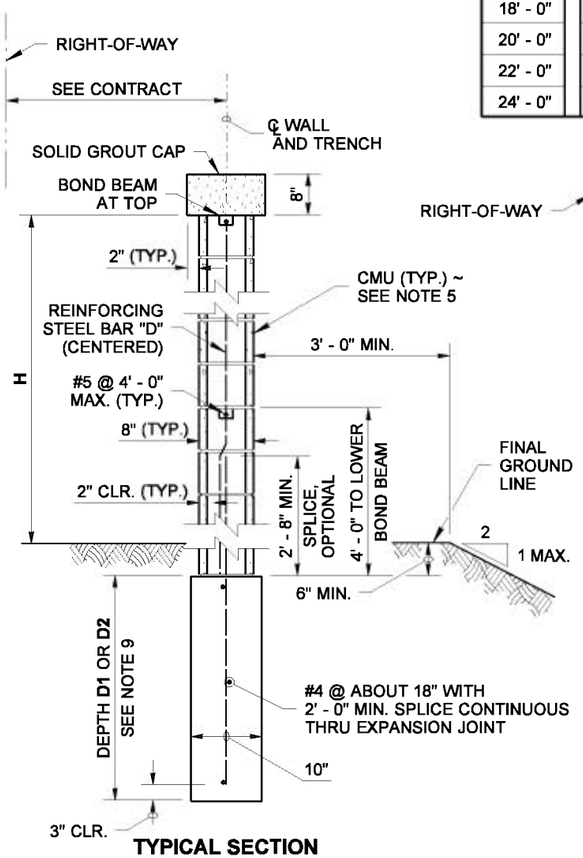

TYPICAL SECTION 8" WIDE CMU

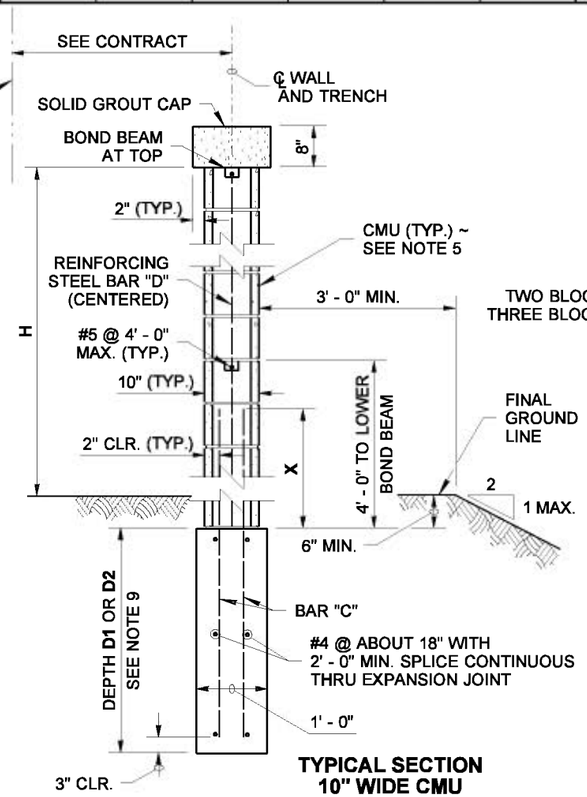

TYPICAL SECTION 10" WIDE CMU

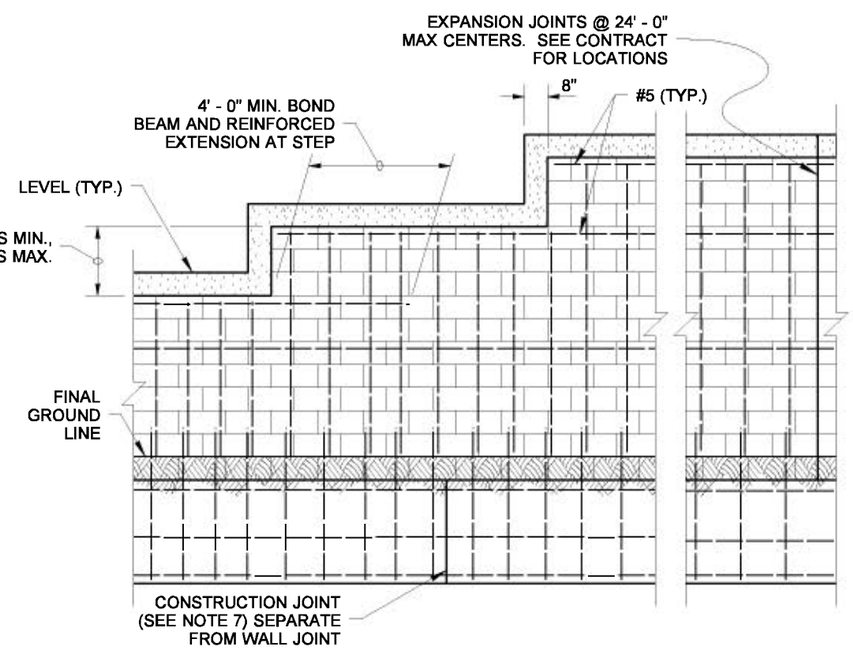

ELEVATION

MASONRY WALL ON TRENCH FOOTING

BIJAN KHALEGHI
STATE OF WASHINGTON
27695
REGISTERED
PROFESSIONAL ENGINEER
EXPIRES AUGUST 23, 2006

NOTE: THIS PLAN IS NOT A LEGAL ENGINEERING DOCUMENT BUT AN ELECTRONIC DUPLICATE. THE ORIGINAL, SIGNED BY THE ENGINEER AND APPROVED FOR PUBLICATION, IS KEPT ON FILE AT THE WASHINGTON STATE DEPARTMENT OF TRANSPORTATION. A COPY MAY BE OBTAINED UPON REQUEST.

NOISE BARRIER WALL TYPE 16

STANDARD PLAN D-2.60-00

SHEET 1 OF 2 SHEETS

APPROVED FOR PUBLICATION

Harold J. Peterfeso — STATE DESIGN ENGINEER
11-10-05 — DATE

Washington State Department of Transportation

EFFECTIVE: AUGUST 6, 2012 TO August 4, 2013
EFFECTIVE: AUGUST 6, 2012 TO August 4, 2013
EFFECTIVE: AUGUST 6, 2012 TO August 4, 2013
EFFECTIVE: AUGUST 6, 2012 TO August 4, 2013

EFFECTIVE: AUGUST 6, 2012 TO August 4, 2013
EFFECTIVE: AUGUST 6, 2012 TO August 4, 2013

DRAWN BY: ADAM COCHRAN

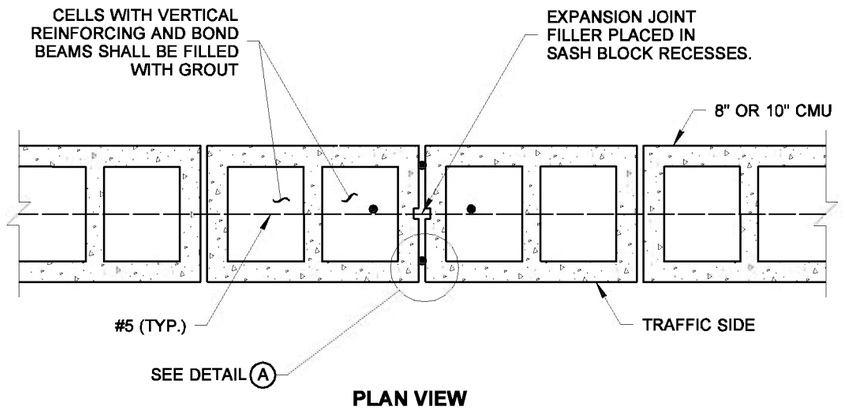

PLAN VIEW

TYPICAL EXPANSION JOINT

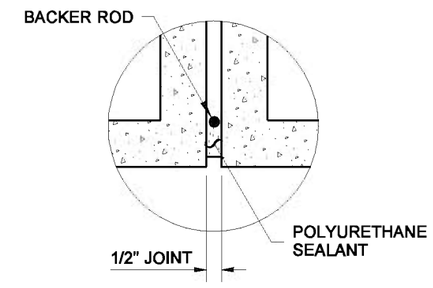

DETAIL A

TYPICAL BOTH SIDES OF WALL

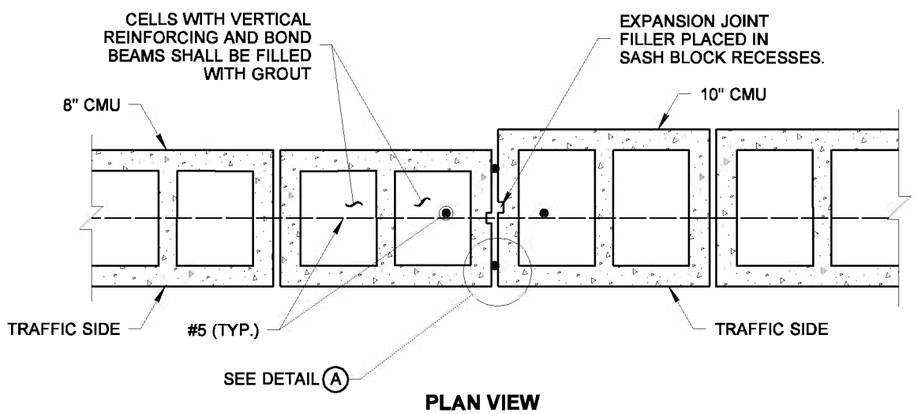

PLAN VIEW

EXPANSION JOINT AT WIDTH STEP

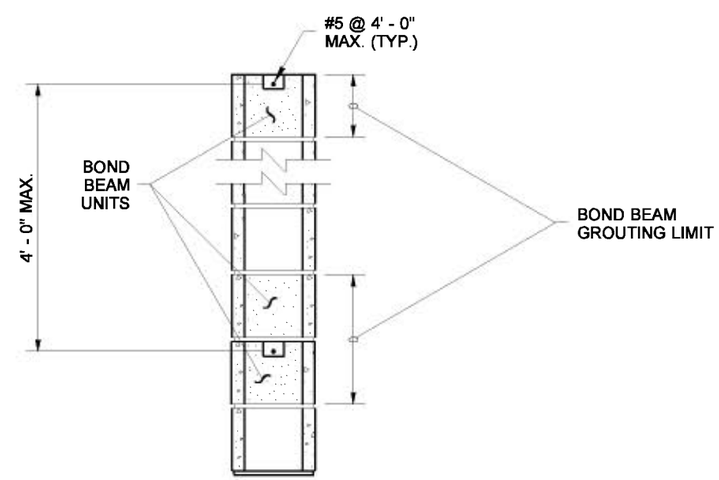

BOND BEAM DETAIL

MASONRY WALL ON TRENCH FOOTING

BIJAN KHALEGHI
STATE OF WASHINGTON
27695
REGISTERED
PROFESSIONAL ENGINEER

EXPIRES AUGUST 23, 2006

NOTE: THIS PLAN IS NOT A LEGAL ENGINEERING DOCUMENT BUT AN ELECTRONIC DUPLICATE. THE ORIGINAL, SIGNED BY THE ENGINEER AND APPROVED FOR PUBLICATION, IS KEPT ON FILE AT THE WASHINGTON STATE DEPARTMENT OF TRANSPORTATION. A COPY MAY BE OBTAINED UPON REQUEST.

NOISE BARRIER WALL TYPE 16

STANDARD PLAN D-2.60-00

SHEET 2 OF 2 SHEETS

APPROVED FOR PUBLICATION

Harold J. Peterfeso — STATE DESIGN ENGINEER
11-10-05 — DATE

Washington State Department of Transportation

EFFECTIVE: AUGUST 6, 2012 TO August 4, 2013
EFFECTIVE: AUGUST 6, 2012 TO August 4, 2013
EFFECTIVE: AUGUST 6, 2012 TO August 4, 2013
EFFECTIVE: AUGUST 6, 2012 TO August 4, 2013

EFFECTIVE: AUGUST 6, 2012 TO August 4, 2013
EFFECTIVE: AUGUST 6, 2012 TO August 4, 2013

DRAWN BY: ADAM COCHRAN

WIND EXPOSURE & VELOCITY		
NOISE BARRIER TYPE	WIND EXPOSURE	WIND VELOCITY (MPH)
17A	B1	80
17B	B1	90
17C	B2	80
17D	B2	90

CMU = CONCRETE MASONRY UNIT

WALL HT H	TYPE 17A CMU WIDTH	X	W	BAR "A"	BAR "C"	BAR "D"	BAR "E"
6' - 0"	8"	—	2' - 0"	3 ~ #4	—	#6 @ 48"	#4 @ 18"
8' - 0"	8"	—	2' - 3"	3 ~ #4	—	#6 @ 48"	#4 @ 18"
10' - 0"	8"	—	2' - 6"	3 ~ #4	—	#6 @ 48"	#4 @ 18"
12' - 0"	8"	—	3' - 0"	4 ~ #4	—	#6 @ 48"	#4 @ 18"
14' - 0"	8"	—	3' - 3"	4 ~ #4	—	#6 @ 32"	#4 @ 18"
16' - 0"	10"	5' - 4"	3' - 9"	5 ~ #4	—	#6 @ 32"	#4 @ 18"
18' - 0"	10"	6' - 0"	4' - 0"	5 ~ #4	#6 @ 48"	#6 @ 48"	#4 @ 18"
20' - 0"	10"	6' - 8"	5' - 0"	5 ~ #4	#6 @ 32"	#6 @ 32"	#4 @ 18"
22' - 0"	10"	7' - 4"	5' - 6"	5 ~ #4	#6 @ 24"	#6 @ 24"	#4 @ 18"
24' - 0"	10"	8' - 0"	6' - 0"	5 ~ #4	#6 @ 24"	#6 @ 24"	#4 @ 18"

WALL HT H	TYPE 17B CMU WIDTH	X	W	BAR "A"	BAR "C"	BAR "D"	BAR "E"
6' - 0"	8"	—	12' - 3"	3 ~ #4	—	#6 @ 48"	#4 @ 18"
8' - 0"	8"	—	2' - 9"	4 ~ #4	—	#6 @ 48"	#4 @ 18"
10' - 0"	8"	—	3' - 3"	4 ~ #4	—	#6 @ 48"	#4 @ 18"
12' - 0"	10"	4' - 0"	3' - 9"	4 ~ #4	—	#6 @ 40"	#4 @ 18"
14' - 0"	10"	4' - 8"	4' - 3"	5 ~ #4	#6 @ 40"	#6 @ 40"	#4 @ 18"
16' - 0"	10"	5' - 4"	4' - 9"	5 ~ #4	#6 @ 32"	#6 @ 32"	#4 @ 18"
18' - 0"	10"	6' - 0"	5' - 3"	6 ~ #4	#6 @ 24"	#6 @ 24"	#4 @ 18"
20' - 0"	10"	8' - 0"	6' - 0"	5 ~ #4	#7 @ 24"	#7 @ 24"	#4 @ 18"
22' - 0"	10"	10' - 0"	6' - 3"	5 ~ #4	#7 @ 16"	#7 @ 16"	#4 @ 12"
24' - 0"	10"	12' - 0"	6' - 9"	5 ~ #4	#8 @ 16"	#8 @ 16"	#4 @ 12"

WALL HT H	TYPE 17C CMU WIDTH	X	W	BAR "A"	BAR "C"	BAR "D"	BAR "E"
6' - 0"	8"	—	2' - 0"	3 ~ #4	—	#6 @ 48"	#4 @ 18"
8' - 0"	8"	—	2' - 6"	3 ~ #4	—	#6 @ 48"	#4 @ 18"
10' - 0"	8"	—	2' - 9"	3 ~ #4	—	#6 @ 48"	#4 @ 18"
12' - 0"	8"	—	3' - 3"	3 ~ #4	—	#6 @ 40"	#4 @ 18"
14' - 0"	10"	4' - 0"	3' - 9"	5 ~ #4	—	#6 @ 16"	#4 @ 18"
16' - 0"	10"	4' - 8"	4' - 3"	5 ~ #4	#6 @ 40"	#6 @ 40"	#4 @ 18"
18' - 0"	10"	5' - 4"	4' - 6"	5 ~ #4	#6 @ 32"	#6 @ 32"	#4 @ 18"
20' - 0"	10"	6' - 0"	5' - 3"	5 ~ #4	#6 @ 24"	#6 @ 16"	#4 @ 18"
22' - 0"	10"	7' - 0"	5' - 9"	5 ~ #4	#6 @ 16"	#6 @ 16"	#4 @ 18"
24' - 0"	10"	8' - 0"	6' - 3"	5 ~ #4	#7 @ 16"	#7 @ 16"	#4 @ 12"

WALL HT H	TYPE 17D CMU WIDTH	X	W	BAR "A"	BAR "C"	BAR "D"	BAR "E"
6' - 0"	8"	—	2' - 6"	3 ~ #4	—	#6 @ 48"	#4 @ 18"
8' - 0"	8"	—	3' - 3"	5 ~ #4	—	#6 @ 48"	#4 @ 18"
10' - 0"	10"	4' - 0"	3' - 6"	5 ~ #4	—	#6 @ 24"	#4 @ 18"
12' - 0"	10"	4' - 0"	4' - 3"	5 ~ #4	#6 @ 32"	#6 @ 32"	#4 @ 18"
14' - 0"	10"	4' - 8"	4' - 9"	5 ~ #4	#6 @ 24"	#6 @ 24"	#4 @ 18"
16' - 0"	10"	5' - 4"	5' - 6"	5 ~ #4	#6 @ 16"	#7 @ 16"	#4 @ 18"
18' - 0"	10"	7' - 4"	6' - 0"	5 ~ #4	#7 @ 24"	#7 @ 16"	#4 @ 18"
20' - 0"	10"	9' - 8"	6' - 6"	5 ~ #4	#7 @ 16"	#8 @ 16"	#4 @ 12"
22' - 0"	10"	12' - 0"	7' - 0"	5 ~ #4	#7 @ 16"	#8 @ 16"	#4 @ 12"
24' - 0"	10"	15' - 0"	7' - 6"	6 ~ #4	#7 @ 16"	#8 @ 16"	#4 @ 12"

BAR SIZE	SPLICE LENGTH
#6	2' - 8"
#7	3' - 8"
#8	4' - 10"

NOTES

1. Wall to be designated Noise Barrier Wall Type 17A, 17B, 17C or 17D. The Contract specifies actual wall designations.
2. For intermediate wall heights, use the next higher H.
3. All masonry shall be hollow unit and installed as running bond.
4. All masonry is to be specially inspected.
5. All Concrete Masonry Unit (CMU) cells that have vertical steel reinforcing bars or bond beam units shall be filled with grout.
6. Panels shall have at least 3 feet of level ground on each side.
7. Construction joints in the footing shall be spaced at 120 feet maximum.
8. See "Masonry Wall Finishes and Details" sheets for masonry block finishes, special shapes, sizes and layout.

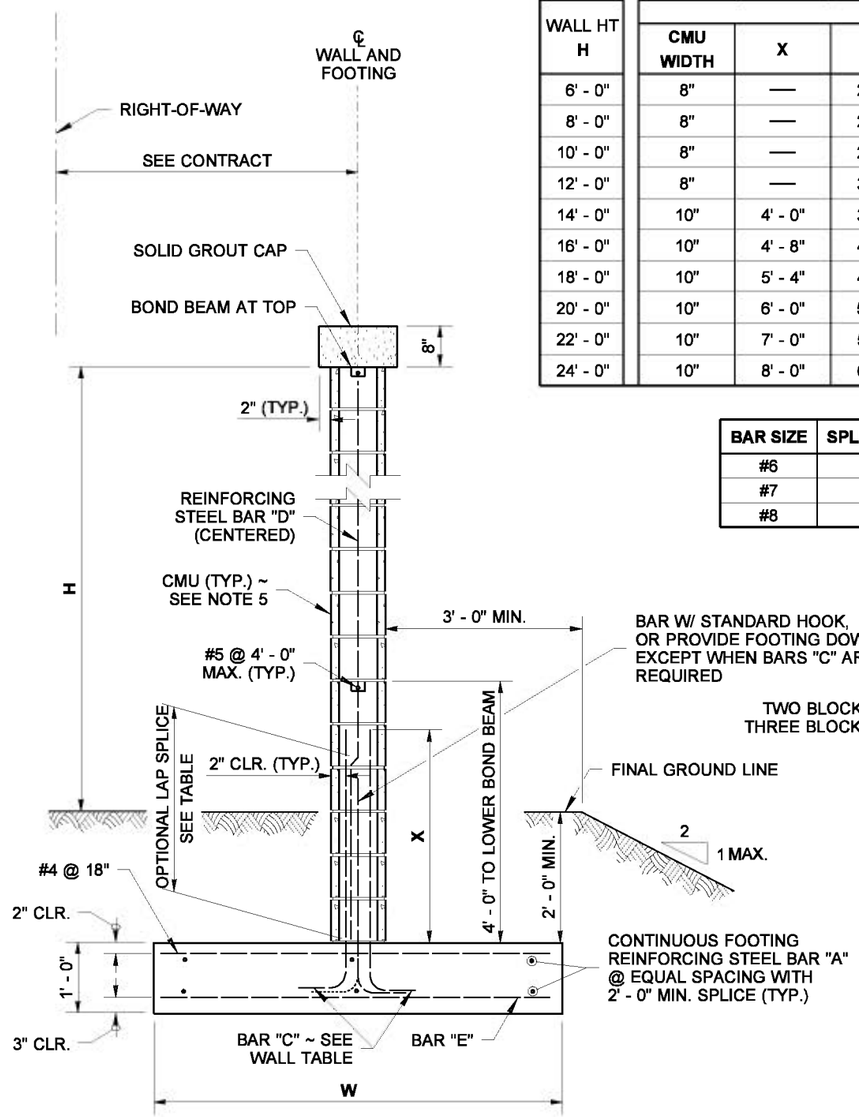

TYPICAL SECTION

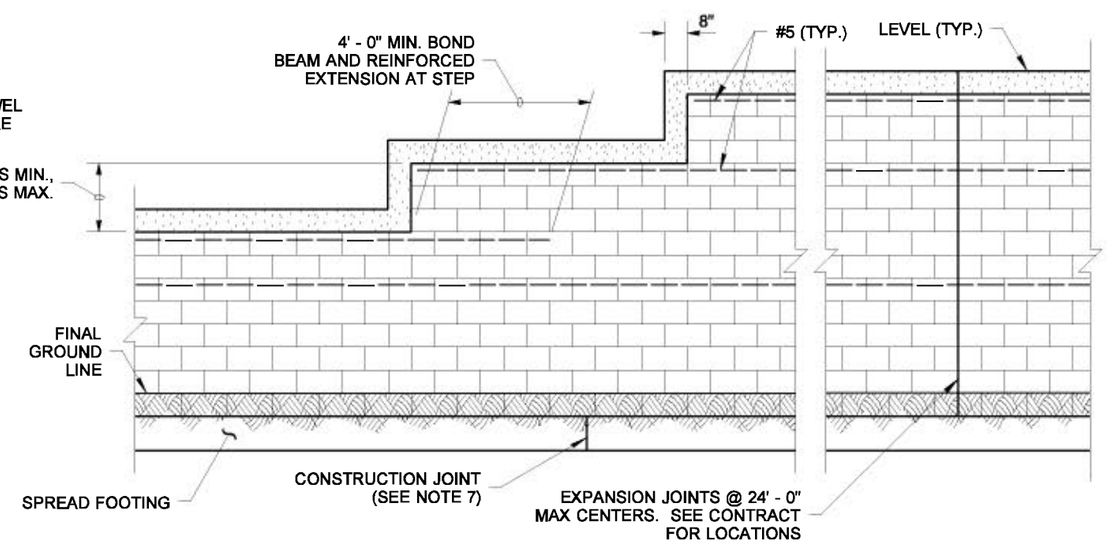

ELEVATION

MASONRY WALL ON SPREAD FOOTING

EXPIRES AUGUST 23, 2006

NOTE: THIS PLAN IS NOT A LEGAL ENGINEERING DOCUMENT BUT AN ELECTRONIC DUPLICATE. THE ORIGINAL, SIGNED BY THE ENGINEER AND APPROVED FOR PUBLICATION, IS KEPT ON FILE AT THE WASHINGTON STATE DEPARTMENT OF TRANSPORTATION. A COPY MAY BE OBTAINED UPON REQUEST.

NOISE BARRIER WALL TYPE 17

STANDARD PLAN D-2.62-00

SHEET 1 OF 2 SHEETS

APPROVED FOR PUBLICATION

Harold J. Peterfeso — STATE DESIGN ENGINEER
11-10-05 — DATE

Washington State Department of Transportation

EFFECTIVE: AUGUST 6, 2012 TO August 4, 2013
EFFECTIVE: AUGUST 6, 2012 TO August 4, 2013
EFFECTIVE: AUGUST 6, 2012 TO August 4, 2013
EFFECTIVE: AUGUST 6, 2012 TO August 4, 2013

EFFECTIVE: AUGUST 6, 2012 TO August 4, 2013
EFFECTIVE: AUGUST 6, 2012 TO August 4, 2013

DRAWN BY: ADAM COCHRAN

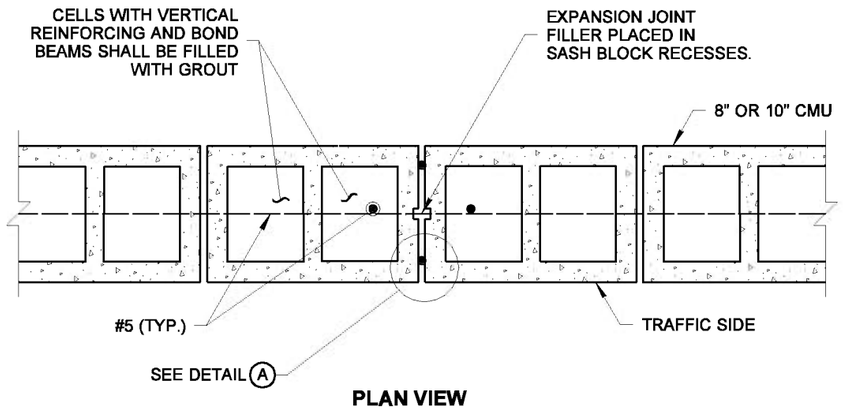

PLAN VIEW

TYPICAL EXPANSION JOINT

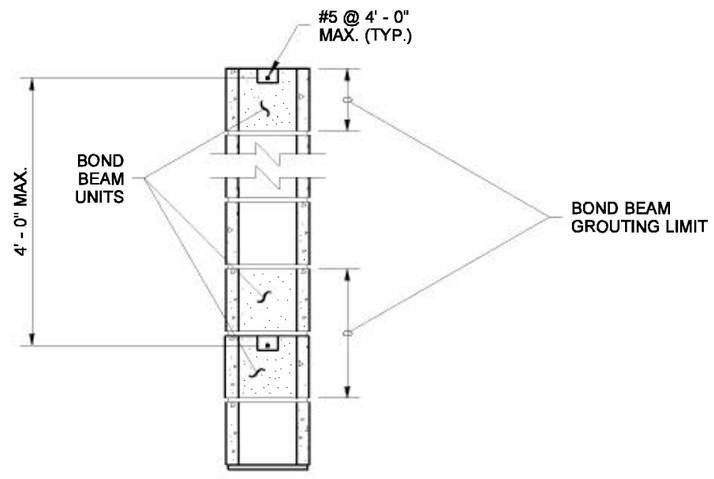

BOND BEAM DETAIL

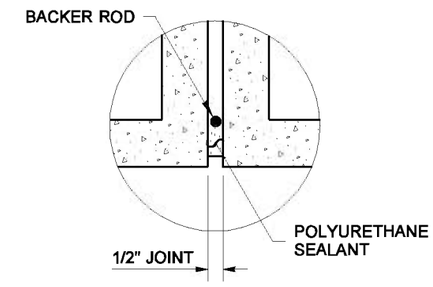

DETAIL A

TYPICAL BOTH SIDES OF WALL

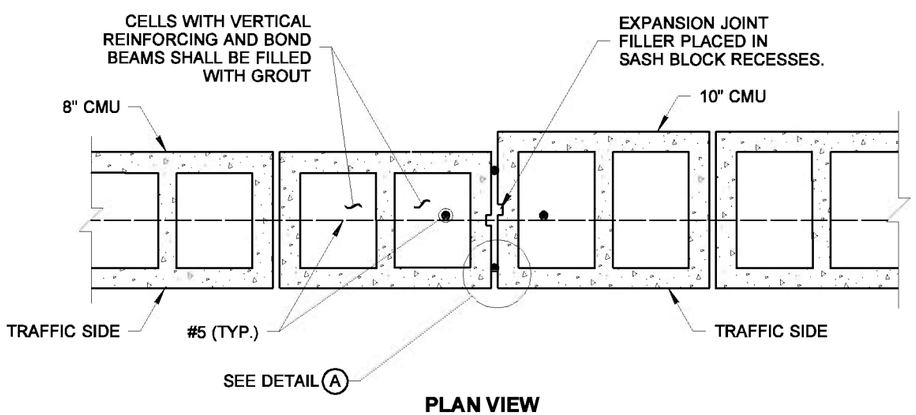

PLAN VIEW

EXPANSION JOINT AT WIDTH STEP

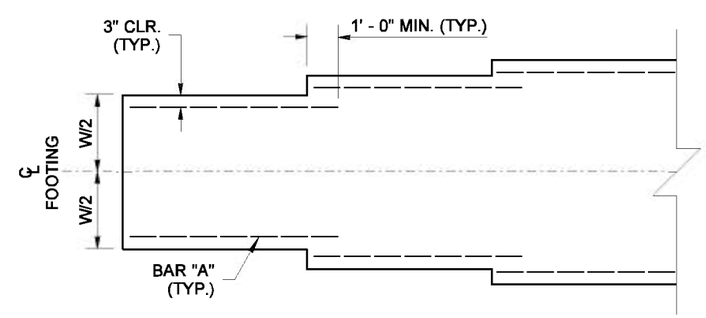

FOOTING WIDTH TRANSITION DETAIL
(FOR LOCATIONS WITHOUT FOOTING STEP)
NOTE: TRANSVERSE BARS NOT SHOWN

MASONRY WALL ON SPREAD FOOTING

BIJAN KHALEGHI
STATE OF WASHINGTON
27695
REGISTERED
PROFESSIONAL ENGINEER

EXPIRES AUGUST 23, 2006

NOTE: THIS PLAN IS NOT A LEGAL ENGINEERING DOCUMENT BUT AN ELECTRONIC DUPLICATE. THE ORIGINAL, SIGNED BY THE ENGINEER AND APPROVED FOR PUBLICATION, IS KEPT ON FILE AT THE WASHINGTON STATE DEPARTMENT OF TRANSPORTATION. A COPY MAY BE OBTAINED UPON REQUEST.

NOISE BARRIER WALL TYPE 17

STANDARD PLAN D-2.62-00

SHEET 2 OF 2 SHEETS

APPROVED FOR PUBLICATION

Harold J. Peterfeso — STATE DESIGN ENGINEER
11-10-05 — DATE

Washington State Department of Transportation

EFFECTIVE: AUGUST 6, 2012 TO August 4, 2013
EFFECTIVE: AUGUST 6, 2012 TO August 4, 2013
EFFECTIVE: AUGUST 6, 2012 TO August 4, 2013
EFFECTIVE: AUGUST 6, 2012 TO August 4, 2013

EFFECTIVE: AUGUST 6, 2012 TO August 4, 2013
EFFECTIVE: AUGUST 6, 2012 TO August 4, 2013

DRAWN BY: BILL BEKENS

WIND EXPOSURE & VELOCITY		
NOISE BARRIER TYPE	WIND EXPOSURE	WIND VELOCITY (MPH)
18A	B1	80
18B	B1	90
18C	B2	80
18D	B2	90

WALL HT H	TYPE 18A CMU WIDTH	X	W	BAR "A"	BAR "C"	BAR "D"	BAR "E"
6' - 0"	8"	—	2' - 0"	3 ~ #4	—	#6 @ 48"	#4 @ 18"
8' - 0"	8"	—	2' - 3"	3 ~ #4	—	#6 @ 48"	#4 @ 18"
10' - 0"	8"	—	2' - 6"	3 ~ #4	—	#6 @ 48"	#4 @ 18"
12' - 0"	8"	—	3' - 0"	4 ~ #4	—	#6 @ 48"	#4 @ 18"
14' - 0"	8"	—	3' - 3"	4 ~ #4	—	#6 @ 36"	#4 @ 18"
16' - 0"	10"	5' - 4"	3' - 9"	5 ~ #4	—	#6 @ 16"	#4 @ 18"
18' - 0"	10"	6' - 0"	4' - 0"	5 ~ #4	#6 @ 48"	#6 @ 48"	#4 @ 18"
20' - 0"	10"	6' - 8"	5' - 0"	5 ~ #4	#6 @ 32"	#6 @ 32"	#4 @ 18"
22' - 0"	10"	7' - 4"	5' - 6"	5 ~ #4	#6 @ 24"	#6 @ 24"	#4 @ 18"
24' - 0"	10"	8' - 0"	6' - 3"	5 ~ #4	#6 @ 16"	#6 @ 16"	#4 @ 18"

WALL HT H	TYPE 18B CMU WIDTH	X	W	BAR "A"	BAR "C"	BAR "D"	BAR "E"
6' - 0"	8"	—	2' - 3"	3 ~ #4	—	#6 @ 48"	#4 @ 18"
8' - 0"	8"	—	2' - 9"	4 ~ #4	—	#6 @ 48"	#4 @ 18"
10' - 0"	8"	—	3' - 3"	4 ~ #4	—	#6 @ 48"	#4 @ 18"
12' - 0"	10"	4' - 0"	3' - 9"	4 ~ #4	—	#6 @ 40"	#4 @ 18"
14' - 0"	10"	4' - 8"	4' - 3"	5 ~ #4	#6 @ 40"	#6 @ 40"	#4 @ 18"
16' - 0"	10"	5' - 4"	5' - 3"	5 ~ #4	#6 @ 32"	#6 @ 32"	#4 @ 18"
18' - 0"	10"	6' - 0"	6' - 0"	6 ~ #4	#6 @ 24"	#6 @ 24"	#4 @ 18"
20' - 0"	10"	8' - 0"	7' - 0"	5 ~ #4	#7 @ 24"	#7 @ 24"	#4 @ 18"
22' - 0"	10"	10' - 0"	7' - 9"	5 ~ #4	#7 @ 16"	#7 @ 16"	#4 @ 12"
24' - 0"	10"	12' - 0"	8' - 6"	5 ~ #4	#8 @ 16"	#8 @ 16"	#4 @ 12"

WALL HT H	TYPE 18C CMU WIDTH	X	W	BAR "A"	BAR "C"	BAR "D"	BAR "E"
6' - 0"	8"	—	2' - 0"	3 ~ #4	—	#6 @ 48"	#4 @ 18"
8' - 0"	8"	—	2' - 6"	3 ~ #4	—	#6 @ 48"	#4 @ 18"
10' - 0"	8"	—	2' - 9"	3 ~ #4	—	#6 @ 48"	#4 @ 18"
12' - 0"	8"	—	3' - 3"	3 ~ #4	—	#6 @ 40"	#4 @ 18"
14' - 0"	10"	4' - 0"	3' - 9"	5 ~ #4	—	#6 @ 16"	#4 @ 18"
16' - 0"	10"	4' - 8"	4' - 3"	5 ~ #4	#6 @ 40"	#6 @ 40"	#4 @ 18"
18' - 0"	10"	5' - 4"	5' - 0"	5 ~ #4	#6 @ 32"	#6 @ 32"	#4 @ 18"
20' - 0"	10"	6' - 0"	5' - 9"	5 ~ #4	#6 @ 24"	#6 @ 24"	#4 @ 18"
22' - 0"	10"	7' - 0"	6' - 6"	5 ~ #4	#6 @ 16"	#6 @ 16"	#4 @ 18"
24' - 0"	10"	8' - 0"	7' - 6"	5 ~ #4	#7 @ 16"	#7 @ 16"	#4 @ 12"

WALL HT H	TYPE 18D CMU WIDTH	X	W	BAR "A"	BAR "C"	BAR "D"	BAR "E"
6' - 0"	8"	—	2' - 6"	3 ~ #4	—	#6 @ 48"	#4 @ 18"
8' - 0"	8"	—	3' - 3"	5 ~ #4	—	#6 @ 48"	#4 @ 18"
10' - 0"	10"	4' - 0"	3' - 6"	5 ~ #4	—	#6 @ 24"	#4 @ 18"
12' - 0"	10"	4' - 0"	4' - 3"	5 ~ #4	#6 @ 48"	#6 @ 32"	#4 @ 18"
14' - 0"	10"	4' - 8"	5' - 3"	5 ~ #4	#6 @ 32"	#6 @ 24"	#4 @ 18"
16' - 0"	10"	5' - 4"	6' - 3"	5 ~ #4	#6 @ 24"	#7 @ 16"	#4 @ 18"
18' - 0"	10"	7' - 4"	7' - 0"	5 ~ #4	#6 @ 16"	#7 @ 16"	#4 @ 18"
20' - 0"	10"	9' - 8"	8' - 0"	5 ~ #4	#7 @ 16"	#8 @ 16"	#4 @ 12"
22' - 0"	10"	12' - 0"	9' - 0"	5 ~ #4	#8 @ 16"	#8 @ 16"	#4 @ 12"
24' - 0"	10"	15' - 0"	9' - 9"	6 ~ #4	#9 @ 16"	#8 @ 16"	#4 @ 12"

CMU = CONCRETE MASONRY UNIT

BAR SIZE	SPLICE LENGTH
#6	2' - 8"
#7	3' - 8"
#8	4' - 10"

NOTES

1. Wall to be designated Noise Barrier Wall Type 18A, 18B, 18C or 18D. The Contract specifies actual wall designations.
2. For intermediate wall heights, use the next higher H.
3. All masonry shall be hollow unit and installed as running bond.
4. All masonry is to be specially inspected.
5. All Concrete Masonry Unit (CMU) cells that have vertical steel reinforcing bars or bond beam units shall be filled with grout.
6. Panels shall have at least 3 feet of level ground on each side.
7. Construction joints in the footing shall be spaced at 120 feet maximum.
8. See "Masonry Wall Finishes and Details" sheets for masonry block finishes, special shapes, sizes and layout.

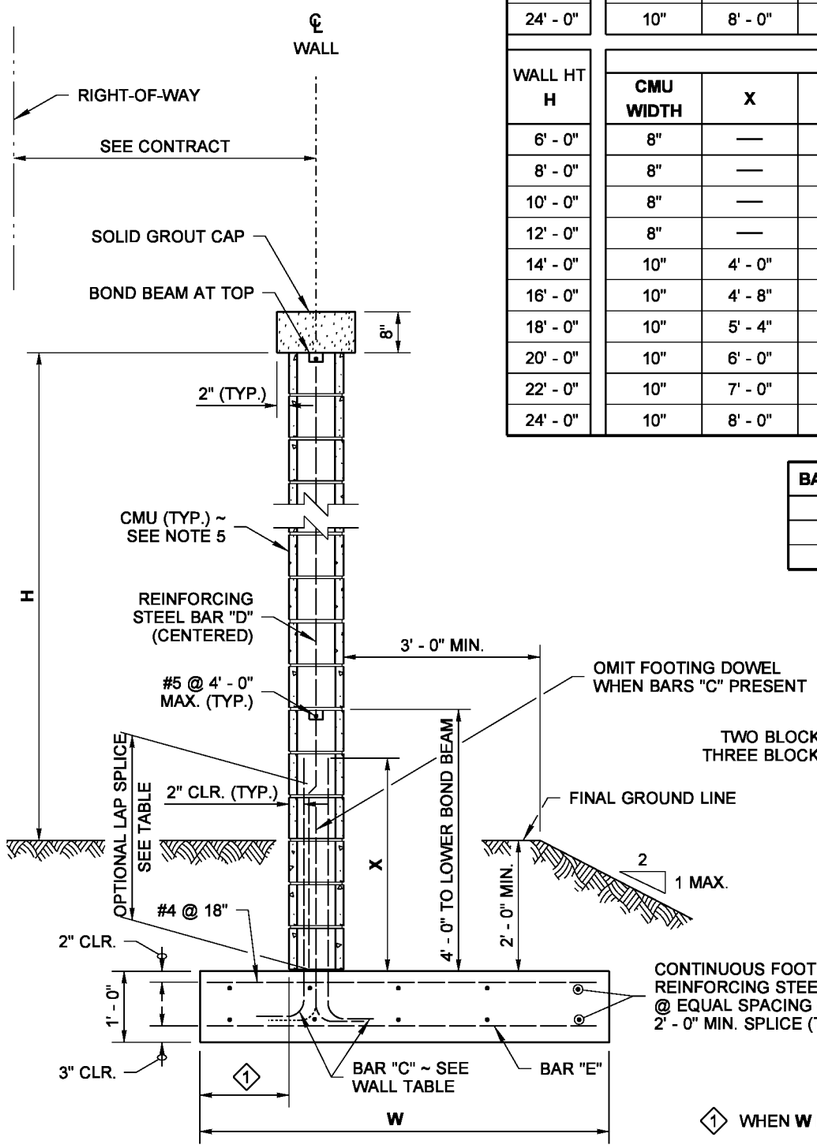

TYPICAL SECTION

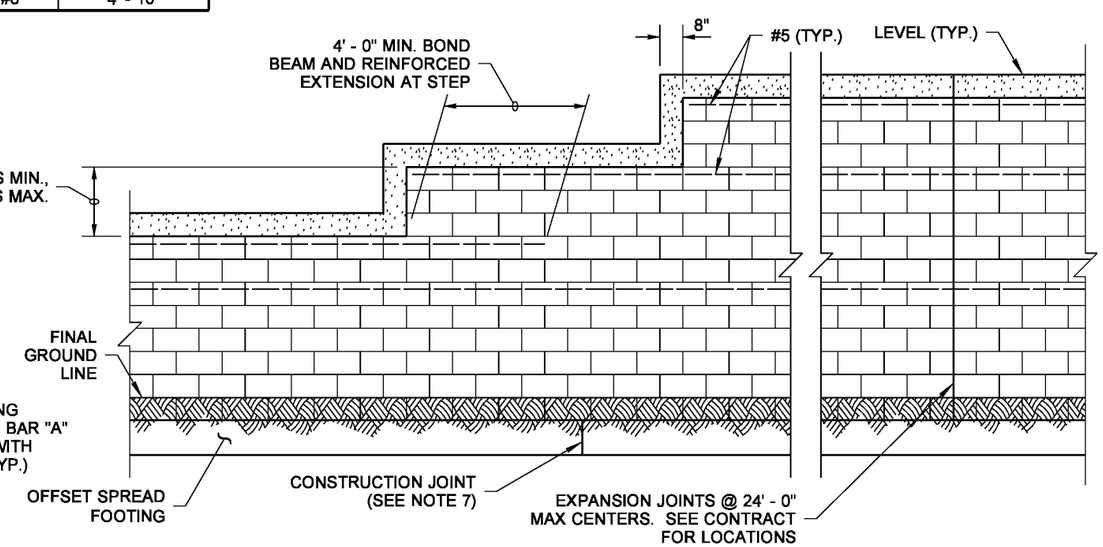

ELEVATION

1 WHEN **W** IS : < 2' - 6" ..... CENTER WALL ON FOOTING
2' - 6' ≤ W < 4' - 6" ..... DIM. = 1' - 0"
≥ 4' - 6" ..... DIM. = 2' - 0"

MASONRY WALL ON OFFSET SPREAD FOOTING

BIJAN KHALEGHI
STATE OF WASHINGTON
27695
STRUCTURAL ENGINEER
PROFESSIONAL ENGINEER

NOTE: THIS PLAN IS NOT A LEGAL ENGINEERING DOCUMENT BUT AN ELECTRONIC DUPLICATE. THE ORIGINAL, SIGNED BY THE ENGINEER AND APPROVED FOR PUBLICATION, IS KEPT ON FILE AT THE WASHINGTON STATE DEPARTMENT OF TRANSPORTATION. A COPY MAY BE OBTAINED UPON REQUEST.

NOISE BARRIER WALL TYPE 18

STANDARD PLAN D-2.64-01

SHEET 1 OF 2 SHEETS

APPROVED FOR PUBLICATION

Pasco Bakotich III — STATE DESIGN ENGINEER
01-06-09 — DATE

Washington State Department of Transportation

EFFECTIVE: AUGUST 6, 2012 TO August 4, 2013
EFFECTIVE: AUGUST 6, 2012 TO August 4, 2013
EFFECTIVE: AUGUST 6, 2012 TO August 4, 2013
EFFECTIVE: AUGUST 6, 2012 TO August 4, 2013

EFFECTIVE: AUGUST 6, 2012 TO August 4, 2013
EFFECTIVE: AUGUST 6, 2012 TO August 4, 2013

DRAWN BY: BILL BEKENS

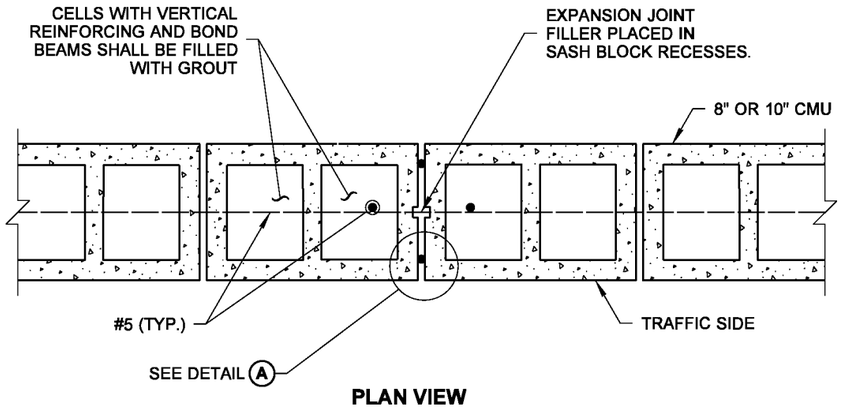

PLAN VIEW

TYPICAL EXPANSION JOINT

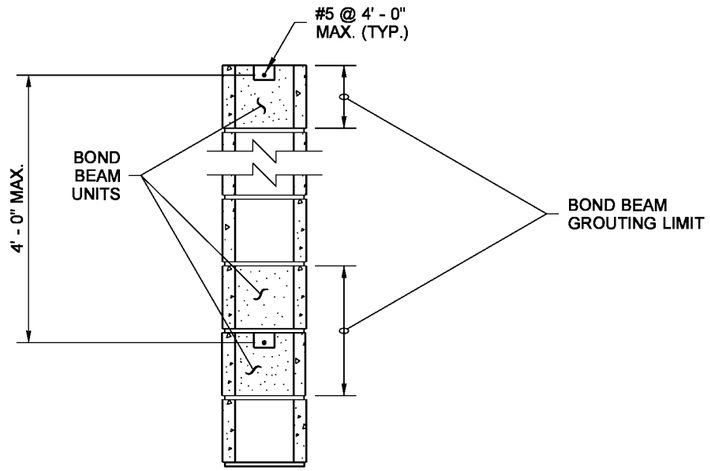

BOND BEAM DETAIL

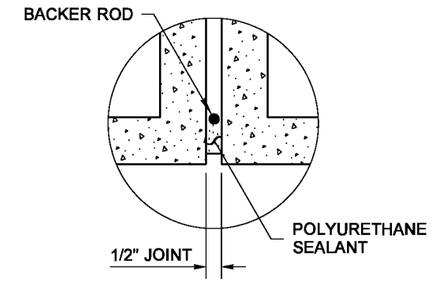

DETAIL A

TYPICAL BOTH SIDES OF WALL

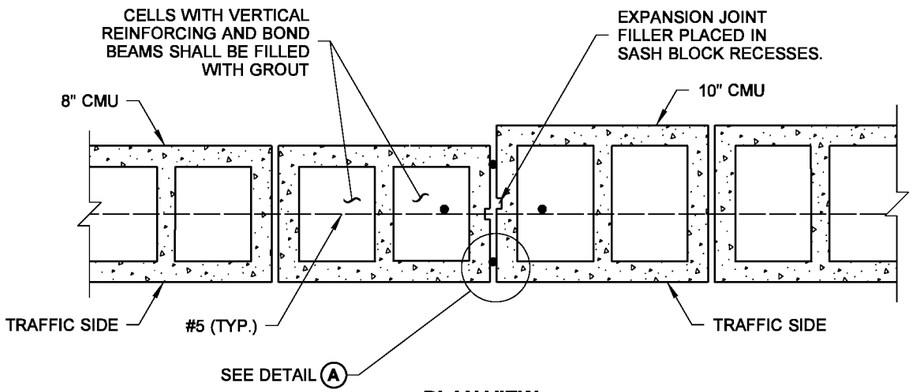

PLAN VIEW

EXPANSION JOINT AT WIDTH STEP

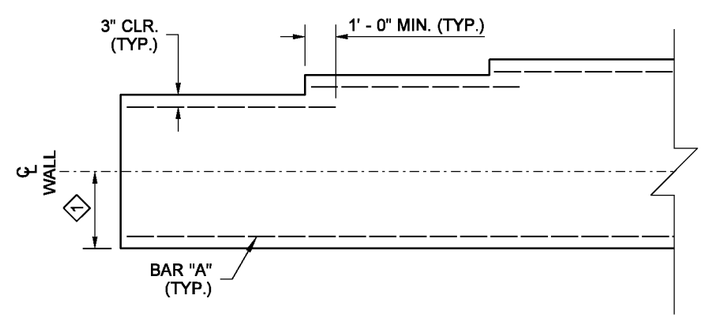

FOOTING WIDTH TRANSITION DETAIL
(FOR LOCATIONS WITHOUT FOOTING STEP)
NOTE: TRANSVERSE BARS NOT SHOWN

MASONRY WALL ON OFFSET SPREAD FOOTING

NOTE: THIS PLAN IS NOT A LEGAL ENGINEERING DOCUMENT BUT AN ELECTRONIC DUPLICATE. THE ORIGINAL, SIGNED BY THE ENGINEER AND APPROVED FOR PUBLICATION, IS KEPT ON FILE AT THE WASHINGTON STATE DEPARTMENT OF TRANSPORTATION. A COPY MAY BE OBTAINED UPON REQUEST.

NOISE BARRIER WALL TYPE 18

STANDARD PLAN D-2.64-01

SHEET 2 OF 2 SHEETS

APPROVED FOR PUBLICATION

Pasco Bakotich III — STATE DESIGN ENGINEER
01-06-09 — DATE

Washington State Department of Transportation

EFFECTIVE: AUGUST 6, 2012 TO August 4, 2013
EFFECTIVE: AUGUST 6, 2012 TO August 4, 2013
EFFECTIVE: AUGUST 6, 2012 TO August 4, 2013
EFFECTIVE: AUGUST 6, 2012 TO August 4, 2013

EFFECTIVE: AUGUST 6, 2012 TO August 4, 2013

DRAWN BY: ADAM COCHRAN

WALL HT H	TYPE 19A CMU WIDTH	X	BAR "D"	BAR "C"	DIAM.	BAR "P"	DEPTH D1	DEPTH D2
6' - 0"	8"	—	#6 @ 48"	—	12"	6 ~ #5	5' - 3"	4' - 9"
8' - 0"	8"	—	#6 @ 48"	—	12"	6 ~ #5	6' - 0"	5' - 3"
10' - 0"	8"	—	#6 @ 48"	—	12"	6 ~ #5	6' - 9"	5' - 9"
12' - 0"	8"	—	#6 @ 48"	—	12"	6 ~ #5	7' - 3"	6' - 3"
14' - 0"	8"	—	#6 @ 32"	—	12"	6 ~ #6	7' - 9"	6' - 9"
16' - 0"	10"	5' - 4"	#6 @ 32"	—	12"	6 ~ #7	8' - 3"	7' - 0"
18' - 0"	10"	6' - 0"	#6 @ 48"	#6 @ 48"	12"	6 ~ #8	8' - 9"	7' - 6"
20' - 0"	10"	6' - 8"	#6 @ 32"	#6 @ 32"	12"	6 ~ #9	9' - 3"	7' - 9"
22' - 0"	10"	7' - 4"	#6 @ 24"	#6 @ 24"	14"	8 ~ #7	9' - 3"	7' - 9"
24' - 0"	10"	8' - 0"	#6 @ 24"	#6 @ 24"	14"	8 ~ #8	9' - 9"	8' - 3"

WALL HT H	TYPE 19B CMU WIDTH	X	BAR "D"	BAR "C"	DIAM.	BAR "P"	DEPTH D1	DEPTH D2
6' - 0"	8"	—	#6 @ 48"	—	12"	6 ~ #5	6' - 0"	5' - 3"
8' - 0"	8"	—	#6 @ 48"	—	12"	6 ~ #5	7' - 0"	6' - 0"
10' - 0"	8"	—	#6 @ 48"	—	12"	6 ~ #6	7' - 9"	6' - 9"
12' - 0"	10"	4' - 0"	#6 @ 40"	—	12"	6 ~ #7	8' - 6"	7' - 3"
14' - 0"	10"	4' - 8"	#6 @ 32"	#6 @ 32"	14"	8 ~ #7	8' - 6"	7' - 3"
16' - 0"	10"	5' - 4"	#6 @ 24"	#6 @ 24"	14"	8 ~ #7	9' - 3"	8' - 0"
18' - 0"	10"	6' - 0"	#6 @ 16"	#6 @ 16"	16"	6 ~ #8	9' - 3"	8' - 0"
20' - 0"	10"	8' - 0"	#7 @ 16"	#7 @ 32"	16"	8 ~ #7	10' - 0"	8' - 6"
22' - 0"	10"	10' - 0"	#7 @ 16"	#7 @ 24"	16"	8 ~ #8	10' - 6"	9' - 0"
24' - 0"	10"	12' - 0"	#8 @ 16"	#7 @ 16"	16"	8 ~ #8	11' - 3"	9' - 6"

WALL HT H	TYPE 19C CMU WIDTH	X	BAR "D"	BAR "C"	DIAM.	BAR "P"	DEPTH D1	DEPTH D2
6' - 0"	8"	—	#6 @ 48"	—	12"	6 ~ #5	5' - 9"	5' - 0"
8' - 0"	8"	—	#6 @ 48"	—	12"	6 ~ #5	6' - 6"	5' - 6"
10' - 0"	8"	—	#6 @ 48"	—	12"	6 ~ #5	7' - 3"	6' - 3"
12' - 0"	8"	—	#6 @ 40"	—	12"	6 ~ #6	7' - 9"	6' - 9"
14' - 0"	8"	5' - 4"	#6 @ 40"	—	12"	6 ~ #7	8' - 6"	7' - 3"
16' - 0"	10"	5' - 4"	#6 @ 32"	#6 @ 32"	14"	8 ~ #6	8' - 6"	7' - 3"
18' - 0"	10"	6' - 0"	#6 @ 24"	#6 @ 24"	14"	8 ~ #7	9' - 0"	7' - 9"
20' - 0"	10"	6' - 8"	#6 @ 24"	#6 @ 16"	14"	8 ~ #8	9' - 9"	8' - 3"
22' - 0"	10"	7' - 4"	#6 @ 16"	#6 @ 16"	14"	8 ~ #9	10' - 3"	8' - 9"
24' - 0"	10"	8' - 0"	#6 @ 16"	#6 @ 16"	16"	8 ~ #8	10' - 3"	8' - 9"

WALL HT H	TYPE 19D CMU WIDTH	X	BAR "D"	BAR "C"	DIAM.	BAR "P"	DEPTH D1	DEPTH D2
6' - 0"	8"	—	#6 @ 48"	—	12"	6 ~ #5	6' - 6"	5' - 9"
8' - 0"	8"	—	#6 @ 48"	—	12"	6 ~ #6	7' - 6"	6' - 6"
10' - 0"	10"	4' - 0"	#6 @ 24"	—	12"	6 ~ #7	8' - 3"	7' - 0"
12' - 0"	10"	4' - 8"	#6 @ 32"	#6 @ 32"	14"	8 ~ #7	8' - 6"	7' - 3"
14' - 0"	10"	4' - 8"	#6 @ 24"	#6 @ 24"	14"	8 ~ #7	9' - 3"	8' - 0"
16' - 0"	10"	5' - 4"	#6 @ 16"	#6 @ 16"	16"	6 ~ #8	9' - 6"	8' - 0"
18' - 0"	10"	7' - 4"	#7 @ 16"	#7 @ 24"	16"	8 ~ #8	10' - 0"	8' - 6"
20' - 0"	10"	9' - 8"	#8 @ 16"	#7 @ 16"	16"	8 ~ #9	10' - 9"	9' - 3"
22' - 0"	10"	12' - 0"	#8 @ 16"	#7 @ 16"	16"	8 ~ #10	11' - 6"	9' - 9"
24' - 0"	10"	15' - 0"	#8 @ 16"	#7 @ 16"	18"	8 ~ #10	11' - 6"	9' - 9"

NOTES

1. Wall to be designated Noise Barrier Wall Type 19A, 19B, 19C, or 19D. The Contract specifies actual wall designations.
2. For intermediate wall heights, use the next higher H.
3. All masonry shall be hollow unit and installed as running bond.
4. All masonry is to be specially inspected.
5. All Concrete Masonry Unit (CMU) cells the have vertical steel reinforcing bars or bond beam units shall be filled with grout.
6. Panels shall have at least 3 feet of level ground on each side.
7. Construction joints in the shaft cap shall be spaced 120 feet maximum.
8. See "Masonry Wall Finishes and Details" sheet for masonry block finishes, special shapes, sizes and layouts.
9. The Contract specifies actual foundation requirements D1 or D2.

SOIL TYPE	
SOIL TYPE	ANGLE OF INTERNAL FRICTION ϕ (DEGREES)
D1	32
D2	38

WIND EXPOSURE & VELOCITY		
NOISE BARRIER TYPE	WIND EXPOSURE	WIND VELOCITY (MPH)
19A	B1	80
19B	B1	90
19C	B2	80
19D	B2	90

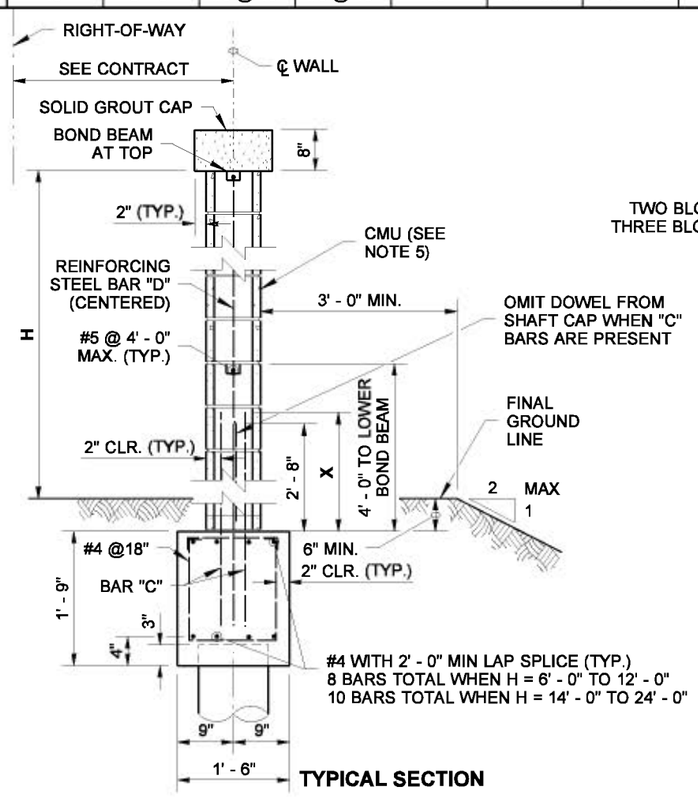

TYPICAL SECTION

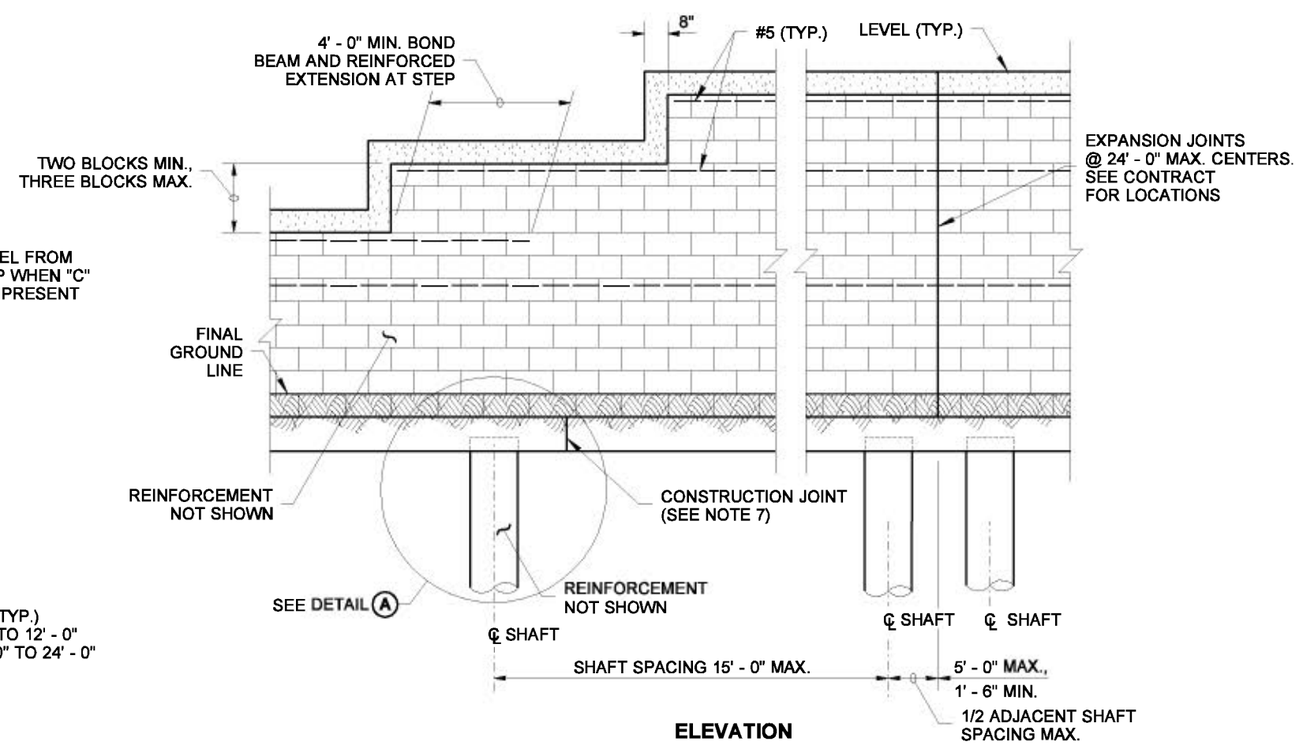

ELEVATION

MASONRY WALL ON SHAFT W/ GRADE BEAM FOUNDATION

EXPIRES AUGUST 23, 2006

NOTE: THIS PLAN IS NOT A LEGAL ENGINEERING DOCUMENT BUT AN ELECTRONIC DUPLICATE. THE ORIGINAL, SIGNED BY THE ENGINEER AND APPROVED FOR PUBLICATION, IS KEPT ON FILE AT THE WASHINGTON STATE DEPARTMENT OF TRANSPORTATION. A COPY MAY BE OBTAINED UPON REQUEST.

NOISE BARRIER WALL TYPE 19

STANDARD PLAN D-2.66-00

SHEET 1 OF 2 SHEETS

APPROVED FOR PUBLICATION

Harold J. Peterfeso — STATE DESIGN ENGINEER

11-10-05 — DATE

Washington State Department of Transportation

EFFECTIVE: AUGUST 6, 2012 TO August 4, 2013

EFFECTIVE: AUGUST 6, 2012 TO August 4, 2013
EFFECTIVE: AUGUST 6, 2012 TO August 4, 2013

DRAWN BY: ADAM COCHRAN

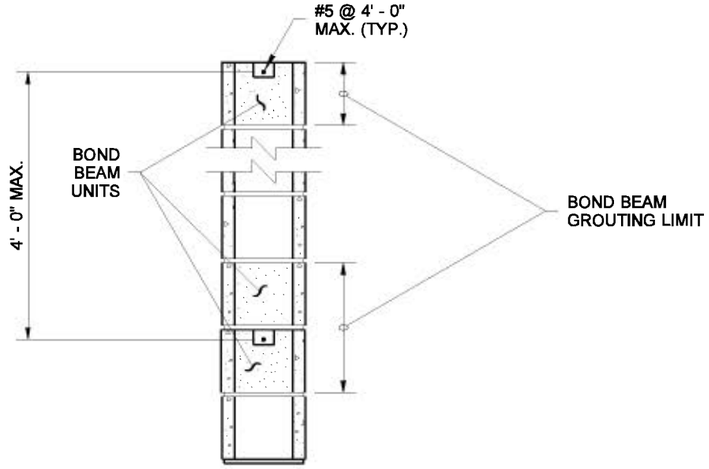

BOND BEAM DETAIL

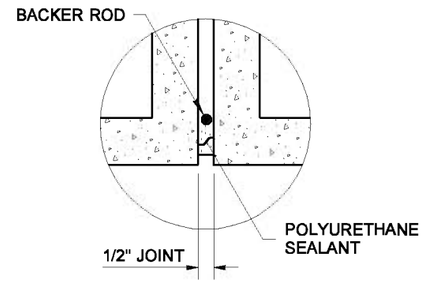

DETAIL (B)

TYPICAL BOTH SIDES OF WALL

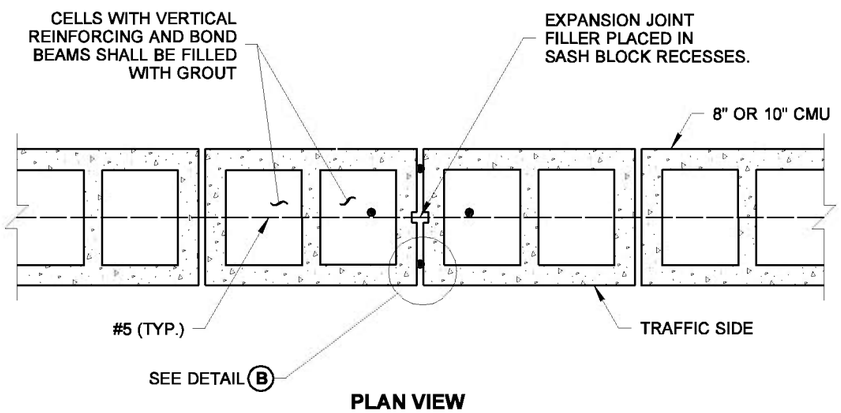

PLAN VIEW

TYPICAL EXPANSION JOINT

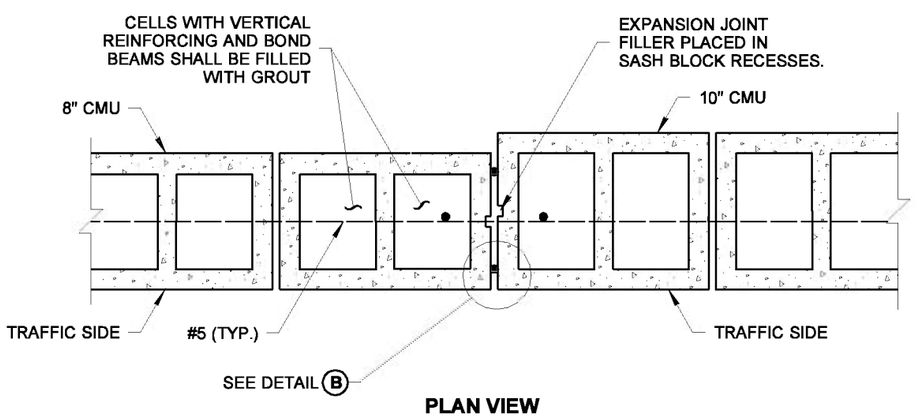

PLAN VIEW

EXPANSION JOINT AT WIDTH STEP

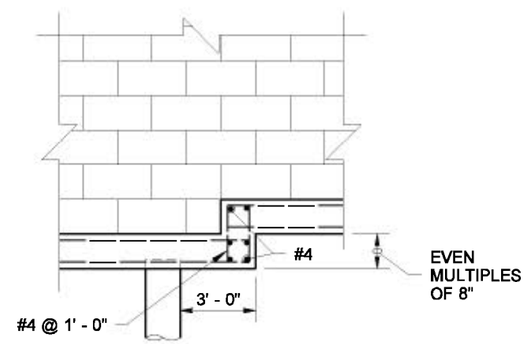

STEP DETAIL

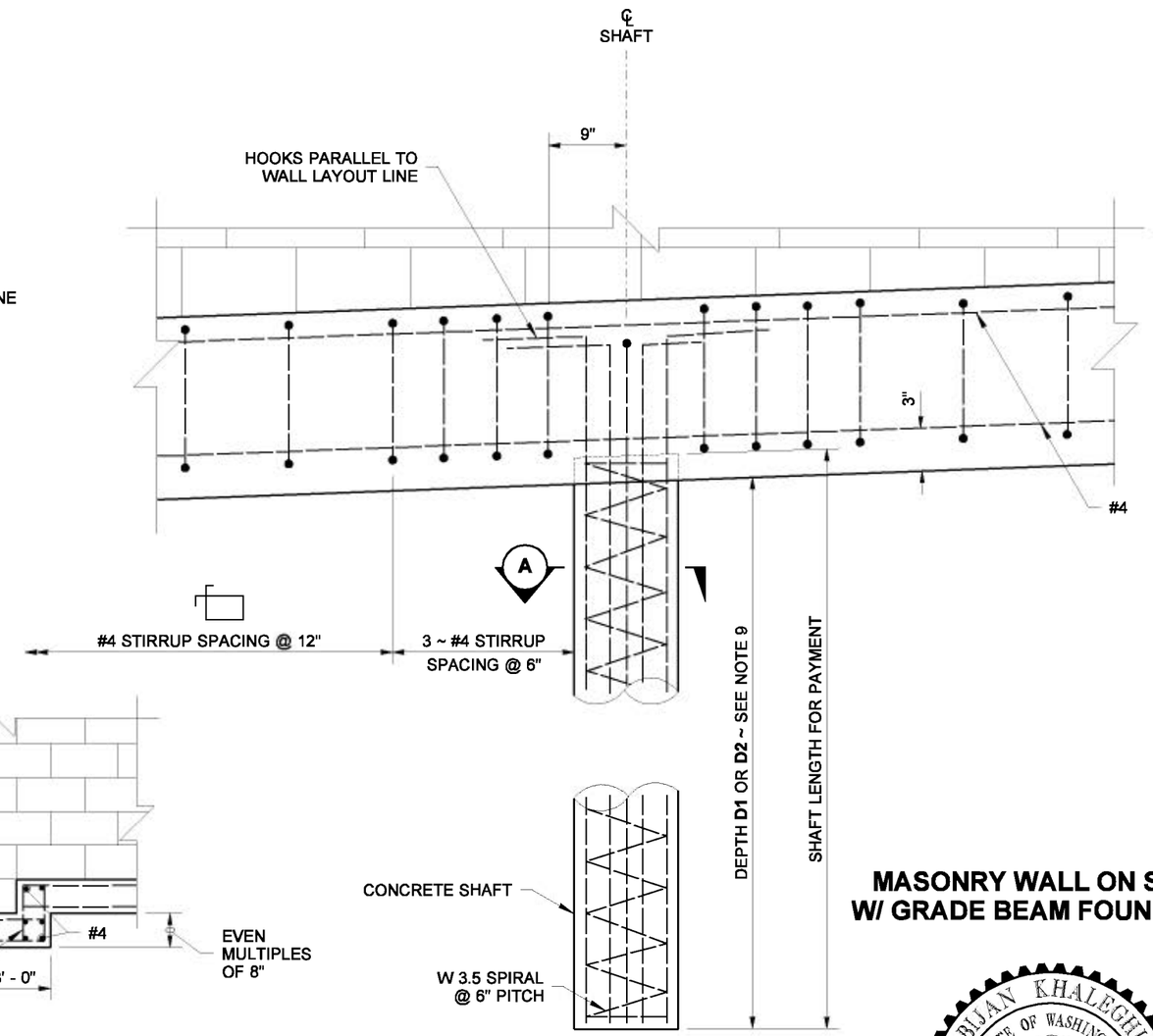

DETAIL (A)

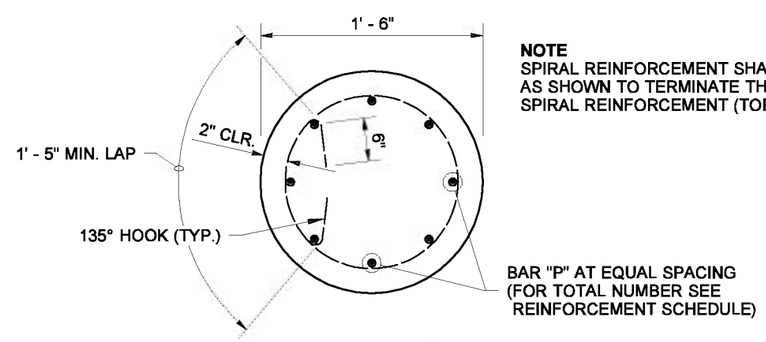

SECTION (A)

NOTE
SPIRAL REINFORCEMENT SHALL BE LAPPED AS SHOWN TO TERMINATE THE ENDS OF THE SPIRAL REINFORCEMENT (TOP AND BOTTOM).

MASONRY WALL ON SHAFT W/ GRADE BEAM FOUNDATION

EXPIRES AUGUST 23, 2006

NOTE: THIS PLAN IS NOT A LEGAL ENGINEERING DOCUMENT BUT AN ELECTRONIC DUPLICATE. THE ORIGINAL, SIGNED BY THE ENGINEER AND APPROVED FOR PUBLICATION, IS KEPT ON FILE AT THE WASHINGTON STATE DEPARTMENT OF TRANSPORTATION. A COPY MAY BE OBTAINED UPON REQUEST.

NOISE BARRIER WALL TYPE 19

STANDARD PLAN D-2.66-00

SHEET 2 OF 2 SHEETS

APPROVED FOR PUBLICATION

Harold J. Peterfeso — STATE DESIGN ENGINEER
11-10-05 — DATE

Washington State Department of Transportation

EFFECTIVE: AUGUST 6, 2012 TO August 4, 2013
EFFECTIVE: AUGUST 6, 2012 TO August 4, 2013
EFFECTIVE: AUGUST 6, 2012 TO August 4, 2013
EFFECTIVE: AUGUST 6, 2012 TO August 4, 2013

EFFECTIVE: AUGUST 6, 2012 TO August 4, 2013
EFFECTIVE: AUGUST 6, 2012 TO August 4, 2013

DRAWN BY: ADAM COCHRAN

WIND EXPOSURE & VELOCITY		
NOISE BARRIER TYPE	WIND EXPOSURE	WIND VELOCITY (MPH)
20A	B1	80
20B	B1	90
20C	B2	80
20D	B2	90

SOIL TYPE	
SOIL TYPE	ANGLE OF INTERNAL FRICTION ϕ (DEGREES)
D1	32
D2	38

TIE SPACING	
BAR "A" SIZE	SPACING
#4	6" O.C.
#5	6" O.C.
#6	5" O.C.
#7, #8, #9, #10	4" O.C.

TYPE 20A						
WALL HT H	DEPTH D1	DEPTH D2	BAR "A"	BAR "B"	BAR "C"	PILASTER SPACING L
6' - 0"	5' - 6"	5' - 0"	6 ~ #6	4 ~ #4	#5 @ 32"	16' - 0"
8' - 0"	6' - 6"	5' - 6"	6 ~ #6	4 ~ #4	#5 @ 32"	16' - 0"
10' - 0"	7' - 0"	6' - 0"	6 ~ #6	4 ~ #4	#5 @ 32"	16' - 0"
12' - 0"	7' - 9"	6' - 6"	6 ~ #6	4 ~ #5	#5 @ 32"	16' - 0"
14' - 0"	8' - 3"	7' - 0"	6 ~ #6	4 ~ #5	#5 @ 32"	16' - 0"
16' - 0"	9' - 0"	7' - 6"	6 ~ #6	4 ~ #6	#5 @ 32"	16' - 0"
18' - 0"	9' - 6"	8' - 0"	6 ~ #6	4 ~ #7	#5 @ 32"	16' - 0"
20' - 0"	10' - 3"	8' - 6"	6 ~ #6	6 ~ #7	#5 @ 32"	16' - 0"
22' - 0"	10' - 9"	9' - 0"	6 ~ #6	6 ~ #8	#5 @ 32"	16' - 0"
24' - 0"	11' - 3"	9' - 6"	6 ~ #6	6 ~ #9	#5 @ 32"	16' - 0"

TYPE 20B						
WALL HT H	DEPTH D1	DEPTH D2	BAR "A"	BAR "B"	BAR "C"	PILASTER SPACING L
6' - 0"	6' - 6"	5' - 9"	6 ~ #6	4 ~ #4	#5 @ 32"	16' - 0"
8' - 0"	7' - 6"	6' - 6"	6 ~ #6	4 ~ #4	#5 @ 32"	16' - 0"
10' - 0"	8' - 6"	7' - 0"	6 ~ #6	4 ~ #5	#5 @ 32"	16' - 0"
12' - 0"	9' - 3"	7' - 9"	6 ~ #6	4 ~ #6	#5 @ 32"	16' - 0"
14' - 0"	10' - 0"	8' - 6"	6 ~ #6	4 ~ #7	#5 @ 32"	16' - 0"
16' - 0"	11' - 0"	9' - 0"	6 ~ #6	6 ~ #8	#5 @ 32"	16' - 0"
18' - 0"	11' - 9"	9' - 9"	6 ~ #6	6 ~ #9	#5 @ 32"	16' - 0"
20' - 0"	12' - 6"	10' - 3"	6 ~ #7	6 ~ #10	#5 @ 32"	16' - 0"
22' - 0"	12' - 6"	10' - 3"	6 ~ #7	6 ~ #10	#5 @ 32"	16' - 0"
24' - 0"	12' - 6"	10' - 3"	6 ~ #7	6 ~ #10	#5 @ 32"	12' - 0"

TYPE 20C						
WALL HT H	DEPTH D1	DEPTH D2	BAR "A"	BAR "B"	BAR "C"	PILASTER SPACING L
6' - 0"	6' - 3"	5' - 3"	6 ~ #6	4 ~ #4	#6 @ 32"	16' - 0"
8' - 0"	7' - 0"	6' - 0"	6 ~ #6	4 ~ #4	#6 @ 32"	16' - 0"
10' - 0"	7' - 9"	6' - 6"	6 ~ #6	4 ~ #5	#6 @ 32"	16' - 0"
12' - 0"	8' - 6"	7' - 3"	6 ~ #6	4 ~ #5	#6 @ 32"	16' - 0"
14' - 0"	9' - 3"	7' - 9"	6 ~ #6	4 ~ #6	#6 @ 32"	16' - 0"
16' - 0"	10' - 0"	8' - 3"	6 ~ #6	4 ~ #7	#6 @ 32"	16' - 0"
18' - 0"	10' - 9"	9' - 0"	6 ~ #6	6 ~ #7	#6 @ 32"	16' - 0"
20' - 0"	11' - 3"	9' - 6"	6 ~ #6	6 ~ #8	#6 @ 32"	16' - 0"
22' - 0"	12' - 0"	10' - 0"	6 ~ #7	6 ~ #9	#6 @ 32"	16' - 0"
24' - 0"	12' - 9"	10' - 6"	6 ~ #7	6 ~ #10	#6 @ 32"	16' - 0"

TYPE 20D						
WALL HT H	DEPTH D1	DEPTH D2	BAR "A"	BAR "B"	BAR "C"	PILASTER SPACING L
6' - 0"	7' - 0"	6' - 0"	6 ~ #6	4 ~ #4	#6 @ 32"	16' - 0"
8' - 0"	8' - 3"	7' - 0"	6 ~ #6	4 ~ #5	#6 @ 32"	16' - 0"
10' - 0"	9' - 3"	7' - 9"	6 ~ #6	4 ~ #6	#6 @ 32"	16' - 0"
12' - 0"	10' - 3"	8' - 6"	6 ~ #6	4 ~ #7	#6 @ 32"	16' - 0"
14' - 0"	11' - 0"	9' - 3"	6 ~ #6	6 ~ #8	#6 @ 32"	16' - 0"
16' - 0"	12' - 0"	9' - 9"	6 ~ #6	6 ~ #9	#6 @ 32"	16' - 0"
18' - 0"	12' - 9"	10' - 6"	6 ~ #7	6 ~ #10	#6 @ 32"	16' - 0"
20' - 0"	13' - 0"	10' - 6"	6 ~ #7	6 ~ #10	#6 @ 32"	14' - 0"
22' - 0"	13' - 0"	10' - 6"	6 ~ #8	6 ~ #10	#6 @ 32"	12' - 0"
24' - 0"	13' - 6"	11' - 3"	6 ~ #8	6 ~ #10	#6 @ 32"	12' - 0"

CMU = CONCRETE MASONRY UNIT

NOTES

1. Wall to be designated Noise Barrier Wall Type 20A, 20B, 20C, or 20D. The Contract specifies actual wall designations.
2. For intermediate wall heights, use the next higher H.
3. All masonry shall be hollow unit and installed as running bond.
4. All masonry is to be specially inspected.
5. All Concrete Masonry Unit (CMU) cells that have vertical steel reinforcing bars or bond beam units shall be filled with grout.
6. Panels shall have at least 3 feet of level ground on each side.
7. See "Masonry Wall Finishes and Details" sheet for masonry block finishes, special shapes, sizes and layouts.
8. The Contract specifies actual foundation requirements D1 or D2.

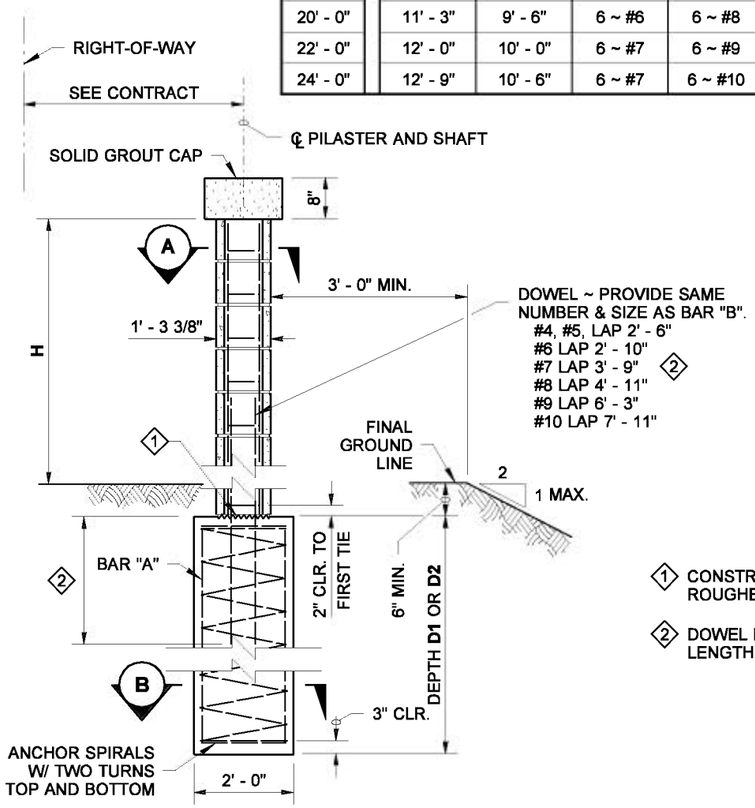

SECTION AT PILASTER AND SHAFT

1 CONSTRUCTION JOINT WITH ROUGHENED SURFACE

2 DOWEL EMBEDMENT LENGTH = 40 x BAR "B" DIAM.

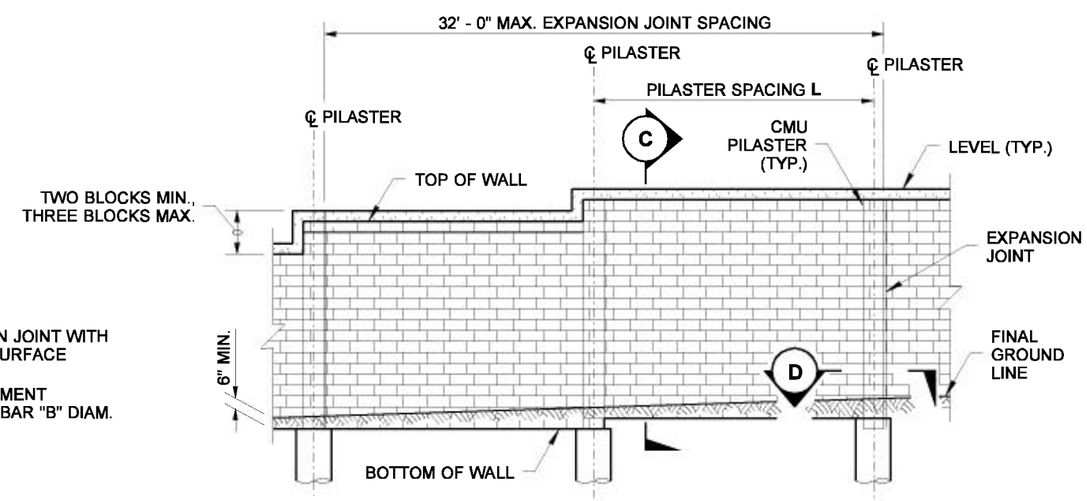

ELEVATION

MASONRY WALL ON SHAFT FOUNDATION

EXPIRES AUGUST 23, 2006

NOTE: THIS PLAN IS NOT A LEGAL ENGINEERING DOCUMENT BUT AN ELECTRONIC DUPLICATE. THE ORIGINAL, SIGNED BY THE ENGINEER AND APPROVED FOR PUBLICATION, IS KEPT ON FILE AT THE WASHINGTON STATE DEPARTMENT OF TRANSPORTATION. A COPY MAY BE OBTAINED UPON REQUEST.

NOISE BARRIER WALL TYPE 20

STANDARD PLAN D-2.68-00

SHEET 1 OF 2 SHEETS

APPROVED FOR PUBLICATION

Harold J. Peterfeso — STATE DESIGN ENGINEER

11-10-05 — DATE

Washington State Department of Transportation

EFFECTIVE: AUGUST 6, 2012 TO August 4, 2013
EFFECTIVE: AUGUST 6, 2012 TO August 4, 2013
EFFECTIVE: AUGUST 6, 2012 TO August 4, 2013
EFFECTIVE: AUGUST 6, 2012 TO August 4, 2013

EFFECTIVE: AUGUST 6, 2012 TO August 4, 2013
EFFECTIVE: AUGUST 6, 2012 TO August 4, 2013

DRAWN BY: ADAM COCHRAN

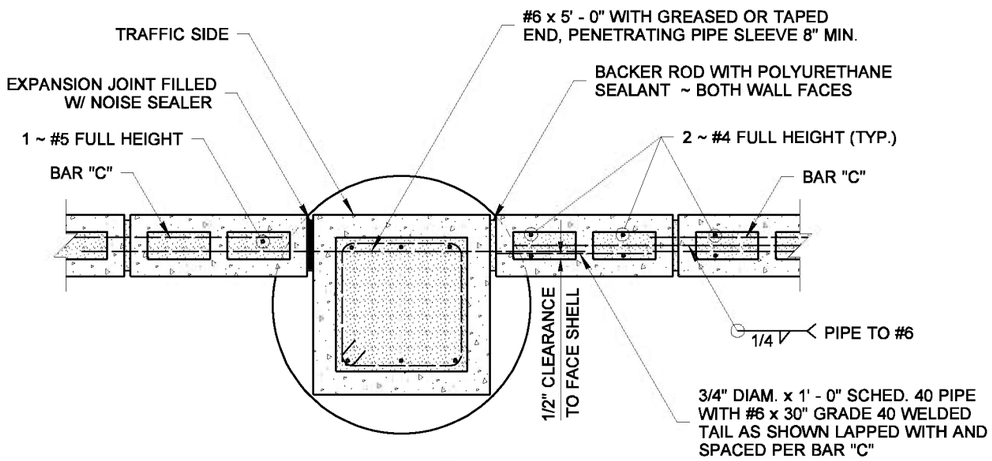

SECTION (D)

TYPICAL EXPANSION JOINT

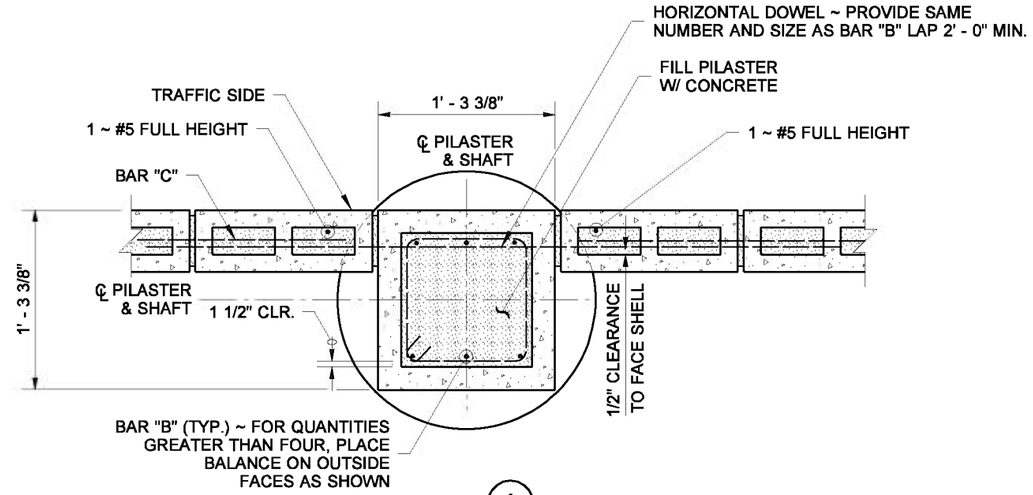

SECTION (A)

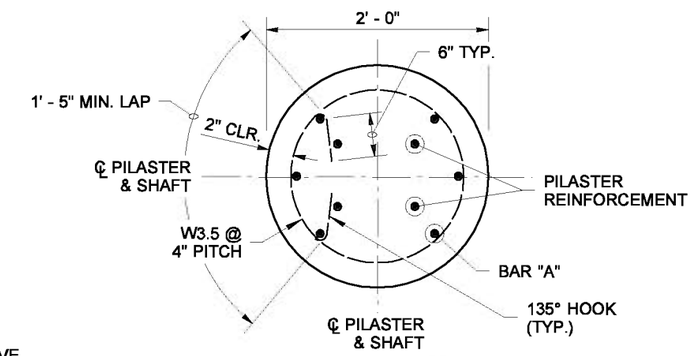

SECTION (B)

NOTE
SPIRAL REINFORCEMENT SHALL BE LAPPED 17" MIN. A 135° HOOK THAT IS HOOKED AROUND A LONGITUDINAL BAR SHALL BE USED TO TERMINATE THE ENDS OF THE SPIRAL REINFORCEMENT AT LAPPED SPLICES AND AT THE TOP AND BOTTOM OF SHAFT.

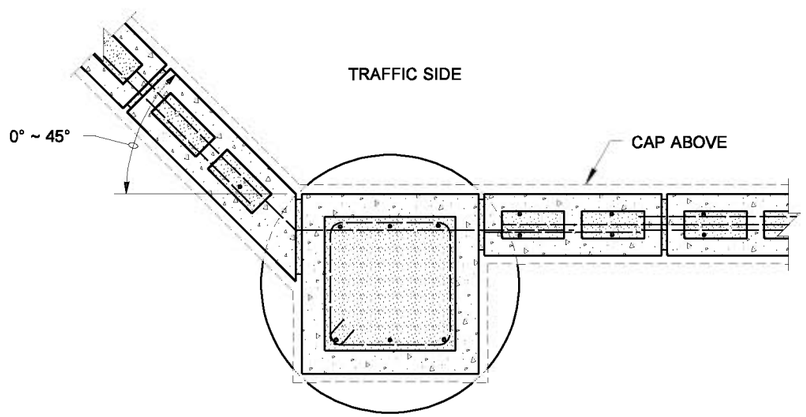

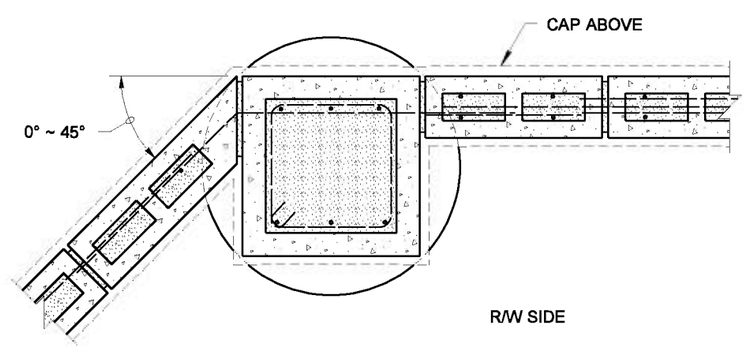

ANGLE POINT PLAN

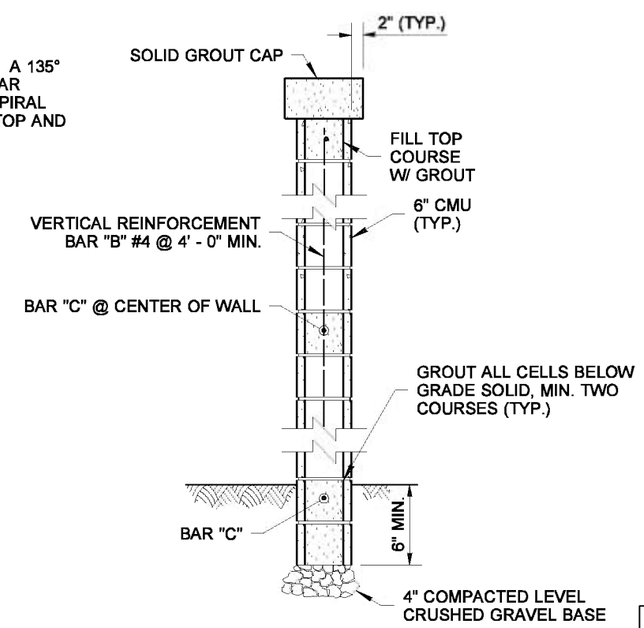

SECTION (C)

MASONRY WALL ON SHAFT FOUNDATION

EXPIRES AUGUST 23, 2006

NOTE: THIS PLAN IS NOT A LEGAL ENGINEERING DOCUMENT BUT AN ELECTRONIC DUPLICATE. THE ORIGINAL, SIGNED BY THE ENGINEER AND APPROVED FOR PUBLICATION, IS KEPT ON FILE AT THE WASHINGTON STATE DEPARTMENT OF TRANSPORTATION. A COPY MAY BE OBTAINED UPON REQUEST.

NOISE BARRIER WALL TYPE 20

STANDARD PLAN D-2.68-00

SHEET 2 OF 2 SHEETS

APPROVED FOR PUBLICATION

Harold J. Peterfeso — STATE DESIGN ENGINEER
11-10-05 — DATE

Washington State Department of Transportation

EFFECTIVE: AUGUST 6, 2012 TO August 4, 2013
EFFECTIVE: AUGUST 6, 2012 TO August 4, 2013
EFFECTIVE: AUGUST 6, 2012 TO August 4, 2013
EFFECTIVE: AUGUST 6, 2012 TO August 4, 2013

EFFECTIVE: AUGUST 6, 2012 TO August 4, 2013
EFFECTIVE: AUGUST 6, 2012 TO August 4, 2013

DRAWN BY: ADAM COCHRAN

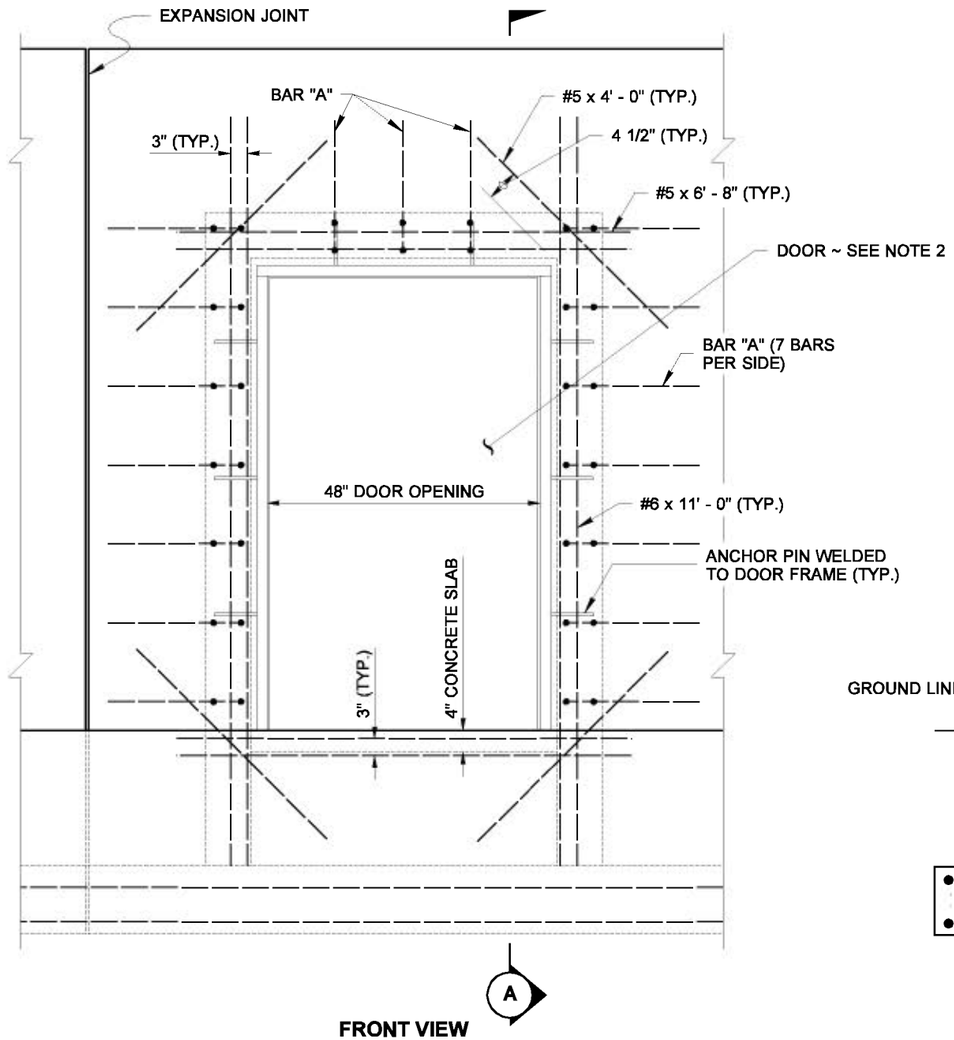

FRONT VIEW

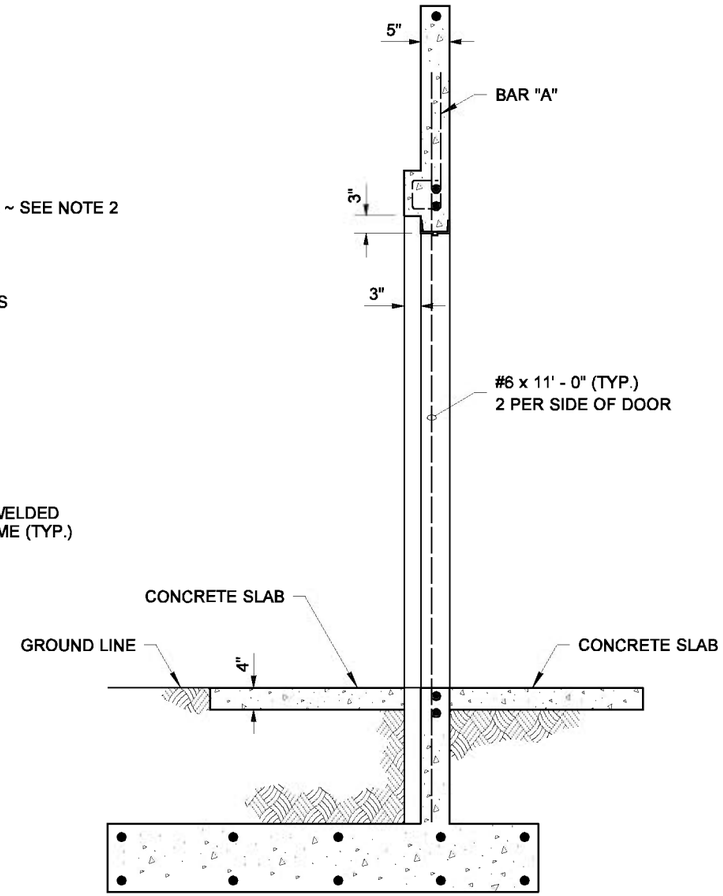

A SECTION

NOTES

1. All rebar shall have a minimum 1 1/2" cover.
2. See Standard Plan D-2.92 for door and frame details.
3. See Standard Plan D-2.06 for wall reinforcement not shown.

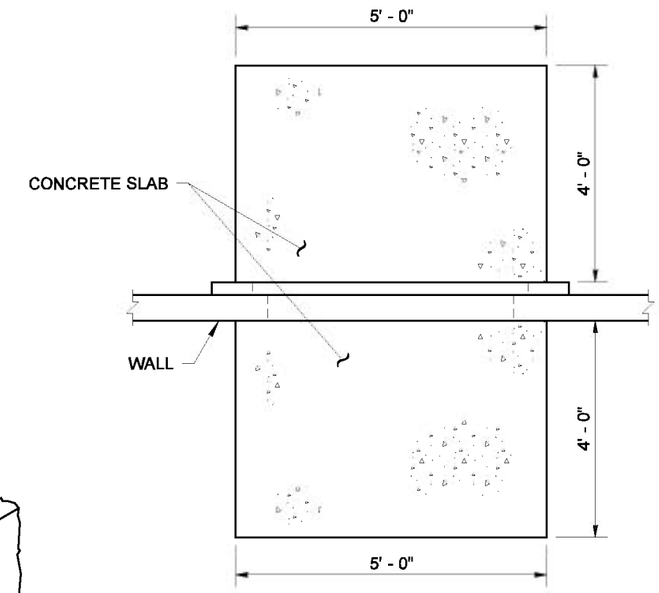

PLAN VIEW
CONCRETE SLAB DETAIL

BENDING DIAGRAM

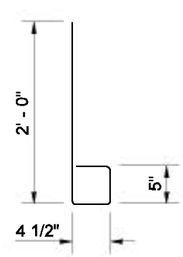

BAR "A"

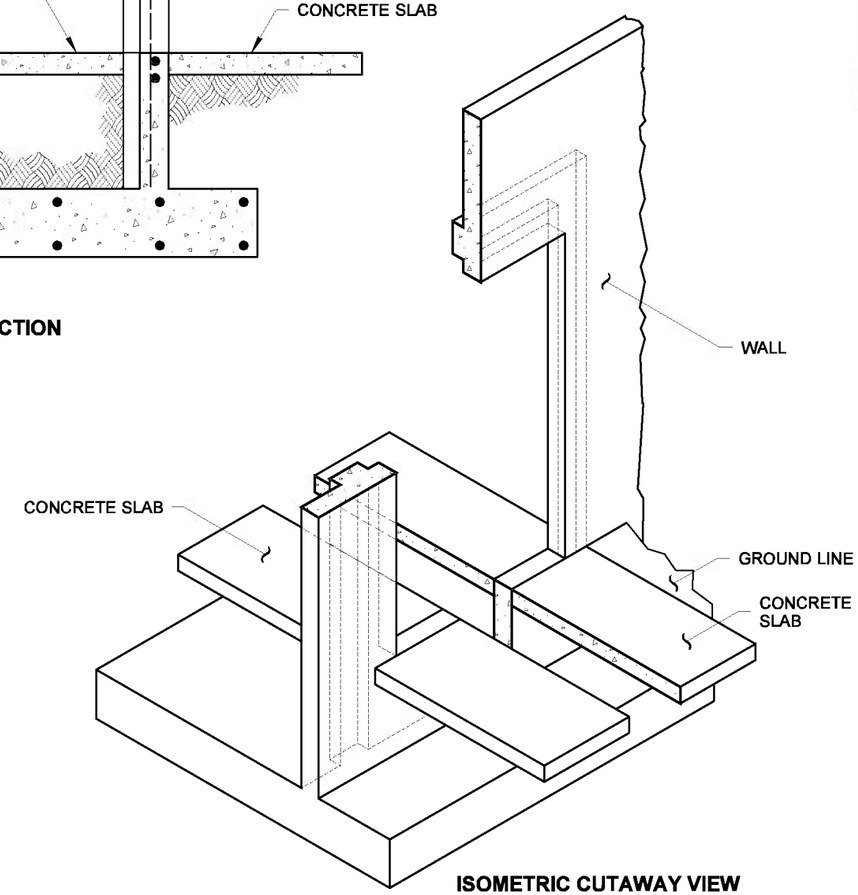

ISOMETRIC CUTAWAY VIEW

FOR CAST-IN-PLACE WALL ON OFFSET SPREAD FOOTING

BIJAN KHALEGHI
STATE OF WASHINGTON
27695
REGISTERED
PROFESSIONAL ENGINEER

EXPIRES AUGUST 23, 2006

NOTE: THIS PLAN IS NOT A LEGAL ENGINEERING DOCUMENT BUT AN ELECTRONIC DUPLICATE. THE ORIGINAL, SIGNED BY THE ENGINEER AND APPROVED FOR PUBLICATION, IS KEPT ON FILE AT THE WASHINGTON STATE DEPARTMENT OF TRANSPORTATION. A COPY MAY BE OBTAINED UPON REQUEST.

NOISE BARRIER WALL ACCESS DOOR TYPE 1

STANDARD PLAN D-2.80-00

SHEET 1 OF 1 SHEET

APPROVED FOR PUBLICATION

Harold J. Peterfeso — STATE DESIGN ENGINEER
11-10-05 — DATE

Washington State Department of Transportation

EFFECTIVE: AUGUST 6, 2012 TO August 4, 2013
EFFECTIVE: AUGUST 6, 2012 TO August 4, 2013
EFFECTIVE: AUGUST 6, 2012 TO August 4, 2013
EFFECTIVE: AUGUST 6, 2012 TO August 4, 2013

EFFECTIVE: AUGUST 6, 2012 TO August 4, 2013
EFFECTIVE: AUGUST 6, 2012 TO August 4, 2013

DRAWN BY: ADAM COCHRAN

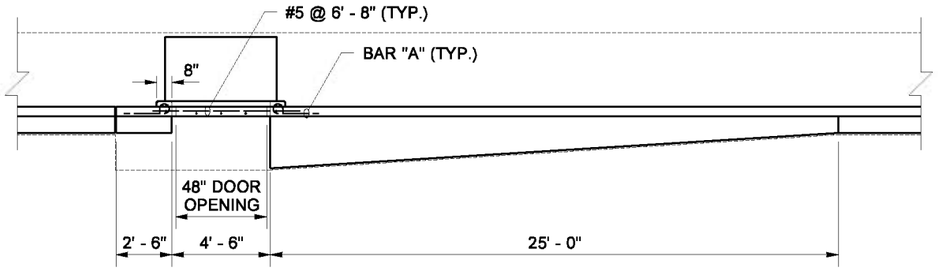

TOP VIEW

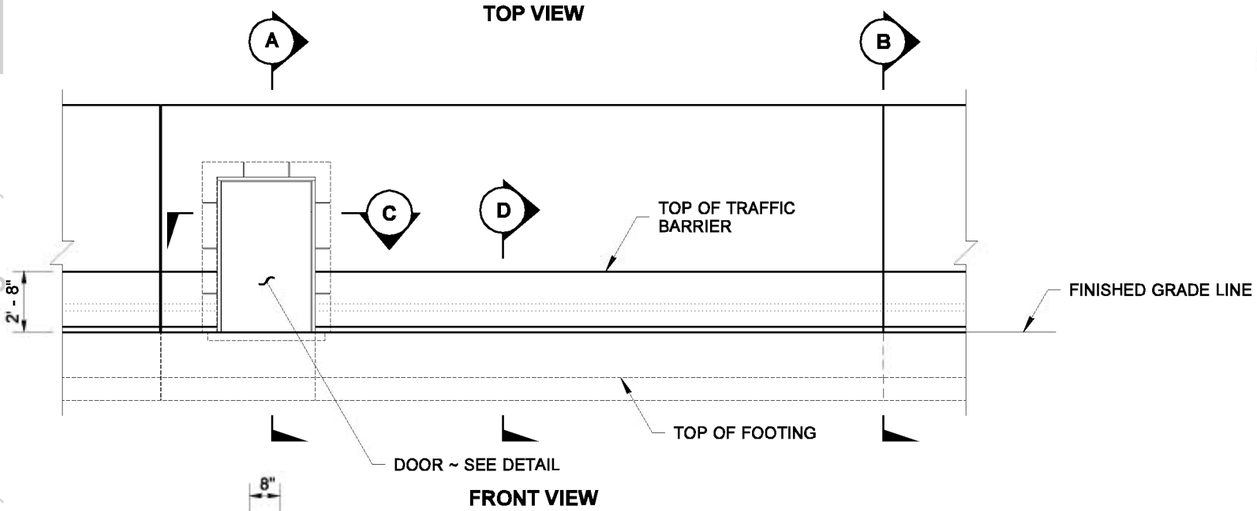

FRONT VIEW

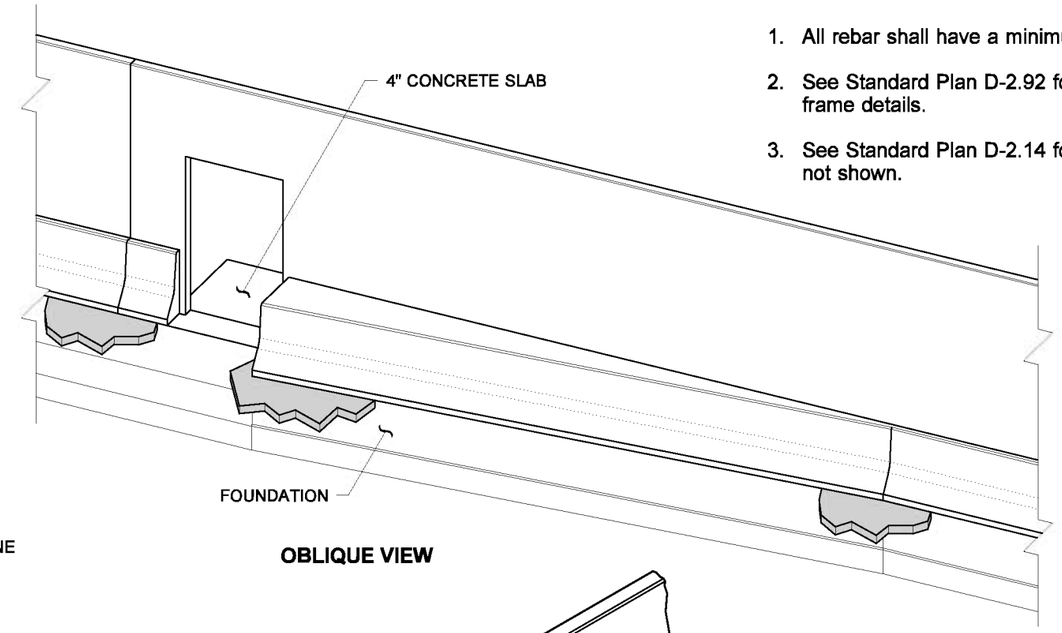

OBLIQUE VIEW

NOTES

1. All rebar shall have a minimum 1 1/2" cover.
2. See Standard Plan D-2.92 for door and frame details.
3. See Standard Plan D-2.14 for wall reinforcement not shown.

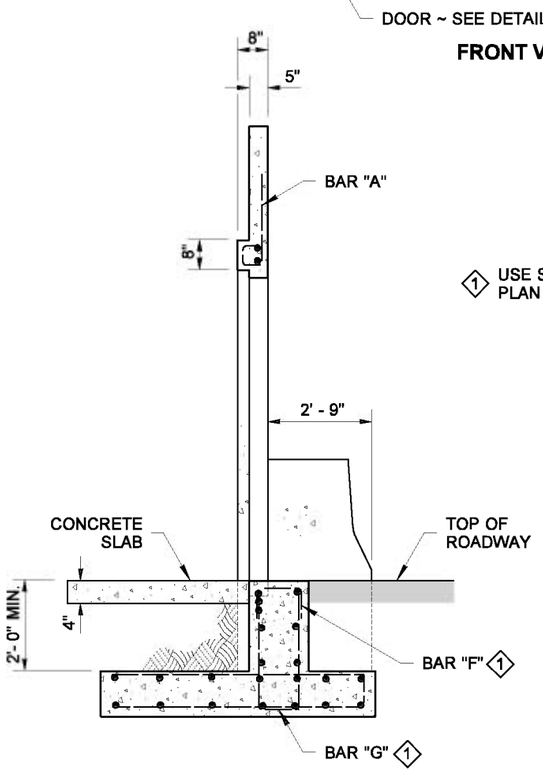

1 USE SPACING IN WALL PLAN PER WALL HEIGHT

SECTION A

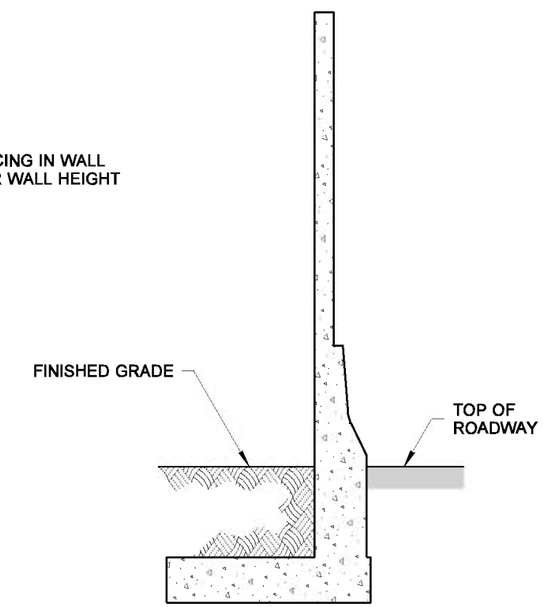

SECTION B

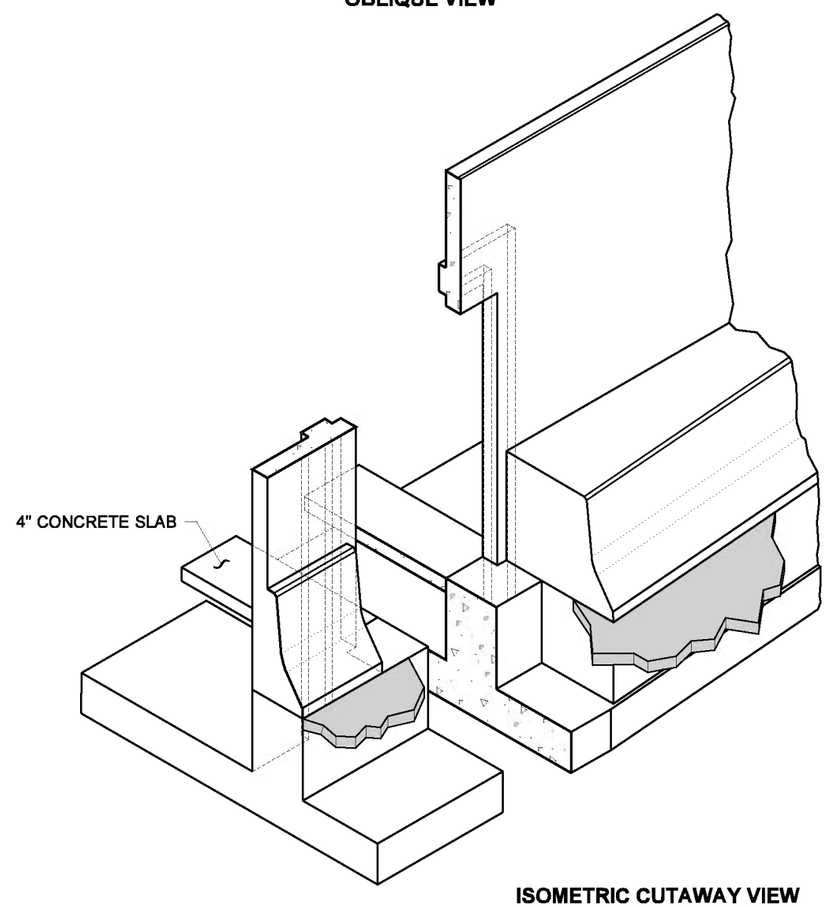

ISOMETRIC CUTAWAY VIEW

FOR CAST-IN-PLACE WALL W/ TRAFFIC BARRIER

EXPIRES AUGUST 23, 2006

NOTE: THIS PLAN IS NOT A LEGAL ENGINEERING DOCUMENT BUT AN ELECTRONIC DUPLICATE. THE ORIGINAL, SIGNED BY THE ENGINEER AND APPROVED FOR PUBLICATION, IS KEPT ON FILE AT THE WASHINGTON STATE DEPARTMENT OF TRANSPORTATION. A COPY MAY BE OBTAINED UPON REQUEST.

NOISE BARRIER WALL ACCESS DOOR TYPE 2

STANDARD PLAN D-2.82-00

SHEET 1 OF 2 SHEETS

APPROVED FOR PUBLICATION

Harold J. Peterfeso — STATE DESIGN ENGINEER

11-10-05 — DATE

Washington State Department of Transportation

EFFECTIVE: AUGUST 6, 2012 TO August 4, 2013
EFFECTIVE: AUGUST 6, 2012 TO August 4, 2013
EFFECTIVE: AUGUST 6, 2012 TO August 4, 2013
EFFECTIVE: AUGUST 6, 2012 TO August 4, 2013
EFFECTIVE: AUGUST 6, 2012 TO August 4, 2013

EFFECTIVE: AUGUST 6, 2012 TO August 4, 2013
EFFECTIVE: AUGUST 6, 2012 TO August 4, 2013

DRAWN BY: ADAM COCHRAN

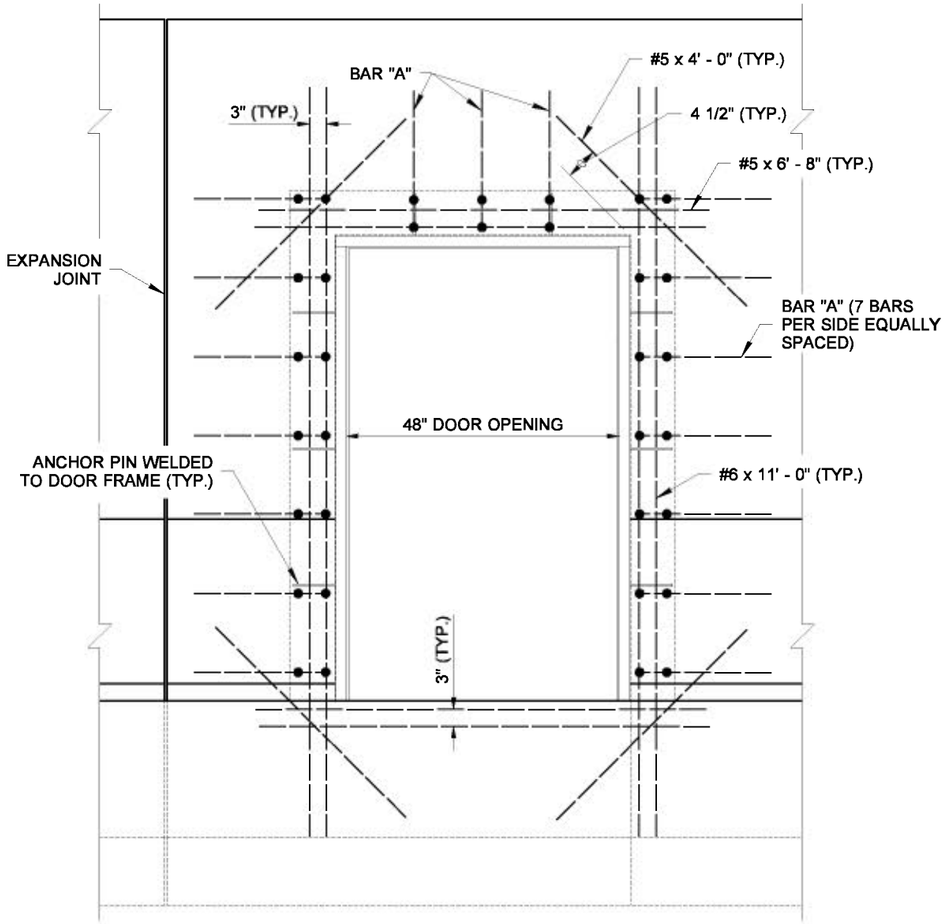

DOOR DETAIL
(SEE NOTE 2)

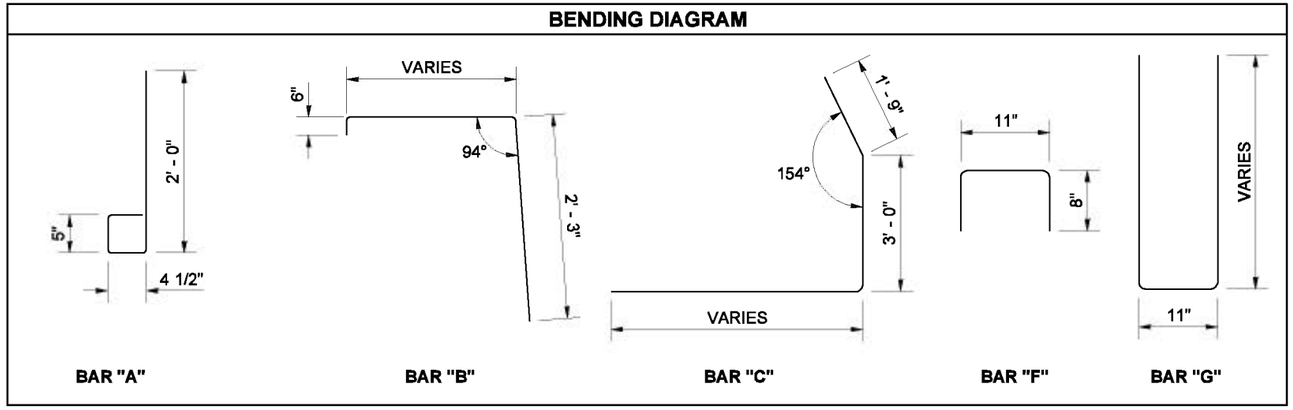

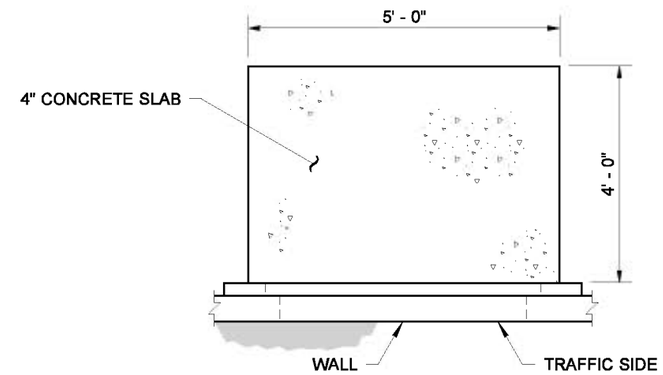

CONCRETE SLAB DETAIL

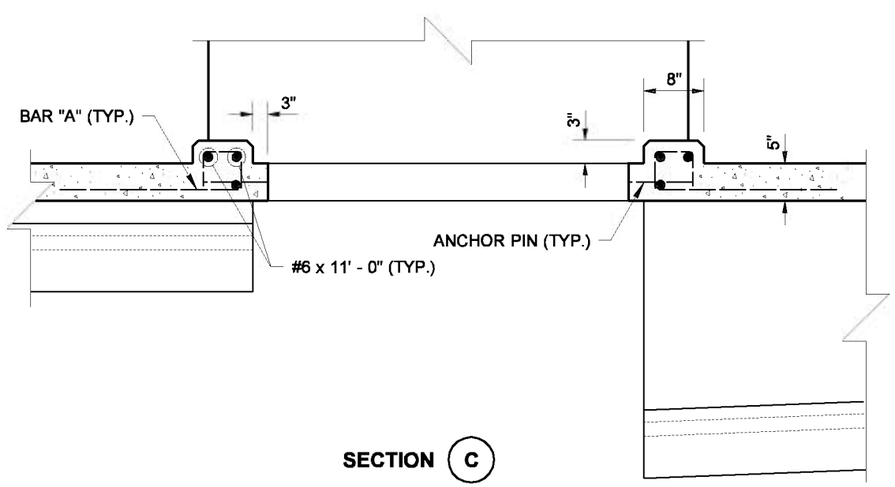

SECTION C

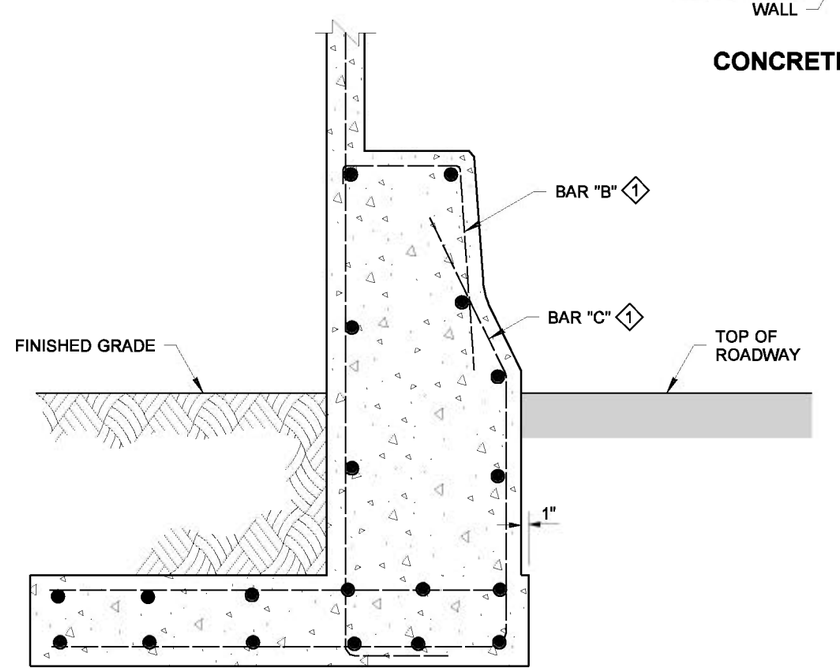

SECTION D

FOR CAST-IN-PLACE WALL W/ TRAFFIC BARRIER

BIJAN KHALEGHI
STATE OF WASHINGTON
27695
REGISTERED PROFESSIONAL ENGINEER
EXPIRES AUGUST 23, 2006

NOTE: THIS PLAN IS NOT A LEGAL ENGINEERING DOCUMENT BUT AN ELECTRONIC DUPLICATE. THE ORIGINAL, SIGNED BY THE ENGINEER AND APPROVED FOR PUBLICATION, IS KEPT ON FILE AT THE WASHINGTON STATE DEPARTMENT OF TRANSPORTATION. A COPY MAY BE OBTAINED UPON REQUEST.

NOISE BARRIER WALL ACCESS DOOR TYPE 2

STANDARD PLAN D-2.82-00

SHEET 2 OF 2 SHEETS

APPROVED FOR PUBLICATION

Harold J. Peterfeso — STATE DESIGN ENGINEER
11-10-05 — DATE

Washington State Department of Transportation

EFFECTIVE: AUGUST 6, 2012 TO August 4, 2013
EFFECTIVE: AUGUST 6, 2012 TO August 4, 2013
EFFECTIVE: AUGUST 6, 2012 TO August 4, 2013
EFFECTIVE: AUGUST 6, 2012 TO August 4, 2013

EFFECTIVE: AUGUST 6, 2012 TO August 4, 2013
EFFECTIVE: AUGUST 6, 2012 TO August 4, 2013

DRAWN BY: ADAM COCHRAN

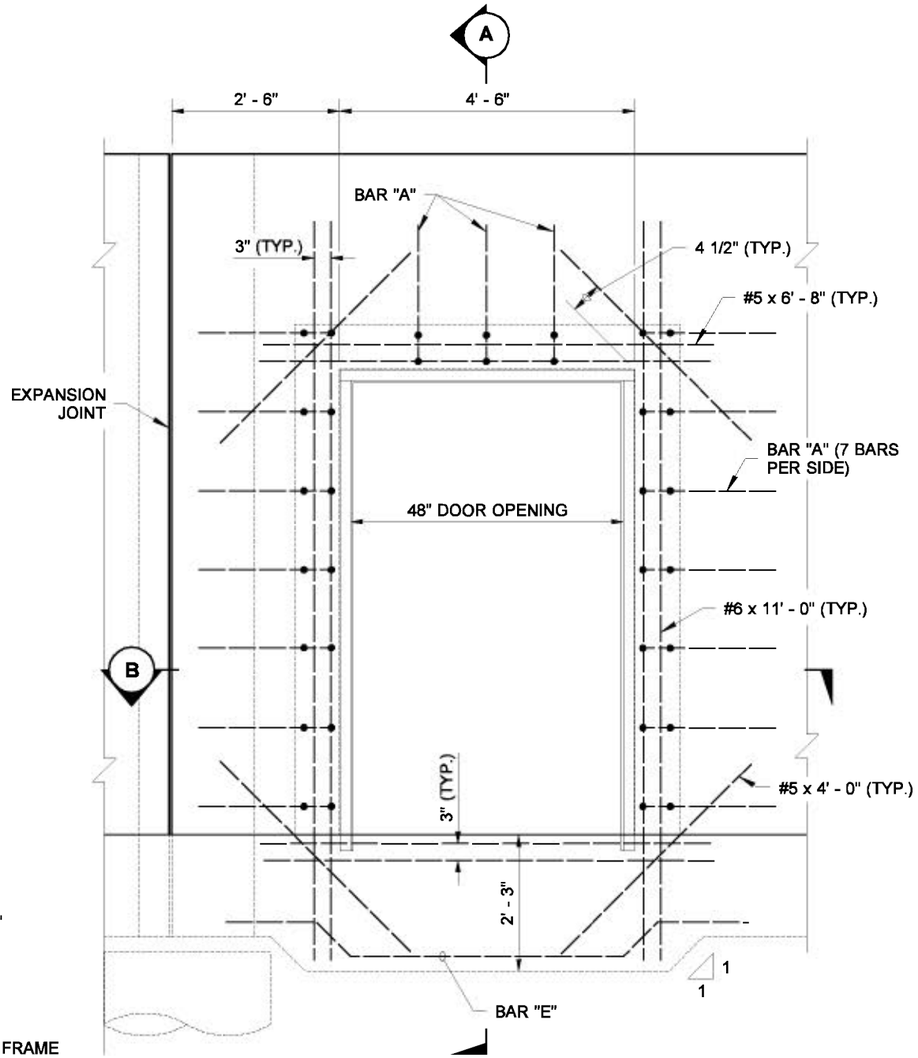

CONCRETE SLAB NOT SHOWN

DOOR DETAIL
(SEE NOTE 2)

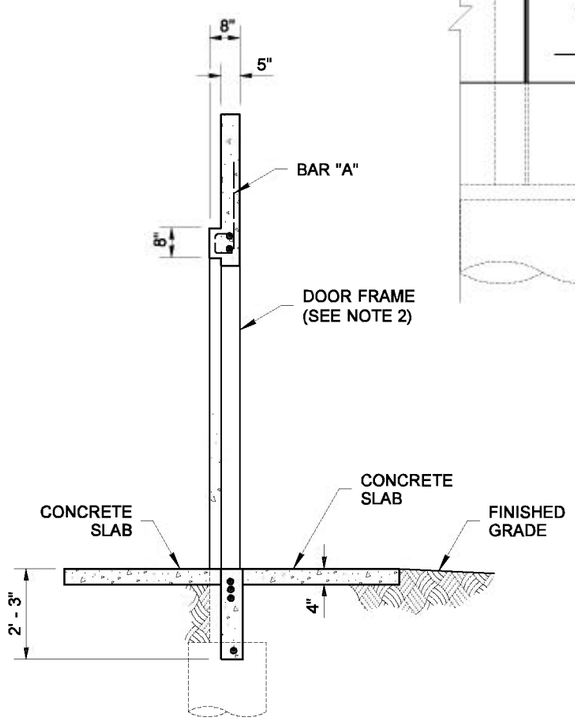

SECTION A

BENDING DIAGRAM

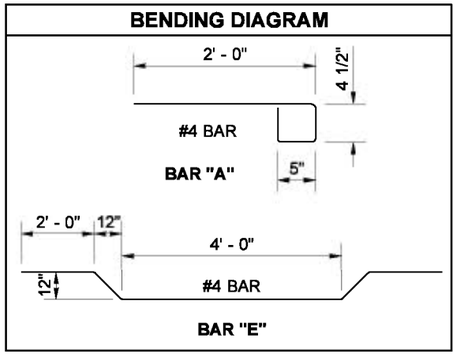

NOTES

1. All rebar shall have a minimum 1 1/2" cover.
2. See Standard Plan D-2.92 for door and frame details.
3. See Standard Plan D-2.36 for wall reinforcement not shown.

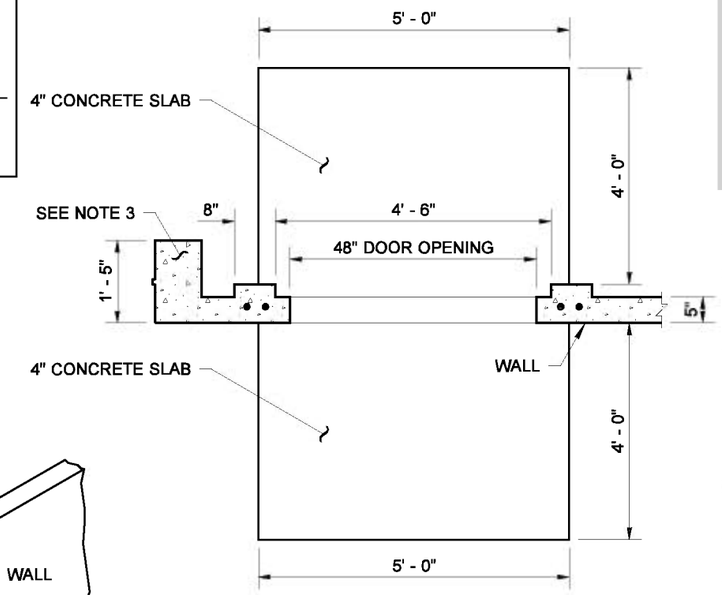

SECTION B

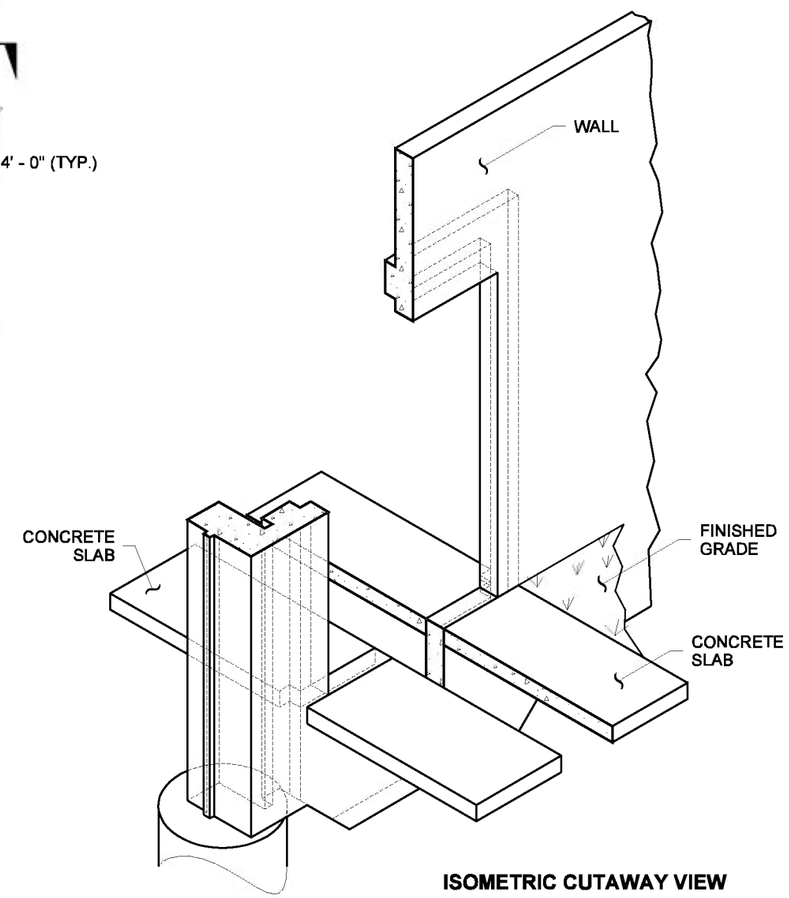

ISOMETRIC CUTAWAY VIEW

FOR PRECAST WALL ON SHAFT FOUNDATION

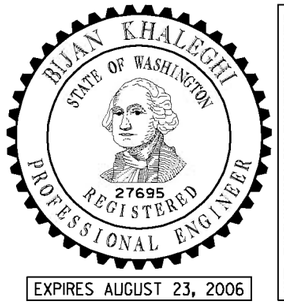

EXPIRES AUGUST 23, 2006

NOTE: THIS PLAN IS NOT A LEGAL ENGINEERING DOCUMENT BUT AN ELECTRONIC DUPLICATE. THE ORIGINAL, SIGNED BY THE ENGINEER AND APPROVED FOR PUBLICATION, IS KEPT ON FILE AT THE WASHINGTON STATE DEPARTMENT OF TRANSPORTATION. A COPY MAY BE OBTAINED UPON REQUEST.

NOISE BARRIER WALL ACCESS DOOR TYPE 3

STANDARD PLAN D-2.84-00

SHEET 1 OF 1 SHEET

APPROVED FOR PUBLICATION

Harold J. Peterfeso — STATE DESIGN ENGINEER
11-10-05 — DATE

Washington State Department of Transportation

EFFECTIVE: AUGUST 6, 2012 TO August 4, 2013
EFFECTIVE: AUGUST 6, 2012 TO August 4, 2013
EFFECTIVE: AUGUST 6, 2012 TO August 4, 2013
EFFECTIVE: AUGUST 6, 2012 TO August 4, 2013

EFFECTIVE: AUGUST 6, 2012 TO August 4, 2013
EFFECTIVE: AUGUST 6, 2012 TO August 4, 2013

DRAWN BY: ADAM COCHRAN

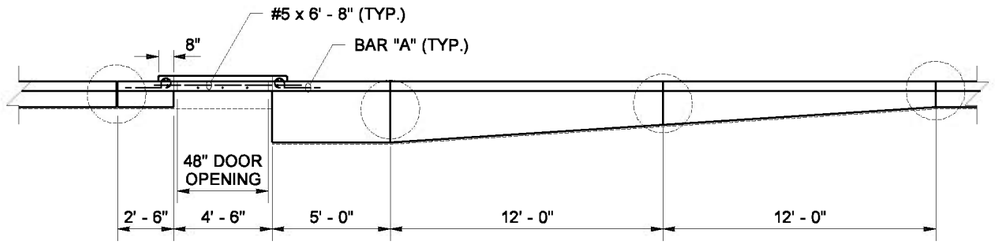

TOP VIEW

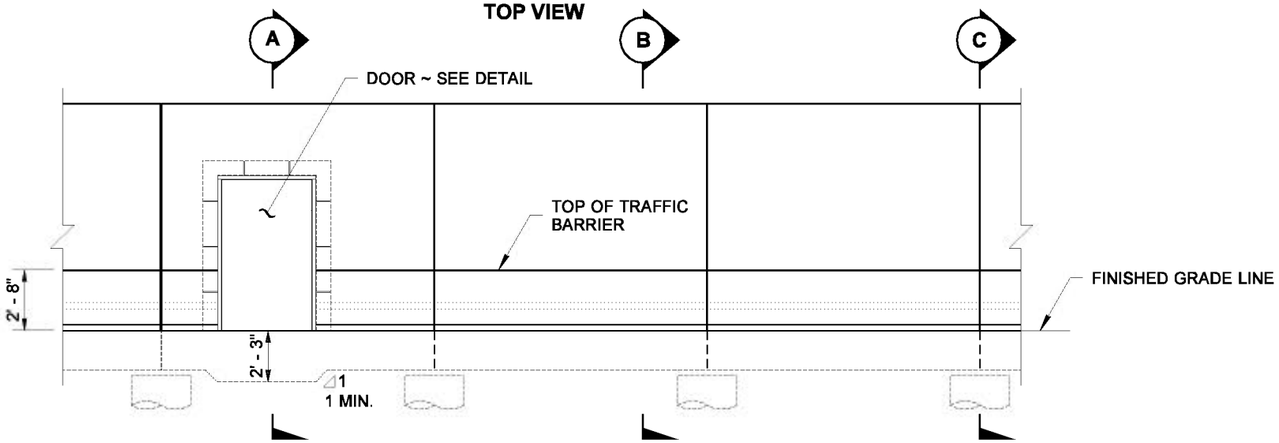

FRONT VIEW

NOTES

1. All rebar shall have a minimum 1 1/2" cover.
2. See Standard Plan D-2.92 for door and frame details.
3. See Standard Plan D-2.44 for wall reinforcement not shown.

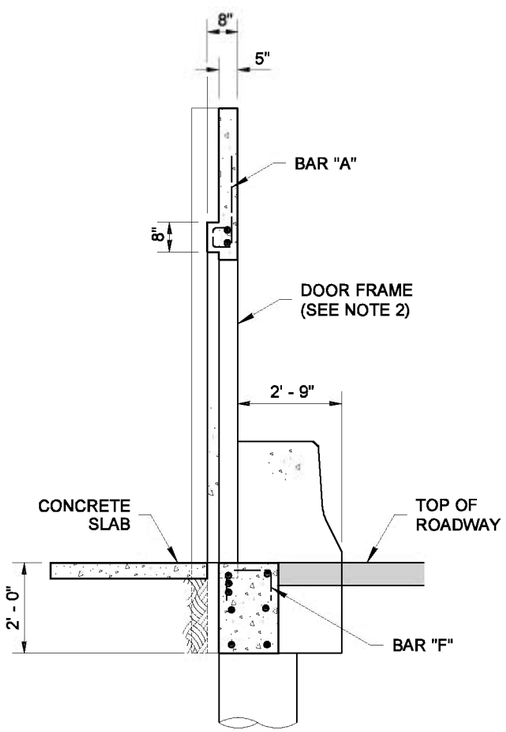

SECTION A

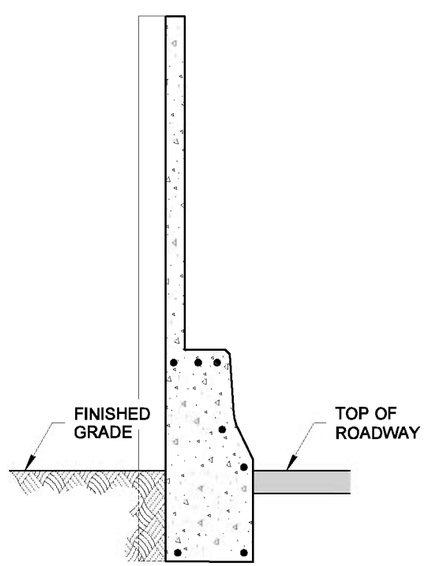

SECTION B

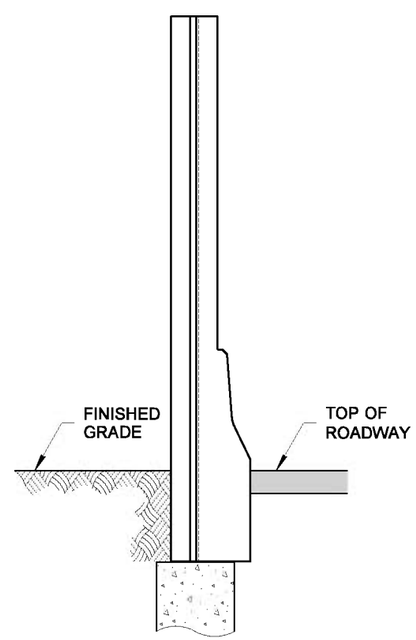

SECTION C

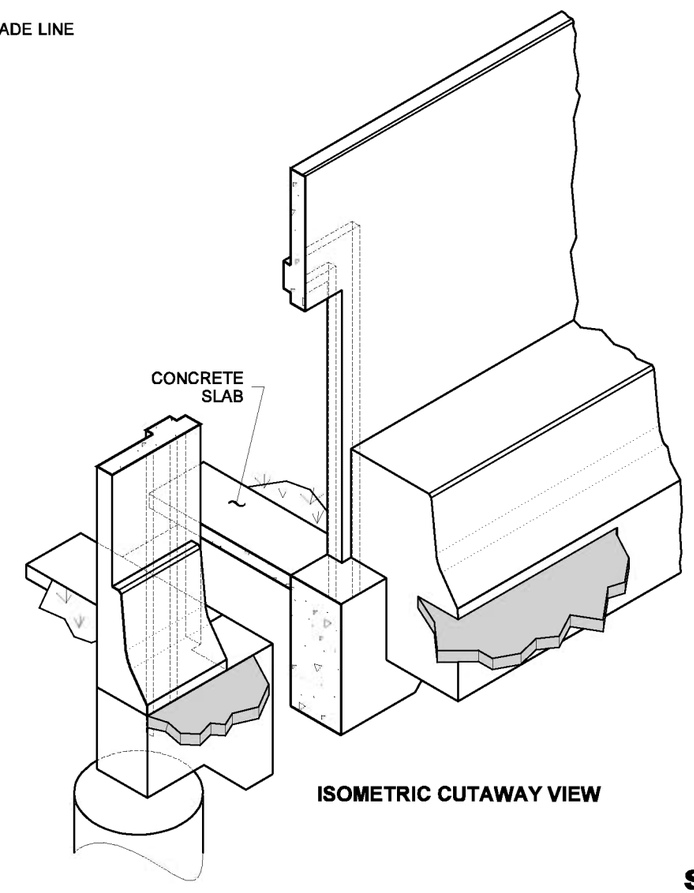

ISOMETRIC CUTAWAY VIEW

FOR PRECAST WALL W/ TRAFFIC BARRIER ON SHAFT FOUNDATION

EXPIRES AUGUST 23, 2006

NOTE: THIS PLAN IS NOT A LEGAL ENGINEERING DOCUMENT BUT AN ELECTRONIC DUPLICATE. THE ORIGINAL, SIGNED BY THE ENGINEER AND APPROVED FOR PUBLICATION, IS KEPT ON FILE AT THE WASHINGTON STATE DEPARTMENT OF TRANSPORTATION. A COPY MAY BE OBTAINED UPON REQUEST.

NOISE BARRIER WALL ACCESS DOOR TYPE 4

STANDARD PLAN D-2.86-00

SHEET 1 OF 2 SHEETS

APPROVED FOR PUBLICATION

Harold J. Peterfeso — STATE DESIGN ENGINEER

11-10-05 — DATE

Washington State Department of Transportation

EFFECTIVE: AUGUST 6, 2012 TO August 4, 2013
EFFECTIVE: AUGUST 6, 2012 TO August 4, 2013
EFFECTIVE: AUGUST 6, 2012 TO August 4, 2013
EFFECTIVE: AUGUST 6, 2012 TO August 4, 2013

EFFECTIVE: AUGUST 6, 2012 TO August 4, 2013
EFFECTIVE: AUGUST 6, 2012 TO August 4, 2013

DRAWN BY: ADAM COCHRAN

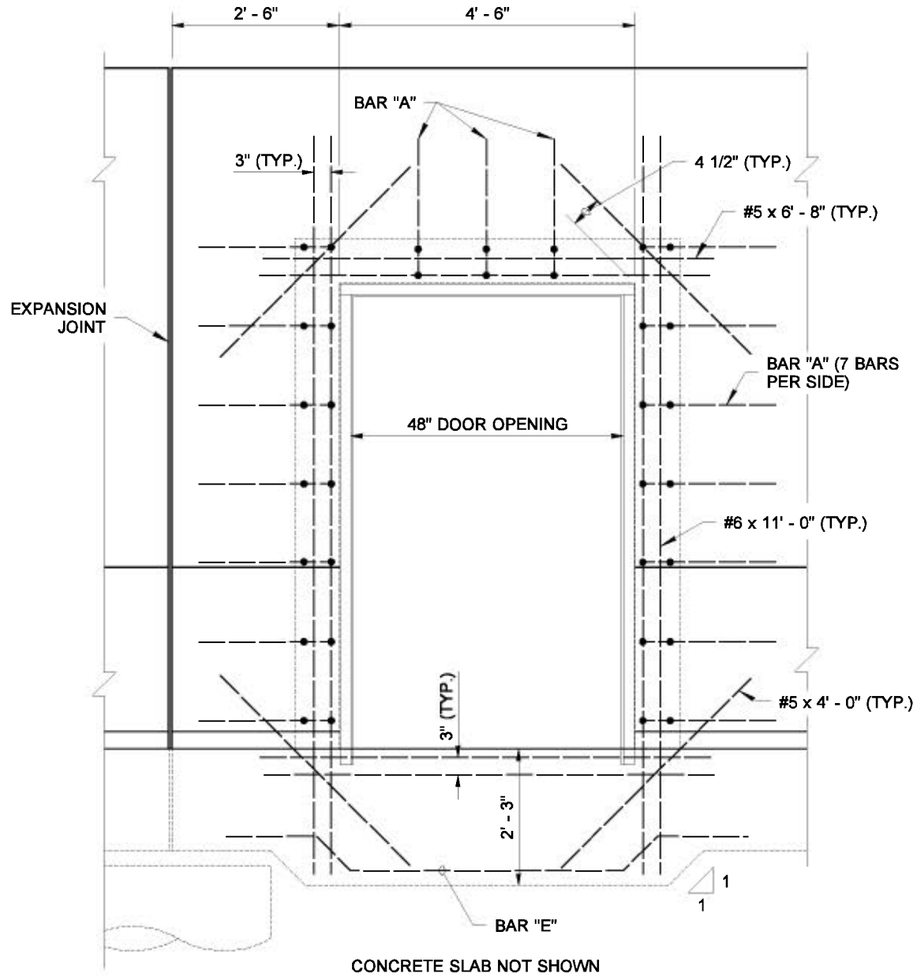

CONCRETE SLAB NOT SHOWN

DOOR DETAIL

(SEE NOTE 2)

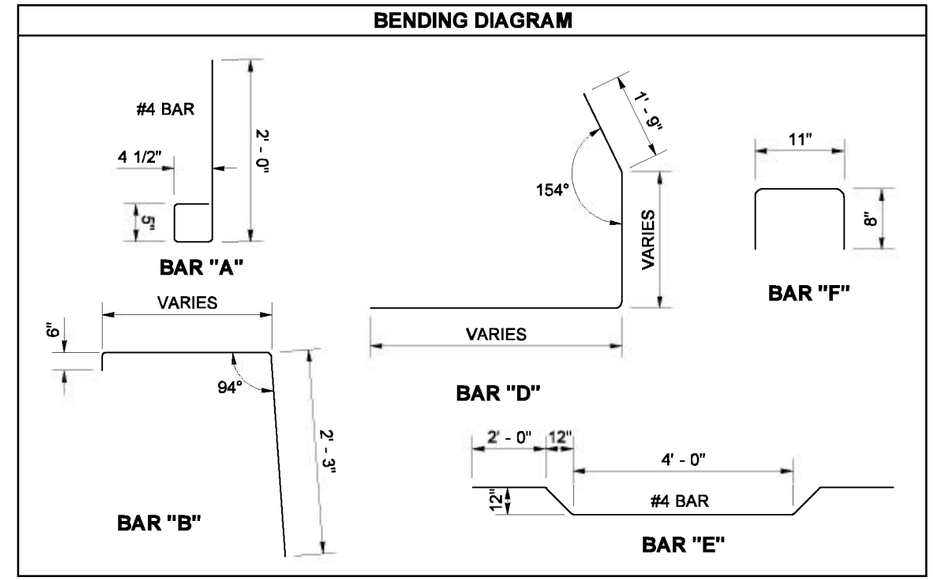

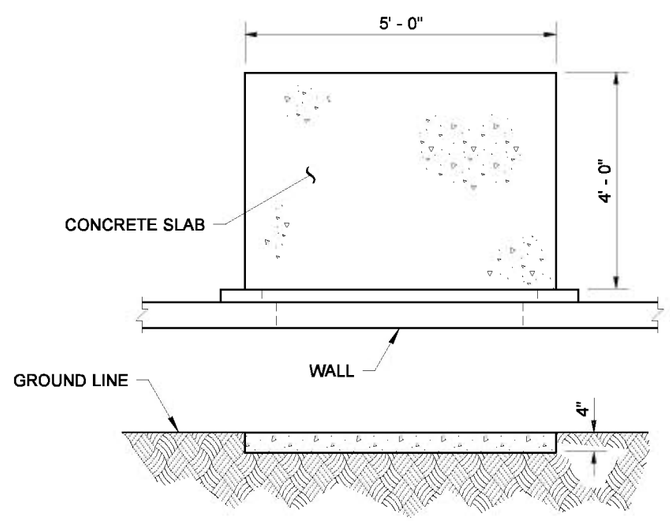

CONCRETE SLAB DETAIL

FOR PRECAST WALL W/ TRAFFIC BARRIER ON SHAFT FOUNDATION

BIJAN KHALEGHI
STATE OF WASHINGTON
27695
REGISTERED PROFESSIONAL ENGINEER

EXPIRES AUGUST 23, 2006

NOTE: THIS PLAN IS NOT A LEGAL ENGINEERING DOCUMENT BUT AN ELECTRONIC DUPLICATE. THE ORIGINAL, SIGNED BY THE ENGINEER AND APPROVED FOR PUBLICATION, IS KEPT ON FILE AT THE WASHINGTON STATE DEPARTMENT OF TRANSPORTATION. A COPY MAY BE OBTAINED UPON REQUEST.

NOISE BARRIER WALL ACCESS DOOR TYPE 4

STANDARD PLAN D-2.86-00

SHEET 2 OF 2 SHEETS

APPROVED FOR PUBLICATION

Harold J. Peterfeso — STATE DESIGN ENGINEER

11-10-05 — DATE

Washington State Department of Transportation

EFFECTIVE: AUGUST 6, 2012 TO August 4, 2013
EFFECTIVE: AUGUST 6, 2012 TO August 4, 2013
EFFECTIVE: AUGUST 6, 2012 TO August 4, 2013
EFFECTIVE: AUGUST 6, 2012 TO August 4, 2013

EFFECTIVE: AUGUST 6, 2012 TO August 4, 2013
EFFECTIVE: AUGUST 6, 2012 TO August 4, 2013

DRAWN BY: ADAM COCHRAN

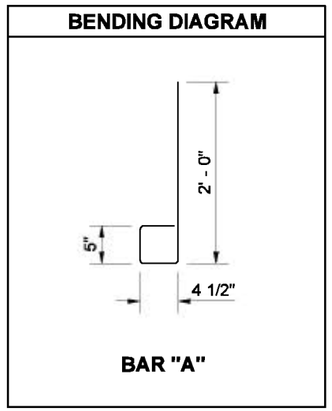

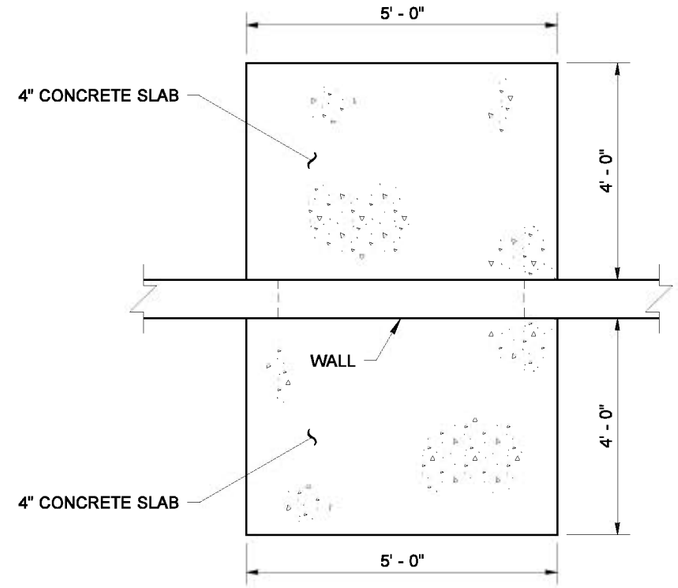

CONCRETE SLAB DETAIL

NOTES

1. All rebar shall have a minimum 1 1/2" cover.
2. See Standard Plan D-2.92 for door and frame details.
3. See Standard Plan D-2.68 for wall reinforcement not shown.

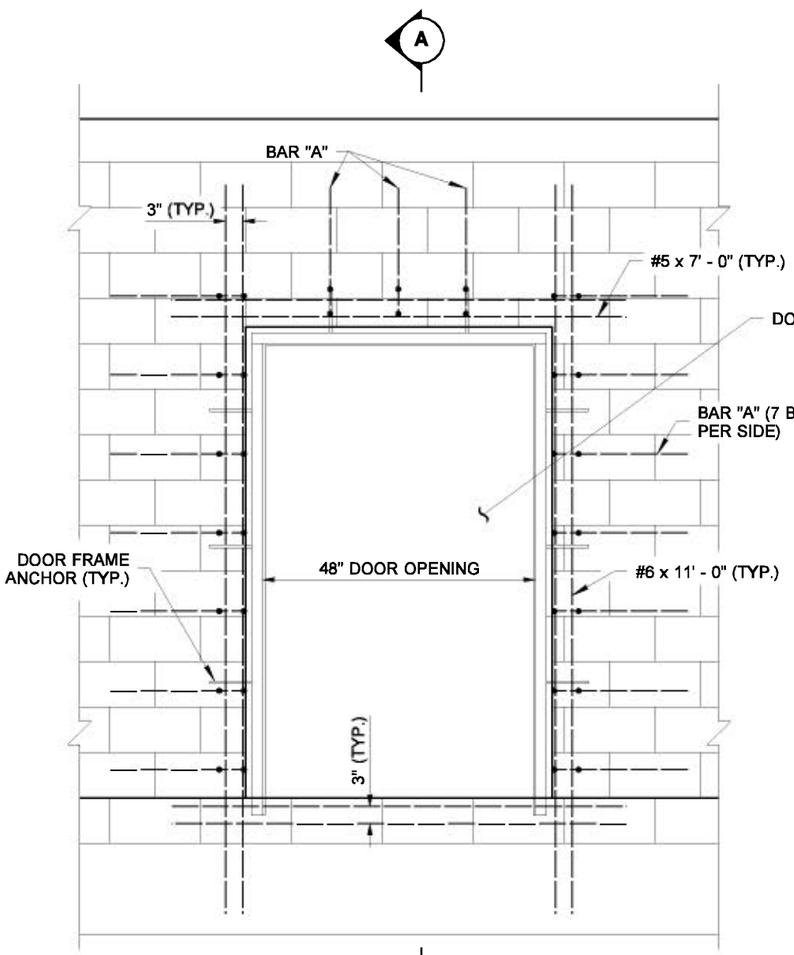

FRONT VIEW

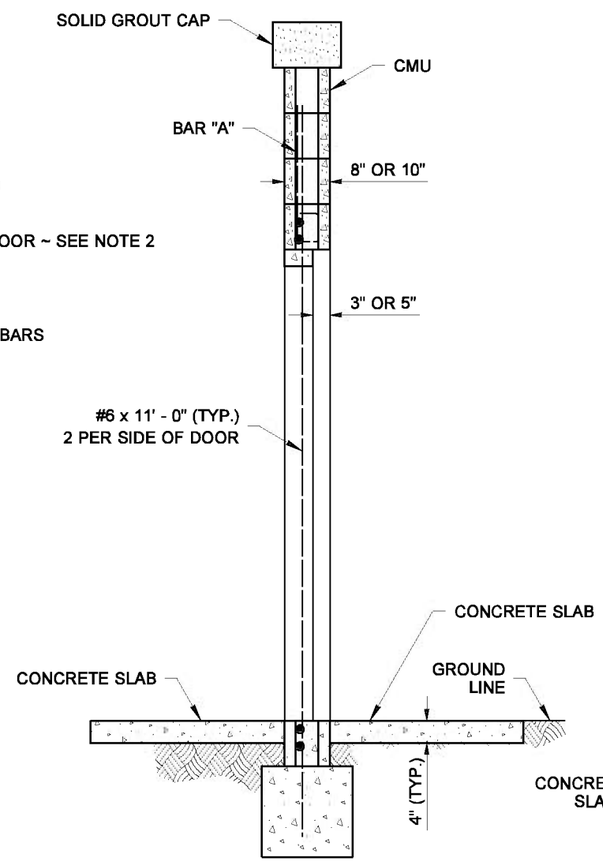

SECTION A

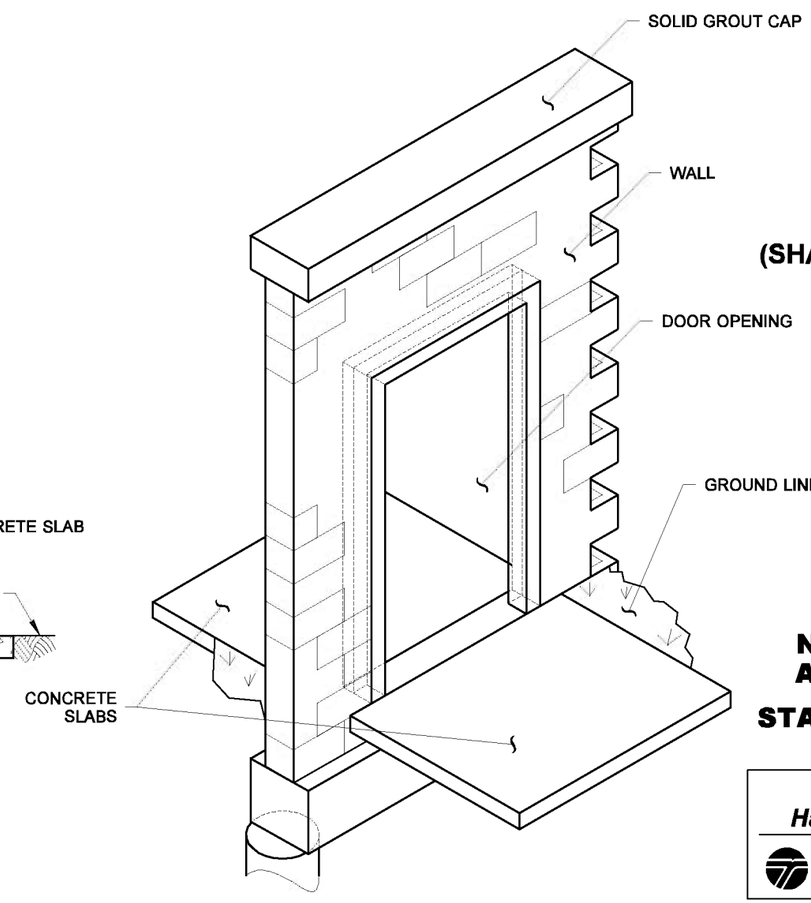

FOR MASONRY WALL (SHAFT FOUNDATION SHOWN)

BIJAN KHALEGHI
STATE OF WASHINGTON
27695
REGISTERED PROFESSIONAL ENGINEER
EXPIRES AUGUST 23, 2006

NOTE: THIS PLAN IS NOT A LEGAL ENGINEERING DOCUMENT BUT AN ELECTRONIC DUPLICATE. THE ORIGINAL, SIGNED BY THE ENGINEER AND APPROVED FOR PUBLICATION, IS KEPT ON FILE AT THE WASHINGTON STATE DEPARTMENT OF TRANSPORTATION. A COPY MAY BE OBTAINED UPON REQUEST.

NOISE BARRIER WALL ACCESS DOOR TYPE 5

STANDARD PLAN D-2.88-00

SHEET 1 OF 1 SHEET

APPROVED FOR PUBLICATION

Harold J. Peterfeso — STATE DESIGN ENGINEER
11-10-05 — DATE

Washington State Department of Transportation

EFFECTIVE: AUGUST 6, 2012 TO August 4, 2013
EFFECTIVE: AUGUST 6, 2012 TO August 4, 2013
EFFECTIVE: AUGUST 6, 2012 TO August 4, 2013
EFFECTIVE: AUGUST 6, 2012 TO August 4, 2013

EFFECTIVE: AUGUST 6, 2012 TO August 4, 2013

DRAWN BY: ADAM COCHRAN

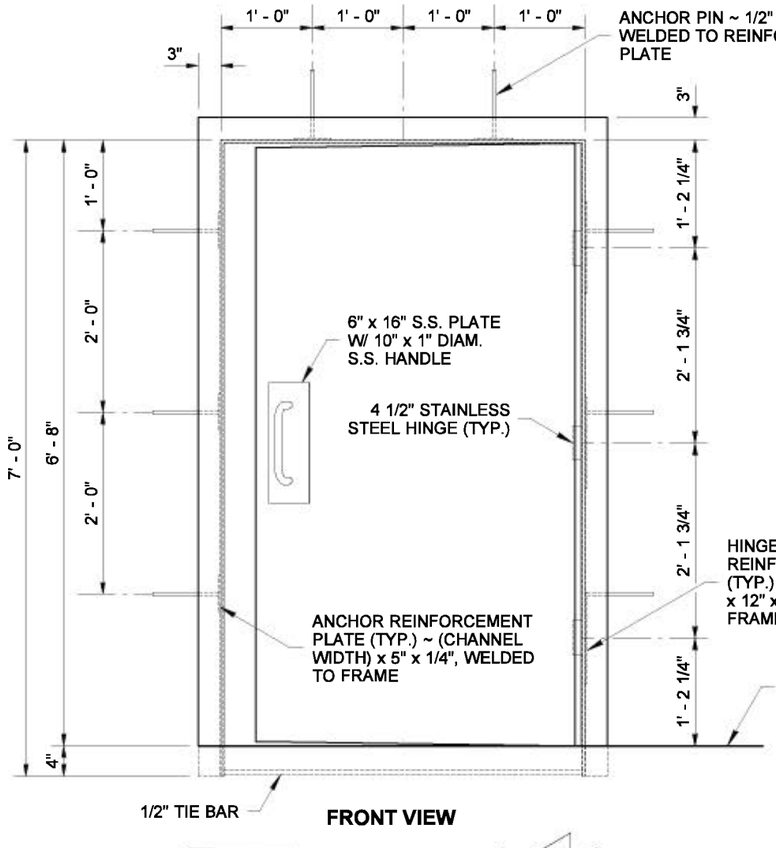

FRONT VIEW

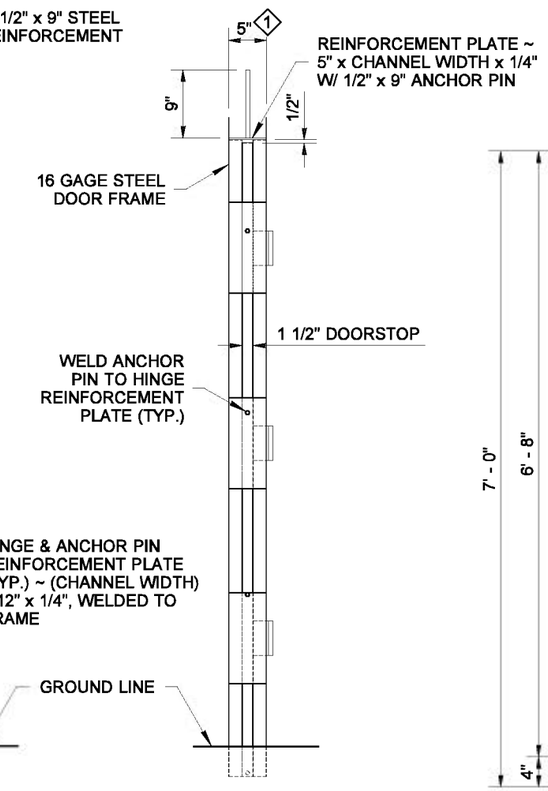

SIDE VIEW

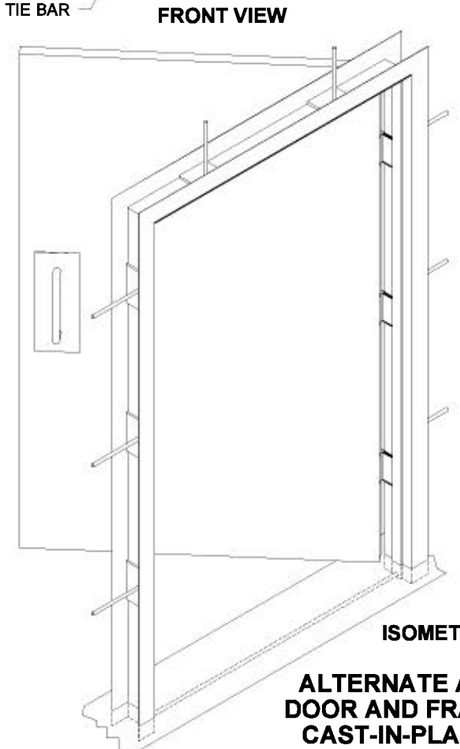

ISOMETRIC VIEW

ALTERNATE ACCESS DOOR AND FRAME FOR CAST-IN-PLACE AND PRECAST WALLS

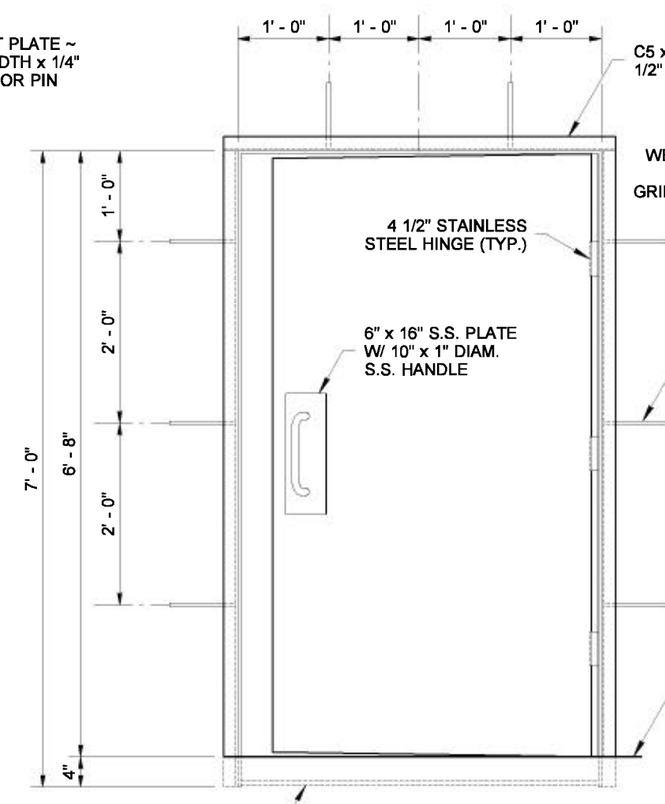

FRONT VIEW

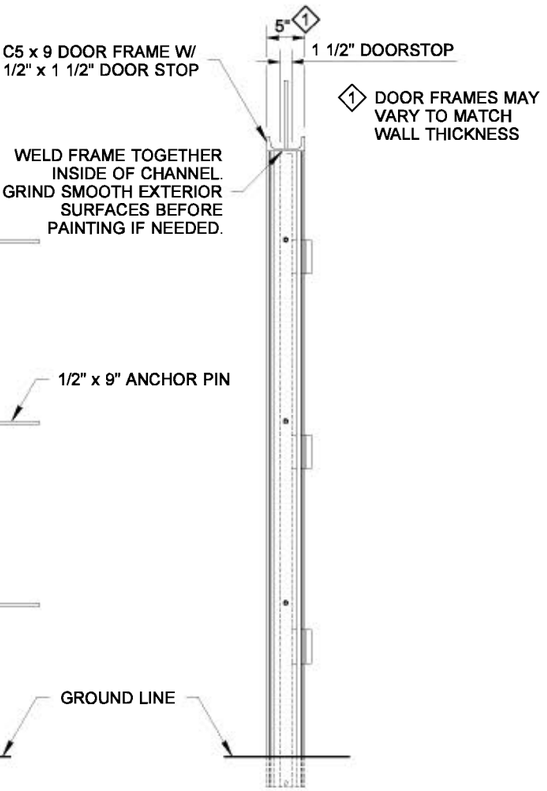

SIDE VIEW

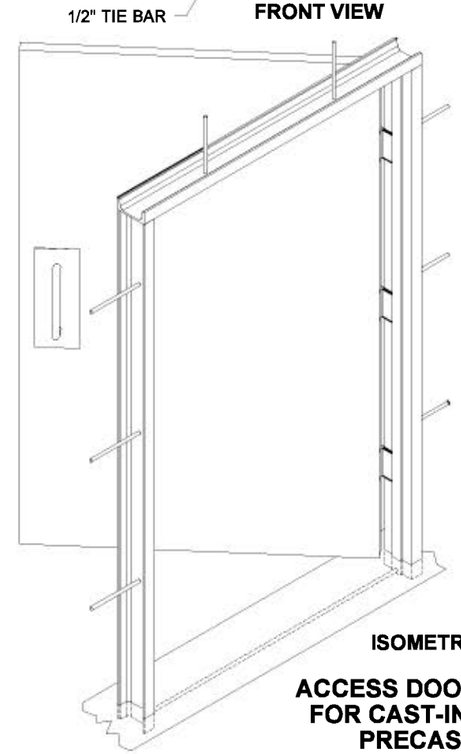

ISOMETRIC VIEW

ACCESS DOOR AND FRAME FOR CAST-IN-PLACE AND PRECAST WALLS

NOTE

All exposed metal surfaces shall be painted with paint conforming to the requirements in the Standard Specifications, Section 9.

EXPIRES AUGUST 23, 2006

NOTE: THIS PLAN IS NOT A LEGAL ENGINEERING DOCUMENT BUT AN ELECTRONIC DUPLICATE. THE ORIGINAL, SIGNED BY THE ENGINEER AND APPROVED FOR PUBLICATION, IS KEPT ON FILE AT THE WASHINGTON STATE DEPARTMENT OF TRANSPORTATION. A COPY MAY BE OBTAINED UPON REQUEST.

NOISE BARRIER WALL ACCESS DOOR & FRAME

STANDARD PLAN D-2.92-00

SHEET 1 OF 2 SHEETS

APPROVED FOR PUBLICATION

Harold J. Peterfeso — STATE DESIGN ENGINEER

11-10-05 — DATE

Washington State Department of Transportation

EFFECTIVE: AUGUST 6, 2012 TO August 4, 2013

EFFECTIVE: AUGUST 6, 2012 TO August 4, 2013

DRAWN BY: ADAM COCHRAN

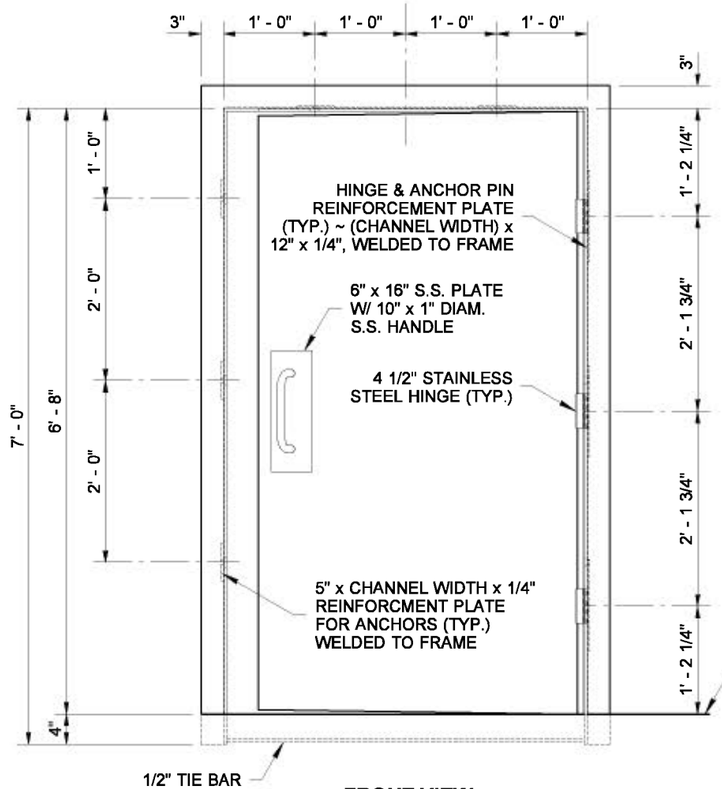

FRONT VIEW

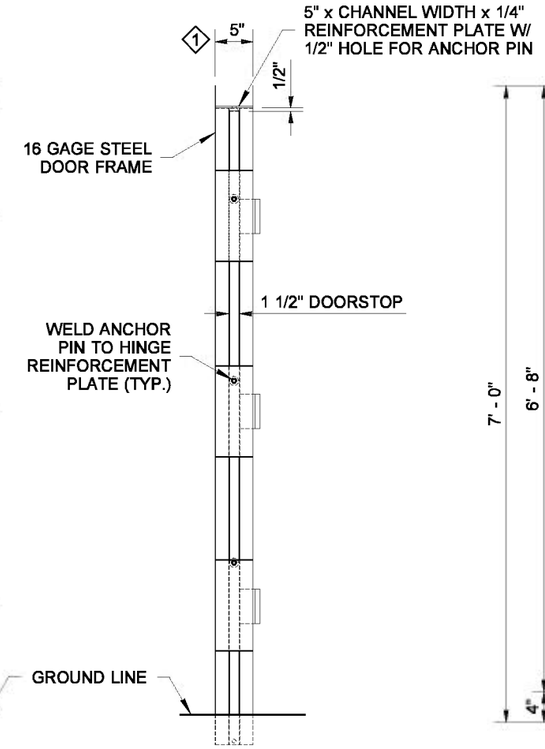

SIDE VIEW

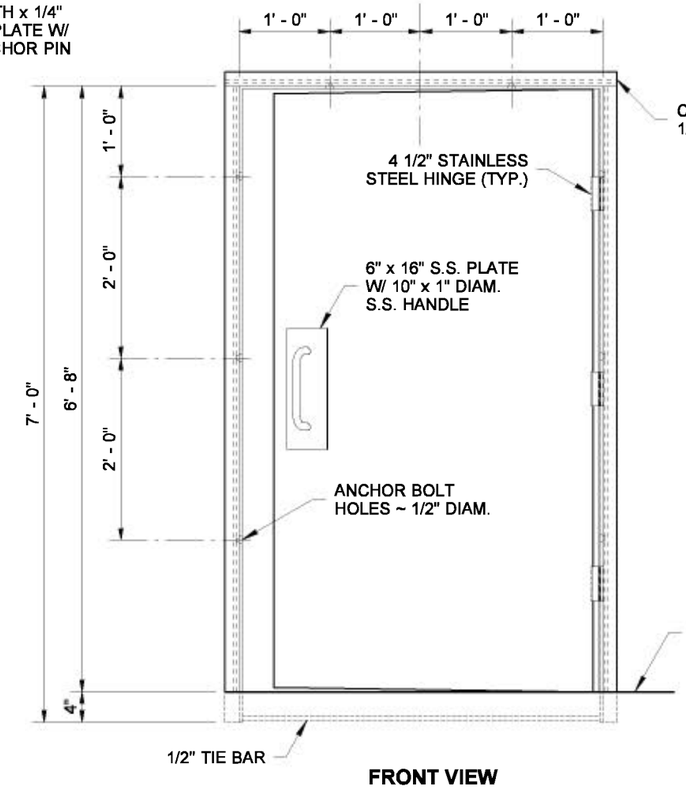

FRONT VIEW

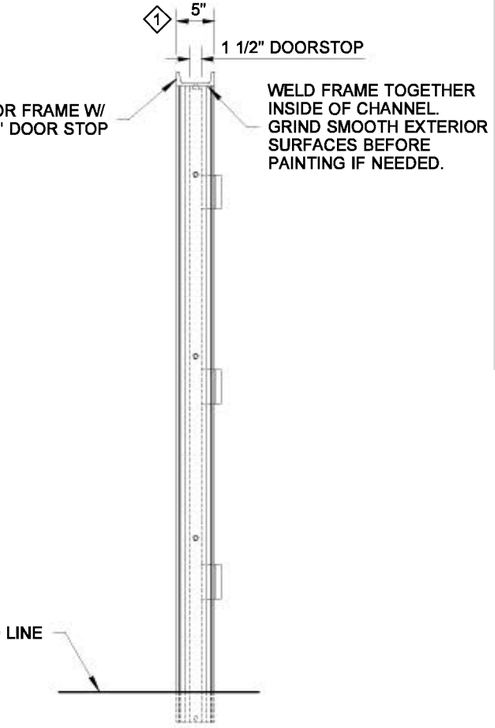

SIDE VIEW

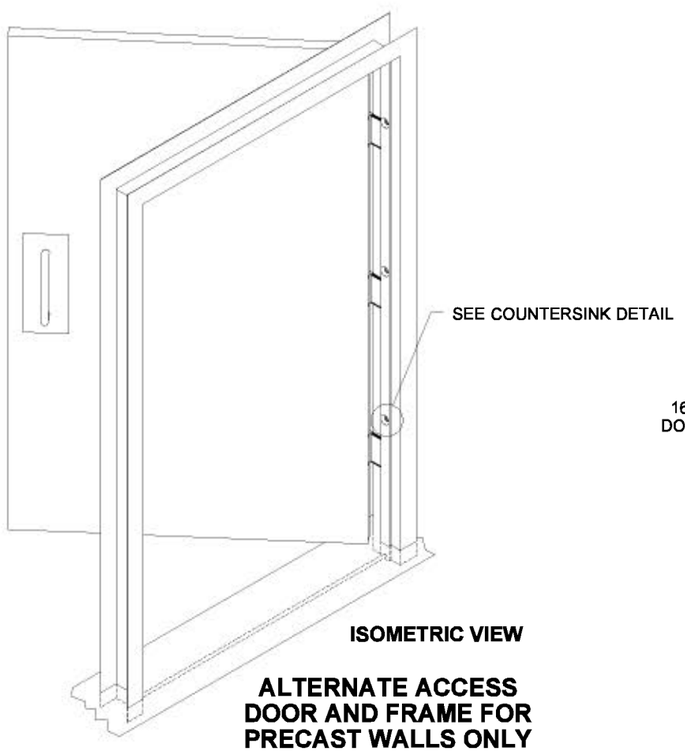

ISOMETRIC VIEW

ALTERNATE ACCESS DOOR AND FRAME FOR PRECAST WALLS ONLY

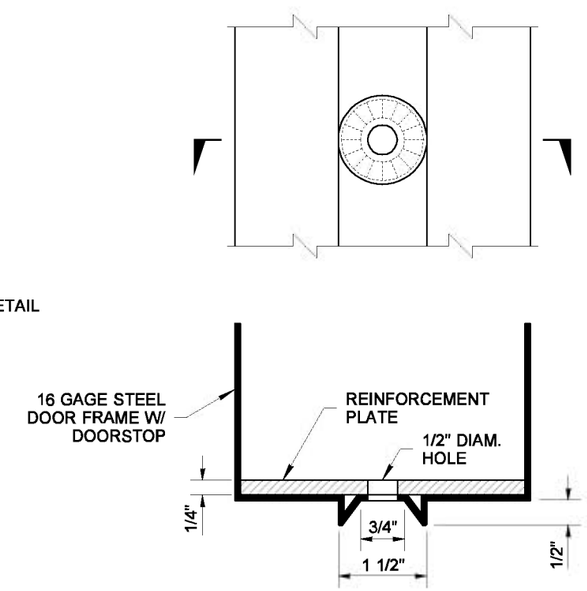

COUNTERSINK DETAIL

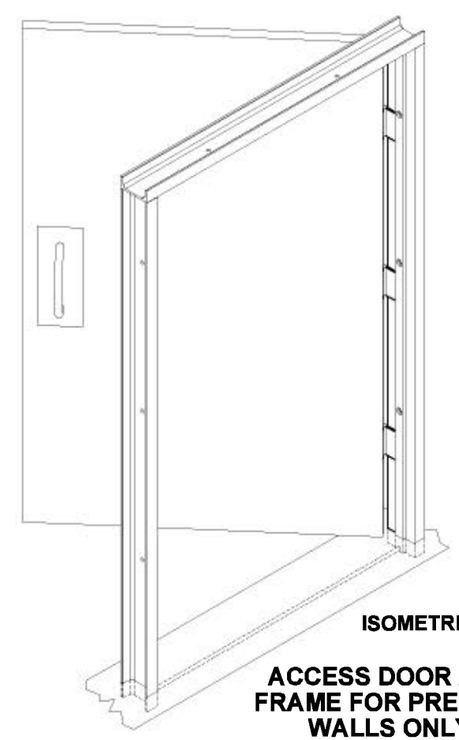

ISOMETRIC VIEW

ACCESS DOOR AND FRAME FOR PRECAST WALLS ONLY

EXPIRES AUGUST 23, 2006

NOTE: THIS PLAN IS NOT A LEGAL ENGINEERING DOCUMENT BUT AN ELECTRONIC DUPLICATE. THE ORIGINAL, SIGNED BY THE ENGINEER AND APPROVED FOR PUBLICATION, IS KEPT ON FILE AT THE WASHINGTON STATE DEPARTMENT OF TRANSPORTATION. A COPY MAY BE OBTAINED UPON REQUEST.

NOISE BARRIER WALL ACCESS DOOR & FRAME

STANDARD PLAN D-2.92-00

SHEET 2 OF 2 SHEETS

APPROVED FOR PUBLICATION

Harold J. Peterfeso — STATE DESIGN ENGINEER

11-10-05 — DATE

Washington State Department of Transportation

EFFECTIVE: AUGUST 6, 2012 TO August 4, 2013

EFFECTIVE: AUGUST 6, 2012 TO August 4, 2013
EFFECTIVE: AUGUST 6, 2012 TO August 4, 2013

DRAWN BY: BILL BEKENS

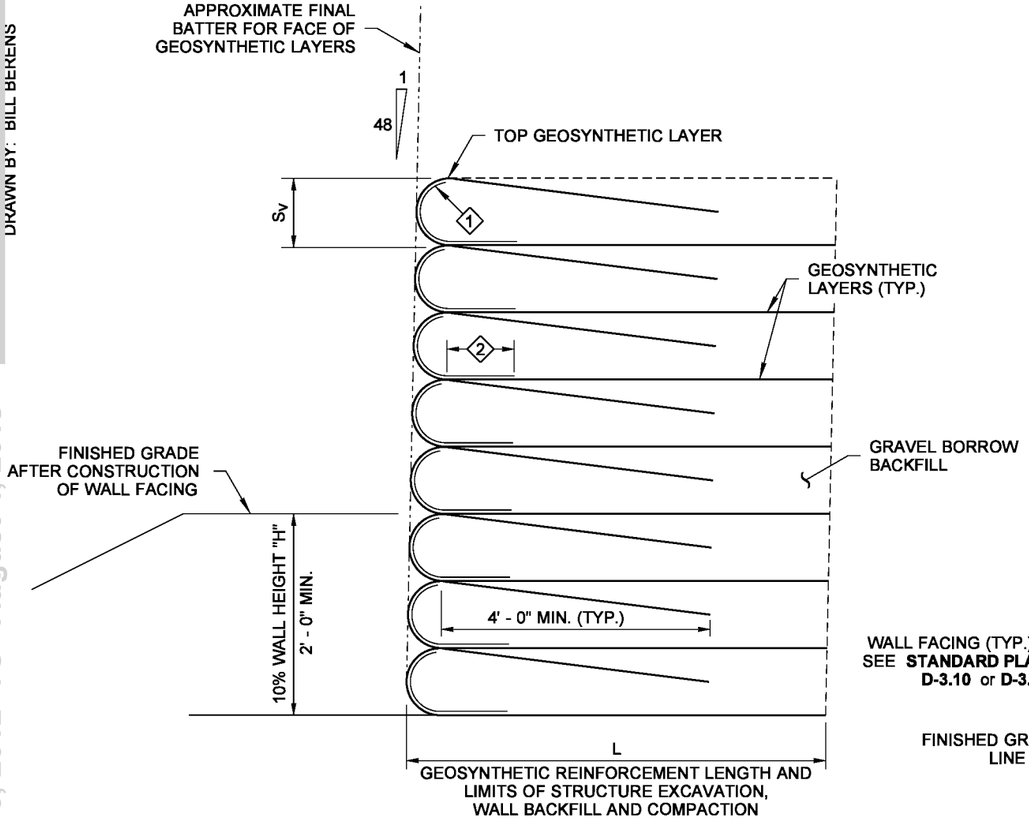

SECTION DETAIL

KEY NOTES

1. GEOTEXTILE FOR UNDERGROUND DRAINAGE CLASS A, MODERATE SURVIVABILITY (ONLY NEEDED IF A GEOGRID IS USED FOR GEOSYNTHETIC REINFORCEMENT)
2. 1' - 0" MIN. GEOTEXTILE OVERLAP, TOP & BOTTOM

NOTES

1. For the values of "L," see sheet 3, and for the values of "S_V" see sheet 2.
2. For Geosynthetic Wall Construction Sequence, see sheet 4.
3. "A_S" is the peak seismic ground acceleration as defined and applied in the AASHTO LRFD Bridge Design Specifications, Articles 3.10.4.1 and 11.6.5.
4. The long-term geosynthetic design strength "T_{al}" shall be determined in accordance with WSDOT Standard Practice T925. See Qualified Products List (QPL), Appendix "D," for products in which "T_{al}" has been determined. "H" and "Z" are graphically defined. "Z" is the distance from the top of the wall to a geosynthetic layer, and is used to determine "T_{al}" for that layer.
5. "L," the geosynthetic reinforcement length behind the wall face, is graphically defined. The maximum factored bearing stress acts in the vertical direction at the base of the wall. The load factors used are as specified in the AASHTO LRFD Bridge Design Specifications for each specified limit state.
6. Fascia or facing type shall be selected from **Standard Plans D-3.10** or **D-3.11** and called out in the Contract Plans. Region is to coordinate with the Geotechnical Services and Bridge & Structures offices.

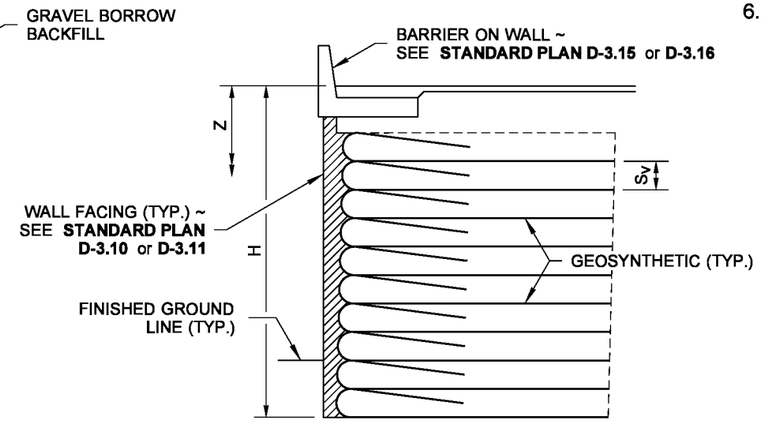

GEOSYNTHETIC WALL WITH 2 FT TRAFFIC SURCHARGE

TYPE 1, $A_S \leq 0.51g$

TYPE 5, $A_S \leq 0.20g$

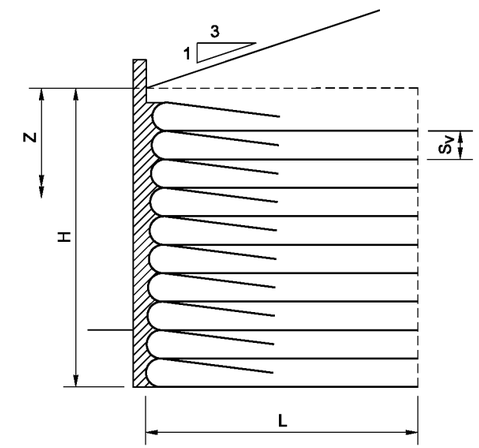

GEOSYNTHETIC WALL

TYPE 3, $A_S \leq 0.51g$

TYPE 7, $A_S \leq 0.20g$

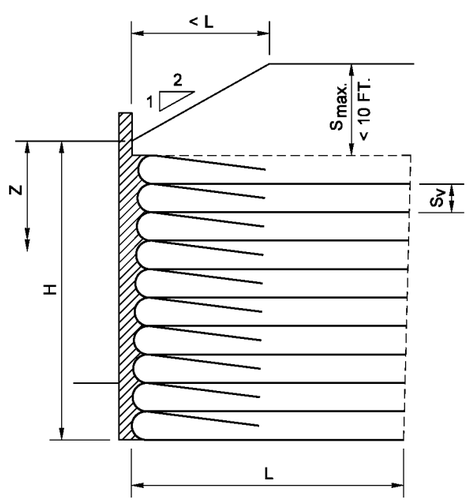

GEOSYNTHETIC WALL

TYPE 2, $A_S \leq 0.51g$

TYPE 6, $A_S \leq 0.20g$

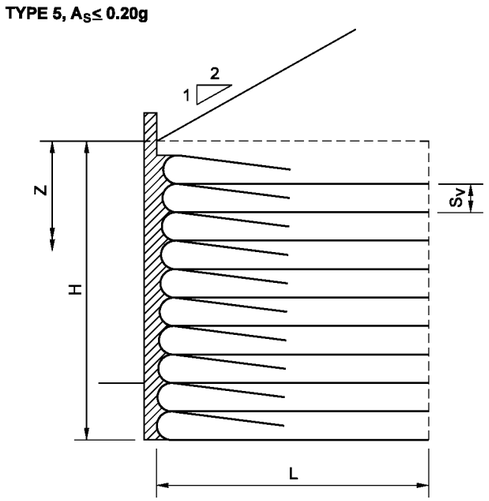

GEOSYNTHETIC WALL

TYPE 4, $A_S \leq 0.51g$

TYPE 8, $A_S \leq 0.20g$

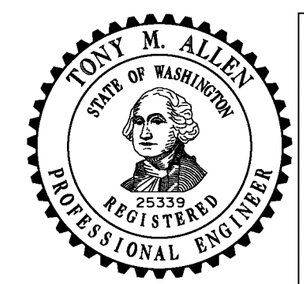

NOTE: THIS PLAN IS NOT A LEGAL ENGINEERING DOCUMENT BUT AN ELECTRONIC DUPLICATE. THE ORIGINAL, SIGNED BY THE ENGINEER AND APPROVED FOR PUBLICATION, IS KEPT ON FILE AT THE WASHINGTON STATE DEPARTMENT OF TRANSPORTATION. A COPY MAY BE OBTAINED UPON REQUEST.

PERMANENT GEOSYNTHETIC WALL

STANDARD PLAN D-3.09-00

SHEET 1 OF 4 SHEETS

APPROVED FOR PUBLICATION

Pasco Bakotich III — STATE DESIGN ENGINEER

05/17/12 — DATE

Washington State Department of Transportation

EFFECTIVE: AUGUST 6, 2012 TO August 4, 2013
EFFECTIVE: AUGUST 6, 2012 TO August 4, 2013
EFFECTIVE: AUGUST 6, 2012 TO August 4, 2013
EFFECTIVE: AUGUST 6, 2012 TO August 4, 2013

EFFECTIVE: AUGUST 6, 2012 TO August 4, 2013
EFFECTIVE: AUGUST 6, 2012 TO August 4, 2013

DRAWN BY: BILL BEKENS

PERMANENT GEOSYNTHETIC WALL - GEOSYNTHETIC REINFORCEMENT DESIGN

WALL GEOMETRY AND REINFORCEMENT LAYER LOCATION			LONG-TERM GEOSYNTHETIC REINFORCEMENT STRENGTH REQUIRED, T_{al} (lbs/ft)*					
TOTAL WALL HEIGHT, H (ft)	DEPTH BELOW WALL TOP AT FACE, z (ft)	GEOSYNTHETIC REINFORCEMENT VERTICAL SPACING, S_v (ft)	GEOSYNTHETIC WALL TYPE 1	GEOSYNTHETIC WALL TYPES 2 AND 4	GEOSYNTHETIC WALL TYPE 3	GEOSYNTHETIC WALL TYPE 5	GEOSYNTHETIC WALL TYPES 6 AND 8	GEOSYNTHETIC WALL TYPE 7
UP TO 5	5	1.0	505	240	220	505	240	220
	5	1.25	631	300	280	631	300	275
5 < H ≤ 10	0 to 10	1.0	530	500	470	528	487	460
	0 to 10	1.25	660	630	590	660	609	575
10 < H ≤ 15	0 to 10	1.0	580	620	570	584	586	545
	10.1 to 15	1.0	760	780	740	760	760	719
	0 to 10	1.25	730	770	710	730	732	681
	10.1 to 15	1.25	950	980	920	950	950	899
15 < H ≤ 20	0 to 10	1.0	584	672	616	584	626	572
	10.1 to 20	1.0	992	1072	1000	992	1032	976
	0 to 10	1.25	730	840	770	730	783	715
	10.1 to 20	1.25	1240	1340	1250	1240	1290	1220
20 < H ≤ 25	0 to 10	1.0	580	720	660	584	667	599
	10.1 to 20	1.0	1050	1180	1100	1048	1128	1064
	20.1 to 25	1.0	1220	1350	1270	1224	1304	1240
	0 to 10	1.25	730	900	820	730	834	749
	10.1 to 20	1.25	1310	1470	1380	1310	1410	1330
	20.1 to 25	1.25	1530	1690	1590	1530	1630	1550
25 < H ≤ 30	0 to 10	1.0	580	780	700	584	708	626
	10.1 to 20	1.0	1050	1240	1140	1048	1168	1088
	20.1 to 30	1.0	1460	1640	1540	1456	1576	1496
	0 to 10	1.25	730	980	870	730	885	782
	10.1 to 20	1.25	1310	1550	1430	1310	1460	1360
	20.1 to 30	1.25	1820	2050	1920	1820	1970	1870
30 < H ≤ 35	0 to 10	1.0	580	830	740	584	749	653
	10.1 to 20	1.0	1050	1290	1180	1048	1216	1120
	20.1 to 30	1.0	1510	1740	1630	1512	1680	1584
	30.1 to 35	1.0	1690	1920	1800	1688	1848	1752
	0 to 10	1.25	730	1040	925	730	936	816
	10.1 to 20	1.25	1310	1610	1480	1310	1520	1400
	20.1 to 30	1.25	1890	2180	2040	1890	2100	1980
	30.1 to 35	1.25	2110	2400	2250	2110	2310	2190

NOTE: See Note 4, sheet 1.

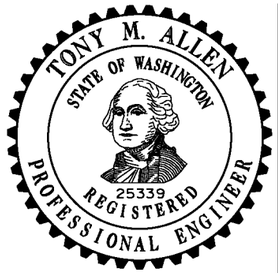

NOTE: THIS PLAN IS NOT A LEGAL ENGINEERING DOCUMENT BUT AN ELECTRONIC DUPLICATE. THE ORIGINAL, SIGNED BY THE ENGINEER AND APPROVED FOR PUBLICATION, IS KEPT ON FILE AT THE WASHINGTON STATE DEPARTMENT OF TRANSPORTATION. A COPY MAY BE OBTAINED UPON REQUEST.

PERMANENT GEOSYNTHETIC WALL

STANDARD PLAN D-3.09-00

SHEET 2 OF 4 SHEETS

APPROVED FOR PUBLICATION

Pasco Bakotich III — STATE DESIGN ENGINEER

05/17/12 — DATE

Washington State Department of Transportation

EFFECTIVE: AUGUST 6, 2012 TO August 4, 2013
EFFECTIVE: AUGUST 6, 2012 TO August 4, 2013
EFFECTIVE: AUGUST 6, 2012 TO August 4, 2013
EFFECTIVE: AUGUST 6, 2012 TO August 4, 2013

EFFECTIVE: AUGUST 6, 2012 TO August 4, 2013
EFFECTIVE: AUGUST 6, 2012 TO August 4, 2013

DRAWN BY: BILL BEKENS

PERMANENT GEOSYNTHETIC WALL - EXTERNAL STABILITY DESIGN

(INCLUDES SEISMIC DESIGN FOR LARGE EARTHQUAKE: $A_S \leq 0.51g$)

TOTAL WALL HEIGHT, H (ft)	GEOSYNTHETIC WALL TYPE 1					GEOSYNTHETIC WALL TYPE 2				GEOSYNTHETIC WALL TYPE 3				GEOSYNTHETIC WALL TYPE 4			
	L (FT)	MAX. FACTORED BEARING STRESS (psf)				L (FT)	MAX. FACTORED BEARING STRESS (psf)			L (FT)	MAX. FACTORED BEARING STRESS (psf)			L (FT)	MAX. FACTORED BEARING STRESS (psf)		
		SERVICE 1	STRENGTH 1	EXTREME EVENT I	EXTREME EVENT II		SERVICE 1	STRENGTH 1	EXTREME EVENT I		SERVICE 1	STRENGTH 1	EXTREME EVENT I		SERVICE 1	STRENGTH 1	EXTREME EVENT I
5	11	847	1220	1011	1192	7	1057	1535	1391	6	852	1168	1284	7	975	1343	1473
6	11	1081	1566	1388	1949	8	1295	1862	1671	7	1028	1415	1598	9	1171	1613	1756
7	11	1248	1800	1685	2165	9	1469	2099	1981	8	1203	1657	1890	10	1366	1882	2058
8	11	1415	2034	1982	2381	10	1643	2336	2291	8	1378	1899	2182	11	1561	2151	2360
9	11	1582	2268	2279	2597	11	1817	2573	2601	9	1553	2141	2474	12	1756	2420	2662
10	11	1768	2531	2609	3278	11	2069	2968	3006	10	1738	2394	2811	14	1951	2685	2947
11	11	1916	2736	2873	3029	12	2165	3047	3221	11	1903	2625	3058	15	2146	2958	3266
12	11	2083	2970	3170	3245	13	2339	3284	3531	12	2078	2867	3350	16	2341	3227	3568
13	11	2250	3204	3467	3461	14	2513	3521	3841	13	2253	3109	3642	18	2536	3496	3870
14	11	2417	3438	3764	3677	15	2687	3758	4151	14	2428	3351	3934	19	2731	3765	4172
15	11	2650	3783	4198	4176	16	2800	3872	4374	15	2607	3590	4216	20	2924	4029	4494
16	11	2751	3906	4358	4238	17	3035	4232	4771	16	2778	3835	4518	22	3121	4303	4776
17	12	2918	4140	4655	4325	18	3209	4469	5081	17	2953	4077	4810	23	3316	4572	5078
18	13	3085	4374	4952	4541	18	3383	4706	5391	18	3128	4319	5102	24	3511	4841	5380
19	14	3252	4608	5249	4757	19	3557	4943	5701	19	3303	4561	5394	25	3706	5110	5682
20	15	3412	4835	5424	4927	21	3811	5286	5975	20	3476	4787	5621	27	3899	5371	5965
21	15	3586	5076	5843	5189	21	3905	5417	6321	21	3653	5045	5978	28	4096	5648	6286
22	16	3753	5310	6140	5405	22	4079	5654	6631	22	3828	5287	6270	29	4291	5917	6588
23	16	3920	5544	6437	5621	23	4253	5891	6941	23	4003	5529	6562	31	4486	6186	6890
24	17	4087	5778	6734	5837	24	4427	6128	7251	23	4178	5771	6854	32	4681	6455	7192
25	18	4268	6038	7040	6027	25	4629	6404	7505	24	4375	6032	7230	33	4873	6716	7519
26	18	4421	6246	7328	6269	25	4775	6602	7871	25	4528	6255	7438	35	5071	6993	7796
27	19	4588	6480	7625	6485	26	4949	6839	8181	26	4703	6497	7730	36	5266	7262	8098
28	19	4755	6714	7922	6701	27	5123	7076	8491	27	4878	6739	8022	37	5461	7531	8400
29	20	4922	6948	8219	6917	28	5297	7313	8801	28	5053	6981	8314	38	5656	7800	8702
30	21	5123	7238	8698	7148	29	5446	7523	9093	29	5244	7228	8632	40	5848	8057	8988
31	22	5256	7416	8813	7349	30	5645	7787	9421	30	5403	7465	8898	41	6046	8338	9306
32	23	5423	7650	9110	7565	30	5819	8024	9731	31	5578	7707	9190	42	6241	8607	9608
33	24	5590	7884	9407	7781	31	5993	8261	10041	32	5753	7949	9482	44	6436	8876	9910
34	25	5757	8118	9704	7997	32	6167	8498	10351	33	5928	8191	9774	45	6631	9145	10212
35	25	5863	8251	9874	8080	32	6320	8737	10766	34	6112	8425	10035	46	6823	9403	10544

NOTE: See General Note 5, sheet 1.

PERMANENT GEOSYNTHETIC WALL - EXTERNAL STABILITY DESIGN

(INCLUDES SEISMIC DESIGN FOR LARGE EARTHQUAKE: $A_S \leq 0.20g$)

TOTAL WALL HEIGHT, H (ft)	GEOSYNTHETIC WALL TYPE 5					GEOSYNTHETIC WALL TYPE 6				GEOSYNTHETIC WALL TYPE 7				GEOSYNTHETIC WALL TYPE 8			
	L (FT)	MAX. FACTORED BEARING STRESS (psf)				L (FT)	MAX. FACTORED BEARING STRESS (psf)			L (FT)	MAX. FACTORED BEARING STRESS (psf)			L (FT)	MAX. FACTORED BEARING STRESS (psf)		
		SERVICE 1	STRENGTH 1	EXTEME EVENT I	EXTEME EVENT II		SERVICE 1	STRENGTH 1	EXTREME EVENT I		SERVICE 1	STRENGTH 1	EXTREME EVENT I		SERVICE 1	STRENGTH 1	EXTREME EVENT I
5	11	847	1220	992	1192	6	1057	1535	1294	6	852	1168	1155	6	977	1349	1326
6	11	1105	1607	1320	1688	6	1358	1928	1574	6	1107	1536	1560	6	1278	1786	1868
7	11	1273	1843	1553	2090	6	1569	2226	1889	6	1302	1809	1842	6	1504	2105	2214
8	10	1441	2079	1786	2463	7	1780	2527	2211	7	1497	2082	2124	7	1730	2424	2560
9	10	1609	2315	2019	2808	7	1991	2831	2540	7	1692	2355	2406	7	1956	2743	2906
10	10	1768	2531	2229	3278	7	2266	3372	2776	7	1924	2692	2773	7	2228	3145	3381
11	10	1945	2787	2485	3424	8	2413	3445	3213	8	2082	2901	2970	8	2408	3381	3598
12	10	2113	3023	2718	3699	9	2624	3755	3555	9	2277	3174	3252	9	2634	3700	3944
13	11	2281	3259	2951	3954	10	2835	4066	3901	10	2472	3447	3534	10	2860	4019	4290
14	11	2449	3495	3184	4190	11	3046	4378	4249	11	2667	3720	3816	11	3086	4338	4636
15	11	2711	3884	3516	4396	11	3245	4598	4737	11	2886	4037	4159	11	3342	4718	5072
16	12	2785	3967	3650	4616	12	3468	5004	4948	12	3057	4266	4380	12	3538	4976	5328
17	12	2953	4203	3883	4809	12	3679	5316	5297	12	3252	4539	4662	12	3764	5295	5674
18	13	3121	4439	4116	4990	13	3890	5628	5644	13	3447	4812	4944	13	3990	5614	6020
19	14	3289	4675	4349	5163	14	4101	5939	5990	14	3642	5085	5226	14	4216	5933	6366
20	14	3522	5015	4642	5201	14	4326	6125	6321	14	3848	5383	5546	14	4456	6291	6762
21	15	3625	5147	4815	5489	15	4523	6557	6672	15	4032	5631	5790	15	4668	6571	7058
22	16	3793	5383	5048	5646	16	4734	6863	7006	16	4227	5904	6072	16	4894	6890	7404
23	17	3961	5619	5281	5801	17	4945	7166	7335	17	4422	6177	6354	17	5120	7209	7750
24	18	4129	5855	5514	5955	18	5156	7466	7657	18	4617	6450	6636	18	5346	7528	8096
25	18	4325	6131	5763	6146	18	5417	7683	7891	18	4810	6729	6932	18	5570	7863	8453
26	19	4465	6327	5980	6272	19	5578	8057	8280	19	5007	6996	7200	19	5798	8166	8788
27	19	4633	6563	6213	6438	19	5789	8346	8578	19	5202	7269	7482	19	6024	8485	9134
28	20	4801	6799	6446	6611	20	6000	8631	8866	20	5397	7542	7764	20	6250	8804	9480
29	21	4969	7035	6679	6793	21	6211	8912	9144	21	5592	7815	8046	21	6476	9123	9826
30	21	5123	7238	6881	7148	21	6577	9408	9515	21	5773	8075	8319	21	6684	9436	10143
31	22	5305	7507	7145	7192	22	6633	9457	9664	22	5982	8361	8610	22	6928	9761	10518
32	23	5473	7743	7378	7412	23	6844	9720	9905	23	6177	8634	8892	23	7154	10080	10864
33	24	5641	7979	7611	7649	24	7055	9978	10131	24	6372	8907	9174	24	7380	10399	11210
34	25	5809	8215	7844	7904	25	7266	10229	10343	25	6567	9180	9456	25	7606	10718	11556
35	25	5918	8341	7998	8177	25	7311	10373	10550	25	6735	9421	9705	25	7798	11009	11834

NOTE: See Note 5, sheet 1.

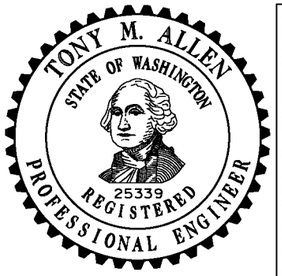

NOTE: THIS PLAN IS NOT A LEGAL ENGINEERING DOCUMENT BUT AN ELECTRONIC DUPLICATE. THE ORIGINAL, SIGNED BY THE ENGINEER AND APPROVED FOR PUBLICATION, IS KEPT ON FILE AT THE WASHINGTON STATE DEPARTMENT OF TRANSPORTATION. A COPY MAY BE OBTAINED UPON REQUEST.

PERMANENT GEOSYNTHETIC WALL

STANDARD PLAN D-3.09-00

SHEET 3 OF 4 SHEETS

APPROVED FOR PUBLICATION

Pasco Bakotich III — STATE DESIGN ENGINEER

05/17/12 — DATE

Washington State Department of Transportation

EFFECTIVE: AUGUST 6, 2012 TO August 4, 2013
EFFECTIVE: AUGUST 6, 2012 TO August 4, 2013
EFFECTIVE: AUGUST 6, 2012 TO August 4, 2013
EFFECTIVE: AUGUST 6, 2012 TO August 4, 2013

EFFECTIVE: AUGUST 6, 2012 TO August 4, 2013

DRAWN BY: BILL BEKENS

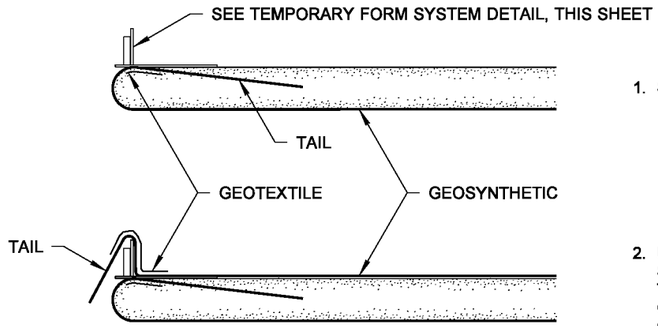

1. SET FORM ON COMPLETED LIFT.

2. UNROLL GEOSYNTHETIC AND POSITION IT SO THAT A 4' - 0" WIDE "TAIL" DRAPES OVER THE FORM. IF A GEOGRID IS USED FOR THE GEOSYNTHETIC REINFORCEMENT, POSITION GEOTEXTILE TO PREVENT BACKFILL FROM SPILLING THROUGH GEOGRID OPENINGS.

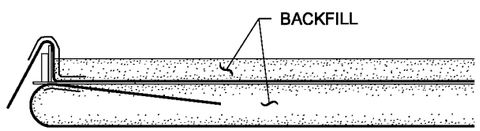

3. PLACE THE BACKFILL UNTIL THE BACKFILL IS UP TO HALF OF THE REQUIRED VERTICAL GEOSYNTHETIC LAYER SPACING.

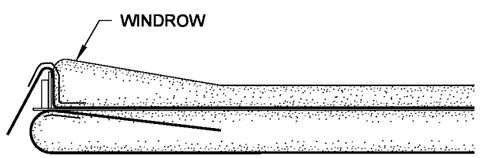

4. PLACE A WINDROW TO SLIGHTLY GREATER THAN FULL LIFT HEIGHT AGAINST THE FORM.

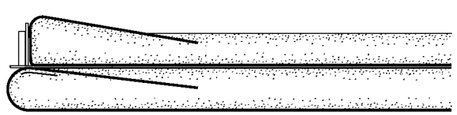

5. PLACE THE GEOSYNTHETIC "TAIL" OVER THE WINDROW AND LOCK INTO PLACE WITH BACKFILL.

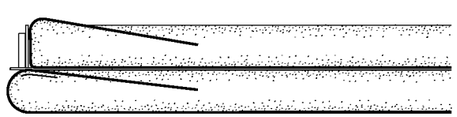

6. COMPLETE BACKFILLING UNTIL THE COMPACTED BACKFILL LAYER THICKNESS IS EQUAL TO THE REQUIRED VERTICAL GEOSYNTHETIC LAYER SPACING.

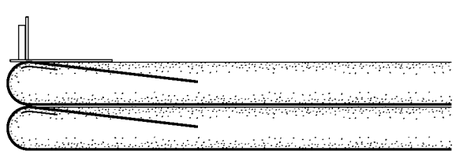

7. THE FORM MAY BE LEFT IN PLACE WHILE CONSTRUCTING THE NEXT LAYER (SEE NOTE 2) OTHERWISE, RESET THE FORM AND REPEAT THE SEQUENCE.

GEOSYNTHETIC WALL CONSTRUCTION SEQUENCE

(SECTION VIEW)

NOTES(SHEET)

1. Use of the Temporary Form System, as detailed in this plan, is optional.
2. To help maintain the wall face batter, leave the form system for the preceding layer in place while constructing the next layer. When the upper layer is complete, remove the form system from the lower layer and reset it for the next layer. See below.

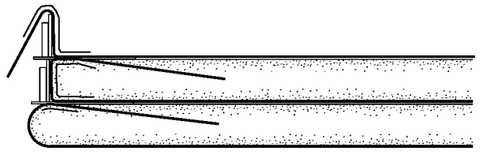

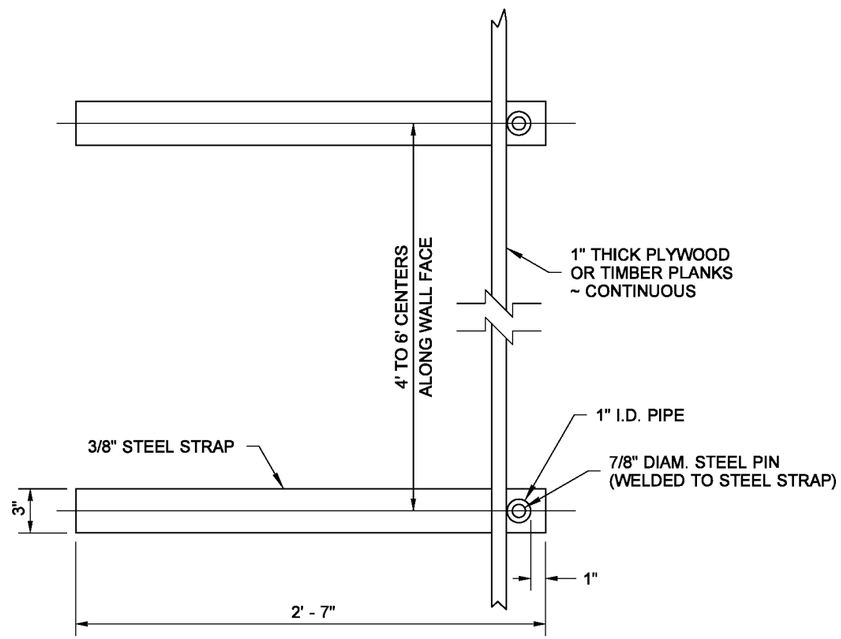

PLAN

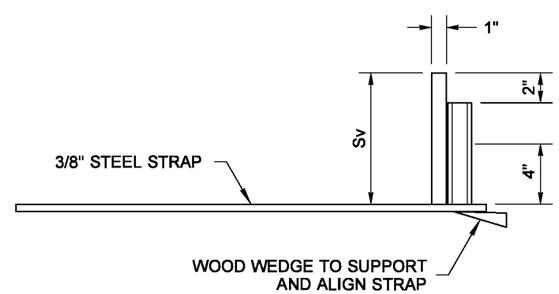

ELEVATION

TEMPORARY FORM SYSTEM DETAIL

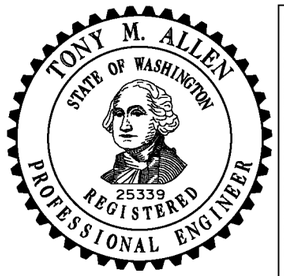

NOTE: THIS PLAN IS NOT A LEGAL ENGINEERING DOCUMENT BUT AN ELECTRONIC DUPLICATE. THE ORIGINAL, SIGNED BY THE ENGINEER AND APPROVED FOR PUBLICATION, IS KEPT ON FILE AT THE WASHINGTON STATE DEPARTMENT OF TRANSPORTATION. A COPY MAY BE OBTAINED UPON REQUEST.

PERMANENT GEOSYNTHETIC WALL

STANDARD PLAN D-3.09-00

SHEET 4 OF 4 SHEETS

APPROVED FOR PUBLICATION

Pasco Bakotich III — STATE DESIGN ENGINEER

05/17/12 — DATE

Washington State Department of Transportation

EFFECTIVE: AUGUST 6, 2012 TO August 4, 2013

EFFECTIVE: AUGUST 6, 2012 TO August 4, 2013

DRAWN BY: LISA CYFORD

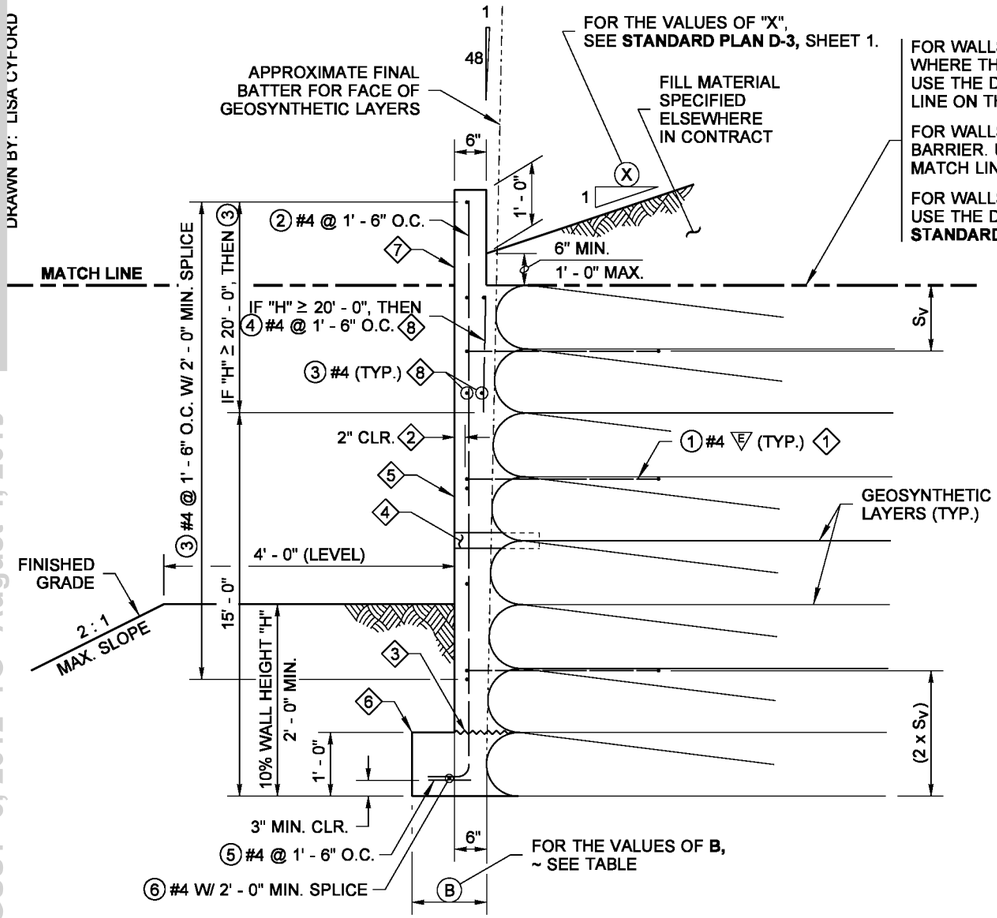

TYPICAL SECTION

PERMANENT GEOSYNTHETIC RETAINING WALL WITH CAST-IN-PLACE CONCRETE FASCIA

KEY NOTES

1. "N" ROWS OF ① #4 (E) DOWEL REINFORCEMENT PLACE BETWEEN GEOSYNTHETIC LAYERS AT 5' - 0" O.C. HORIZONTAL SPACING, SEE TABLE. VERTICAL SPACING BETWEEN ROWS TO BE EQUAL, AS MULTIPLES OF "S_V" ALLOW. ROWS MAY BE STAGGERED. SEE **STD. PLAN D-3** FOR "S_V".
2. INCREASE THE COVER AS REQUIRED TO ACCOMMODATE ARCHITECTURAL FEATURES AND FINISH.
3. CONSTRUCTION JOINT WITH ROUGHENED SURFACE.
4. 3" I.D. PVC PIPE FOR WEEP HOLE IN WALL FACING ~ PLACE BETWEEN GEOSYNTHETIC LAYERS APPROX. 9" DEEP AT 12' - 0" HORIZONTAL SPACING. LENGTH TO EXTEND TO OUTER SURFACE OF SPECIFIED WALL. WEEP HOLES SHALL BE KEPT CLEAR OF CONCRETE. SEE **STANDARD PLAN D-3,** FOR DETAILS NOT SHOWN.
5. VERTICAL CONSTRUCTION JOINTS IN FASCIA @ 24' - 0" O.C. WITH 1/2 " PREMOLDED JOINT FILLER (SEE **STANDARD PLAN D-10.45**, "SPLIT ELEVATION").
6. VERTICAL CONSTRUCTION JOINTS IN FOOTING @ 120' O.C. MAX. (SEE **STANDARD PLAN D-10.45,** "ELEVATION"). IF THE FOOTING IS STEPPED, PROVIDE 2' - 0" NON-CONTACT LAP SPLICES FOR THE ⑥ #4 BARS AT EACH STEP.
7. COORDINATE WALL FINISH AND CONFIGURATION WITH STATE BRIDGE AND STRUCTURES ARCHITECT PER WSDOT DESIGN MANUAL 1130.04(5).06.
8. THE ④ BARS AND INTERIOR ③ BARS SHALL BE USED ONLY IF THE FACE IS VERTICAL.

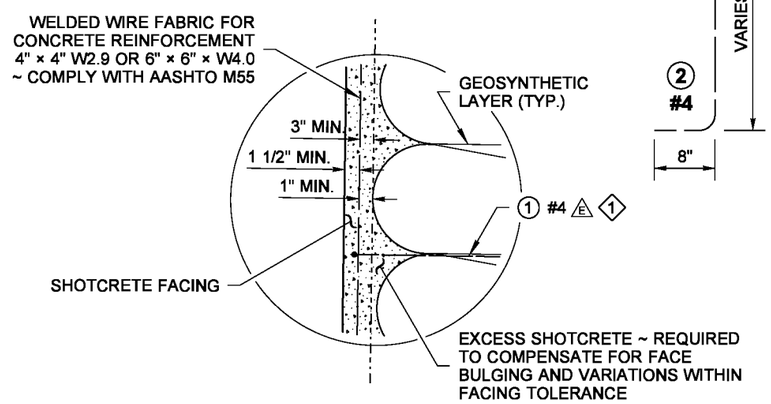

SHOTCRETE DETAIL

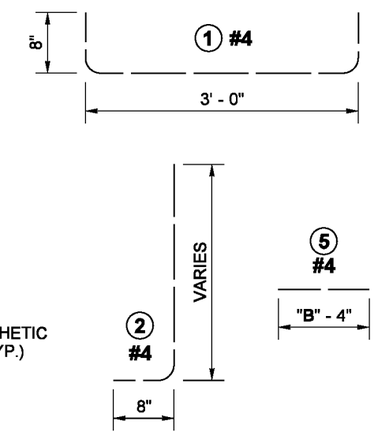

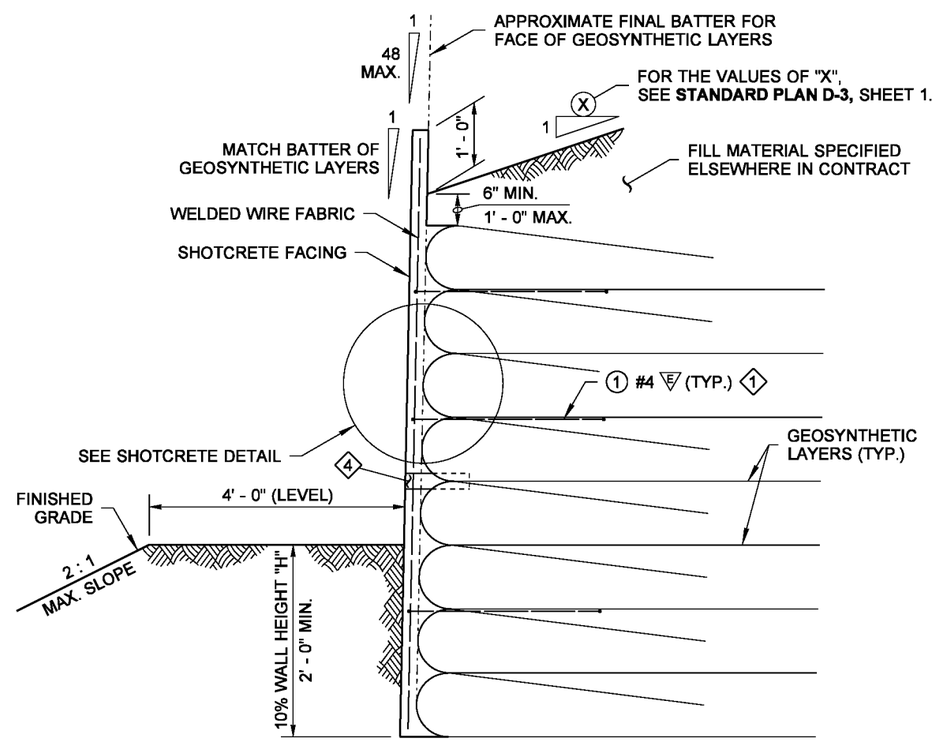

TYPICAL SECTION

PERMANENT GEOSYNTHETIC RETAINING WALL WITH SHOTCRETE FACING

NOTES

1. All bars shown on this plan shall be ASTM A706 unless otherwise specified in the Contract.

(E) = EPOXY COATED

DESIGN HEIGHT "H" (ft.)	ROWS OF #4 (E) DOWEL BARS REQUIRED N (no.)	FASCIA FOOTING WIDTH B (ft. - in.)
UP TO 5	2	1' - 0"
6	3	1' - 0"
7	3	1' - 0"
8	3	1' - 0"
9	3	1' - 0"
10	4	1' - 0"
11	4	1' - 0 1/2"
12	4	1' - 0 1/2"
13	4	1' - 1"
14	4	1' - 1"
15	6	1' - 2"
16	6	1' - 2"
17	8	1' - 2 1/2"
18	8	1' - 2 1/2"
19	8	1' - 3"
20	10	1' - 3"
21	10	1' - 3 1/2"
22	10	1' - 3 1/2"
23	10	1' - 4"
24	10	1' - 4"
25	10	1' - 5"
26	10	1' - 5"
27	10	1' - 5 1/2"
28	10	1' - 5 1/2"
29	10	1' - 6"
30	10	1' - 6"
31	10	1' - 6 1/2"
32	10	1' - 6 1/2"
33	10	1' - 7"
34	10	1' - 7"
35	10	1' - 8"

NOTE: THIS PLAN IS NOT A LEGAL ENGINEERING DOCUMENT BUT AN ELECTRONIC DUPLICATE. THE ORIGINAL, SIGNED BY THE ENGINEER AND APPROVED FOR PUBLICATION, IS KEPT ON FILE AT THE WASHINGTON STATE DEPARTMENT OF TRANSPORTATION. A COPY MAY BE OBTAINED UPON REQUEST.

CAST-IN-PLACE PERMANENT GEOSYNTHETIC WALL FASCIA AND FACING

STANDARD PLAN D-3.10-00

SHEET 1 OF 1 SHEET

APPROVED FOR PUBLICATION

Pasco Bakotich III — STATE DESIGN ENGINEER

06-16-10 — DATE

Washington State Department of Transportation

EFFECTIVE: AUGUST 6, 2012 TO August 4, 2013

EFFECTIVE: AUGUST 6, 2012 TO August 4, 2013
EFFECTIVE: AUGUST 6, 2012 TO August 4, 2013

DRAWN BY: LISA CYFORD

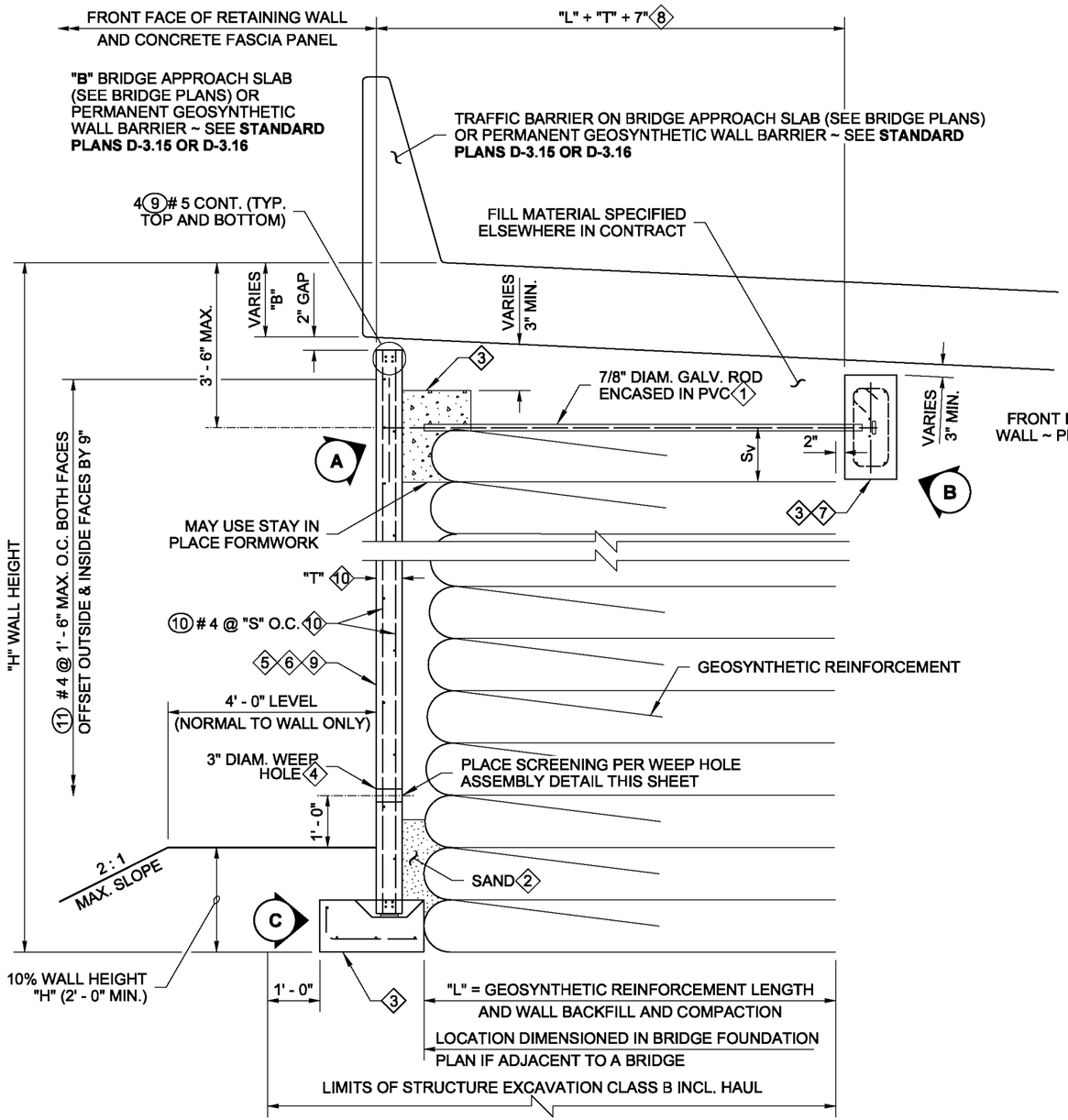

TYPICAL SECTION

PERMANENT GEOSYNTHETIC RETAINING WALL WITH PRECAST CONCRETE FASCIA PANEL AND TRAFFIC BARRIER

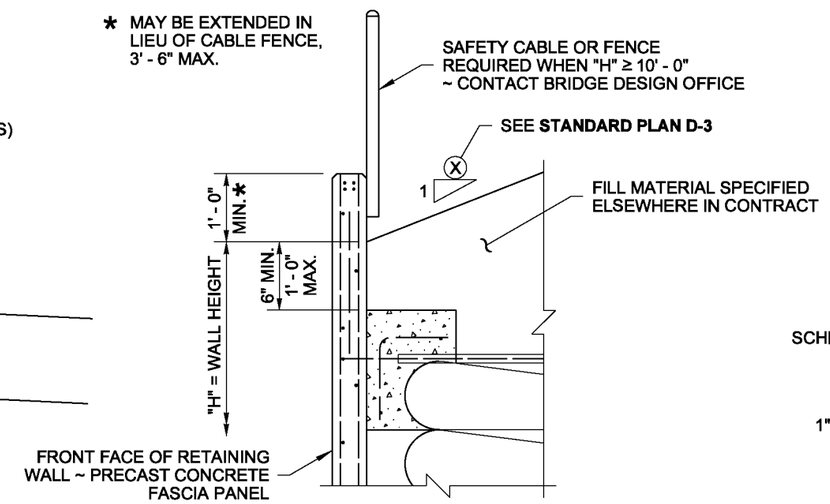

TYPICAL SECTION

PERMANENT GEOSYNTHETIC WALL PRECAST CONCRETE FASCIA PANEL

NOTES

1. All structural steel shall be ASTM A572 GR. 50 or ASTM A588 or as otherwise noted.
2. Anchor Rods shall be ASTM F1554 GR. 55
3. All cast-in-place concrete shall be Class 4000.

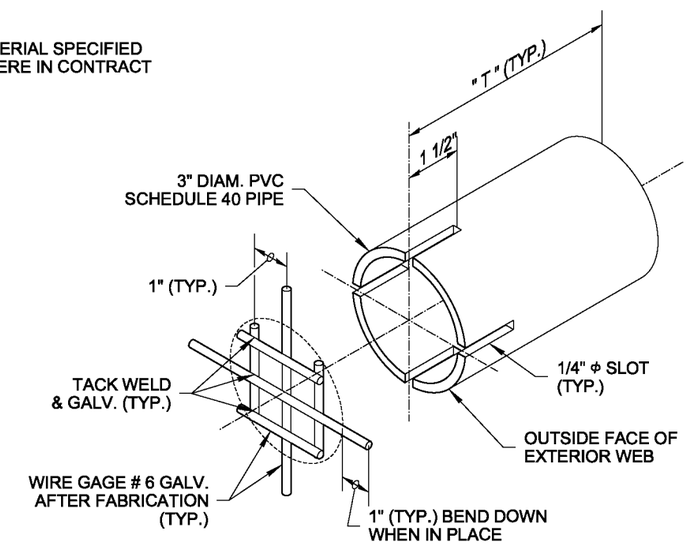

WEEP HOLE ASSEMBLY

KEY NOTES

1. 7/8" DIAMETER THREADED ROD **(STANDARD SPECIFICATION SECTION 9.06.5 (4))**, GALVANIZED AFTER FABRICATION IN ACCORDANCE WITH AASHTO M232. RODS SHALL BE THREADED A MINIMUM OF 1' - 0" AT ENDS. PLACE LEVEL AND NORMAL TO WALL. ENCASE RODS WITH PVC SLEEVE. EMBED PVC ENDS INTO GRADE BEAM AND EDGE BEAM.
2. BACKFILL VOID BEHIND WALL WITH SAND CONFORMING TO **STANDARD SPECIFICATION SECTION 9-03.13(1)** TO 6" ABOVE FINISHED GRADE ON FRONT FACE OF WALL.
3. LEVELING PAD, EDGE BEAM, AND GRADE BEAM ARE CAST-IN-PLACE CONCRETE PLACED AT 4 : 1 MAXIMUM SLOPE AND THE VERTICAL CONSTRUCTION JOINTS SHALL BE SPACED AT 120' MAXIMUM.
4. ONE 3" DIAMETER WEEP HOLE PER FASCIA PANEL. HORIZONTAL LOCATION AT THE CENTERLINE FASCIA PANEL.
5. ALL VERTICAL PANEL JOINTS SHALL BE SEALED FOR FULL CONTACT WITH AN APPROVED JOINT SEALANT. SEE "EXPANSION JOINT DETAIL", SHEET 2.
6. UNLESS OTHERWISE SHOWN, MINIMUM CONCRETE COVER FOR REINFORCEMENT IS 1 1/2". INCREASE COVER AS REQUIRED TO ACCOMMODATE ARCHITECTURAL FEATURES.
7. IF GRADE BEAM IS NEAR CENTERLINE OF ROADWAY, USE ONE GRADE BEAM AT CENTERLINE FOR FASCIA PANEL ON EITHER SIDE.
8. CONTACT BRIDGE OFFICE FOR ROADWAY CROSS SLOPES GREATER THAN 0.08'/FT.
9. COORDINATE WALL FINISH AND CONFIGURATION WITH STATE BRIDGE AND STRUCTURES ARCHITECT PER **WSDOT DESIGN MANUAL 730.05(5).**
10. SEE PRECAST FASCIA TABLE, SHEET 2 OF 2.

NOTE: THIS PLAN IS NOT A LEGAL ENGINEERING DOCUMENT BUT AN ELECTRONIC DUPLICATE. THE ORIGINAL, SIGNED BY THE ENGINEER AND APPROVED FOR PUBLICATION, IS KEPT ON FILE AT THE WASHINGTON STATE DEPARTMENT OF TRANSPORTATION. A COPY MAY BE OBTAINED UPON REQUEST.

PRECAST PERMANENT GEOSYNTHETIC WALL FASCIA

STANDARD PLAN D-3.11-01

SHEET 1 OF 2 SHEETS

APPROVED FOR PUBLICATION

Pasco Bakotich III — STATE DESIGN ENGINEER

03-15-12 — DATE

Washington State Department of Transportation

EFFECTIVE: AUGUST 6, 2012 TO August 4, 2013
EFFECTIVE: AUGUST 6, 2012 TO August 4, 2013
EFFECTIVE: AUGUST 6, 2012 TO August 4, 2013
EFFECTIVE: AUGUST 6, 2012 TO August 4, 2013

EFFECTIVE: AUGUST 6, 2012 TO August 4, 2013
EFFECTIVE: AUGUST 6, 2012 TO August 4, 2013

DRAWN BY: LISA CYFORD

PRECAST FASCIA TABLE

DESIGN HEIGHT "H" (ft.)	PANEL THICKNESS "T" (in.)	(F 10) BAR SPACING "S" (in.)
5	6.0	18.0
6	6.0	18.0
7	6.0	18.0
8	6.0	18.0
9	6.0	18.0
10	6.0	18.0
11	6.0	18.0
12	6.0	18.0
13	6.0	18.0
14	6.0	18.0
15	6.0	18.0
16	6.0	18.0
17	6.0	18.0
18	6.0	18.0
19	6.0	18.0
20	6.0	18.0
21	6.0	18.0
22	7.0	18.0
23	7.0	18.0
24	7.0	18.0
25	8.0	18.0
26	8.0	18.0
27	8.0	18.0
28	9.0	12.0
29	9.0	12.0
30	9.0	12.0
31	10.0	12.0
32	10.0	12.0
33	11.0	12.0
34	11.0	12.0
35	11.0	12.0

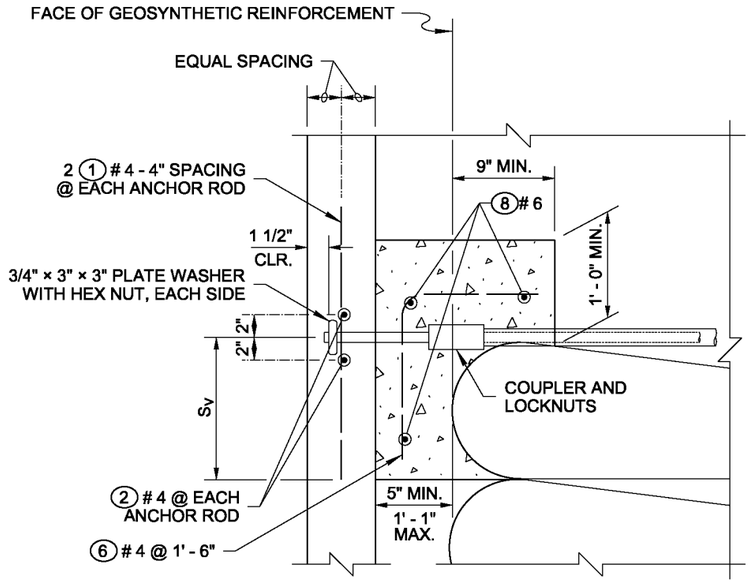

EDGE BEAM

DETAIL (A)

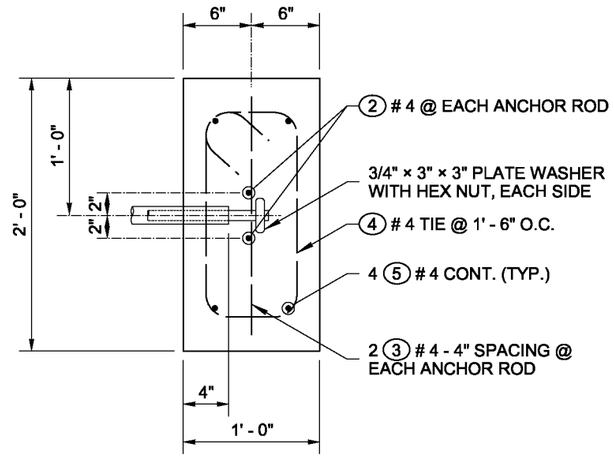

GRADE BEAM

DETAIL (B)

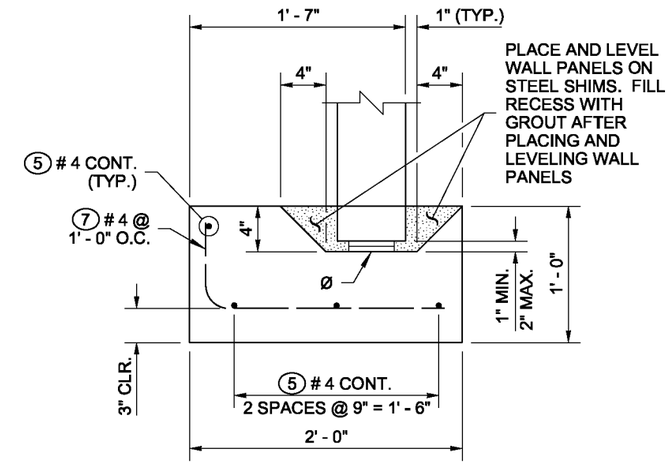

LEVELING PAD

DETAIL (C)

Φ 4" × 4" SHIM STACK
(2 LOCATIONS PER PANEL)
HEIGHT SHALL BE ADJUSTED SO THAT VERTICAL PANEL JOINTS ARE PLUMB

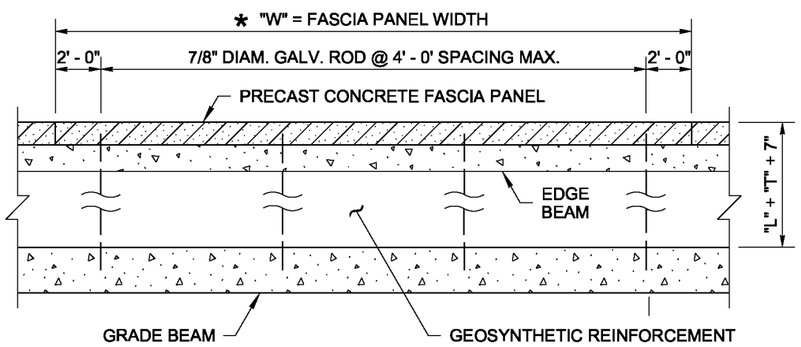

PLAN VIEW

TYPICAL PANEL LAYOUT

* PANEL WIDTH "W" SHOWN IN ELEVATION OF RETAINING WALLS

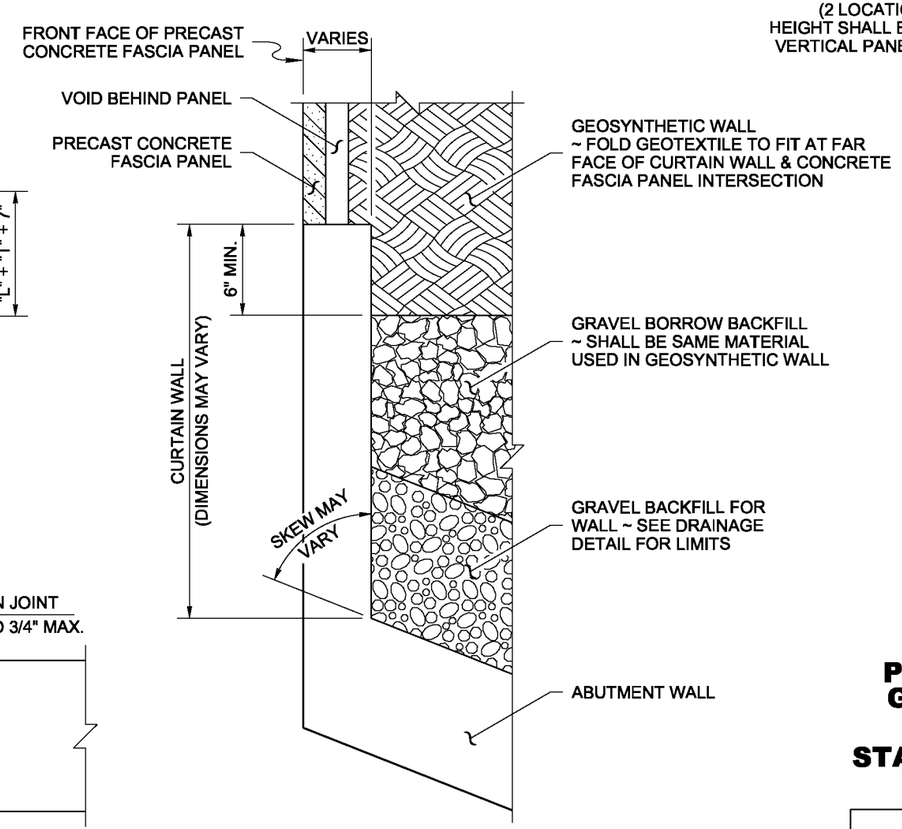

PLAN VIEW

WALL TRANSITION

GEOSYNTHETIC WALL TO CURTAIN WALL TRANSITION AT BRIDGE ~ SEE BRIDGE PLAN SHEETS FOR DETAILS

FASCIA PANEL BENDING DIAGRAM

ALL REINFORCEMENT SHALL BE ASTM A706.

MARK	SIZE	LENGTH	
(1)	4	2' - 0"	STR.
(2)	4	4' - 0"	STR.
(3)	4	1' - 9"	STR.
(4)	4	4' - 11"	
(5)	4	(A)	STR.
(6)	4	2' - 1 3/4"	
(7)	4		
(8)	6	(A)	STR.
(9)	5	(A)	STR.
(10)	4	(A)	STR.
(11)	4	(A)	STR.

(A) DETERMINE FROM PLANS

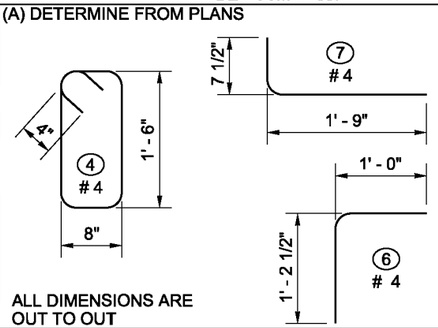

ALL DIMENSIONS ARE OUT TO OUT

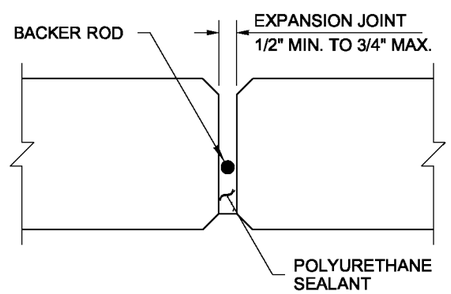

EXPANSION JOINT DETAIL

NOTE: THIS PLAN IS NOT A LEGAL ENGINEERING DOCUMENT BUT AN ELECTRONIC DUPLICATE. THE ORIGINAL, SIGNED BY THE ENGINEER AND APPROVED FOR PUBLICATION, IS KEPT ON FILE AT THE WASHINGTON STATE DEPARTMENT OF TRANSPORTATION. A COPY MAY BE OBTAINED UPON REQUEST.

PRECAST PERMANENT GEOSYNTHETIC WALL FASCIA

STANDARD PLAN D-3.11-01

SHEET 2 OF 2 SHEETS

APPROVED FOR PUBLICATION

Pasco Bakotich III — STATE DESIGN ENGINEER

03-15-12 — DATE

Washington State Department of Transportation

EFFECTIVE: AUGUST 6, 2012 TO August 4, 2013
EFFECTIVE: AUGUST 6, 2012 TO August 4, 2013
EFFECTIVE: AUGUST 6, 2012 TO August 4, 2013
EFFECTIVE: AUGUST 6, 2012 TO August 4, 2013

EFFECTIVE: AUGUST 6, 2012 TO August 4, 2013
EFFECTIVE: AUGUST 6, 2012 TO August 4, 2013

DRAWN BY: BILL BERENS

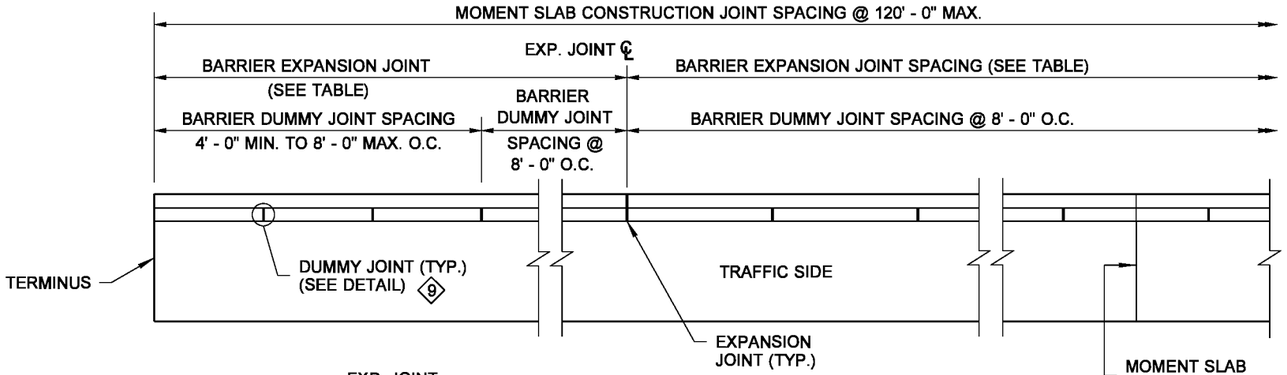

JOINT SCHEME
PLAN VIEW

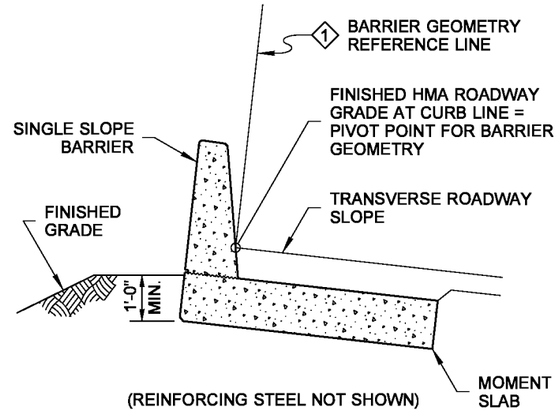

TYPICAL SECTION
SHOWN AT GRADE

KEY NOTES

1. THE BARRIER GEOMETRY REFERENCE LINE (B.G.R.L.) IS PERPENDICULAR TO THE TRANSVERSE ROADWAY SLOPE (T.R.S.). FOR SUPERELEVATED TRANSVERSE ROADWAY SLOPES, THE B.G.R.L. ON THE LOW SIDE OF THE ROADWAY SHALL BE PERPENDICULAR TO THE T.R.S. UP TO A MAXIMUM OF 8% SUPERELEVATION; THE B.G.R.L. ON THE HIGH SIDE SHALL ALWAYS BE PERPENDICULAR TO THE T.R.S..
2. JUNCTION BOX & PULL BOX ~ 8" × 8" × 1' - 6" NEMA 4 X S.S. (TYP.). JUNCTION BOX CAN BE RECESSED 1/2" MAX. SEE SPECIAL PROVISIONS. SIZE CONDUIT PER WIRING SCHEDULE, SEE ELECTRICAL PLANS.
3. 1 1/2" MIN. CONCRETE COVER ~ INCREASE THE COVER AS REQUIRED TO ACCOMMODATE ARCHITECTURAL FEATURES AND FINISH.
4. CONSTRUCTION JOINT WITH ROUGHENED SURFACE.
5. THE NOTCH, DETAILED BY THESE DIMENSIONS AND SPECIFICATIONS, IS REQUIRED ONLY IF THE BARRIER IS ON WALL FACING.
6. RUSTICATION ~ SEE RUSTICATION DETAIL
7. FOR STRUCTURAL DETAILS BELOW THE MATCH LINE, SEE **STANDARD PLANS D-3.09, D-3.10 OR D-3.11.**
8. 1/2" EXPANSION JOINT WITH PREMOLDED JOINT FILLER.
9. INSTALL BARRIER DUMMY JOINTS ON TRAFFIC SIDE ONLY WHEN ARCHITECTURAL FEATURES ARE SPECIFIED.

SLAB LENGTH		SLAB BASE		BARRIER EXPANSION JOINT SPACING	
MIN.	MAX.	ON WALL	AT GRADE	MIN.	MAX.
80' - 1"	- -	7' - 0"	5' - 0"	80' - 0"	120' - 0"
60' - 1"	80' - 0"	8' - 0"	6' - 0"	60' - 0"	80' - 0"
40' - 1"	60' - 0"	9' - 0"	7' - 0"	40' - 0"	60' - 0"
0	40' - 0"	CONTACT BRIDGE OFFICE			

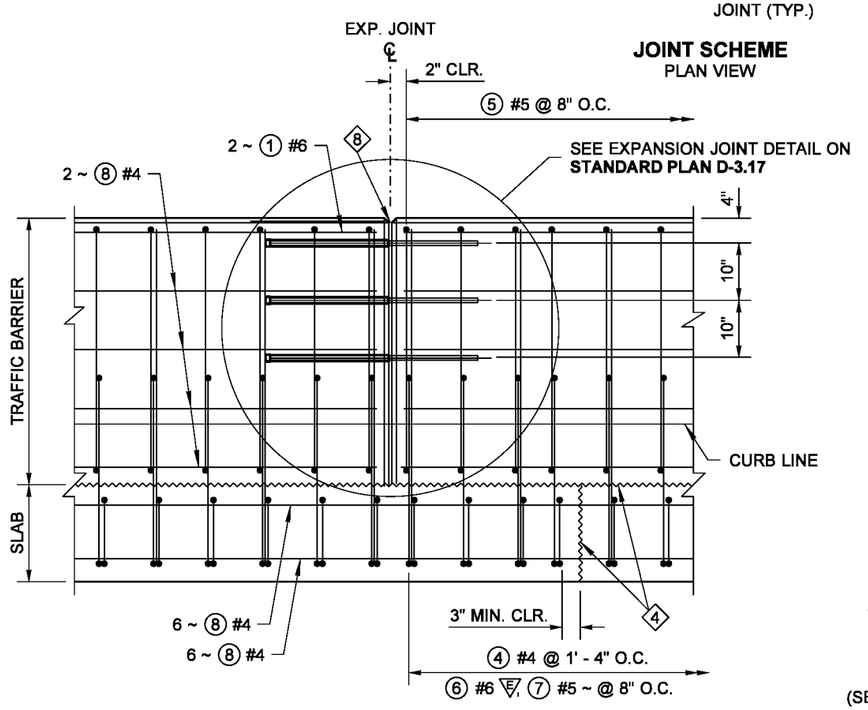

ELEVATION

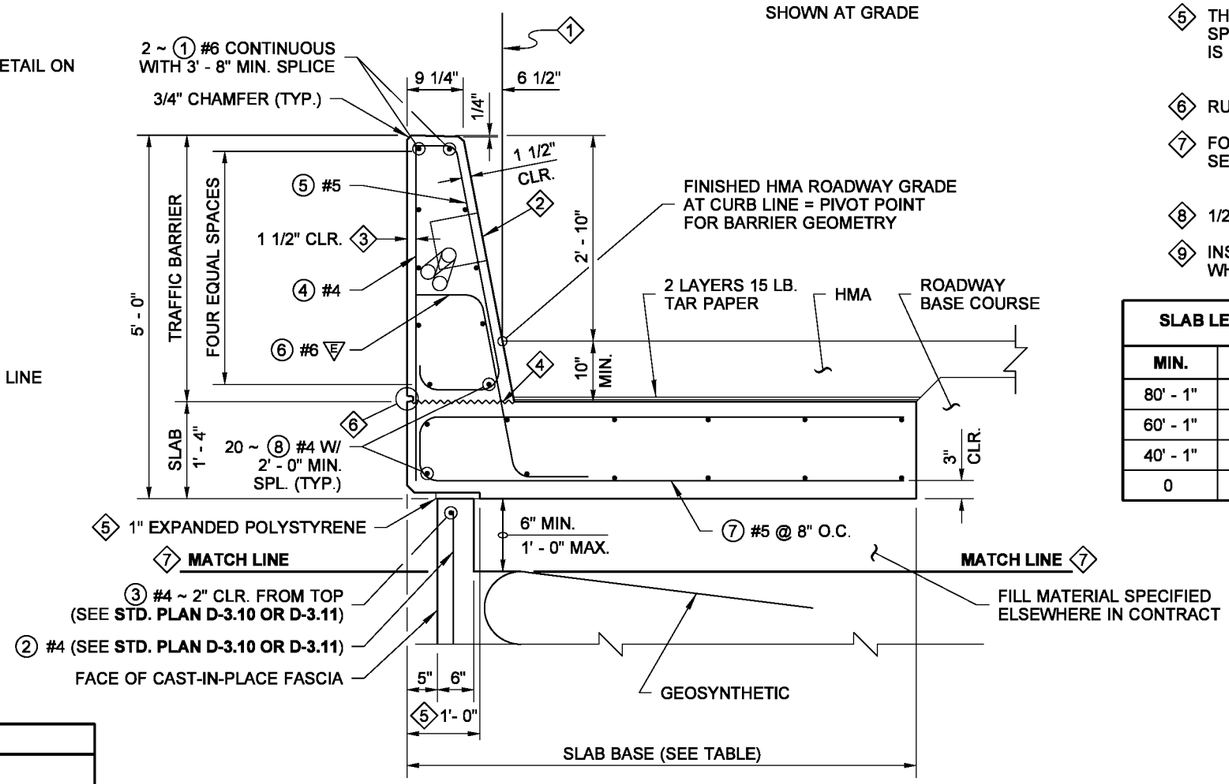

TYPICAL SECTION
SHOWN ON WALL

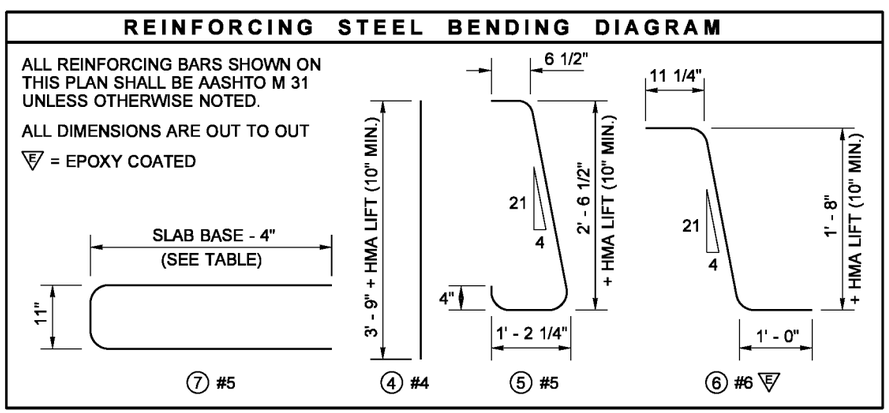

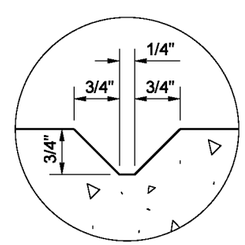

DUMMY JOINT DETAIL

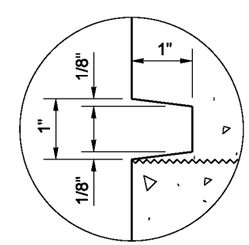

RUSTICATION DETAIL

NOTE: THIS PLAN IS NOT A LEGAL ENGINEERING DOCUMENT BUT AN ELECTRONIC DUPLICATE. THE ORIGINAL, SIGNED BY THE ENGINEER AND APPROVED FOR PUBLICATION, IS KEPT ON FILE AT THE WASHINGTON STATE DEPARTMENT OF TRANSPORTATION. A COPY MAY BE OBTAINED UPON REQUEST.

PERMANENT GEOSYNTHETIC WALL SINGLE SLOPE BARRIER STANDARD PLAN D-3.15-01

SHEET 1 OF 1 SHEET

APPROVED FOR PUBLICATION

Pasco Bakotich III — STATE DESIGN ENGINEER
05/17/12 — DATE

Washington State Department of Transportation

EFFECTIVE: AUGUST 6, 2012 TO August 4, 2013
EFFECTIVE: AUGUST 6, 2012 TO August 4, 2013
EFFECTIVE: AUGUST 6, 2012 TO August 4, 2013
EFFECTIVE: AUGUST 6, 2012 TO August 4, 2013

EFFECTIVE: AUGUST 6, 2012 TO August 4, 2013

DRAWN BY: BILL BEKENS

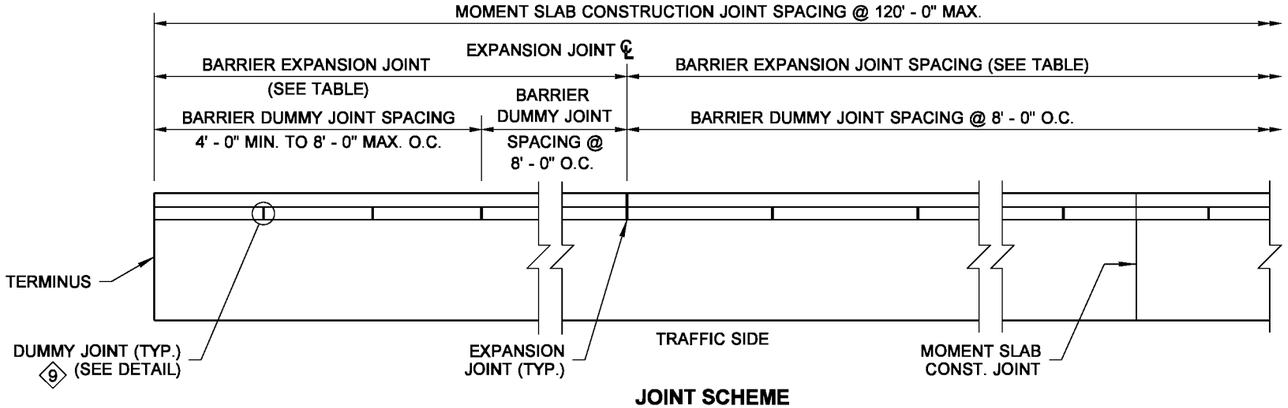

JOINT SCHEME
PLAN VIEW

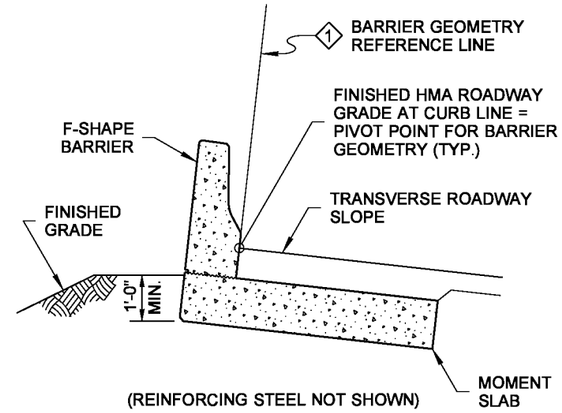

TYPICAL SECTION
SHOWN AT GRADE

KEY NOTES

1. THE BARRIER GEOMETRY REFERENCE LINE (B.G.R.L.) IS PERPENDICULAR TO THE TRANSVERSE ROADWAY SLOPE (T.R.S.). FOR SUPERELEVATED TRANSVERSE ROADWAY SLOPES, THE B.G.R.L. ON THE LOW SIDE OF THE ROADWAY SHALL BE PERPENDICULAR TO THE T.R.S. UP TO A MAXIMUM OF 8% SUPERELEVATION; THE B.G.R.L. ON THE HIGH SIDE SHALL ALWAYS BE PERPENDICULAR TO THE T.R.S.
2. JUNCTION BOX & PULL BOX ~ 8" × 8" × 1' - 6" NEMA 4 X S.S. (TYP.). JUNCTION BOX CAN BE RECESSED 1/2" MAX. SEE SPECIAL PROVISIONS. SIZE CONDUIT PER WIRING SCHEDULE, SEE ELECTRICAL PLANS.
3. 1 1/2" MIN. CONCRETE COVER ~ INCREASE THE COVER AS REQUIRED TO ACCOMMODATE ARCHITECTURAL FEATURES AND FINISH.
4. CONSTRUCTION JOINT WITH ROUGHENED SURFACE.
5. THE NOTCH, DETAILED BY THESE DIMENSIONS AND SPECIFICATIONS, IS REQUIRED ONLY IF THE BARRIER IS ON WALL FACING.
6. RUSTICATION ~ SEE RUSTICATION DETAIL.
7. FOR STRUCTURAL DETAILS BELOW THE MATCH LINE, SEE **STANDARD PLANS D-3.09, D-3.10 OR D-3.11.**
8. 1/2" EXPANSION JOINT WITH PREMOLDED JOINT FILLER.
9. INSTALL BARRIER DUMMY JOINTS ON TRAFFIC SIDE ONLY WHEN ARCHITECTURAL FEATURES ARE SPECIFIED.

SLAB LENGTH		SLAB BASE		BARRIER EXPANSION JOINT SPACING	
MIN.	MAX.	ON WALL	AT GRADE	MIN.	MAX.
80' - 1"	- -	7' - 0"	5' - 0"	80' - 0"	120' - 0"
60' - 1"	80' - 0"	8' - 0"	6' - 0"	60' - 0"	80' - 0"
40' - 1"	60' - 0"	9' - 0"	7' - 0"	40' - 0"	60' - 0"
0	40' - 0"	CONTACT BRIDGE OFFICE			

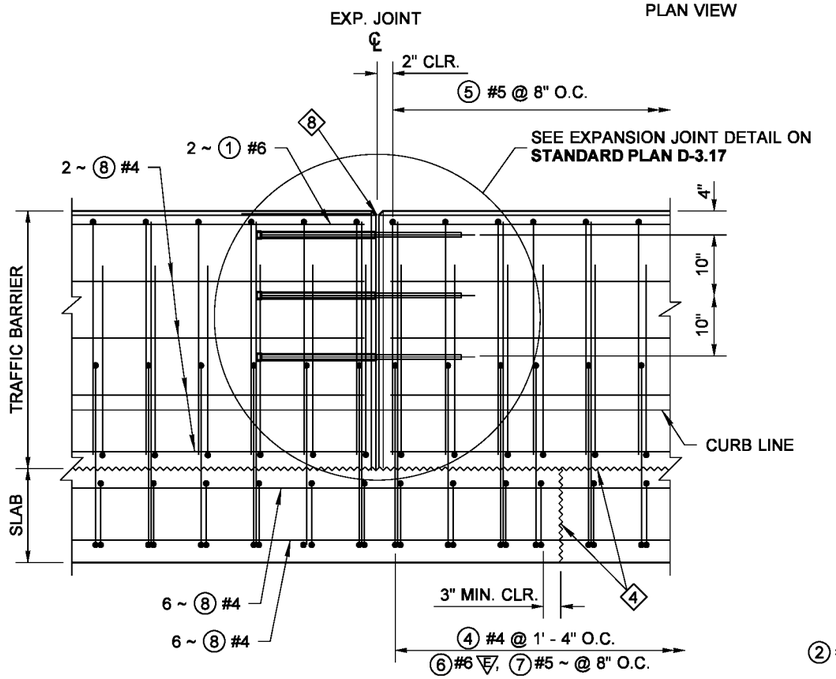

ELEVATION

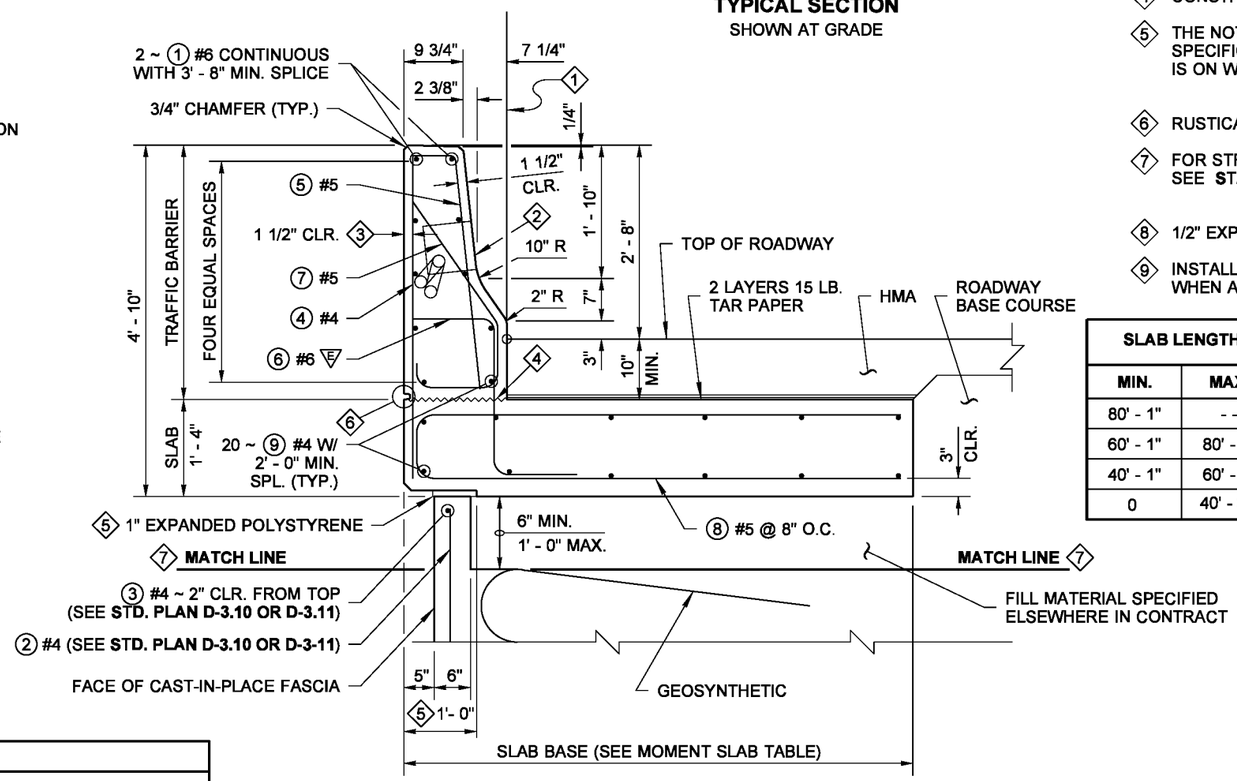

TYPICAL SECTION
SHOWN ON WALL

REINFORCING STEEL BENDING DIAGRAM

ALL REINFORCING BARS SHOWN ON THIS PLAN SHALL BE AASHTO M 31 UNLESS OTHERWISE NOTED.

ALL DIMENSIONS ARE OUT TO OUT

E = EPOXY COATED

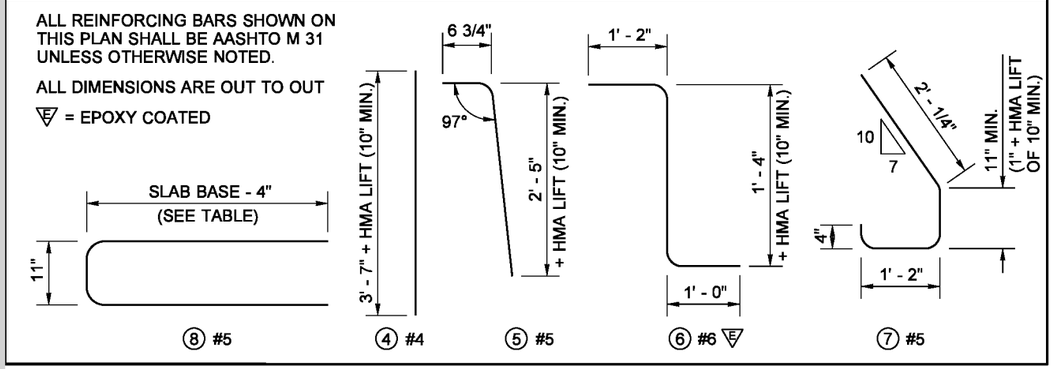

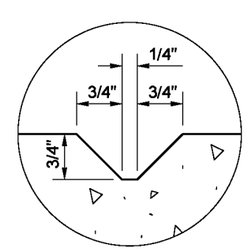

DUMMY JOINT DETAIL

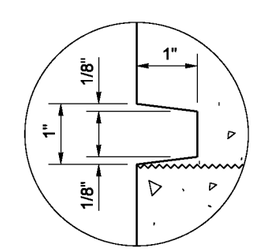

RUSTICATION DETAIL

JUGESH KAPUR
STATE OF WASHINGTON
25400
STRUCTURAL ENGINEER
PROFESSIONAL ENGINEER

NOTE: THIS PLAN IS NOT A LEGAL ENGINEERING DOCUMENT BUT AN ELECTRONIC DUPLICATE. THE ORIGINAL, SIGNED BY THE ENGINEER AND APPROVED FOR PUBLICATION, IS KEPT ON FILE AT THE WASHINGTON STATE DEPARTMENT OF TRANSPORTATION. A COPY MAY BE OBTAINED UPON REQUEST.

PERMANENT GEOSYNTHETIC WALL F - SHAPE BARRIER STANDARD PLAN D-3.16-01

SHEET 1 OF 1 SHEET

APPROVED FOR PUBLICATION

Pasco Bakotich III — STATE DESIGN ENGINEER
05/17/12 — DATE

Washington State Department of Transportation

EFFECTIVE: AUGUST 6, 2012 TO August 4, 2013

EFFECTIVE: AUGUST 6, 2012 TO August 4, 2013
EFFECTIVE: AUGUST 6, 2012 TO August 4, 2013

DRAWN BY: BILL BEKENS

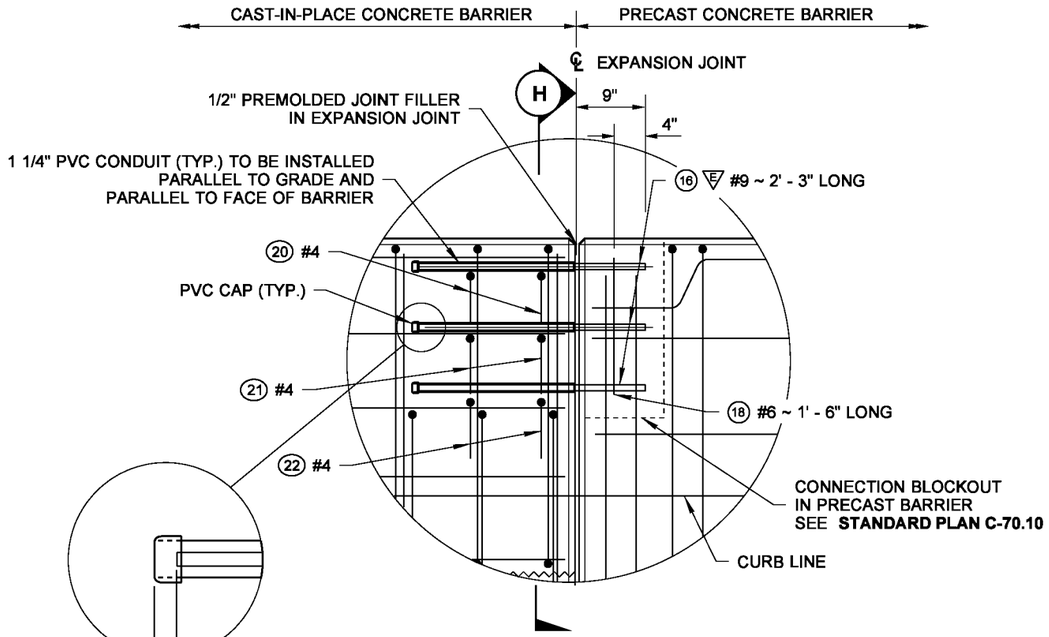

EXPANSION JOINT DETAIL
FOR CAST-IN-PLACE TO PRECAST BARRIER CONNECTION

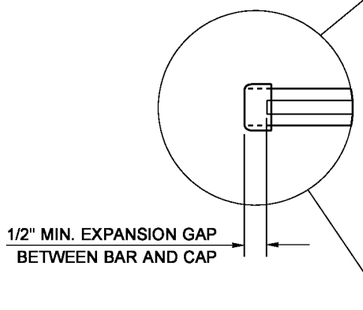

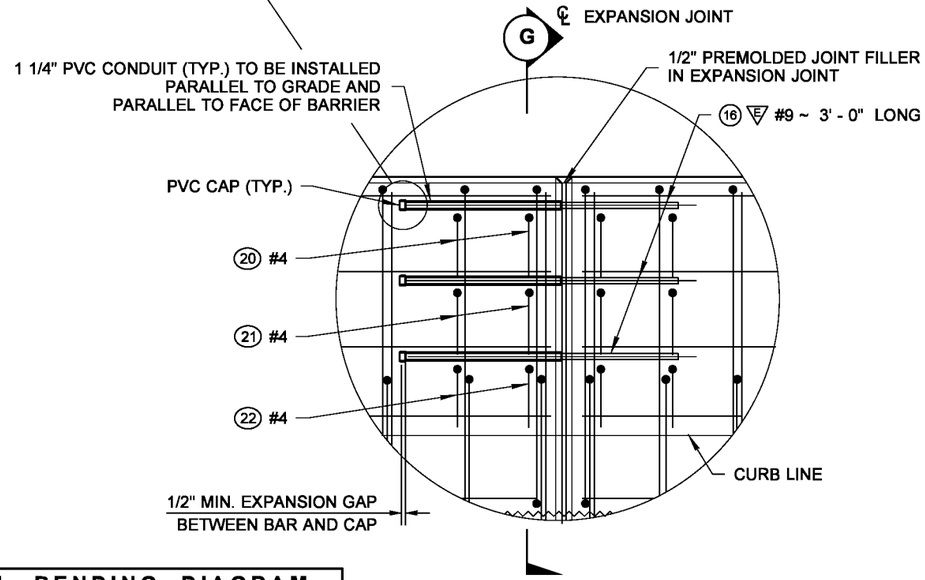

EXPANSION JOINT DETAIL

NOTE

1. Ensure that no concrete enters the PVC conduit during concrete placement.

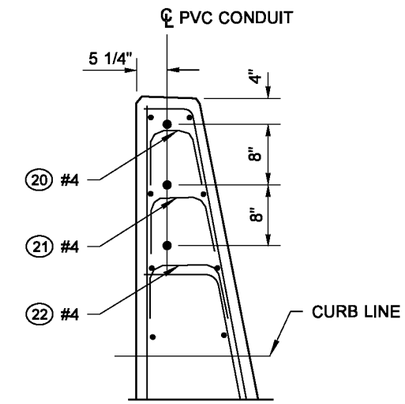

SECTION H

FOR DETAILS NOT SHOWN ~ SEE TYPICAL SECTION
STANDARD PLAN D-3.15 OR D-3.16

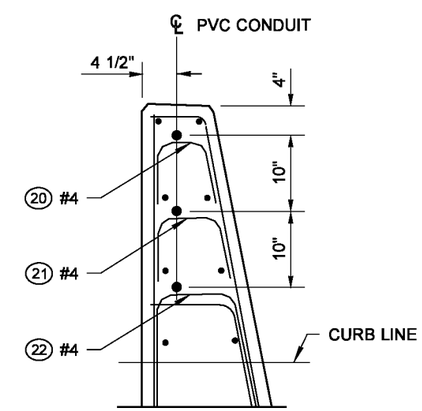

SECTION G

FOR DETAILS NOT SHOWN ~ SEE TYPICAL SECTION
STANDARD PLAN D-3.15 OR D-3.16

REINFORCING STEEL BENDING DIAGRAM

ALL REINFORCING BARS SHOWN ON THIS PLAN SHALL BE AASHTO M 31 UNLESS OTHERWISE NOTED.

ALL DIMENSIONS ARE OUT TO OUT

E = EPOXY COATED

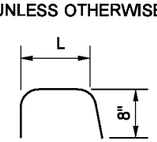

(20) #4 L = 7"
(21) #4 L = 8 7/8"
(22) #4 L = 10 3/4"

NOTE: THIS PLAN IS NOT A LEGAL ENGINEERING DOCUMENT BUT AN ELECTRONIC DUPLICATE. THE ORIGINAL, SIGNED BY THE ENGINEER AND APPROVED FOR PUBLICATION, IS KEPT ON FILE AT THE WASHINGTON STATE DEPARTMENT OF TRANSPORTATION. A COPY MAY BE OBTAINED UPON REQUEST.

PERMANENT GEOSYNTHETIC WALL EXPANSION JOINT DETAILS

STANDARD PLAN D-3.17-01

SHEET 1 OF 1 SHEET

APPROVED FOR PUBLICATION

Pasco Bakotich III — STATE DESIGN ENGINEER
05/17/12 — DATE

Washington State Department of Transportation

EFFECTIVE: AUGUST 6, 2012 TO August 4, 2013
EFFECTIVE: AUGUST 6, 2012 TO August 4, 2013
EFFECTIVE: AUGUST 6, 2012 TO August 4, 2013
EFFECTIVE: AUGUST 6, 2012 TO August 4, 2013

EFFECTIVE: AUGUST 6, 2012 TO August 4, 2013
EFFECTIVE: AUGUST 6, 2012 TO August 4, 2013

NOTES

1. SEE CONTRACT FOR BACKFILL LIMITS AND GEOTEXTILE CLASS.

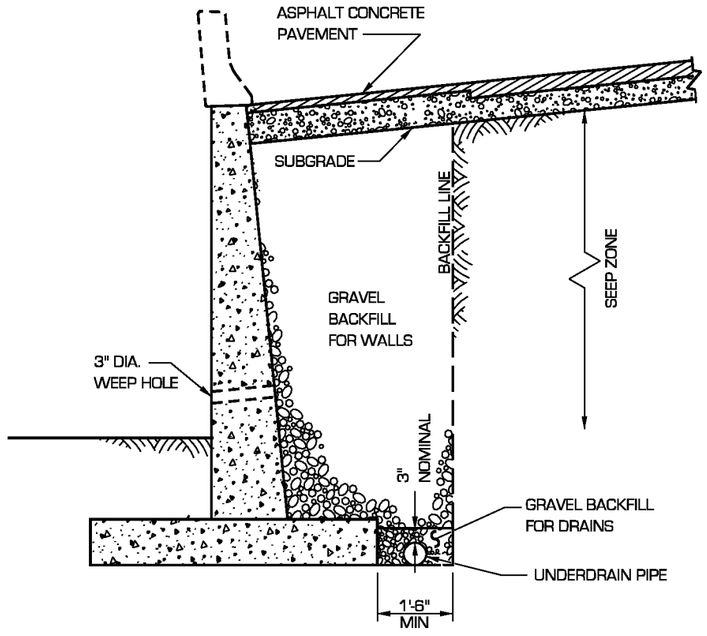

CONDITION A

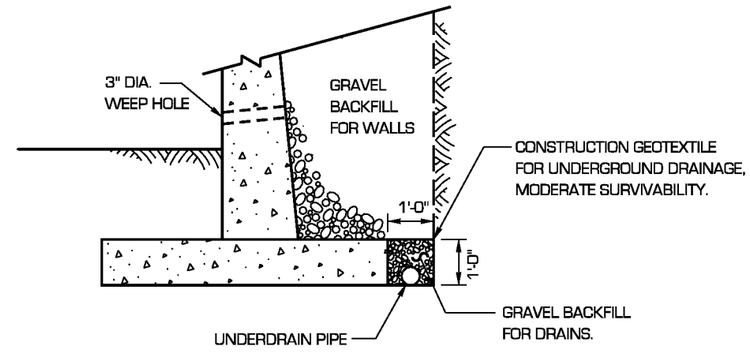

CONDITION A OR CONDITION B WITH GEOTEXTILE

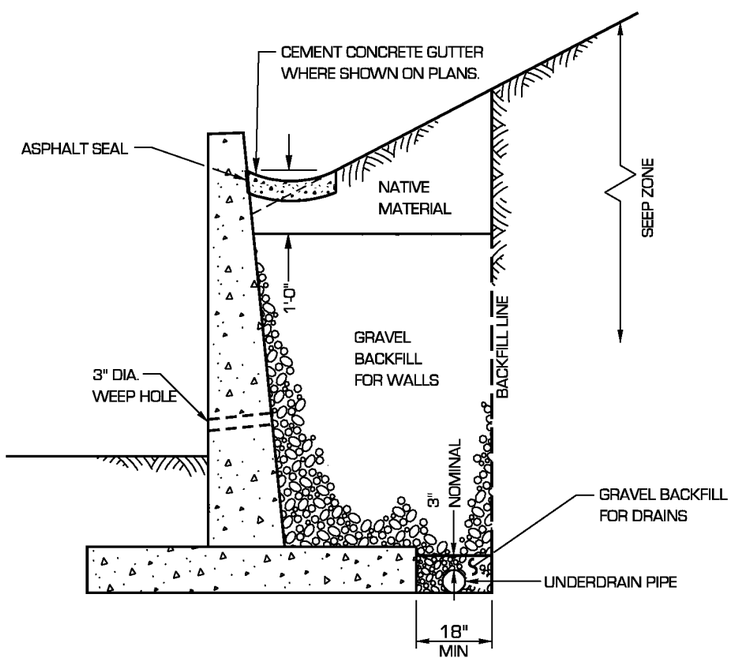

CONDITION B

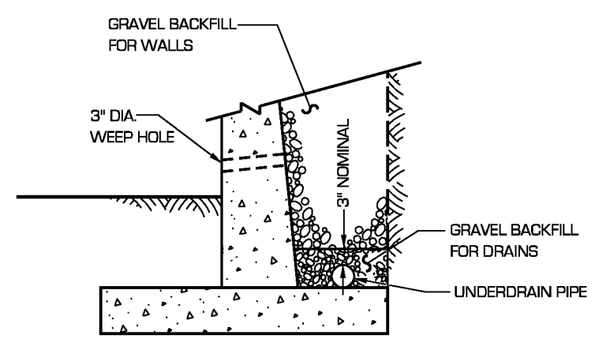

ALTERNATE DETAIL

TYPICAL FOR CONSTRUCTION WITH SHORING.

EXPIRES JANUARY 17, 1999

BACKFILL AND DRAINAGE FOR RETAINING WALLS

STANDARD PLAN D-4

NOTE: THIS PLAN IS NOT A LEGAL ENGINEERING DOCUMENT BUT AN ELECTRONIC DUPLICATE. THE ORIGINAL, SIGNED BY THE ENGINEER AND APPROVED FOR PUBLICATION, IS KEPT ON FILE AT THE WASHINGTON STATE DEPARTMENT OF TRANSPORTATION. A COPY MAY BE OBTAINED UPON REQUEST.

DATE	REVISION	BY
10/98	REMOVED GURADRAIL, CURB & METAL CRIB WALLS.	MT

APPROVED FOR PUBLICATION

Clifford E. Mansfield — *12/11/98*

DEPUTY STATE DESIGN ENGINEER — DATE

WASHINGTON STATE DEPARTMENT OF TRANSPORTATION
OLYMPIA, WASHINGTON

EFFECTIVE: AUGUST 6, 2012 TO August 4, 2013
EFFECTIVE: AUGUST 6, 2012 TO August 4, 2013
EFFECTIVE: AUGUST 6, 2012 TO August 4, 2013
EFFECTIVE: AUGUST 6, 2012 TO August 4, 2013

EFFECTIVE: AUGUST 6, 2012 TO August 4, 2013
EFFECTIVE: AUGUST 6, 2012 TO August 4, 2013

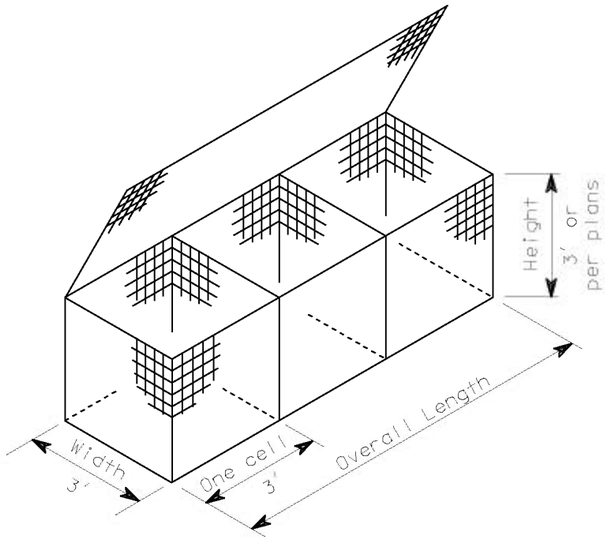

Unit A - 2 cell gabion = 6'
Unit B - 3 cell gabion = 9'
Unit C - 4 cell gabion = 12'

TYPICAL GABION

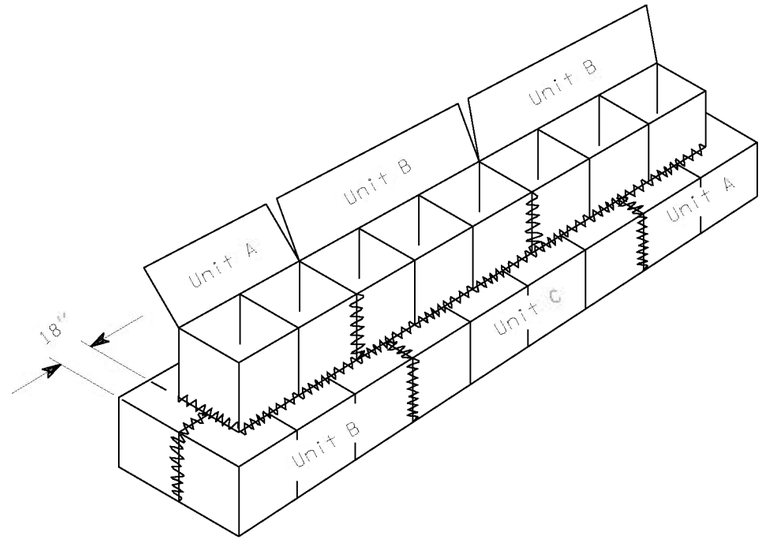

FASTENING ADJACENT BASKETS

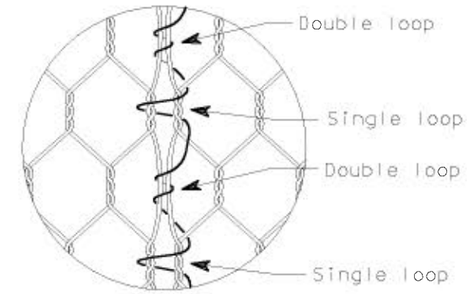

LACING DETAIL

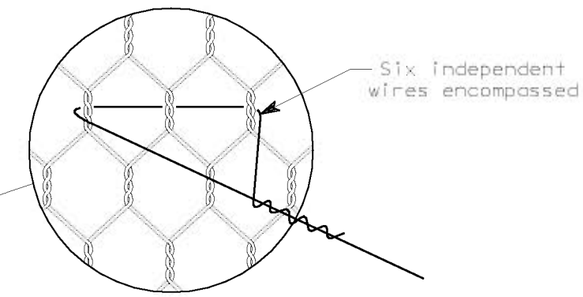

TWISTED FABRIC

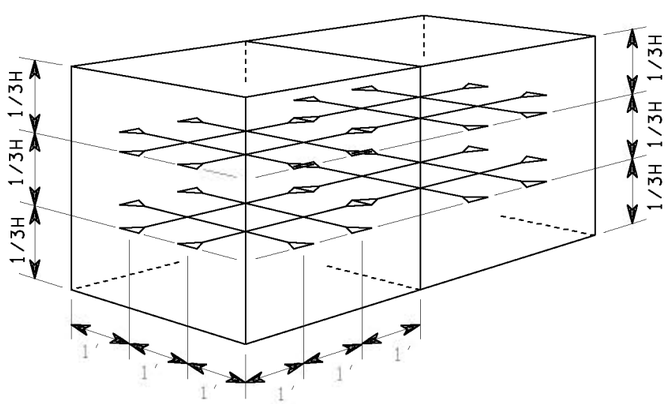

CROSS-CONNECTING WIRE
PLACEMENT, END CELLS

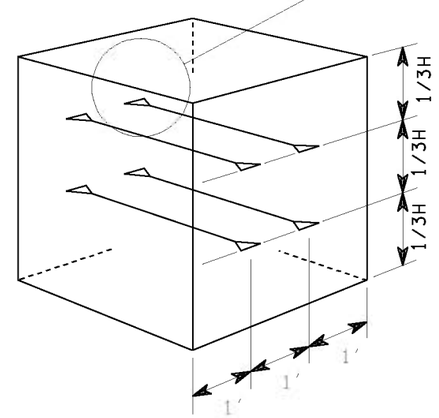

CROSS CONNECTING WIRE
PLACMENT, INTERIOR CELLS
OF FRONT GABIONS

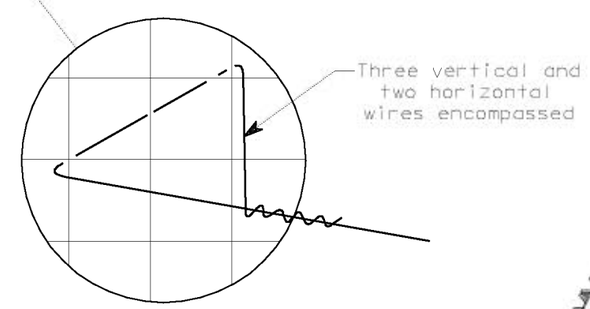

WELDED FABRIC

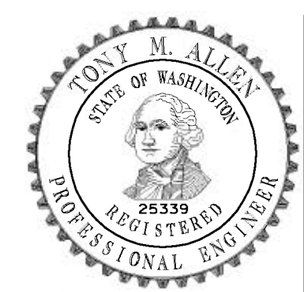

EXPIRES JULY 1, 1999

NOTE: THIS PLAN IS NOT A LEGAL ENGINEERING DOCUMENT BUT AN ELECTRONIC DUPLICATE. THE ORIGINAL, SIGNED BY THE ENGINEER AND APPROVED FOR PUBLICATION, IS KEPT ON FILE AT THE WASHINGTON STATE DEPARTMENT OF TRANSPORTATION. A COPY MAY BE OBTAINED UPON REQUEST.

GABIONS

STANDARD PLAN D-6

APPROVED FOR PUBLICATION

Clifford E. Mansfield 6/19/98

DEPUTY STATE DESIGN ENGINEER DATE

WASHINGTON STATE DEPARTMENT OF TRANSPORTATION
OLYMPIA, WASHINGTON

EFFECTIVE: AUGUST 6, 2012 TO August 4, 2013
EFFECTIVE: AUGUST 6, 2012 TO August 4, 2013
EFFECTIVE: AUGUST 6, 2012 TO August 4, 2013
EFFECTIVE: AUGUST 6, 2012 TO August 4, 2013

EFFECTIVE: AUGUST 6, 2012 TO August 4, 2013
EFFECTIVE: AUGUST 6, 2012 TO August 4, 2013

DRAWN BY: BILL BEKENS

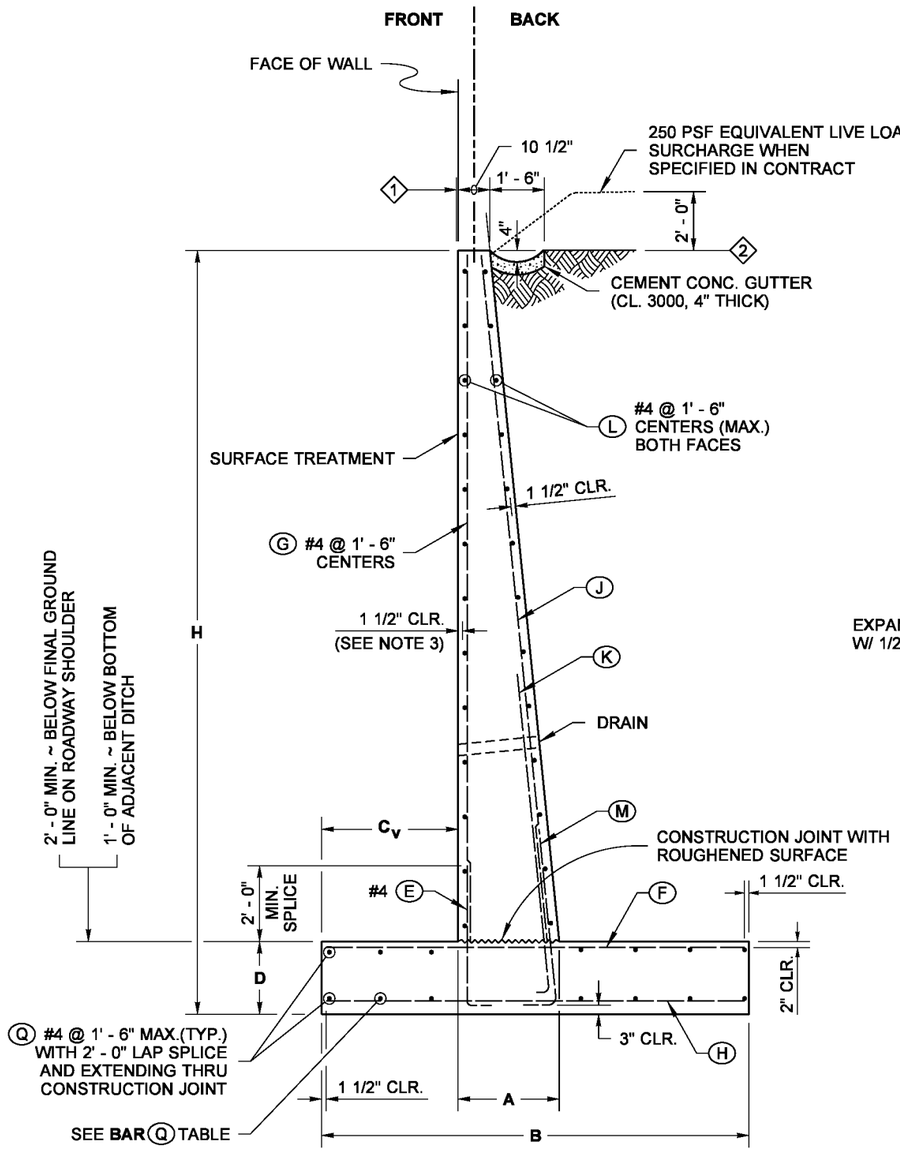

TYPICAL SECTION

BAR Q #4		
LOCATION	WALL HEIGHT (H)	QTY.
TOP OF FOOTING	≤ 16'	5
	16' ≤ 23'	7
	23' ≤ 28'	9
	29' ≤ 35'	11
BOTTOM OF FOOTING	≤ 16'	5
	16' ≤ 23'	7
	23' ≤ 28'	9
	29' ≤ 35'	11

1 OFFSET ~ SET TOP OF WALL BACK:
H ≤ 20' ..... OFFSET = 1/2"
H ≥ 20' ..... OFFSET (inches) = $\frac{H(ft)}{8} - 2$

2 WHEN THE CONTRACT SPECIFIES CABLE FENCE, BACKFILL AND THE CEMENT CONCRETE GUTTER SHALL BE PLACED 6" MIN. FROM THE TOP OF THE WALL

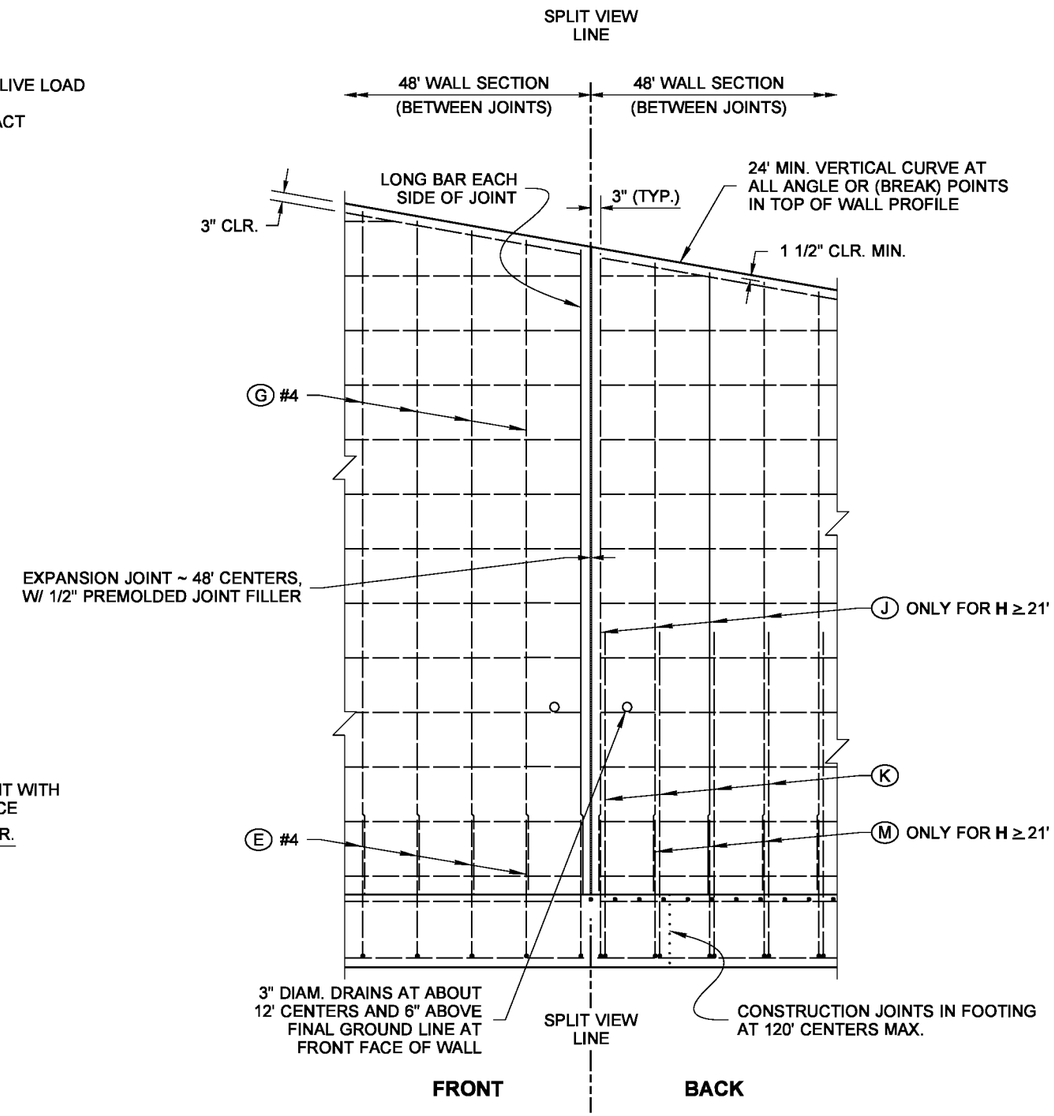

SPLIT ELEVATION VIEW
(SHOWING SEPARATE REBAR LAYERS)

NOTES

1. All concrete shall be Class 4000, except as noted.
2. For backfill requirements, see Standard Plan D-4.
3. When Wall Type 1SW (saltwater) is specified, the concrete cover over steel in the front face and the total wall thickness shall be increased by 1".
4. When Wall Type 1SW (saltwater) is specified, concrete in the table column "Material Quantity" shall be increased by (0.003 x H) CY/LF.
5. Concrete in the 48 foot wall sections shall be placed separately between expansion joints with a minimum 24 hour period before placing concrete in the adjacent section.
6. This wall has been designed in accordance with the requirements of the AASHTO LRFD Bridge Design Specifications 4th Edition 2007 and interims through 2008. The seismic design of these walls has been completed using an effective PGA of 0.51 g.
7. If Traffic Barriers are required, See Standard Plans D-15.10, D-15.20 and D-15.30.

VERTICAL FACE WALL DESIGN WITH A 250 PSF SURCHARGE OR TRAFFIC BARRIER

NOTE: THIS PLAN IS NOT A LEGAL ENGINEERING DOCUMENT BUT AN ELECTRONIC DUPLICATE. THE ORIGINAL, SIGNED BY THE ENGINEER AND APPROVED FOR PUBLICATION, IS KEPT ON FILE AT THE WASHINGTON STATE DEPARTMENT OF TRANSPORTATION. A COPY MAY BE OBTAINED UPON REQUEST.

REINFORCED CONCRETE RETAINING WALL TYPE 1 AND 1SW STANDARD PLAN D-10.10-01

SHEET 1 OF 2 SHEETS

APPROVED FOR PUBLICATION

Pasco Bakotich III — STATE DESIGN ENGINEER
12-02-08 — DATE

Washington State Department of Transportation

EFFECTIVE: AUGUST 6, 2012 TO August 4, 2013
EFFECTIVE: AUGUST 6, 2012 TO August 4, 2013
EFFECTIVE: AUGUST 6, 2012 TO August 4, 2013
EFFECTIVE: AUGUST 6, 2012 TO August 4, 2013

EFFECTIVE: AUGUST 6, 2012 TO August 4, 2013
EFFECTIVE: AUGUST 6, 2012 TO August 4, 2013

WALL HT H	DIMENSIONS				FOOTING REINFORCEMENT																			STEM REINFORCEMENT				MATERIAL QUANTITY		MAXIMUM SOIL PRESSURE (PSF)			
					BAR (E) #4		BAR (F)			BAR (H)			BAR (K)					BAR (M)						BAR (J)			(G) #4						
	B	C_V	D	A	LENGTH	h	SIZE	SPA.	LENGTH	SIZE	SPA.	LENGTH	SIZE	SPA.	LENGTH	h	b	SIZE	SPA.	LENGTH	h	b	SIZE	SPA.	LENGTH	LENGTH	CONC. CY / LF	STEEL LBS / LF	SERVICE	STRENGTH	EXTREME EVENT 1	EXTREME EVENT 2
5'	6' - 6"	2' - 0"	1' - 0"	1' - 4"	3' - 4"	2' - 9"	#4	1' - 0"	6' - 3"	#4	1' - 6"	6' - 3"	#4	1' - 6"	5' - 2"	4' - 7 1/2"	8"	N/A	N/A	N/A	N/A	N/A	N/A	N/A	N/A	4' - 4"	0.40	25.7	915	1260	1131	1623
6'	6' - 6"	2' - 0"	1' - 0"	1' - 5 1/2"	3' - 4"	2' - 9"	#4	1' - 0"	6' - 3"	#4	1' - 6"	6' - 3"	#4	1' - 6"	6' - 2"	5' - 7 1/2"	8"	N/A	N/A	N/A	N/A	N/A	N/A	N/A	N/A	5' - 4"	0.45	28.2	992	1350	1311	1850
7'	6' - 6"	2' - 3"	1' - 0"	1' - 6 1/2"	3' - 4"	2' - 9"	#4	1' - 0"	6' - 3"	#4	1' - 6"	6' - 3"	#4	1' - 6"	7' - 2 1/2"	6' - 7 1/2"	8"	N/A	N/A	N/A	N/A	N/A	N/A	N/A	N/A	6' - 4"	0.51	29.3	1046	1443	1446	2049
8'	6' - 9"	2' - 3"	1' - 0"	1' - 7 1/2"	3' - 4"	2' - 9"	#4	1' - 0"	6' - 6"	#4	1' - 6"	6' - 6"	#4	1' - 0"	8' - 2 1/2"	7' - 7 1/2"	8"	N/A	N/A	N/A	N/A	N/A	N/A	N/A	N/A	7' - 4"	0.58	33.8	1176	1631	1660	2217
9'	7' - 0"	2' - 3"	1' - 0"	1' - 9"	3' - 4"	2' - 9"	#4	1' - 0"	6' - 9"	#4	1' - 6"	6' - 9"	#4	1' - 0"	9' - 2 1/2"	8' - 7 1/2"	8"	N/A	N/A	N/A	N/A	N/A	N/A	N/A	N/A	8' - 4"	0.65	38.1	1318	1836	1904	2402
10'	7' - 3"	2' - 3"	1' - 0"	1' - 10"	3' - 4"	2' - 9"	#4	10"	7' - 0"	#4	1' - 0"	7' - 0"	#4	1' - 0"	10' - 2 1/2"	9' - 7 1/2 "	8"	N/A	N/A	N/A	N/A	N/A	N/A	N/A	N/A	9' - 4"	0.72	43.6	1471	2060	2178	2604
11'	7' - 6"	2' - 3"	1' - 0"	1' - 11 1/2"	3' - 4"	2' - 9"	#4	9"	7' - 3"	#4	1' - 0"	7' - 3"	#4	10"	11' - 2 1/2"	10' - 8"	8"	N/A	N/A	N/A	N/A	N/A	N/A	N/A	N/A	10' - 4"	0.80	48.8	1636	2303	2486	2822
12'	7' - 9"	2' - 6"	1' - 0"	2' - 0 1/2"	3' - 4"	2' - 9"	#4	9"	7' - 6"	#4	10"	7' - 6"	#4	10"	12' - 2 1/2"	11' - 8"	8"	N/A	N/A	N/A	N/A	N/A	N/A	N/A	N/A	11' - 4"	0.88	53.0	1733	2455	2676	2958
13'	8' - 0"	2' - 6"	1' - 0"	2' - 1 1/2"	3' - 4"	2' - 9"	#4	8"	7' - 9"	#4	10"	7' - 9"	#4	8"	13' - 2 1/2"	12' - 8"	8"	N/A	N/A	N/A	N/A	N/A	N/A	N/A	N/A	12' - 4"	0.96	59.7	1915	2728	3041	3202
14'	8' - 3"	2' - 6"	1' - 0"	2' - 3"	3' - 4"	2' - 9"	#4	7"	8' - 0"	#4	8"	8' - 0"	#4	7"	14' - 2 1/2"	13' - 8"	8"	N/A	N/A	N/A	N/A	N/A	N/A	N/A	N/A	13' - 4"	1.05	67.9	2109	3022	3451	3462
15'	8' - 9"	2' - 6"	1' - 0"	2' - 4"	3' - 4"	2' - 9"	#5	8"	8' - 6"	#4	8"	8' - 6"	#4	6"	15' - 3"	14' - 8"	8"	N/A	N/A	N/A	N/A	N/A	N/A	N/A	N/A	14' - 4"	1.16	78.6	2277	3261	3804	3570
16'	9' - 3"	2' - 9"	1' - 3"	2' - 5"	3' - 7"	3' - 0"	#5	8"	9' - 0"	#4	8"	9' - 0"	#5	6"	16' - 4"	15' - 8"	10"	N/A	N/A	N/A	N/A	N/A	N/A	N/A	N/A	15' - 1"	1.33	87.1	2377	3403	4031	3628
17'	9' - 9"	3' - 0"	1' - 6"	2' - 6"	3' - 10"	3' - 3"	#5	8"	9' - 6"	#4	8"	9' - 6"	#5	8"	17' - 4"	16' - 8"	10"	N/A	N/A	N/A	N/A	N/A	N/A	N/A	N/A	15' - 10"	1.51	91.9	2478	3546	4264	3700
18'	10' - 3"	3' - 3"	1' - 6"	2' - 7"	3' - 10"	3' - 3"	#5	8"	10' - 0"	#5	10"	10' - 0"	#5	6"	18' - 4"	17' - 8"	10"	N/A	N/A	N/A	N/A	N/A	N/A	N/A	N/A	16' - 10"	1.63	108.8	2555	3658	4422	3741
19'	10' - 9"	3' - 6"	1' - 9"	2' - 8"	4' - 1"	3' - 6"	#5	8"	10' - 6"	#5	10"	10' - 6"	#6	9"	19' - 5 1/2"	18' - 8 1/2"	1' - 0"	N/A	N/A	N/A	N/A	N/A	N/A	N/A	N/A	17' - 7"	1.83	114.2	2658	3803	4664	3834
20'	11' - 6"	3' - 6"	1' - 9"	2' - 9 1/2"	4' - 1"	3' - 6"	#6	9"	11' - 3"	#5	10"	11' - 3"	#6	7"	20' - 5 1/2"	19' - 8 1/2"	1' - 0"	N/A	N/A	N/A	N/A	N/A	N/A	N/A	N/A	18' - 7"	1.97	137.0	2790	3970	4926	3905
21'	12' - 0"	3' - 9"	2' - 0"	2' - 10"	4' - 4"	3' - 9"	#6	9"	11' - 9"	#5	10"	11' - 9"	#6	1' - 4"	12' - 10 1/2"	12' - 1"	1' - 0"	#6	1' - 4"	5' - 2 1/2"	4' - 4"	1' - 0"	#6	1' - 4"	19' - 6 1/2"	19' - 4"	2.19	130.1	2892	4115	5173	4012
22'	12' - 6"	4' - 0"	2' - 0"	2' - 11 1/2"	4' - 4"	3' - 9"	#6	8"	12' - 3"	#5	8"	12' - 3"	#6	1' - 4"	14' - 2 1/2"	13' - 5"	1' - 0"	#6	1' - 4"	5' - 2 1/2"	4' - 4"	1' - 0"	#6	1' - 4"	20' - 6 1/2"	20' - 4"	2.34	143.3	2970	4227	5338	4083
23'	13' - 0"	4' - 3"	2' - 3"	3' - 0 1/2"	4' - 7"	4' - 0"	#6	9"	12' - 9"	#5	8"	12' - 9"	#6	1' - 4"	15' - 6 1/2"	14' - 9"	1' - 0"	#6	1' - 4"	5' - 5 1/2"	4' - 7"	1' - 0"	#6	1' - 4"	21' - 3 1/2"	21' - 1"	2.58	146.6	3074	4373	5592	4198
24'	13' - 9"	4' - 3"	2' - 3"	3' - 1 1/2"	4' - 7"	4' - 0"	#6	7"	13' - 6"	#5	7"	13' - 6"	#6	1' - 4"	16' - 10"	16' - 0 1/2"	1' - 0"	#6	1' - 4"	5' - 5 1/2"	4' - 7"	1' - 0"	#6	1' - 4"	22' - 3 1/2"	22' - 1"	2.75	166.0	3207	4544	5860	4311
25'	14' - 3"	4' - 6"	2' - 6"	3' - 2 1/2"	4' - 10"	4' - 3"	#6	7"	14' - 0"	#6	10"	14' - 0"	#6	1' - 4"	18' - 1 1/2"	17' - 4"	1' - 0"	#6	1' - 4"	5' - 8 1/2"	4' - 10"	1' - 0"	#6	1' - 4"	23' - 0 1/2"	22' - 10"	3.01	172.9	3310	4689	6120	4431
26'	14' - 9"	4' - 9"	2' - 6"	3' - 3 1/2"	4' - 10"	4' - 3"	#6	6"	14' - 6"	#6	9"	14' - 6"	#6	1' - 4"	19' - 4 1/2"	18' - 7 1/2"	1' - 0"	#6	1' - 4"	5' - 8 1/2"	4' - 10"	1' - 0"	#6	1' - 4"	24' - 0 1/2"	23' - 10"	3.18	188.8	3388	4802	6290	4515
27'	15' - 6"	5' - 0"	2' - 9"	3' - 4 1/2"	5' - 1"	4' - 6"	#6	6"	15' - 3"	#6	9"	15' - 3"	#6	1' - 0"	18' - 7"	17' - 9 1/2"	1' - 0"	#6	1' - 0"	5' - 11 1/2"	5' - 1"	1' - 0"	#6	1' - 0"	24' - 9 1/2"	24' - 7"	3.48	213.2	3467	4897	6454	4587
28'	16' - 0"	5' - 3"	3' - 0"	3' - 5 1/2"	5' - 4"	4' - 9"	#6	6"	15' - 9"	#6	8"	15' - 9"	#6	10"	18' - 4"	17' - 6 1/2"	1' - 0"	#6	10"	6' - 2 1/2"	5' - 4"	1' - 0"	#6	10"	25' - 6 1/2"	25' - 4"	3.77	237.8	3571	5043	6723	4713
29'	16' - 9"	5' - 6"	3' - 3"	3' - 6 1/2"	5' - 7"	5' - 0"	#7	8"	16' - 6"	#6	8"	16' - 6"	#8	1' - 4"	19' - 11 1/2"	18' - 11"	1' - 3"	#8	1' - 4"	8' - 4 1/2"	7' - 2 1/2"	1' - 3"	#8	1' - 4"	26' - 4"	26' - 1"	4.11	265.1	3653	5143	6898	4796
30'	17' - 3"	5' - 9"	3' - 3"	3' - 7 1/2"	5' - 7"	5' - 0"	#7	7"	17' - 0"	#6	7"	17' - 0"	#8	1' - 4"	21' - 3 1/2"	20' - 3"	1' - 3"	#8	1' - 4"	8' - 4 1/2"	7' - 2 1/2"	1' - 3"	#8	1' - 4"	27' - 4"	27' - 1"	4.30	287.4	3733	5257	7075	4888
31'	18' - 0"	6' - 0"	3' - 6"	3' - 8 1/2"	5' - 10"	5' - 3"	#7	7"	17' - 9"	#6	7"	17' - 9"	#8	1' - 4"	22' - 7"	21' - 6 1/2"	1' - 3"	#8	1' - 4"	8' - 7 1/2"	7' - 5 1/2"	1' - 3"	#8	1' - 4"	28' - 1"	27' - 10"	4.65	298.5	3817	5362	7258	4979
32'	18' - 6"	6' - 3"	3' - 9"	3' - 9 1/2"	6' - 1"	5' - 6"	#7	7"	18' - 3"	#6	7"	18' - 3"	#8	1' - 2"	22' - 7 1/2"	21' - 7"	1' - 3"	#8	1' - 2"	8' - 10 1/2"	7' - 8 1/2"	1' - 3"	#8	1' - 2"	28' - 10"	28' - 7"	4.99	322.9	3923	5509	7540	5111
33'	19' - 3"	6' - 6"	4' - 0"	3' - 10"	6' - 4"	5' - 9"	#7	7"	19' - 0"	#6	7"	19' - 0"	#8	1' - 0"	22' - 4 1/2"	21' - 4"	1' - 3"	#8	1' - 0"	9' - 1 1/2"	7' - 11 1/2"	1' - 3"	#8	1' - 0"	29' - 7"	29' - 4"	5.38	354.3	4009	5618	7733	5208
34'	20' - 0"	6' - 9"	4' - 3"	3' - 11"	6' - 7"	6' - 0"	#7	7"	19' - 9"	#6	7"	19' - 9"	#9	10"	19' - 2 1/2"	17' - 11 1/2"	1' - 6"	#9	10"	10' - 8 1/2"	9' - 4"	1' - 6"	#9	10"	30' - 4"	30' - 1"	5.78	444.8	4097	5729	7933	5308
35'	20' - 6"	7' - 0"	4' - 6"	4' - 0"	6' - 10"	6' - 3"	#7	7"	20' - 3"	#6	7"	20' - 3"	#10	1' - 0"	21' - 1 1/2"	19' - 9"	1' - 8"	#10	1' - 0"	12' - 4"	10' - 10"	1' - 8"	#10	1' - 0"	31' - 1"	30' - 10"	6.16	480.4	4203	5877	8224	5442

REINFORCEMENT NOTES

(1) IF TRAFFIC BARRIER IS USED, ADD 0.100 CY/LF OF CONCRETE CLASS 4000 FOR BARRIER ALTERNATE 1. ADD 0.123 CY/LF OF CONCRETE CLASS 4000 FOR BARRIER ALTERNATE 2. SEE STANDARD PLAN D-15.10

(2) ADD 28 LB/LF OF REINFORCING STEEL FOR BARRIER ALTERNATE 1 OR 19 LB/LF OF REINFORCING STEEL FOR BARRIER ALTERNATE 2. SEE STANDARD PLAN D-15.10

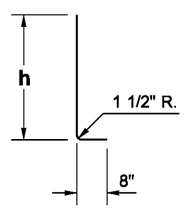

BAR (E)
@ 1' - 6" CENTERS

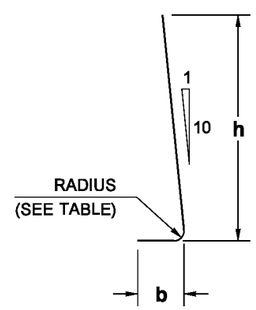

BAR	RADIUS
#4	1 1/2"
#5	1 7/8"
#6	2 1/4"
#7	2 5/8"
#8	3"
#9	4 3/4"
#10	5 3/8"
#11	6"

BARS (K) AND (M)

BAR	MIN. SPLICE
#4	2' - 0"
#5	2' - 0"
#6	2' - 0"
#7	2' - 6"
#8	3' - 3"
#9	4' - 2"
#10	5' - 3"

VERTICAL FACE WALL DESIGN WITH A 250 PSF SURCHARGE OR TRAFFIC BARRIER

NOTE: THIS PLAN IS NOT A LEGAL ENGINEERING DOCUMENT BUT AN ELECTRONIC DUPLICATE. THE ORIGINAL, SIGNED BY THE ENGINEER AND APPROVED FOR PUBLICATION, IS KEPT ON FILE AT THE WASHINGTON STATE DEPARTMENT OF TRANSPORTATION. A COPY MAY BE OBTAINED UPON REQUEST.

REINFORCED CONCRETE RETAINING WALL TYPE 1 AND 1SW

STANDARD PLAN D-10.10-01

SHEET 2 OF 2 SHEETS

APPROVED FOR PUBLICATION

Pasco Bakotich III — STATE DESIGN ENGINEER
12-02-08 — DATE

Washington State Department of Transportation

DRAWN BY: BILL BERENS

EFFECTIVE: AUGUST 6, 2012 TO August 4, 2013
EFFECTIVE: AUGUST 6, 2012 TO August 4, 2013
EFFECTIVE: AUGUST 6, 2012 TO August 4, 2013
EFFECTIVE: AUGUST 6, 2012 TO August 4, 2013

EFFECTIVE: AUGUST 6, 2012 TO August 4, 2013
EFFECTIVE: AUGUST 6, 2012 TO August 4, 2013

DRAWN BY: BILL BEKENS

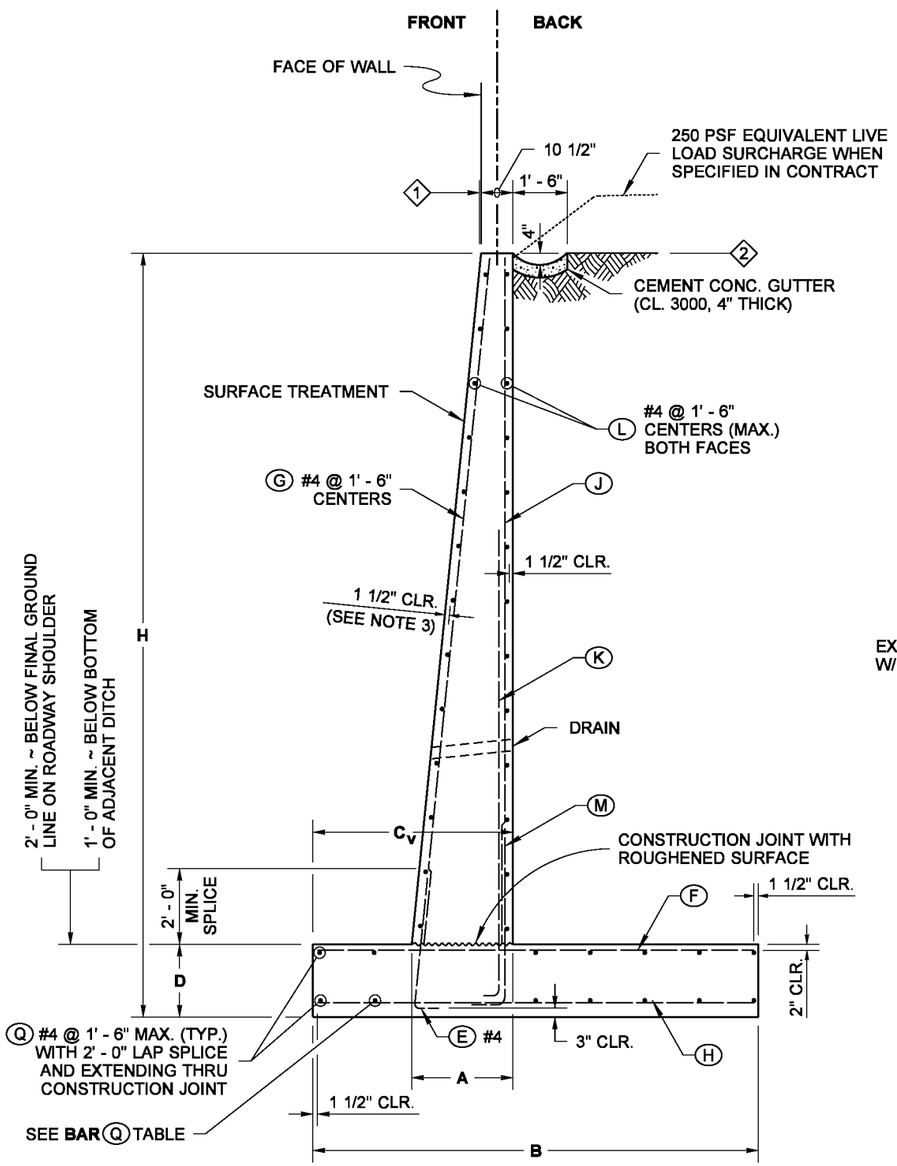

TYPICAL SECTION

BAR Q #4		
LOCATION	WALL HEIGHT (H)	QTY.
TOP OF FOOTING	≤ 12'	5
	13' ≤ 16'	6
	17' ≤ 22'	7
	23' ≤ 28'	9
	29' ≤ 35'	11
BOTTOM OF FOOTING	≤ 12'	5
	13' ≤ 16'	6
	17' ≤ 22'	7
	23' ≤ 28'	9
	29' ≤ 35'	11

1. OFFSET ~ SET TOP OF WALL BACK:
   H ≤ 20' ..... OFFSET = 1/2"
   H ≥ 20' ..... OFFSET (inches) = $\frac{H(ft)}{8} - 2$

2. WHEN THE CONTRACT SPECIFIES CABLE FENCE, BACKFILL AND THE CEMENT CONCRETE GUTTER SHALL BE PLACED 6" MIN. FROM THE TOP OF THE WALL

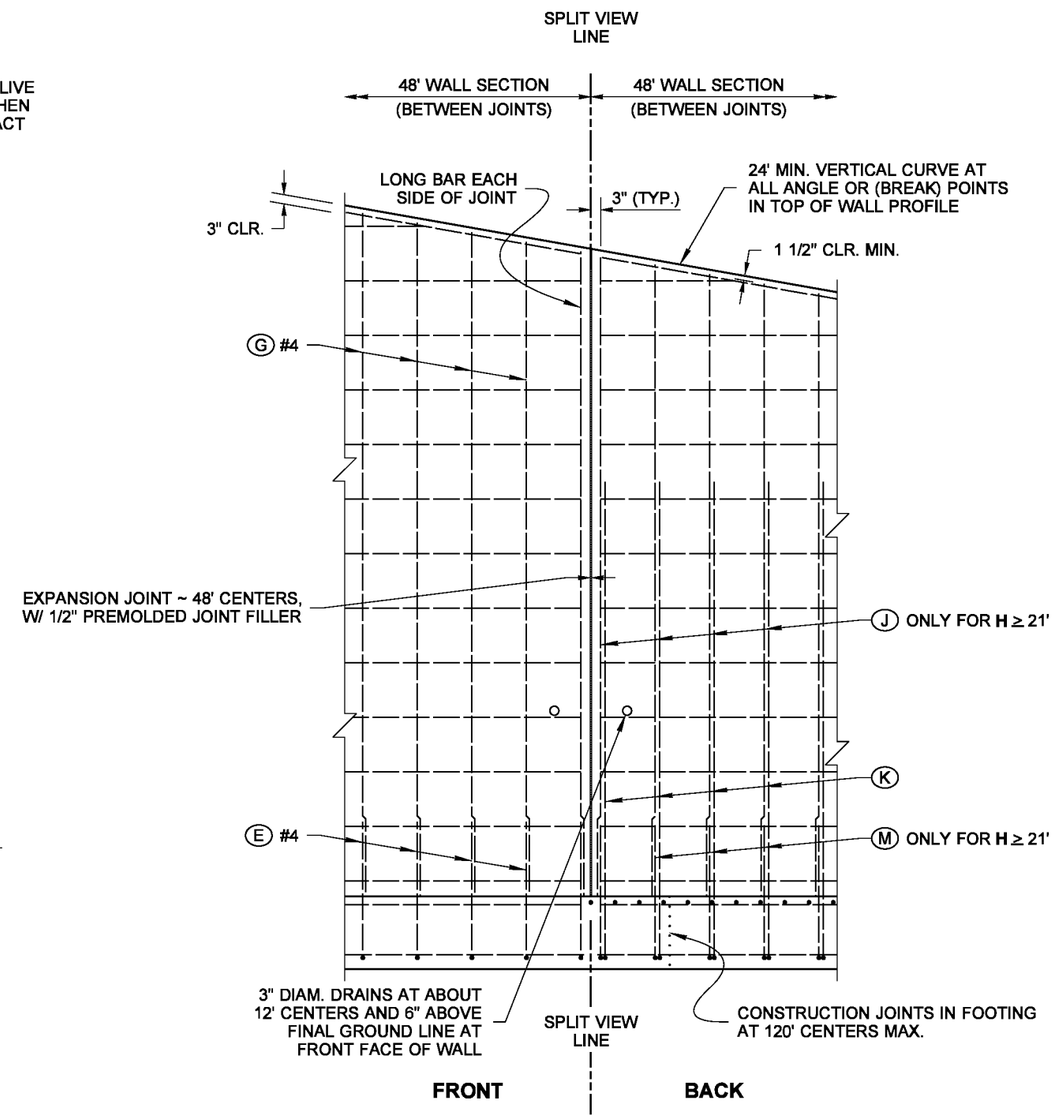

SPLIT ELEVATION VIEW
(SHOWING SEPARATE REBAR LAYERS)

NOTES

1. All concrete shall be Class 4000, except as noted.
2. For backfill requirements, see Standard Plan D-4.
3. When Wall Type 2SW (saltwater) is specified, the concrete cover over steel in the front face and the total wall thickness shall be increased by 1".
4. When Wall Type 2SW (saltwater) is specified, concrete in the table column "Material Quantity" shall be increased by (0.003 x H) CY/LF.
5. Concrete in the 48 foot wall sections shall be placed separately between expansion joints with a minimum 24 hour period before placing concrete in the adjacent section.
6. This wall has been designed in accordance with the requirements of the AASHTO LRFD Bridge Design Specifications 4th Edition 2007 and interims through 2008. The seismic design of these walls has been completed using an effective PGA of 0.51 g.
7. If Traffic Barriers are required, see Standard Plans D-15.10, D-15.20 and D-15.30.

SLOPING FACE WALL DESIGN WITH A 250 PSF SURCHARGE OR TRAFFIC BARRIER

NOTE: THIS PLAN IS NOT A LEGAL ENGINEERING DOCUMENT BUT AN ELECTRONIC DUPLICATE. THE ORIGINAL, SIGNED BY THE ENGINEER AND APPROVED FOR PUBLICATION, IS KEPT ON FILE AT THE WASHINGTON STATE DEPARTMENT OF TRANSPORTATION. A COPY MAY BE OBTAINED UPON REQUEST.

REINFORCED CONCRETE RETAINING WALL TYPE 2 AND 2SW STANDARD PLAN D-10.15-01

SHEET 1 OF 2 SHEETS

APPROVED FOR PUBLICATION

Pasco Bakotich III — STATE DESIGN ENGINEER
12-02-08 — DATE

Washington State Department of Transportation

EFFECTIVE: AUGUST 6, 2012 TO August 4, 2013
EFFECTIVE: AUGUST 6, 2012 TO August 4, 2013
EFFECTIVE: AUGUST 6, 2012 TO August 4, 2013
EFFECTIVE: AUGUST 6, 2012 TO August 4, 2013

EFFECTIVE: AUGUST 6, 2012 TO August 4, 2013

WALL HT H	DIMENSIONS				FOOTING REINFORCEMENT																		STEM REINFORCEMENT				MATERIAL QUANTITY		MAXIMUM SOIL PRESSURE (PSF)			
					BAR (E) #4		BAR (F)			BAR (H)			BAR (K)					BAR (M)					BAR (J)			(G) #4						
	B	C_V	D	A	LENGTH	h	SIZE	SPA.	LENGTH	SIZE	SPA.	LENGTH	SIZE	SPA.	LENGTH	h	b	SIZE	SPA.	LENGTH	h	b	SIZE	SPA.	LENGTH	LENGTH	CONC. CY / LF	STEEL LBS / LF	SERVICE	STRENGTH	EXTREME EVENT 1	EXTREME EVENT 2
5'	6' - 9"	3' - 0"	1' - 0"	1' - 4"	2' - 7"	2' - 0"	#4	1' - 6"	6' - 6"	#4	1' - 6"	6' - 6"	#4	1' - 6"	5' - 2"	4' - 7"	8"	N/A	N/A	N/A	N/A	N/A	N/A	N/A	N/A	3' - 10 1/2"	0.41	23.8	900	1244	1163	1620
6'	6' - 9"	3' - 0"	1' - 0"	1' - 5 1/2"	2' - 7"	2' - 0"	#4	1' - 6"	6' - 6"	#4	1' - 6"	6' - 6"	#4	1' - 6"	6' - 2"	5' - 7"	8"	N/A	N/A	N/A	N/A	N/A	N/A	N/A	N/A	4' - 10 1/2"	0.46	26.3	987	1351	1380	1878
7'	7' - 0"	3' - 3"	1' - 0"	1' - 6 1/2"	2' - 7"	2' - 0"	#4	1' - 6"	6' - 9"	#4	1' - 6"	6' - 9"	#4	1' - 6"	7' - 2"	6' - 7"	8"	N/A	N/A	N/A	N/A	N/A	N/A	N/A	N/A	5' - 10 1/2"	0.53	28.9	1076	1476	1548	2006
8'	7' - 0"	3' - 3"	1' - 0"	1' - 7 1/2"	2' - 7"	2' - 0"	#4	1' - 0"	6' - 9"	#4	1' - 6"	6' - 9"	#4	1' - 0"	8' - 2"	7' - 7"	8"	N/A	N/A	N/A	N/A	N/A	N/A	N/A	N/A	6' - 10 1/2"	0.58	34.7	1225	1687	1837	2332
9'	7' - 3"	3' - 6"	1' - 0"	1' - 9"	2' - 7"	2' - 0"	#4	1' - 0"	7' - 0"	#4	1' - 6"	7' - 0"	#4	1' - 0"	9' - 2"	8' - 7"	8"	N/A	N/A	N/A	N/A	N/A	N/A	N/A	N/A	7' - 10 1/2"	0.65	37.7	1325	1833	2043	2486
10'	7' - 6"	3' - 6"	1' - 0"	1' - 10"	2' - 7"	2' - 0"	#4	9"	7' - 3"	#4	1' - 6"	7' - 3"	#4	1' - 0"	10' - 2"	9' - 7"	8"	N/A	N/A	N/A	N/A	N/A	N/A	N/A	N/A	8' - 10 1/2"	0.73	42.2	1493	2075	2385	2744
11'	7' - 9"	3' - 6"	1' - 0"	1' - 11 1/2"	2' - 7"	2' - 0"	#4	7"	7' - 6"	#4	1' - 6"	7' - 6"	#4	10"	11' - 2"	10' - 7"	8"	N/A	N/A	N/A	N/A	N/A	N/A	N/A	N/A	9' - 10 1/2"	0.81	48.6	1677	2341	2780	3027
12'	8' - 0"	3' - 9"	1' - 0"	2' - 0 1/2"	2' - 7"	2' - 0"	#5	9"	7' - 9"	#4	1' - 6"	7' - 9"	#4	9"	12' - 2"	11' - 7"	8"	N/A	N/A	N/A	N/A	N/A	N/A	N/A	N/A	10' - 11"	0.89	53.8	1797	2522	3066	3221
13'	8' - 3"	3' - 9"	1' - 0"	2' - 1 1/2"	2' - 7"	2' - 0"	#5	7"	8' - 0"	#4	1' - 6"	8' - 0"	#4	8"	13' - 2"	12' - 7"	8"	N/A	N/A	N/A	N/A	N/A	N/A	N/A	N/A	11' - 11"	0.97	62.7	2004	2826	3563	3545
14'	8' - 9"	3' - 9"	1' - 0"	2' - 3"	2' - 7"	2' - 0"	#5	5"	8' - 6"	#4	1' - 6"	8' - 6"	#4	7"	14' - 2"	13' - 7"	8"	N/A	N/A	N/A	N/A	N/A	N/A	N/A	N/A	12' - 11"	1.07	74.4	2190	3089	3977	3706
15'	9' - 6"	3' - 9"	1' - 3"	2' - 4"	2' - 10"	2' - 3"	#5	5"	9' - 3"	#4	1' - 6"	9' - 3"	#4	7"	15' - 2"	14' - 7"	8"	N/A	N/A	N/A	N/A	N/A	N/A	N/A	N/A	13' - 8"	1.25	80.4	2359	3313	4280	3766
16'	10' - 0"	4' - 0"	1' - 3"	2' - 5"	2' - 10"	2' - 3"	#6	6"	9' - 9"	#4	1' - 6"	9' - 9"	#4	6"	16' - 2"	15' - 7"	8"	N/A	N/A	N/A	N/A	N/A	N/A	N/A	N/A	14' - 8"	1.36	95.6	2459	3455	4496	3845
17'	10' - 6"	4' - 3"	1' - 6"	2' - 6"	3' - 1"	2' - 6"	#6	6"	10' - 3"	#4	1' - 6"	10' - 3"	#4	5"	17' - 2"	16' - 7"	8"	N/A	N/A	N/A	N/A	N/A	N/A	N/A	N/A	15' - 5"	1.55	103.9	2572	3615	4733	3951
18'	11' - 0"	4' - 6"	1' - 6"	2' - 7"	3' - 1"	2' - 6"	#6	5"	10' - 9"	#4	1' - 0"	10' - 9"	#5	7"	18' - 3"	17' - 7"	10"	N/A	N/A	N/A	N/A	N/A	N/A	N/A	N/A	16' - 5"	1.67	121.6	2671	3756	4951	4047
19'	11' - 6"	5' - 0"	1' - 9"	2' - 8"	3' - 4"	2' - 9"	#6	6"	11' - 3"	#4	1' - 0"	11' - 3"	#5	6"	19' - 3"	18' - 7"	10"	N/A	N/A	N/A	N/A	N/A	N/A	N/A	N/A	17' - 2"	1.87	126.5	2701	3800	4989	4051
20'	12' - 3"	5' - 0"	1' - 9"	2' - 9 1/2"	3' - 4"	2' - 9"	#6	5"	12' - 0"	#4	1' - 0"	12' - 0"	#5	5"	20' - 3"	19' - 7"	10"	N/A	N/A	N/A	N/A	N/A	N/A	N/A	N/A	18' - 2"	2.02	149.0	2855	4005	5275	4186
21'	12' - 9"	5' - 6"	2' - 0"	2' - 10"	3' - 7"	3' - 0"	#7	7"	12' - 6"	#4	11"	12' - 6"	#6	1' - 4"	10' - 4 1/2"	9' - 7"	12"	#6	1' - 4"	5' - 2"	4' - 4"	11"	#6	1' - 4"	19' - 4"	18' - 11 1/2"	2.25	141.1	2888	4052	5322	4207
22'	13' - 3"	5' - 9"	2' - 0"	2' - 11 1/2"	3' - 7"	3' - 0"	#7	6"	13' - 0"	#4	10"	13' - 0"	#6	1' - 4"	11' - 5"	10' - 7 1/2"	12"	#6	1' - 4"	5' - 2"	4' - 4"	11"	#6	1' - 4"	20' - 4"	19' - 11 1/2"	2.39	157.4	2987	4193	5540	4323
23'	13' - 9"	6' - 0"	2' - 3"	3' - 0 1/2"	3' - 10"	3' - 3"	#7	6"	13' - 6"	#4	10"	13' - 6"	#6	1' - 4"	12' - 6 1/2"	11' - 9"	12"	#6	1' - 4"	5' - 5"	4' - 7"	11"	#6	1' - 4"	21' - 1"	20' - 8 1/2"	2.64	164.2	3103	4356	5786	4462
24'	14' - 3"	6' - 3"	2' - 3"	3' - 1 1/2"	3' - 10"	3' - 3"	#7	6"	14' - 0"	#4	8"	14' - 0"	#6	1' - 4"	13' - 7"	12' - 9 1/2"	12"	#6	1' - 4"	5' - 5"	4' - 7"	11"	#6	1' - 4"	22' - 1"	21' - 8 1/2"	2.79	175.1	3202	4497	6004	4582
25'	14' - 9"	6' - 6"	2' - 6"	3' - 2 1/2"	4' - 1"	3' - 6"	#7	6"	14' - 6"	#4	8"	14' - 6"	#6	1' - 4"	14' - 8"	13' - 10 1/2"	12"	#6	1' - 4"	5' - 8"	4' - 10"	11"	#6	1' - 4"	22' - 10"	22' - 5 1/2"	3.06	180.6	3318	4660	6252	4725
26'	15' - 6"	6' - 9"	2' - 6"	3' - 3 1/2"	4' - 1"	3' - 6"	#8	7"	15' - 3"	#4	7"	15' - 3"	#6	1' - 4"	15' - 8 1/2"	14' - 11"	12"	#6	1' - 4"	5' - 8"	4' - 10"	11"	#6	1' - 4"	23' - 10"	23' - 5 1/2"	3.24	198.4	3391	4753	6346	4785
27'	16' - 0"	7' - 0"	2' - 9"	3' - 4 1/2"	4' - 4"	3' - 9"	#8	7"	15' - 9"	#4	7"	15' - 9"	#6	1' - 2"	16' - 9 1/2"	16' - 0"	12"	#6	1' - 2"	5' - 11"	5' - 1"	11"	#6	1' - 2"	24' - 7"	24' - 2 1/2"	3.53	214.5	3508	4916	6593	4933
28'	16' - 6"	7' - 3"	3' - 0"	3' - 5 1/2"	4' - 7"	4' - 0"	#8	7"	16' - 3"	#4	7"	16' - 3"	#6	10"	15' - 11"	15' - 1 1/2"	12"	#6	10"	6' - 2"	5' - 4"	11"	#6	10"	25' - 4"	24' - 11 1/2"	3.83	243.9	3626	5079	6842	5082
29'	17' - 0"	7' - 6"	3' - 3"	3' - 6 1/2"	4' - 10"	4' - 3"	#8	7"	16' - 9"	#4	6"	16' - 9"	#8	1' - 4"	16' - 0"	15' - 0"	1' - 3"	#8	1' - 4"	8' - 4"	7' - 2"	1' - 3"	#8	1' - 4"	26' - 1"	25' - 8 1/2"	4.14	267.4	3743	5243	7092	5232
30'	17' - 6"	8' - 0"	3' - 3"	3' - 7 1/2"	4' - 10"	4' - 3"	#8	6"	17' - 3"	#5	9"	17' - 3"	#8	1' - 4"	17' - 0 1/2"	16' - 0"	1' - 3"	#8	1' - 4"	8' - 4"	7' - 2"	1' - 3"	#8	1' - 4"	27' - 1"	26' - 9"	4.33	290.5	3765	5279	7128	5258
31'	18' - 0"	8' - 3"	3' - 6"	3' - 8 1/2"	5' - 1"	4' - 6"	#8	6"	17' - 9"	#5	8"	17' - 9"	#8	1' - 4"	18' - 1 1/2"	17' - 1"	1' - 3"	#8	1' - 4"	8' - 7"	7' - 5 1/2"	1' - 3"	#8	1' - 4"	27' - 10"	27' - 6"	4.65	303.1	3883	5444	7379	5411
32'	18' - 9"	8' - 6"	3' - 9"	3' - 9 1/2"	5' - 4"	4' - 9"	#8	6"	18' - 6"	#5	8"	18' - 6"	#8	1' - 2"	19' - 2 1/2"	18' - 2"	1' - 3"	#8	1' - 2"	8' - 10"	7' - 8"	1' - 3"	#8	1' - 2"	28' - 7"	28' - 3"	5.03	330.6	3978	5563	7509	5512
33'	19' - 3"	8' - 9"	4' - 0"	3' - 10"	5' - 7"	5' - 0"	#8	6"	19' - 0"	#5	8"	19' - 0"	#8	1' - 0"	19' - 2"	18' - 1 1/2"	1' - 3"	#8	1' - 0"	9' - 1"	7' - 11"	1' - 3"	#8	1' - 0"	29' - 4"	29' - 0"	5.38	361.5	4096	5727	7760	5667
34'	19' - 9"	9' - 0"	4' - 3"	3' - 11"	5' - 10"	5' - 3"	#8	6"	19' - 6"	#5	7"	19' - 6"	#9	10"	17' - 4 1/2"	16' - 1 1/2"	1' - 6"	#9	10"	10' - 8"	9' - 3 1/2"	1' - 6"	#9	10"	30' - 1"	29' - 9"	5.74	454.5	4214	5892	8012	5822
35'	20' - 3"	9' - 3"	4' - 6"	4' - 0"	6' - 1"	5' - 6"	#8	6"	20' - 0"	#5	7"	20' - 0"	#10	1' - 0"	18' - 9"	17' - 4 1/2"	1' - 8"	#10	1' - 0"	12' - 3 1/2"	10' - 9 1/2"	1' - 8"	#10	1' - 0"	30' - 1"	30' - 6"	6.12	487.8	4332	6057	8265	5978

REINFORCEMENT NOTES

(1) IF TRAFFIC BARRIER IS USED, ADD 0.110 CY OF CONCRETE CLASS 4000 FOR BARRIER ALTERNATE 1. ADD 0.152 CY/LF OF CONCRETE CLASS 4000 FOR BARRIER ALTERNATE 2. SEE STANDARD PLAN D-15.10

(2) ADD 16 LB/LF OF REINFORCING STEEL FOR BARRIER ALTERNATE 1 OR 23 LB/LF OF REINFORCING STEEL FOR BARRIER ALTERNATE 2. SEE STANDARD PLAN D-15.10

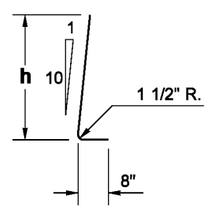

BAR (E)
@ 1' - 6" CENTERS

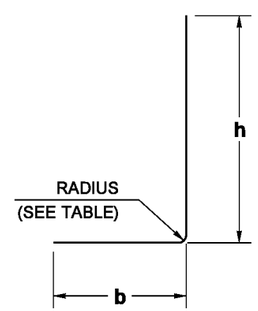

BAR	RADIUS
#4	1 1/2"
#5	1 7/8"
#6	2 1/4"
#7	2 5/8"
#8	3"
#9	4 3/4"
#10	5 3/8"
#11	6"

BARS (K) AND (M)

BAR	MIN. SPLICE
#4	2' - 0"
#5	2' - 0"
#6	2' - 0"
#7	2' - 6"
#8	3' - 3"
#9	4' - 2"
#10	5' - 3"

SLOPING FACE WALL DESIGN WITH A 250 PSF SURCHARGE

NOTE: THIS PLAN IS NOT A LEGAL ENGINEERING DOCUMENT BUT AN ELECTRONIC DUPLICATE. THE ORIGINAL, SIGNED BY THE ENGINEER AND APPROVED FOR PUBLICATION, IS KEPT ON FILE AT THE WASHINGTON STATE DEPARTMENT OF TRANSPORTATION. A COPY MAY BE OBTAINED UPON REQUEST.

REINFORCED CONCRETE RETAINING WALL TYPE 2 AND 2SW

STANDARD PLAN D-10.15-01

SHEET 2 OF 2 SHEETS

APPROVED FOR PUBLICATION

Pasco Bakotich III — STATE DESIGN ENGINEER

12-02-08 — DATE

Washington State Department of Transportation

DRAWN BY: BILL BERENS

EFFECTIVE: AUGUST 6, 2012 TO August 4, 2013

EFFECTIVE: AUGUST 6, 2012 TO August 4, 2013
EFFECTIVE: AUGUST 6, 2012 TO August 4, 2013

DRAWN BY: BILL BEKENS

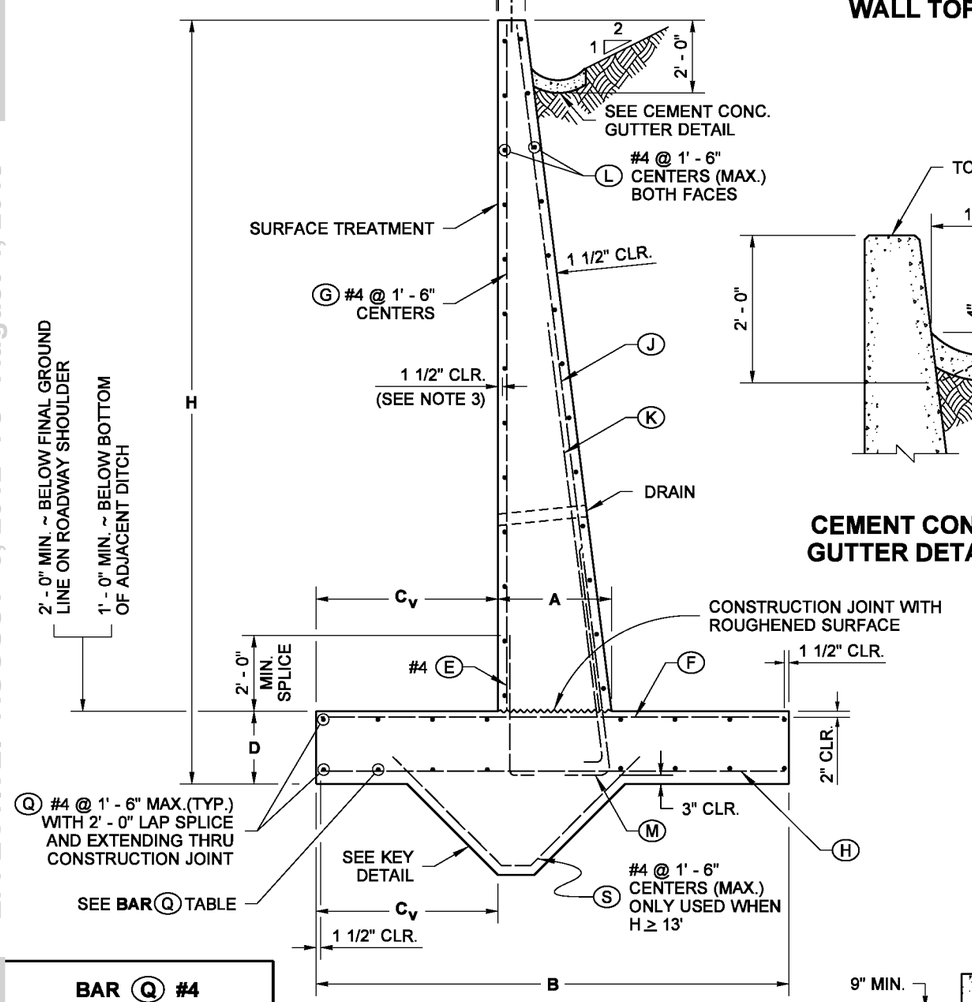

TYPICAL SECTION

1 OFFSET ~ SET TOP OF WALL BACK:
H ≤ 20' ..... OFFSET = 1/2"
H ≥ 20' ..... OFFSET (inches) = $\frac{H(ft)}{8} - 2$

BAR Q #4		
LOCATION	WALL HEIGHT (H)	QTY.
TOP OF FOOTING	≤ 11'	4
	12' ≤ 18'	6
	19' ≤ 24'	8
	25' ≤ 30'	10
	31' ≤ 35'	12
BOTTOM OF FOOTING	≤ 11'	4
	12' ≤ 18'	6
	19' ≤ 24'	8
	25' ≤ 30'	10
	31' ≤ 35'	12

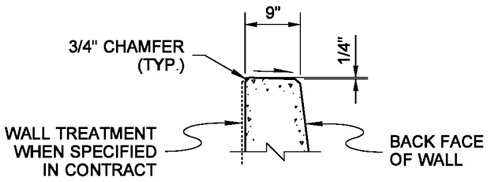

WALL TOP DETAIL

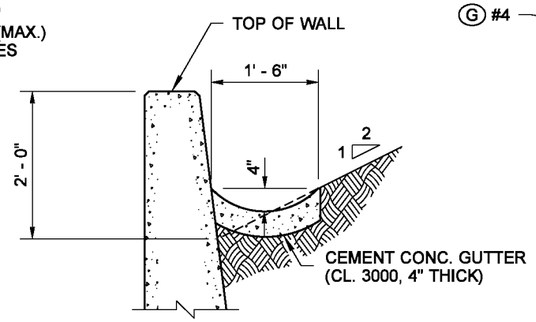

CEMENT CONC. GUTTER DETAIL

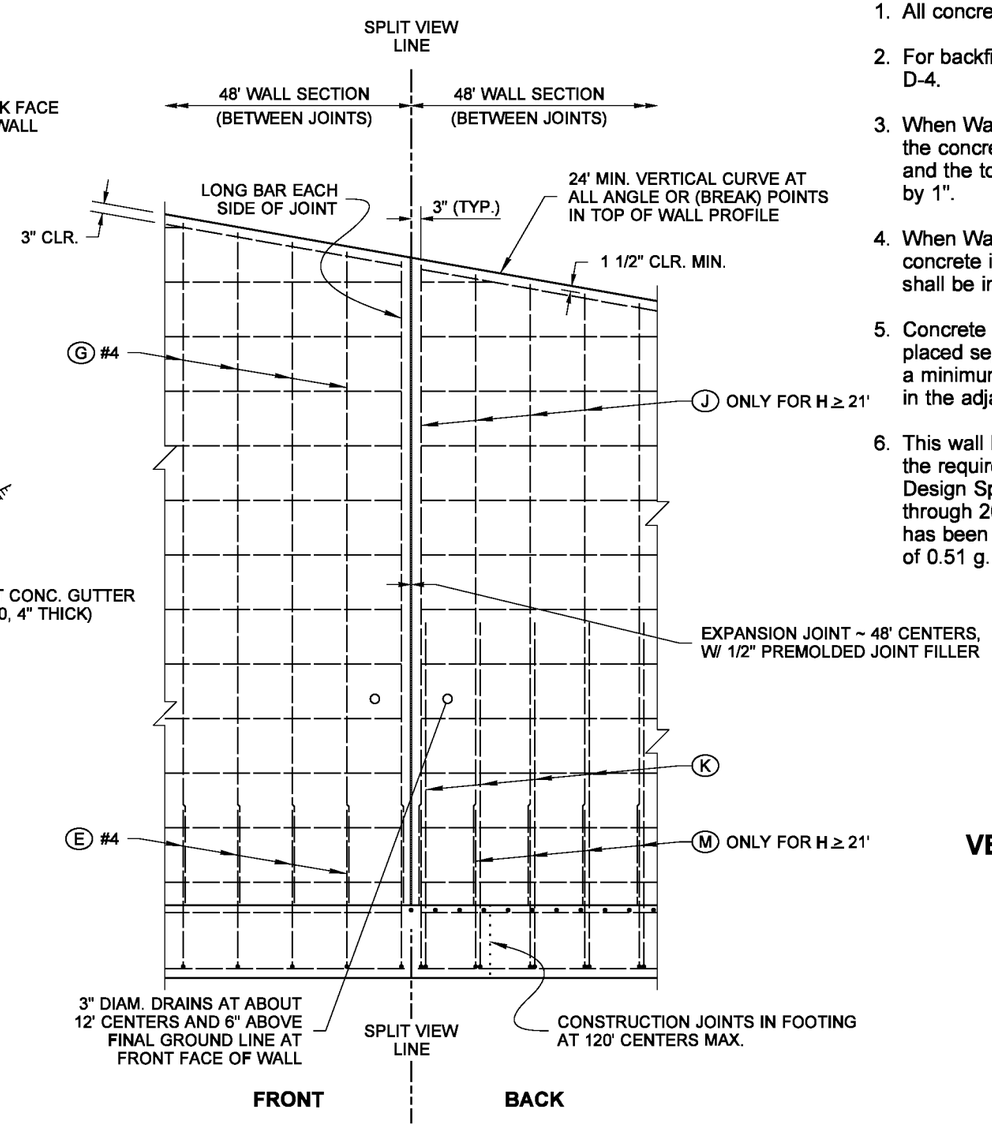

SPLIT ELEVATION VIEW
(SHOWING SEPARATE REBAR LAYERS)

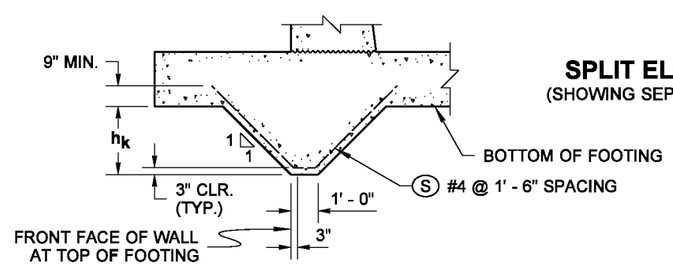

KEY DETAIL
REQUIRED ON WALLS WHERE H ≥ 13'

NOTES

1. All concrete shall be Class 4000, except as noted.
2. For backfill requirements, see Standard Plan D-4.
3. When Wall Type 3SW (saltwater) is specified, the concrete cover over steel in the front face and the total wall thickness shall be increased by 1".
4. When Wall Type 3SW (saltwater) is specified, concrete in the table column "Material Quantity" shall be increased by (0.003 x H) CY/LF.
5. Concrete in the 48 foot wall sections shall be placed separately between expansion joints with a minimum 24 hour period before placing concrete in the adjacent section.
6. This wall has been designed in accordance with the requirements of the AASHTO LRFD Bridge Design Specifications 4th Edition 2007 and interims through 2008. The seismic design of these walls has been completed using an effective PGA of 0.51 g.

VERTICAL FACE WALL DESIGN WITH 2 :1 BACKSLOPE

NOTE: THIS PLAN IS NOT A LEGAL ENGINEERING DOCUMENT BUT AN ELECTRONIC DUPLICATE. THE ORIGINAL, SIGNED BY THE ENGINEER AND APPROVED FOR PUBLICATION, IS KEPT ON FILE AT THE WASHINGTON STATE DEPARTMENT OF TRANSPORTATION. A COPY MAY BE OBTAINED UPON REQUEST.

REINFORCED CONCRETE RETAINING WALL TYPE 3 AND 3SW STANDARD PLAN D-10.20-00

SHEET 1 OF 2 SHEETS

APPROVED FOR PUBLICATION

Pasco Bakotich III — STATE DESIGN ENGINEER
07-08-08 — DATE

Washington State Department of Transportation

EFFECTIVE: AUGUST 6, 2012 TO August 4, 2013
EFFECTIVE: AUGUST 6, 2012 TO August 4, 2013
EFFECTIVE: AUGUST 6, 2012 TO August 4, 2013
EFFECTIVE: AUGUST 6, 2012 TO August 4, 2013

EFFECTIVE: AUGUST 6, 2012 TO August 4, 2013

WALL HT H	DIMENSIONS					FOOTING REINFORCEMENT																			STEM REINFORCEMENT				MATERIAL QUANTITY		MAXIMUM SOIL PRESSURE (PSF)		
						BAR (E) #4		BAR (F)			BAR (H)			BAR (K)					BAR (M)					BAR (J)			(G) #4					
	B	C_V	D	h_K	A	LENGTH	h	SIZE	SPA.	LENGTH	SIZE	SPA.	LENGTH	SIZE	SPA.	LENGTH	h	b	SIZE	SPA.	LENGTH	h	b	SIZE	SPA.	LENGTH	LENGTH	CONC. CY / LF	STEEL LBS / LF	SERVICE	STRENGTH	EXTREME EVENT 1
5'	4' - 3"	1' - 6"	1' - 0"	N/A	1' - 3"	3' - 3 1/2"	2' - 9"	#4	1' - 6"	4' - 0"	#4	1' - 6"	4' - 0"	#4	1' - 6"	5' - 2"	4' - 7 1/2"	8"	N/A	N/A	N/A	N/A	N/A	N/A	N/A	N/A	3' - 10"	0.31	20.6	707	928	1019
6'	4' - 3"	1' - 6"	1' - 0"	N/A	1' - 4 1/2"	3' - 3 1/2"	2' - 9"	#4	1' - 6"	4' - 0"	#4	1' - 6"	4' - 0"	#4	1' - 6"	6' - 2"	5' - 7 1/2"	8"	N/A	N/A	N/A	N/A	N/A	N/A	N/A	N/A	4' - 10"	0.35	21.7	827	1084	1296
7'	4' - 3"	1' - 9"	1' - 0"	N/A	1' - 6"	3' - 3 1/2"	2' - 9"	#4	1' - 6"	4' - 0"	#4	1' - 6"	4' - 0"	#4	1' - 6"	7' - 2"	6' - 7 1/2"	8"	N/A	N/A	N/A	N/A	N/A	N/A	N/A	N/A	5' - 10"	0.41	24.2	920	1198	1557
8'	4' - 6"	1' - 9"	1' - 0"	N/A	1' - 7 1/2"	3' - 3 1/2"	2' - 9"	#4	1' - 6"	4' - 3"	#4	1' - 6"	4' - 3"	#4	1' - 6"	8' - 2"	7' - 7 1/2"	8"	N/A	N/A	N/A	N/A	N/A	N/A	N/A	N/A	6' - 10"	0.47	26.8	1020	1328	2018
9'	4' - 9"	1' - 9"	1' - 0"	N/A	1' - 9"	3' - 3 1/2"	2' - 9"	#4	1' - 6"	4' - 6"	#4	1' - 6"	4' - 6"	#4	1' - 6"	9' - 2"	8' - 7 1/2"	8"	N/A	N/A	N/A	N/A	N/A	N/A	N/A	N/A	7' - 10"	0.55	29.5	1129	1525	2647
10'	5' - 6"	2' - 0"	1' - 0"	N/A	1' - 10 1/2"	3' - 3 1/2"	2' - 9"	#4	1' - 6"	5' - 3"	#4	1' - 6"	5' - 3"	#4	1' - 0"	10' - 2"	9' - 7 1/2"	8"	N/A	N/A	N/A	N/A	N/A	N/A	N/A	N/A	8' - 10"	0.64	36.2	1238	1678	2868
11'	6' - 9"	2' - 0"	1' - 0"	N/A	2' - 0"	3' - 3 1/2"	2' - 9"	#4	1' - 6"	6' - 6"	#4	1' - 6"	6' - 6"	#5	1' - 0"	11' - 3 1/2"	10' - 7 1/2"	9"	N/A	N/A	N/A	N/A	N/A	N/A	N/A	N/A	9' - 10"	0.76	44.3	1419	1923	3126
12'	8' - 3"	3' - 0"	1' - 0"	N/A	2' - 1 1/2"	3' - 3 1/2"	2' - 9"	#4	1' - 0"	8' - 0"	#4	9"	8' - 0"	#5	10"	12' - 3 1/2"	11' - 7 1/2"	9"	N/A	N/A	N/A	N/A	N/A	N/A	N/A	N/A	10' - 10"	0.89	59.3	1493	1970	2650
13'	8' - 3"	3' - 3"	1' - 0"	1' - 0"	2' - 3"	3' - 3 1/2"	2' - 9"	#4	1' - 0"	8' - 0"	#4	7"	8' - 0"	#5	8"	13' - 3 1/2"	12' - 7 1/2"	9"	N/A	N/A	N/A	N/A	N/A	N/A	N/A	N/A	11' - 10"	1.05	67.8	1594	2088	3050
14'	8' - 3"	3' - 6"	1' - 3"	1' - 3"	2' - 4"	3' - 6 1/2"	3' - 0"	#4	1' - 0"	8' - 0"	#4	7"	8' - 0"	#5	7"	14' - 3 1/2"	13' - 7 1/2"	9"	N/A	N/A	N/A	N/A	N/A	N/A	N/A	N/A	12' - 7"	1.22	73.2	1672	2199	3539
15'	9' - 0"	3' - 9"	1' - 3"	1' - 3"	2' - 5 1/2"	3' - 6 1/2"	3' - 0"	#4	1' - 0"	8' - 9"	#5	8"	8' - 9"	#5	6"	15' - 3 1/2"	14' - 7 1/2"	9"	N/A	N/A	N/A	N/A	N/A	N/A	N/A	N/A	13' - 7"	1.34	86.6	1777	2347	3783
16'	9' - 3"	4' - 0"	1' - 6"	1' - 6"	2' - 6 1/2"	3' - 9 1/2"	3' - 3"	#4	1' - 0"	9' - 0"	#5	6"	9' - 0"	#6	7"	16' - 5"	15' - 7 1/2"	11"	N/A	N/A	N/A	N/A	N/A	N/A	N/A	N/A	14' - 4"	1.54	104.3	1869	2554	4266
17'	10' - 0"	4' - 3"	1' - 9"	1' - 9"	2' - 7 1/2"	4' - 0 1/2"	3' - 6"	#4	1' - 0"	9' - 9"	#6	8"	9' - 9"	#7	8"	17' - 6 1/2"	16' - 8"	1' - 1"	N/A	N/A	N/A	N/A	N/A	N/A	N/A	N/A	15' - 1"	1.79	122.9	2007	2756	4560
18'	10' - 9"	4' - 3"	1' - 9"	1' - 9"	2' - 9"	4' - 0 1/2"	3' - 6"	#4	10"	10' - 6"	#6	8"	10' - 6"	#7	7"	18' - 7"	17' - 8"	1' - 1"	N/A	N/A	N/A	N/A	N/A	N/A	N/A	N/A	16' - 1"	1.94	139.7	2186	3007	5040
19'	11' - 0"	4' - 6"	2' - 0"	2' - 0"	2' - 10 1/2"	4' - 3 1/2"	3' - 9"	#4	10"	10' - 9"	#6	8"	10' - 9"	#7	6"	19' - 7"	18' - 8"	1' - 1"	N/A	N/A	N/A	N/A	N/A	N/A	N/A	N/A	16' - 10"	2.18	158.7	2336	3225	5583
20'	11' - 9"	4' - 6"	2' - 3"	2' - 3"	2' - 11 1/2"	4' - 6 1/2"	4' - 0"	#4	9"	11' - 6"	#6	7"	11' - 6"	#8	7"	20' - 8 1/2"	19' - 8"	1' - 3"	N/A	N/A	N/A	N/A	N/A	N/A	N/A	N/A	17' - 7"	2.47	181.2	2561	3537	6137
21'	13' - 0"	5' - 0"	2' - 3"	2' - 3"	3' - 1"	4' - 6 1/2"	4' - 0"	#4	7"	12' - 9"	#6	7"	12' - 9"	#8	1' - 0"	13' - 4 1/2"	12' - 4"	1' - 3"	#8	1' - 0"	7' - 5"	6' - 2"	1' - 3"	#8	1' - 0"	18' - 8"	18' - 7"	2.69	192.8	2583	3556	5870
22'	13' - 3"	5' - 3"	2' - 6"	2' - 6"	3' - 2"	4' - 9 1/2"	4' - 3"	#4	7"	13' - 0"	#6	6"	13' - 0"	#9	1' - 2"	14' - 10"	13' - 8 1/2"	1' - 6"	#9	1' - 2"	9' - 0"	7' - 6 1/2"	1' - 6"	#9	1' - 2"	19' - 5"	19' - 4"	2.97	246.3	2733	3774	6394
23'	13' - 9"	5' - 6"	2' - 9"	2' - 9"	3' - 3"	5' - 0 1/2"	4' - 6"	#4	7"	13' - 6"	#6	6"	13' - 6"	#9	1' - 0"	14' - 11"	13' - 9 1/2"	1' - 6"	#9	1' - 0"	9' - 3"	7' - 9 1/2"	1' - 6"	#9	1' - 0"	20' - 2"	20' - 1"	3.29	261.3	2881	3986	6813
24'	14' - 9"	5' - 9"	2' - 9"	2' - 9"	3' - 4 1/2"	5' - 0 1/2"	4' - 6"	#4	6"	14' - 6"	#6	6"	14' - 6"	#10	1' - 0"	15' - 2 1/2"	13' - 11 1/2"	1' - 8"	#10	1' - 0"	10' - 8"	9' - 0 1/2"	1' - 8"	#10	1' - 0"	21' - 2"	21' - 1"	3.52	322.1	2984	4122	6926
25'	15' - 0"	6' - 0"	3' - 0"	3' - 0"	3' - 6"	5' - 3 1/2"	4' - 9"	#4	6"	14' - 9"	#7	7"	14' - 9"	#10	1' - 0"	16' - 7 1/2"	15' - 4 1/2"	1' - 8"	#10	1' - 0"	10' - 11"	9' - 3 1/2"	1' - 8"	#10	1' - 0"	21' - 11"	21' - 10"	3.84	324.2	3136	4344	7476
26'	15' - 9"	6' - 3"	3' - 0"	3' - 0"	3' - 7 1/2"	5' - 3 1/2"	4' - 9"	#5	8"	15' - 6"	#7	6"	15' - 6"	#10	10"	16' - 1 1/2"	14' - 10 1/2"	1' - 8"	#10	10"	10' - 11"	9' - 3 1/2"	1' - 8"	#10	10"	22' - 11"	22' - 10"	4.06	378.8	3241	4489	7715
27'	16' - 9"	6' - 6"	3' - 3"	3' - 3"	3' - 8 1/2"	5' - 6 1/2"	5' - 0"	#5	6"	16' - 6"	#7	6"	16' - 6"	#10	10"	17' - 7"	16' - 4"	1' - 8"	#10	10"	11' - 2"	9' - 6 1/2"	1' - 8"	#10	10"	23' - 8"	23' - 7"	4.49	406.8	3382	4679	7870
28'	17' - 9"	6' - 9"	3' - 3"	3' - 3"	3' - 10"	5' - 6 1/2"	5' - 0"	#6	8"	17' - 6"	#7	6"	17' - 6"	#10	9"	17' - 10"	16' - 7"	1' - 8"	#10	9"	11' - 2"	9' - 6 1/2"	1' - 8"	#10	9"	24' - 8 1/2"	24' - 7"	4.75	433.8	3485	4816	7995
29'	18' - 3"	7' - 0"	3' - 6"	3' - 6"	4' - 0"	5' - 9 1/2"	5' - 3"	#6	8"	18' - 0"	#8	7"	18' - 0"	#10	8"	17' - 10 1/2"	16' - 7 1/2"	1' - 8"	#10	8"	11' - 5"	9' - 9 1/2"	1' - 8"	#10	8"	25' - 5 1/2"	25' - 4"	5.16	442.5	3633	5026	8403
30'	18' - 6"	7' - 3"	3' - 9"	3' - 9"	4' - 0 1/2"	6' - 0 1/2"	5' - 6"	#6	8"	18' - 3"	#8	7"	18' - 3"	#10	8"	19' - 3 1/2"	18' - 0 1/2"	1' - 8"	#10	8"	11' - 8"	10' - 0 1/2"	1' - 8"	#10	8"	26' - 2 1/2"	26' - 1"	5.55	459.3	3785	5249	8947
31'	19' - 0"	7' - 6"	4' - 0"	4' - 0"	4' - 1 1/2"	6' - 3 1/2"	5' - 9"	#6	8"	18' - 9"	#8	7"	18' - 9"	#11	9"	20' - 10"	19' - 5"	1' - 10"	#11	9"	13' - 5 1/2"	11' - 8"	1' - 10"	#11	9"	26' - 11 1/2"	26' - 10"	5.99	533.5	3934	5462	9370
32'	19' - 6"	7' - 9"	4' - 0"	4' - 0"	4' - 3"	6' - 4 1/2"	5' - 10"	#6	8"	19' - 3"	#8	6"	19' - 3"	#11	8"	20' - 7"	19' - 2 1/2"	1' - 10"	#11	8"	13' - 7"	11' - 10"	1' - 10"	#11	8"	27' - 11 1/2"	27' - 10"	6.22	661.9	4044	5620	9757
33'	20' - 3"	8' - 0"	4' - 1"	4' - 1"	4' - 4"	6' - 6 1/2"	6' - 0"	#6	8"	20' - 0"	#8	6"	20' - 0"	#11	7"	20' - 0"	18' - 7 1/2"	1' - 10"	#11	7"	13' - 9 1/2"	12' - 0"	1' - 10"	#11	7"	28' - 10 1/2"	28' - 9"	6.57	746.0	4162	5783	10009
34'	21' - 6"	8' - 3"	4' - 3"	4' - 3"	4' - 5 1/2"	6' - 9 1/2"	6' - 3"	#6	6"	21' - 3"	#8	6"	21' - 3"	#11	7"	21' - 4"	19' - 11 1/2"	1' - 10"	#11	7"	14' - 1"	12' - 4"	1' - 10"	#11	7"	29' - 8 1/2"	29' - 7"	7.09	849.0	4285	5941	10005
35'	23' - 0"	8' - 6"	4' - 3"	4' - 3"	4' - 7"	6' - 10 1/2"	6' - 4"	#7	7"	22' - 9"	#8	6"	22' - 9"	#11	6"	20' - 2 1/2"	18' - 10"	1' - 10"	#11	6"	14' - 3"	12' - 5 1/2"	1' - 10"	#11	6"	30' - 8 1/2"	30' - 7"	7.49	968.6	4381	6058	9904

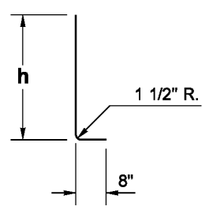

BAR (E)
@ 1' - 6" CENTERS

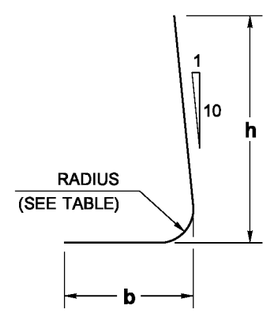

BAR	RADIUS
#4	1 1/2"
#5	1 7/8"
#6	2 1/4"
#7	2 5/8"
#8	3"
#9	4 3/4"
#10	5 3/8"
#11	6"

BARS (K) AND (M)

BAR	MIN. SPLICE
#4	2' - 0"
#5	2' - 0"
#6	2' - 0"
#7	2' - 6"
#8	3' - 3"
#9	4' - 2"
#10	5' - 3"

VERTICAL FACE WALL DESIGN WITH 2 :1 BACKSLOPE

BIJAN KHALEGHI
STATE OF WASHINGTON
27695
STRUCTURAL ENGINEER
PROFESSIONAL ENGINEER

NOTE: THIS PLAN IS NOT A LEGAL ENGINEERING DOCUMENT BUT AN ELECTRONIC DUPLICATE. THE ORIGINAL, SIGNED BY THE ENGINEER AND APPROVED FOR PUBLICATION, IS KEPT ON FILE AT THE WASHINGTON STATE DEPARTMENT OF TRANSPORTATION. A COPY MAY BE OBTAINED UPON REQUEST.

REINFORCED CONCRETE RETAINING WALL TYPE 3 AND 3SW
STANDARD PLAN D-10.20-00

SHEET 2 OF 2 SHEETS

APPROVED FOR PUBLICATION

Pasco Bakotich III — STATE DESIGN ENGINEER
07-08-08 — DATE

Washington State Department of Transportation

DRAWN BY: BILL BEKENS

EFFECTIVE: AUGUST 6, 2012 TO August 4, 2013

EFFECTIVE: AUGUST 6, 2012 TO August 4, 2013
EFFECTIVE: AUGUST 6, 2012 TO August 4, 2013

DRAWN BY: BILL BEKENS

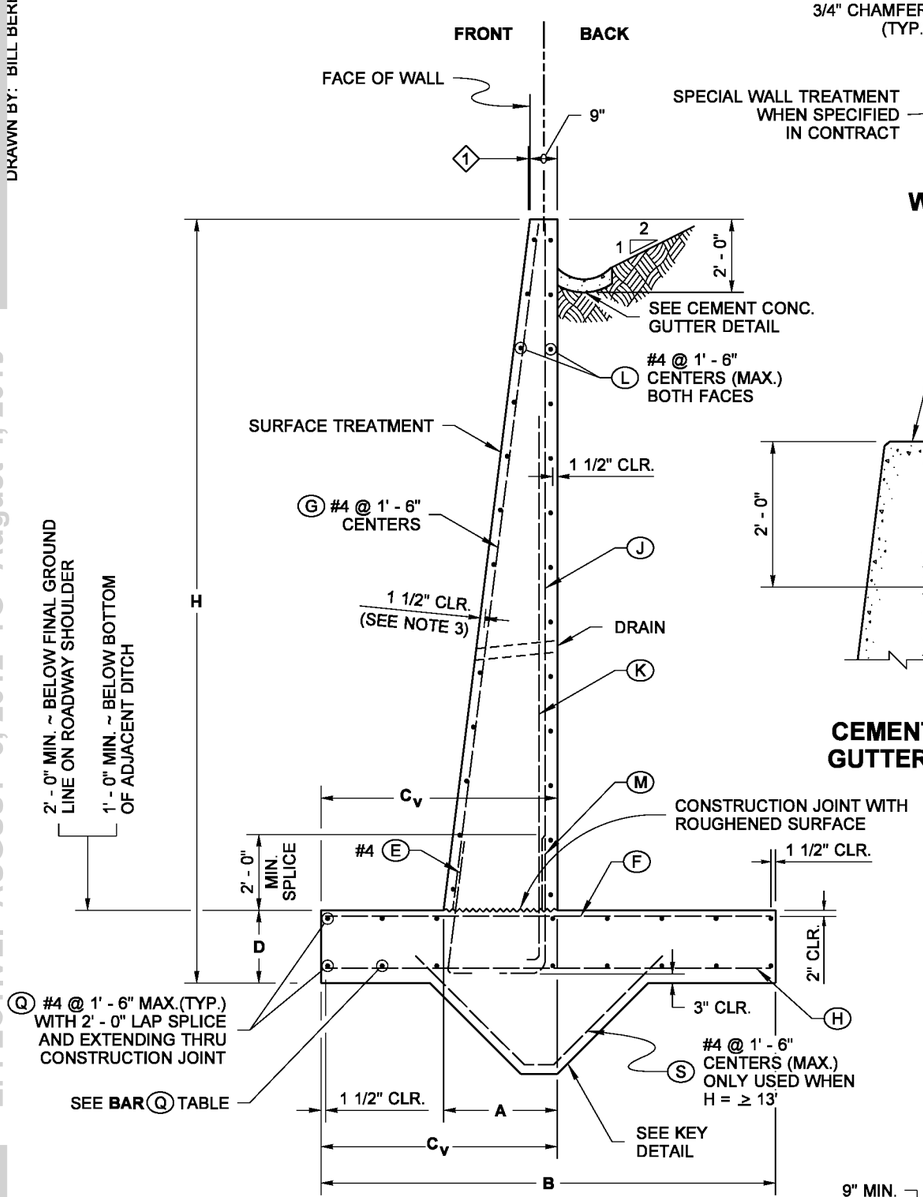

TYPICAL SECTION

1 OFFSET ~ SET TOP OF WALL BACK:
H ≤ 20' ..... OFFSET = 1/2"
H ≥ 20' ..... OFFSET (inches) = $\frac{H(ft)}{8} - 2$

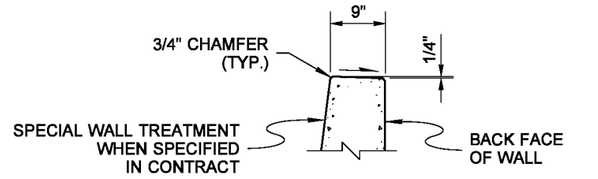

WALL TOP DETAIL

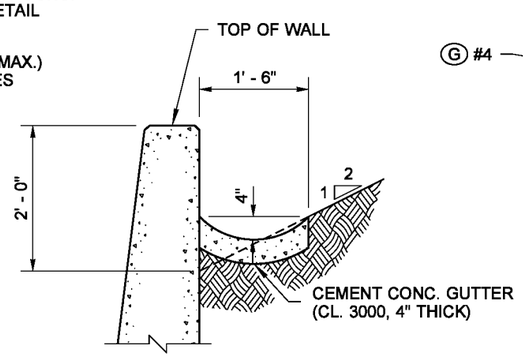

CEMENT CONC. GUTTER DETAIL

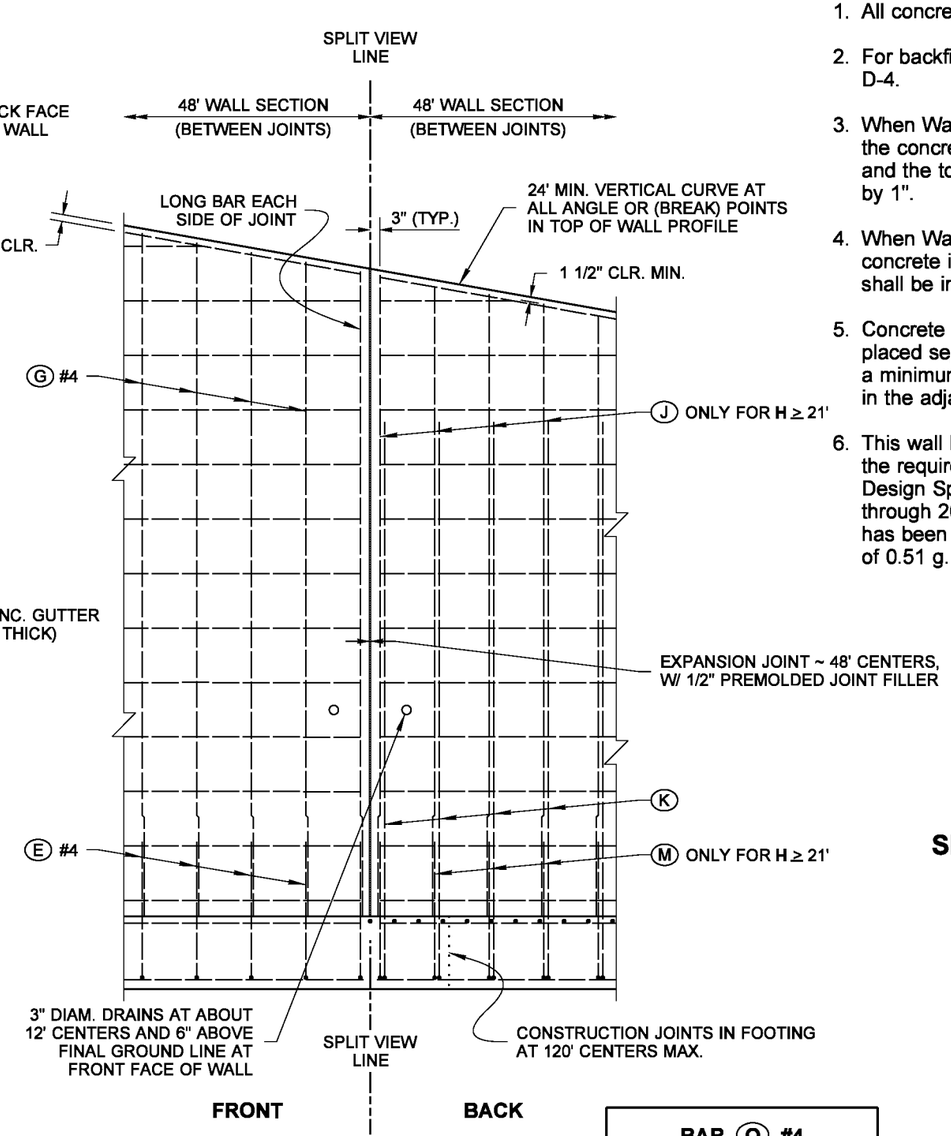

SPLIT ELEVATION VIEW
(SHOWING SEPARATE REBAR LAYERS)

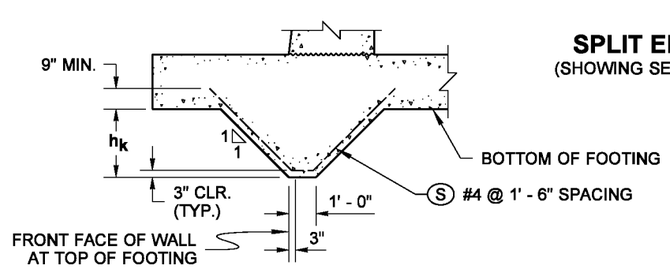

KEY DETAIL
REQUIRED ON WALLS WHERE H ≥ 13'

NOTES

1. All concrete shall be Class 4000, except as noted.
2. For backfill requirements, see Standard Plan D-4.
3. When Wall Type 4SW (saltwater) is specified, the concrete cover over steel in the front face and the total wall thickness shall be increased by 1".
4. When Wall Type 4SW (saltwater) is specified, concrete in the table column "Material Quantity" shall be increased by (0.003 x H) CY/LF.
5. Concrete in the 48 foot wall sections shall be placed separately between expansion joints with a minimum 24 hour period before placing concrete in the adjacent section.
6. This wall has been designed in accordance with the requirements of the AASHTO LRFD Bridge Design Specifications 4th Edition 2007 and interims through 2008. The seismic design of these walls has been completed using an effective PGA of 0.51 g.

SLOPING FACE WALL DESIGN WITH 2 :1 BACKSLOPE

BAR Q #4		
LOCATION	WALL HEIGHT (H)	QTY.
TOP OF FOOTING	≤ 11'	4
	12' ≤ 15'	6
	16' ≤ 21'	8
	22' ≤ 25'	10
	26' ≤ 29'	12
	30' ≤ 35'	14
BOTTOM OF FOOTING	≤ 11'	4
	12' ≤ 15'	6
	16' ≤ 21'	8
	22' ≤ 25'	10
	26' ≤ 29'	12
	30' ≤ 35'	14

BIJAN KHALEGHI
STATE OF WASHINGTON
27695
STRUCTURAL ENGINEER
PROFESSIONAL ENGINEER

NOTE: THIS PLAN IS NOT A LEGAL ENGINEERING DOCUMENT BUT AN ELECTRONIC DUPLICATE. THE ORIGINAL, SIGNED BY THE ENGINEER AND APPROVED FOR PUBLICATION, IS KEPT ON FILE AT THE WASHINGTON STATE DEPARTMENT OF TRANSPORTATION. A COPY MAY BE OBTAINED UPON REQUEST.

REINFORCED CONCRETE RETAINING WALL TYPE 4 AND 4SW
STANDARD PLAN D-10.25-00

SHEET 1 OF 2 SHEETS

APPROVED FOR PUBLICATION

Pasco Bakotich III — STATE DESIGN ENGINEER
07-08-08 — DATE

Washington State Department of Transportation

EFFECTIVE: AUGUST 6, 2012 TO August 4, 2013
EFFECTIVE: AUGUST 6, 2012 TO August 4, 2013
EFFECTIVE: AUGUST 6, 2012 TO August 4, 2013
EFFECTIVE: AUGUST 6, 2012 TO August 4, 2013

EFFECTIVE: AUGUST 6, 2012 TO August 4, 2013
EFFECTIVE: AUGUST 6, 2012 TO August 4, 2013

WALL HT H	DIMENSIONS					FOOTING REINFORCEMENT														STEM REINFORCEMENT									MATERIAL QUANTITY		MAXIMUM SOIL PRESSURE (PSF)		
						BAR (E) #4		BAR (F)			BAR (H)			BAR (K)					BAR (M)						BAR (J)			(G) #4					
	B	C_V	D	h_K	A	LENGTH	h	SIZE	SPA.	LENGTH	SIZE	SPA.	LENGTH	SIZE	SPA.	LENGTH	h	b	SIZE	SPA.	LENGTH	h	b	SIZE	SPA.	LENGTH	LENGTH	CONC. CY / LF	STEEL LBS / LF	SERVICE	STRENGTH	EXTREME EVENT 1
5'	4' - 3"	2' - 9"	1' - 0"	N/A	1' - 3"	3' - 4"	2' - 9"	#4	1' - 6"	4' - 0"	#4	1' - 6"	4' - 0"	#4	1' - 6"	5' - 1 1/2"	4' - 7"	8"	N/A	N/A	N/A	N/A	N/A	N/A	N/A	N/A	3' - 10"	0.31	20.6	552	718	856
6'	4' - 3"	3' - 0"	1' - 0"	N/A	1' - 4 1/2"	3' - 4"	2' - 9"	#4	1' - 6"	4' - 0"	#4	1' - 6"	4' - 0"	#4	1' - 6"	6' - 1 1/2"	5' - 7"	8"	N/A	N/A	N/A	N/A	N/A	N/A	N/A	N/A	4' - 10"	0.35	23.0	666	864	1030
7'	4' - 3"	3' - 0"	1' - 0"	N/A	1' - 6"	3' - 4"	2' - 9"	#4	1' - 6"	4' - 0"	#4	1' - 6"	4' - 0"	#4	1' - 6"	7' - 1 1/2"	6' - 7"	8"	N/A	N/A	N/A	N/A	N/A	N/A	N/A	N/A	5' - 10"	0.41	25.5	771	998	1335
8'	4' - 6"	3' - 3"	1' - 0"	N/A	1' - 7 1/2"	3' - 4"	2' - 9"	#4	1' - 6"	4' - 3"	#4	1' - 6"	4' - 3"	#4	1' - 6"	8' - 1 1/2"	7' - 7"	8"	N/A	N/A	N/A	N/A	N/A	N/A	N/A	N/A	6' - 10 1/2"	0.47	28.2	862	1112	1612
9'	5' - 0"	3' - 3"	1' - 0"	N/A	1' - 9"	3' - 4"	2' - 9"	#4	1' - 6"	4' - 9"	#4	1' - 6"	4' - 9"	#4	1' - 6"	9' - 1 1/2"	8' - 7"	8"	N/A	N/A	N/A	N/A	N/A	N/A	N/A	N/A	7' - 10 1/2"	0.56	31.1	969	1281	2056
10'	5' - 6"	3' - 6"	1' - 0"	N/A	1' - 10 1/2"	3' - 4"	2' - 9"	#4	1' - 6"	5' - 3"	#4	1' - 6"	5' - 3"	#4	1' - 0"	10' - 1 1/2"	9' - 7"	8"	N/A	N/A	N/A	N/A	N/A	N/A	N/A	N/A	8' - 10 1/2"	0.64	36.2	1067	1440	2383
11'	6' - 0"	3' - 9"	1' - 0"	N/A	2' - 0"	3' - 4"	2' - 9"	#4	1' - 6"	5' - 9"	#4	1' - 6"	5' - 9"	#4	11"	11' - 1 1/2"	10' - 7"	8"	N/A	N/A	N/A	N/A	N/A	N/A	N/A	N/A	9' - 10 1/2"	0.73	40.0	1184	1605	2732
12'	6' - 9"	4' - 0"	1' - 0"	N/A	2' - 1 1/2"	3' - 4"	2' - 9"	#4	1' - 0"	6' - 6"	#4	1' - 0"	6' - 6"	#4	8"	12' - 1 1/2"	11' - 7"	8"	N/A	N/A	N/A	N/A	N/A	N/A	N/A	N/A	10' - 10 1/2"	0.84	51.0	1301	1767	2989
13'	7' - 0"	4' - 6"	1' - 0"	1' - 0"	2' - 3"	3' - 4"	2' - 9"	#4	1' - 0"	6' - 9"	#4	1' - 0"	6' - 9"	#4	7"	13' - 1 1/2"	12' - 7"	8"	N/A	N/A	N/A	N/A	N/A	N/A	N/A	N/A	11' - 10 1/2"	1.00	57.5	1388	1896	3229
14'	7' - 9"	4' - 9"	1' - 3"	1' - 3"	2' - 4"	3' - 7"	3' - 0"	#4	1' - 0"	7' - 6"	#4	11"	7' - 6"	#5	8"	14' - 3"	13' - 7"	9"	N/A	N/A	N/A	N/A	N/A	N/A	N/A	N/A	12' - 7 1/2"	1.19	66.8	1539	2104	3537
15'	8' - 3"	5' - 0"	1' - 3"	1' - 3"	2' - 5 1/2"	3' - 7"	3' - 0"	#4	11"	8' - 0"	#4	9"	8' - 0"	#5	7"	15' - 3"	14' - 7"	9"	N/A	N/A	N/A	N/A	N/A	N/A	N/A	N/A	13' - 7 1/2"	1.31	77.7	1657	2271	3915
16'	9' - 0"	5' - 3"	1' - 6"	1' - 6"	2' - 6 1/2"	3' - 10"	3' - 3"	#4	9"	8' - 9"	#4	7"	8' - 9"	#5	6"	16' - 3"	15' - 7"	9"	N/A	N/A	N/A	N/A	N/A	N/A	N/A	N/A	14' - 8"	1.53	92.5	1809	2480	4220
17'	9' - 9"	5' - 6"	1' - 6"	1' - 6"	2' - 8"	3' - 10"	3' - 3"	#4	6"	9' - 6"	#4	6"	9' - 6"	#6	7"	17' - 4"	16' - 7"	11"	N/A	N/A	N/A	N/A	N/A	N/A	N/A	N/A	15' - 8"	1.67	113.0	1927	2642	4489
18'	10' - 6"	5' - 6"	1' - 6"	1' - 6"	2' - 9 1/2"	3' - 10"	3' - 3"	#5	8"	10' - 3"	#4	6"	10' - 3"	#7	8"	18' - 6"	17' - 7"	1' - 1"	N/A	N/A	N/A	N/A	N/A	N/A	N/A	N/A	16' - 5"	1.81	132.6	2121	2909	5006
19'	11' - 0"	6' - 3"	1' - 9"	1' - 9"	2' - 10 1/2"	4' - 1"	3' - 6"	#5	8"	10' - 9"	#4	6"	10' - 9"	#7	7"	19' - 6"	18' - 7"	1' - 1"	N/A	N/A	N/A	N/A	N/A	N/A	N/A	N/A	17' - 2"	2.06	146.5	2126	2921	4937
20'	11' - 9"	6' - 6"	1' - 9"	1' - 9"	3' - 0"	4' - 1"	3' - 6"	#5	8"	11' - 6"	#5	8"	11' - 6"	#7	6"	20' - 6"	19' - 7"	1' - 1"	N/A	N/A	N/A	N/A	N/A	N/A	N/A	N/A	18' - 2"	2.22	170.2	2245	3085	5207
21'	12' - 6"	6' - 6"	2' - 0"	2' - 0"	3' - 1 1/2"	4' - 4"	3' - 9"	#5	7"	12' - 3"	#5	8"	12' - 3"	#8	1' -2"	14' - 2"	13' - 1 1/2"	1' - 3"	#8	1' - 2"	7' - 0"	5' - 11"	1' - 3"	#8	1' - 2"	18' - 10"	18' - 11"	2.51	185.2	2472	3396	5756
22'	13' - 6"	6' - 6"	2' - 3"	2' - 3"	3' - 2 1/2"	4' - 7"	4' - 0"	#5	6"	13' - 3"	#5	8"	13' - 3"	#9	1' -0"	14' - 5 1/2"	13' - 4"	1' - 6"	#9	1' - 0"	8' - 7"	7' - 3"	1' - 6"	#9	1' - 0"	19' - 7"	19' - 8"	2.85	227.4	2698	3703	6200
23'	13' - 9"	7' - 0"	2' - 3"	2' - 3"	3' - 4"	4' - 7"	4' - 0"	#5	6"	13' - 6"	#5	8"	13' - 6"	#9	1' -2"	15' - 10"	14' - 8 1/2"	1' - 6"	#9	1' - 2"	8' - 7"	7' - 3"	1' - 6"	#9	1' - 2"	20' - 7"	20' - 8"	2.99	237.4	2746	3778	6450
24'	14' - 6"	7' - 3"	2' - 6"	2' - 6"	3' - 5"	4' - 10"	4' - 3"	#6	7"	14' - 3"	#5	8"	14' - 3"	#9	1' -0"	15' - 10 1/2"	14' - 9"	1' - 6"	#9	1' - 0"	8' - 10"	7' - 6"	1' - 6"	#9	1' - 0"	21' - 4"	21' - 5"	3.33	275.9	2899	3989	6759
25'	15' - 0"	7' - 9"	2' - 6"	2' - 6"	3' - 6 1/2"	4' - 10"	4' - 3"	#6	7"	14' - 9"	#5	6"	14' - 9"	#10	1' -2"	17' - 7 1/2"	16' - 4 1/2"	1' - 8"	#10	1' - 2"	10' - 2 1/2"	8' - 9"	1' - 8"	#10	1' - 2"	22' - 4"	22' - 5"	3.51	316.5	2944	4056	6897
26'	15' - 9"	7' - 9"	2' - 6"	2' - 6"	3' - 8"	4' - 10"	4' - 3"	#6	6"	15' - 6"	#5	6"	15' - 6"	#10	1' -0"	17' - 7"	16' - 4"	1' - 8"	#10	1' - 0"	10' - 2 1/2"	8' - 9"	1' - 8"	#10	1' - 0"	23' - 4"	23' - 5 1/2"	3.71	364.9	3141	4328	7416
27'	16' - 3"	8' - 3"	2' - 9"	2' - 9"	3' - 9"	5' - 1"	4' - 6"	#6	6"	16' - 0"	#6	8"	16' - 0"	#10	10"	17' - 0 1/2"	15' - 9 1/2"	1' - 8"	#10	10"	10' - 5 1/2"	9' - 0"	1' - 8"	#10	10"	24' - 1"	24' - 2 1/2"	4.07	418.8	3219	4439	7593
28'	16' - 9"	8' - 9"	3' - 0"	3' - 0"	3' - 10 1/2"	5' - 4"	4' - 9"	#6	6"	16' - 6"	#6	7"	16' - 6"	#10	10"	18' - 5 1/2"	17' - 2 1/2"	1' - 8"	#10	10"	10' - 8 1/2"	9' - 3"	1' - 8"	#10	10"	24' - 10"	24' - 11 1/2"	4.45	441.3	3298	4552	7773
29'	17' - 6"	9' - 0"	3' - 3"	3' - 3"	3' - 11 1/2"	5' - 7"	5' - 0"	#6	6"	17' - 3"	#6	7"	17' - 3"	#10	9"	18' - 8 1/2"	17' - 5 1/2"	1' - 8"	#10	9"	10' - 11 1/2"	9' - 6"	1' - 8"	#10	9"	25' - 7"	25' - 8 1/2"	4.87	485.7	3451	4763	8081
30'	18' - 0"	9' - 3"	3' - 6"	3' - 6"	4' - 0 1/2"	5' - 10"	5' - 3"	#6	6"	17' - 9"	#6	7"	17' - 9"	#10	9"	20' - 1 1/2"	18' - 10 1/2"	1' - 8"	#10	9"	11' - 2 1/2"	9' - 9"	1' - 8"	#10	9"	26' - 4"	26' - 5 1/2"	5.28	505.6	3606	4982	8510
31'	18' - 9"	9' - 6"	4' - 0"	4' - 0"	4' - 1 1/2"	6' - 4"	5' - 9"	#6	6"	18' - 6"	#6	7"	18' - 6"	#10	8"	20' - 1 1/2"	18' - 10 1/2"	1' - 8"	#10	8"	11' - 8 1/2"	10' - 3"	1' - 8"	#10	8"	26' - 10"	26' - 11 1/2"	5.96	559.9	3793	5241	8856
32'	19' - 6"	9' - 9"	3' - 9"	3' - 9"	4' - 3"	6' - 1"	5' - 6"	#7	7"	19' - 3"	#6	6"	19' - 3"	#10	7"	19' - 10 1/2"	18' - 7 1/2"	1' - 8"	#10	7"	11' - 5 1/2"	10' - 0"	1' - 8"	#10	7"	28' - 1"	28' - 2 1/2"	6.00	643.8	3879	5357	9087
33'	20' - 0"	10' - 0"	4' - 0"	4' - 0"	4' - 4 1/2"	6' - 4"	5' - 9"	#7	7"	19' - 9"	#6	6"	19' - 9"	#10	7"	21' - 3 1/2"	20' - 0 1/2"	1' - 8"	#10	7"	11' - 8 1/2"	10' - 3"	1' - 8"	#10	7"	28' - 10"	28' - 11 1/2"	6.46	668.3	4034	5577	9518
34'	20' - 9"	10' - 3"	4' - 1"	4' - 1"	4' - 5 1/2"	6' - 6"	5' - 11"	#7	6"	20' - 6"	#6	6"	20' - 6"	#10	6"	19' - 10 1/2"	18' - 7 1/2"	1' - 8"	#10	6"	11' - 2 1/2"	9' - 9"	1' - 8"	#10	6"	29' - 9"	29' - 10 1/2"	6.81	831.8	4324	5833	9880
35'	21' - 3"	10' - 6"	4' - 2"	4' - 2"	4' - 7"	6' - 8"	6' - 1"	#7	6"	21' - 0"	#7	7"	21' - 0"	#10	6"	20' - 8"	19' - 5"	1' - 8"	#10	6"	10' - 10"	9' - 5"	1' - 8"	#10	6"	30' - 8"	30' - 9 1/2"	7.13	969.0	4611	6094	10364

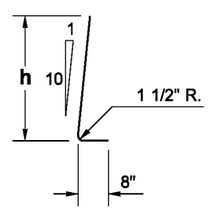

BAR (E)
@ 1' - 6" CENTERS

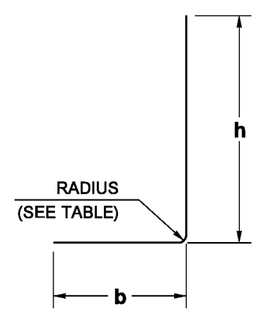

BAR	RADIUS
#4	1 1/2"
#5	1 7/8"
#6	2 1/4"
#7	2 5/8"
#8	3"
#9	4 3/4"
#10	5 3/8"
#11	6"

BARS (K) AND (M)

BAR	MIN. SPLICE
#4	2' - 0"
#5	2' - 0"
#6	2' - 0"
#7	2' - 6"
#8	3' - 3"
#9	4' - 2"
#10	5' - 3"

VERTICAL FACE WALL DESIGN WITH 2 :1 BACKSLOPE

BIJAN KHALEGHI
STATE OF WASHINGTON
27695
STRUCTURAL ENGINEER
PROFESSIONAL ENGINEER

NOTE: THIS PLAN IS NOT A LEGAL ENGINEERING DOCUMENT BUT AN ELECTRONIC DUPLICATE. THE ORIGINAL, SIGNED BY THE ENGINEER AND APPROVED FOR PUBLICATION, IS KEPT ON FILE AT THE WASHINGTON STATE DEPARTMENT OF TRANSPORTATION. A COPY MAY BE OBTAINED UPON REQUEST.

REINFORCED CONCRETE RETAINING WALL TYPE 4 AND 4SW

STANDARD PLAN D-10.25-00

SHEET 2 OF 2 SHEETS

APPROVED FOR PUBLICATION

Pasco Bakotich III — STATE DESIGN ENGINEER
07-08-08 — DATE

Washington State Department of Transportation

DRAWN BY: BILL BEKENS

EFFECTIVE: AUGUST 6, 2012 TO August 4, 2013
EFFECTIVE: AUGUST 6, 2012 TO August 4, 2013
EFFECTIVE: AUGUST 6, 2012 TO August 4, 2013
EFFECTIVE: AUGUST 6, 2012 TO August 4, 2013

EFFECTIVE: AUGUST 6, 2012 TO August 4, 2013
EFFECTIVE: AUGUST 6, 2012 TO August 4, 2013

DRAWN BY: BILL BEKENS

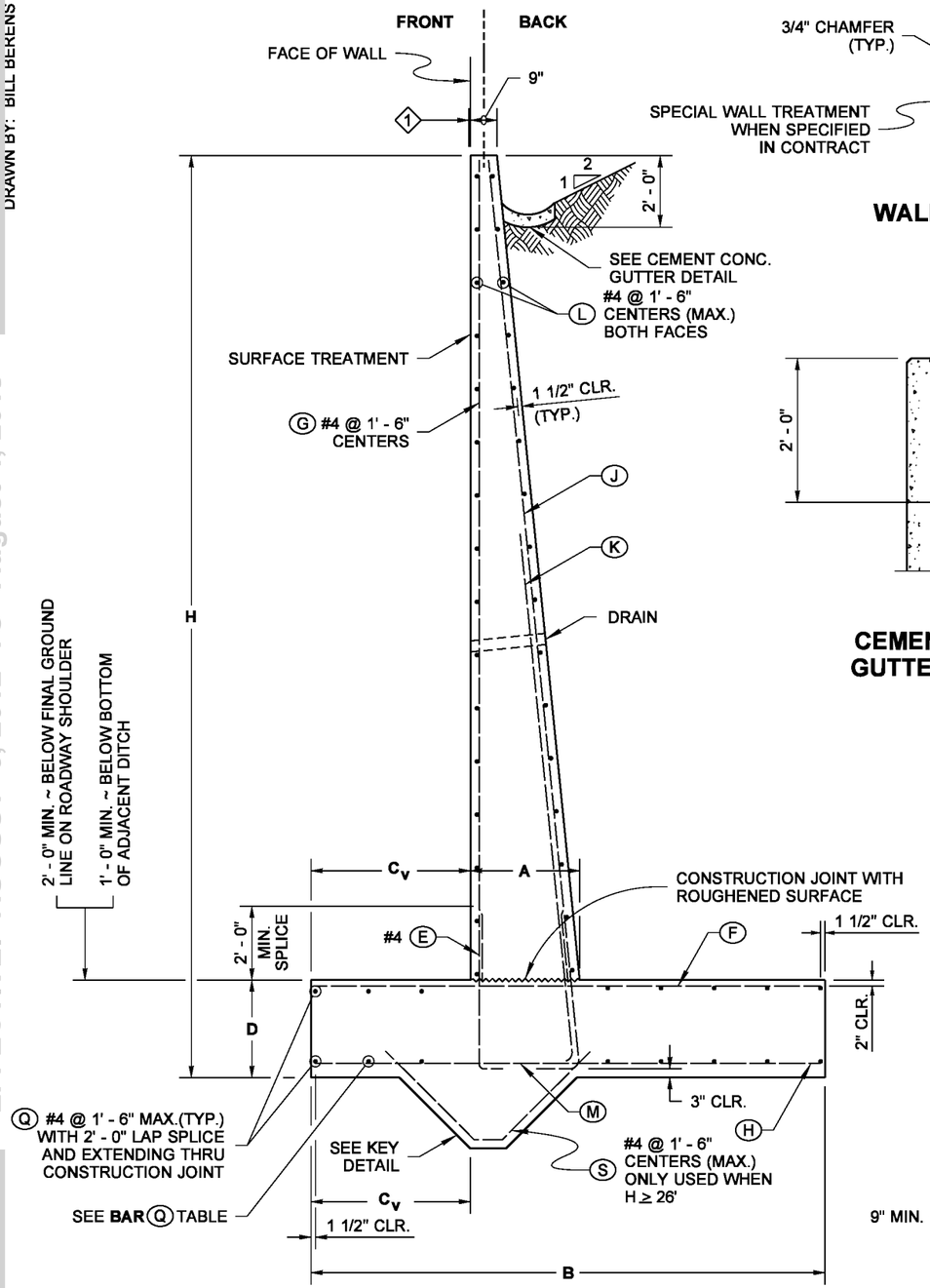

TYPICAL SECTION

1 OFFSET ~ SET TOP OF WALL BACK:
H ≤ 20' ..... OFFSET = 1/2"
H ≥ 20' ..... OFFSET (inches) = $\frac{H(ft)}{8} - 2$

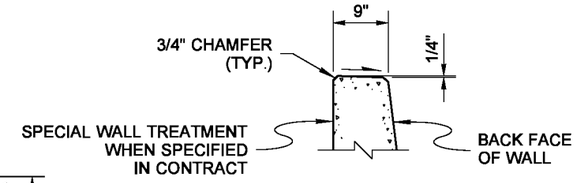

WALL TOP DETAIL

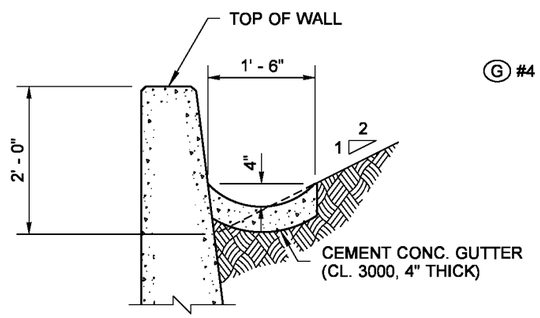

CEMENT CONC. GUTTER DETAIL

BAR Q #4		
LOCATION	WALL HEIGHT (H)	QTY.
TOP OF FOOTING	≤ 13'	4
	12' ≤ 17'	5
	18' ≤ 22'	7
	23' ≤ 29'	9
	30' ≤ 35'	13
BOTTOM OF FOOTING	≤ 13'	4
	12' ≤ 17'	5
	18' ≤ 22'	7
	23' ≤ 29'	9
	30' ≤ 35'	13

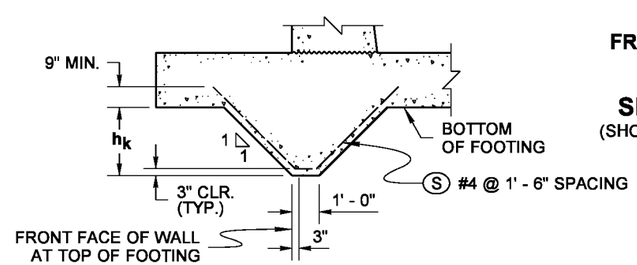

KEY DETAIL

REQUIRED ON WALLS WHERE H > 26'

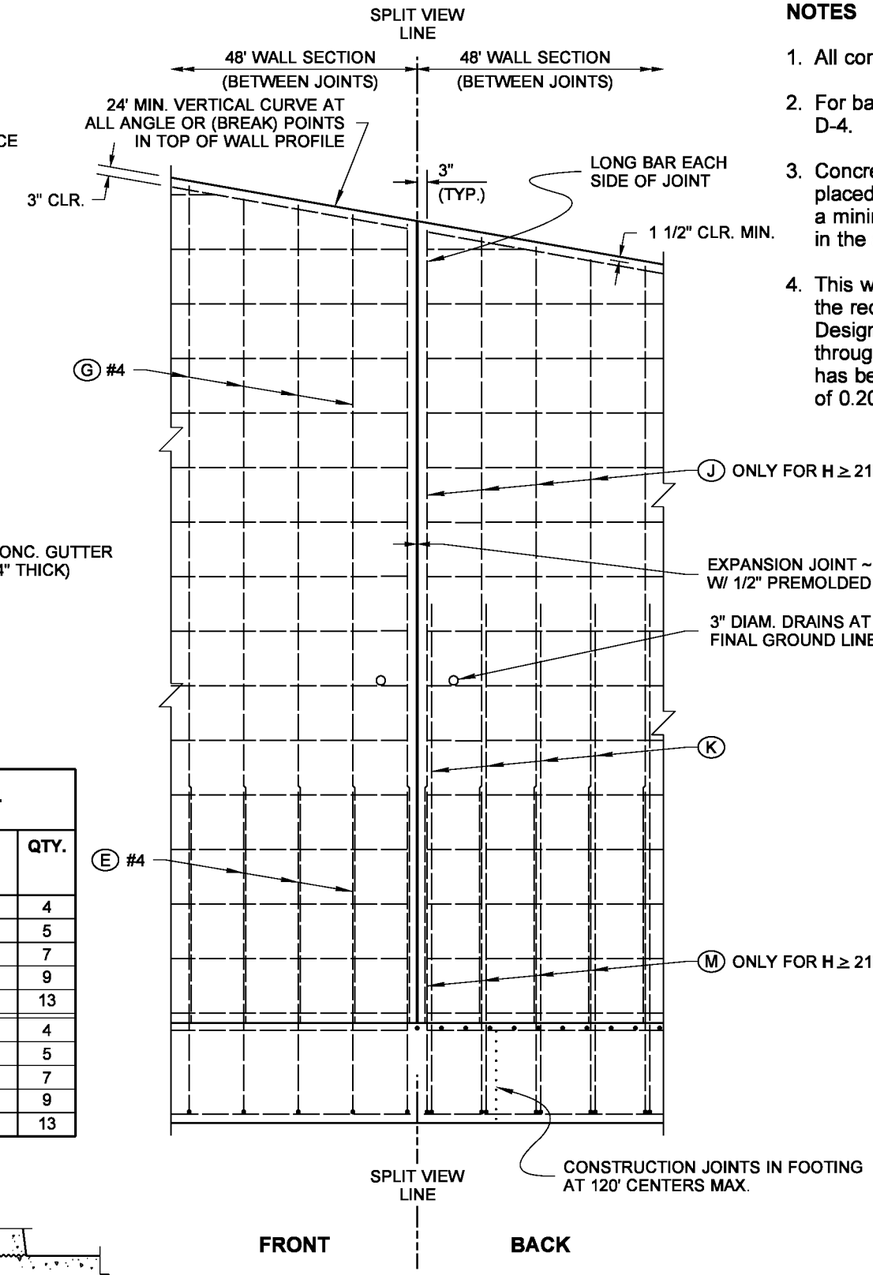

SPLIT ELEVATION VIEW

(SHOWING SEPARATE REBAR LAYERS)

NOTES

1. All concrete shall be Class 4000, except as noted.
2. For backfill requirements, see Standard Plan D-4.
3. Concrete in the 48 foot wall sections shall be placed separately between expansion joints with a minimum 24 hour period before placing concrete in the adjacent section.
4. This wall has been designed in accordance with the requirements of the AASHTO LRFD Bridge Design Specifications 4th Edition 2007 and interims through 2008. The seismic design of these walls has been completed using an effective PGA of 0.20 g.

VERTICAL FACE WALL DESIGN WITH 2 :1 BACKSLOPE

NOTE: THIS PLAN IS NOT A LEGAL ENGINEERING DOCUMENT BUT AN ELECTRONIC DUPLICATE. THE ORIGINAL, SIGNED BY THE ENGINEER AND APPROVED FOR PUBLICATION, IS KEPT ON FILE AT THE WASHINGTON STATE DEPARTMENT OF TRANSPORTATION. A COPY MAY BE OBTAINED UPON REQUEST.

REINFORCED CONCRETE RETAINING WALL TYPE 5

STANDARD PLAN D-10.30-00

SHEET 1 OF 2 SHEETS

APPROVED FOR PUBLICATION

Pasco Bakotich III — STATE DESIGN ENGINEER
07-08-08 — DATE

Washington State Department of Transportation

EFFECTIVE: AUGUST 6, 2012 TO August 4, 2013
EFFECTIVE: AUGUST 6, 2012 TO August 4, 2013
EFFECTIVE: AUGUST 6, 2012 TO August 4, 2013
EFFECTIVE: AUGUST 6, 2012 TO August 4, 2013

EFFECTIVE: AUGUST 6, 2012 TO August 4, 2013

WALL HT H	DIMENSIONS					FOOTING REINFORCEMENT																			STEM REINFORCEMENT				MATERIAL QUANTITY		MAXIMUM SOIL PRESSURE (PSF)		
						BAR (E) #4		BAR (F)			BAR (H)			BAR (K)					BAR (M)					BAR (J)			(G) #4					
	B	C_V	D	h_K	A	LENGTH	h	SIZE	SPA.	LENGTH	SIZE	SPA.	LENGTH	SIZE	SPA.	LENGTH	h	b	SIZE	SPA.	LENGTH	h	b	SIZE	SPA.	LENGTH	LENGTH	CONC. CY / LF	STEEL LBS / LF	SERVICE	STRENGTH	EXTREME EVENT 1
5'	4' - 3"	1' - 6"	1' - 0"	N/A	1' - 1 1/2"	3' - 3 1/2"	2' - 9"	#4	1' - 6"	4' - 0"	#4	1' - 6"	4' - 0"	#4	1' - 6"	5' - 2"	4' - 7"	8"	N/A	N/A	N/A	N/A	N/A	N/A	N/A	N/A	3' - 10"	0.30	19.3	706	928	831
6'	4' - 3"	1' - 6"	1' - 0"	N/A	1' - 3"	3' - 3 1/2"	2' - 9"	#4	1' - 6"	4' - 0"	#4	1' - 6"	4' - 0"	#4	1' - 6"	6' - 2"	5' - 7"	8"	N/A	N/A	N/A	N/A	N/A	N/A	N/A	N/A	4' - 10"	0.34	21.7	825	1084	982
7'	4' - 3"	1' - 6"	1' - 0"	N/A	1' - 4"	3' - 3 1/2"	2' - 9"	#4	1' - 6"	4' - 0"	#4	1' - 6"	4' - 0"	#4	1' - 6"	7' - 2"	6' - 7"	8"	N/A	N/A	N/A	N/A	N/A	N/A	N/A	N/A	5' - 10"	0.39	22.8	930	1218	1169
8'	4' - 3"	1' - 6"	1' - 0"	N/A	1' - 5"	3' - 3 1/2"	2' - 9"	#4	1' - 6"	4' - 0"	#4	1' - 6"	4' - 0"	#4	1' - 6"	8' - 2"	7' - 7"	8"	N/A	N/A	N/A	N/A	N/A	N/A	N/A	N/A	6' - 10"	0.44	25.3	1018	1362	1401
9'	4' - 3"	1' - 6"	1' - 0"	N/A	1' - 6 1/2"	3' - 3 1/2"	2' - 9"	#4	1' - 6"	4' - 0"	#4	1' - 6"	4' - 0"	#4	1' - 6"	9' - 2"	8' - 7 1/2"	8"	N/A	N/A	N/A	N/A	N/A	N/A	N/A	N/A	7' - 10"	0.50	27.7	1211	1649	1696
10'	4' - 9"	1' - 6"	1' - 0"	N/A	1' - 7 1/2"	3' - 3 1/2"	2' - 9"	#4	1' - 6"	4' - 6"	#4	1' - 6"	4' - 6"	#4	1' - 6"	10' - 2"	9' - 7 1/2"	8"	N/A	N/A	N/A	N/A	N/A	N/A	N/A	N/A	8' - 10"	0.58	32.0	1421	1946	2000
11'	5' - 6"	1' - 6"	1' - 0"	N/A	1' - 9"	3' - 3 1/2"	2' - 9"	#4	1' - 6"	5' - 3"	#4	1' - 6"	5' - 3"	#4	1' - 0"	11' - 2"	10' - 7 1/2"	8"	N/A	N/A	N/A	N/A	N/A	N/A	N/A	N/A	9' - 10"	0.67	37.6	1623	2225	2283
12'	6' - 3"	1' - 6"	1' - 0"	N/A	1' - 10"	3' - 3 1/2"	2' - 9"	#4	1' - 0"	6' - 0"	#4	1' - 6"	6' - 0"	#4	10"	12' - 2"	11' - 7 1/2"	8"	N/A	N/A	N/A	N/A	N/A	N/A	N/A	N/A	10' - 10"	0.76	43.9	1826	2508	2570
13'	6' - 6"	1' - 9"	1' - 0"	N/A	1' - 11"	3' - 3 1/2"	2' - 9"	#4	1' - 0"	6' - 3"	#4	1' - 6"	6' - 3"	#4	8"	13' - 2 1/2"	12' - 7 1/2"	8"	N/A	N/A	N/A	N/A	N/A	N/A	N/A	N/A	11' - 10"	0.84	49.6	1963	2715	2769
14'	7' - 3"	1' - 9"	1' - 0"	N/A	2' - 0 1/2"	3' - 3 1/2"	2' - 9"	#4	8"	7' - 0"	#4	1' - 6"	7' - 0"	#4	6"	14' - 2 1/2"	13' - 7 1/2"	8"	N/A	N/A	N/A	N/A	N/A	N/A	N/A	N/A	12' - 10"	0.94	61.9	2169	3001	3060
15'	7' - 9"	2' - 0"	1' - 3"	N/A	2' - 1 1/2"	3' - 6 1/2"	3' - 0"	#4	8"	7' - 6"	#4	1' - 6"	7' - 6"	#5	8"	15' - 3 1/2"	14' - 8"	9"	N/A	N/A	N/A	N/A	N/A	N/A	N/A	N/A	13' - 7"	1.09	69.5	2306	3198	3247
16'	8' - 3"	2' - 3"	1' - 3"	N/A	2' - 2 1/2"	3' - 6 1/2"	3' - 0"	#4	8"	8' - 0"	#4	1' - 0"	8' - 0"	#5	7"	16' - 3 1/2"	15' - 8"	9"	N/A	N/A	N/A	N/A	N/A	N/A	N/A	N/A	14' - 7"	1.19	79.2	2423	3369	3405
17'	8' - 9"	2' - 3"	1' - 6"	N/A	2' - 3 1/2"	3' - 9 1/2"	3' - 3"	#4	8"	8' - 6"	#4	1' - 0"	8' - 6"	#5	6"	17' - 3 1/2"	16' - 8"	9"	N/A	N/A	N/A	N/A	N/A	N/A	N/A	N/A	15' - 4"	1.36	89.0	2677	3729	3777
18'	9' - 6"	2' - 3"	1' - 6"	N/A	2' - 4 1/2"	3' - 9 1/2"	3' - 3"	#5	9"	9' - 3"	#4	1' - 0"	9' - 3"	#6	7"	18' - 5"	17' - 8"	11"	N/A	N/A	N/A	N/A	N/A	N/A	N/A	N/A	16' - 4"	1.49	108.6	2883	4015	4068
19'	10' - 0"	2' - 6"	1' - 9"	N/A	2' - 5 1/2"	4' - 0 1/2"	3' - 6"	#5	9"	9' - 9"	#4	1' - 0"	9' - 9"	#6	6"	19' - 5 1/2"	18' - 8"	11"	N/A	N/A	N/A	N/A	N/A	N/A	N/A	N/A	17' - 1"	1.68	122.5	3021	4213	4256
20'	10' - 6"	3' - 0"	2' - 0"	N/A	2' - 6 1/2"	4' - 3 1/2"	3' - 9"	#5	9"	10' - 3"	#4	1' - 0"	10' - 3"	#6	6"	20' - 5 1/2"	19' - 8"	11"	N/A	N/A	N/A	N/A	N/A	N/A	N/A	N/A	17' - 10"	1.88	128.5	3048	4256	4268
21'	11' - 6"	3' - 6"	2' - 0"	N/A	2' - 7 1/2"	4' - 3 1/2"	3' - 9"	#5	9"	11' - 3"	#4	10"	11' - 3"	#6	1' - 4"	14' - 4"	13' - 5 1/2"	11"	#6	1' - 4"	5' - 2 1/2"	4' - 4 1/2"	11"	#6	1' - 4"	18' - 11"	18' - 10"	2.05	116.0	3015	4199	4180
22'	12' - 3"	3' - 9"	2' - 0"	N/A	2' - 9"	4' - 3 1/2"	3' - 9"	#5	7"	12' - 0"	#4	9"	12' - 0"	#6	1' - 4"	15' - 7 1/2"	14' - 10"	11"	#6	1' - 4"	5' - 2 1/2"	4' - 4 1/2"	11"	#6	1' - 4"	19' - 11"	19' - 10"	2.20	128.0	3114	4337	4307
23'	12' - 9"	3' - 9"	2' - 3"	N/A	2' - 10"	4' - 6 1/2"	4' - 0"	#5	7"	12' - 6"	#4	9"	12' - 6"	#6	1' - 2"	16' - 1"	15' - 3 1/2"	11"	#6	1' - 2"	5' - 5 1/2"	4' - 7 1/2"	11"	#6	1' - 2"	20' - 8"	20' - 7"	2.44	141.1	3355	4679	4655
24'	13' - 6"	4' - 0"	2' - 3"	N/A	2' - 11"	4' - 6 1/2"	4' - 0"	#5	6"	13' - 3"	#4	8"	13' - 3"	#8	1' - 4"	15' - 3 1/2"	14' - 3"	1' - 3"	#8	1' - 4"	7' - 4 1/2"	6' - 3 1/2"	1' - 3"	#8	1' - 4"	21' - 8"	21' - 7"	2.61	185.1	3454	4816	4780
25'	14' - 3"	4' - 6"	2' - 6"	N/A	3' - 0"	4' - 9 1/2"	4' - 3"	#5	6"	14' - 0"	#4	7"	14' - 0"	#8	1' - 4"	16' - 8"	15' - 7 1/2"	1' - 3"	#8	1' - 4"	7' - 7 1/2"	6' - 6 1/2"	1' - 3"	#8	1' - 4"	22' - 5"	22' - 4"	2.88	197.5	3481	4850	4792
26'	14' - 6"	4' - 6"	2' - 9"	2' - 0"	3' - 1"	5' - 0 1/2"	4' - 6"	#5	6"	14' - 3"	#4	7"	14' - 3"	#8	1' - 4"	18' - 0 1/2"	17' - 0"	1' - 3"	#8	1' - 4"	7' - 10 1/2"	6' - 9 1/2"	1' - 3"	#8	1' - 4"	23' - 2"	23' - 1"	3.35	205.6	3818	5330	5279
27'	14' - 9"	4' - 9"	2' - 9"	2' - 0"	3' - 2"	5' - 0 1/2"	4' - 6"	#5	6"	14' - 6"	#4	6"	14' - 6"	#8	1' - 2"	18' - 2 1/2"	17' - 2"	1' - 3"	#8	1' - 2"	7' - 10 1/2"	6' - 9 1/2"	1' - 3"	#8	1' - 2"	24' - 2"	24' - 1"	3.49	227.9	3955	5538	5474
28'	15' - 3"	5' - 0"	3' - 0"	2' - 0"	3' - 3"	5' - 3 1/2"	4' - 9"	#5	6"	15' - 0"	#4	6"	15' - 0"	#8	1' - 0"	18' - 1"	17' - 0 1/2"	1' - 3"	#8	1' - 0"	8' - 1 1/2"	7' - 0 1/2"	1' - 3"	#8	1' - 0"	24' - 11 1/2"	24' - 10"	3.77	251.8	4097	5739	5667
29'	16' - 0"	5' - 6"	3' - 3"	2' - 0"	3' - 4"	5' - 6 1/2"	5' - 0"	#5	6"	15' - 9"	#5	8"	15' - 9"	#8	10"	17' - 6 1/2"	16' - 6"	1' - 3"	#8	10"	8' - 4 1/2"	7' - 3 1/2"	1' - 3"	#8	10"	25' - 8 1/2"	25' - 7"	4.09	288.7	4117	5761	5667
30'	17' - 0"	6' - 0"	3' - 3"	2' - 0"	3' - 5"	5' - 6 1/2"	5' - 0"	#6	7"	16' - 9"	#5	7"	16' - 9"	#9	10"	16' - 9 1/2"	15' - 8"	1' - 6"	#9	10"	9' - 8"	8' - 5"	1' - 6"	#9	10"	26' - 8 1/2"	26' - 7"	4.34	361.2	4102	5729	5614
31'	17' - 6"	6' - 3"	3' - 6"	2' - 0"	3' - 6"	5' - 9 1/2"	5' - 3"	#6	7"	17' - 3"	#5	7"	17' - 3"	#10	1' - 0"	18' - 9"	17' - 6"	1' - 8"	#10	1' - 0"	11' - 4"	9' - 10 1/2"	1' - 8"	#10	1' - 0"	27' - 5 1/2"	27' - 4"	4.66	396.1	4245	5931	5808
32'	18' - 3"	6' - 6"	3' - 9"	2' - 0"	3' - 7"	6' - 0 1/2"	5' - 6"	#6	7"	18' - 0"	#5	7"	18' - 0"	#10	10"	17' - 7"	16' - 4"	1' - 8"	#10	10"	11' - 7"	10' - 1 1/2"	1' - 8"	#10	10"	28' - 2 1/2"	28' - 1"	5.02	450.1	4372	6103	5974
33'	19' - 0"	7' - 0"	4' - 0"	2' - 0"	3' - 7 1/2"	6' - 3 1/2"	5' - 9"	#6	7"	18' - 9"	#6	8"	18' - 9"	#10	10"	19' - 1"	17' - 10"	1' - 8"	#10	10"	11' - 10"	10' - 4 1/2"	1' - 8"	#10	10"	28' - 11 1/2"	28' - 10"	5.40	475.6	4411	6151	6006
34'	20' - 0"	7' - 3"	4' - 0"	2' - 0"	3' - 9"	6' - 3 1/2"	5' - 9"	#6	6"	19' - 9"	#6	7"	19' - 9"	#10	9"	18' - 11"	17' - 8"	1' - 8"	#10	9"	11' - 10"	10' - 4 1/2"	1' - 8"	#10	9"	29' - 11 1/2"	29' - 10"	5.69	538.0	4499	6267	6117
35'	20' - 6"	7' - 6"	4' - 3"	2' - 0"	3' - 10"	6' - 6 1/2"	6' - 0"	#6	6"	20' - 3"	#6	7"	20' - 3"	#10	9"	20' - 5"	19' - 2"	1' - 8"	#10	9"	12' - 1"	10' - 7 1/2"	1' - 8"	#10	9"	30' - 8 1/2"	30' - 7"	6.05	558.4	4640	6468	6310

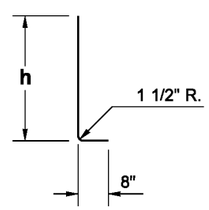

BAR (E)
@ 1' - 6" CENTERS

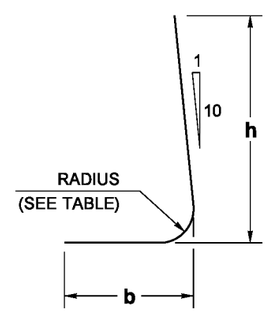

BAR	RADIUS
#4	1 1/2"
#5	1 7/8"
#6	2 1/4"
#7	2 5/8"
#8	3"
#9	4 3/4"
#10	5 3/8"
#11	6"

BARS (K) AND (M)

BAR	MIN. SPLICE
#4	2' - 0"
#5	2' - 0"
#6	2' - 0"
#7	2' - 6"
#8	3' - 3"
#9	4' - 2"
#10	5' - 3"

VERTICAL FACE WALL DESIGN WITH 2 :1 BACKSLOPE

BIJAN KHALEGHI
STATE OF WASHINGTON
27695
STRUCTURAL ENGINEER
PROFESSIONAL ENGINEER

NOTE: THIS PLAN IS NOT A LEGAL ENGINEERING DOCUMENT BUT AN ELECTRONIC DUPLICATE. THE ORIGINAL, SIGNED BY THE ENGINEER AND APPROVED FOR PUBLICATION, IS KEPT ON FILE AT THE WASHINGTON STATE DEPARTMENT OF TRANSPORTATION. A COPY MAY BE OBTAINED UPON REQUEST.

REINFORCED CONCRETE RETAINING WALL TYPE 5

STANDARD PLAN D-10.30-00

SHEET 2 OF 2 SHEETS

APPROVED FOR PUBLICATION

Pasco Bakotich III — STATE DESIGN ENGINEER
07-08-08 — DATE

Washington State Department of Transportation

DRAWN BY: BILL BEKENS

EFFECTIVE: AUGUST 6, 2012 TO August 4, 2013

EFFECTIVE: AUGUST 6, 2012 TO August 4, 2013
EFFECTIVE: AUGUST 6, 2012 TO August 4, 2013

DRAWN BY: BILL BEKENS

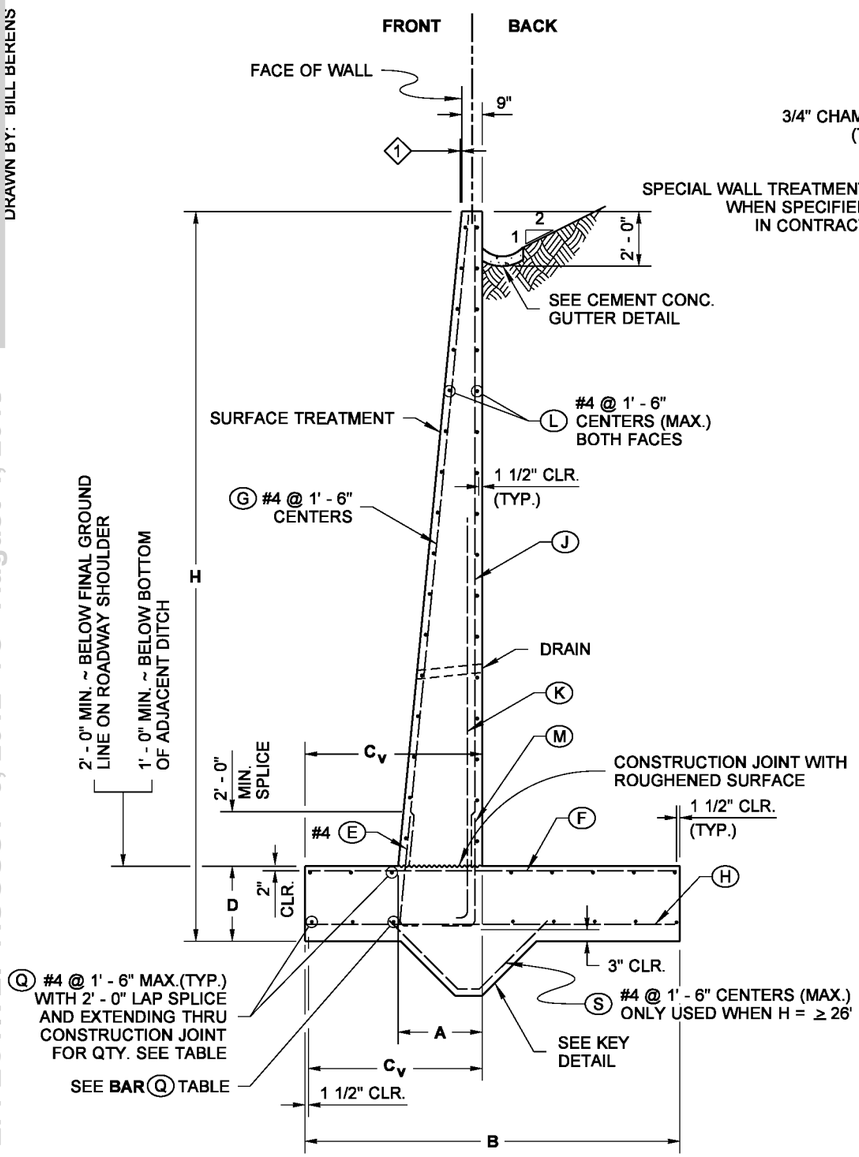

TYPICAL SECTION

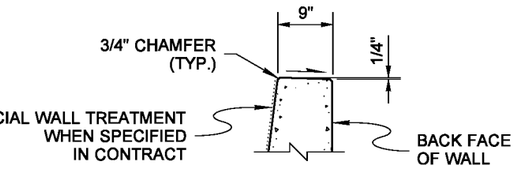

WALL TOP DETAIL

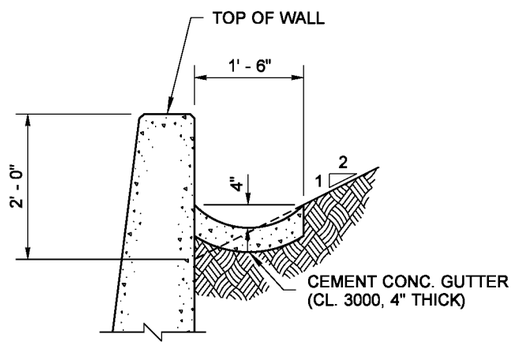

CEMENT CONC. GUTTER DETAIL

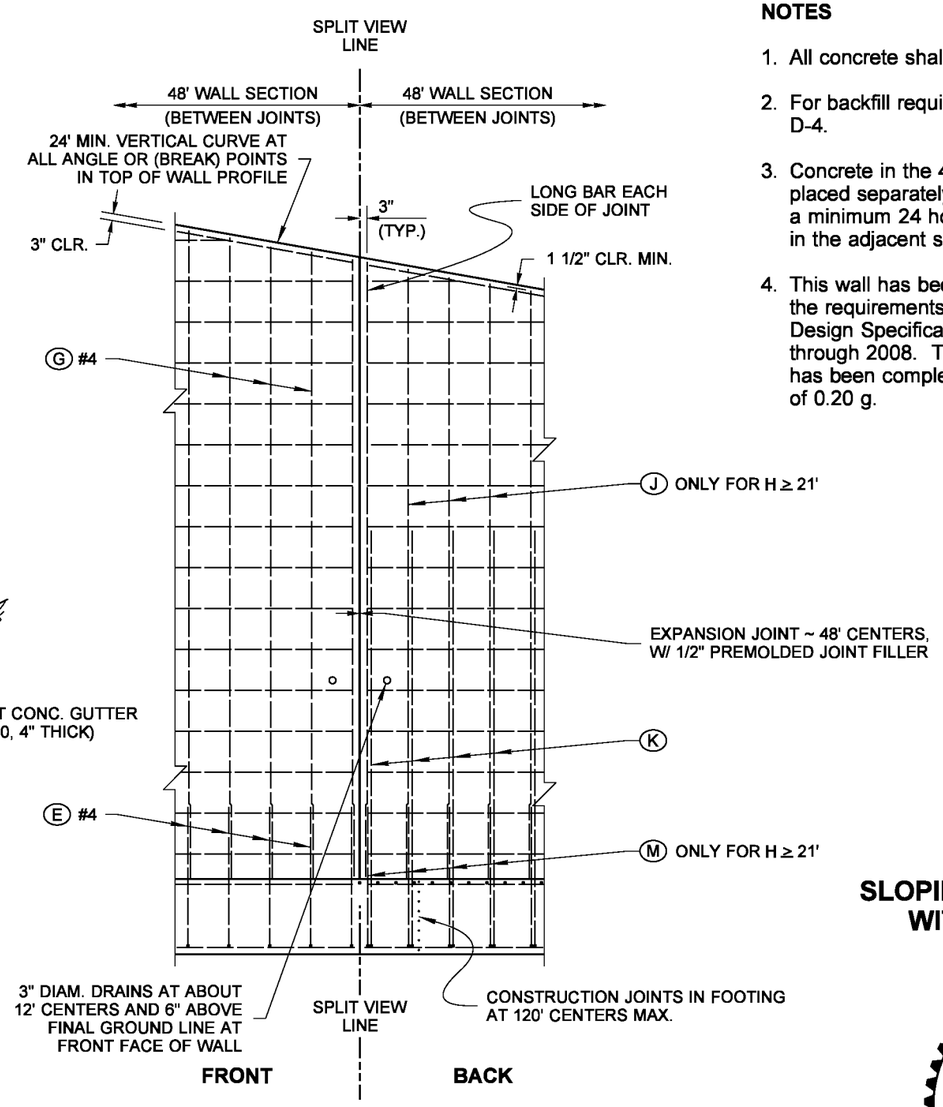

SPLIT ELEVATION VIEW
(SHOWING SEPARATE REBAR LAYERS)

NOTES

1. All concrete shall be Class 4000, except as noted.
2. For backfill requirements, see Standard Plan D-4.
3. Concrete in the 48 foot wall sections shall be placed separately between expansion joints with a minimum 24 hour period before placing concrete in the adjacent section.
4. This wall has been designed in accordance with the requirements of the AASHTO LRFD Bridge Design Specifications 4th Edition 2007 and interims through 2008. The seismic design of these walls has been completed using an effective PGA of 0.20 g.

SLOPING FACE WALL DESIGN WITH 2 :1 BACKSLOPE

BAR Q #4		
LOCATION	WALL HEIGHT (H)	QTY.
TOP OF FOOTING	≤ 14'	4
	15' ≤ 20'	6
	21' ≤ 24'	7
	25' ≤ 29'	9
	30' ≤ 35'	11
BOTTOM OF FOOTING	≤ 14'	4
	15' ≤ 20'	6
	21' ≤ 24'	7
	25' ≤ 29'	9
	30' ≤ 35'	11

1 OFFSET ~ SET TOP OF WALL BACK:
H ≤ 20' ..... OFFSET = 1/2"
H ≥ 20' ..... OFFSET (inches) = $\frac{H(ft)}{8} - 2$

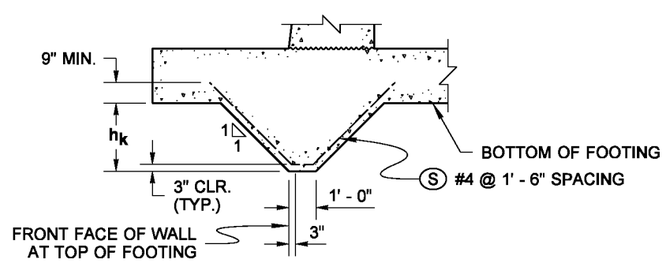

KEY DETAIL
REQUIRED ON WALLS WHERE H ≥ 26'

NOTE: THIS PLAN IS NOT A LEGAL ENGINEERING DOCUMENT BUT AN ELECTRONIC DUPLICATE. THE ORIGINAL, SIGNED BY THE ENGINEER AND APPROVED FOR PUBLICATION, IS KEPT ON FILE AT THE WASHINGTON STATE DEPARTMENT OF TRANSPORTATION. A COPY MAY BE OBTAINED UPON REQUEST.

REINFORCED CONCRETE RETAINING WALL TYPE 6
STANDARD PLAN D-10.35-00

SHEET 1 OF 2 SHEETS

APPROVED FOR PUBLICATION

Pasco Bakotich III — STATE DESIGN ENGINEER
07-08-08 — DATE

Washington State Department of Transportation

EFFECTIVE: AUGUST 6, 2012 TO August 4, 2013
EFFECTIVE: AUGUST 6, 2012 TO August 4, 2013
EFFECTIVE: AUGUST 6, 2012 TO August 4, 2013
EFFECTIVE: AUGUST 6, 2012 TO August 4, 2013

EFFECTIVE: AUGUST 6, 2012 TO August 4, 2013

WALL HT H	DIMENSIONS					FOOTING REINFORCEMENT																			STEM REINFORCEMENT				MATERIAL QUANTITY		MAXIMUM SOIL PRESSURE (PSF)		
						BAR (E) #4		BAR (F)			BAR (H)			BAR (K)					BAR (M)					BAR (J)			(G) #4					
	B	C_V	D	h_K	A	LENGTH	h	SIZE	SPA.	LENGTH	SIZE	SPA.	LENGTH	SIZE	SPA.	LENGTH	h	b	SIZE	SPA.	LENGTH	h	b	SIZE	SPA.	LENGTH	LENGTH	CONC. CY / LF	STEEL LBS / LF	SERVICE	STRENGTH	EXTREME EVENT 1
5'	4' - 3"	2' - 9"	1' - 0"	N/A	1' - 1 1/2"	3' - 4"	2' - 9"	#4	1' - 6"	4' - 0"	#4	1' - 6"	4' - 0"	#4	1' - 6"	5' - 1 1/2"	4' - 7"	8"	N/A	N/A	N/A	N/A	N/A	N/A	N/A	N/A	3' - 9"	0.30	20.5	591	771	733
6'	4' - 3"	2' - 9"	1' - 0"	N/A	1' - 3"	3' - 4"	2' - 9"	#4	1' - 6"	4' - 0"	#4	1' - 6"	4' - 0"	#4	1' - 6"	6' - 1 1/2"	5' - 7"	8"	N/A	N/A	N/A	N/A	N/A	N/A	N/A	N/A	4' - 9"	0.34	23.0	709	925	871
7'	4' - 3"	2' - 9"	1' - 0"	N/A	1' - 4"	3' - 4"	2' - 9"	#4	1' - 6"	4' - 0"	#4	1' - 6"	4' - 0"	#4	1' - 6"	7' - 1 1/2"	6' - 7"	8"	N/A	N/A	N/A	N/A	N/A	N/A	N/A	N/A	5' - 9"	0.39	24.1	815	1061	992
8'	4' - 3"	3' - 0"	1' - 0"	N/A	1' - 5"	3' - 4"	2' - 9"	#4	1' - 6"	4' - 0"	#4	1' - 6"	4' - 0"	#4	1' - 6"	8' - 1 1/2"	7' - 7"	8"	N/A	N/A	N/A	N/A	N/A	N/A	N/A	N/A	6' - 9"	0.44	26.6	887	1146	1066
9'	4' - 3"	3' - 0"	1' - 0"	N/A	1' - 6 1/2"	3' - 4"	2' - 9"	#4	1' - 6"	4' - 0"	#4	1' - 6"	4' - 0"	#4	1' - 6"	9' - 1 1/2"	8' - 7"	8"	N/A	N/A	N/A	N/A	N/A	N/A	N/A	N/A	7' - 10 1/2"	0.50	27.7	998	1354	1236
10'	4' - 3"	3' - 3"	1' - 0"	N/A	1' - 7 1/2"	3' - 4"	2' - 9"	#4	1' - 6"	4' - 0"	#4	1' - 6"	4' - 0"	#4	1' - 6"	10' - 1 1/2"	9' - 7"	8"	N/A	N/A	N/A	N/A	N/A	N/A	N/A	N/A	8' - 9 1/2"	0.56	31.5	1145	1580	1412
11'	4' - 9"	3' - 3"	1' - 3"	N/A	1' - 8 1/2"	3' - 7"	3' - 0"	#4	1' - 6"	4' - 6"	#4	1' - 6"	4' - 6"	#4	1' - 0"	11' - 1 1/2"	10' - 7"	8"	N/A	N/A	N/A	N/A	N/A	N/A	N/A	N/A	9' - 6 1/2"	0.67	36.8	1368	1892	1686
12'	5' - 6"	3' - 3"	1' - 3"	N/A	1' - 10"	3' - 7"	3' - 0"	#4	1' - 6"	5' - 3"	#4	1' - 6"	5' - 3"	#4	1' - 0"	12' - 1 1/2"	11' - 7"	8"	N/A	N/A	N/A	N/A	N/A	N/A	N/A	N/A	10' - 6 1/2"	0.77	38.8	1540	2125	1899
13'	6' - 0"	3' - 6"	1' - 3"	N/A	1' - 11"	3' - 7"	3' - 0"	#4	1' - 6"	5' - 9"	#4	1' - 6"	5' - 9"	#4	9"	13' - 1 1/2"	12' - 7"	8"	N/A	N/A	N/A	N/A	N/A	N/A	N/A	N/A	11' - 6 1/2"	0.86	46.2	1664	2305	2049
14'	6' - 6"	3' - 6"	1' - 3"	N/A	2' - 0"	3' - 7"	3' - 0"	#4	1' - 0"	6' - 3"	#4	1' - 6"	6' - 3"	#4	7"	14' - 1 1/2"	13' - 7"	8"	N/A	N/A	N/A	N/A	N/A	N/A	N/A	N/A	12' - 6 1/2"	0.96	54.5	1875	2604	2310
15'	7' - 3"	3' - 9"	1' - 6"	N/A	2' - 1"	3' - 10"	3' - 3"	#4	1' - 0"	7' - 0"	#4	1' - 6"	7' - 0"	#4	6"	15' - 1 1/2"	14' - 7"	8"	N/A	N/A	N/A	N/A	N/A	N/A	N/A	N/A	13' - 3 1/2"	1.12	62.7	1987	2754	2450
16'	7' - 9"	3' - 9"	1' - 6"	N/A	2' - 2"	3' - 10"	3' - 3"	#4	9"	7' - 6"	#4	1' - 6"	7' - 6"	#5	8"	16' - 2 1/2"	15' - 7"	9"	N/A	N/A	N/A	N/A	N/A	N/A	N/A	N/A	14' - 3 1/2"	1.22	72.1	2202	3058	2716
17'	8' - 3"	4' - 0"	1' - 9"	N/A	2' - 3"	4' - 1"	3' - 6"	#4	9"	8' - 0"	#4	1' - 6"	8' - 0"	#5	7"	17' - 2 1/2"	16' - 7"	9"	N/A	N/A	N/A	N/A	N/A	N/A	N/A	N/A	15' - 0 1/2"	1.39	80.1	2348	3265	2894
18'	9' - 0"	4' - 3"	1' - 9"	N/A	2' - 4 1/2"	4' - 1"	3' - 6"	#4	7"	8' - 9"	#4	1' - 6"	8' - 9"	#5	6"	18' - 2 1/2"	17' - 7"	9"	N/A	N/A	N/A	N/A	N/A	N/A	N/A	N/A	16' - 1"	1.52	93.9	2441	3391	3010
19'	9' - 9"	4' - 6"	2' - 0"	N/A	2' - 5"	4' - 4"	3' - 9"	#4	6"	9' - 6"	#4	1' - 6"	9' - 6"	#6	7"	19' - 4"	18' - 7"	11"	N/A	N/A	N/A	N/A	N/A	N/A	N/A	N/A	16' - 10"	1.73	110.7	2556	3545	3153
20'	10' - 3"	4' - 9"	2' - 3"	N/A	2' - 6"	4' - 7"	4' - 0"	#4	6"	10' - 0"	#4	1' - 6"	10' - 0"	#6	6"	20' - 4"	19' - 7"	11"	N/A	N/A	N/A	N/A	N/A	N/A	N/A	N/A	17' - 7"	1.93	123.5	2702	3752	3331
21'	11' - 0"	5' - 0"	2' - 3"	N/A	2' - 7 1/2"	4' - 7"	4' - 0"	#5	7"	10' - 9"	#4	1' - 6"	10' - 9"	#7	1' - 4"	10' - 3 1/2"	9' - 4 1/2"	1' - 1"	#7	1' - 4"	6' - 2"	5' - 2"	1' - 1"	#7	1' - 4"	18' - 6"	18' - 7"	2.09	125.5	2800	3886	3454
22'	12' - 0"	5' - 3"	2' - 3"	N/A	2' - 8 1/2"	4' - 7"	4' - 0"	#6	8"	11' - 9"	#4	1' - 6"	11' - 9"	#7	1' - 0"	9' - 3 1/2"	8' - 4 1/2"	1' - 1"	#7	1' - 0"	6' - 2"	5' - 2"	1' - 1"	#7	1' - 0"	19' - 6"	19' - 7"	2.27	153.1	2876	3983	3552
23'	12' - 3"	5' - 6"	2' - 6"	N/A	2' - 9 1/2"	4' - 10"	4' - 3"	#6	8"	12' - 0"	#4	1' - 6"	12' - 0"	#7	1' - 0"	10' - 5"	9' - 6"	1' - 1"	#7	1' - 0"	6' - 5"	5' - 5"	1' - 1"	#7	1' - 0"	20' - 3"	20' - 4"	2.48	160.1	3046	4229	3756
24'	13' - 0"	5' - 9"	2' - 6"	N/A	2' - 10 1/2"	4' - 10"	4' - 3"	#6	7"	12' - 9"	#4	1' - 6"	12' - 9"	#7	10"	10' - 0 1/2"	9' - 1 1/2"	1' - 1"	#7	10"	6' - 5"	5' - 5"	1' - 1"	#7	10"	21' - 3"	21' - 4"	2.66	184.9	3147	4368	3883
25'	13' - 9"	6' - 3"	2' - 9"	N/A	2' - 11 1/2"	5' - 1"	4' - 6"	#6	7"	13' - 6"	#4	1' - 6"	13' - 6"	#7	10"	11' - 1 1/2"	10' - 3"	1' - 1"	#7	10"	6' - 8"	5' - 8"	1' - 1"	#7	10"	22' - 0"	22' - 1"	2.94	197.0	3190	4424	3933
26'	13' - 9"	6' - 6"	2' - 9"	2' - 0"	3' - 1"	5' - 1"	4' - 6"	#6	7"	13' - 6"	#4	1' - 0"	13' - 6"	#8	1' - 4"	14' - 5 1/2"	13' - 5"	1' - 3"	#8	1' - 4"	7' - 9"	6' - 8"	1' - 3"	#8	1' - 4"	23' - 0"	23' - 1"	3.27	194.2	3248	4543	3997
27'	14' - 3"	7' - 0"	2' - 9"	2' - 0"	3' - 2"	5' - 1"	4' - 6"	#6	7"	14' - 0"	#4	1' - 0"	14' - 0"	#8	1' - 4"	15' - 5 1/2"	14' - 5 1/2"	1' - 3"	#8	1' - 4"	7' - 9"	6' - 8"	1' - 3"	#8	1' - 4"	24' - 0"	24' - 1 1/2"	3.44	201.9	3298	4620	4054
28'	14' - 9"	7' - 3"	3' - 0"	2' - 0"	3' - 3"	5' - 4"	4' - 9"	#6	7"	14' - 6"	#4	1' - 0"	14' - 6"	#8	1' - 2"	15' - 7"	14' - 6 1/2"	1' - 3"	#8	1' - 2"	8' - 0"	6' - 11"	1' - 3"	#8	1' - 2"	24' - 9"	24' - 10 1/2"	3.71	222.8	3450	4832	4238
29'	15' - 6"	7' - 6"	3' - 0"	2' - 0"	3' - 4"	5' - 4"	4' - 9"	#6	6"	15' - 3"	#4	11"	15' - 3"	#8	1' - 0"	15' - 4"	14' - 3 1/2"	1' - 3"	#8	1' - 0"	8' - 0"	6' - 11"	1' - 3"	#8	1' - 0"	25' - 9"	25' - 10 1/2"	3.92	255.3	3556	4976	4370
30'	16' - 6"	8' - 0"	3' - 3"	2' - 0"	3' - 5"	5' - 7"	5' - 0"	#7	7"	16' - 3"	#4	10"	16' - 3"	#9	10"	13' - 5 1/2"	12' - 3"	1' - 6"	#9	10"	9' - 7"	8' - 3"	1' - 6"	#9	10"	26' - 6"	26' - 7 1/2"	4.28	341.4	3591	5010	4414
31'	16' - 9"	8' - 3"	3' - 6"	2' - 0"	3' - 6"	5' - 10"	5' - 3"	#7	7"	16' - 6"	#4	10"	16' - 6"	#9	10"	14' - 6 1/2"	13' - 4"	1' - 6"	#9	10"	9' - 10"	8' - 6"	1' - 6"	#9	10"	27' - 3"	27' - 4 1/2"	4.56	353.0	3760	5254	4616
32'	17' - 3"	8' - 6"	3' - 9"	2' - 0"	3' - 7"	6' - 1"	5' - 6"	#7	7"	17' - 0"	#4	9"	17' - 0"	#10	1' - 0"	16' - 3"	14' - 10 1/2"	1' - 8"	#10	1' - 0"	11' - 5 1/2"	10' - 0"	1' - 8"	#10	1' - 0"	28' - 0"	28' - 1 1/2"	4.88	387.7	3910	5464	4799
33'	17' - 9"	8' - 9"	4' - 0"	2' - 0"	3' - 7 1/2"	6' - 4"	5' - 9"	#7	7"	17' - 6"	#4	9"	17' - 6"	#10	10"	15' - 5 1/2"	14' - 1"	1' - 8"	#10	10"	11' - 8 1/2"	10' - 3"	1' - 8"	#10	10"	28' - 9"	28' - 10 1/2"	5.21	442.0	4060	5675	4982
34'	18' - 9"	9' - 3"	4' - 0"	2' - 0"	3' - 9"	6' - 4"	5' - 9"	#7	6"	18' - 6"	#4	8"	18' - 6"	#10	10"	16' - 4"	15' - 1"	1' - 8"	#10	10"	11' - 8 1/2"	10' - 3"	1' - 8"	#10	10"	29' - 9"	29' - 10 1/2"	5.50	471.7	4072	5680	4997
35'	19' - 3"	9' - 6"	4' - 3"	2' - 0"	3' - 10"	6' - 7"	6' - 0"	#7	6"	19' - 0"	#4	7"	19' - 0"	#10	9"	16' - 2 1/2"	14' - 11 1/2"	1' - 8"	#10	9"	11' - 11 1/2"	10' - 6"	1' - 8"	#10	9"	30' - 6"	30' - 7 1/2"	5.86	516.0	4221	5889	5179

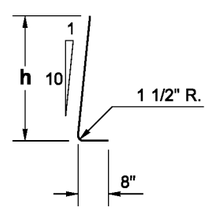

BAR (E)
@ 1' - 6" CENTERS

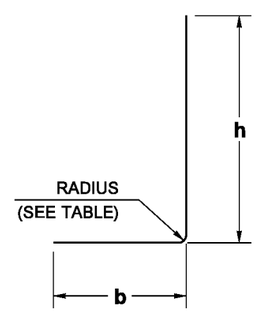

BAR	RADIUS
#4	1 1/2"
#5	1 7/8"
#6	2 1/4"
#7	2 5/8"
#8	3"
#9	4 3/4"
#10	5 3/8"
#11	6"

BARS (K) AND (M)

BAR	MIN. SPLICE
#4	2' - 0"
#5	2' - 0"
#6	2' - 0"
#7	2' - 6"
#8	3' - 3"
#9	4' - 2"
#10	5' - 3"

SLOPING FACE WALL DESIGN WITH 2 :1 BACKSLOPE

BIJAN KHALEGHI
STATE OF WASHINGTON
27695
STRUCTURAL ENGINEER
PROFESSIONAL ENGINEER

NOTE: THIS PLAN IS NOT A LEGAL ENGINEERING DOCUMENT BUT AN ELECTRONIC DUPLICATE. THE ORIGINAL, SIGNED BY THE ENGINEER AND APPROVED FOR PUBLICATION, IS KEPT ON FILE AT THE WASHINGTON STATE DEPARTMENT OF TRANSPORTATION. A COPY MAY BE OBTAINED UPON REQUEST.

REINFORCED CONCRETE RETAINING WALL TYPE 6
STANDARD PLAN D-10.35-00

SHEET 2 OF 2 SHEETS

APPROVED FOR PUBLICATION

Pasco Bakotich III — STATE DESIGN ENGINEER
07-08-08 — DATE

Washington State Department of Transportation

DRAWN BY: BILL BEKENS

EFFECTIVE: AUGUST 6, 2012 TO August 4, 2013

EFFECTIVE: AUGUST 6, 2012 TO August 4, 2013
EFFECTIVE: AUGUST 6, 2012 TO August 4, 2013

DRAWN BY: BILL BEKENS

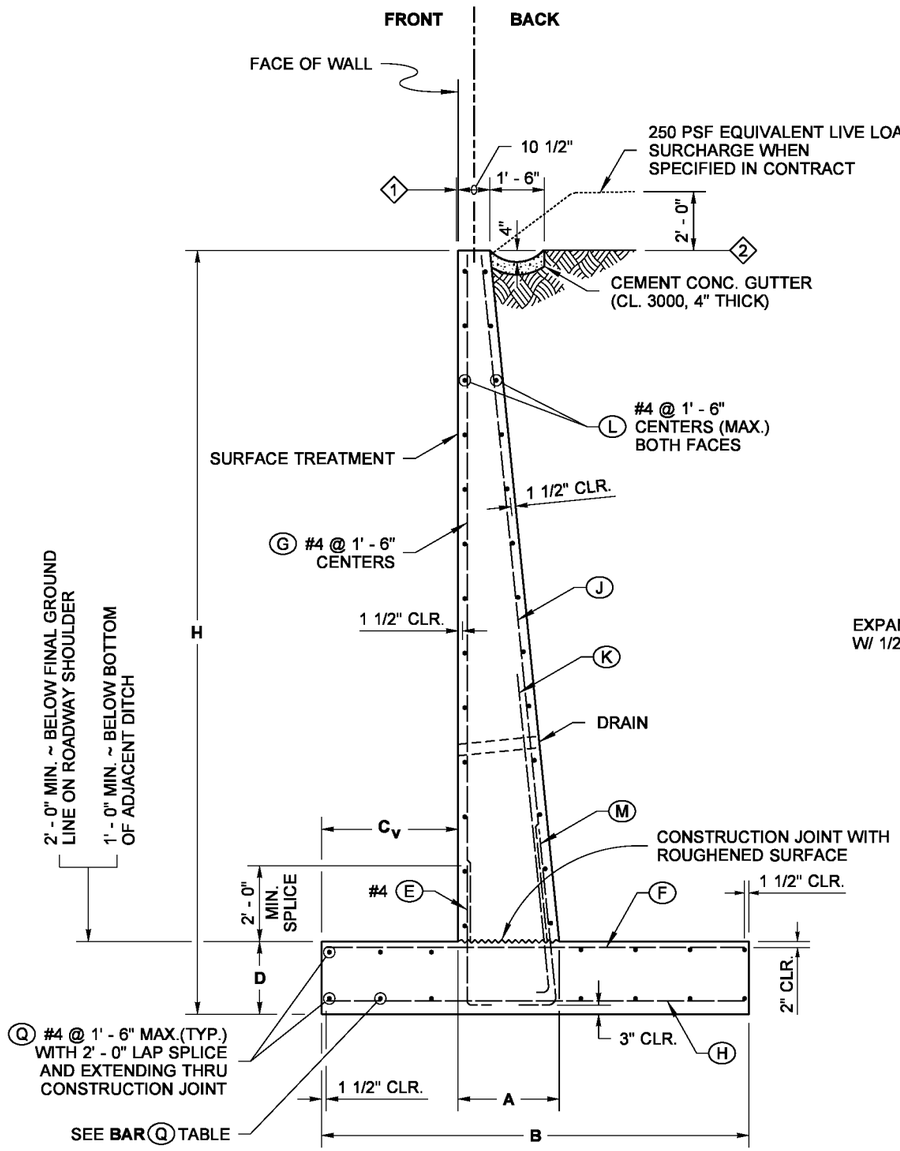

TYPICAL SECTION

BAR Q #4		
LOCATION	WALL HEIGHT (H)	QTY.
TOP OF FOOTING	≤ 16'	5
	16' ≤ 23'	7
	23' ≤ 28'	9
	29' ≤ 35'	11
BOTTOM OF FOOTING	≤ 16'	5
	16' ≤ 23'	7
	23' ≤ 28'	9
	29' ≤ 35'	11

1 OFFSET ~ SET TOP OF WALL BACK:
H ≤ 20' ..... OFFSET = 1/2"
H ≥ 20' ..... OFFSET (inches) = $\frac{H(ft)}{8} - 2$

2 WHEN THE CONTRACT SPECIFIES CABLE FENCE, BACKFILL AND THE CEMENT CONCRETE GUTTER SHALL BE PLACED 6" MIN. FROM THE TOP OF THE WALL

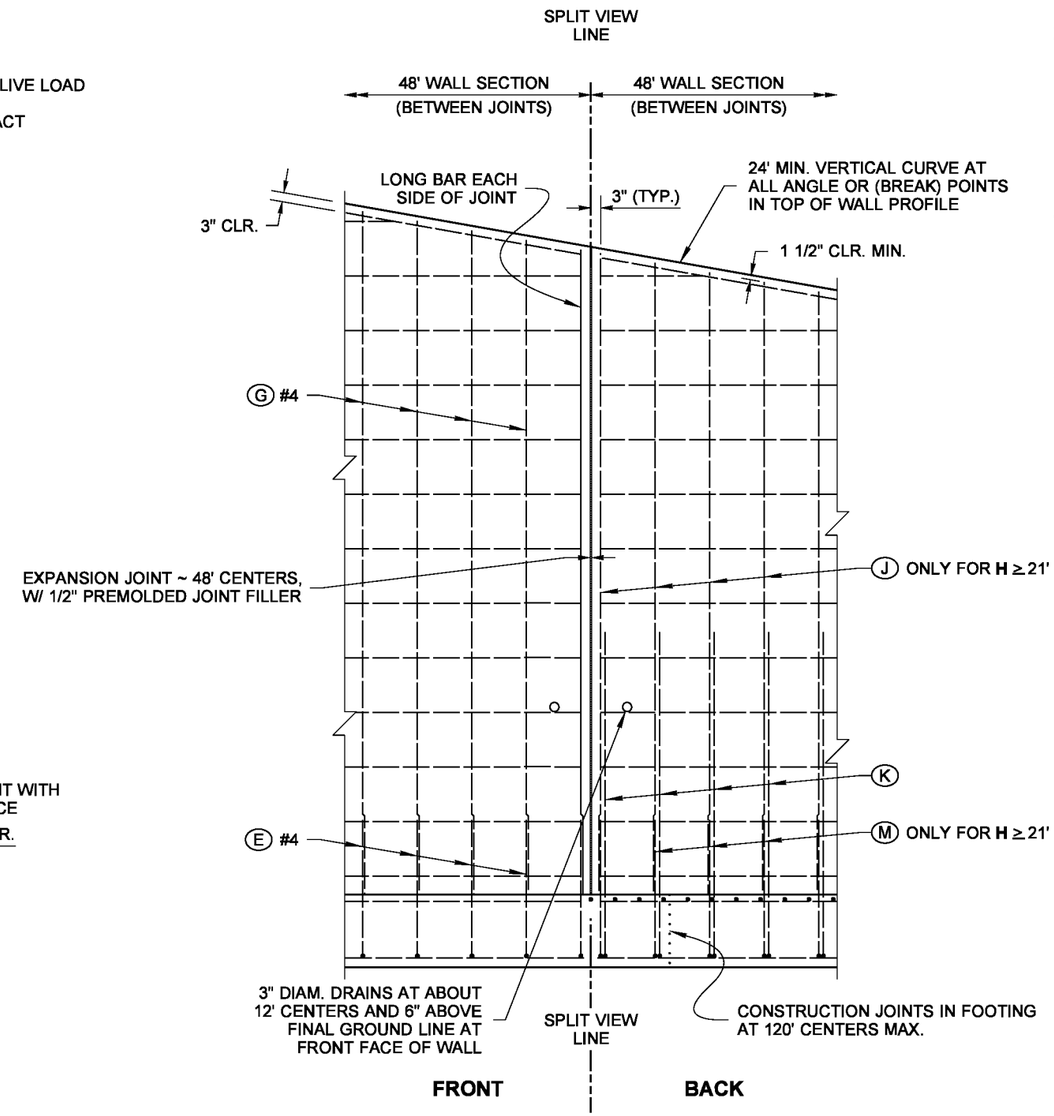

SPLIT ELEVATION VIEW
(SHOWING SEPARATE REBAR LAYERS)

NOTES

1. All concrete shall be Class 4000, except as noted.
2. For backfill requirements, see Standard Plan D-4.
3. Concrete in the 48 foot wall sections shall be placed separately between expansion joints with a minimum 24 hour period before placing concrete in the adjacent section.
4. This wall has been designed in accordance with the requirements of the AASHTO LRFD Bridge Design Specifications 4th Edition 2007 and interims through 2008. The seismic design of these walls has been completed using an effective PGA of 0.20 g.
5. If Traffic Barriers are required, See Standard Plans D-15.10, D-15.20 and D-15.30.

VERTICAL FACE WALL DESIGN WITH A 250 PSF SURCHARGE OR TRAFFIC BARRIER

NOTE: THIS PLAN IS NOT A LEGAL ENGINEERING DOCUMENT BUT AN ELECTRONIC DUPLICATE. THE ORIGINAL, SIGNED BY THE ENGINEER AND APPROVED FOR PUBLICATION, IS KEPT ON FILE AT THE WASHINGTON STATE DEPARTMENT OF TRANSPORTATION. A COPY MAY BE OBTAINED UPON REQUEST.

REINFORCED CONCRETE RETAINING WALL TYPE 7
STANDARD PLAN D-10.40-01

SHEET 1 OF 2 SHEETS

APPROVED FOR PUBLICATION

Pasco Bakotich III — STATE DESIGN ENGINEER
12-02-08 — DATE

Washington State Department of Transportation

EFFECTIVE: AUGUST 6, 2012 TO August 4, 2013
EFFECTIVE: AUGUST 6, 2012 TO August 4, 2013
EFFECTIVE: AUGUST 6, 2012 TO August 4, 2013
EFFECTIVE: AUGUST 6, 2012 TO August 4, 2013

EFFECTIVE: AUGUST 6, 2012 TO August 4, 2013
EFFECTIVE: AUGUST 6, 2012 TO August 4, 2013

WALL HT H	DIMENSIONS				FOOTING REINFORCEMENT																			STEM REINFORCEMENT				MATERIAL QUANTITY		MAXIMUM SOIL PRESSURE (PSF)			
					BAR (E) #4		BAR (F)			BAR (H)			BAR (K)					BAR (M)						BAR (J)			(G) #4						
	B	C_V	D	A	LENGTH	h	SIZE	SPA.	LENGTH	SIZE	SPA.	LENGTH	SIZE	SPA.	LENGTH	h	b	SIZE	SPA.	LENGTH	h	b	SIZE	SPA.	LENGTH	LENGTH	CONC. CY / LF	STEEL LBS / LF	SERVICE	STRENGTH	EXTREME EVENT 1	EXTREME EVENT 2
5'	6' - 6"	2' - 0"	1' - 0"	1' - 4"	3' - 4"	2' - 9"	#4	1' - 0"	6' - 3"	#4	1' - 6"	6' - 3"	#4	1' - 6"	5' - 2"	4' - 7 1/2"	8"	N/A	N/A	N/A	N/A	N/A	N/A	N/A	N/A	4' - 4"	0.40	25.7	915	1260	1108	1623
6'	6' - 6"	2' - 0"	1' - 0"	1' - 5 1/2"	3' - 4"	2' - 9"	#4	1' - 0"	6' - 3"	#4	1' - 6"	6' - 3"	#4	1' - 6"	6' - 2"	5' - 7 1/2"	8"	N/A	N/A	N/A	N/A	N/A	N/A	N/A	N/A	5' - 4"	0.45	28.2	992	1350	1272	1850
7'	6' - 6"	2' - 3"	1' - 0"	1' - 6 1/2"	3' - 4"	2' - 9"	#4	1' - 0"	6' - 3"	#4	1' - 6"	6' - 3"	#4	1' - 6"	7' - 2 1/2"	6' - 7 1/2"	8"	N/A	N/A	N/A	N/A	N/A	N/A	N/A	N/A	6' - 4"	0.51	29.3	1046	1443	1384	2049
8'	6' - 9"	2' - 3"	1' - 0"	1' - 7 1/2"	3' - 4"	2' - 9"	#4	1' - 0"	6' - 6"	#4	1' - 6"	6' - 6"	#4	1' - 0"	8' - 2 1/2"	7' - 7 1/2"	8"	N/A	N/A	N/A	N/A	N/A	N/A	N/A	N/A	7' - 4"	0.58	33.8	1176	1631	1572	2217
9'	7' - 0"	2' - 3"	1' - 0"	1' - 9"	3' - 4"	2' - 9"	#4	1' - 0"	6' - 9"	#4	1' - 0"	6' - 9"	#4	1' - 0"	9' - 2 1/2"	8' - 7 1/2"	8"	N/A	N/A	N/A	N/A	N/A	N/A	N/A	N/A	8' - 4"	0.65	39.6	1318	1836	1781	2402
10'	7' - 3"	2' - 3"	1' - 0"	1' - 10"	3' - 4"	2' - 9"	#4	10"	7' - 0"	#4	1' - 0"	7' - 0"	#4	1' - 0"	10' - 2 1/2"	9' - 7 1/2"	8"	N/A	N/A	N/A	N/A	N/A	N/A	N/A	N/A	9' - 4"	0.72	43.6	1471	2060	2011	2604
11'	7' - 6"	2' - 3"	1' - 0"	1' - 11 1/2"	3' - 4"	2' - 9"	#4	9"	7' - 3"	#4	1' - 0"	7' - 3"	#4	10"	11' - 2 1/2"	10' - 8"	8"	N/A	N/A	N/A	N/A	N/A	N/A	N/A	N/A	10' - 4"	0.80	48.8	1636	2303	2264	2822
12'	7' - 9"	2' - 6"	1' - 0"	2' - 0 1/2"	3' - 4"	2' - 9"	#4	9"	7' - 6"	#4	10"	7' - 6"	#4	9"	12' - 2 1/2"	11' - 8"	8"	N/A	N/A	N/A	N/A	N/A	N/A	N/A	N/A	11' - 4"	0.88	53.0	1733	2455	2400	2958
13'	8' - 0"	2' - 6"	1' - 0"	2' - 1 1/2"	3' - 4"	2' - 9"	#4	8"	7' - 9"	#4	10"	7' - 9"	#4	8"	13' - 2 1/2"	12' - 8"	8"	N/A	N/A	N/A	N/A	N/A	N/A	N/A	N/A	12' - 4"	0.96	59.7	1915	2728	2685	3202
14'	8' - 3"	2' - 6"	1' - 0"	2' - 3"	3' - 4"	2' - 9"	#4	7"	8' - 0"	#4	8"	8' - 0"	#4	7"	14' - 2 1/2"	13' - 8"	8"	N/A	N/A	N/A	N/A	N/A	N/A	N/A	N/A	13' - 4"	1.05	65.9	2109	3022	2995	3462
15'	8' - 9"	2' - 6"	1' - 0"	2' - 4"	3' - 4"	2' - 9"	#5	8"	8' - 6"	#4	8"	8' - 6"	#5	10"	15' - 4"	14' - 8"	10"	N/A	N/A	N/A	N/A	N/A	N/A	N/A	N/A	14' - 4"	1.16	77.5	2277	3261	3287	3570
16'	9' - 3"	2' - 9"	1' - 3"	2' - 5"	3' - 7"	3' - 0"	#5	8"	9' - 0"	#4	8"	9' - 0"	#5	10"	16' - 4"	15' - 8"	10"	N/A	N/A	N/A	N/A	N/A	N/A	N/A	N/A	15' - 1"	1.33	82.0	2377	3403	3466	3628
17'	9' - 9"	3' - 0"	1' - 3"	2' - 6 1/2"	3' - 7"	3' - 0"	#5	8"	9' - 6"	#4	8"	9' - 6"	#5	8"	17' - 4"	16' - 8"	10"	N/A	N/A	N/A	N/A	N/A	N/A	N/A	N/A	16' - 1"	1.44	93.3	2453	3514	3585	3658
18'	10' - 3"	3' - 3"	1' - 3"	2' - 7 1/2"	3' - 7"	3' - 0"	#5	7"	10' - 0"	#5	10"	10' - 0"	#5	8"	18' - 4"	17' - 8"	10"	N/A	N/A	N/A	N/A	N/A	N/A	N/A	N/A	17' - 1"	1.56	102.9	2530	3625	3705	3700
19'	10' - 6"	3' - 6"	1' - 3"	2' - 8 1/2"	3' - 7"	3' - 0"	#6	10"	10' - 3"	#5	8"	10' - 3"	#6	10"	19' - 5 1/2"	18' - 8 1/2"	1' - 0"	N/A	N/A	N/A	N/A	N/A	N/A	N/A	N/A	18' - 1"	1.66	115.4	2642	3809	3864	3859
20'	11' - 0"	3' - 6"	1' - 3"	2' - 10"	3' - 7"	3' - 0"	#6	7"	10' - 9"	#5	7"	10' - 9"	#6	9"	20' - 5 1/2"	19' - 8 1/2"	1' - 0"	N/A	N/A	N/A	N/A	N/A	N/A	N/A	N/A	19' - 1"	1.79	132.9	2808	4043	4169	4012
21'	11' - 6"	3' - 9"	1' - 3"	2' - 11"	3' - 7"	3' - 0"	#6	7"	11' - 3"	#5	6"	11' - 3"	#5	8"	4' - 8 1/2"	4' - 1"	10"	#5	8"	3' - 10 1/2"	3' - 2"	10"	#5	8"	20' - 3 1/2"	20' - 1"	1.92	148.7	2883	4152	4288	4067
22'	12' - 0"	4' - 0"	1' - 6"	3' - 0"	3' - 10"	3' - 3"	#6	7"	11' - 9"	#5	7"	11' - 9"	#5	8"	6' - 5"	5' - 9"	10"	#5	8"	4' - 1 1/2"	3' - 5"	10"	#5	8"	21' - 0 1/2"	20' - 10"	2.13	152.3	2985	4296	4481	4169
23'	12' - 9"	4' - 3"	1' - 6"	3' - 1"	3' - 10"	3' - 3"	#6	6"	12' - 6"	#5	6"	12' - 6"	#5	8"	8' - 0"	7' - 4 1/2"	10"	#5	8"	4' - 1 1/2"	3' - 5"	10"	#5	8"	22' - 0 1/2"	21' - 10"	2.28	170.8	3026	4335	4561	4151
24'	13' - 0"	4' - 3"	1' - 9"	3' - 2"	4' - 1"	3' - 6"	#6	6"	12' - 9"	#5	6"	12' - 9"	#5	8"	9' - 7"	8' - 11"	10"	#5	8"	4' - 4 1/2"	3' - 8"	10"	#5	8"	22' - 9 1/2"	22' - 7"	2.50	178.0	3252	4672	4990	4448
25'	13' - 6"	4' - 6"	1' - 9"	3' - 3 1/2"	4' - 1"	3' - 6"	#6	6'	13' - 3"	#6	8"	13' - 3"	#5	8"	11' - 1 1/2"	10' - 5 1/2"	10"	#5	8"	4' - 4 1/2"	3' - 8"	10"	#5	8"	23' - 9 1/2"	23' - 7"	2.65	190.1	3328	4782	5112	4520
26'	14' - 3"	4' - 9"	2' - 0"	3' - 4"	4' - 4"	3' - 9"	#7	7"	14' - 0"	#6	7"	14' - 0"	#5	8"	12' - 7"	11' - 11 1/2"	10"	#5	8"	4' - 7 1/2"	3' - 11"	10"	#5	8"	24' - 6 1/2"	24' - 4"	2.93	212.7	3395	4855	5268	4562
27'	14' - 9"	5' - 0"	2' - 0"	3' - 5 1/2"	4' - 4"	3' - 9"	#7	7"	14' - 6"	#6	7"	14' - 6"	#5	8"	14' - 0 1/2"	13' - 4 1/2"	10"	#5	8"	4' - 7 1/2"	3' - 11"	10"	#5	8"	25' - 6 1/2"	25' - 4"	3.09	221.6	3472	4966	5393	4642
28'	15' - 3"	5' - 3"	2' - 3"	3' - 6 1/2"	4' - 7"	4' - 0"	#7	6"	15' - 0"	#6	7"	15' - 0"	#6	1' - 0"	16' - 4"	15' - 6 1/2"	1' - 0"	#6	1' - 0"	5' - 5 1/2"	4' - 7"	1' - 0"	#6	1' - 0"	26' - 4"	26' - 1"	3.36	238.4	3576	5112	5600	4765
29'	16' - 0"	5' - 6"	2' - 3"	3' - 7 1/2"	4' - 7"	4' - 0"	#7	6"	15' - 9"	#6	6"	15' - 9"	#6	1' - 0"	17' - 8 1/2"	16' - 11"	1' - 0"	#6	1' - 0"	5' - 5 1/2"	4' - 7"	1' - 0"	#6	1' - 0"	27' - 4"	27' - 1"	3.55	255.7	3623	5162	5686	4789
30'	16' - 6"	5' - 9"	2' - 6"	3' - 8 1/2"	4' - 10"	4' - 3"	#7	6"	16' - 3"	#6	6"	16' - 3"	#6	1' - 0"	19' - 1"	18' - 3 1/2"	1' - 0"	#6	1' - 0"	5' - 8 1/2"	4' - 10"	1' - 0"	#6	1' - 0"	28' - 1"	27' - 10"	3.85	263.4	3727	5308	5897	4916
31'	17' - 0"	6' - 0"	2' - 6"	3' - 9 1/2"	4' - 10"	4' - 3"	#7	6"	16' - 9"	#6	6"	16' - 9"	#6	1' - 0"	20' - 5"	19' - 7 1/2"	1' - 0"	#6	1' - 0"	5' - 8 1/2"	4' - 10"	1' - 0"	#6	1' - 0"	29' - 1"	28' - 10"	4.03	273.8	3805	5421	6027	5005
32'	17' - 6"	6' - 3"	2' - 9"	3' - 10 1/2"	5' - 1"	4' - 6"	#7	6"	17' - 3"	#7	7"	17' - 3"	#6	1' - 0"	21' - 8 1/2"	20' - 11 1/2"	1' - 0"	#6	1' - 0"	5' - 11 1/2"	5' - 1"	1' - 0"	#6	1' - 0"	29' - 10"	29' - 7"	4.35	291.4	3910	5568	6242	5134
33'	18' - 3"	6' - 6"	3' - 0"	3' - 11 1/2"	5' - 4"	4' - 9"	#8	7"	18' - 0"	#7	7"	18' - 0"	#6	10"	21' - 2"	20' - 5"	1' - 0"	#6	10"	6' - 2 1/2"	5' - 4"	1' - 0"	#6	10"	30' - 7"	30' - 4"	4.70	327.3	3989	5660	6421	5215
34'	18' - 9"	6' - 9"	3' - 0"	4' - 0 1/2"	5' - 4"	4' - 9"	#8	7"	18' - 6"	#7	7"	18' - 6"	#6	8"	19' - 10 1/2"	19' - 1 1/2"	1' - 0"	#6	8"	6' - 2 1/2"	5' - 4"	1' - 0"	#6	8"	31' - 7"	31' - 4"	4.90	358.8	4067	5774	6554	5307
35'	19' - 3"	7' - 0"	3' - 3"	4' - 1 1/2"	5' - 7"	5' - 0"	#8	7"	19' - 0"	#7	7"	19' - 0"	#7	8"	21' - 9 1/2"	20' - 10 1/2"	1' - 2"	#7	8"	7' - 3"	6' - 3"	1' - 2"	#7	8"	32' - 4"	32' - 1"	5.25	423.0	4173	5922	6776	5440

REINFORCEMENT NOTES

(1) IF TRAFFIC BARRIER IS USED, ADD 0.100 CY/LF OF CONCRETE CLASS 4000 FOR BARRIER ALTERNATE 1. ADD 0.123 CY/LF OF CONCRETE CLASS 4000 FOR BARRIER ALTERNATE 2. SEE STANDARD PLAN D-15.10

(2) ADD 28 LB/LF OF REINFORCING STEEL FOR BARRIER ALTERNATE 1 OR 19 LB/LF OF REINFORCING STEEL FOR BARRIER ALTERNATE 2. SEE STANDARD PLAN D-15.10

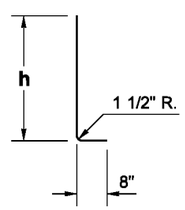

BAR (E)
@ 1' - 6" CENTERS

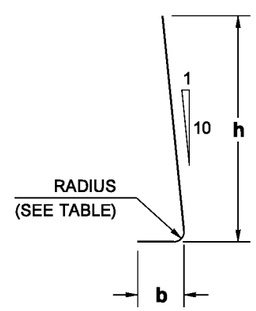

BAR	RADIUS
#4	1 1/2"
#5	1 7/8"
#6	2 1/4"
#7	2 5/8"
#8	3"
#9	4 3/4"
#10	5 3/8"
#11	6"

BARS (K) AND (M)

BAR	MIN. SPLICE
#4	2' - 0"
#5	2' - 0"
#6	2' - 0"
#7	2' - 6"
#8	3' - 3"
#9	4' - 2"
#10	5' - 3"

VERTICAL FACE WALL DESIGN WITH A 250 PSF SURCHARGE OR TRAFFIC BARRIER

NOTE: THIS PLAN IS NOT A LEGAL ENGINEERING DOCUMENT BUT AN ELECTRONIC DUPLICATE. THE ORIGINAL, SIGNED BY THE ENGINEER AND APPROVED FOR PUBLICATION, IS KEPT ON FILE AT THE WASHINGTON STATE DEPARTMENT OF TRANSPORTATION. A COPY MAY BE OBTAINED UPON REQUEST.

REINFORCED CONCRETE RETAINING WALL TYPE 7

STANDARD PLAN D-10.40-01

SHEET 2 OF 2 SHEETS

APPROVED FOR PUBLICATION

Pasco Bakotich III — STATE DESIGN ENGINEER
12-02-08 — DATE

Washington State Department of Transportation

DRAWN BY: BILL BERENS

EFFECTIVE: AUGUST 6, 2012 TO August 4, 2013
EFFECTIVE: AUGUST 6, 2012 TO August 4, 2013
EFFECTIVE: AUGUST 6, 2012 TO August 4, 2013
EFFECTIVE: AUGUST 6, 2012 TO August 4, 2013

EFFECTIVE: AUGUST 6, 2012 TO August 4, 2013
EFFECTIVE: AUGUST 6, 2012 TO August 4, 2013

DRAWN BY: BILL BEKENS

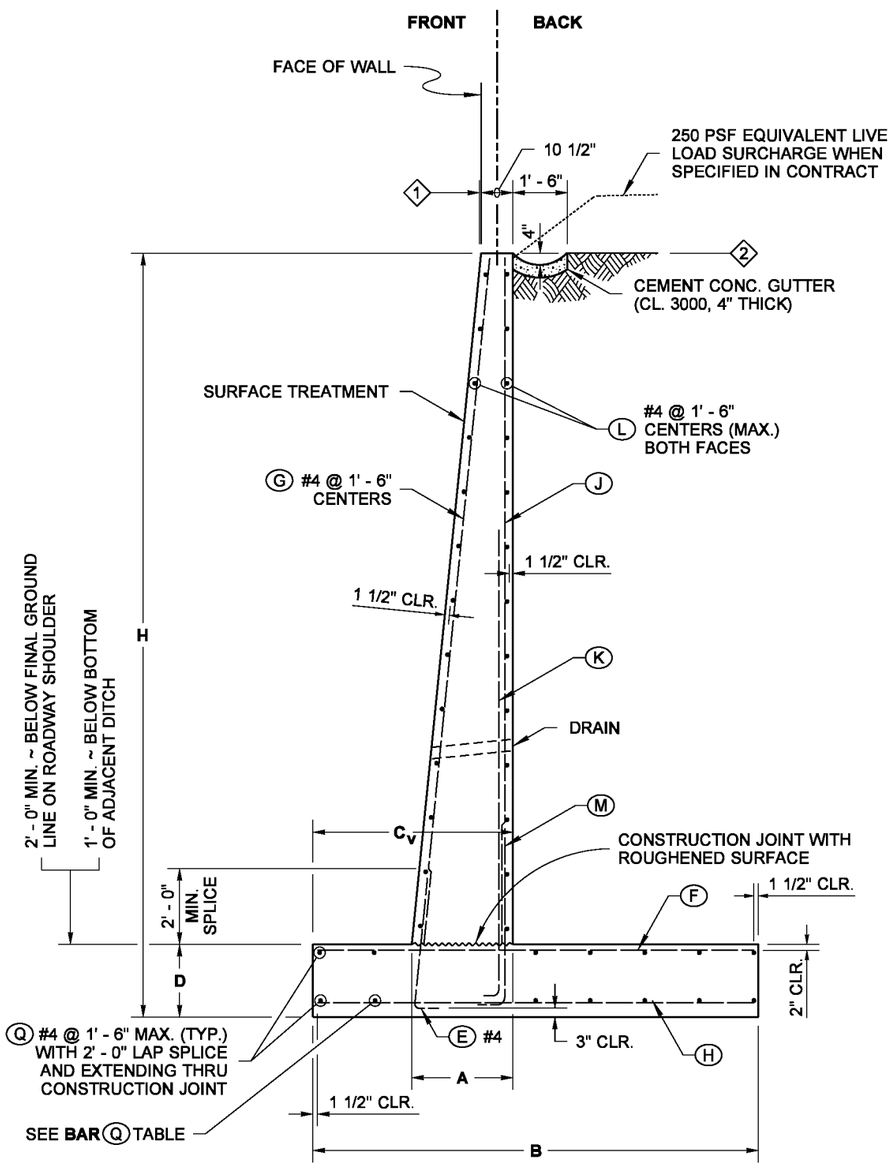

BAR Q #4		
LOCATION	WALL HEIGHT (H)	QTY.
TOP OF FOOTING	≤ 12'	5
	13' ≤ 16'	6
	17' ≤ 22'	7
	23' ≤ 28'	9
	29' ≤ 35'	11
BOTTOM OF FOOTING	≤ 12'	5
	13' ≤ 16'	6
	17' ≤ 22'	7
	23' ≤ 28'	9
	29' ≤ 35'	11

TYPICAL SECTION

1. OFFSET ~ SET TOP OF WALL BACK:
   H ≤ 20' ..... OFFSET = 1/2"
   H ≥ 20' ..... OFFSET (inches) = $\frac{H(ft)}{8} - 2$

2. WHEN THE CONTRACT SPECIFIES CABLE FENCE, BACKFILL AND THE CEMENT CONCRETE GUTTER SHALL BE PLACED 6" MIN. FROM THE TOP OF THE WALL

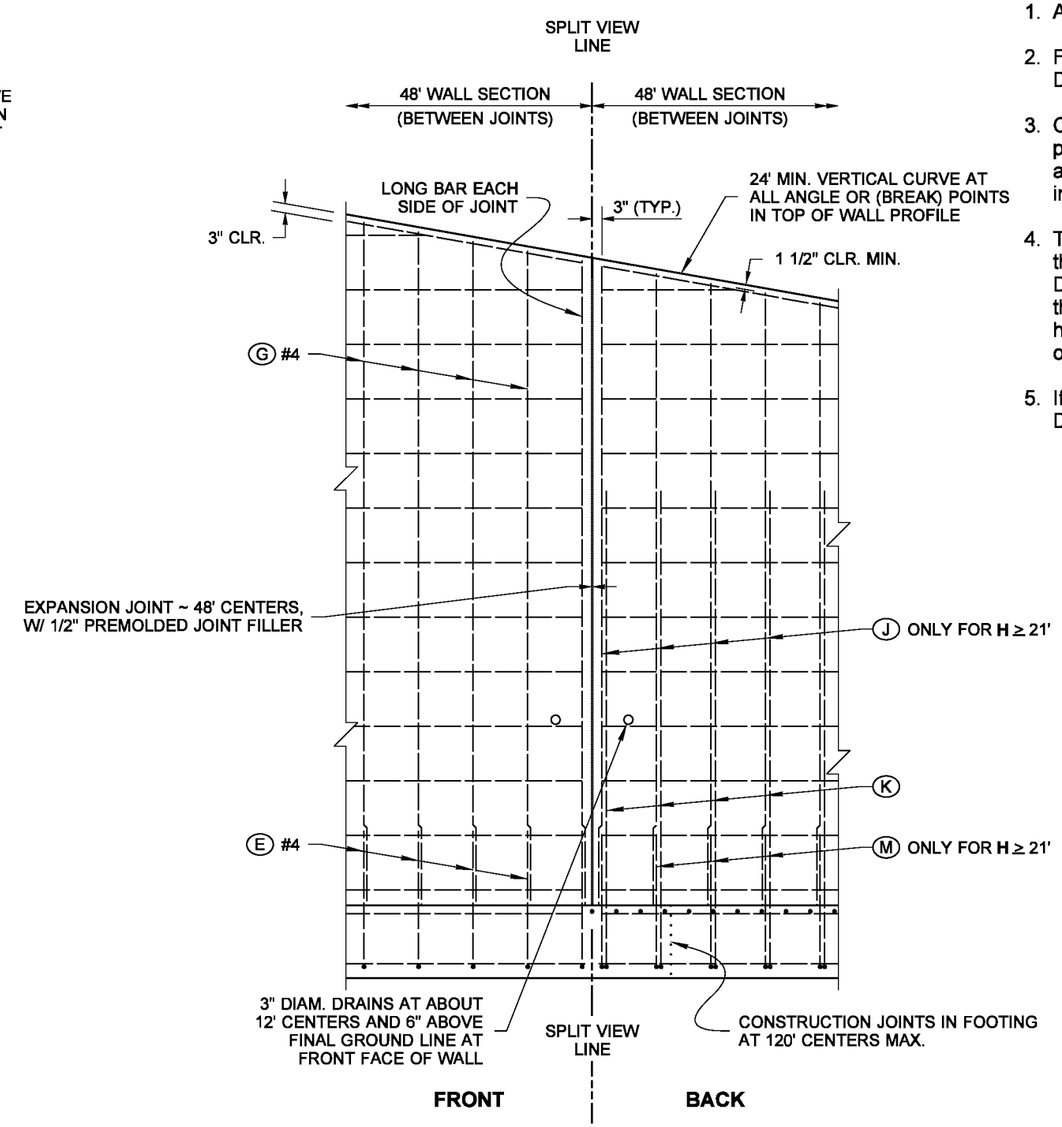

SPLIT ELEVATION VIEW
(SHOWING SEPARATE REBAR LAYERS)

NOTES

1. All concrete shall be Class 4000, except as noted.
2. For backfill requirements, see Standard Plan D-4.
3. Concrete in the 48 foot wall sections shall be placed separately between expansion joints with a minimum 24 hour period before placing concrete in the adjacent section.
4. This wall has been designed in accordance with the requirements of the AASHTO LRFD Bridge Design Specifications 4th Edition 2007 and interims through 2008. The seismic design of these walls has been completed using an effective PGA of 0.20 g.
5. If Traffic Barriers are required, See Standard Plans D-15.10, D-15.20 and D-15.30.

SLOPING FACE WALL DESIGN WITH A 250 PSF SURCHARGE OR TRAFFIC BARRIER

NOTE: THIS PLAN IS NOT A LEGAL ENGINEERING DOCUMENT BUT AN ELECTRONIC DUPLICATE. THE ORIGINAL, SIGNED BY THE ENGINEER AND APPROVED FOR PUBLICATION, IS KEPT ON FILE AT THE WASHINGTON STATE DEPARTMENT OF TRANSPORTATION. A COPY MAY BE OBTAINED UPON REQUEST.

REINFORCED CONCRETE RETAINING WALL TYPE 8
STANDARD PLAN D-10.45-01

SHEET 1 OF 2 SHEETS

APPROVED FOR PUBLICATION

Pasco Bakotich III — STATE DESIGN ENGINEER
12-02-08 — DATE

Washington State Department of Transportation

EFFECTIVE: AUGUST 6, 2012 TO August 4, 2013
EFFECTIVE: AUGUST 6, 2012 TO August 4, 2013
EFFECTIVE: AUGUST 6, 2012 TO August 4, 2013
EFFECTIVE: AUGUST 6, 2012 TO August 4, 2013

EFFECTIVE: AUGUST 6, 2012 TO August 4, 2013
EFFECTIVE: AUGUST 6, 2012 TO August 4, 2013

WALL HT H	DIMENSIONS				FOOTING REINFORCEMENT																		STEM REINFORCEMENT				MATERIAL QUANTITY		MAXIMUM SOIL PRESSURE (PSF)			
					BAR (E) #4		BAR (F)			BAR (H)			BAR (K)					BAR (M)					BAR (J)			(G) #4						
	B	C_V	D	A	LENGTH	h	SIZE	SPA.	LENGTH	SIZE	SPA.	LENGTH	SIZE	SPA.	LENGTH	h	b	SIZE	SPA.	LENGTH	h	b	SIZE	SPA.	LENGTH	LENGTH	CONC. CY / LF	STEEL LBS / LF	SERVICE	STRENGTH	EXTREME EVENT 1	EXTREME EVENT 2
5'	6' - 9"	3' - 0"	1' - 0"	1' - 4"	2' - 7"	2' - 0"	#4	1' - 6"	6' - 6"	#4	1' - 6"	6' - 6"	#4	1' - 6"	5' - 2"	4' - 7"	8"	N/A	N/A	N/A	N/A	N/A	N/A	N/A	N/A	3' - 10 1/2"	0.41	23.8	900	1244	1140	1620
6'	6' - 9"	3' - 0"	1' - 0"	1' - 5 1/2"	2' - 7"	2' - 0"	#4	1' - 6"	6' - 6"	#4	1' - 6"	6' - 6"	#4	1' - 6"	6' - 2"	5' - 7"	8"	N/A	N/A	N/A	N/A	N/A	N/A	N/A	N/A	4' - 10 1/2"	0.46	26.3	987	1351	1339	1878
7'	7' - 0"	3' - 3"	1' - 0"	1' - 6 1/2"	2' - 7"	2' - 0"	#4	1' - 0"	6' - 9"	#4	1' - 6"	6' - 9"	#4	1' - 6"	7' - 2"	6' - 7"	8"	N/A	N/A	N/A	N/A	N/A	N/A	N/A	N/A	5' - 10 1/2"	0.53	30.5	1076	1476	1488	2006
8'	7' - 0"	3' - 3"	1' - 0"	1' - 7 1/2"	2' - 7"	2' - 0"	#4	1' - 0"	6' - 9"	#4	1' - 6"	6' - 9"	#4	1' - 0"	8' - 2"	7' - 7"	8"	N/A	N/A	N/A	N/A	N/A	N/A	N/A	N/A	6' - 10 1/2"	0.58	34.7	1225	1687	1741	2332
9'	7' - 3"	3' - 6"	1' - 0"	1' - 9"	2' - 7"	2' - 0"	#4	1' - 0"	7' - 0"	#4	1' - 6"	7' - 0"	#4	1' - 0"	9' - 2"	8' - 7"	8"	N/A	N/A	N/A	N/A	N/A	N/A	N/A	N/A	7' - 10 1/2"	0.65	37.7	1325	1833	1911	2486
10'	7' - 6"	3' - 6"	1' - 0"	1' - 10"	2' - 7"	2' - 0"	#4	8"	7' - 3"	#4	1' - 6"	7' - 3"	#4	1' - 0"	10' - 2"	9' - 7"	8"	N/A	N/A	N/A	N/A	N/A	N/A	N/A	N/A	8' - 10 1/2"	0.73	43.0	1493	2075	2200	2744
11'	7' - 9"	3' - 6"	1' - 0"	1' - 11 1/2"	2' - 7"	2' - 0"	#4	6"	7' - 6"	#4	1' - 6"	7' - 6"	#4	10"	11' - 2"	10' - 7"	8"	N/A	N/A	N/A	N/A	N/A	N/A	N/A	N/A	9' - 10 1/2"	0.81	50.1	1677	2341	2526	3027
12'	8' - 0"	3' - 9"	1' - 0"	2' - 0 1/2"	2' - 7"	2' - 0"	#5	8"	7' - 9"	#4	1' - 6"	7' - 9"	#4	9"	12' - 2"	11' - 7"	8"	N/A	N/A	N/A	N/A	N/A	N/A	N/A	N/A	10' - 11"	0.89	55.1	1797	2522	2739	3221
13'	8' - 3"	3' - 9"	1' - 0"	2' - 1 1/2"	2' - 7"	2' - 0"	#5	7"	8' - 0"	#4	1' - 6"	8' - 0"	#4	8"	13' - 2"	12' - 7"	8"	N/A	N/A	N/A	N/A	N/A	N/A	N/A	N/A	11' - 11"	0.97	62.7	2004	2826	3126	3545
14'	8' - 9"	3' - 9"	1' - 0"	2' - 3"	2' - 7"	2' - 0"	#6	7"	8' - 6"	#4	1' - 6"	8' - 6"	#4	7"	14' - 2"	13' - 7"	8"	N/A	N/A	N/A	N/A	N/A	N/A	N/A	N/A	12' - 11"	1.07	75.0	2190	3089	3470	3706
15'	9' - 0"	3' - 9"	1' - 0"	2' - 4"	2' - 7"	2' - 0"	#6	6"	8' - 9"	#4	1' - 6"	8' - 9"	#4	6"	15' - 2"	14' - 7"	8"	N/A	N/A	N/A	N/A	N/A	N/A	N/A	N/A	13' - 11"	1.17	83.3	2420	3430	3928	4064
16'	9' - 6"	4' - 0"	1' - 3"	2' - 5"	2' - 10"	2' - 3"	#6	6"	9' - 3"	#4	1' - 6"	9' - 3"	#5	10"	16' - 3"	15' - 7"	10"	N/A	N/A	N/A	N/A	N/A	N/A	N/A	N/A	14' - 8"	1.34	91.3	2532	3588	4115	4129
17'	10' - 0"	4' - 3"	1' - 3"	2' - 6 1/2"	2' - 10"	2' - 3"	#6	6"	9' - 9"	#4	1' - 6"	9' - 9"	#5	9"	17' - 3"	16' - 7"	10"	N/A	N/A	N/A	N/A	N/A	N/A	N/A	N/A	15' - 8"	1.45	98.7	2630	3730	4284	4194
18'	10' - 6"	4' - 6"	1' - 3"	2' - 7 1/2"	2' - 10"	2' - 3"	#7	7"	10' - 3"	#4	1' - 0"	10' - 3"	#5	8"	18' - 3"	17' - 7"	10"	N/A	N/A	N/A	N/A	N/A	N/A	N/A	N/A	16' - 8"	1.57	115.7	2728	3871	4453	4270
19'	11' - 3"	5' - 0"	1' - 6"	2' - 8 1/2"	3' - 1"	2' - 6"	#7	7"	11' - 0"	#4	1' - 0"	11' - 0"	#5	7"	19' - 3"	18' - 7"	10"	N/A	N/A	N/A	N/A	N/A	N/A	N/A	N/A	17' - 5"	1.78	121.1	2715	3838	4366	4131
20'	11' - 6"	5' - 0"	1' - 6"	2' - 9 1/2"	3' - 1"	2' - 6"	#7	7"	11' - 3"	#4	1' - 0"	11' - 3"	#5	7"	20' - 3"	19' - 7"	10"	N/A	N/A	N/A	N/A	N/A	N/A	N/A	N/A	18' - 5"	1.89	130.2	2940	4172	4815	4466
21'	12' - 3"	5' - 6"	1' - 9"	2' - 10 1/2"	3' - 4"	2' - 9"	#7	6"	12' - 0"	#4	9"	12' - 0"	#5	1' - 0"	7' - 9 1/2"	7' - 1 1/2"	10"	#5	1' - 0"	4' - 4 1/2"	3' - 7 1/2"	10"	#5	1' - 0"	19' - 7"	19' - 2 1/2"	2.12	141.8	2930	4143	4734	4358
22'	12' - 9"	5' - 9"	1' - 9"	2' - 11 1/2"	3' - 4"	2' - 9"	#7	6"	12' - 6"	#4	9"	12' - 6"	#5	1' - 0"	8' - 11 1/2"	8' - 3 1/2"	10"	#5	1' - 0"	4' - 4 1/2"	3' - 7 1/2"	10"	#5	1' - 0"	20' - 7"	20' - 2 1/2"	2.26	148.6	3028	4284	4905	4466
23'	13' - 3"	6' - 0"	2' - 0"	3' - 0 1/2"	3' - 7"	3' - 0"	#7	6"	13' - 0"	#4	8"	13' - 0"	#5	10"	8' - 7"	7' - 11"	10"	#5	10"	4' - 7 1/2"	3' - 11"	10"	#5	10"	21' - 4"	20' - 11 1/2"	2.50	162.3	3145	4448	5104	4600
24'	13' - 9"	6' - 3"	2' - 0"	3' - 1 1/2"	3' - 7"	3' - 0"	#7	6"	13' - 6"	#4	8"	13' - 6"	#5	10"	9' - 8 1/2"	9' - 0 1/2"	10"	#5	10"	4' - 7 1/2"	3' - 11"	10"	#5	10"	22' - 4"	21' - 11 1/2"	2.65	172.2	3243	4589	5276	4714
25'	14' - 3"	6' - 6"	2' - 3"	3' - 2 1/2"	3' - 10"	3' - 3"	#7	6"	14' - 0"	#4	8"	14' - 0"	#5	9"	10' - 10"	10' - 2"	10"	#5	9"	4' - 10 1/2"	4' - 1 1/2"	10"	#5	9"	23' - 1"	22' - 8 1/2"	2.91	179.4	3360	4753	5476	4854
26'	15' - 0"	6' - 9"	2' - 6"	3' - 3 1/2"	4' - 1"	3' - 6"	#8	7"	14' - 9"	#4	7"	14' - 9"	#5	9"	11' - 0"	10' - 4"	10"	#5	9"	5' - 1 1/2"	4' - 4 1/2"	10"	#5	9"	23' - 10"	23' - 5 1/2"	3.20	200.1	3445	4856	5603	4917
27'	15' - 6"	7' - 0"	2' - 6"	3' - 4 1/2"	4' - 1"	3' - 6"	#8	7"	15' - 3"	#4	7"	15' - 3"	#5	8"	11' - 1 1/2"	10' - 5 1/2"	10"	#5	8"	5' - 1 1/2"	4' - 4 1/2"	10"	#5	8"	24' - 10"	24' - 5 1/2"	3.37	213.7	3544	4996	5776	5039
28'	16' - 0"	7' - 3"	2' - 9"	3' - 5 1/2"	4' - 4"	3' - 9"	#8	7"	15' - 9"	#4	6"	15' - 9"	#5	7"	12' - 1 1/2"	11' - 6"	10"	#5	7"	5' - 4 1/2"	4' - 7 1/2"	10"	#5	7"	25' - 7"	25' - 3"	3.66	234.3	3661	5161	5977	5186
29'	16' - 6"	7' - 6"	2' - 9"	3' - 7"	4' - 4"	3' - 9"	#8	6"	16' - 3"	#4	6"	16' - 3"	#6	1' - 0"	14' - 0"	13' - 2 1/2"	1' - 0"	#6	1' - 0"	5' - 11"	5' - 0 1/2"	1' - 0"	#6	1' - 0"	26' - 7"	26' - 3"	3.84	245.8	3760	5301	6150	5310
30'	17' - 3"	8' - 0"	3' - 0"	3' - 7 1/2"	4' - 7"	4' - 0"	#8	6"	17' - 0"	#4	6"	17' - 0"	#6	1' - 0"	15' - 1"	14' - 4"	1' - 0"	#6	1' - 0"	6' - 2"	5' - 4"	1' - 0"	#6	1' - 0"	27' - 4"	27' - 0"	4.17	255.9	3770	5303	6116	5291
31'	17' - 9"	8' - 3"	3' - 3"	3' - 8 1/2"	4' - 10"	4' - 3"	#8	6"	17' - 6"	#5	8"	17' - 6"	#6	1' - 0"	16' - 1 1/2"	15' - 4"	1' - 0"	#6	1' - 0"	6' - 5"	5' - 7"	1' - 0"	#6	1' - 0"	28' - 1"	27' - 9"	4.49	269.6	3888	5469	6319	5443
32'	18' - 3"	8' - 6"	3' - 3"	3' - 10"	4' - 10"	4' - 3"	#8	6"	18' - 0"	#5	8"	18' - 0"	#6	1' - 0"	17' - 2 1/2"	16' - 5 1/2"	1' - 0"	#6	1' - 0"	6' - 5"	5' - 7"	1' - 0"	#6	1' - 0"	29' - 1"	28' - 9"	4.69	278.2	3986	5609	6491	5571
33'	18' - 9"	8' - 9"	3' - 6"	3' - 10 1/2"	5' - 1"	4' - 6"	#8	6"	18' - 6"	#5	8"	18' - 6"	#6	10"	18' - 3 1/2"	17' - 6 1/2"	1' - 0"	#6	10"	6' - 8"	5' - 10"	1' - 0"	#6	10"	29' - 10"	29' - 6"	5.03	301.9	4105	5774	6694	5725
34'	19' - 3"	9' - 0"	3' - 9"	3' - 11 1/2"	5' - 4"	4' - 9"	#8	6"	19' - 0"	#5	8"	19' - 0"	#6	10"	17' - 9"	17' - 0"	1' - 0"	#6	10"	6' - 11"	6' - 0 1/2"	1' - 0"	#6	10"	30' - 7"	30' - 3"	5.38	308.1	4223	5940	6898	5879
35'	19' - 9"	9' - 3"	4' - 0"	4' - 0 1/2"	5' - 7"	5' - 0"	#9	7"	19' - 6"	#5	7"	19' - 6"	#6	8"	16' - 7"	15' - 9 1/2"	1' - 0"	#6	8"	7' - 2"	6' - 4"	1' - 0"	#6	8"	31' - 4"	31' - 0"	5.74	353.2	4342	6106	7102	6034

REINFORCEMENT NOTES

(1) IF TRAFFIC BARRIER IS USED, ADD 0.110 CY OF CONCRETE CLASS 4000 FOR BARRIER ALTERNATE 1. ADD 0.152 CY/LF OF CONCRETE CLASS 4000 FOR BARRIER ALTERNATE 2. SEE STANDARD PLAN D-15.10

(2) ADD 16 LB/LF OF REINFORCING STEEL FOR BARRIER ALTERNATE 1 OR 23 LB/LF OF REINFORCING STEEL FOR BARRIER ALTERNATE 2. SEE STANDARD PLAN D-15.10

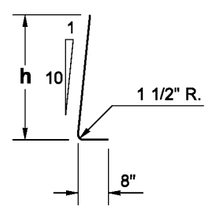

BAR (E)
@ 1' - 6" CENTERS

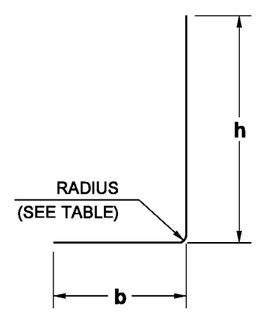

BAR	RADIUS
#4	1 1/2"
#5	1 7/8"
#6	2 1/4"
#7	2 5/8"
#8	3"
#9	4 3/4"
#10	5 3/8"
#11	6"

BARS (K) AND (M)

BAR	MIN. SPLICE
#4	2' - 0"
#5	2' - 0"
#6	2' - 0"
#7	2' - 6"
#8	3' - 3"
#9	4' - 2"
#10	5' - 3"

SLOPING FACE WALL DESIGN WITH A 250 PSF SURCHARGE

BIJAN KHALEGHI
STATE OF WASHINGTON
27695
STRUCTURAL ENGINEER
PROFESSIONAL ENGINEER

NOTE: THIS PLAN IS NOT A LEGAL ENGINEERING DOCUMENT BUT AN ELECTRONIC DUPLICATE. THE ORIGINAL, SIGNED BY THE ENGINEER AND APPROVED FOR PUBLICATION, IS KEPT ON FILE AT THE WASHINGTON STATE DEPARTMENT OF TRANSPORTATION. A COPY MAY BE OBTAINED UPON REQUEST.

REINFORCED CONCRETE RETAINING WALL TYPE 8
STANDARD PLAN D-10.45-01

SHEET 2 OF 2 SHEETS

APPROVED FOR PUBLICATION

Pasco Bakotich III — STATE DESIGN ENGINEER
12-02-08 — DATE

Washington State Department of Transportation

DRAWN BY: BILL BERENS

EFFECTIVE: AUGUST 6, 2012 TO August 4, 2013
EFFECTIVE: AUGUST 6, 2012 TO August 4, 2013
EFFECTIVE: AUGUST 6, 2012 TO August 4, 2013
EFFECTIVE: AUGUST 6, 2012 TO August 4, 2013

EFFECTIVE: AUGUST 6, 2012 TO August 4, 2013
EFFECTIVE: AUGUST 6, 2012 TO August 4, 2013

DRAWN BY: BILL BEKENS

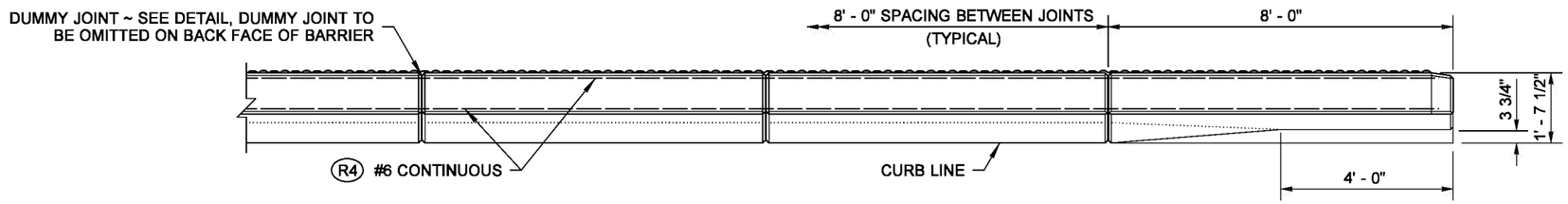

PLAN

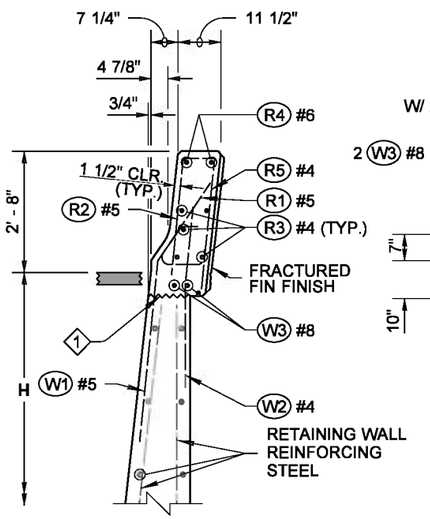

SECTION A

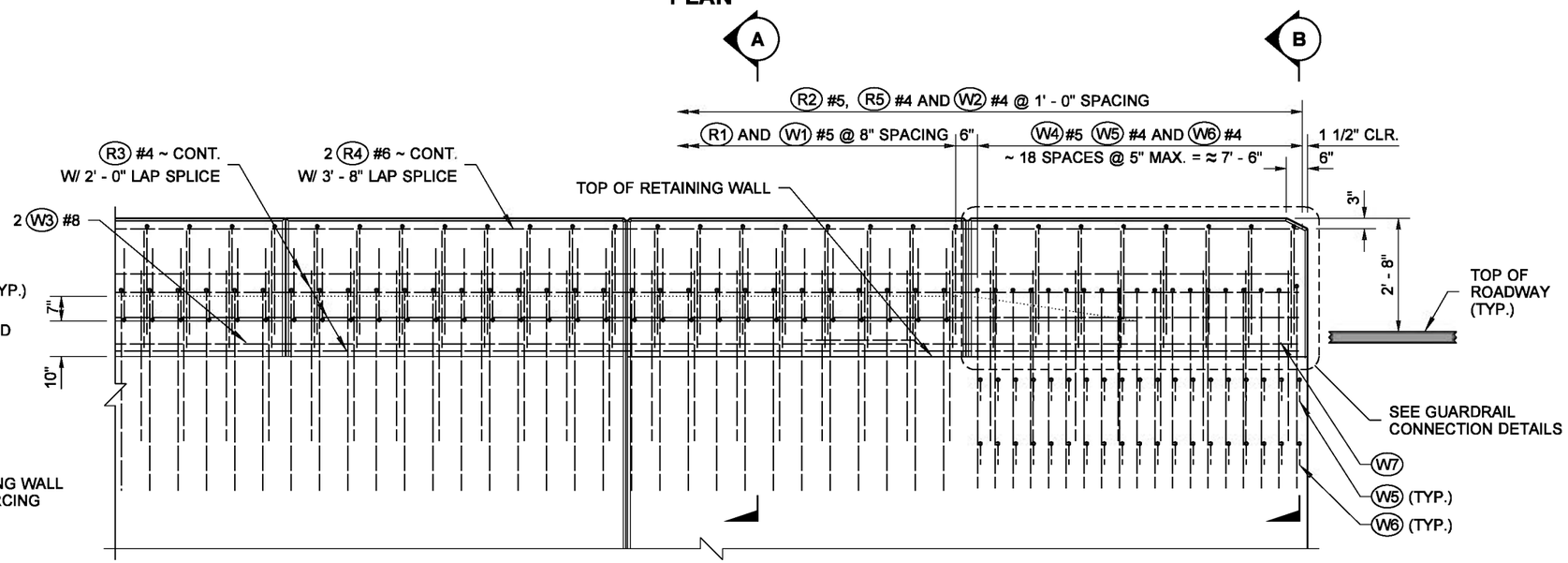

ELEVATION

1 CONSTRUCTION JOINT ~ LEVEL TRANSVERSE WITH ROUGHENED SURFACE

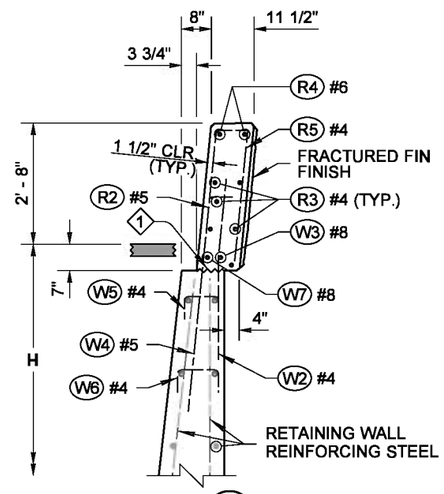

SECTION B

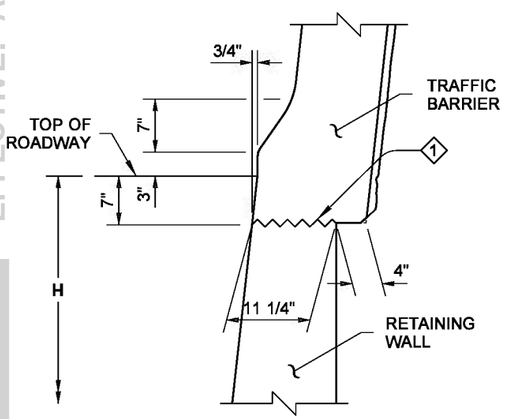

DETAIL

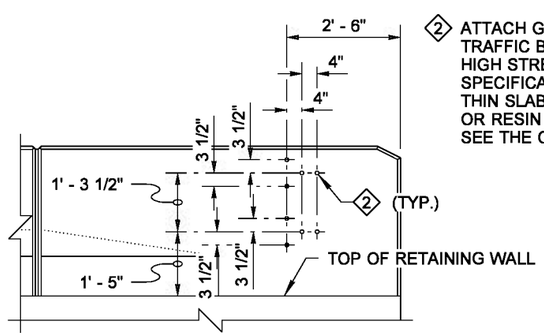

2 ATTACH GUARDRAIL TO CONCRETE TRAFFIC BARRIER WITH 7/8" DIAM. HIGH STRENGTH BOLTS (STANDARD SPECIFICATION 9-06.5(4)) WITH THIN SLAB FERRULE INSERTS OR RESIN BONDED ANCHORS. SEE THE CONTRACT PLANS.

BEAM GUARDRAIL TRANSITION TYPE 20 CONNECTION

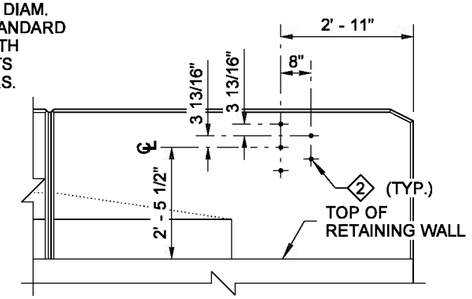

BEAM GUARDRAIL TRANSITION TYPE 21 CONNECTION

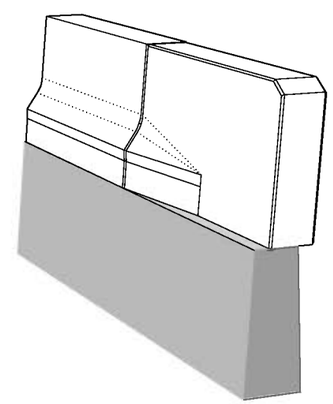

PERSPECTIVE VIEW

F-SHAPE TRAFFIC BARRIER ON RETAINING WALL

NOTE: THIS PLAN IS NOT A LEGAL ENGINEERING DOCUMENT BUT AN ELECTRONIC DUPLICATE. THE ORIGINAL, SIGNED BY THE ENGINEER AND APPROVED FOR PUBLICATION, IS KEPT ON FILE AT THE WASHINGTON STATE DEPARTMENT OF TRANSPORTATION. A COPY MAY BE OBTAINED UPON REQUEST.

TRAFFIC BARRIER DETAILS FOR REINFORCED CONCRETE RETAINING WALLS
STANDARD PLAN D-15.10-01

SHEET 1 OF 2 SHEETS

APPROVED FOR PUBLICATION

Pasco Bakotich III — STATE DESIGN ENGINEER

12-02-08 — DATE

Washington State Department of Transportation

EFFECTIVE: AUGUST 6, 2012 TO August 4, 2013
EFFECTIVE: AUGUST 6, 2012 TO August 4, 2013
EFFECTIVE: AUGUST 6, 2012 TO August 4, 2013
EFFECTIVE: AUGUST 6, 2012 TO August 4, 2013

EFFECTIVE: AUGUST 6, 2012 TO August 4, 2013
EFFECTIVE: AUGUST 6, 2012 TO August 4, 2013

DRAWN BY: BILL BEKENS

REINFORCING STEEL BENDING DIAGRAM

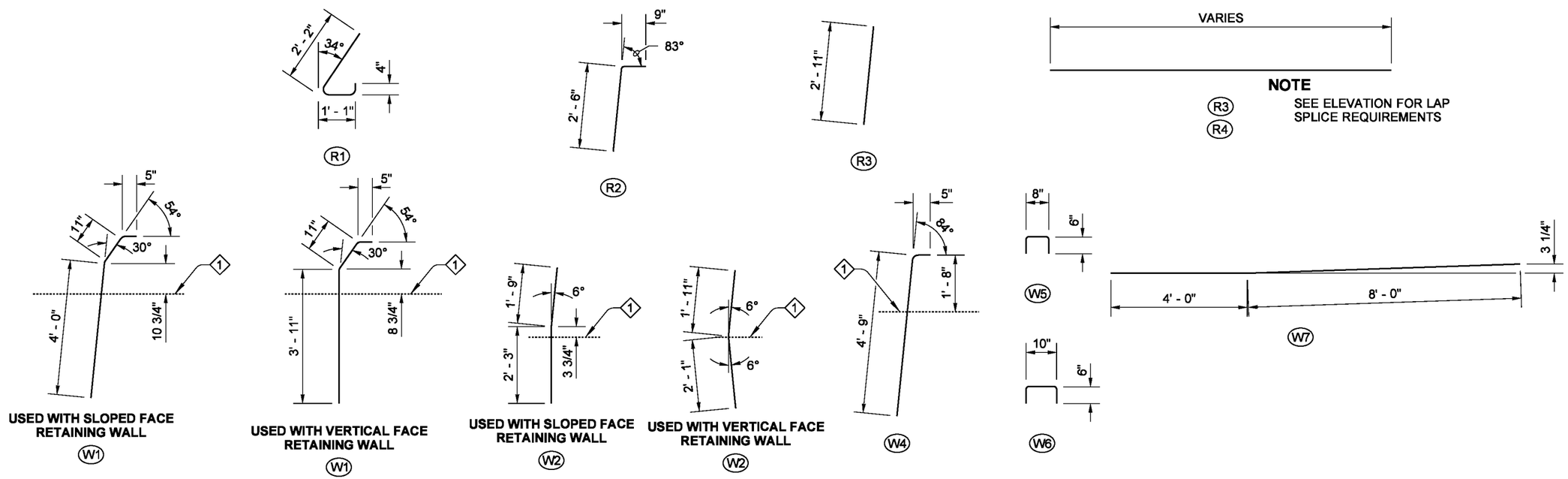

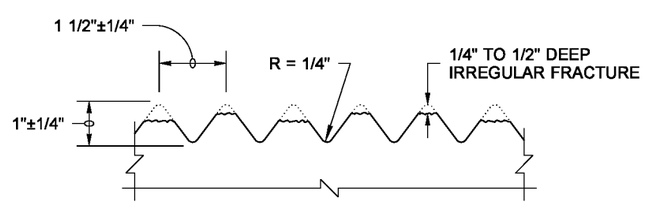

PLAN VIEW
FRACTURED FIN FINISH DETAIL

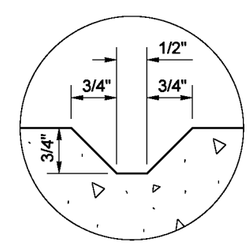

DUMMY JOINT DETAIL

NOTE: THIS PLAN IS NOT A LEGAL ENGINEERING DOCUMENT BUT AN ELECTRONIC DUPLICATE. THE ORIGINAL, SIGNED BY THE ENGINEER AND APPROVED FOR PUBLICATION, IS KEPT ON FILE AT THE WASHINGTON STATE DEPARTMENT OF TRANSPORTATION. A COPY MAY BE OBTAINED UPON REQUEST.

TRAFFIC BARRIER DETAILS FOR REINFORCED CONCRETE RETAINING WALLS
STANDARD PLAN D-15.10-01

SHEET 2 OF 2 SHEETS

APPROVED FOR PUBLICATION

Pasco Bakotich III — STATE DESIGN ENGINEER
12-02-08 — DATE

Washington State Department of Transportation

EFFECTIVE: AUGUST 6, 2012 TO August 4, 2013
EFFECTIVE: AUGUST 6, 2012 TO August 4, 2013
EFFECTIVE: AUGUST 6, 2012 TO August 4, 2013
EFFECTIVE: AUGUST 6, 2012 TO August 4, 2013
EFFECTIVE: AUGUST 6, 2012 TO August 4, 2013

EFFECTIVE: AUGUST 6, 2012 TO August 4, 2013
EFFECTIVE: AUGUST 6, 2012 TO August 4, 2013

DRAWN BY: BILL BEKENS

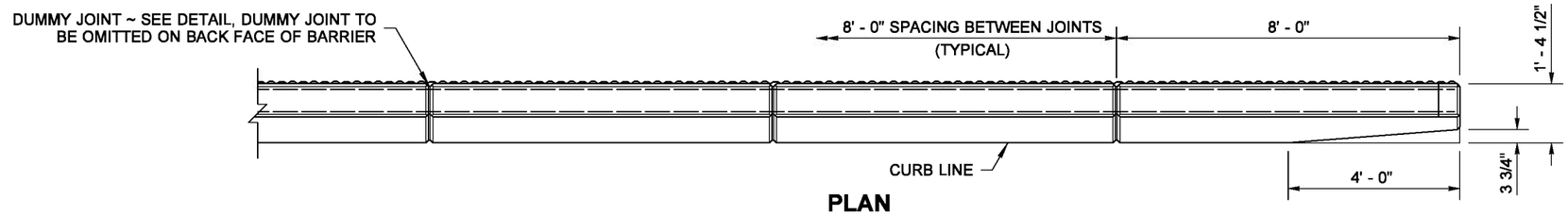

PLAN

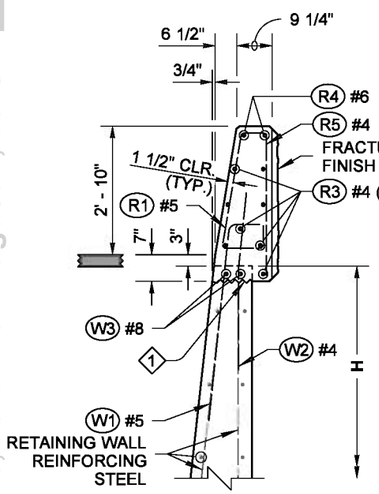

SECTION A

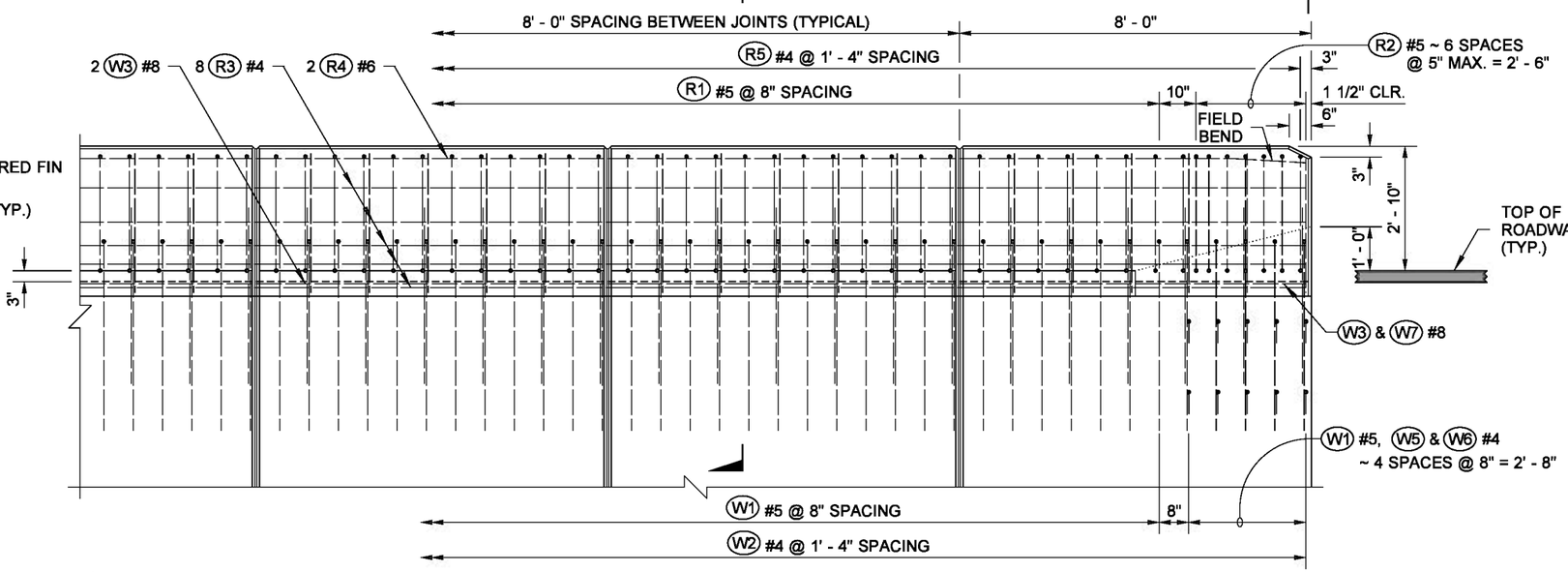

1 CONSTRUCTION JOINT ~ LEVEL TRANSVERSE WITH ROUGHENED SURFACE

ELEVATION

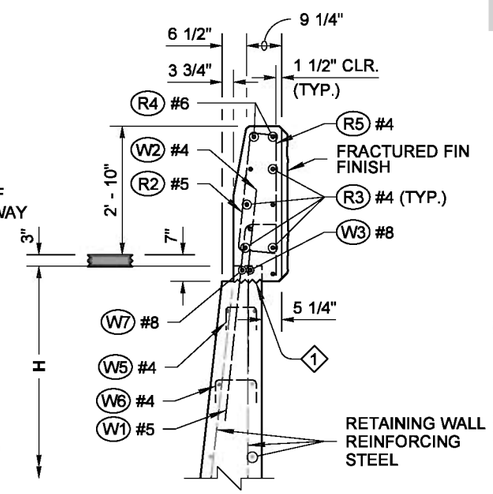

SECTION B

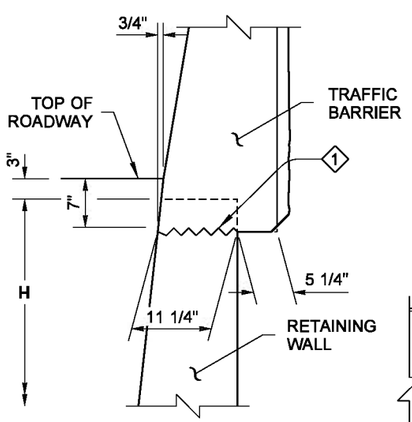

DETAIL

2 ATTACH GUARDRAIL TO CONCRETE TRAFFIC BARRIER WITH 7/8" DIAM. HIGH STRENGTH BOLTS (STANDARD SPECIFICATION 9-06.5(4)) WITH THIN SLAB FERRULE INSERTS OR RESIN BONDED ANCHORS. SEE THE CONTRACT PLANS.

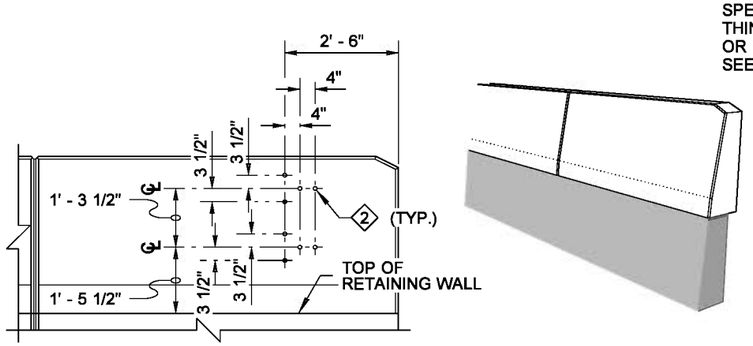

ELEVATION **PERSPECTIVE VIEW**

BEAM GUARDRAIL TRANSITION TYPE 20 CONNECTION

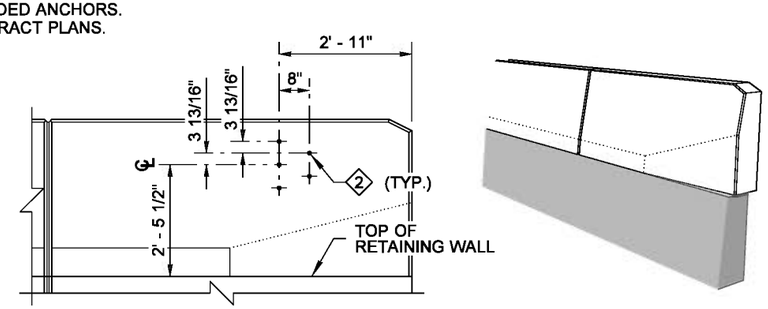

ELEVATION **PERSPECTIVE VIEW**

BEAM GUARDRAIL TRANSITION TYPE 21 CONNECTION

SINGLE SLOPE TRAFFIC BARRIER ON RETAINING WALL

NOTE: THIS PLAN IS NOT A LEGAL ENGINEERING DOCUMENT BUT AN ELECTRONIC DUPLICATE. THE ORIGINAL, SIGNED BY THE ENGINEER AND APPROVED FOR PUBLICATION, IS KEPT ON FILE AT THE WASHINGTON STATE DEPARTMENT OF TRANSPORTATION. A COPY MAY BE OBTAINED UPON REQUEST.

TRAFFIC BARRIER DETAILS FOR REINFORCED CONCRETE RETAINING WALLS

STANDARD PLAN D-15.20-02

SHEET 1 OF 2 SHEETS

APPROVED FOR PUBLICATION

Pasco Bakotich III — STATE DESIGN ENGINEER

06-02-11 — DATE

Washington State Department of Transportation

EFFECTIVE: AUGUST 6, 2012 TO August 4, 2013
EFFECTIVE: AUGUST 6, 2012 TO August 4, 2013
EFFECTIVE: AUGUST 6, 2012 TO August 4, 2013
EFFECTIVE: AUGUST 6, 2012 TO August 4, 2013

EFFECTIVE: AUGUST 6, 2012 TO August 4, 2013
EFFECTIVE: AUGUST 6, 2012 TO August 4, 2013

DRAWN BY: BILL BEKENS

REINFORCING STEEL BENDING DIAGRAM

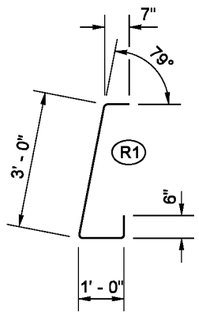

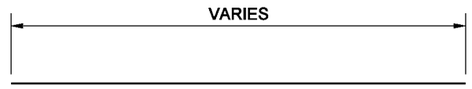

NOTE

SEE ELEVATION FOR LAP SPLICE REQUIREMENTS

R3
R4

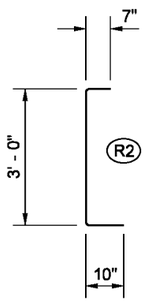

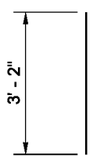

R5

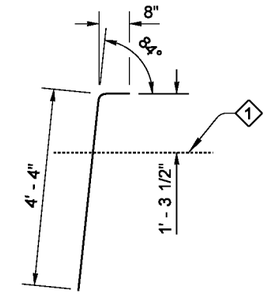

USED WITH A SLOPED FRONT FACE OF A RETAINING WALL

W1

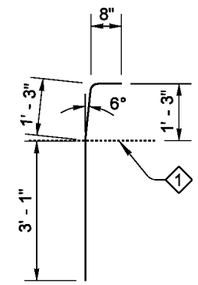

USED WITH A VERTICAL FRONT FACE OF A RETAINING WALL

W1

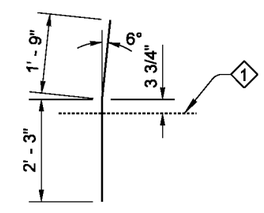

USED WITH A SLOPED FRONT FACE OF A RETAINING WALL

W2

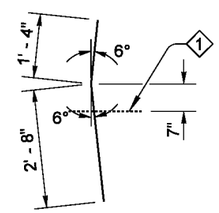

USED WITH A VERTICAL FRONT FACE OF A RETAINING WALL

W2

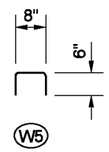

W5

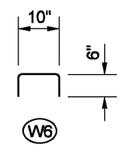

W6

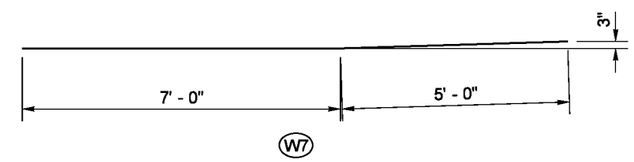

W7

1 CONSTRUCTION JOINT ~ LEVEL TRANSVERSE WITH ROUGHENED SURFACE

ALL DIMENSIONS ARE OUT TO OUT

SEE STD. SPEC. FOR BENDING DIAMETERS

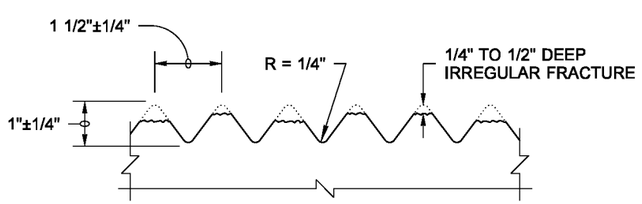

PLAN VIEW

FRACTURED FIN FINISH DETAIL

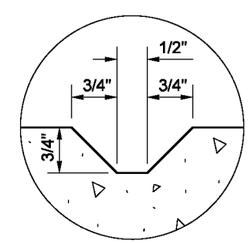

DUMMY JOINT DETAIL

NOTE: THIS PLAN IS NOT A LEGAL ENGINEERING DOCUMENT BUT AN ELECTRONIC DUPLICATE. THE ORIGINAL, SIGNED BY THE ENGINEER AND APPROVED FOR PUBLICATION, IS KEPT ON FILE AT THE WASHINGTON STATE DEPARTMENT OF TRANSPORTATION. A COPY MAY BE OBTAINED UPON REQUEST.

TRAFFIC BARRIER DETAILS FOR REINFORCED CONCRETE RETAINING WALLS

STANDARD PLAN D-15.20-02

SHEET 2 OF 2 SHEETS

APPROVED FOR PUBLICATION

Pasco Bakotich III — STATE DESIGN ENGINEER

06-02-11 — DATE

Washington State Department of Transportation

EFFECTIVE: AUGUST 6, 2012 TO August 4, 2013
EFFECTIVE: AUGUST 6, 2012 TO August 4, 2013
EFFECTIVE: AUGUST 6, 2012 TO August 4, 2013
EFFECTIVE: AUGUST 6, 2012 TO August 4, 2013

EFFECTIVE: AUGUST 6, 2012 TO August 4, 2013
EFFECTIVE: AUGUST 6, 2012 TO August 4, 2013

DRAWN BY: BILL BEKENS

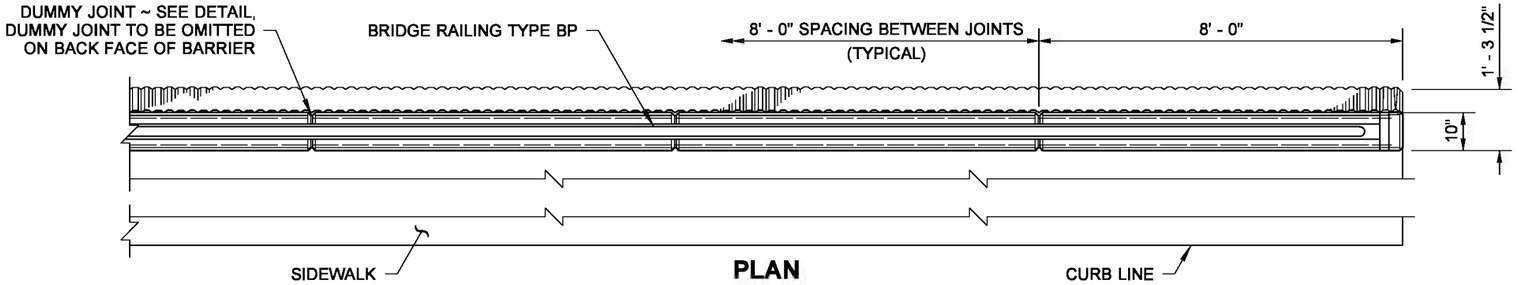

PLAN

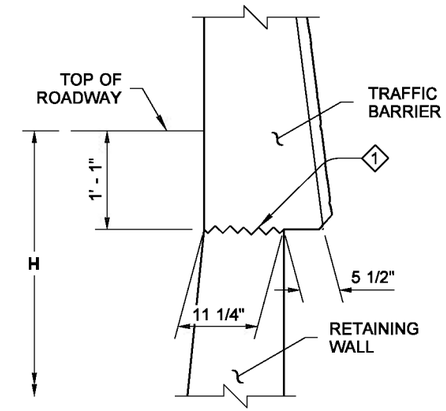

DETAIL

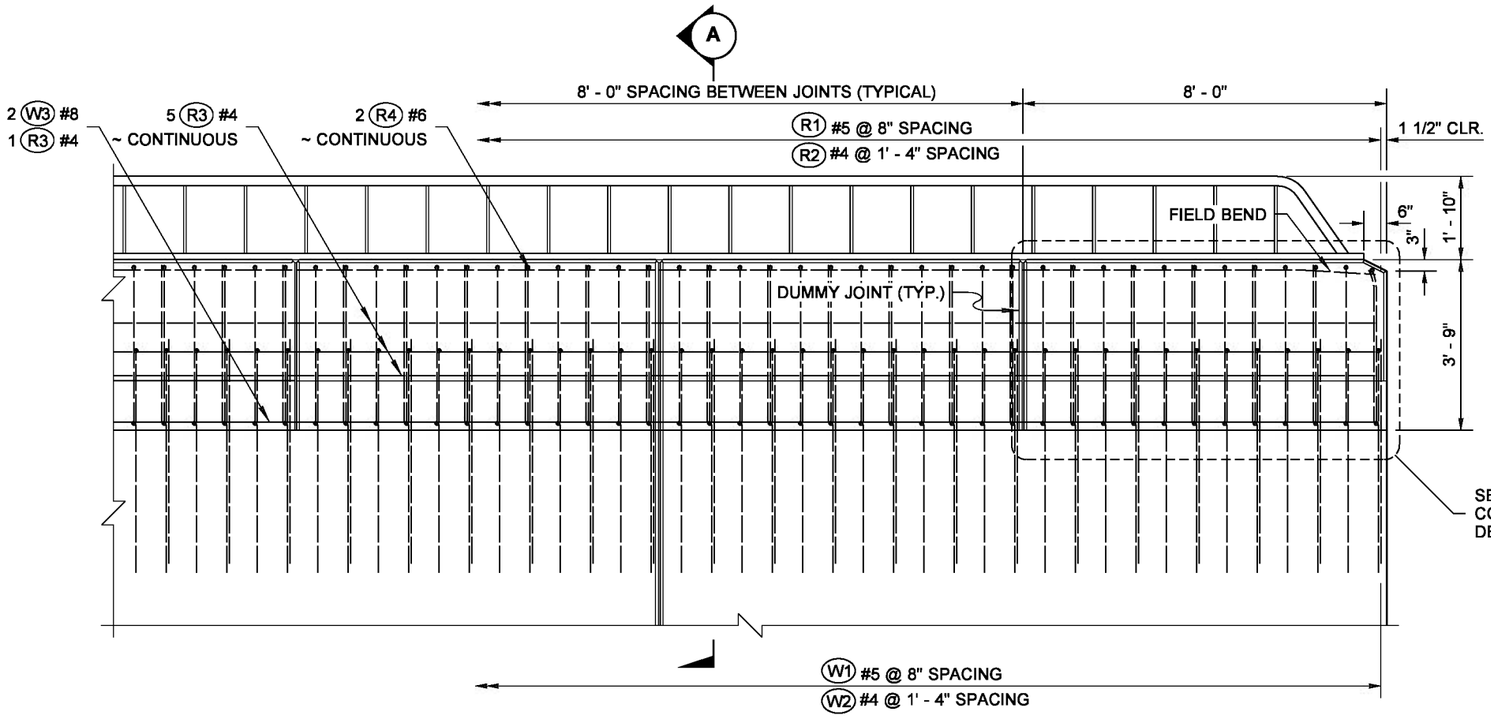

ELEVATION

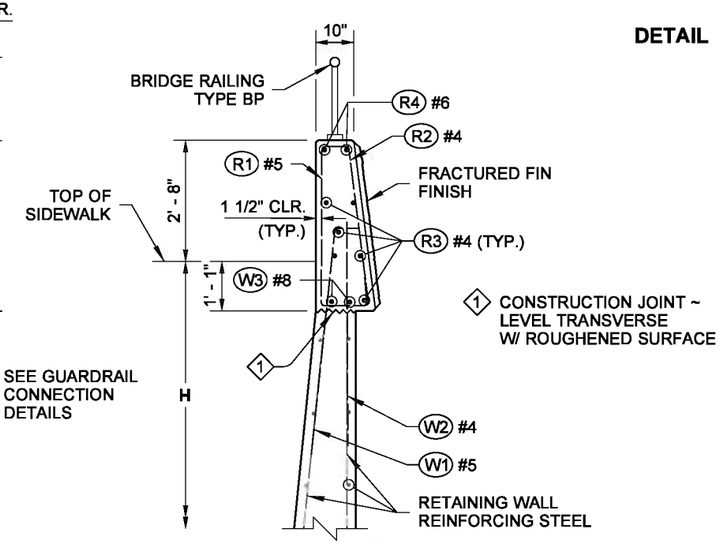

SECTION A

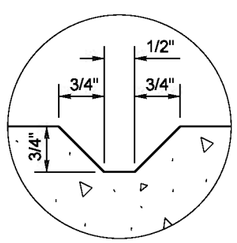

DUMMY JOINT DETAIL

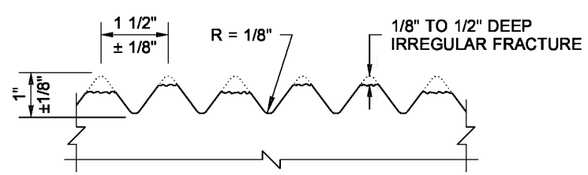

PLAN VIEW

FRACTURED FIN FINISH DETAIL

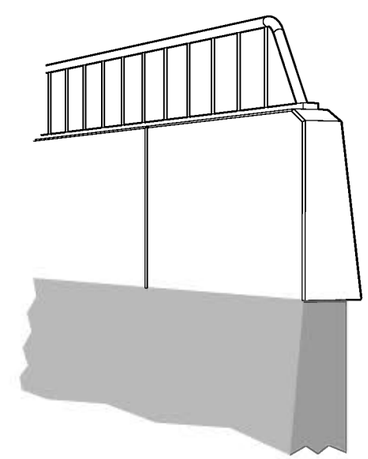

OBLIQUE VIEW

NOTE: THIS PLAN IS NOT A LEGAL ENGINEERING DOCUMENT BUT AN ELECTRONIC DUPLICATE. THE ORIGINAL, SIGNED BY THE ENGINEER AND APPROVED FOR PUBLICATION, IS KEPT ON FILE AT THE WASHINGTON STATE DEPARTMENT OF TRANSPORTATION. A COPY MAY BE OBTAINED UPON REQUEST.

TRAFFIC BARRIER DETAILS FOR REINFORCED CONCRETE RETAINING WALLS
STANDARD PLAN D-15.30-01

SHEET 1 OF 2 SHEETS

APPROVED FOR PUBLICATION

Pasco Bakotich III — STATE DESIGN ENGINEER

12-02-08 — DATE

Washington State Department of Transportation

EFFECTIVE: AUGUST 6, 2012 TO August 4, 2013
EFFECTIVE: AUGUST 6, 2012 TO August 4, 2013
EFFECTIVE: AUGUST 6, 2012 TO August 4, 2013
EFFECTIVE: AUGUST 6, 2012 TO August 4, 2013

EFFECTIVE: AUGUST 6, 2012 TO August 4, 2013
EFFECTIVE: AUGUST 6, 2012 TO August 4, 2013

DRAWN BY: BILL BEKENS

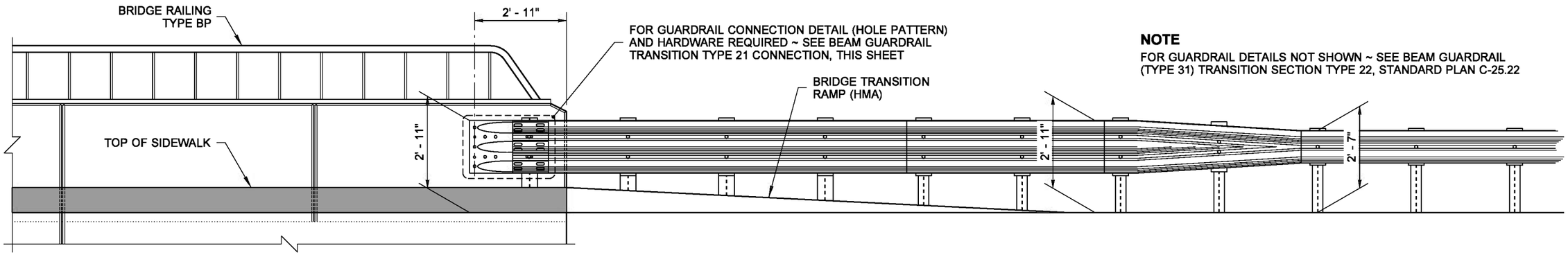

NOTE

FOR GUARDRAIL DETAILS NOT SHOWN ~ SEE BEAM GUARDRAIL (TYPE 31) TRANSITION SECTION TYPE 22, STANDARD PLAN C-25.22

SIDEWALK @ RETAINING WALL

BEAM GUARDRAIL TRANSITION TO BRIDGE END CONNECTION

NOTE

FOR GUARDRAIL DETAILS NOT SHOWN ~ SEE BEAM GUARDRAIL (TYPE 31) TRANSITION SECTION TYPE 20, STANDARD PLAN C-25.18

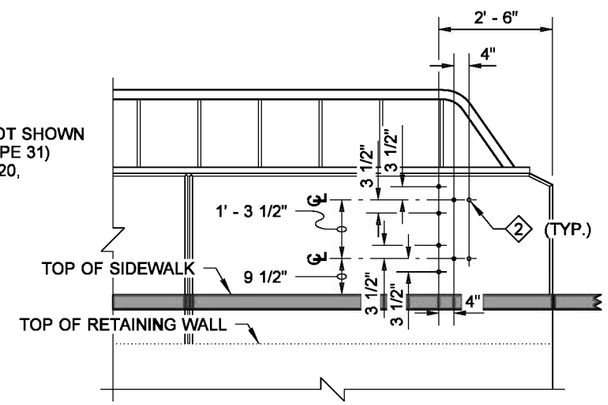

SIDEWALK @ RETAINING WALL AND CONTINUING BEYOND

BEAM GUARDRAIL TRANSITION TYPE 20 CONNECTION

2 ATTACH GUARDRAIL TO CONCRETE TRAFFIC BARRIER WITH 7/8" DIAM. HIGH STRENGTH BOLTS (STANDARD SPECIFICATION 9-06.5(4)) WITH THIN SLAB FERRULE INSERTS OR RESIN BONDED ANCHORS. SEE THE CONTRACT PLANS.

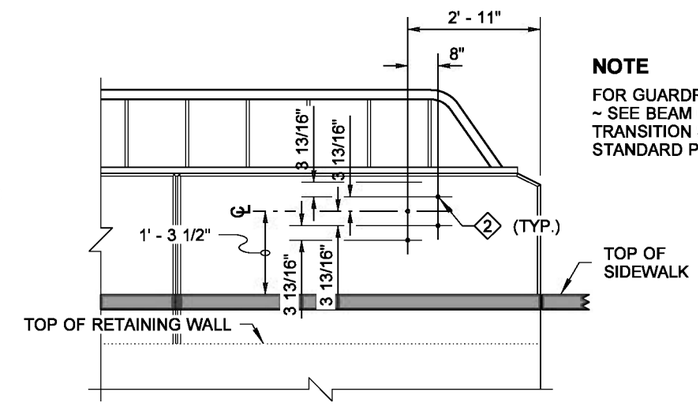

NOTE

FOR GUARDRAIL DETAILS NOT SHOWN ~ SEE BEAM GUARDRAIL (TYPE 31) TRANSITION SECTION TYPE 21, STANDARD PLAN C-25.20

SIDEWALK @ RETAINING WALL AND CONTINUING BEYOND

BEAM GUARDRAIL TRANSITION TYPE 21 CONNECTION

REINFORCING STEEL BENDING DIAGRAM

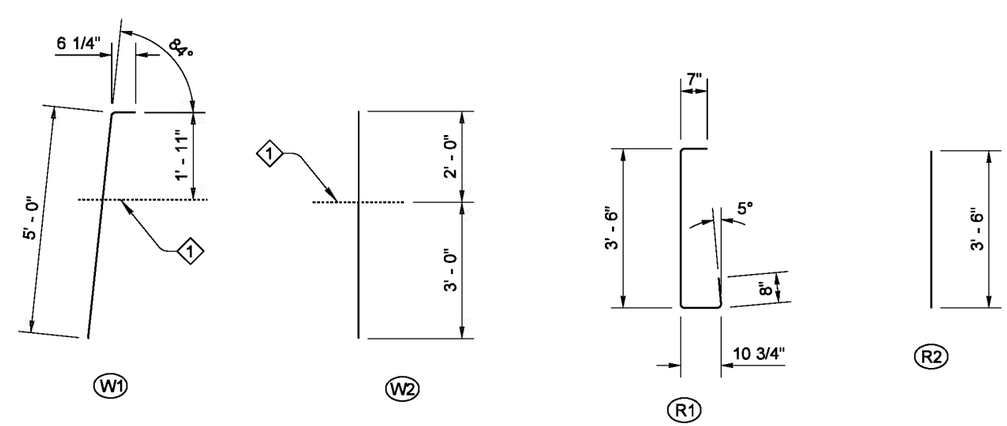

1 CONSTRUCTION JOINT ~ LEVEL TRANSVERSE WITH ROUGHENED SURFACE

ALL DIMENSIONS ARE OUT TO OUT

SEE STD. SPEC. FOR BENDING DIAMETERS

BIJAN KHALEGHI
STATE OF WASHINGTON
27695
STRUCTURAL ENGINEER
PROFESSIONAL ENGINEER

NOTE: THIS PLAN IS NOT A LEGAL ENGINEERING DOCUMENT BUT AN ELECTRONIC DUPLICATE. THE ORIGINAL, SIGNED BY THE ENGINEER AND APPROVED FOR PUBLICATION, IS KEPT ON FILE AT THE WASHINGTON STATE DEPARTMENT OF TRANSPORTATION. A COPY MAY BE OBTAINED UPON REQUEST.

TRAFFIC BARRIER DETAILS FOR REINFORCED CONCRETE RETAINING WALLS
STANDARD PLAN D-15.30-01

SHEET 2 OF 2 SHEETS

APPROVED FOR PUBLICATION

Pasco Bakotich III — STATE DESIGN ENGINEER

12-02-08 — DATE

Washington State Department of Transportation

EFFECTIVE: AUGUST 6, 2012 TO August 4, 2013
EFFECTIVE: AUGUST 6, 2012 TO August 4, 2013
EFFECTIVE: AUGUST 6, 2012 TO August 4, 2013
EFFECTIVE: AUGUST 6, 2012 TO August 4, 2013

EFFECTIVE: AUGUST 6, 2012 TO August 4, 2013
EFFECTIVE: AUGUST 6, 2012 TO August 4, 2013

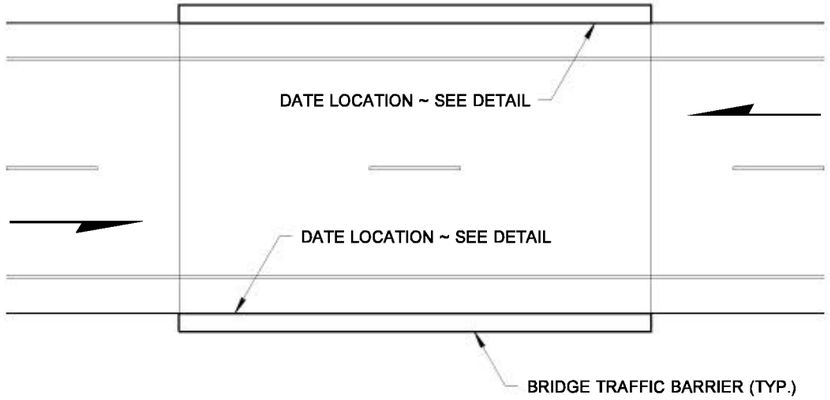

PLAN VIEW

DATE LOCATION ON TWO-WAY BRIDGES

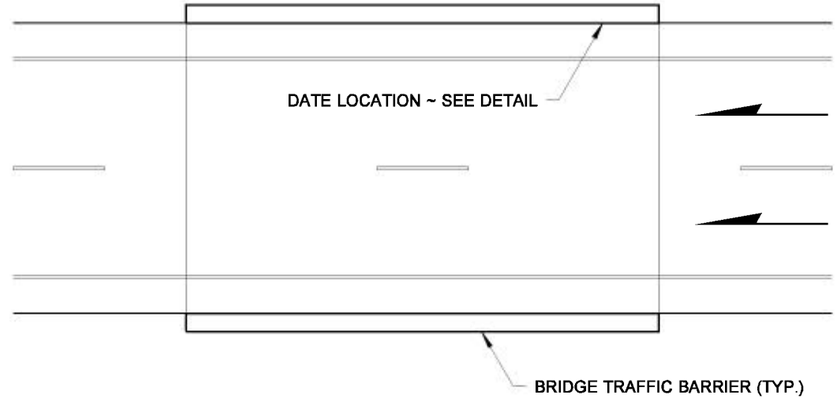

PLAN VIEW

DATE LOCATION ON ONE-WAY BRIDGES

NOTES

1. All numerals are approx. 3 1/4" wide except numeral "1" which is approx. 5/8" wide.
2. Spacing between the numeral "1" and any other numeral is 1". Spacing between all other numerals is 3/4".
3. Traffic Barrier Connections between the bridge and the approaching roadway vary and may consist of concrete barrier extensions. Install the Date Numerals on the traffic barrier of the bridge itself.

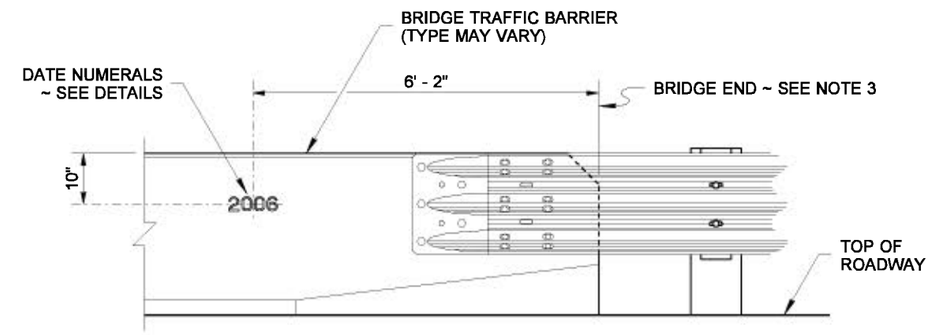

ELEVATION VIEW

DATE LOCATION DETAIL

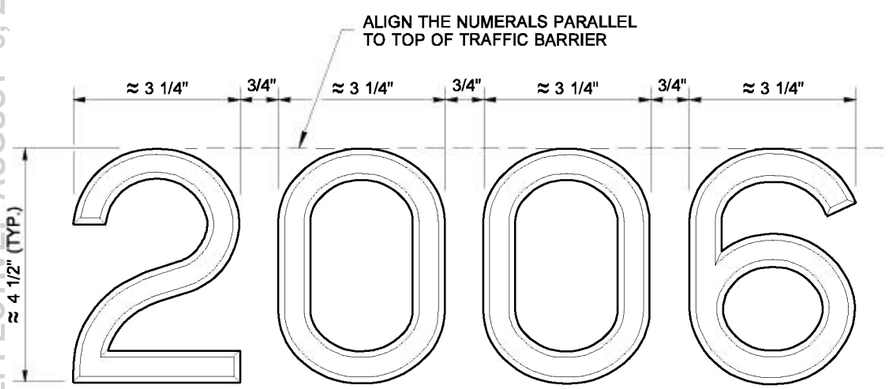

TYPICAL DATE NUMERALS

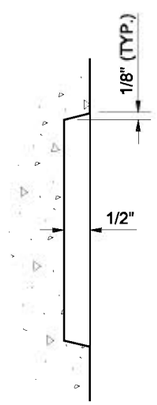

TYPICAL SECTION VIEW

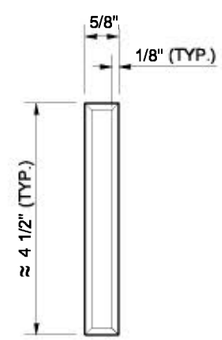

NUMERAL "1"

DATE NUMERAL DETAILS

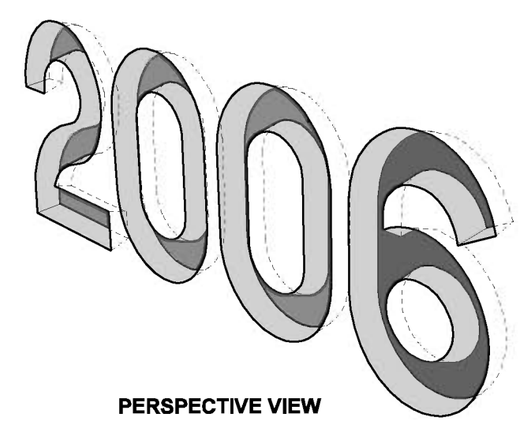

PERSPECTIVE VIEW

EXPIRES AUGUST 26, 2007

NOTE: THIS PLAN IS NOT A LEGAL ENGINEERING DOCUMENT BUT AN ELECTRONIC DUPLICATE. THE ORIGINAL, SIGNED BY THE ENGINEER AND APPROVED FOR PUBLICATION, IS KEPT ON FILE AT THE WASHINGTON STATE DEPARTMENT OF TRANSPORTATION. A COPY MAY BE OBTAINED UPON REQUEST.

DATE NUMERAL PLACEMENT ON BRIDGE TRAFFIC BARRIER STANDARD PLAN E-1

SHEET 1 OF 1 SHEET

APPROVED FOR PUBLICATION

Ken L. Smith — STATE DESIGN ENGINEER

02-21-07 — DATE

Washington State Department of Transportation

EFFECTIVE: AUGUST 6, 2012 TO August 4, 2013
EFFECTIVE: AUGUST 6, 2012 TO August 4, 2013
EFFECTIVE: AUGUST 6, 2012 TO August 4, 2013
EFFECTIVE: AUGUST 6, 2012 TO August 4, 2013

EFFECTIVE: AUGUST 6, 2012 TO August 4, 2013

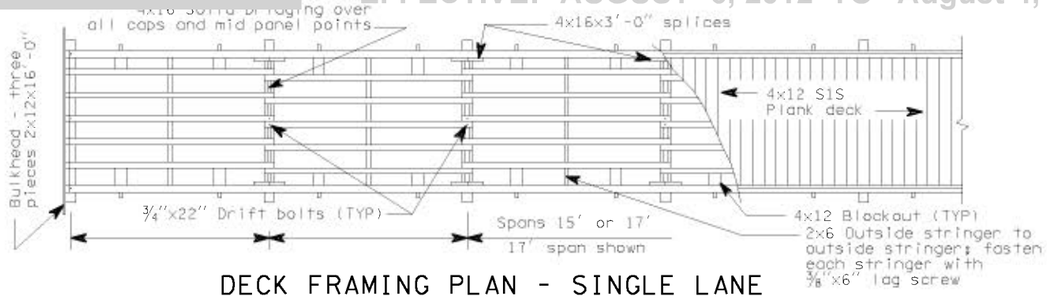

DECK FRAMING PLAN - SINGLE LANE

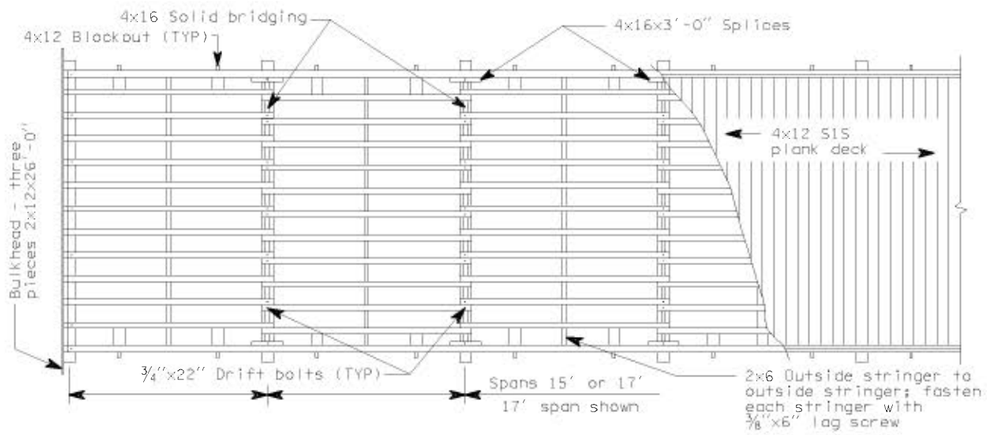

DECK FRAMING PLAN - TWO LANE

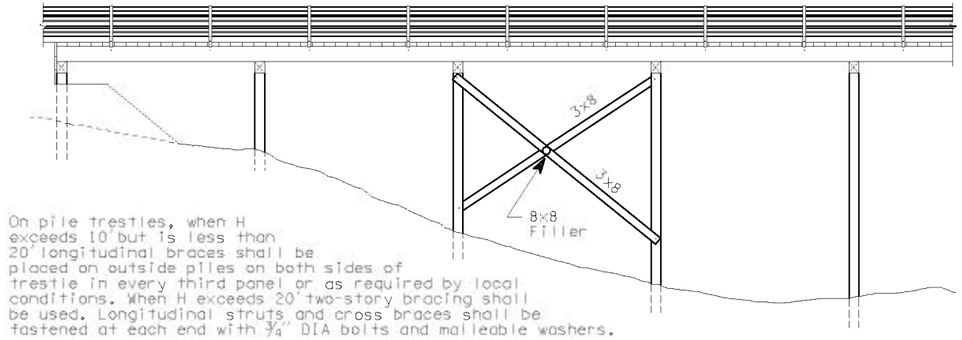

ELEVATION - PILE TRESTLE

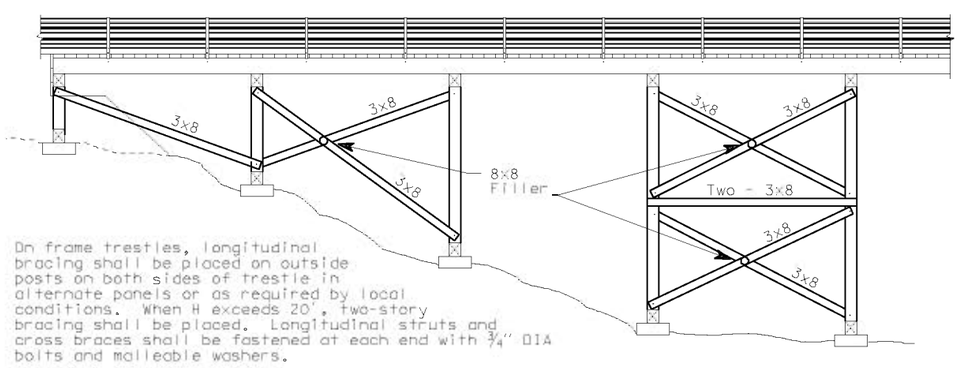

ELEVATION - FRAME TRESTLE

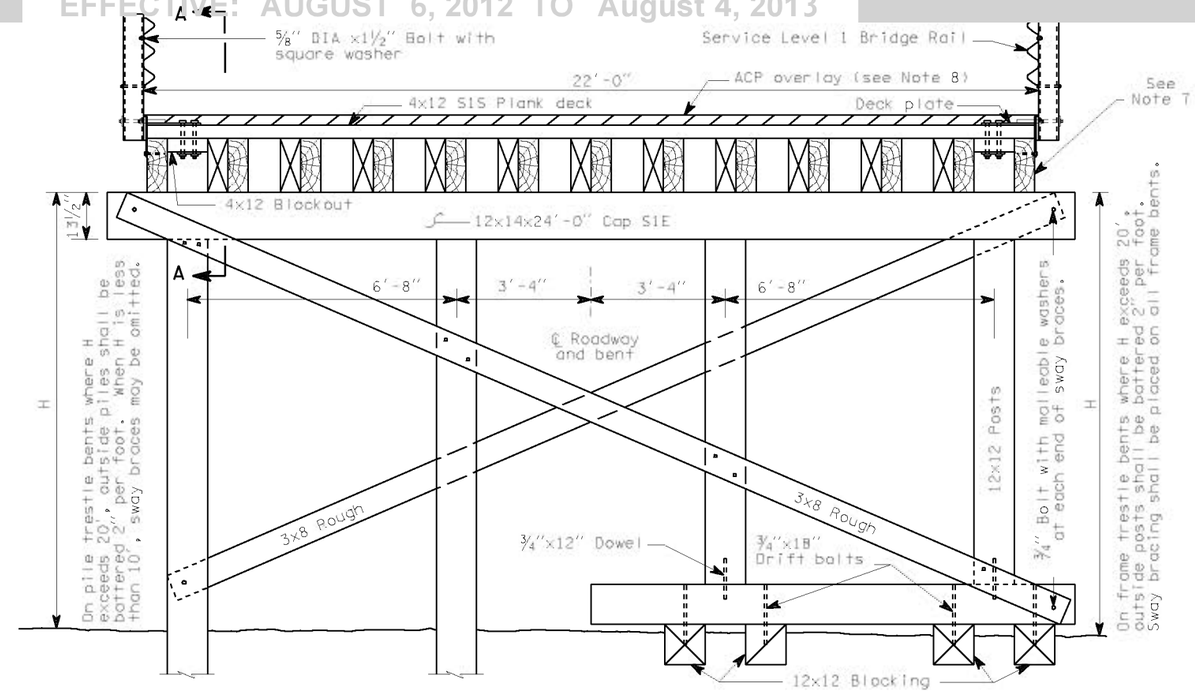

HALF SECTION-PILE BENT HALF SECTION-FRAME BENT

TYPICAL SECTION-TWO LANE BRIDGE

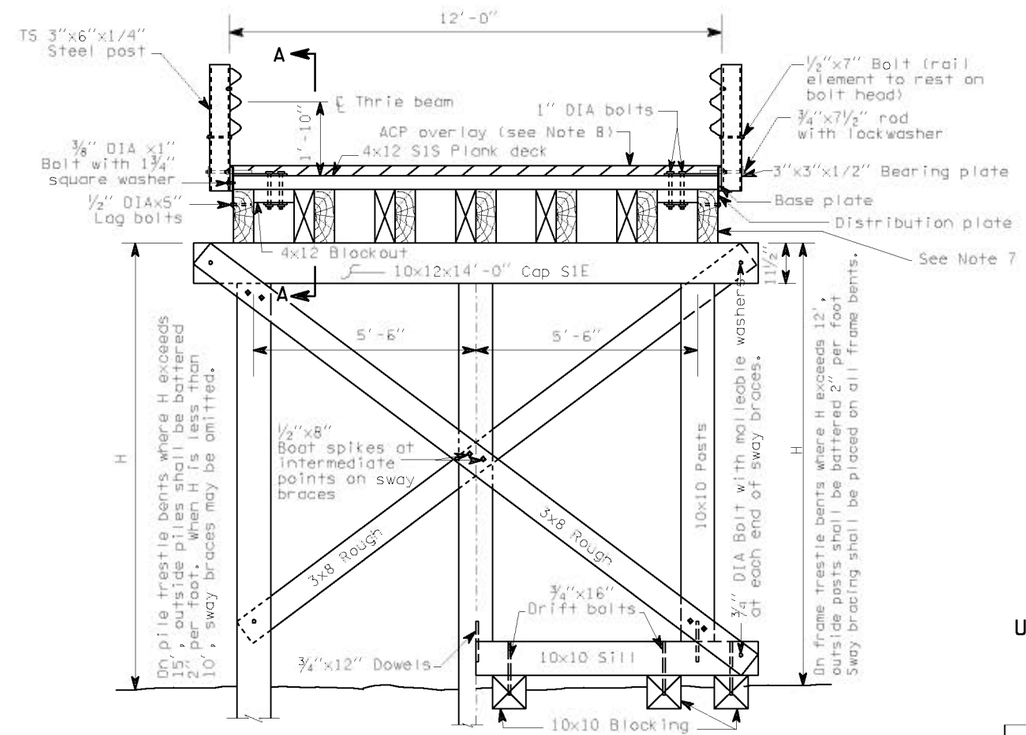

HALF SECTION-PILE BENT HALF SECTION-FRAME BENT

TYPICAL SECTION-SINGLE LANE BRIDGE

M. MYINT LWIN
STATE OF WASHINGTON
10536
REGISTERED
PROFESSIONAL ENGINEER

EXPIRES JANUARY 17, 1999

NOTE: THIS PLAN IS NOT A LEGAL ENGINEERING DOCUMENT BUT ELECTRONIC COPIES OF THE ORIGINAL SIGNED BY THE ENGINEER AND APPROVED FOR PUBLICATION, ARE KEPT ON FILE AT THE WASHINGTON STATE DEPARTMENT OF TRANSPORTATION. A COPY MAY BE OBTAINED UPON REQUEST.

PILE OR FRAME DETOUR BRIDGE WITH ASPHALT OVERLAY

USE ONLY FOR TEMPORARY BRIDGES

STANDARD PLAN E-2

SHEET 1 OF 2 SHEETS

APPROVED FOR PUBLICATION

Brian Ziegler 05-29-98

STATE DESIGN ENGINEER DATE

WASHINGTON STATE DEPARTMENT OF TRANSPORTATION
OLYMPIA, WASHINGTON

EFFECTIVE: AUGUST 6, 2012 TO August 4, 2013

EFFECTIVE: AUGUST 6, 2012 TO August 4, 2013

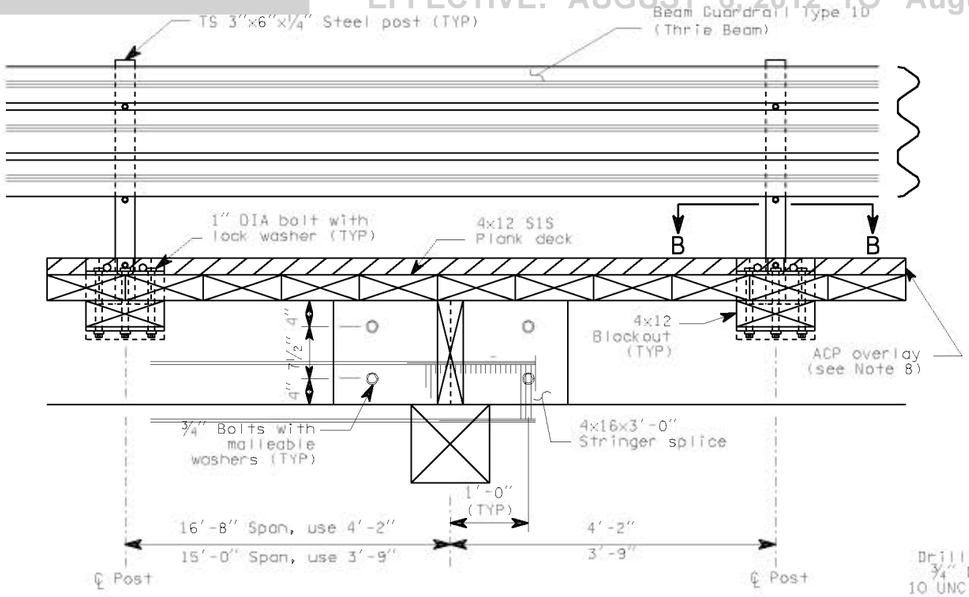

SECTION A-A

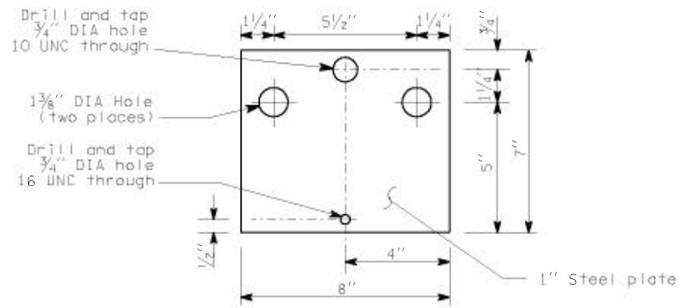

BASE PLATE DETAIL

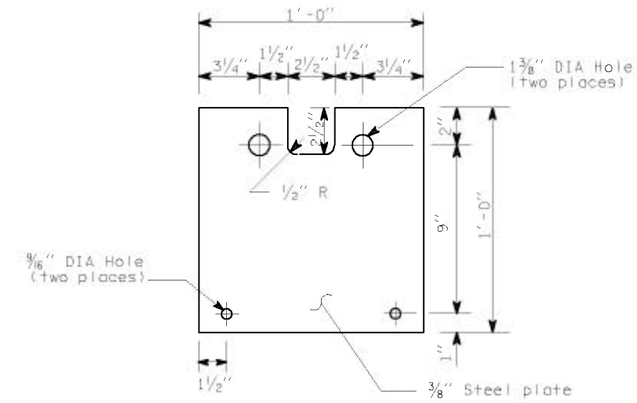

DISTRIBUTION PLATE DETAIL

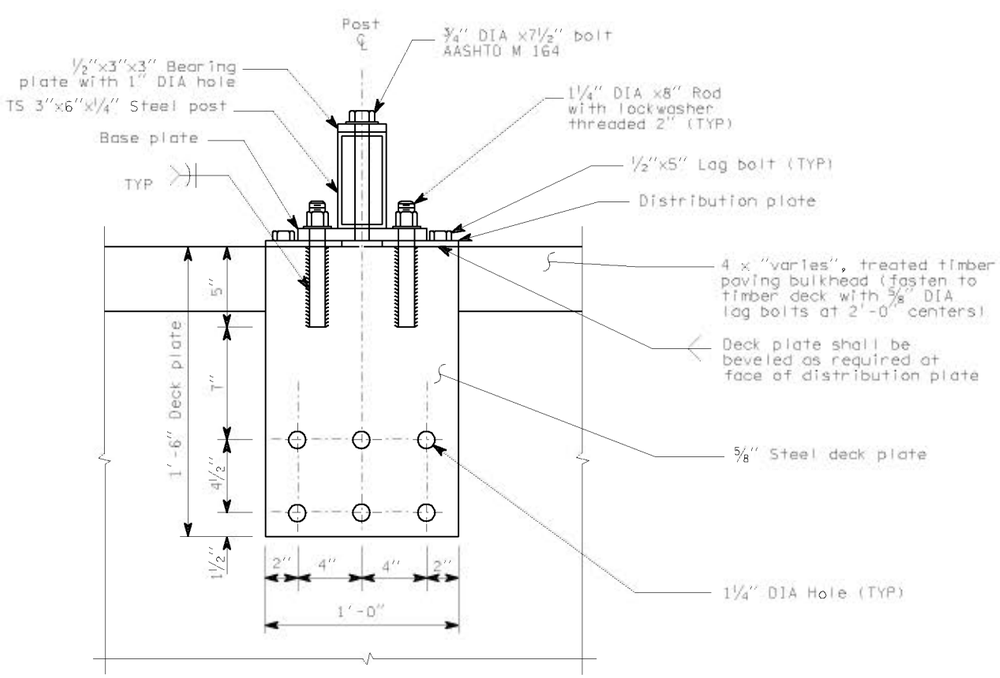

SECTION B-B

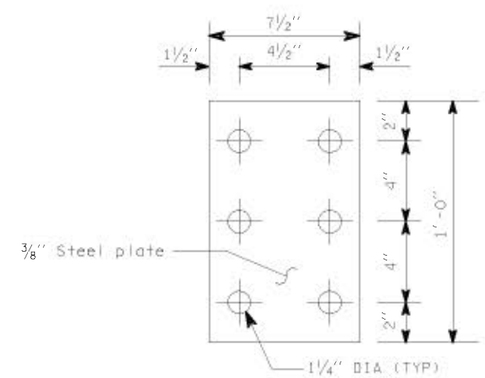

BACKING PLATE DETAIL

Notes

1. Dimensions and notations for superstructure are typical for both single lane and two lane bridges.
2. All timber and lumber shall be #2 or better and untreated Douglas fir-larch.
3. All piling shall be untreated Douglas fir and shall be driven to develop a minimum load bearing capacity of 15 tons.
4. Blocking for frame bents shall be proportioned to carry a minimum load of 15 tons per post.
5. All hardware shall be black, ungalvanized.
6. Each deck plank shall be nailed to each stringer with two 7" spikes, number 1 or larger.
7. On 17' spans, stringers shall be 6x16 S1E. On 15' spans, stringers shall be 5x16 S1E. Two-lane bridges shall use thirteen lines of stringers, one-lane bridges shall use seven lines of stringers.
8. Overlay thickness must be sufficient to cover bolts.

EXPIRES JANUARY 17, 1999

NOTE: THIS PLAN IS NOT A LEGAL ENGINEERING DOCUMENT BUT AN ELECTRONIC DUPLICATE. THE ORIGINAL, SIGNED BY THE ENGINEER AND APPROVED FOR PUBLICATION, IS KEPT ON FILE AT THE WASHINGTON STATE DEPARTMENT OF TRANSPORTATION. A COPY MAY BE OBTAINED UPON REQUEST.

PILE OR FRAME DETOUR BRIDGE WITH ASPHALT OVERLAY

USE ONLY FOR TEMPORARY BRIDGES

STANDARD PLAN E-2

SHEET 2 OF 2 SHEETS

APPROVED FOR PUBLICATION

Brian Ziegler	*05-29-98*
STATE DESIGN ENGINEER	DATE

WASHINGTON STATE DEPARTMENT OF TRANSPORTATION
OLYMPIA, WASHINGTON

EFFECTIVE: AUGUST 6, 2012 TO August 4, 2013

EFFECTIVE: AUGUST 6, 2012 TO August 4, 2013

DRAWN BY: MARK SUJKA

PILE TYPE	D (in.)	PERIMETER (in.)	UNIT WEIGHT (lbs./ft.)	AREA (in.²)	MOMENT OF INERTIA (in.⁴)	RADIUS OF GYRATION (in.)	NUMBER OF STRANDS	
							MINIMUM	MAXIMUM
SQUARE	12	48.0	158	144	1728	3.5	4	7
	14	56.0	215	196	3201	4.0	6	10
	16	64.0	281	256	5461	4.6	7	13
OCTAGONAL	14	46.4	178	162	2103	3.6	5	8
	16 1/2	54.7	247	226	4057	4.2	7	11
	18	59.6	295	268	5746	4.6	8	13
	20	66.3	364	331	8758	5.1	9	16
	24	79.5	524	477	18161	6.2	13	22

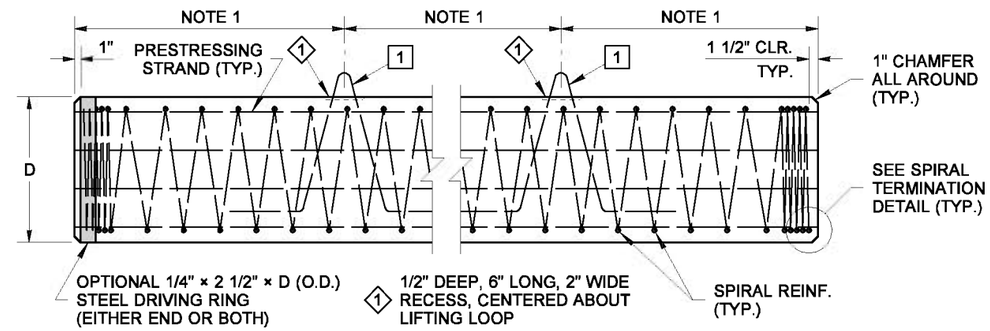

ELEVATION

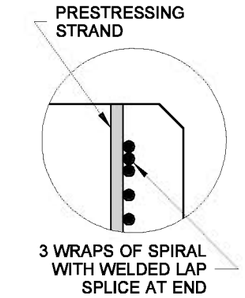

SPIRAL TERMINATION DETAIL

PILE DETAILS

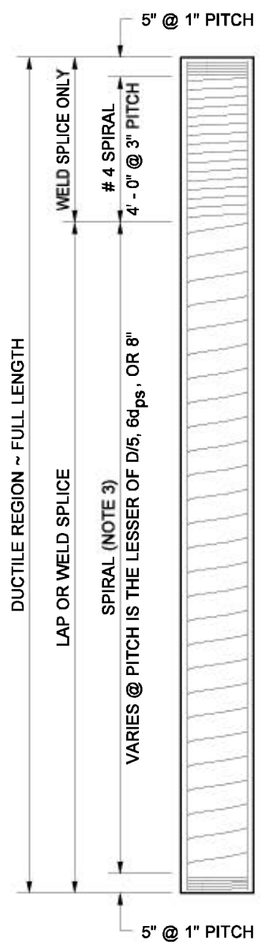

PILES LESS THAN 35' LONG

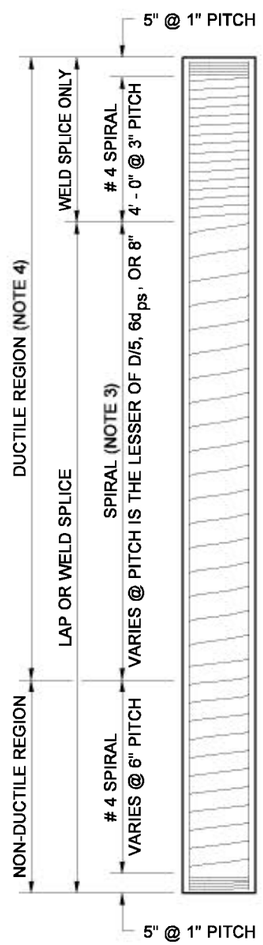

PILES MORE THAN 35' LONG

SPIRAL REINFORCEMENT

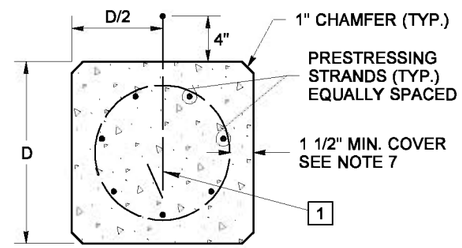

SQUARE

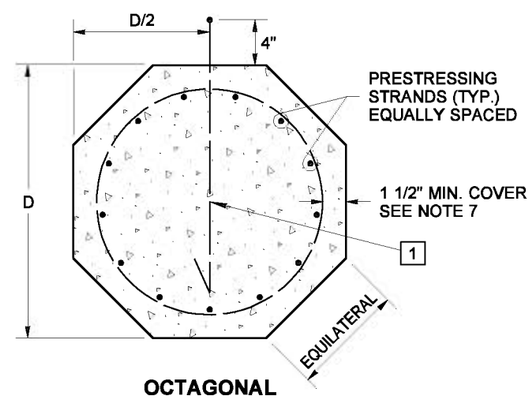

OCTAGONAL

TYPICAL SECTIONS

NOTES

1. Place lifting loops at the lifting points shown in the PILE HANDLING DIAGRAM, Standard Plan E-4a, for the case stated in the contract.
2. Spirals shall be spliced either by lapping one full turn and bending the end of the spiral to a 135° seismic hook, by welding, or by the use of a mechanical connector that develops 125% of the minimum yield strenth of the spiral. Welding shall meet the requirements of Standard Specification 6-02.3(24)E.
3. All prestressing strands are 1/2" or 0.6" diameter (d_{ps}), Grade 270, uncoated strands, AASHTO M203, jack to 0.75 Fpu maximum.
4. Strength of concrete shall be 5.0 ksi at release and 7.0 ksi at final.
5. 2 1/2" cover if pile is exposed to salt water.

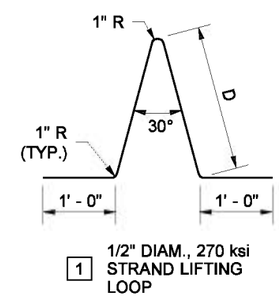

BENDING DIAGRAM

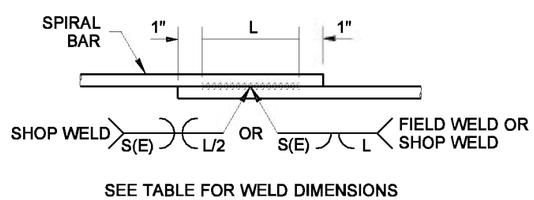

SPIRAL WELDED LAP SPLICE DETAIL

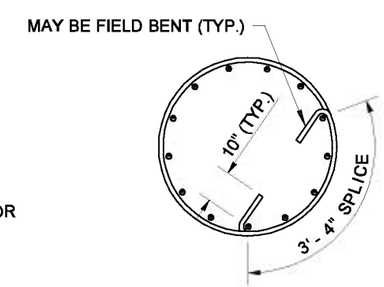

SPIRAL LAP SPLICE DETAIL

DEFORMED BAR AASHTO M 31 GR. 60	PLAIN STEEL BAR AASHTO M 31 GR. 60	COLD DRAWN WIRE AASHTO M 32	DEFORMED WIRE AASHTO M225	WELD DIMENSIONS		
				S	E	LENGTH (L)
# 4	1/2" DIAM.	W 20	D 20	6	3	4"
# 5	5/8" DIAM.	W 31	D 31	8	5	6"

EXPIRES AUGUST 23, 2004

NOTE: THIS PLAN IS NOT A LEGAL ENGINEERING DOCUMENT BUT AN ELECTRONIC DUPLICATE. THE ORIGINAL, SIGNED BY THE ENGINEER AND APPROVED FOR PUBLICATION, IS KEPT ON FILE AT THE WASHINGTON STATE DEPARTMENT OF TRANSPORTATION. A COPY MAY BE OBTAINED UPON REQUEST.

PRECAST PRESTRESSED CONCRETE PILES

STANDARD PLAN E-4

SHEET 1 OF 1 SHEET

APPROVED FOR PUBLICATION

Harold J. Peterfeso — STATE DESIGN ENGINEER

08-27-03 — DATE

Washington State Department of Transportation

EFFECTIVE: AUGUST 6, 2012 TO August 4, 2013

EFFECTIVE: AUGUST 6, 2012 TO August 4, 2013
EFFECTIVE: AUGUST 6, 2012 TO August 4, 2013

DRAWN BY: MARK SUJKA

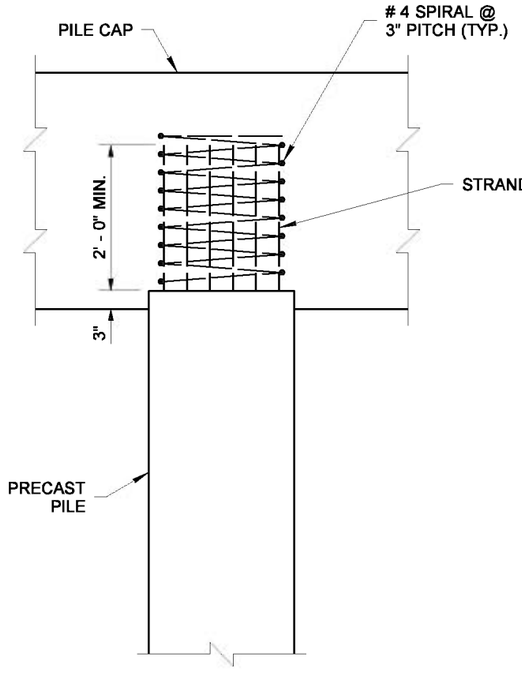

PILE CUTOFF WITH STRANDS EXTENDING 2' - 0" MINIMUM

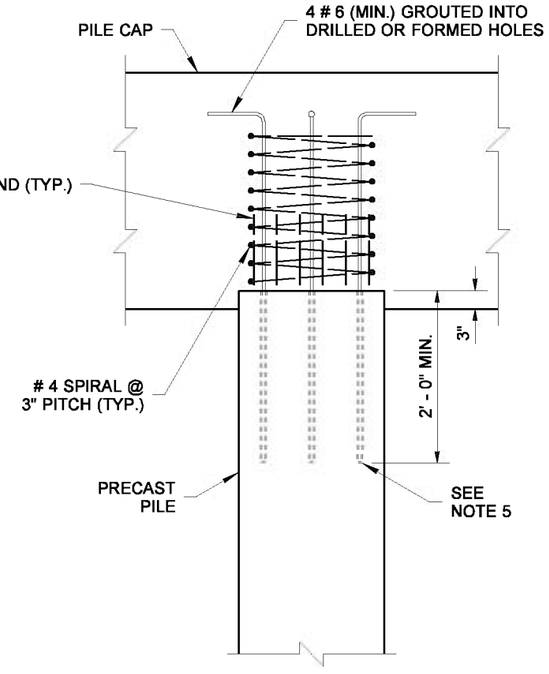

PILE CUTOFF WITH STRANDS EXTENDING LESS THAN 2' - 0"

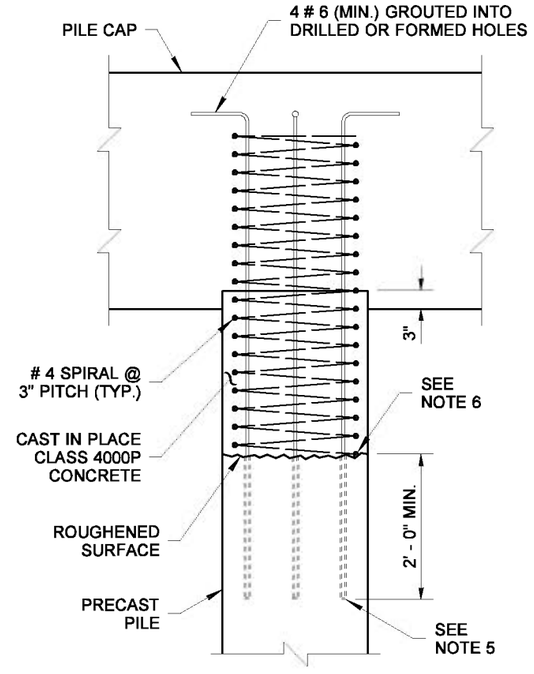

BUILD-UP ON PILE DRIVEN BELOW CUTOFF

PILE TO PILE-CAP CONNECTIONS

PRECAST PILES, HANDLING NOTES

1. For pile lifting Cases 1 and 2, do not allow pile tip to bear on other piling stored in a lower layer.
2. For pile lifting Cases 3 and 4, tilt the pile in the air, do not allow the pile to touch the ground.
3. The minimum angle between the pile and the lifting strap is 60° when the pile is in the horizontal position.
4. When directed to remove a lifting loop, cut it off at the bottom of the recess and patch the recess by filling it with 1:2 mortar, finishing it to the level of the pile face. The patch shall be allowed to cure at least 24 hours prior to driving the pile.
5. The length of the formed or drilled hole shall allow for potential cut-off and full development length of the steel reinforcement. The holes must be roughened and filled with epoxy resin.
6. Expose the spiral reinforcement at the pile head and splice with new spiral in accordance with Standard Plan E-4, Note 2.
7. For handling and bunking, the Prestressed piles shall have at least the minimum number of strands shown on Std Plan E4.
8. Piles stored on the ground should be bunked on level dunnage at no more than 20' on center, with a maximum overhang of 10'.

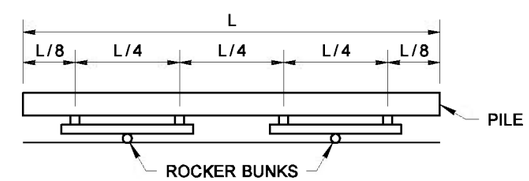

"L" IS MORE THAN 90'

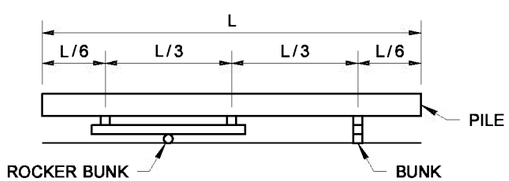

"L" IS MORE THAN 70' BUT NOT MORE THAN 90'

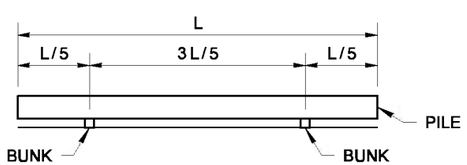

"L" IS 70' OR LESS

PILE BUNKING AND SHIPPING SUPPORT DIAGRAMS

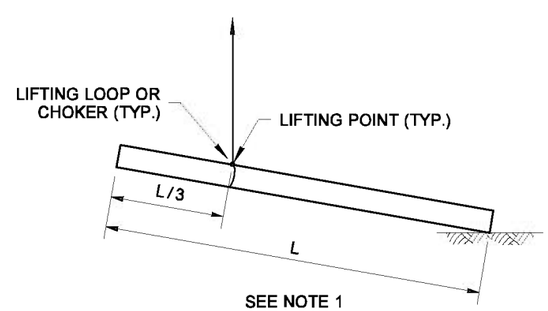

SEE NOTE 1

WHEN "L" IS 50' OR LESS

CASE 1

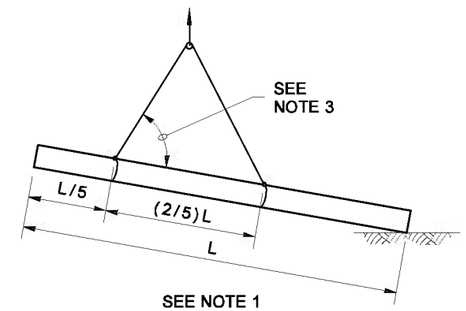

SEE NOTE 1

WHEN "L" IS MORE THAN 50' BUT NOT MORE THAN 70'

CASE 2

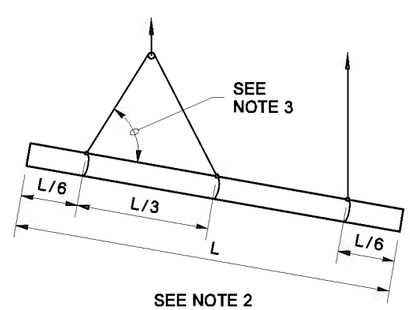

SEE NOTE 2

WHEN "L" IS MORE THAN 70' BUT NOT MORE THAN 90'

CASE 3

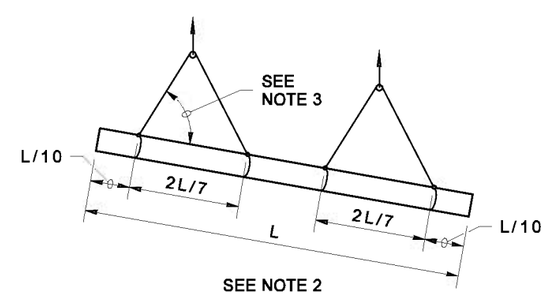

SEE NOTE 2

WHEN "L" IS MORE THAN 90'

CASE 4

PILE HANDLING DIAGRAMS

EXPIRES AUGUST 23, 2004

NOTE: THIS PLAN IS NOT A LEGAL ENGINEERING DOCUMENT BUT AN ELECTRONIC DUPLICATE. THE ORIGINAL, SIGNED BY THE ENGINEER AND APPROVED FOR PUBLICATION, IS KEPT ON FILE AT THE WASHINGTON STATE DEPARTMENT OF TRANSPORTATION. A COPY MAY BE OBTAINED UPON REQUEST.

PRECAST PRESTRESSED CONCRETE PILES HANDLING AND CAPPING

STANDARD PLAN E-4a

SHEET 1 OF 1 SHEET

APPROVED FOR PUBLICATION

Harold J. Peterfeso — STATE DESIGN ENGINEER

08-27-03 — DATE

Washington State Department of Transportation

EFFECTIVE: AUGUST 6, 2012 TO August 4, 2013
EFFECTIVE: AUGUST 6, 2012 TO August 4, 2013
EFFECTIVE: AUGUST 6, 2012 TO August 4, 2013
EFFECTIVE: AUGUST 6, 2012 TO August 4, 2013

EFFECTIVE: AUGUST 6, 2012 TO August 4, 2013

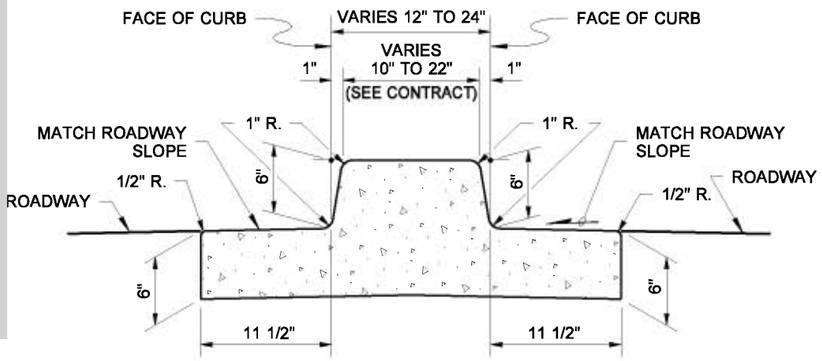

DUAL-FACED CEMENT CONCRETE TRAFFIC CURB AND GUTTER

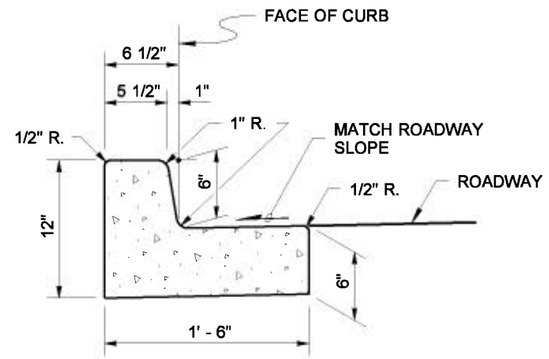

CEMENT CONCRETE TRAFFIC CURB AND GUTTER

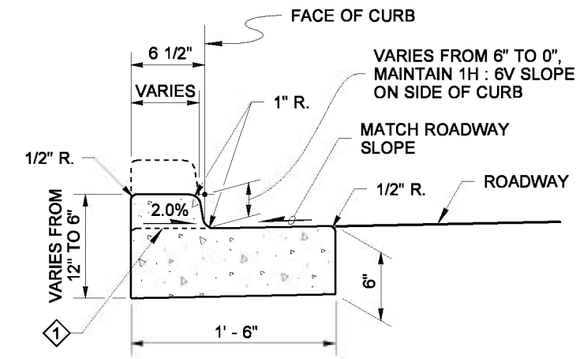

DEPRESSED CURB SECTION

AT CURB RAMPS AND DRIVEWAY ENTRANCES

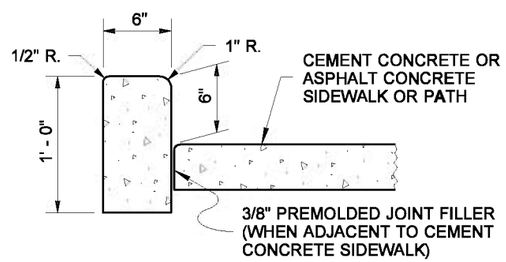

CEMENT CONCRETE PEDESTRIAN CURB

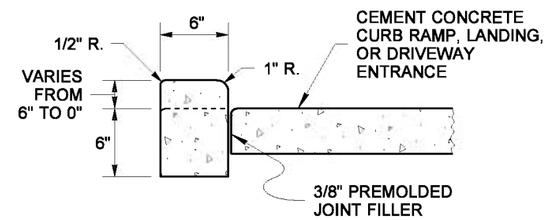

CEMENT CONCRETE PEDESTRIAN CURB

AT CURB RAMPS, LANDINGS, AND DRIVEWAY ENTRANCES

NOTE

1. See **Standard Plan F-30.10** for Curb Expansion and Contraction Joint spacing.

1 FLUSH WITH GUTTER PAN AT CURB RAMP ENTRANCE ~ 1/2" VERTICAL LIP AT DRIVEWAY ENTRANCE

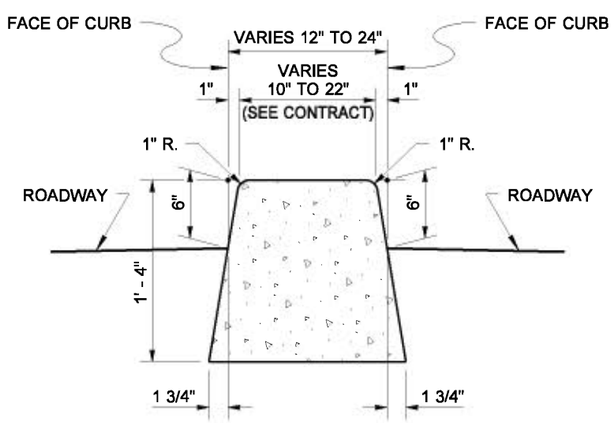

DUAL-FACED CEMENT CONCRETE TRAFFIC CURB

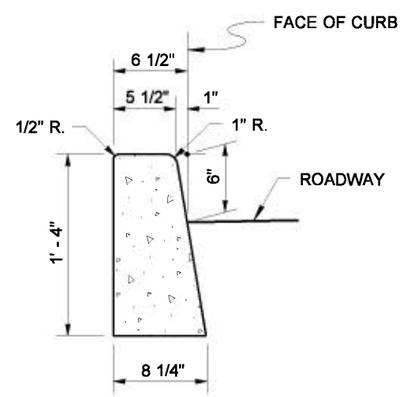

CEMENT CONCRETE TRAFFIC CURB

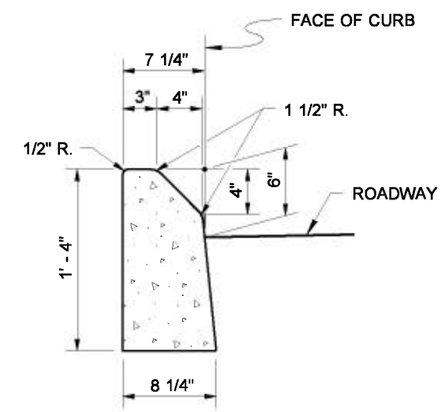

MOUNTABLE CEMENT CONCRETE TRAFFIC CURB

NOTE: THIS PLAN IS NOT A LEGAL ENGINEERING DOCUMENT BUT AN ELECTRONIC DUPLICATE. THE ORIGINAL, SIGNED BY THE ENGINEER AND APPROVED FOR PUBLICATION, IS KEPT ON FILE AT THE WASHINGTON STATE DEPARTMENT OF TRANSPORTATION. A COPY MAY BE OBTAINED UPON REQUEST.

CEMENT CONCRETE CURBS

STANDARD PLAN F-10.12-02

SHEET 1 OF 1 SHEET

APPROVED FOR PUBLICATION

Pasco Bakotich III — STATE DESIGN ENGINEER

06-16-11 — DATE

Washington State Department of Transportation

DRAWN BY: FERN LIDDELL

EFFECTIVE: AUGUST 6, 2012 TO August 4, 2013

EFFECTIVE: AUGUST 6, 2012 TO August 4, 2013
EFFECTIVE: AUGUST 6, 2012 TO August 4, 2013

DRAWN BY: MARK SUJKA

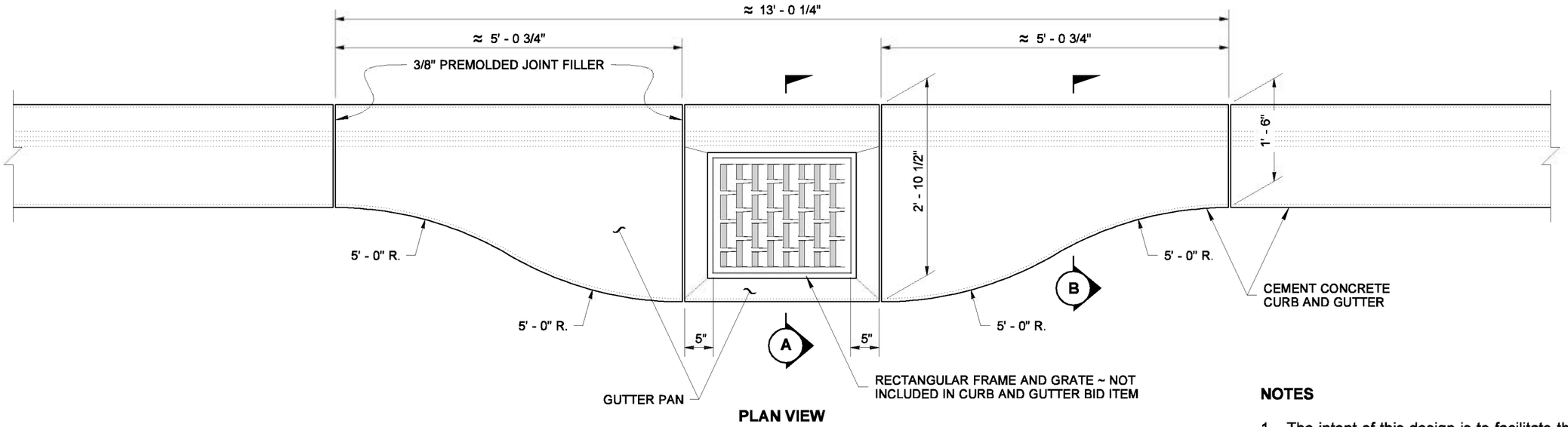

PLAN VIEW

CATCH BASIN GUTTER PAN

NOTES

1. The intent of this design is to facilitate the compaction of Hot Mix Asphalt pavement adjacent to a drainage structure.
2. The centerline of the drainage structure may differ from the centerline of the frame and grate.

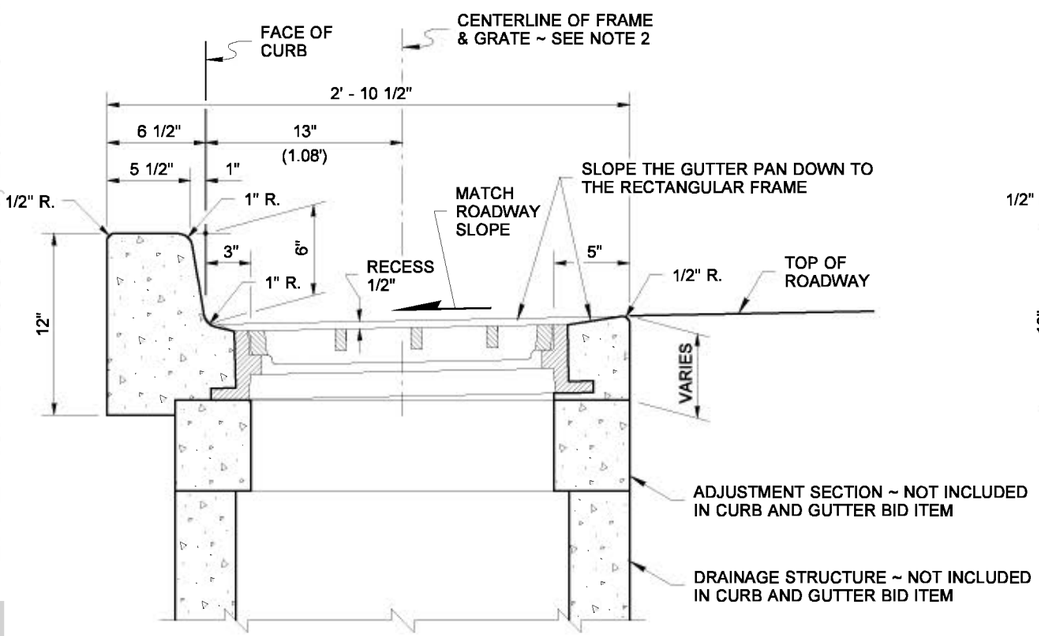

SECTION (A)

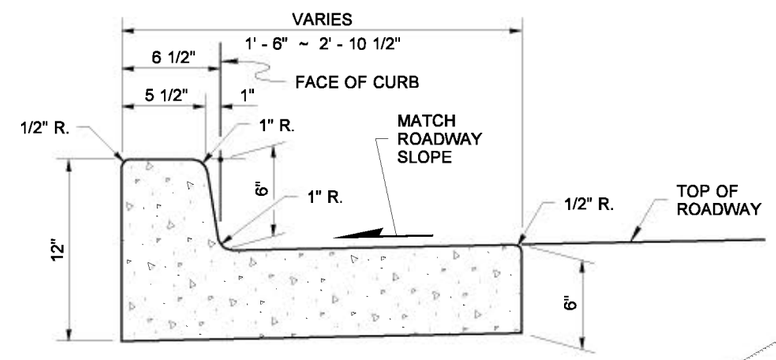

SECTION (B)

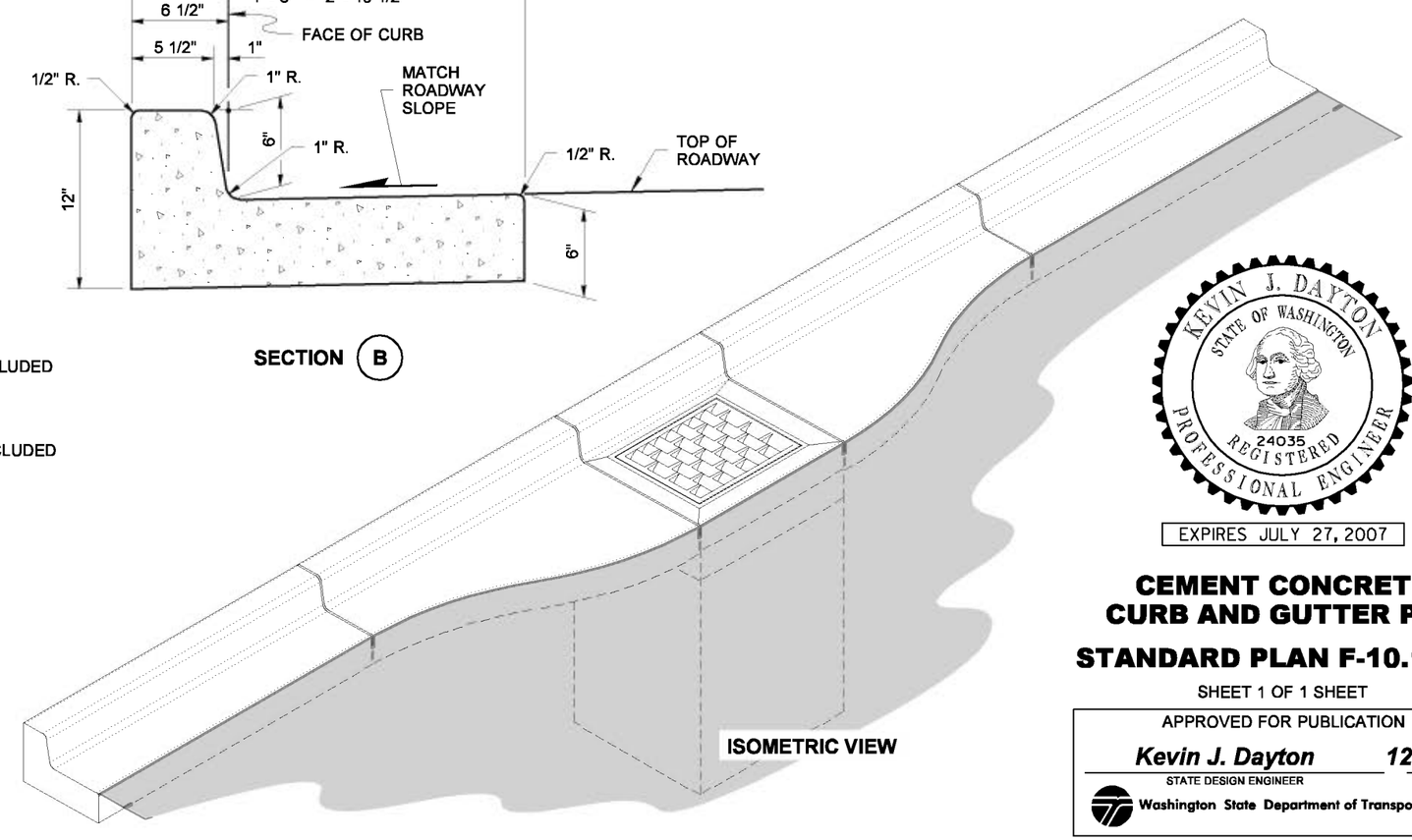

ISOMETRIC VIEW

EXPIRES JULY 27, 2007

NOTE: THIS PLAN IS NOT A LEGAL ENGINEERING DOCUMENT BUT AN ELECTRONIC DUPLICATE. THE ORIGINAL, SIGNED BY THE ENGINEER AND APPROVED FOR PUBLICATION, IS KEPT ON FILE AT THE WASHINGTON STATE DEPARTMENT OF TRANSPORTATION. A COPY MAY BE OBTAINED UPON REQUEST.

CEMENT CONCRETE CURB AND GUTTER PAN

STANDARD PLAN F-10.16-00

SHEET 1 OF 1 SHEET

APPROVED FOR PUBLICATION

Kevin J. Dayton — STATE DESIGN ENGINEER

12-20-06 — DATE

Washington State Department of Transportation

EFFECTIVE: AUGUST 6, 2012 TO August 4, 2013
EFFECTIVE: AUGUST 6, 2012 TO August 4, 2013
EFFECTIVE: AUGUST 6, 2012 TO August 4, 2013
EFFECTIVE: AUGUST 6, 2012 TO August 4, 2013

EFFECTIVE: AUGUST 6, 2012 TO August 4, 2013
EFFECTIVE: AUGUST 6, 2012 TO August 4, 2013

CURB PLACEMENT

SECTION (A)

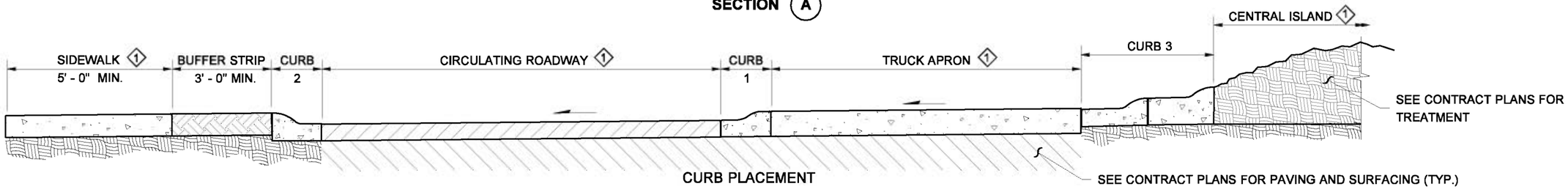

CURB PLACEMENT

SECTION (B)

(ROUNDABOUT CONFIGURATION WILL VARY DEPENDING ON CONTRACT PLANS)

NOTES

1. See **Standard Plan F-30.10** for Curb Expansion and Contraction Joint spacing.

LEGEND

◇1 WIDTH VARIES ~ SEE CONTRACT PLANS

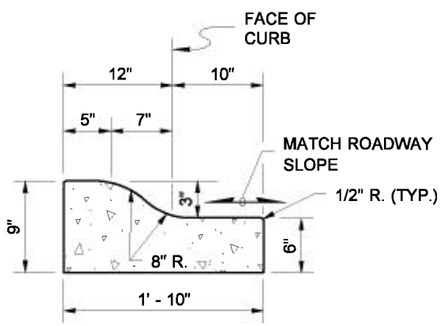

CURB 1
ROUNDABOUT TRUCK APRON
CEMENT CONCRETE CURB & GUTTER

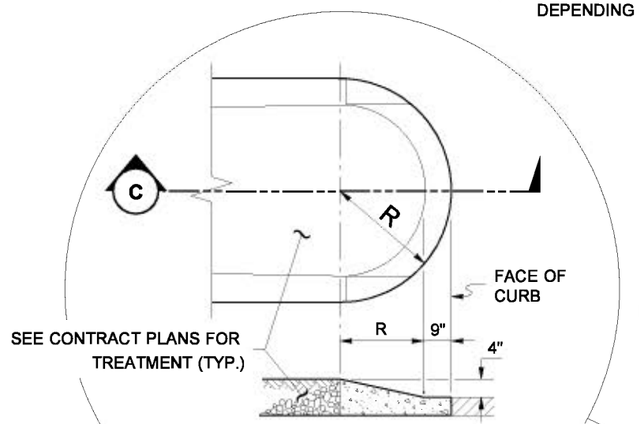

ROUNDABOUT SPLITTER ISLAND
NOSING CURB

SECTION C

DETAIL

(SEE CONTRACT PLANS FOR **R**)

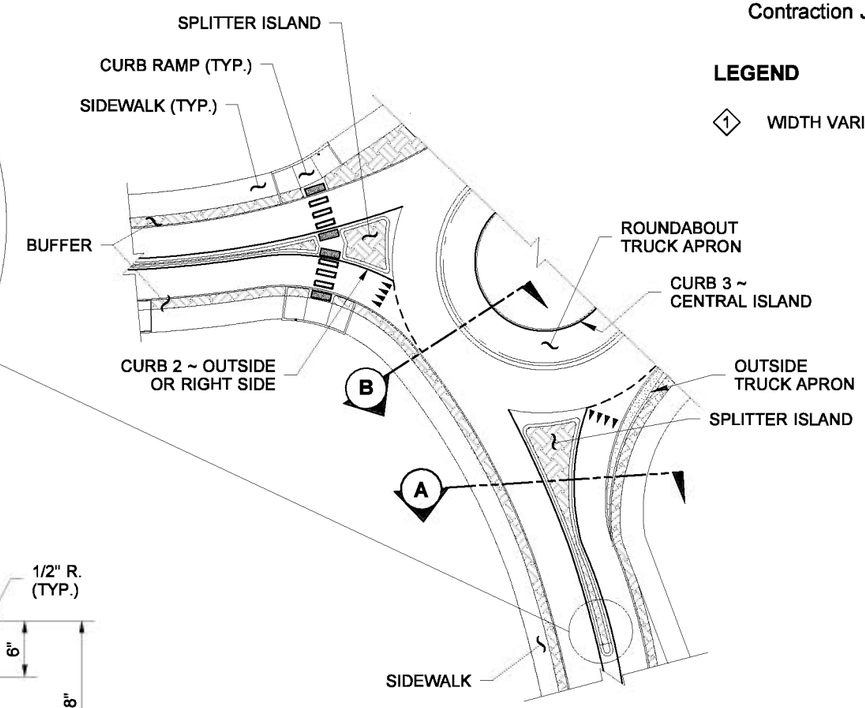

PARTIAL PLAN

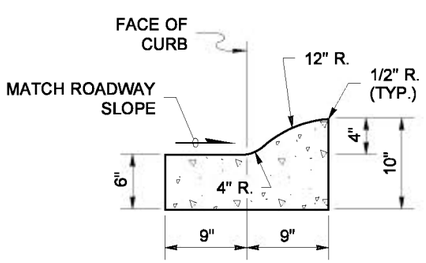

CURB 2
(OUTSIDE, RIGHT SIDE OR SPLITTER ISLAND)

ROUNDABOUT CEMENT CONCRETE CURB AND GUTTER

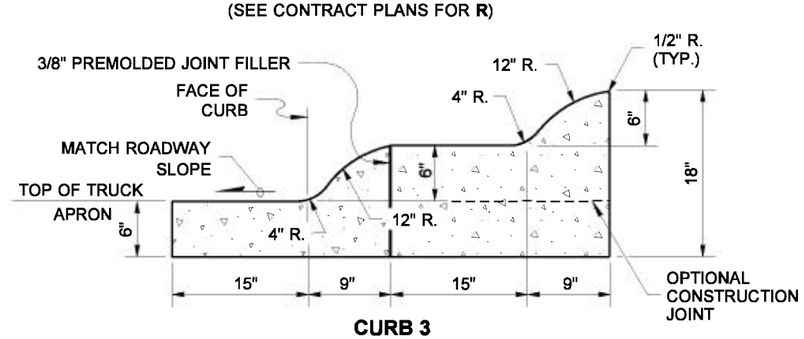

CURB 3
ROUNDABOUT CENTRAL ISLAND
CEMENT CONCRETE CURB

NOTE: THIS PLAN IS NOT A LEGAL ENGINEERING DOCUMENT BUT AN ELECTRONIC DUPLICATE. THE ORIGINAL, SIGNED BY THE ENGINEER AND APPROVED FOR PUBLICATION, IS KEPT ON FILE AT THE WASHINGTON STATE DEPARTMENT OF TRANSPORTATION. A COPY MAY BE OBTAINED UPON REQUEST.

ROUNDABOUT CEMENT CONCRETE CURBS

STANDARD PLAN F-10.18-00

SHEET 1 OF 1 SHEET

APPROVED FOR PUBLICATION

Pasco Bakotich III — STATE DESIGN ENGINEER

06-27-11 — DATE

Washington State Department of Transportation

EFFECTIVE: AUGUST 6, 2012 TO August 4, 2013
EFFECTIVE: AUGUST 6, 2012 TO August 4, 2013
EFFECTIVE: AUGUST 6, 2012 TO August 4, 2013
EFFECTIVE: AUGUST 6, 2012 TO August 4, 2013

EFFECTIVE: AUGUST 6, 2012 TO August 4, 2013
EFFECTIVE: AUGUST 6, 2012 TO August 4, 2013

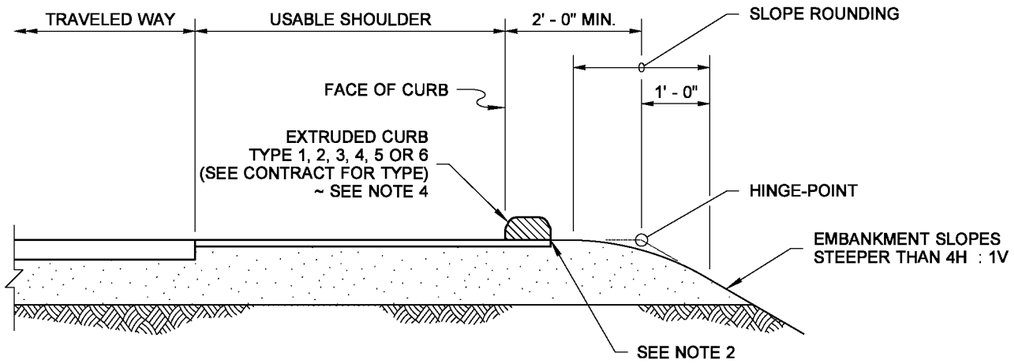

EXTRUDED CURB WITH SLOPE ROUNDING

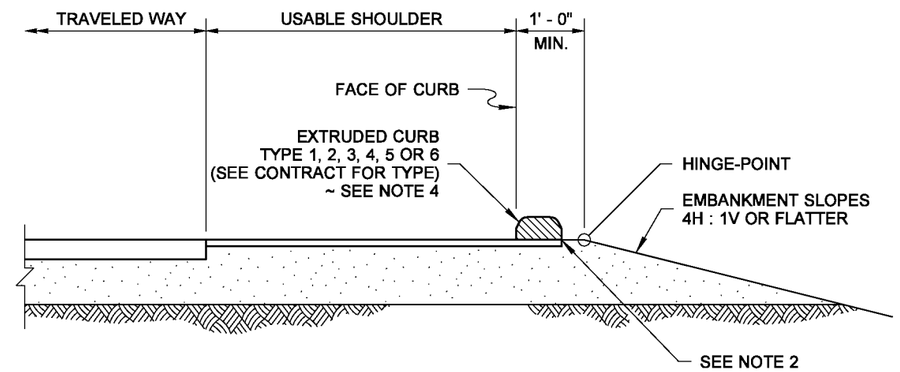

EXTRUDED CURB WITHOUT SLOPE ROUNDING

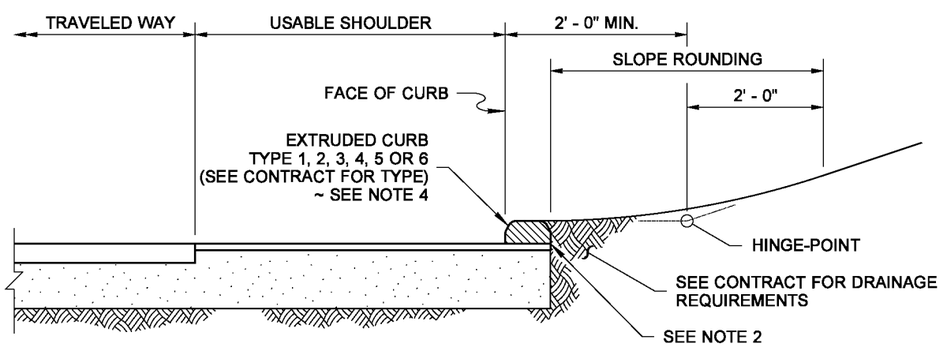

EXTRUDED CURB AT CUT SLOPE

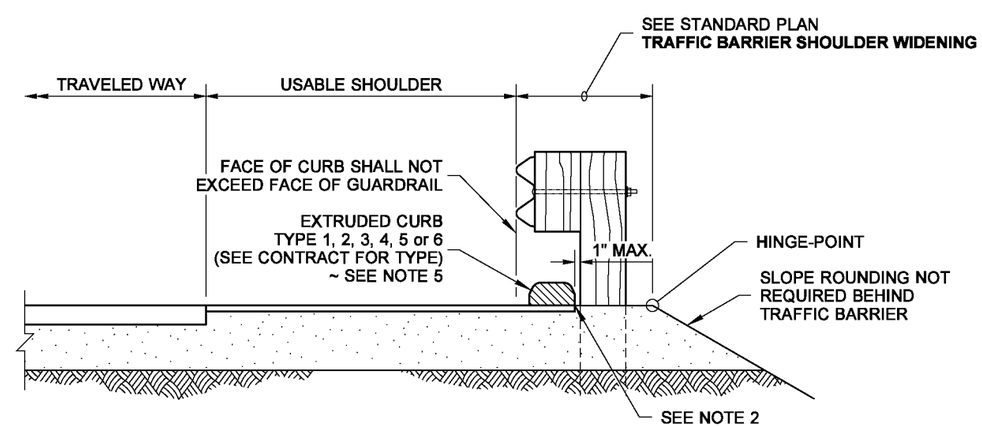

EXTRUDED CURB AT BEAM GUARDRAIL TYPE 1

NOTES

1. The installation of curb in areas with existing guardrail could require the removal and resetting of the guardrail or its components.
2. Extend shoulder pavement to provide a base for the extruded curb.
3. See Contract for exception to distances shown.
4. Type 3 and 6 curbs are not used on roadways with a posted speed greater than 40 mph.
5. Type 3 and 6 are not used under beam guardrail on roadways with a posted speed greater than 50 mph.
6. For extruded curb placement at Beam Guardrail Type 31, See **Standard Plan C-20.10.**
7. For extruded curb details, See **Standard Plan F-10.42.**

NOTE: THIS PLAN IS NOT A LEGAL ENGINEERING DOCUMENT BUT AN ELECTRONIC DUPLICATE. THE ORIGINAL, SIGNED BY THE ENGINEER AND APPROVED FOR PUBLICATION, IS KEPT ON FILE AT THE WASHINGTON STATE DEPARTMENT OF TRANSPORTATION. A COPY MAY BE OBTAINED UPON REQUEST.

EXTRUDED CURB PLACEMENT

STANDARD PLAN F-10.40-02

SHEET 1 OF 1 SHEET

APPROVED FOR PUBLICATION

Pasco Bakotich III — STATE DESIGN ENGINEER

06/21/12 — DATE

Washington State Department of Transportation

DRAWN BY: FERN LIDDELL

EFFECTIVE: AUGUST 6, 2012 TO August 4, 2013
EFFECTIVE: AUGUST 6, 2012 TO August 4, 2013
EFFECTIVE: AUGUST 6, 2012 TO August 4, 2013
EFFECTIVE: AUGUST 6, 2012 TO August 4, 2013

EFFECTIVE: AUGUST 6, 2012 TO August 4, 2013
EFFECTIVE: AUGUST 6, 2012 TO August 4, 2013

DRAWN BY: BILL BEKENS

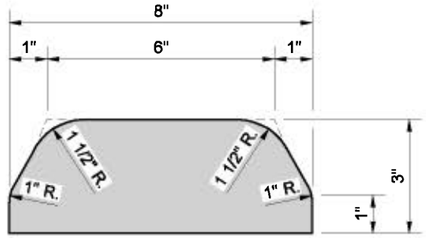

TYPE 1
(HOT MIX ASPHALT)

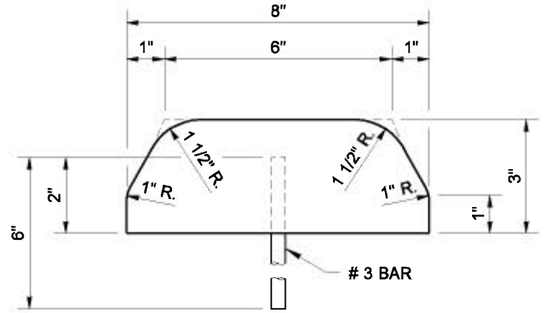

TYPE 4
(CEMENT CONCRETE)

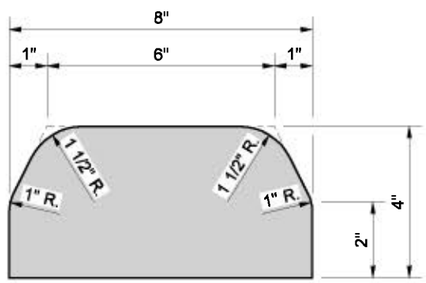

TYPE 2
(HOT MIX ASPHALT)

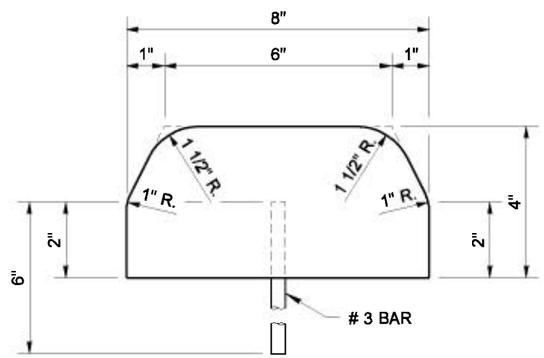

TYPE 5
(CEMENT CONCRETE)

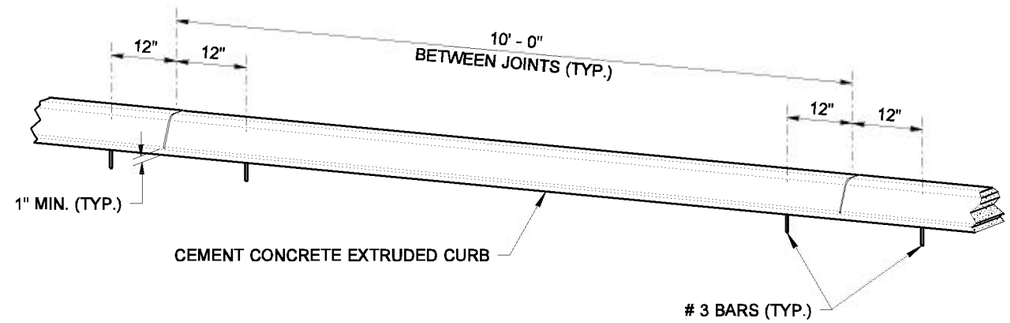

SPACING OF ANCHOR BARS
(FOR TYPES 4, 5, AND 6)

NOTE

JOINTS MAY BE FORMED DURING INSTALLATION USING A RIGID DIVIDER OR SAWCUT AFTER CONCRETE CURES TO MINIMUM STRENGTH.

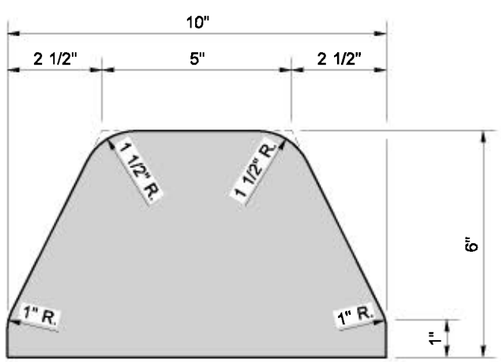

TYPE 3
(HOT MIX ASPHALT)

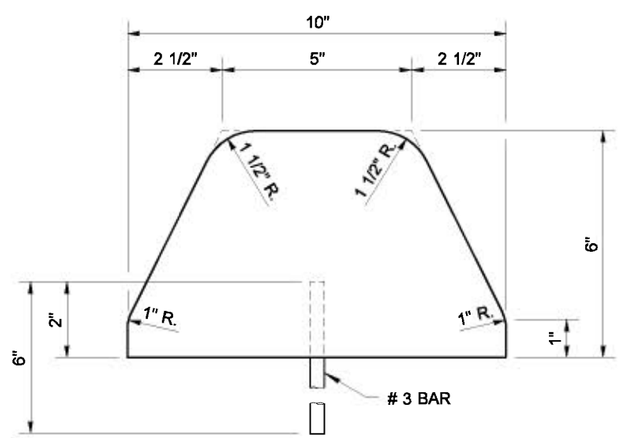

TYPE 6
(CEMENT CONCRETE)

EXPIRES AUGUST 26, 2007

NOTE: THIS PLAN IS NOT A LEGAL ENGINEERING DOCUMENT BUT AN ELECTRONIC DUPLICATE. THE ORIGINAL, SIGNED BY THE ENGINEER AND APPROVED FOR PUBLICATION, IS KEPT ON FILE AT THE WASHINGTON STATE DEPARTMENT OF TRANSPORTATION. A COPY MAY BE OBTAINED UPON REQUEST.

EXTRUDED CURB

STANDARD PLAN F-10.42-00

SHEET 1 OF 1 SHEET

APPROVED FOR PUBLICATION

Ken L. Smith — STATE DESIGN ENGINEER
01-23-07 — DATE

Washington State Department of Transportation

EFFECTIVE: AUGUST 6, 2012 TO August 4, 2013
EFFECTIVE: AUGUST 6, 2012 TO August 4, 2013
EFFECTIVE: AUGUST 6, 2012 TO August 4, 2013
EFFECTIVE: AUGUST 6, 2012 TO August 4, 2013

EFFECTIVE: AUGUST 6, 2012 TO August 4, 2013
EFFECTIVE: AUGUST 6, 2012 TO August 4, 2013

DRAWN BY: BILL BEKENS

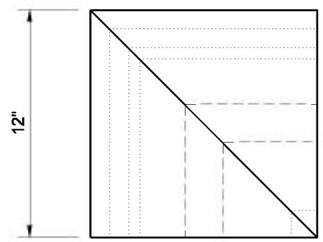

TOP VIEW

INSIDE CORNER BLOCK

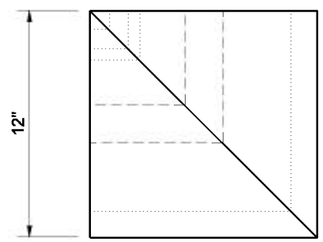

TOP VIEW

OUTSIDE CORNER BLOCK

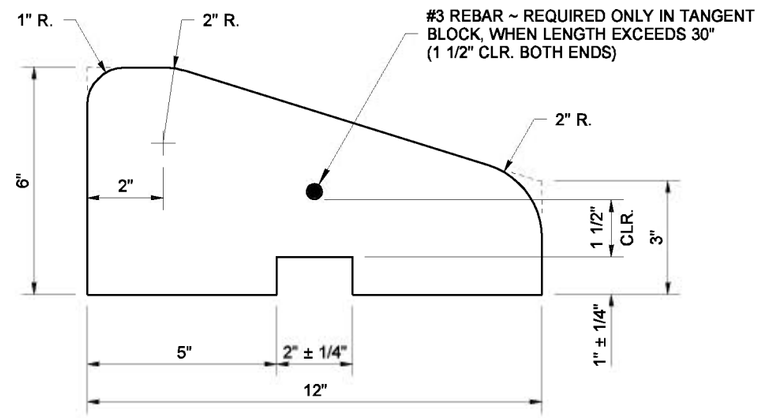

TYPICAL OF ALL

END VIEW

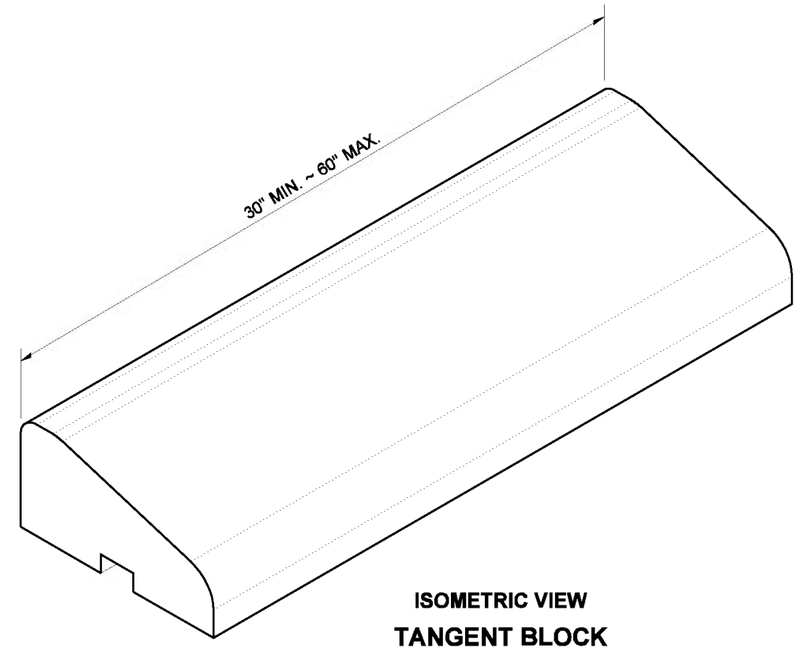

ISOMETRIC VIEW

TANGENT BLOCK

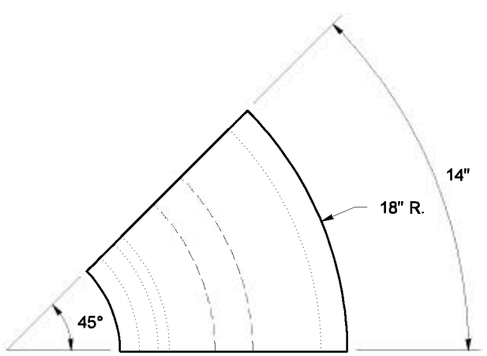

TOP VIEW

18" RADIUS BLOCK

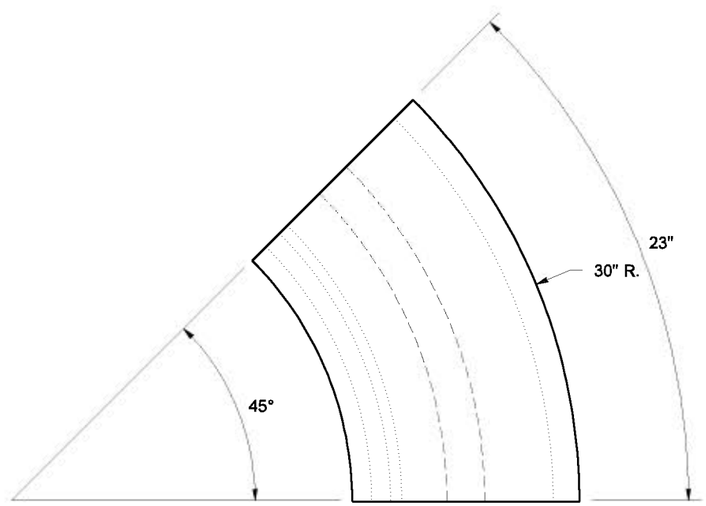

TOP VIEW

30" RADIUS BLOCK

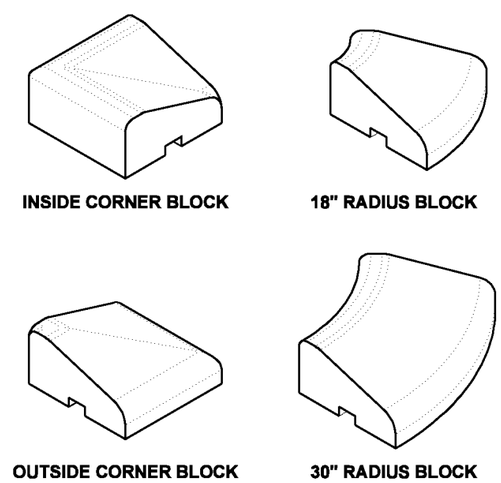

ISOMETRIC VIEWS

EXPIRES JUNE 19, 2008

NOTE: THIS PLAN IS NOT A LEGAL ENGINEERING DOCUMENT BUT AN ELECTRONIC DUPLICATE. THE ORIGINAL, SIGNED BY THE ENGINEER AND APPROVED FOR PUBLICATION, IS KEPT ON FILE AT THE WASHINGTON STATE DEPARTMENT OF TRANSPORTATION. A COPY MAY BE OBTAINED UPON REQUEST.

PRECAST CONCRETE SLOPED MOUNTABLE CURB

STANDARD PLAN F-10.62-01

SHEET 1 OF 2 SHEETS

APPROVED FOR PUBLICATION

Pasco Bakotich III — STATE DESIGN ENGINEER

09-05-07 — DATE

Washington State Department of Transportation

EFFECTIVE: AUGUST 6, 2012 TO August 4, 2013
EFFECTIVE: AUGUST 6, 2012 TO August 4, 2013
EFFECTIVE: AUGUST 6, 2012 TO August 4, 2013
EFFECTIVE: AUGUST 6, 2012 TO August 4, 2013

EFFECTIVE: AUGUST 6, 2012 TO August 4, 2013
EFFECTIVE: AUGUST 6, 2012 TO August 4, 2013

DRAWN BY: BILL BEKENS

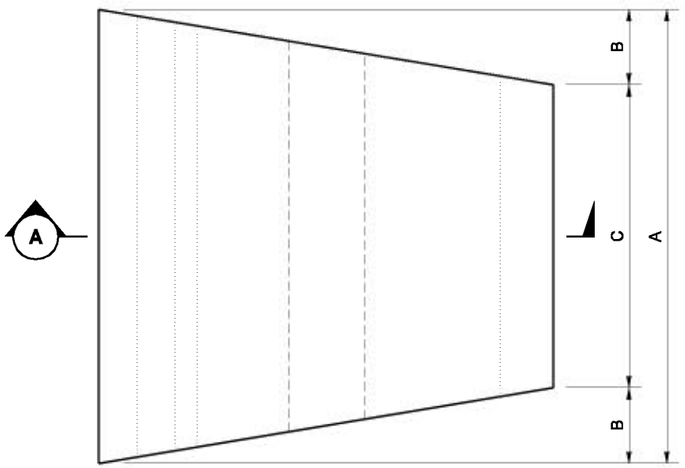

TOP VIEW
INSIDE RADIUS BLOCK

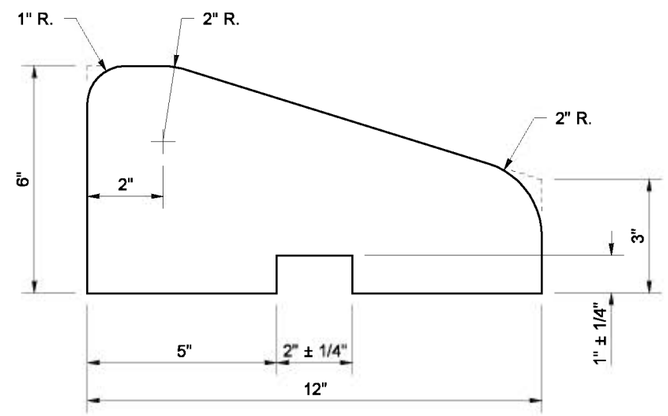

SECTION (A)

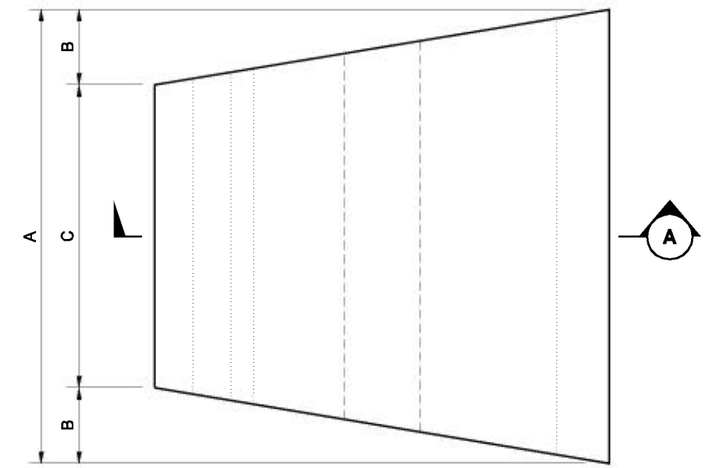

TOP VIEW
OUTSIDE RADIUS BLOCK

CURB RADIUS TABLE			
CURB RADIUS	DIMENSION A	DIMENSION B	DIMENSION C
3'	12"	2"	8"
4' TO 5'	12"	1 1/2"	9"
6'	12"	1"	10"
7'	12"	7/8"	10 1/4"
8'	18"	1 1/8"	15 3/4"
9'	18"	1"	16"
10'	18"	7/8"	16 1/4"
11' TO 13'	18"	3/4"	16 1/2"
14' TO 15'	18"	5/8"	16 3/4"
16' TO 17'	24"	3/4"	22 1/2"
18' TO 22'	24"	5/8"	22 3/4"
23' TO 29'	24"	1/2"	23"
30' TO 34'	30"	1/2"	29"
35' TO 48'	30"	3/8"	29 1/4"
49' TO 60'	30"	1/4"	29 1/2"
OVER 60'	USE TANGENT BLOCK, SEE SHEET 1		

THIS TABLE LISTS THE CALCULATED DIMENSIONS FOR CASTING BLOCKS SUITABLE FOR CONSTRUCTING VARIOUS CURB RADII. CURVED BLOCKS, OR BLOCKS WITH DIFFERENT DIMENSIONS MAY BE ACCEPTABLE WITH PRIOR APPROVAL OF THE ENGINEER.

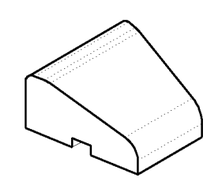

INSIDE RADIUS BLOCK

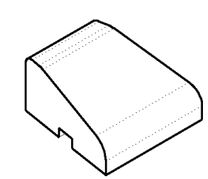

OUTSIDE RADIUS BLOCK

ISOMETRIC VIEWS

EXPIRES JUNE 19, 2008

NOTE: THIS PLAN IS NOT A LEGAL ENGINEERING DOCUMENT BUT AN ELECTRONIC DUPLICATE. THE ORIGINAL, SIGNED BY THE ENGINEER AND APPROVED FOR PUBLICATION, IS KEPT ON FILE AT THE WASHINGTON STATE DEPARTMENT OF TRANSPORTATION. A COPY MAY BE OBTAINED UPON REQUEST.

PRECAST CONCRETE SLOPED MOUNTABLE CURB

STANDARD PLAN F-10.62-01

SHEET 2 OF 2 SHEETS

APPROVED FOR PUBLICATION

Pasco Bakotich III — STATE DESIGN ENGINEER
09-05-07 — DATE

Washington State Department of Transportation

EFFECTIVE: AUGUST 6, 2012 TO August 4, 2013
EFFECTIVE: AUGUST 6, 2012 TO August 4, 2013
EFFECTIVE: AUGUST 6, 2012 TO August 4, 2013
EFFECTIVE: AUGUST 6, 2012 TO August 4, 2013

EFFECTIVE: AUGUST 6, 2012 TO August 4, 2013
EFFECTIVE: AUGUST 6, 2012 TO August 4, 2013

DRAWN BY: BILL BEKENS

NOTE

The dual faced curb may be constructed by using two precast concrete sloped mountable curbs (longitundinal halves) so long as the installation is consistent with the dimensions shown in the plan.

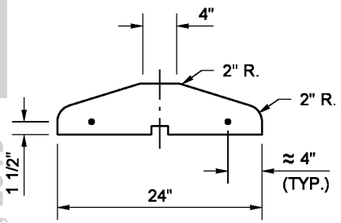

FRONT

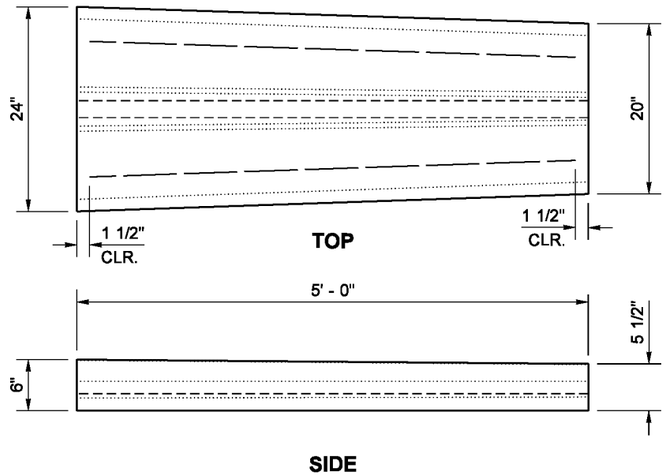

SIDE

24 × 20 TAPER BLOCK

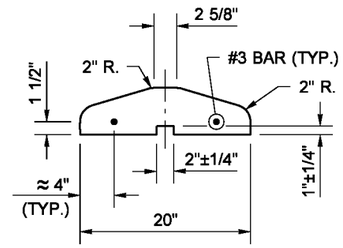

BACK

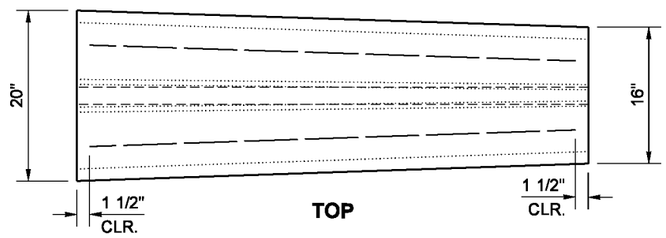

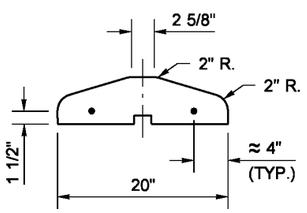

FRONT

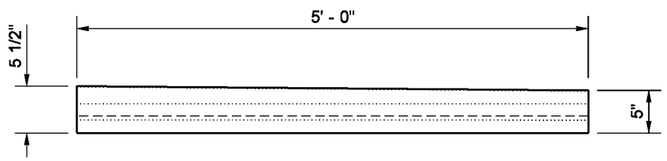

SIDE

20 × 16 TAPER BLOCK

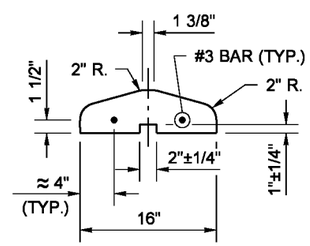

BACK

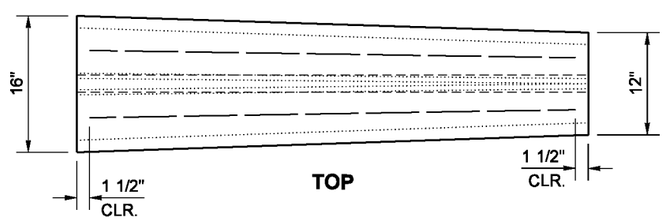

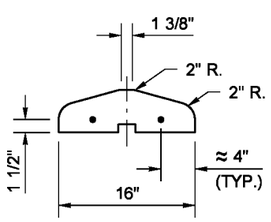

FRONT

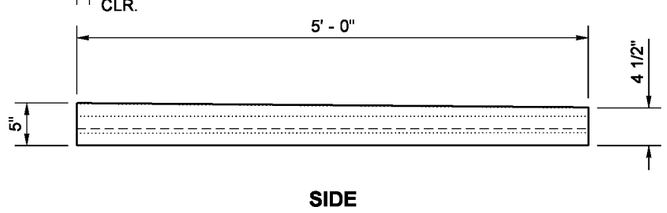

SIDE

16 × 12 TAPER BLOCK

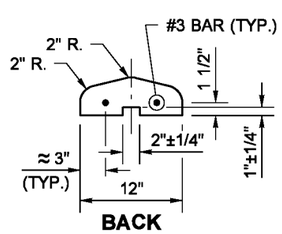

BACK

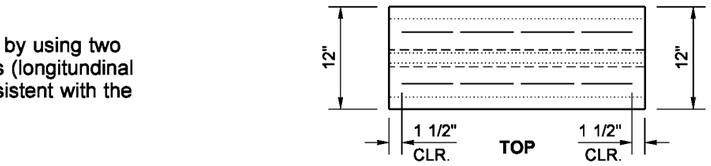

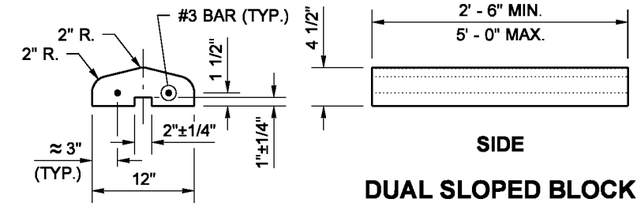

END

SIDE

DUAL SLOPED BLOCK

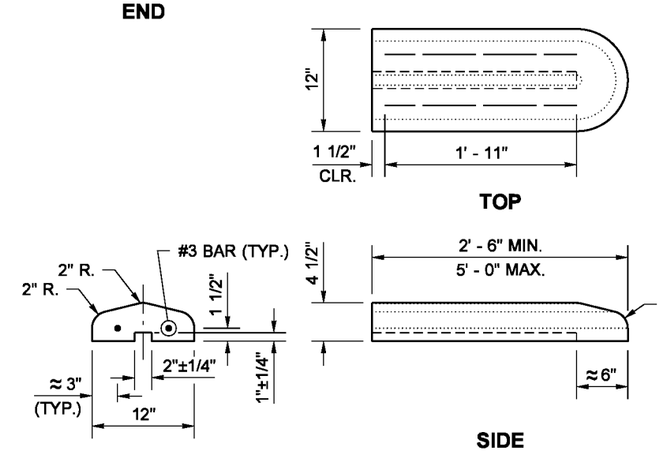

END

SIDE

NOSING BLOCK

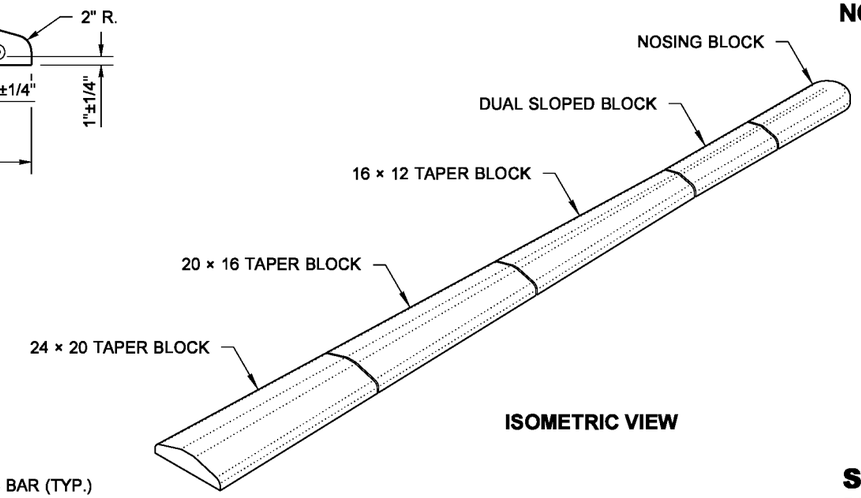

ISOMETRIC VIEW

EXPIRES JUNE 19, 2010

NOTE: THIS PLAN IS NOT A LEGAL ENGINEERING DOCUMENT BUT AN ELECTRONIC DUPLICATE. THE ORIGINAL, SIGNED BY THE ENGINEER AND APPROVED FOR PUBLICATION, IS KEPT ON FILE AT THE WASHINGTON STATE DEPARTMENT OF TRANSPORTATION. A COPY MAY BE OBTAINED UPON REQUEST.

PRECAST CONCRETE DUAL FACED SLOPED MOUNTABLE CURB STANDARD PLAN F-10.64-02

SHEET 1 OF 1 SHEET

APPROVED FOR PUBLICATION

Pasco Bakotich III — STATE DESIGN ENGINEER

07-03-08 — DATE

Washington State Department of Transportation

EFFECTIVE: AUGUST 6, 2012 TO August 4, 2013
EFFECTIVE: AUGUST 6, 2012 TO August 4, 2013
EFFECTIVE: AUGUST 6, 2012 TO August 4, 2013
EFFECTIVE: AUGUST 6, 2012 TO August 4, 2013

EFFECTIVE: AUGUST 6, 2012 TO August 4, 2013
EFFECTIVE: AUGUST 6, 2012 TO August 4, 2013

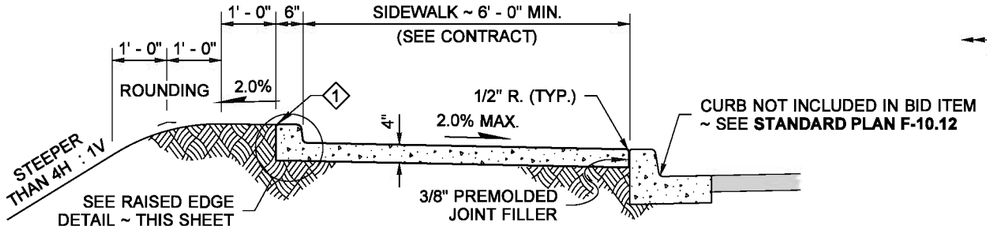

WITH RAISED EDGE

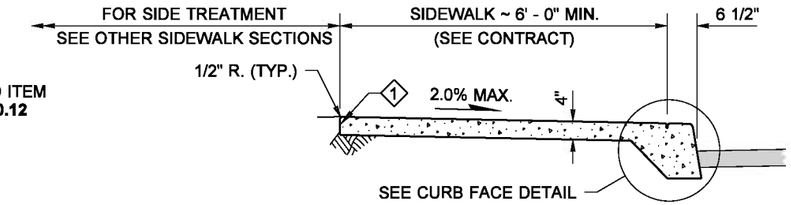

MONOLITHIC CEMENT CONCRETE CURB AND SIDEWALK

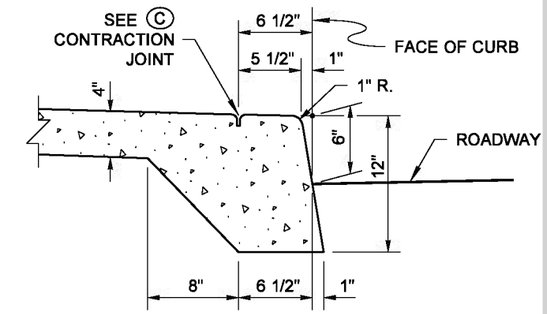

NOTE: Extend sidewalk transverse expansion joints to include curb (full depth).

CURB FACE DETAIL

1 FINISHED GRADE 1" BELOW TOP OF CONCRETE SURFACE

NOTE

1. Four feet of the sidewalk width shall be the minimum pedestrian accessible route free of vertical and horizontal obstructions. Gratings, access covers, junction boxes, cable vaults, pull boxes and other appurtenances within the sidewalk must have slip resistant surfaces and be flush with surface and match grade of the sidewalk.

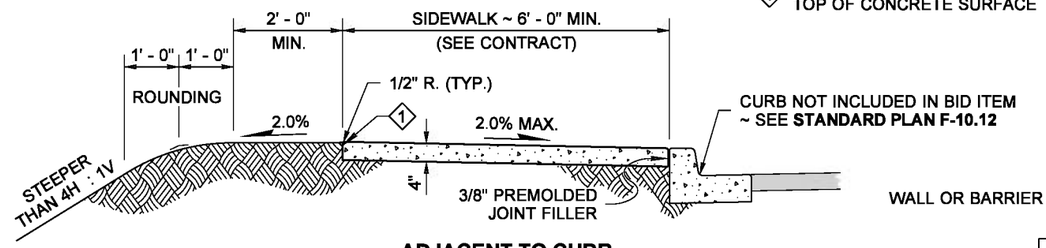

ADJACENT TO CURB
(STEEP FILL SLOPES)

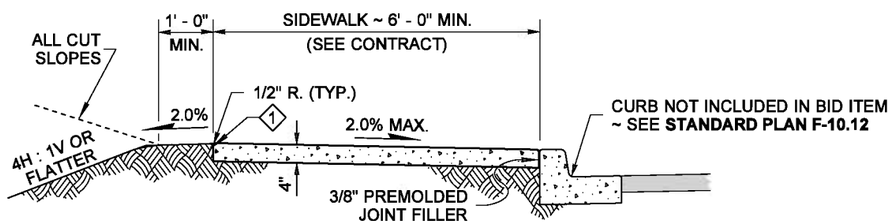

ADJACENT TO CURB

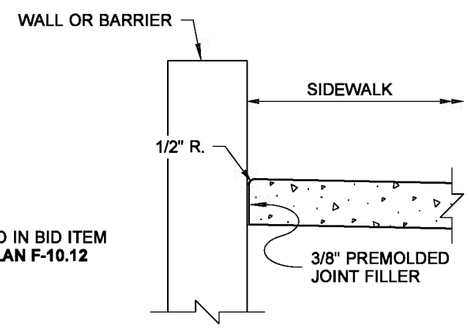

SIDEWALK ADJACENT TO WALL DETAIL

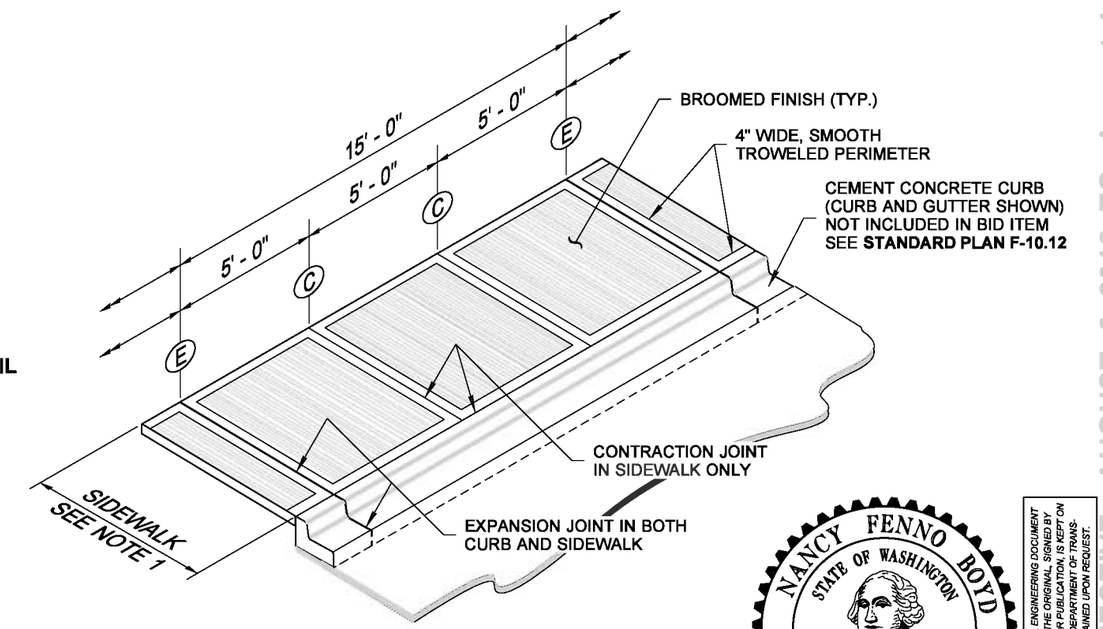

ISOMETRIC VIEW

JOINT AND FINISH DETAIL

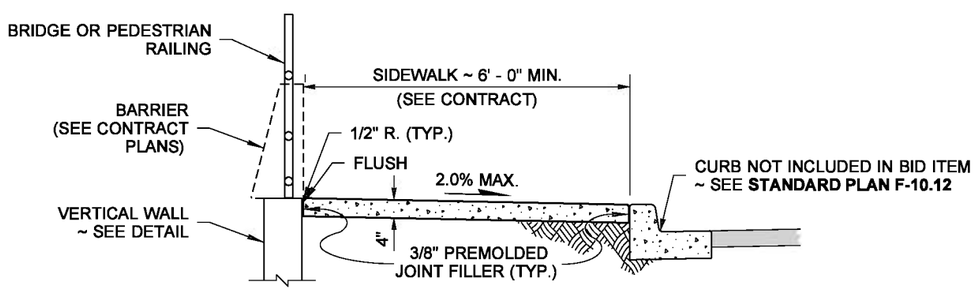

ADJACENT TO CURB AND RAILING OR WALL

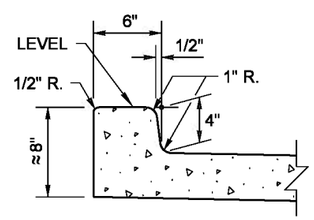

NOTE: EXTEND SIDEWALK TRANSVERSE JOINTS TO INCLUDE RAISED EDGE

RAISED EDGE DETAIL

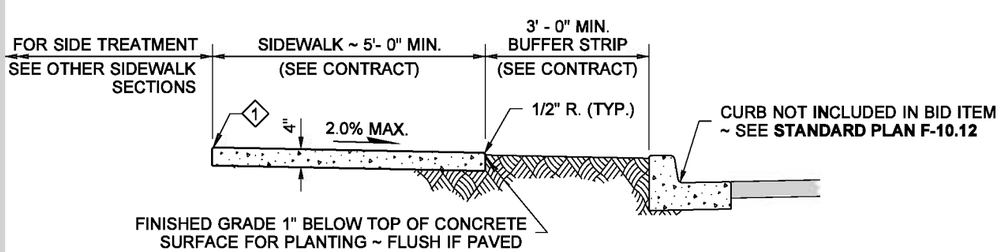

ADJACENT TO BUFFER STRIP

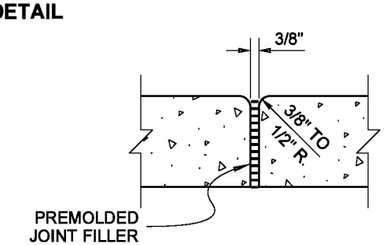

E EXPANSION JOINT

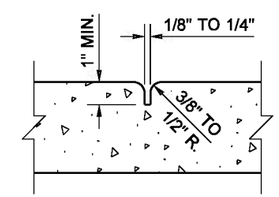

C CONTRACTION JOINT

NOTE: THIS PLAN IS NOT A LEGAL ENGINEERING DOCUMENT BUT AN ELECTRONIC DUPLICATE. THE ORIGINAL, SIGNED BY THE ENGINEER AND APPROVED FOR PUBLICATION, IS KEPT ON FILE AT THE WASHINGTON STATE DEPARTMENT OF TRANSPORTATION. A COPY MAY BE OBTAINED UPON REQUEST.

CEMENT CONCRETE SIDEWALK

STANDARD PLAN F-30.10-01

SHEET 1 OF 1 SHEET

APPROVED FOR PUBLICATION

Pasco Bakotich III — STATE DESIGN ENGINEER

06-03-10 — DATE

Washington State Department of Transportation

DRAWN BY: FERN LIDDELL

EFFECTIVE: AUGUST 6, 2012 TO August 4, 2013
EFFECTIVE: AUGUST 6, 2012 TO August 4, 2013
EFFECTIVE: AUGUST 6, 2012 TO August 4, 2013
EFFECTIVE: AUGUST 6, 2012 TO August 4, 2013

EFFECTIVE: AUGUST 6, 2012 TO August 4, 2013
EFFECTIVE: AUGUST 6, 2012 TO August 4, 2013

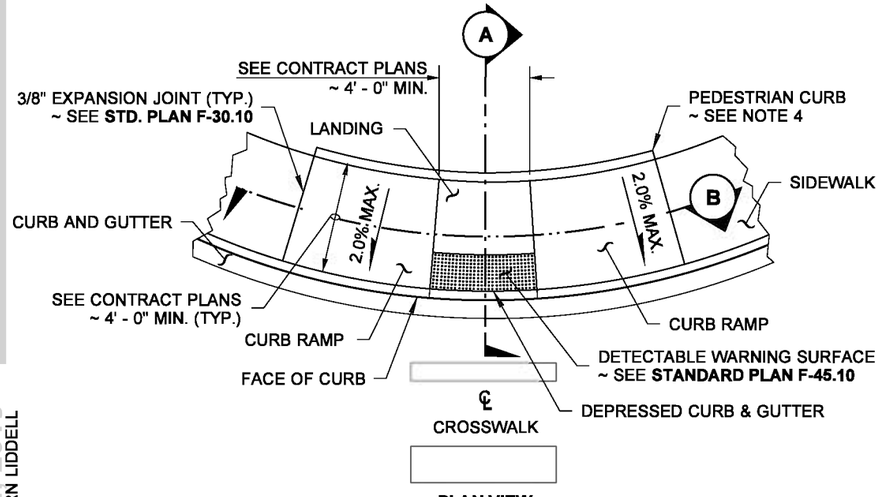

PLAN VIEW
TYPE PARALLEL A

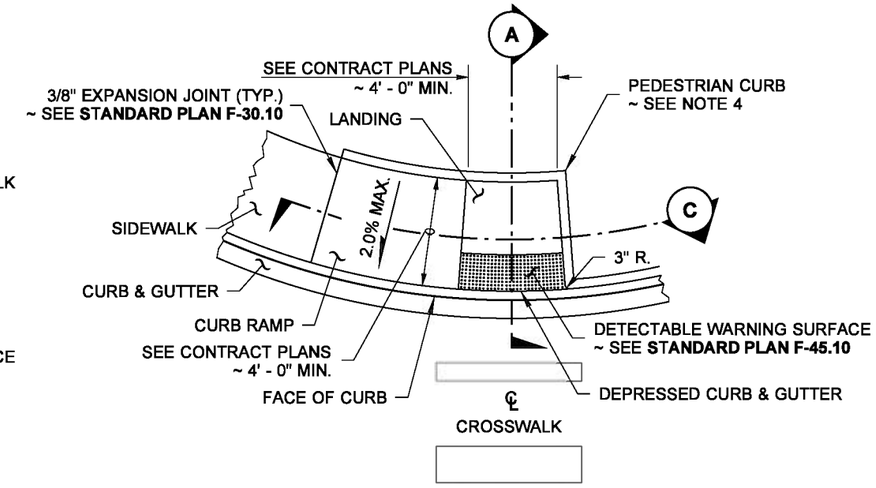

PLAN VIEW
TYPE PARALLEL B

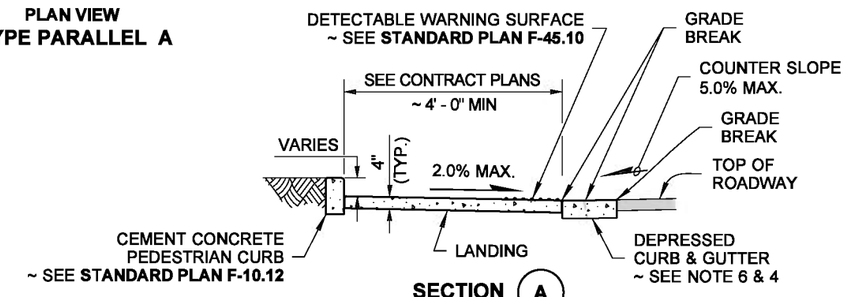

SECTION A

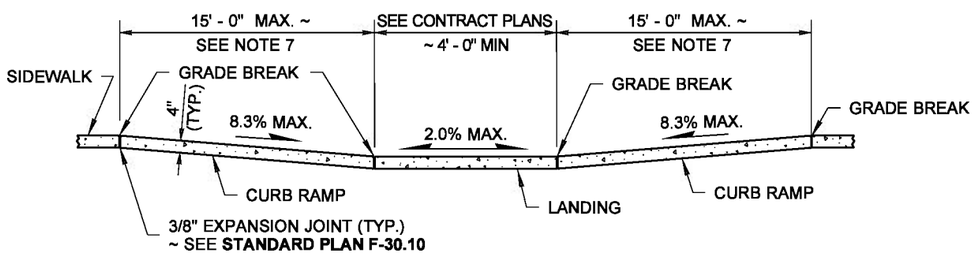

SECTION B

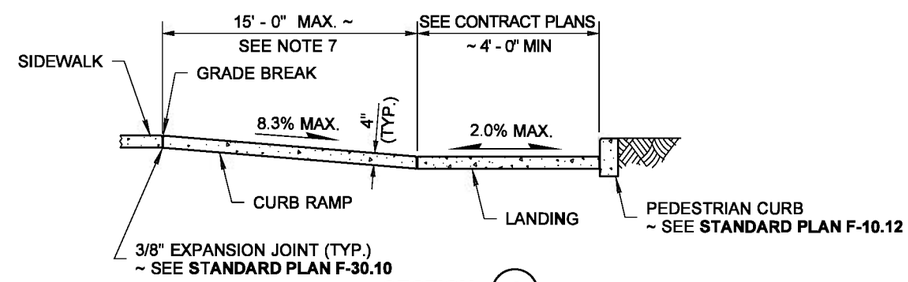

SECTION C

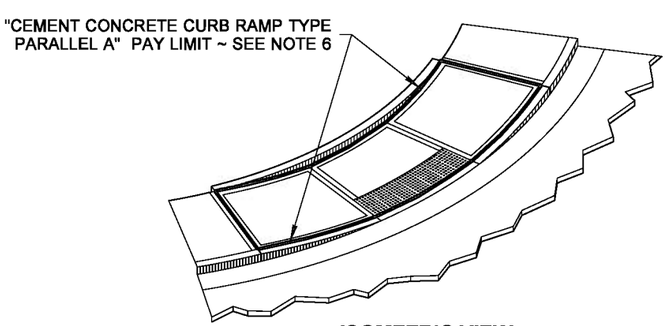

ISOMETRIC VIEW
TYPE PARALLEL A PAY LIMIT

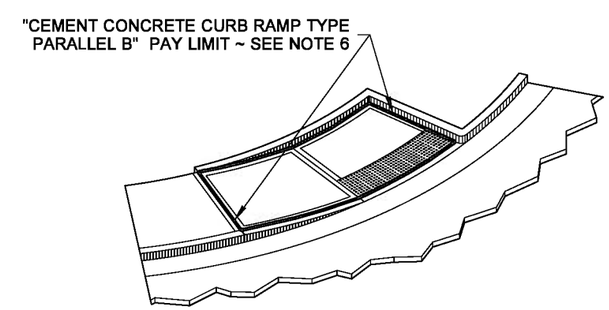

ISOMETRIC VIEW
TYPE PARALLEL B PAY LIMIT

NOTES

1. Provide a separate curb ramp for each marked or unmarked crosswalk. Curb ramp location shall be placed within the width of the associated crosswalk, or as shown in the Contract Plans.
2. Where "GRADE BREAK" is called out, the entire length of the grade break between the two adjacent surface planes shall be flush.
3. Do not place gratings, junction boxes, access covers, or other appurtenances in front of thre curb ramp or on any part of the curb ramp or landing.
4. See Contract Plans for the curb design specified. See **Standard Plan F-10.12** for Curb, Curb and Gutter, and Pedestrian Curb Details.
5. See **Standard Plan F-30.10** for Cement Concrete Sidewalk Details. See Contract Plans for width and placement of sidewalk.
6. The Bid Item "Cement Concrete Curb Ramp Type __" does not include the adacent Curb, Curb and Gutter, Pedestrian Curb or Sidewalks.
7. The curb ramp maximum running slope shall not require the ramp length to exceed 15 feet to avoid chasing the slope indefinitely when connecting to steep grades. When applying the 15 foot max. length, the running slope of the curb ramp shall be as flat as feasable.
8. Curb ramp, landing, & flares shall receive broom finish. See **Standard Specifications 8-14.**

LEGEND

SLOPE IN EITHER DIRECTION

NOTE: THIS PLAN IS NOT A LEGAL ENGINEERING DOCUMENT BUT AN ELECTRONIC DUPLICATE. THE ORIGINAL, SIGNED BY THE ENGINEER AND APPROVED FOR PUBLICATION, IS KEPT ON FILE AT THE WASHINGTON STATE DEPARTMENT OF TRANSPORTATION. A COPY MAY BE OBTAINED UPON REQUEST.

PARALLEL CURB RAMP

STANDARD PLAN F-40.12-01

SHEET 1 OF 1 SHEET

APPROVED FOR PUBLICATION

Pasco Bakotich III — STATE DESIGN ENGINEER
06-03-10 — DATE

Washington State Department of Transportation

DRAWN BY: FERN LIDDELL

EFFECTIVE: AUGUST 6, 2012 TO August 4, 2013
EFFECTIVE: AUGUST 6, 2012 TO August 4, 2013
EFFECTIVE: AUGUST 6, 2012 TO August 4, 2013
EFFECTIVE: AUGUST 6, 2012 TO August 4, 2013

EFFECTIVE: AUGUST 6, 2012 TO August 4, 2013
EFFECTIVE: AUGUST 6, 2012 TO August 4, 2013

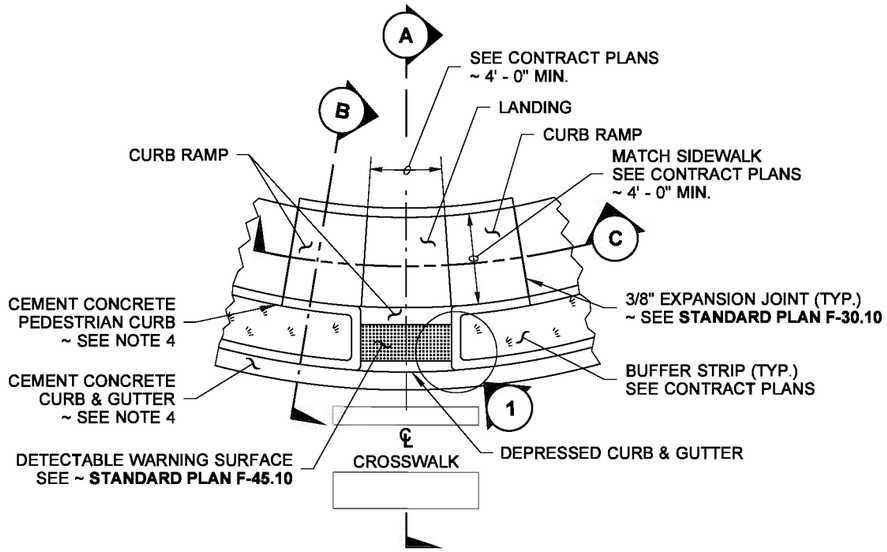

PLAN VIEW

TYPE COMBINATION

WITH BUFFER

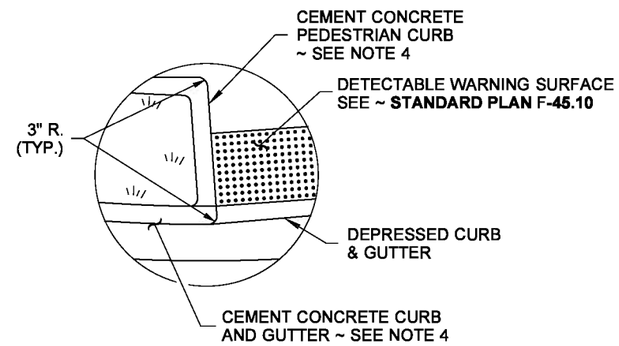

CURB RADIUS DETAIL (1)

NOTES

1. Provide a separate curb ramp for each marked or unmarked crosswalk. Curb ramp location shall be placed within the width of the associated crosswalk, or as shown in the Contract Plans.
2. Where "GRADE BREAK" is called out, the entire length of the grade break between the two adjacent surface planes shall be flush.
3. Do not place gratings, junction boxes, access covers, or other appurtenances in front of thre curb ramp or on any part of the curb ramp or landing.
4. See Contract Plans for the curb design specified. See **Standard Plan F-10.12** for Curb, Curb and Gutter, and Pedestrian Curb Details.
5. See **Standard Plan F-30.10** for Cement Concrete Sidewalk Details. See Contract Plans for width and placement of sidewalk.
6. The Bid Item "Cement Concrete Curb Ramp Type __" does not include the adacent Curb, Curb and Gutter, Pedestrian Curb or Sidewalks.
7. The curb ramp maximum running slope shall not require the ramp length to exceed 15 feet to avoid chasing the slope indefinitely when connecting to steep grades. When applying the 15 foot max. length, the running slope of the curb ramp shall be as flat as feasable.
8. Curb ramp, landing & flares shall receive broom finish. See **Standard Specifications 8-14.**

LEGEND

SLOPE IN EITHER DIRECTION

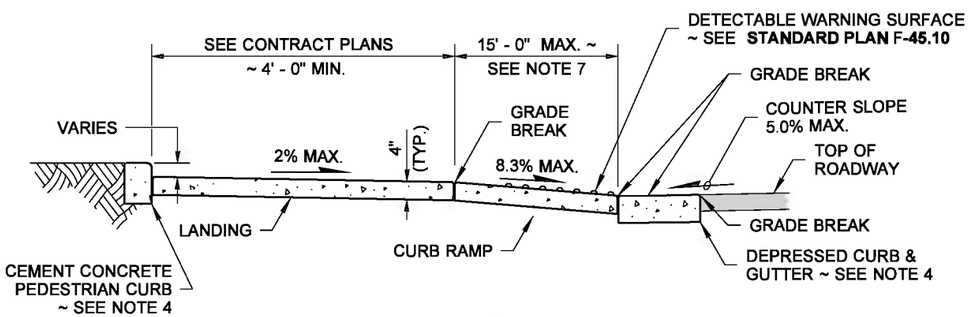

SECTION (A)

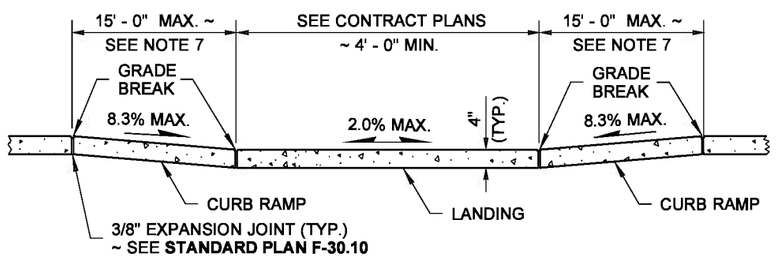

SECTION (C)

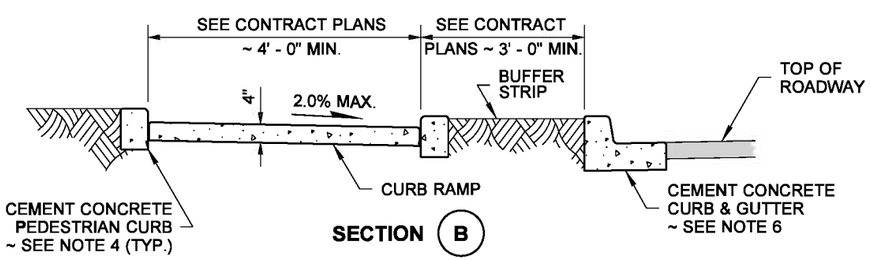

SECTION (B)

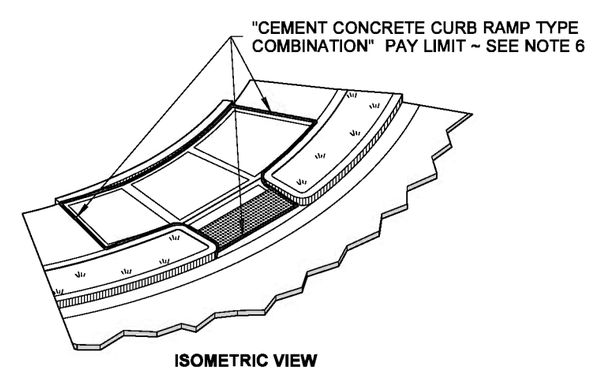

ISOMETRIC VIEW

TYPE COMBINATION
PAY LIMIT

NOTE: THIS PLAN IS NOT A LEGAL ENGINEERING DOCUMENT BUT AN ELECTRONIC DUPLICATE. THE ORIGINAL, SIGNED BY THE ENGINEER AND APPROVED FOR PUBLICATION, IS KEPT ON FILE AT THE WASHINGTON STATE DEPARTMENT OF TRANSPORTATION. A COPY MAY BE OBTAINED UPON REQUEST.

COMBINATION
CURB RAMP

STANDARD PLAN F-40.14-01

SHEET 1 OF 1 SHEET

APPROVED FOR PUBLICATION

Pasco Bakotich III — STATE DESIGN ENGINEER
06-03-10 — DATE

Washington State Department of Transportation

DRAWN BY: FERN LIDDELL

EFFECTIVE: AUGUST 6, 2012 TO August 4, 2013
EFFECTIVE: AUGUST 6, 2012 TO August 4, 2013
EFFECTIVE: AUGUST 6, 2012 TO August 4, 2013
EFFECTIVE: AUGUST 6, 2012 TO August 4, 2013

EFFECTIVE: AUGUST 6, 2012 TO August 4, 2013

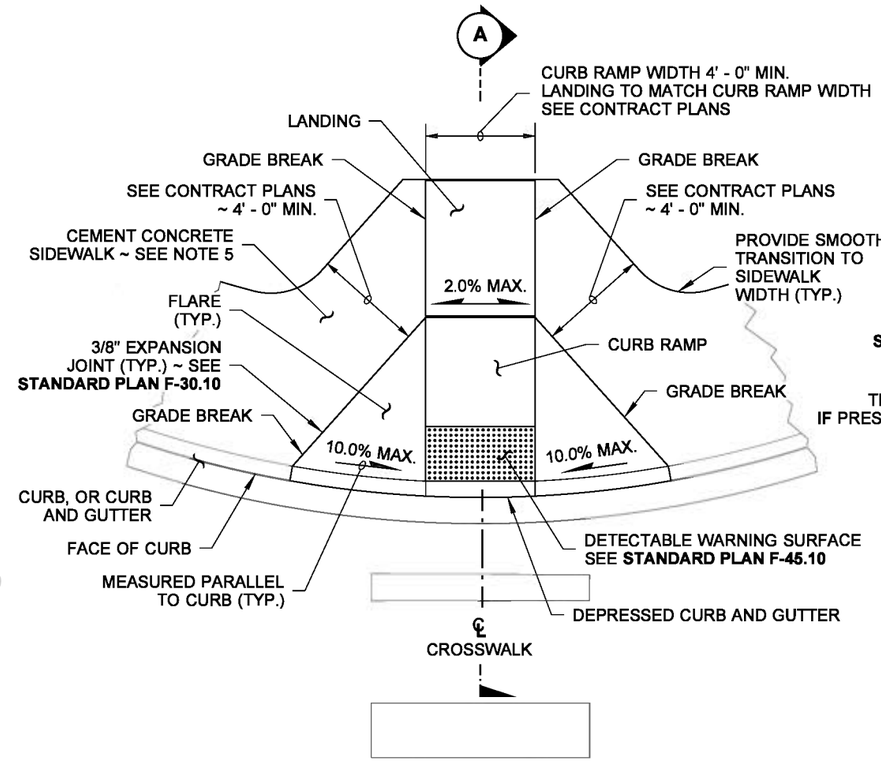

PLAN VIEW
TYPE PERPENDICULAR A

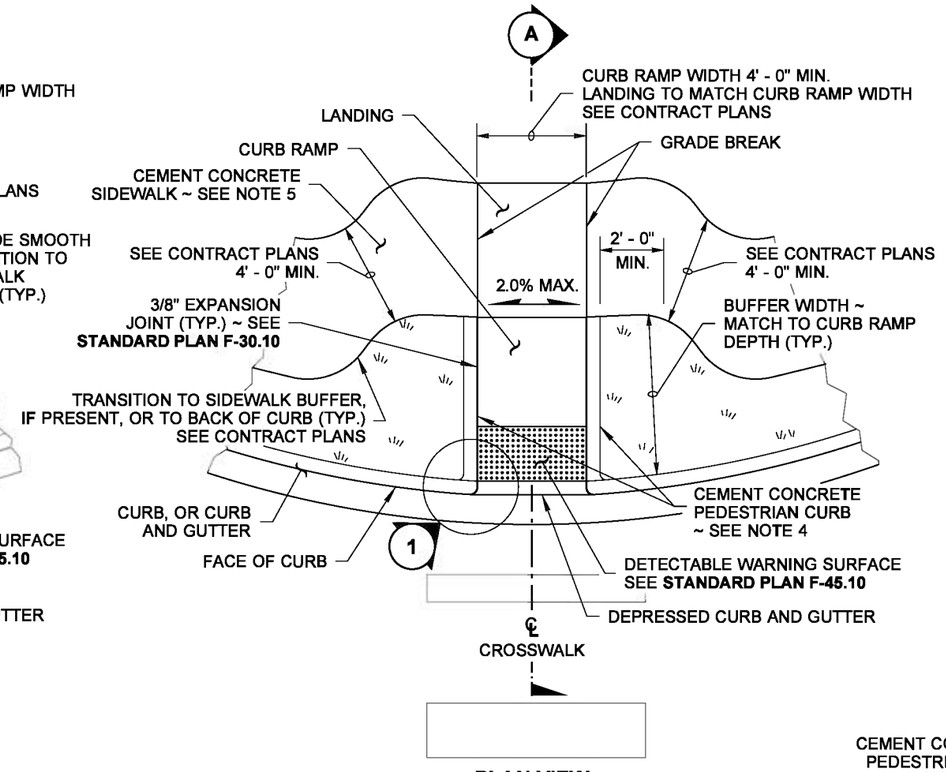

PLAN VIEW
TYPE PERPENDICULAR B
(SHOWN WITH BUFFER)

NOTES

1. Provide a separate curb ramp for each marked or unmarked crosswalk. Curb ramp location shall be placed within the width of the associated crosswalk, or as shown in the Contract Plans.
2. Where "GRADE BREAK" is called out, the entire length of the grade break between the two adjacent surface planes shall be flush.
3. Do not place gratings, junction boxes, access covers, or other appurtenances In front of the curb ramp or on any part of the curb ramp or landing.
4. See the Contract plans for the curb design specified. See **Standard Plan F-10.12** for Curb, Curb and Gutter, and Pedestrian Curb details.
5. See **Standard Plan F-30.10** for Cement Concrete Sidewalk details. See Contract plans for width and placement of sidewalk.
6. The Bid Item "Cement Concrete Curb Ramp Type __" does not include the adjacent Curb, Curb and Gutter, Pedestrian Curb or Sidewalk.
7. The curb ramp maximum running slope shall not require the ramp length to exceed 15 feet to avoid chasing the slope indefinitely when connecting to steep grades. When applying the 15 foot maximum length, the running slope of the curb ramp shall as flat as feasible.
8. Curb ramp, landing, & flares shall receive broom finish. **See Standard Specifications 8-14.**

LEGEND

SLOPE IN EITHER DIRECTION

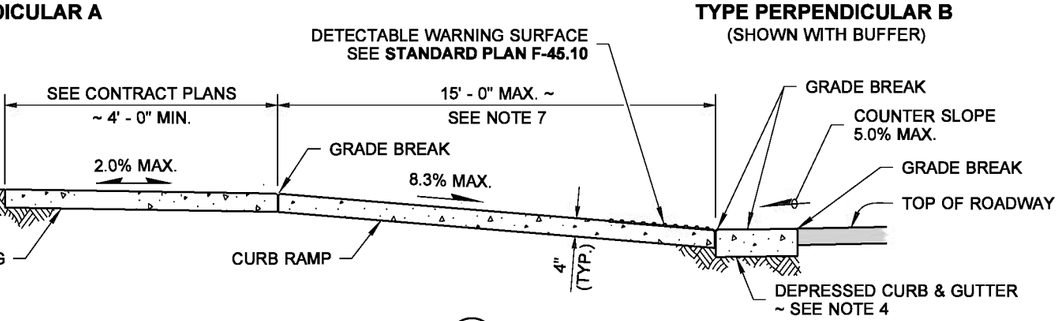

SECTION (A)

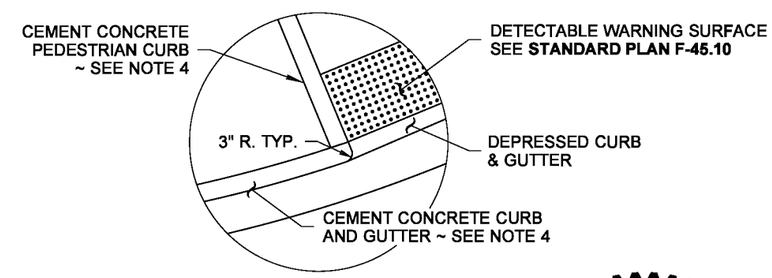

CURB RADIUS DETAIL (1)

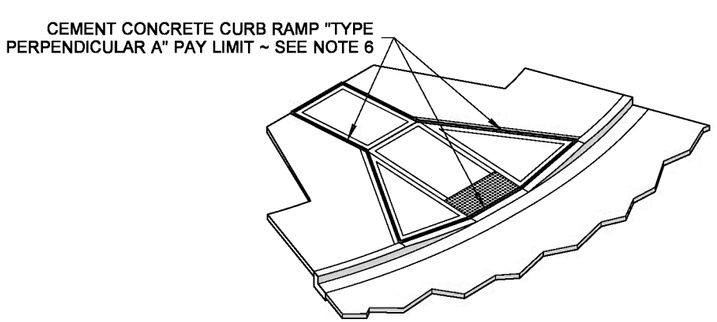

ISOMETRIC VIEW
TYPE PERPENDICULAR A PAY LIMIT

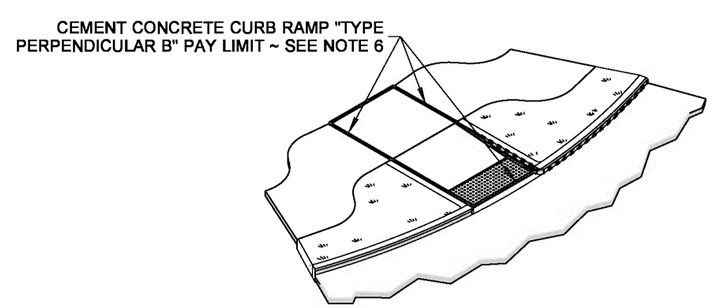

ISOMETRIC VIEW
TYPE PERPENDICULAR B PAY LIMIT

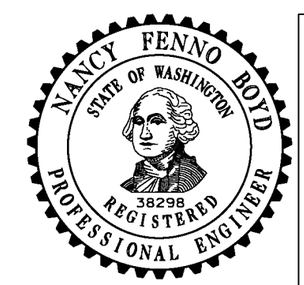

NOTE: THIS PLAN IS NOT A LEGAL ENGINEERING DOCUMENT BUT AN ELECTRONIC DUPLICATE. THE ORIGINAL, SIGNED BY THE ENGINEER AND APPROVED FOR PUBLICATION, IS KEPT ON FILE AT THE WASHINGTON STATE DEPARTMENT OF TRANSPORTATION. A COPY MAY BE OBTAINED UPON REQUEST.

PERPENDICULAR CURB RAMP

STANDARD PLAN F-40.15-01

SHEET 1 OF 1 SHEET

APPROVED FOR PUBLICATION

Pasco Bakotich III — STATE DESIGN ENGINEER
06-03-10 — DATE

Washington State Department of Transportation

EFFECTIVE: AUGUST 6, 2012 TO August 4, 2013

EFFECTIVE: AUGUST 6, 2012 TO August 4, 2013
EFFECTIVE: AUGUST 6, 2012 TO August 4, 2013

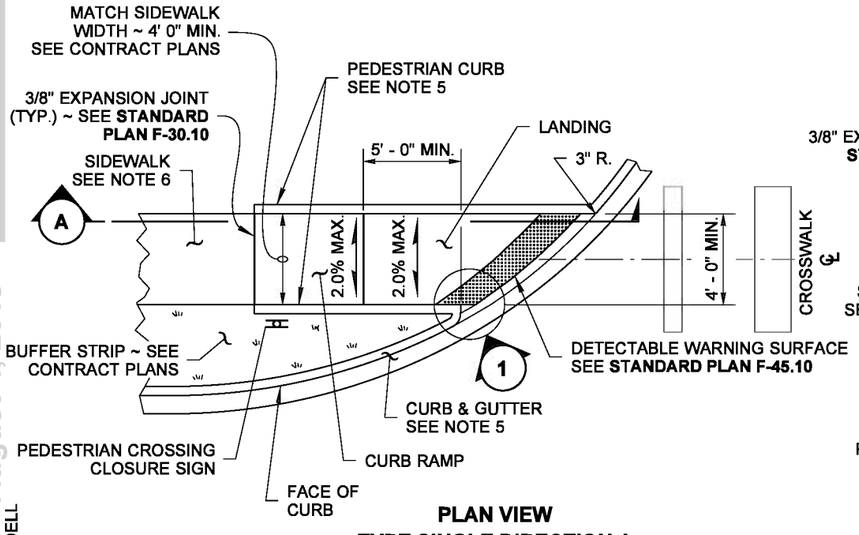

PLAN VIEW
TYPE SINGLE DIRECTION A

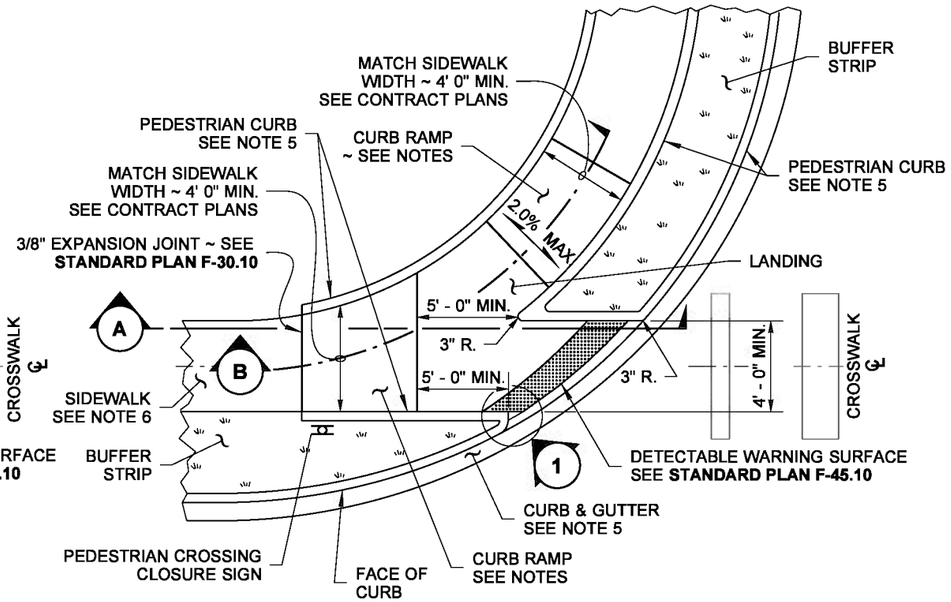

PLAN VIEW
TYPE SINGLE DIRECTION B

NOTES

1. This plan is to be used where pedestrian crossing in one direction is not permitted.
2. Curb ramp location shall be placed within the width of the associated crosswalk, or as shown in the Contract Plans.
3. Where "GRADE BREAK" is called out, the entire length of the grade break between the two adjacent surface planes shall be flush.
4. Do not place gratings, junction boxes, access covers or other appurtenances in front of the curb ramp or on any part of the curb ramp or landing.
5. See the Contract Documents for the curb design specified. See **Standard Plan F-10.12** for Curb, Curb and Gutter, and Pedestrian Curb details.
6. See **Standard Plan F-30.10** for Cement Concrete Sidewalk Details. See contract plans for width and placement of sidewalk.
7. The bid item "Cement Concrete Curb Ramp Type __" does not include the adjacent Curb or (Curb and Gutter), Pedestrian Curb or Sidewalk, or the pedestrian crossing closure sign.
8. The curb ramp maximum running slope shall not require the ramp length to exceed 15 feet to avoid chasing the slope indefinitely when connecting to steep grades. When applying the 15 foot maximum length, the running slope of the curb ramp shall be as flat as feasible.
9. Curb ramps and landings shall receive broom finish. See **Standard Specifications 8-14.**

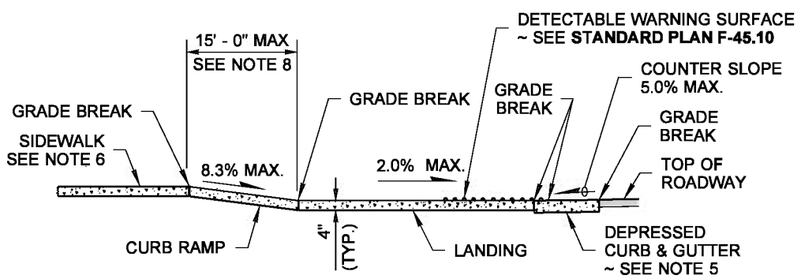

SECTION A

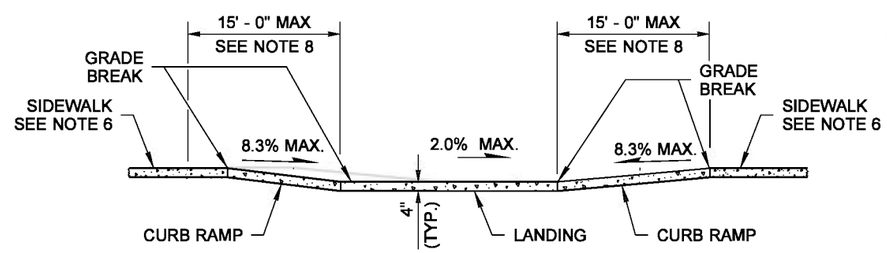

SECTION B

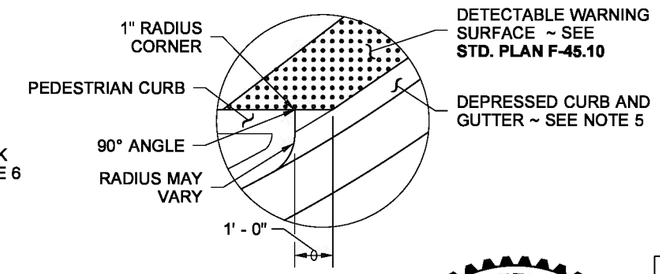

DETAIL 1

LEGEND

SLOPE IN EITHER DIRECTION

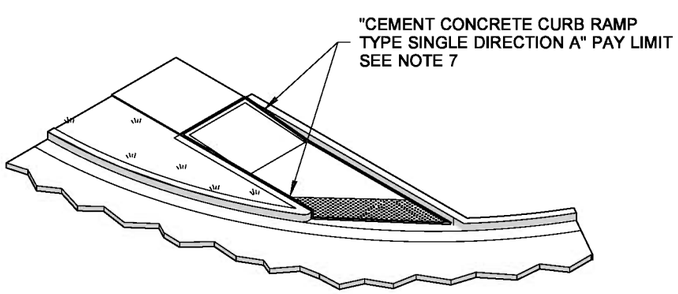

ISOMETRIC VIEW
TYPE SINGLE DIRECTION A
PAY LIMIT

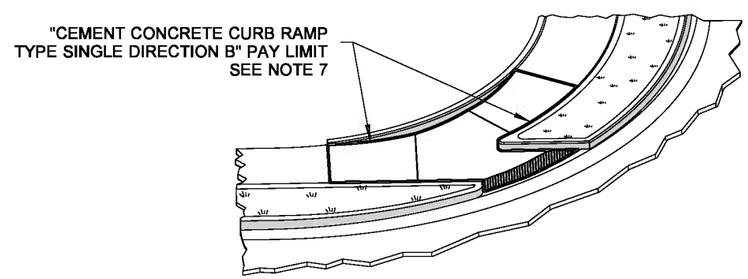

ISOMETRIC VIEW
TYPE SINGLE DIRECTION B
PAY LIMIT

NANCY FENNO BOYD
STATE OF WASHINGTON
38298
REGISTERED
PROFESSIONAL ENGINEER

NOTE: THIS PLAN IS NOT A LEGAL ENGINEERING DOCUMENT BUT AN ELECTRONIC DUPLICATE. THE ORIGINAL, SIGNED BY THE ENGINEER AND APPROVED FOR PUBLICATION, IS KEPT ON FILE AT THE WASHINGTON STATE DEPARTMENT OF TRANSPORTATION. A COPY MAY BE OBTAINED UPON REQUEST.

SINGLE DIRECTION CURB RAMP

STANDARD PLAN F-40.16-01

SHEET 1 OF 1 SHEET

APPROVED FOR PUBLICATION

Pasco Bakotich III — STATE DESIGN ENGINEER
06-03-10 — DATE

Washington State Department of Transportation

DRAWN BY: FERN LIDDELL

EFFECTIVE: AUGUST 6, 2012 TO August 4, 2013
EFFECTIVE: AUGUST 6, 2012 TO August 4, 2013
EFFECTIVE: AUGUST 6, 2012 TO August 4, 2013
EFFECTIVE: AUGUST 6, 2012 TO August 4, 2013

EFFECTIVE: AUGUST 6, 2012 TO August 4, 2013

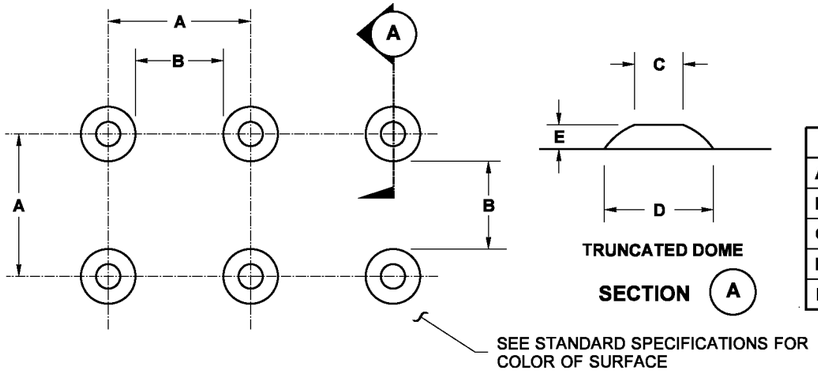

	MIN.	MAX.
A	1.60"	2.40"
B	0.65"	—
C	0.45"	0.90"
D	0.9"	1.40"
E	0.2"	0.2"

TRUNCATED DOME SPACING
SEE NOTE 3

TRUNCATED DOME DETAILS

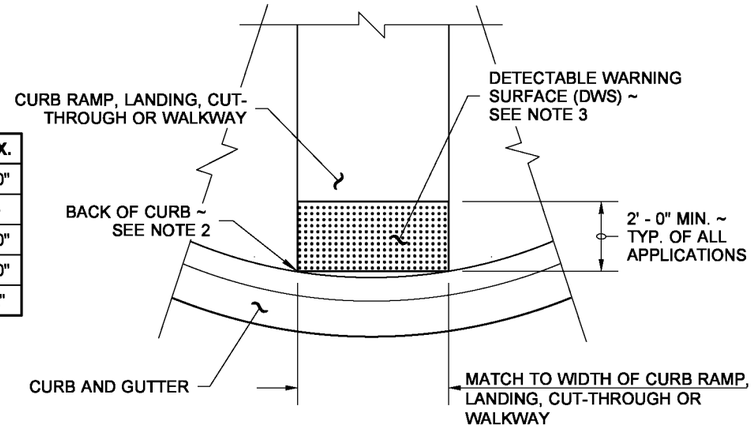

DETECTABLE WARNING SURFACE DETAIL

NOTES

1. The Detectable Warning Surface (DWS) shall extend the full width of the curb ramp (exclusive of flares) or the landing.
2. The Detectable Warning Surface shall be placed at the back of curb, and need not follow the radius.
3. The rows of truncated domes shall be aligned to be perpendicular to the grade break at the back of curb.
4. The rows of truncated domes shall be aligned to be parallel to the direction of travel.
5. If curb and gutter are not present, such as a shared-use path connection, the Detectable Warning Surface shall be placed at the pavement edge.
6. See **Standard Plans** for sidewalk and curb ramp details.
7. If a curb ramp is required, the location of the Detectable Warning Surface must be at the bottom of the ramp and within the required distance from the rail.
8. When the grade break between the curb ramp and the landing is less than or equal to 5 ft. from the back of curb at all points, place the Detectable Warning Surface on the bottom of the curb ramp.

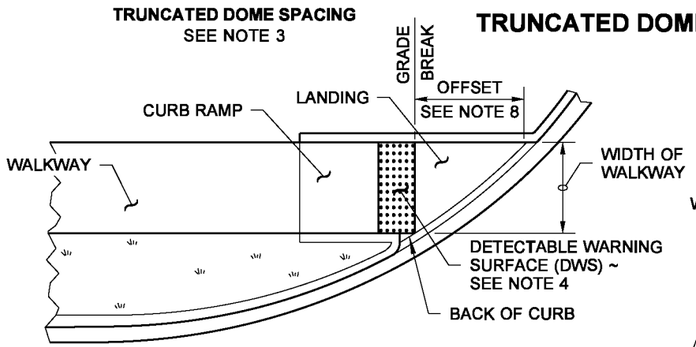

SINGLE DIRECTION CURB RAMP
(GRADE BREAK BETWEEN CURB AND LANDING ≤ 5 FT. FROM BACK OF CURB)
(SEE NOTE 6)

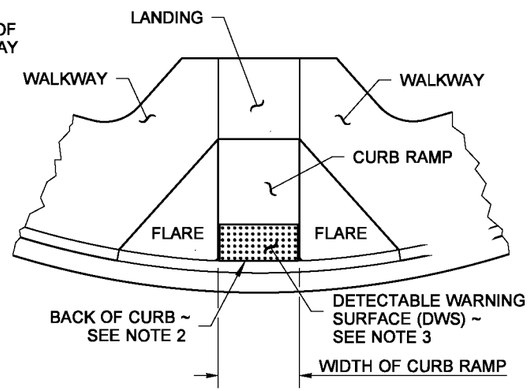

PERPENDICULAR CURB RAMP
(SEE NOTE 6)

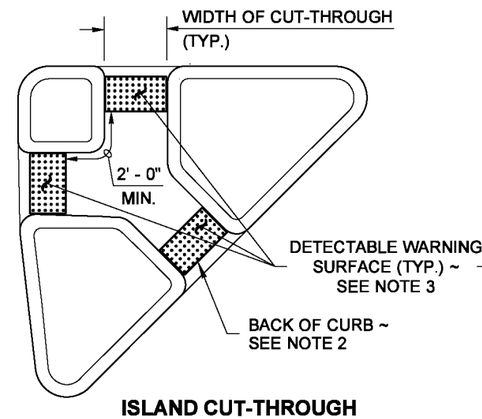

ISLAND CUT-THROUGH

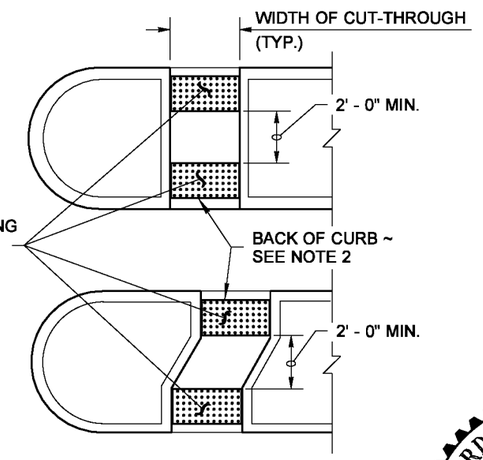

MEDIAN CUT-THROUGH

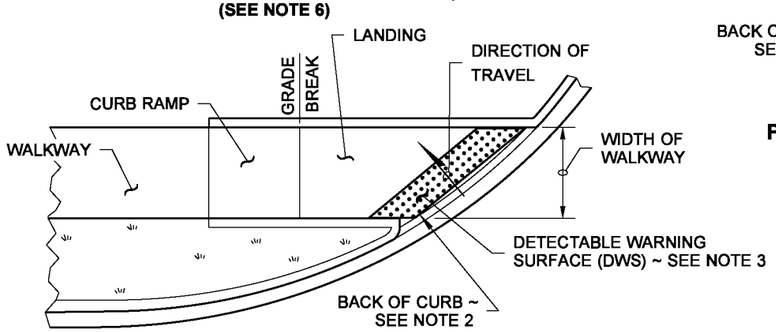

SINGLE DIRECTION CURB RAMP
(GRADE BREAK BETWEEN CURB AND LANDING > 5 FT. FROM BACK OF CURB)
(SEE NOTE 6)

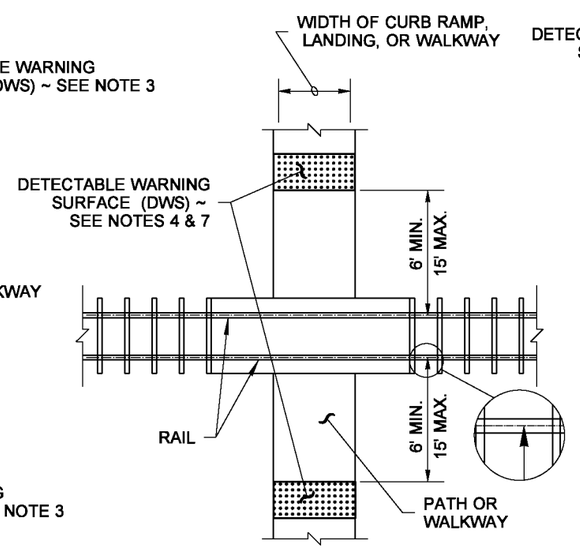

PEDESTRIAN RAILROAD CROSSING

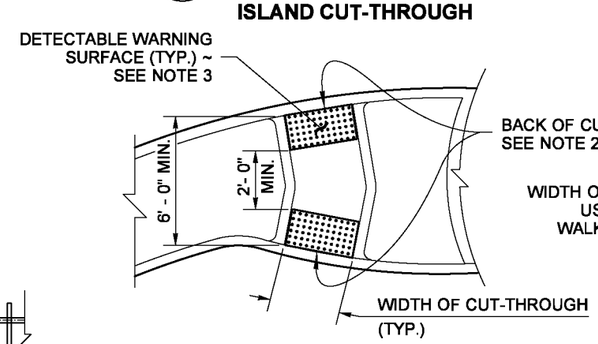

ROUNDABOUT SPLITTER ISLAND

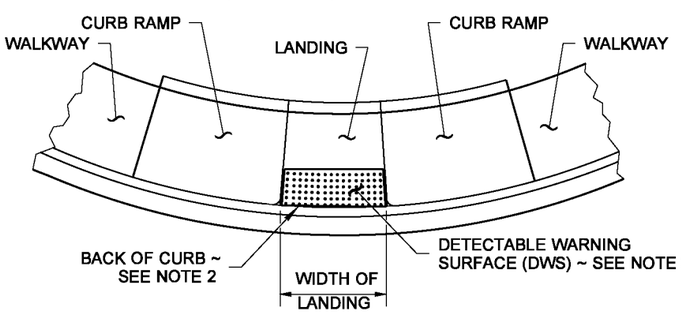

PARALLEL CURB RAMP
(SEE NOTE 6)

PLACEMENT GUIDELINES

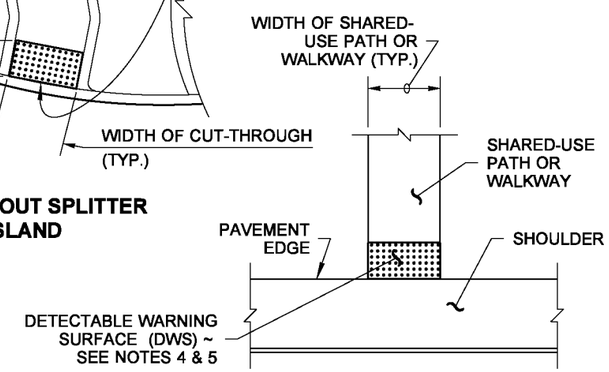

SHARED-USE PATH CONNECTION

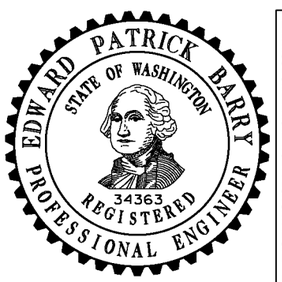

NOTE: THIS PLAN IS NOT A LEGAL ENGINEERING DOCUMENT BUT AN ELECTRONIC DUPLICATE. THE ORIGINAL, SIGNED BY THE ENGINEER AND APPROVED FOR PUBLICATION, IS KEPT ON FILE AT THE WASHINGTON STATE DEPARTMENT OF TRANSPORTATION. A COPY MAY BE OBTAINED UPON REQUEST.

DETECTABLE WARNING SURFACE

STANDARD PLAN F-45.10-01

SHEET 1 OF 1 SHEET

APPROVED FOR PUBLICATION

Pasco Bakotich III — STATE DESIGN ENGINEER

06/21/12 — DATE

Washington State Department of Transportation

DRAWN BY: FERN LIDDELL

EFFECTIVE: AUGUST 6, 2012 TO August 4, 2013
EFFECTIVE: AUGUST 6, 2012 TO August 4, 2013
EFFECTIVE: AUGUST 6, 2012 TO August 4, 2013
EFFECTIVE: AUGUST 6, 2012 TO August 4, 2013

EFFECTIVE: AUGUST 6, 2012 TO August 4, 2013

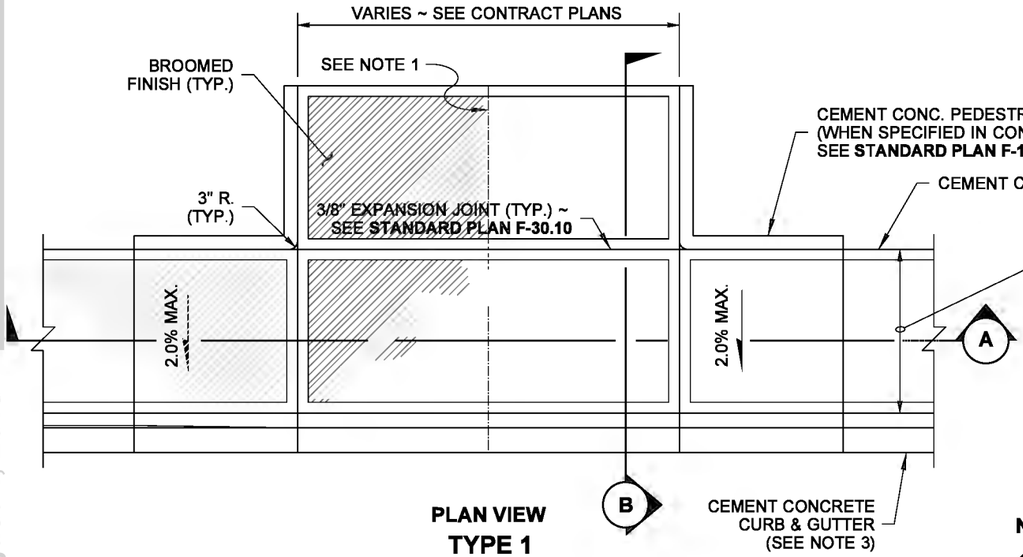

PLAN VIEW
TYPE 1

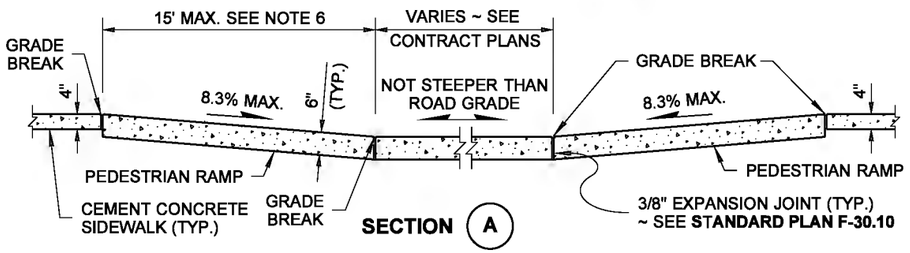

SECTION A

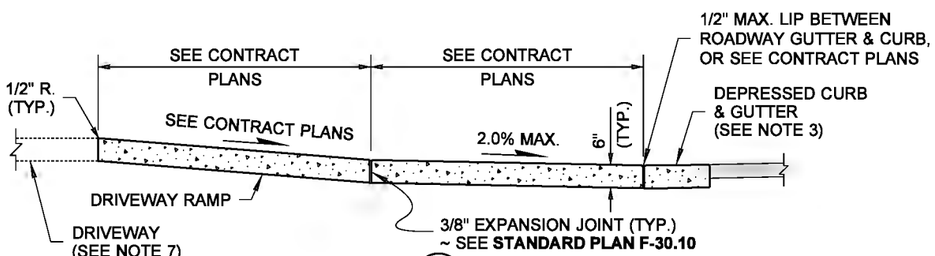

SECTION B

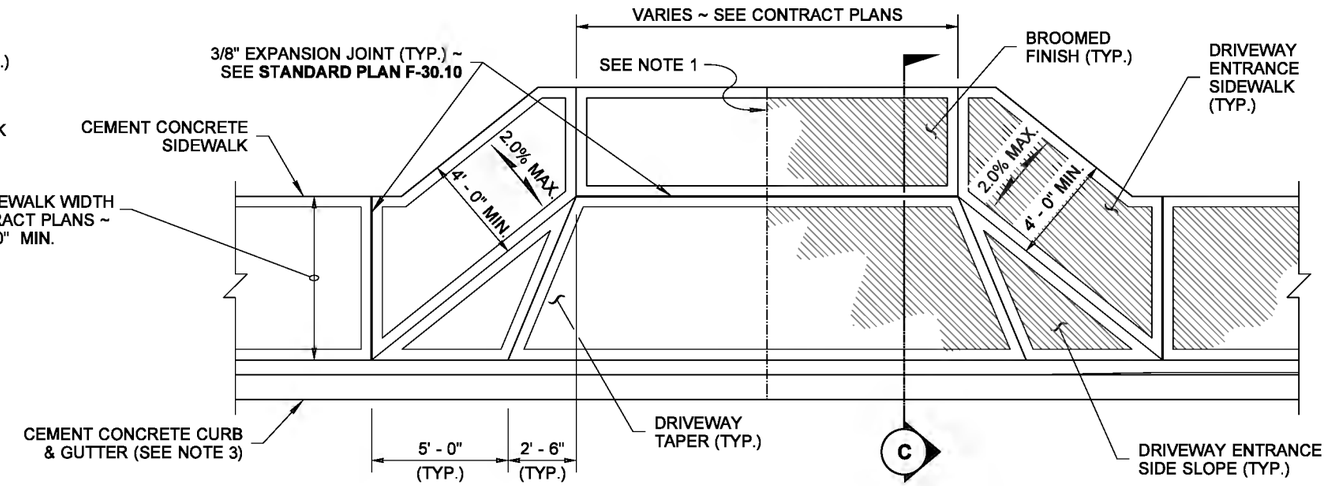

PLAN VIEW
TYPE 2

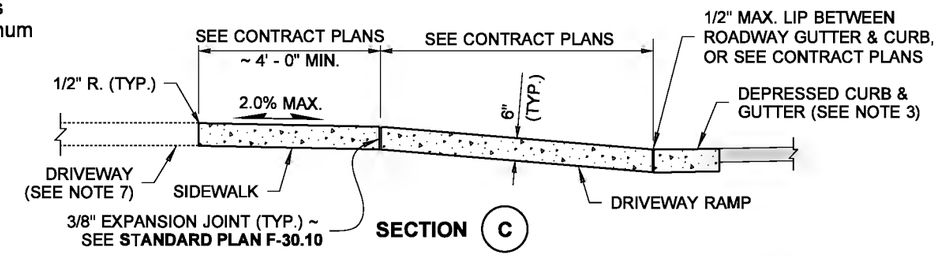

SECTION C

NOTES

1. When the driveway width exceeds 15 feet, construct a full depth expansion joint with 3/8" joint filler along the driveway centerline. See **Standard Plan F-30.10.** Construct expansion joints parallel with the centerline as required at 15 feet maximum spacing when driveway widths exceed 30 feet.
2. See **Standard Plan F-30.10** for sidewalk details.
3. Curb and gutter shown; see the Contract Plans for the curb design specified. See **Standard Plan F-10.12** for Curb Details.
4. Avoid placing drainage structures, junction boxes or other obstructions in front of driveway entrances.
5. Where "GRADE BREAK" is called out, the entire length of the line between the two adjacent surface planes shall be flush.
6. The curb ramp maximum running slope shall not require the ramp length to exceed 15 feet to avoid chasing the slope indefinitely when connecting to steep grades. When applying the 15 foot max. length, the running slope of the curb ramp shall be as flat as feasable.
7. Pay item does not include driveway. See Contract Plans.

LEGEND

SLOPE IN EITHER DIRECTION

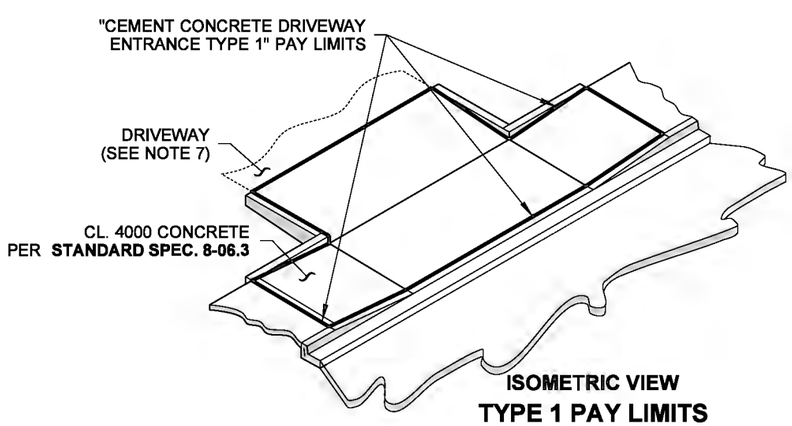

ISOMETRIC VIEW
TYPE 1 PAY LIMITS

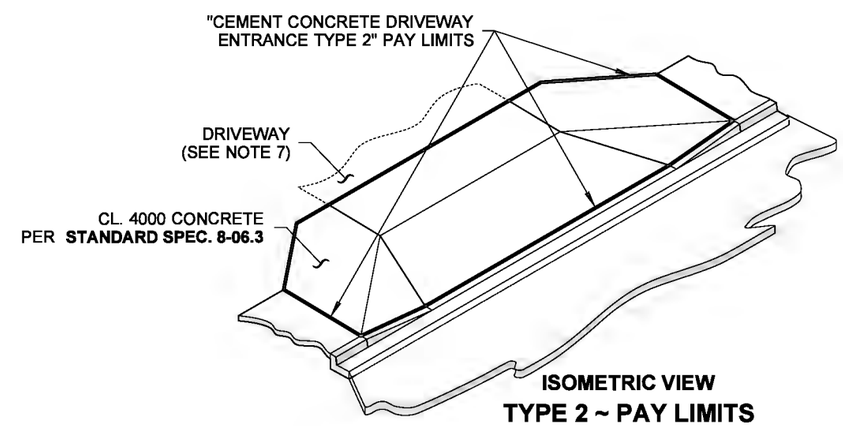

ISOMETRIC VIEW
TYPE 2 ~ PAY LIMITS

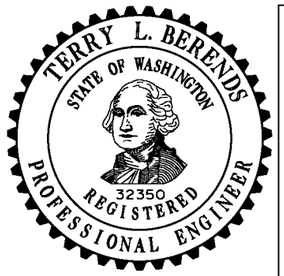

NOTE: THIS PLAN IS NOT A LEGAL ENGINEERING DOCUMENT BUT AN ELECTRONIC DUPLICATE. THE ORIGINAL, SIGNED BY THE ENGINEER AND APPROVED FOR PUBLICATION, IS KEPT ON FILE AT THE WASHINGTON STATE DEPARTMENT OF TRANSPORTATION. A COPY MAY BE OBTAINED UPON REQUEST.

CEMENT CONCRETE DRIVEWAY ENTRANCE TYPES 1, 2, 3 & 4
STANDARD PLAN F-80.10-02

SHEET 1 OF 2 SHEETS

APPROVED FOR PUBLICATION

Pasco Bakotich III — STATE DESIGN ENGINEER
03-15-12 — DATE

Washington State Department of Transportation

DRAWN BY: FERN LIDDELL

EFFECTIVE: AUGUST 6, 2012 TO August 4, 2013

EFFECTIVE: AUGUST 6, 2012 TO August 4, 2013
EFFECTIVE: AUGUST 6, 2012 TO August 4, 2013

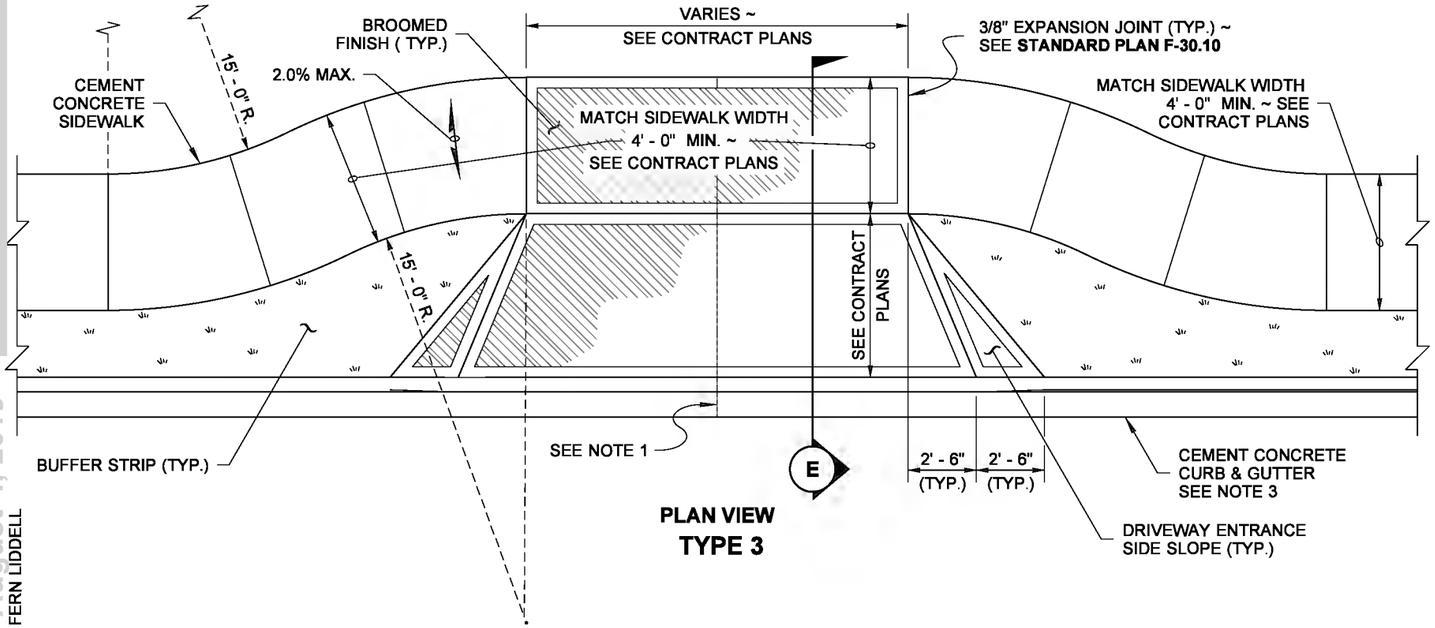

PLAN VIEW
TYPE 3

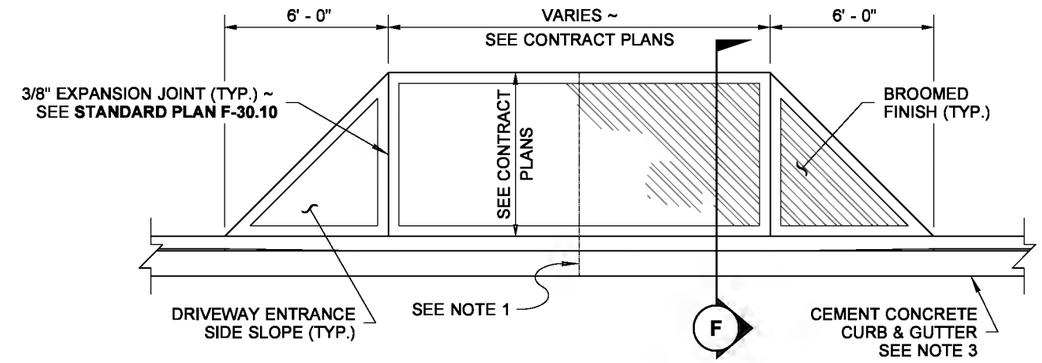

PLAN VIEW
TYPE 4*

*THIS ENTRANCE TYPE SHALL NOT BE USED ALONG A PEDESTRIAN ROUTE

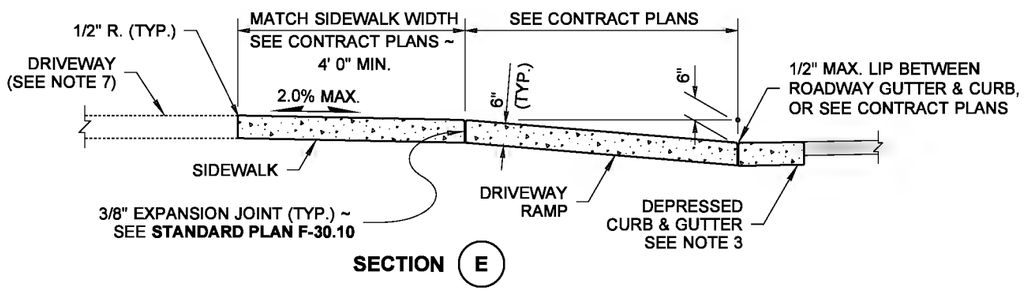

SECTION E

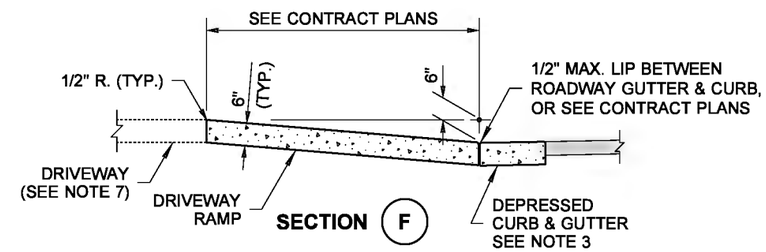

SECTION F

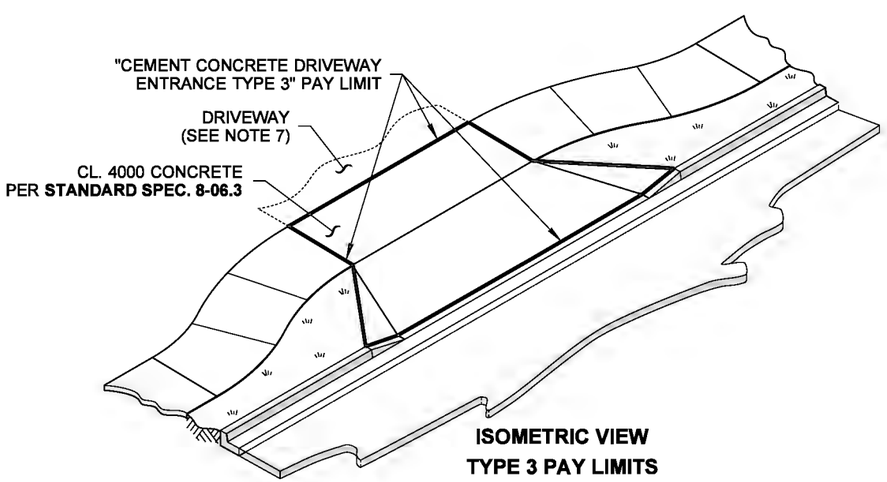

ISOMETRIC VIEW
TYPE 3 PAY LIMITS

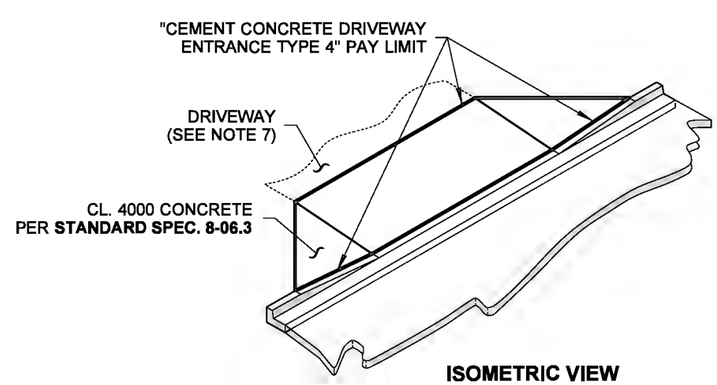

ISOMETRIC VIEW
TYPE 4 PAY LIMITS

CEMENT CONCRETE DRIVEWAY ENTRANCE TYPES 1, 2, 3 & 4
STANDARD PLAN F-80.10-02

SHEET 2 OF 2 SHEETS

APPROVED FOR PUBLICATION

STATE DESIGN ENGINEER — DATE

Washington State Department of Transportation

DRAWN BY: FERN LIDDELL

EFFECTIVE: AUGUST 6, 2012 TO August 4, 2013
EFFECTIVE: AUGUST 6, 2012 TO August 4, 2013
EFFECTIVE: AUGUST 6, 2012 TO August 4, 2013
EFFECTIVE: AUGUST 6, 2012 TO August 4, 2013

EFFECTIVE: AUGUST 6, 2012 TO August 4, 2013
EFFECTIVE: AUGUST 6, 2012 TO August 4, 2013

DRAWN BY: MARK SUJKA

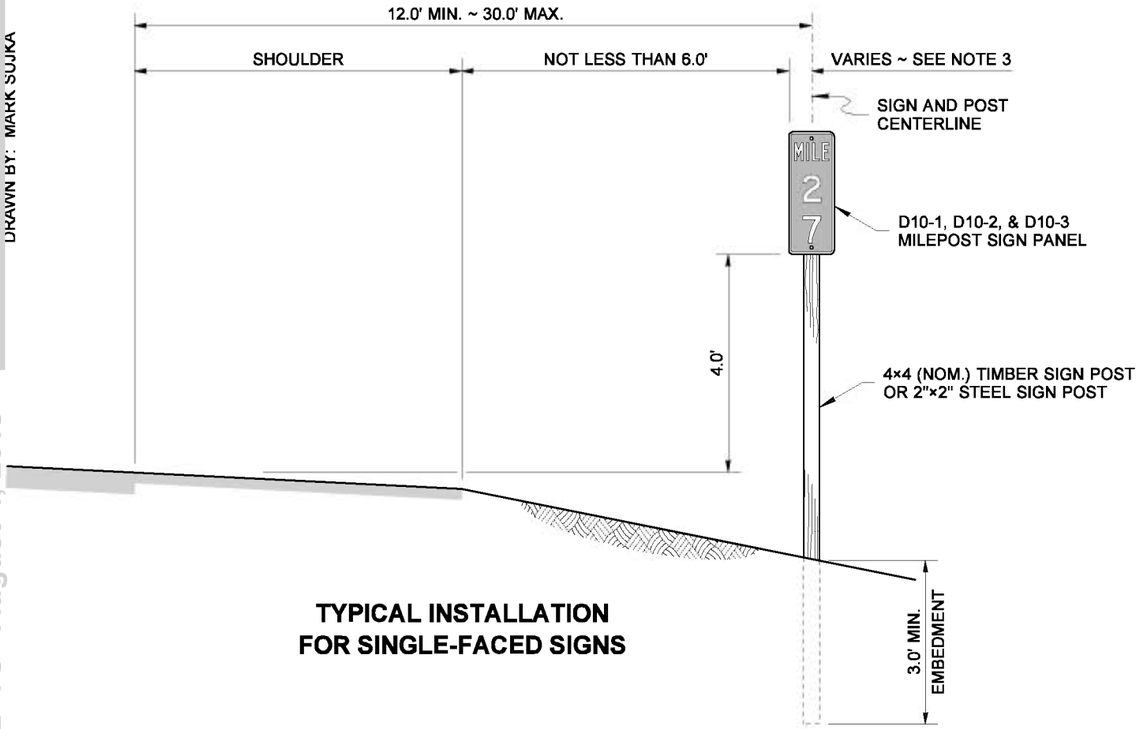

TYPICAL INSTALLATION FOR SINGLE-FACED SIGNS

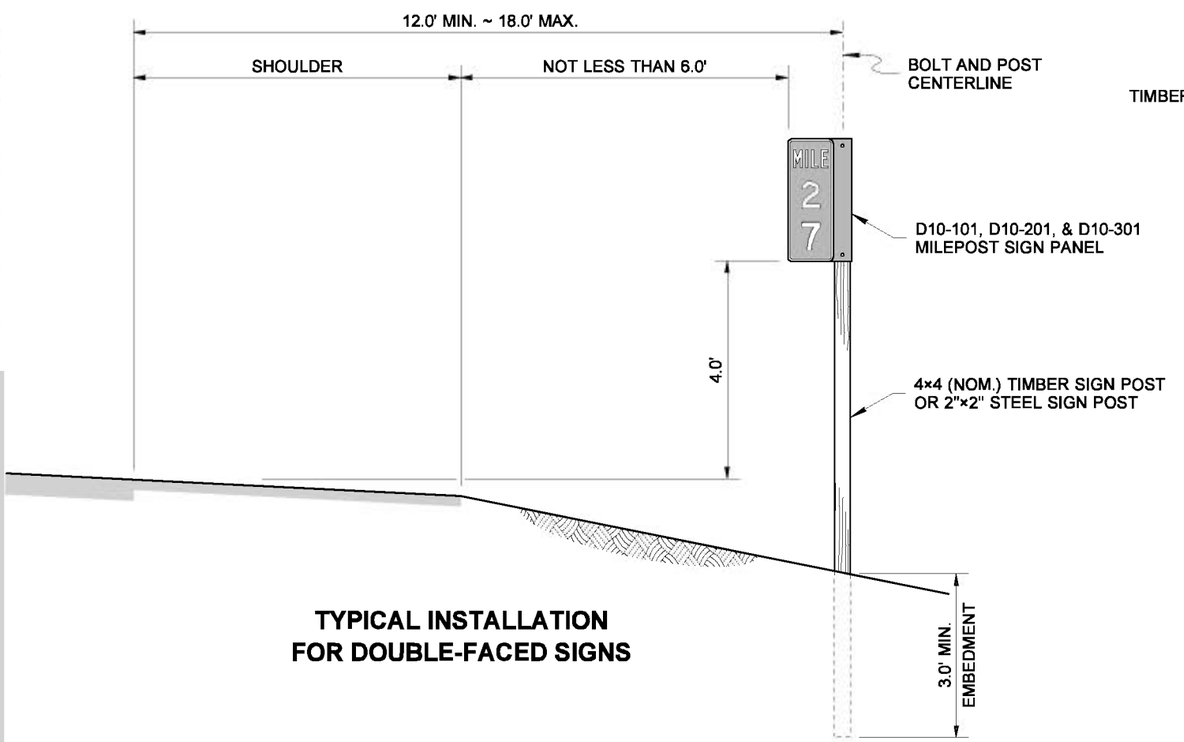

TYPICAL INSTALLATION FOR DOUBLE-FACED SIGNS

NOTES

1. Attach the Milepost Sign Panel to a timber sign post using two 3/8" diameter lag bolts, with washers; see Standard Plan G-22.10. For post and attachment details on steel sign posts, see Standard Plan G-24.50, Type ST-1.
2. Provide Supplemental Plaques and install on Mileposts where indicated in the Contract.
3. See the Contract for the width of the Single-Faced Milepost Signs required (10" or 12").
4. For lateral installations behind traffic barrier, 6" high curbs, and ditches, see Standard Plan G-20.10.
5. Install at the locations shown in the Contract. Installation may be moved 50 feet or less (longitudinally) before or after the contract location if obstructions are encountered, or to utilize the post of another sign. Mileposts that cannot be placed within this degree of accuracy shall be omitted entirely.

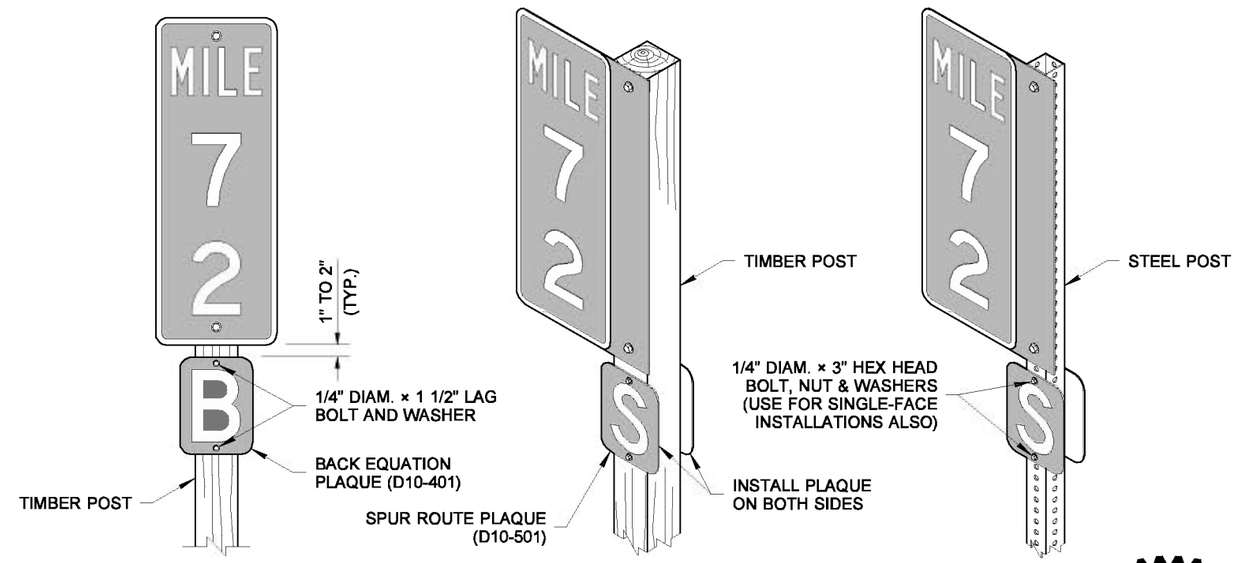

SINGLE-FACED SIGN **DOUBLE-FACED SIGN**

SUPPLEMENTAL PLAQUE ~ MOUNTING DETAIL

SEE NOTE 2

EXPIRES AUGUST 9, 2009

NOTE: THIS PLAN IS NOT A LEGAL ENGINEERING DOCUMENT BUT AN ELECTRONIC DUPLICATE. THE ORIGINAL, SIGNED BY THE ENGINEER AND APPROVED FOR PUBLICATION, IS KEPT ON FILE AT THE WASHINGTON STATE DEPARTMENT OF TRANSPORTATION. A COPY MAY BE OBTAINED UPON REQUEST.

MILEPOST

STANDARD PLAN G-10.10-00

SHEET 1 OF 1 SHEET

APPROVED FOR PUBLICATION

Pasco Bakotich III *09-20-07*

STATE DESIGN ENGINEER DATE

Washington State Department of Transportation

EFFECTIVE: AUGUST 6, 2012 TO August 4, 2013
EFFECTIVE: AUGUST 6, 2012 TO August 4, 2013
EFFECTIVE: AUGUST 6, 2012 TO August 4, 2013
EFFECTIVE: AUGUST 6, 2012 TO August 4, 2013

EFFECTIVE: AUGUST 6, 2012 TO August 4, 2013
EFFECTIVE: AUGUST 6, 2012 TO August 4, 2013

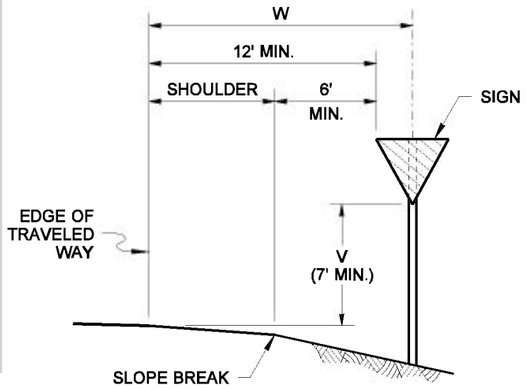

SIGN INSTALLATION IN FILL SECTION

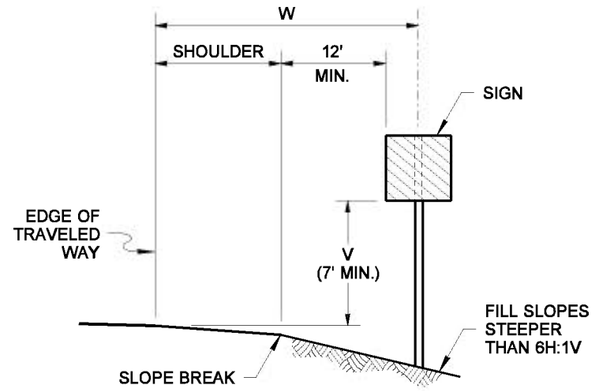

SIGN INSTALLATION ON STEEP FILL SLOPES

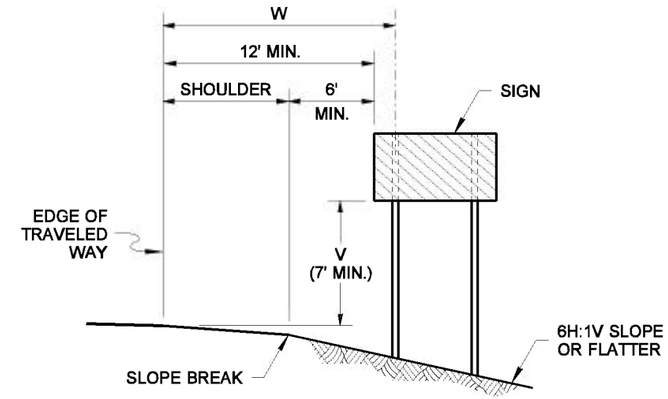

MULTIPLE SIGN POST INSTALLATION IN FILL SECTION

NOTES

1. Refer to the Sign Specification Sheet of the Contract for the 'V' and 'W' distances.
2. The minimum vertical distance from the bottom of the sign to the ground shall not be less than 7' for signs located within the Design Clear Zone.

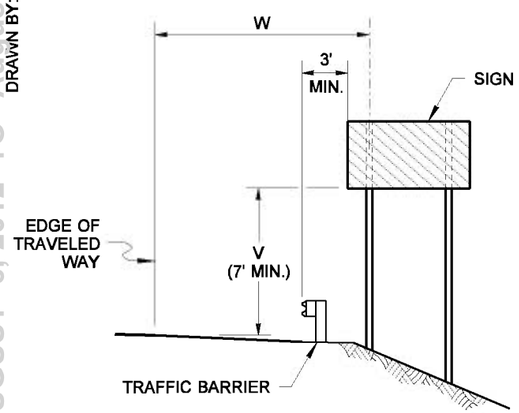

SIGN INSTALLATION BEHIND TRAFFIC BARRIER

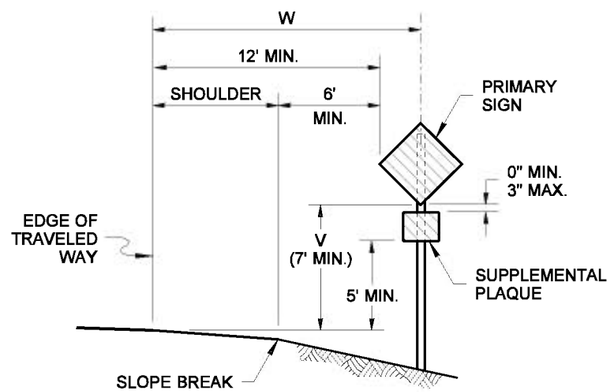

SIGN WITH SUPPLEMENTAL PLAQUE INSTALLATION IN FILL SECTION

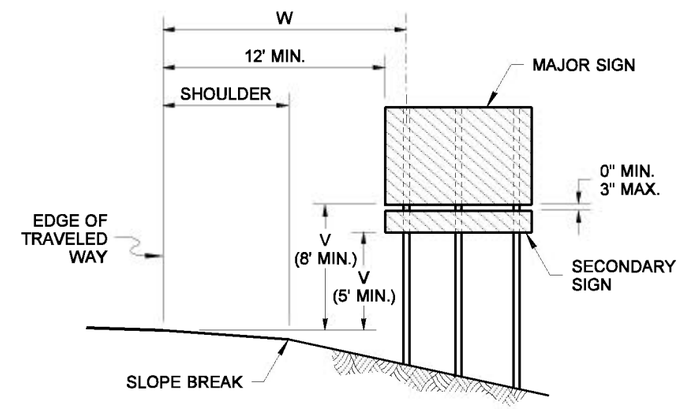

GUIDE OR DIRECTIONAL SIGN WITH SECONDARY SIGN INSTALLATION ON EXPRESSWAYS AND FREEWAYS

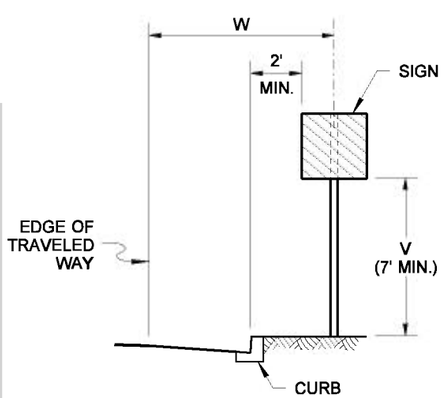

SIGN INSTALLATION IN CURB SECTION

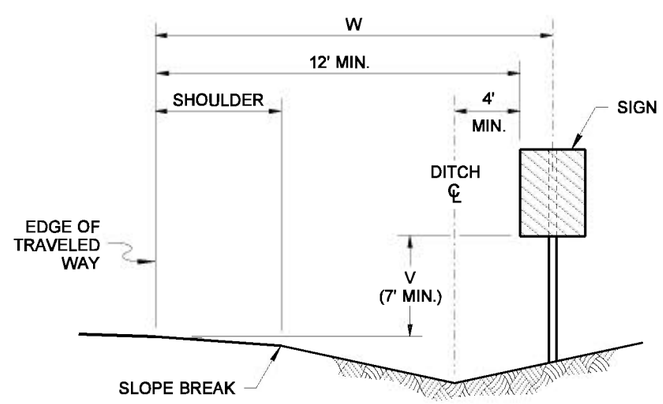

SIGN INSTALLATION IN DITCH SECTION

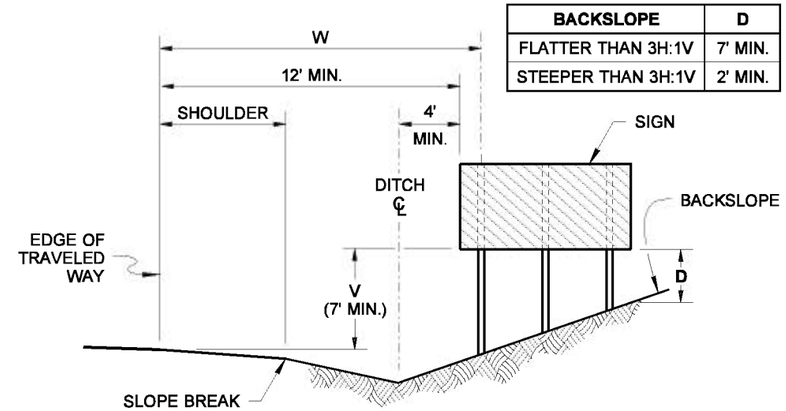

BACKSLOPE	D
FLATTER THAN 3H:1V	7' MIN.
STEEPER THAN 3H:1V	2' MIN.

MULTIPLE SIGN POST INSTALLATION IN DITCH SECTION

EXPIRES AUGUST 9, 2009

NOTE: THIS PLAN IS NOT A LEGAL ENGINEERING DOCUMENT BUT AN ELECTRONIC DUPLICATE. THE ORIGINAL, SIGNED BY THE ENGINEER AND APPROVED FOR PUBLICATION, IS KEPT ON FILE AT THE WASHINGTON STATE DEPARTMENT OF TRANSPORTATION. A COPY MAY BE OBTAINED UPON REQUEST.

GROUND MOUNTED SIGN PLACEMENT

STANDARD PLAN G-20.10-00

SHEET 1 OF 1 SHEET

APPROVED FOR PUBLICATION

Pasco Bakotich III — STATE DESIGN ENGINEER

09-20-07 — DATE

Washington State Department of Transportation

DRAWN BY: MARK SUJKA

EFFECTIVE: AUGUST 6, 2012 TO August 4, 2013
EFFECTIVE: AUGUST 6, 2012 TO August 4, 2013
EFFECTIVE: AUGUST 6, 2012 TO August 4, 2013
EFFECTIVE: AUGUST 6, 2012 TO August 4, 2013

EFFECTIVE: AUGUST 6, 2012 TO August 4, 2013
EFFECTIVE: AUGUST 6, 2012 TO August 4, 2013

DRAWN BY: BILL BEKENS

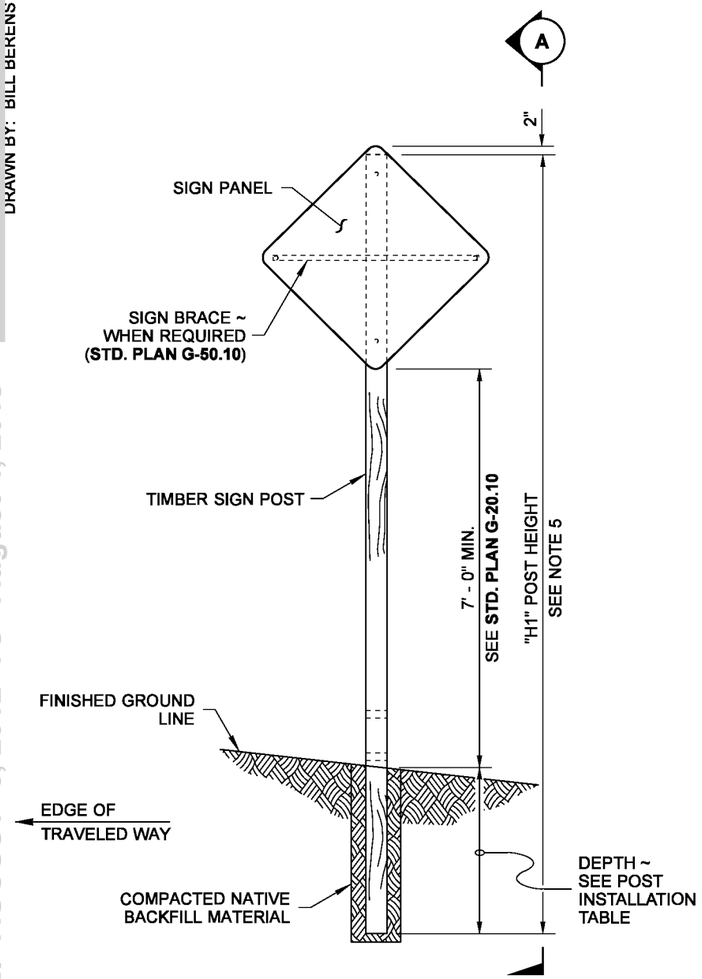

ELEVATION VIEW

SINGLE POST INSTALLATION

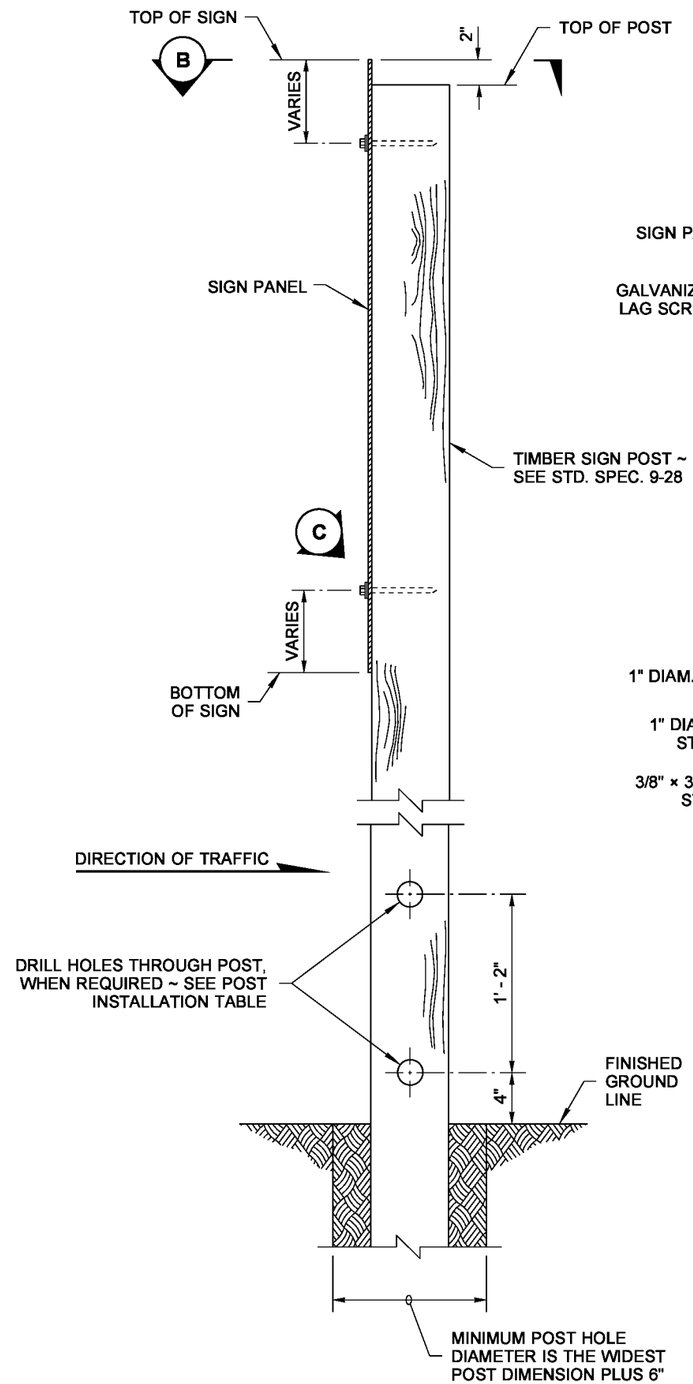

VIEW (A)

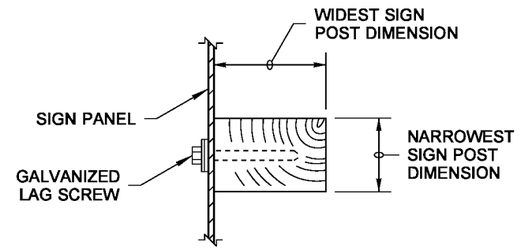

VIEW (B)

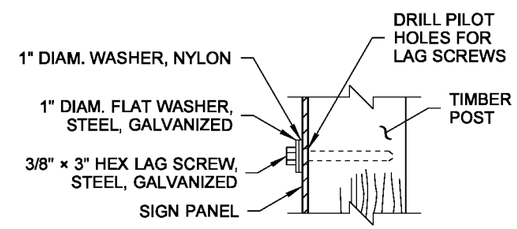

DETAIL (C)

NOTES

1. Notch is only required with multiple post installations.
2. 6×10, 8×10, and 6×12 Timber Sign Posts cannot be made breakaway and do not have holes or notches. These posts shall not be installed within the Design Clear Zone. They may be installed behind traffic barrier.
3. Signs with a width less than 12 feet and supported on three 6×6 or 6×8 posts shall not be installed within the Design Clear Zone. They may be installed behind traffic barrier.
4. Signs with a width less than 17 feet and supported on four 6×6 or 6×8 posts shall not be installed within the Design Clear Zone. They may be installed behind traffic barrier.
5. For "X", "Y", "H1", "H2", "H3", and "H4" refer to the Sign Specification Sheet in the Contract.
6. For 6×6 posts and larger, 7 feet minimum spacing is required between posts.

POST INSTALLATION TABLE

POST SIZE (NOM.)	DEPTH	HOLE DIAMETER	NOTCH DEPTH (SEE NOTE 1)
4×4	3' - 0"	NOT REQ'D	NOT REQ'D
4×6	4' - 0"	1 1/2"	1 1/2"
6×6	4' - 0"	2" SEE NOTE 3 & 4	2" SEE NOTE 3 & 4
6×8	5' - 0"	3" SEE NOTE 3 & 4	3" SEE NOTE 3 & 4
6×10	6' - 0"	SEE NOTE 2	SEE NOTE 2
8×10	6' - 0"	SEE NOTE 2	SEE NOTE 2
6×12	7' - 0"	SEE NOTE 2	SEE NOTE 2

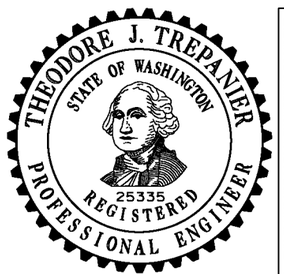

EXPIRES AUGUST 9, 2009

NOTE: THIS PLAN IS NOT A LEGAL ENGINEERING DOCUMENT BUT AN ELECTRONIC DUPLICATE. THE ORIGINAL, SIGNED BY THE ENGINEER AND APPROVED FOR PUBLICATION, IS KEPT ON FILE AT THE WASHINGTON STATE DEPARTMENT OF TRANSPORTATION. A COPY MAY BE OBTAINED UPON REQUEST.

TIMBER SIGN SUPPORT

STANDARD PLAN G-22.10-01

SHEET 1 OF 3 SHEETS

APPROVED FOR PUBLICATION

Pasco Bakotich III — STATE DESIGN ENGINEER

07-03-08 — DATE

Washington State Department of Transportation

EFFECTIVE: AUGUST 6, 2012 TO August 4, 2013
EFFECTIVE: AUGUST 6, 2012 TO August 4, 2013
EFFECTIVE: AUGUST 6, 2012 TO August 4, 2013
EFFECTIVE: AUGUST 6, 2012 TO August 4, 2013

EFFECTIVE: AUGUST 6, 2012 TO August 4, 2013

DRAWN BY: BILL BERENS

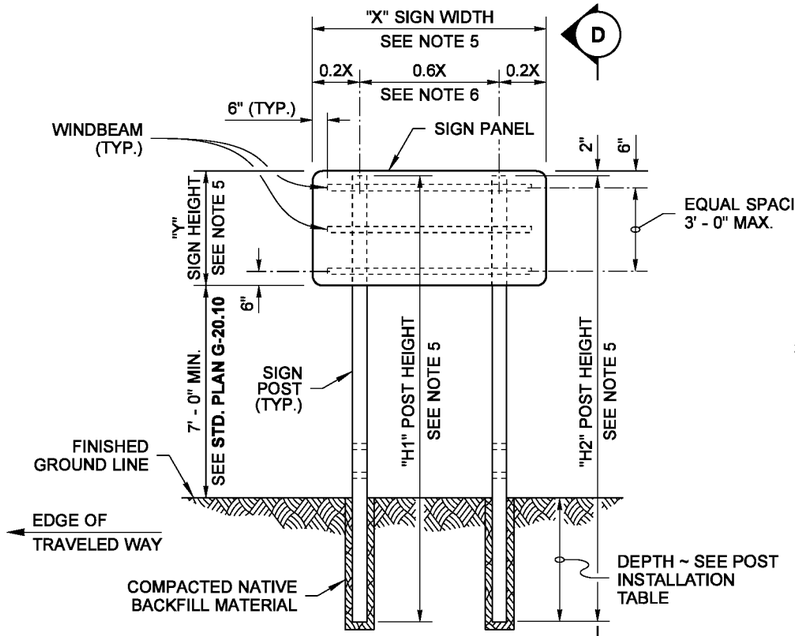

TWO POST INSTALLATION

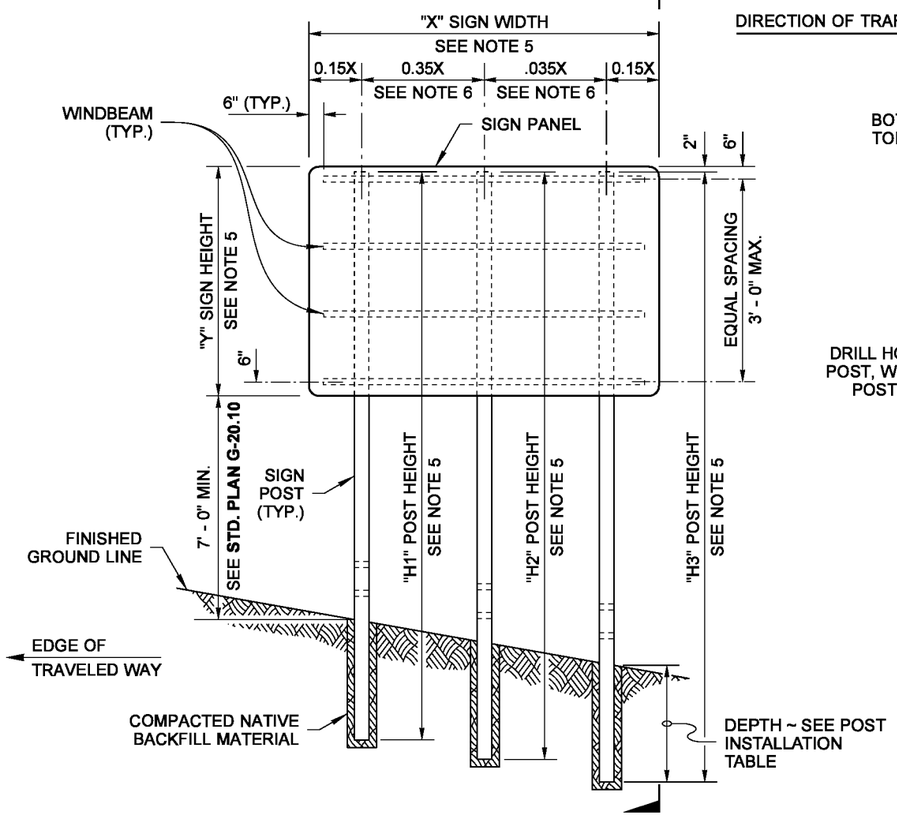

THREE POST INSTALLATION

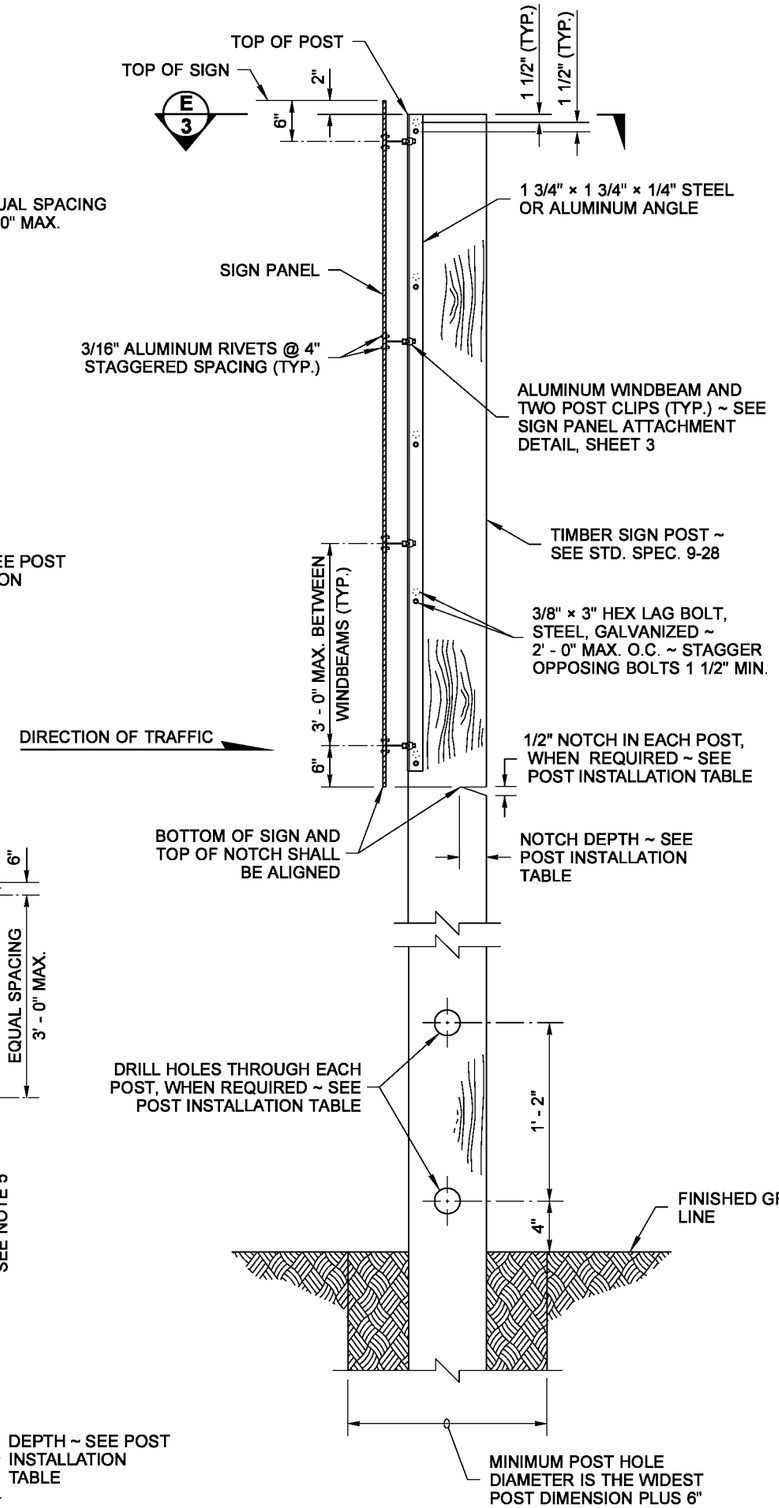

VIEW D

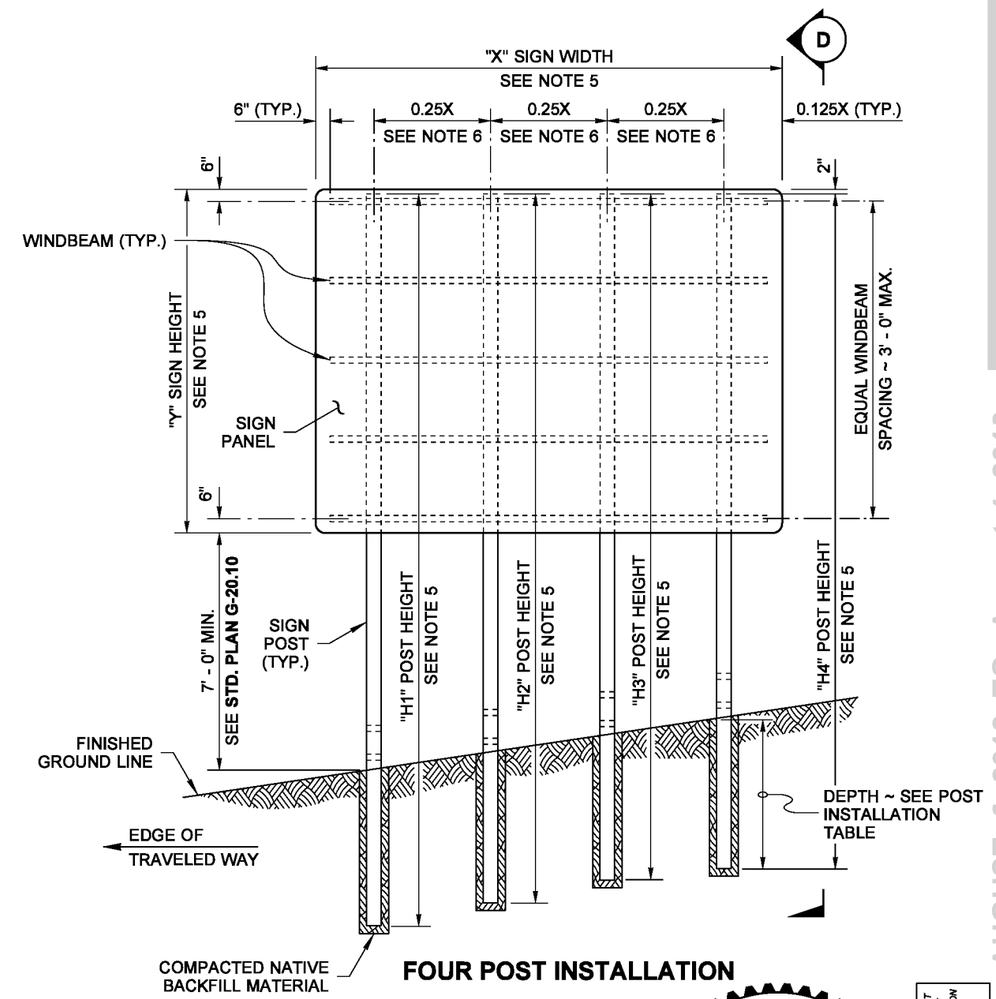

FOUR POST INSTALLATION

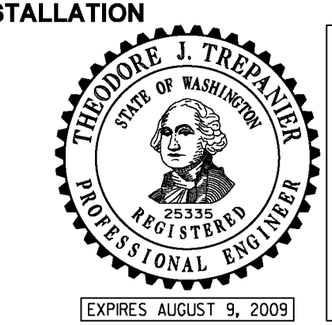

NOTE: THIS PLAN IS NOT A LEGAL ENGINEERING DOCUMENT BUT AN ELECTRONIC DUPLICATE. THE ORIGINAL, SIGNED BY THE ENGINEER AND APPROVED FOR PUBLICATION, IS KEPT ON FILE AT THE WASHINGTON STATE DEPARTMENT OF TRANSPORTATION. A COPY MAY BE OBTAINED UPON REQUEST.

TIMBER SIGN SUPPORT

STANDARD PLAN G-22.10-01

SHEET 2 OF 3 SHEETS

APPROVED FOR PUBLICATION

Pasco Bakotich III — STATE DESIGN ENGINEER

07-03-08 — DATE

Washington State Department of Transportation

EFFECTIVE: AUGUST 6, 2012 TO August 4, 2013

EFFECTIVE: AUGUST 6, 2012 TO August 4, 2013
EFFECTIVE: AUGUST 6, 2012 TO August 4, 2013

DRAWN BY: BILL BERENS

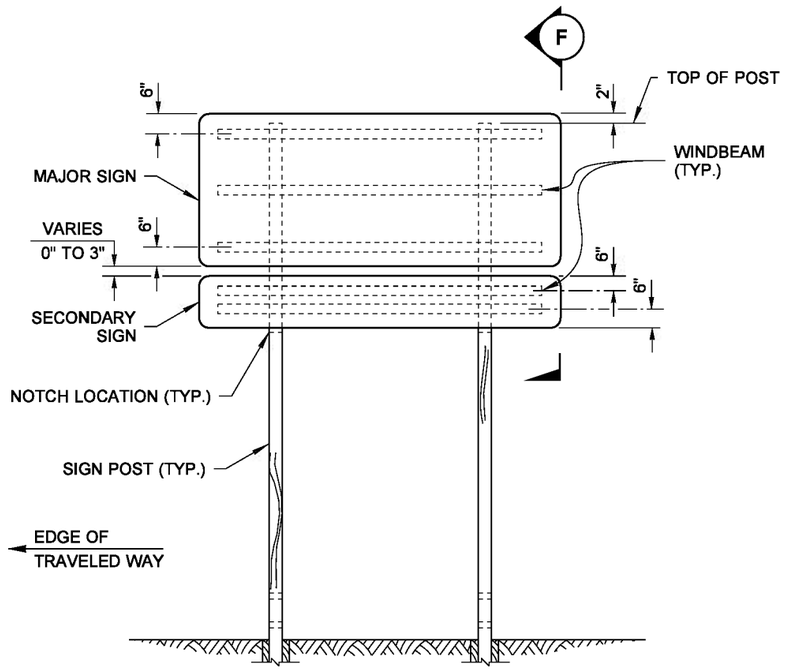

MAJOR AND SECONDARY SIGN INSTALLATION

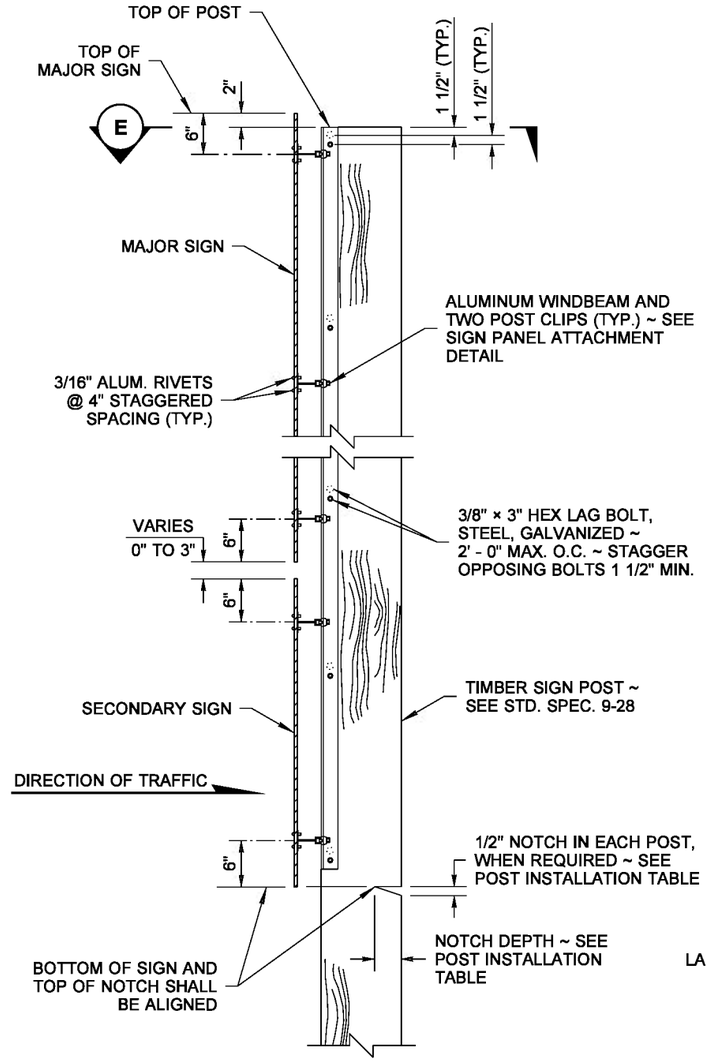

VIEW F

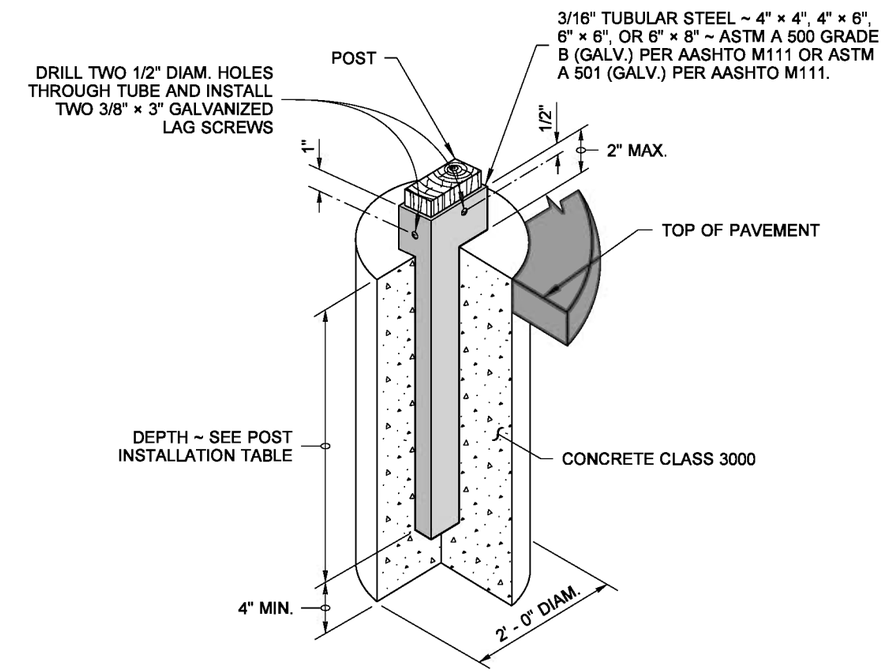

ISOMETRIC VIEW

CONCRETE FOUNDATION SLEEVE DETAIL

TO BE USED WHEN PLACING TIMBER POST IN A PAVED AREA

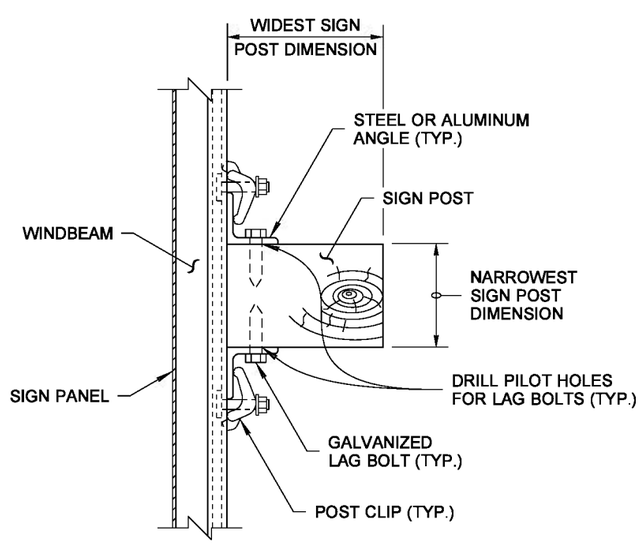

VIEW E

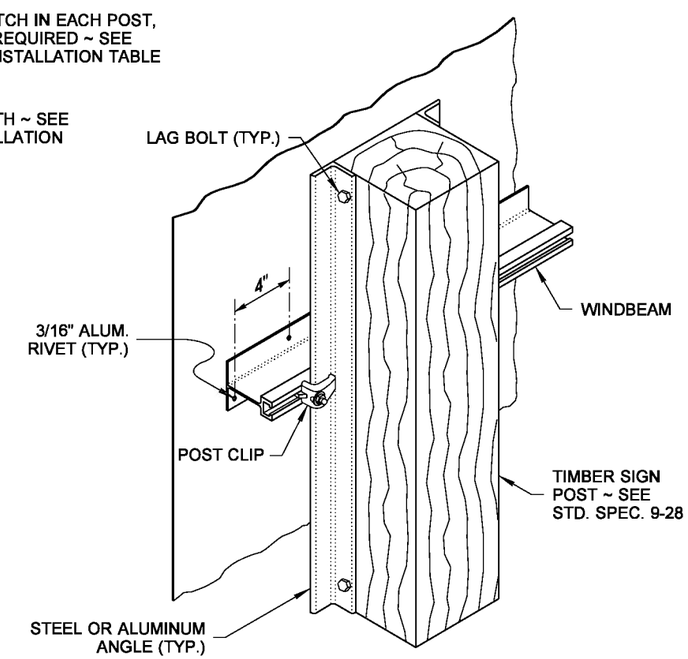

ISOMETRIC VIEW

SIGN PANEL ATTACHMENT DETAIL

EXPIRES AUGUST 9, 2009

NOTE: THIS PLAN IS NOT A LEGAL ENGINEERING DOCUMENT BUT AN ELECTRONIC DUPLICATE. THE ORIGINAL, SIGNED BY THE ENGINEER AND APPROVED FOR PUBLICATION, IS KEPT ON FILE AT THE WASHINGTON STATE DEPARTMENT OF TRANSPORTATION. A COPY MAY BE OBTAINED UPON REQUEST.

TIMBER SIGN SUPPORT

STANDARD PLAN G-22.10-01

SHEET 3 OF 3 SHEETS

APPROVED FOR PUBLICATION

Pasco Bakotich III — STATE DESIGN ENGINEER

07-03-08 — DATE

Washington State Department of Transportation

EFFECTIVE: AUGUST 6, 2012 TO August 4, 2013
EFFECTIVE: AUGUST 6, 2012 TO August 4, 2013
EFFECTIVE: AUGUST 6, 2012 TO August 4, 2013
EFFECTIVE: AUGUST 6, 2012 TO August 4, 2013

EFFECTIVE: AUGUST 6, 2012 TO August 4, 2013
EFFECTIVE: AUGUST 6, 2012 TO August 4, 2013

DRAWN BY: LISA CYFORD

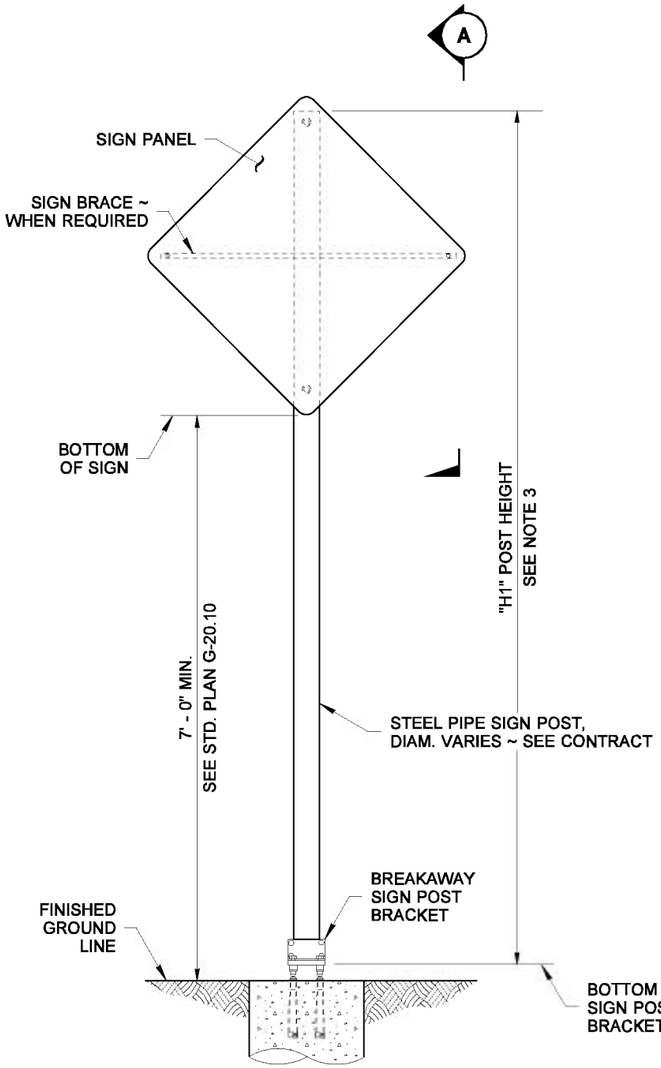

ELEVATION

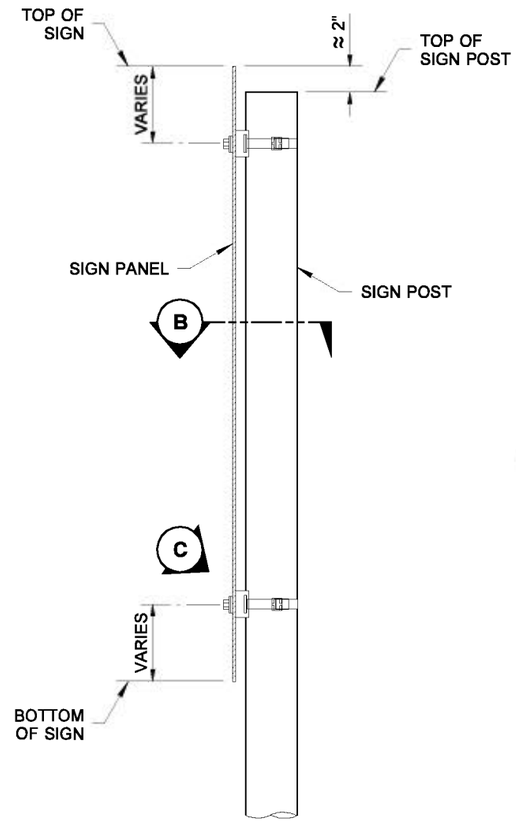

VIEW (A)

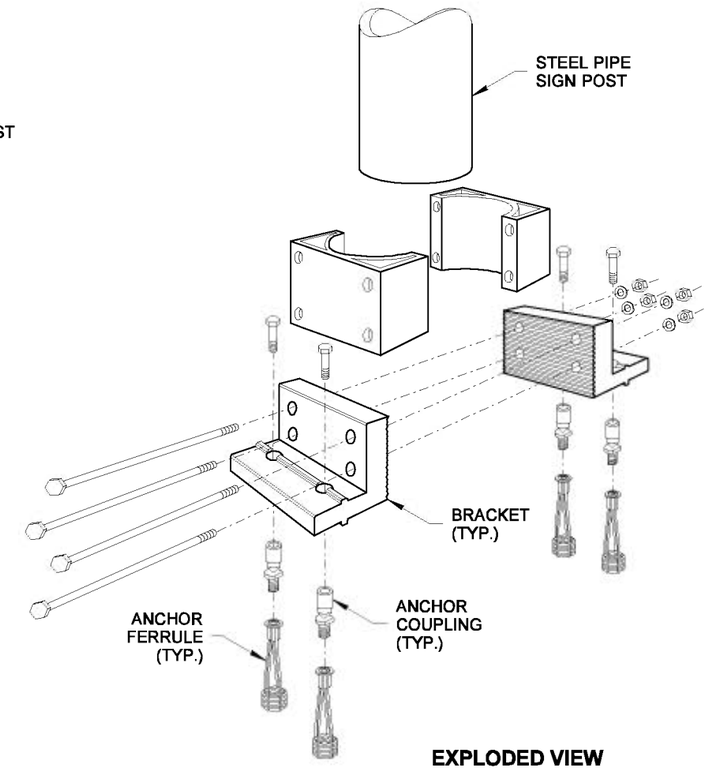

EXPLODED VIEW

BREAKAWAY SIGN BRACKET ASSEMBLY

NOTES

1. Dimensions for the parts used to assemble the base connections are intentionally not shown. Base connections are patented, manufactured products that are in compliance with NCHRP 350 crash test criteria. The base connection details are only shown on this plan to illustrate how the parts are assembled.
2. For Steel Sign Support Foundation, see Standard Plan G-25.10.
3. For "H1" refer to the Sign Specification Sheet in the Contract.
4. Mounting brackets with steel straps shall be the stainless steel one bolt, flared leg bracket and 3/4" wide, 0.030" thick strap "Band-it" products or an approved equal.

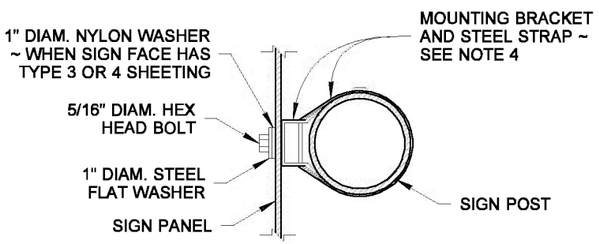

SECTION (B)

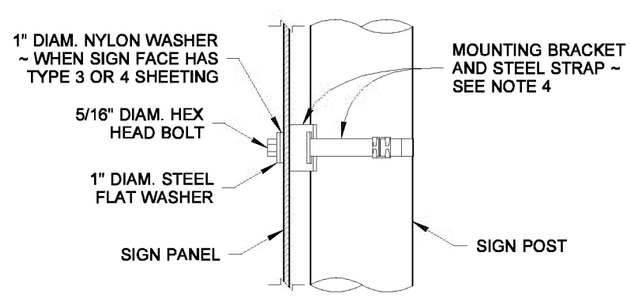

DETAIL (C)

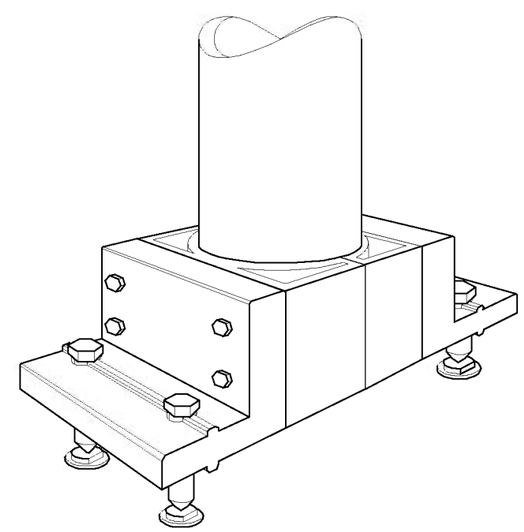

PERSPECTIVE VIEW

BREAKAWAY SIGN BRACKET ASSEMBLY

EXPIRES AUGUST 9, 2009

NOTE: THIS PLAN IS NOT A LEGAL ENGINEERING DOCUMENT BUT AN ELECTRONIC DUPLICATE. THE ORIGINAL, SIGNED BY THE ENGINEER AND APPROVED FOR PUBLICATION, IS KEPT ON FILE AT THE WASHINGTON STATE DEPARTMENT OF TRANSPORTATION. A COPY MAY BE OBTAINED UPON REQUEST.

STEEL SIGN SUPPORT
TYPE AP
INSTALLATION DETAILS
STANDARD PLAN G-24.10-00

SHEET 1 OF 1 SHEET

APPROVED FOR PUBLICATION

Pasco Bakotich III — STATE DESIGN ENGINEER
11-8-07 — DATE

Washington State Department of Transportation

EFFECTIVE: AUGUST 6, 2012 TO August 4, 2013
EFFECTIVE: AUGUST 6, 2012 TO August 4, 2013
EFFECTIVE: AUGUST 6, 2012 TO August 4, 2013
EFFECTIVE: AUGUST 6, 2012 TO August 4, 2013

EFFECTIVE: AUGUST 6, 2012 TO August 4, 2013
EFFECTIVE: AUGUST 6, 2012 TO August 4, 2013

DRAWN BY: LISA CYFORD

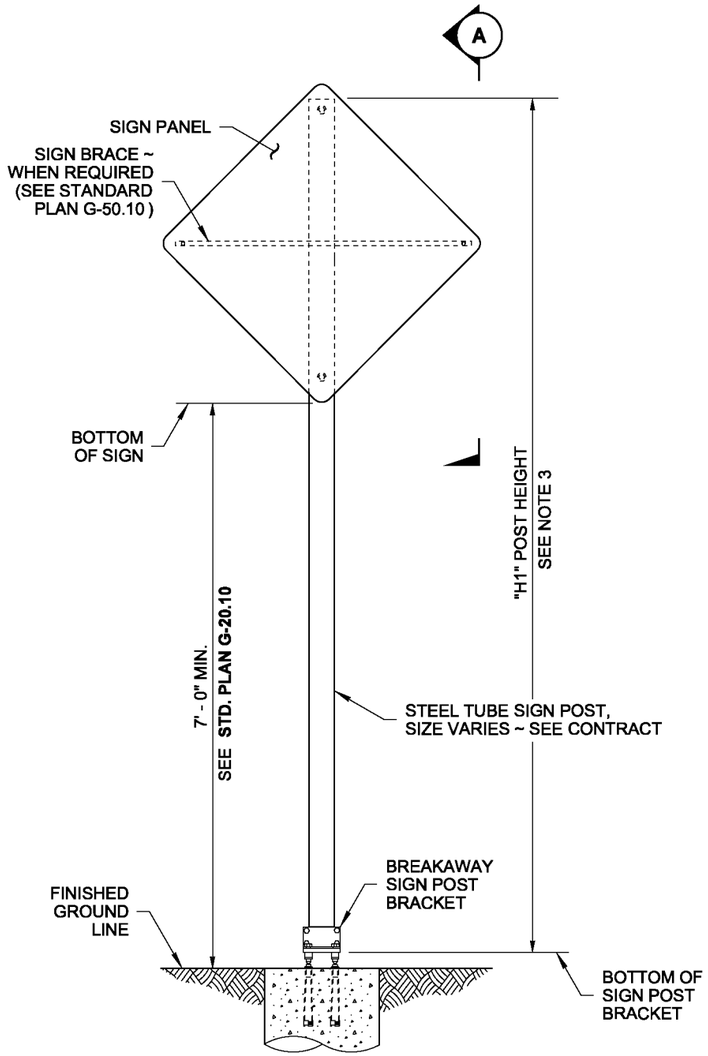

ELEVATION

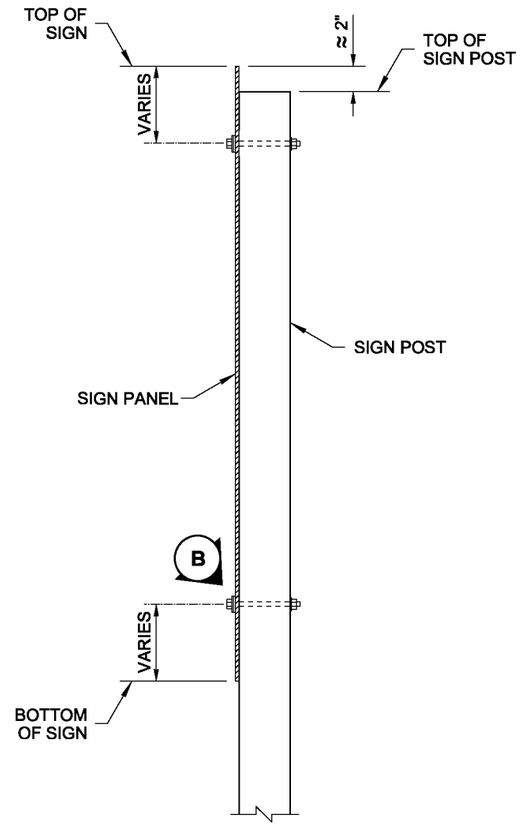

VIEW A

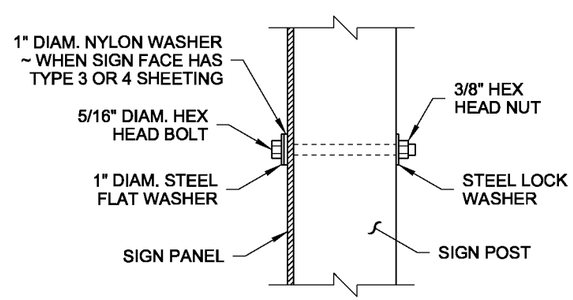

DETAIL B

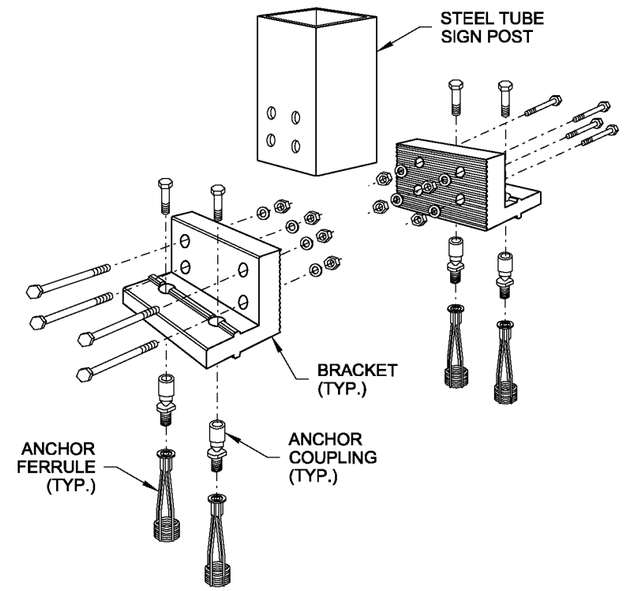

EXPLODED VIEW

BREAKAWAY SIGN BRACKET ASSEMBLY

NOTES

1. Dimensions for the parts used to assemble the base connections are intentionally not shown. Base connections are patented manufactured products that are in compliance with NCHRP 350 crash test criteria. The base connection details are only shown on this plan to illustrate how the parts are assembled.
2. For Steel Sign Support Foundations, see **Standard Plan G-25.10.**
3. For "H1" refer to the Sign Specification Sheet in the Contract.

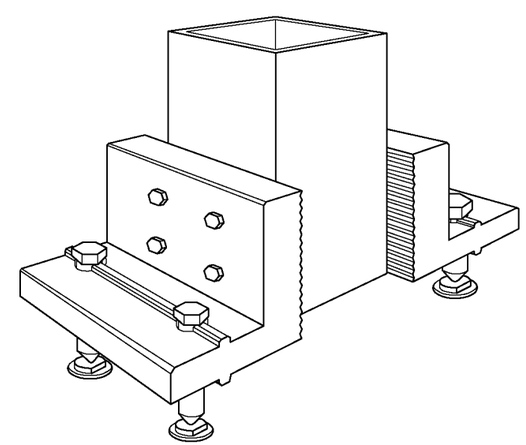

PERSPECTIVE VIEW

BREAKAWAY SIGN BRACKET ASSEMBLY

NOTE: THIS PLAN IS NOT A LEGAL ENGINEERING DOCUMENT BUT AN ELECTRONIC DUPLICATE. THE ORIGINAL, SIGNED BY THE ENGINEER AND APPROVED FOR PUBLICATION, IS KEPT ON FILE AT THE WASHINGTON STATE DEPARTMENT OF TRANSPORTATION. A COPY MAY BE OBTAINED UPON REQUEST.

STEEL SIGN SUPPORT TYPE AS INSTALLATION DETAILS STANDARD PLAN G-24.20-01

SHEET 1 OF 1 SHEET

APPROVED FOR PUBLICATION

Pasco Bakotich III — STATE DESIGN ENGINEER

02-07-12 — DATE

Washington State Department of Transportation

EFFECTIVE: AUGUST 6, 2012 TO August 4, 2013
EFFECTIVE: AUGUST 6, 2012 TO August 4, 2013
EFFECTIVE: AUGUST 6, 2012 TO August 4, 2013
EFFECTIVE: AUGUST 6, 2012 TO August 4, 2013

EFFECTIVE: AUGUST 6, 2012 TO August 4, 2013
EFFECTIVE: AUGUST 6, 2012 TO August 4, 2013

DRAWN BY: LISA CYFORD

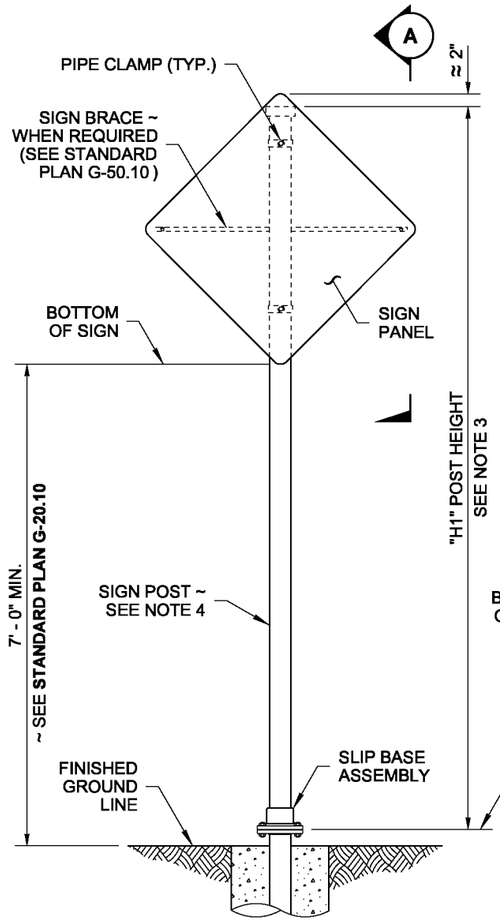

ELEVATION
TYPE PL SIGN SUPPORT

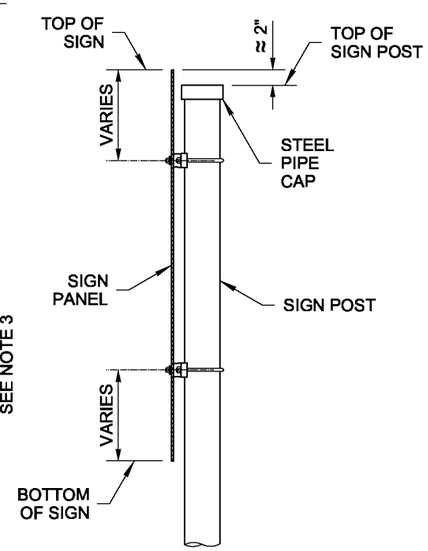

VIEW A

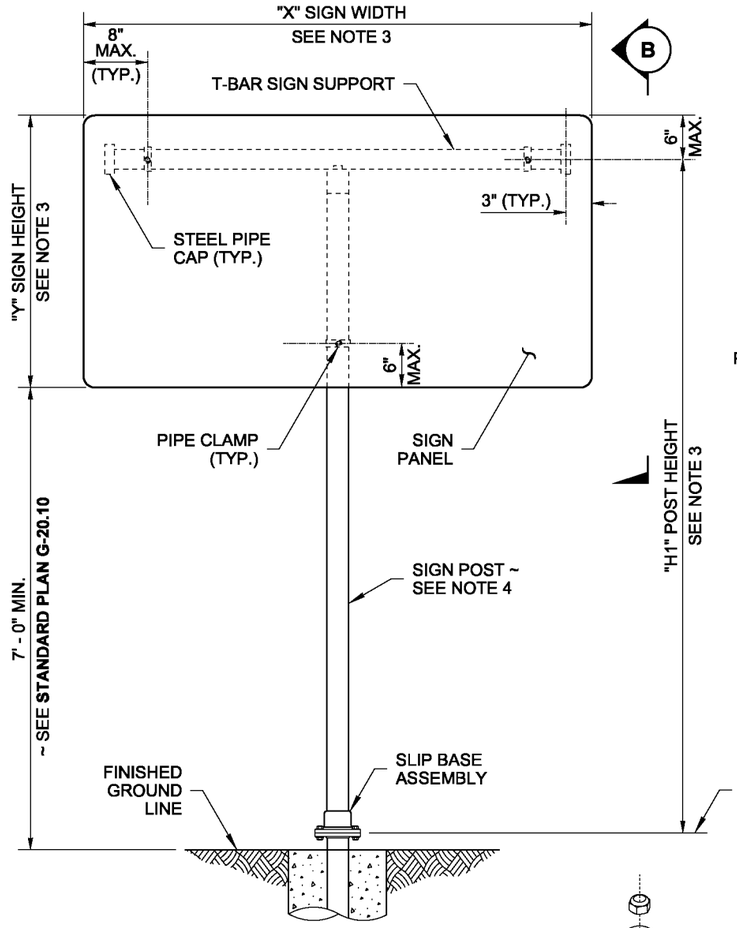

ELEVATION
TYPE PL-T SIGN SUPPORT

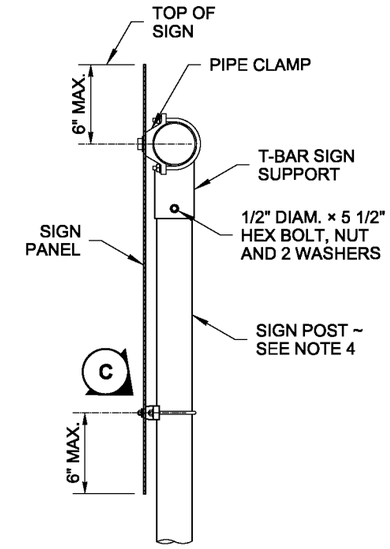

VIEW B

NOTES

1. Dimensions for the parts used to assemble the base connections are intentionally not shown. Base connections are patented manufactured products that are in compliance with NCHRP 350 crash test criteria. The base connection details are only shown on this plan to illustrate how the parts are assembled.
2. For Steel Sign Support Foundations, see **Standard Plan G-25.10.**
3. For "X", "Y", "H1", and "H2", refer to the Sign Specification Sheet in the Contract.
4. Sign posts shall be 2 1/2" nominal I.D. galvanized Schedule 80 steel pipe.
5. Do not tighten any slip plate bolt to the recommended torque before pretightening the other bolts. Progressively tighten the three slip plate bolts in 10 ft-lbs increments, alternately, to a final torque of 38 ft-lbs on each bolt.

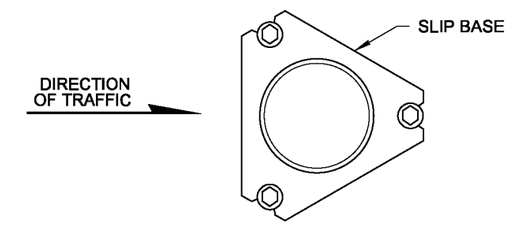

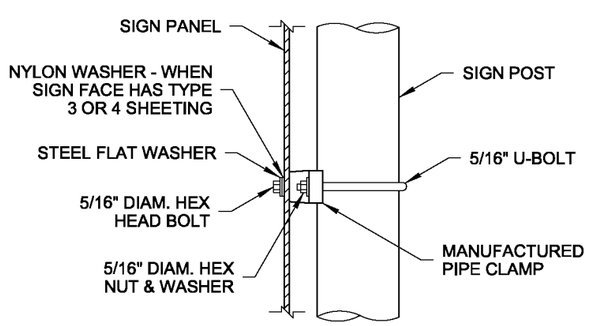

DETAIL C

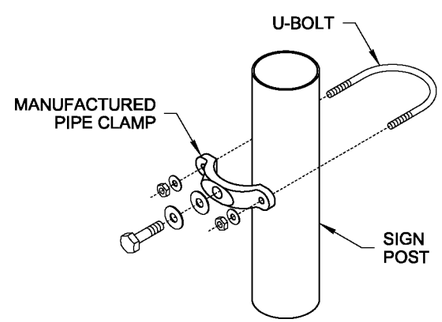

EXPLODED IVEW
PIPE CLAMP AND U-BOLT

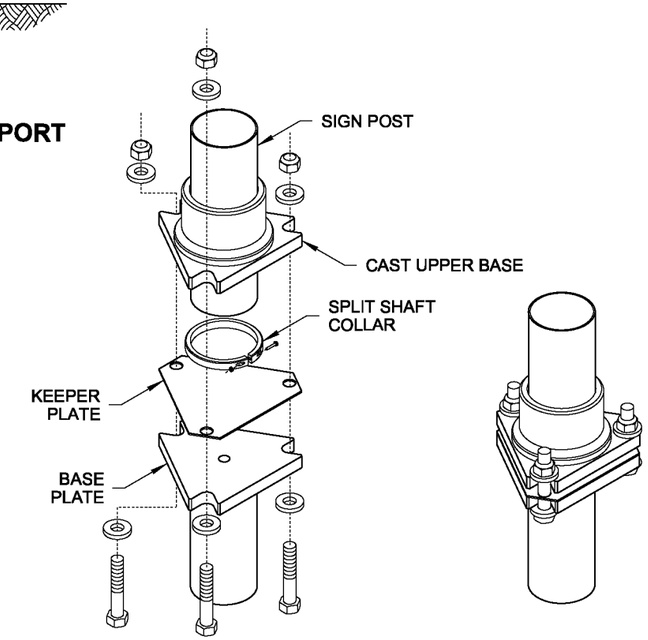

EXPLODED VIEW **ISOMETRIC VIEW**
TYPE PL SIGN SUPPORT

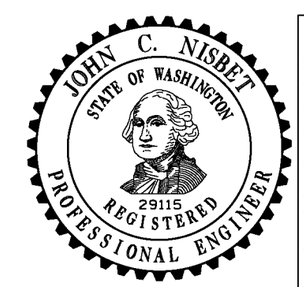

NOTE: THIS PLAN IS NOT A LEGAL ENGINEERING DOCUMENT BUT AN ELECTRONIC DUPLICATE. THE ORIGINAL, SIGNED BY THE ENGINEER AND APPROVED FOR PUBLICATION, IS KEPT ON FILE AT THE WASHINGTON STATE DEPARTMENT OF TRANSPORTATION. A COPY MAY BE OBTAINED UPON REQUEST.

STEEL SIGN SUPPORT TYPES PL, PL-T, & PL-U INSTALLATIONS DETAILS STANDARD PLAN G-24.30-01

SHEET 1 OF 2 SHEETS

APPROVED FOR PUBLICATION

Pasco Bakotich III — STATE DESIGN ENGINEER
02-07-12 — DATE

Washington State Department of Transportation

EFFECTIVE: AUGUST 6, 2012 TO August 4, 2013
EFFECTIVE: AUGUST 6, 2012 TO August 4, 2013
EFFECTIVE: AUGUST 6, 2012 TO August 4, 2013
EFFECTIVE: AUGUST 6, 2012 TO August 4, 2013

EFFECTIVE: AUGUST 6, 2012 TO August 4, 2013
EFFECTIVE: AUGUST 6, 2012 TO August 4, 2013

DRAWN BY: LISA CYFORD

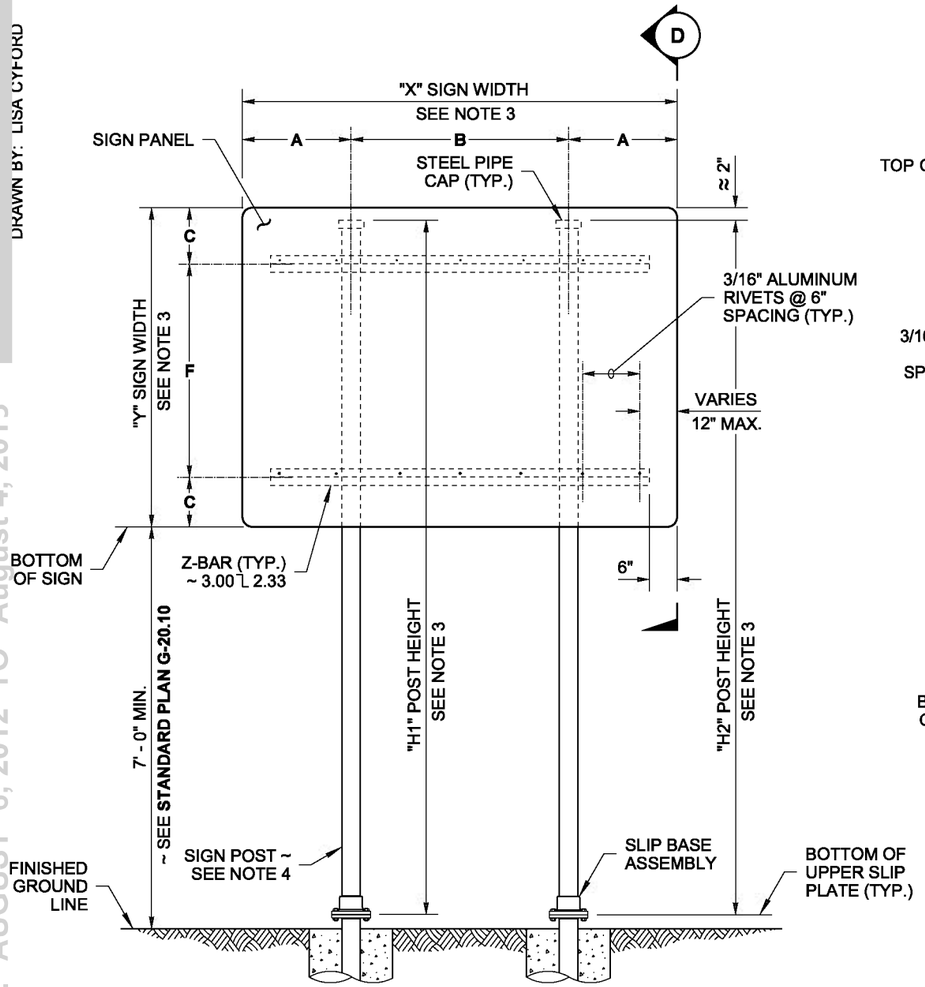

ELEVATION
TYPE PL SIGN SUPPORT
DUAL POST INSTALLATION

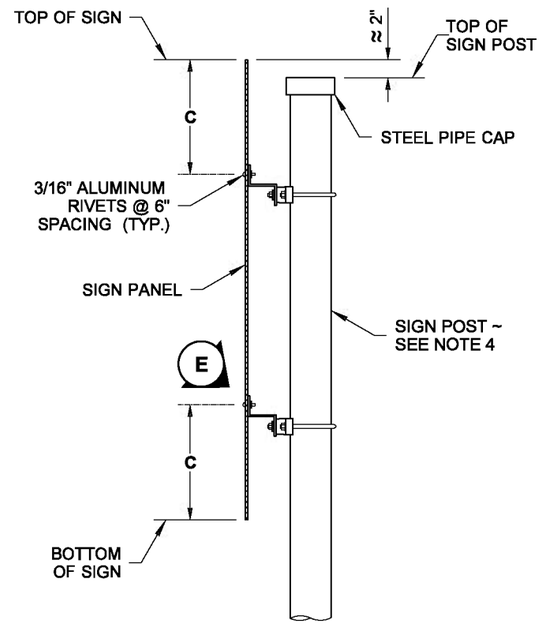

VIEW D

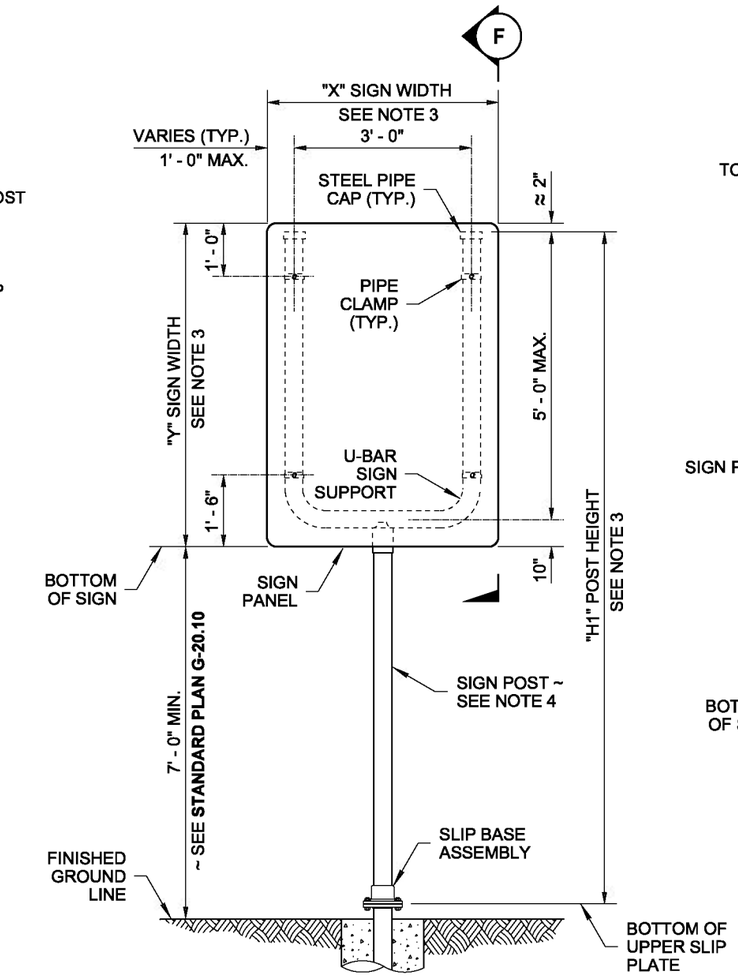

ELEVATION
TYPE PL-U SIGN SUPPORT

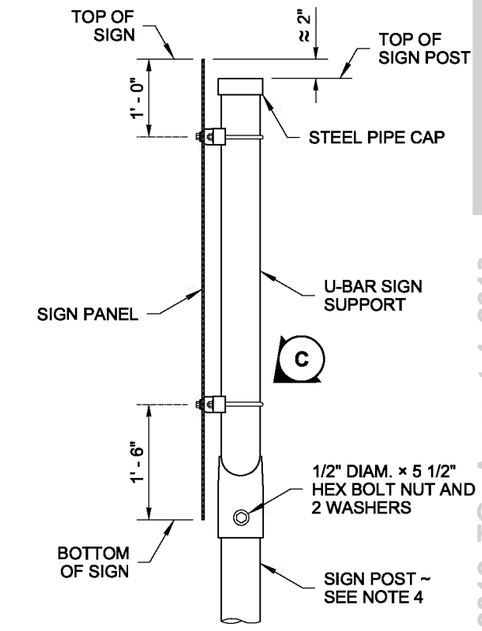

VIEW F

	"X" SIGN WIDTH		
	6' - 0"	8' - 0"	10' - 0"
A	1' - 0"	2' - 0"	3' - 0"
B	3' - 0"	4' - 0"	4' - 0"

	"Y" SIGN HEIGHT		
	6' - 0"	8' - 0"	10' - 0"
C	1' - 0"	2' - 0"	3' - 0"
F	4' - 0"	4' - 0"	4' - 0"

A, B, C, & F, MAY BE INTERPOLATED
FOR INTERMEDIATE SIGN SIZES

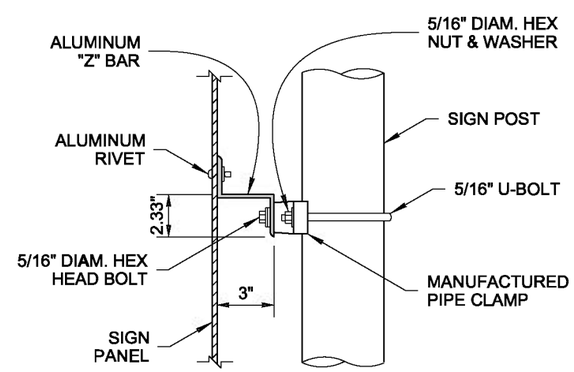

DETAIL E

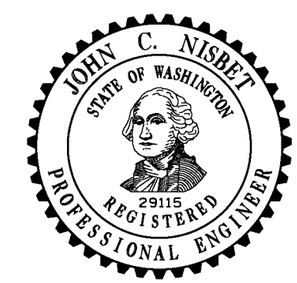

NOTE: THIS PLAN IS NOT A LEGAL ENGINEERING DOCUMENT BUT AN ELECTRONIC DUPLICATE. THE ORIGINAL, SIGNED BY THE ENGINEER AND APPROVED FOR PUBLICATION, IS KEPT ON FILE AT THE WASHINGTON STATE DEPARTMENT OF TRANSPORTATION. A COPY MAY BE OBTAINED UPON REQUEST.

STEEL SIGN SUPPORT TYPES PL, PL-T, & PL-U INSTALLATIONS DETAILS STANDARD PLAN G-24.30-01

SHEET 2 OF 2 SHEETS

APPROVED FOR PUBLICATION

Pasco Bakotich III — STATE DESIGN ENGINEER
02-07-12 — DATE

Washington State Department of Transportation

EFFECTIVE: AUGUST 6, 2012 TO August 4, 2013
EFFECTIVE: AUGUST 6, 2012 TO August 4, 2013
EFFECTIVE: AUGUST 6, 2012 TO August 4, 2013
EFFECTIVE: AUGUST 6, 2012 TO August 4, 2013

EFFECTIVE: AUGUST 6, 2012 TO August 4, 2013

DRAWN BY: LISA GYFORD

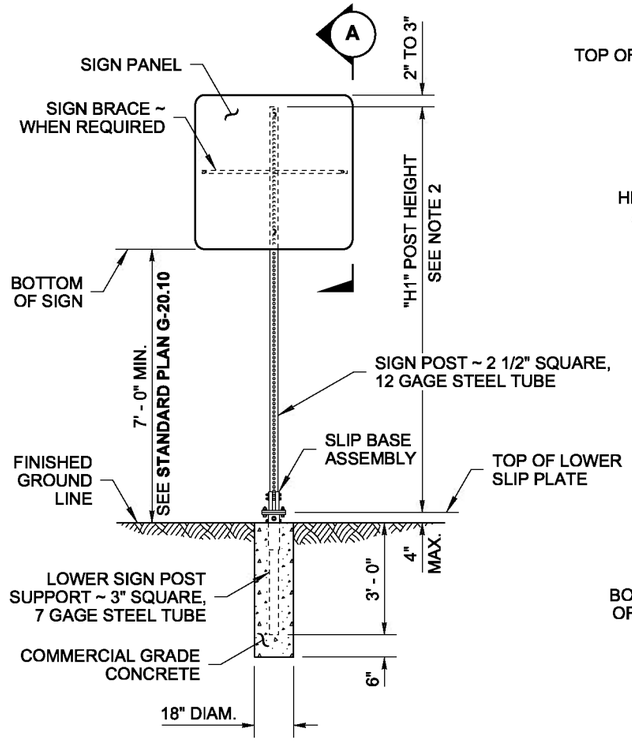

ELEVATION

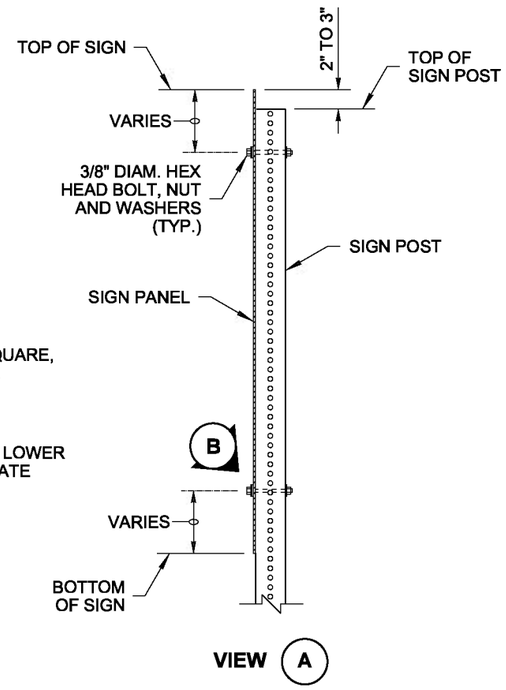

VIEW A

TYPE SB-1, SB-2 & SB-3 SIGN SUPPORT

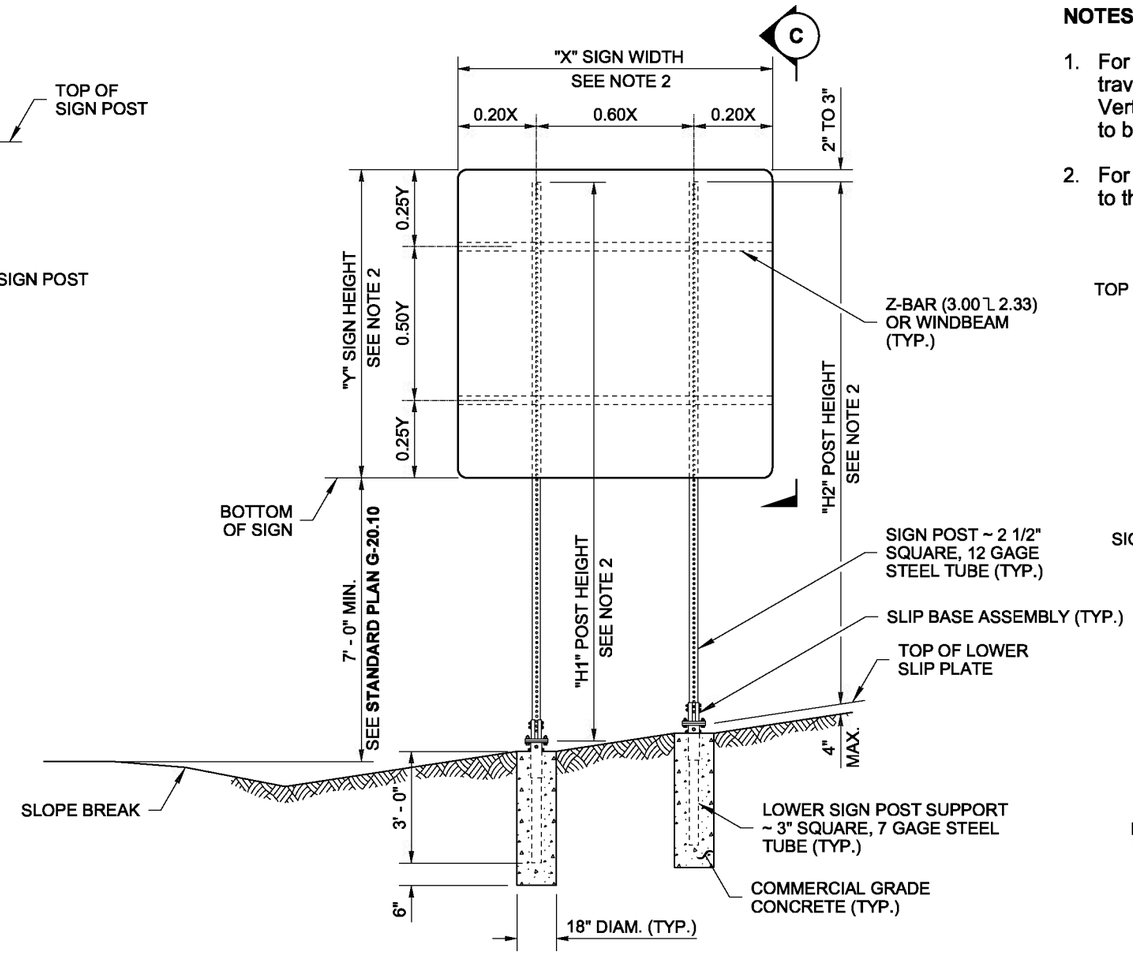

ELEVATION

TYPE SB-1, SB-2 & SB-3 SIGN SUPPORT
DUAL POST INSTALLATION

NOTES

1. For "W", Horizontal distance from edge of traveled way to center of nearest post, and "V", Vertical distance from edge of traveled way to bottom of sign, see **Standard Plan G-20.10.**
2. For "X", "Y", "H1", "H2", "H3", and "H4" refer to the Sign Specification Sheet in the Contract.

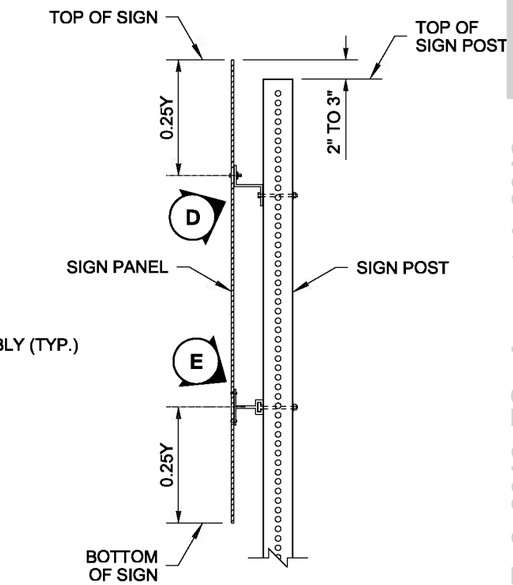

VIEW C

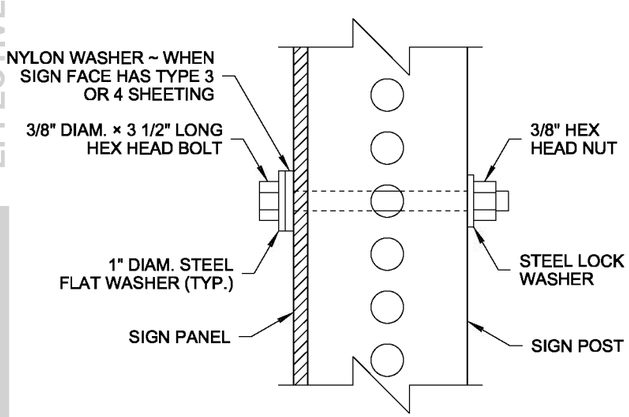

DETAIL B

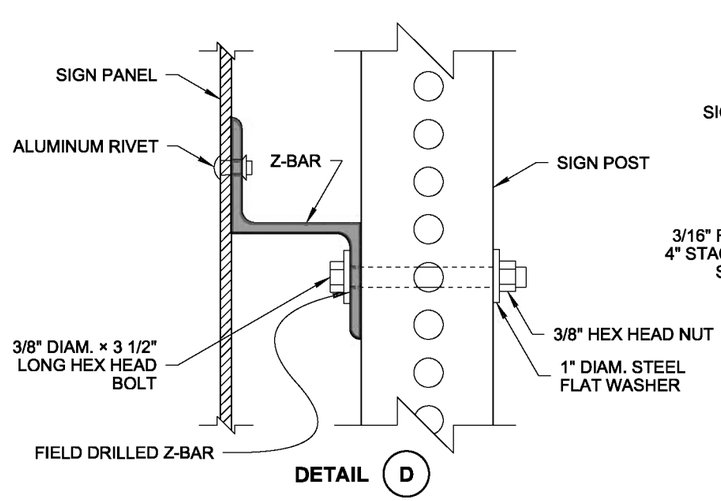

DETAIL D

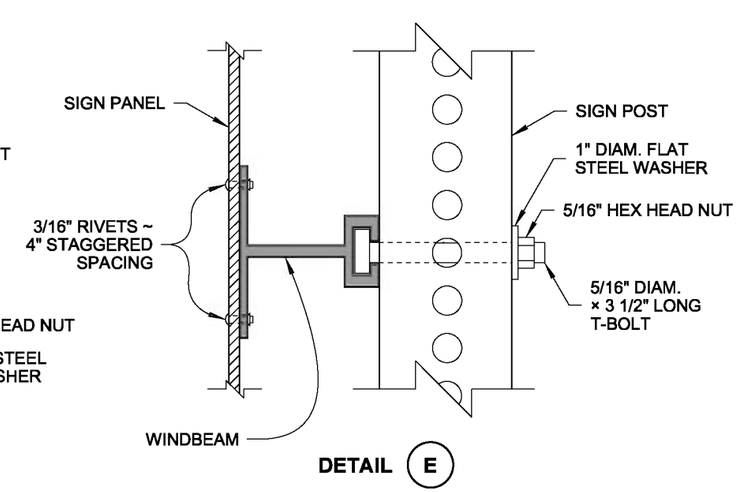

DETAIL E

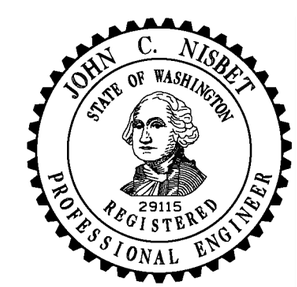

NOTE: THIS PLAN IS NOT A LEGAL ENGINEERING DOCUMENT BUT AN ELECTRONIC DUPLICATE. THE ORIGINAL, SIGNED BY THE ENGINEER AND APPROVED FOR PUBLICATION, IS KEPT ON FILE AT THE WASHINGTON STATE DEPARTMENT OF TRANSPORTATION. A COPY MAY BE OBTAINED UPON REQUEST.

STEEL SIGN SUPPORT TYPES SB-1, SB-2 & SB-3 INSTALLATION DETAILS STANDARD PLAN G-24.40-02

SHEET 1 OF 2 SHEETS

APPROVED FOR PUBLICATION

Pasco Bakotich III — STATE DESIGN ENGINEER

02-07-12 — DATE

Washington State Department of Transportation

EFFECTIVE: AUGUST 6, 2012 TO August 4, 2013

EFFECTIVE: AUGUST 6, 2012 TO August 4, 2013
EFFECTIVE: AUGUST 6, 2012 TO August 4, 2013

DRAWN BY: LISA CYFORD

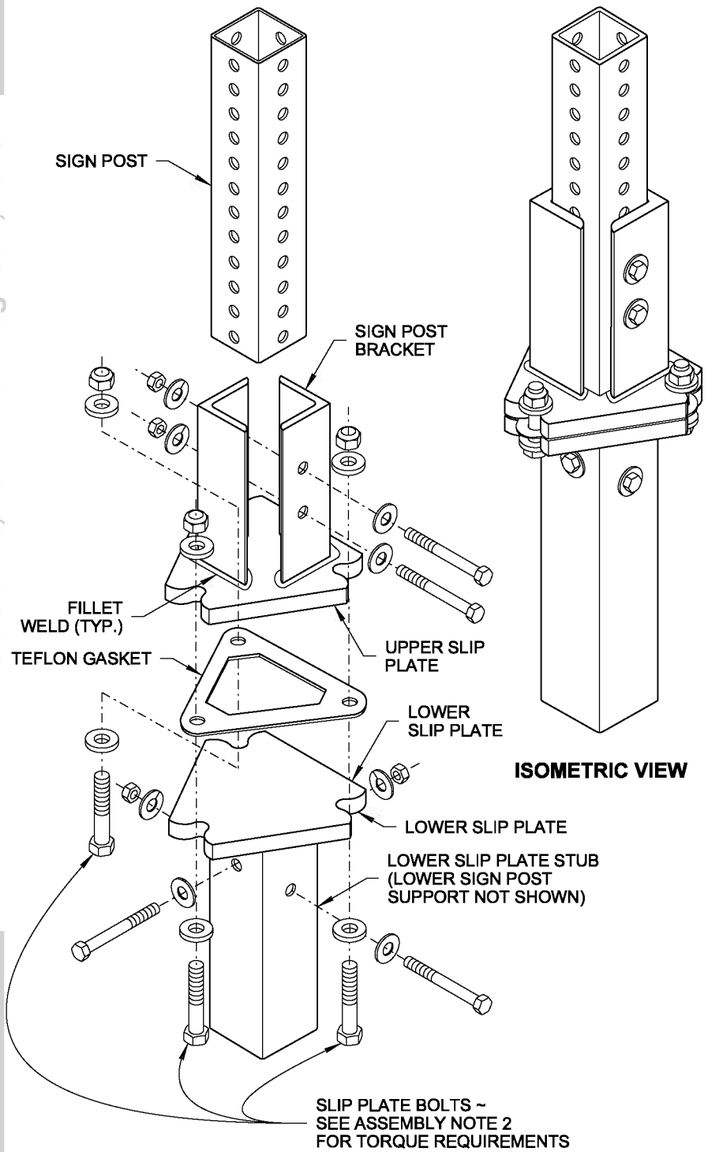

TYPE SB-1
SLIP BASE ASSEMBLY

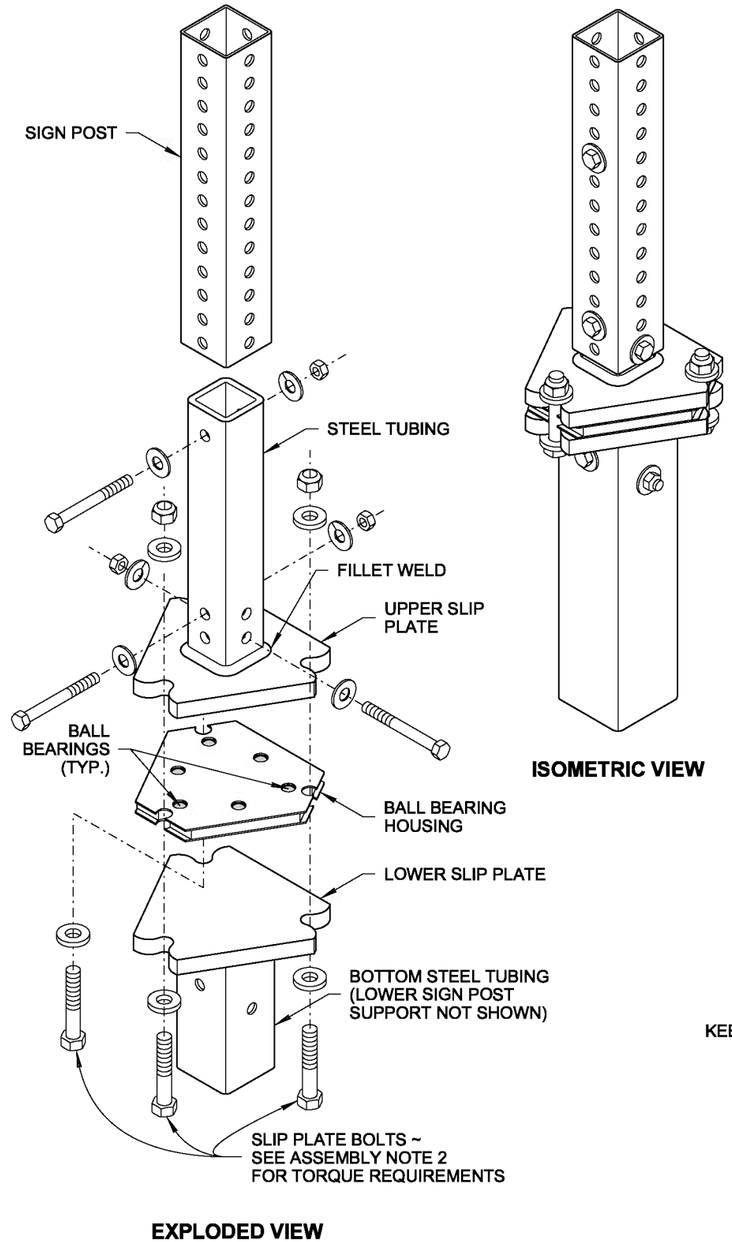

TYPE SB-2
SLIP BASE ASSEMBLY

ASSEMBLY NOTES

1. Dimensions for the parts used to assemble the base connections are intentionally not shown. Base connections are patented, manufactured products that are in compliance with NCHRP 350 crash test criteria. The base connection details are only shown on this plan to illustrate how the parts are assembled.

2. Do not tighten any single Slip Plate Bolt to the recommended torque before pre-tightening the other bolts. Progressively tighten the three Slip Plate Bolts in 10 ft-lb increments, alternately, to a final torque of 40 ft-lbs on each.

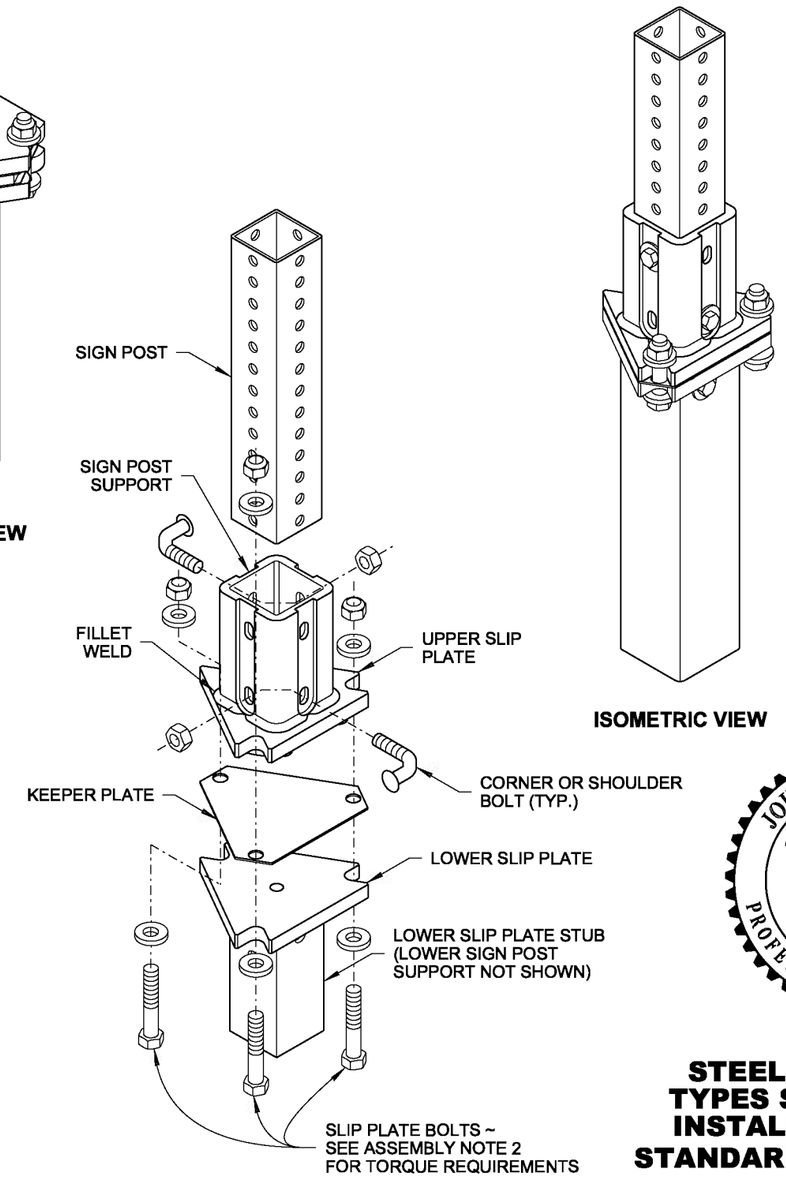

TYPE SB-3
SLIP BASE ASSEMBLY

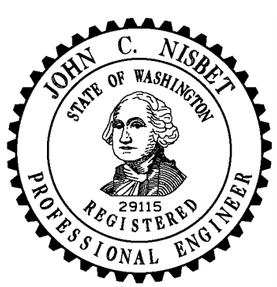

NOTE: THIS PLAN IS NOT A LEGAL ENGINEERING DOCUMENT BUT AN ELECTRONIC DUPLICATE. THE ORIGINAL, SIGNED BY THE ENGINEER AND APPROVED FOR PUBLICATION, IS KEPT ON FILE AT THE WASHINGTON STATE DEPARTMENT OF TRANSPORTATION. A COPY MAY BE OBTAINED UPON REQUEST.

STEEL SIGN SUPPORT TYPES SB-1, SB-2 & SB-3 INSTALLATION DETAILS STANDARD PLAN G-24.40-02

SHEET 2 OF 2 SHEETS

APPROVED FOR PUBLICATION

Pasco Bakotich III — STATE DESIGN ENGINEER
02-07-12 — DATE

Washington State Department of Transportation

EFFECTIVE: AUGUST 6, 2012 TO August 4, 2013
EFFECTIVE: AUGUST 6, 2012 TO August 4, 2013
EFFECTIVE: AUGUST 6, 2012 TO August 4, 2013
EFFECTIVE: AUGUST 6, 2012 TO August 4, 2013

EFFECTIVE: AUGUST 6, 2012 TO August 4, 2013

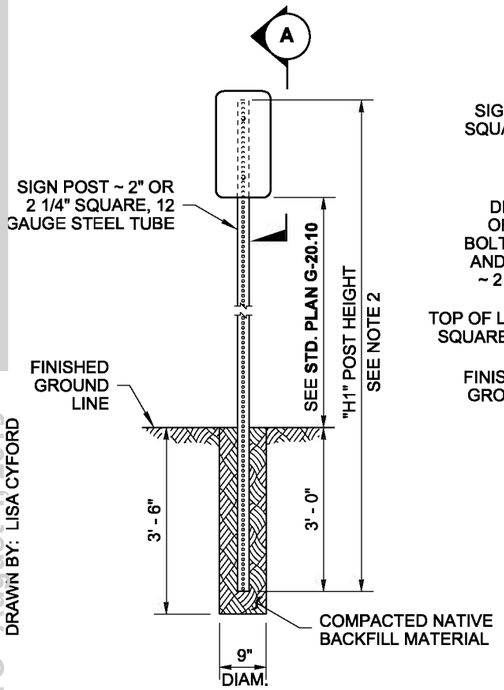

ELEVATION

TYPE ST-1 SIGN SUPPORT

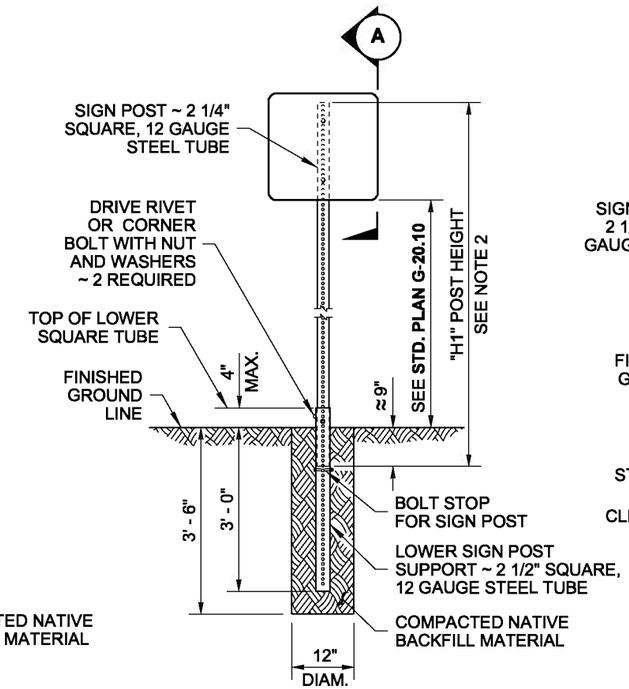

ELEVATION

TYPE ST-2 SIGN SUPPORT

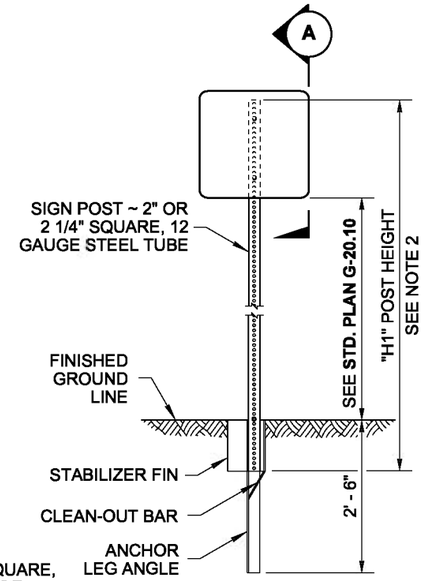

ELEVATION

TYPE ST-3 SIGN SUPPORT

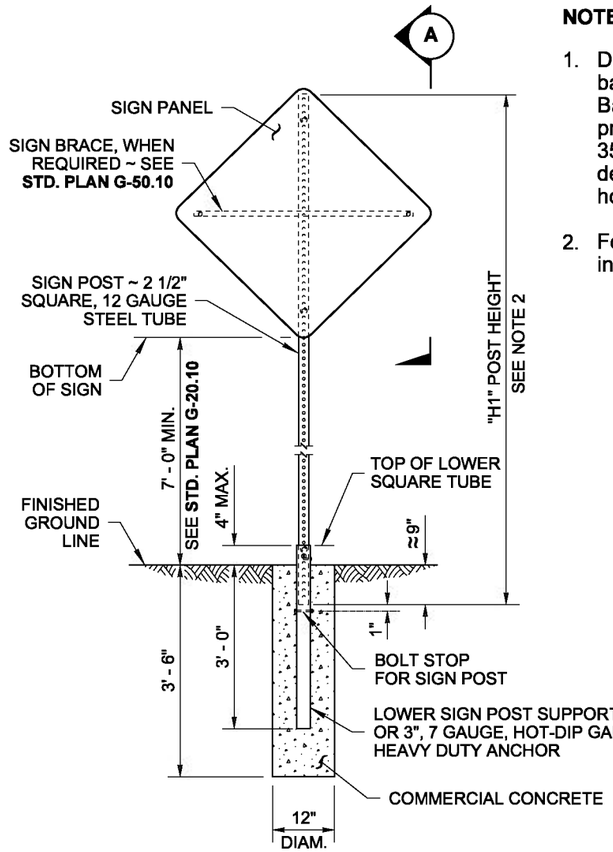

ELEVATION

TYPE ST-4 SIGN SUPPORT

NOTES

1. Dimensions for the parts used to assemble the base connections are intentionally not shown. Base connections are patented, manufactured products that are in compliance with NCHRP 350 crash test criteria. The base connection details are only shown on this plan to illustrate how the parts are assembled.
2. For "H1" refer to the Sign Specification Sheet in the Contract.

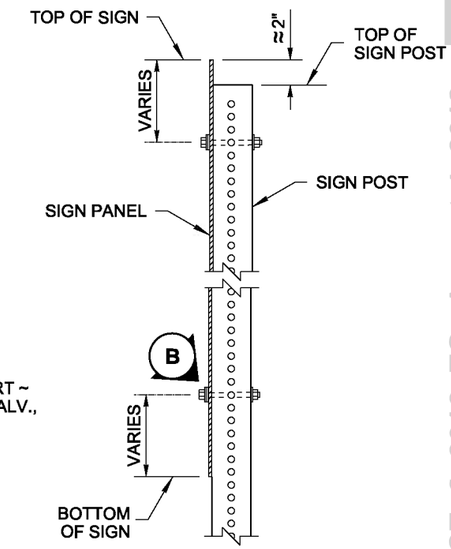

VIEW A

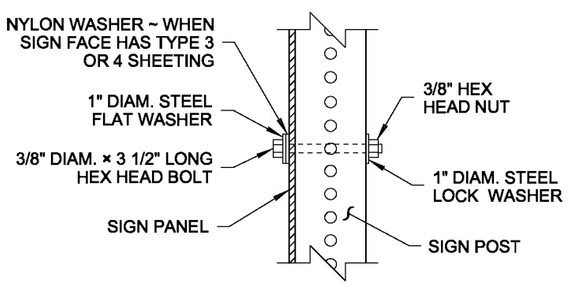

DETAIL B

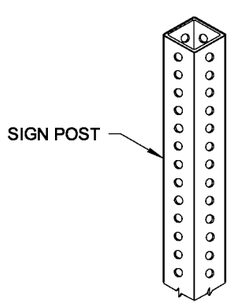

TYPE ST-1

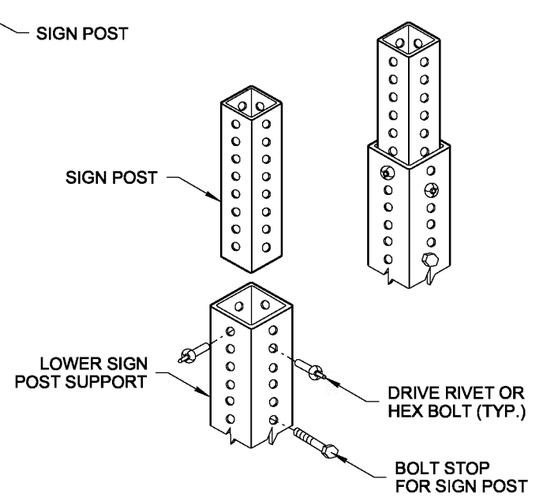

TYPE ST-2

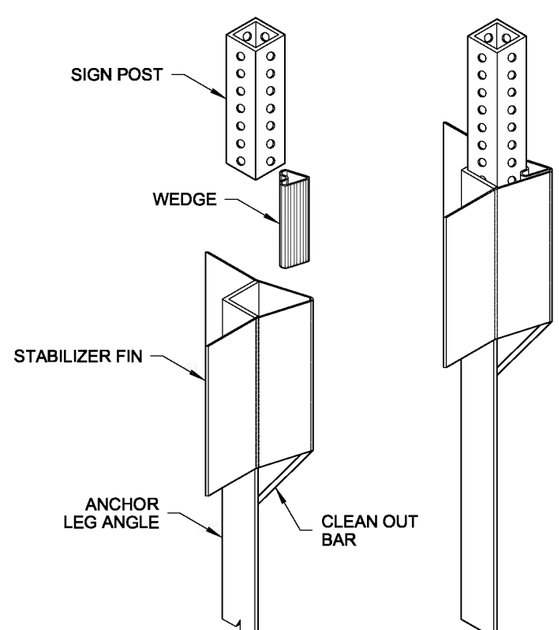

TYPE ST-3

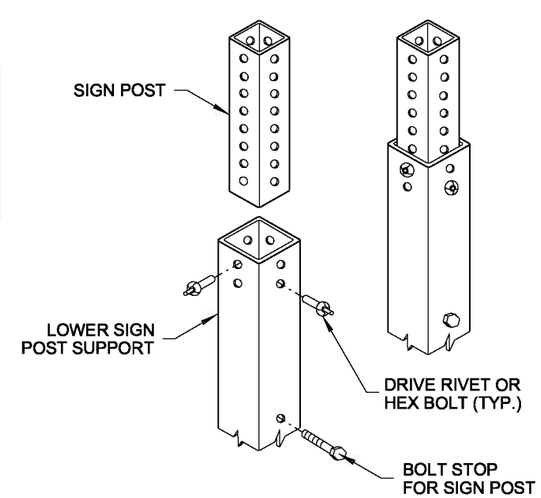

TYPE ST-4

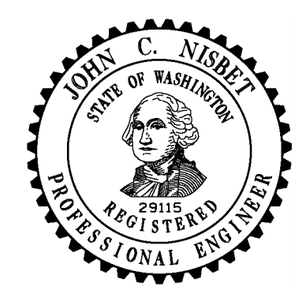

NOTE: THIS PLAN IS NOT A LEGAL ENGINEERING DOCUMENT BUT AN ELECTRONIC DUPLICATE. THE ORIGINAL, SIGNED BY THE ENGINEER AND APPROVED FOR PUBLICATION, IS KEPT ON FILE AT THE WASHINGTON STATE DEPARTMENT OF TRANSPORTATION. A COPY MAY BE OBTAINED UPON REQUEST.

STEEL SIGN SUPPORT TYPES ST-1 ~ ST-4 INSTALLATION DETAILS

STANDARD PLAN G-24.50-01

SHEET 1 OF 1 SHEET

APPROVED FOR PUBLICATION

Pasco Bakotich III — STATE DESIGN ENGINEER — *02-07-12* — DATE

Washington State Department of Transportation

DRAWN BY: LISA CYFORD

EFFECTIVE: AUGUST 6, 2012 TO August 4, 2013

EFFECTIVE: AUGUST 6, 2012 TO August 4, 2013

DRAWN BY: LISA CYFORD

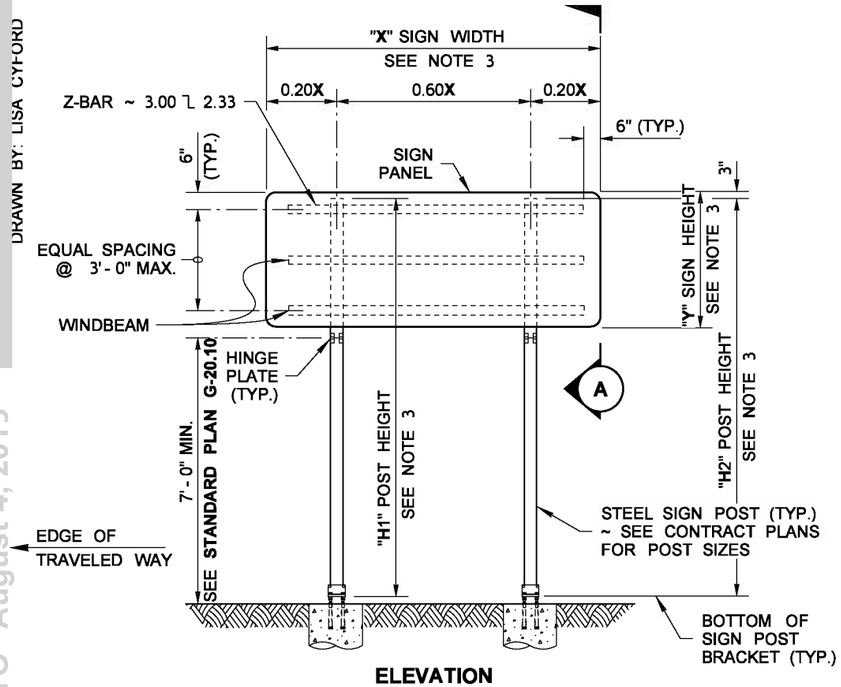

ELEVATION

TYPE TP-A OR TP-B SIGN SUPPORT

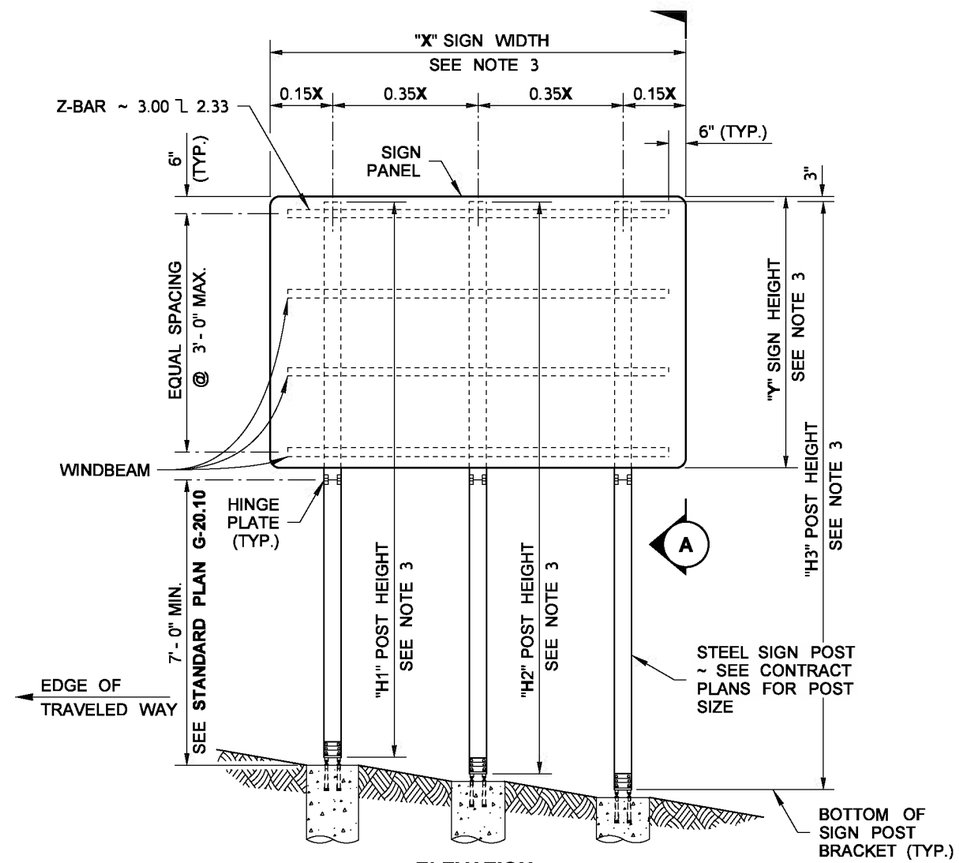

ELEVATION

TYPE TP-A OR TP-B SIGN SUPPORT

NOTES

1. Dimensions for the parts used to assemble the base connections are intentionally not shown. Base connections are patented, manufactured products that are in compliance with NCHRP 350 crash test criteria. The base connection details are only shown on this plan to illustrate how the parts are assembled.
2. For Steel Sign Support Foundations, see **Standard Plan G-25.10.**
3. For "X," "Y," "H1," "H2," and "H3," refer to the Sign Specification Sheet in the Contract.

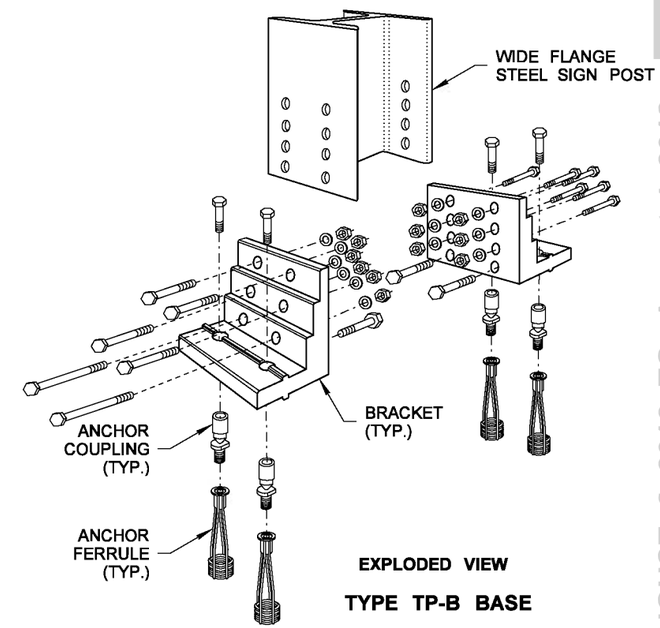

EXPLODED VIEW

TYPE TP-B BASE

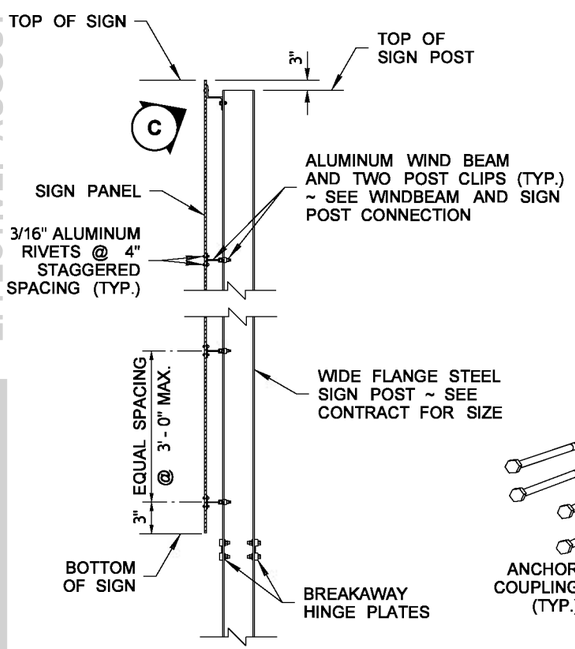

VIEW A

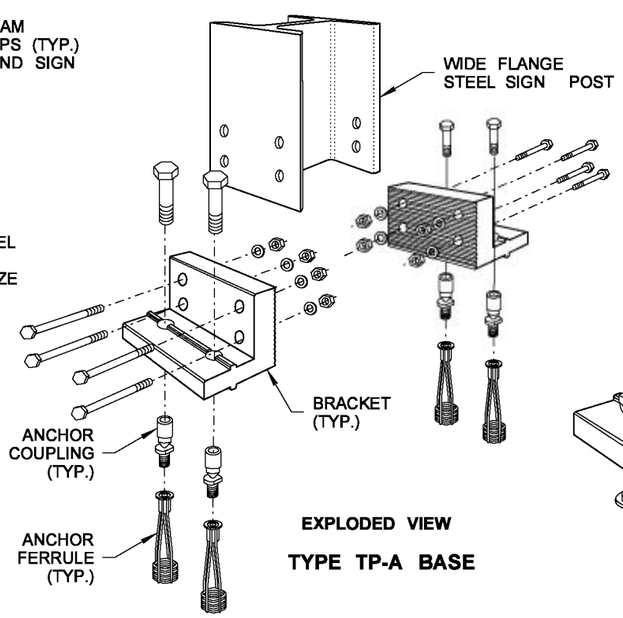

EXPLODED VIEW

TYPE TP-A BASE

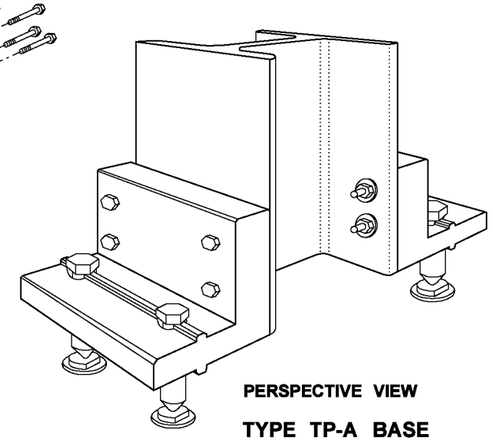

PERSPECTIVE VIEW

TYPE TP-A BASE

(W6×9)

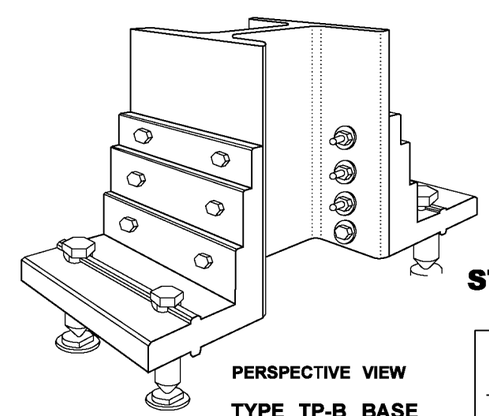

PERSPECTIVE VIEW

TYPE TP-B BASE

(W6×12 OR LARGER)

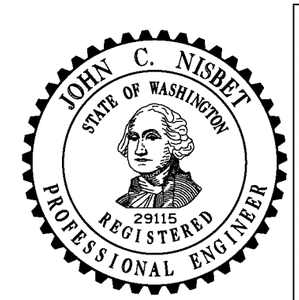

NOTE: THIS PLAN IS NOT A LEGAL ENGINEERING DOCUMENT BUT AN ELECTRONIC DUPLICATE. THE ORIGINAL, SIGNED BY THE ENGINEER AND APPROVED FOR PUBLICATION, IS KEPT ON FILE AT THE WASHINGTON STATE DEPARTMENT OF TRANSPORTATION. A COPY MAY BE OBTAINED UPON REQUEST.

STEEL SIGN SUPPORT TYPES TP-A AND TP-B INSTALLATION DETAILS STANDARD PLAN G-24.60-01

SHEET 1 OF 2 SHEETS

APPROVED FOR PUBLICATION

Pasco Bakotich III — STATE DESIGN ENGINEER

06-16-11 — DATE

Washington State Department of Transportation

EFFECTIVE: AUGUST 6, 2012 TO August 4, 2013

EFFECTIVE: AUGUST 6, 2012 TO August 4, 2013
EFFECTIVE: AUGUST 6, 2012 TO August 4, 2013

DRAWN BY: LISA CYFORD

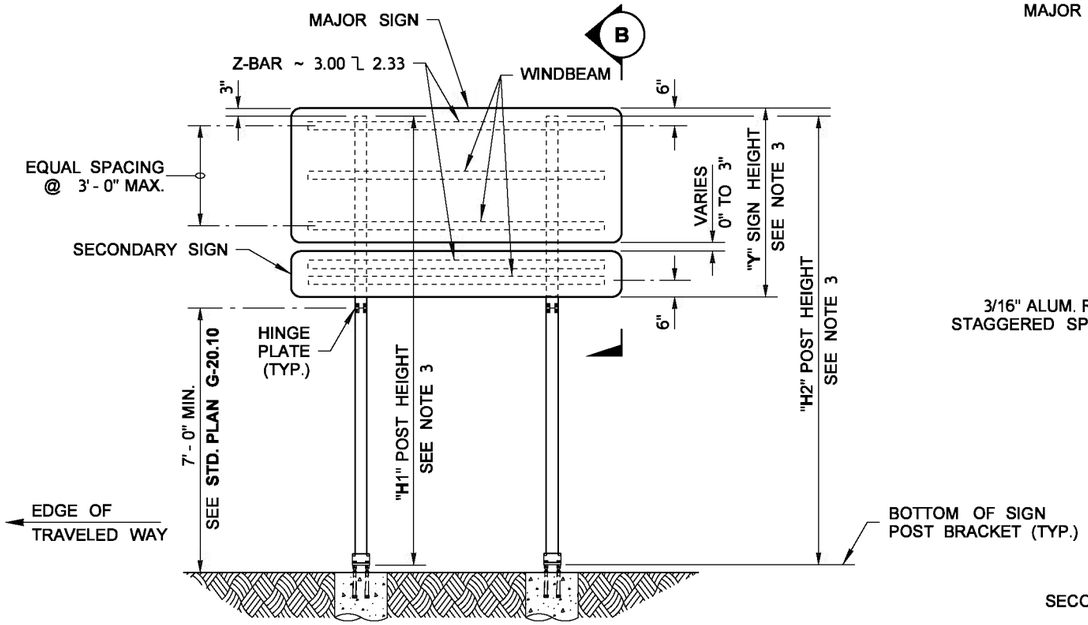

ELEVATION

MAJOR AND SECONDARY SIGN SUPPORT INSTALLATION

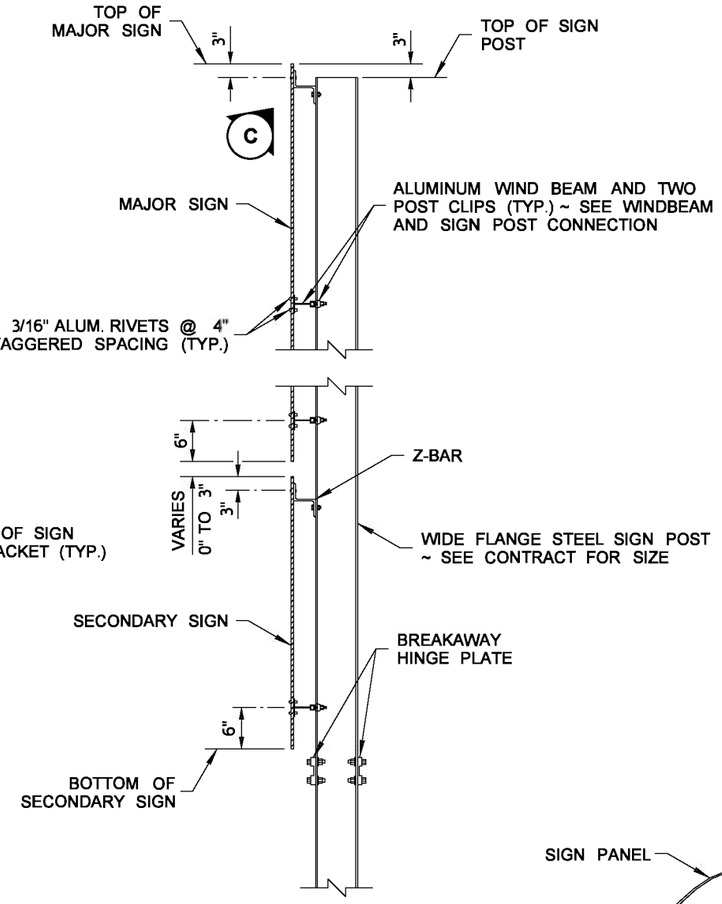

VIEW B

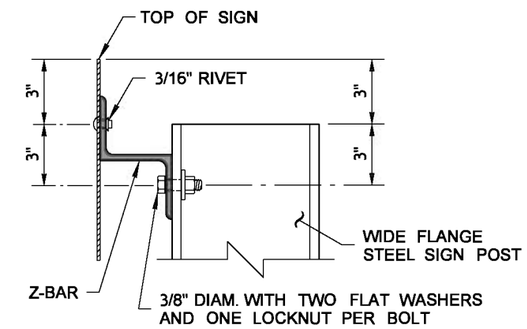

DETAIL C

(BOLT ON ONE SIDE OF EACH WIDE FLANGE STEEL SIGN POST)

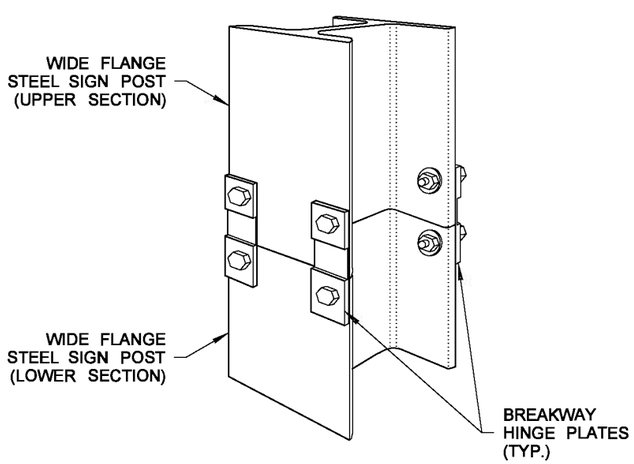

PERSPECTIVE VIEW

BREAKAWAY HINGE PLATE CONNECTION

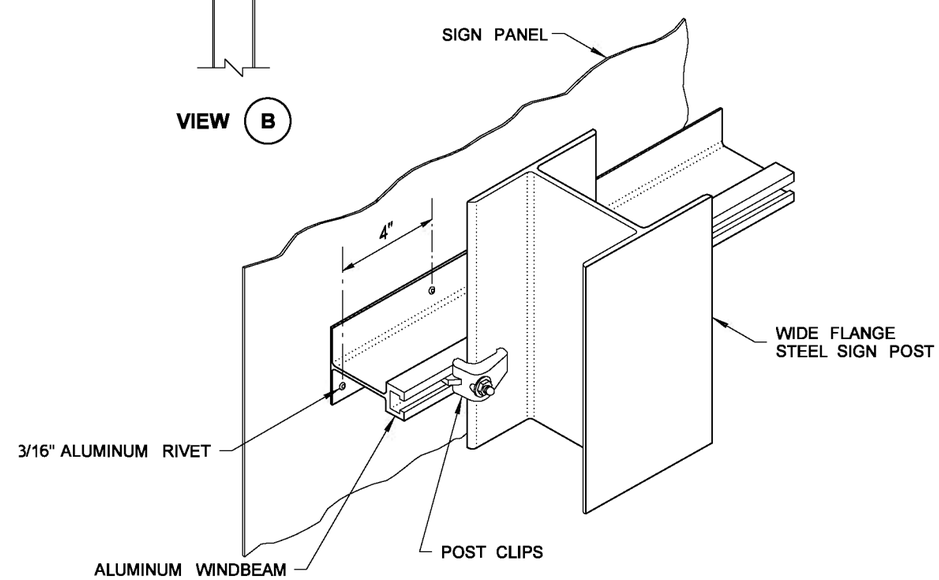

ISOMETRIC VIEW

WINDBEAM AND SIGN POST CONNECTION

(ATTACH POST CLIPS ON BOTH SIDES OF WIDE FLANGE STEEL SIGN POST)

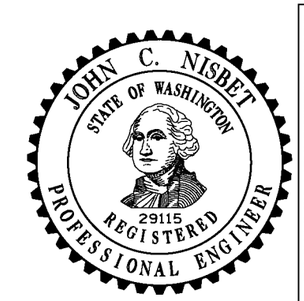

NOTE: THIS PLAN IS NOT A LEGAL ENGINEERING DOCUMENT BUT AN ELECTRONIC DUPLICATE. THE ORIGINAL, SIGNED BY THE ENGINEER AND APPROVED FOR PUBLICATION, IS KEPT ON FILE AT THE WASHINGTON STATE DEPARTMENT OF TRANSPORTATION. A COPY MAY BE OBTAINED UPON REQUEST.

STEEL SIGN SUPPORT TYPES TP-A AND TP-B INSTALLATION DETAILS

STANDARD PLAN G-24.60-01

SHEET 2 OF 2 SHEETS

APPROVED FOR PUBLICATION

Pasco Bakotich III — 06-16-11

STATE DESIGN ENGINEER — DATE

Washington State Department of Transportation

EFFECTIVE: AUGUST 6, 2012 TO August 4, 2013
EFFECTIVE: AUGUST 6, 2012 TO August 4, 2013
EFFECTIVE: AUGUST 6, 2012 TO August 4, 2013
EFFECTIVE: AUGUST 6, 2012 TO August 4, 2013

EFFECTIVE: AUGUST 6, 2012 TO August 4, 2013

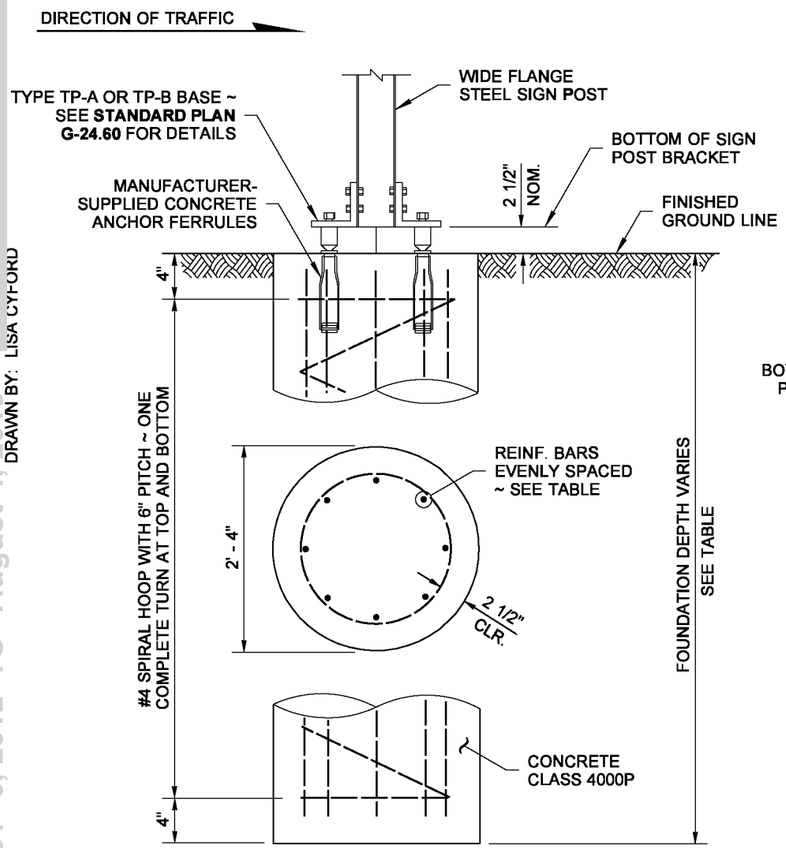

ELEVATION VIEW

TYPE TP-A & TYPE TP-B FOUNDATION

TYPE TP-A & TP-B FOUNDATION TABLE SEE NOTE 1					
POST SIZE		MAX. XYZ		VERTICAL REBAR	FDN. DEPTH (1)
ASTM A 36	ASTM A 992	2 POST (3)	3 POST		
W6 x 12	W6 x 9	1570	2355	8 ~ # 5	4' - 0"
W6 x 16	W6 x 12	2340	3510	8 ~ # 5	5' - 0"
W8 x 21	W8 x 18	4120	6180	8 ~ # 6	7' - 0"
W10 x 26	W10 x 22	6320	9480	8 ~ # 7	8' - 0"
W12 x 30	W12 x 26	8700	----	8 ~ # 7	9' - 0"

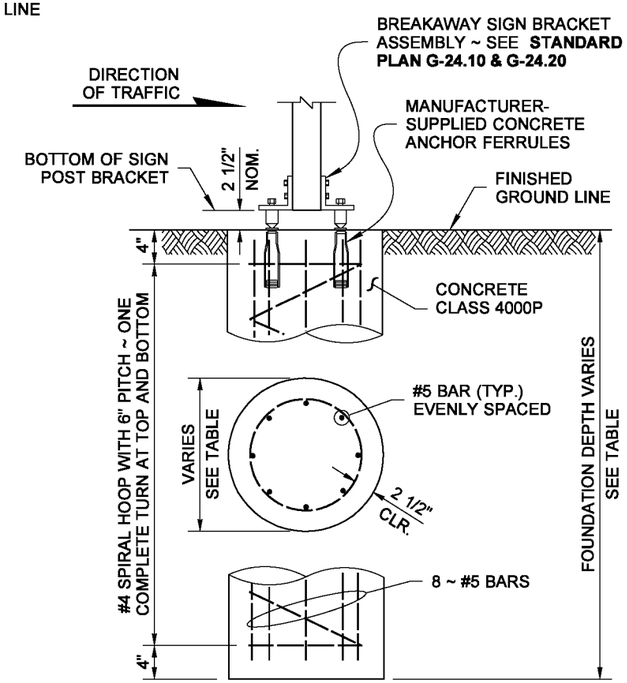

ELEVATION VIEW

TYPE AS & TYPE AP FOUNDATION

TYPE AS FOUNDATION TABLE			
POST SIZE	MAX. XYZ	FDN. DIAM.	FDN. DEPTH (1)
4" SQ.	250	18"	4' - 0"

TYPE AP FOUNDATION TABLE			
POST SIZE	MAX. XYZ	FDN. DIAM.	FDN. DEPTH (1)
3" O.D.	225	18"	3' - 6"
3 1/2" O.D.	250	18"	4' - 0"
4" O.D.	275	24"	4' - 0"
4 1/2" O.D.	300	24"	4' - 0"

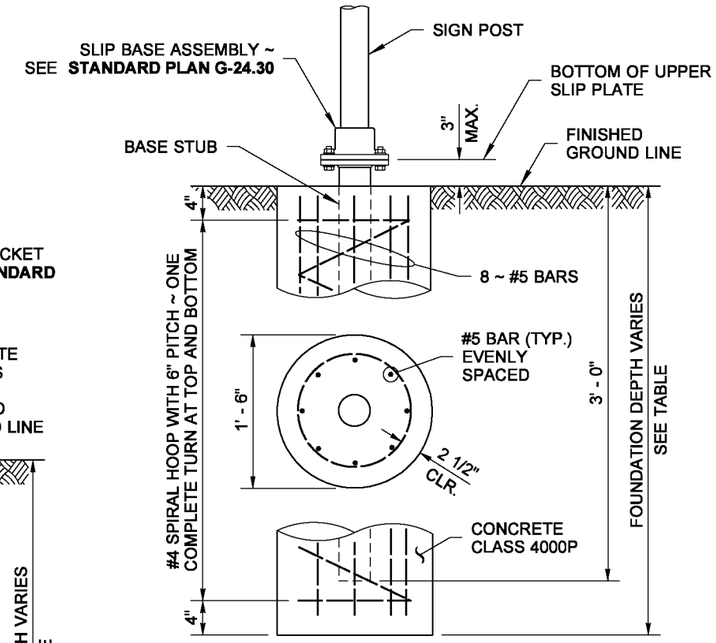

ELEVATION VIEW

TYPE PL, TYPE PL-T & TYPE PL-U FOUNDATION

TYPE PL, TYPE PL-T & TYPE PL-U FOUNDATION TABLE	
MAX. XYZ	FDN. DEPTH (1)
225	3' - 6"
265	4' - 0"
300	4' - 6"
600 (2)	4' - 6"

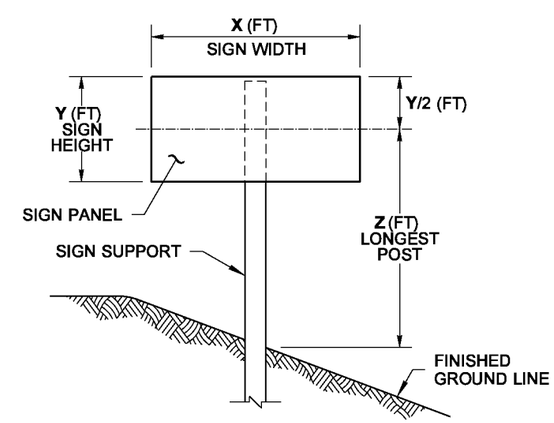

XYZ CALCULATION

XYZ (FT^3) = X × Y × Z
USED TO DETERMINE POST SIZE
~ SEE FOUNDATION TABLES

NOTES

1. Per TRANSPO: 5" to 8" square steel posts are acceptable and require type TP-B foundations.
2. Install conduit for post-mounted Junction Box in the concrete foundation, when required. See **Standard Plan J-40.35, Sheet 2.**

KEY NOTES

(1) Foundation depths based on allowable lateral bearing pressure in excess of 2500 PSF.

(2) Two-post installation.

(3) Single-post installations require square steel posts. For single-post installations, divide the (2) post MAX. XYZ in half.

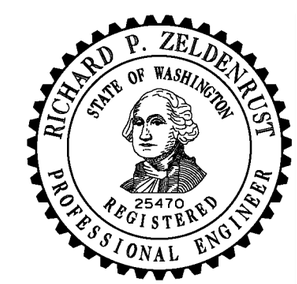

NOTE: THIS PLAN IS NOT A LEGAL ENGINEERING DOCUMENT BUT AN ELECTRONIC DUPLICATE. THE ORIGINAL, SIGNED BY THE ENGINEER AND APPROVED FOR PUBLICATION, IS KEPT ON FILE AT THE WASHINGTON STATE DEPARTMENT OF TRANSPORTATION. A COPY MAY BE OBTAINED UPON REQUEST.

STEEL SIGN SUPPORT FOUNDATION DETAILS

STANDARD PLAN G-25.10-03

SHEET 1 OF 1 SHEET

APPROVED FOR PUBLICATION

Pasco Bakotich III — STATE DESIGN ENGINEER
03-15-12 — DATE

Washington State Department of Transportation

DRAWN BY: LISA CYFORD

EFFECTIVE: AUGUST 6, 2012 TO August 4, 2013

EFFECTIVE: AUGUST 6, 2012 TO August 4, 2013

DRAWN BY: LISA CYFORD

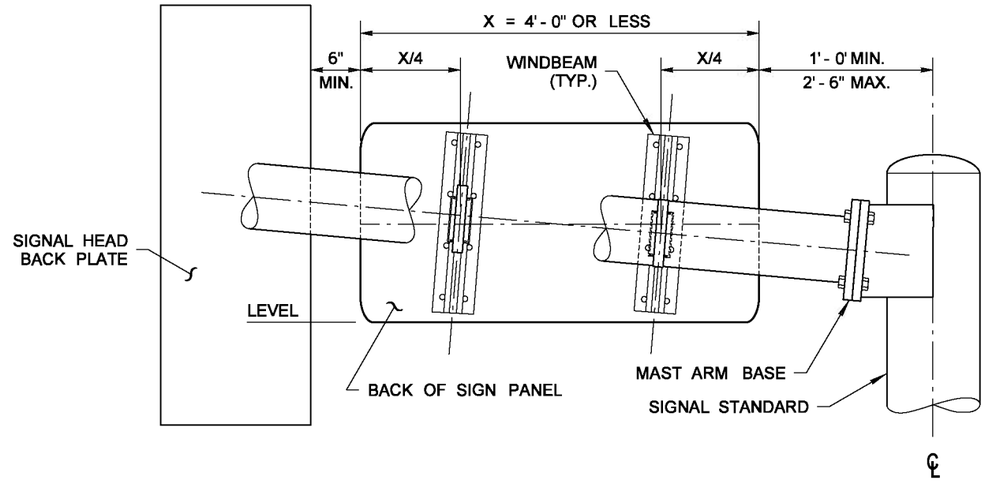

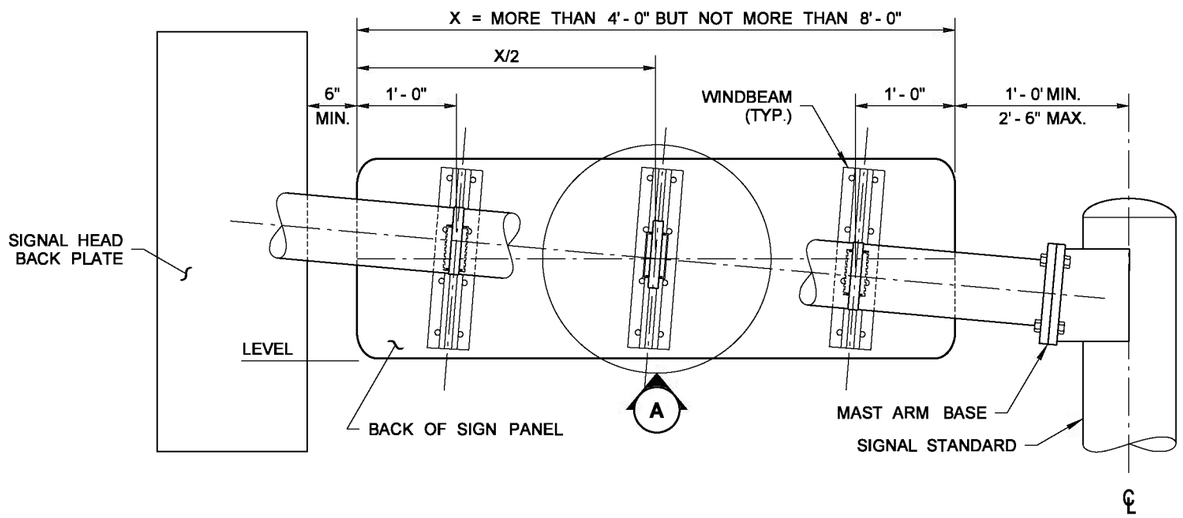

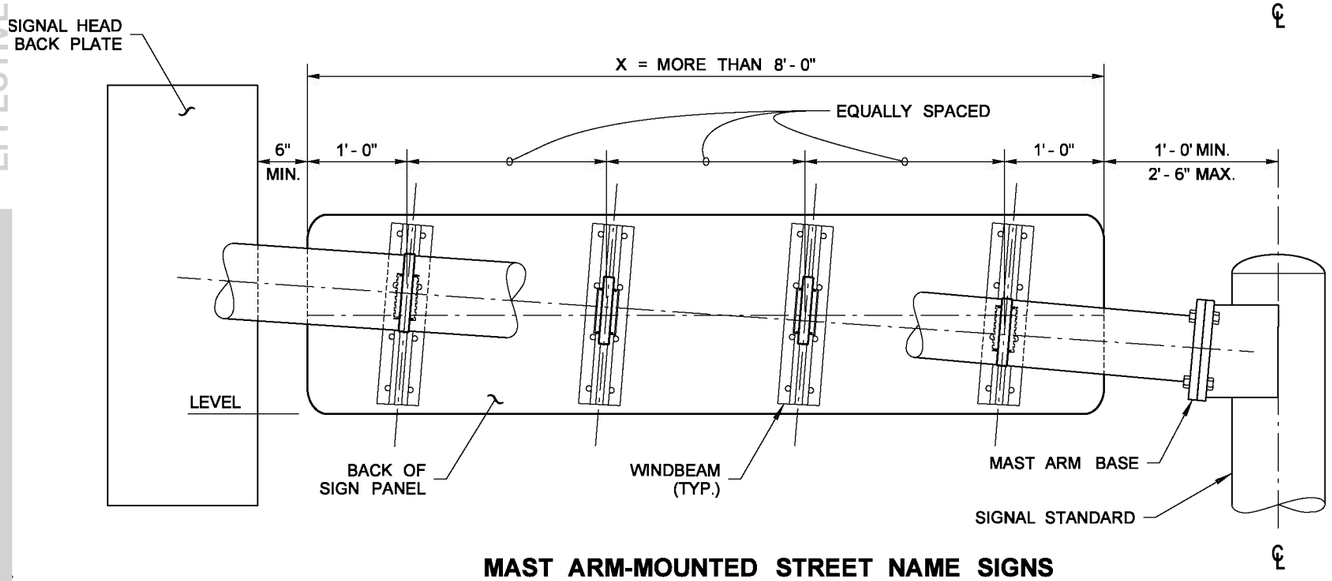

MAST ARM-MOUNTED STREET NAME SIGNS

NOTES

1. Mounting brackets with steel straps shall be a stainless steel band and buckle system product or an approved equal. Mounting brackets shall be universal channel clamps; steel straps shall be 3/4" wide and 0.030" thick.
2. All signs installed on mast arms or standards (poles) require windbeams. All signs shall be installed with horizontal edges level. A skewed windbeam is required only when the sign is mounted within 12" of the mast arm base (see Detail "A").
3. The street name sign shall be a maximum of 36 square feet and the sign height is a maximum of 3 feet.

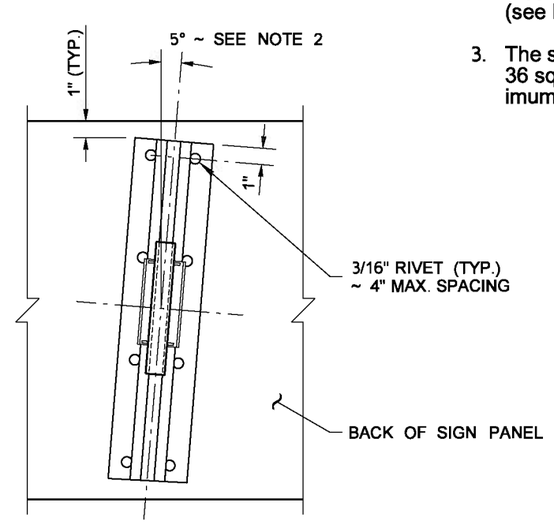

DETAIL (A)

TYPICAL FOR EACH CONNECTION

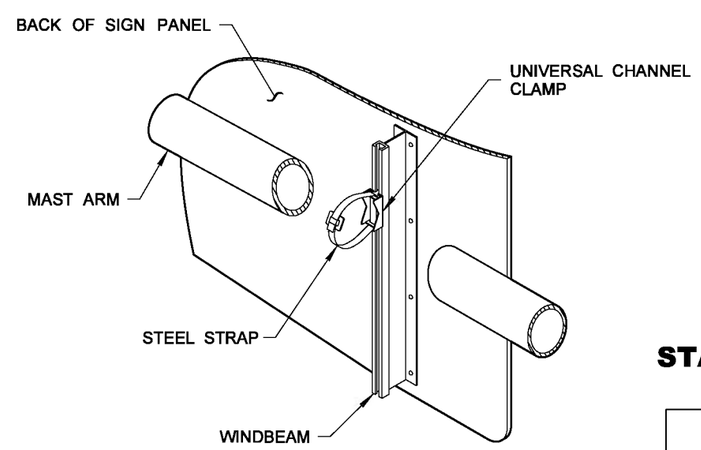

TYPICAL MAST ARM INSTALLATION

NOTE: THIS PLAN IS NOT A LEGAL ENGINEERING DOCUMENT BUT AN ELECTRONIC DUPLICATE. THE ORIGINAL, SIGNED BY THE ENGINEER AND APPROVED FOR PUBLICATION, IS KEPT ON FILE AT THE WASHINGTON STATE DEPARTMENT OF TRANSPORTATION. A COPY MAY BE OBTAINED UPON REQUEST.

SIGN INSTALLATION ON SIGNAL AND LIGHT STANDARDS
STANDARD PLAN G-30.10-01

SHEET 1 OF 2 SHEETS

APPROVED FOR PUBLICATION

Pasco Bakotich III — STATE DESIGN ENGINEER
06-16-11 — DATE

Washington State Department of Transportation

EFFECTIVE: AUGUST 6, 2012 TO August 4, 2013

EFFECTIVE: AUGUST 6, 2012 TO August 4, 2013
EFFECTIVE: AUGUST 6, 2012 TO August 4, 2013

DRAWN BY: LISA CYFORD

DIMENSIONS	
A	B
3' - 0"	9"
4' - 0"	1' - 0"

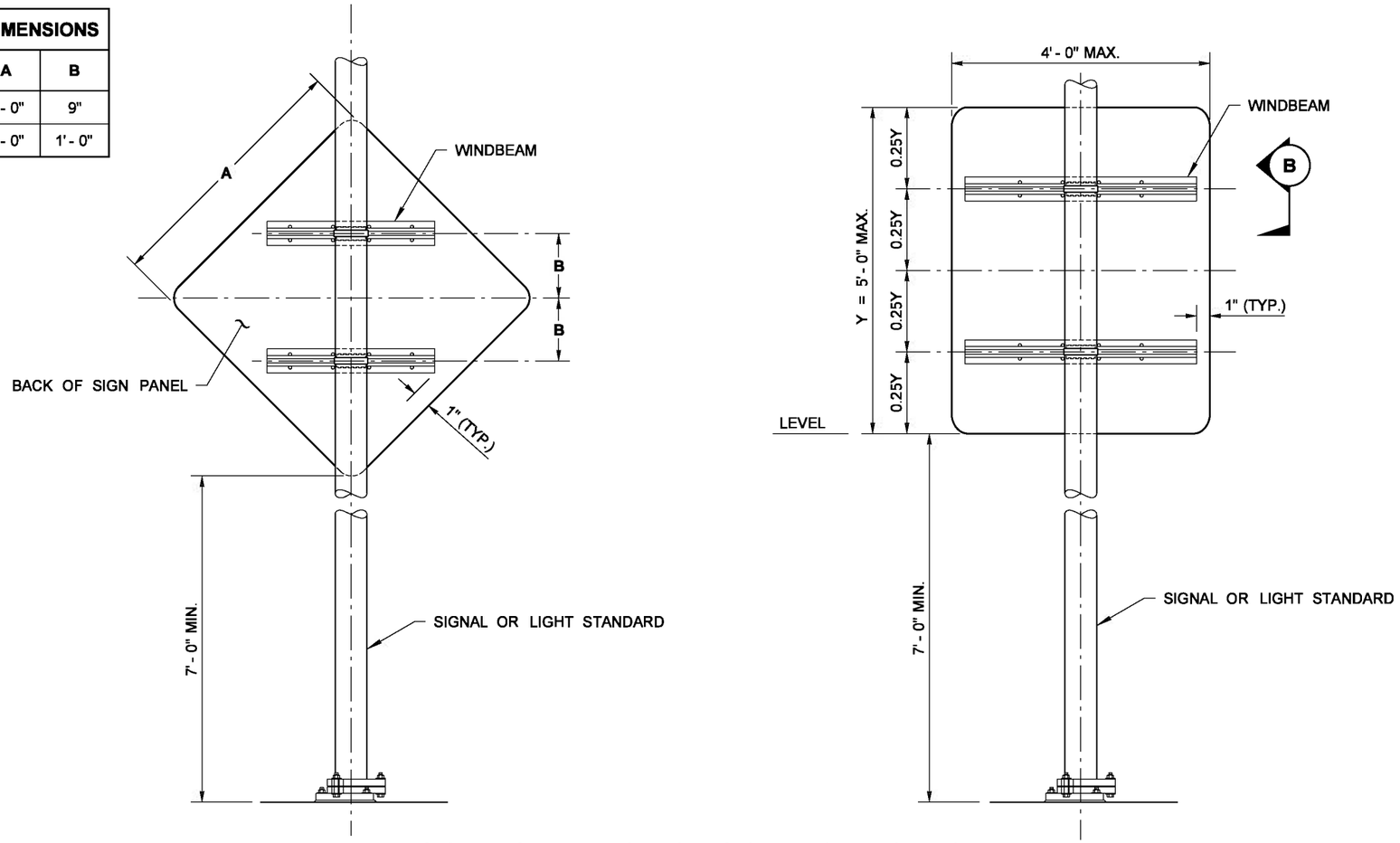

SIGN INSTALLATION ON SIGNAL OR LIGHT STANDARD

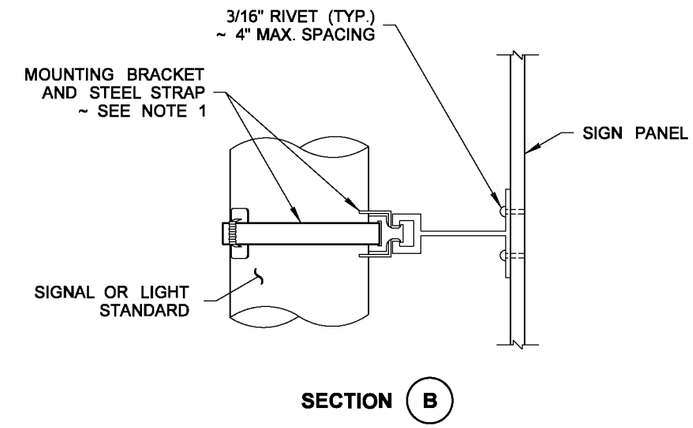

SECTION B

DIMENSIONS			
X	Y	C	D
3' - 0"	2' - 6"	1' - 0"	6"
3' - 0"	3' - 0"	1' - 0"	6"
4' - 0"	2' - 6"	1' - 3"	9"

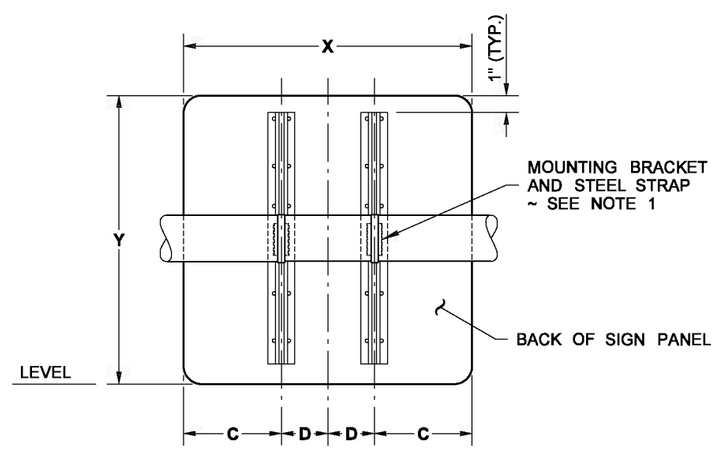

MAST ARM-MOUNTED LANE USE SIGNS

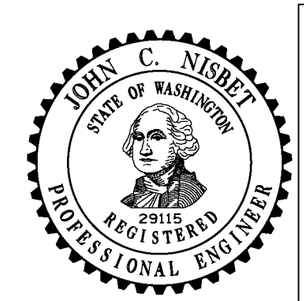

NOTE: THIS PLAN IS NOT A LEGAL ENGINEERING DOCUMENT BUT AN ELECTRONIC DUPLICATE. THE ORIGINAL, SIGNED BY THE ENGINEER AND APPROVED FOR PUBLICATION, IS KEPT ON FILE AT THE WASHINGTON STATE DEPARTMENT OF TRANSPORTATION. A COPY MAY BE OBTAINED UPON REQUEST.

SIGN INSTALLATION ON SIGNAL AND LIGHT STANDARDS
STANDARD PLAN G-30.10-01

SHEET 2 OF 2 SHEETS

APPROVED FOR PUBLICATION

Pasco Bakotich III — STATE DESIGN ENGINEER

06-16-11 — DATE

Washington State Department of Transportation

EFFECTIVE: AUGUST 6, 2012 TO August 4, 2013
EFFECTIVE: AUGUST 6, 2012 TO August 4, 2013
EFFECTIVE: AUGUST 6, 2012 TO August 4, 2013
EFFECTIVE: AUGUST 6, 2012 TO August 4, 2013

EFFECTIVE: AUGUST 6, 2012 TO August 4, 2013
EFFECTIVE: AUGUST 6, 2012 TO August 4, 2013

DRAWN BY: ELENA BRUNSTEIN

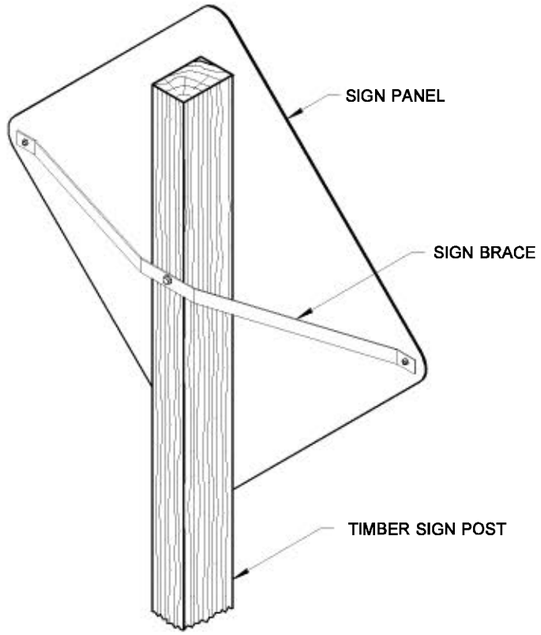

SIGN BRACE ON TIMBER POST

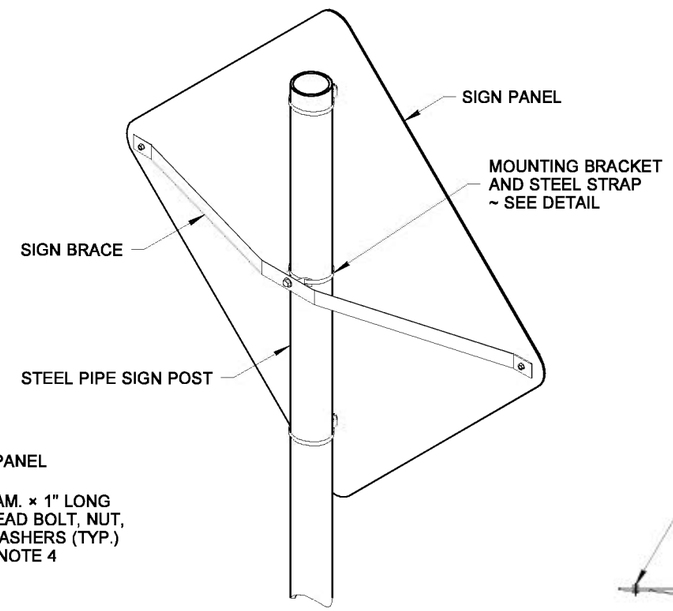

SIGN BRACE ON STEEL PIPE

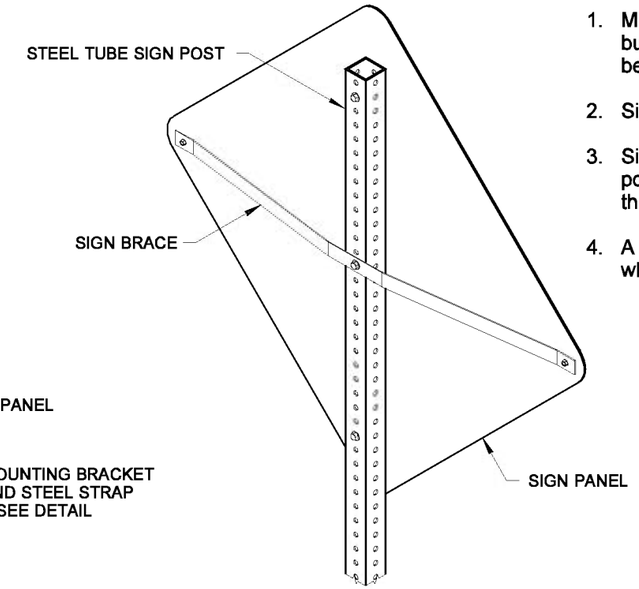

SIGN BRACE ON STEEL TUBE

NOTES

1. Mounting brackets with steel straps shall be a stainless steel band and buckle system product or an approved equal. Mounting brackets shall be one bolt, flared leg; steel straps shall be 3/4" wide and 0.030" thick.
2. Sign braces are only installed when specified in the contract.
3. Sign braces are typically necessary on large sign panels that are exposed to high winds, traffic generated wind buffeting, or when snow thrown from plows might impact the sign.
4. A nylon washer shall be placed between the sign and the steel washer when the sign face has Type 3 or 4 sheeting.

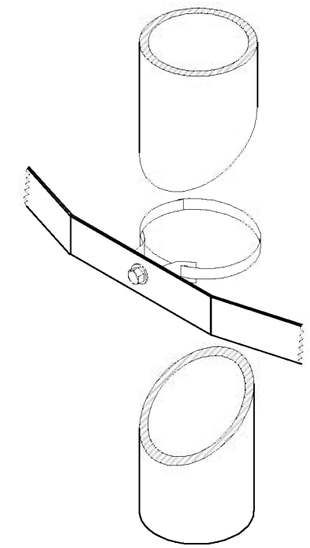

MOUNTING BRACKET AND STEEL STRAP DETAIL

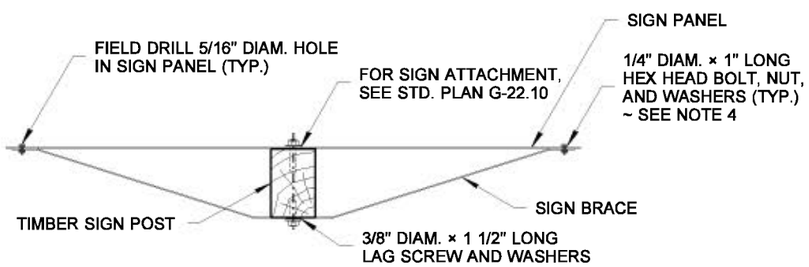

PLAN

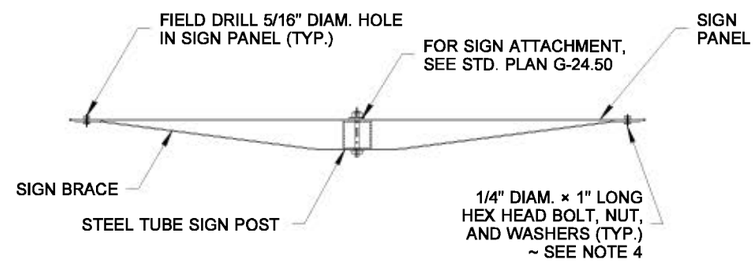

PLAN

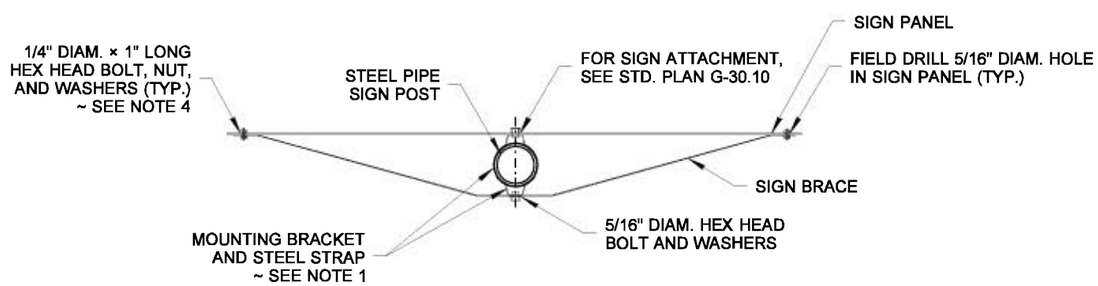

PLAN

EXPIRES AUGUST 9, 2009

NOTE: THIS PLAN IS NOT A LEGAL ENGINEERING DOCUMENT BUT AN ELECTRONIC DUPLICATE. THE ORIGINAL, SIGNED BY THE ENGINEER AND APPROVED FOR PUBLICATION, IS KEPT ON FILE AT THE WASHINGTON STATE DEPARTMENT OF TRANSPORTATION. A COPY MAY BE OBTAINED UPON REQUEST.

SIGN BRACING

STANDARD PLAN G-50.10-00

SHEET 1 OF 2 SHEETS

APPROVED FOR PUBLICATION

Pasco Bakotich III — STATE DESIGN ENGINEER

11-8-07 — DATE

Washington State Department of Transportation

EFFECTIVE: AUGUST 6, 2012 TO August 4, 2013
EFFECTIVE: AUGUST 6, 2012 TO August 4, 2013
EFFECTIVE: AUGUST 6, 2012 TO August 4, 2013
EFFECTIVE: AUGUST 6, 2012 TO August 4, 2013

EFFECTIVE: AUGUST 6, 2012 TO August 4, 2013
EFFECTIVE: AUGUST 6, 2012 TO August 4, 2013

DRAWN BY: ELENA BRUNSTEIN

SIGN BRACE DIMENSIONS				
	SIGN TYPE			
	YIELD	DIAMOND-SHAPED	OTHERS	
A	1/3 SIGN WIDTH - 1 3/4"	1/2 SIGN WIDTH - 2 1/4"	1/2 SIGN WIDTH - 1"	
	SIGN POST TYPE			
	4×6 OR 6×6 TIMBER POST	6×8 TIMBER POST	3" DIAM. STEEL PIPE	2 1/2" SQUARE TUBE
B	5 1/2"	7 1/2"	4 3/4"	2 1/2"

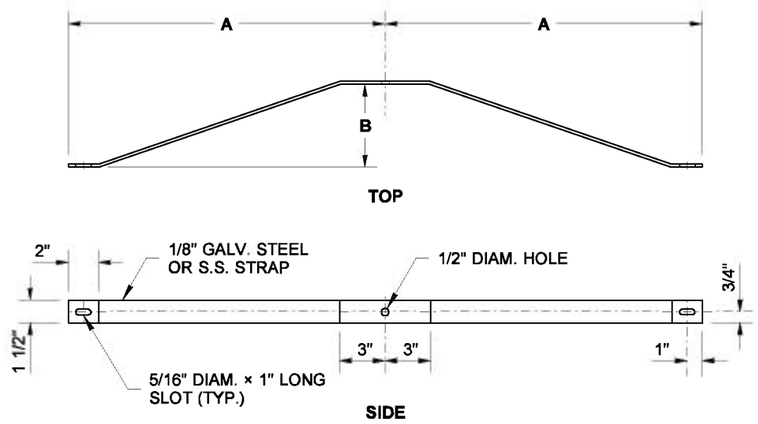

SIGN BRACE DETAIL

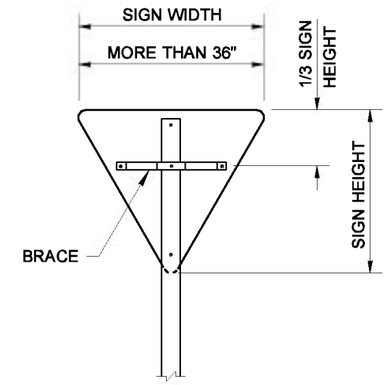

YIELD SIGN

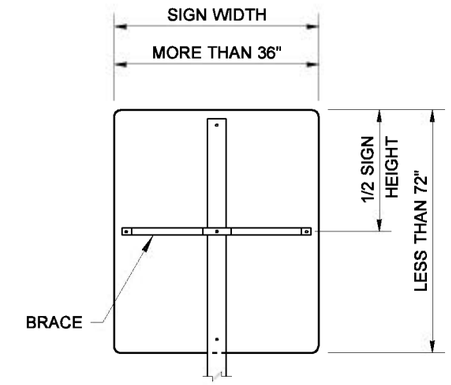

SMALL RECTANGULAR SIGN

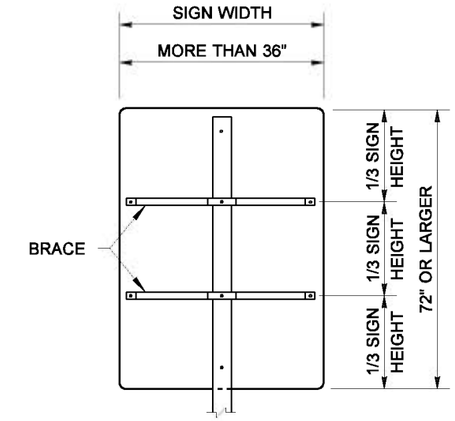

LARGE RECTANGULAR SIGN

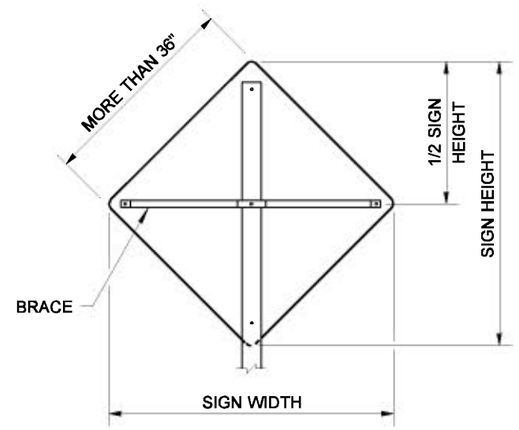

DIAMOND-SHAPED SIGN

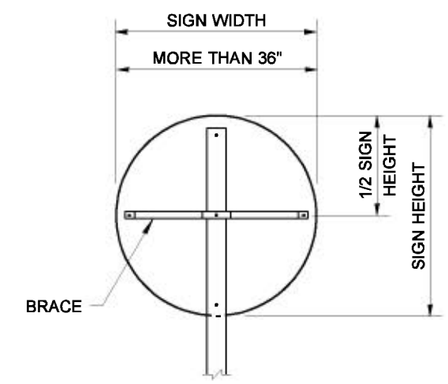

RAILROAD WARNING SIGN

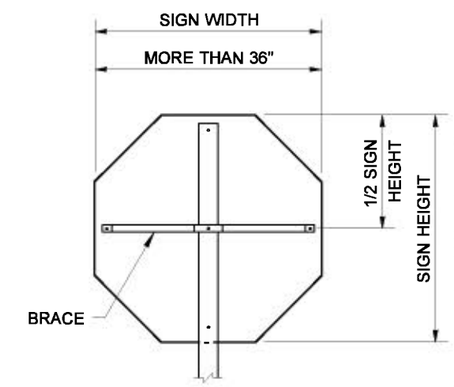

STOP SIGN

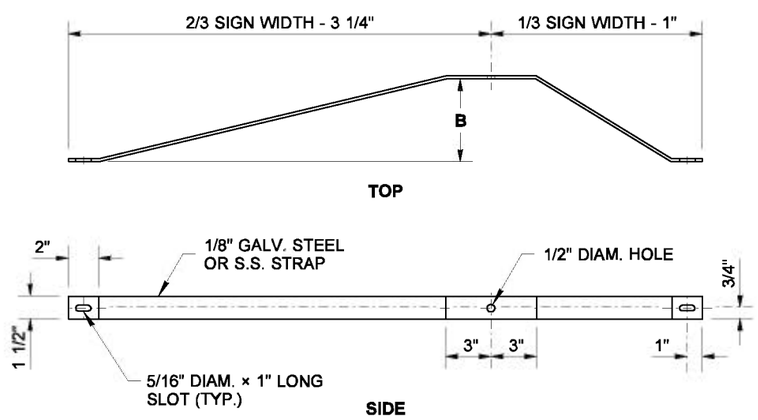

NO PASSING ZONE SIGN BRACE DETAIL

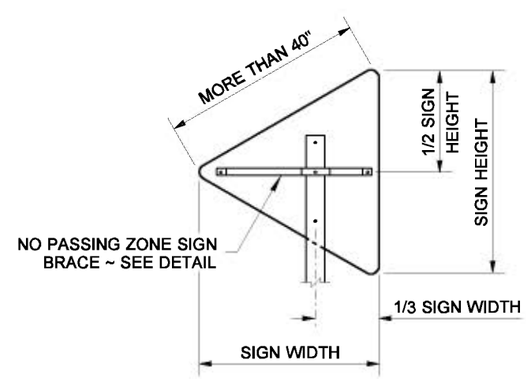

NO PASSING ZONE SIGN

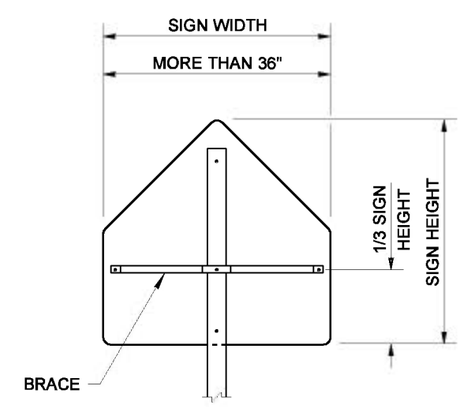

SCHOOL ZONE SIGN

SIGN BRACE PLACEMENT

NOTE: THIS PLAN IS NOT A LEGAL ENGINEERING DOCUMENT BUT AN ELECTRONIC DUPLICATE. THE ORIGINAL, SIGNED BY THE ENGINEER AND APPROVED FOR PUBLICATION, IS KEPT ON FILE AT THE WASHINGTON STATE DEPARTMENT OF TRANSPORTATION. A COPY MAY BE OBTAINED UPON REQUEST.

SIGN BRACING

STANDARD PLAN G-50.10-00

SHEET 2 OF 2 SHEETS

APPROVED FOR PUBLICATION

Pasco Bakotich III — STATE DESIGN ENGINEER

11-8-07 — DATE

Washington State Department of Transportation

EFFECTIVE: AUGUST 6, 2012 TO August 4, 2013
EFFECTIVE: AUGUST 6, 2012 TO August 4, 2013
EFFECTIVE: AUGUST 6, 2012 TO August 4, 2013
EFFECTIVE: AUGUST 6, 2012 TO August 4, 2013
EFFECTIVE: AUGUST 6, 2012 TO August 4, 2013
EFFECTIVE: AUGUST 6, 2012 TO August 4, 2013

EFFECTIVE: AUGUST 6, 2012 TO August 4, 2013
EFFECTIVE: AUGUST 6, 2012 TO August 4, 2013

DRAWN BY: BILL BEKENS

POST SELECTION			
TOTAL SIGN AREA ◇1 Σ (X TIMES Y) (FT^2)	POST SIZE		
	O.D.	WALL	
50 OR LESS	18"	0.438"	SINGLE OR DOUBLE CANTILEVER
50+ to 100	18"	0.438"	
100+ to 150	24"	0.375"	
150+ to 200	24"	0.375"	
200+ to 250	24"	0.375"	DOUBLE CANTILEVER ONLY
250+ to 300	24"	0.375"	
300+ to 350	24"	0.438"	
350+ to 400	24"	0.500"	

◇1 SUM OF SIGN FOR DOUBLE CANTILEVER

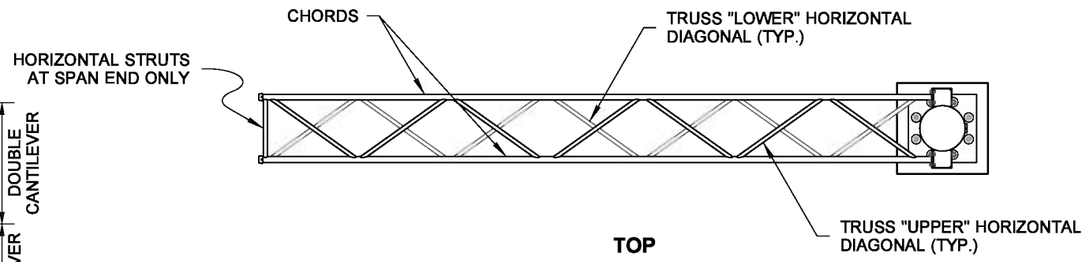

TOP

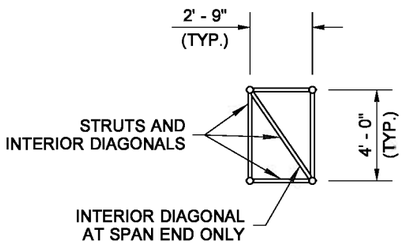

END

ALL TRUSS DIAGONALS AND STRUTS SHALL BE 1 1/2" PIPE (0.145" WALL)

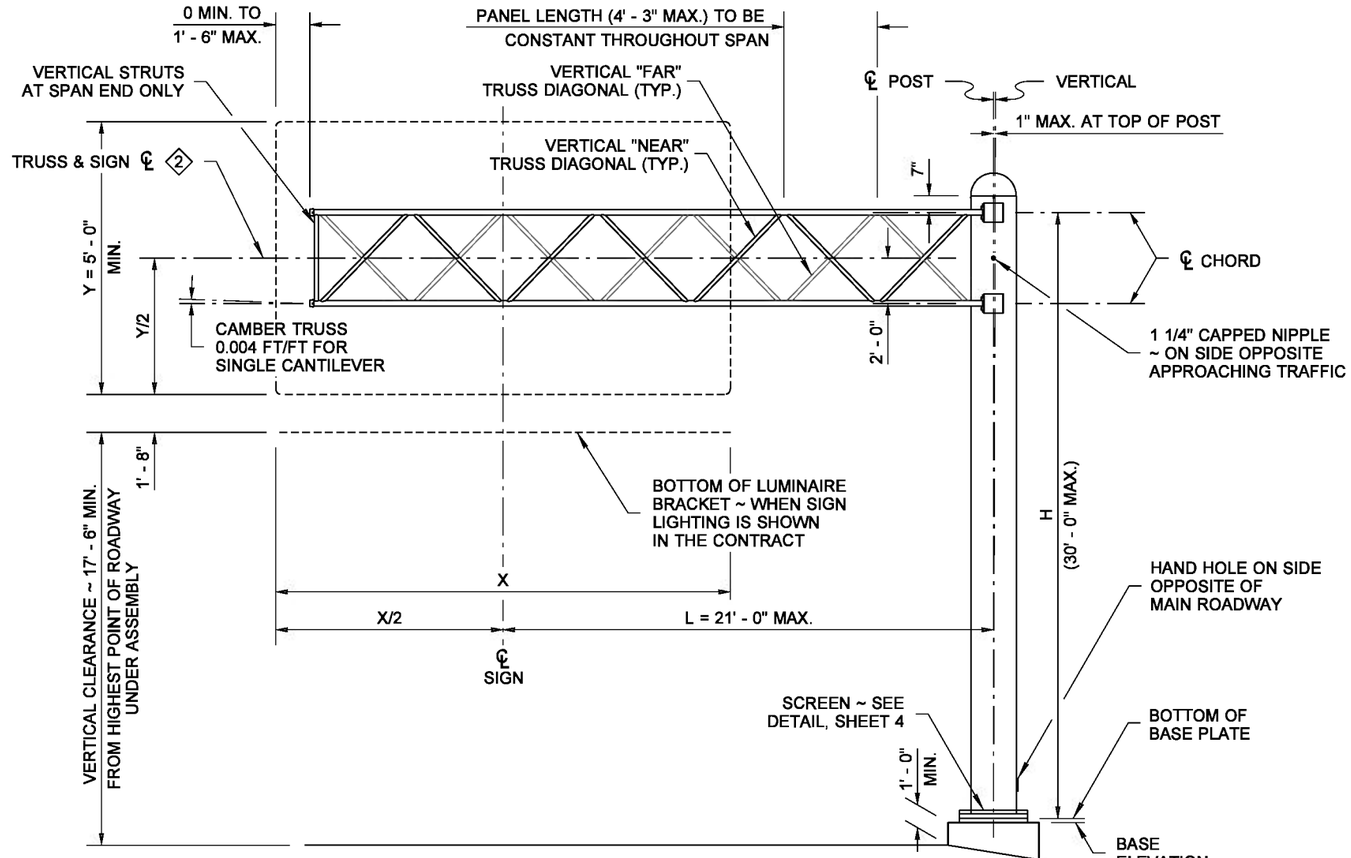

◇2 SIGN CENTERLINE MAY VARY FROM TRUSS CENTERLINE TO PROVIDE MINIMUM VERTICAL CLEARANCE.

ELEVATION

SINGLE CANTILEVER SIGN STRUCTURE

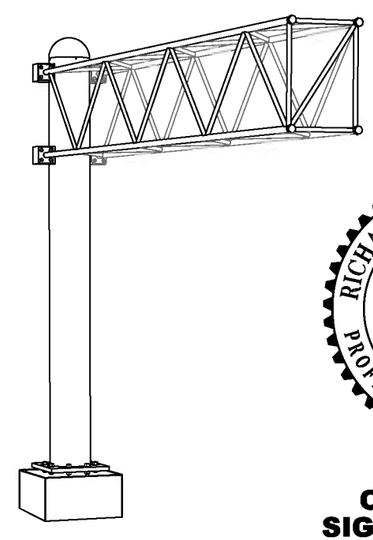

PERSPECTIVE

NOTES

1. Vertical and horizontal clearance requirements shall be as shown on the contract plans.
2. No post splices permitted in lower third of height, nor closer than 3' - 0" to bottom chord, except as otherwise noted. No chord shop splices permitted in first two-thirds of the span, except as otherwise noted. A maximum of two splices are permitted in the post. For post or chord shop splice details, see **Standard Plan G-70.10**.
3. The back-up plates or rings for all full penetration welds shall be welded continuously to the joined pieces. This can be done by either a continuous fillet weld on the back side of the piece, or by a continuous weld in the root of the full penetration weld.
4. All bolt holes shall be drilled, and the diameter shall be 1/16" larger than the nominal bolt diameter, except as noted.
5. The design and analysis of the structures has been done in accordance with AASHTO Standard Specification for Structural Supports for Highway Signs, Luminaires and Traffic Signals Dated 2001, using 90 MPH wind velocity and fatigue category - I.
6. Adjust post alignment in plane normal to roadway centerline by means of leveling nuts located below base plate to maintain upward slope in cantilever arm(s). Tighten anchor nuts above base plate in accordance with Standard Specification 6-03.3(33).
7. Variable Message Signs (VMS) exceeding 700 lbs. and/or 200 sq. ft. shall not be installed on cantilever structure.

MATERIAL SPECIFICATIONS	
PIPE (CHORDS, DIAGONALS, STRUTS AND POSTS)	ASTM A 36 OR ASTM A 53 GRADE B, TYPE E OR S, OR A 500 GRADE B
PLATES	ASTM A 36
SHAPES	ASTM A 36 ASTM A 992
BOLTS, NUTS, & WASHERS	STD. SPEC. 9-06.5(3)
PIPE, PLATE & SHAPE GALVANIZING	AASHTO M 111
FASTENER GALVANIZING	AASHTO M 232

CHORD SELECTION		
SIGN AREA (X TIMES Y) (FT^2)	CHORD SIZE	
	NOM. DIAM.	WALL
50 OR LESS	2"	0.154"
50+ TO 100	2"	0.218"
100+ TO 150	2 1/2"	0.203"
150+ TO 200	3"	0.216"

NOTE: THIS PLAN IS NOT A LEGAL ENGINEERING DOCUMENT BUT AN ELECTRONIC DUPLICATE. THE ORIGINAL, SIGNED BY THE ENGINEER AND APPROVED FOR PUBLICATION, IS KEPT ON FILE AT THE WASHINGTON STATE DEPARTMENT OF TRANSPORTATION. A COPY MAY BE OBTAINED UPON REQUEST.

CANTILEVER SIGN STRUCTURE (TRUSS-TYPE)

STANDARD PLAN G-60.10-01

SHEET 1 OF 4 SHEETS

APPROVED FOR PUBLICATION

Pasco Bakotich III — STATE DESIGN ENGINEER

06-27-11 — DATE

Washington State Department of Transportation

EFFECTIVE: AUGUST 6, 2012 TO August 4, 2013
EFFECTIVE: AUGUST 6, 2012 TO August 4, 2013
EFFECTIVE: AUGUST 6, 2012 TO August 4, 2013
EFFECTIVE: AUGUST 6, 2012 TO August 4, 2013

EFFECTIVE: AUGUST 6, 2012 TO August 4, 2013
EFFECTIVE: AUGUST 6, 2012 TO August 4, 2013

DRAWN BY: BILL BEKENS

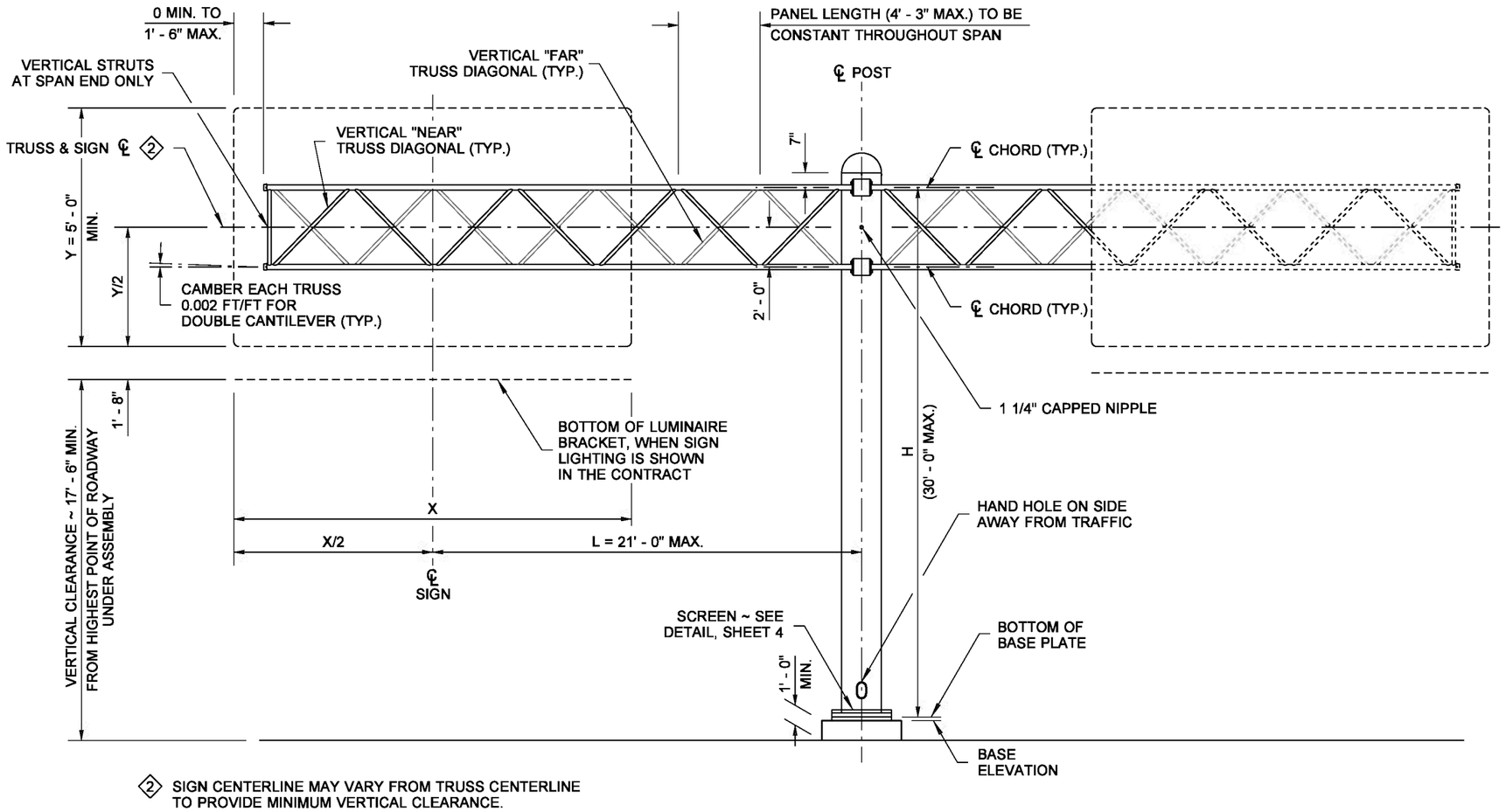

2 SIGN CENTERLINE MAY VARY FROM TRUSS CENTERLINE TO PROVIDE MINIMUM VERTICAL CLEARANCE.

ELEVATION

DOUBLE CANTILEVER SIGN STRUCTURE

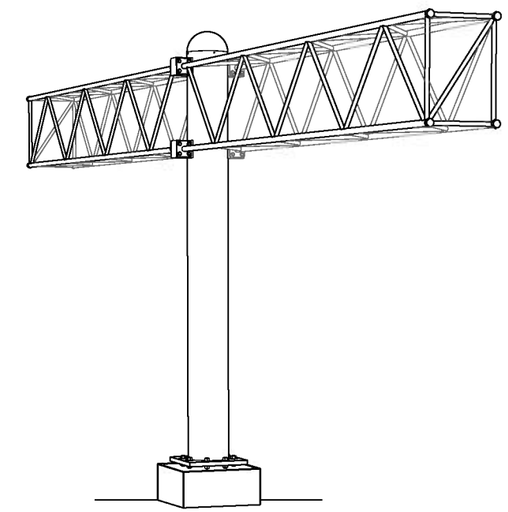

PERSPECTIVE

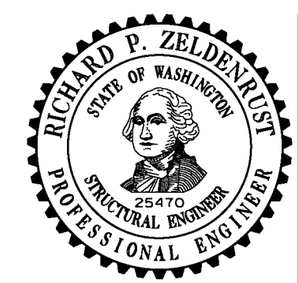

NOTE: THIS PLAN IS NOT A LEGAL ENGINEERING DOCUMENT BUT AN ELECTRONIC DUPLICATE. THE ORIGINAL, SIGNED BY THE ENGINEER AND APPROVED FOR PUBLICATION, IS KEPT ON FILE AT THE WASHINGTON STATE DEPARTMENT OF TRANSPORTATION. A COPY MAY BE OBTAINED UPON REQUEST.

CANTILEVER SIGN STRUCTURE (TRUSS-TYPE) STANDARD PLAN G-60.10-01

SHEET 2 OF 4 SHEETS

APPROVED FOR PUBLICATION

Pasco Bakotich III — STATE DESIGN ENGINEER

06-27-11 — DATE

Washington State Department of Transportation

EFFECTIVE: AUGUST 6, 2012 TO August 4, 2013
EFFECTIVE: AUGUST 6, 2012 TO August 4, 2013
EFFECTIVE: AUGUST 6, 2012 TO August 4, 2013
EFFECTIVE: AUGUST 6, 2012 TO August 4, 2013

EFFECTIVE: AUGUST 6, 2012 TO August 4, 2013
EFFECTIVE: AUGUST 6, 2012 TO August 4, 2013

DRAWN BY: BILL BEKENS

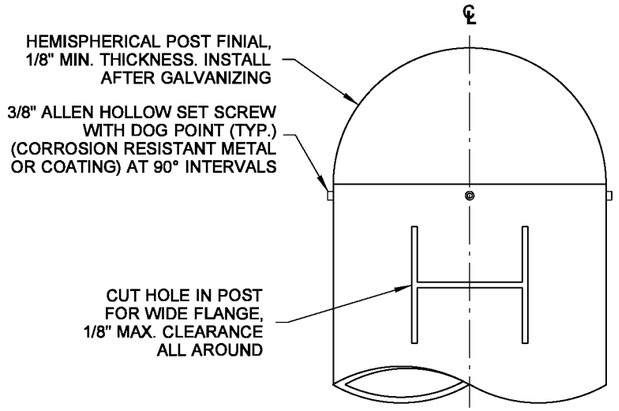

ELEVATION
ROTATED 90° TO SHOW CUTOUT

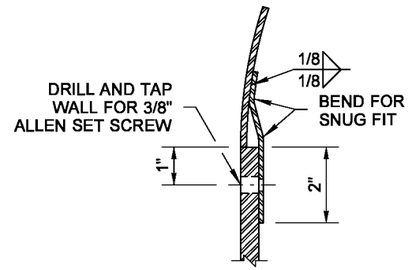

SECTION THROUGH FINIAL AND POST

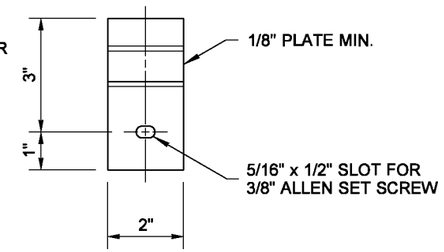

FINIAL BRACKET

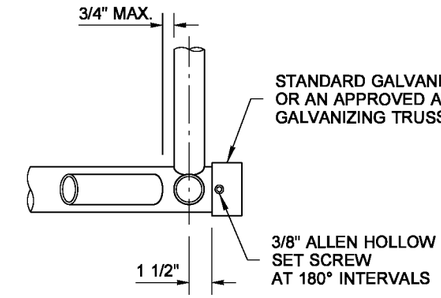

SPAN END ~ SIDE

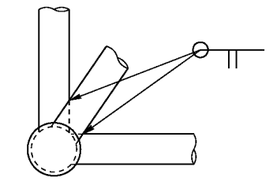

SPAN END ~ END
OPPOSITE HAND SHOWN FOR CLARITY

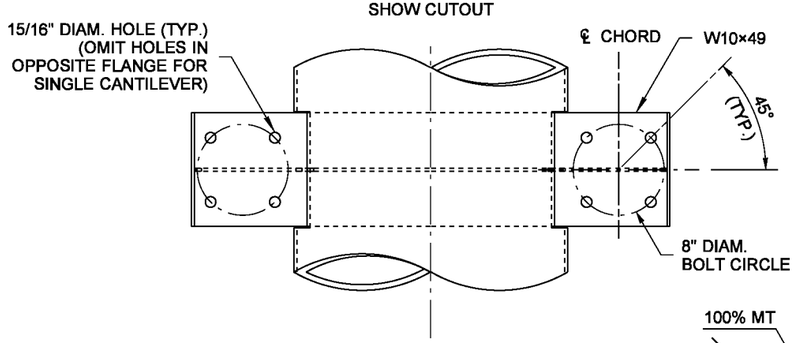

ELEVATION

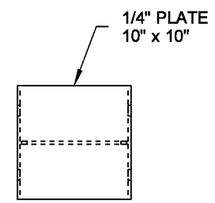

END OF CHORD

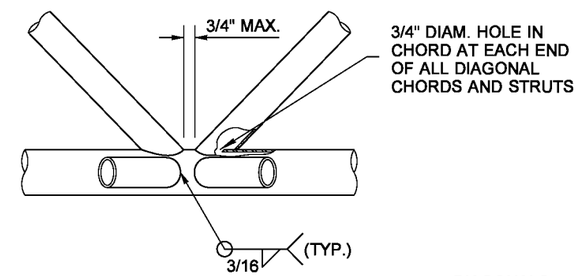

DIAGONAL CONNECTION DETAIL
TYPICAL OF ALL DIAGONALS

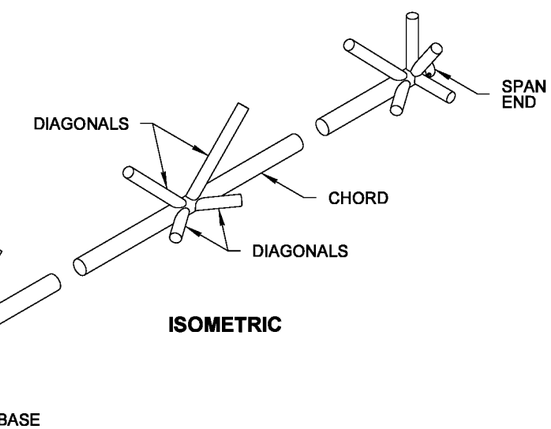

ISOMETRIC

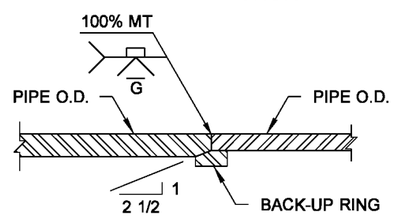

DETAIL "D"

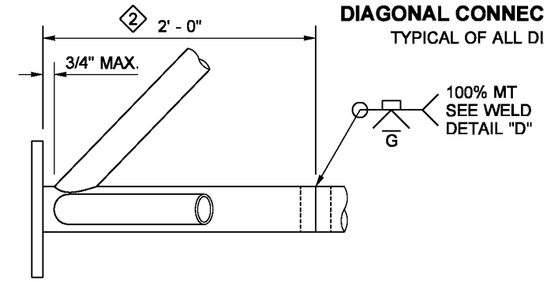

BASE ~ SIDE

2 3" DIAM. PIPE (t = 0.300) SPLICE WITH 3" DIAM. PIPE (t = 0.216) (SEE CHORD SELECTION TABLE)
2 1/2" DIAM. PIPE (t = 0.276) SPLICE WITH 2 1/2" DIAM. PIPE (t = 0.203) (SEE CHORD SELECTION TABLE)

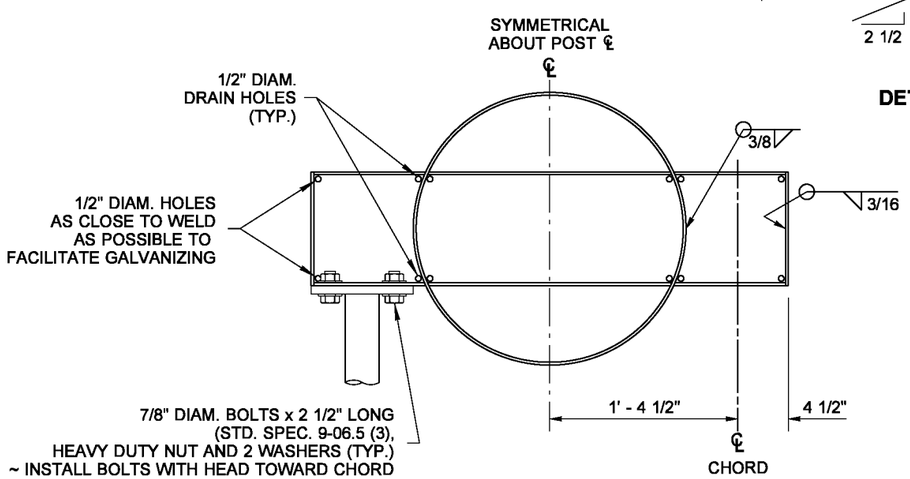

TOP

CHORD TO POST CONNECTION DETAIL

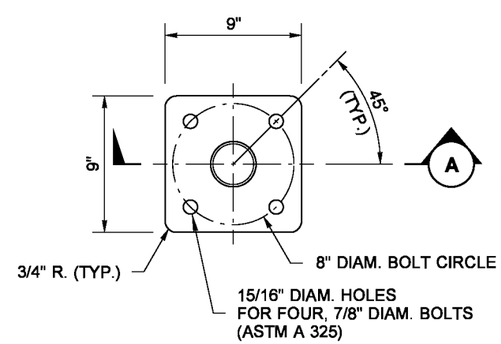

BASE ~ TOP

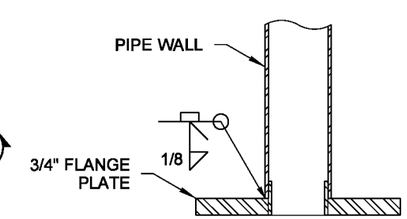

SECTION A

TYPICAL TRUSS DETAILS
ENDS OF DIAGONALS SHALL BE CUT TO FIT NEATLY AGAINST CHORDS

NOTE: THIS PLAN IS NOT A LEGAL ENGINEERING DOCUMENT BUT AN ELECTRONIC DUPLICATE. THE ORIGINAL, SIGNED BY THE ENGINEER AND APPROVED FOR PUBLICATION, IS KEPT ON FILE AT THE WASHINGTON STATE DEPARTMENT OF TRANSPORTATION. A COPY MAY BE OBTAINED UPON REQUEST.

CANTILEVER SIGN STRUCTURE (TRUSS-TYPE)
STANDARD PLAN G-60.10-01

SHEET 3 OF 4 SHEETS

APPROVED FOR PUBLICATION

Pasco Bakotich III — STATE DESIGN ENGINEER
06-27-11 — DATE

Washington State Department of Transportation

EFFECTIVE: AUGUST 6, 2012 TO August 4, 2013
EFFECTIVE: AUGUST 6, 2012 TO August 4, 2013

EFFECTIVE: AUGUST 6, 2012 TO August 4, 2013
EFFECTIVE: AUGUST 6, 2012 TO August 4, 2013

DRAWN BY: BILL BEKENS

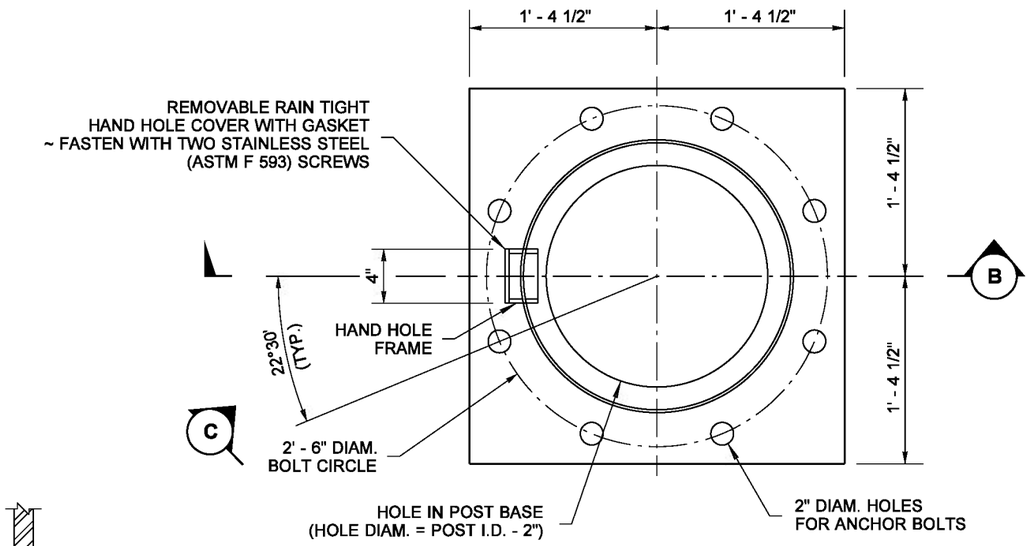

TOP

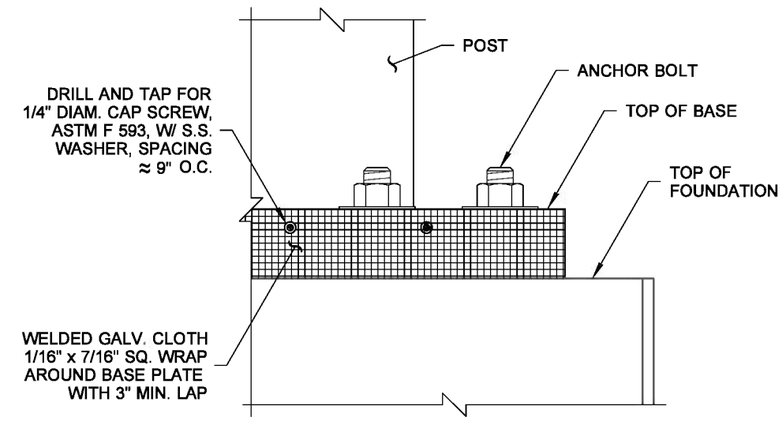

SCREEN DETAIL

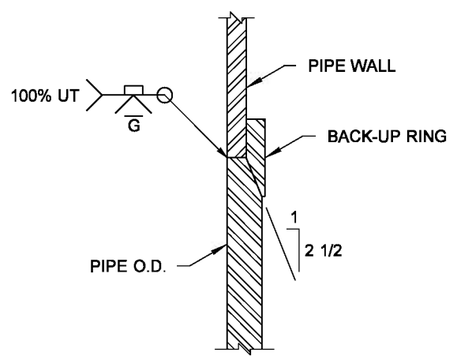

DETAIL "G"

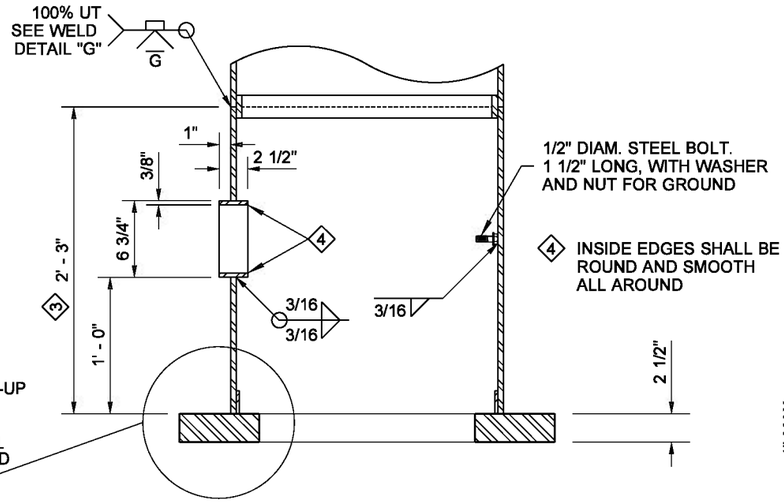

SECTION B

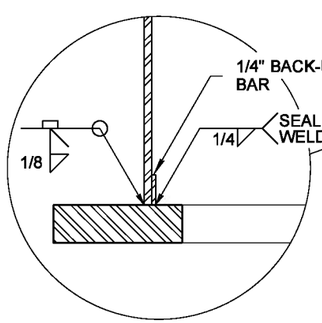

BASE WELD DETAIL

3 24" O.D. PIPE (t = 0.969) SPLICE WITH
24" O.D. UPPER POST (SEE POST SELECTION TABLE)
18" O.D. PIPE (t = 0.750) SPLICE WITH
18" O.D. UPPER POST (SEE POST SELECTION TABLE)

POST BASE DETAILS

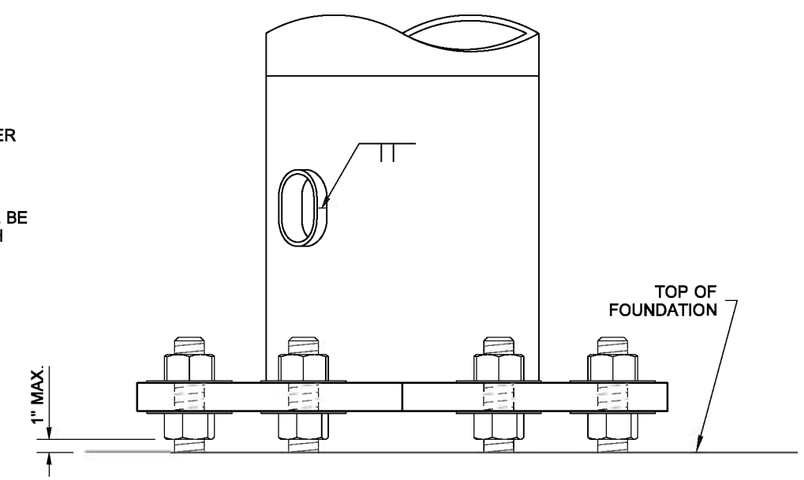

VIEW C

RICHARD P. ZELDENRUST
STATE OF WASHINGTON
25470
STRUCTURAL ENGINEER
PROFESSIONAL ENGINEER

NOTE: THIS PLAN IS NOT A LEGAL ENGINEERING DOCUMENT BUT AN ELECTRONIC DUPLICATE. THE ORIGINAL, SIGNED BY THE ENGINEER AND APPROVED FOR PUBLICATION, IS KEPT ON FILE AT THE WASHINGTON STATE DEPARTMENT OF TRANSPORTATION. A COPY MAY BE OBTAINED UPON REQUEST.

CANTILEVER SIGN STRUCTURE (TRUSS-TYPE) STANDARD PLAN G-60.10-01

SHEET 4 OF 4 SHEETS

APPROVED FOR PUBLICATION

Pasco Bakotich III — STATE DESIGN ENGINEER
06-27-11 — DATE

Washington State Department of Transportation

EFFECTIVE: AUGUST 6, 2012 TO August 4, 2013
EFFECTIVE: AUGUST 6, 2012 TO August 4, 2013
EFFECTIVE: AUGUST 6, 2012 TO August 4, 2013
EFFECTIVE: AUGUST 6, 2012 TO August 4, 2013

EFFECTIVE: AUGUST 6, 2012 TO August 4, 2013

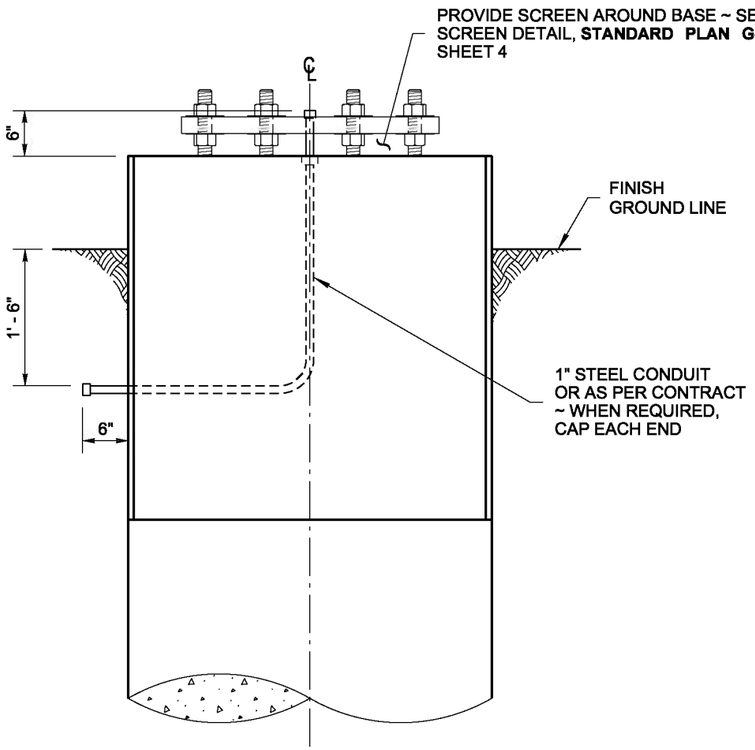

VIEW (A)

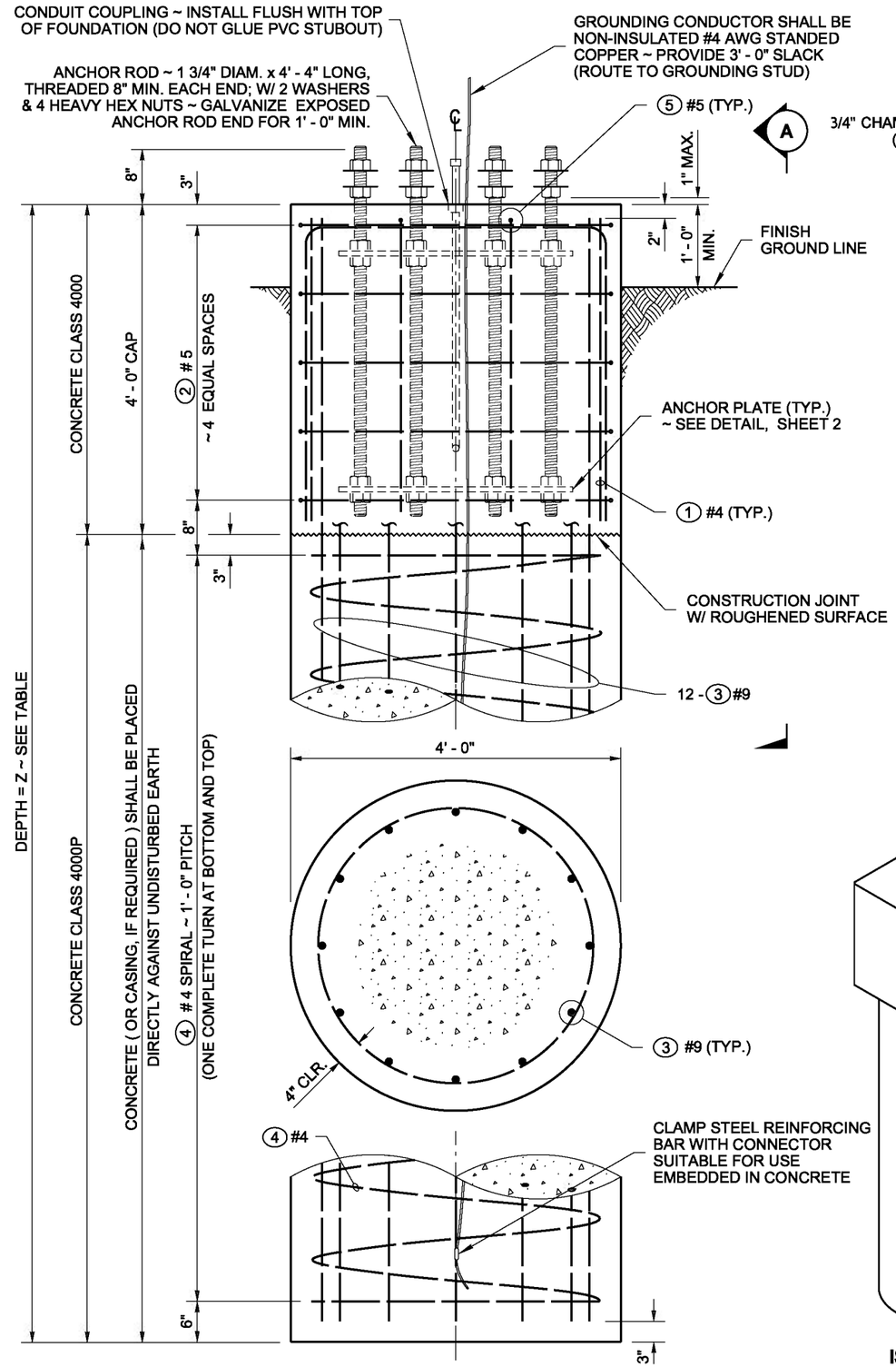

SIDE

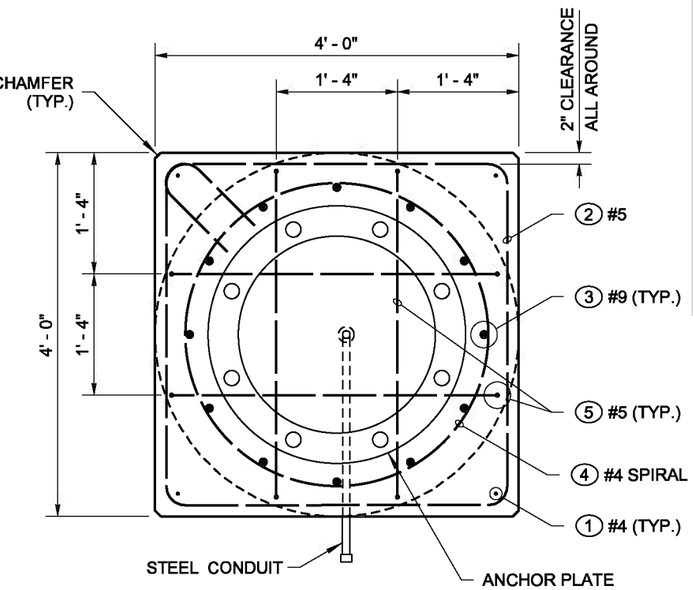

TOP

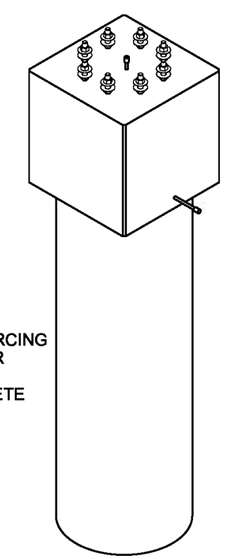

ISOMETRIC

NOTES

1. See **Standard Specification 8-21.3(9)** for construction requirements.
2. Use a template to locate and secure bolts in place during foundation installation.

VALUES OF Z			
FOUNDATION TYPE	TOTAL SIGN AREA		ALLOWABLE LATERAL BEARING PRESSURE (PSF)
	200 SF OR LESS	200 SF ~ 400 SF	
	Z	Z	
1	13' - 0"	18' - 0"	1500 AND UP
	16' - 0"	22' - 0"	1000 ~ 1499

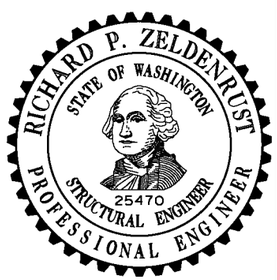

NOTE: THIS PLAN IS NOT A LEGAL ENGINEERING DOCUMENT BUT AN ELECTRONIC DUPLICATE. THE ORIGINAL, SIGNED BY THE ENGINEER AND APPROVED FOR PUBLICATION, IS KEPT ON FILE AT THE WASHINGTON STATE DEPARTMENT OF TRANSPORTATION. A COPY MAY BE OBTAINED UPON REQUEST.

CANTILEVER SIGN STRUCTURE (TRUSS-TYPE) FOUNDATION TYPE 1

STANDARD PLAN G-60.20-01

SHEET 1 OF 2 SHEETS

APPROVED FOR PUBLICATION

Pasco Bakotich III — 06-27-11

STATE DESIGN ENGINEER — DATE

Washington State Department of Transportation

DRAWN BY: LISA CYFORD

EFFECTIVE: AUGUST 6, 2012 TO August 4, 2013

EFFECTIVE: AUGUST 6, 2012 TO August 4, 2013
EFFECTIVE: AUGUST 6, 2012 TO August 4, 2013

DRAWN BY: LISA CYFORD

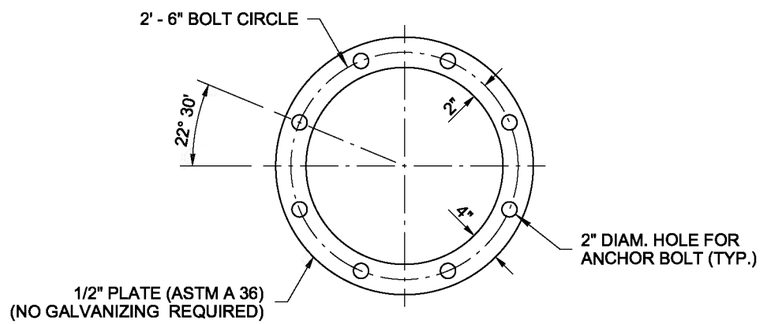

ANCHOR PLATE DETAIL

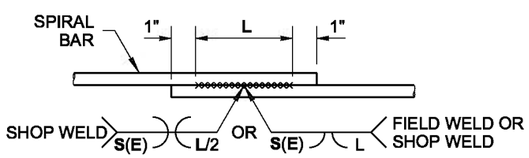

SEE TABLE FOR WELD DIMENSIONS

SPIRAL WELDED LAP SPLICE DETAIL

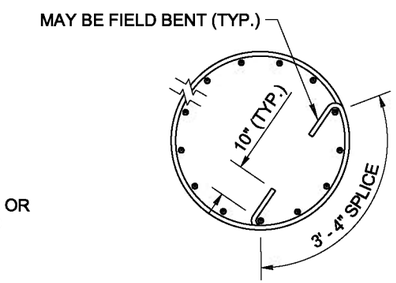

SPIRAL LAP SPLICE DETAIL

WELDING SHALL MEET THE REQUIREMENTS OF STD. SPEC. 6-02.3(24)E
FOR WELD DIMENSIONS ~ SEE TABLE BELOW

COLUMN AND SHAFT SPIRAL OPTIONS

DEFORMED BAR AASHTO M 31 GRADE 60	PLAIN STEEL BAR AASHTO M 31 GRADE 60	COLD DRAWN WIRE AASHTO M 32	DEFORMED WIRE AASHTO M 225	WELD DIMENSIONS (INCHES)		
				S	E	L
# 4	1/2" DIAM.	W20	D20	1/4	1/8	4
# 5	5/8" DIAM.	W31	D31	5/16	3/16	6
# 6	3/4" DIAM.	W44	D44	3/8	3/16	6

BAR LIST

MARK	LOCATION	QTY.	LENGTH	SIZE	TYPE
1	CAP VERTICAL	4	3' - 10"	#4	STR.
2	CAP HOOPS	5	15' - 9"	#5	
3	SHAFT VERTICAL	12	"Z" MINUS CLEARANCES	#9	STR.
4	SHAFT SPIRAL	1	AS REQUIRED	#4	
5	CAP TOP	4	10' - 10"	#5	

BENDING DIAGRAM
(ALL DIMENSIONS ARE OUT TO OUT)

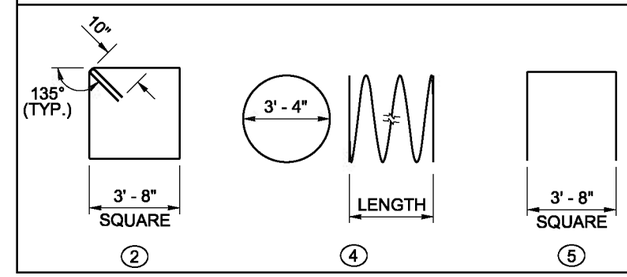

MATERIAL SPECIFICATIONS	
SHAFT CONCRETE	CLASS 4000P
ALL OTHER CONCRETE	CLASS 4000
STEEL REINF. BAR	AASHTO M 31 GRADE 60
ANCHOR RODS	ASTM F 1554 GRADE 105
ANCHOR NUTS	AASHTO M 291
ANCHOR WASHERS	AASHTO M 293
ANCHORAGE GALVANIZING	AASHTO M 232
ANCHOR PLATE	ASTM A 36

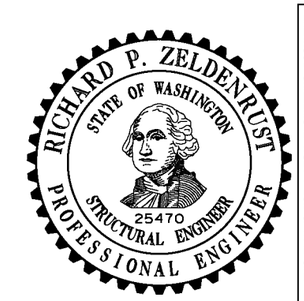

NOTE: THIS PLAN IS NOT A LEGAL ENGINEERING DOCUMENT BUT AN ELECTRONIC DUPLICATE. THE ORIGINAL, SIGNED BY THE ENGINEER AND APPROVED FOR PUBLICATION, IS KEPT ON FILE AT THE WASHINGTON STATE DEPARTMENT OF TRANSPORTATION. A COPY MAY BE OBTAINED UPON REQUEST.

CANTILEVER SIGN STRUCTURE (TRUSS-TYPE) FOUNDATION TYPE 1

STANDARD PLAN G-60.20-01

SHEET 2 OF 2 SHEETS

APPROVED FOR PUBLICATION

Pasco Bakotich III — STATE DESIGN ENGINEER
06-27-11 — DATE

Washington State Department of Transportation

EFFECTIVE: AUGUST 6, 2012 TO August 4, 2013
EFFECTIVE: AUGUST 6, 2012 TO August 4, 2013
EFFECTIVE: AUGUST 6, 2012 TO August 4, 2013
EFFECTIVE: AUGUST 6, 2012 TO August 4, 2013

EFFECTIVE: AUGUST 6, 2012 TO August 4, 2013

DRAWN BY: LISA CYFORD

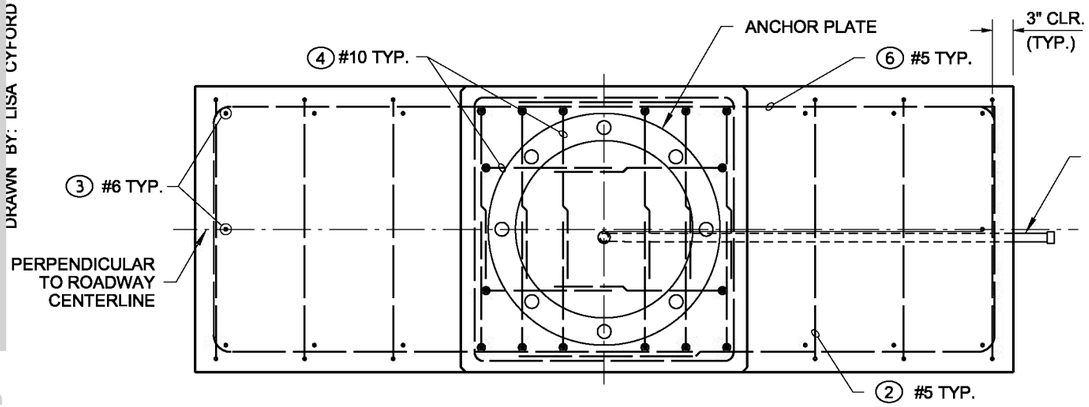

TOP

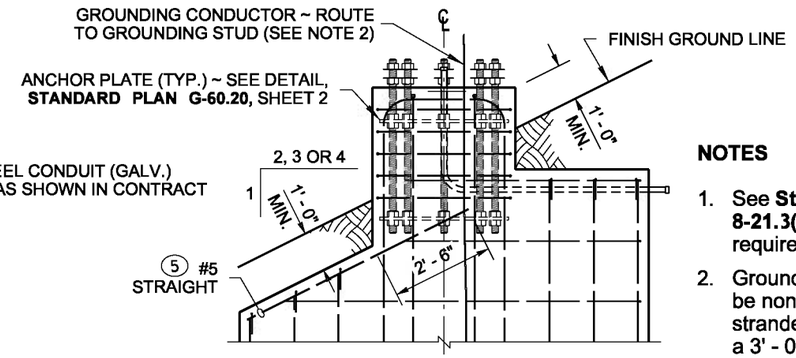

SIDE
ON SLOPED GRADE
(SHOWN AT REDUCED SCALE)

NOTES

1. See **Standard Specification 8-21.3(9)** for construction requirements.
2. Grounding Conductor shall be non-insulated #4 AWG stranded copper. Provide a 3' - 0" min. slack.

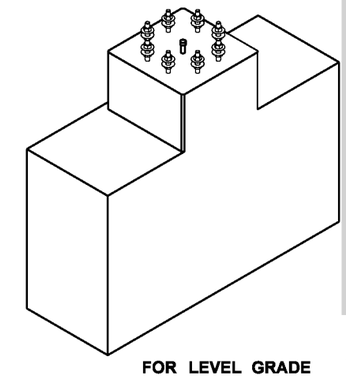

FOR LEVEL GRADE

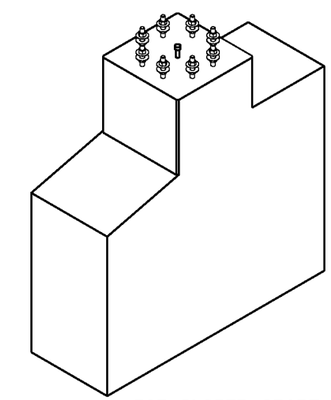

FOR SLOPED GRADE

ISOMETRIC

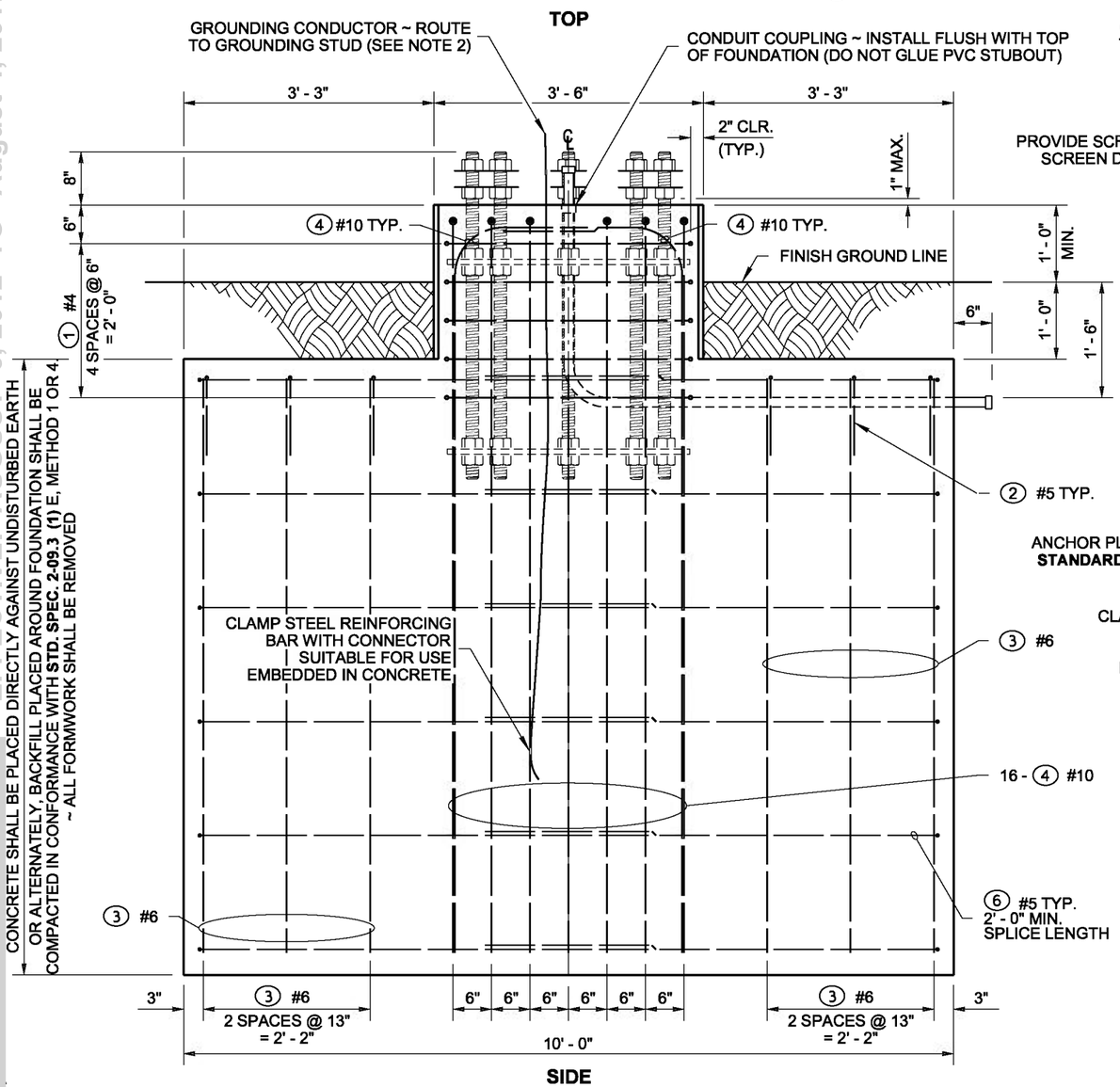

SIDE

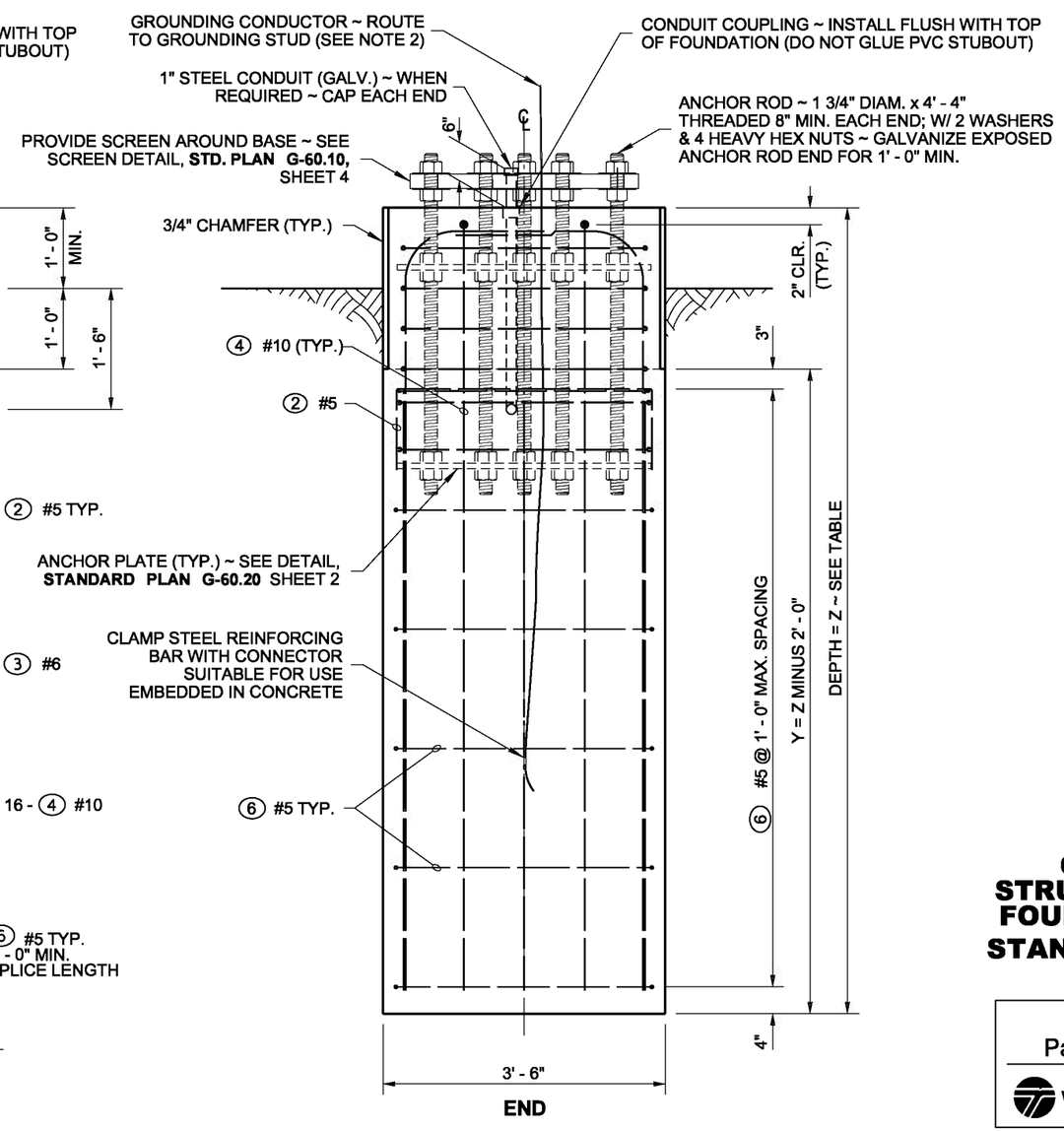

END

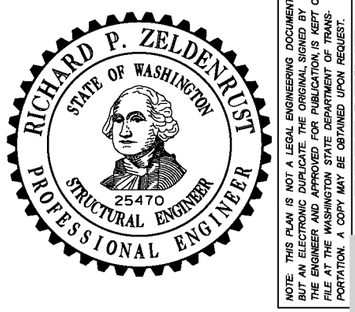

NOTE: THIS PLAN IS NOT A LEGAL ENGINEERING DOCUMENT BUT AN ELECTRONIC DUPLICATE. THE ORIGINAL, SIGNED BY THE ENGINEER AND APPROVED FOR PUBLICATION, IS KEPT ON FILE AT THE WASHINGTON STATE DEPARTMENT OF TRANSPORTATION. A COPY MAY BE OBTAINED UPON REQUEST.

CANTILEVER SIGN STRUCTURE (TRUSS-TYPE) FOUNDATION TYPES 2 & 3

STANDARD PLAN G-60.30-01

SHEET 1 OF 2 SHEETS

APPROVED FOR PUBLICATION

Pasco Bakotich III — STATE DESIGN ENGINEER
06-27-11 — DATE

Washington State Department of Transportation

EFFECTIVE: AUGUST 6, 2012 TO August 4, 2013

EFFECTIVE: AUGUST 6, 2012 TO August 4, 2013
EFFECTIVE: AUGUST 6, 2012 TO August 4, 2013

DRAWN BY: BILL BERENS

BAR LIST ~ TYPES 2 AND 3

MARK	LOCATION	TOTAL SIGN AREA			
		200 SF OR LESS		+200 SF -400 SF	
		QTY.	SIZE	QTY.	SIZE
1	PEDESTAL HOOP	5	#4	5	#4
2	FOUNDATION WALL TIES	6	#5	6	#5
3	FOUNDATION VERTICALS	14	#6	14	#6
4	PEDESTAL VERTICALS	16	#10	16	#10
5	FOUNDATION WALL HORIZONTALS AT SLOPE	2	#5	2	#5
6	FOUNDATION WALL HORIZONTALS	VARIES SEE PLANS	#5	VARIES SEE PLANS	#5

BENDING DIAGRAM

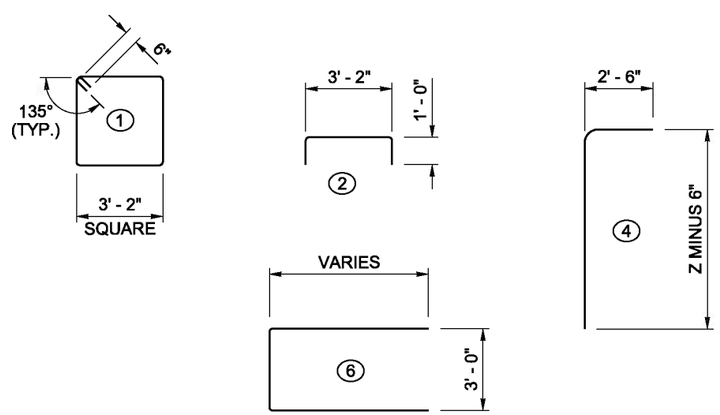

VALUES OF Z

FOUNDATION TYPE	TOTAL SIGN AREA		ALLOWABLE LATERAL BEARING PRESSURE (PSF)
	200 SF OR LESS	200 SF ~ 400 SF	
	Z	Z	
TYPE 2	9' - 0"	11' - 0"	2500 OR GREATER
TYPE 3	11' - 0"	13' - 6"	NOT LESS THAN 1500

MATERIAL SPECIFICATIONS

CONCRETE	CLASS 4000P
STEEL REINF. BAR	AASHTO M 31 GRADE 60
ANCHOR RODS	ASTM F 1554 GRADE 105
ANCHOR NUTS	AASHTO M 291
ANCHOR WASHERS	AASHTO M 293
ANCHORAGE GALVANIZING	AASHTO M 232
ANCHOR PLATE	ASTM A 36

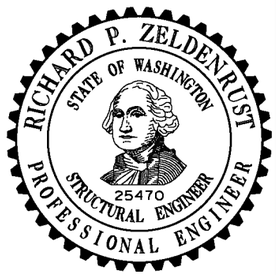

NOTE: THIS PLAN IS NOT A LEGAL ENGINEERING DOCUMENT BUT AN ELECTRONIC DUPLICATE. THE ORIGINAL, SIGNED BY THE ENGINEER AND APPROVED FOR PUBLICATION, IS KEPT ON FILE AT THE WASHINGTON STATE DEPARTMENT OF TRANSPORTATION. A COPY MAY BE OBTAINED UPON REQUEST.

CANTILEVER SIGN STRUCTURE (TRUSS-TYPE) FOUNDATION TYPES 2 & 3

STANDARD PLAN G-60.30-01

SHEET 2 OF 2 SHEETS

APPROVED FOR PUBLICATION

Pasco Bakotich III — STATE DESIGN ENGINEER

06-27-11 — DATE

Washington State Department of Transportation

EFFECTIVE: AUGUST 6, 2012 TO August 4, 2013
EFFECTIVE: AUGUST 6, 2012 TO August 4, 2013
EFFECTIVE: AUGUST 6, 2012 TO August 4, 2013
EFFECTIVE: AUGUST 6, 2012 TO August 4, 2013

EFFECTIVE: AUGUST 6, 2012 TO August 4, 2013
EFFECTIVE: AUGUST 6, 2012 TO August 4, 2013

DRAWN BY: BILL BEKENS

1. SEE CHORD TO END POST CONNECTION TYPE **Q**
2. SEE CHORD TO END POST CONNECTION TYPE **R**
3. TOP END TRUSS DIAGONAL JOINS END POSTS AT CHORDS WHERE VERTICAL AND HORIZONTAL DIAGONALS CONNECT

NOTES

1. Horizontal and vertical clearance requirements shall be as shown in Contract Plans.
2. Horizontal diagonals must join chords where vertical diagonals connect (panel points).
3. Interior diagonals shall be placed at panel points, 40' maximum spacing. Locate symmetrically about centerline of span if possible. An interior diagonal is not required at span ends.
4. No post splices permitted in lower third of height, nor closer than 3' - 0" to bottom of chord. No chord shop splices permitted in middle third of span. Maximum of one splice in each end post.

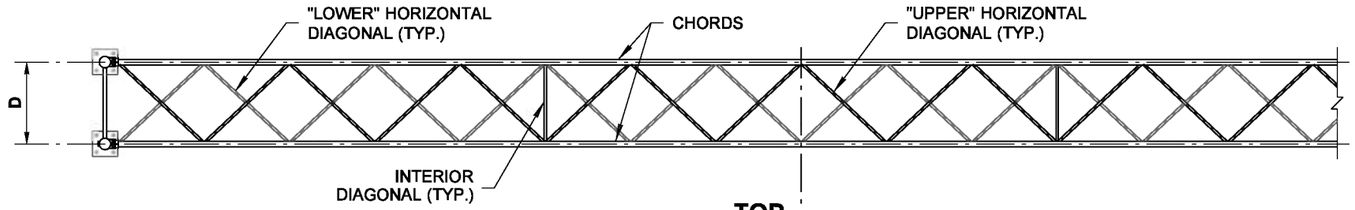

TOP

SYMMETRICAL ABOUT ℄ SPAN (EXCEPT FRAMING WITH ODD NUMBER OF PANELS)

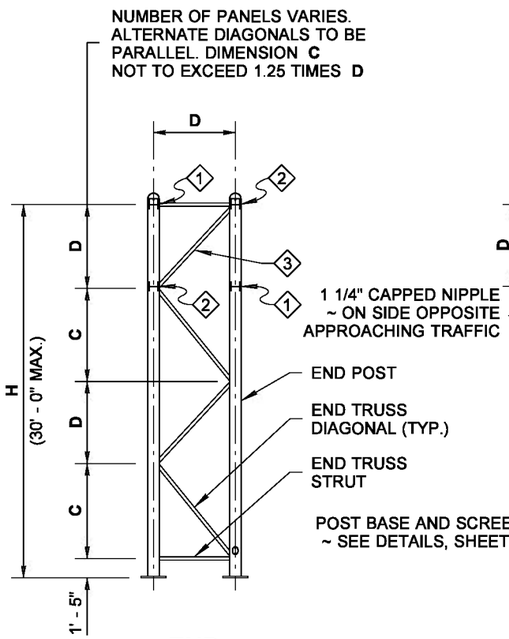

END

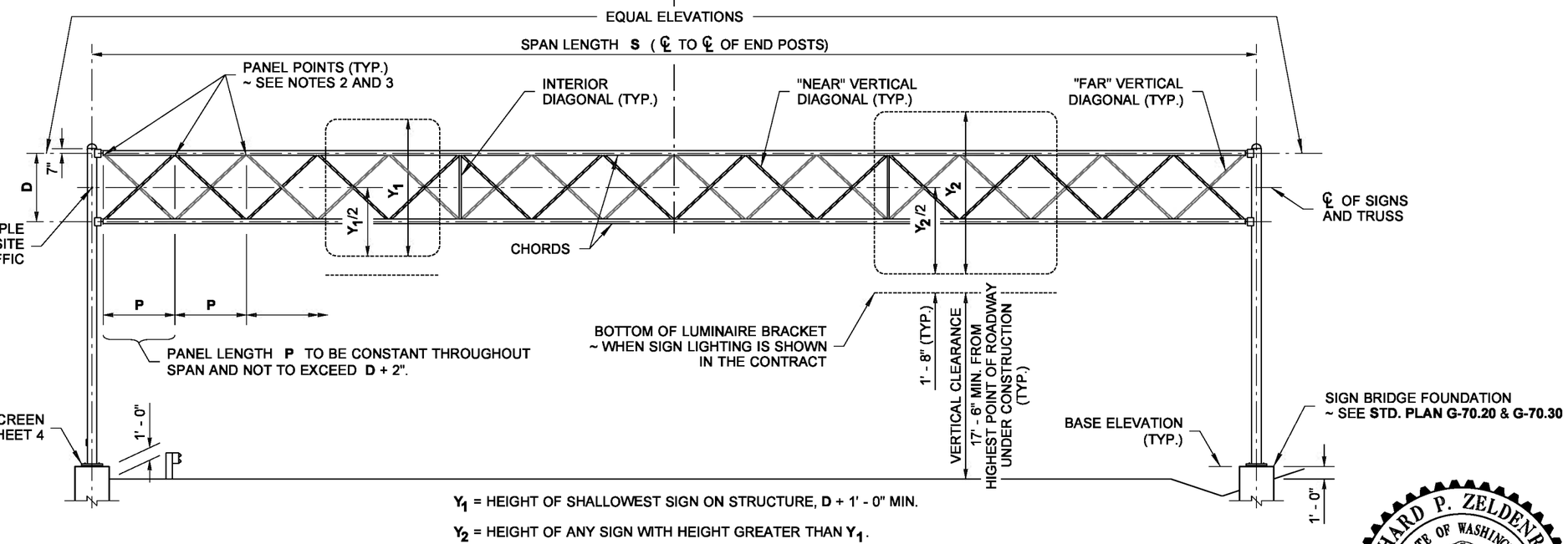

Y_1 = HEIGHT OF SHALLOWEST SIGN ON STRUCTURE, D + 1' - 0" MIN.

Y_2 = HEIGHT OF ANY SIGN WITH HEIGHT GREATER THAN Y_1.

ELEVATION

MATERIAL SPECIFICATIONS	
PIPE (CHORDS, DIAGONALS, STRUTS AND POSTS)	ASTM A 36 OR ASTM A 53 GRADE B, TYPE E OR S, OR A 500 GRADE B
PLATES	ASTM A 36
SHAPES	ASTM A 36 ASTM A 992
BOLTS, NUTS, & WASHERS	STD. SPEC. 9-06.5(3)
PIPE, PLATE & SHAPE GALVANIZING	AASHTO M 111
FASTENER GALVANIZING	AASHTO M 232

STRUCTURE DIMENSIONS

SPAN LENGTH S	DIMENSION D	TOP AND BOTTOM CHORDS	DIAGONALS	END TRUSS POSTS	END TRUSS STRUTS AND DIAGONALS	TOTAL SIGN AREA (MAX.) (SQ. FT.)
60' OR LESS	4' - 0"	3" x .216"	1 1/4" x .140"	10" x .279"	2 1/2" x .203"	384
61' to 90'	5' - 0"	4" x .237"	2" x .154"	10" x .279"	2 1/2" x .203"	624
91' to 120'	6' - 0"	5" x .258"	2" x .154"	10" x .307"	3" x .216"	864
121' to 150'	7' - 0"	6" x .280"	2 1/2" x .203"	10" x .365"	3 1/2" x .226"	1104

ALL MEMBERS ARE PIPE. VALUES SHOWN ARE NOMINAL PIPE SIZE AND WALL THICKNESS.

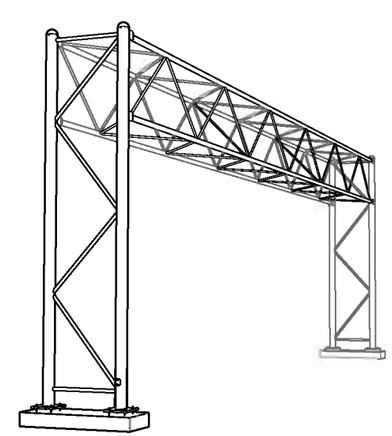

PERSPECTIVE

RICHARD P. ZELDENRUST
STATE OF WASHINGTON
25470
STRUCTURAL ENGINEER
PROFESSIONAL ENGINEER

NOTE: THIS PLAN IS NOT A LEGAL ENGINEERING DOCUMENT BUT AN ELECTRONIC DUPLICATE. THE ORIGINAL, SIGNED BY THE ENGINEER AND APPROVED FOR PUBLICATION, IS KEPT ON FILE AT THE WASHINGTON STATE DEPARTMENT OF TRANSPORTATION. A COPY MAY BE OBTAINED UPON REQUEST.

SIGN BRIDGE (TRUSS-TYPE)

STANDARD PLAN G-70.10-01

SHEET 1 OF 4 SHEETS

APPROVED FOR PUBLICATION

Pasco Bakotich III — STATE DESIGN ENGINEER

06-27-11 — DATE

Washington State Department of Transportation

EFFECTIVE: AUGUST 6, 2012 TO August 4, 2013
EFFECTIVE: AUGUST 6, 2012 TO August 4, 2013
EFFECTIVE: AUGUST 6, 2012 TO August 4, 2013
EFFECTIVE: AUGUST 6, 2012 TO August 4, 2013

EFFECTIVE: AUGUST 6, 2012 TO August 4, 2013

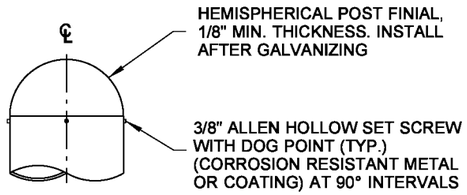

ELEVATION

FINIAL DETAIL

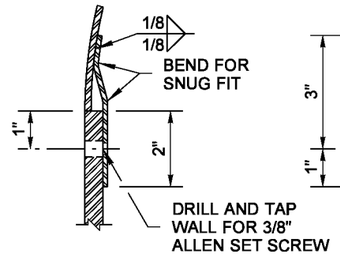

SECTION THROUGH FINIAL AND POST

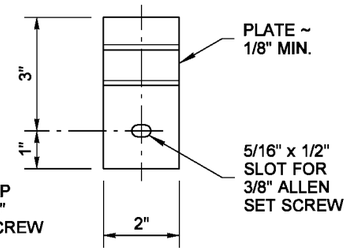

FINIAL BRACKET

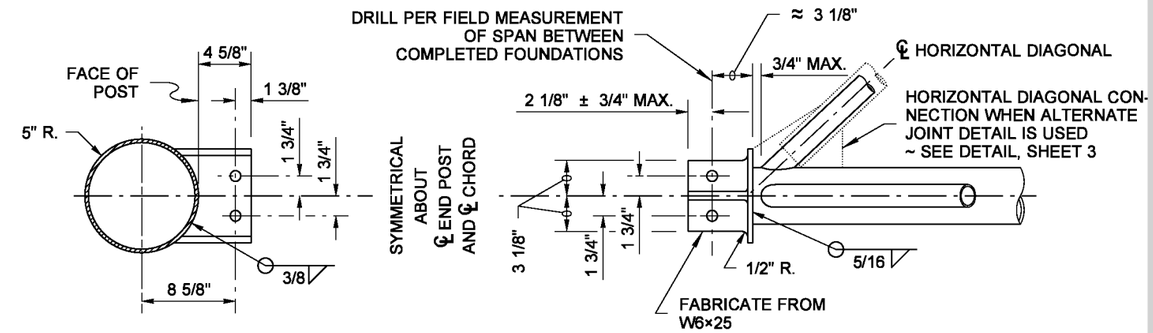

TOP

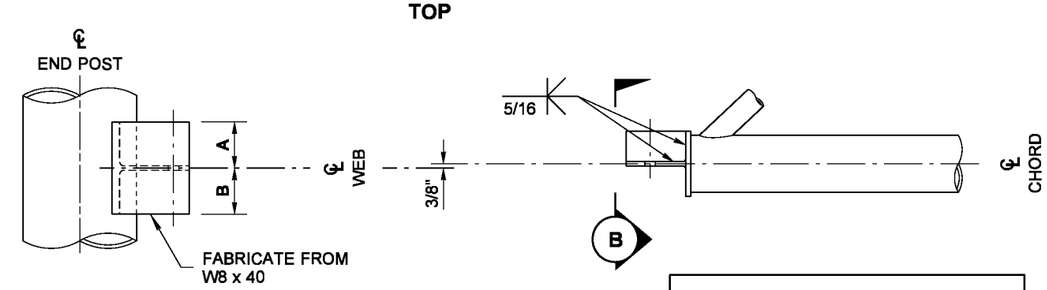

ELEVATION

CONNECTION DATA			
SPAN LENGTH	A	B	BOLT DIAMETER
60' OR LESS	2 3/8"	1 5/8"	7/8" ④
61' TO 90'	2 7/8"	2 1/8"	
91' TO 120'	3 3/8"	2 5/8"	
121' TO 150'	4 1/16"	3 1/4"	

④ INSTALL BOLTS WITH HEAD UPWARD. EXCLUDE BOLT THREADING FROM GRIP.

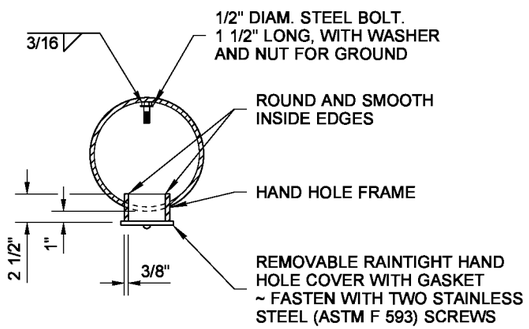

TOP

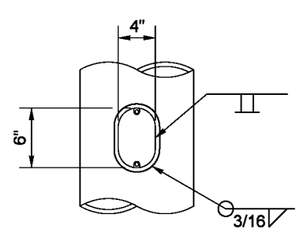

ELEVATION
(COVER NOT SHOWN FOR CLARITY)

HAND HOLE DETAIL

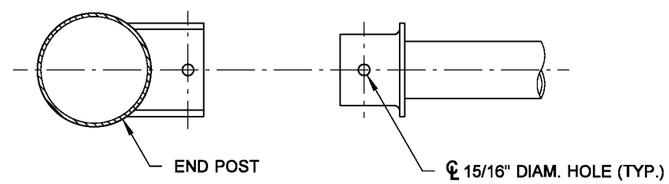

TOP

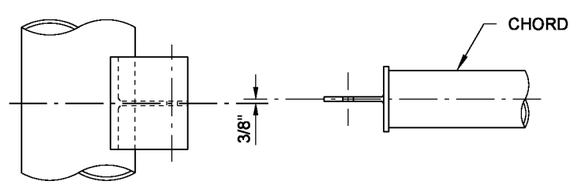

ELEVATION

CHORD TO END POST CONNECTION TYPE Q
USED WHERE NO DIAGONALS CONNECT
DETAILS NOT SHOWN ARE SAME AS **CHORD TO END POST CONNECTION TYPE R**, OMITTING THE 3/4" PLATE STIFFENER ON THE TEE MEMBER.

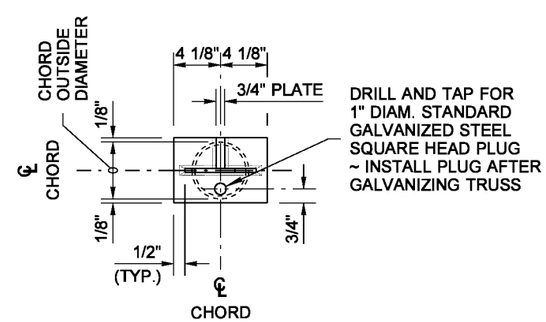

VIEW B

CHORD TO END POST CONNECTION TYPE R
USED WHERE DIAGONALS CONNECT

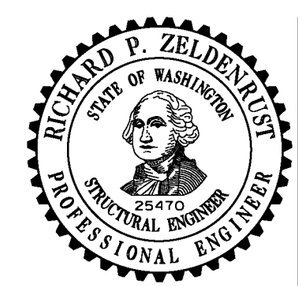

NOTE: THIS PLAN IS NOT A LEGAL ENGINEERING DOCUMENT BUT AN ELECTRONIC DUPLICATE. THE ORIGINAL, SIGNED BY THE ENGINEER AND APPROVED FOR PUBLICATION, IS KEPT ON FILE AT THE WASHINGTON STATE DEPARTMENT OF TRANSPORTATION. A COPY MAY BE OBTAINED UPON REQUEST.

SIGN BRIDGE (TRUSS-TYPE)

STANDARD PLAN G-70.10-01

SHEET 2 OF 4 SHEETS

APPROVED FOR PUBLICATION

Pasco Bakotich III — STATE DESIGN ENGINEER
06-27-11 — DATE

Washington State Department of Transportation

DRAWN BY: BILL BERENS

EFFECTIVE: AUGUST 6, 2012 TO August 4, 2013

EFFECTIVE: AUGUST 6, 2012 TO August 4, 2013

DRAWN BY: BILL BEKENS

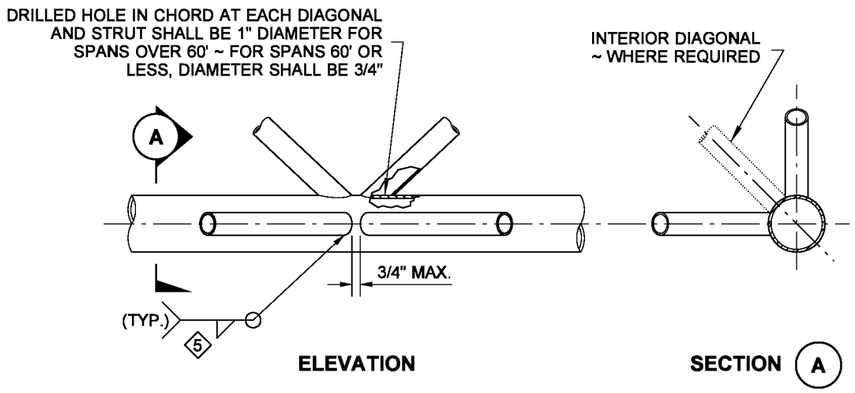

5 ENDS OF DIAGONALS SHALL BE CUT TO FIT NEATLY AGAINST CHORD OR POST. FILLET WELD SIZE TO BE DIAGONAL TUBE OR PIPE THICKNESS PLUS 1/16".

TYPICAL JOINT DETAIL

CHORD SHOWN ~ END POST SIMILAR

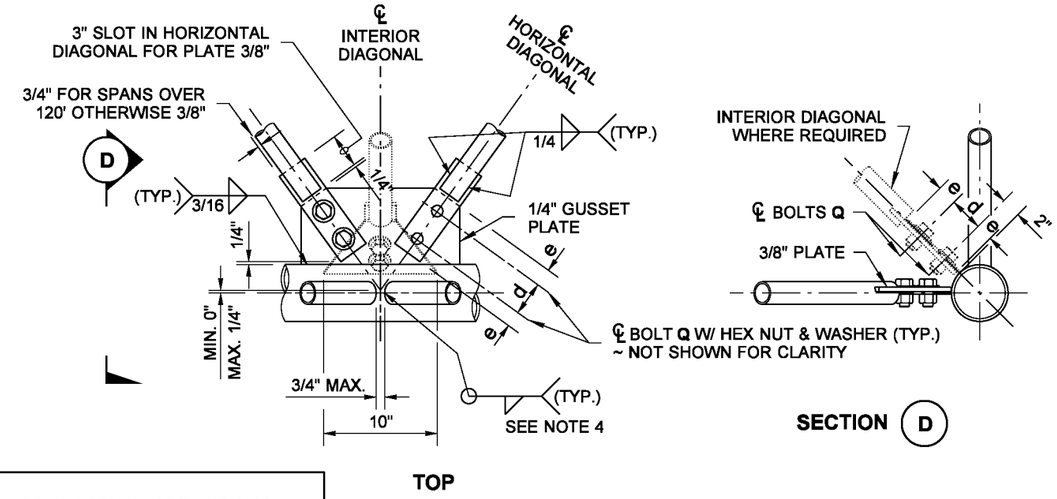

ALTERNATE JOINT DATA			
SPAN LENGTH	d	e	BOLT Q DIAMETER
60' OR LESS	2 1/2"	1 1/4"	3/4"
61' TO 90'	3"	1 1/2"	7/8"
91' TO 120'	3"	1 1/2"	7/8"
121' TO 150'	3 1/2"	1 3/4"	1"

ALTERNATE JOINT DETAIL

NOT FOR CONNECTIONS BETWEEN VERTICAL DIAGONALS AND CHORDS

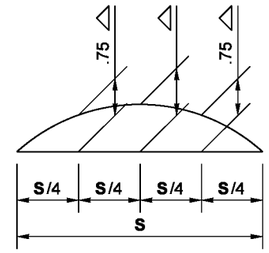

SPAN LENGTH S (FT.)	△ (IN.)
40	1/2
50	3/4
60	7/8
61	7/8
70	1
80	1 1/4
90	1 1/2
91	1 3/8
100	1 5/8
110	2
120	2 3/8
121	2 1/8
130	2 1/2
140	2 7/8
150	3 3/8

FOR SPAN LENGTHS NOT LISTED, INTERPOLATE VALUES OF △.

FABRICATE TRUSS WITH CHORDS CURVED TO PROVIDE CAMBER. DO NOT CAMBER BY USING SHIMS BETWEEN CHORDS AT SPLICES.

DEAD LOAD CAMBER

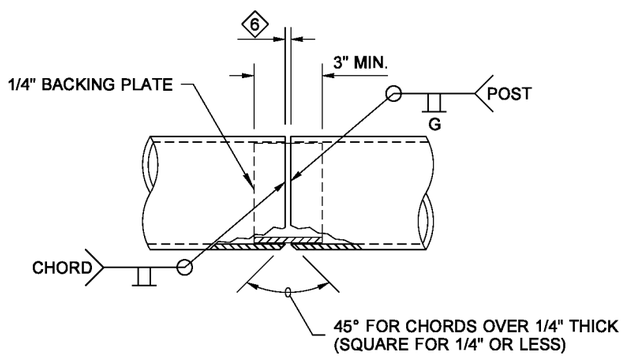

6 DIMENSION SHALL EQUAL CHORD THICKNESS OR 1/4", WHICHEVER IS LESS.

END POST OR CHORD SHOP SPLICE

NO POST SPLICES PERMITTED IN LOWER THIRD OF HEIGHT, NOR CLOSER THAN 3' - 0" TO BOTTOM OF CHORD. NO CHORD SHOP SPLICES PERMITTED IN MIDDLE THIRD OF SPAN. MAXIMUM OF ONE SPLICE IN EACH END POST.

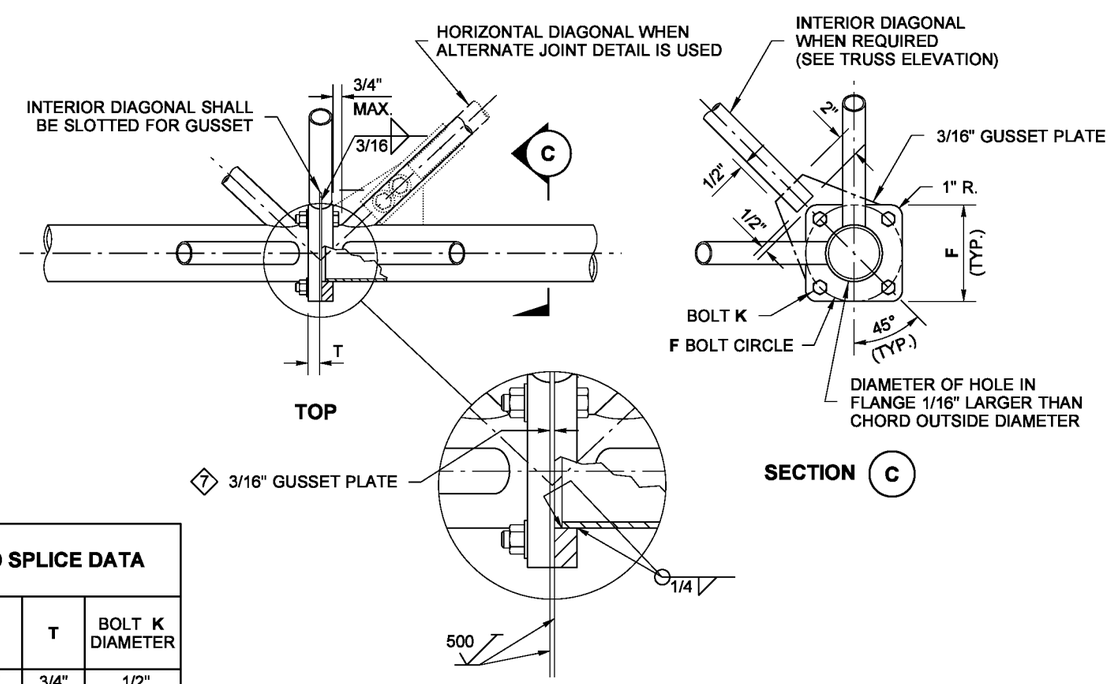

CHORD FIELD SPLICE DATA			
SPAN LENGTH	F	T	BOLT K DIAMETER
60' OR LESS	6"	3/4"	1/2"
61' TO 90'	7"	7/8"	5/8"
91' TO 120'	8 1/2"	1"	3/4"
121' TO 150'	9 1/2"	1 1/4"	7/8"

CHORD FIELD SPLICE

(NO CHORD FIELD SPLICE PERMITTED IN MIDDLE THIRD OF SPAN LENGTH)

7 3/16" SHIMS ARE REQUIRED AT THE REMAINING TWO CHORD JOINTS WHEN INTERIOR DIAGONAL IS INSTALLED.

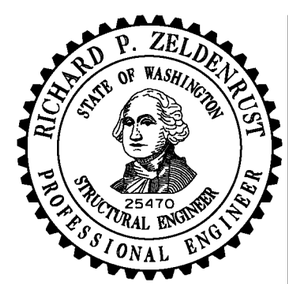

NOTE: THIS PLAN IS NOT A LEGAL ENGINEERING DOCUMENT BUT AN ELECTRONIC DUPLICATE. THE ORIGINAL, SIGNED BY THE ENGINEER AND APPROVED FOR PUBLICATION, IS KEPT ON FILE AT THE WASHINGTON STATE DEPARTMENT OF TRANSPORTATION. A COPY MAY BE OBTAINED UPON REQUEST.

SIGN BRIDGE (TRUSS-TYPE)

STANDARD PLAN G-70.10-01

SHEET 3 OF 4 SHEETS

APPROVED FOR PUBLICATION

Pasco Bakotich III — STATE DESIGN ENGINEER

06-27-11 — DATE

Washington State Department of Transportation

EFFECTIVE: AUGUST 6, 2012 TO August 4, 2013

EFFECTIVE: AUGUST 6, 2012 TO August 4, 2013
EFFECTIVE: AUGUST 6, 2012 TO August 4, 2013

DRAWN BY: BILL BEKENS

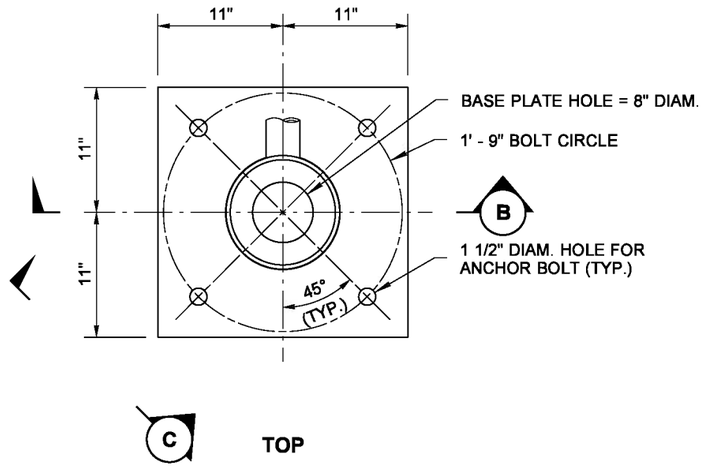

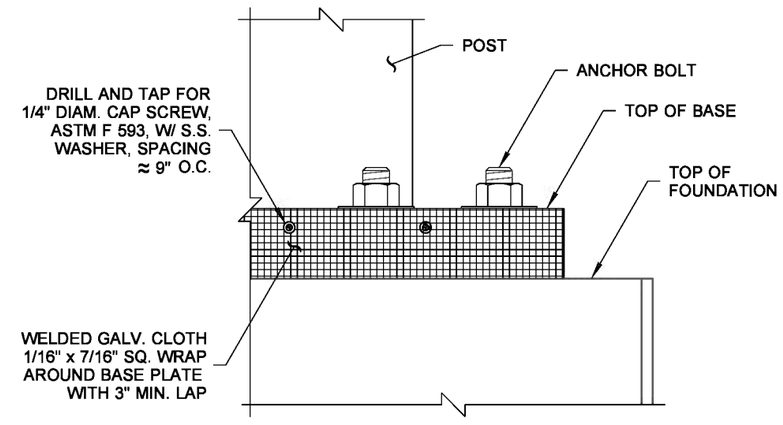

SCREEN DETAIL

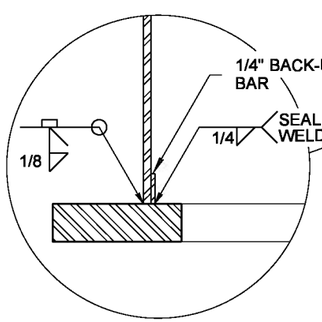

BASE WELD DETAIL

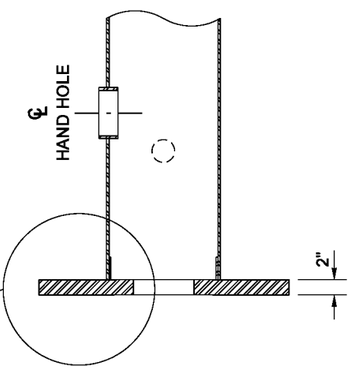

SECTION B

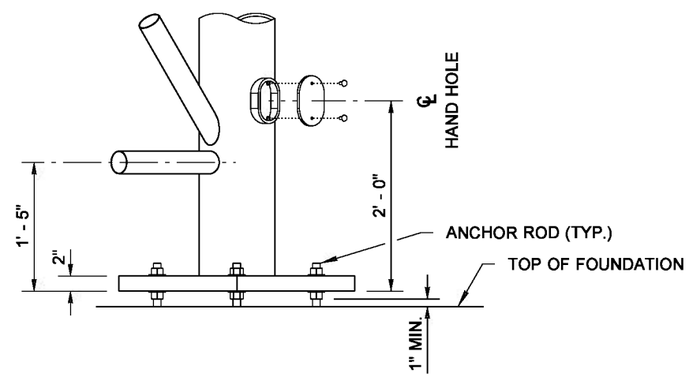

VIEW C

POST BASE DETAILS

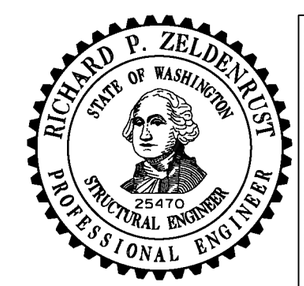

NOTE: THIS PLAN IS NOT A LEGAL ENGINEERING DOCUMENT BUT AN ELECTRONIC DUPLICATE. THE ORIGINAL, SIGNED BY THE ENGINEER AND APPROVED FOR PUBLICATION, IS KEPT ON FILE AT THE WASHINGTON STATE DEPARTMENT OF TRANSPORTATION. A COPY MAY BE OBTAINED UPON REQUEST.

SIGN BRIDGE
(TRUSS-TYPE)

STANDARD PLAN G-70.10-01

SHEET 4 OF 4 SHEETS

APPROVED FOR PUBLICATION

Pasco Bakotich III — STATE DESIGN ENGINEER
06-27-11 — DATE

Washington State Department of Transportation

EFFECTIVE: AUGUST 6, 2012 TO August 4, 2013
EFFECTIVE: AUGUST 6, 2012 TO August 4, 2013
EFFECTIVE: AUGUST 6, 2012 TO August 4, 2013
EFFECTIVE: AUGUST 6, 2012 TO August 4, 2013

EFFECTIVE: AUGUST 6, 2012 TO August 4, 2013
EFFECTIVE: AUGUST 6, 2012 TO August 4, 2013

DRAWN BY: LISA CYFORD

MATERIAL SPECIFICATIONS	
SHAFT CONCRETE	CLASS 4000P ⟨1⟩
ALL OTHER CONCRETE	CLASS 4000
STEEL REINF. BAR	AASHTO M 31 GRADE 60
ANCHOR RODS	ASTM F 1554 GRADE 105
ANCHOR NUTS	AASHTO M 291
ANCHOR WASHERS	AASHTO M 293
ANCHORAGE GALVANIZING	AASHTO M 232
ANCHOR PLATE	ASTM A 36

⟨1⟩ CASE THE EXCAVATION AND PLACE USING TREMIE METHOD WHEN WATER IS PRESENT

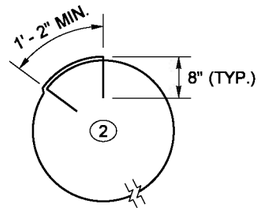

LAP SPLICE DETAIL

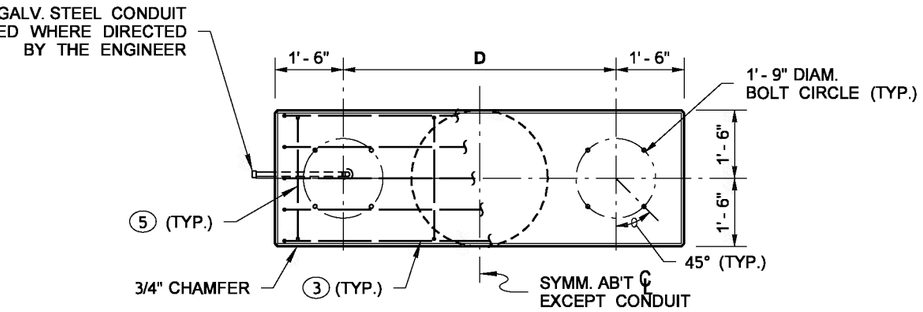

TOP

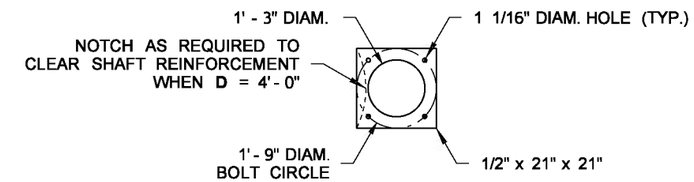

ANCHOR PLATE DETAIL

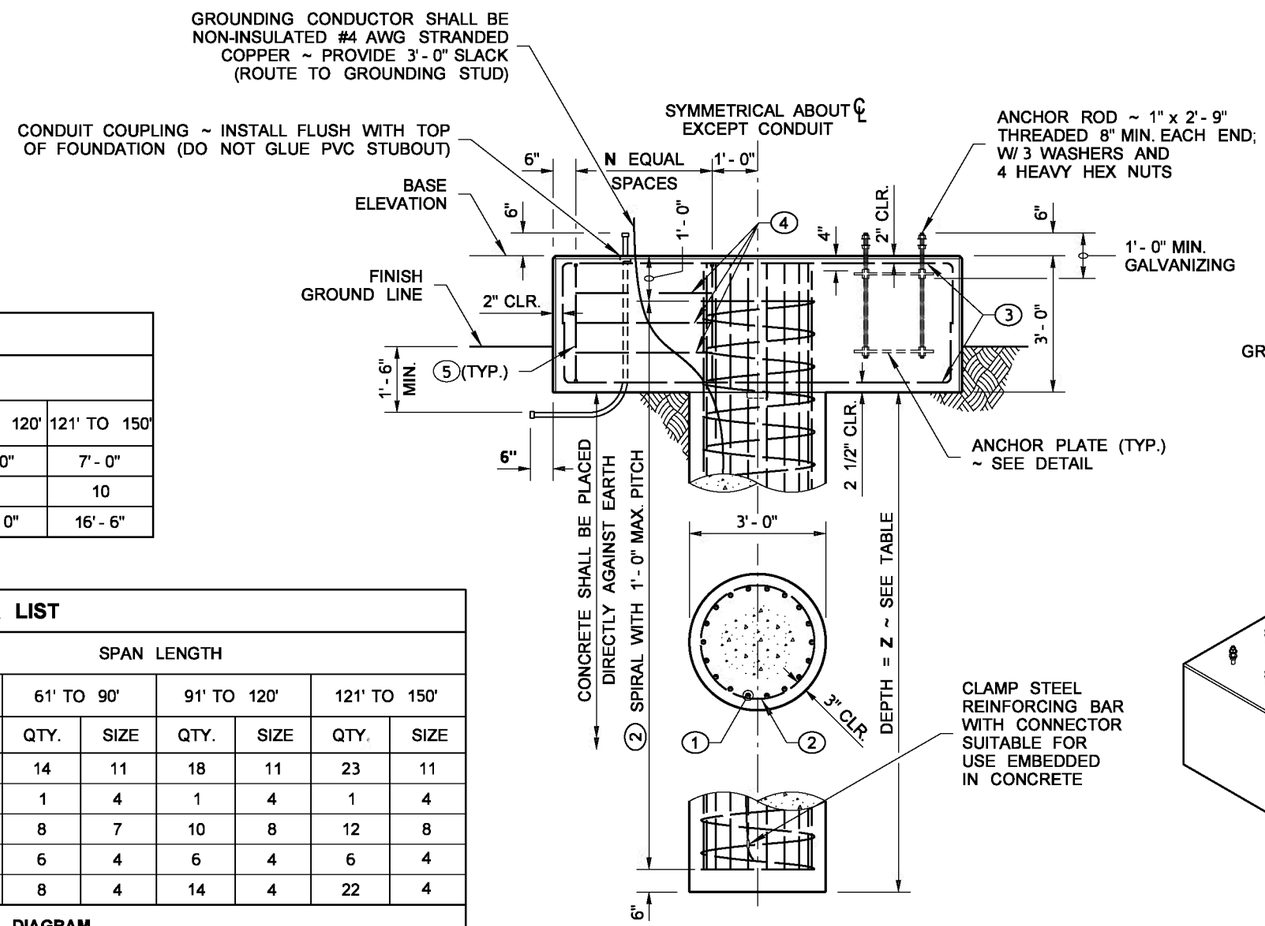

ELEVATION

FOUNDATION TYPE 1

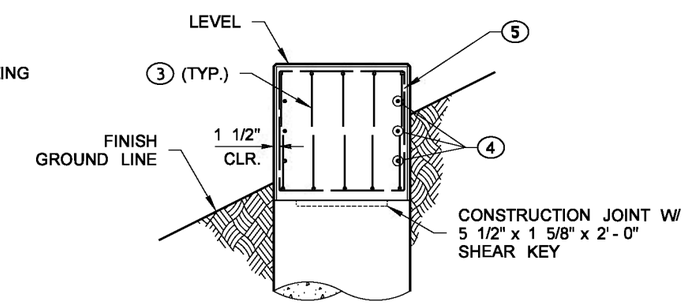

END

TABLE				
VARIABLES	SPAN LENGTH			
	60' OR LESS	61' TO 90'	91' TO 120'	121' TO 150'
DIMENSION ~ D	4' - 0"	5' - 0"	6' - 0"	7' - 0"
BAR SPACES ~ N	2	3	6	10
SHAFT DEPTH ~ Z	11' - 6"	13' - 6"	15' - 0"	16' - 6"

BAR LIST									
MARK	LOCATION	SPAN LENGTH							
		60' OR LESS		61' TO 90'		91' TO 120'		121' TO 150'	
		QTY.	SIZE	QTY.	SIZE	QTY.	SIZE	QTY.	SIZE
1	SHAFT - VERTICAL	11	9	14	11	18	11	23	11
2	SHAFT - SPIRAL	1	4	1	4	1	4	1	4
3	CAP - TOP AND BOTTOM	8	6	8	7	10	8	12	8
4	CAP - SIDES	6	4	6	4	6	4	6	4
5	CAP - HOOPS	6	4	8	4	14	4	22	4

BENDING DIAGRAM

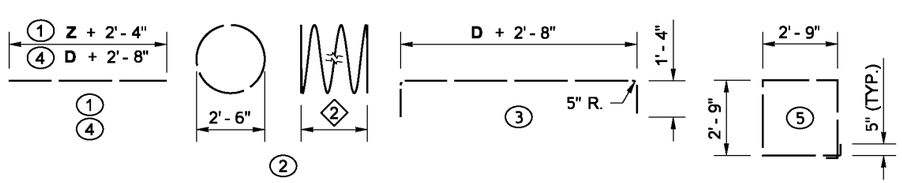

(ALL DIMENSIONS ARE OUT TO OUT)
2" RADIUS, UNLESS OTHERWISE NOTED

⟨2⟩ DETERMINE LENGTH FROM PLANS

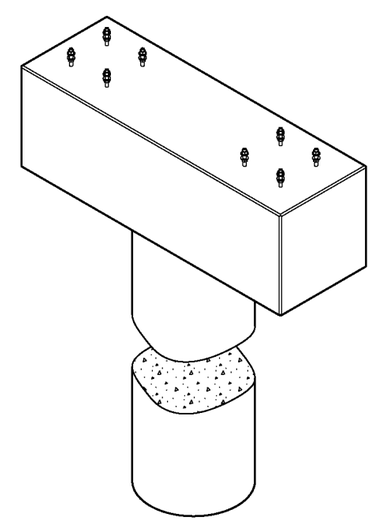

ISOMETRIC

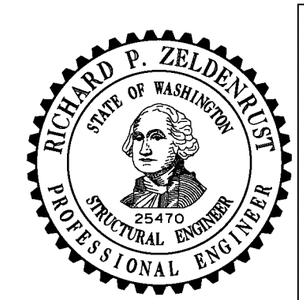

NOTE: THIS PLAN IS NOT A LEGAL ENGINEERING DOCUMENT BUT AN ELECTRONIC DUPLICATE. THE ORIGINAL, SIGNED BY THE ENGINEER AND APPROVED FOR PUBLICATION, IS KEPT ON FILE AT THE WASHINGTON STATE DEPARTMENT OF TRANSPORTATION. A COPY MAY BE OBTAINED UPON REQUEST.

SIGN BRIDGE (TRUSS-TYPE) FOUNDATION TYPE 1

STANDARD PLAN G-70.20-01

SHEET 1 OF 1 SHEET

APPROVED FOR PUBLICATION

Pasco Bakotich III — 06-27-11
STATE DESIGN ENGINEER — DATE

Washington State Department of Transportation

EFFECTIVE: AUGUST 6, 2012 TO August 4, 2013
EFFECTIVE: AUGUST 6, 2012 TO August 4, 2013

EFFECTIVE: AUGUST 6, 2012 TO August 4, 2013
EFFECTIVE: AUGUST 6, 2012 TO August 4, 2013

DRAWN BY: LISA CYFORD

MATERIAL SPECIFICATIONS	
CONCRETE	CLASS 4000P
STEEL REINF. BAR	AASHTO M 31 GRADE 60
ANCHOR RODS	ASTM F 1554 GRADE 105
ANCHOR NUTS	AASHTO M 291
ANCHOR WASHERS	AASHTO M 293
ANCHORAGE GALVANIZING	AASHTO M 232
ANCHOR PLATE	ASTM A 36

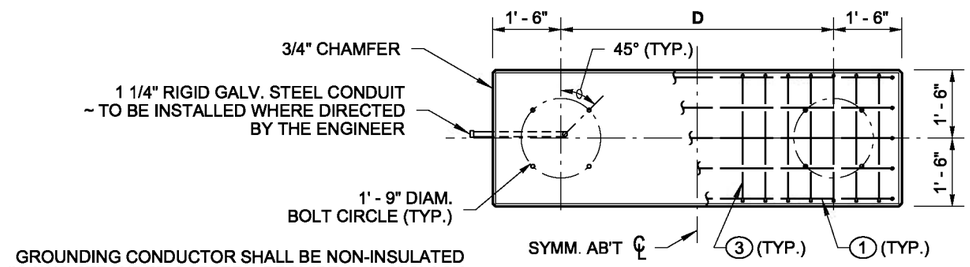

TOP

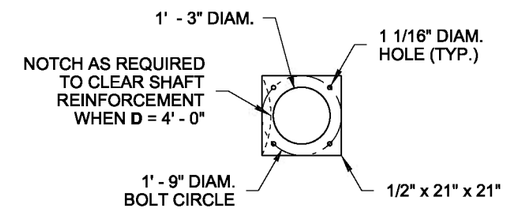

ANCHOR PLATE DETAIL

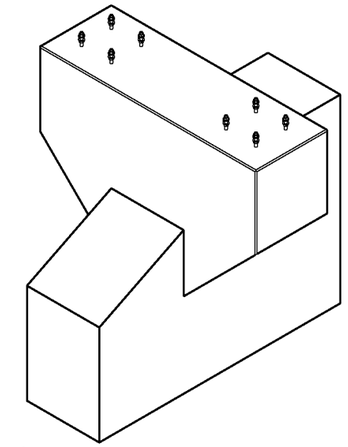

ISOMETRIC

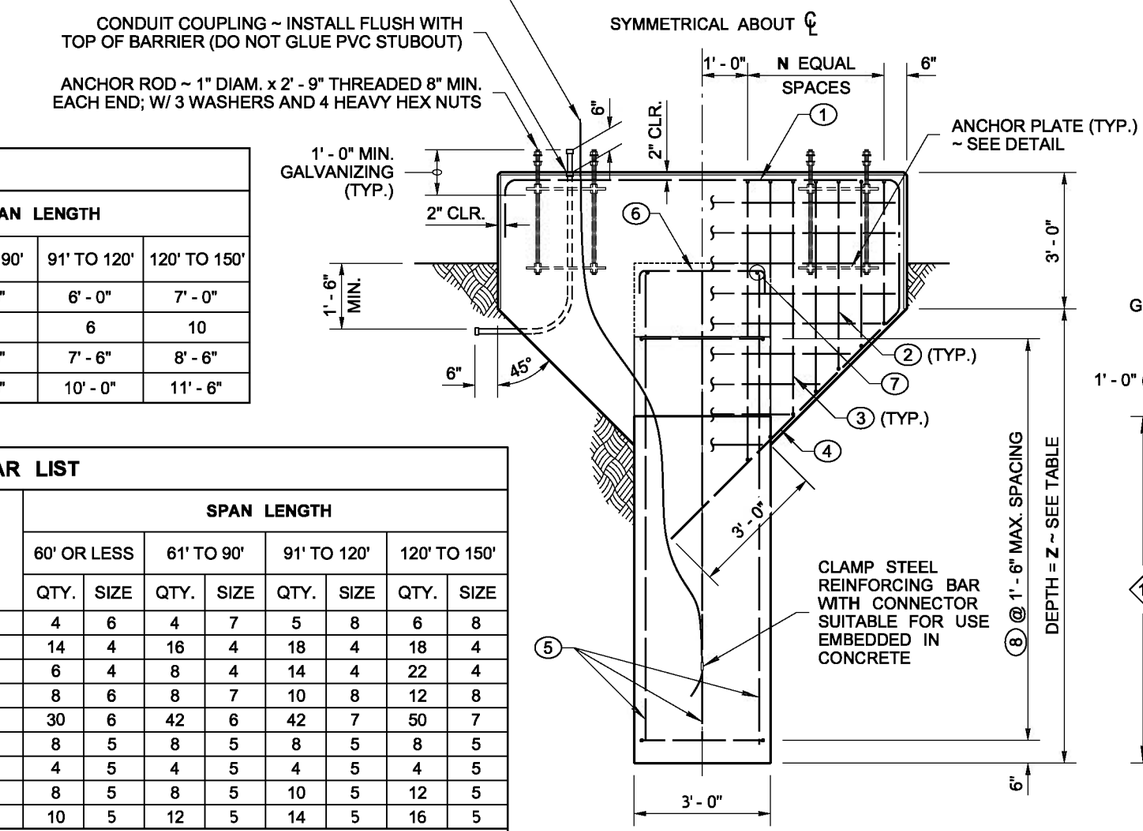

END

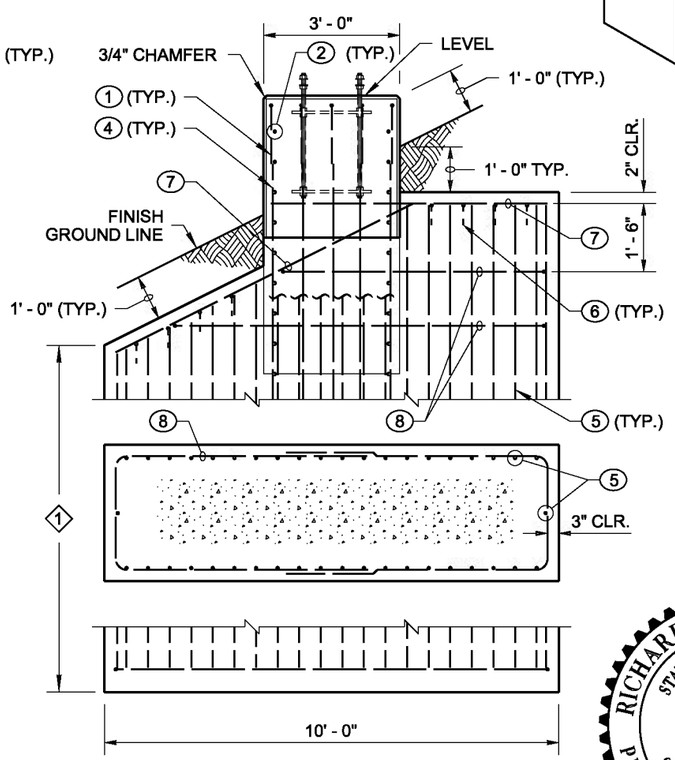

SIDE

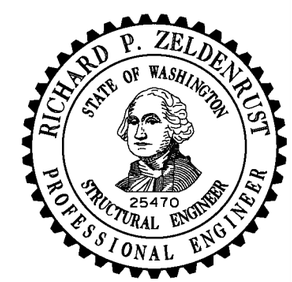

NOTE: THIS PLAN IS NOT A LEGAL ENGINEERING DOCUMENT BUT AN ELECTRONIC DUPLICATE. THE ORIGINAL SIGNED BY THE ENGINEER AND APPROVED FOR PUBLICATION, IS KEPT ON FILE AT THE WASHINGTON STATE DEPARTMENT OF TRANSPORTATION. A COPY MAY BE OBTAINED UPON REQUEST.

TABLE						
VARIABLES			SPAN LENGTH			
			60' OR LESS	61' TO 90'	91' TO 120'	120' TO 150'
DIMENSION ~ D			4' - 0"	5' - 0"	6' - 0"	7' - 0"
BAR SPACES ~ N			2	3	6	10
SHAFT DEPTH ~ Z	TYPE	2	5' - 6"	6' - 6"	7' - 6"	8' - 6"
		3	7' - 0"	8' - 6"	10' - 0"	11' - 6"

BAR LIST

FOUNDATION TYPE	MARK	LOCATION	SPAN LENGTH							
			60' OR LESS		61' TO 90'		91' TO 120'		120' TO 150'	
			QTY.	SIZE	QTY.	SIZE	QTY.	SIZE	QTY.	SIZE
2 AND 3	1	CAP - TOP	4	6	4	7	5	8	6	8
	2	CAP - SIDES	14	4	16	4	18	4	18	4
	3	CAP - HOOPS	6	4	8	4	14	4	22	4
	4	CAP - BOTTOM	8	6	8	7	10	8	12	8
	5	FND. WALL - VERTICAL	30	6	42	6	42	7	50	7
	6	FND. WALL - TIES	8	5	8	5	8	5	8	5
	7	FND. WALL - HORIZONTAL	4	5	4	5	4	5	4	5
2	8	FND. WALL - HORIZONTAL	8	5	8	5	10	5	12	5
3	8	FND. WALL - HORIZONTAL	10	5	12	5	14	5	16	5

BENDING DIAGRAM

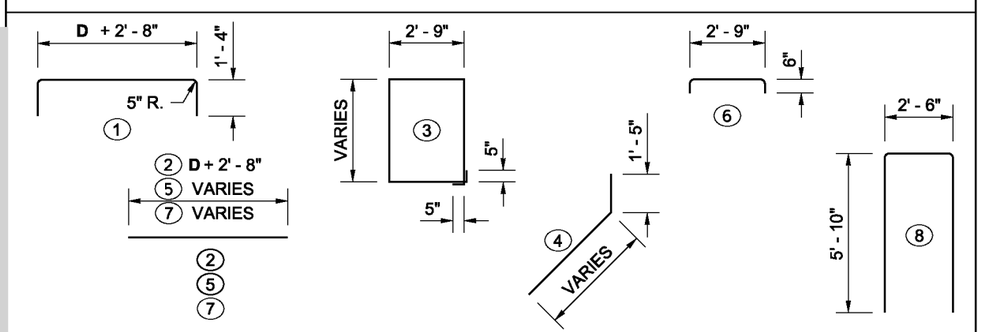

(ALL DIMENSIONS ARE OUT TO OUT)
2" RADIUS, UNLESS OTHERWISE NOTED

1 CONCRETE BELOW FINISHED GROUNDLINE SHALL BE PLACED DIRECTLY AGAINST UNDISTURBED EARTH, OR ALTERNATELY, BACKFILL PLACED AROUND FOUNDATION SHALL BE COMPACTED IN CONFORMANCE WITH **STANDARD SPECIFICATION 2-09.3(1)E**, METHOD 1 OR 4. ALL FORMWORK SHALL BE REMOVED.

FOUNDATION TYPES 2 & 3

SIGN BRIDGE (TRUSS-TYPE) FOUNDATION TYPES 2 & 3

STANDARD PLAN G-70.30-01

SHEET 1 OF 1 SHEET

APPROVED FOR PUBLICATION

Pasco Bakotich III — 06-27-11

STATE DESIGN ENGINEER — DATE

Washington State Department of Transportation

EFFECTIVE: AUGUST 6, 2012 TO August 4, 2013
EFFECTIVE: AUGUST 6, 2012 TO August 4, 2013
EFFECTIVE: AUGUST 6, 2012 TO August 4, 2013
EFFECTIVE: AUGUST 6, 2012 TO August 4, 2013

EFFECTIVE: AUGUST 6, 2012 TO August 4, 2013

DRAWN BY: LISA CYFORD

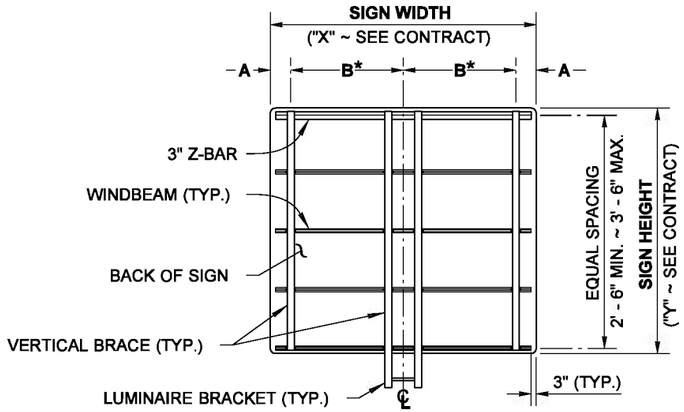

ONE SIGN LIGHTING LUMINAIRE
BRACE PLACEMENT

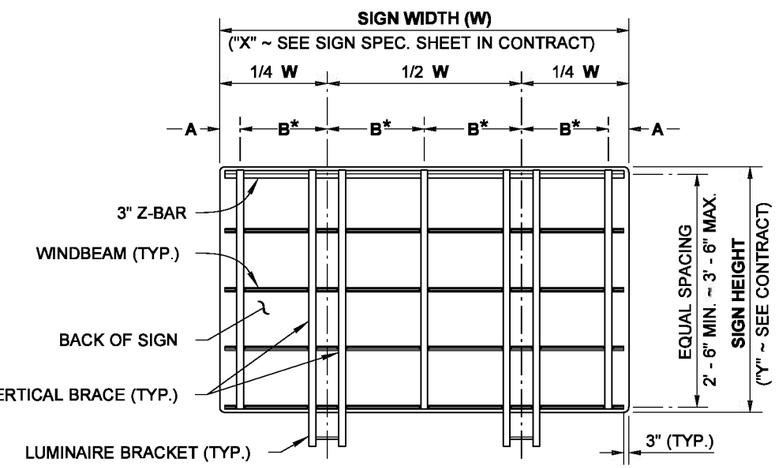

TWO SIGN LIGHTING LUMINAIRES
BRACE PLACEMENT

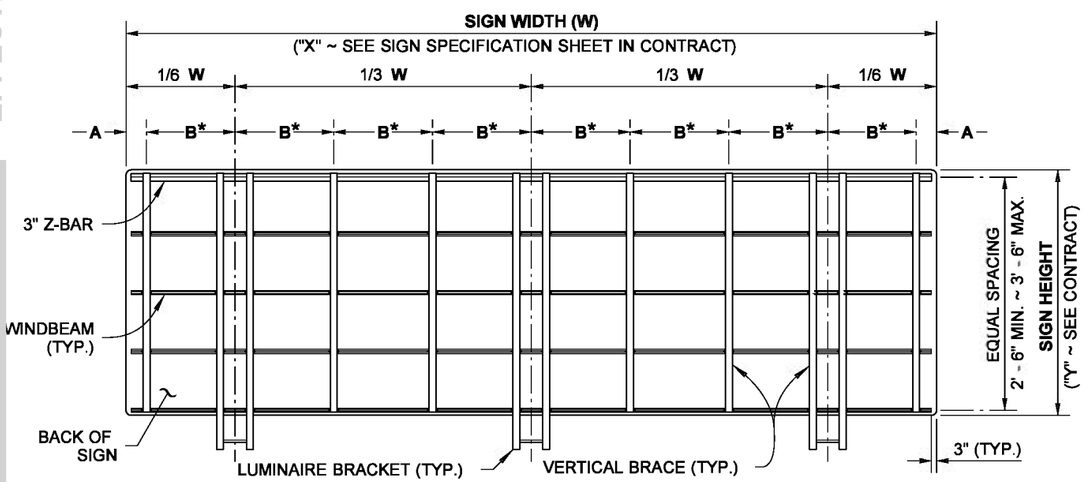

THREE SIGN LIGHTING LUMINAIRES
BRACE PLACEMENT

VERTICAL BRACE SPACING WITH SIGN LIGHTING		
SIGN WIDTH	A	B*
ONE SIGN LIGHTING LUMINAIRE		
8' - 0"	6"	3' - 6"
10' - 0"	6"	4' - 6"
12' - 0"	6"	5' - 6"
14' - 0"	1' - 0"	6' - 0"
16' - 0"	2' - 0"	6' - 0"
TWO SIGN LIGHTING LUMINAIRES		
18' - 0"	6"	4' - 3"
20' - 0"	6"	4' - 9"
22' - 0"	6"	5' - 3"
24' - 0"	6"	5' - 9"
26' - 0"	6"	6' - 3"
28' - 0"	6"	6' - 9"
30' - 0"	1' - 0"	7' - 0"
32' - 0"	2' - 0"	7' - 0"
THREE SIGN LIGHTING LUMINAIRES		
34' - 0"	6"	4' - 1 1/2"
36' - 0"	6"	4' - 4 1/2"

* IF "B" EXCEEDS THE SPACING LISTED ON THE VERTICAL BRACE SPACING TABLE, ADD AN ADDITIONAL VERTICAL BRACE

EFFECTIVE: AUGUST 6, 2012 TO August 4, 2013

NOTES

1. Install Sign Lighting Luminaires (and Brackets) only when required in the Contract.
2. Windbeam and 3" Z-Bar are aluminum. All nuts, bolts, washers, and other hardware shall be stainless steel, except as noted.
3. See **Standard Plan G-90.20** (Monotube), or **G-90.30** (Truss) for additional Overhead Sign Mounting details.
4. Galvanize all non-stainless steel parts.

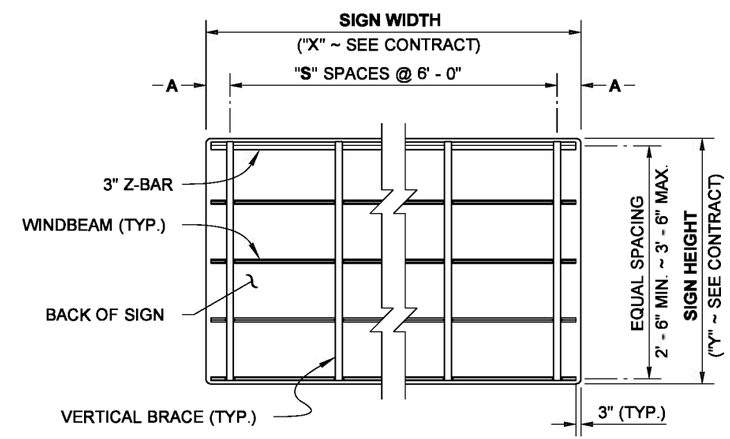

WITHOUT SIGN LIGHTING
BRACE PLACEMENT

VERTICAL BRACE SPACING WITHOUT SIGN LIGHTING		
SIGN WIDTH	A	S (SPACES)
8' - 0"	1' - 0"	1
10' - 0"	2' - 0"	1
12' - 0"	3' - 0"	1
14' - 0"	1' - 0"	2
16' - 0"	2' - 0"	2
18' - 0"	3' - 0"	2
20' - 0"	1' - 0"	3
22' - 0"	2' - 0"	3
24' - 0"	3' - 0"	3
26' - 0"	1' - 0"	4
28' - 0"	2' - 0"	4
30' - 0"	3' - 0"	4
32' - 0"	1' - 0"	5
34' - 0"	2' - 0"	5
36' - 0"	3' - 0"	5

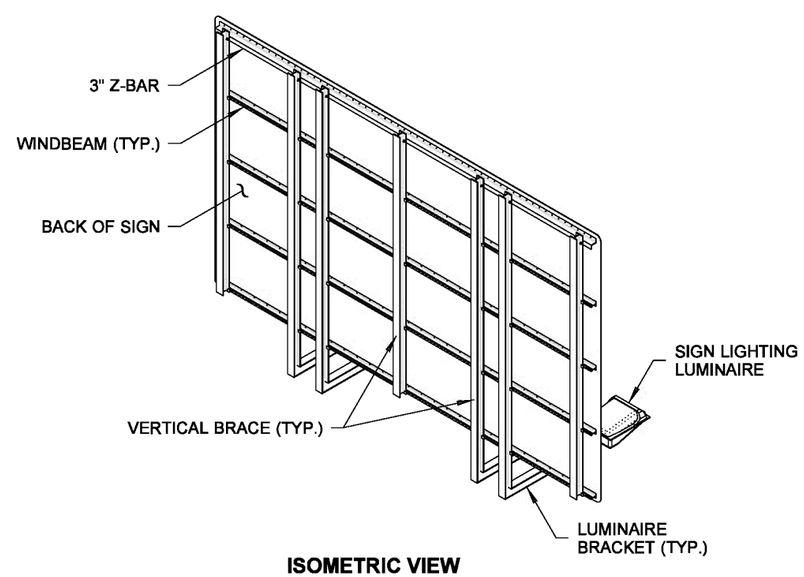

ISOMETRIC VIEW

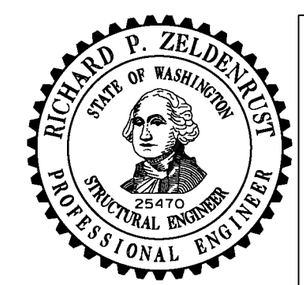

NOTE: THIS PLAN IS NOT A LEGAL ENGINEERING DOCUMENT BUT AN ELECTRONIC DUPLICATE. THE ORIGINAL, SIGNED BY THE ENGINEER AND APPROVED FOR PUBLICATION, IS KEPT ON FILE AT THE WASHINGTON STATE DEPARTMENT OF TRANSPORTATION. A COPY MAY BE OBTAINED UPON REQUEST.

OVERHEAD SIGN BRACING AND LIGHTING PLACEMENT

STANDARD PLAN G-90.10-01

SHEET 1 OF 1 SHEET

APPROVED FOR PUBLICATION

Pasco Bakotich III — STATE DESIGN ENGINEER
05-11-11 — DATE

Washington State Department of Transportation

EFFECTIVE: AUGUST 6, 2012 TO August 4, 2013

EFFECTIVE: AUGUST 6, 2012 TO August 4, 2013

DRAWN BY: LISA CYFORD

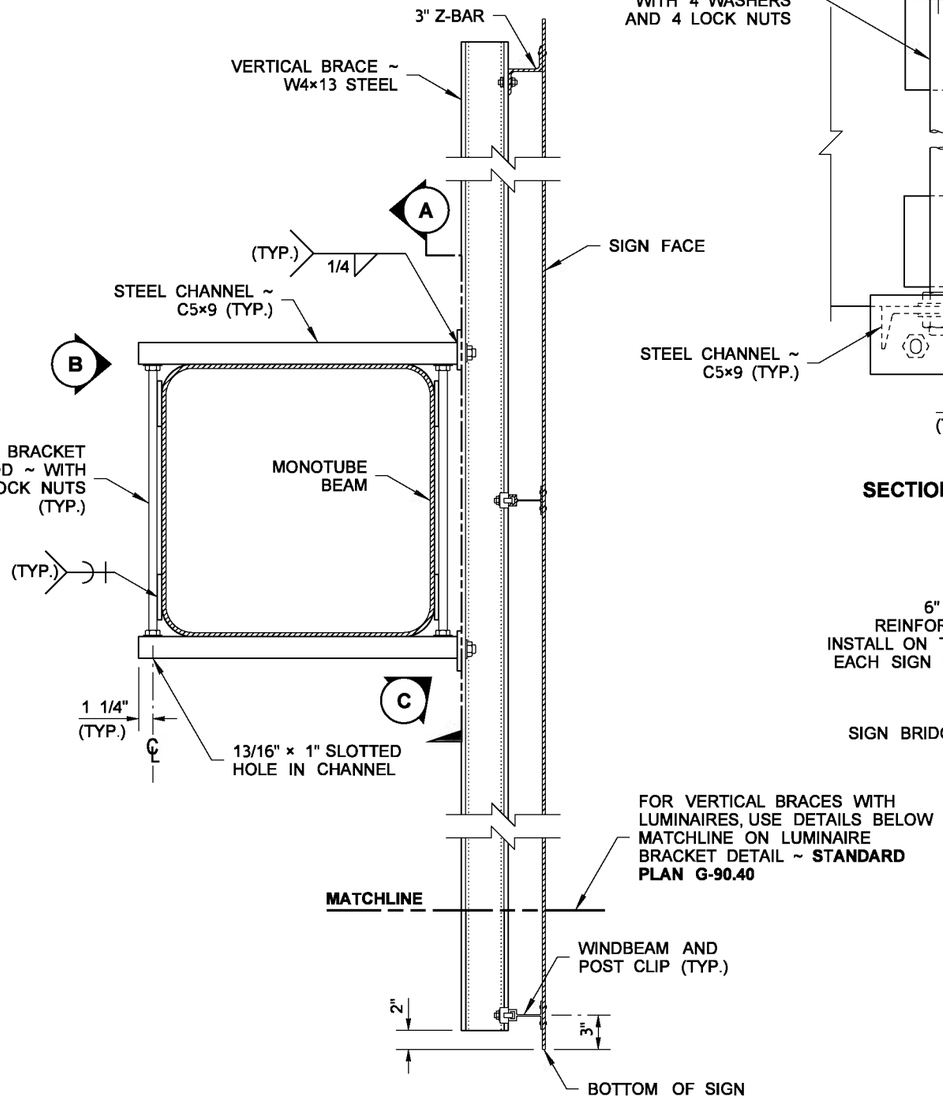

SIDE VIEW
MONOTUBE CONNECTION

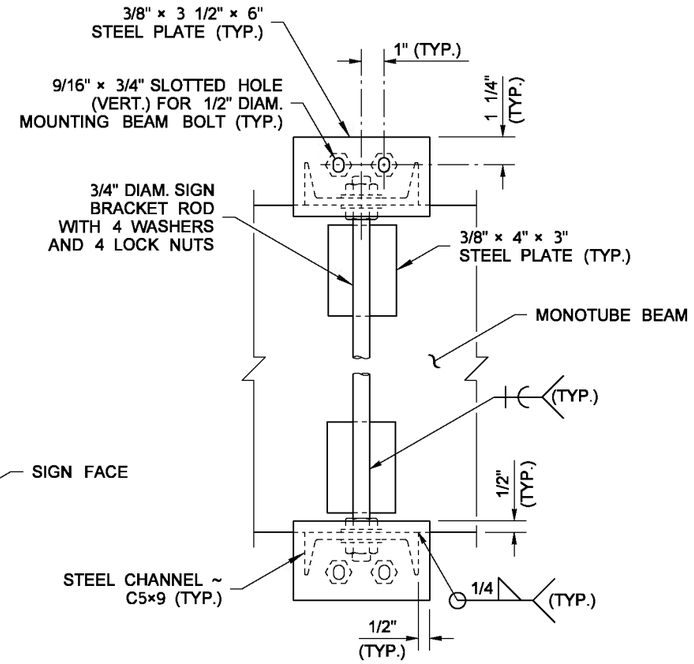

SECTION A

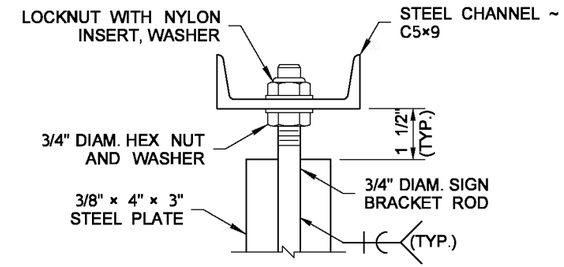

VIEW B

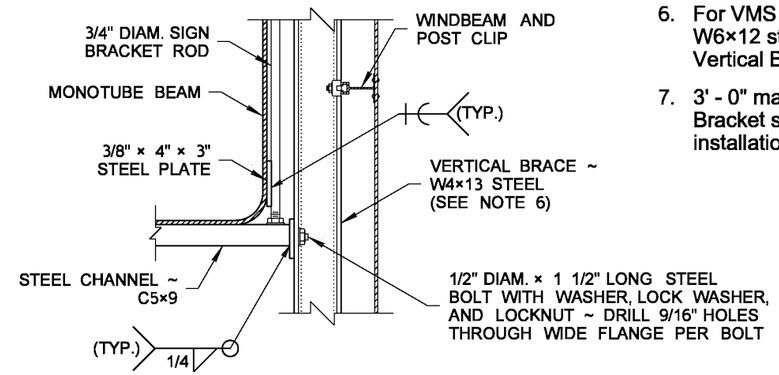

DETAIL C

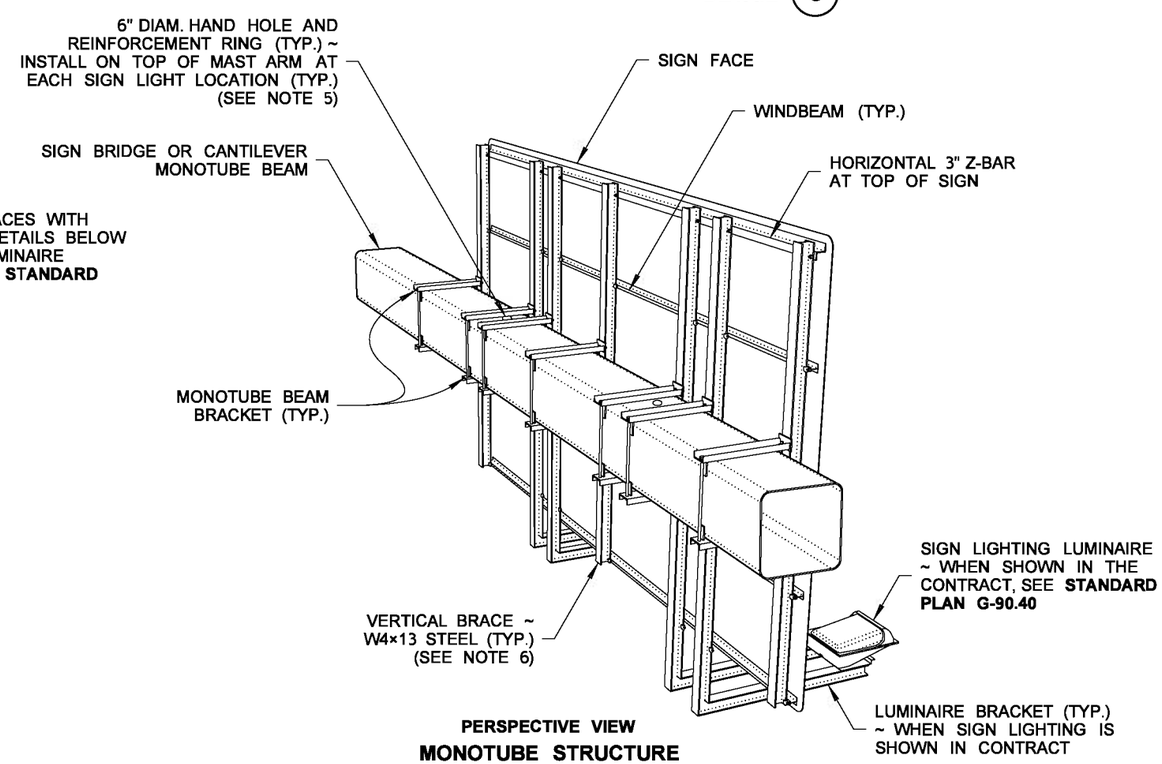

PERSPECTIVE VIEW
MONOTUBE STRUCTURE

NOTES

1. Refer to Contract Plans for Monotube Beam Bracket element sizes, dimensions, and weld symbols.
2. See **Standard Plan G-90.10** for Sign Bracing and Lighting Placement details.
3. Galvanize all non stainless steel parts.
4. See **Standard Plan G-90.40** for Sign Lighting details.
5. Hand holes shall be installed at the time of fabrication. Only additional conduits for lighting accommodations to previously non illuminated structures may be installed in field as long as the proper repairs are made to the structure. For details not shown, see **Standard Plan J-75.40.**
6. For VMS mounting, the Contractor may substitute W6×12 steel or W8×13 steel sections for the Vertical Brace 4 × 13 steel.
7. 3' - 0" max. Vertical Brace and Monotube Beam Bracket spacing for walk-in cabinet Type VMS installation.

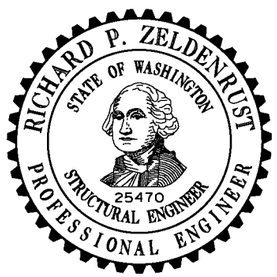

NOTE: THIS PLAN IS NOT A LEGAL ENGINEERING DOCUMENT BUT AN ELECTRONIC DUPLICATE. THE ORIGINAL, SIGNED BY THE ENGINEER AND APPROVED FOR PUBLICATION, IS KEPT ON FILE AT THE WASHINGTON STATE DEPARTMENT OF TRANSPORTATION. A COPY MAY BE OBTAINED UPON REQUEST.

OVERHEAD SIGN MOUNTING (MONOTUBE STRUCTURE)

STANDARD PLAN G-90.20-01

SHEET 1 OF 1 SHEET

APPROVED FOR PUBLICATION

Pasco Bakotich III — 06-27-11

STATE DESIGN ENGINEER — DATE

Washington State Department of Transportation

EFFECTIVE: AUGUST 6, 2012 TO August 4, 2013

EFFECTIVE: AUGUST 6, 2012 TO August 4, 2013
EFFECTIVE: AUGUST 6, 2012 TO August 4, 2013

DRAWN BY: BILL BERENS

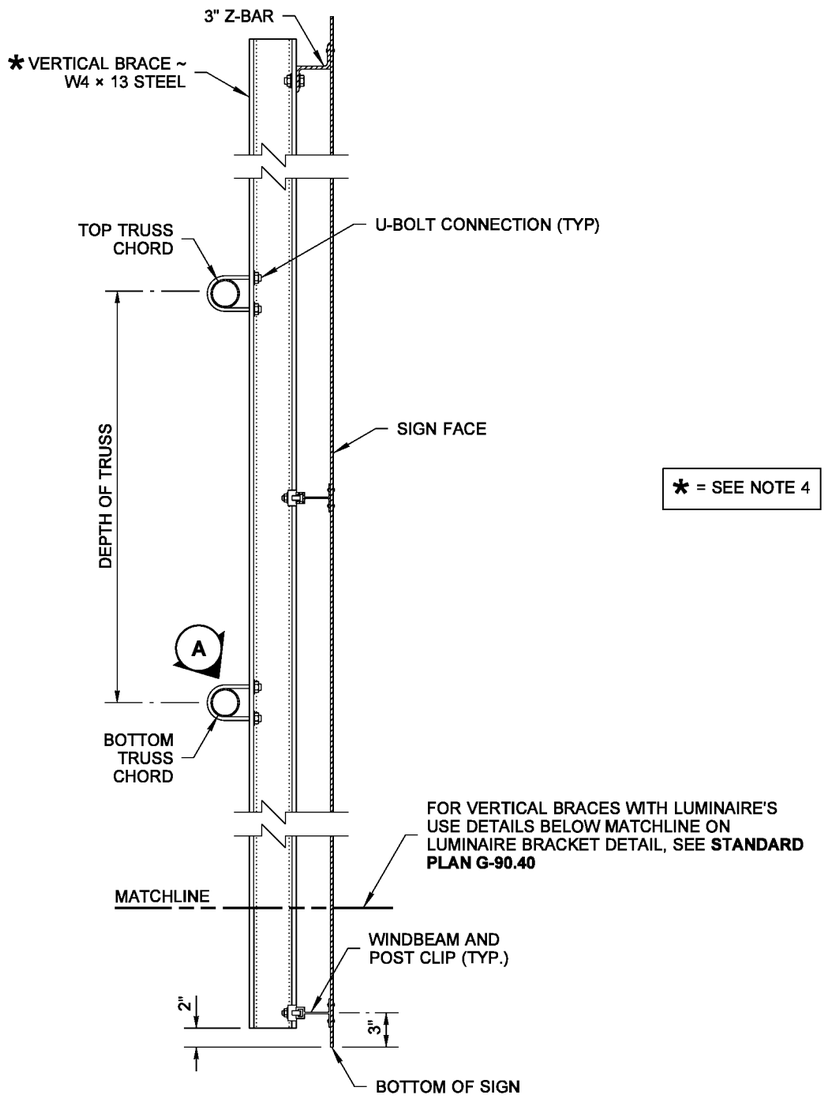

SIDE VIEW
TRUSS CONNECTION

* = SEE NOTE 4

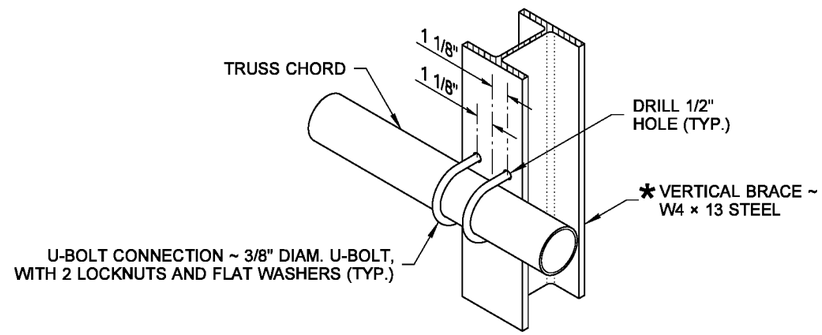

DETAIL A

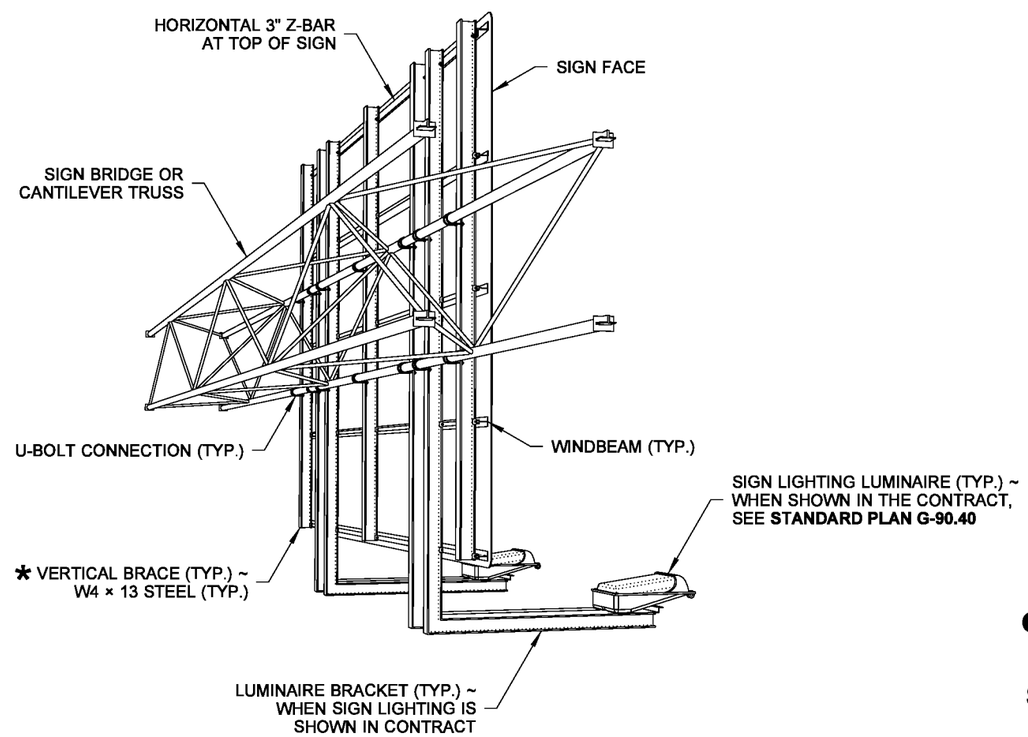

PERSPECTIVE VIEW
TRUSS STRUCTURE

NOTES

1. U-Bolts, Washers and Nuts shall be stainless steel, except as noted.
2. See **Standard Plan G-90.10** for Overhead Sign Lighting details.
3. Galvanize all non-stainless steel parts.
4. For VMS mounting, the contractor may substitute W6 x 12 Steel or W8 x 13 Steel sections for the Vertical Brace W4 x 13 Steel.
5. 3' - 0" MAX. Vertical Brace spacing for Walk-In Cabinet Type VMS installation.

NOTE: THIS PLAN IS NOT A LEGAL ENGINEERING DOCUMENT BUT AN ELECTRONIC DUPLICATE. THE ORIGINAL, SIGNED BY THE ENGINEER AND APPROVED FOR PUBLICATION, IS KEPT ON FILE AT THE WASHINGTON STATE DEPARTMENT OF TRANSPORTATION. A COPY MAY BE OBTAINED UPON REQUEST.

OVERHEAD SIGN MOUNTING (TRUSS STRUCTURE)

STANDARD PLAN G-90.30-01

SHEET 1 OF 1 SHEET

APPROVED FOR PUBLICATION

Pasco Bakotich III — STATE DESIGN ENGINEER
06-02-11 — DATE

Washington State Department of Transportation

EFFECTIVE: AUGUST 6, 2012 TO August 4, 2013
EFFECTIVE: AUGUST 6, 2012 TO August 4, 2013
EFFECTIVE: AUGUST 6, 2012 TO August 4, 2013
EFFECTIVE: AUGUST 6, 2012 TO August 4, 2013

EFFECTIVE: AUGUST 6, 2012 TO August 4, 2013

DRAWN BY: LISA CYFORD

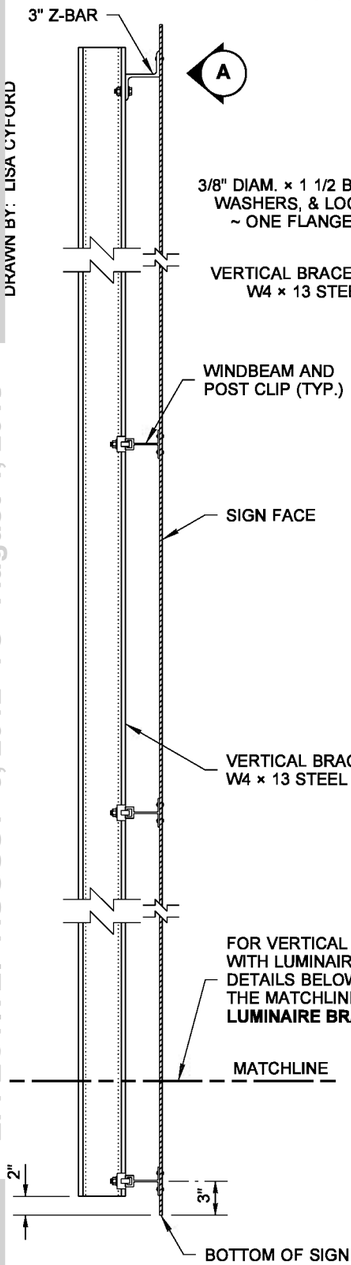

SIDE VIEW
VERTICAL BRACE

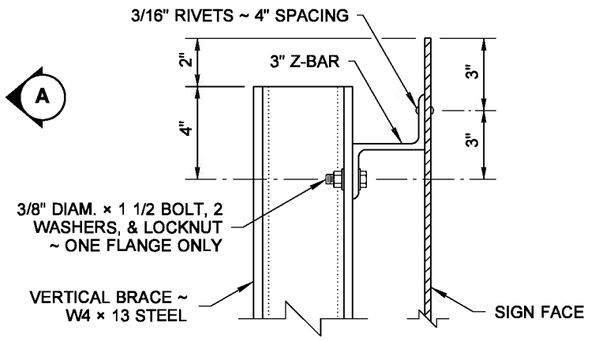

DETAIL A

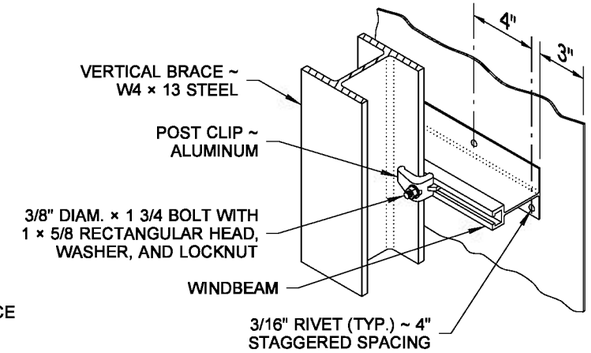

WINDBEAM CONNECTION DETAIL

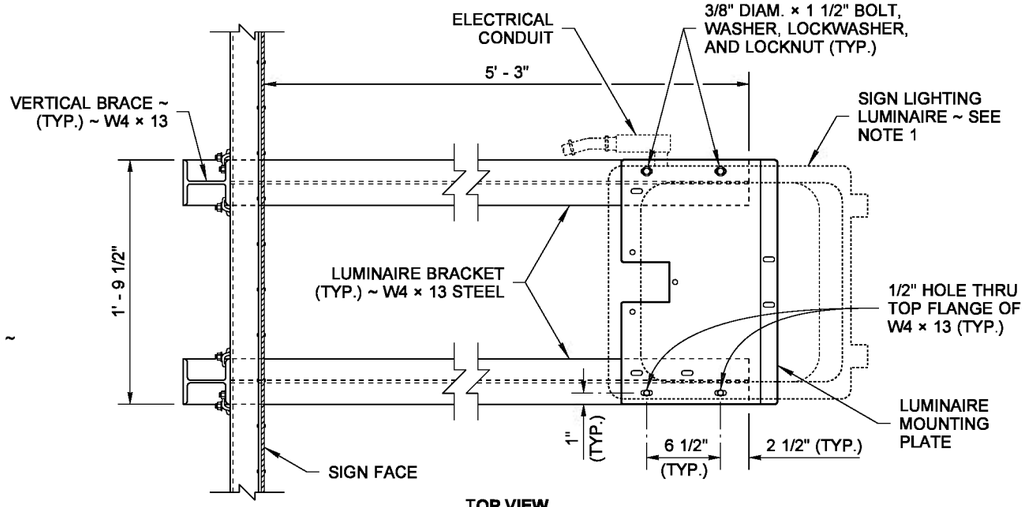

TOP VIEW
LUMINAIRE BRACKET

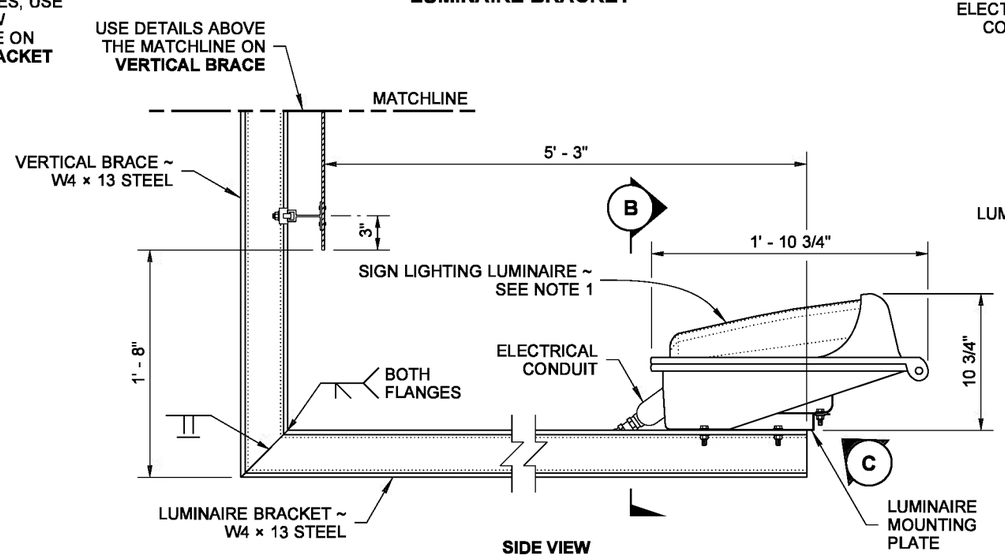

SIDE VIEW
LUMINAIRE BRACKET

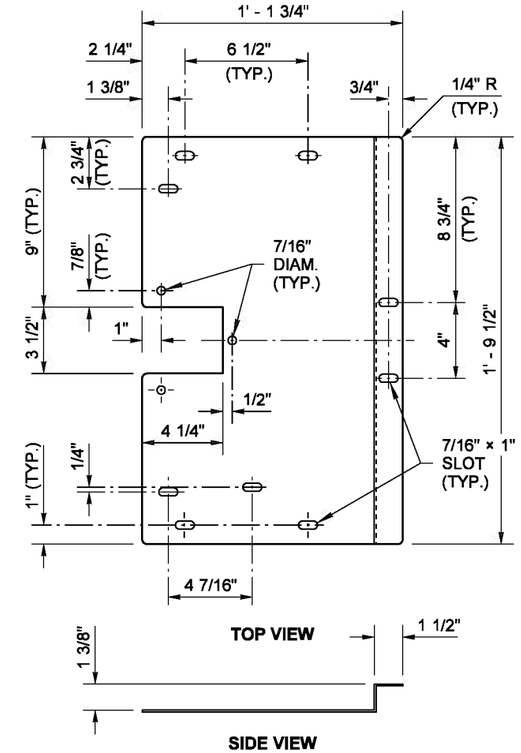

TOP VIEW

SIDE VIEW

10 GAGE GALV. STEEL PLATE ~ ITEM AVAILABLE FROM LUMINAIRE MANUFACTURER

LUMINAIRE MOUNTING PLATE

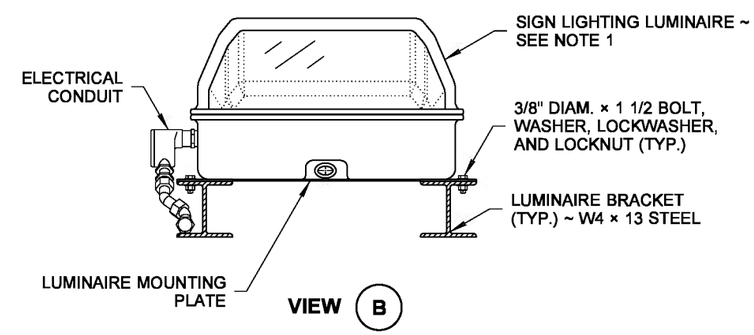

VIEW B

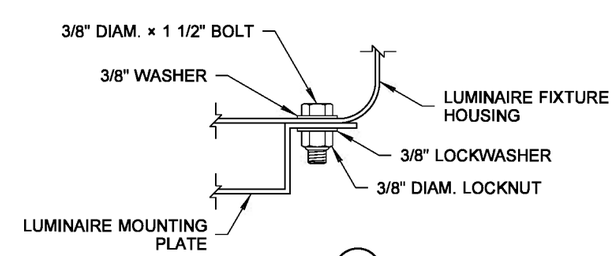

DETAIL C

NOTES

1. Sign Lighting Luminaire shall include a 3/4" threaded side entry, a gasketed front entry, a door prop, and 4 mounting holes. Refer to **Standard Spec. 8-20.3(13)** for additional requirements.
2. See **Standard Plan J-75.40** and **J-75.45** for Sign Light Luminaire Electrical Details.

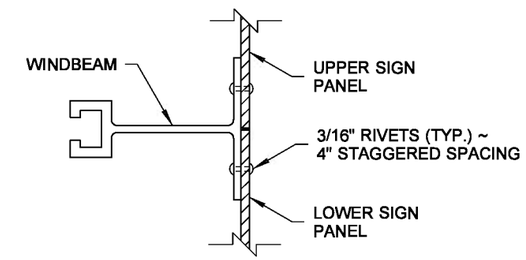

HORIZONTAL SIGN PANEL SPLICE

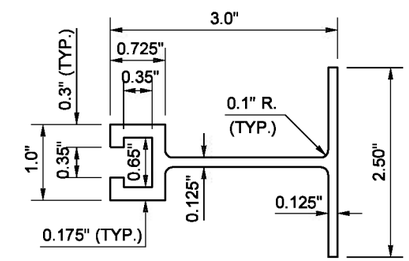

WINDBEAM DETAIL

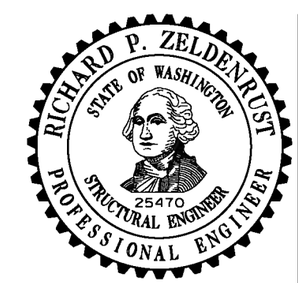

NOTE: THIS PLAN IS NOT A LEGAL ENGINEERING DOCUMENT BUT AN ELECTRONIC DUPLICATE. THE ORIGINAL, SIGNED BY THE ENGINEER AND APPROVED FOR PUBLICATION, IS KEPT ON FILE AT THE WASHINGTON STATE DEPARTMENT OF TRANSPORTATION. A COPY MAY BE OBTAINED UPON REQUEST.

OVERHEAD SIGN LIGHTING DETAILS

STANDARD PLAN G-90.40-01

SHEET 1 OF 1 SHEET

APPROVED FOR PUBLICATION

Pasco Bakotich III — STATE DESIGN ENGINEER

10-14-09 — DATE

Washington State Department of Transportation

EFFECTIVE: AUGUST 6, 2012 TO August 4, 2013

EFFECTIVE: AUGUST 6, 2012 TO August 4, 2013
EFFECTIVE: AUGUST 6, 2012 TO August 4, 2013

DRAWN BY: BILL BEKENS

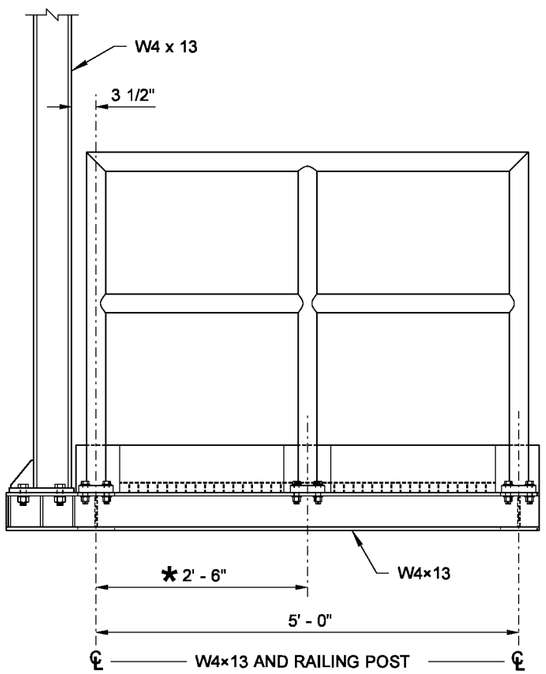

END VIEW (A)

* MODIFY DIMENSION AS REQUIRED FOR PROPER FIT-UP WITH THE VMS DOOR OPENING.

MATERIAL SPECIFICATIONS	
PIPE	ASTM A 36 OR ASTM A 53 GRADE B, TYPE E OR S, OR ASTM A 500 GRADE B
PLATES AND SHAPES	ASTM A 36
STRUCTURAL TUBING	ASTM A 500 GRADE B
GALVANIZING FOR PIPE PLATES AND SHAPES	AASHTO M 111
HIGH STRENGTH BOLTS, NUTS, & WASHERS; INCL. MOUNTING BEAM BOLTS	STD SPEC. 9-06.5(3)
ALL OTHER BOLTS	STD SPEC. 9-06.5(1)
FASTENER GALVANIZING	AASHTO M 232
STEEL GRATING	ASTM A 36

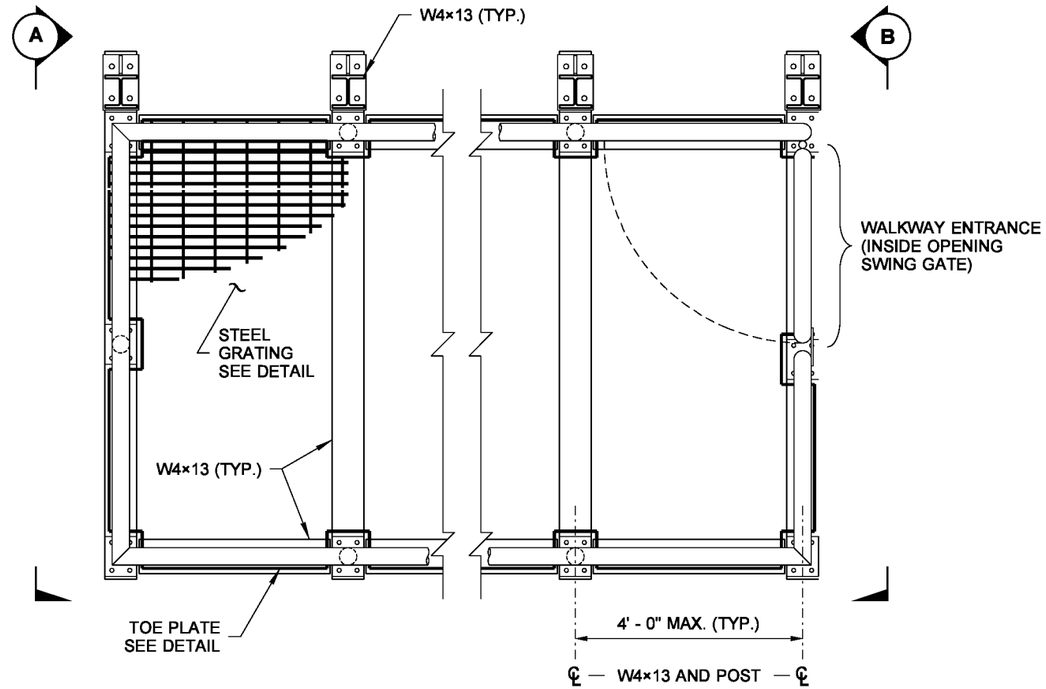

PLAN

MAINTENANCE WALKWAY

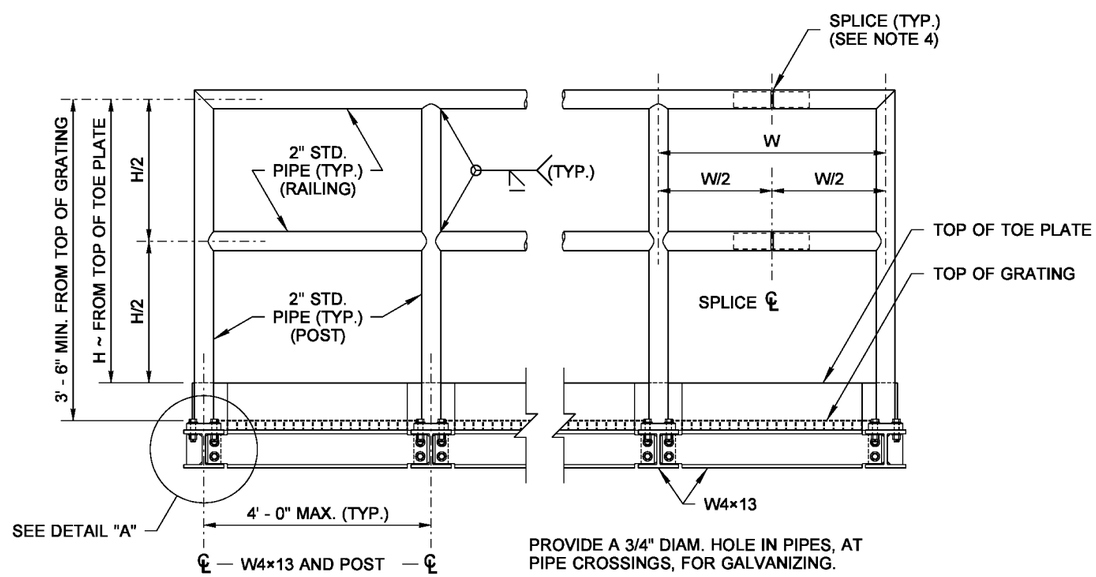

ELEVATION

MAINTENANCE WALKWAY

NOTES

1. NOT INTENDED FOR USE IN FRONT OF STATIC SIGNS.
2. FOR MOUNTING THE MAINTENANCE WALKWAY TO A MONOTUBE SIGN BRIDGE, **SEE STANDARD PLAN G-95.20**.
3. FOR MOUNTING THE MAINTENANCE WALKWAY TO A TRUSS-TYPE SIGN BRIDGE, **SEE STANDARD PLAN G-95.30**.
4. LOCATION OF RAILING SPLICES TO BE DETERMINED BY FABRICATOR. SEE "RAILING SPLICE DETAIL".

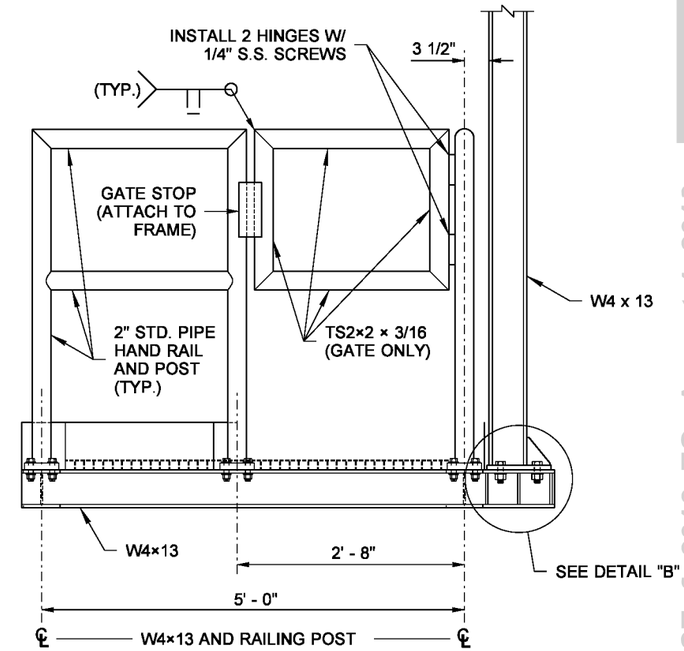

MAINTENANCE WALKWAY GATE

END VIEW (B)

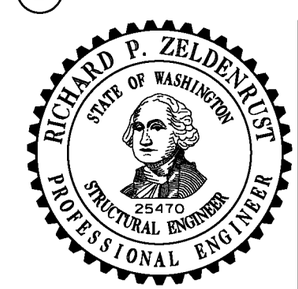

NOTE: THIS PLAN IS NOT A LEGAL ENGINEERING DOCUMENT BUT AN ELECTRONIC DUPLICATE. THE ORIGINAL, SIGNED BY THE ENGINEER AND APPROVED FOR PUBLICATION, IS KEPT ON FILE AT THE WASHINGTON STATE DEPARTMENT OF TRANSPORTATION. A COPY MAY BE OBTAINED UPON REQUEST.

MAINTENANCE WALKWAY FOR SIGN BRIDGES

STANDARD PLAN G-95.10-01

SHEET 1 OF 3 SHEETS

APPROVED FOR PUBLICATION

Pasco Bakotich III — STATE DESIGN ENGINEER

06-02-11 — DATE

Washington State Department of Transportation

EFFECTIVE: AUGUST 6, 2012 TO August 4, 2013
EFFECTIVE: AUGUST 6, 2012 TO August 4, 2013
EFFECTIVE: AUGUST 6, 2012 TO August 4, 2013
EFFECTIVE: AUGUST 6, 2012 TO August 4, 2013

EFFECTIVE: AUGUST 6, 2012 TO August 4, 2013

DRAWN BY: BILL BEKENS

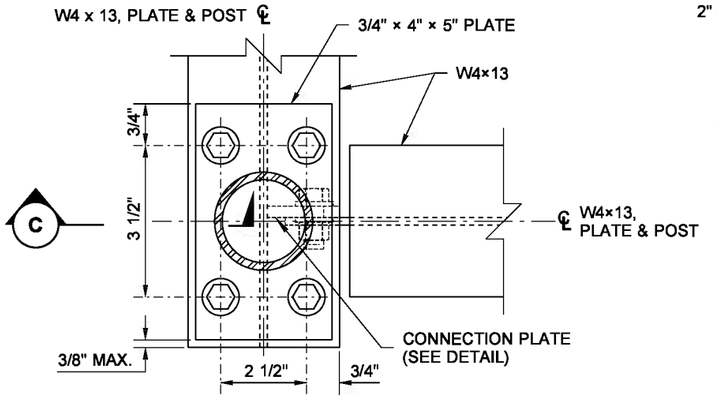

PLAN

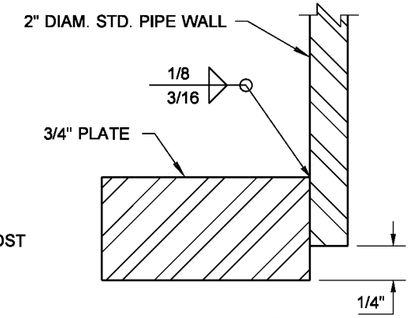

SECTION C

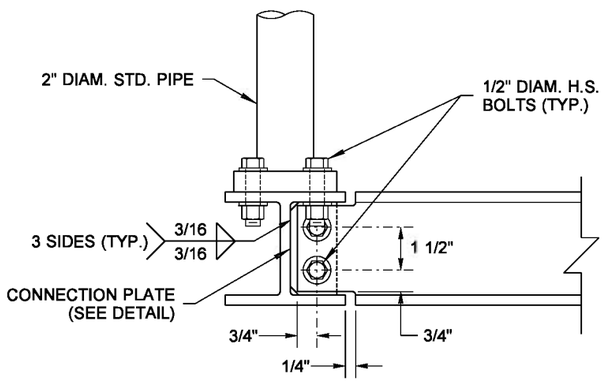

ELEVATION

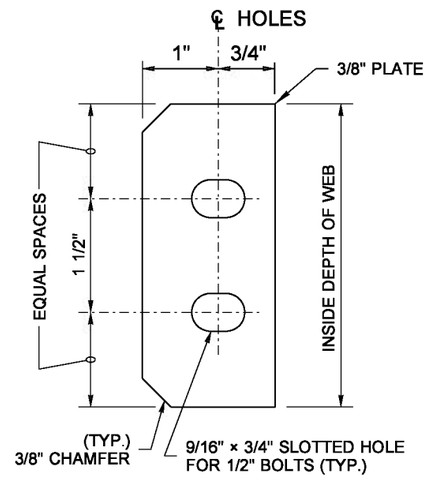

CONNECTION PLATE DETAIL

DETAIL "A"

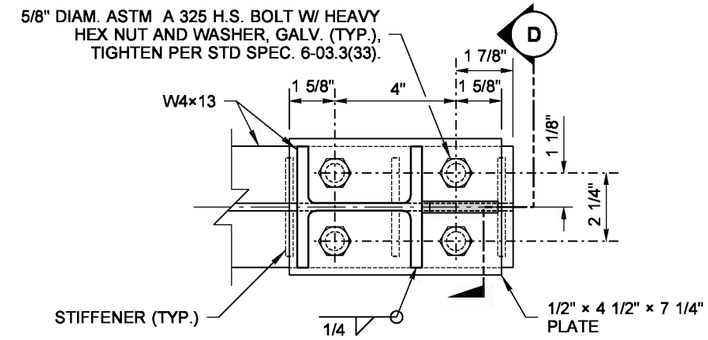

PLAN

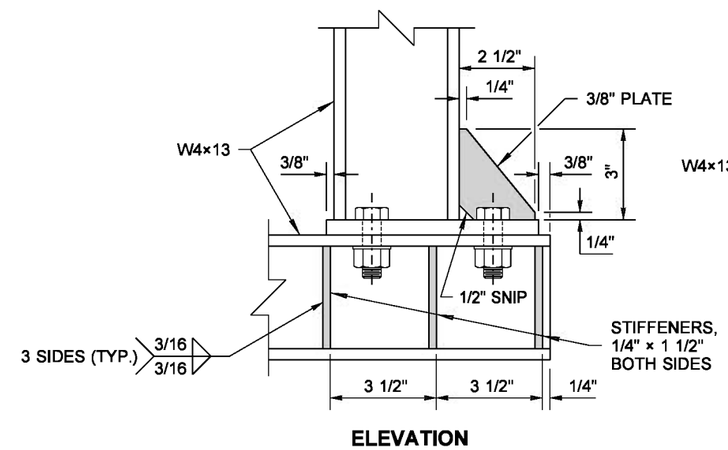

ELEVATION

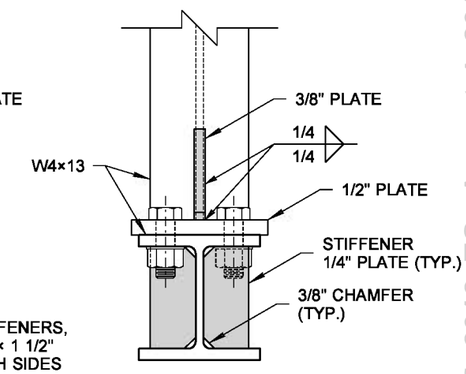

SECTION D

DETAIL "B"

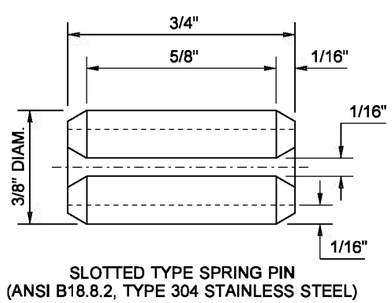

DRIVE PIN DETAIL

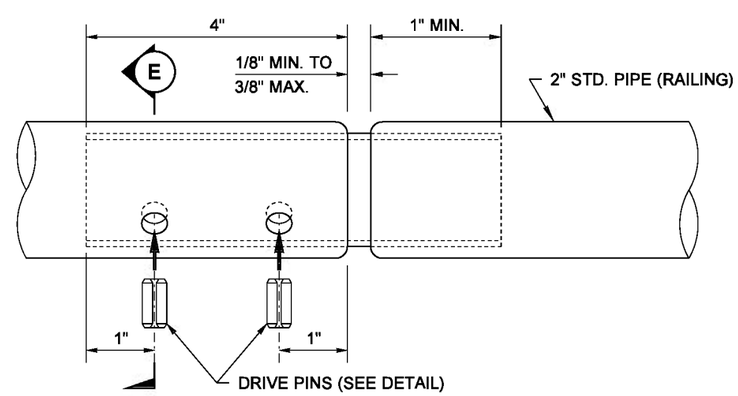

ELEVATION

RAILING SPLICE DETAIL

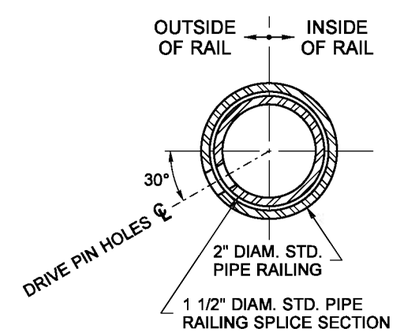

SECTION E

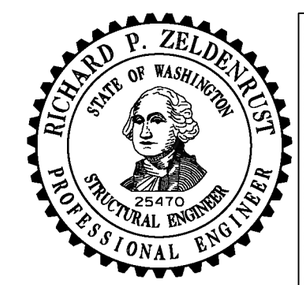

NOTE: THIS PLAN IS NOT A LEGAL ENGINEERING DOCUMENT BUT AN ELECTRONIC DUPLICATE. THE ORIGINAL, SIGNED BY THE ENGINEER AND APPROVED FOR PUBLICATION, IS KEPT ON FILE AT THE WASHINGTON STATE DEPARTMENT OF TRANSPORTATION. A COPY MAY BE OBTAINED UPON REQUEST.

MAINTENANCE WALKWAY FOR SIGN BRIDGES

STANDARD PLAN G-95.10-01

SHEET 2 OF 3 SHEETS

APPROVED FOR PUBLICATION

Pasco Bakotich III — STATE DESIGN ENGINEER

06-02-11 — DATE

Washington State Department of Transportation

EFFECTIVE: AUGUST 6, 2012 TO August 4, 2013

EFFECTIVE: AUGUST 6, 2012 TO August 4, 2013
EFFECTIVE: AUGUST 6, 2012 TO August 4, 2013

DRAWN BY: BILL BEKENS

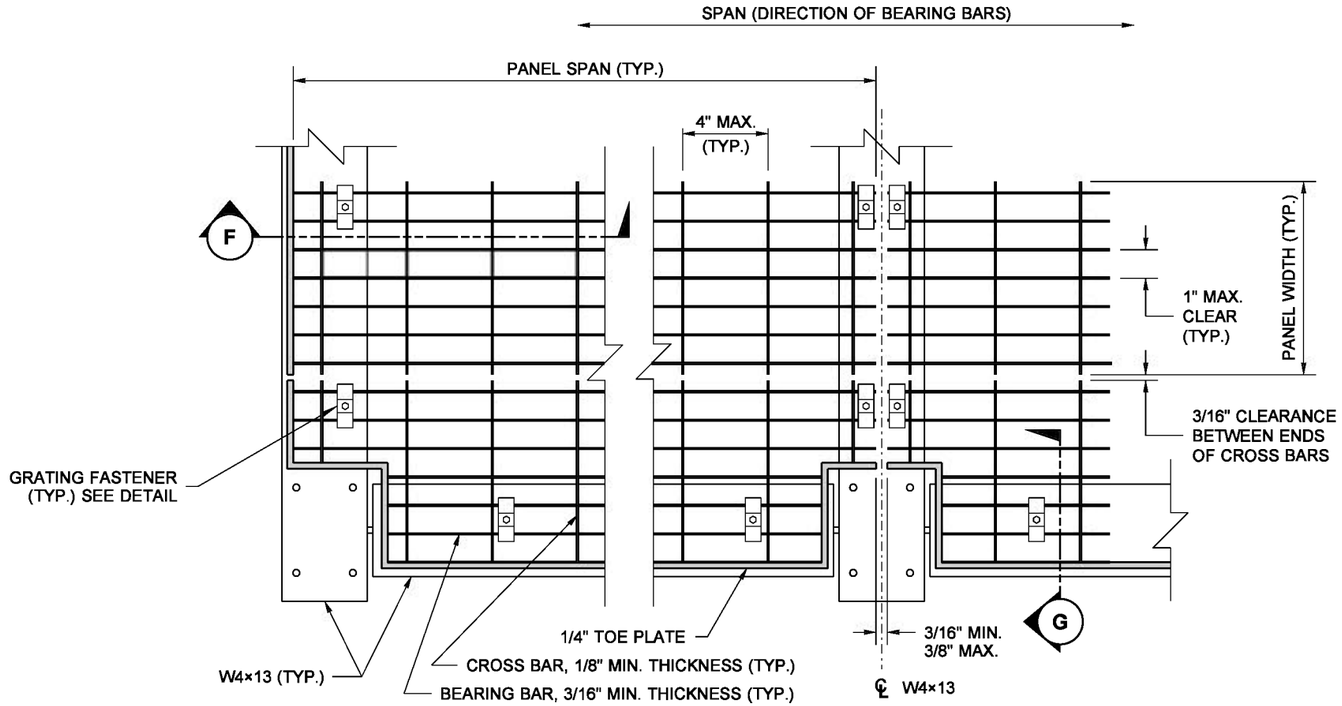

PLAN

STEEL GRATING DETAIL

(RAILING NOT SHOWN FOR CLARITY)

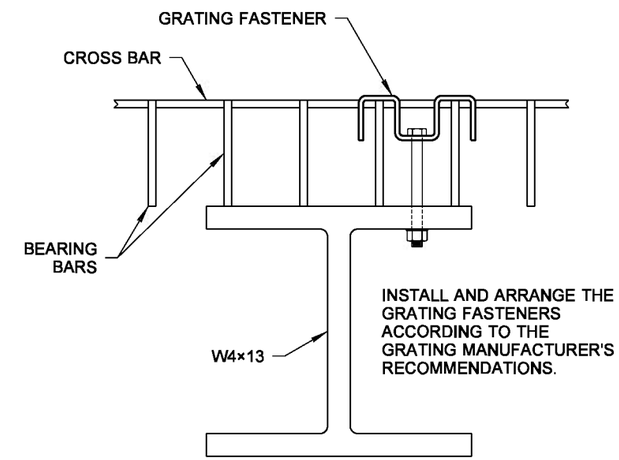

GRATING FASTENER DETAIL

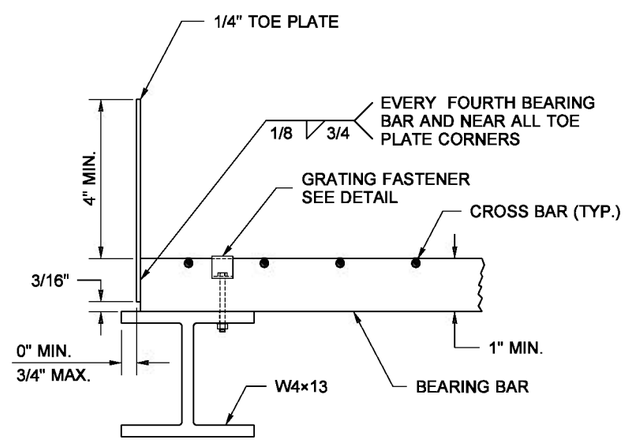

SECTION F

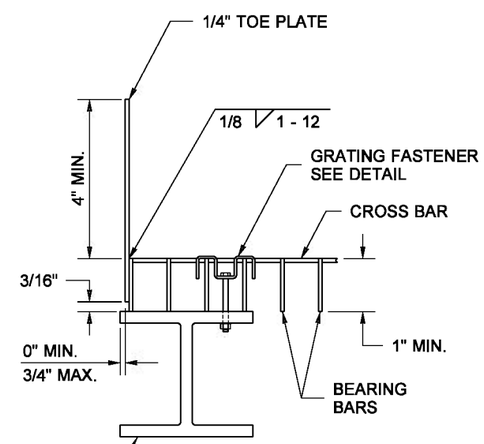

SECTION G

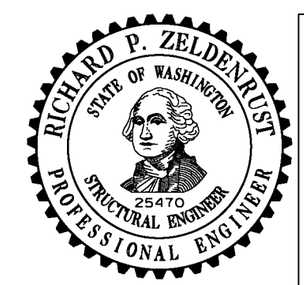

NOTE: THIS PLAN IS NOT A LEGAL ENGINEERING DOCUMENT BUT AN ELECTRONIC DUPLICATE. THE ORIGINAL, SIGNED BY THE ENGINEER AND APPROVED FOR PUBLICATION, IS KEPT ON FILE AT THE WASHINGTON STATE DEPARTMENT OF TRANSPORTATION. A COPY MAY BE OBTAINED UPON REQUEST.

MAINTENANCE WALKWAY FOR SIGN BRIDGES

STANDARD PLAN G-95.10-01

SHEET 3 OF 3 SHEETS

APPROVED FOR PUBLICATION

Pasco Bakotich III — STATE DESIGN ENGINEER

06-02-11 — DATE

Washington State Department of Transportation

EFFECTIVE: AUGUST 6, 2012 TO August 4, 2013
EFFECTIVE: AUGUST 6, 2012 TO August 4, 2013
EFFECTIVE: AUGUST 6, 2012 TO August 4, 2013
EFFECTIVE: AUGUST 6, 2012 TO August 4, 2013

EFFECTIVE: AUGUST 6, 2012 TO August 4, 2013

DRAWN BY: BILL BEKENS

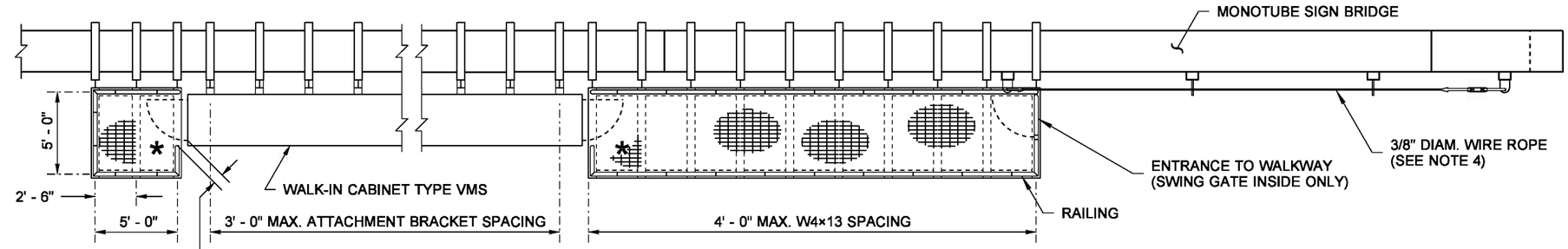

PLAN

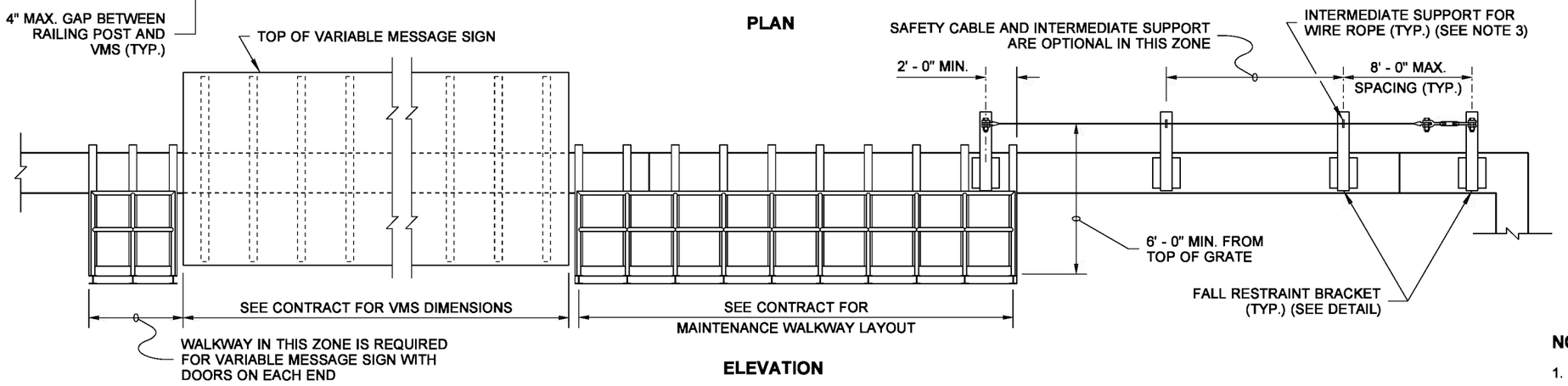

ELEVATION

MAINTENANCE WALKWAY INSTALLED ON MONOTUBE SIGN BRIDGE

(WALKWAYS MAY BE USED WITH OTHER LAYOUTS THAN THAT SHOWN ABOVE)

MATERIAL SPECIFICATIONS	
PIPE	ASTM A 36 OR ASTM A 53 GRADE B, TYPE E OR S, OR ASTM A 500 GRADE B
PLATES AND SHAPES	ASTM A 36
STRUCTURAL TUBING	ASTM A 500 GRADE B
GALVANIZING FOR PIPE PLATES AND SHAPES	AASHTO M 111
HIGH STRENGTH BOLTS, NUTS, & WASHERS; INCL. MOUNTING BEAM BOLTS	STD SPEC. 9-06.5(3)
ALL OTHER BOLTS	STD SPEC. 9-06.5(1)
FASTENER GALVANIZING	AASHTO M 232
STEEL GRATING	ASTM A 36
WIRE ROPE	ASTM A 603 W/ CLASS A WEIGHT ZINC COATED WIRES THROUGHOUT (1)

(1) ALLOWABLE ALTERNATE MATERIAL: FEDERAL STANDARD RR-W-410F TYPE 6 CLASS 3 GALVANIZED.

NOTES

1. NOT INTENDED FOR USE IN FRONT OF STATIC SIGNS.
2. FOR MAINTENANCE WALKWAY, RAILING, GRATING, AND TOE PLATE DETAILS, **SEE STANDARD PLAN G-95.10**.
3. USE TWO LANYARDS THROUGH INTERMEDIATE WIRE ROPE SUPPORT.
4. 3/8" DIAM. WIRE ROPE WITH 14 KIPS MIN. BREAKING STRENGTH. THE WIRE ROPE SHALL BE INSTALLED WITH 450 LBS. OF TENSION, AND WITH 6" OF TAKE UP ADJUSTMENT AVAILABLE IN THE TURNBUCKLE.
5. HANDRAIL FIT-UP WITH VMS DOOR OPENING IS THE RESPONSIBILITY OF THE CONTRACTOR.

✱ = SEE NOTE 5

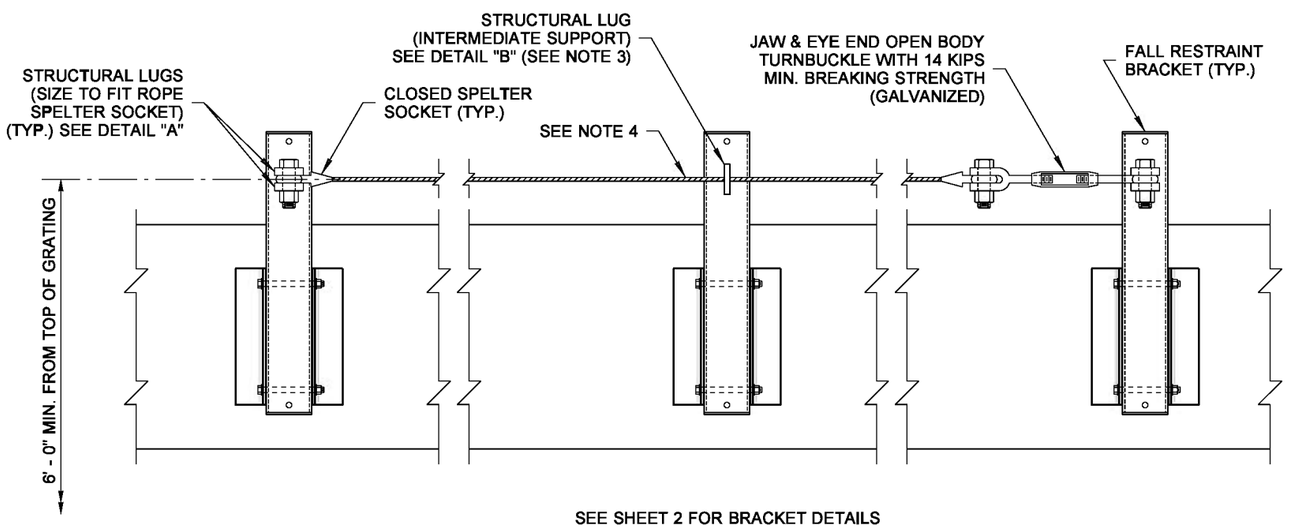

SEE SHEET 2 FOR BRACKET DETAILS

FALL RESTRAINT

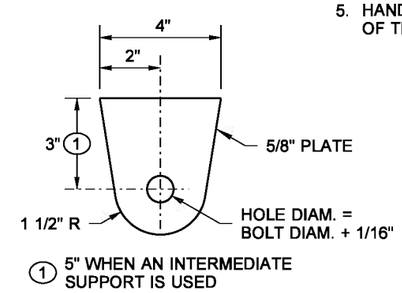

DETAIL "A"

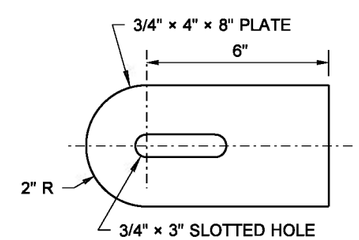

DETAIL "B"

NOTE: THIS PLAN IS NOT A LEGAL ENGINEERING DOCUMENT BUT AN ELECTRONIC DUPLICATE. THE ORIGINAL, SIGNED BY THE ENGINEER AND APPROVED FOR PUBLICATION, IS KEPT ON FILE AT THE WASHINGTON STATE DEPARTMENT OF TRANSPORTATION. A COPY MAY BE OBTAINED UPON REQUEST.

MAINTENANCE WALKWAY MOUNTING FOR MONOTUBE SIGN BRIDGE
STANDARD PLAN G-95.20-02

SHEET 1 OF 3 SHEETS

APPROVED FOR PUBLICATION

Pasco Bakotich III — STATE DESIGN ENGINEER
06-02-11 — DATE

Washington State Department of Transportation

EFFECTIVE: AUGUST 6, 2012 TO August 4, 2013

EFFECTIVE: AUGUST 6, 2012 TO August 4, 2013

DRAWN BY: BILL BEKENS

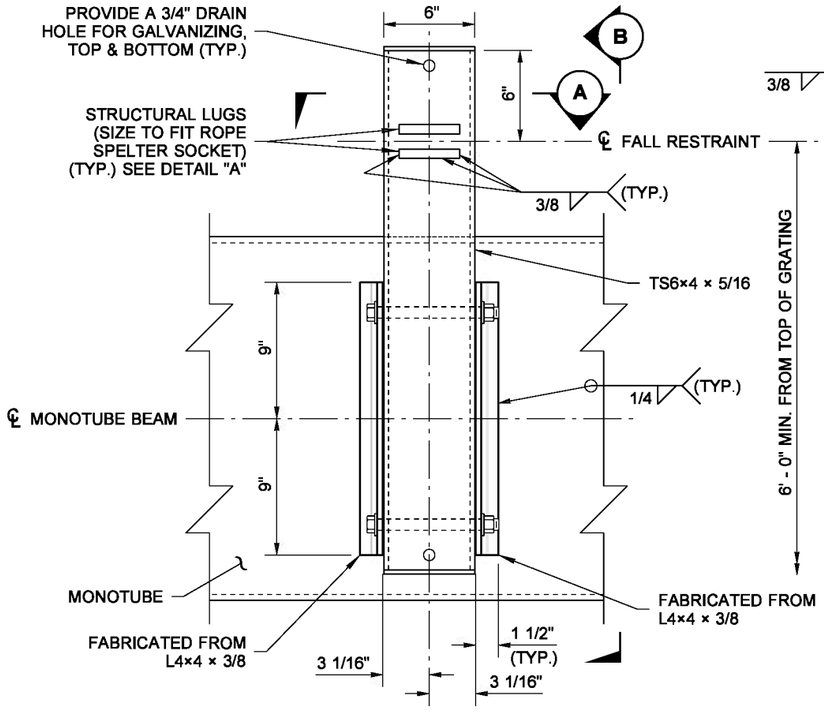

ELEVATION VIEW

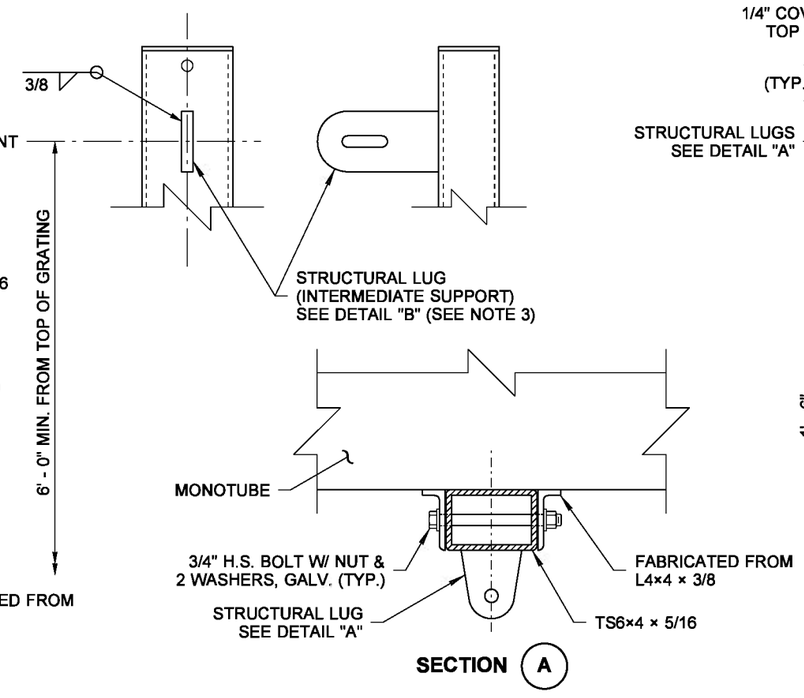

SECTION A

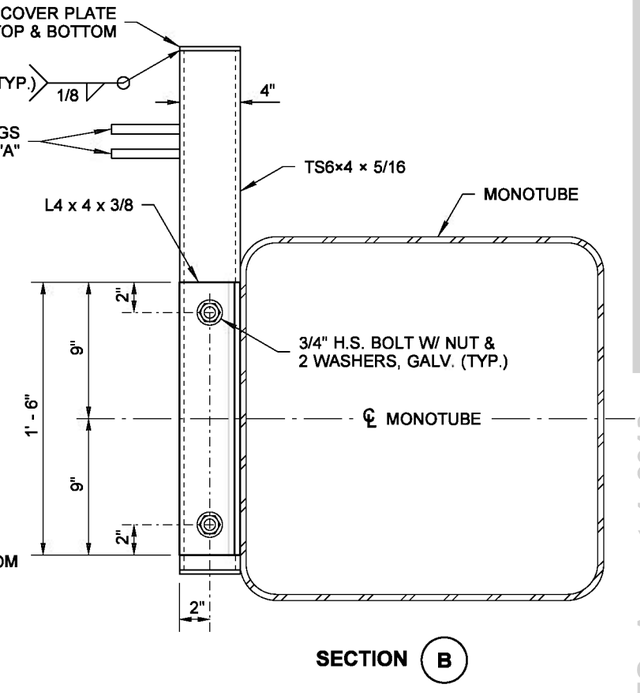

SECTION B

FALL RESTRAINT BRACKET INSTALLATION ON NEW MONOTUBE SIGN BRIDGE

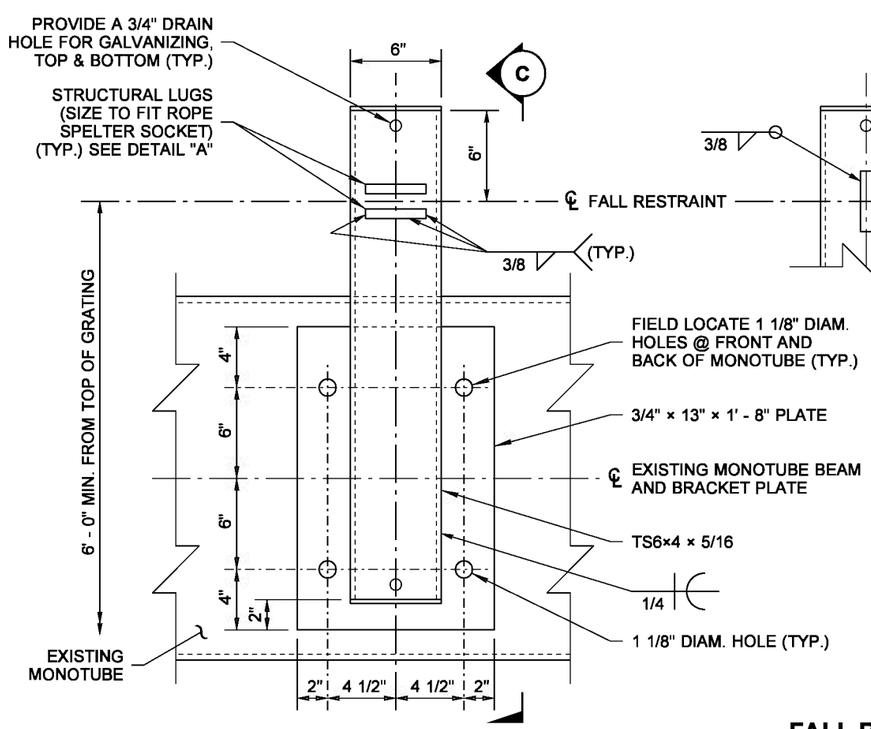

ELEVATION VIEW

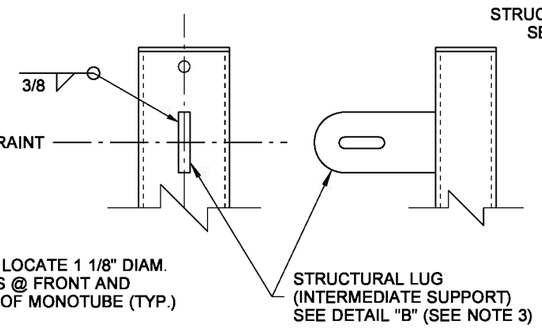

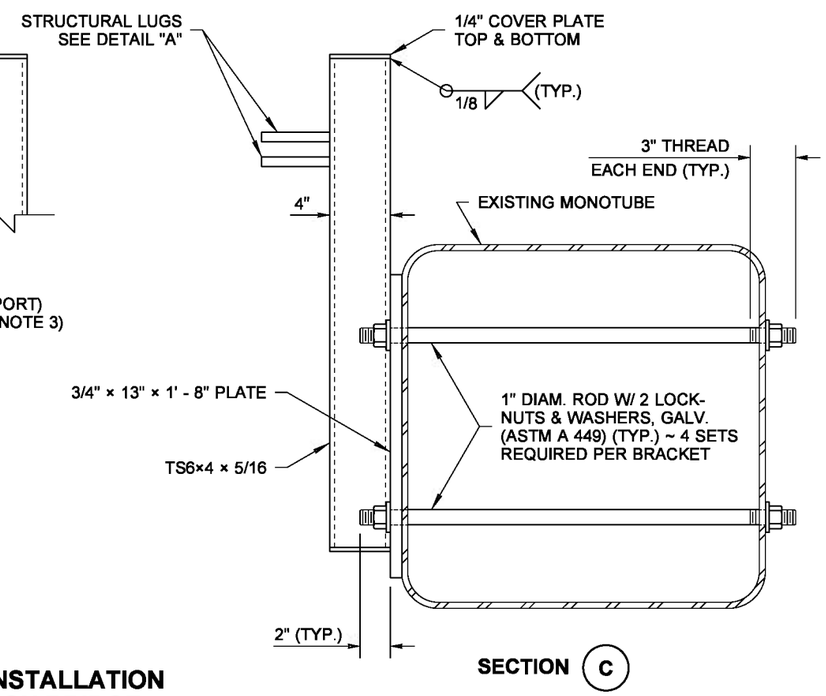

SECTION C

FALL RESTRAINT BRACKET INSTALLATION ON EXISTING MONOTUBE SIGN BRIDGE

RICHARD P. ZELDENRUST
STATE OF WASHINGTON
25470
STRUCTURAL ENGINEER
PROFESSIONAL ENGINEER

NOTE: THIS PLAN IS NOT A LEGAL ENGINEERING DOCUMENT BUT AN ELECTRONIC DUPLICATE. THE ORIGINAL, SIGNED BY THE ENGINEER AND APPROVED FOR PUBLICATION, IS KEPT ON FILE AT THE WASHINGTON STATE DEPARTMENT OF TRANSPORTATION. A COPY MAY BE OBTAINED UPON REQUEST.

MAINTENANCE WALKWAY MOUNTING FOR MONOTUBE SIGN BRIDGE STANDARD PLAN G-95.20-02

SHEET 2 OF 3 SHEETS

APPROVED FOR PUBLICATION

Pasco Bakotich III — STATE DESIGN ENGINEER
06-02-11 — DATE

Washington State Department of Transportation

EFFECTIVE: AUGUST 6, 2012 TO August 4, 2013

EFFECTIVE: AUGUST 6, 2012 TO August 4, 2013
EFFECTIVE: AUGUST 6, 2012 TO August 4, 2013

DRAWN BY: BILL BEKENS

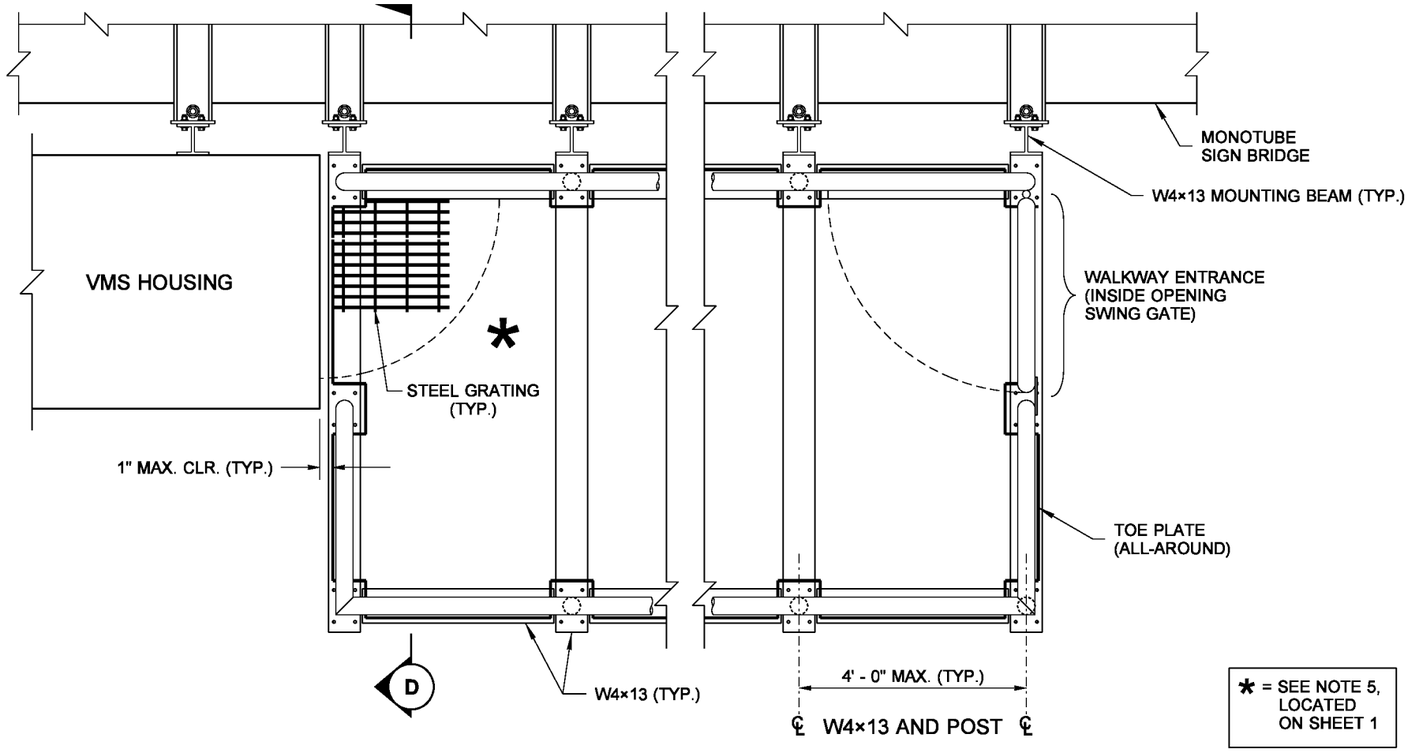

MAINTENANCE WALKWAY PARTIAL PLAN

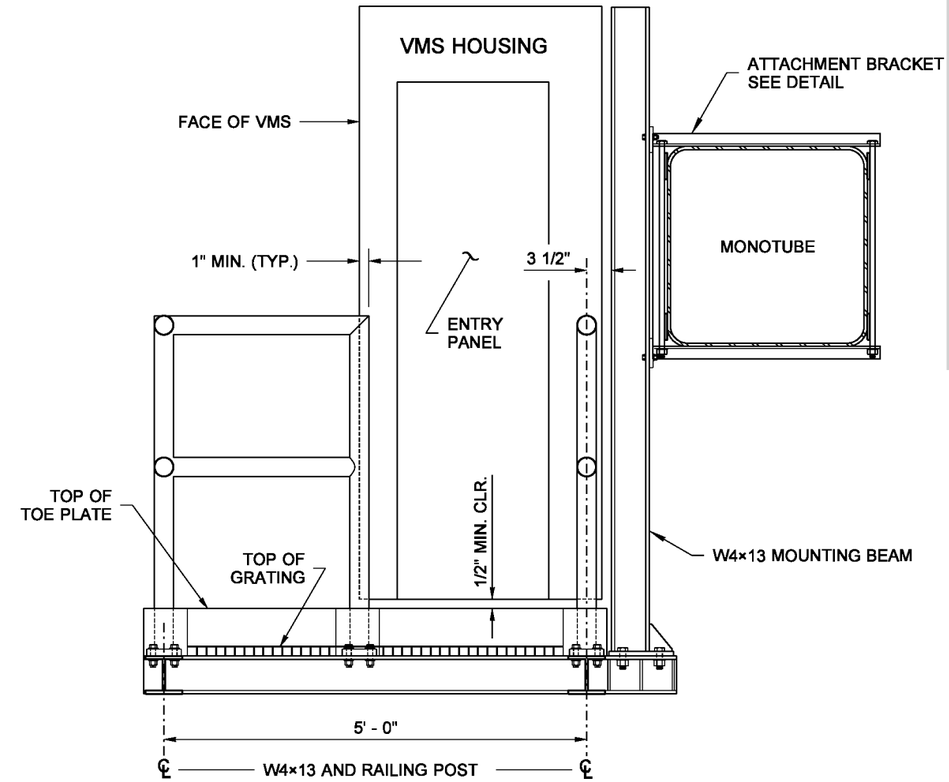

SECTION D

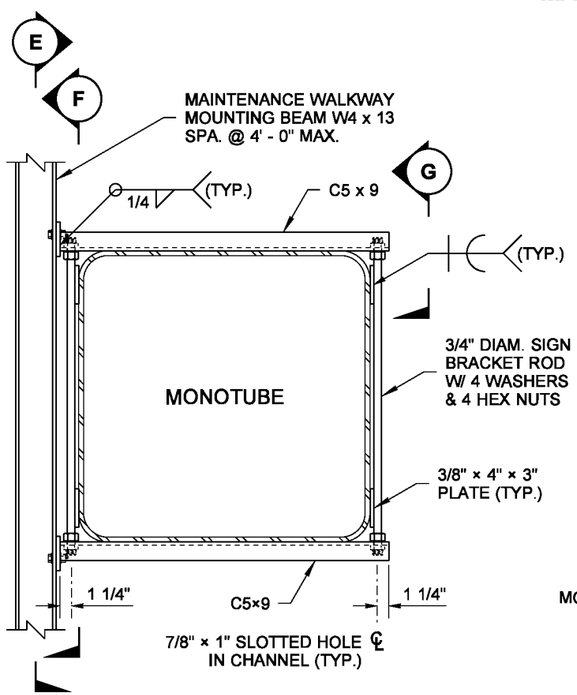

ATTACHMENT BRACKET DETAIL

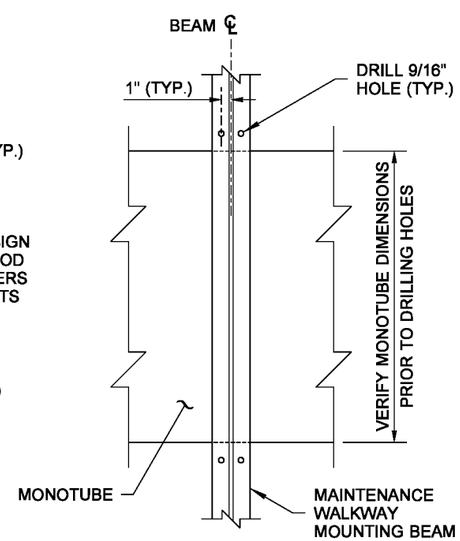

SECTION E

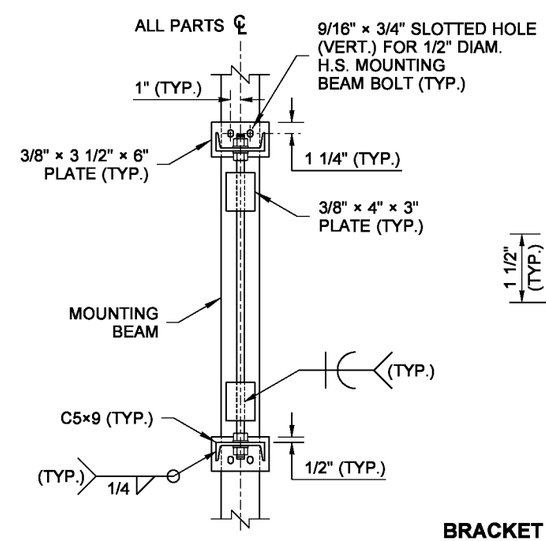

SECTION F

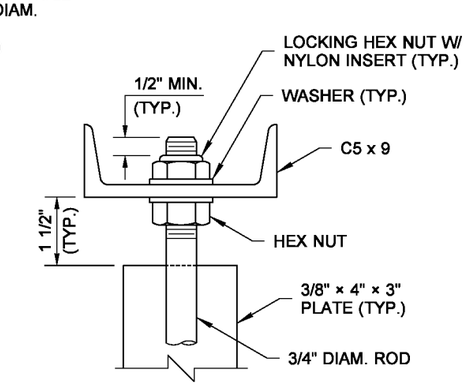

VIEW G

BRACKET NOTES

PAINT ENTIRE ATTACHMENT BRACKET TO MATCH EXISTING STRUCTURE EXCEPT FOR MOUNTING BEAM.

SIGN, LIGHT, BEAM LENGTHS, SIZE AND SPACING SHALL BE DETERMINED FROM THE CONTRACT PLANS OR WSDOT STANDARD PLANS.

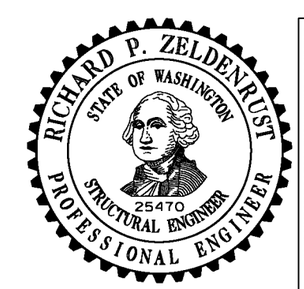

NOTE: THIS PLAN IS NOT A LEGAL ENGINEERING DOCUMENT BUT AN ELECTRONIC DUPLICATE. THE ORIGINAL, SIGNED BY THE ENGINEER AND APPROVED FOR PUBLICATION, IS KEPT ON FILE AT THE WASHINGTON STATE DEPARTMENT OF TRANSPORTATION. A COPY MAY BE OBTAINED UPON REQUEST.

MAINTENANCE WALKWAY MOUNTING FOR MONOTUBE SIGN BRIDGE STANDARD PLAN G-95.20-02

SHEET 3 OF 3 SHEETS

APPROVED FOR PUBLICATION

Pasco Bakotich III — STATE DESIGN ENGINEER

06-02-11 — DATE

Washington State Department of Transportation

EFFECTIVE: AUGUST 6, 2012 TO August 4, 2013
EFFECTIVE: AUGUST 6, 2012 TO August 4, 2013
EFFECTIVE: AUGUST 6, 2012 TO August 4, 2013
EFFECTIVE: AUGUST 6, 2012 TO August 4, 2013

EFFECTIVE: AUGUST 6, 2012 TO August 4, 2013
EFFECTIVE: AUGUST 6, 2012 TO August 4, 2013

DRAWN BY: BILL BEKENS

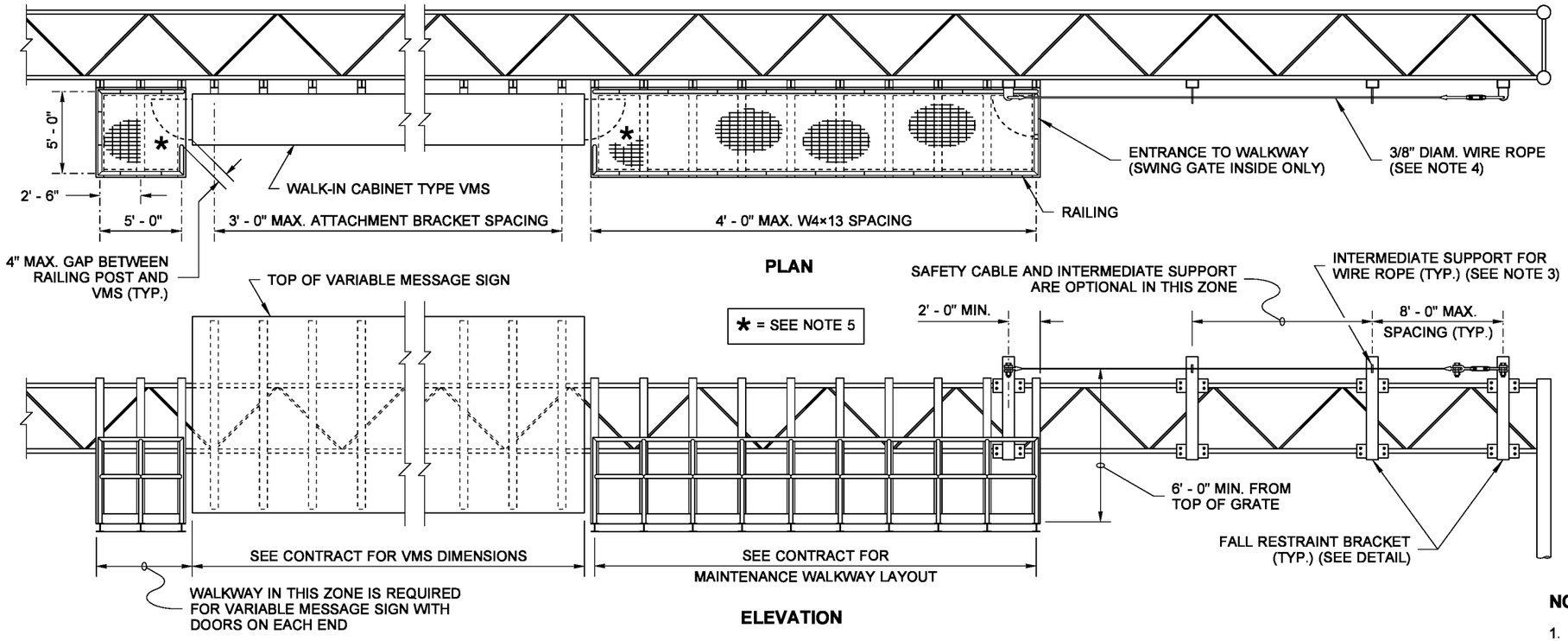

MAINTENANCE WALKWAY INSTALLED ON TRUSS-TYPE SIGN BRIDGE

(WALKWAYS MAY BE USED WITH OTHER LAYOUTS THAN THAT SHOWN ABOVE)

MATERIAL SPECIFICATIONS	
PIPE	ASTM A 36 OR ASTM A 53 GRADE B, TYPE E OR S, OR ASTM A 500 GRADE B
PLATES AND SHAPES	ASTM A 36
STRUCTURAL TUBING	ASTM A 500 GRADE B
GALVANIZING FOR PIPE PLATES AND SHAPES	AASHTO M 111
HIGH STRENGTH BOLTS, NUTS, & WASHERS; INCL. MOUNTING BEAM BOLTS	STD SPEC. 9-06.5(3)
ALL OTHER BOLTS	STD SPEC. 9-06.5(1)
FASTENER GALVANIZING	AASHTO M 232
STEEL GRATING	ASTM A 36
WIRE ROPE	ASTM A 603 W/ CLASS A WEIGHT ZINC COATED WIRES THROUGHOUT (1)

(1) ALLOWABLE ALTERNATE MATERIAL: FEDERAL STANDARD RR-W-410F TYPE 6 CLASS 3 GALVANIZED.

NOTES

1. NOT INTENDED FOR USE IN FRONT OF STATIC SIGNS.
2. FOR MAINTENANCE WALKWAY, RAILING, GRATING, AND TOE PLATE DETAILS, SEE **STANDARD PLAN G-95.10**.
3. USE TWO LANYARDS THROUGH INTERMEDIATE WIRE ROPE SUPPORT.
4. 3/8" DIAM. WIRE ROPE WITH 14 KIPS MIN. BREAKING STRENGTH. THE WIRE ROPE SHALL BE INSTALLED WITH 450 LBS. OF TENSION, AND WITH 6" OF TAKE UP ADJUSTMENT AVAILABLE IN THE TURNBUCKLE.
5. HANDRAIL FIT-UP WITH VMS DOOR OPENING IS THE RESPONSIBILITY OF THE CONTRACTOR.

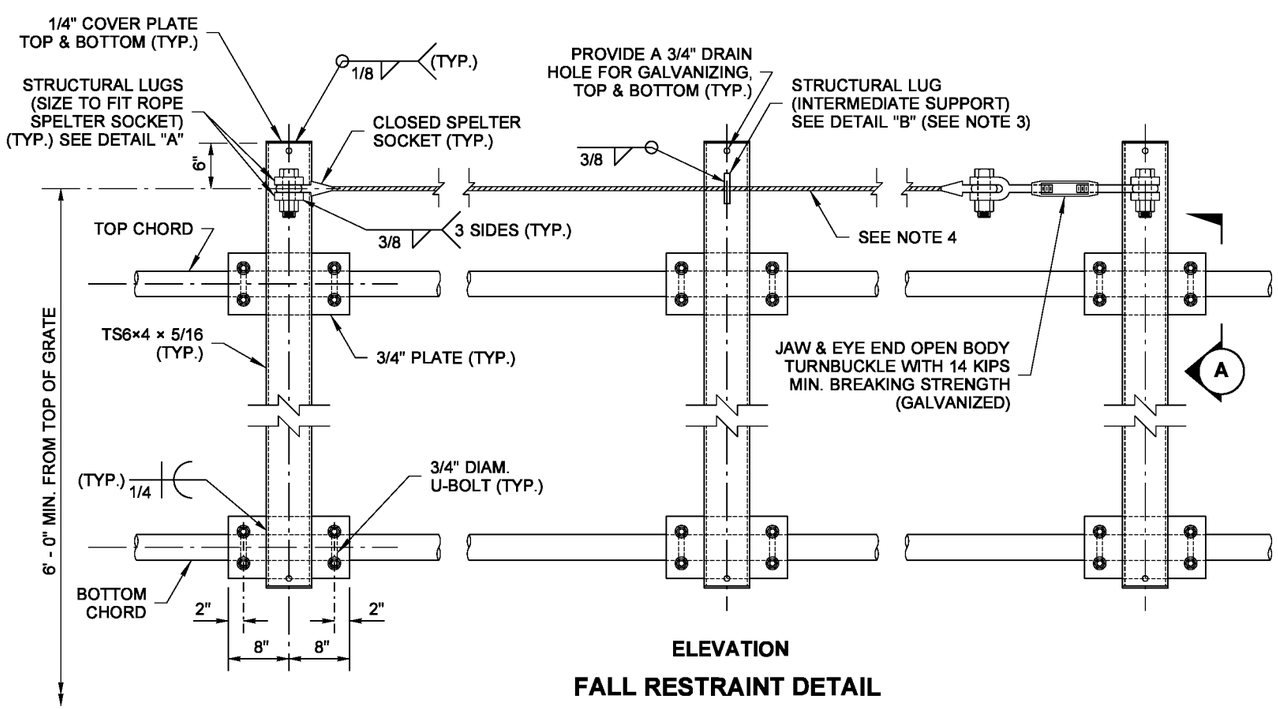

FALL RESTRAINT DETAIL

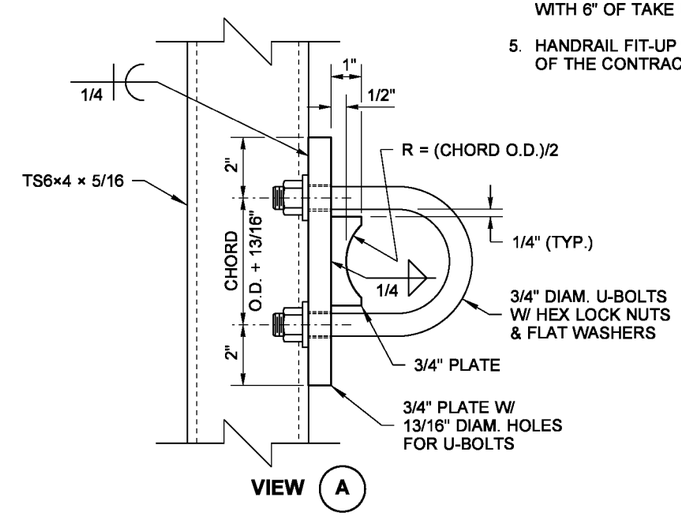

NOTE: THIS PLAN IS NOT A LEGAL ENGINEERING DOCUMENT BUT AN ELECTRONIC DUPLICATE. THE ORIGINAL, SIGNED BY THE ENGINEER AND APPROVED FOR PUBLICATION, IS KEPT ON FILE AT THE WASHINGTON STATE DEPARTMENT OF TRANSPORTATION. A COPY MAY BE OBTAINED UPON REQUEST.

MAINTENANCE WALKWAY MOUNTING FOR TRUSS-TYPE SIGN BRIDGE STANDARD PLAN G-95.30-02

SHEET 1 OF 2 SHEETS

APPROVED FOR PUBLICATION

Pasco Bakotich III — STATE DESIGN ENGINEER

06-02-11 — DATE

Washington State Department of Transportation

EFFECTIVE: AUGUST 6, 2012 TO August 4, 2013
EFFECTIVE: AUGUST 6, 2012 TO August 4, 2013
EFFECTIVE: AUGUST 6, 2012 TO August 4, 2013
EFFECTIVE: AUGUST 6, 2012 TO August 4, 2013

EFFECTIVE: AUGUST 6, 2012 TO August 4, 2013

DRAWN BY: BILL BEKENS

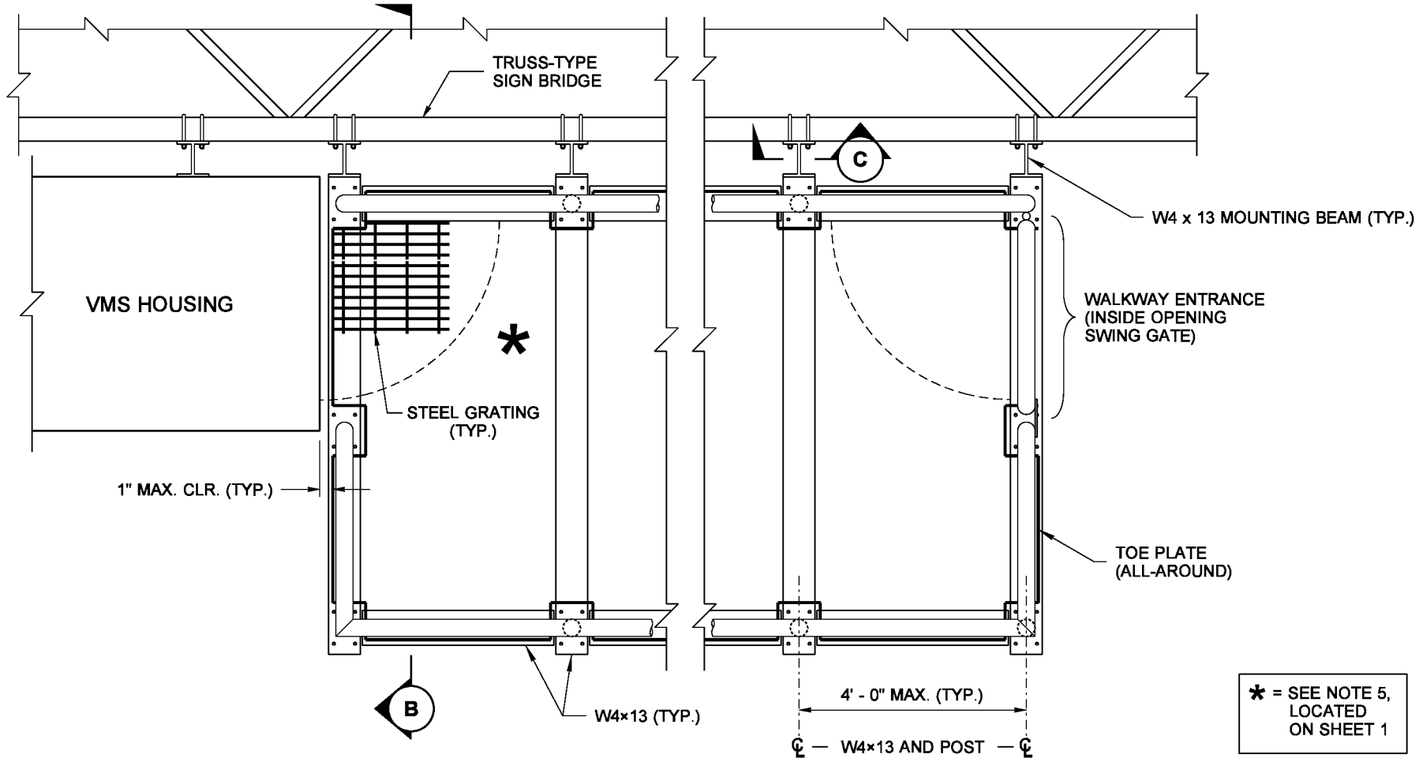

MAINTENANCE WALKWAY
PARTIAL PLAN

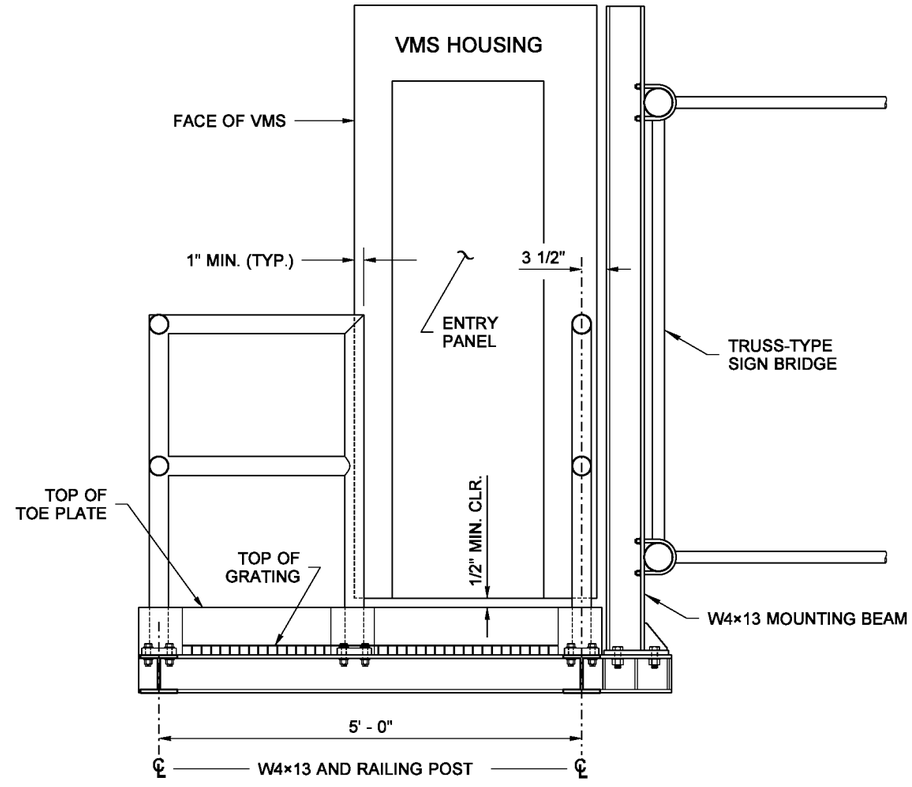

SECTION B

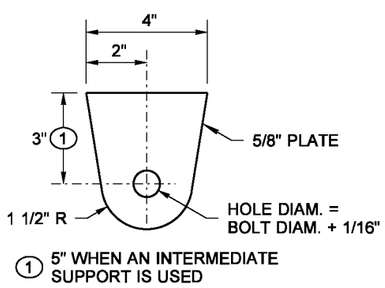

DETAIL "A"

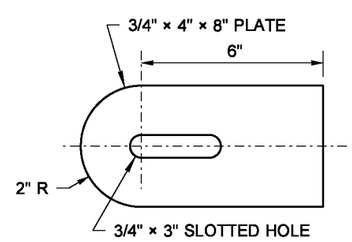

DETAIL "B"

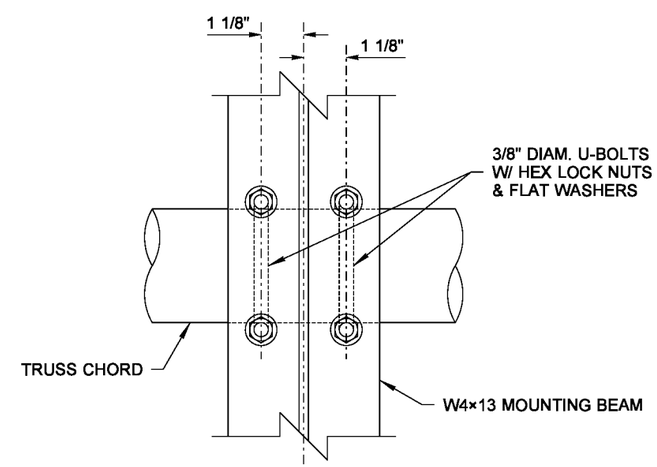

SECTION C

NOTE: THIS PLAN IS NOT A LEGAL ENGINEERING DOCUMENT BUT AN ELECTRONIC DUPLICATE. THE ORIGINAL, SIGNED BY THE ENGINEER AND APPROVED FOR PUBLICATION, IS KEPT ON FILE AT THE WASHINGTON STATE DEPARTMENT OF TRANSPORTATION. A COPY MAY BE OBTAINED UPON REQUEST.

MAINTENANCE WALKWAY MOUNTING FOR TRUSS-TYPE SIGN BRIDGE
STANDARD PLAN G-95.30-02

SHEET 2 OF 2 SHEETS

APPROVED FOR PUBLICATION

Pasco Bakotich III — STATE DESIGN ENGINEER
06-02-11 — DATE

Washington State Department of Transportation

EFFECTIVE: AUGUST 6, 2012 TO August 4, 2013

EFFECTIVE: AUGUST 6, 2012 TO August 4, 2013
EFFECTIVE: AUGUST 6, 2012 TO August 4, 2013

NOTE

Backfill with soil removed from hole ~ See planting area soil preparation detail or Special Provisions.

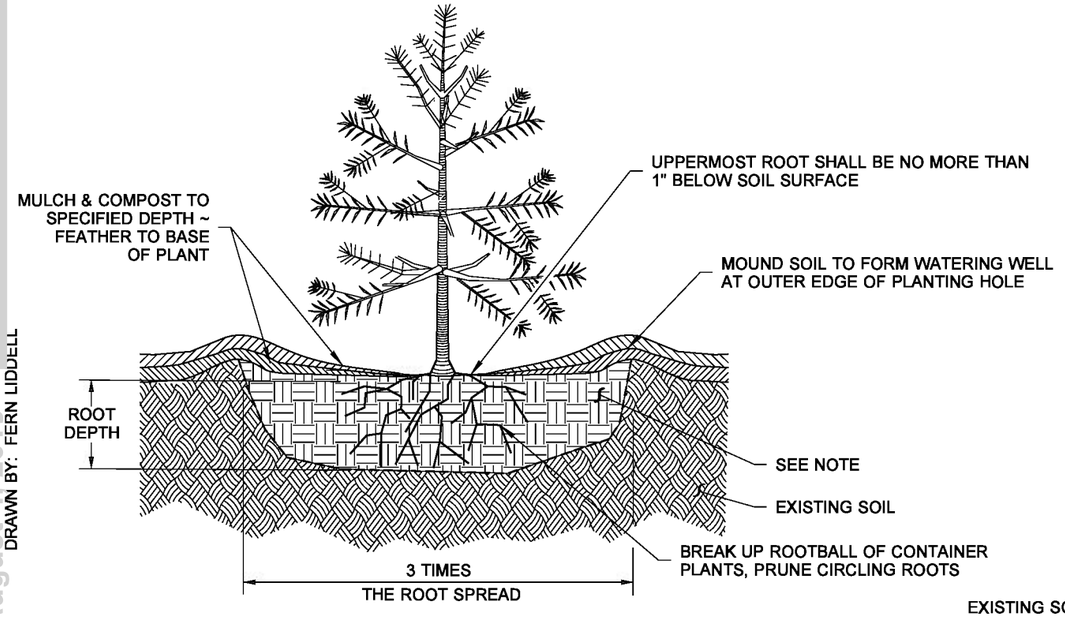

SHRUB, TREE AND GROUND COVER PLANTING DETAIL

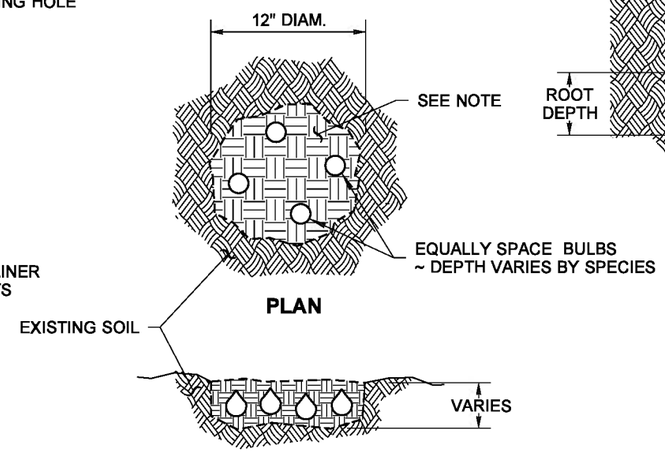

BULB PLANTING DETAIL

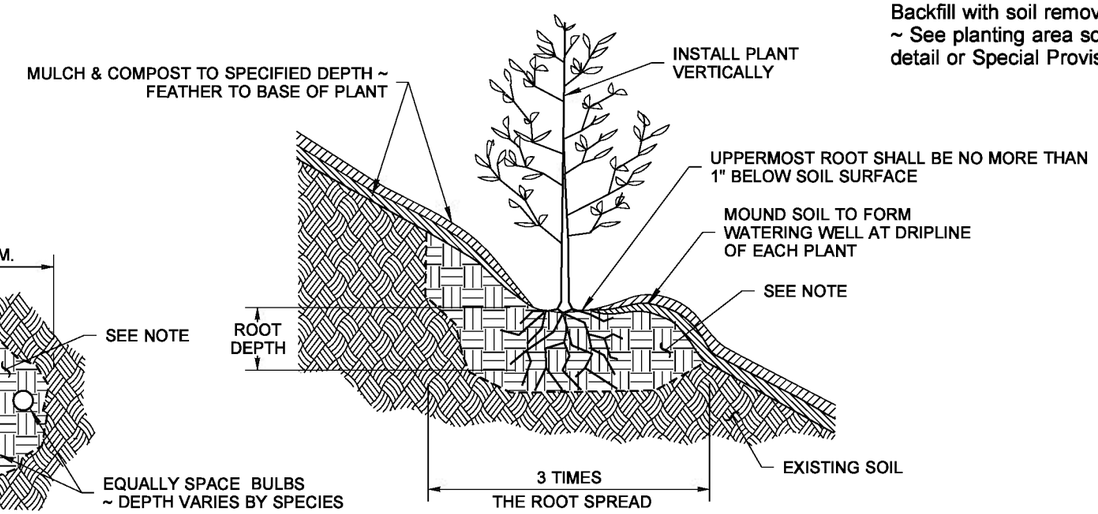

SLOPE PLANTING DETAIL

(INCLUDES ALL PLANTS ON SLOPES)

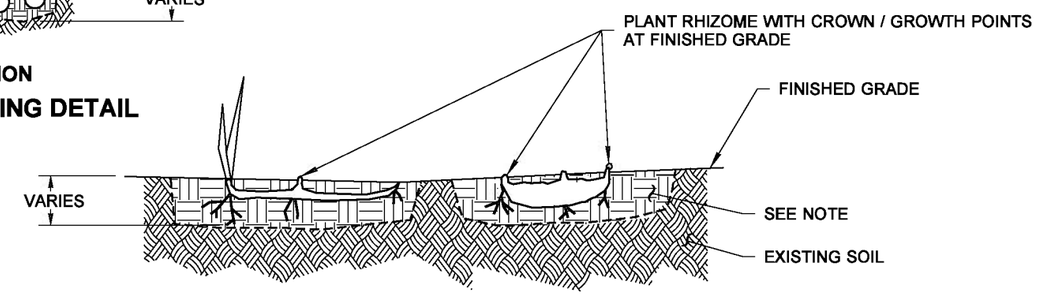

TUBER OR RHIZOME PLANTING DETAIL

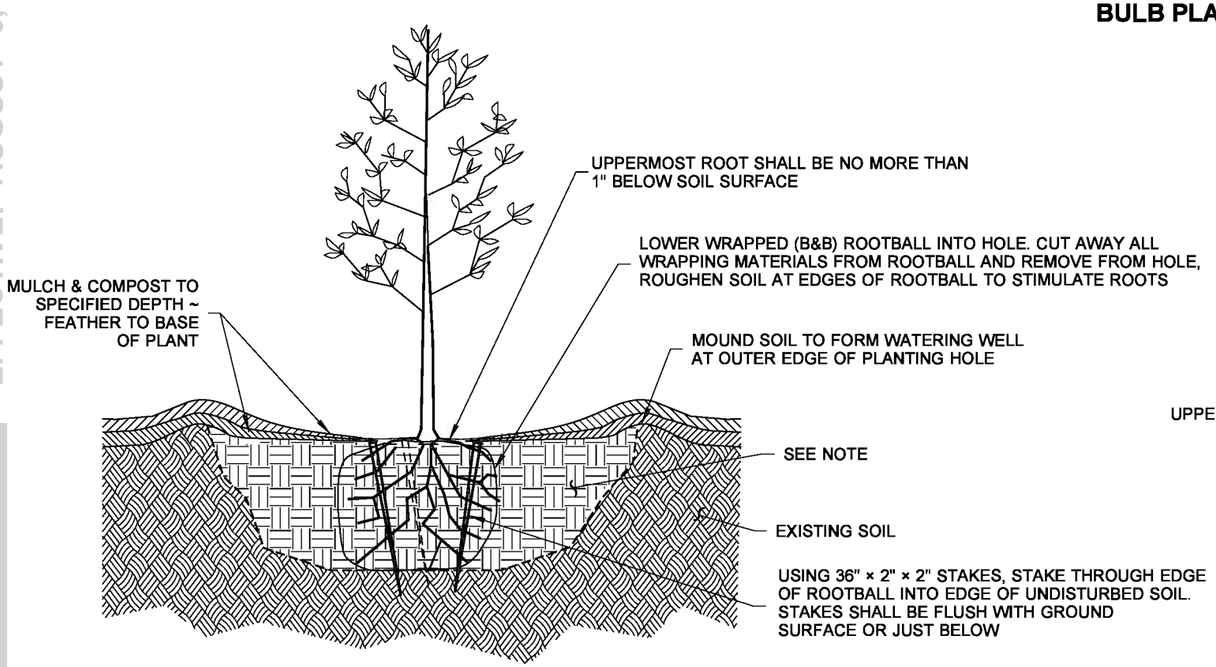

STREET TREE PLANTING AND STAKING DETAIL

(APPLIES TO CONTAINER, BALL AND BURLAPPED, (B&B) DECIDUOUS AND CONIFERS)

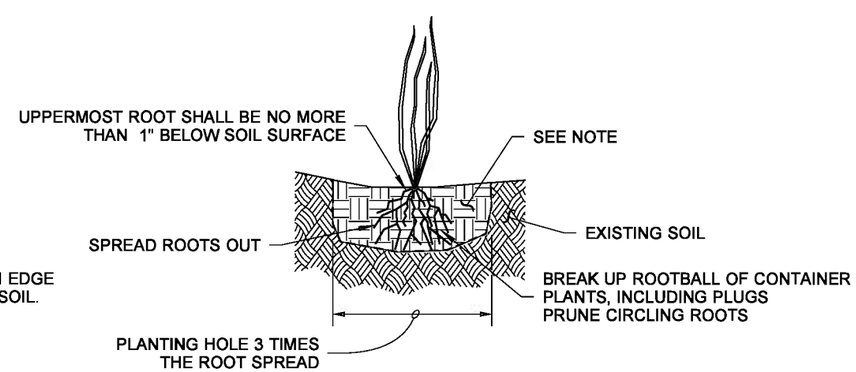

EMERGENT PLANTING DETAIL

STATE OF WASHINGTON REGISTERED LANDSCAPE ARCHITECT

SALLY A. ANDERSON

CERTIFICATE NO. 000372

NOTE: THIS PLAN IS NOT A LEGAL ENGINEERING DOCUMENT BUT AN ELECTRONIC DUPLICATE. THE ORIGINAL, SIGNED BY THE ENGINEER AND APPROVED FOR PUBLICATION, IS KEPT ON FILE AT THE WASHINGTON STATE DEPARTMENT OF TRANSPORTATION. A COPY MAY BE OBTAINED UPON REQUEST.

TREE AND SHRUB PLANTING DETAILS

STANDARD PLAN H-10.10-00

SHEET 1 OF 1 SHEET

APPROVED FOR PUBLICATION

Pasco Bakotich III — STATE DESIGN ENGINEER

07-03-08 — DATE

Washington State Department of Transportation

DRAWN BY: FERN LIDDELL

EFFECTIVE: AUGUST 6, 2012 TO August 4, 2013
EFFECTIVE: AUGUST 6, 2012 TO August 4, 2013
EFFECTIVE: AUGUST 6, 2012 TO August 4, 2013
EFFECTIVE: AUGUST 6, 2012 TO August 4, 2013

EFFECTIVE: AUGUST 6, 2012 TO August 4, 2013
EFFECTIVE: AUGUST 6, 2012 TO August 4, 2013

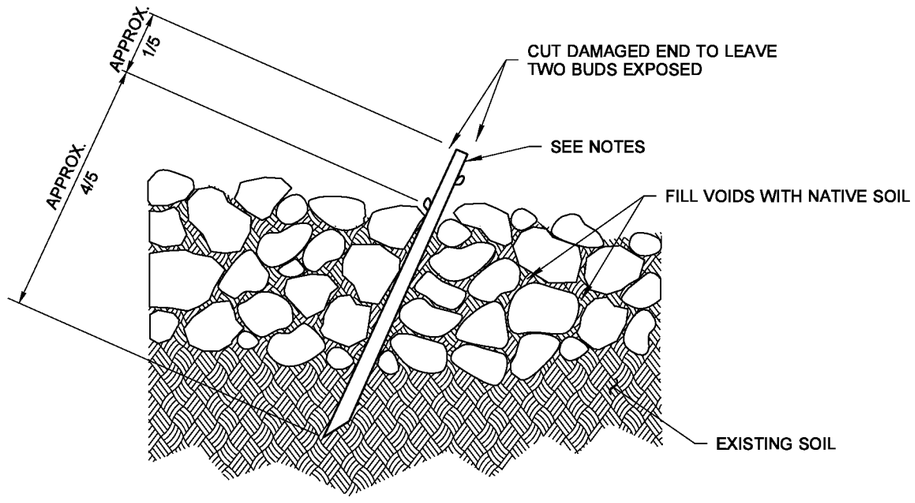

LIVE STAKE INSTALLATION IN RIPRAP

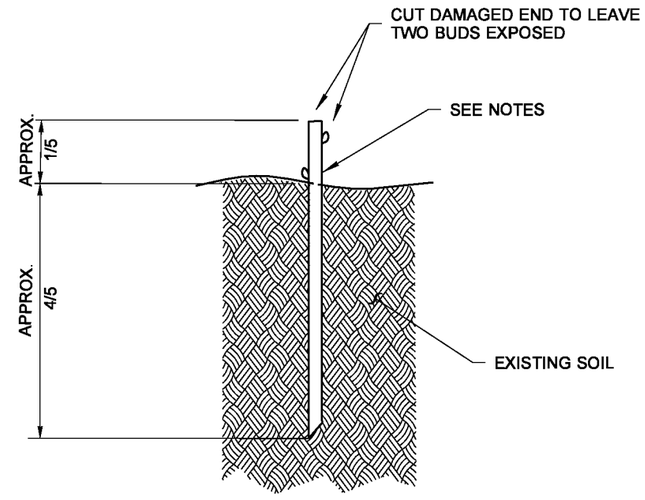

TYPICAL LIVE STAKE INSTALLATION

NOTES

1. See Plant Material List for size and type of live stake.
2. Do not use axe or sledge for driving stakes.
3. In hard ground use an iron bar or star drill to prepare the holes for the stake.
4. Avoid stripping bark or bruising stakes during installation.
5. Fill void around cutting with soil.

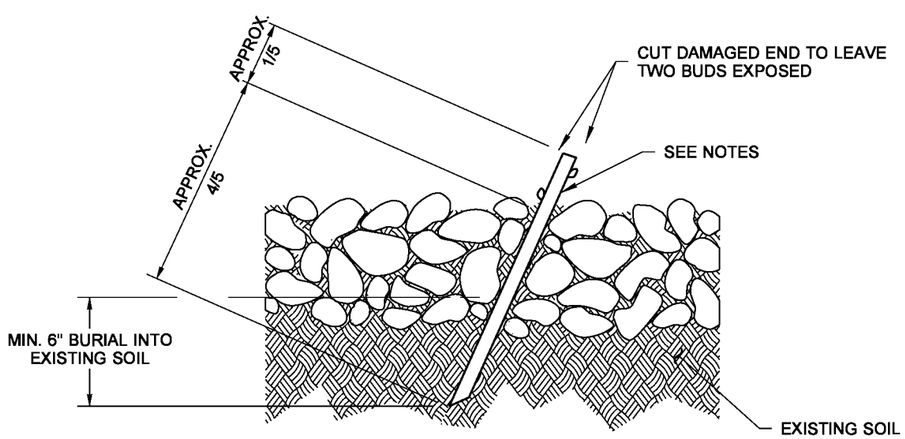

LIVE STAKE INSTALLATION IN QUARRY SPALLS

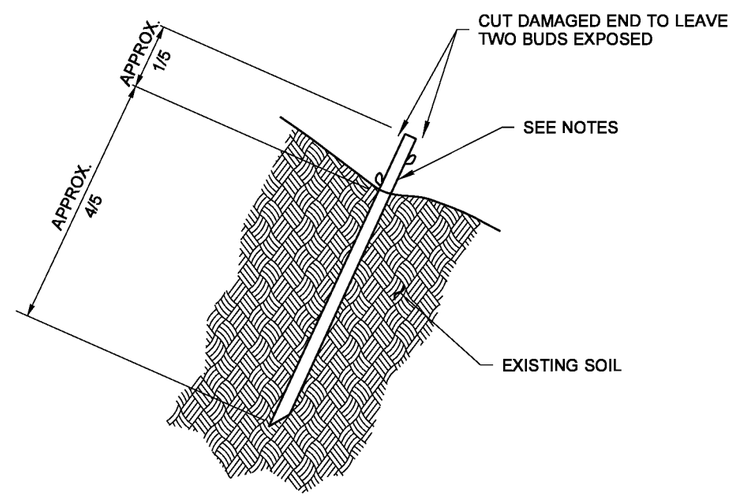

LIVE STAKE INSTALLATION ON SLOPES

STATE OF WASHINGTON REGISTERED LANDSCAPE ARCHITECT

SALLY A. ANDERSON

CERTIFICATE NO. 000372

NOTE: THIS PLAN IS NOT A LEGAL ENGINEERING DOCUMENT BUT AN ELECTRONIC DUPLICATE. THE ORIGINAL, SIGNED BY THE ENGINEER AND APPROVED FOR PUBLICATION, IS KEPT ON FILE AT THE WASHINGTON STATE DEPARTMENT OF TRANSPORTATION. A COPY MAY BE OBTAINED UPON REQUEST.

LIVE STAKE INSTALLATIONS

STANDARD PLAN H-10.15-00

SHEET 1 OF 1 SHEET

APPROVED FOR PUBLICATION

Pasco Bakotich III — STATE DESIGN ENGINEER

07-03-08 — DATE

Washington State Department of Transportation

DRAWN BY: FERN LIDDELL

EFFECTIVE: AUGUST 6, 2012 TO August 4, 2013
EFFECTIVE: AUGUST 6, 2012 TO August 4, 2013
EFFECTIVE: AUGUST 6, 2012 TO August 4, 2013
EFFECTIVE: AUGUST 6, 2012 TO August 4, 2013

EFFECTIVE: AUGUST 6, 2012 TO August 4, 2013
EFFECTIVE: AUGUST 6, 2012 TO August 4, 2013

DRAWN BY: LISA CYFORD

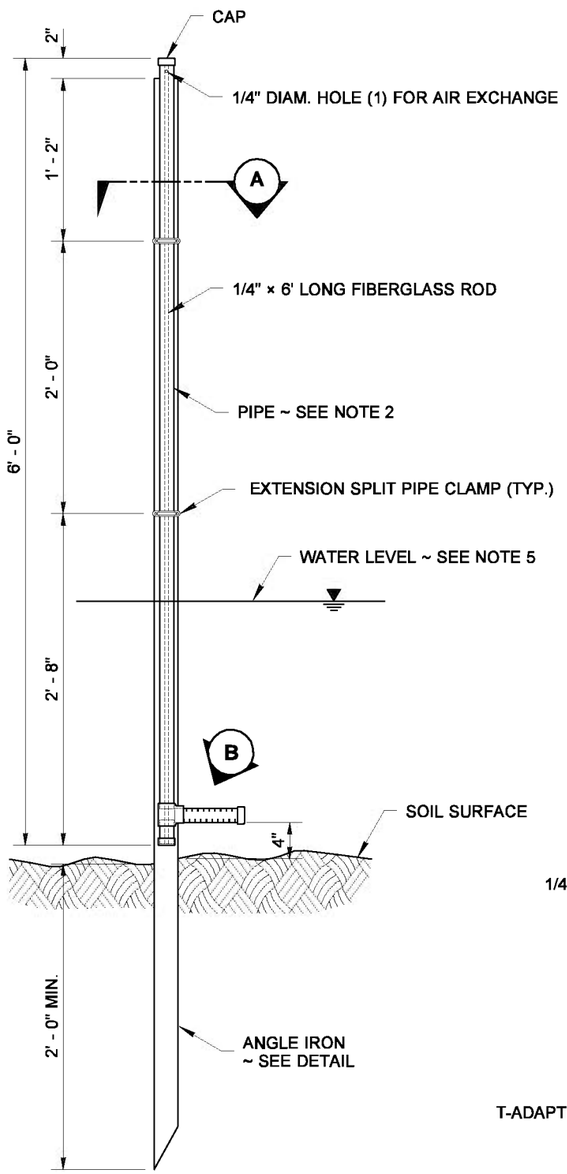

CREST GAGE

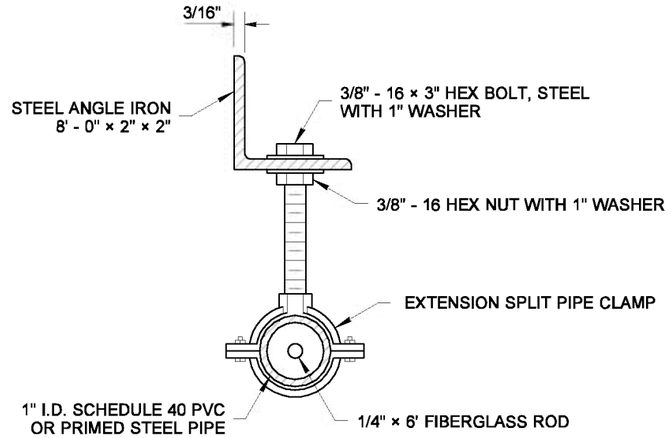

SECTION A

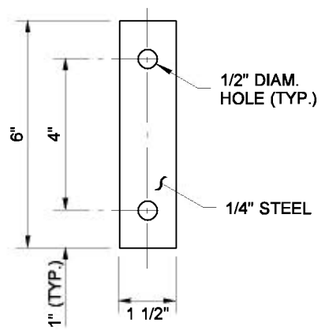

STEEL STRAP

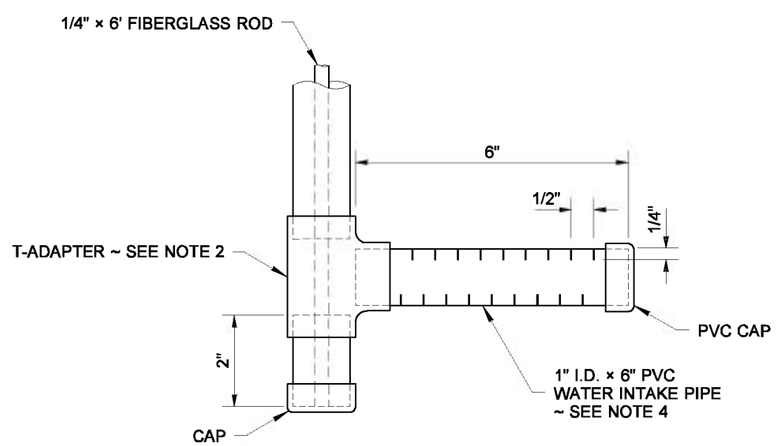

WATER INTAKE AND CLEANOUT ASSEMBLY

DETAIL B

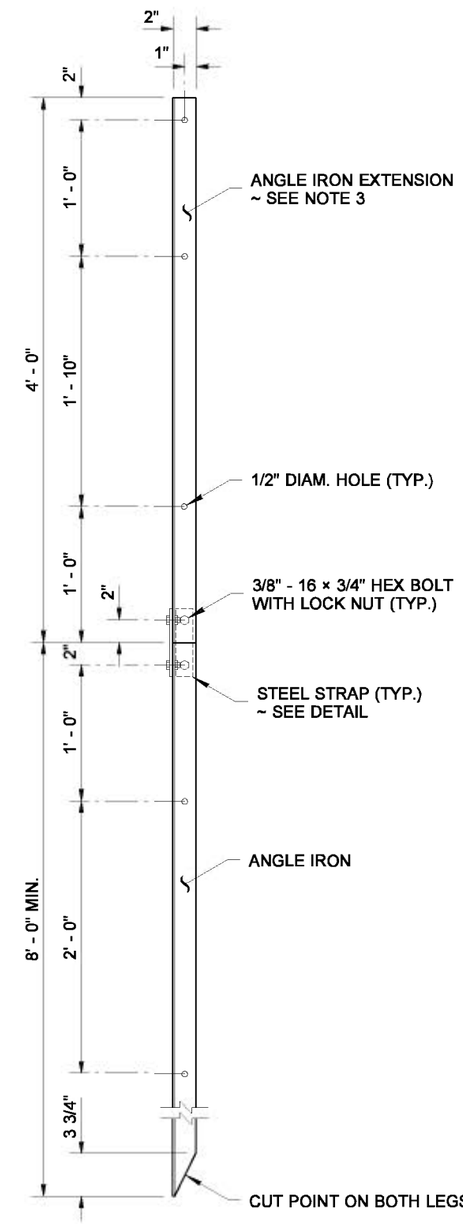

ANGLE IRON DETAIL
(SHOWN WITH EXTENSION)

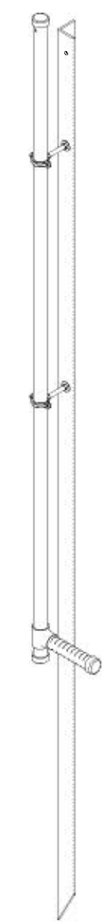

ISOMETRIC VIEW

NOTES

1. All Angle Irons and Steel Straps shall be galvanized in accordance with AASHTO M 232.
2. Pipe, Caps, and T-Adapter shall be 1" I.D. white PVC, or Primed Steel, except the water intake pipe shall be white PVC. Pipe shall be Sch. 40. All pipe joints shall be threaded.
3. Gage assembly pipe, fiberglass rod, and angle iron can be extended as needed to fit site requirements. Extra Pipe Clamps shall be added for security.
4. Score the water intake pipe 1/4" deep, 1/32" wide (width of saw blade), every 1/2", alternating cuts on top and bottom for drainage. Place at lowest water level.
5. Water level may vary, depending on season.
6. Pour in approximately 1 tablespoon of cork dust at installation, and after each reading.

STATE OF
WASHINGTON
REGISTERED
LANDSCAPE ARCHITECT

SANDRA L. SALISBURY
CERTIFICATE NO. 000860

NOTE: THIS PLAN IS NOT A LEGAL ENGINEERING DOCUMENT BUT AN ELECTRONIC DUPLICATE. THE ORIGINAL, SIGNED BY THE ENGINEER AND APPROVED FOR PUBLICATION, IS KEPT ON FILE AT THE WASHINGTON STATE DEPARTMENT OF TRANSPORTATION. A COPY MAY BE OBTAINED UPON REQUEST.

CREST GAGE

STANDARD PLAN H-30.10-00

SHEET 1 OF 1 SHEET

APPROVED FOR PUBLICATION

Pasco Bakotich III — STATE DESIGN ENGINEER
10-12-07 — DATE

Washington State Department of Transportation

EFFECTIVE: AUGUST 6, 2012 TO August 4, 2013
EFFECTIVE: AUGUST 6, 2012 TO August 4, 2013
EFFECTIVE: AUGUST 6, 2012 TO August 4, 2013
EFFECTIVE: AUGUST 6, 2012 TO August 4, 2013

EFFECTIVE: AUGUST 6, 2012 TO August 4, 2013
EFFECTIVE: AUGUST 6, 2012 TO August 4, 2013

DRAWN BY: LISA CYFORD

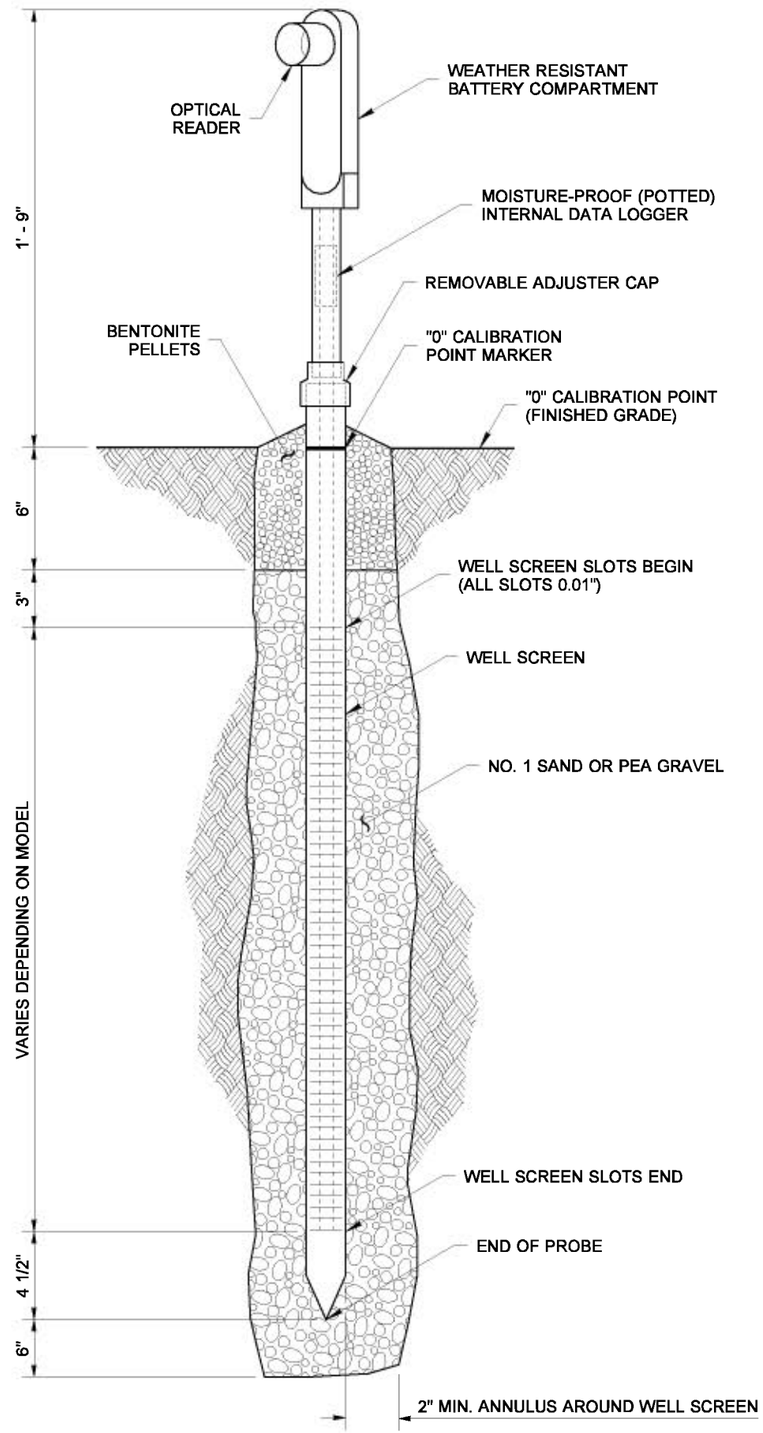

STATE OF WASHINGTON REGISTERED LANDSCAPE ARCHITECT

MARK W. MAURER
CERTIFICATE NO. 000598

NOTE: THIS PLAN IS NOT A LEGAL ENGINEERING DOCUMENT BUT AN ELECTRONIC DUPLICATE. THE ORIGINAL, SIGNED BY THE ENGINEER AND APPROVED FOR PUBLICATION, IS KEPT ON FILE AT THE WASHINGTON STATE DEPARTMENT OF TRANSPORTATION. A COPY MAY BE OBTAINED UPON REQUEST.

AUTOMATED GROUND WATER MONITORING WELL

STANDARD PLAN H-32.10-00

SHEET 1 OF 1 SHEET

APPROVED FOR PUBLICATION

Pasco Bakotich III — STATE DESIGN ENGINEER
09-20-07 — DATE

Washington State Department of Transportation

EFFECTIVE: AUGUST 6, 2012 TO August 4, 2013
EFFECTIVE: AUGUST 6, 2012 TO August 4, 2013
EFFECTIVE: AUGUST 6, 2012 TO August 4, 2013
EFFECTIVE: AUGUST 6, 2012 TO August 4, 2013

EFFECTIVE: AUGUST 6, 2012 TO August 4, 2013
EFFECTIVE: AUGUST 6, 2012 TO August 4, 2013

DRAWN BY: BILL BEKENS

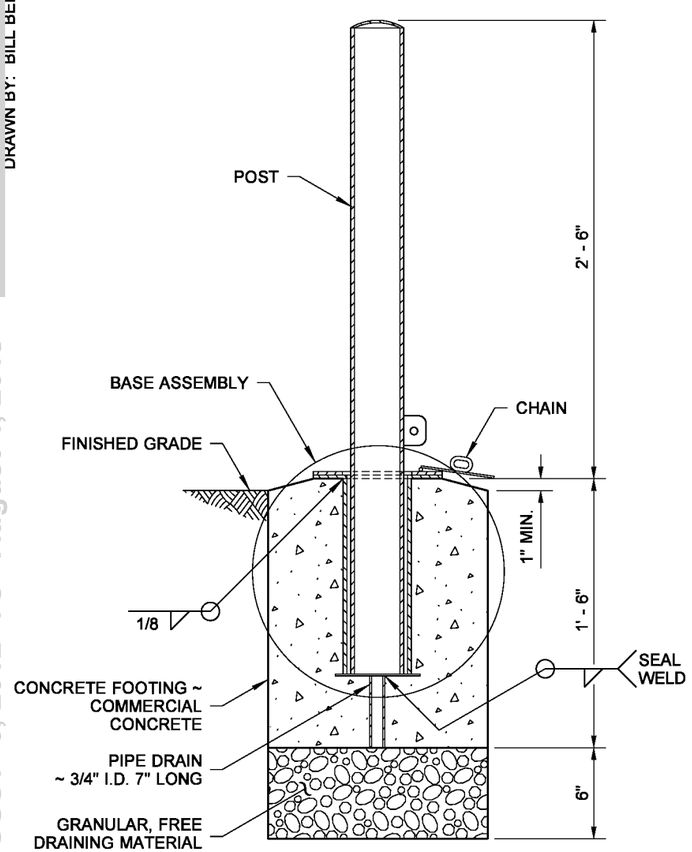

SECTION (A)

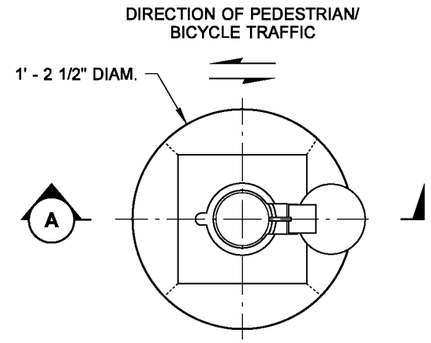

ROUND FOOTING

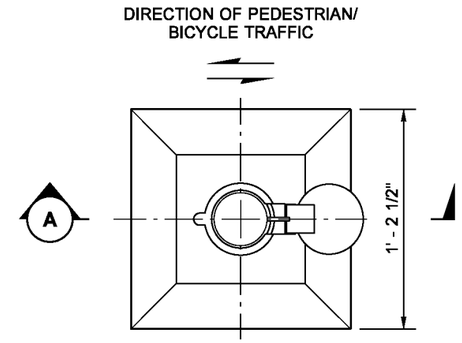

SQUARE FOOTING

PLAN VIEW

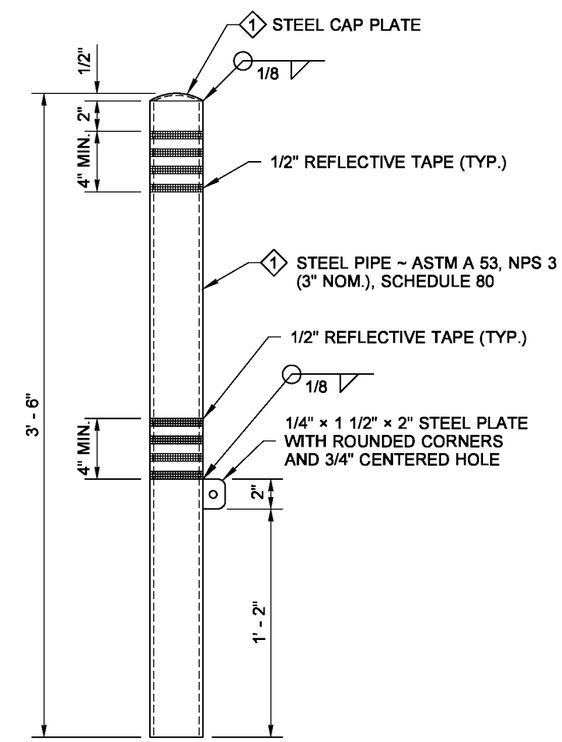

POST

1 PAINT ASSEMBLY WITH A "HIGHLY VISIBLE" COLOR. (SAFETY YELLOW IS ACCEPTABLE)

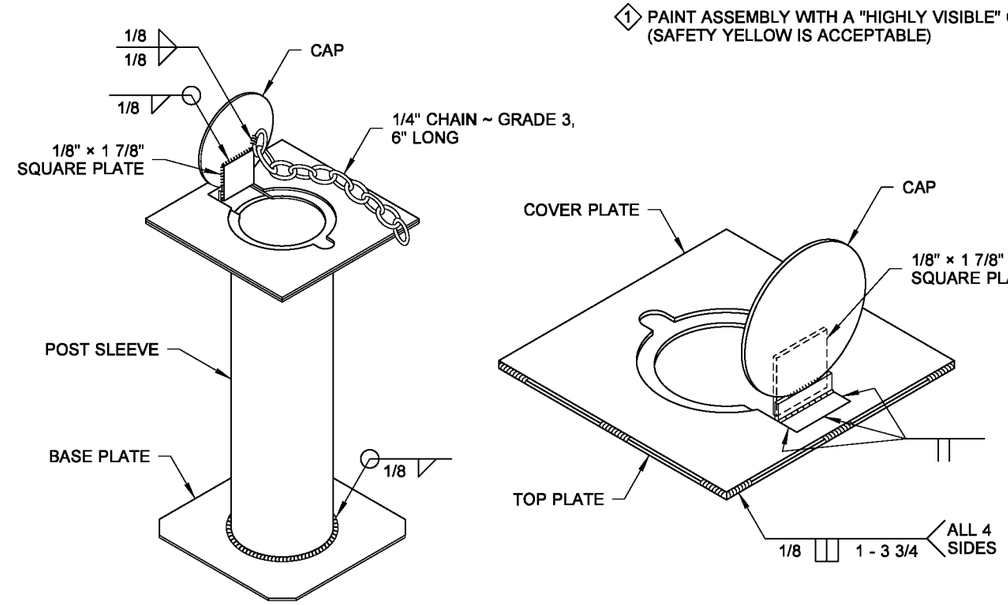

1 BASE ASSEMBLY

NOTE

This bollard does not have an effective breakaway design feature and cannot be installed within the Design Clear Zone.

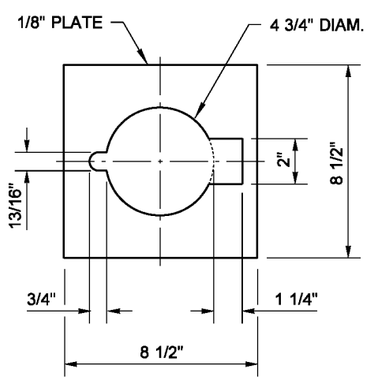

COVER PLATE

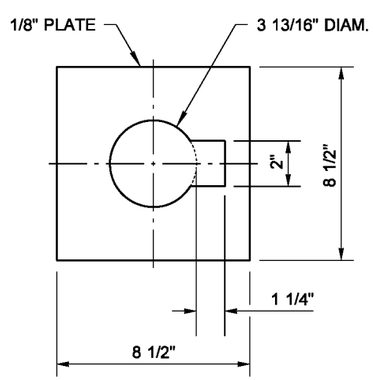

TOP PLATE

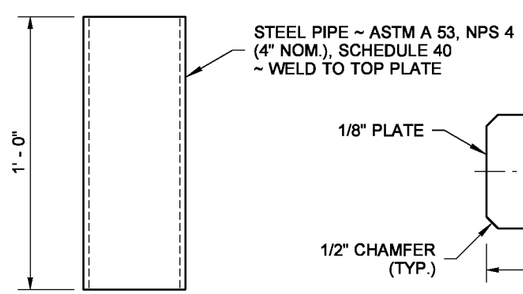

POST SLEEVE

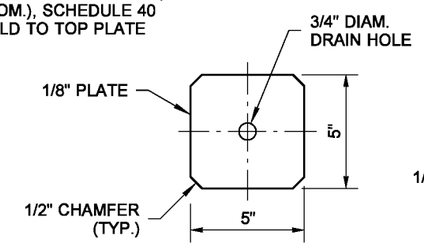

BASE PLATE

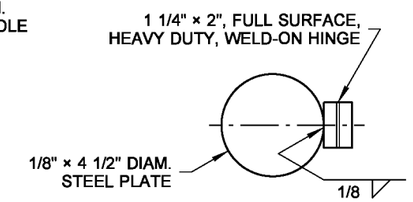

CAP AND HINGE

NOTE: THIS PLAN IS NOT A LEGAL ENGINEERING DOCUMENT BUT AN ELECTRONIC DUPLICATE. THE ORIGINAL, SIGNED BY THE ENGINEER AND APPROVED FOR PUBLICATION, IS KEPT ON FILE AT THE WASHINGTON STATE DEPARTMENT OF TRANSPORTATION. A COPY MAY BE OBTAINED UPON REQUEST.

BOLLARD TYPE 1

STANDARD PLAN H-60.10-01

SHEET 1 OF 1 SHEET

APPROVED FOR PUBLICATION

Pasco Bakotich III — STATE DESIGN ENGINEER

07-03-08 — DATE

Washington State Department of Transportation

EFFECTIVE: AUGUST 6, 2012 TO August 4, 2013
EFFECTIVE: AUGUST 6, 2012 TO August 4, 2013
EFFECTIVE: AUGUST 6, 2012 TO August 4, 2013
EFFECTIVE: AUGUST 6, 2012 TO August 4, 2013

EFFECTIVE: AUGUST 6, 2012 TO August 4, 2013
EFFECTIVE: AUGUST 6, 2012 TO August 4, 2013

DRAWN BY: BILL BEKENS

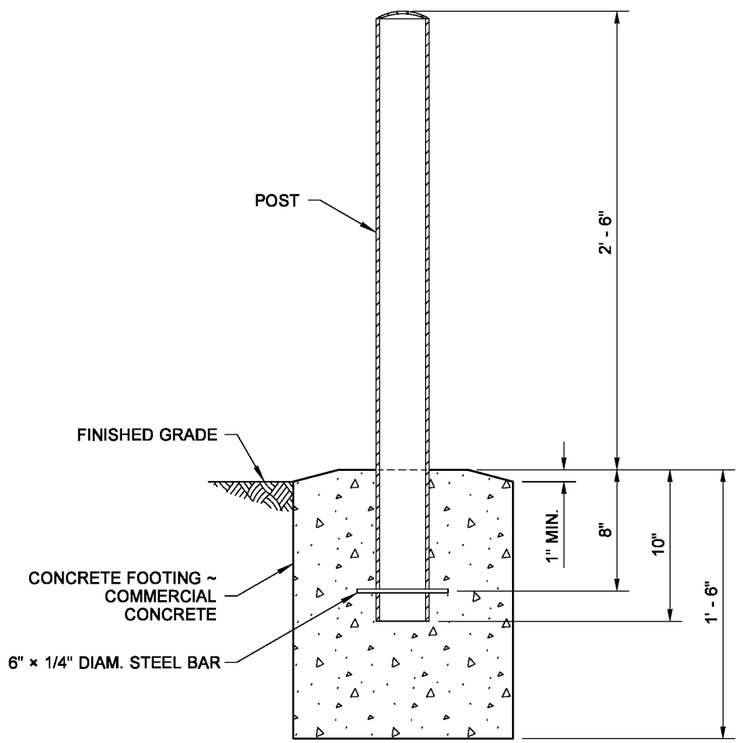

SECTION (A)

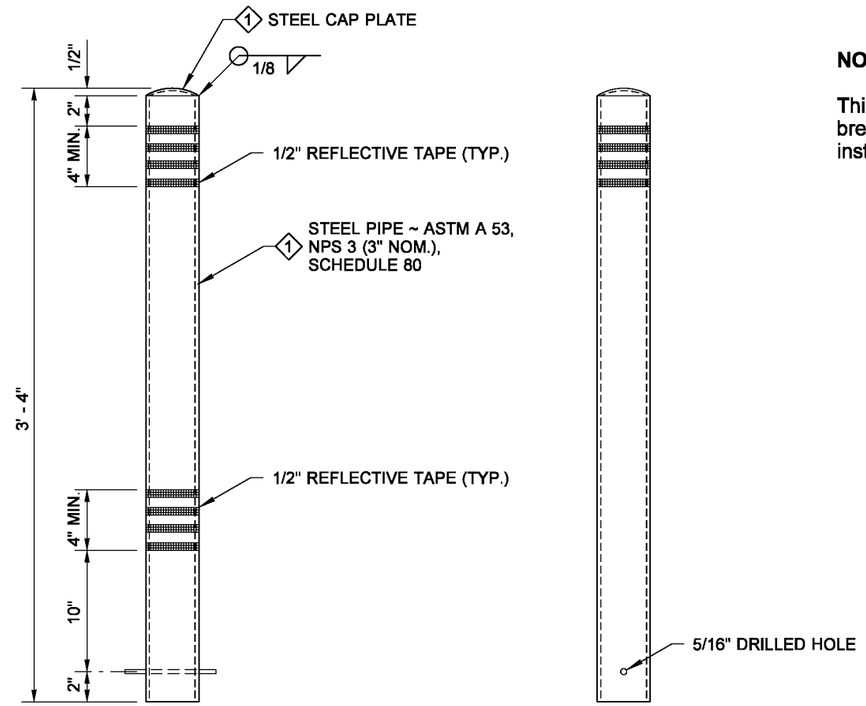

FRONT VIEW

SIDE VIEW

1 PAINT ASSEMBLY WITH A "HIGHLY VISIBLE" COLOR.
(SAFETY YELLOW IS ACCEPTABLE)

POST

NOTE

This bollard does not have an effective breakaway design feature and cannot be installed within the Design Clear Zone.

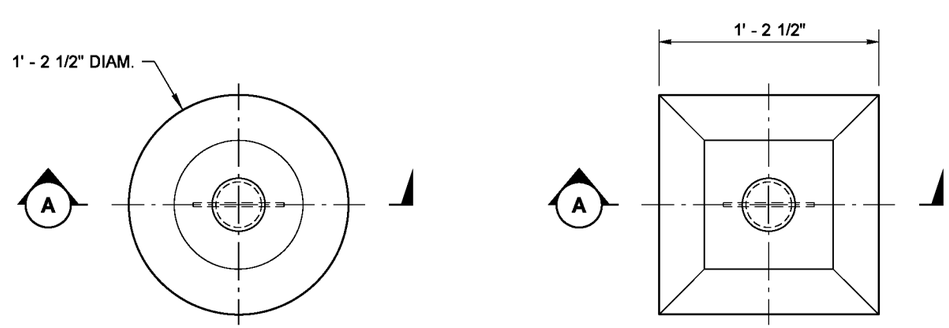

ROUND FOOTING

SQUARE FOOTING

PLAN VIEW

EXPIRES JUNE 19, 2010

NOTE: THIS PLAN IS NOT A LEGAL ENGINEERING DOCUMENT BUT AN ELECTRONIC DUPLICATE. THE ORIGINAL, SIGNED BY THE ENGINEER AND APPROVED FOR PUBLICATION, IS KEPT ON FILE AT THE WASHINGTON STATE DEPARTMENT OF TRANSPORTATION. A COPY MAY BE OBTAINED UPON REQUEST.

BOLLARD TYPE 2

STANDARD PLAN H-60.20-01

SHEET 1 OF 1 SHEET

APPROVED FOR PUBLICATION

Pasco Bakotich III — STATE DESIGN ENGINEER

07-03-08 — DATE

Washington State Department of Transportation

EFFECTIVE: AUGUST 6, 2012 TO August 4, 2013
EFFECTIVE: AUGUST 6, 2012 TO August 4, 2013
EFFECTIVE: AUGUST 6, 2012 TO August 4, 2013
EFFECTIVE: AUGUST 6, 2012 TO August 4, 2013

EFFECTIVE: AUGUST 6, 2012 TO August 4, 2013
EFFECTIVE: AUGUST 6, 2012 TO August 4, 2013

DRAWN BY: MARK SUJKA

WOOD POST FASTENERS			
SIZE / TYPE	QUANTITY	WASHERS	LOCKNUTS
3/8" DIAM. × 4 3/4" BOLT	2	4	2
3/8" DIAM. × 3/4" BOLT	4	8	4
3/16" DIAM. × 1" SCREW	4	8	4

STEEL POST FASTENERS			
SIZE / TYPE	QUANTITY	WASHERS	LOCKNUTS
3/8" DIAM. × 2 3/4" BOLT	2	4	2
3/8" DIAM. × 3/4" BOLT	4	8	4
3/16" DIAM. × 1" SCREW	4	8	4
1 7/8" M-CLAMP	2	4	4

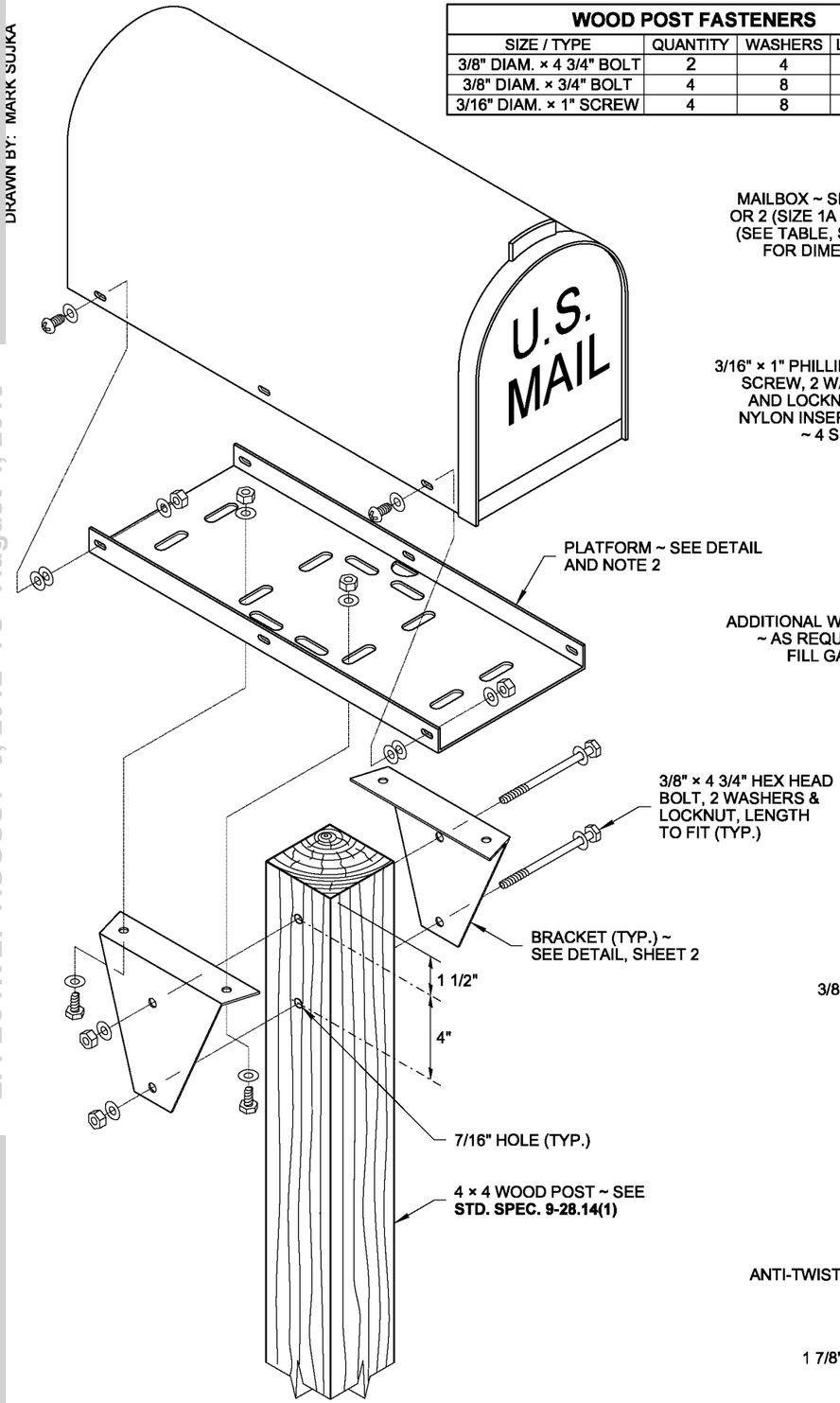

WOOD POST ASSEMBLY DETAIL

SEE **STEEL POST ASSEMBLY DETAIL** FOR SPECIFICATIONS NOT SHOWN

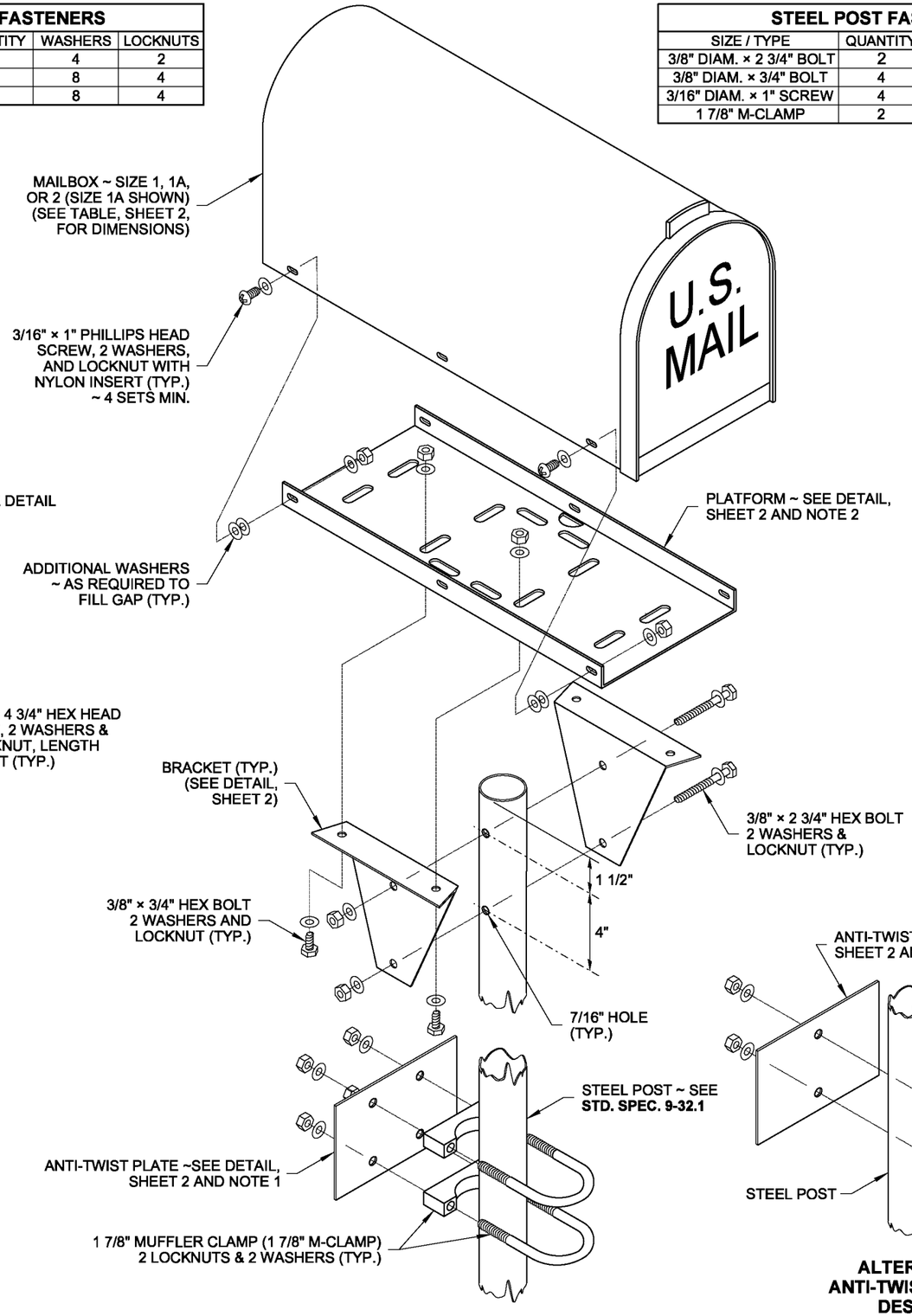

STEEL POST ASSEMBLY DETAIL

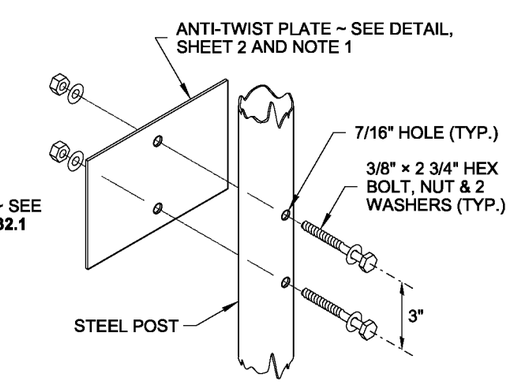

ALTERNATE ANTI-TWIST PLATE DESIGN

NOTES

1. A socket and wedge anchoring system that meets the NCHRP 350 crash test criteria may be substituted in lieu of the anti-twist plate designs shown. Anti-twist plates are not required for wood post installations.
2. The platform design shown on this plan features slots that accommodate several types of mailbox supports; only those slots necessary for assembling the type being installed are required. An adjustable platform may be used in lieu of this design, but it must fit the bracket design shown on this plan. Brackets are required for all single-post installations. Field drilling may be necessary.
3. Center the mailbox on the platform to ensure space for the mailbox door to open and to allow space for installing the fasteners (see ALIGNMENT DETAIL, Sheet 2). Spacing of mailbox mounting holes varies among manufacturers. Attachment of the mailbox to the platform may require drilling additional holes through the mailbox to fit the platform.
4. Attach a newspaper box to a steel post with two 1 7/8" Muffler Clamps spaced 4" apart. Field drill 7/16" holes in the newspaper box to fit. Use 2 1/2" × 1/4" lag bolts to attach newspaper boxes to wood posts. Newspaper boxes must not extend beyond the front of the mailbox when the mailbox door is closed.
5. A Type 2 Support **(Standard Plan H-70.20)** is required when 2 or more mailboxes are to be installed on one support.

NOTE: THIS PLAN IS NOT A LEGAL ENGINEERING DOCUMENT BUT AN ELECTRONIC DUPLICATE. THE ORIGINAL, SIGNED BY THE ENGINEER AND APPROVED FOR PUBLICATION, IS KEPT ON FILE AT THE WASHINGTON STATE DEPARTMENT OF TRANSPORTATION. A COPY MAY BE OBTAINED UPON REQUEST.

MAILBOX SUPPORT TYPE 1

STANDARD PLAN H-70.10-01

SHEET 1 OF 2 SHEETS

APPROVED FOR PUBLICATION

Pasco Bakotich III — STATE DESIGN ENGINEER

02-07-12 — DATE

Washington State Department of Transportation

EFFECTIVE: AUGUST 6, 2012 TO August 4, 2013
EFFECTIVE: AUGUST 6, 2012 TO August 4, 2013
EFFECTIVE: AUGUST 6, 2012 TO August 4, 2013
EFFECTIVE: AUGUST 6, 2012 TO August 4, 2013

EFFECTIVE: AUGUST 6, 2012 TO August 4, 2013

DRAWN BY: MARK SUJKA

MAILBOX & PLATFORM DIMENSIONS						
SIZE	MAILBOX DIMENSIONS			PLATFORM DIMENSIONS		
	L	W	H	L	W	H
1	19"	6 1/2"	8 1/2"	17"	6"	1"
1A	21"	8"	10 1/2"	19"	7 1/2"	1"
2	24"	11 1/2"	13 1/2"	21"	11"	1"

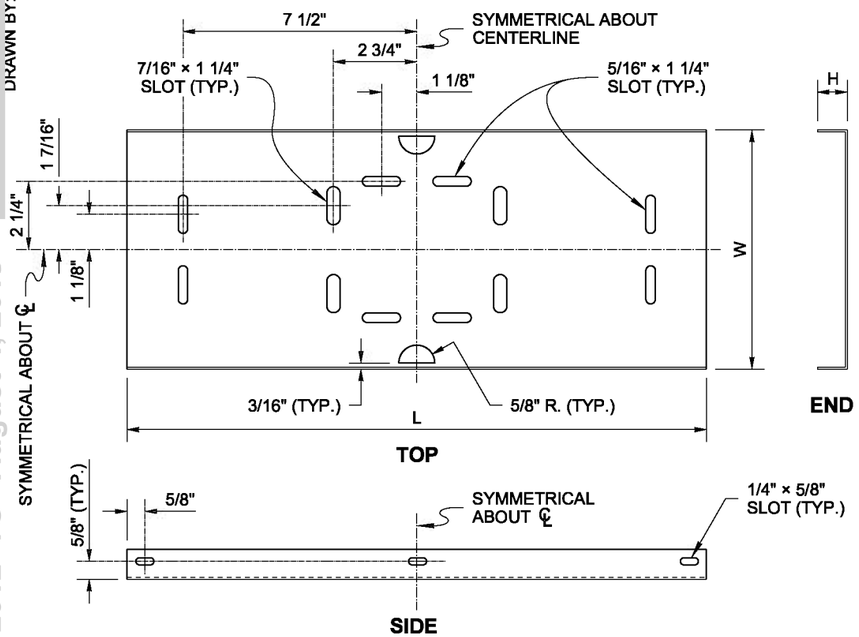

PLATFORM DETAIL

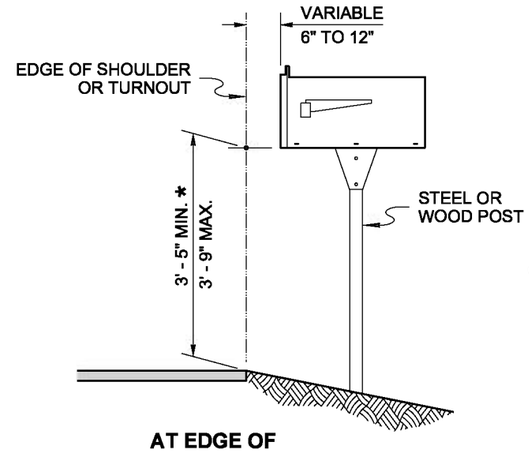

AT EDGE OF SHOULDER

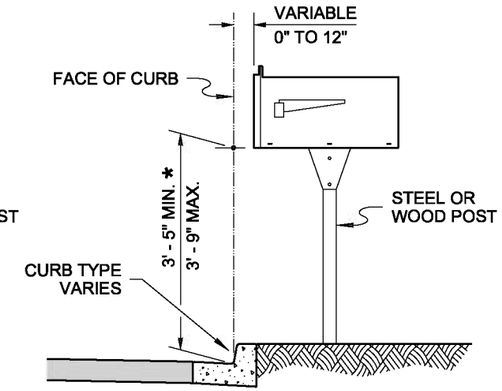

BEHIND CURB

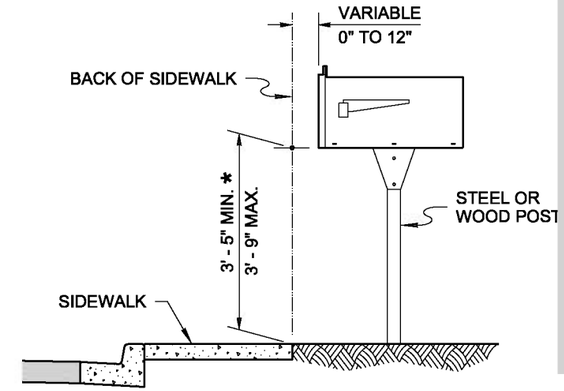

BEHIND SIDEWALK

* UNLESS OTHERWISE SHOWN IN THE PLANS

MAILBOX PLACEMENT SECTIONS

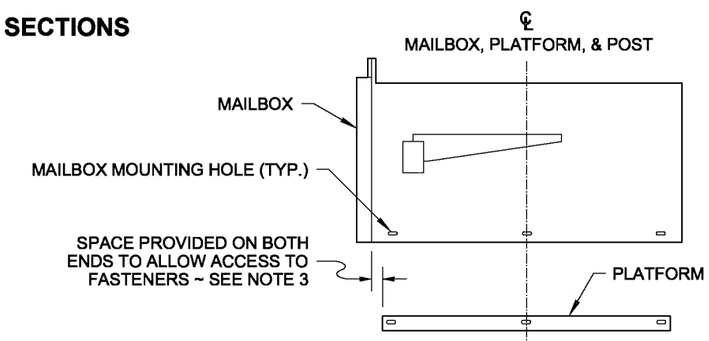

ALIGNMENT DETAIL

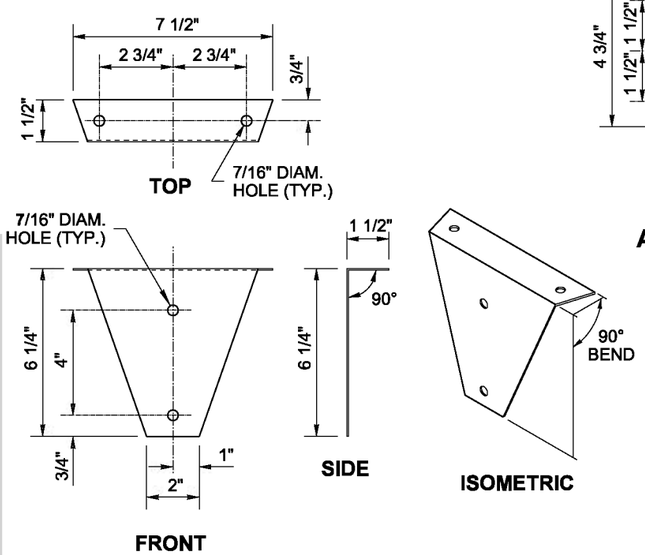

BRACKET DETAIL

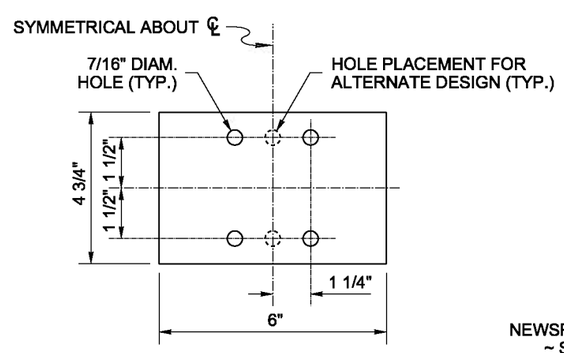

ANTI-TWIST PLATE DETAIL

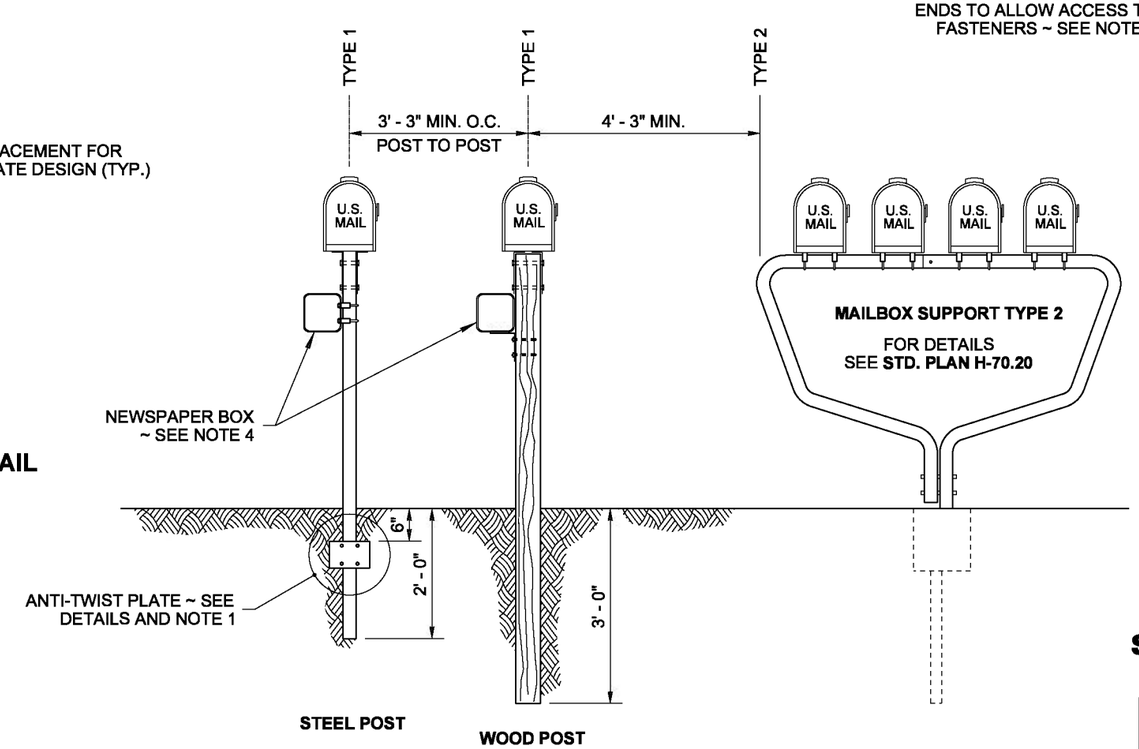

POST PLACEMENT DETAIL

BAKOTICH, PASCO III
STATE OF WASHINGTON
24557
REGISTERED
PROFESSIONAL ENGINEER

NOTE: THIS PLAN IS NOT A LEGAL ENGINEERING DOCUMENT BUT AN ELECTRONIC DUPLICATE. THE ORIGINAL, SIGNED BY THE ENGINEER AND APPROVED FOR PUBLICATION, IS KEPT ON FILE AT THE WASHINGTON STATE DEPARTMENT OF TRANSPORTATION. A COPY MAY BE OBTAINED UPON REQUEST.

MAILBOX SUPPORT TYPE 1

STANDARD PLAN H-70.10-01

SHEET 2 OF 2 SHEETS

APPROVED FOR PUBLICATION

Pasco Bakotich III — STATE DESIGN ENGINEER — *02-07-12* — DATE

Washington State Department of Transportation

EFFECTIVE: AUGUST 6, 2012 TO August 4, 2013

EFFECTIVE: AUGUST 6, 2012 TO August 4, 2013
EFFECTIVE: AUGUST 6, 2012 TO August 4, 2013

DRAWN BY: MARK SUJKA

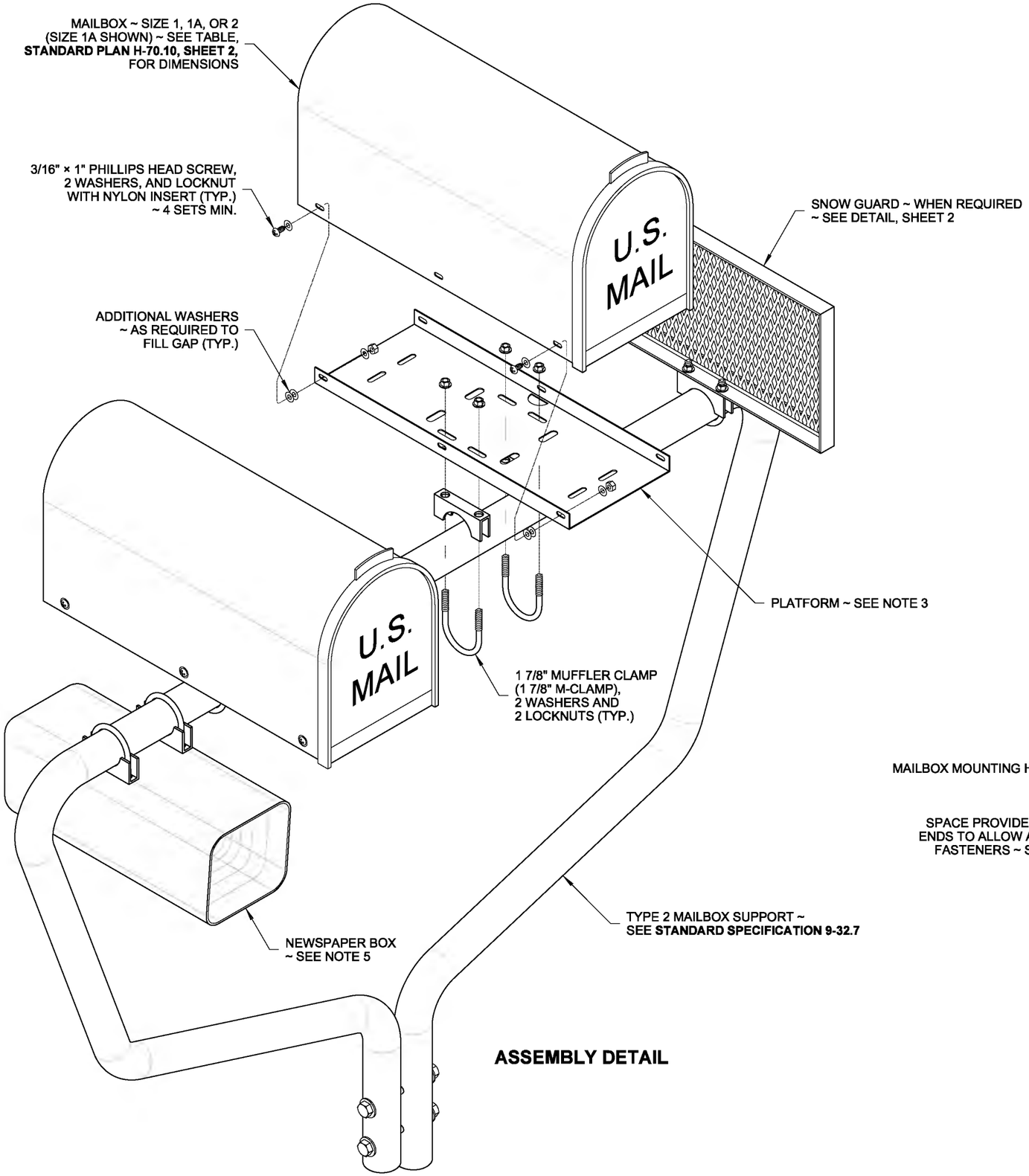

ASSEMBLY DETAIL

NOTES

1. The anchoring system shall meet NCHRP 350 crash test criteria. Use a socket and wedge system or the anchoring system supplied by or recommended by the Type 2 Support manufacturer.
2. A maximum of five mailboxes may be installed on a Type 2 Support.
3. The Platform design shown in this plan is detailed in the PLATFORM DETAIL, **Standard Plan H-70.10, Sheet 2**. The design features slots that accomodate several types of mailbox supports; only those slots necessary for assembling the type being installed are required. An adjustable platform may be used in lieu of this platform design. Adjustable platforms must fit the 1 7/8" M-Clamp.
4. Center the mailbox on the platform to ensure space for the mailbox door to open and to allow space for installing the fasteners (see ALIGNMENT DETAIL). Spacing of mailbox mounting holes varies among manufacturers. Attachment of the mailbox to the platform may require drilling additional holes through the mailbox to fit the platform.
5. Attach a newspaper box to a Type 2 Support with two 1 7/8" Muffler Clamps spaced 4" apart. Field drill 7/16" holes in the newspaper box to fit. Newspaper boxes must not extend beyond the front of the mailbox when the mailbox door is closed.

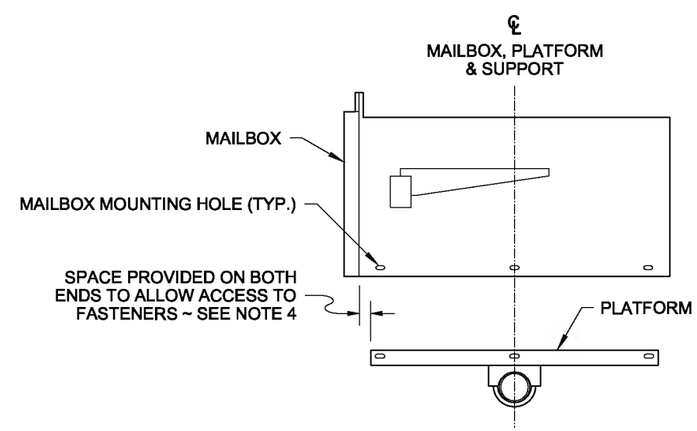

ALIGNMENT DETAIL

SEE NOTE 4

NOTE: THIS PLAN IS NOT A LEGAL ENGINEERING DOCUMENT BUT AN ELECTRONIC DUPLICATE. THE ORIGINAL, SIGNED BY THE ENGINEER AND APPROVED FOR PUBLICATION, IS KEPT ON FILE AT THE WASHINGTON STATE DEPARTMENT OF TRANSPORTATION. A COPY MAY BE OBTAINED UPON REQUEST.

MAILBOX SUPPORT TYPE 2

STANDARD PLAN H-70.20-01

SHEET 1 OF 2 SHEETS

APPROVED FOR PUBLICATION

Pasco Bakotich III — STATE DESIGN ENGINEER

02-16-12 — DATE

Washington State Department of Transportation

EFFECTIVE: AUGUST 6, 2012 TO August 4, 2013
EFFECTIVE: AUGUST 6, 2012 TO August 4, 2013
EFFECTIVE: AUGUST 6, 2012 TO August 4, 2013
EFFECTIVE: AUGUST 6, 2012 TO August 4, 2013

EFFECTIVE: AUGUST 6, 2012 TO August 4, 2013
EFFECTIVE: AUGUST 6, 2012 TO August 4, 2013

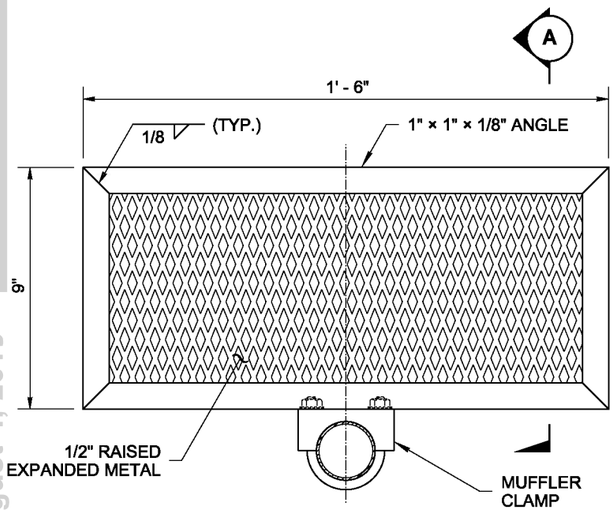

FRONT VIEW

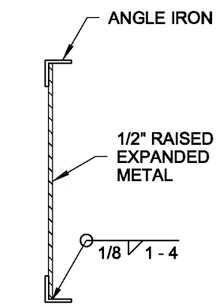

SECTION A

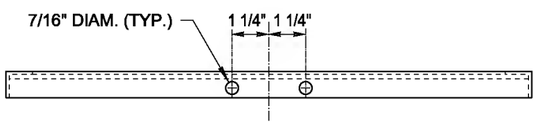

BOTTOM VIEW

SNOW GUARD DETAIL

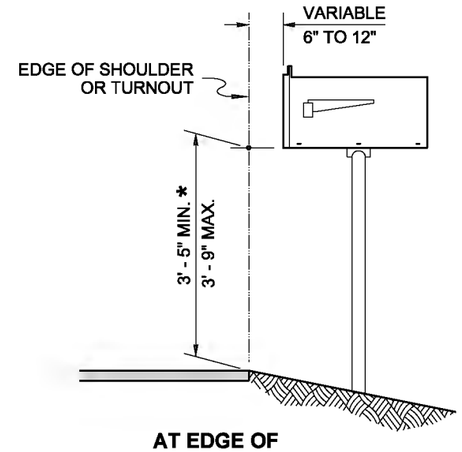

AT EDGE OF SHOULDER

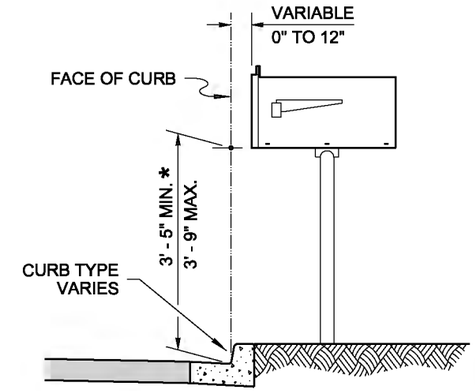

BEHIND CURB

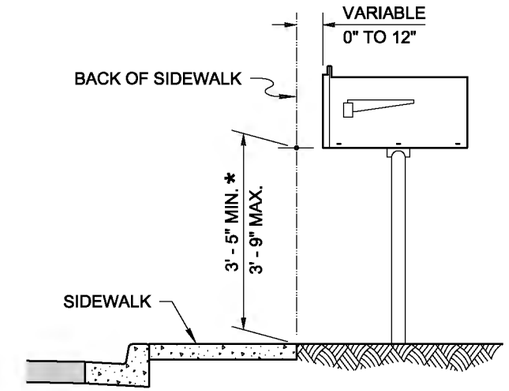

BEHIND SIDEWALK

* UNLESS OTHERWISE SHOWN IN THE PLANS

MAILBOX PLACEMENT SECTIONS

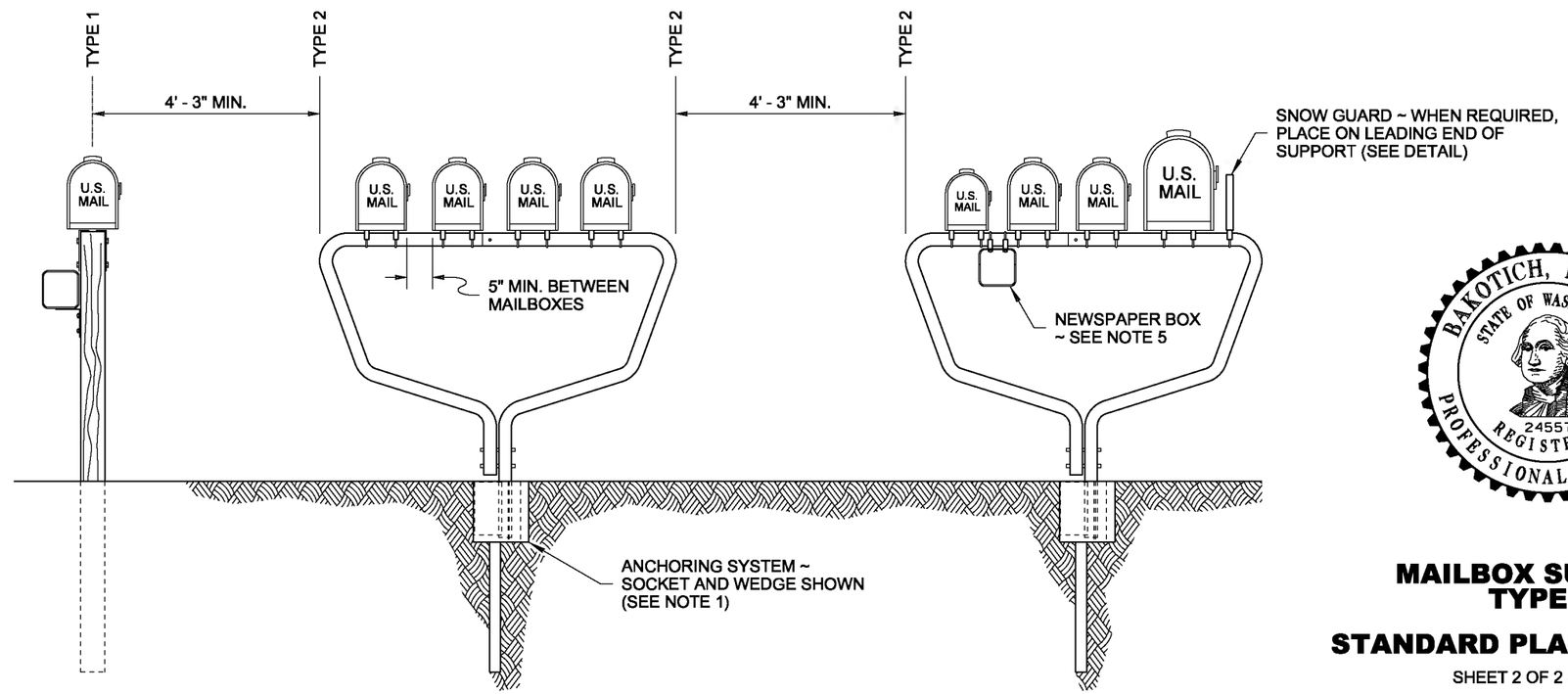

MAILBOX SUPPORT TYPE 1
(WOOD POST SHOWN)

FOR DETAILS,
SEE **STANDARD PLAN I-70.10**

MAILBOX SUPPORTS TYPE 2

SPACING DETAIL

NOTE: THIS PLAN IS NOT A LEGAL ENGINEERING DOCUMENT BUT AN ELECTRONIC DUPLICATE. THE ORIGINAL, SIGNED BY THE ENGINEER AND APPROVED FOR PUBLICATION, IS KEPT ON FILE AT THE WASHINGTON STATE DEPARTMENT OF TRANSPORTATION. A COPY MAY BE OBTAINED UPON REQUEST.

MAILBOX SUPPORT TYPE 2

STANDARD PLAN H-70.20-01

SHEET 2 OF 2 SHEETS

APPROVED FOR PUBLICATION

Pasco Bakotich III — STATE DESIGN ENGINEER
02-16-12 — DATE

Washington State Department of Transportation

DRAWN BY: MARK SUJKA

EFFECTIVE: AUGUST 6, 2012 TO August 4, 2013
EFFECTIVE: AUGUST 6, 2012 TO August 4, 2013
EFFECTIVE: AUGUST 6, 2012 TO August 4, 2013
EFFECTIVE: AUGUST 6, 2012 TO August 4, 2013

EFFECTIVE: AUGUST 6, 2012 TO August 4, 2013
EFFECTIVE: AUGUST 6, 2012 TO August 4, 2013

DRAWN BY: MARK SUJKA

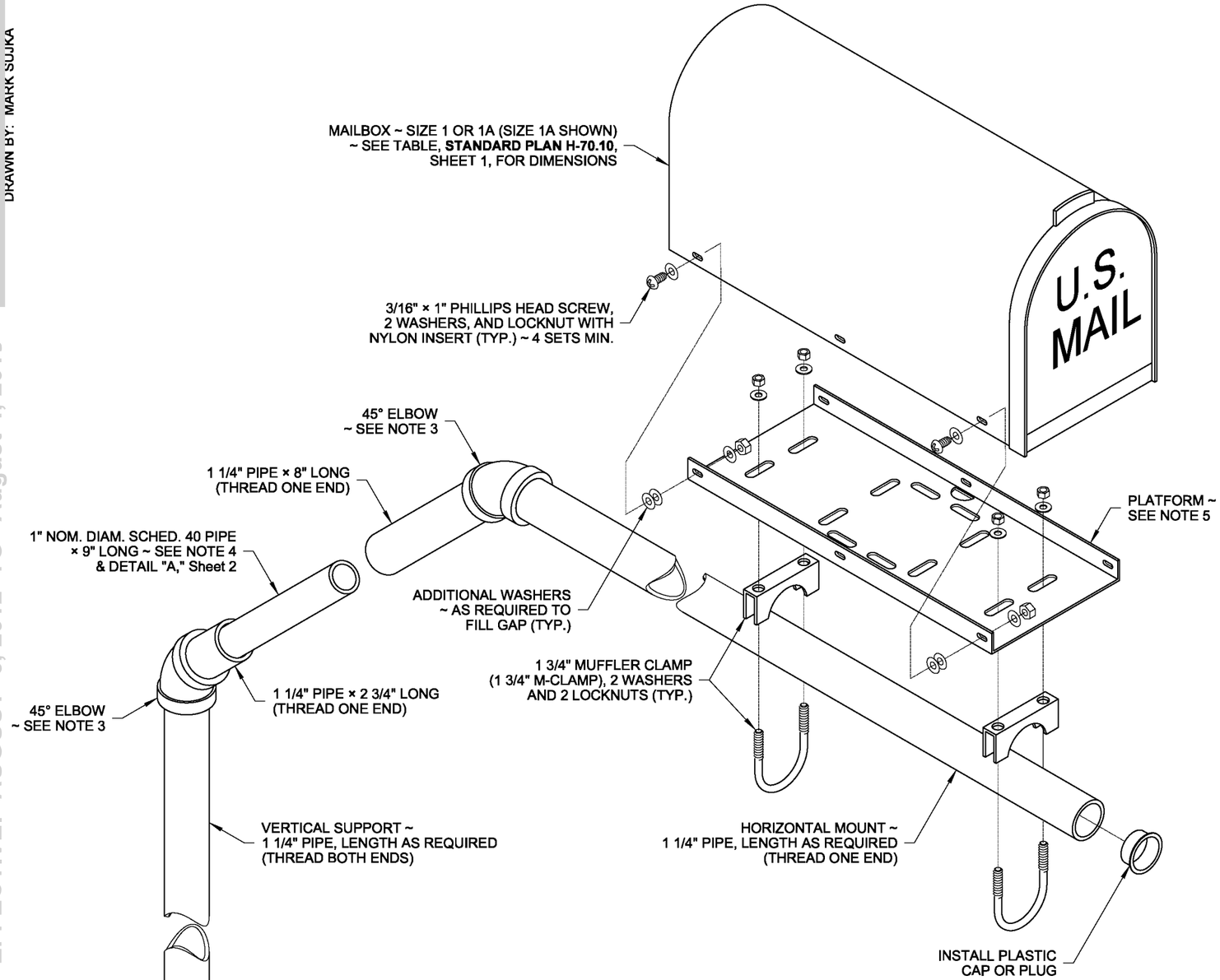

ASSEMBLY DETAIL
ISOMETRIC VIEW

NOTES

1. The insert pipe is 1" nominal diameter, Schedule 40 steel pipe, as indicated; all other pipe shown on this plan is 1 1/4" nominal diameter, Schedule 40 steel pipe. All pipe, couplings, and elbows shall be galvanized in accordance with ASTM A 153.
2. The vertical support may be cast in a concrete foundation, or bolted to a U-channel post, (see PLACEMENT DETAIL, Sheet 2). Avoid placing the vertical support in the flow line of a ditch.
3. The pipe angles required in this design may be achieved by using pipe fittings or by bending the pipes. See DETAIL "A," Sheet 2.
4. Coat the 1" diam. pipe with grease (petroleum) before sliding the 1 1/4" diam. pipe (cantilever arm) onto it, to aid rotation and to guard against corrosion.
5. The Platform design shown in this plan is detailed in the PLATFORM DETAIL, **Standard Plan H-70.10, Sheet 2.** The design features slots that accommodate several types of mailbox supports; only those slots necessary for assembling the type being installed are required.
6. Match the edge of the mailbox platform to the end of the horizontal pipe mount. Center the mailbox on the platform to ensure space for the mailbox door to open and to allow space for installing the fasteners. Spacing of mailbox mounting holes varies among manufacturers. Attachment of the mailbox to the platform may require drilling additional holes through the mailbox to fit the platform, (see ALIGNMENT DETAIL).
7. Attach a newspaper box to the pipe with two 1 3/4" muffler clamps spaced 4" apart. Newspaper boxes must not extend beyond the front of the mailbox when the mailbox door is closed.

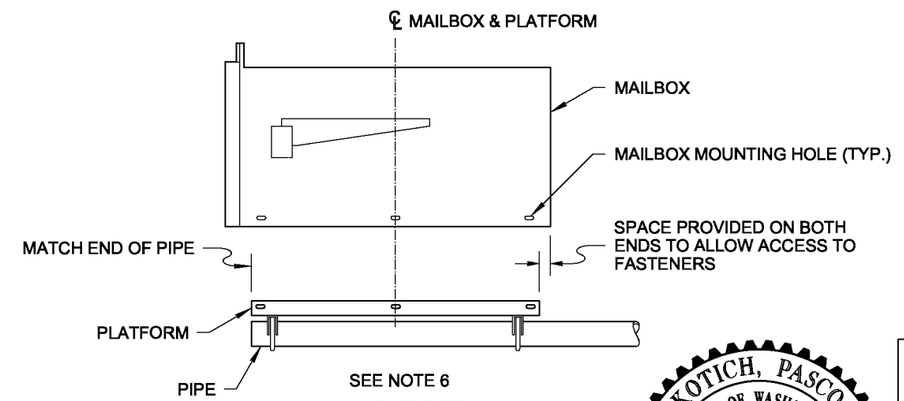

ALIGNMENT DETAIL
SIDE VIEW

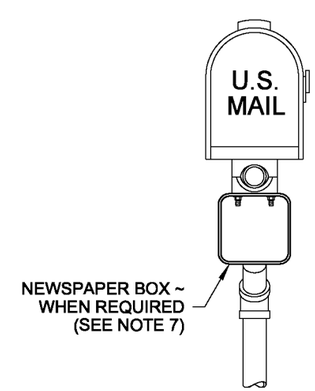

NEWSPAPER BOX ATTACHMENT DETAIL
ELEVATION VIEW

BAKOTICH, PASCO III
STATE OF WASHINGTON
24557
REGISTERED
PROFESSIONAL ENGINEER

NOTE: THIS PLAN IS NOT A LEGAL ENGINEERING DOCUMENT BUT AN ELECTRONIC DUPLICATE. THE ORIGINAL, SIGNED BY THE ENGINEER AND APPROVED FOR PUBLICATION, IS KEPT ON FILE AT THE WASHINGTON STATE DEPARTMENT OF TRANSPORTATION. A COPY MAY BE OBTAINED UPON REQUEST.

MAILBOX SUPPORT TYPE 3

STANDARD PLAN H-70.30-02

SHEET 1 OF 2 SHEETS

APPROVED FOR PUBLICATION

Pasco Bakotich III — STATE DESIGN ENGINEER
02-07-12 — DATE

Washington State Department of Transportation

EFFECTIVE: AUGUST 6, 2012 TO August 4, 2013
EFFECTIVE: AUGUST 6, 2012 TO August 4, 2013
EFFECTIVE: AUGUST 6, 2012 TO August 4, 2013
EFFECTIVE: AUGUST 6, 2012 TO August 4, 2013

EFFECTIVE: AUGUST 6, 2012 TO August 4, 2013
EFFECTIVE: AUGUST 6, 2012 TO August 4, 2013

DRAWN BY: MARK SUJKA

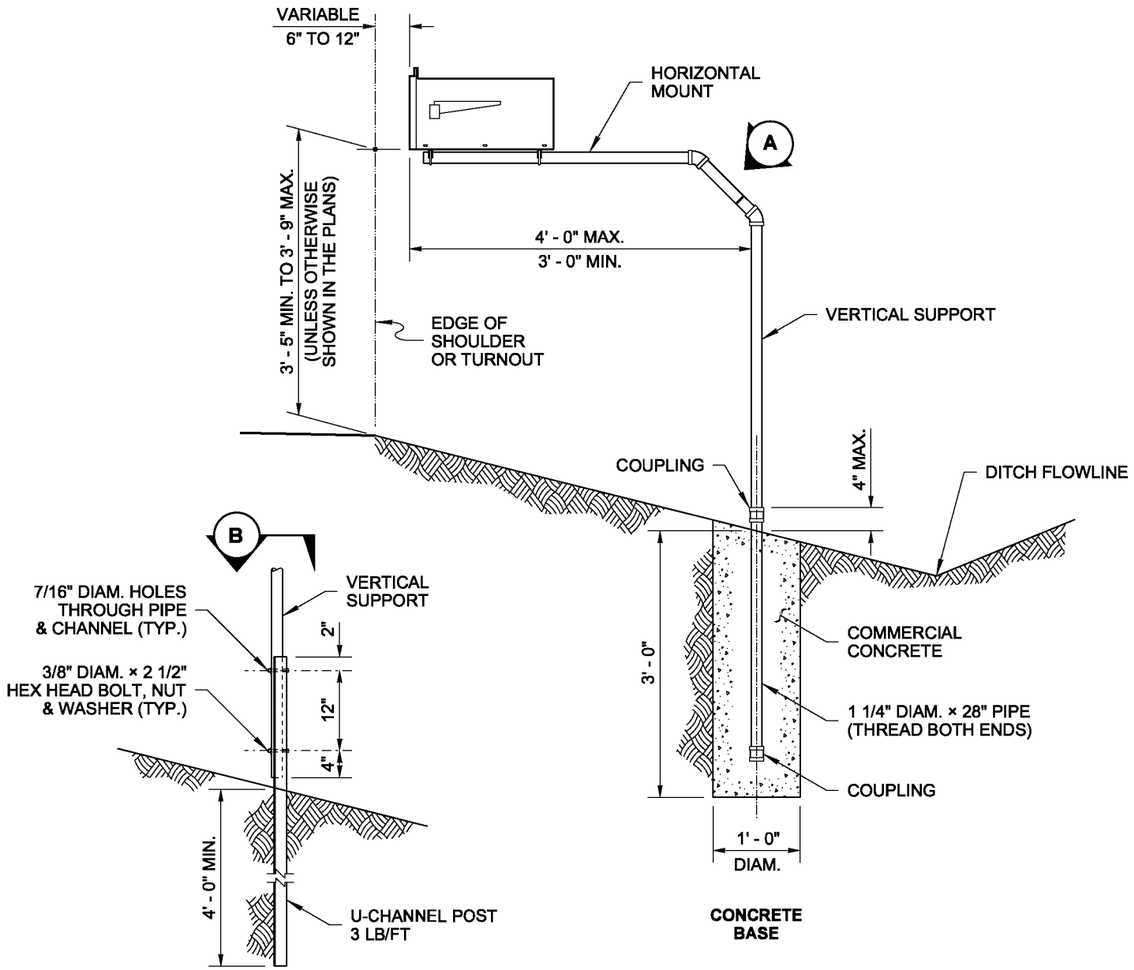

PLACEMENT DETAIL
SECTION VIEW

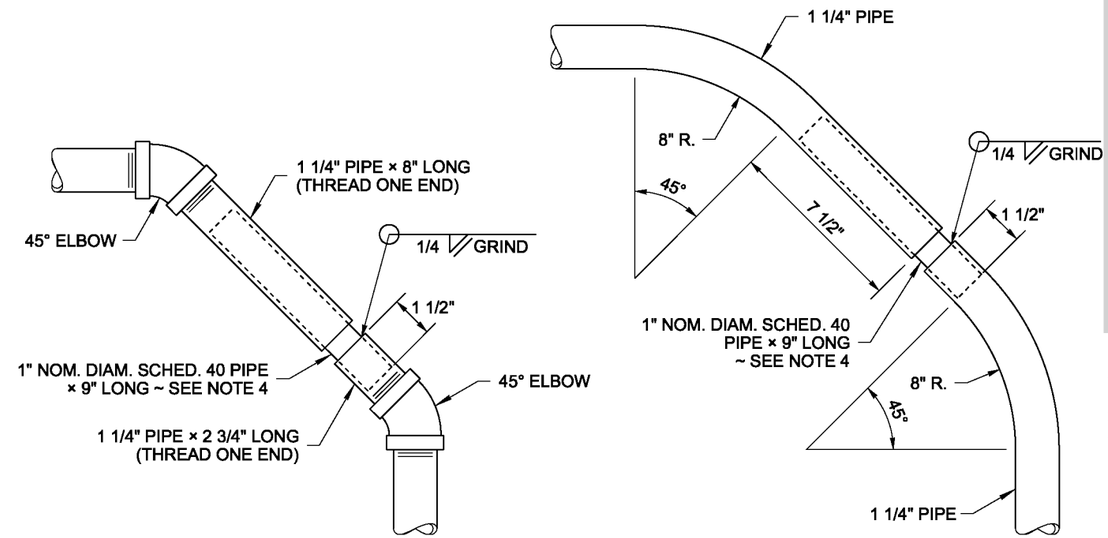

PIPE FITTING ANGLES **PIPE BENDING ANGLES**

DETAIL A

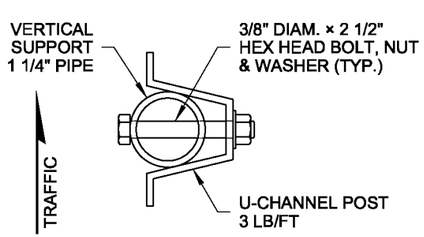

SECTION B

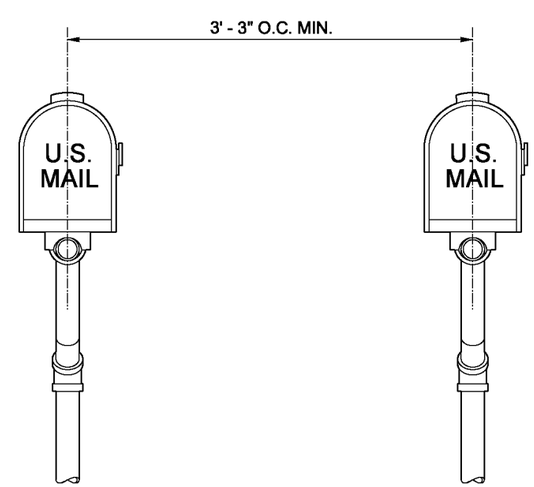

SPACING DETAIL
ELEVATION VIEW

BAKOTICH, PASCO III
STATE OF WASHINGTON
24557
REGISTERED
PROFESSIONAL ENGINEER

NOTE: THIS PLAN IS NOT A LEGAL ENGINEERING DOCUMENT BUT AN ELECTRONIC DUPLICATE. THE ORIGINAL, SIGNED BY THE ENGINEER AND APPROVED FOR PUBLICATION, IS KEPT ON FILE AT THE WASHINGTON STATE DEPARTMENT OF TRANSPORTATION. A COPY MAY BE OBTAINED UPON REQUEST.

MAILBOX SUPPORT TYPE 3

STANDARD PLAN H-70.30-02

SHEET 2 OF 2 SHEETS

APPROVED FOR PUBLICATION

Pasco Bakotich III — STATE DESIGN ENGINEER
02-07-12 — DATE

Washington State Department of Transportation

EFFECTIVE: AUGUST 6, 2012 TO August 4, 2013
EFFECTIVE: AUGUST 6, 2012 TO August 4, 2013
EFFECTIVE: AUGUST 6, 2012 TO August 4, 2013
EFFECTIVE: AUGUST 6, 2012 TO August 4, 2013

EFFECTIVE: AUGUST 6, 2012 TO August 4, 2013
EFFECTIVE: AUGUST 6, 2012 TO August 4, 2013

DRAWN BY: BILL BEKENS

NOTE

1. Post shall have sufficient strength and durability to support the fence through the life of the project.

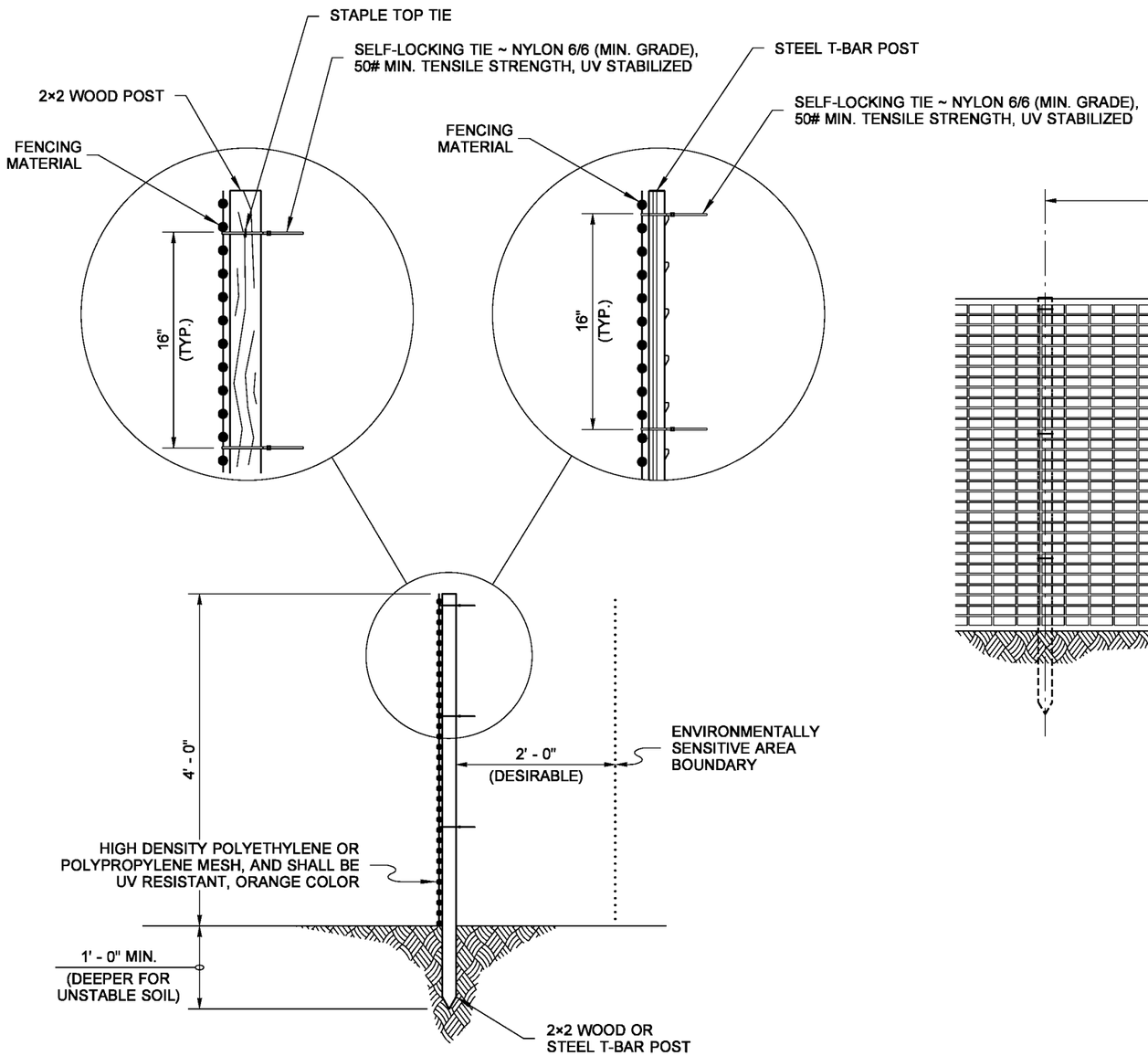

TYPICAL SECTION

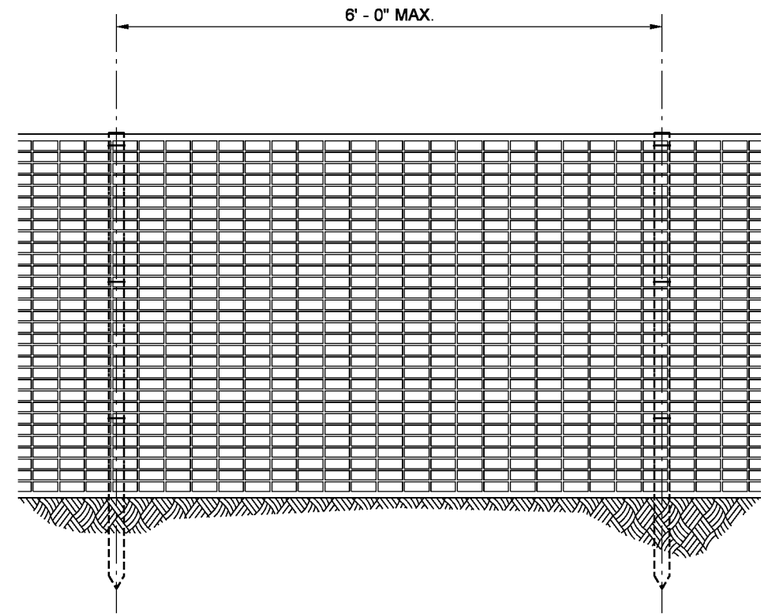

ELEVATION

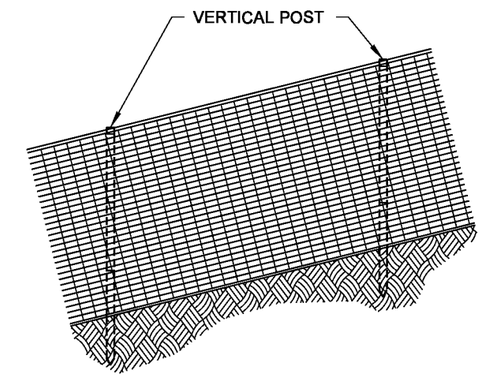

ELEVATION

FENCE ON SLOPE

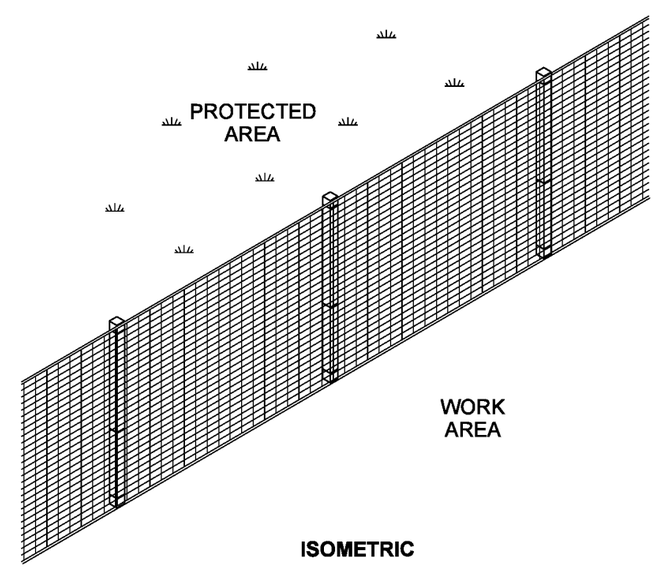

ISOMETRIC

STATE OF WASHINGTON REGISTERED LANDSCAPE ARCHITECT

MARK W. MAURER
CERTIFICATE NO. 000598

NOTE: THIS PLAN IS NOT A LEGAL ENGINEERING DOCUMENT BUT AN ELECTRONIC DUPLICATE. THE ORIGINAL, SIGNED BY THE ENGINEER AND APPROVED FOR PUBLICATION, IS KEPT ON FILE AT THE WASHINGTON STATE DEPARTMENT OF TRANSPORTATION. A COPY MAY BE OBTAINED UPON REQUEST.

HIGH VISIBILITY FENCE

STANDARD PLAN I-10.10-01

SHEET 1 OF 1 SHEET

APPROVED FOR PUBLICATION

Pasco Bakotich III — STATE DESIGN ENGINEER

08-11-09 — DATE

Washington State Department of Transportation

EFFECTIVE: AUGUST 6, 2012 TO August 4, 2013
EFFECTIVE: AUGUST 6, 2012 TO August 4, 2013
EFFECTIVE: AUGUST 6, 2012 TO August 4, 2013
EFFECTIVE: AUGUST 6, 2012 TO August 4, 2013

EFFECTIVE: AUGUST 6, 2012 TO August 4, 2013
EFFECTIVE: AUGUST 6, 2012 TO August 4, 2013

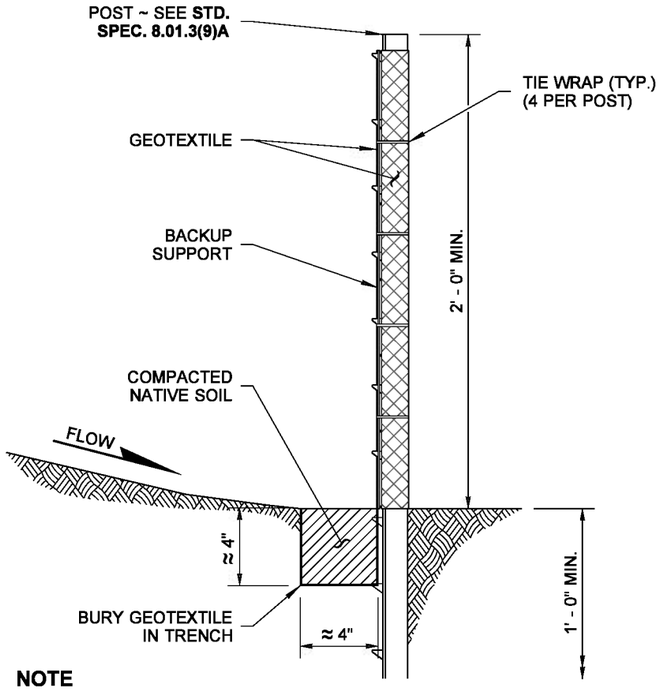

NOTE

DURING EXCAVATION, MINIMIZE DISTURBING THE GROUND AROUND TRENCH AS MUCH AS IS FEASIBLE AND SMOOTH SURFACE FOLLOWING EXCAVATION TO AVOID CONCENTRATING FLOWS.

SECTION (A)

NOTES

1. Maximize detention of stormwater by placing fence as far away from toe of slope as possible without encroaching on sensitive areas or outside of the clearing boundaries.
2. Install silt fencing along contours.
3. Install the ends of the silt fence to point slightly up-slope to prevent sediment from flowing around the ends of the fence.
4. Perform maintenance in accordance with Standard Specifications **8.01.3(9)A and 8.01.3(15)**.

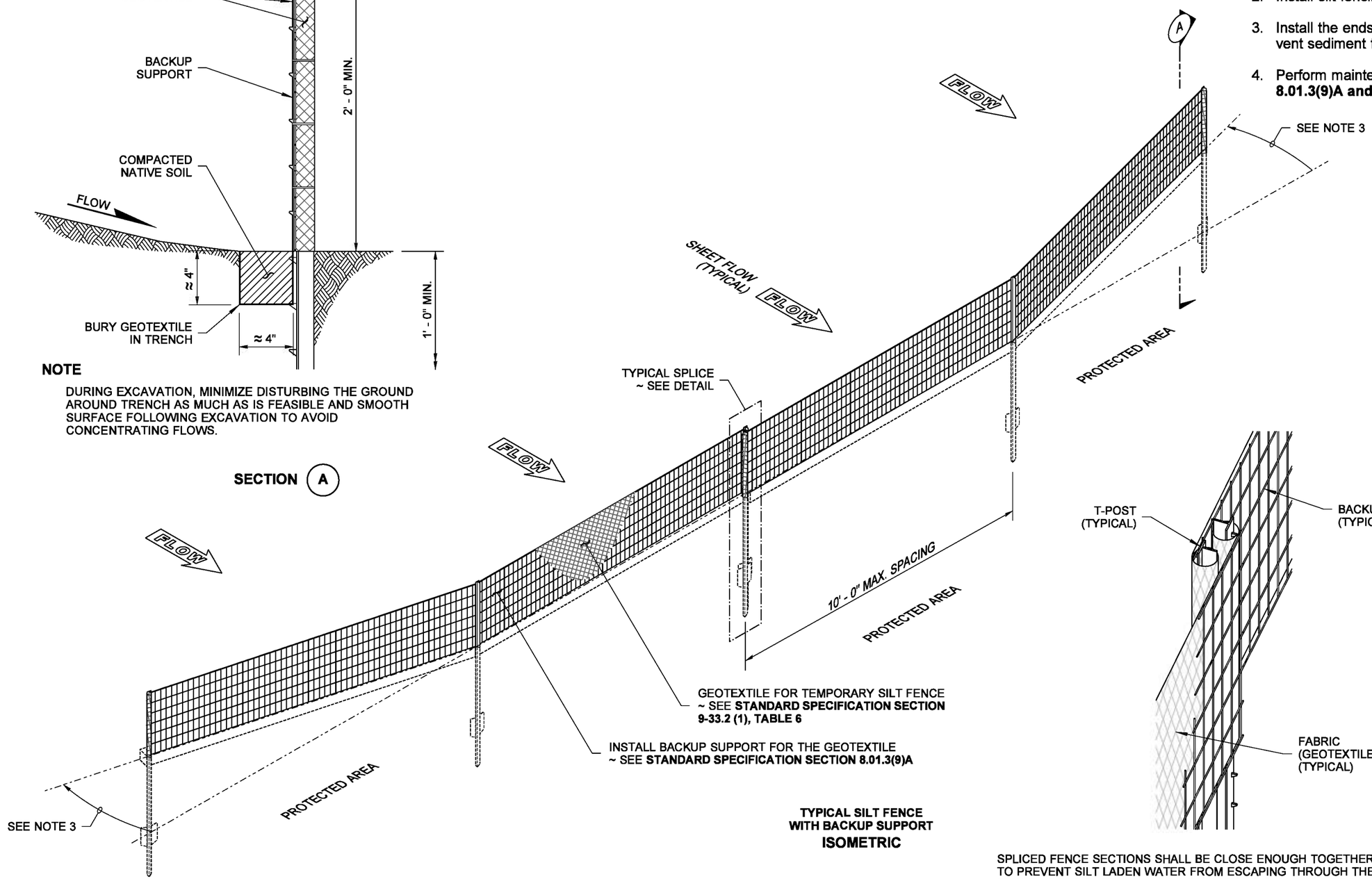

TYPICAL SILT FENCE WITH BACKUP SUPPORT
ISOMETRIC

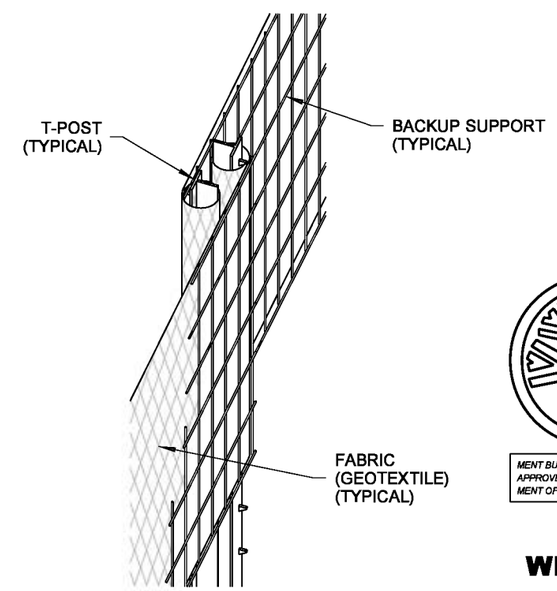

SPLICED FENCE SECTIONS SHALL BE CLOSE ENOUGH TOGETHER TO PREVENT SILT LADEN WATER FROM ESCAPING THROUGH THE FENCE AT THE OVERLAP. JOINING SECTIONS SHALL NOT BE PLACED IN LOW SPOTS OR IN SUMP LOCATIONS.

SPLICE DETAIL

STATE OF WASHINGTON REGISTERED LANDSCAPE ARCHITECT

MARK W. MAURER
CERTIFICATE NO. 000598

NOTE: THIS PLAN IS NOT A LEGAL ENGINEERING DOCUMENT BUT AN ELECTRONIC DUPLICATE. THE ORIGINAL, SIGNED BY THE ENGINEER AND APPROVED FOR PUBLICATION, IS KEPT ON FILE AT THE WASHINGTON STATE DEPARTMENT OF TRANSPORTATION. A COPY MAY BE OBTAINED UPON REQUEST.

SILT FENCE WITH BACKUP SUPPORT

STANDARD PLAN I-30.10-01

SHEET 1 OF 1 SHEET

APPROVED FOR PUBLICATION

Pasco Bakotich III — STATE DESIGN ENGINEER
08-11-09 — DATE

Washington State Department of Transportation

EFFECTIVE: AUGUST 6, 2012 TO August 4, 2013
EFFECTIVE: AUGUST 6, 2012 TO August 4, 2013
EFFECTIVE: AUGUST 6, 2012 TO August 4, 2013
EFFECTIVE: AUGUST 6, 2012 TO August 4, 2013

EFFECTIVE: AUGUST 6, 2012 TO August 4, 2013
EFFECTIVE: AUGUST 6, 2012 TO August 4, 2013

DRAWN BY: BILL BEKENS

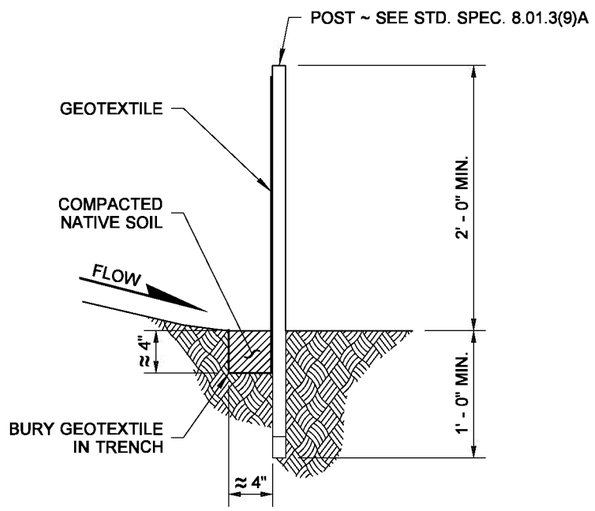

NOTE

DURING EXCAVATION, MINIMIZE DISTURBING THE GROUND AROUND TRENCH AS MUCH AS IS FEASIBLE AND SMOOTH SURFACE FOLLOWING EXCAVATION TO AVOID CONCENTRATING FLOWS.

SECTION (A)

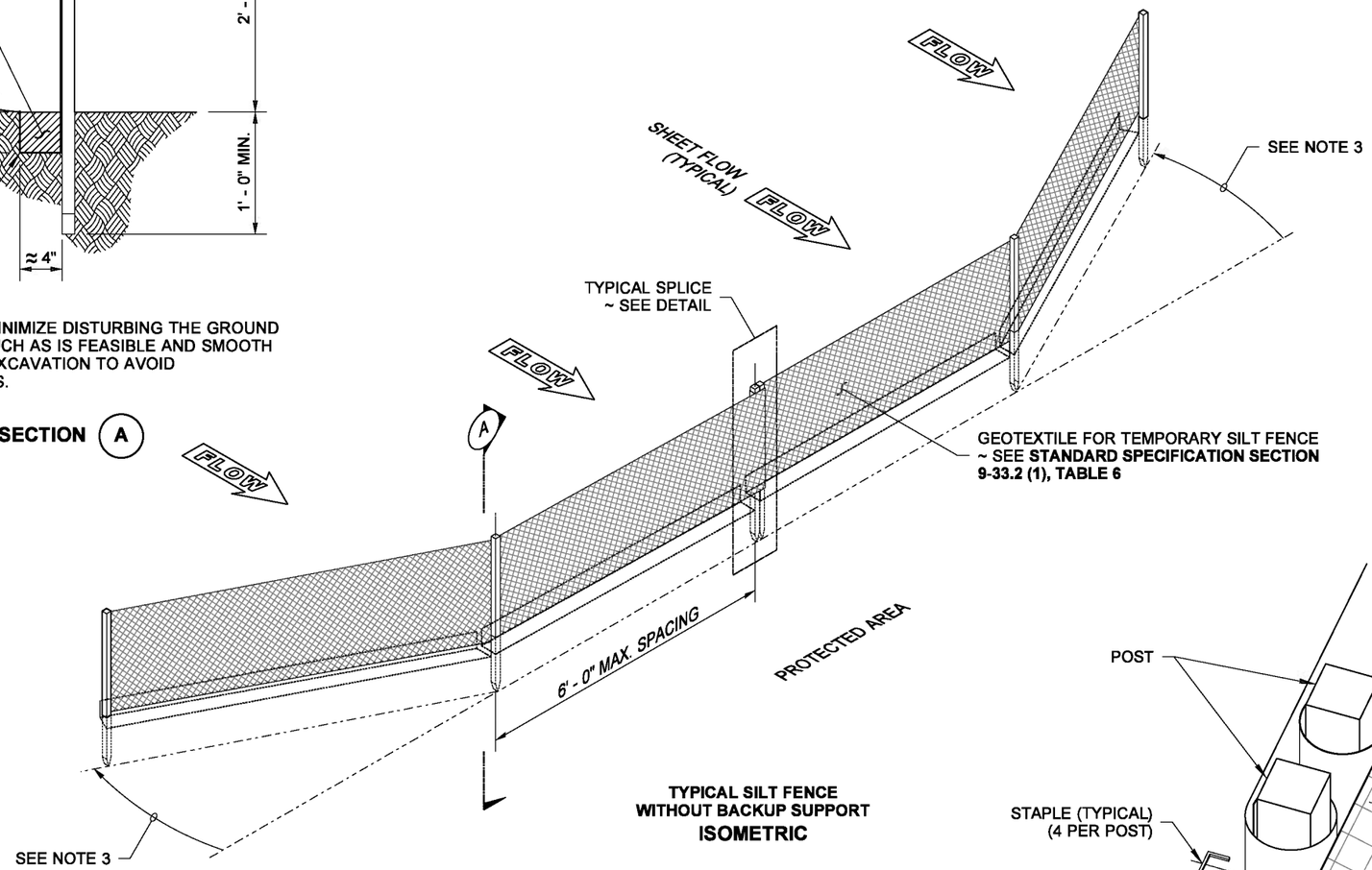

TYPICAL SILT FENCE WITHOUT BACKUP SUPPORT
ISOMETRIC

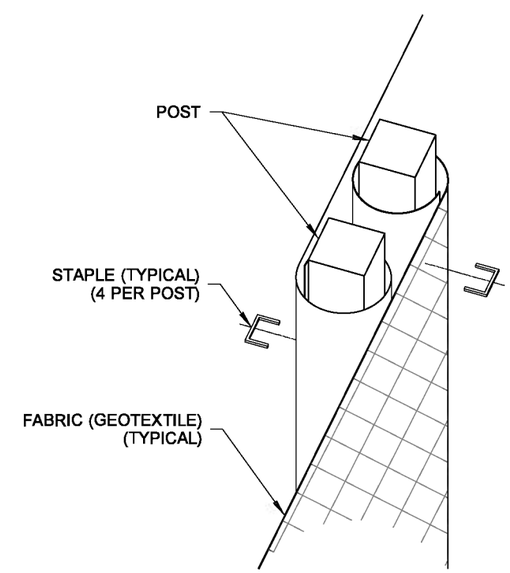

SPLICED FENCE SECTIONS SHALL BE CLOSE ENOUGH TOGETHER TO PREVENT SILT LADEN WATER FROM ESCAPING THROUGH THE FENCE AT THE OVERLAP. JOINING SECTIONS SHALL NOT BE PLACED IN LOW SPOTS OR IN SUMP LOCATIONS.

SPLICE DETAIL

NOTES

1. Maximize detention of stormwater by placing fence as far away from toe of slope as possible without encroaching on sensitive areas or outside of the clearing boundaries.
2. Install silt fencing along contours.
3. Install the ends of the silt fence to point slightly up-slope to prevent sediment from flowing around the ends of the fence.
4. Perform maintenance in accordance with **Standard Specifications 8.01.3(9)A and 8.01.3(15)**.

STATE OF WASHINGTON REGISTERED LANDSCAPE ARCHITECT

MARK W. MAURER
CERTIFICATE NO. 000598

NOTE: THIS PLAN IS NOT A LEGAL ENGINEERING DOCUMENT BUT AN ELECTRONIC DUPLICATE. THE ORIGINAL, SIGNED BY THE ENGINEER AND APPROVED FOR PUBLICATION, IS KEPT ON FILE AT THE WASHINGTON STATE DEPARTMENT OF TRANSPORTATION. A COPY MAY BE OBTAINED UPON REQUEST.

SILT FENCE

STANDARD PLAN I-30.15-01

SHEET 1 OF 1 SHEET

APPROVED FOR PUBLICATION

Pasco Bakotich III — STATE DESIGN ENGINEER
02-07-12 — DATE

Washington State Department of Transportation

EFFECTIVE: AUGUST 6, 2012 TO August 4, 2013
EFFECTIVE: AUGUST 6, 2012 TO August 4, 2013
EFFECTIVE: AUGUST 6, 2012 TO August 4, 2013
EFFECTIVE: AUGUST 6, 2012 TO August 4, 2013

EFFECTIVE: AUGUST 6, 2012 TO August 4, 2013
EFFECTIVE: AUGUST 6, 2012 TO August 4, 2013

DRAWN BY: LISA CYFORD

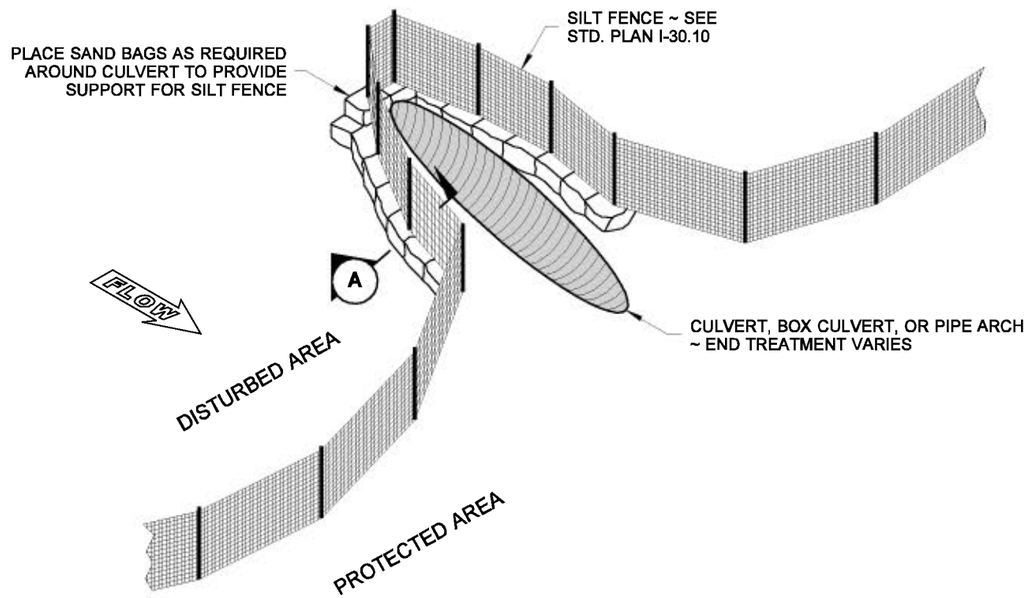

SILT FENCE DESIGN

NOTE

Perform maintenance in accordance with Standard Specification 8-01.3(9)A and 8-01.3(15).

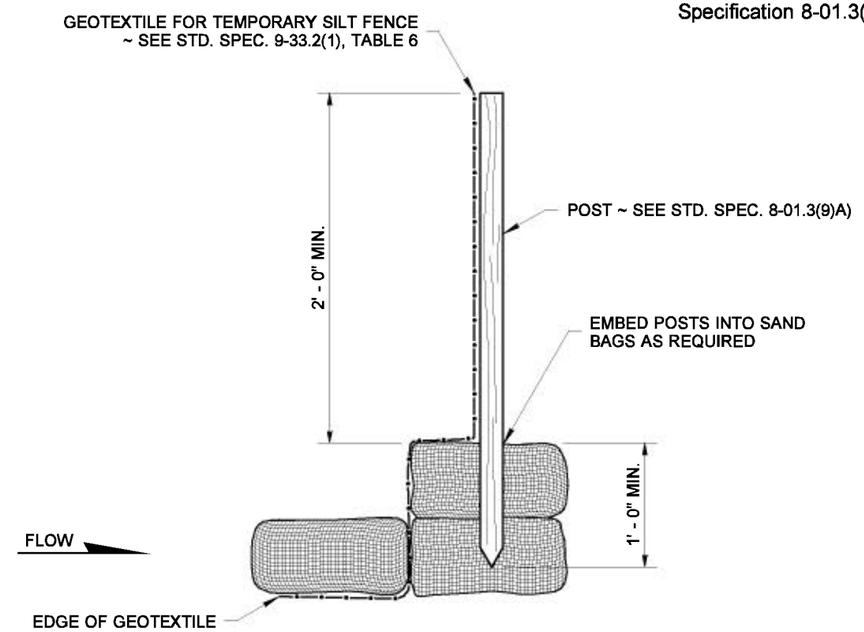

SECTION A

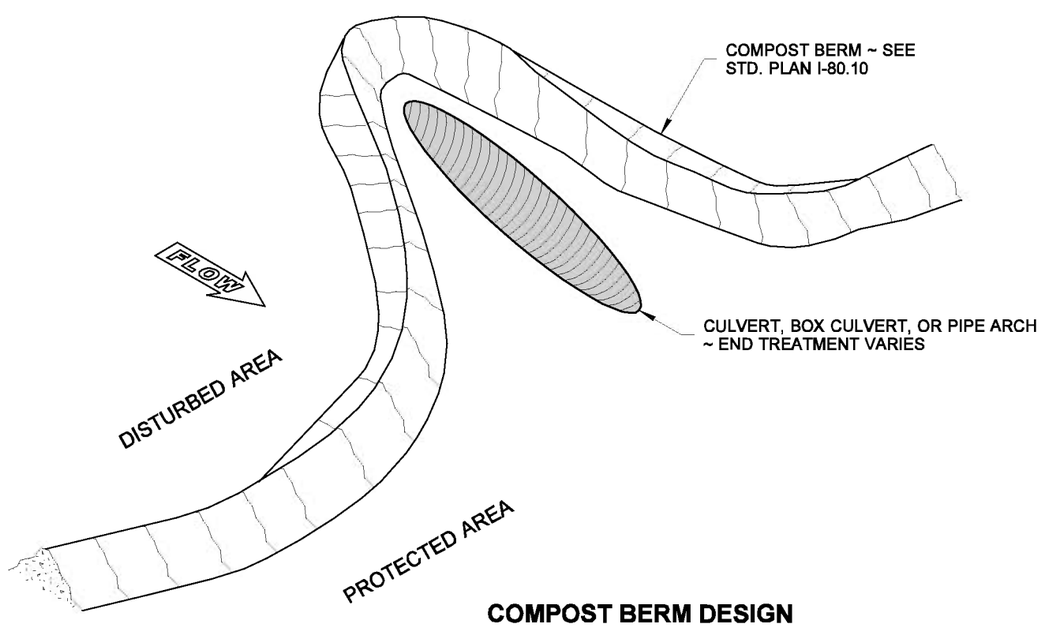

COMPOST BERM DESIGN

STATE OF WASHINGTON REGISTERED LANDSCAPE ARCHITECT

MARK W. MAURER

CERTIFICATE NO. 000598

NOTE: THIS PLAN IS NOT A LEGAL ENGINEERING DOCUMENT BUT AN ELECTRONIC DUPLICATE. THE ORIGINAL, SIGNED BY THE ENGINEER AND APPROVED FOR PUBLICATION, IS KEPT ON FILE AT THE WASHINGTON STATE DEPARTMENT OF TRANSPORTATION. A COPY MAY BE OBTAINED UPON REQUEST.

EROSION CONTROL AT CULVERT ENDS

STANDARD PLAN I-30.20-00

SHEET 1 OF 1 SHEET

APPROVED FOR PUBLICATION

Pasco Bakotich III — STATE DESIGN ENGINEER

09-20-07 — DATE

Washington State Department of Transportation

EFFECTIVE: AUGUST 6, 2012 TO August 4, 2013
EFFECTIVE: AUGUST 6, 2012 TO August 4, 2013
EFFECTIVE: AUGUST 6, 2012 TO August 4, 2013
EFFECTIVE: AUGUST 6, 2012 TO August 4, 2013

EFFECTIVE: AUGUST 6, 2012 TO August 4, 2013
EFFECTIVE: AUGUST 6, 2012 TO August 4, 2013

DRAWN BY: LISA CYFORD

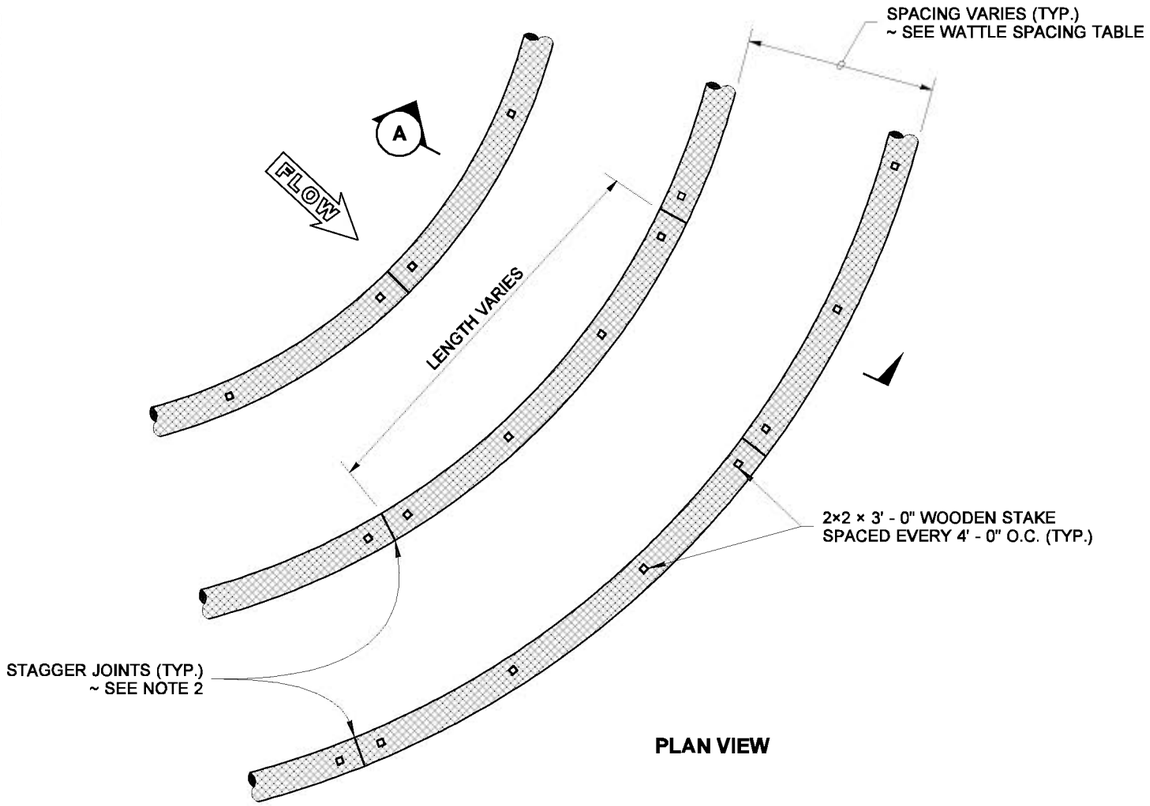

PLAN VIEW

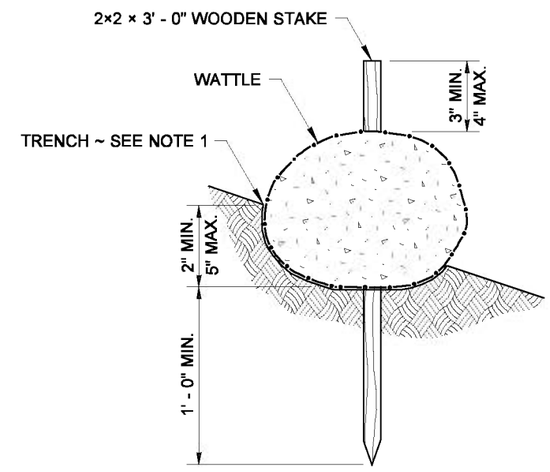

TYPICAL SECTION

WATTLE DETAIL

NOTES

1. Wattles shall be in accordance with Standard Specification 9-14.5(5). Install Wattles along contours. Installation shall be in accordance with Standard Specification 8-01.3(10).
2. Securely knot each end of Wattle. Abut adjacent Wattles tightly, end to end, without overlapping the ends.
3. Pilot holes may be driven through the Wattles and into the soil when soil conditions require.
4. Live stakes may be used for permanent installation and shall be in accordance with Standard Specification 9-14.5(6).
5. Wattles shall be inspected regularly, and immediately after a rainfall produces runoff, to ensure they remain thoroughly entrenched and in contact with the soil.
6. Perform maintenance in accordance with Standard Specification 8-01.3(15).

WATTLE SPACING TABLE	
SLOPE	MAXIMUM SPACING
1:1	10' - 0"
2:1	20' - 0"
3:1	30' - 0"
4:1	40' - 0"

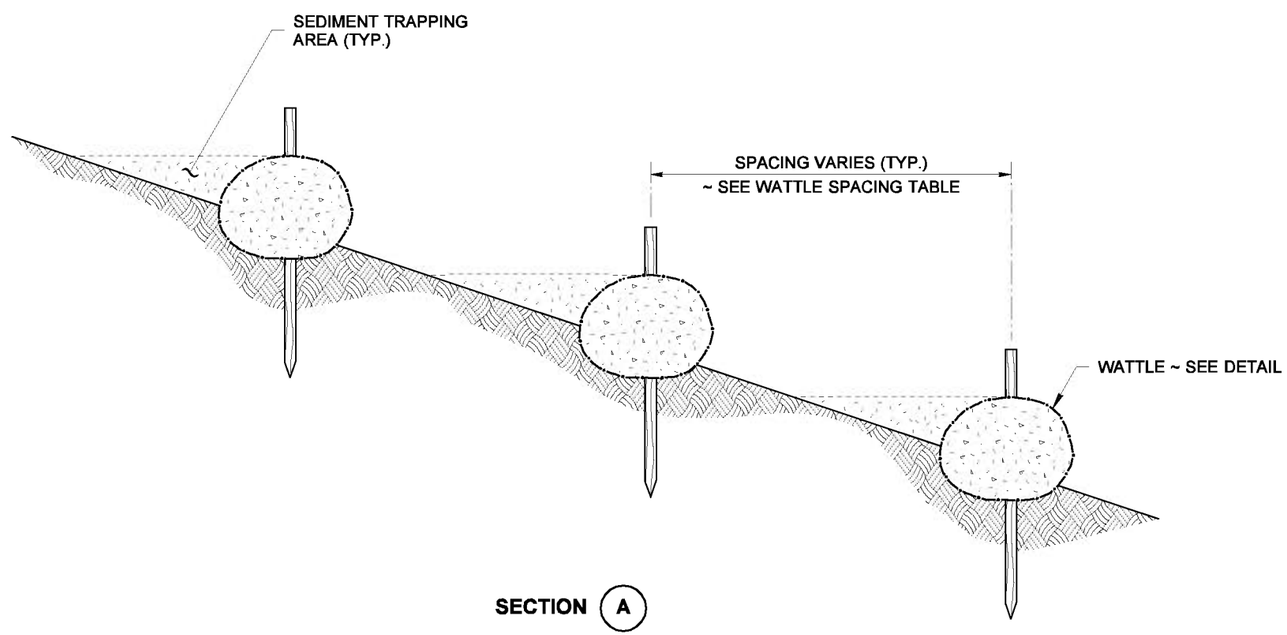

SECTION A

STATE OF WASHINGTON REGISTERED LANDSCAPE ARCHITECT

MARK W. MAURER
CERTIFICATE NO. 000598

NOTE: THIS PLAN IS NOT A LEGAL ENGINEERING DOCUMENT BUT AN ELECTRONIC DUPLICATE. THE ORIGINAL, SIGNED BY THE ENGINEER AND APPROVED FOR PUBLICATION, IS KEPT ON FILE AT THE WASHINGTON STATE DEPARTMENT OF TRANSPORTATION. A COPY MAY BE OBTAINED UPON REQUEST.

WATTLE INSTALLATION ON SLOPE

STANDARD PLAN I-30.30-00

SHEET 1 OF 1 SHEET

APPROVED FOR PUBLICATION

Pasco Bakotich III — STATE DESIGN ENGINEER
09-20-07 — DATE

Washington State Department of Transportation

EFFECTIVE: AUGUST 6, 2012 TO August 4, 2013
EFFECTIVE: AUGUST 6, 2012 TO August 4, 2013
EFFECTIVE: AUGUST 6, 2012 TO August 4, 2013
EFFECTIVE: AUGUST 6, 2012 TO August 4, 2013

EFFECTIVE: AUGUST 6, 2012 TO August 4, 2013
EFFECTIVE: AUGUST 6, 2012 TO August 4, 2013

DRAWN BY: LISA GYFORD

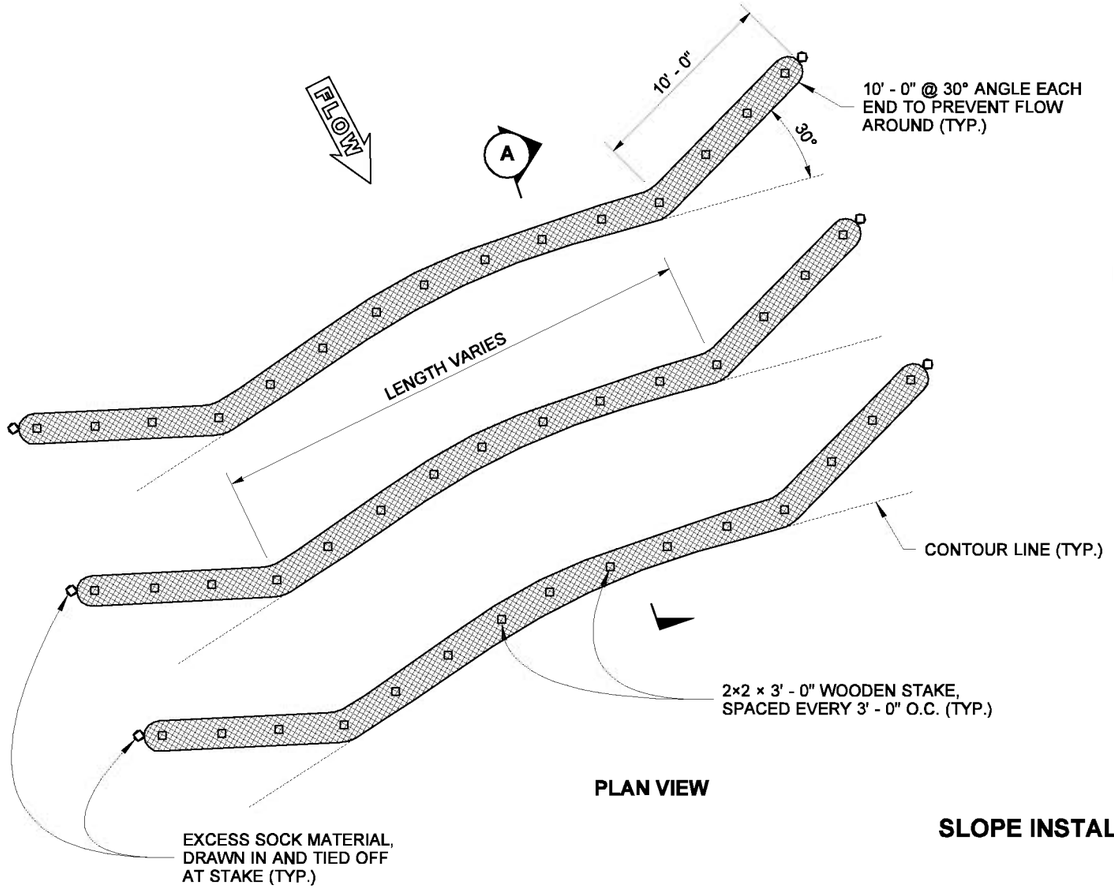

PLAN VIEW

SLOPE INSTALLATION

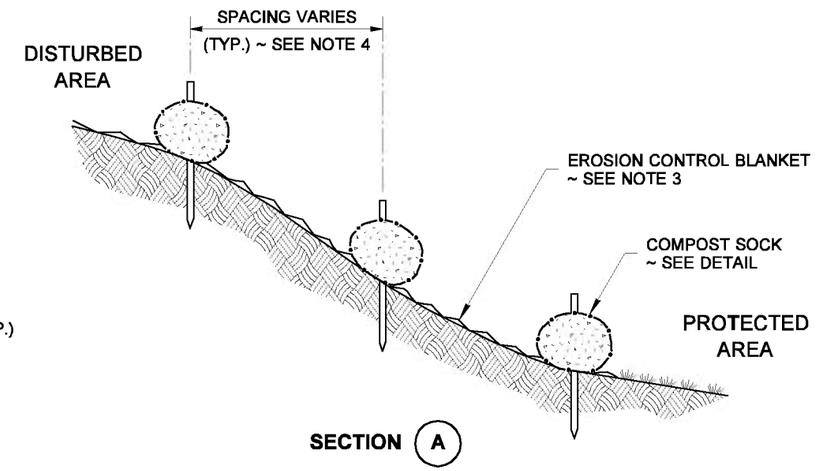

SECTION A

NOTES

1. Compost Sock shall be in accordance with Standard Specification 9-14.5(6). Compost Sock shall be a minimum of 8" in diameter or sized to suit conditions as specified by the Engineer or Contract.
2. Compost material to be dispersed on site, as determined by the Engineer.
3. When placing Compost Sock on slopes, use Erosion Control Blanket if specified by the Engineer and in accordance with Standard Specification 9-14.5(2). See Standard Plan I-60.10.
4. Always install Compost Sock perpendicular to slope and along contour lines.
5. Remove sediment from the up slope side of the Compost Sock when accumulation has reached 1/2 of the effective height of the Compost Sock.
6. Live stakes can be used in addition to wooden stakes and shall be in accordance with Standard Specification 9-14.6(1). See plans for species selection and spacing.

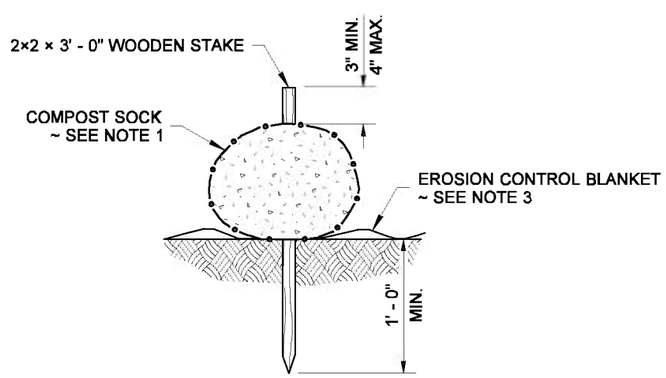

TYPICAL SECTION

COMPOST SOCK DETAIL

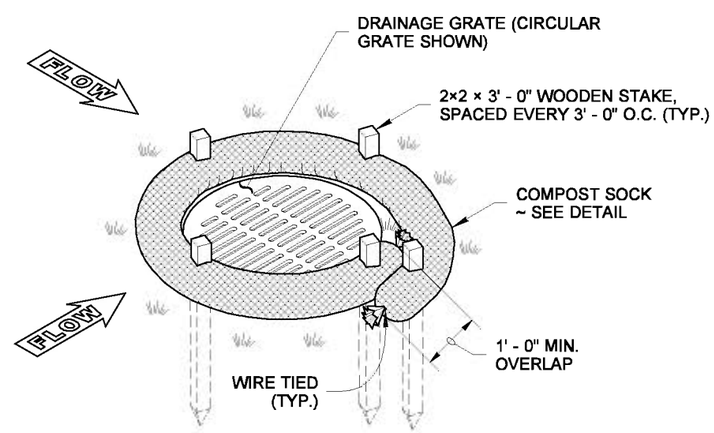

ISOMETRIC VIEW

CATCH BASIN INSTALLATION

STATE OF WASHINGTON REGISTERED LANDSCAPE ARCHITECT

SANDRA L. SALISBURY

CERTIFICATE NO. 000860

NOTE: THIS PLAN IS NOT A LEGAL ENGINEERING DOCUMENT BUT AN ELECTRONIC DUPLICATE. THE ORIGINAL, SIGNED BY THE ENGINEER AND APPROVED FOR PUBLICATION, IS KEPT ON FILE AT THE WASHINGTON STATE DEPARTMENT OF TRANSPORTATION. A COPY MAY BE OBTAINED UPON REQUEST.

COMPOST SOCK

STANDARD PLAN I-30.40-00

SHEET 1 OF 1 SHEET

APPROVED FOR PUBLICATION

Pasco Bakotich III — STATE DESIGN ENGINEER

10-12-07 — DATE

Washington State Department of Transportation

EFFECTIVE: AUGUST 6, 2012 TO August 4, 2013
EFFECTIVE: AUGUST 6, 2012 TO August 4, 2013
EFFECTIVE: AUGUST 6, 2012 TO August 4, 2013
EFFECTIVE: AUGUST 6, 2012 TO August 4, 2013

EFFECTIVE: AUGUST 6, 2012 TO August 4, 2013
EFFECTIVE: AUGUST 6, 2012 TO August 4, 2013

DRAWN BY: LISA CYFORD

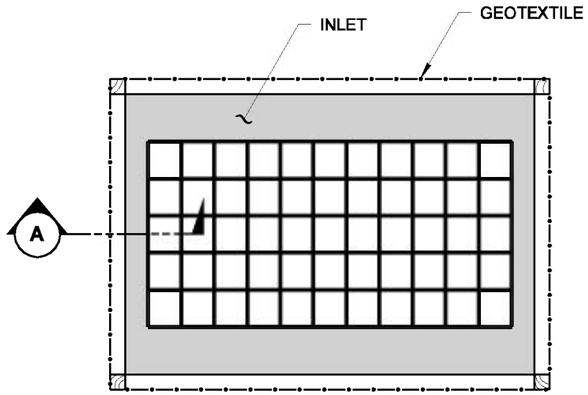

PLAN VIEW
(CROSS BRACES NOT SHOWN)

NOTES

1. Prefabricated units may be used in lieu of the design shown on this plan upon approval of the Engineer.
2. Structure shall be constructed such that geotextile material shall be fastened to posts creating a seamless joint.
3. Ensure that ponding height of water does not cause flooding on adjacent roadways or private property.
4. Perform maintenance in accordance with Standard Specification 8-01.3(15).

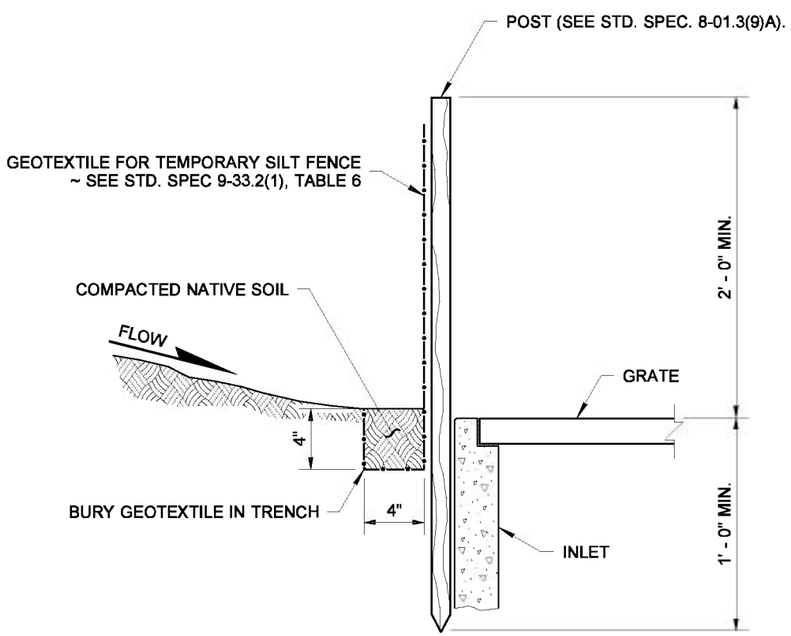

SECTION A

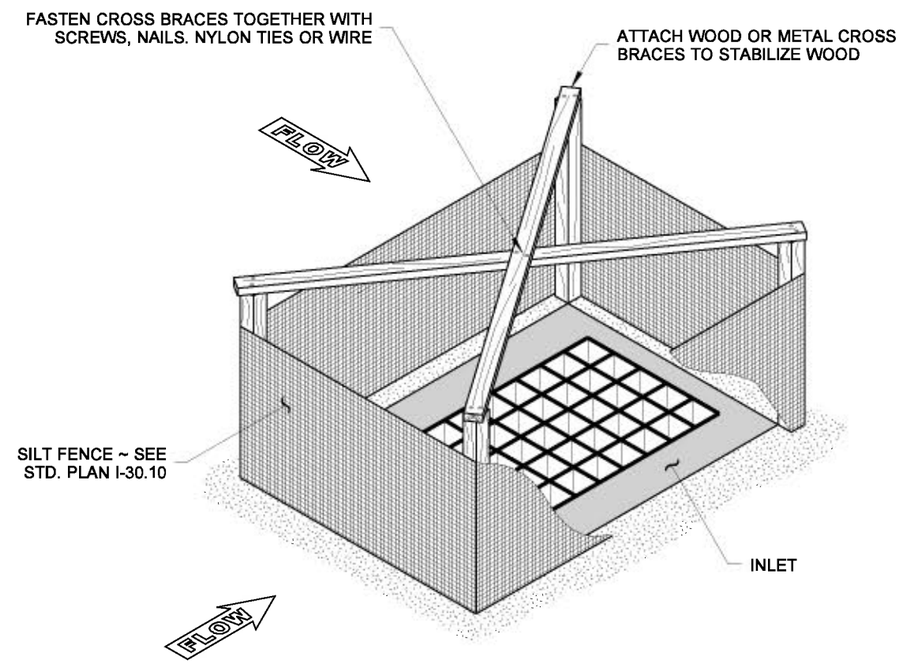

ISOMETRIC VIEW
(ENTIRE FENCE NOT SHOWN
FOR ILLUSTRATIVE PURPOSES)

STATE OF
WASHINGTON
REGISTERED
LANDSCAPE ARCHITECT

MARK W. MAURER
CERTIFICATE NO. 000598

NOTE: THIS PLAN IS NOT A LEGAL ENGINEERING DOCUMENT BUT AN ELECTRONIC DUPLICATE. THE ORIGINAL, SIGNED BY THE ENGINEER AND APPROVED FOR PUBLICATION, IS KEPT ON FILE AT THE WASHINGTON STATE DEPARTMENT OF TRANSPORTATION. A COPY MAY BE OBTAINED UPON REQUEST.

TEMPORARY SILT FENCE FOR INLET PROTECTION IN UNPAVED AREAS
STANDARD PLAN I-40.10-00

SHEET 1 OF 1 SHEET

APPROVED FOR PUBLICATION

Pasco Bakotich III — STATE DESIGN ENGINEER
09-20-07 — DATE

Washington State Department of Transportation

EFFECTIVE: AUGUST 6, 2012 TO August 4, 2013
EFFECTIVE: AUGUST 6, 2012 TO August 4, 2013
EFFECTIVE: AUGUST 6, 2012 TO August 4, 2013
EFFECTIVE: AUGUST 6, 2012 TO August 4, 2013

EFFECTIVE: AUGUST 6, 2012 TO August 4, 2013
EFFECTIVE: AUGUST 6, 2012 TO August 4, 2013

DRAWN BY: LISA CYFORD

NOTES

1. Size the Below Inlet Grate Device (BIGD) for the storm water structure it will service.
2. The BIGD shall have a built-in high-flow relief system (overflow bypass).
3. The retrieval system must allow removal of the BIGD without spilling the collected material.
4. Perform maintenance in accordance with Standard Specification 8-01.3(15).

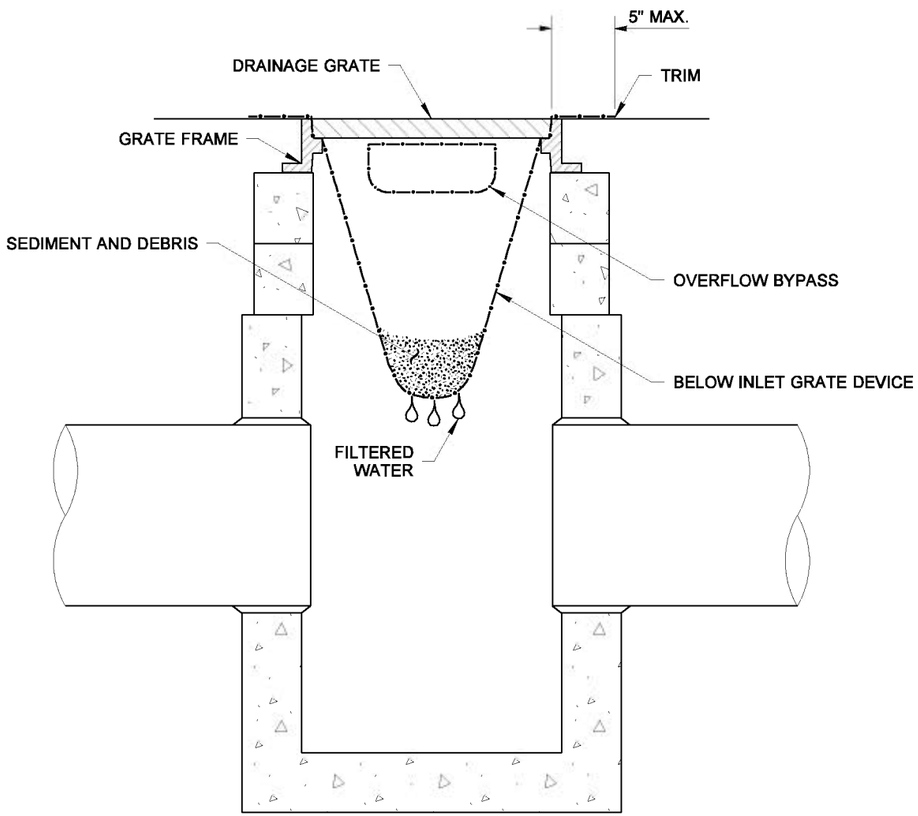

SECTION VIEW

NOT TO SCALE

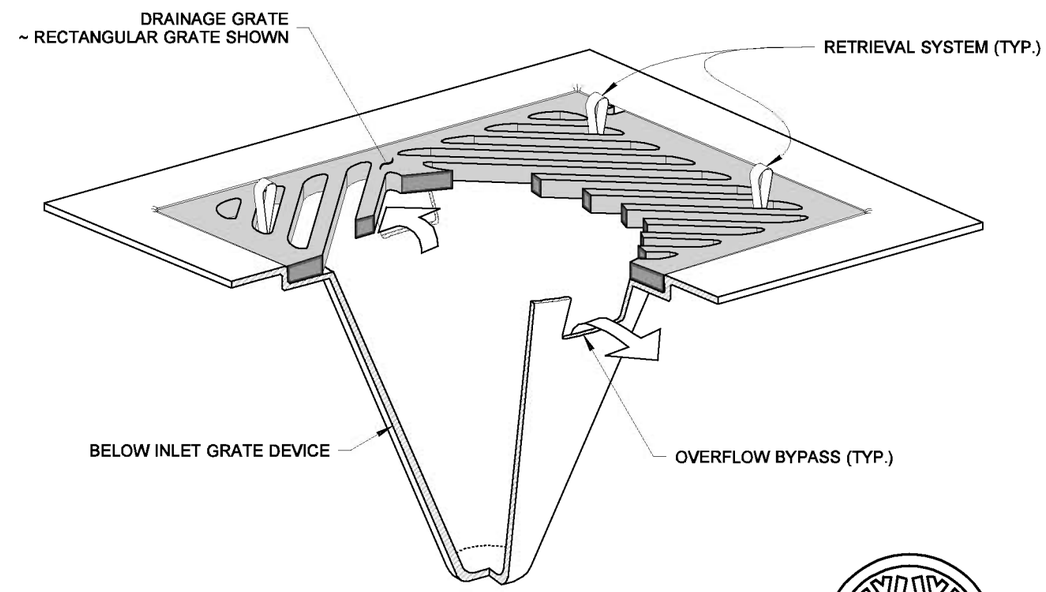

ISOMETRIC VIEW

STATE OF WASHINGTON REGISTERED LANDSCAPE ARCHITECT

MARK W. MAURER
CERTIFICATE NO. 000598

NOTE: THIS PLAN IS NOT A LEGAL ENGINEERING DOCUMENT BUT AN ELECTRONIC DUPLICATE. THE ORIGINAL, SIGNED BY THE ENGINEER AND APPROVED FOR PUBLICATION, IS KEPT ON FILE AT THE WASHINGTON STATE DEPARTMENT OF TRANSPORTATION. A COPY MAY BE OBTAINED UPON REQUEST.

STORM DRAIN INLET PROTECTION

STANDARD PLAN I-40.20-00

SHEET 1 OF 1 SHEET

APPROVED FOR PUBLICATION

Pasco Bakotich III — STATE DESIGN ENGINEER

09-20-07 — DATE

Washington State Department of Transportation

EFFECTIVE: AUGUST 6, 2012 TO August 4, 2013
EFFECTIVE: AUGUST 6, 2012 TO August 4, 2013
EFFECTIVE: AUGUST 6, 2012 TO August 4, 2013
EFFECTIVE: AUGUST 6, 2012 TO August 4, 2013

EFFECTIVE: AUGUST 6, 2012 TO August 4, 2013
EFFECTIVE: AUGUST 6, 2012 TO August 4, 2013

DRAWN BY: LISA CYFORD

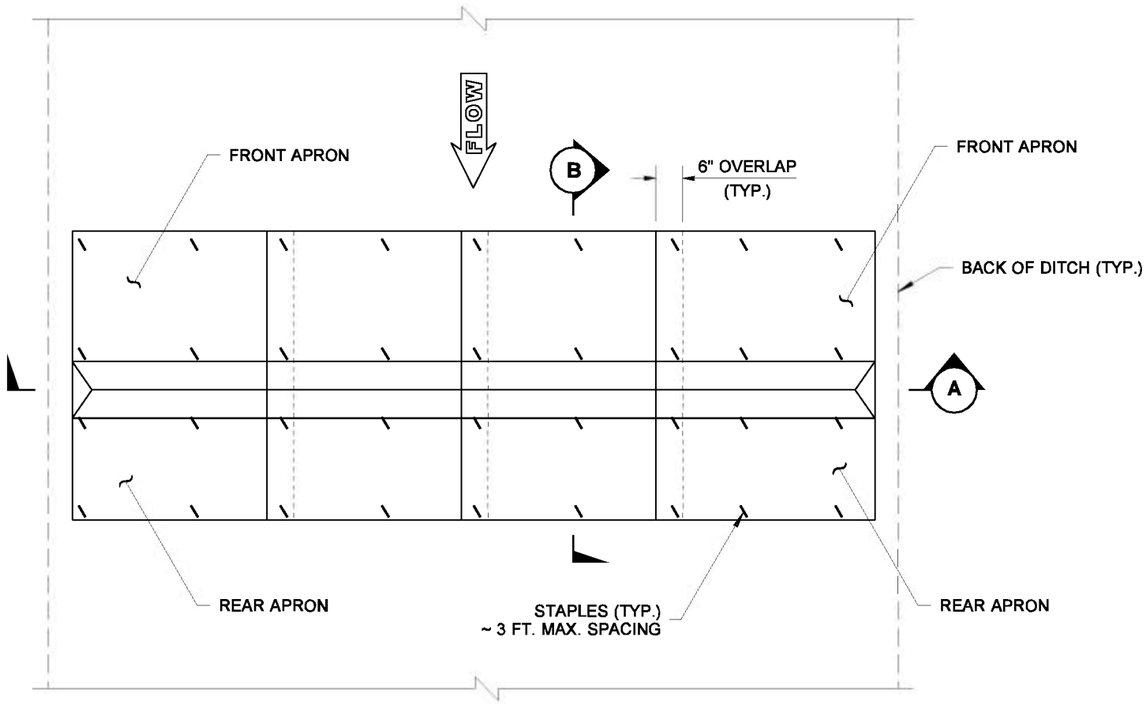

PLAN VIEW

NOTES

1. Geotextile encased Check Dams shall meet the requirements of Standard Specifications 8-01.3(6)A and 9-14.5(4).
2. Install the sloped ends of the Check Dam a minimum of 3" higher than the top of the check dam in the channel to ensure that water flows over the dam and not around it.
3. Flat bottom ditch design shown, Check Dam installation details are similar for "V" bottom ditches.
4. Perform maintenance in accordance with Standard Specifications 8-01.3(15).

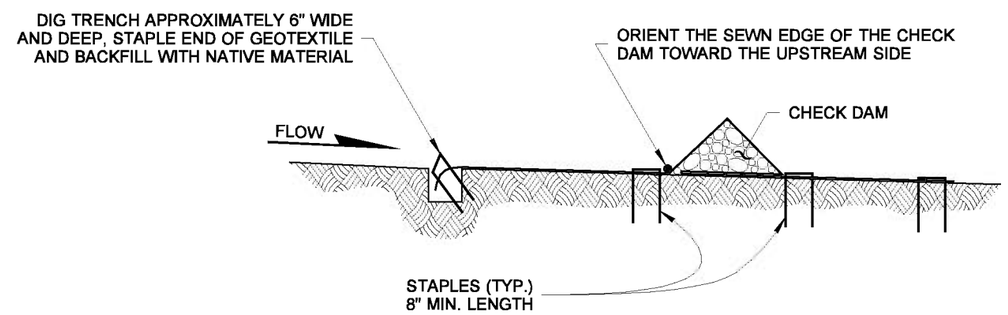

SECTION B

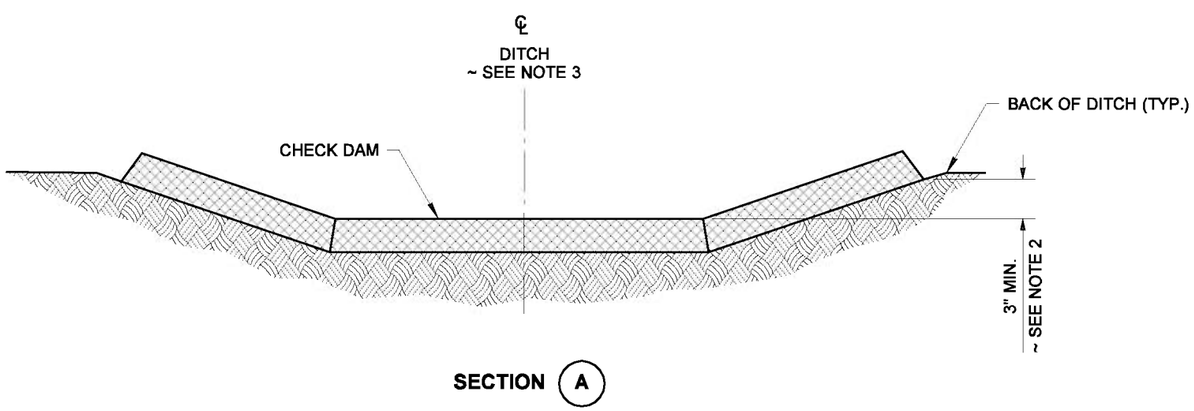

SECTION A

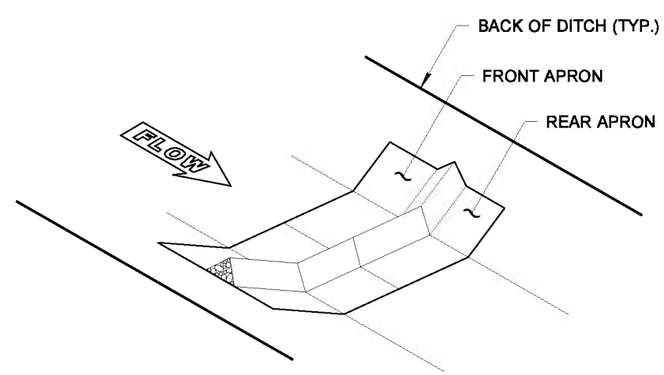

ISOMETRIC VIEW

STATE OF
WASHINGTON
REGISTERED
LANDSCAPE ARCHITECT

MARK W. MAURER
CERTIFICATE NO. 000598

NOTE: THIS PLAN IS NOT A LEGAL ENGINEERING DOCUMENT BUT AN ELECTRONIC DUPLICATE. THE ORIGINAL, SIGNED BY THE ENGINEER AND APPROVED FOR PUBLICATION, IS KEPT ON FILE AT THE WASHINGTON STATE DEPARTMENT OF TRANSPORTATION. A COPY MAY BE OBTAINED UPON REQUEST.

GEOTEXTILE ENCASED CHECK DAM INSTALLATION

STANDARD PLAN I-50.10-00

SHEET 1 OF 1 SHEET

APPROVED FOR PUBLICATION

Pasco Bakotich III — STATE DESIGN ENGINEER
09-20-07 — DATE

Washington State Department of Transportation

EFFECTIVE: AUGUST 6, 2012 TO August 4, 2013
EFFECTIVE: AUGUST 6, 2012 TO August 4, 2013
EFFECTIVE: AUGUST 6, 2012 TO August 4, 2013
EFFECTIVE: AUGUST 6, 2012 TO August 4, 2013

EFFECTIVE: AUGUST 6, 2012 TO August 4, 2013
EFFECTIVE: AUGUST 6, 2012 TO August 4, 2013

DRAWN BY: MARK SUJKA

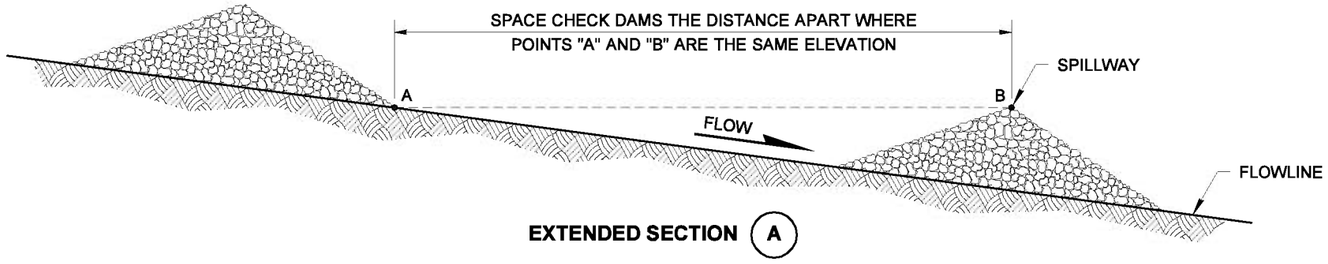

EXTENDED SECTION (A)

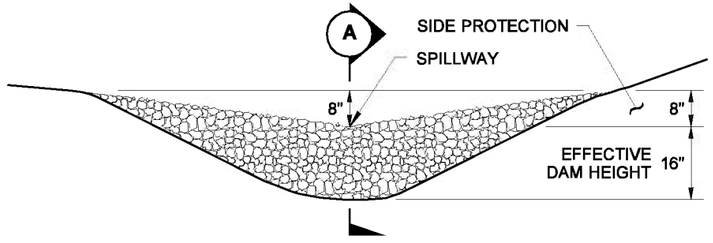

ELEVATION

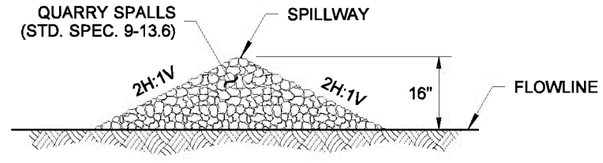

SECTION (A)

NOTE

ROCK CHECK DAMS SHALL BE PLACED OUTSIDE OF THE CLEAR ZONE, OR BEHIND TRAFFIC BARRIER.

ROCK CHECK DAM

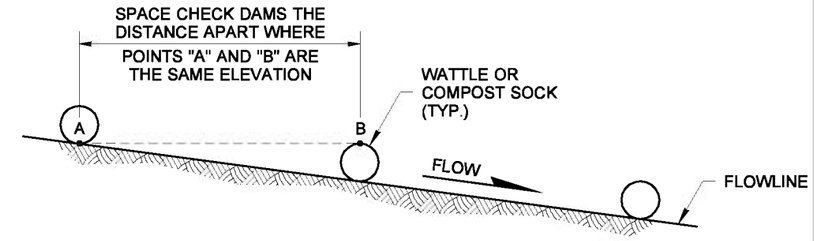

EXTENDED SECTION (C)

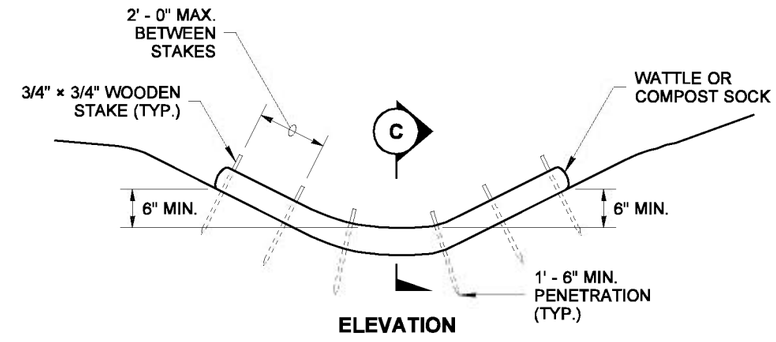

ELEVATION

WATTLE OR COMPOST SOCK CHECK DAM

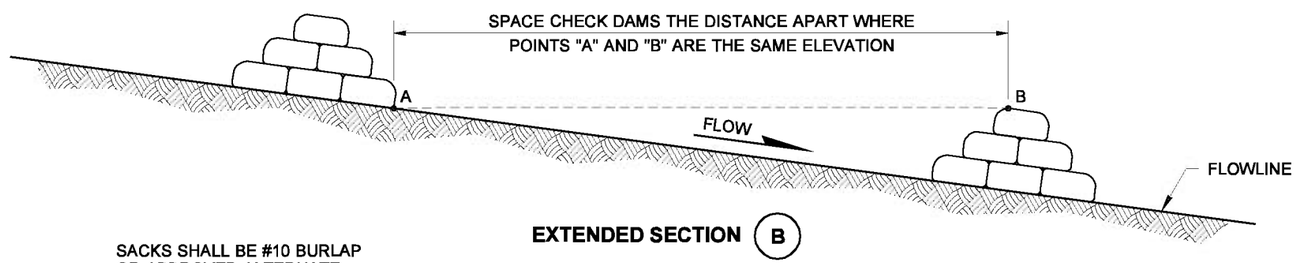

EXTENDED SECTION (B)

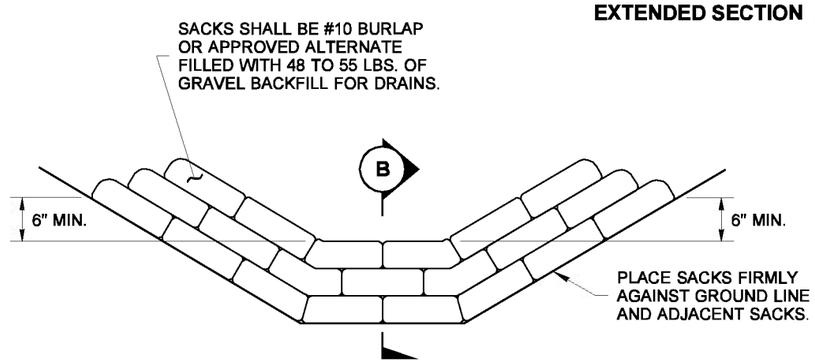

ELEVATION

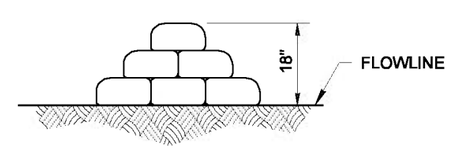

SECTION (B)

SANDBAG CHECK DAM

STATE OF
WASHINGTON
REGISTERED
LANDSCAPE ARCHITECT

MARK W. MAURER
CERTIFICATE NO. 000598

NOTE: THIS PLAN IS NOT A LEGAL ENGINEERING DOCUMENT BUT AN ELECTRONIC DUPLICATE. THE ORIGINAL, SIGNED BY THE ENGINEER AND APPROVED FOR PUBLICATION, IS KEPT ON FILE AT THE WASHINGTON STATE DEPARTMENT OF TRANSPORTATION. A COPY MAY BE OBTAINED UPON REQUEST.

CHECK DAMS

STANDARD PLAN I-50.20-00

SHEET 1 OF 1 SHEET

APPROVED FOR PUBLICATION

Pasco Bakotich III — STATE DESIGN ENGINEER
08-31-07 — DATE

Washington State Department of Transportation

EFFECTIVE: AUGUST 6, 2012 TO August 4, 2013
EFFECTIVE: AUGUST 6, 2012 TO August 4, 2013
EFFECTIVE: AUGUST 6, 2012 TO August 4, 2013
EFFECTIVE: AUGUST 6, 2012 TO August 4, 2013

EFFECTIVE: AUGUST 6, 2012 TO August 4, 2013
EFFECTIVE: AUGUST 6, 2012 TO August 4, 2013

DRAWN BY: MARK SUJKA

NOTES

1. More than the minimum of one fastener per square yard may be required due to conditions such as blanket composition, soil type, surface uniformity, and slope steepness.
2. See Standard Specification 8-01.3(3).

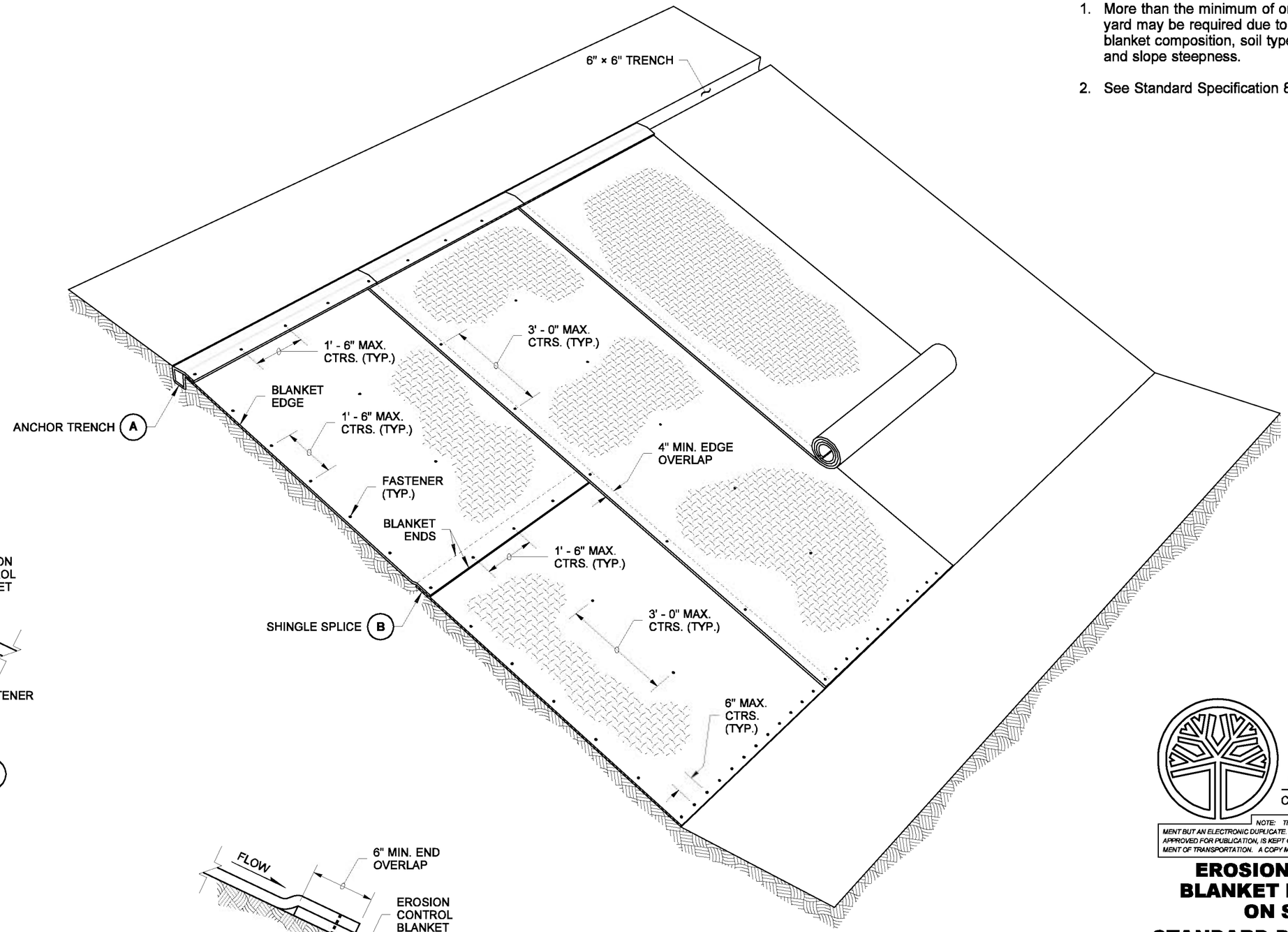

PERSPECTIVE VIEW

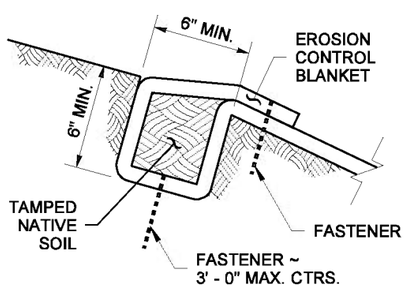

ANCHOR TRENCH ~ SECTION (A)

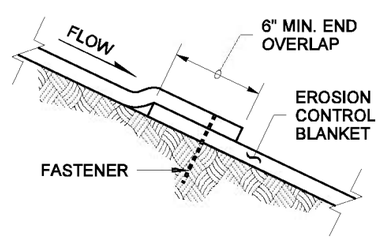

SHINGLE SPLICE ~ SECTION (B)

STATE OF WASHINGTON REGISTERED LANDSCAPE ARCHITECT

MARK W. MAURER
CERTIFICATE NO. 000598

NOTE: THIS PLAN IS NOT A LEGAL ENGINEERING DOCUMENT BUT AN ELECTRONIC DUPLICATE. THE ORIGINAL, SIGNED BY THE ENGINEER AND APPROVED FOR PUBLICATION, IS KEPT ON FILE AT THE WASHINGTON STATE DEPARTMENT OF TRANSPORTATION. A COPY MAY BE OBTAINED UPON REQUEST.

EROSION CONTROL BLANKET PLACEMENT ON SLOPE

STANDARD PLAN I-60.10-00

SHEET 1 OF 1 SHEET

APPROVED FOR PUBLICATION

Pasco Bakotich III — STATE DESIGN ENGINEER
08-31-07 — DATE

Washington State Department of Transportation

EFFECTIVE: AUGUST 6, 2012 TO August 4, 2013
EFFECTIVE: AUGUST 6, 2012 TO August 4, 2013
EFFECTIVE: AUGUST 6, 2012 TO August 4, 2013
EFFECTIVE: AUGUST 6, 2012 TO August 4, 2013

EFFECTIVE: AUGUST 6, 2012 TO August 4, 2013

DRAWN BY: MARK SUJKA

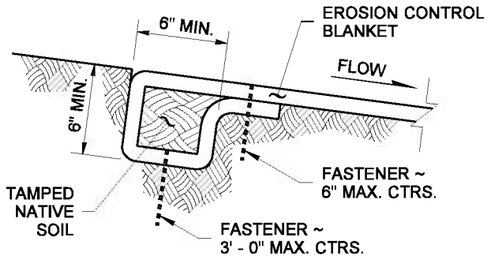

INITIAL ANCHOR ~ SECTION (A)

NOTES

1. More than the minimum of one fastener per square yard may be required due to conditions such as blanket composition, soil type, surface uniformity, and flow velocity.
2. Provide Check Slots per manufacturer's recommendations.
3. Roll ends may be spliced in a check slot.
4. See Standard Specification 8-01.3(3).

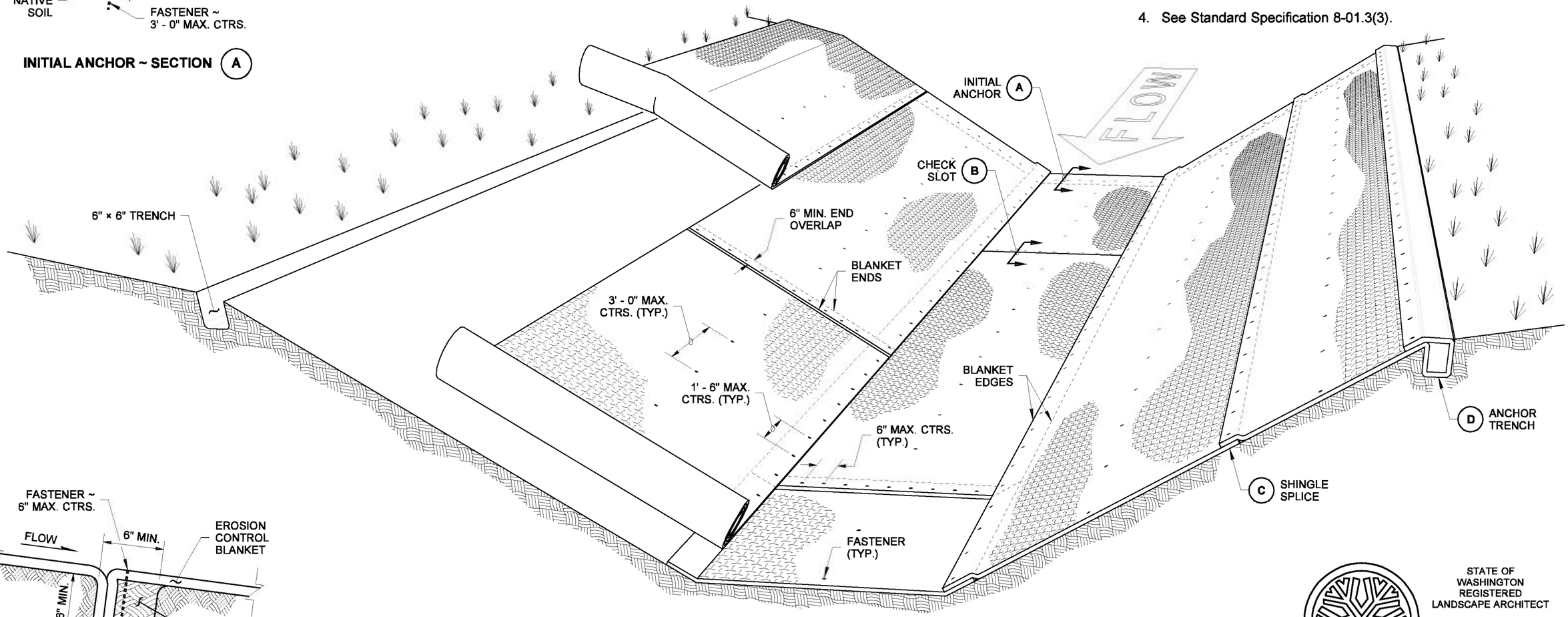

PERSPECTIVE VIEW

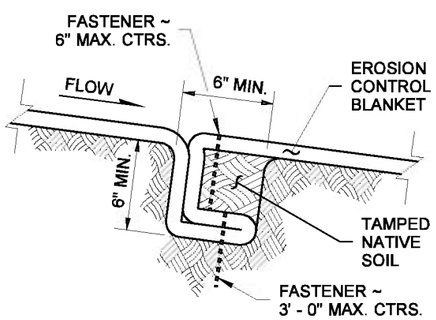

CHECK SLOT ~ SECTION (B)

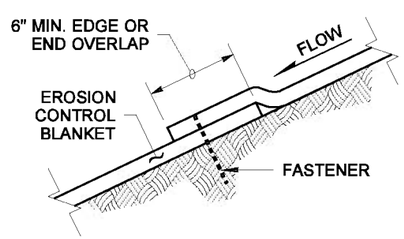

SHINGLE SPLICE ~ SECTION (C)

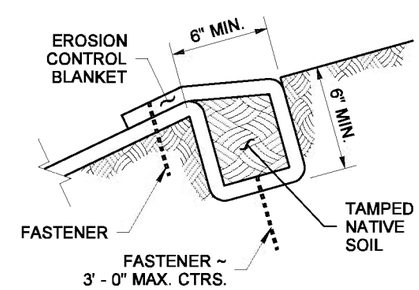

ANCHOR TRENCH ~ SECTION (D)

STATE OF WASHINGTON REGISTERED LANDSCAPE ARCHITECT

MARK W. MAURER

CERTIFICATE NO. 000598

NOTE: THIS PLAN IS NOT A LEGAL ENGINEERING DOCUMENT BUT AN ELECTRONIC DUPLICATE. THE ORIGINAL, SIGNED BY THE ENGINEER AND APPROVED FOR PUBLICATION, IS KEPT ON FILE AT THE WASHINGTON STATE DEPARTMENT OF TRANSPORTATION. A COPY MAY BE OBTAINED UPON REQUEST.

EROSION CONTROL BLANKET PLACEMENT IN CHANNEL

STANDARD PLAN I-60.20-00

SHEET 1 OF 1 SHEET

APPROVED FOR PUBLICATION

Pasco Bakotich III — STATE DESIGN ENGINEER

08-31-07 — DATE

Washington State Department of Transportation

EFFECTIVE: AUGUST 6, 2012 TO August 4, 2013

EFFECTIVE: AUGUST 6, 2012 TO August 4, 2013
EFFECTIVE: AUGUST 6, 2012 TO August 4, 2013

DRAWN BY: BILL BEKENS

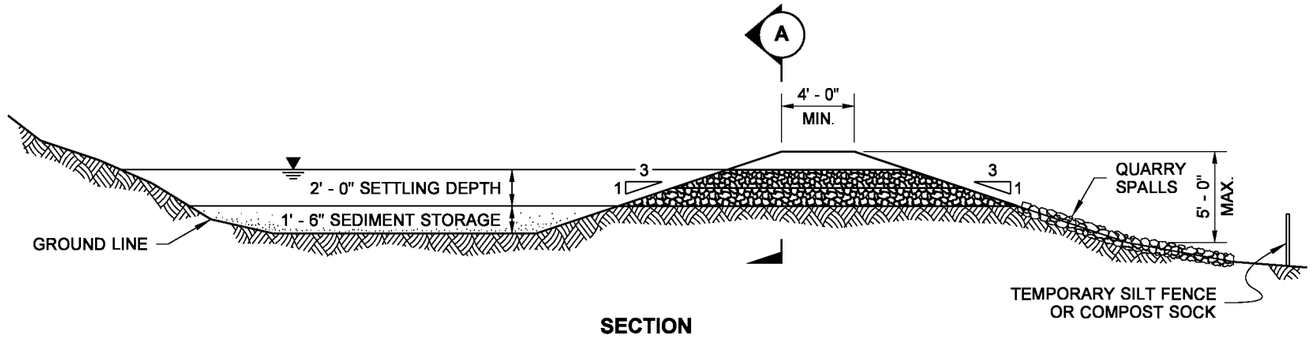

SECTION

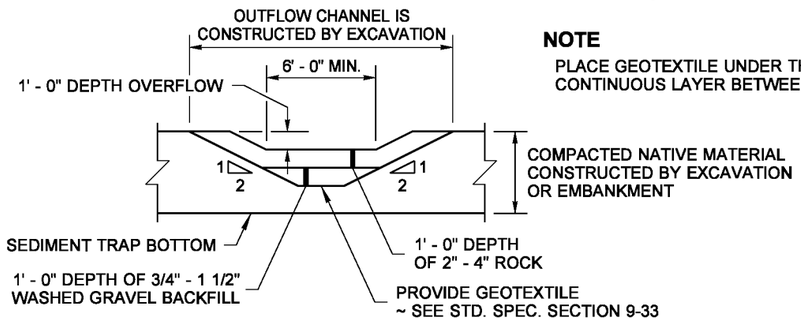

SECTION (A)

NOTE

PLACE GEOTEXTILE UNDER THE SPILLWAY AND SIDE SLOPES. PROVIDE A CONTINUOUS LAYER BETWEEN THE GRAVEL/ROCK AND THE NATIVE EARTHEN MATERIAL.

TEMPORARY SEDIMENT TRAP

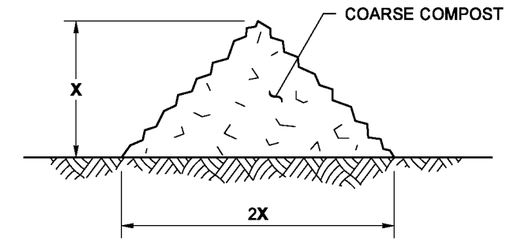

X = 1' - 0" FOR SLOPES 4H:1V OR FLATTER
X = 1' - 6" FOR SLOPES STEEPER THAN 4H:1V

TYPICAL SECTION

COMPOST BERM DETAIL

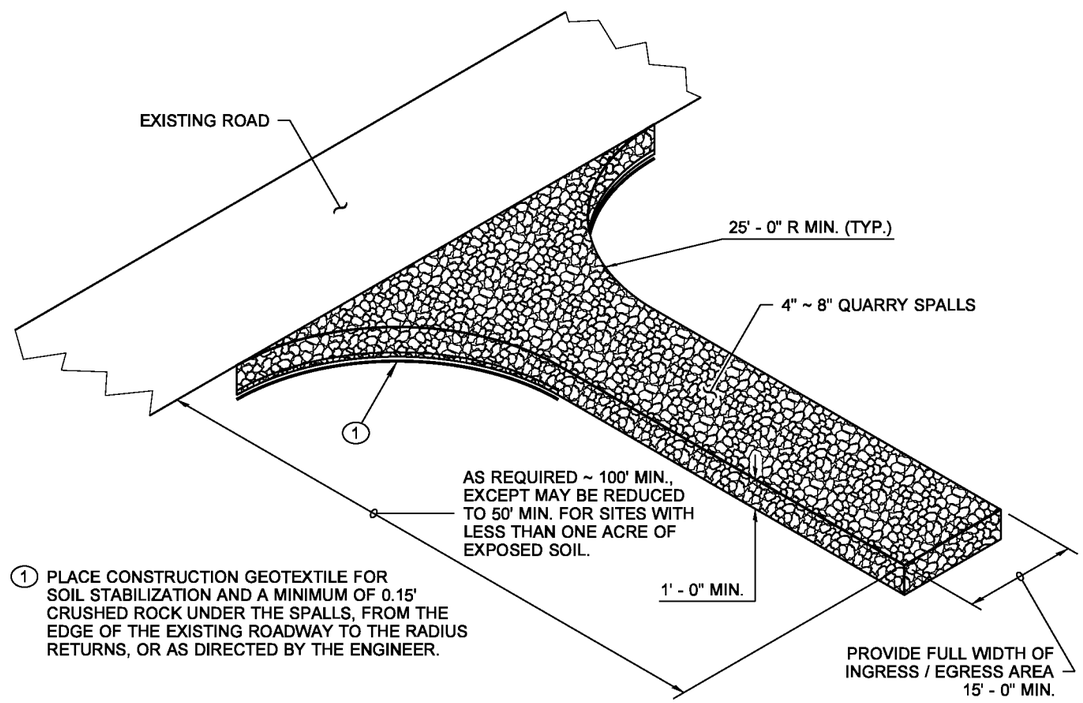

(1) PLACE CONSTRUCTION GEOTEXTILE FOR SOIL STABILIZATION AND A MINIMUM OF 0.15' CRUSHED ROCK UNDER THE SPALLS, FROM THE EDGE OF THE EXISTING ROADWAY TO THE RADIUS RETURNS, OR AS DIRECTED BY THE ENGINEER.

ISOMETRIC VIEW

STABILIZED CONSTRUCTION ENTRANCE

STATE OF
WASHINGTON
REGISTERED
LANDSCAPE ARCHITECT

MARK W. MAURER
CERTIFICATE NO. 000598

NOTE: THIS PLAN IS NOT A LEGAL ENGINEERING DOCUMENT BUT AN ELECTRONIC DUPLICATE. THE ORIGINAL, SIGNED BY THE ENGINEER AND APPROVED FOR PUBLICATION, IS KEPT ON FILE AT THE WASHINGTON STATE DEPARTMENT OF TRANSPORTATION. A COPY MAY BE OBTAINED UPON REQUEST.

MISCELLANEOUS EROSION CONTROL DETAILS

STANDARD PLAN I-80.10-01

SHEET 1 OF 1 SHEET

APPROVED FOR PUBLICATION

Pasco Bakotich III — STATE DESIGN ENGINEER
08-11-09 — DATE

Washington State Department of Transportation

EFFECTIVE: AUGUST 6, 2012 TO August 4, 2013
EFFECTIVE: AUGUST 6, 2012 TO August 4, 2013
EFFECTIVE: AUGUST 6, 2012 TO August 4, 2013
EFFECTIVE: AUGUST 6, 2012 TO August 4, 2013

EFFECTIVE: AUGUST 6, 2012 TO August 4, 2013

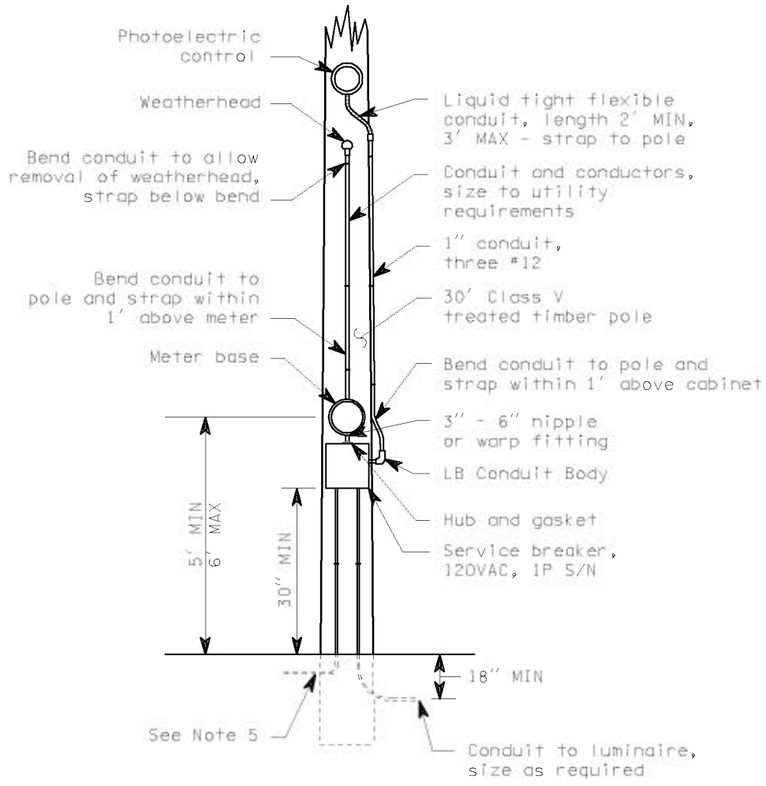

TYPE A SERVICE, 120 VOLT

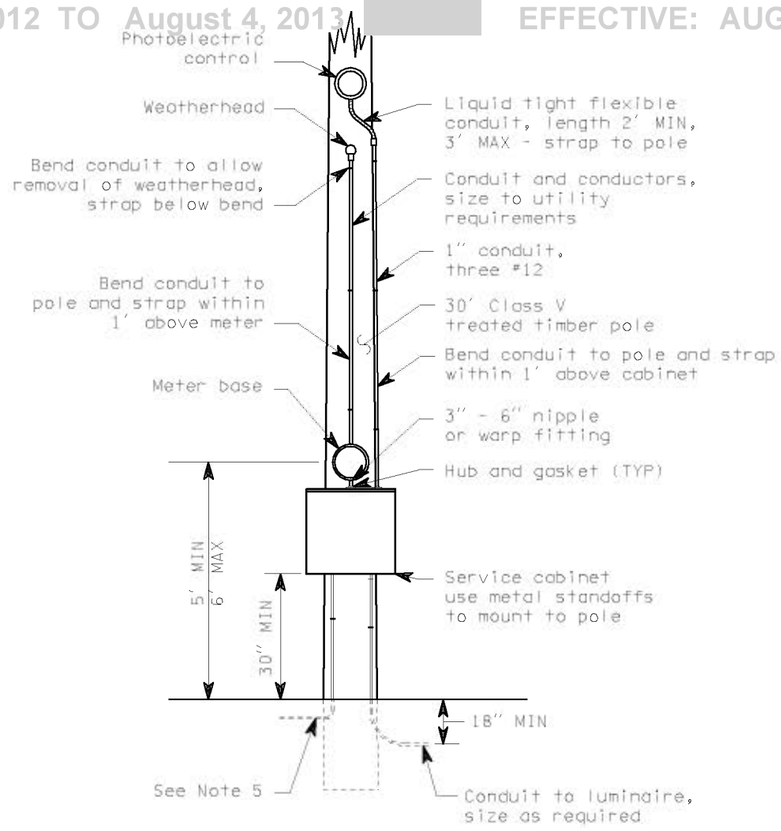

TYPE B SERVICE, 120/240 VOLT

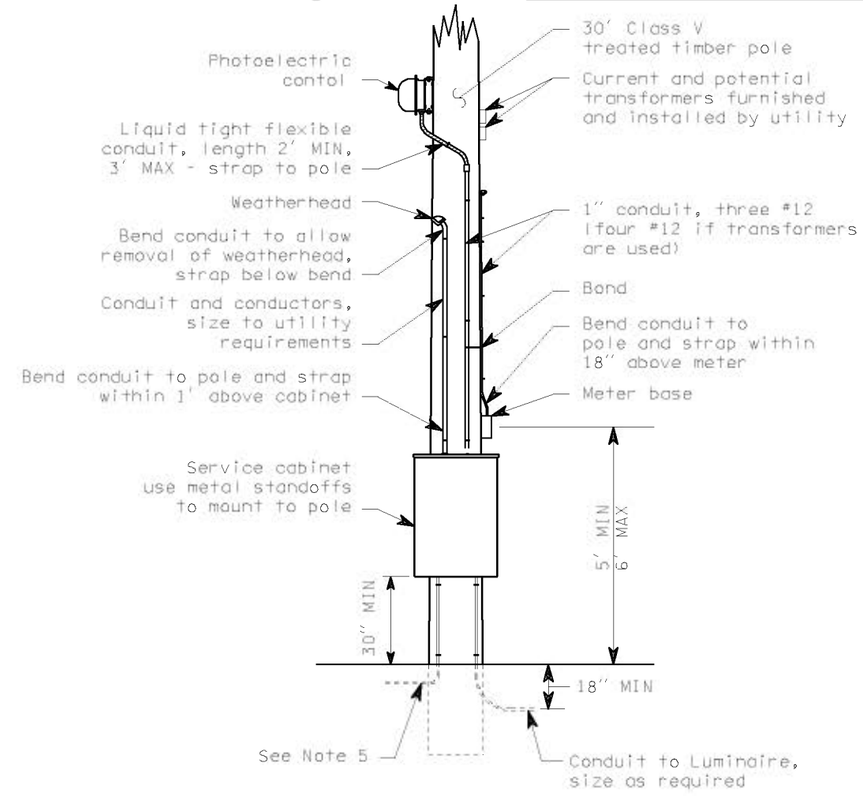

TYPE C SERVICE, 480 VOLT

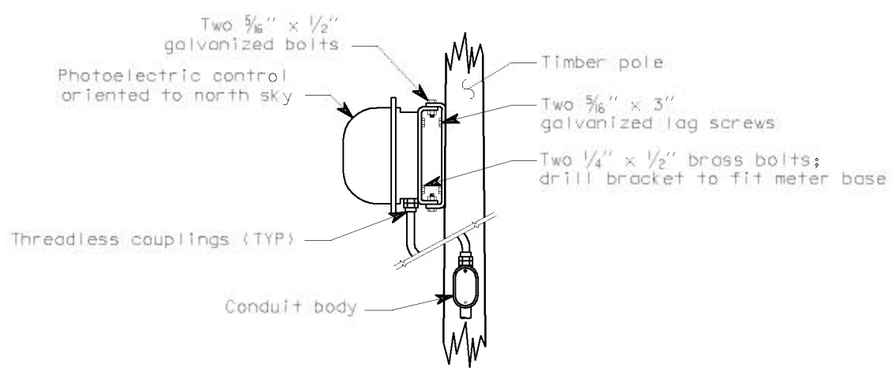

PHOTOELECTRIC CONTROL DETAILS

TYPE A, B AND C SERVICE LIGHTING DETAILS

DAVID K. PEACH
STATE OF WASHINGTON
00011089
REGISTERED
PROFESSIONAL ENGINEER
EXPIRES JUNE 4, 1999

NOTE: THIS PLAN IS NOT A LEGAL ENGINEERING DOCUMENT BUT AN ELECTRONIC DUPLICATE. THE ORIGINAL SIGNED BY THE ENGINEER AND DATED IS THE OFFICIAL DOCUMENT ON FILE AT THE WASHINGTON STATE DEPARTMENT OF TRANSPORTATION. A COPY MAY BE OBTAINED UPON REQUEST.

STANDARD PLAN J-3

APPROVED FOR PUBLICATION

Clifford E. Mansfield	*08-01-97*
STATE DESIGN ENGINEER	DATE

WASHINGTON STATE DEPARTMENT OF TRANSPORTATION
OLYMPIA, WASHINGTON

Sheet 1 of 2 Sheets

EFFECTIVE: AUGUST 6, 2012 TO August 4, 2013

EFFECTIVE: AUGUST 6, 2012 TO August 4, 2013

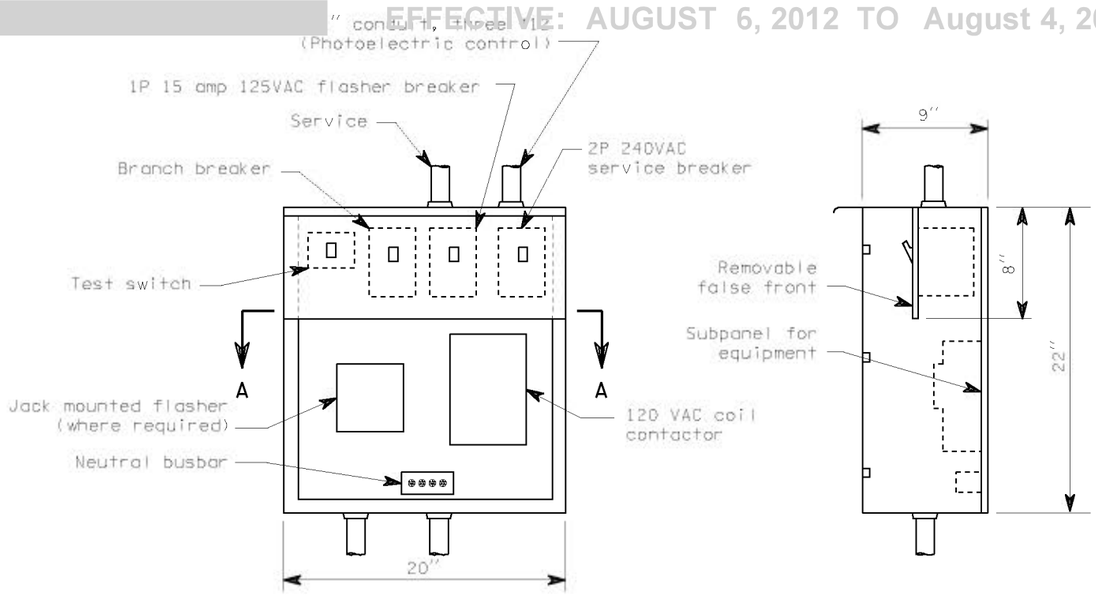

TYPE B SERVICE CABINET

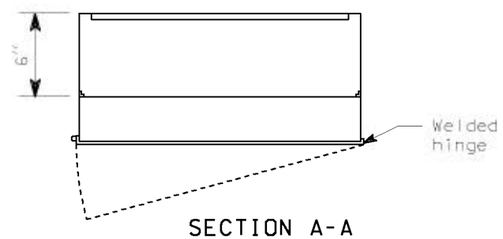

SECTION A-A

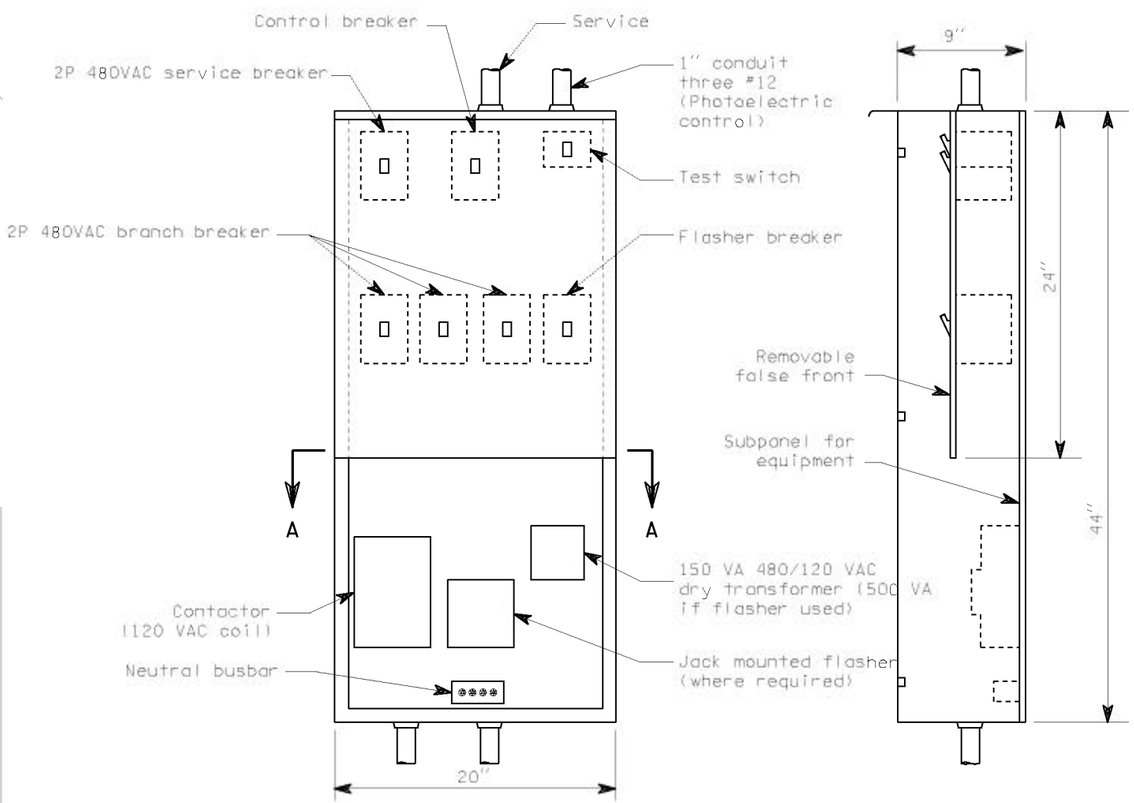

TYPE C SERVICE CABINET

NOTES:

1. Metering arrangements may vary with different serving utilities. The contractor shall verify the requirements of the utility prior to installing the service equipment.
2. All service pole conduit shall be secured to the pole with conduit strap at 5' centers.
3. All risers and service equipment shall be installed on side of pole that is away from traffic.
4. Where required by the serving utility, service breakers shall be installed above the meter socket in a separate raintight enclosure.
5. Bend and attach to pole within 1' of enclosure. See Standard Plan "Typical Grounding Details."
6. For Type B service wiring diagram, use Standard Plan "Modified Type B Service". For Type C service wiring diagram, use Standard Plan, "Type E Service."
7. See breaker schedule in contract for breaker and contactor sizes.

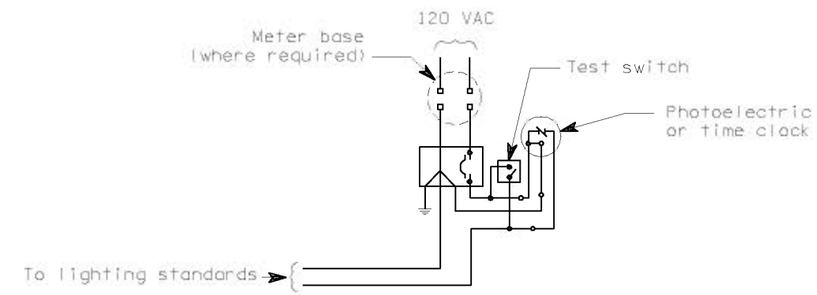

TYPE A WIRING DIAGRAM
120 VOLT

TYPE A, B AND C SERVICE LIGHTING DETAILS

EXPIRES JUNE 4, 1999

NOTE: THIS PLAN IS NOT A LEGAL ENGINEERING DOCUMENT BUT AN ELECTRONIC DUPLICATE. THE ORIGINAL SIGNED BY DAVID K. PEACH, PROFESSIONAL ENGINEER, IS ON FILE AT THE WASHINGTON STATE DEPARTMENT OF TRANSPORTATION. A COPY MAY BE OBTAINED UPON REQUEST.

STANDARD PLAN J-3

APPROVED FOR PUBLICATION

Clifford E. Mansfield	*08-01-97*
STATE DESIGN ENGINEER	DATE

WASHINGTON STATE DEPARTMENT OF TRANSPORTATION
OLYMPIA, WASHINGTON

Sheet 2 of 2 Sheets

EFFECTIVE: AUGUST 6, 2012 TO August 4, 2013

EFFECTIVE: AUGUST 6, 2012 TO August 4, 2013

GENERAL NOTES

200 AMP TYPE 120/240 1ø SERVICE CABINET

1. SEE STANDARD SPECIFICATION 9-29.24, SERVICE CABINETS.
2. HINGES SHALL HAVE STAINLESS STEEL OR BRASS PINS.
3. CABINETS SHALL BE RATED NEMA 3R AND SHALL INCLUDE TWO RAIN TIGHT VENTS.
4. METERING EQUIPMENT DOOR SHALL BE PAD LOCKABLE. EACH DOOR SHALL BE GASKETED. INSTALL BEST CX CONSTRUCTION CORE ON RIGHT DOOR. SEE DOOR HINGE DETAIL, SHEET 1 OF 2.
5. THE FOLLOWING EQUIPMENT WITHIN THE SERVICE ENCLOSURE SHALL HAVE AN APPROPRIATELY ENGRAVED PHENOLIC NAME PLATE ATTACHED WITH SCREWS OR RIVETS: KEY NUMBERS 2, 3, 4, 6, 7, 8, 9 AND 16. KEY NUMBER 4 NAME PLATE SHALL READ: "PHOTOCELL BYPASS TEST ON" AND "PHOTOCELL TEST OFF- AUTOMATIC". SEE SERVICE CABINET DETAIL.
6. METERING ARRANGEMENTS VARY WITH DIFFERENT SERVING UTILITIES. THE UTILITY MAY REQUIRE METER BASE MOUNTING IN THE ENCLOSURE, ON THE SIDE OR ON THE BACK OF THE ENCLOSURE. THE UTILITY MAY REQUIRE THE DIMENSION BETWEEN THE DOOR AND THE FRONT OF THE SAFETY SOCKET BOX TO BE LESS THAN THE 11 INCHES SHOWN IN THE LEFT SIDE- SAFETY SOCKET BOX MOUNTING DETAIL. THE CONTRACTOR SHALL VERIFY THE SERVING UTILITY'S REQUIREMENTS PRIOR TO FABRICATION OF AND INSTALLING THE SERVICE EQUIPMENT.
7. DIMENSIONS SHOWN ARE MINIMUM AND SHALL BE ADJUSTED TO ACCOMMODATE THE VARIOUS SIZES OF EQUIPMENT INSTALLED.
8. ALL BUSSWORK SHALL BE HIGH GRADE COPPER AND SHALL EQUAL OR EXCEED THE MAIN BREAKER RATING. ALL BREAKERS SHALL BOLT ONTO THE BUSSWORK. JUMPERING OF BREAKERS SHALL NOT BE ALLOWED. BUSSWORK SHALL ACCOMMODATE ALL FUTURE EQUIPMENT AS SHOWN IN THE BREAKER SCHEDULE.
9. THE PHOTOCELL UNIT SHALL BE CENTERED IN THE PHOTOCELL ENCLOSURE TO PERMIT 360 DEGREE ROTATION OF THE PHOTOCELL WITHOUT REMOVAL OF THE PHOTOCELL UNIT OR THE PHOTOCELL ENCLOSURE.
10. ALL INTERNAL WIRE RUNS SHALL BE IDENTIFIED WITH "TO - FROM" CODED TAGS LABELED WITH THE CODE LETTERS AND/OR NUMBERS SHOWN ON THE SCHEDULES. APPROVED PVC OR POLYOLEFIN WIRE MARKING SLEEVES SHALL BE USED.
11. ALL NUTS, BOLTS AND WASHERS USED FOR MOUNTING THE PHOTOCELL ENCLOSURE SHALL BE STAINLESS STEEL.
12. A 1% TOLERANCE IS ALLOWED FOR ALL DIMENSIONS.
13. UNISTRUT TYPE CHANNEL AND MOUNTING HARDWARE COMPONENTS SHALL BE STAINLESS STEEL. CONDUIT CLAMPS SHALL BE HOT DIPPED, GALVANIZED STEEL OR STAINLESS STEEL.
14. INSTALL CONDUIT COUPLINGS ON ALL CONDUITS. PLACE COUPLINGS FLUSH WITH TOP OF CONCRETE FOUNDATION.
15. NOTE 15 HAS BEEN DELETED.
16. THE METER BASE PORTION OF THIS SERVICE WAS DESIGNED TO MEET METERING PORTION OF EUSERC DRAWING 309 REQUIREMENTS.
17. WHEN USING ALTERNATE DOOR HINGE: REMOVE HINGE PIN PRIOR TO WELDING HINGE TO CABINET AND PRIOR TO HOT DIP GALVANIZING CABINET. AFTER GALVANIZING, REPLACE PIN WITH BRASS PIN AND SOLDER IN PLACE.
18. VERIFY THE SERVICE UTILITY STAND-OFF DIMENSION. ADJUST THE REMOVABLE PANEL TO THE MEASUREMENT PROVIDED BY THE UTILITY COMPANY. AFTER ADJUSTMENT, CUT OFF ALL-THREAD BOLTS SO THAT NO LESS THAN 2 AND NO MORE THAN 3 FULL THREADS EXTEND PAST THE FACE OF THE NUTS

DRAWN BY: MARK SUJKA

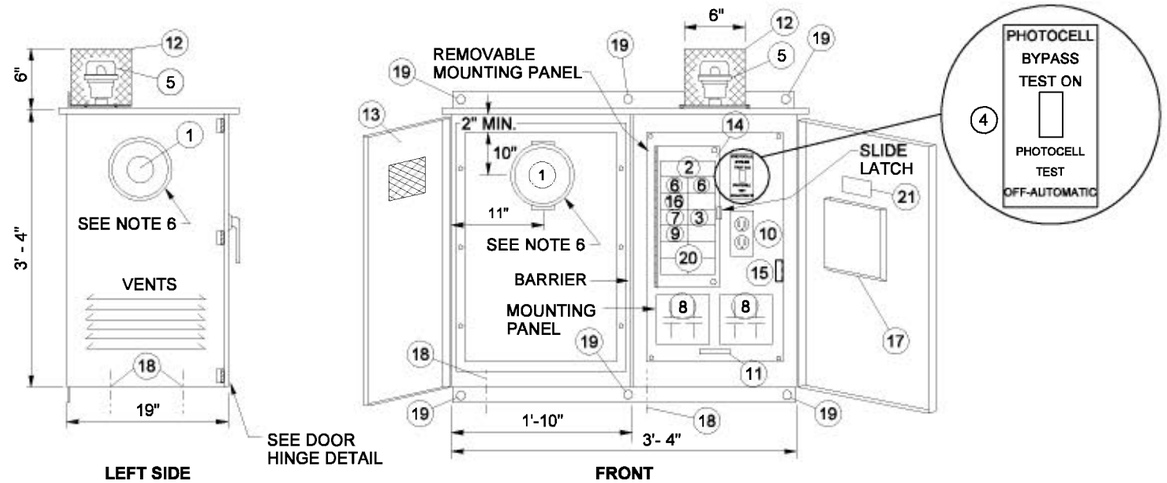

SERVICE CABINET DETAIL

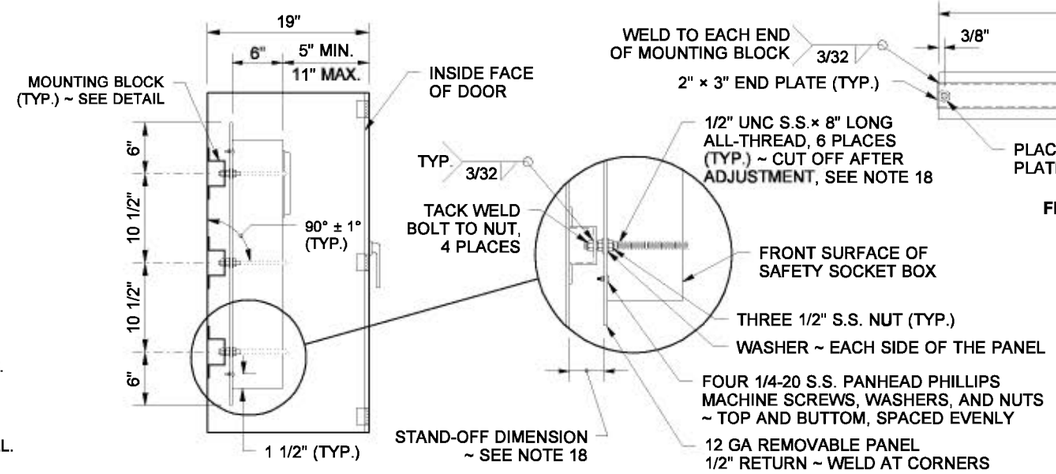

LEFT SIDE- SAFETY SOCKET BOX MOUNTING DETAIL

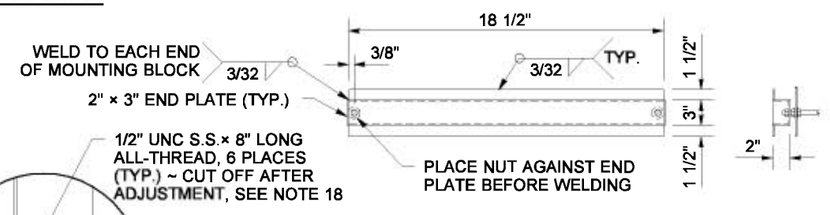

MOUNTING BLOCK DETAIL

12 GA. ~ MATERIAL TO BE THE SAME AS CABINET MATERIAL

KEY

1. METER BASE PER SERVING UTILITY REQUIREMENTS. AS A MINIMUM, THE METER BASE SHALL BE SAFETY SOCKET BOX WITH FACTORY INSTALLED TEST BYPASS FACILITY THAT MEETS THE REQUIREMENTS OF EUSERC DRAWING 305.
2. MAIN BREAKER (SEE BREAKER SCHEDULE)
3. PHOTOCELL BREAKER (SPST 15 AMP - 120/240 VOLT)
4. TEST SWITCH (SPDT SNAP ACTION, POSITIVE CLOSE 15 AMP - 120/277 VOLT - "T" RATED)
5. PHOTOELECTRIC CONTROL, STD. SPEC. 9 - 29.11(2)
6. BRANCH BREAKER (SEE BREAKER SCHEDULE)
7. SIGNAL BREAKER (SEE BREAKER SCHEDULE)
8. CONTACTOR (SEE BREAKER SCHEDULE)
9. RECEPTACLE BREAKER (SPST 20 AMP - 120/240 VOLT)
10. RECEPTACLE, GROUNDED (GFCI 20 AMP - 125 VOLT)
11. NEUTRAL BUSS, 14 LUG COPPER
12. PHOTOCELL ENCLOSURE - ENCLOSURE TO BE FABRICATED FROM 5/8" EXPANDED STEEL MESH WITH WELDED SEAMS AND MOUNTING FLANGES. HOT DIP GALVANIZED AFTER FABRICATION. TYPE 5052 - H32 ALUMINUM WITH 5/8" x 5/8" OPENINGS EQUIVALENT TO 5/8" EXPANDED STEEL MESH MAY BE USED AS ALTERNATIVE MATERIAL. SEE PHOTOCELL ENCLOSURE MOUNTING DETAIL, SHEET 2 OF 2.
13. HINGED FRONT FACING DOOR WITH 4" x 4" MIN. POLISHED WIRE GLASS WINDOW.
14. HINGED DEAD FRONT WITH 1/4 TURN FASTENERS OR SLIDE LATCH.
15. CABINET MAIN BONDING JUMPER. BUSS SHALL BE 4 LUG TINNED COPPER. SEE CABINET MAIN BONDING JUMPER DETAIL ON SHEET 2 OF 2.
16. SPARE BRANCH BREAKER (DPST 20AMP- 120/240 VOLT)
17. METAL WIRING DIAGRAM HOLDER
18. 1/4" DIAMETER DRAIN HOLE. DRILL BEFORE GALVANIZING.
19. MOUNTING HOLE. SEE SERVICE CABINET MOUNTING DETAILS.
20. 18 CIRCUIT PANEL BOARD - MINIMUM SIZE WITH SEPARATE MAIN BREAKER.
21. LABEL CABINET WITH BUSSWORK RATING.

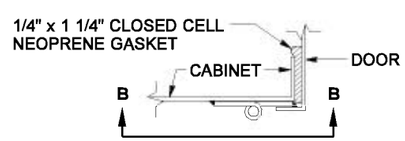

DOOR HINGE DETAIL

ALTERNATE FOR TYPE B MODIFIED CABINET SEE NOTE 17

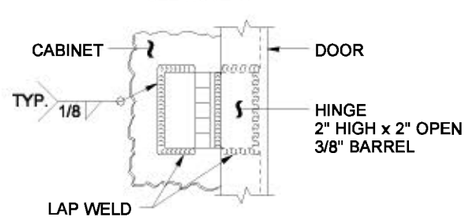

VIEW B-B

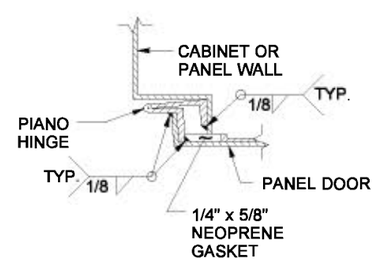

DOOR HINGE DETAIL

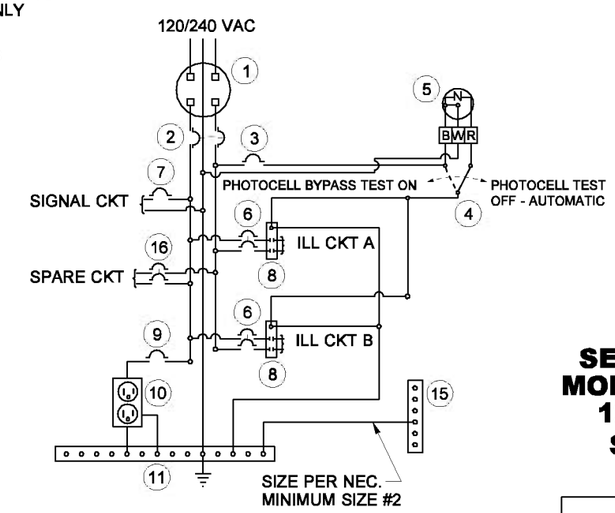

WIRING SCHEMATIC

R. SCOTT ZELLER
STATE OF WASHINGTON
28680
REGISTERED
PROFESSIONAL ENGINEER

EXPIRES MAY 5, 2005

NOTE: THIS PLAN IS NOT A LEGAL ENGINEERING DOCUMENT BUT AN ELECTRONIC DUPLICATE. THE ORIGINAL, SIGNED BY THE ENGINEER AND APPROVED FOR PUBLICATION, IS KEPT ON FILE AT THE WASHINGTON STATE DEPARTMENT OF TRANSPORTATION. A COPY MAY BE OBTAINED UPON REQUEST.

SERVICE CABINET TYPE B MODIFIED (0 - 200 AMP TYPE 120/240 SINGLE PHASE) STANDARD PLAN J-3b

SHEET 1 OF 2 SHEETS

APPROVED FOR PUBLICATION

Harold J. Peterfeso — STATE DESIGN ENGINEER — *03-04-05* DATE

Washington State Department of Transportation

DATE	REVISION	BY
01/2005	REVISED SAFETY SOCKET BOX MOUNTING DETAIL	EB

EFFECTIVE: AUGUST 6, 2012 TO August 4, 2013

EFFECTIVE: AUGUST 6, 2012 TO August 4, 2013
EFFECTIVE: AUGUST 6, 2012 TO August 4, 2013

DRAWN BY: MARK SUJKA

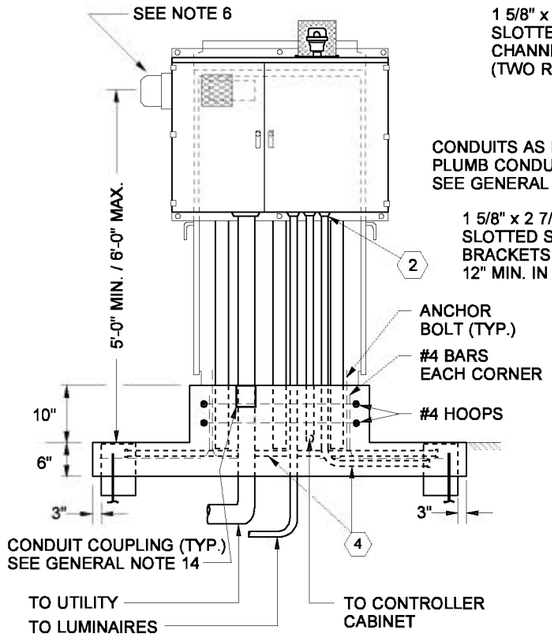

FRONT OF SERVICE CABINET

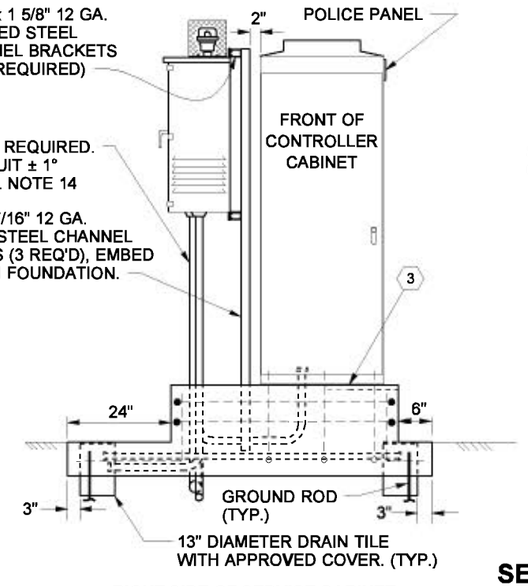

RIGHT SIDE OF SERVICE CABINET

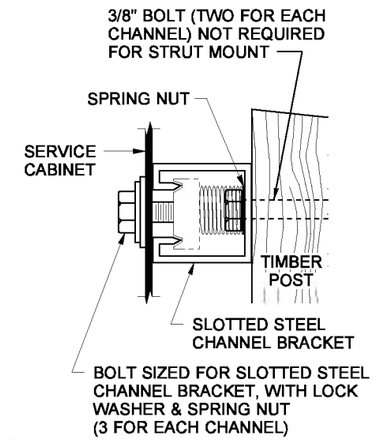

CABINET BRACKET MOUNTING DETAIL

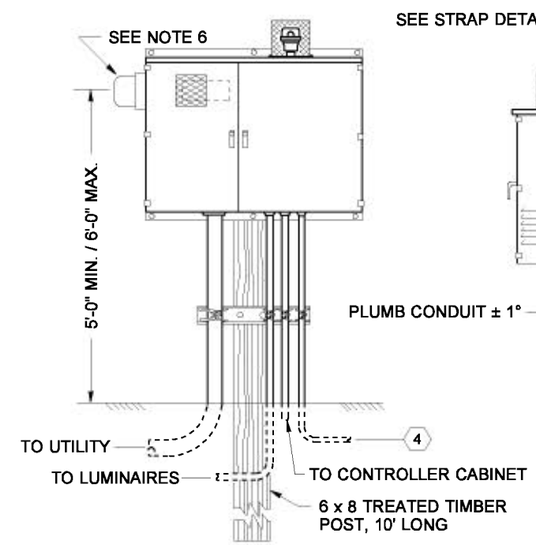

FRONT OF SERVICE CABINET

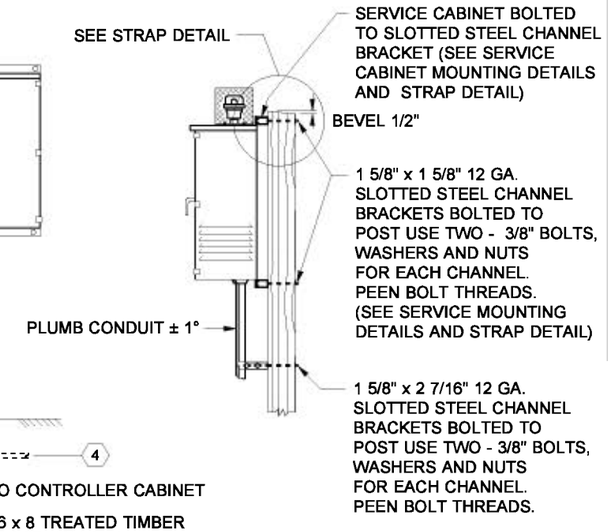

RIGHT SIDE OF SERVICE CABINET

SERVICE CABINET MOUNTING DETAILS

STRUT MOUNT

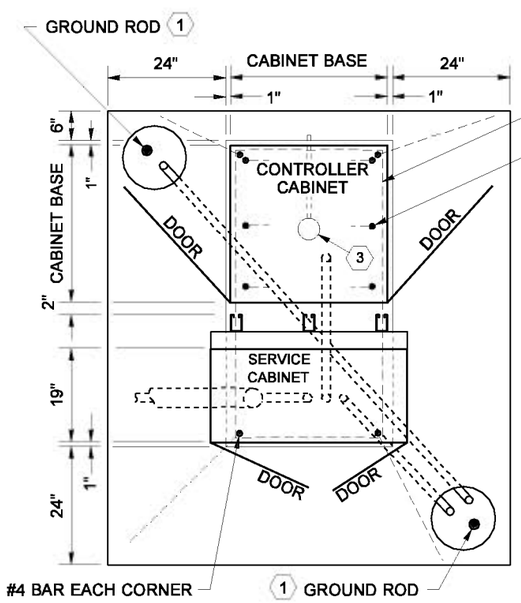

PLAN VIEW OF SERVICE CABINET

SEE STANDARD PLAN J-6c "CABINET FOUNDATION DETAILS", FOR DETAILS NOT SHOWN.

1. DRIVE GROUND RODS BEFORE PLACING CONCRETE. MOVE ROD(S) AND DRAIN TILE(S) WITH COVER(S) AS REQUIRED TO ACHIEVE FULL GROUND PENETRATION. MAINTAIN A 6' MINIMUM CLEARANCE BETWEEN GROUND RODS AS DETAILED ON STD. PLAN J-9a "TYPICAL GROUNDING DETAILS".
2. ALL CONDUITS PENETRATING CABINET SHALL BE TERMINATED WITH GROUNDING END BUSHING AND BONDED TO THE CABINET GROUNDING BUS.
3. 4" DIAM. x 1/2" DEEP SUMP. SLOPE FOUNDATION TOWARDS SUMP. 3/8" DIAM. POLYETHYLENE OR COPPER DRAIN PIPE. SLOPE TO DRAIN OUTSIDE FOUNDATION.
4. TO SERVICE GROUND - PER STD. PLAN J-9a "TYPICAL GROUNDING DETAILS"

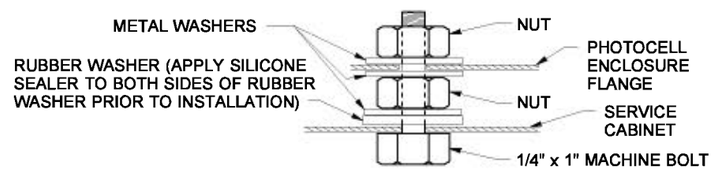

PHOTOCELL ENCLOSURE MOUNTING DETAIL

POST MOUNT

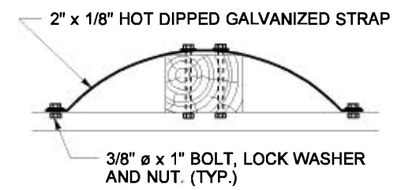

POST MOUNT STRAP DETAIL

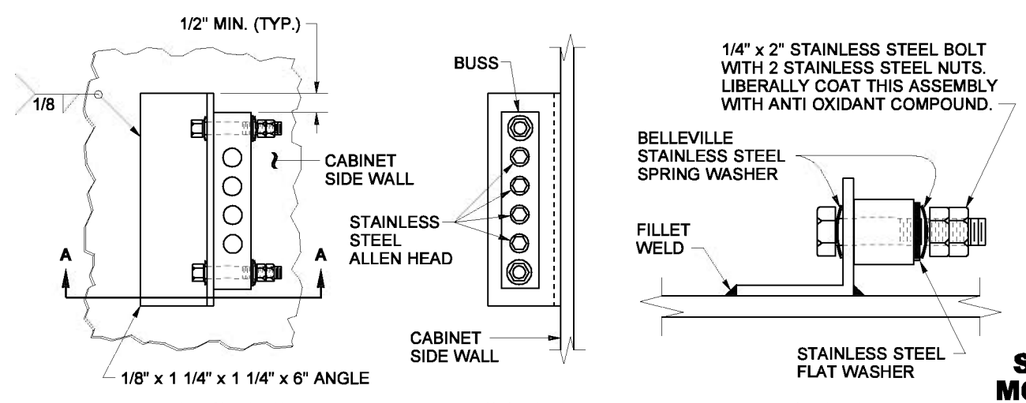

ELEVATION VIEW | SIDE VIEW | DETAIL A-A

CABINET MAIN BONDING JUMPER DETAIL

EXPIRES MAY 5, 2005

NOTE: THIS PLAN IS NOT A LEGAL ENGINEERING DOCUMENT BUT AN ELECTRONIC DUPLICATE. THE ORIGINAL, SIGNED BY THE ENGINEER AND APPROVED FOR PUBLICATION, IS KEPT ON FILE AT THE WASHINGTON STATE DEPARTMENT OF TRANSPORTATION. A COPY MAY BE OBTAINED UPON REQUEST.

SERVICE CABINET TYPE B MODIFIED (0 - 200 AMP TYPE 120/240 SINGLE PHASE) STANDARD PLAN J-3b

SHEET 2 OF 2 SHEETS

APPROVED FOR PUBLICATION

Harold J. Peterfeso — STATE DESIGN ENGINEER
03-04-05 — DATE

Washington State Department of Transportation

EFFECTIVE: AUGUST 6, 2012 TO August 4, 2013
EFFECTIVE: AUGUST 6, 2012 TO August 4, 2013
EFFECTIVE: AUGUST 6, 2012 TO August 4, 2013
EFFECTIVE: AUGUST 6, 2012 TO August 4, 2013

EFFECTIVE: AUGUST 6, 2012 TO August 4, 2013

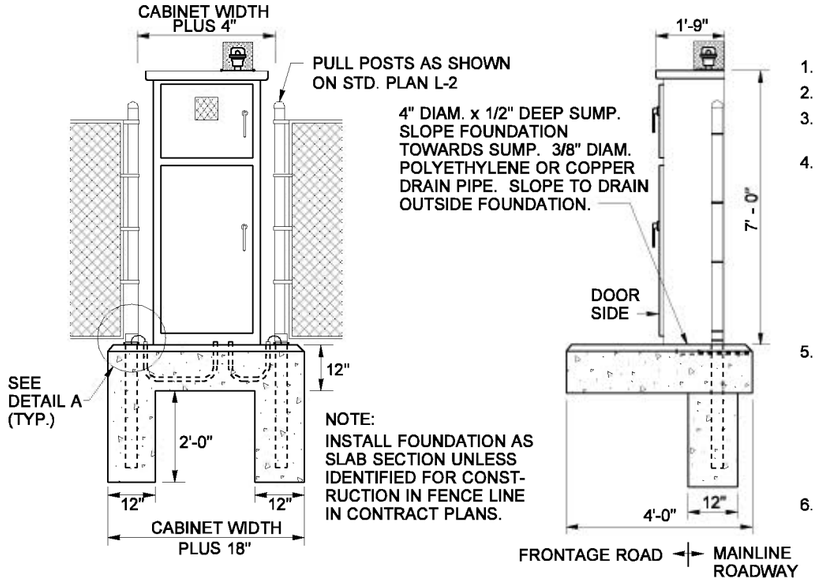

FRONT VIEW

SIDE VIEW

INSTALLATION DETAIL

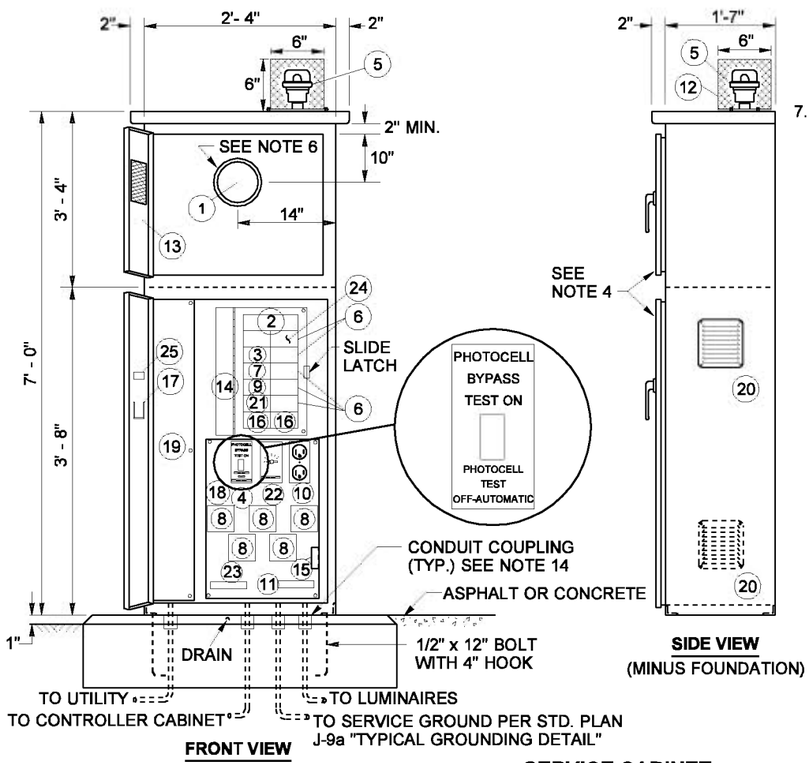

FRONT VIEW

SIDE VIEW (MINUS FOUNDATION)

SERVICE CABINET

GENERAL NOTES

200 AMP TYPE 120/240 1ø SERVICE CABINET

1. SEE STD. SPECIFICATION 9-29.24, SERVICE CABINETS.
2. HINGES SHALL HAVE STAINLESS STEEL OR BRASS PINS.
3. CABINETS SHALL BE RATED NEMA 3R AND SHALL INCLUDE TWO RAIN TIGHT VENTS.
4. METERING EQUIPMENT DOOR SHALL BE PAD LOCKABLE. EACH DOOR SHALL BE GASKETED. INSTALL BEST CX CONSTRUCTION CORE ON BOTTOM DOOR. SEE DOOR HINGE DETAIL, STANDARD PLAN J-3b. CONCEALED HEAVY DUTY STAINLESS STEEL LIFT OFF HINGES ARE ALLOWED AS AN ALTERNATIVE TO DOOR HINGE DETAIL SHOWN ON STANDARD PLAN J-3b. UPPER DOOR SHALL HAVE 2 HINGES AND LOWER DOOR SHALL HAVE 3 HINGES. THE LOWER DOOR SHALL HAVE A TWO POSITION DOOR STOP ASSEMBLY.
5. THE FOLLOWING EQUIPMENT WITHIN THE SERVICE ENCLOSURE SHALL HAVE AN APPROPRIATELY ENGRAVED PHENOLIC NAME PLATE ATTACHED WITH SCREWS OR RIVETS:
   KEY NUMBERS 2, 3, 4, 6, 7, 8, 9, 16 AND 21.
   KEY NUMBER 4 NAME PLATE SHALL READ:
   "PHOTOCELL BYPASS TEST ON" AND "PHOTOCELL TEST OFF- AUTOMATIC". SEE SERVICE CABINET DETAIL.
6. METERING ARRANGEMENTS VARY WITH DIFFERENT SERVING UTILITIES. THE UTILITY MAY REQUIRE METER BASE MOUNTING IN THE ENCLOSURE, ON THE SIDE OR ON THE BACK OF THE ENCLOSURE. THE UTILITY MAY REQUIRE THE DIMENSION BETWEEN THE DOOR AND THE FRONT OF THE SAFETY SOCKET BOX TO BE LESS THAN THE 11 INCHES SHOWN IN THE LEFT SIDE- SAFETY SOCKET BOX MOUNTING DETAIL. SEE STANDARD PLAN J-3b FOR SAFETY SOCKET BOX DETAIL. THE CONTRACTOR SHALL VERIFY THE SERVING UTILITY'S REQUIREMENTS PRIOR TO FABRICATION OF AND INSTALLING THE SERVICE EQUIPMENT.
7. DIMENSIONS SHOWN ARE MINIMUM AND SHALL BE ADJUSTED TO ACCOMMODATE THE VARIOUS SIZES OF EQUIPMENT INSTALLED.
8. ALL BUSSWORK SHALL BE HIGH GRADE COPPER AND SHALL EQUAL OR EXCEED THE MAIN BREAKER RATING. ALL BREAKERS SHALL BOLT ONTO THE BUSSWORK. JUMPERING OF BREAKERS SHALL NOT BE ALLOWED. BUSSWORK SHALL ACCOMMODATE ALL FUTURE EQUIPMENT AS SHOWN IN THE BREAKER SCHEDULE.
9. THE PHOTOCELL UNIT SHALL BE CENTERED IN THE PHOTOCELL ENCLOSURE TO PERMIT 360 DEGREE ROTATION OF THE PHOTOCELL WITHOUT REMOVAL OF THE PHOTOCELL UNIT OR PHOTOCELL ENCLOSURE.
10. ALL INTERNAL WIRE RUNS SHALL BE IDENTIFIED WITH "TO - FROM" CODED TAGS LABELED WITH THE CODE LETTERS AND/OR NUMBERS SHOWN ON THE SCHEDULES. APPROVED PVC OR POLYOLEFIN WIRE MARKING SLEEVES SHALL BE USED.
11. ALL NUTS, BOLTS AND WASHERS USED FOR MOUNTING THE PHOTOCELL ENCLOSURE SHALL BE STAINLESS STEEL.
12. A 1% TOLERANCE IS ALLOWED FOR ALL DIMENSIONS.
13. THE PHOTOCELL CIRCUIT SHALL BE INSTALLED IN FLEX CONDUIT WITHIN THE METER COMPARTMENT.
14. INSTALL CONDUIT COUPLINGS ON ALL CONDUITS. PLACE COUPLINGS FLUSH WITH TOP OF CONCRETE FOUNDATION.
15. SEE PLANS FOR BREAKER SCHEDULE.
16. SEAL CABINET TO FOUNDATION WITH A 1/2" BEAD OF SILICONE. APPLY SILICONE TO DRY SURFACE ONLY.
17. THE METER BASE PORTION OF THIS SERVICE WAS DESIGNED TO MEET METERING PORTION OF EUSERC DRAWING 309 REQUIREMENTS.

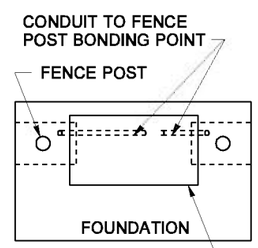

PLAN VIEW

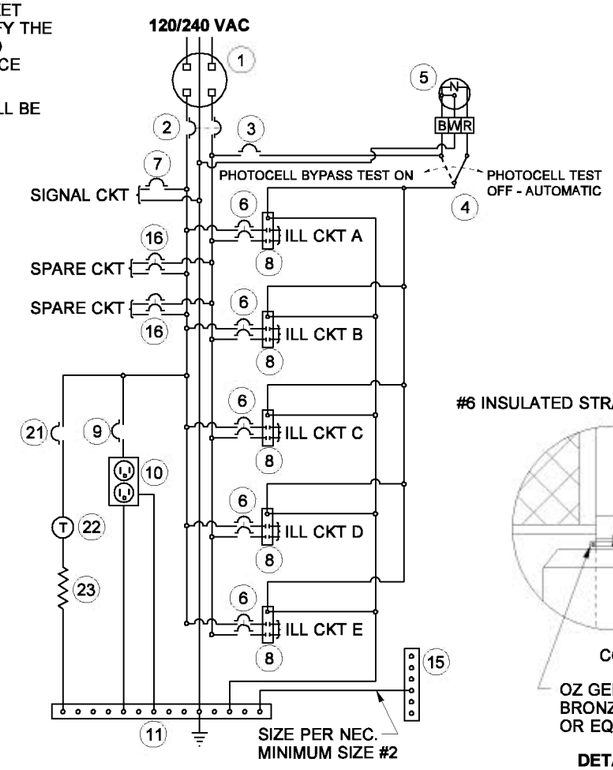

WIRING SCHEMATIC

KEY

1. METER BASE PER SERVING UTILITY REQUIREMENTS. AS A MINIMUM, THE METER BASE SHALL BE SAFETY SOCKET BOX WITH FACTORY INSTALLED TEST BYPASS FACILITY THAT MEETS THE REQUIREMENTS OF EUSERC DRAWING 305.
2. MAIN BREAKER (SEE BREAKER SCHEDULE)
3. PHOTOCELL BREAKER (SPST 15 AMP - 120/240 VOLT)
4. TEST SWITCH (SPDT SNAP ACTION, POSITIVE CLOSE, 15 AMP - 120/277 VOLT "T" RATED)
5. PHOTOELECTRIC CONTROL, STD. SPEC. 9 - 29.11(2)
6. BRANCH BREAKER (SEE BREAKER SCHEDULE)
7. SIGNAL BREAKER (SEE BREAKER SCHEDULE)
8. CONTACTOR (SEE BREAKER SCHEDULE)
9. RECEPTACLE BREAKER (SPST 20 AMP - 120/240 VOLT)
10. RECEPTACLE, GROUNDED (GFCI 20 AMP - 125 VOLT)
11. NEUTRAL BUSS, 14 LUG COPPER
12. PHOTOCELL ENCLOSURE - ENCLOSURE TO BE FABRICATED FROM 5/8" EXPANDED STEEL MESH WITH WELDED SEAMS AND MOUNTING FLANGES. HOT DIP GALVANIZED AFTER FABRICATION. TYPE 5052 - H32 ALUMINUM WITH 5/8" x 5/8" OPENINGS EQUIVALENT TO 5/8" EXPANDED STEEL MESH MAY BE USED AS ALTERNATIVE MATERIAL. SEE PHOTOCELL ENCLOSURE MOUNTING DETAILS, STANDARD PLAN J-3b.
13. HINGED FRONT FACING DOOR WITH 4" x 4" MIN. POLISHED WIRE GLASS WINDOW.
14. HINGED DEAD FRONT WITH 1/4 TURN FASTENERS OR SLIDE LATCH.
15. CABINET MAIN BONDING JUMPER. BUSS SHALL BE 4 LUG TINNED COPPER. SEE CABINET MAIN BONDING JUMPER DETAIL, STANDARD PLAN J-3b.
16. SPARE BRANCH BREAKER (DPST 20AMP- 120/240 VOLT)
17. METAL WIRING DIAGRAM HOLDER
18. REMOVABLE EQUIPMENT MOUNTING PAN
19. 6" x 6" MIN. UNDERGROUND FEED - SERVICE WIREWAY (LEFT REAR CORNER)
20. SCREENED VENTS, 2 REQUIRED, 1 EACH SIDE, LOUVERED PLATES.
21. HEATER BREAKER (SPST 15 AMP - 120/240 VOLT)
22. THERMOSTAT, 40°F CLOSURE - 3 DIFFERENTIAL
23. STRIP HEATER (100 WATT NOMINAL) , WITH TERMINAL STRIP COVER.
24. 24 CIRCUIT PANEL BOARD - MINIMUM SIZE WITH SEPARATE MAIN BREAKER.
25. LABEL CABINET WITH BUSSWORK RATING.

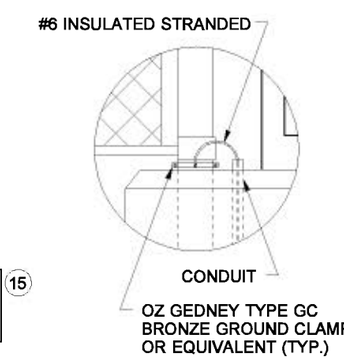

DETAIL A

R. SCOTT ZELLER
STATE OF WASHINGTON
28680
REGISTERED
PROFESSIONAL ENGINEER

EXPIRES MAY 5, 2003

NOTE: THIS PLAN IS NOT A LEGAL ENGINEERING DOCUMENT BUT AN ELECTRONIC DUPLICATE. THE ORIGINAL, SIGNED BY THE ENGINEER AND APPROVED FOR PUBLICATION, IS KEPT ON FILE AT THE WASHINGTON STATE DEPARTMENT OF TRANSPORTATION. A COPY MAY BE OBTAINED UPON REQUEST.

SERVICE CABINET TYPE D (0 - 200 AMP TYPE 120/240 SINGLE PHASE) STANDARD PLAN J-3c

SHEET 1 OF 1 SHEET

APPROVED FOR PUBLICATION

Harold J. Peterfeso — STATE DESIGN ENGINEER

06-24-02 — DATE

Washington State Department of Transportation

EFFECTIVE: AUGUST 6, 2012 TO August 4, 2013

EFFECTIVE: AUGUST 6, 2012 TO August 4, 2013

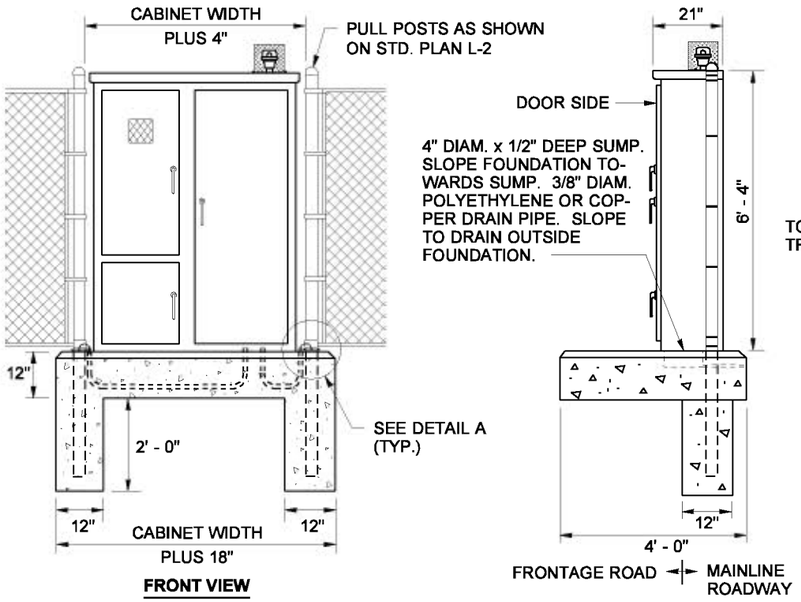

FRONT VIEW

SIDE VIEW

NOTE: INSTALL FOUNDATION AS SLAB SECTION UNLESS IDENTIFIED FOR CONSTRUCTION IN FENCE LINE IN CONTRACT PLANS.

INSTALLATION DETAIL

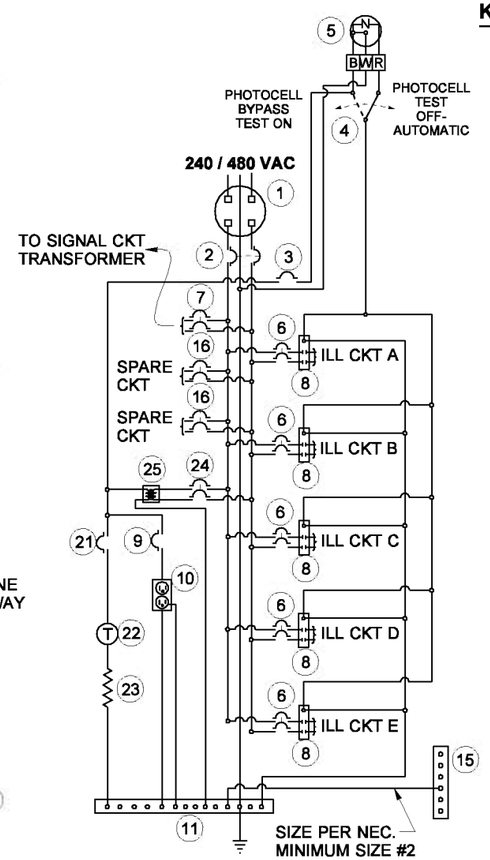

WIRING SCHEMATIC

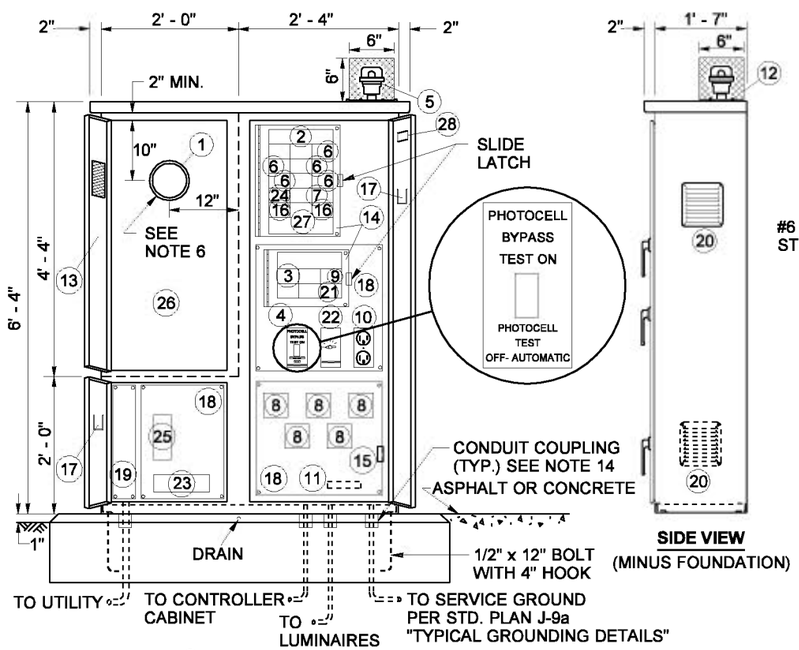

FRONT VIEW

SIDE VIEW

SERVICE CABINET

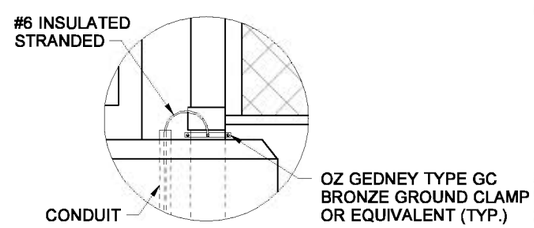

DETAIL A

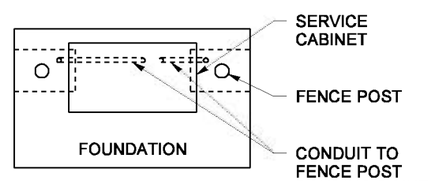

PLAN VIEW

KEY

1. METER BASE PER SERVING UTILITY REQUIREMENTS. AS A MINIMUM, THE METER BASE SHALL BE SAFETY SOCKET BOX WITH FACTORY INSTALLED TEST BYPASS FACILITY THAT MEETS THE REQUIREMENTS OF EUSERC DRAWING 305.
2. MAIN BREAKER (SEE BREAKER SCHEDULE)
3. PHOTOCELL BREAKER (SPST 15 AMP - 120/240 VOLT)
4. TEST SWITCH (SPDT SNAP ACTION, POSITIVE CLOSE 15 AMP - 120/277 VOLT "T" RATED)
5. PHOTOELECTRIC CONTROL, STD. SPEC. 9 - 29.11(2)
6. BRANCH BREAKER (SEE BREAKER SCHEDULE)
7. SIGNAL TRANSFORMER BREAKER (SEE BREAKER SCHEDULE)
8. CONTACTOR (SEE BREAKER SCHEDULE)
9. RECEPTACLE BREAKER (SPST 20 AMP - 120/240 VOLT)
10. RECEPTACLE, GROUNDED (GFCI 20 AMP - 125 VOLT)
11. NEUTRAL BUSS, 14 LUG COPPER
12. PHOTOCELL ENCLOSURE - ENCLOSURE TO BE FABRICATED FROM 5/8" EXPANDED STEEL MESH WITH WELDED SEAMS AND MOUNTING FLANGES. HOT DIP GALVANIZED AFTER FABRICATION. TYPE 5052 - H32 ALUMINUM WITH 5/8" x 5/8" OPENINGS EQUIVALENT TO 5/8" EXPANDED STEEL MESH MAY BE USED AS ALTERNATIVE MATERIAL. SEE PHOTOCELL ENCLOSURE MOUNTING DETAILS, STANDARD PLAN J-3b.
13. HINGED FRONT FACING DOOR WITH 4" x 4" MIN. POLISHED WIRE GLASS WINDOW.
14. HINGED DEAD FRONT WITH 1/4 TURN FASTENERS OR SLIDE LATCH
15. CABINET MAIN BONDING JUMPER. BUSS SHALL BE 4 LUG TINNED COPPER. SEE CABINET MAIN BONDING JUMPER DETAIL, STANDARD PLAN J-3b.
16. SPARE BRANCH BREAKER (DPST 20AMP- 240/480 VOLT)
17. METAL WIRING DIAGRAM HOLDER
18. REMOVABLE EQUIPMENT MOUNTING PAN
19. 6" x 6" MIN. UNDERGROUND FEED - SERVICE WIREWAY (LEFT REAR CORNER)
20. SCREENED VENTS, 2 REQUIRED, 1 EACH SIDE, LOUVERED PLATES
21. HEATER BREAKER (SPST 15 AMP - 120/240 VOLT)
22. THERMOSTAT, 40°F CLOSURE - 3 DIFFERENTIAL
23. STRIP HEATER (100 WATT NOMINAL), WITH TERMINAL STRIP COVER
24. TRANSFORMER BREAKER (DPST 15 AMP - 480 VOLT)
25. DRY TRANSFORMER (480/120 VOLT) 3 KVA COPPER BUSSED AND COPPER WOUND
26. RESERVED FOR METER, CURRENT TRANSFORMER AND/OR DISCONNECT SWITCH AS REQUIRED BY THE UTILITY
27. 24 CIRCUIT PANEL BOARD - MINIMUM SIZE WITH SEPARATE MAIN BREAKER.
28. LABEL CABINET WITH BUSSWORK RATING

GENERAL NOTES

200 AMP TYPE 240/480 1ø SERVICE CABINET

1. SEE STD. SPECIFICATION 9-29.24, SERVICE CABINETS.
2. HINGES SHALL HAVE STAINLESS STEEL OR BRASS PINS.
3. CABINETS SHALL BE RATED NEMA 3R AND SHALL INCLUDE TWO RAIN TIGHT VENTS.
4. METERING EQUIPMENT DOORS SHALL BE PAD LOCKABLE. EACH DOOR SHALL BE GASKETED. INSTALL BEST CX CONSTRUCTION CORE ON BOTTOM LEFT AND RIGHT DOORS. SEE DOOR HINGE DETAIL, STD. PLAN J-3b; CONCEALED HEAVY DUTY STAINLESS STEEL LIFT OFF HINGES ARE ALLOWED AS AN ALTERNATIVE. UPPER LEFT DOOR SHALL HAVE 3 HINGES, LOWER LEFT DOOR SHALL HAVE 2 HINGES, AND RIGHT DOOR SHALL HAVE 3 HINGES. LOWER DOOR SHALL HAVE A TWO POSITION DOOR STOP ASSEMBLY.
5. THE FOLLOWING EQUIPMENT WITHIN THE SERVICE ENCLOSURE SHALL HAVE AN APPROPRIATELY ENGRAVED PHENOLIC NAME PLATE ATTACHED WITH SCREWS OR RIVETS: KEY NUMBERS 2, 3, 4, 6, 7, 8, 9, 16, 21 AND 25. KEY NUMBER 4 NAME PLATE SHALL READ: "PHOTOCELL BYPASS TEST ON" AND "PHOTOCELL TEST OFF- AUTOMATIC". SEE SERVICE CABINET DETAIL.
6. METERING ARRANGEMENTS VARY WITH DIFFERENT SERVING UTILITIES. THE UTILITY MAY REQUIRE METER BASE MOUNTING IN THE ENCLOSURE, ON THE SIDE, OR ON THE BACK OF THE ENCLOSURE. THE UTILITY MAY REQUIRE THE DIMENSION BETWEEN THE DOOR AND THE FRONT OF THE SAFETY SOCKET BOX TO BE LESS THAN THE 11 INCHES SHOWN IN THE LEFT SIDE- SAFETY SOCKET BOX MOUNTING DETAIL, SEE STD. PLAN J-3b. THE CONTRACTOR SHALL VERIFY THE SERVING UTILITY'S REQUIREMENTS PRIOR TO FABRICATION OF AND INSTALLING THE SERVICE EQUIPMENT.
7. THE DIMENSIONS SHOWN ARE MINIMUM AND SHALL BE ADJUSTED TO ACCOMMODATE THE VARIOUS SIZES OF EQUIPMENT INSTALLED.
8. ALL BUSSWORK SHALL BE HIGH GRADE COPPER AND SHALL EQUAL OR EXCEED THE MAIN BREAKER RATING. ALL BREAKERS SHALL BOLT ONTO THE BUSSWORK. JUMPERING OF BREAKERS SHALL NOT BE ALLOWED. BUSSWORK SHALL ACCOMMODATE ALL FUTURE EQUIPMENT AS SHOWN IN THE BREAKER SCHEDULE.
9. THE PHOTOCELL UNIT SHALL BE CENTERED IN THE PHOTOCELL ENCLOSURE TO PERMIT 360 DEGREE ROTATION OF THE PHOTOCELL WITHOUT REMOVAL OF THE PHOTOCELL UNIT OR THE PHOTOCELL ENCLOSURE.
10. ALL INTERNAL WIRE RUNS SHALL BE IDENTIFIED WITH "TO - FROM" CODED TAGS LABELED WITH THE CODE LETTERS AND/OR NUMBERS SHOWN ON THE SCHEDULES. APPROVED PVC OR POLYOLEFIN WIRE MARKING SLEEVES SHALL BE USED.
11. ALL NUTS, BOLTS, AND WASHERS USED FOR MOUNTING PHOTOCELL ENCLOSURE SHALL BE STAINLESS STEEL.
12. A 1% TOLERANCE IS ALLOWED FOR ALL DIMENSIONS.
13. SEE PLANS FOR BREAKER SCHEDULE.
14. INSTALL CONDUIT COUPLINGS ON ALL CONDUITS. PLACE COUPLINGS FLUSH WITH TOP OF CONCRETE FOUNDATION.
15. SEAL CABINET TO FOUNDATION WITH A 1/2" BEAD OF SILICONE. APPLY SILICONE TO DRY SURFACE ONLY.
16. THE METER BASE PORTION OF THIS SERVICE WAS DESIGNED TO MEET METERING PORTION OF EUSERC DRAWING 309 REQUIREMENTS.

EXPIRES MAY 5, 2005

NOTE: THIS PLAN IS NOT A LEGAL ENGINEERING DOCUMENT BUT AN ELECTRONIC DUPLICATE. THE ORIGINAL, SIGNED BY THE ENGINEER AND APPROVED FOR PUBLICATION, IS KEPT ON FILE AT THE WASHINGTON STATE DEPARTMENT OF TRANSPORTATION. A COPY MAY BE OBTAINED UPON REQUEST.

SERVICE CABINET TYPE E (0 - 200 AMP TYPE 240/480 SINGLE PHASE)

STANDARD PLAN J-3d

SHEET 1 OF 1 SHEET

APPROVED FOR PUBLICATION

Harold J. Peterfeso — STATE DESIGN ENGINEER — *11-05-03* — DATE

Washington State Department of Transportation

DATE	REVISION	BY
09/2003	REVISED KEY NOTE 16	MHG

EFFECTIVE: AUGUST 6, 2012 TO August 4, 2013

EFFECTIVE: AUGUST 6, 2012 TO August 4, 2013
EFFECTIVE: AUGUST 6, 2012 TO August 4, 2013

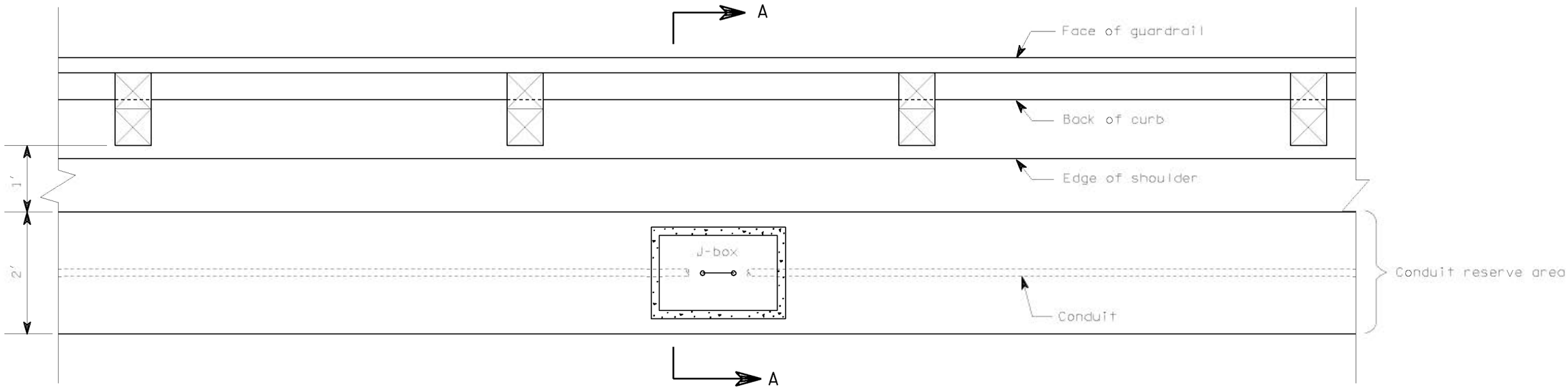

PLAN

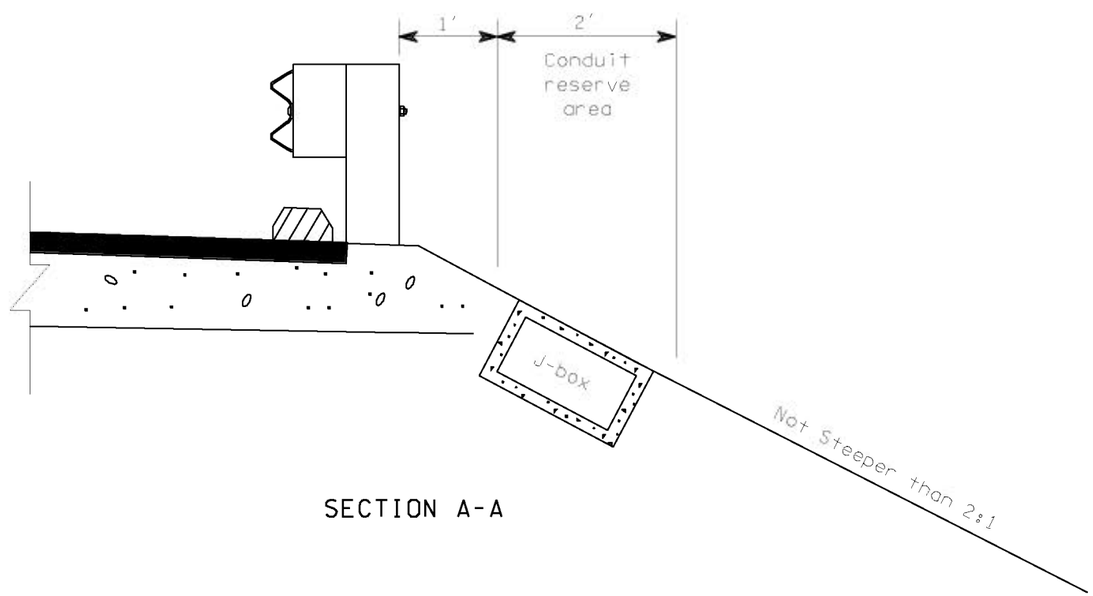

SECTION A-A

ELECTRICAL CONDUIT PLACEMENT

WILLIAM D. BROWN
STATE OF WASHINGTON
0014812
REGISTERED
PROFESSIONAL ENGINEER

EXPIRES SEPT 10, 1998

NOTE: THIS PLAN IS NOT A LEGAL ENGINEERING DOCUMENT BUT HAS BEEN PREPARED BY THE WASHINGTON STATE DEPARTMENT OF TRANSPORTATION. A COPY MAY BE OBTAINED UPON REQUEST.

STANDARD PLAN J-10

APPROVED FOR PUBLICATION

Clifford E. Mansfield	*07-18-97*
STATE DESIGN ENGINEER	DATE

WASHINGTON STATE DEPARTMENT OF TRANSPORTATION
OLYMPIA, WASHINGTON

EFFECTIVE: AUGUST 6, 2012 TO August 4, 2013
EFFECTIVE: AUGUST 6, 2012 TO August 4, 2013
EFFECTIVE: AUGUST 6, 2012 TO August 4, 2013
EFFECTIVE: AUGUST 6, 2012 TO August 4, 2013

EFFECTIVE: AUGUST 6, 2012 TO August 4, 2013
EFFECTIVE: AUGUST 6, 2012 TO August 4, 2013

DRAWN BY: LISA CYFORD

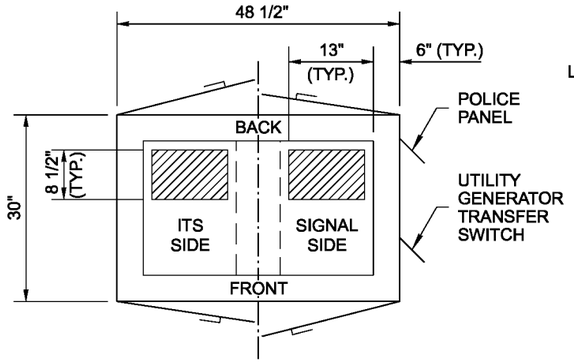

TYPE 332D CONTROLLER CABINET

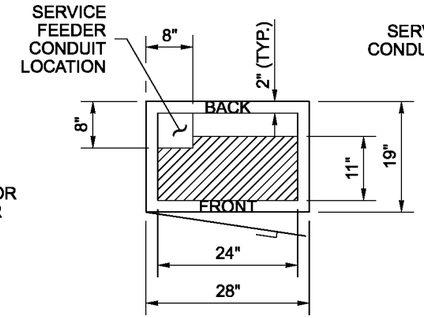

TYPE D SERVICE CABINET

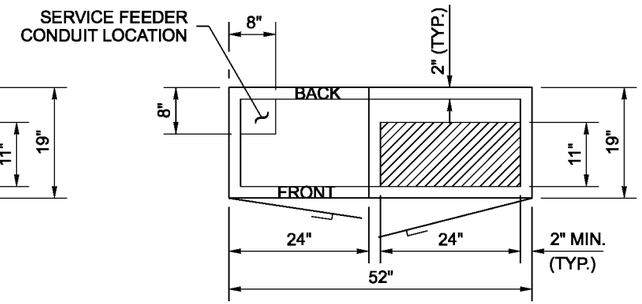

TYPE E SERVICE CABINET

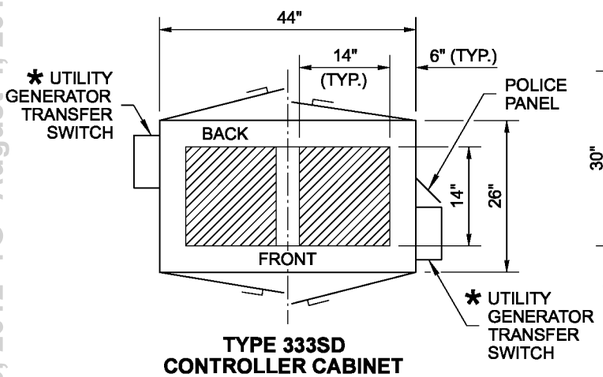

TYPE 333SD CONTROLLER CABINET

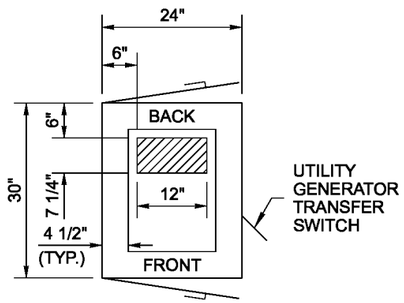

TYPE 332 UNINTERRUPTABLE POWER SUPPLY CABINET

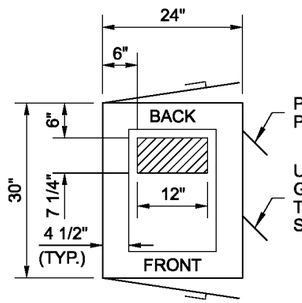

TYPE 332 CONTROLLER CABINET

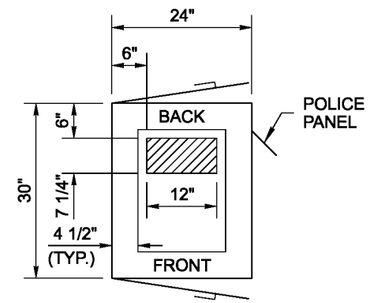

TYPE 334

* TO BE INSTALLED BY REGION MAINTAINANCE PERSONNEL. PROVIDE A 15' PIGTAIL. (SEE NOTE 12)

CONDUIT PLACEMENT LOCATION AREA (OR TRANSFORMER HIGH VOLTAGE CONDUIT AREA)

LOW VOLTAGE CONDUIT PLACEMENT LOCATION

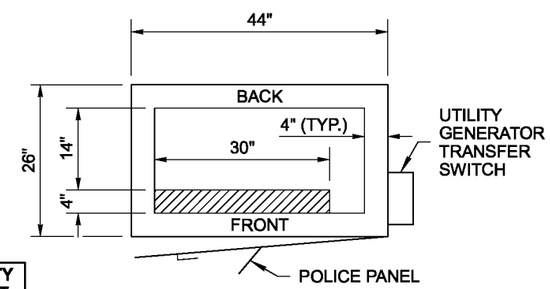

NEMA P44 CONTROLLER CABINET

CONSTRUCTION NOTES

1. Drive ground rods before placing concrete. Move rod(s) and drain tiles with cover(s) as required to achieve full ground penetration. Maintain a 6' minimum clearance between ground rods and 6" from foundation edge as detailed on **Standard Plan J-60.05.**
2. GRS conduits penetrating all cabinets shall be terminated with grounding end bushing and bonded to the cabinet grounding bus. All PVC conduits penetrating cabinet shall be terminated with end bell bushings.
3. Install conduit couplings on all conduits. Place couplings flush with top of concrete. If PVC conduits are specified, the conduit stub and end bell bushing shall not be glued to the coupling.
4. 4" diam. × 1/2" deep sump. Slope foundation within cabinet footprint toward sump. Drainpipe shall be 3/8" diam. polyethylene or copper tubing.
5. The Type D Service shall not be installed on a raised section. All other cabinets shall be installed on 3 1/2" or 9" cabinet footing.
6. Cabinet power supply conduit.
7. Conduits for service grounding electrodes.

CONTROLLER OR CABINET BASE	SIZE W × D	CAPACITY CONDUIT DIAMETER
TYPE 332	24" × 30"	12"
TYPE 332D	48.5" × 30"	24" (1)
NEMA P44	44" × 26"	15"
TYPE 333SD	44" × 26"	48" (2)
TYPE 334	24" × 30"	12"
TRANSFORMER	**SIZE W × D**	
UP TO 3 KVA	18" × 12"	8"
3.1 TO 12.5 KVA	24" × 20"	12"
12.6 TO 35.0 KVA	32" × 30"	15"
UNINTERRUPTABLE POWER SUPPLY	**SIZE W × D**	
332 CABINET	16" × 16"	12"

(1) 12" OF CONDUIT IN EACH LOCATION SHOWN

(2) 24" OF CONDUIT IN EACH LOCATION SHOWN

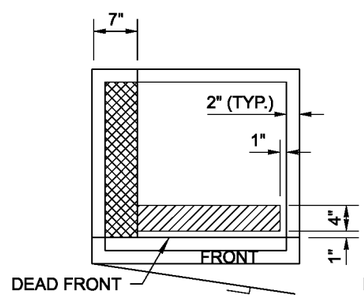

12.6 TO 35.0 KVA TRANSFORMER

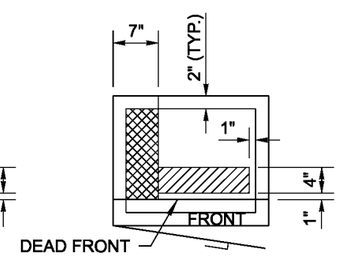

3.1 TO 12.5 KVA TRANSFORMER

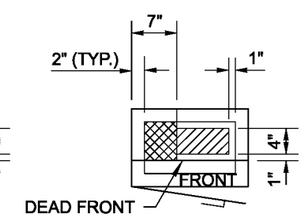

UP TO 3 KVA TRANSFORMER

PLAN VIEWS
CABINET FOOTPRINT AND CONDUIT PLACEMENT LOCATIONS

NOTES

1. The cabinets shown in these details are shown for illustrative purposes only. The Contractor shall verify the plans and substitute those cabinets in place of the cabinets shown in these details. The Contractor shall install each cabinet type in the locations and orientations shown in these details.
2. The Contractor shall install the conduits in the locations shown. Conduits shall extend 2" min. above the coupling. The conduit containing unfused utility conductors shall extend into the utility chase.
3. The ground rods, drain tiles, associated conduits, and #4 rebar, 90° with 30" legs, may be omitted if no transformer or service cabinet is to be installed.
4. The cabinets shall be attached to the foundation with 4 each: 1/2" × 12" × 2" × 4" hot dip galv. anchor bolts, washers, and nuts. Stainless steel epoxy anchors may be used as an alternative, and shall be 1/2" diam. × 9", or 5/8" diam. × 8". Bolts shall extend 1 1/2" min. to 2" max. above the concrete pad.
5. All reinforcing steel shall be embedded 2" below surface of concrete.
6. Place a 1/2" bead of silicone between cabinets and foundation.
7. Two ground rods are required for foundations with a service cabinet or transformer cabinet. See **Standard Plan J-60.05** for details.
8. Concrete shall be class 3000. See **Standard Specification 8-20.3(4).**
9. Verify dead front locations from manufacturer prior to placing conduit in foundation.
10. Foundations installed in, or adjacent to, sidewalks shall be constructed with the top flush with the sidewalk surface and grade, not including concrete risers for cabinets. Omit chamfers where foundation abuts sidewalk.
11. If the slope is 3H : 1V or steeper, special considerations may be necessary for safety reasons. Coordinate with Maintenance and Project Engineer.
12. For Type 333SD Controller Cabinet, the cabinet vendor shall allow the Utility Transfer Switch to be installed on either side of the cabinet. The Utility Transfer Switch unit shall be shipped inside the cabinet for field installation by Region Maintenance Personnel.
13. Height of cabinet footings shall be adjusted to serve environmental needs. Adjust length of conduits and rebar accordingly.
14. Use (1) #4 hoop for a 3 1/2" cabinet footing and (2) #4 hoops for a 9" cabinet footing.
15. The Police Panel location is set by Industry Standards on all Controller Cabinets.
16. See **Standard Plan J-3b** for Foundation Construction and Conduit Routing for Type B Modified Service Cabinet with Controller Cabinet.
17. Verify pad size and location with Project Engineer prior to placing.
18. Field bend #4 rebar around the Generator Anti-Theft Tie Down Unit when required.
19. See **Standard Plan J-3c** and **J-3d** for additional details for Type D and Type E Service Cabinets.

NOTE: THIS PLAN IS NOT A LEGAL ENGINEERING DOCUMENT BUT AN ELECTRONIC DUPLICATE. THE ORIGINAL, SIGNED BY THE ENGINEER AND APPROVED FOR PUBLICATION, IS KEPT ON FILE AT THE WASHINGTON STATE DEPARTMENT OF TRANSPORTATION. A COPY MAY BE OBTAINED UPON REQUEST.

CABINET ORIENTATION CONDUIT LAYOUT AND FOUNDATION DETAIL

STANDARD PLAN J-10.10-01

SHEET 1 OF 5 SHEETS

APPROVED FOR PUBLICATION

Pasco Bakotich III — STATE DESIGN ENGINEER

05-11-11 — DATE

Washington State Department of Transportation

EFFECTIVE: AUGUST 6, 2012 TO August 4, 2013
EFFECTIVE: AUGUST 6, 2012 TO August 4, 2013
EFFECTIVE: AUGUST 6, 2012 TO August 4, 2013
EFFECTIVE: AUGUST 6, 2012 TO August 4, 2013

EFFECTIVE: AUGUST 6, 2012 TO August 4, 2013

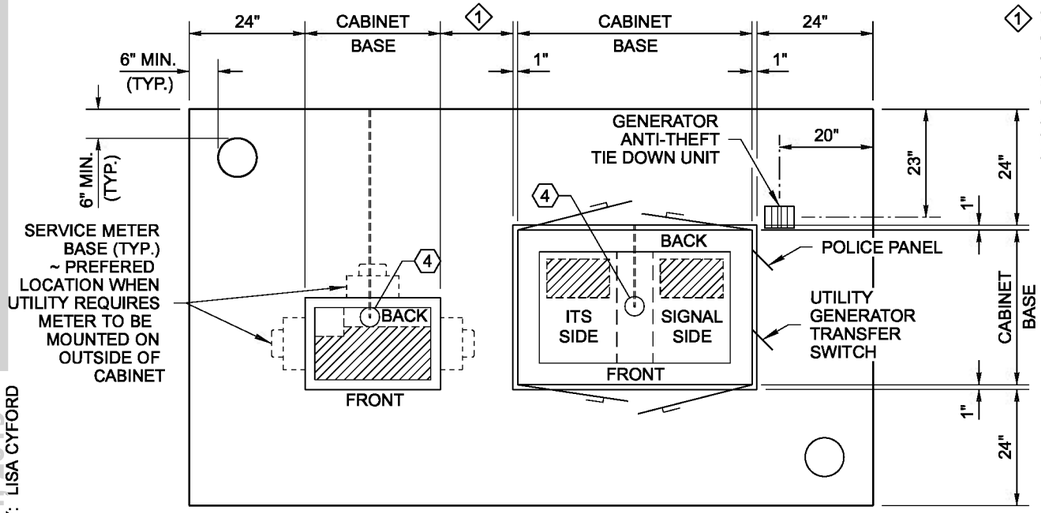

1 With Meter Base mounted on inside of Service Cabinet, allow 6" between Cabinets

With Meter Base mounted on outside of Service Cabinet, allow 36" from face of meter to adjacent Cabinet. See **Standard Plan J-3c**

PLAN VIEW

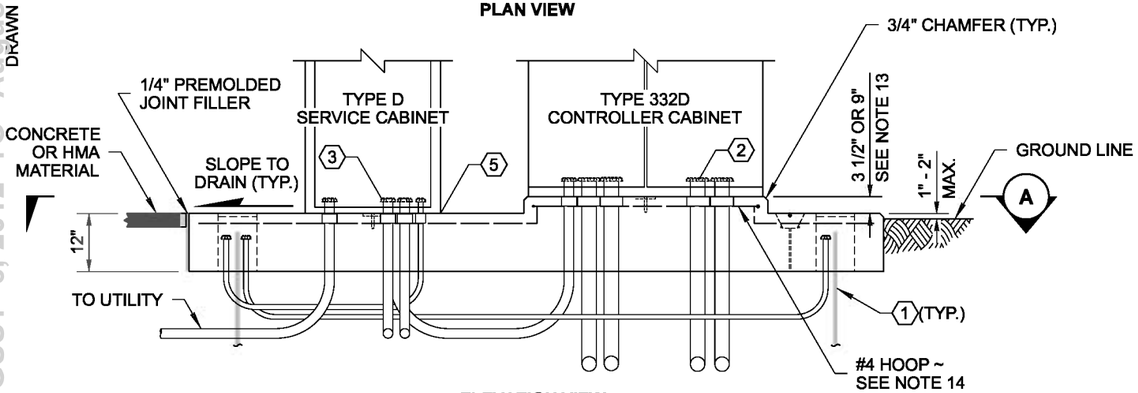

ELEVATION VIEW

TWO CABINET FOUNDATION

(TYPE D SERVICE AND TYPE 332D CONTROLLER CABINET SHOWN)

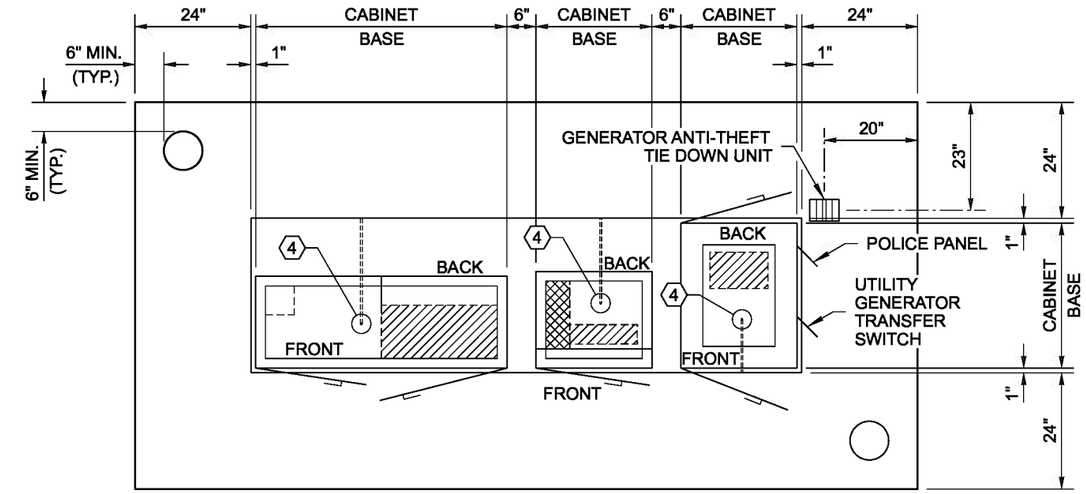

PLAN VIEW

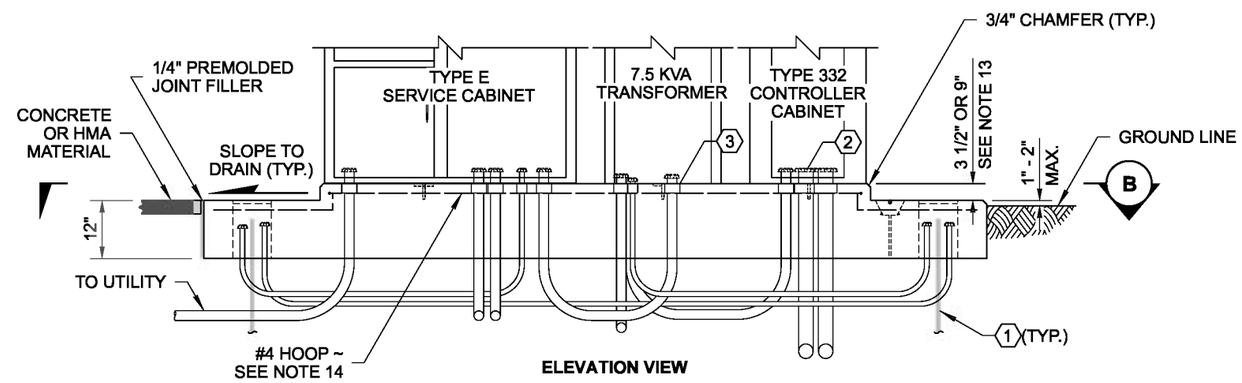

ELEVATION VIEW

THREE CABINET FOUNDATION

(TYPE E SERVICE, 7.5 KVA TRANSFORMER AND TYPE 332 CONTROLLER CABINET SHOWN)

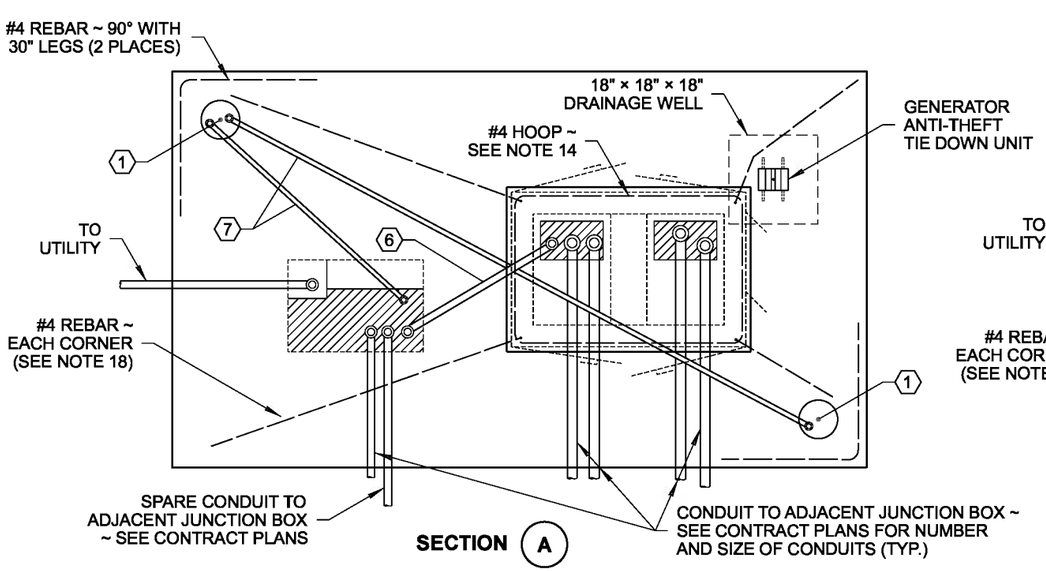

SECTION A

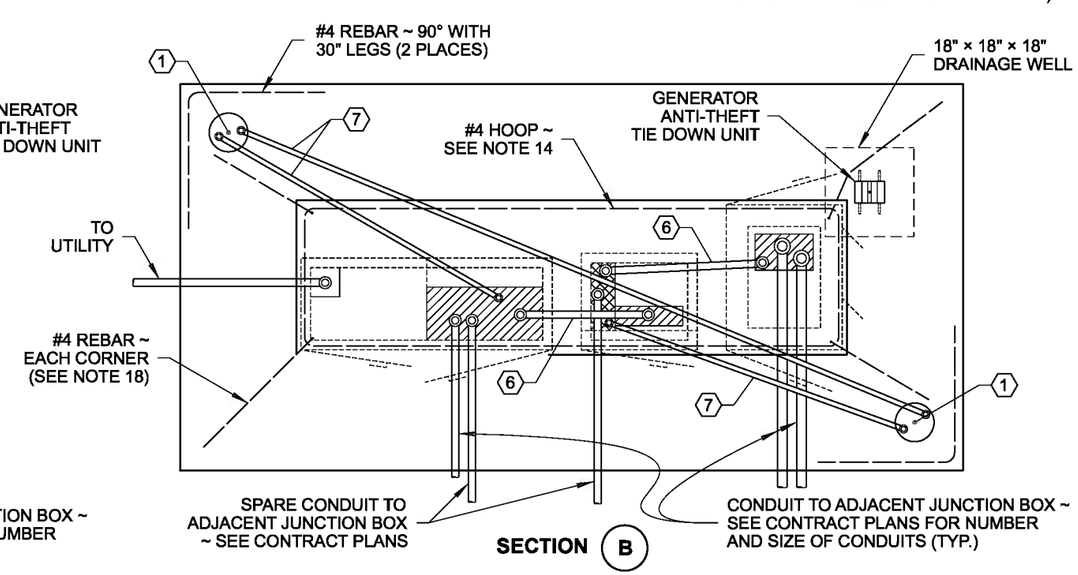

SECTION B

BRIAN J. WALSH
STATE OF WASHINGTON
36103
REGISTERED
PROFESSIONAL ENGINEER

NOTE: THIS PLAN IS NOT A LEGAL ENGINEERING DOCUMENT BUT AN ELECTRONIC DUPLICATE. THE ORIGINAL, SIGNED BY THE ENGINEER AND APPROVED FOR PUBLICATION, IS KEPT ON FILE AT THE WASHINGTON STATE DEPARTMENT OF TRANSPORTATION. A COPY MAY BE OBTAINED UPON REQUEST.

CABINET ORIENTATION CONDUIT LAYOUT AND FOUNDATION DETAIL

STANDARD PLAN J-10.10-01

SHEET 2 OF 5 SHEETS

APPROVED FOR PUBLICATION

Pasco Bakotich III — STATE DESIGN ENGINEER

05-11-11 — DATE

Washington State Department of Transportation

DRAWN BY: LISA CYFORD

EFFECTIVE: AUGUST 6, 2012 TO August 4, 2013

EFFECTIVE: AUGUST 6, 2012 TO August 4, 2013

DRAWN BY: LISA CYFORD

2 With Meter Base mounted on inside of Service Cabinet, allow 6" between cabinets

With Meter Base mounted on outside of Service Cabinet, allow 36" from face of meter to adjacent Cabinet. See **Standard Plan J-3d**

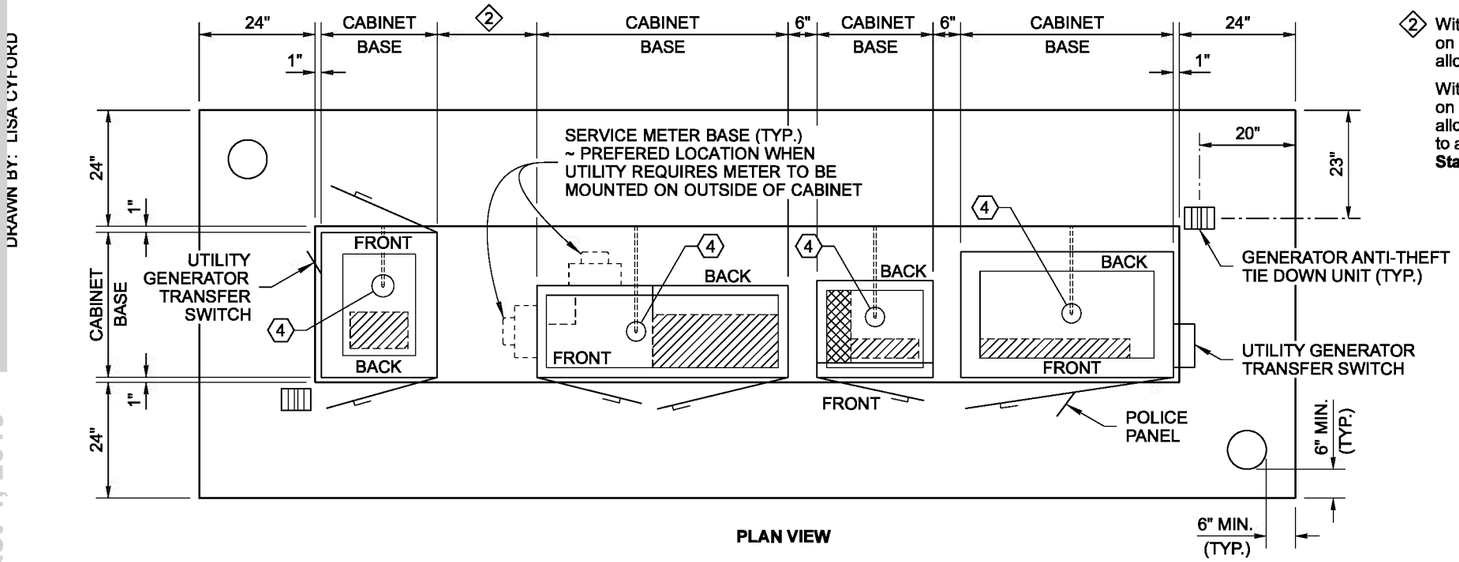

PLAN VIEW

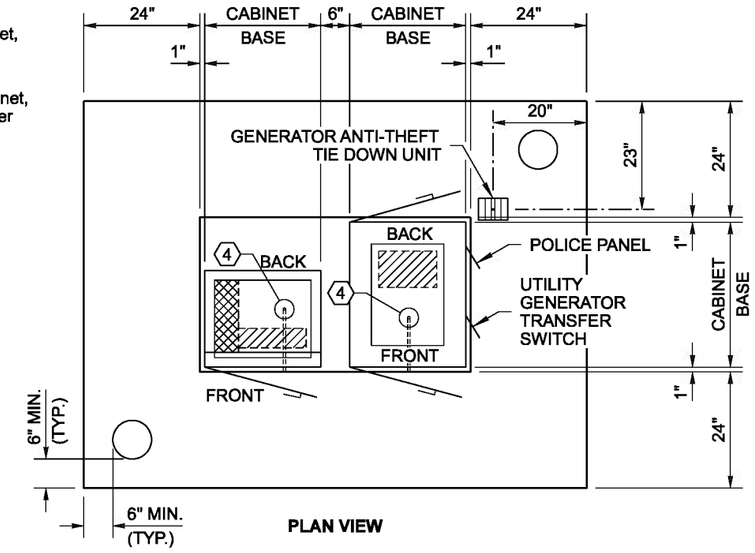

PLAN VIEW

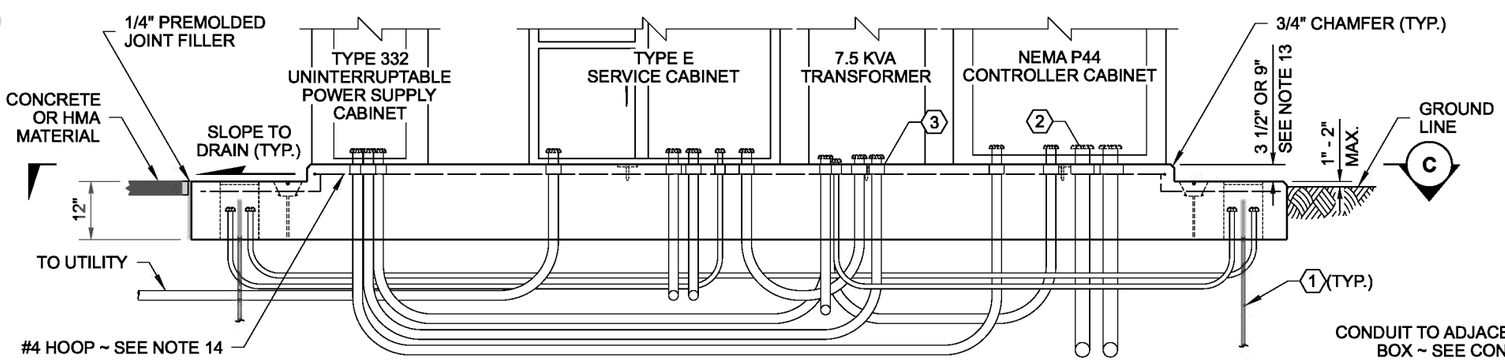

ELEVATION VIEW

FOUR CABINET FOUNDATION

(TYPE 332 UNINTERRUPTABLE POWER SUPPLY CABINET, TYPE E SERVICE CABINET, 7.5 KVA TRANSFORMER AND NEMA P44 CONTROLLER CABINET SHOWN)

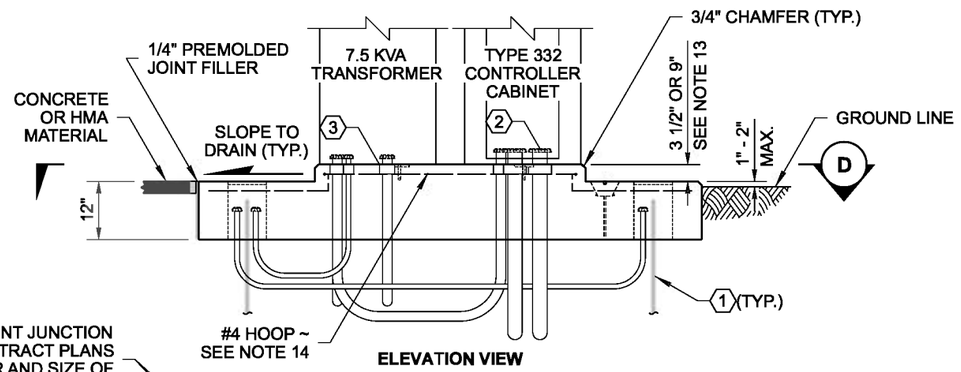

ELEVATION VIEW

TWO CABINET FOUNDATION

(7.5 KVA TRANSFORMER AND TYPE 332 CONTROLLER CABINET SHOWN)

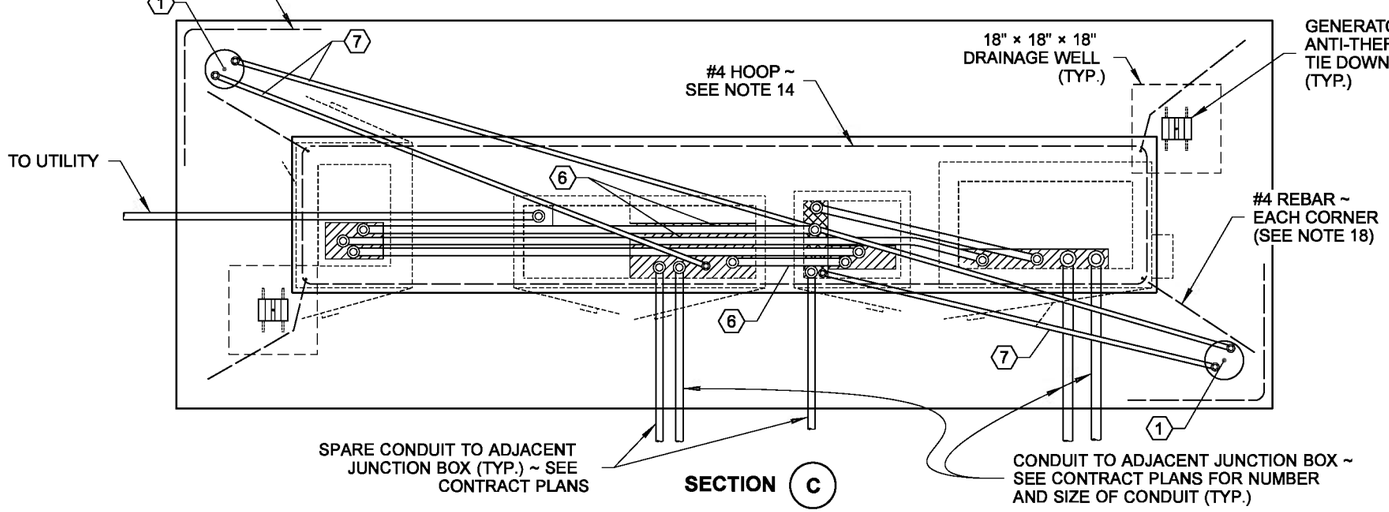

SECTION C

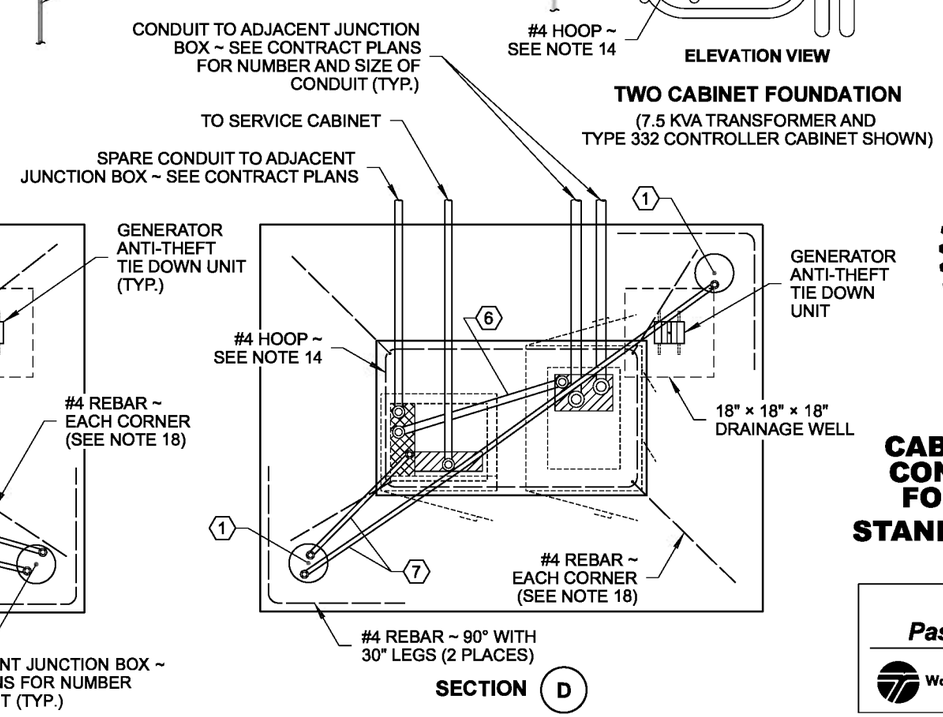

SECTION D

BRIAN J. WALSH
STATE OF WASHINGTON
36103
REGISTERED
PROFESSIONAL ENGINEER

NOTE: THIS PLAN IS NOT A LEGAL ENGINEERING DOCUMENT BUT AN ELECTRONIC DUPLICATE. THE ORIGINAL, SIGNED BY THE ENGINEER AND APPROVED FOR PUBLICATION, IS KEPT ON FILE AT THE WASHINGTON STATE DEPARTMENT OF TRANSPORTATION. A COPY MAY BE OBTAINED UPON REQUEST.

CABINET ORIENTATION CONDUIT LAYOUT AND FOUNDATION DETAIL

STANDARD PLAN J-10.10-01

SHEET 3 OF 5 SHEETS

APPROVED FOR PUBLICATION

Pasco Bakotich III — STATE DESIGN ENGINEER

05-11-11 — DATE

Washington State Department of Transportation

EFFECTIVE: AUGUST 6, 2012 TO August 4, 2013

EFFECTIVE: AUGUST 6, 2012 TO August 4, 2013

DRAWN BY: LISA CYFORD

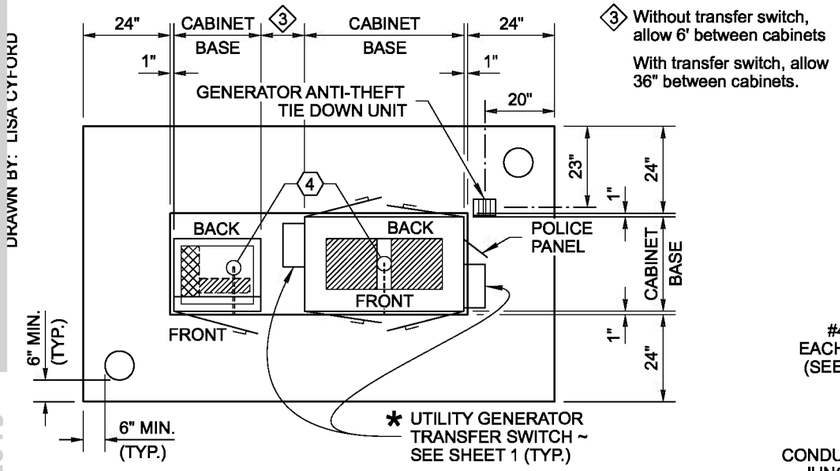

③ Without transfer switch, allow 6' between cabinets

With transfer switch, allow 36" between cabinets.

PLAN VIEW

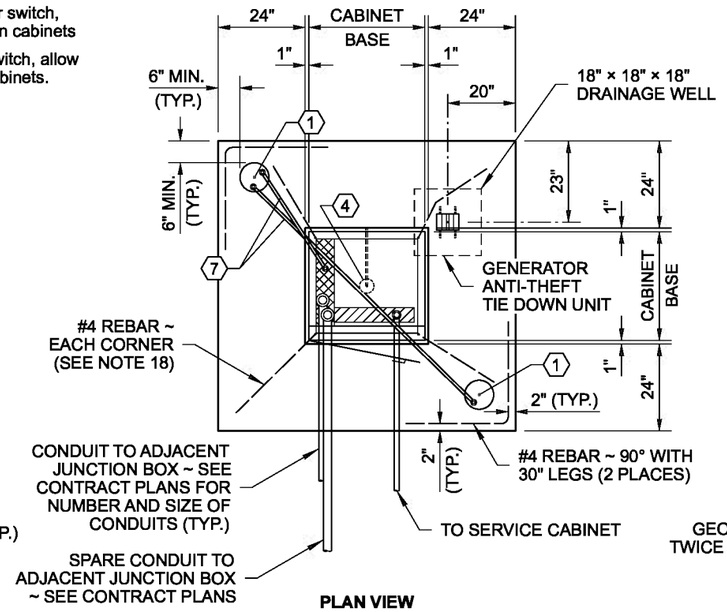

PLAN VIEW

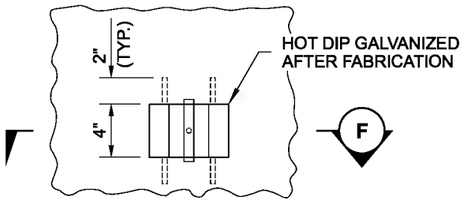

PLAN VIEW

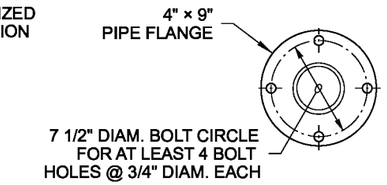

PEDESTAL BASE DETAIL

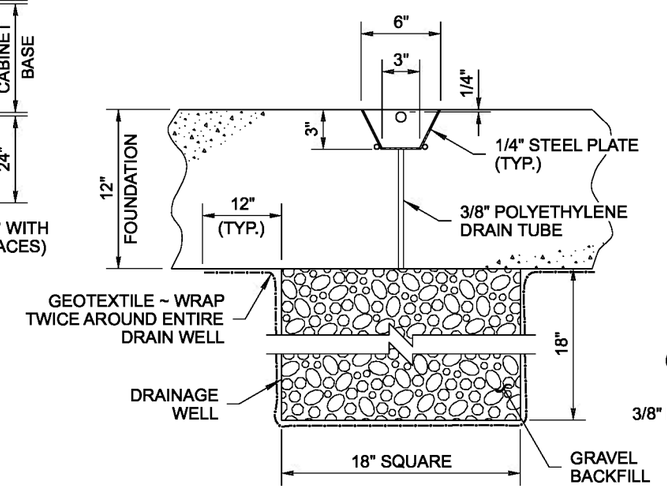

ELEVATION VIEW

SECTION (F)

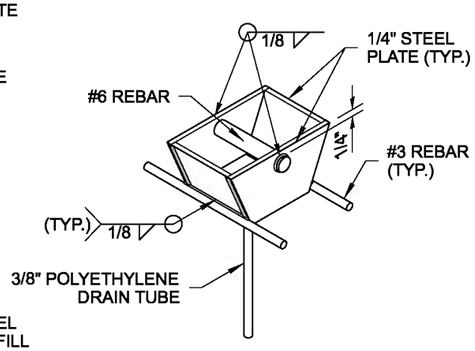

ISOMETRIC VIEW

GENERATOR ANTI-THEFT TIE DOWN UNIT
(FABRICATE IF NOT AVAILABLE COMMERCIALLY)

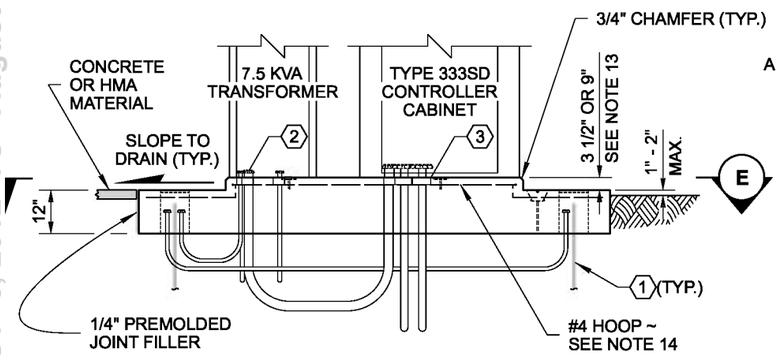

ELEVATION VIEW

TWO CABINET FOUNDATION
(7.5 KVA TRANSFORMER AND TYPE 333SD CONTROLLER CABINET SHOWN)

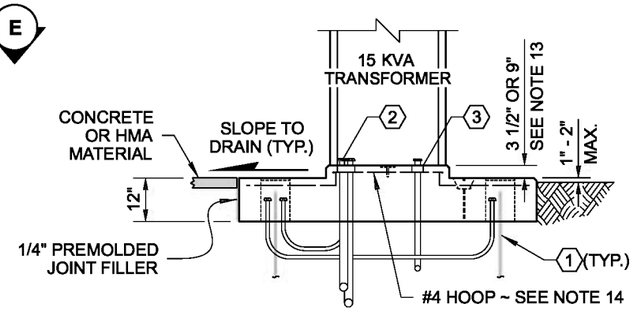

ELEVATION VIEW

SINGLE CABINET FOUNDATION
(15 KVA TRANSFORMER SHOWN)

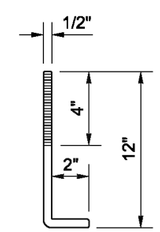

ANCHOR BOLT
(SEE NOTE 4)

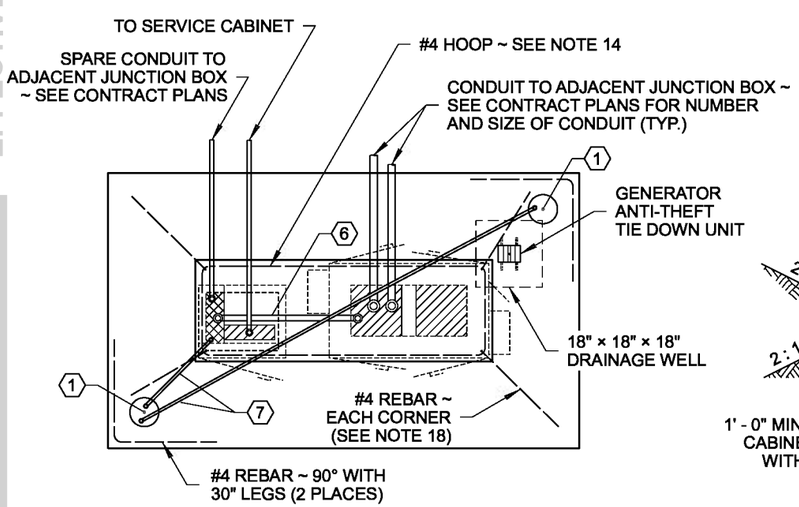

SECTION (E)

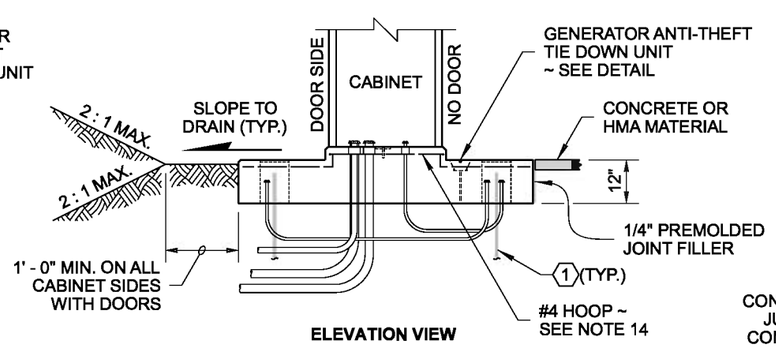

ELEVATION VIEW

TYPICAL FOUNDATION CROSS SECTION
(SEE NOTE 12)

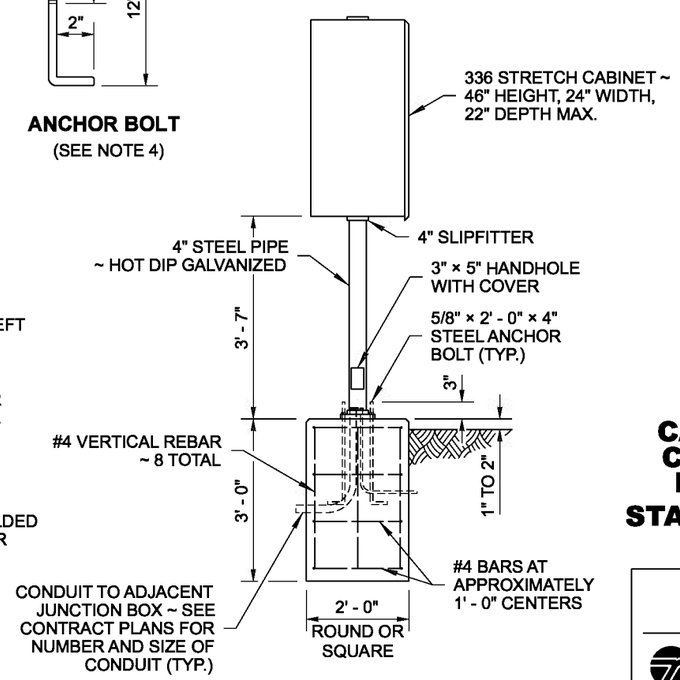

PEDESTAL MOUNT

NOTE: THIS PLAN IS NOT A LEGAL ENGINEERING DOCUMENT BUT AN ELECTRONIC DUPLICATE. THE ORIGINAL, SIGNED BY THE ENGINEER AND APPROVED FOR PUBLICATION, IS KEPT ON FILE AT THE WASHINGTON STATE DEPARTMENT OF TRANSPORTATION. A COPY MAY BE OBTAINED UPON REQUEST.

CABINET ORIENTATION CONDUIT LAYOUT AND FOUNDATION DETAIL

STANDARD PLAN J-10.10-01

SHEET 4 OF 5 SHEETS

APPROVED FOR PUBLICATION

Pasco Bakotich III	05-11-11
STATE DESIGN ENGINEER	DATE

Washington State Department of Transportation

EFFECTIVE: AUGUST 6, 2012 TO August 4, 2013

EFFECTIVE: AUGUST 6, 2012 TO August 4, 2013
EFFECTIVE: AUGUST 6, 2012 TO August 4, 2013

DRAWN BY: LISA CYFORD

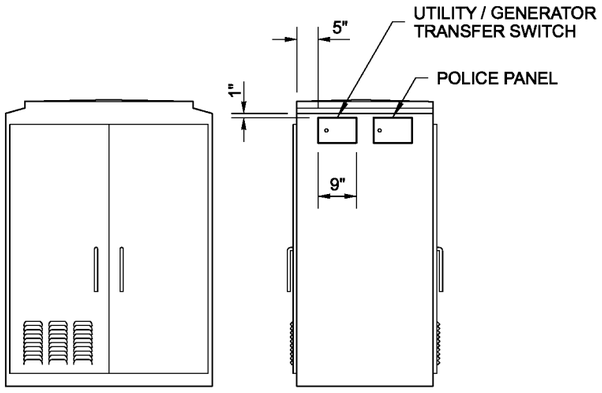

TYPE 332D CONTROLLER CABINET

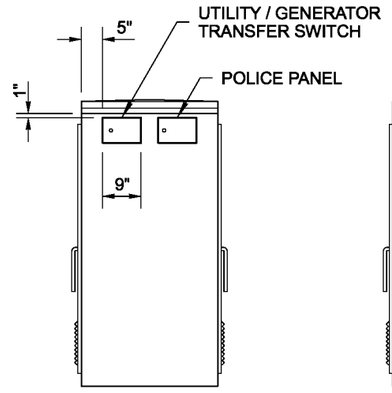

TYPE 332 CONTROLLER CABINET

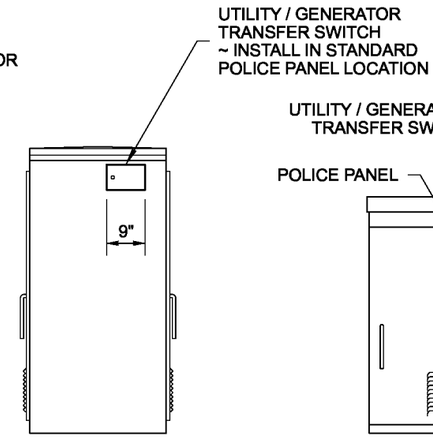

TYPE 332 UNINTERRUPTABLE POWER SUPPLY (UPS) CABINET

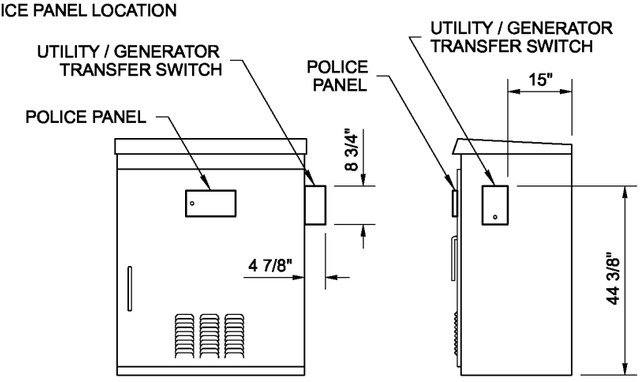

NEMA P44 CONTROLLER CABINET

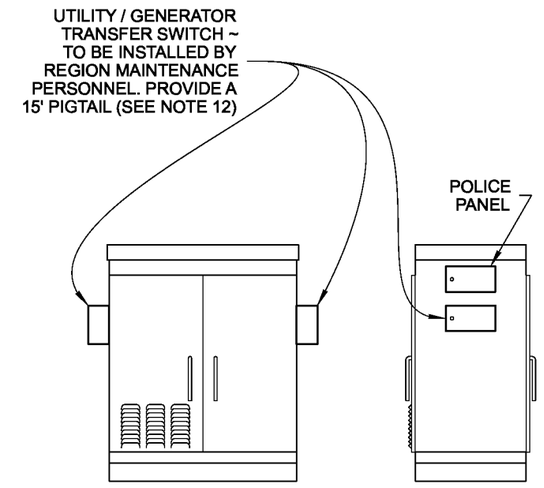

TYPE 333SD CONTROLLER CABINET

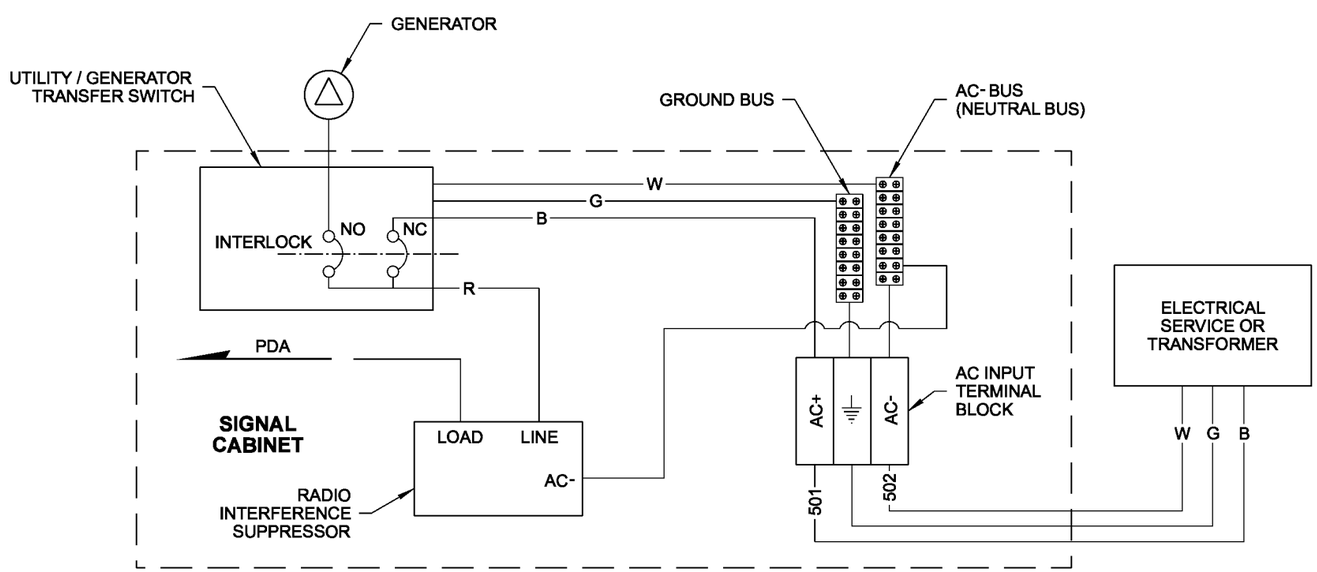

TRANSFER SWITCH CONNECTION TYPICAL WIRING DIAGRAM

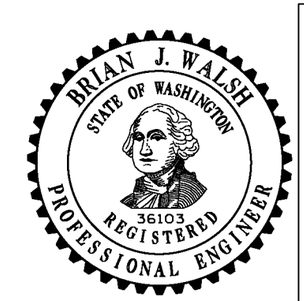

NOTE: THIS PLAN IS NOT A LEGAL ENGINEERING DOCUMENT BUT AN ELECTRONIC DUPLICATE. THE ORIGINAL, SIGNED BY THE ENGINEER AND APPROVED FOR PUBLICATION, IS KEPT ON FILE AT THE WASHINGTON STATE DEPARTMENT OF TRANSPORTATION. A COPY MAY BE OBTAINED UPON REQUEST.

CABINET ORIENTATION CONDUIT LAYOUT AND FOUNDATION DETAIL

STANDARD PLAN J-10.10-01

SHEET 5 OF 5 SHEETS

APPROVED FOR PUBLICATION

Pasco Bakotich III — STATE DESIGN ENGINEER

05-11-11 — DATE

Washington State Department of Transportation

EFFECTIVE: AUGUST 6, 2012 TO August 4, 2013
EFFECTIVE: AUGUST 6, 2012 TO August 4, 2013
EFFECTIVE: AUGUST 6, 2012 TO August 4, 2013
EFFECTIVE: AUGUST 6, 2012 TO August 4, 2013

EFFECTIVE: AUGUST 6, 2012 TO August 4, 2013
EFFECTIVE: AUGUST 6, 2012 TO August 4, 2013

DRAWN BY: LISA CYFORD

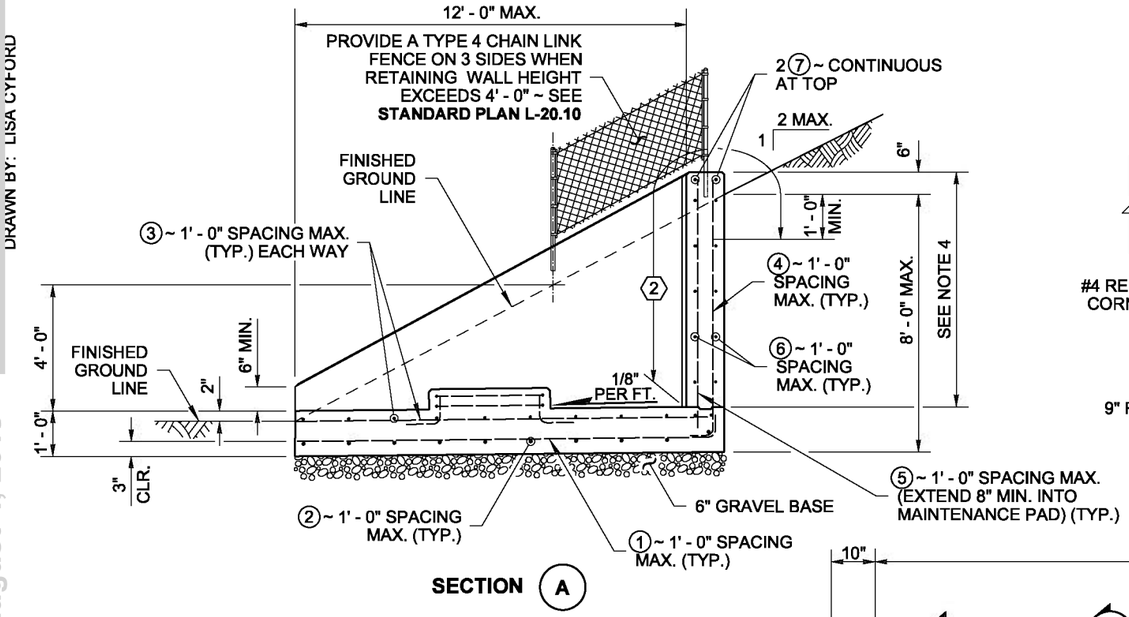

SECTION (A)

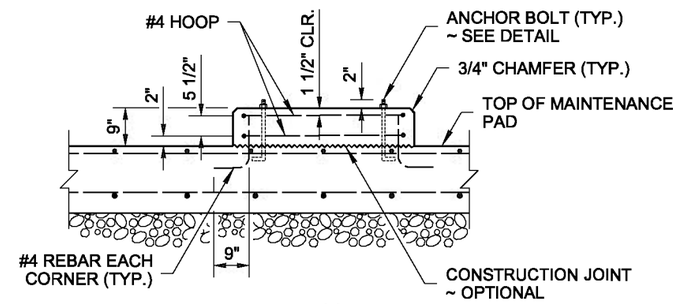

SECTION (B)

9" RAISED CABINET PAD SHOWN, 3 1/2" RAISED CABINET PAD SIMILAR WITH ONE #4 TOP HOOP

NOTES

1. Contractor shall orient the maintenance pad to align with the direction of natural grade as shown. Obtain Engineer's approval of maintenance pad orientation prior to proceeding with construction.
2. The maintenance pad and retaining walls have been designed to meet the requirements of the AASHTO LRFD Bridge Design Specifications 6th Edition, 2012.
3. Concrete for walls and bases shall be class 4000.
4. Height of wall varies to match slope of existing grade. Contractor shall field determine wall height and each maintenance pad location and obtain approval from the Engineer prior to proceeding with construction.
5. 3/4" chamfer for all exposed corners.
6. For grounding details, see **Standard Plan J-60.05.**
7. For cabinet and conduit details not shown, see **Standard Plan J-10.10.**
8. The Cabinets shall be attached to the foundation with 4 anchor bolts and located per the Cabinet supplier. Stainless steel epoxy anchor bolt may be used as an alternative and shall be 1/2" diameter by 9" long.

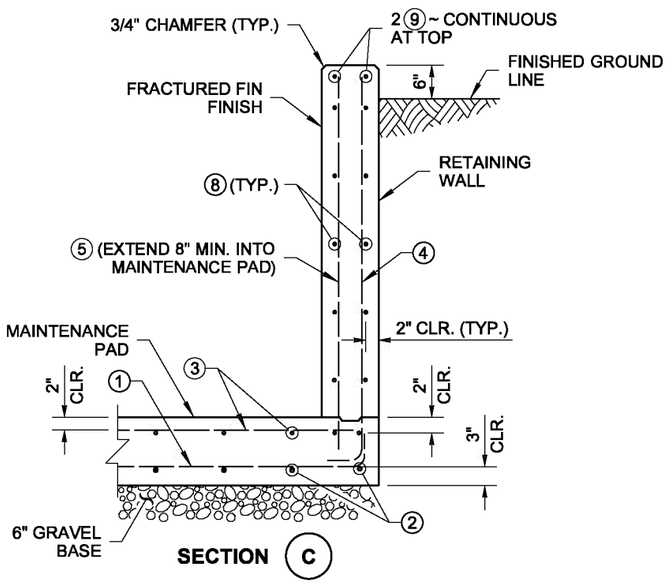

SECTION (C)

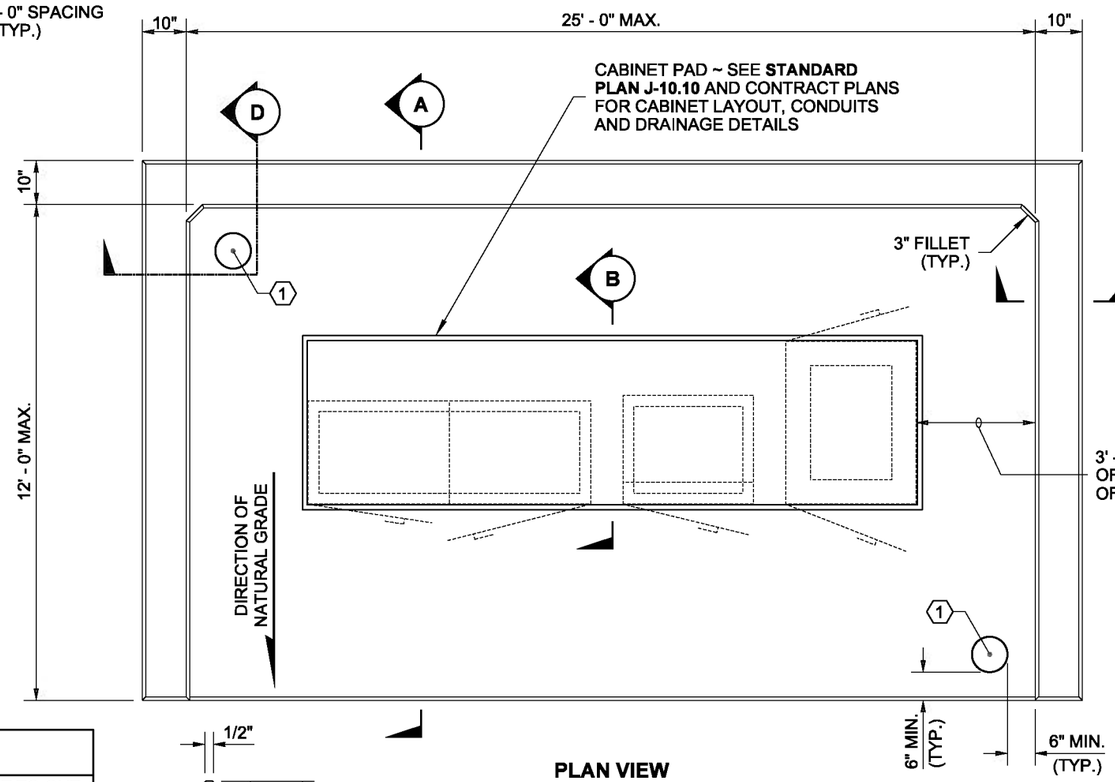

PLAN VIEW

CABINETS SHOWN FOR DISPLAY PURPOSES ONLY
SEE CONTRACT PLANS FOR CABINET LAYOUT

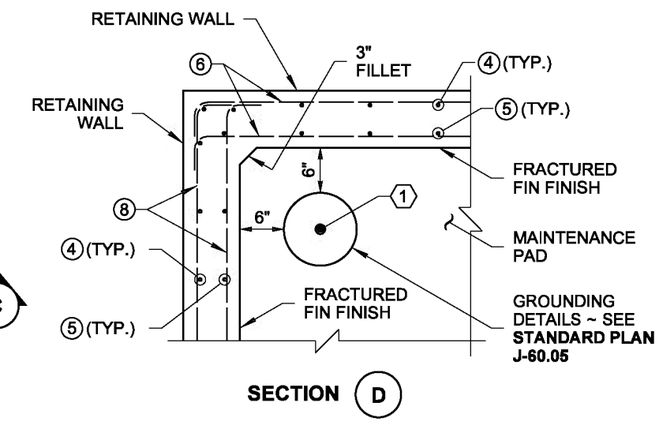

SECTION (D)

REINFORCING STEEL BENDING DIAGRAM

SEE **STD. SPEC. 9-07.1(2)** FOR BENDING DIAM. ALL DIMENSIONS ARE OUT TO OUT

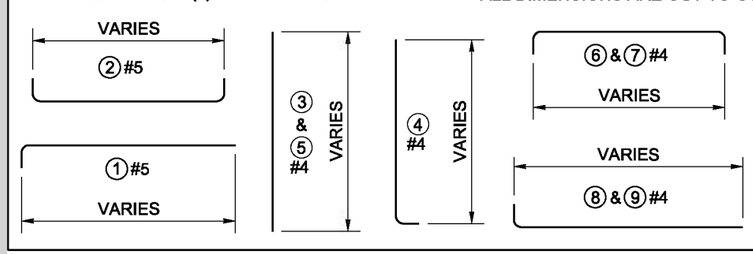

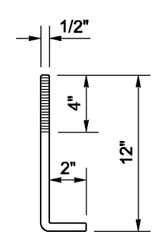

ANCHOR BOLT

ASTM A307 WITH WASHER AND NUT ~ GALVANIZED PER AASHTO M 232

① Drive ground rods before placing concrete. Move rod(s) and drain tile(s) with cover(s) as required to achieve full ground penetration. Maintain a 6' - 0" minimum clearance between ground rods as detailed on **Standard Plan J-60.05.**

② Limits of pigmented sealer. Typical for all retaining walls.

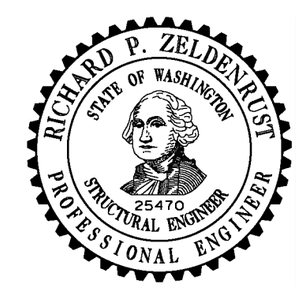

NOTE: THIS PLAN IS NOT A LEGAL ENGINEERING DOCUMENT BUT AN ELECTRONIC DUPLICATE. THE ORIGINAL, SIGNED BY THE ENGINEER AND APPROVED FOR PUBLICATION, IS KEPT ON FILE AT THE WASHINGTON STATE DEPARTMENT OF TRANSPORTATION. A COPY MAY BE OBTAINED UPON REQUEST.

CABINET ENCLOSURE ON SLOPE

STANDARD PLAN J-10.15-00

SHEET 1 OF 1 SHEET

APPROVED FOR PUBLICATION

Pasco Bakotich III — STATE DESIGN ENGINEER — *07/02/12* — DATE

Washington State Department of Transportation

EFFECTIVE: AUGUST 6, 2012 TO August 4, 2013
EFFECTIVE: AUGUST 6, 2012 TO August 4, 2013
EFFECTIVE: AUGUST 6, 2012 TO August 4, 2013
EFFECTIVE: AUGUST 6, 2012 TO August 4, 2013

EFFECTIVE: AUGUST 6, 2012 TO August 4, 2013
EFFECTIVE: AUGUST 6, 2012 TO August 4, 2013

EFFECTIVE: AUGUST 6, 2012 TO August 4, 2013
DRAWN BY: LISA CYFORD

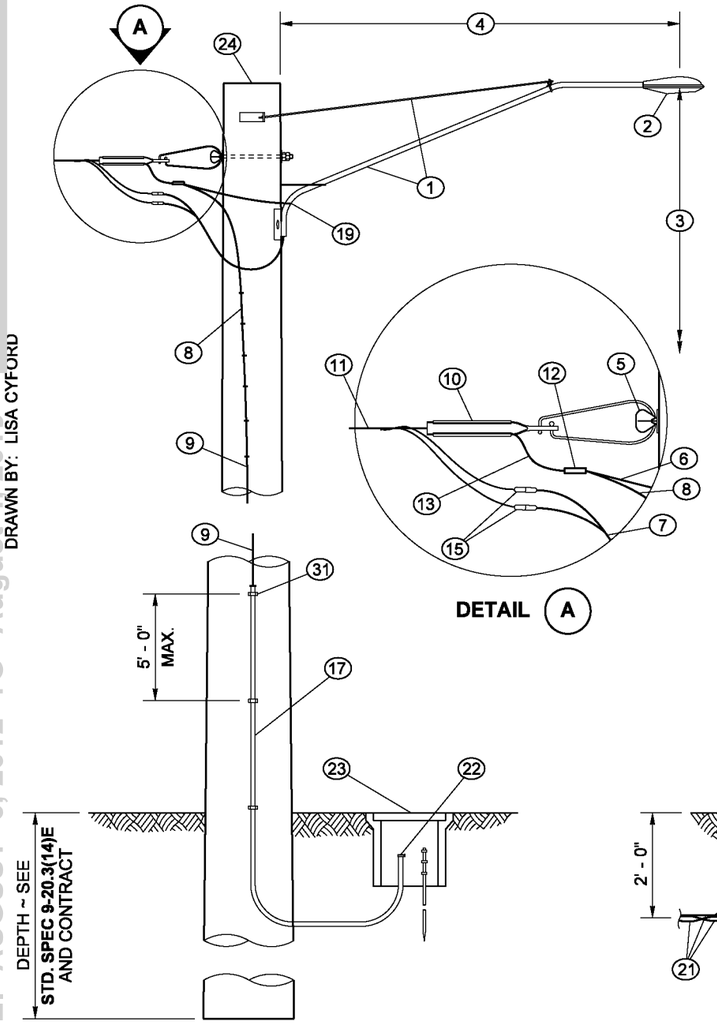

DETAIL A

TIMBER LUMINAIRE SUPPORT

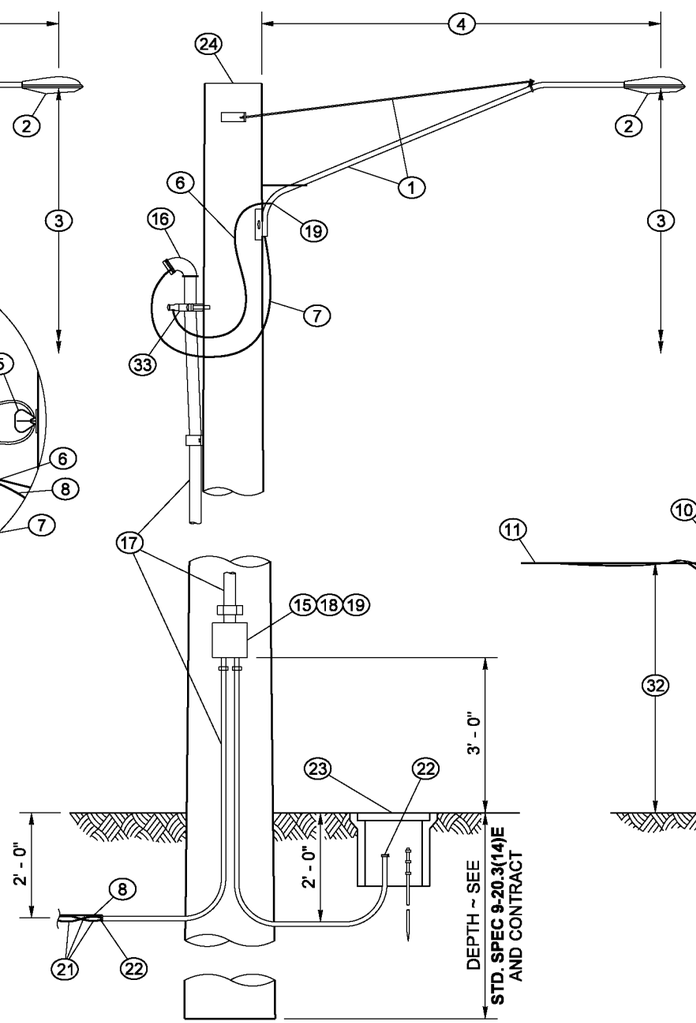

TIMBER LUMINAIRE SUPPORT

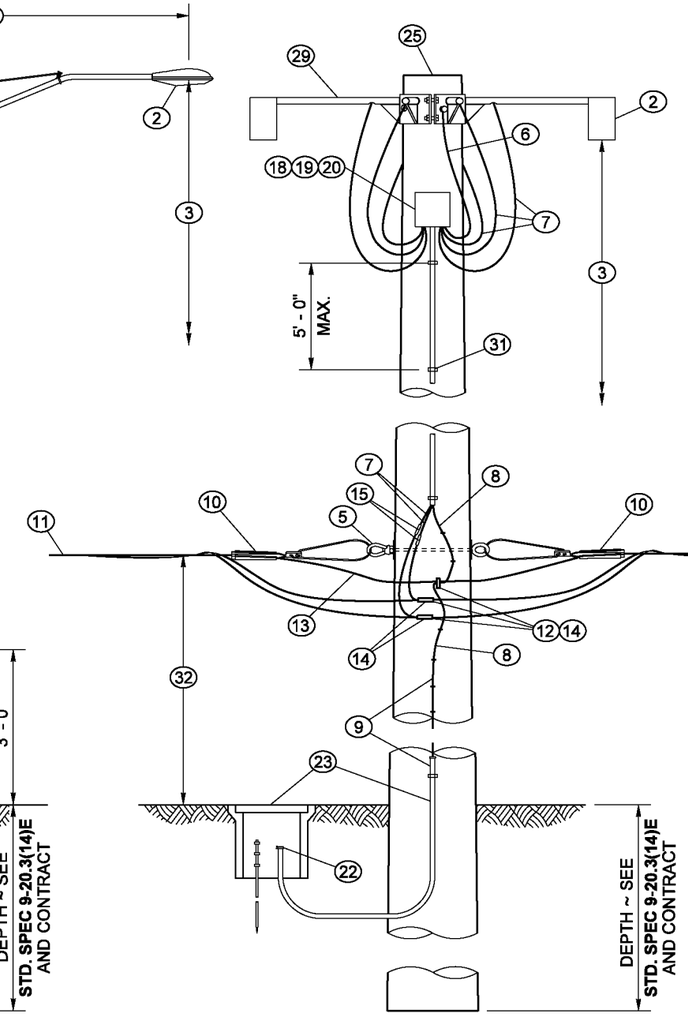

HIGH MAST TIMBER
LUMINAIRE SUPPORT

SHOWN FOR 480 VAC POWER FEED.
INCREASE CONDUCTOR AND FUSE SIZE
AS REQUIRED FOR 240 VAC POWER FEED.

NOTES

1. Timber luminaire supports are allowed only for temporary installations where breakaway or slip bases are not required.
2. When down guys are required, See **Standard Plan J-15.15.**

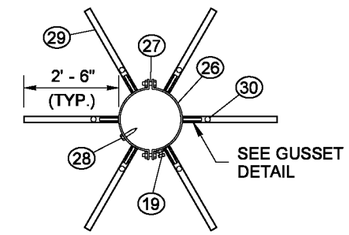

PLAN VIEW
LUMINAIRE SUPPORT BRACKET

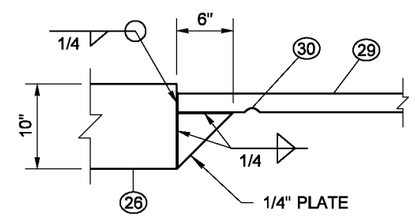

GUSSET DETAIL

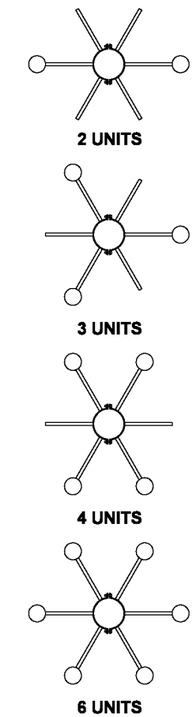

PLAN VIEW
TYPICAL LUMINAIRE MOUNTING
CONFIGURATIONS

KEY

1. GALVANIZED STEEL OR ALUMINUM MAST ARM - CONFIGURATIONS VARIES WITH MANUFACTURER
2. LUMINAIRE - SEE CONTRACT FOR TYPE AND NUMBER
3. MOUNTING HEIGHT - ROADWAY TO LUMINAIRE ELEVATION DIFFERENCE ± 2% - SEE CONTRACT
4. MAST ARM LENGTH - SEE CONTRACT
5. 5/8" GALVANIZED THIMBLE EYE BOLT (SINGLE OR DOUBLE) WITH WASHERS AND NUTS OR EYENUT
6. BONDING JUMPER
7. POLE AND BRACKET CABLE
8. EQUIPMENT GROUNDING CONDUCTOR - SEE **STANDARD PLAN J-60.05**
9. FROM GROUND LINE TO 10' ABOVE GROUND, ENCLOSE EQUIPMENT GROUNDING CONDUCTOR IN GALVANIZED STEEL CONDUIT, CODE SIZED. ABOVE 10' FROM GROUND, STAPLE EQUIPMENT GROUNDING CONDUCTOR TO POLE. CONNNECT TO SUPPLEMENTAL GROUND, PER **STANDARD PLAN J-60.05**
10. SERVICE WEDGE CLAMP
11. ACSR TRIPLEX OR FOURPLEX CONDUCTORS - SEE CONTRACT
12. CU \ AL SPLIT BOLT CONNECTOR
13. MESSENGER CABLE
14. INSULATING TAPE FOR WATERPROOF CONNECTION
15. FUSED QUICK DISCONNECT, PER **STANDARD SPECIFICATION 9-29.7** - USE 30 AMP FUSES FOR HIGH MAST SUPPORTS
16. WEATHERHEAD - SIZE AS REQUIRED
17. STEEL CONDUIT
18. 8" × 8" × 4" NEMA 3R JUNCTION BOX WITH RAIN-TIGHT HUBS AND REMOVABLE COVER
19. GROUNDING LUG
20. 12 POLE TERMINAL BLOCK
21. DIRECT BURIAL CONDUCTORS OR GALVANIZED STEEL CONDUITS WITH CONDUCTORS - SEE CONTRACT
22. GROUNDING BUSHING
23. SUPPLEMENTAL GROUND - SEE **STANDARD PLAN J-60.05**
24. CLASS 5 TIMBER POLE - LENGTH SUFFICIENT FOR MOUNTING HEIGHT AND BURIAL DEPTH
25. CLASS 2 TIMBER POLE - LENGTH SUFFICIENT FOR MOUNTING HEIGHT AND BURIAL DEPTH
26. 1/4" × 10" PLATE COLLAR BENT TO FIT POLE DIAMETER (8" - 10")
27. 3/8" × 4" MACHINE BOLTS (FOUR REQUIRED) WITH WASHERS AND NUTS
28. 1/2" LAG BOLTS (SIX REQUIRED) - DRILL 9/16" HOLE IN PLATE
29. 2" PIPE
30. 3/4" WIRE HOLE 2" FROM GUSSET PLATE, SMOOTH HOLE EDGES
31. 1" NON-METALLIC CONDUIT WITH 1" STRAPS SPACED MAXIMUM 5' APART AND NEAR ALL CONDUIT ENDS
32. DISTANCE VARIES, 35' MIN. TO 50' MAX. DEPENDING ON LINE CLEARANCE REQUIREMENTS
33. CONDUIT GROUND CLAMP

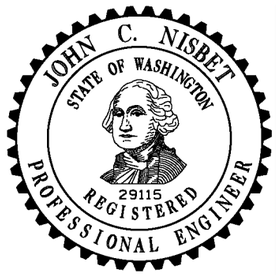

NOTE: THIS PLAN IS NOT A LEGAL ENGINEERING DOCUMENT BUT AN ELECTRONIC DUPLICATE. THE ORIGINAL, SIGNED BY THE ENGINEER AND APPROVED FOR PUBLICATION, IS KEPT ON FILE AT THE WASHINGTON STATE DEPARTMENT OF TRANSPORTATION. A COPY MAY BE OBTAINED UPON REQUEST.

TIMBER LIGHT STANDARD

STANDARD PLAN J-15.10-00

SHEET 1 OF 1 SHEET

APPROVED FOR PUBLICATION

Pasco Bakotich III — STATE DESIGN ENGINEER
05/18/12 — DATE

Washington State Department of Transportation

EFFECTIVE: AUGUST 6, 2012 TO August 4, 2013
EFFECTIVE: AUGUST 6, 2012 TO August 4, 2013

EFFECTIVE: AUGUST 6, 2012 TO August 4, 2013
EFFECTIVE: AUGUST 6, 2012 TO August 4, 2013

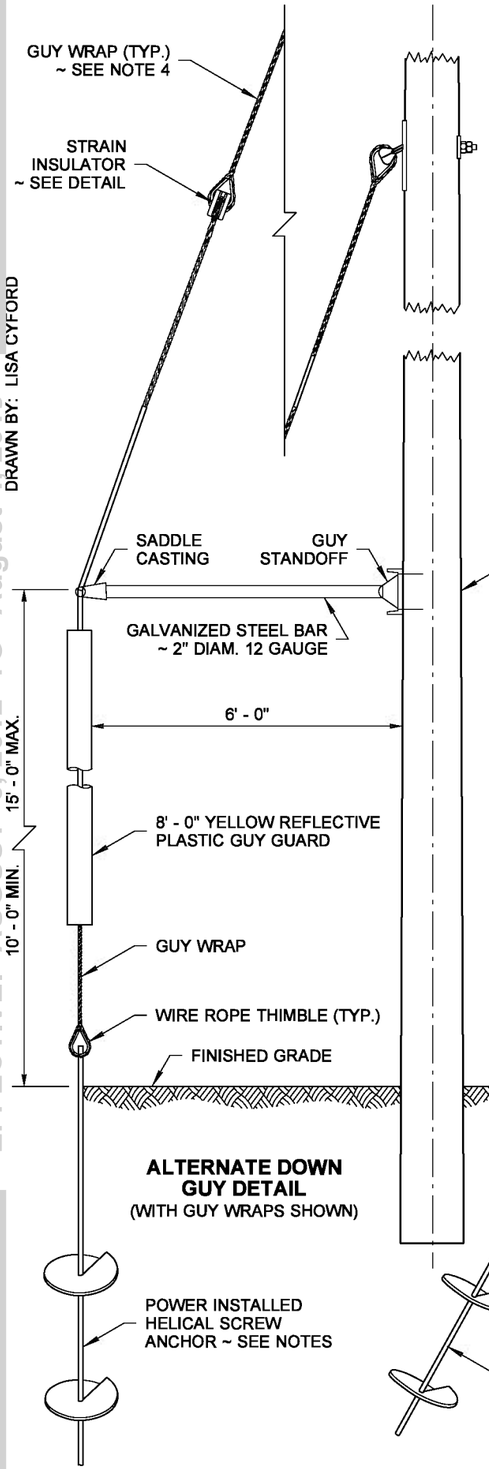

ALTERNATE DOWN GUY DETAIL
(WITH GUY WRAPS SHOWN)

ANCHOR ASSEMBLIES
(SEE **STANDARD SPECIFICATION 9-29.4**)

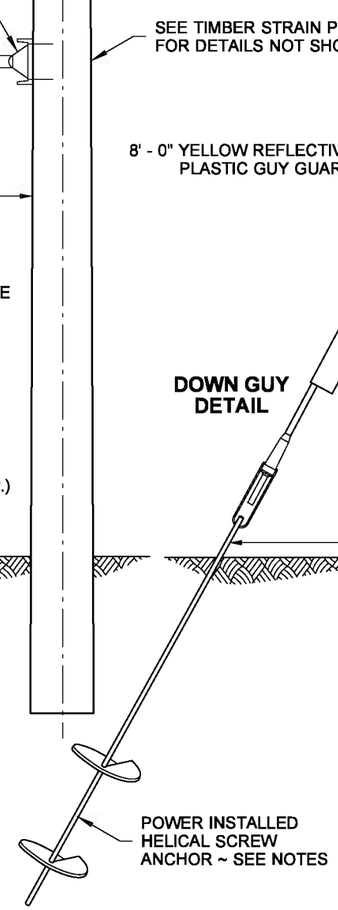

DOWN GUY DETAIL

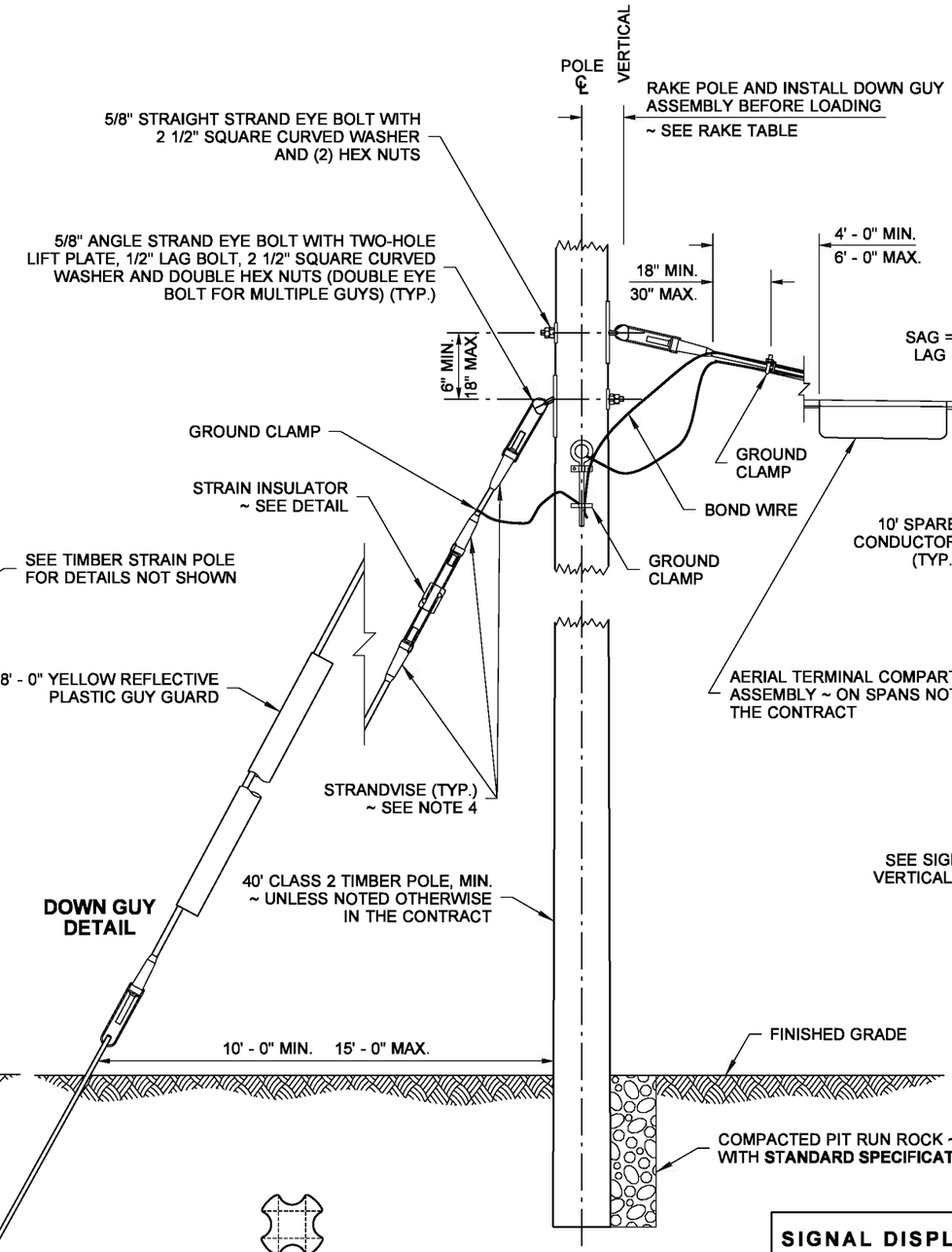

TIMBER STRAIN POLE
(WITH STRANDVISE SHOWN)

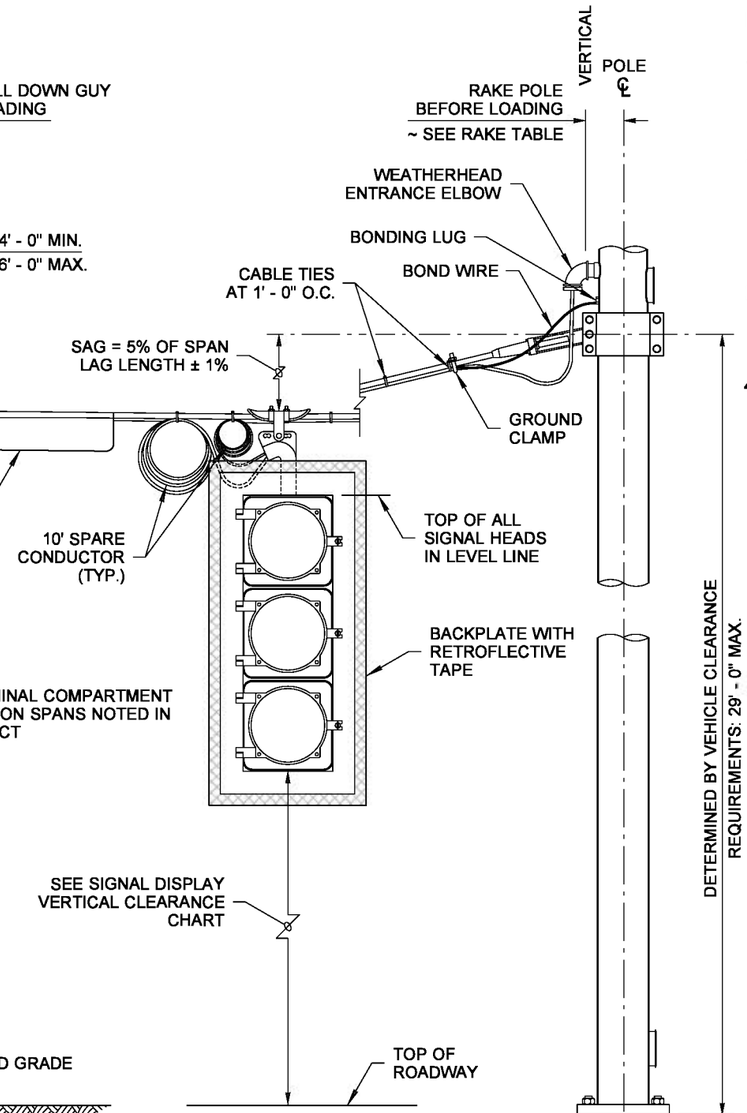

TYPE IV OR TYPE V STRAIN POLE STANDARD
(SEE NOTE 3)

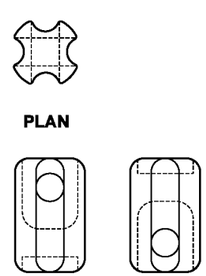

STRAIN INSULATOR DETAIL

NOTES

1. An eight-way expanding anchor may be used as an acceptable alternate to power installed helical screw anchor.
2. If anchor hole diameter is greater than nominal diameter of folded anchors, a 5' cover of 6" to 12" size rock shall be tamped in to replace the disturbed soil immediately above the anchor.
3. See **Standard Plan J-7c** for Type IV or Type V Strain Pole details not shown.
4. Strandvise or Guy Wrap may be used.

RAKE TABLE

POLE CLASS	RAKE
1900#	7"
2700#	6"
3700#	5"
4800#	5"
5400#	4"
4300#	4"
7200#	4"
ALL TIMBER	6"

SIGNAL DISPLAY VERTICAL CLEARANCE TO ROADWAY

HORIZONTAL DISTANCE FROM STOP LINE	40'		45'		50'		53' - 180'	
	MIN.	MAX.	MIN.	MAX.	MIN.	MAX.	MIN.	MAX.
3 SECTION 12" 5 SECTION DOGHOUSE 12"	16.5'	17.5"	16.5'	19.2'	16.5'	20.9'	16.5'	22.0'
4 SECTION 12"	16.5'	17.0'	16.5'	18.0'	16.5'	19.7'	16.5'	20.8'
5 SECTION 12"	16.5'	17.0'	16.5'	17.5"	16.5'	18.5'	16.5'	19.6'

MEASURED FROM BOTTOM OF SIGNAL HEAD HOUSING TO ROADWAY

NOTE: THIS PLAN IS NOT A LEGAL ENGINEERING DOCUMENT BUT AN ELECTRONIC DUPLICATE. THE ORIGINAL, SIGNED BY THE ENGINEER AND APPROVED FOR PUBLICATION, IS KEPT ON FILE AT THE WASHINGTON STATE DEPARTMENT OF TRANSPORTATION. A COPY MAY BE OBTAINED UPON REQUEST.

SPAN WIRE INSTALLATION

STANDARD PLAN J-15.15-00

SHEET 1 OF 1 SHEET

APPROVED FOR PUBLICATION

Pasco Bakotich III — STATE DESIGN ENGINEER
06-16-10 — DATE

Washington State Department of Transportation

DRAWN BY: LISA CYFORD

EFFECTIVE: AUGUST 6, 2012 TO August 4, 2013
EFFECTIVE: AUGUST 6, 2012 TO August 4, 2013
EFFECTIVE: AUGUST 6, 2012 TO August 4, 2013
EFFECTIVE: AUGUST 6, 2012 TO August 4, 2013

EFFECTIVE: AUGUST 6, 2012 TO August 4, 2013
EFFECTIVE: AUGUST 6, 2012 TO August 4, 2013

DRAWN BY: ELENA BRUNSTEIN

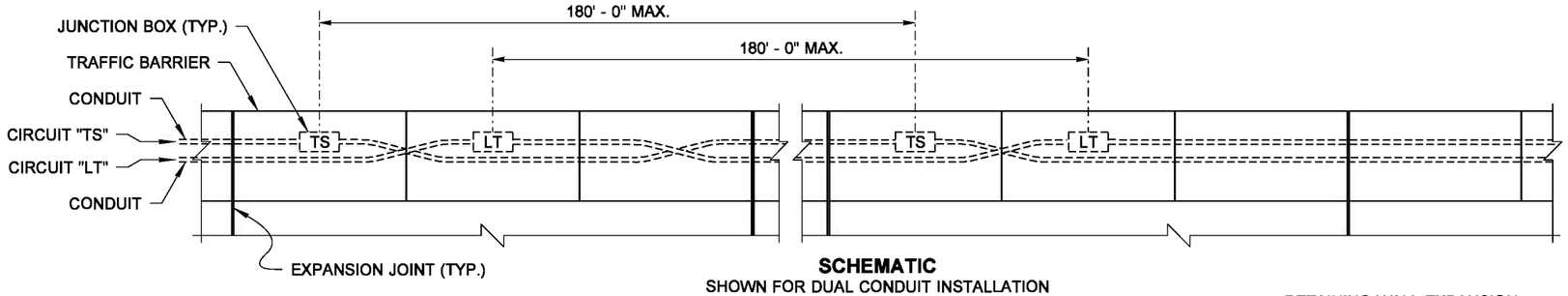

SCHEMATIC
SHOWN FOR DUAL CONDUIT INSTALLATION
~ CIRCUIT TYPES MAY VARY

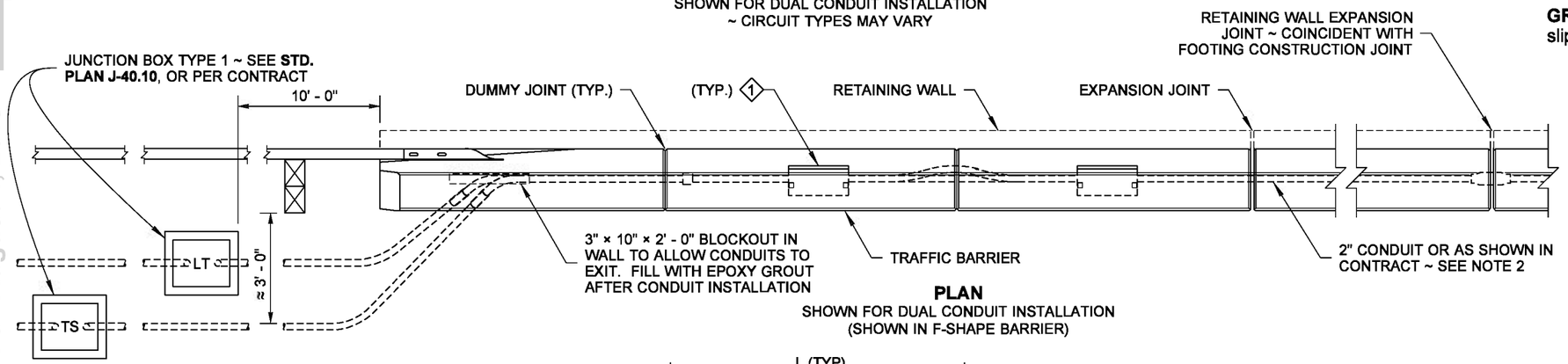

PLAN
SHOWN FOR DUAL CONDUIT INSTALLATION
(SHOWN IN F-SHAPE BARRIER)

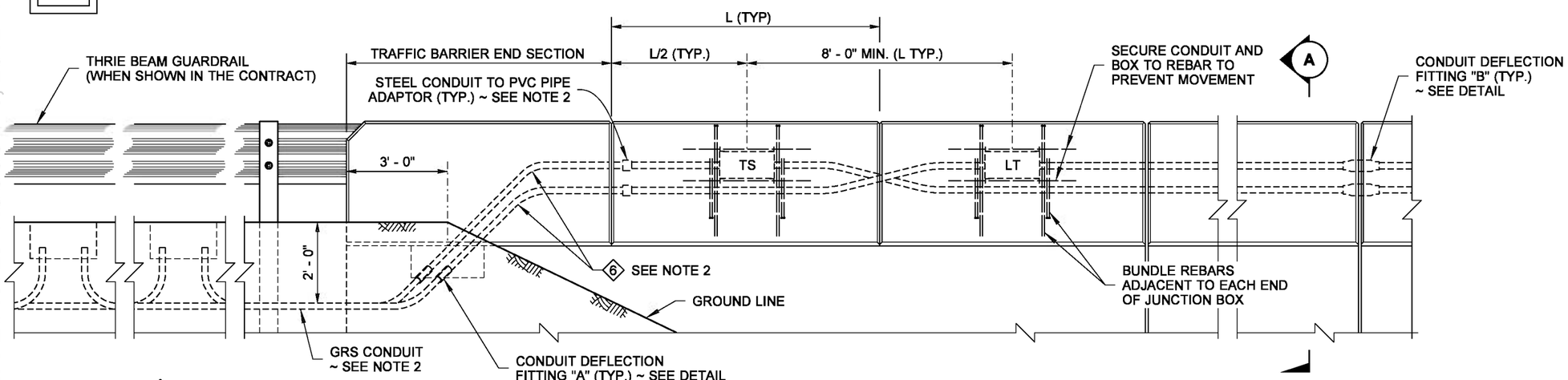

ELEVATION
SHOWN FOR DUAL CONDUIT INSTALLATION
(SHOWN IN F-SHAPE BARRIER)

NOTES

1. Conduit pipes placed in retaining wall traffic barriers shall be fitted with Conduit Deflection (CD) Fittings spaced at 120' maximum. The CD Fittings shall be placed at the traffic barrier open joints that coincide with the retaining wall stem expansion joints nearest to the transverse construction joints in the wall footing.
2. Install Galvanized Rigid Steel (GRS) conduit between the Junction Box(es) Type 1 and the CD Fitting(s) "A". GRS conduit shall also be used from the CD Fitting(s) "A" to the PVC adaptor in the barrier.

   PVC Conduit may be used only in stationary-form barriers. Connect to GRS using a PVC adaptor.

   GRS Conduit may be used in stationary-form barriers, but it shall be used in slipform barriers.

KEY NOTES

1. Junction Box ~ 8" × 8" × 18" NEMA 4X in stationary-form barrier, adjustable NEMA 3R in slipform barrier (junction box can be recessed up to 1/8"). **See Standard Plan J-16a.**
2. Conduit Fitting with Internal Bonding Jumper ~ Type DX for deflection of 30° & 3/4" movement.
3. Where conduit exits from a structure, wrap the conduit pipe for 1' - 0" on each side from the exiting point. Pipe-wrap tape shall be 2" wide, 20 mil thick, & installed w/ 1" minimum overlap.
4. 1' - 0" long, 3/4" thick expanded closed cell foam sleeve around conduit and conduit fitting. After placing wire ties, duct tape seams and ends to seal and prevent concrete from bonding with fitting and conduit.
5. Where conduit in a structure is routed across a joint, wrap the conduit pipe for 1' - 0" on each side of joint. Pipe-wrap tape shall be 2" wide, 20 mil thick, & installed w/ 1" min. overlap.
6. 10' long section of GRS Conduit

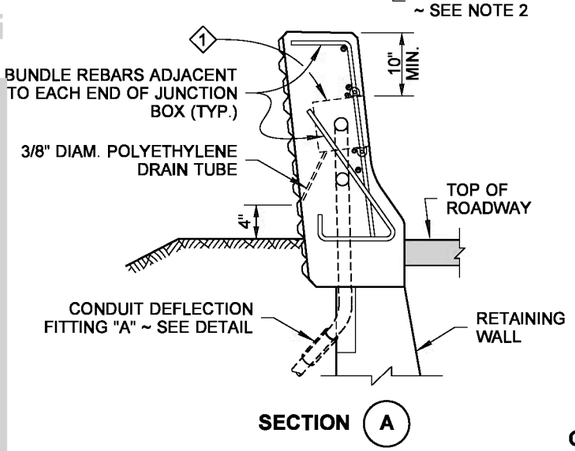

SECTION A

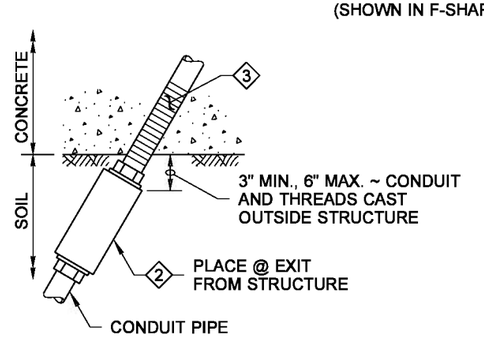

CONDUIT DEFLECTION FITTING "A" DETAIL

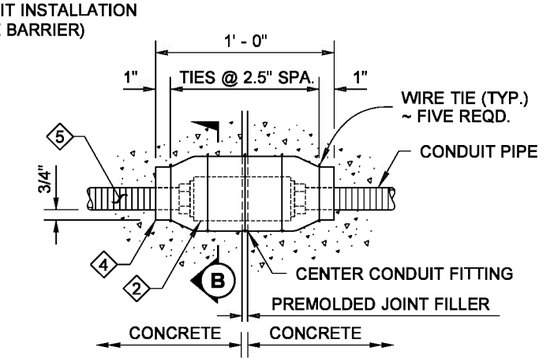

CONDUIT DEFLECTION FITTING "B" DETAIL

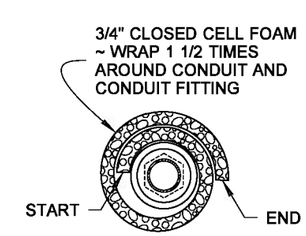

SECTION B

NOTE: THIS PLAN IS NOT A LEGAL ENGINEERING DOCUMENT BUT AN ELECTRONIC DUPLICATE. THE ORIGINAL, SIGNED BY THE ENGINEER AND APPROVED FOR PUBLICATION, IS KEPT ON FILE AT THE WASHINGTON STATE DEPARTMENT OF TRANSPORTATION. A COPY MAY BE OBTAINED UPON REQUEST.

CONDUIT INSTALLATION IN TRAFFIC BARRIER ON RETAINING WALL

STANDARD PLAN J-16b

SHEET 1 OF 1 SHEET

APPROVED FOR PUBLICATION

Pasco Bakotich III — STATE DESIGN ENGINEER
02-10-09 — DATE

Washington State Department of Transportation

EFFECTIVE: AUGUST 6, 2012 TO August 4, 2013
EFFECTIVE: AUGUST 6, 2012 TO August 4, 2013
EFFECTIVE: AUGUST 6, 2012 TO August 4, 2013
EFFECTIVE: AUGUST 6, 2012 TO August 4, 2013

EFFECTIVE: AUGUST 6, 2012 TO August 4, 2013
EFFECTIVE: AUGUST 6, 2012 TO August 4, 2013

DRAWN BY: ELENA BRUNSTEIN

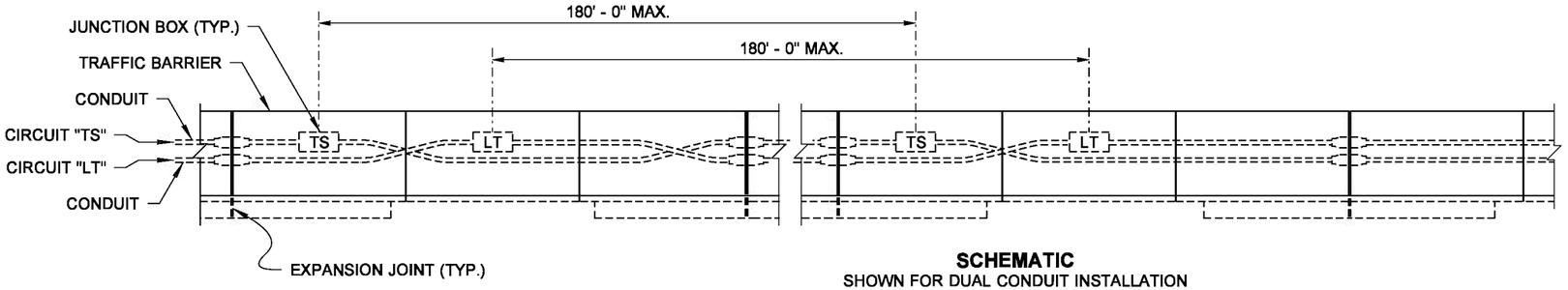

SCHEMATIC
SHOWN FOR DUAL CONDUIT INSTALLATION
~ CIRCUIT TYPES MAY VARY

NOTES

1. Install a Conduit Deflection (CD) Fitting "A" at the exit from the barrier. Install a Conduit Deflection Fitting "B" to connect conduit ends at each concrete barrier expansion joint. See **Standard Plan J-16b** for Conduit Deflection Fitting details.

2. Install Galvanized Rigid Steel (GRS) conduit between the Junction Box(es) Type 1 and the CD Fitting(s) "A". GRS conduit shall also be used from the CD Fitting(s) "A" to the PVC adaptor in the barrier.

   PVC Conduit may be used only in stationary-form barriers. Connect to GRS using a PVC adaptor.

   GRS Conduit may be used in stationary-form barriers, but it shall be used in slipform barriers.

3. See **Standard Plan C-14a** for additional information on Single Slope Concrete Barrier.

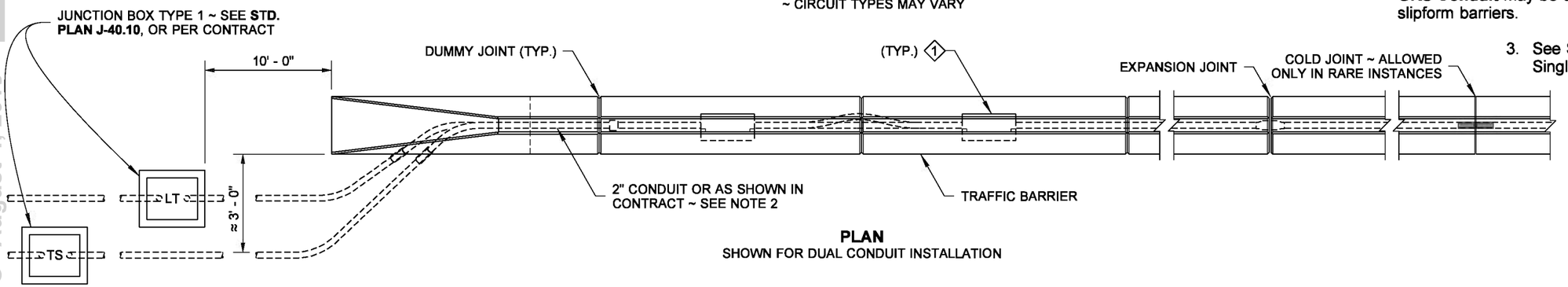

PLAN
SHOWN FOR DUAL CONDUIT INSTALLATION

KEY NOTES

1. Junction Box ~ 8" × 8" × 18" NEMA 4X in stationary-form barrier, adjustable NEMA 3R in slipform barrier (junction box can be recessed up to 1/8"). **See Standard Plan J-16a.**

2. Where conduit in a structure is routed across a cold joint with continuous reinforcing steel, install premolded joint filler and wrap the conduit pipe for 1' - 0" on each side of joint. Pipe-wrap tape shall be 2" wide, 20 mil thick, & installed w/ 1" min. overlap.

3. 10' long section of GRS Conduit.

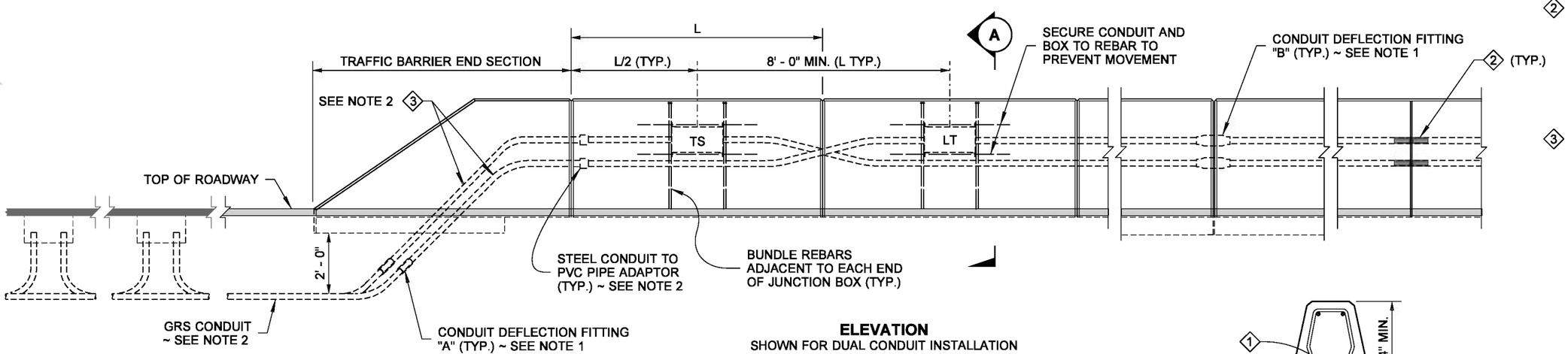

ELEVATION
SHOWN FOR DUAL CONDUIT INSTALLATION

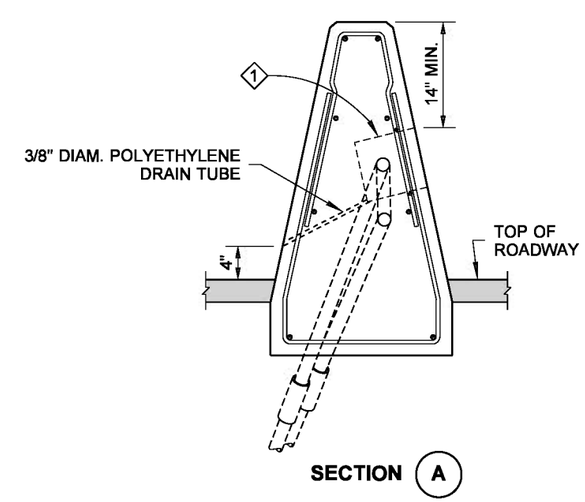

SECTION A

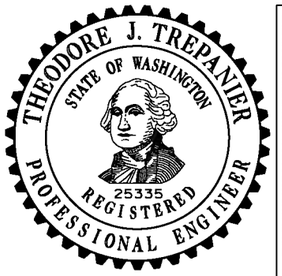

NOTE: THIS PLAN IS NOT A LEGAL ENGINEERING DOCUMENT BUT AN ELECTRONIC DUPLICATE. THE ORIGINAL, SIGNED BY THE ENGINEER AND APPROVED FOR PUBLICATION, IS KEPT ON FILE AT THE WASHINGTON STATE DEPARTMENT OF TRANSPORTATION. A COPY MAY BE OBTAINED UPON REQUEST.

CONDUIT INSTALLATION IN SINGLE SLOPE CONCRETE BARRIER (DUAL FACE) STANDARD PLAN J-16c

SHEET 1 OF 1 SHEET

APPROVED FOR PUBLICATION

Pasco Bakotich III — STATE DESIGN ENGINEER
02-10-09 — DATE

Washington State Department of Transportation

EFFECTIVE: AUGUST 6, 2012 TO August 4, 2013
EFFECTIVE: AUGUST 6, 2012 TO August 4, 2013
EFFECTIVE: AUGUST 6, 2012 TO August 4, 2013
EFFECTIVE: AUGUST 6, 2012 TO August 4, 2013

EFFECTIVE: AUGUST 6, 2012 TO August 4, 2013
EFFECTIVE: AUGUST 6, 2012 TO August 4, 2013

DRAWN BY: LISA CYFORD

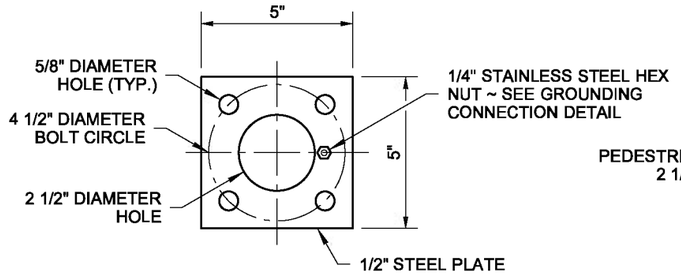

BASE PLATE DETAIL

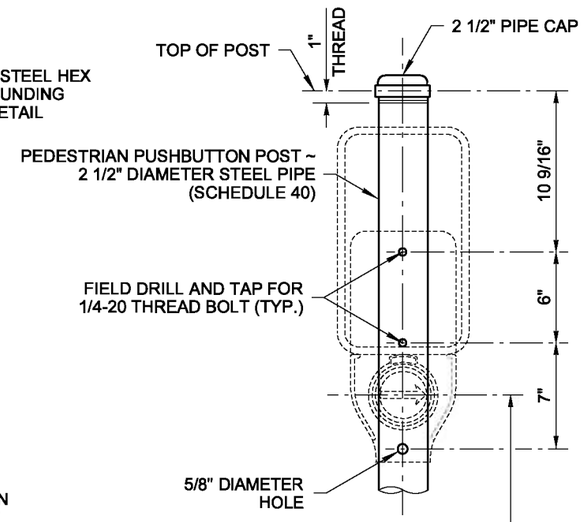

POST DETAIL

NOTES

1. See **Standard Plan J-20.26** for Accessible Pedestrian Pushbutton details.
2. Pole shall be galvanized per AASHTO M111.
3. When additional crossing time is provided by an extended pushbutton press, a "PUSH BUTTON FOR 2 SECONDS FOR EXTRA CROSSING TIME" sign (R10.32P) shall be installed above the APS assembly. Leave a 2" space between signs.

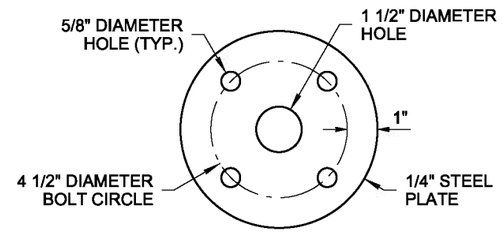

ANCHOR BOLT TEMPLATE

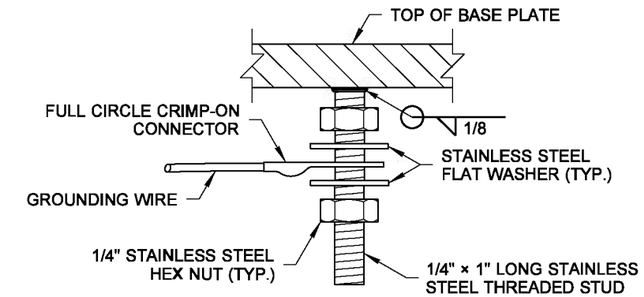

GROUNDING CONNECTION DETAIL

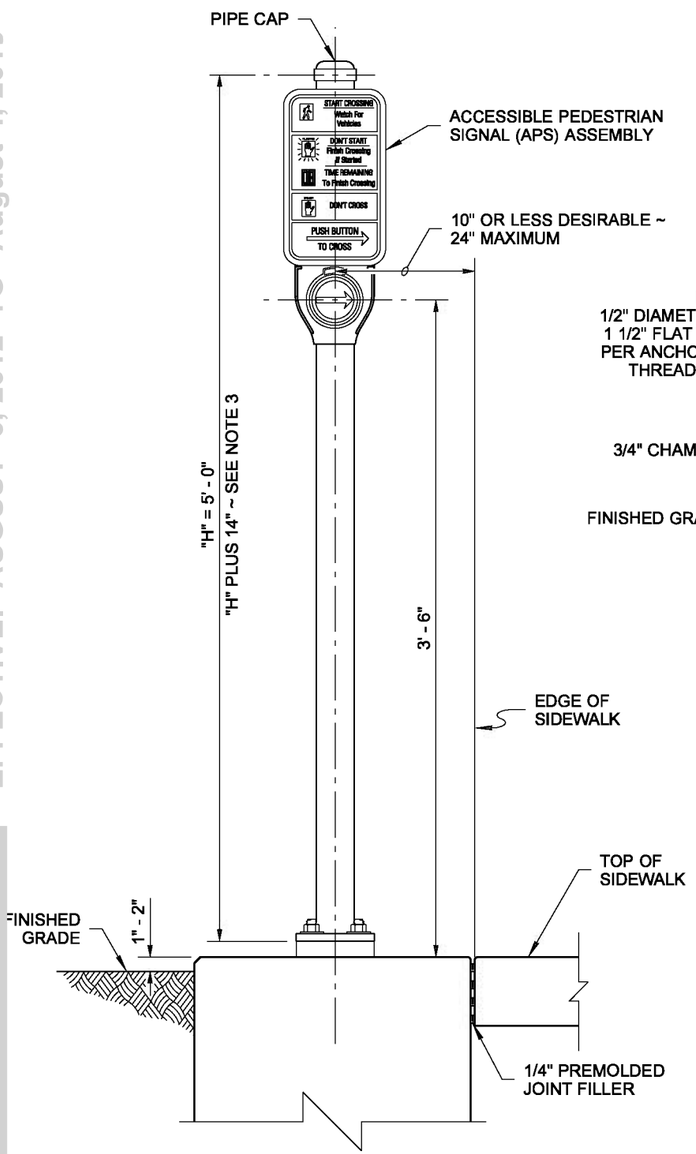

ELEVATION

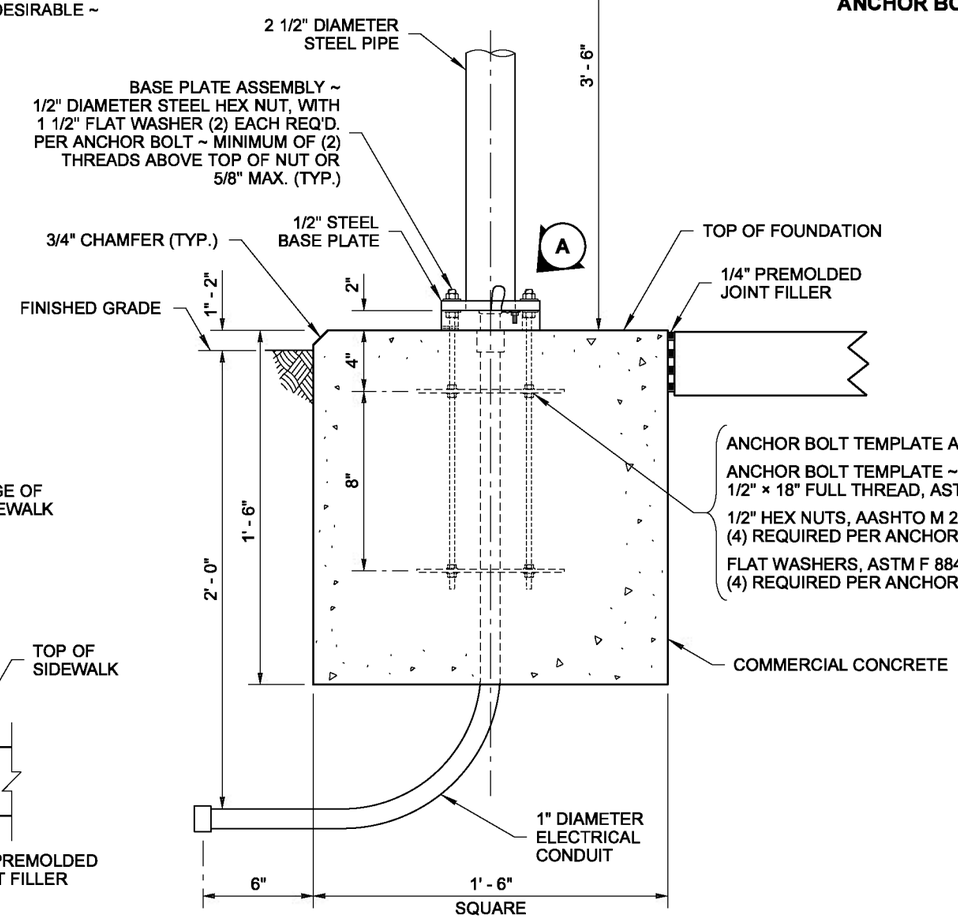

FOUNDATION DETAIL

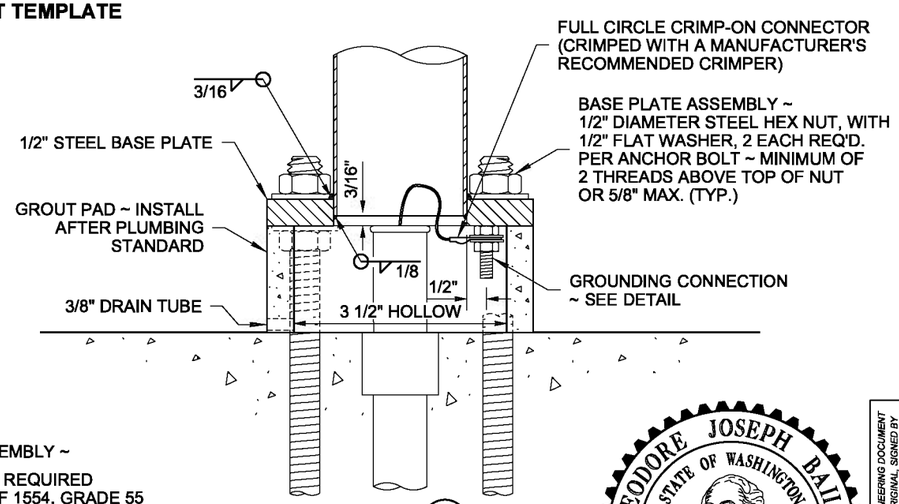

DETAIL A

(LEVELING NUT NOT SHOWN FOR CLARITY)

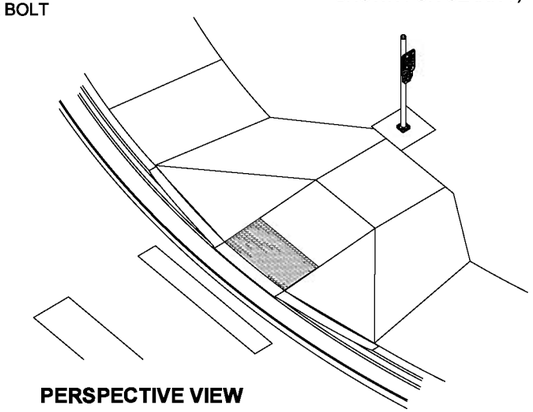

PERSPECTIVE VIEW

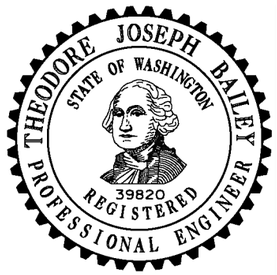

NOTE: THIS PLAN IS NOT A LEGAL ENGINEERING DOCUMENT BUT AN ELECTRONIC DUPLICATE. THE ORIGINAL, SIGNED BY THE ENGINEER AND APPROVED FOR PUBLICATION, IS KEPT ON FILE AT THE WASHINGTON STATE DEPARTMENT OF TRANSPORTATION. A COPY MAY BE OBTAINED UPON REQUEST.

ACCESSIBLE PEDESTRIAN PUSHBUTTON POST (PPB) AND FOUNDATION

STANDARD PLAN J-20.10-01

SHEET 1 OF 1 SHEET

APPROVED FOR PUBLICATION

Pasco Bakotich III — STATE DESIGN ENGINEER — *7/12/12* — DATE

Washington State Department of Transportation

EFFECTIVE: AUGUST 6, 2012 TO August 4, 2013
EFFECTIVE: AUGUST 6, 2012 TO August 4, 2013
EFFECTIVE: AUGUST 6, 2012 TO August 4, 2013
EFFECTIVE: AUGUST 6, 2012 TO August 4, 2013

EFFECTIVE: AUGUST 6, 2012 TO August 4, 2013

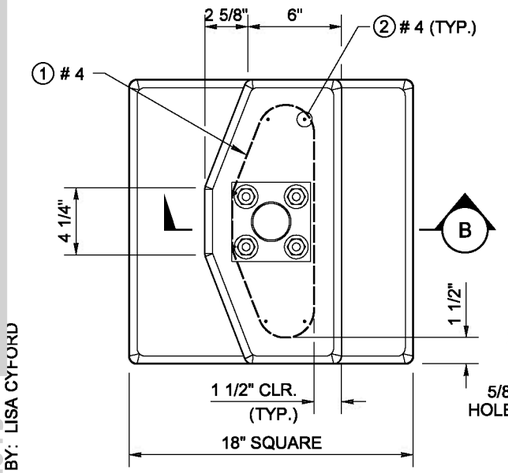

PLAN VIEW

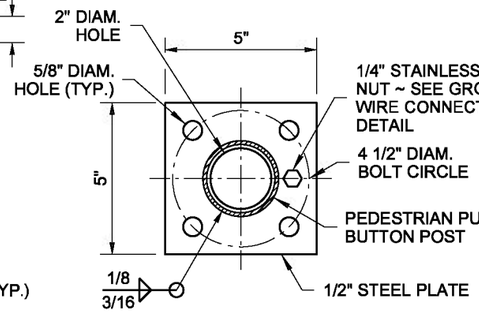

BASE PLATE DETAIL

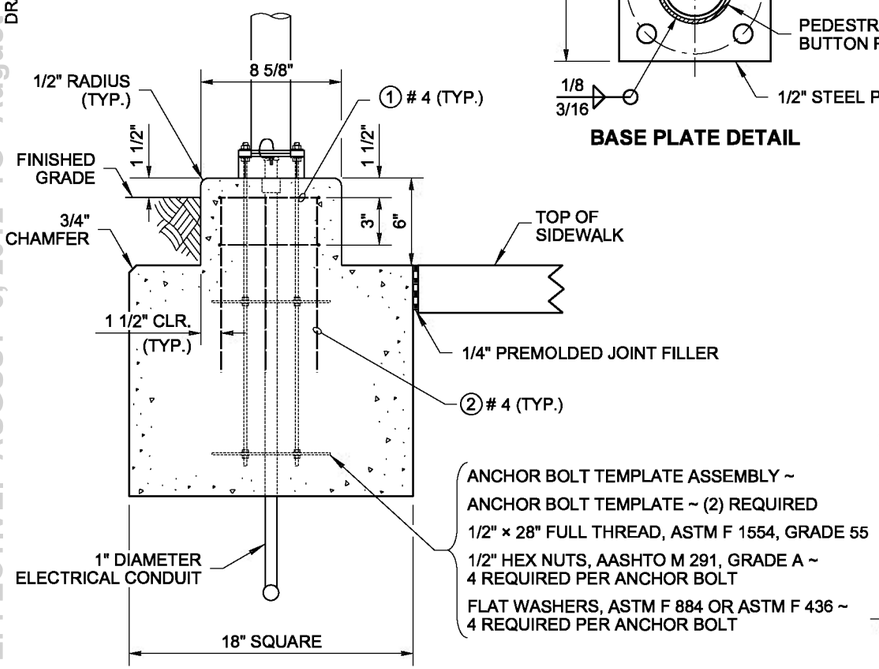

VIEW (A)

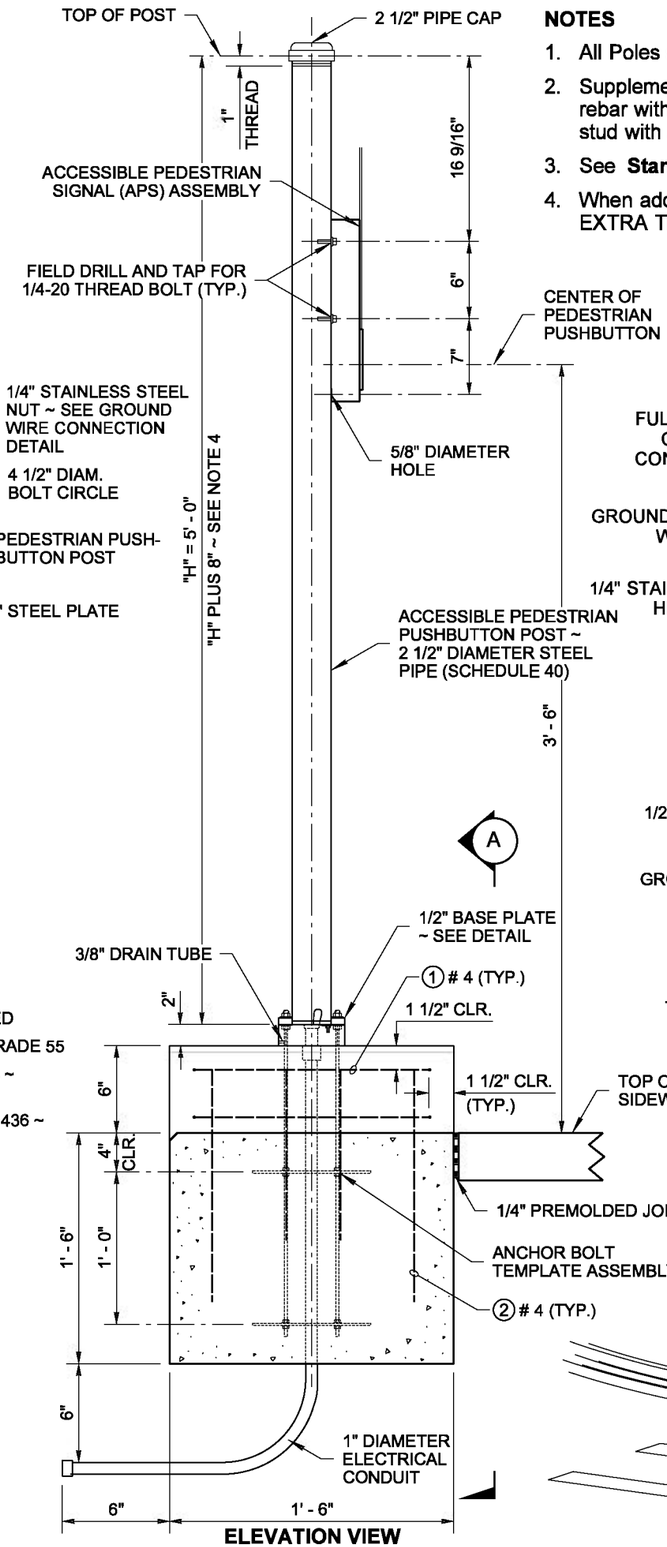

ELEVATION VIEW

NOTES

1. All Poles shall be hot dip galvanized per AASHTO M111.
2. Supplemental grounding conductor shall be non-insulated #4 AWG stranded copper and shall be clamped to vertical rebar with a connector suitable for use embedded in concrete: provide 3' - 0" min. slack. Attach to pole grounding stud with a full circle crimp-on connector (crimped with manufacturer's recommended crimper).
3. See **Standard Plan J-20.26** for Accessible Pedestrian Pushbutton details.
4. When additional crossing time is provided by an extended pushbutton press, a PUSH BUTTON FOR 2 SECONDS FOR EXTRA TIME CROSSING sign (R10.32P) shall be installed above the APS assembly. Leave a 2" space between signs

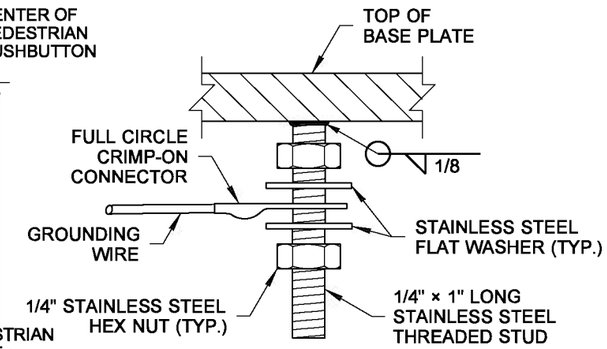

GROUNDING CONNECTION DETAIL

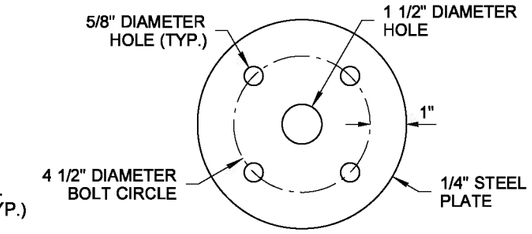

ANCHOR BOLT TEMPLATE

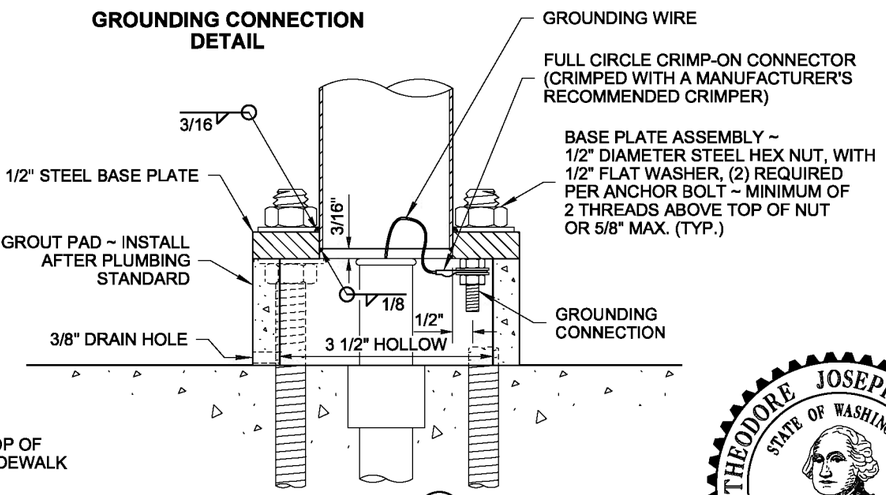

SECTION (B)

(LEVELING NUTS NOT SHOWN FOR CLARITY)

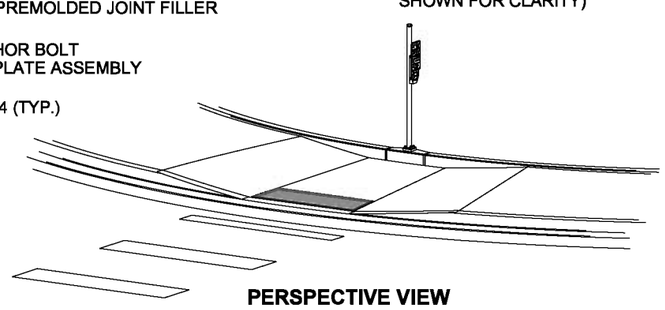

PERSPECTIVE VIEW

REINFORCING STEEL BENDING DIAGRAM

SEE **STD. SPEC. 9-07.1(2)** FOR BENDING DIAMETERS

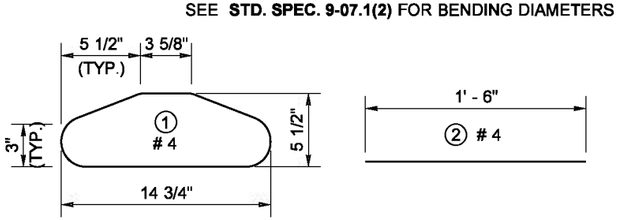

DIMENSIONS ARE OUT TO OUT

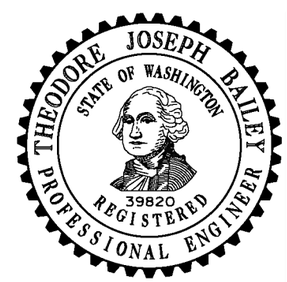

NOTE: THIS PLAN IS NOT A LEGAL ENGINEERING DOCUMENT BUT AN ELECTRONIC DUPLICATE. THE ORIGINAL, SIGNED BY THE ENGINEER AND APPROVED FOR PUBLICATION, IS KEPT ON FILE AT THE WASHINGTON STATE DEPARTMENT OF TRANSPORTATION. A COPY MAY BE OBTAINED UPON REQUEST.

ACCESSIBLE PEDESTRIAN PUSHBUTTON WITH CURB BASE

STANDARD PLAN J-20.11-00

SHEET 1 OF 2 SHEETS

APPROVED FOR PUBLICATION

Pasco Bakotich III — STATE DESIGN ENGINEER — *7/12/12* — DATE

Washington State Department of Transportation

TYPE PPB SIGNAL STANDARD DETAILS

DRAWN BY: LISA CYFORD

EFFECTIVE: AUGUST 6, 2012 TO August 4, 2013

EFFECTIVE: AUGUST 6, 2012 TO August 4, 2013

DRAWN BY: LISA CYFORD

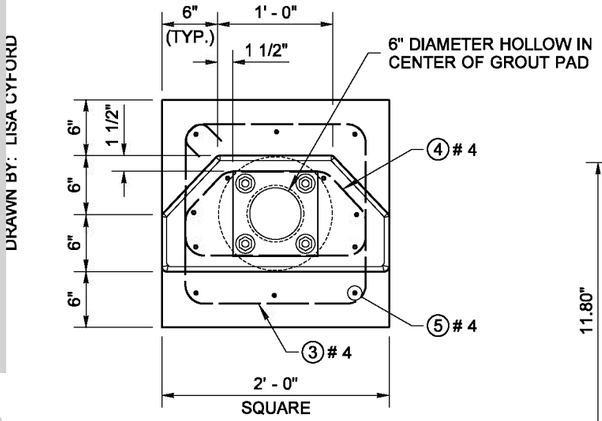

PLAN VIEW

FOUNDATION DETAILS

DUEL (APS) ASSEMBLY MOUNTING ADAPTER DETAILS

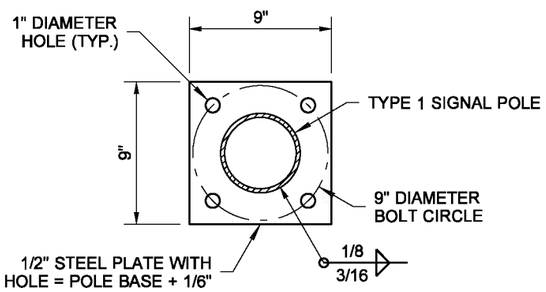

BASE PLATE DETAIL

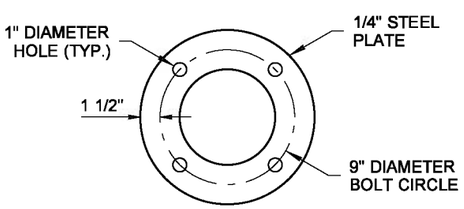

ANCHOR BOLT TEMPLATE

REINFORCING STEEL BENDING DIAGRAM

SEE **STD. SPEC. 9-07.1(2)** FOR BENDING DIAMETER

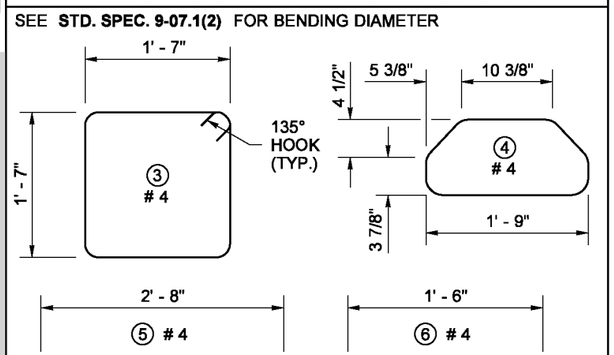

DIMENSIONS ARE OUT TO OUT

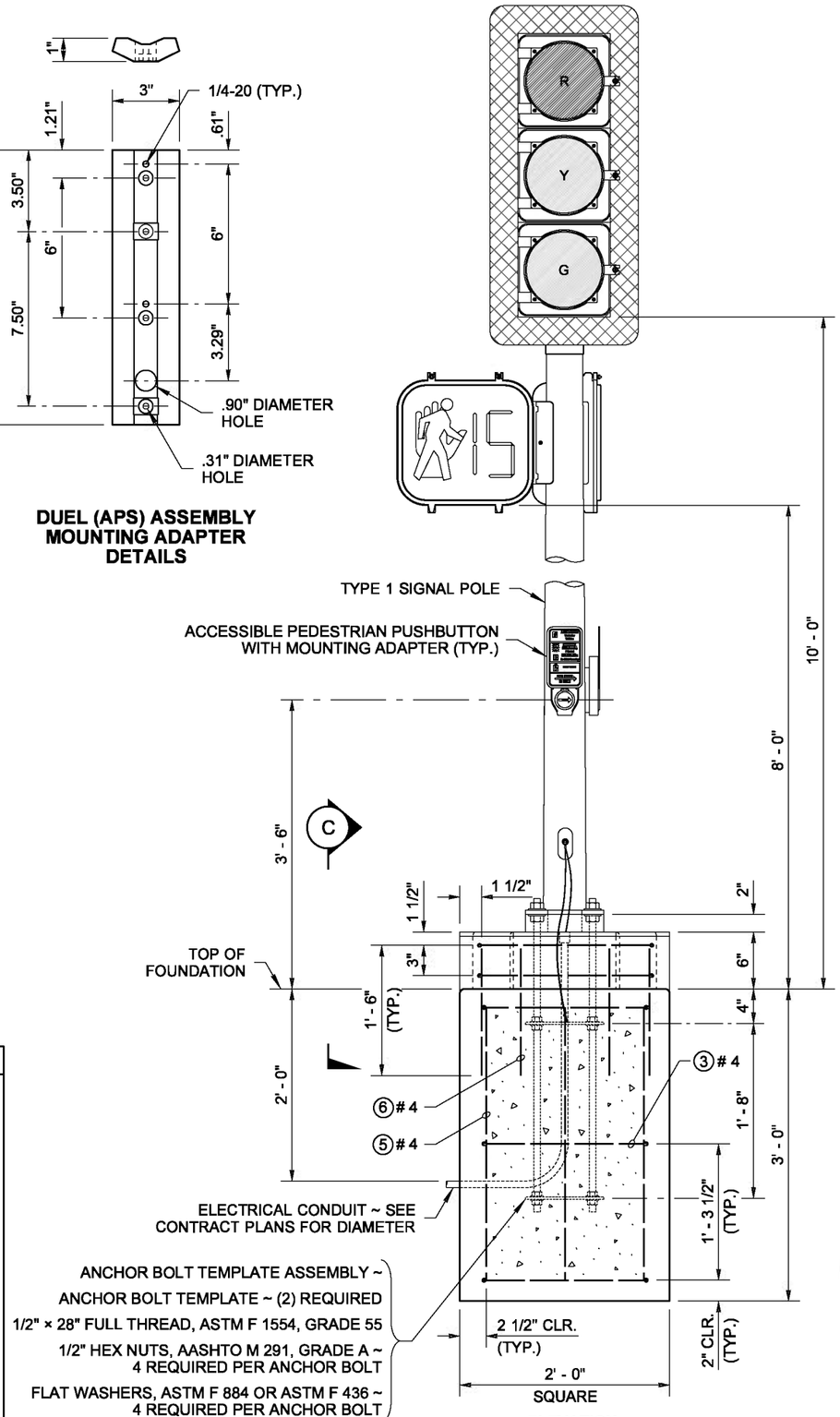

ELEVATION

FOUNDATION DETAIL

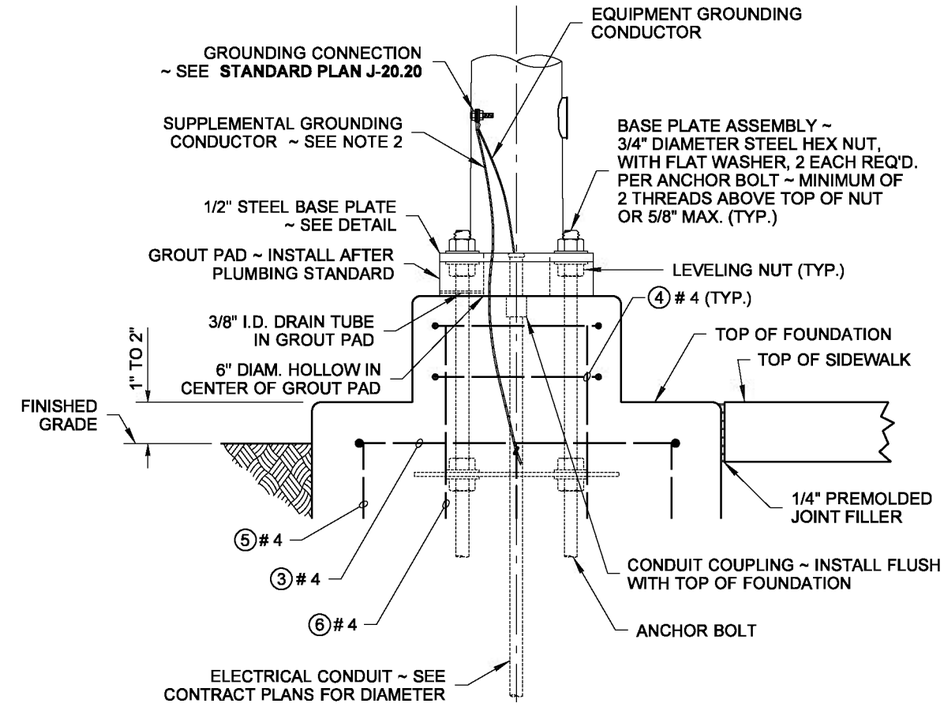

SECTION C

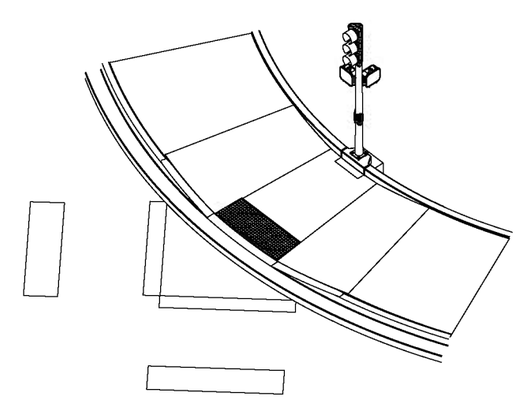

PERSPECTIVE VIEW

TYPE 1 SIGNAL STANDARD DETAILS

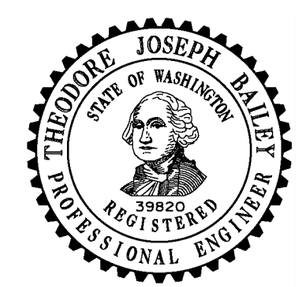

NOTE: THIS PLAN IS NOT A LEGAL ENGINEERING DOCUMENT BUT AN ELECTRONIC DUPLICATE. THE ORIGINAL, SIGNED BY THE ENGINEER AND APPROVED FOR PUBLICATION, IS KEPT ON FILE AT THE WASHINGTON STATE DEPARTMENT OF TRANSPORTATION. A COPY MAY BE OBTAINED UPON REQUEST.

ACCESSIBLE PEDESTRIAN PUSHBUTTON WITH CURB BASE

STANDARD PLAN J-20.11-00

SHEET 2 OF 2 SHEETS

APPROVED FOR PUBLICATION

Pasco Bakotich III — STATE DESIGN ENGINEER

7/12/12 — DATE

Washington State Department of Transportation

EFFECTIVE: AUGUST 6, 2012 TO August 4, 2013

EFFECTIVE: AUGUST 6, 2012 TO August 4, 2013

DRAWN BY: LISA CYFORD

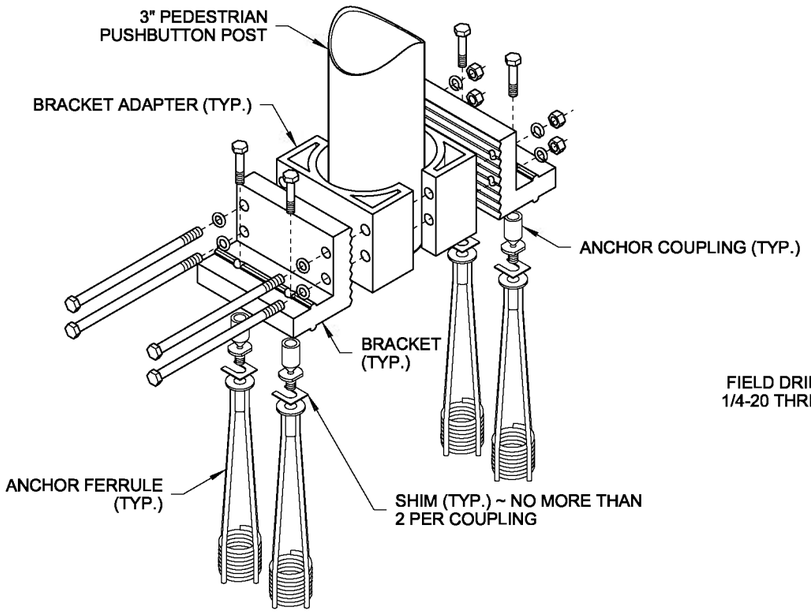

EXPLODED VIEW

BREAKAWAY BASE CONNECTOR

(SEE NOTE 1)

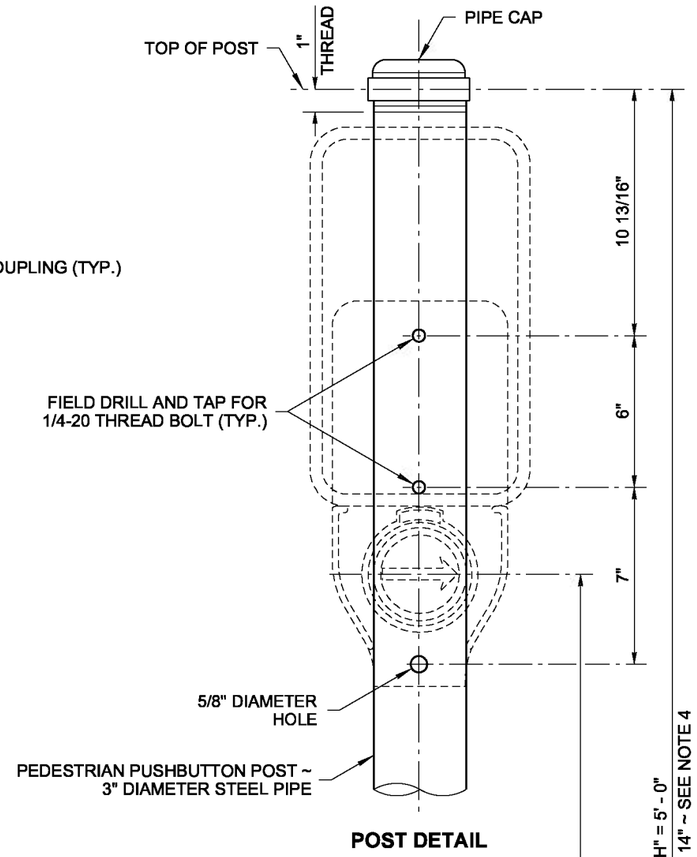

POST DETAIL

NOTES

1. See **Standard Specification 9-06.16** for Breakaway Base Connectors details. Dimensions for the parts used to assemble the base connections are intentionally not shown. Base connections are patented manufactured products that are in compliance with NCHRP 350 crash test criteria. The base connection details are only shown on this plan to illustrate how parts are assembled.
2. See **Standard Plan J-20.26** for Accessible Pedestrian Pushbutton details.
3. Secure conductor in adjacent junction box per detail, **Standard Plan J-28.70**.

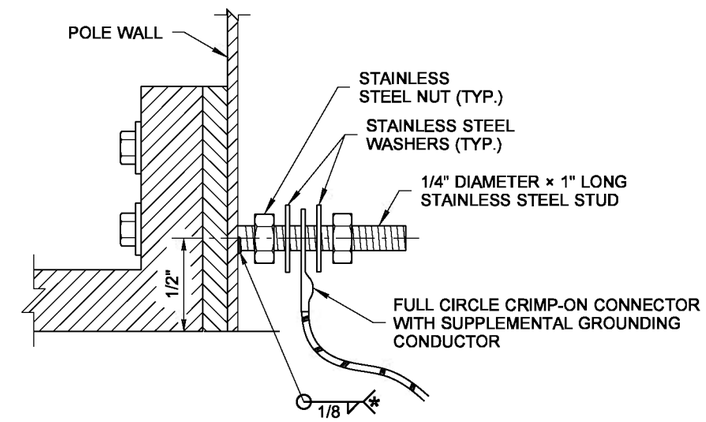

GROUNDING CONNECTION DETAIL

* WELD STUD TO POLE WALL TO MAXIMUM EXTENT AS POSSIBLE ~ 1/2" MINIMUM WELD

CONFIGURATIONS VARY AMONG DIFFERENT MANUFACTURERS (SHOWN EXPLODED FOR CLARITY)

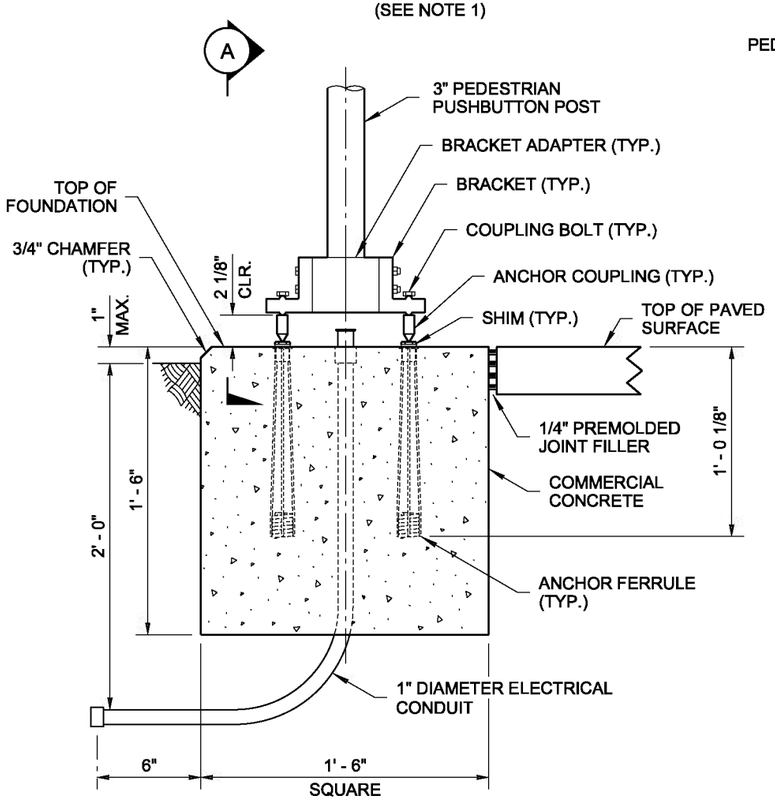

FOUNDATION DETAIL

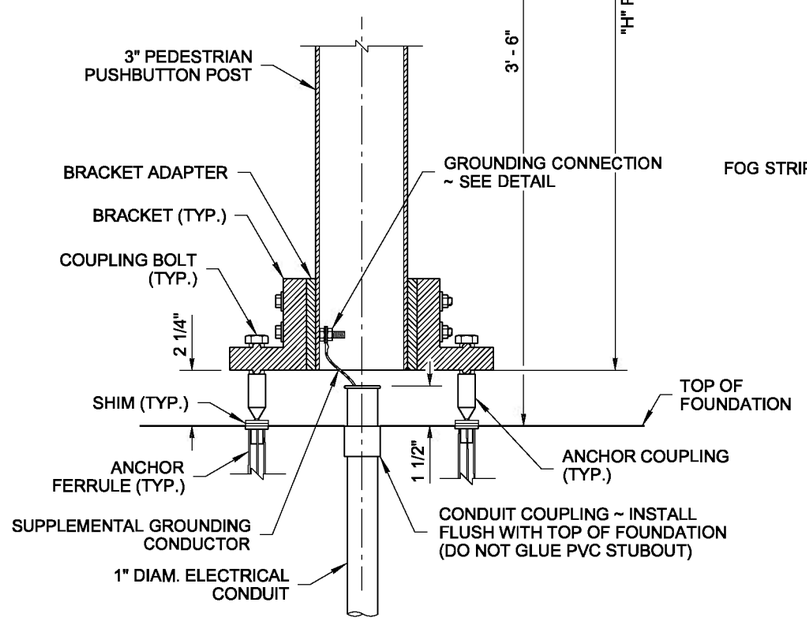

SECTION A

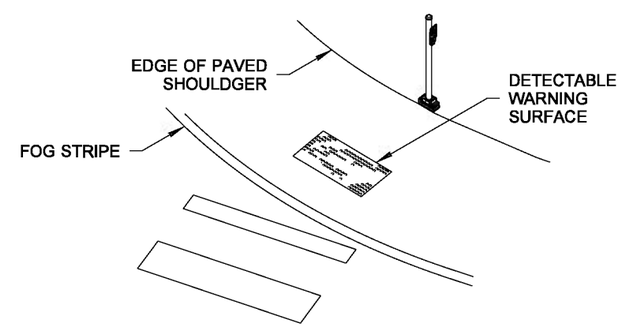

PERSPECTIVE VIEW

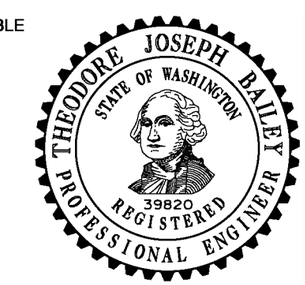

NOTE: THIS PLAN IS NOT A LEGAL ENGINEERING DOCUMENT BUT AN ELECTRONIC DUPLICATE. THE ORIGINAL, SIGNED BY THE ENGINEER AND APPROVED FOR PUBLICATION, IS KEPT ON FILE AT THE WASHINGTON STATE DEPARTMENT OF TRANSPORTATION. A COPY MAY BE OBTAINED UPON REQUEST.

ACCESSIBLE BREAKAWAY PEDESTRIAN PUSHBUTTON (PPB) POST

STANDARD PLAN J-20.15-01

SHEET 1 OF 1 SHEET

APPROVED FOR PUBLICATION

Pasco Bakotich III — STATE DESIGN ENGINEER

7/12/12 — DATE

Washington State Department of Transportation

EFFECTIVE: AUGUST 6, 2012 TO August 4, 2013

EFFECTIVE: AUGUST 6, 2012 TO August 4, 2013
EFFECTIVE: AUGUST 6, 2012 TO August 4, 2013

DRAWN BY: LISA CYFORD

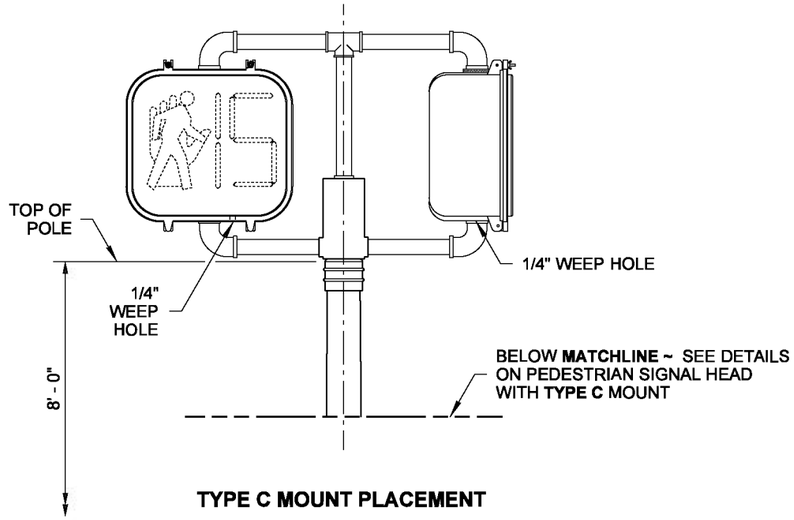

TYPE C MOUNT PLACEMENT

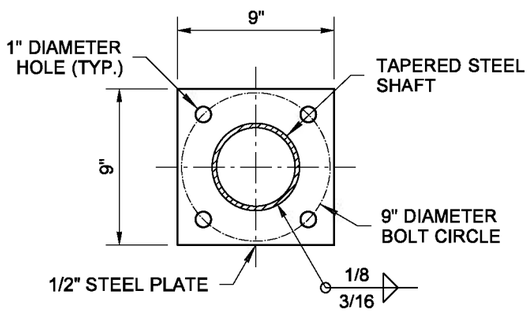

BASE PLATE DETAIL

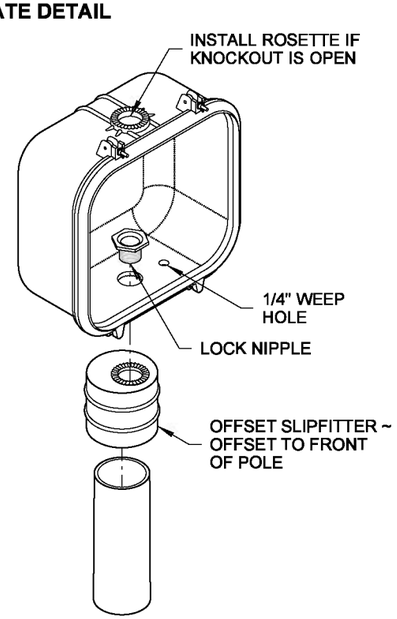

VIEW (A)

TYPE D MOUNTING DETAIL

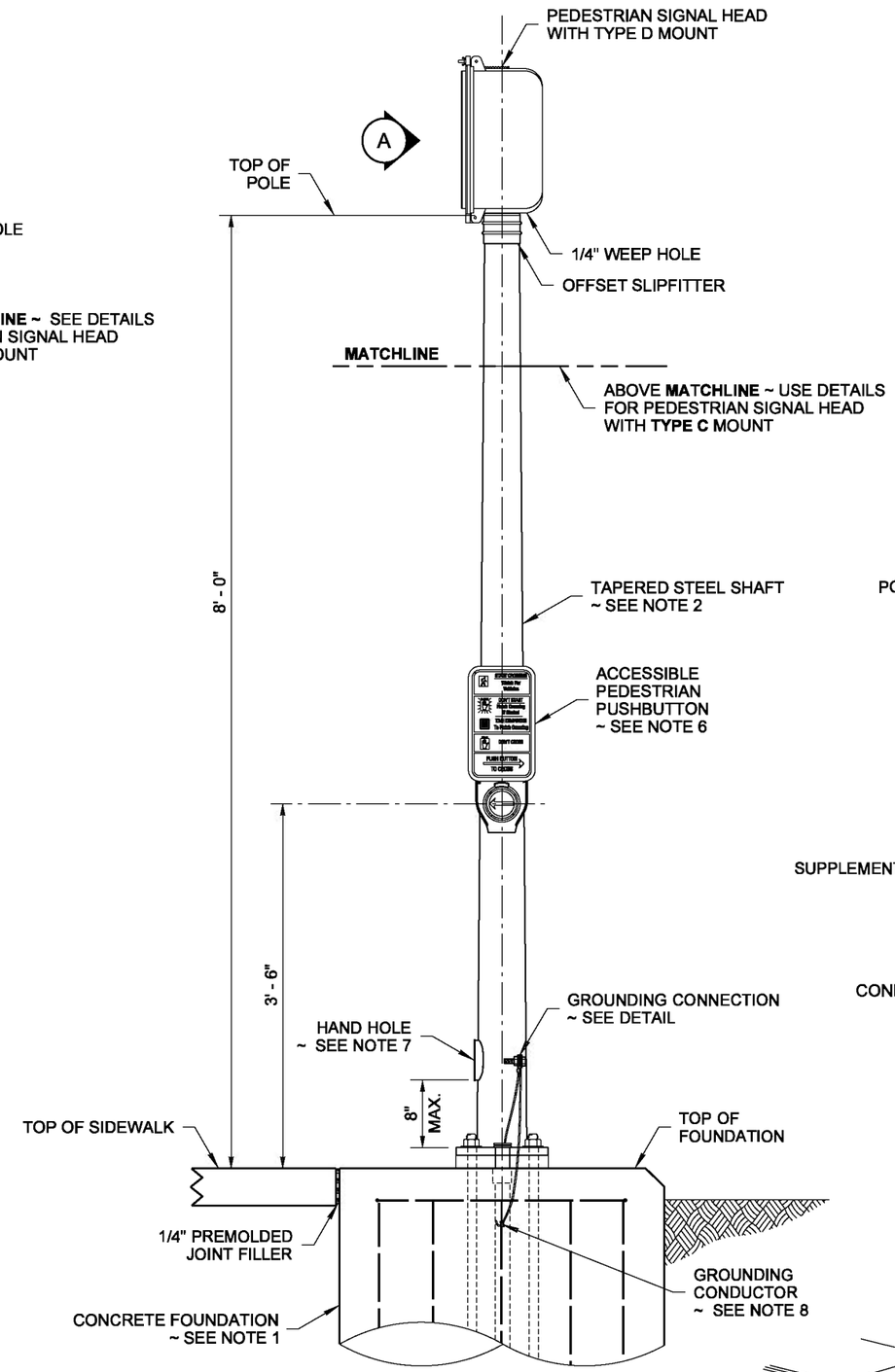

TYPE D MOUNT

PEDESTRIAN SIGNAL STANDARD

(FIXED BASE SHOWN)

NOTES

1. See **Standard Plan J-21.10** for Signal Standard Foundation with Fixed Base and Slip Base details.
2. Steel shaft shall be tapered either round or dodecagon (12-sided), 11 gage, 4 1/2" O.D. at slipfitter weld. Taper shall be 0.14 inches per foot.
3. All poles shall be hot dip galvanized per AASHTO M 111.
4. Welding of structures shall be in accordance with the latest edition of the AWS D1.1 Structural Welding Code - Steel. All butt welds shall be ground flush with base metal.
5. See **Standard Plan J-20.26** for Accessible Pedestrian Pushbutton details.
6. See **Standard Plan J-20.20** for Accessible Pedestrian Signal Standard Electrical details.
7. Hand holes shall include a removable, rain-tight cover and gasket, fastened with two stainless steel screws (ASTM 593).
8. Grounding Conductor shall be non-insulated #4 AWG stranded copper, provide 3' - 0' min. slack. Clamp to vertical steel reinforcing bar with connector suitable for use embedded in concrete.

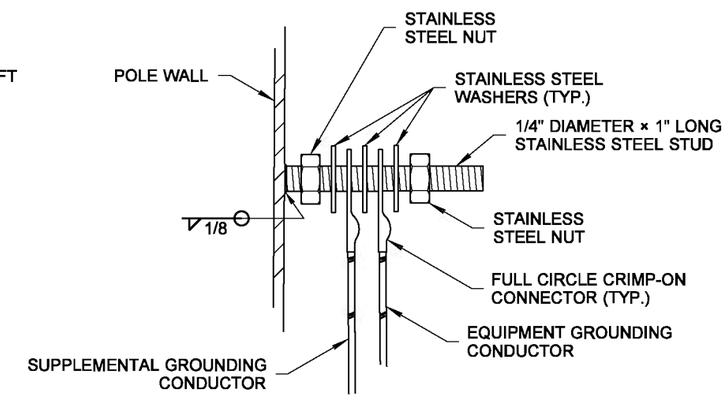

GROUNDING CONNECTION DETAIL

CONFIGURATIONS VARY AMONG DIFFERENT MANUFACTURERS (SHOWN EXPLODED FOR CLARITY)

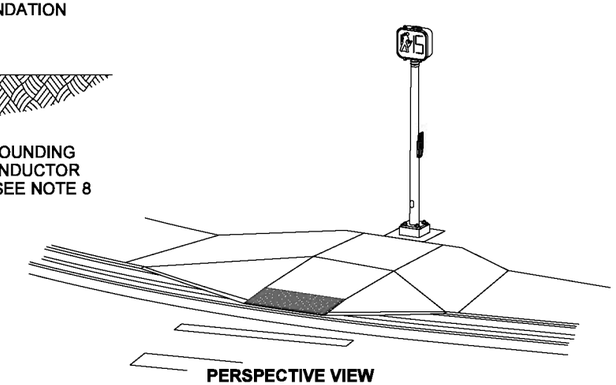

PERSPECTIVE VIEW

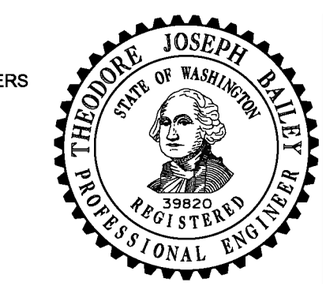

NOTE: THIS PLAN IS NOT A LEGAL ENGINEERING DOCUMENT BUT AN ELECTRONIC DUPLICATE. THE ORIGINAL, SIGNED BY THE ENGINEER AND APPROVED FOR PUBLICATION, IS KEPT ON FILE AT THE WASHINGTON STATE DEPARTMENT OF TRANSPORTATION. A COPY MAY BE OBTAINED UPON REQUEST.

PEDESTRIAN SIGNAL STANDARD (TYPE PS) DETAILS STANDARD PLAN J-20.16-01

SHEET 1 OF 1 SHEET

APPROVED FOR PUBLICATION

Pasco Bakotich III — STATE DESIGN ENGINEER

7/12/12 — DATE

Washington State Department of Transportation

EFFECTIVE: AUGUST 6, 2012 TO August 4, 2013
EFFECTIVE: AUGUST 6, 2012 TO August 4, 2013
EFFECTIVE: AUGUST 6, 2012 TO August 4, 2013
EFFECTIVE: AUGUST 6, 2012 TO August 4, 2013

EFFECTIVE: AUGUST 6, 2012 TO August 4, 2013
EFFECTIVE: AUGUST 6, 2012 TO August 4, 2013

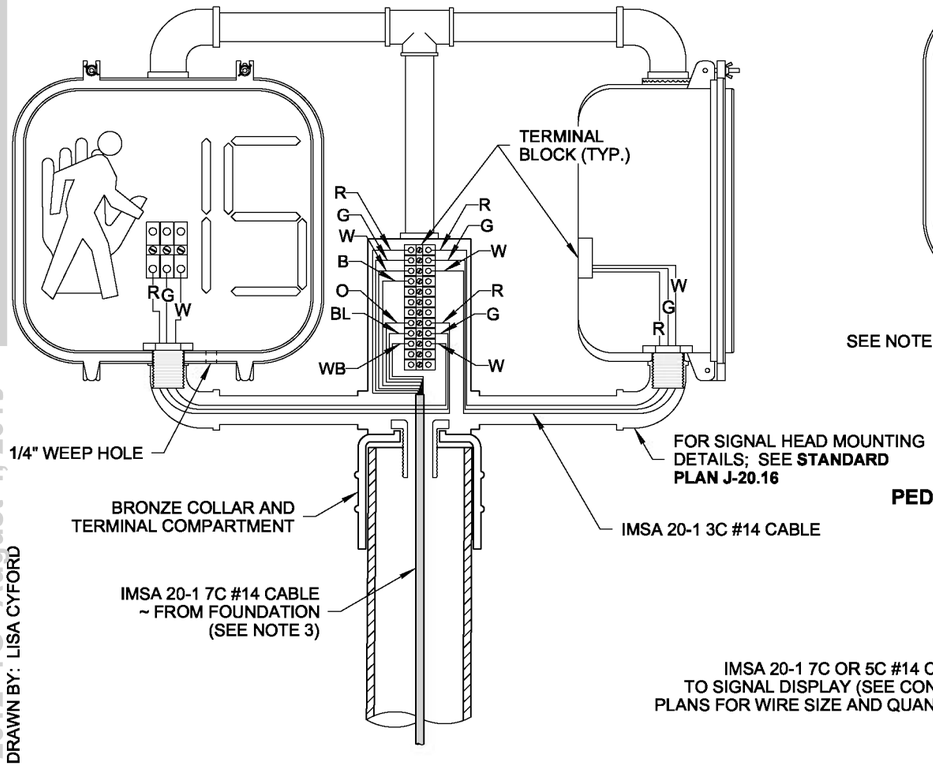

DOUBLE PEDESTRIAN SIGNAL WIRING DETAIL

(TYPE C MOUNTING SHOWN)

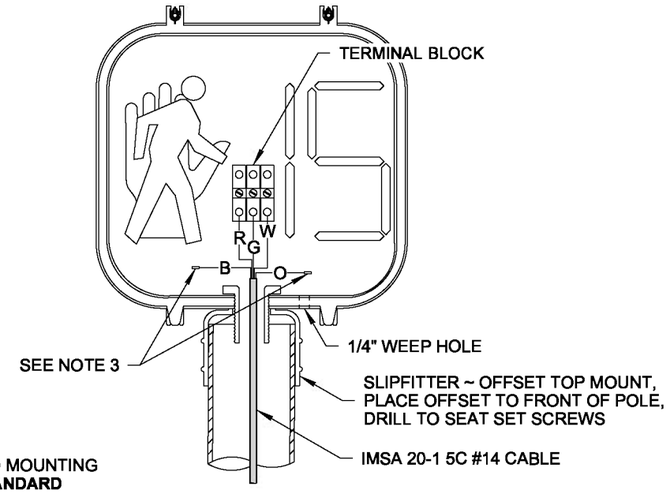

PEDESTRIAN SIGNAL WIRING DETAIL

(TYPE D MOUNTING SHOWN)

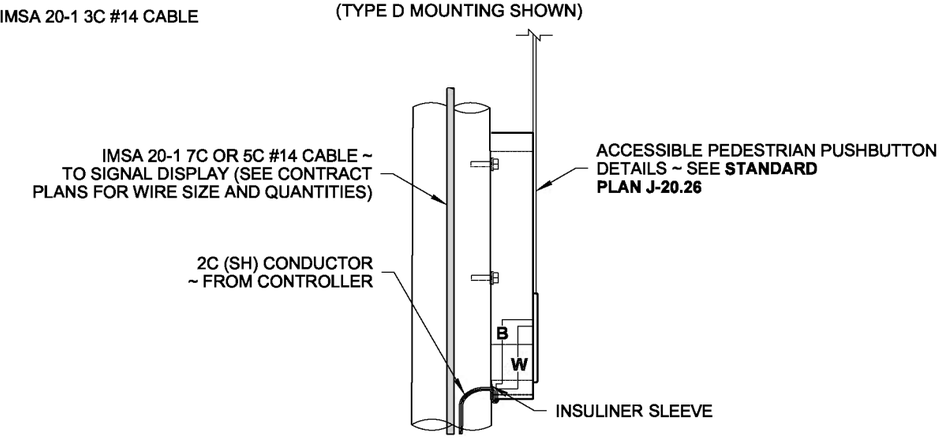

ACCESSIBLE PEDESTRIAN PUSHBUTTON WIRING DETAIL

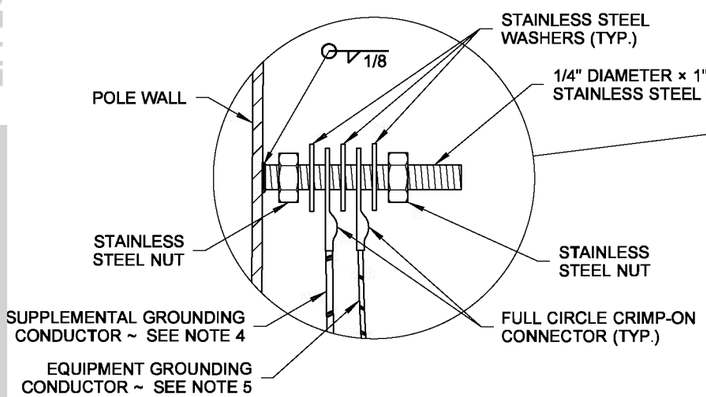

GROUNDING CONNECTION DETAIL

CONFIGURATIONS VARY AMONG DIFFERENT MANUFACTURERS (SHOWN EXPLODED FOR CLARITY)

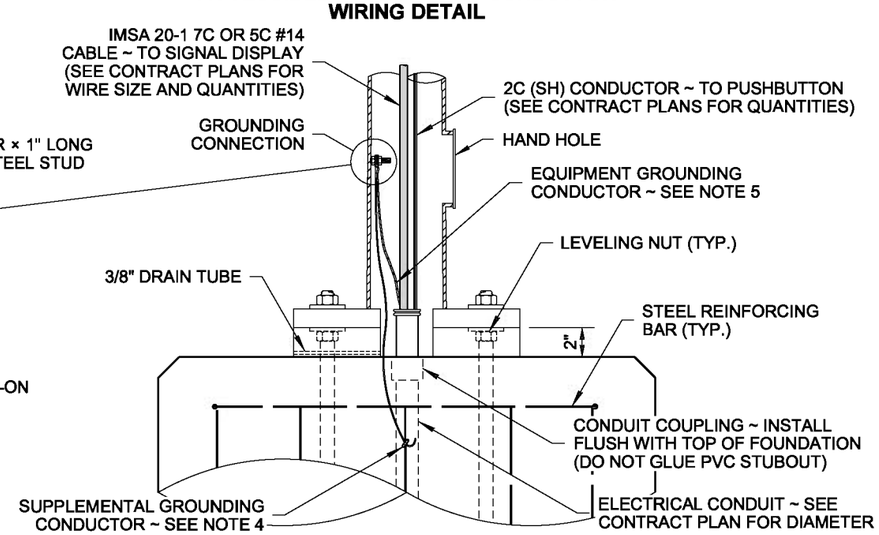

FOUNDATION WIRING DETAIL

NOTES

1. See **Standard Plan J-21.10** for Signal Standard Foundation with Fixed Base and Slip Base details.
2. See **Standard Specification 9-29.3** for Cable Conductor requirements.
3. Install heat shrink caps on all spare conductors not terminated on a terminal strip.
4. Supplemental grounding conductor shall be non-insulated #4 AWG stranded copper and shall be clamped to vertical rebar with a connector suitable for use embedded in concrete: provide 3' - 0" min. slack. Attach to pole grounding stud with a full circle crimp-on connector (crimped with manufacturer's recommended crimper).
5. Equipment grounding conductor shall attach to grounding stud with a full circle crimp-on connector (crimped with a manufacurer's recommended crimper).

5C PEDESTRIAN HEAD TERMINATIONS		
TERMINAL NUMBER	COLOR CODE	USE
7 * 1	R	DON'T WALK DISPLAY
7 * 2	G	WALK DISPLAY
7 * 3	W	NEUTRAL CONDUCTOR
7 * 6	B	SPARE CONDUCTOR
7 * 7	O	SPARE CONDUCTOR

* ASSOCIATED PHASE NUMBER

7C PEDESTRIAN HEAD TERMINATIONS		
TERMINAL NUMBER	COLOR CODE	USE
7 * 1	R	DON'T WALK DISPLAY
7 * 2	G	WALK DISPLAY
7 * 3	W	NEUTRAL CONDUCTOR
7 * 6	B	SPARE CONDUCTOR
7 * 1	O	DON'T WALK DISPLAY
7 * 2	BL	WALK DISPLAY
7 * 3	WB	NEUTRAL CONDUCTOR

* ASSOCIATED PHASE NUMBER

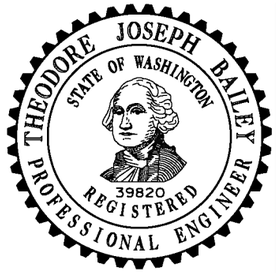

NOTE: THIS PLAN IS NOT A LEGAL ENGINEERING DOCUMENT BUT AN ELECTRONIC DUPLICATE. THE ORIGINAL, SIGNED BY THE ENGINEER AND APPROVED FOR PUBLICATION, IS KEPT ON FILE AT THE WASHINGTON STATE DEPARTMENT OF TRANSPORTATION. A COPY MAY BE OBTAINED UPON REQUEST.

PEDESTRIAN SIGNAL STANDARD (TYPE PS) ELECTRICAL DETAIL

STANDARD PLAN J-20.20-01

SHEET 1 OF 1 SHEET

APPROVED FOR PUBLICATION

Pasco Bakotich III — STATE DESIGN ENGINEER — *7/12/12* DATE

Washington State Department of Transportation

EFFECTIVE: AUGUST 6, 2012 TO August 4, 2013
DRAWN BY: LISA CYFORD
EFFECTIVE: AUGUST 6, 2012 TO August 4, 2013
EFFECTIVE: AUGUST 6, 2012 TO August 4, 2013
EFFECTIVE: AUGUST 6, 2012 TO August 4, 2013

EFFECTIVE: AUGUST 6, 2012 TO August 4, 2013
EFFECTIVE: AUGUST 6, 2012 TO August 4, 2013

DRAWN BY: LISA CYFORD

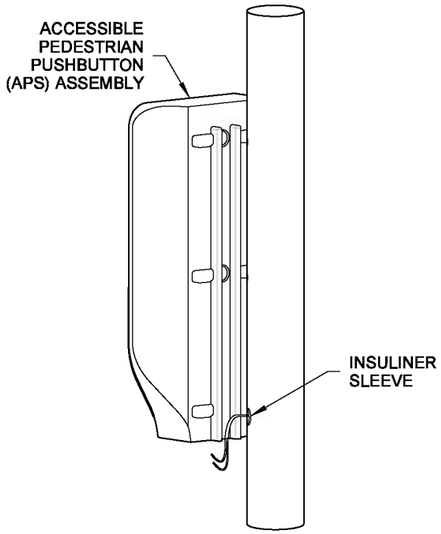

WIRE ROUTING
PERSPECTIVE VIEW

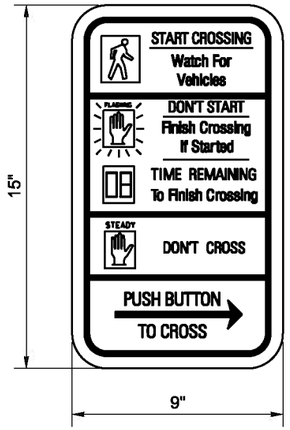

R10-3e (RIGHT)

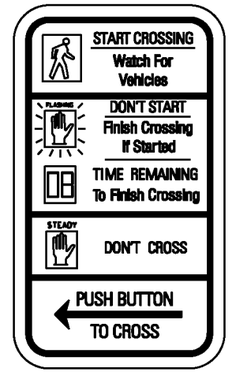

R10-3e (LEFT)

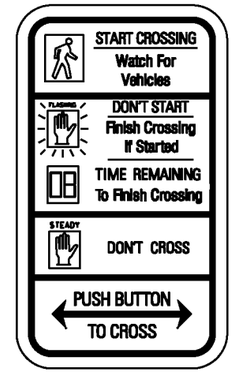

R10-3e (MOD.)

PEDESTRIAN PUSHBUTTON INSTRUCTIONAL SIGN

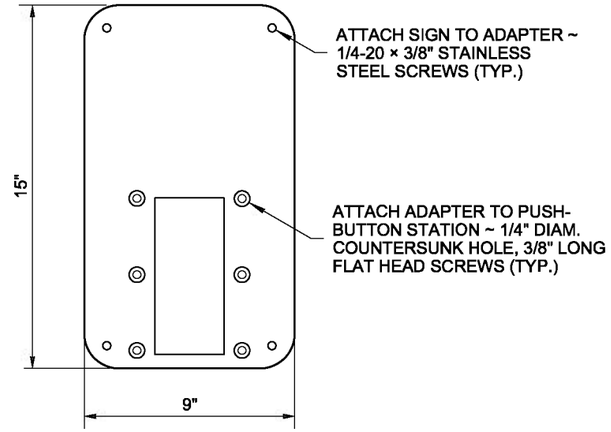

PEDESTRIAN PUSHBUTTON FRAME ADAPTER

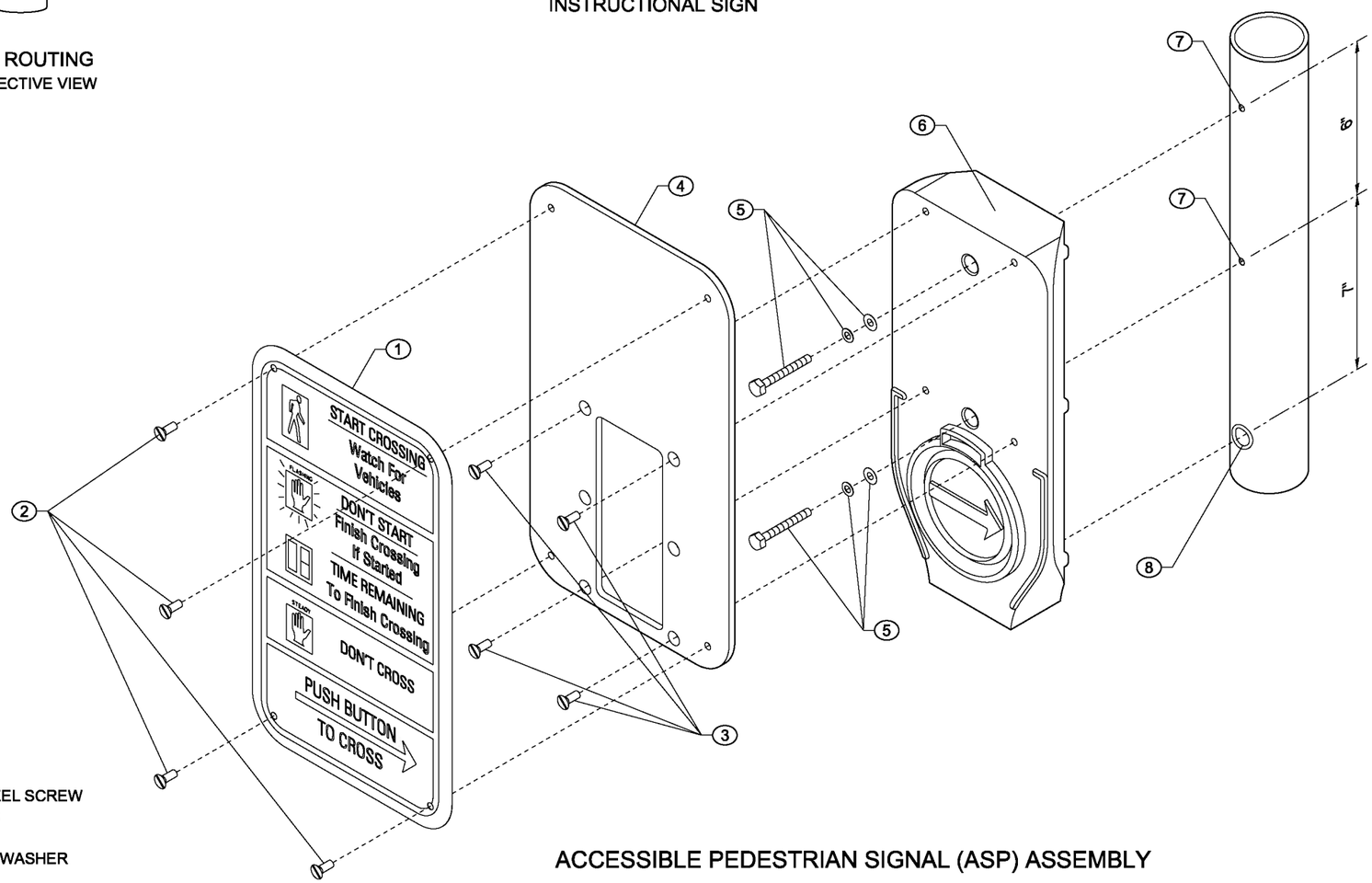

ACCESSIBLE PEDESTRIAN SIGNAL (ASP) ASSEMBLY

METAL POLE INSTALLATION
PPB-M

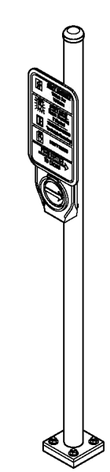

ISOMETRIC VIEW
(METAL POLE SHOWN)

KEY

1. FACE PLATE
2. 1/4-20 × 3/8" LONG STAINLESS STEEL SCREW
3. 1/4-20 STAINLESS STEEL SCREWS
4. PUSHBUTTON FRAME ADAPTER
5. 1/4-20 STAINLESS STEEL BOLT W/ WASHER AND LOCK WASHER
6. PUSHBUTTON STATION
7. DRILL AND TAP SHAFT FOR 1/4" DIAM. BOLT
8. DRILL AND TAP SHAFT FOR 5/8" WIRE GUIDE HOLE - ADD INSULINER

THEODORE JOSEPH BAILEY
STATE OF WASHINGTON
39820
REGISTERED
PROFESSIONAL ENGINEER

NOTE: THIS PLAN IS NOT A LEGAL ENGINEERING DOCUMENT BUT AN ELECTRONIC DUPLICATE. THE ORIGINAL, SIGNED BY THE ENGINEER AND APPROVED FOR PUBLICATION, IS KEPT ON FILE AT THE WASHINGTON STATE DEPARTMENT OF TRANSPORTATION. A COPY MAY BE OBTAINED UPON REQUEST.

ACCESSIBLE PEDESTRIAN PUSHBUTTON (PPB) DETAILS

STANDARD PLAN J-20.26-01

SHEET 1 OF 2 SHEETS

APPROVED FOR PUBLICATION

Pasco Bakotich III — STATE DESIGN ENGINEER
7/12/12 — DATE

Washington State Department of Transportation

EFFECTIVE: AUGUST 6, 2012 TO August 4, 2013
EFFECTIVE: AUGUST 6, 2012 TO August 4, 2013
EFFECTIVE: AUGUST 6, 2012 TO August 4, 2013
EFFECTIVE: AUGUST 6, 2012 TO August 4, 2013

EFFECTIVE: AUGUST 6, 2012 TO August 4, 2013
EFFECTIVE: AUGUST 6, 2012 TO August 4, 2013

DRAWN BY: LISA CYFORD

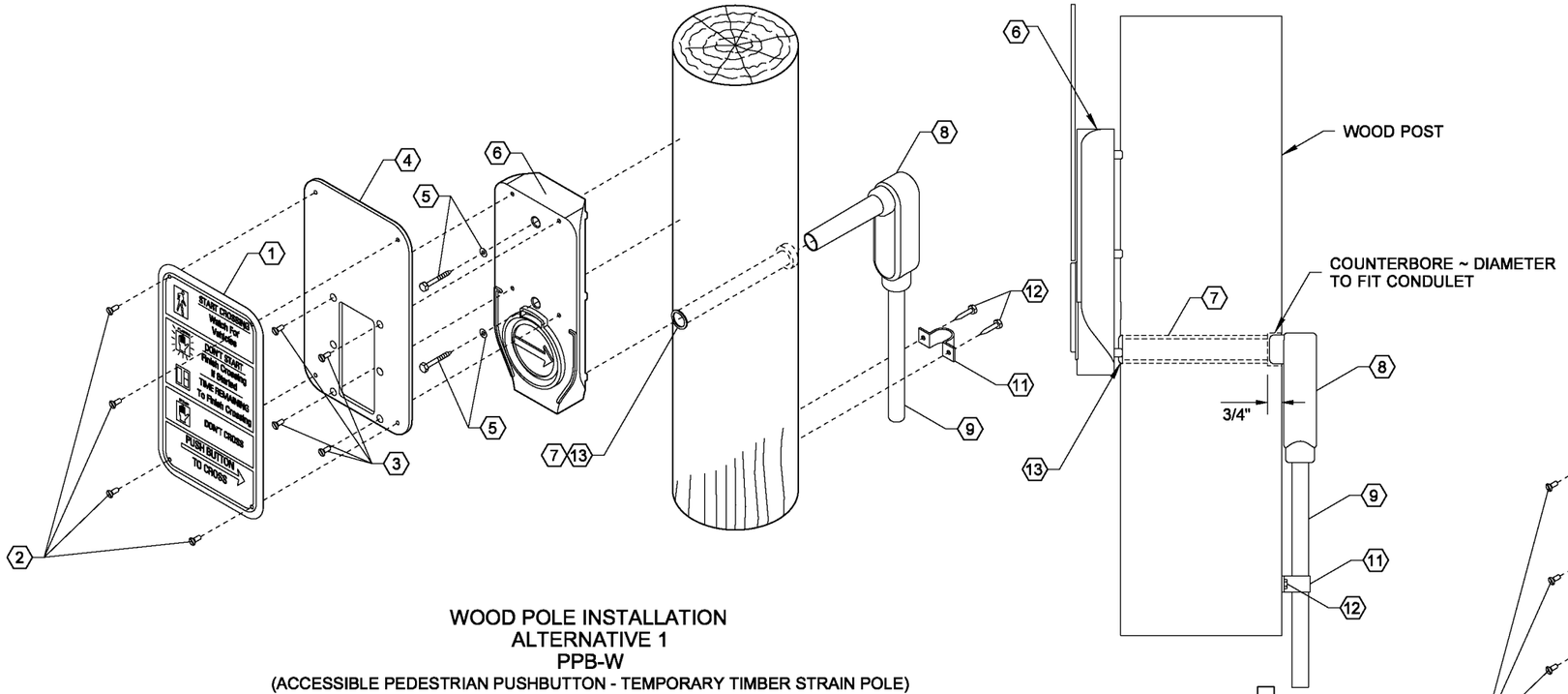

WOOD POLE INSTALLATION
ALTERNATIVE 1
PPB-W
(ACCESSIBLE PEDESTRIAN PUSHBUTTON - TEMPORARY TIMBER STRAIN POLE)

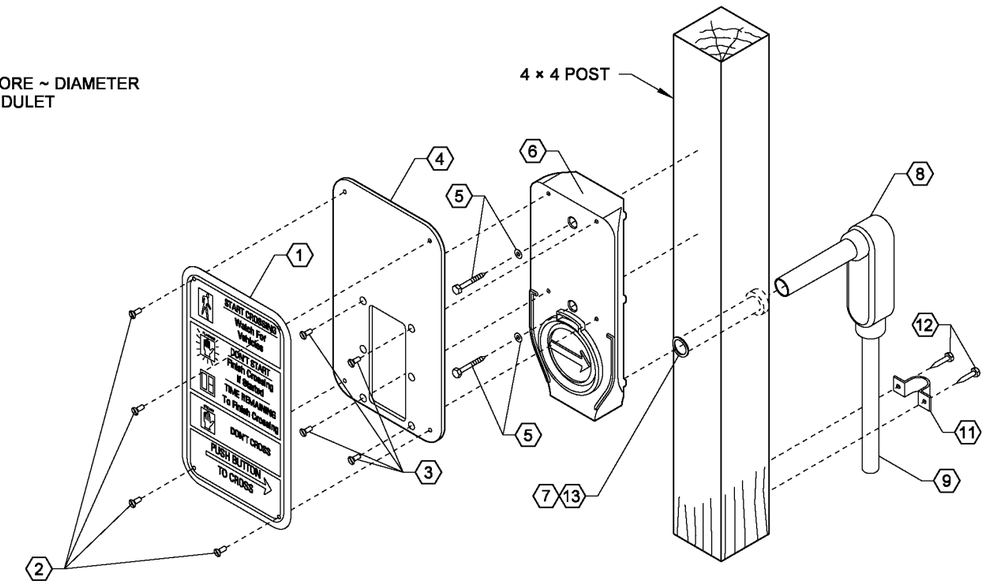

WOOD POLE INSTALLATION
ALTERNATIVE 3
PPB-W
(ACCESSIBLE PEDESTRIAN PUSHBUTTON - TEMPORARY TIMBER POLE)

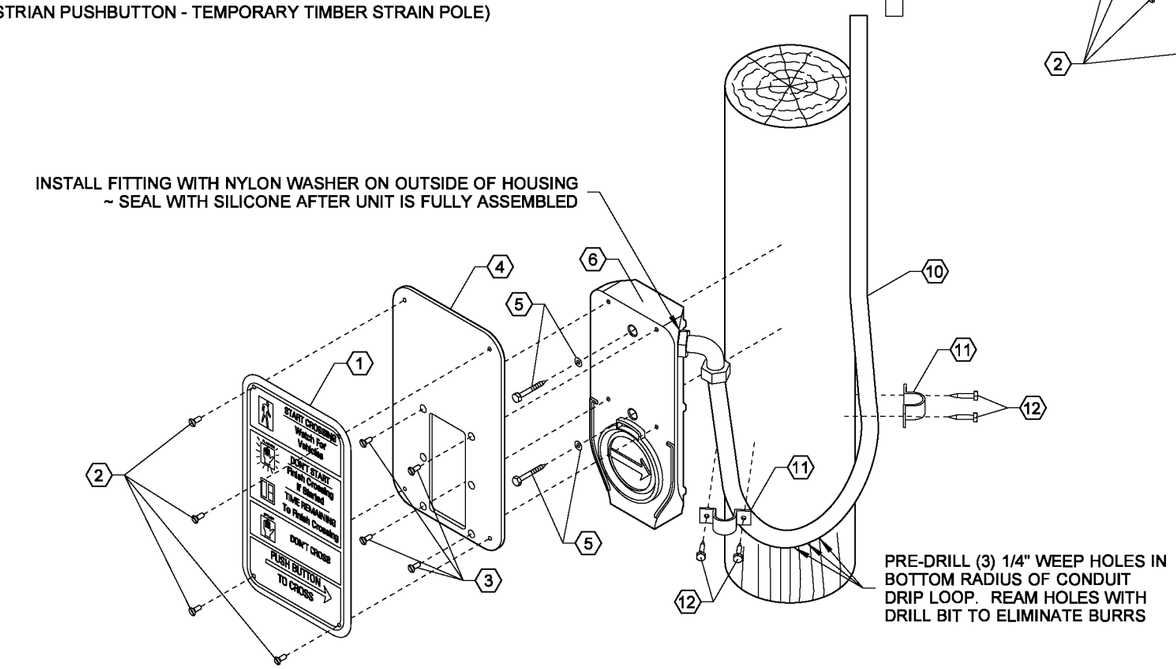

ACCESSIBLE PEDESTRIAN SIGNAL (ASP) ASSEMBLY

WOOD POLE INSTALLATION
ALTERNATIVE 2
PPB-W
(ACCESSIBLE PEDESTRIAN PUSHBUTTON - TEMPORARY TIMBER STRAIN POLE)

TEMPORARY TIMBER POLE

KEY

1. FACE PLATE
2. 1/4-20 × 3/8" LONG STAINLESS STEEL SCREW
3. 1/4-20 STAINLESS STEEL SCREWS
4. PUSHBUTTON FRAME ADAPTER
5. LAG BOLT WITH WASHER
6. PUSHBUTTON STATION
7. CONDUIT DIAMETER + 1/8" HOLE THRU POLE
8. CONDULET
9. 3/4" CONDUIT
10. LIQUID-TITE FLEX CONDUIT
11. ONE PIECE TWO HOLE CLAMP
12. LAG BOLT
13. INSULINER SLEEVE

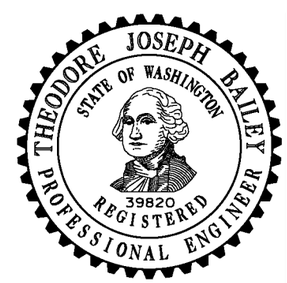

NOTE: THIS PLAN IS NOT A LEGAL ENGINEERING DOCUMENT BUT AN ELECTRONIC DUPLICATE. THE ORIGINAL, SIGNED BY THE ENGINEER AND APPROVED FOR PUBLICATION, IS KEPT ON FILE AT THE WASHINGTON STATE DEPARTMENT OF TRANSPORTATION. A COPY MAY BE OBTAINED UPON REQUEST.

ACCESSIBLE PEDESTRIAN PUSHBUTTON (PPB) DETAILS

STANDARD PLAN J-20.26-01

SHEET 2 OF 2 SHEETS

APPROVED FOR PUBLICATION

Pasco Bakotich III — STATE DESIGN ENGINEER
7/12/12 — DATE

Washington State Department of Transportation

EFFECTIVE: AUGUST 6, 2012 TO August 4, 2013
EFFECTIVE: AUGUST 6, 2012 TO August 4, 2013
EFFECTIVE: AUGUST 6, 2012 TO August 4, 2013
EFFECTIVE: AUGUST 6, 2012 TO August 4, 2013

EFFECTIVE: AUGUST 6, 2012 TO August 4, 2013

DRAWN BY: LISA CYFORD

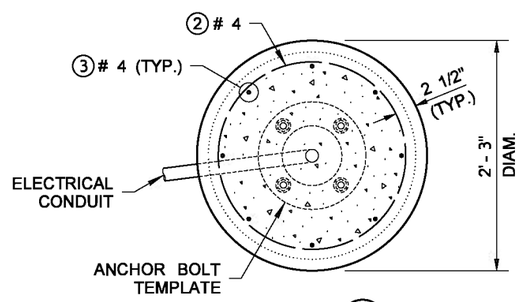

SECTION (A)

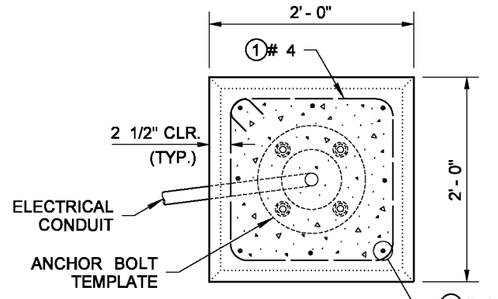

SECTION (B)

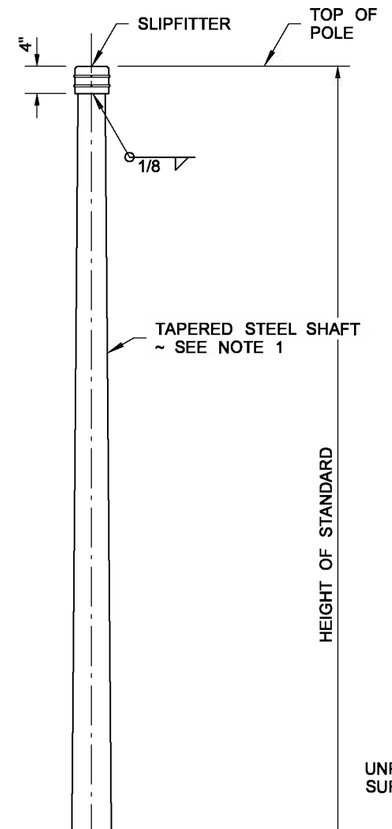

REINFORCING STEEL BENDING DIAGRAM

SEE **STD. SPEC. 9-07.1(2)** FOR BENDING DIAM.

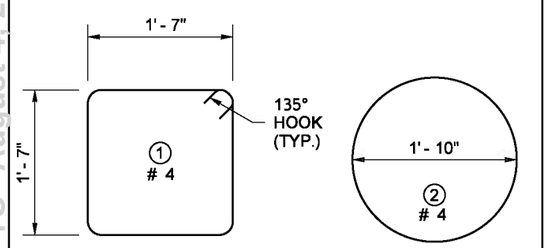

DIMENSIONS ARE OUT TO OUT

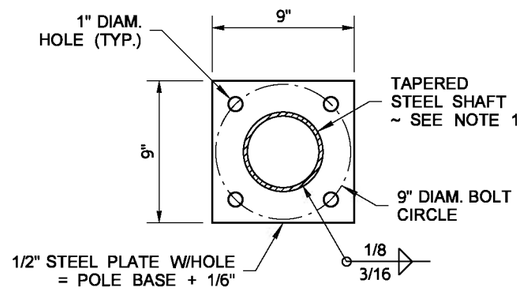

BASE PLATE DETAIL

NOTES

1. Steel Shaft shall be tapered either round or dodecagon (12-sided), 11-gauge, 4 1/2" O.D. at slipfitter weld. Taper shall be 0.14 inches per foot.
2. Hand Holes shall include a removable, rain-tight cover and gasket, fastened with two stainless steel screws (ASTM F 593).
3. Clamping Bolts shall be tightened to 50 ft-lbs max. torque. After state inspection, burr threads to prevent nut rotation. DO NOT OVERTIGHTEN.
4. The final height of the Anchor Bolts must be below the top of the Slip Plate Assembly to ensure proper function of the Slip Base.
5. All Poles shall be hot dip galvanized per AASHTO M111.
6. Grounding Conductor shall be non-insulated #4 AWG stranded copper, provide 3' - 0" min. slack. Clamp to steel reinforcing bar with connector suitable for use embedded in concrete.

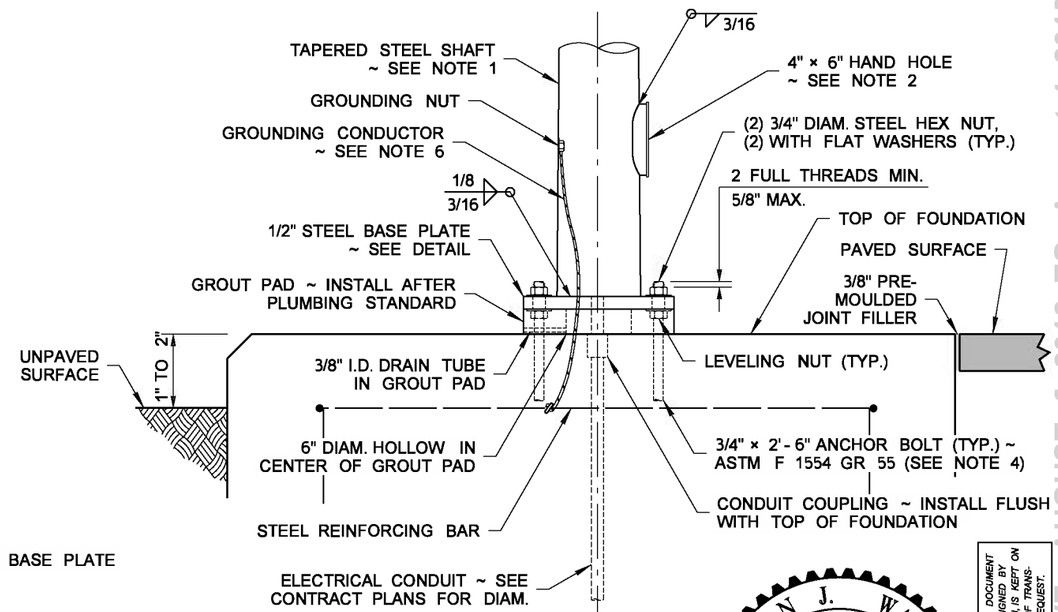

DETAIL (C)

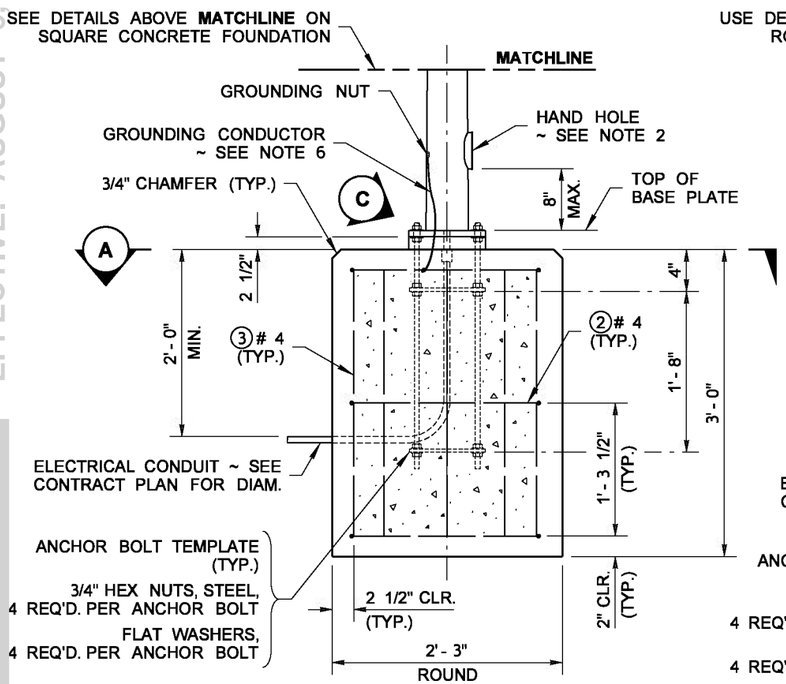

ELEVATION

ROUND CONCRETE FOUNDATION DETAIL

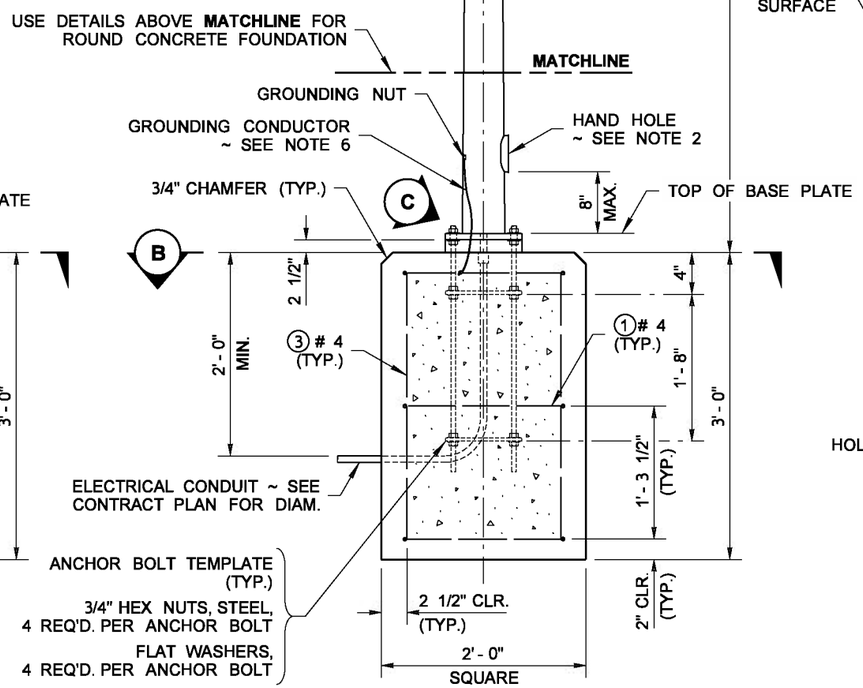

ELEVATION

SQUARE CONCRETE FOUNDATION DETAIL

FIXED BASE

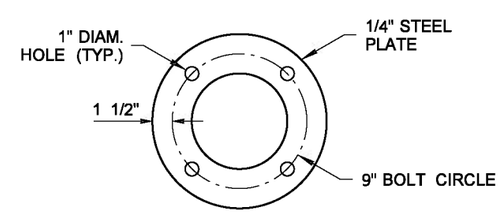

ANCHOR BOLT TEMPLATE

NOTE: THIS PLAN IS NOT A LEGAL ENGINEERING DOCUMENT BUT AN ELECTRONIC DUPLICATE. THE ORIGINAL, SIGNED BY THE ENGINEER AND APPROVED FOR PUBLICATION, IS KEPT ON FILE AT THE WASHINGTON STATE DEPARTMENT OF TRANSPORTATION. A COPY MAY BE OBTAINED UPON REQUEST.

TYPE PS, TYPE 1, RM & FB SIGNAL STANDARD FOUNDATION DETAILS

STANDARD PLAN J-21.10-02

SHEET 1 OF 2 SHEETS

APPROVED FOR PUBLICATION

Pasco Bakotich III — STATE DESIGN ENGINEER
06-27-11 — DATE

Washington State Department of Transportation

EFFECTIVE: AUGUST 6, 2012 TO August 4, 2013

EFFECTIVE: AUGUST 6, 2012 TO August 4, 2013

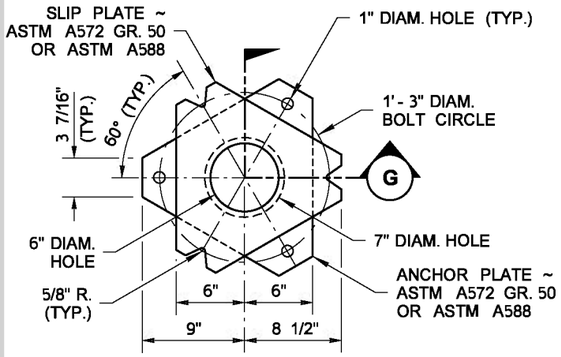

SLIP AND ANCHOR PLATES DETAIL

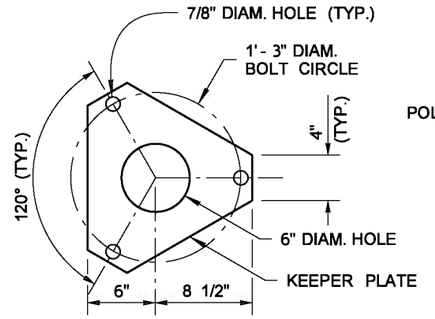

(28 GAGE SHEET METAL)
PLACE BETWEEN POLE BASE PLATE AND SLIP PLATE ON TOP OF MIDDLE WASHERS ~ SEE **STANDARD PLAN J-28.42**

KEEPER PLATE DETAIL

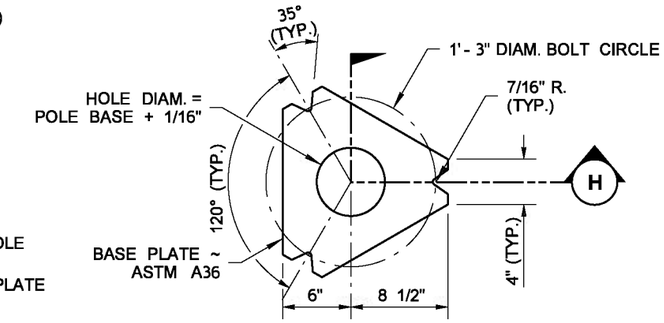

FOR DIMENSIONS NOT SHOWN, SEE SLIP AND ANCHOR PLATES DETAIL

BASE PLATE DETAIL

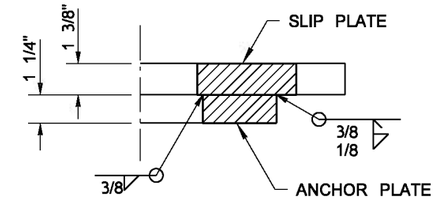

SECTION G

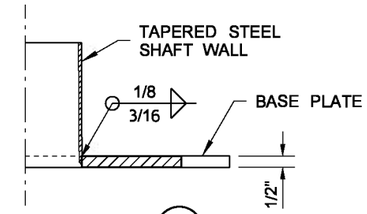

SECTION H

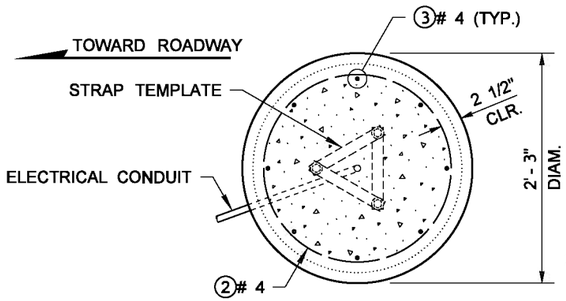

SECTION D

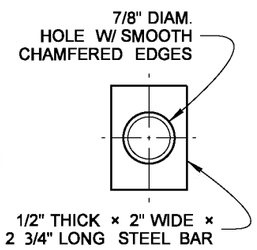

PLATE WASHER DETAIL

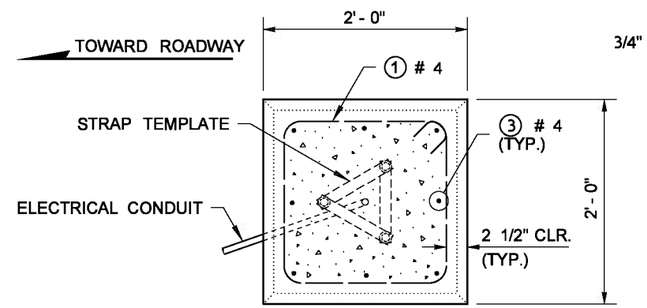

SECTION E

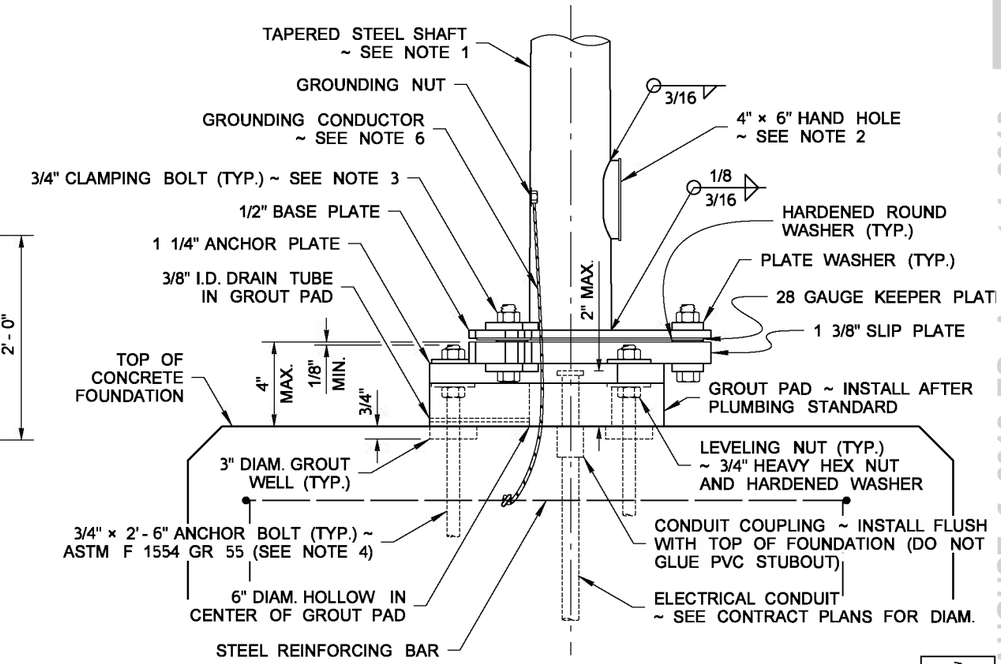

DETAIL F

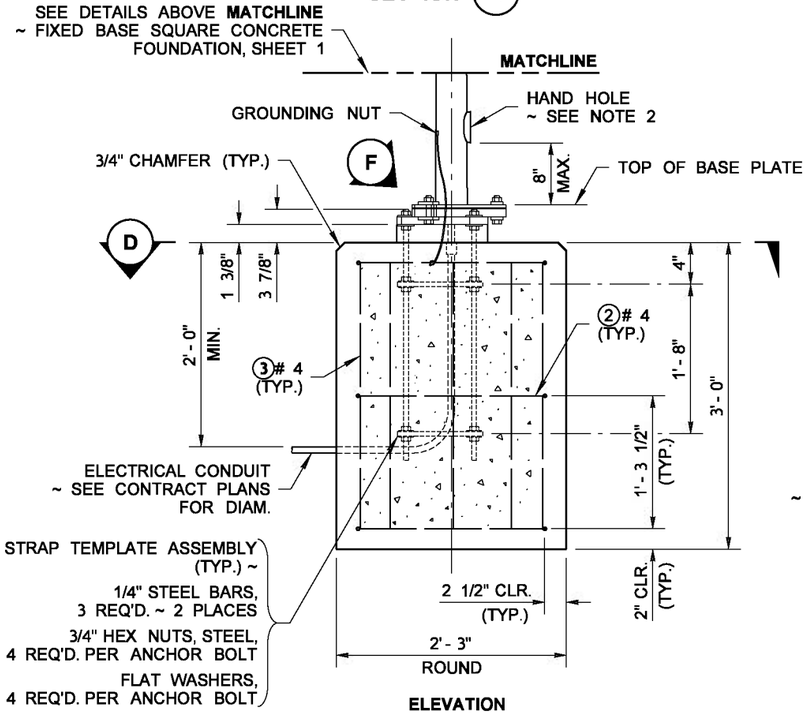

ELEVATION

ROUND CONCRETE FOUNDATION DETAIL

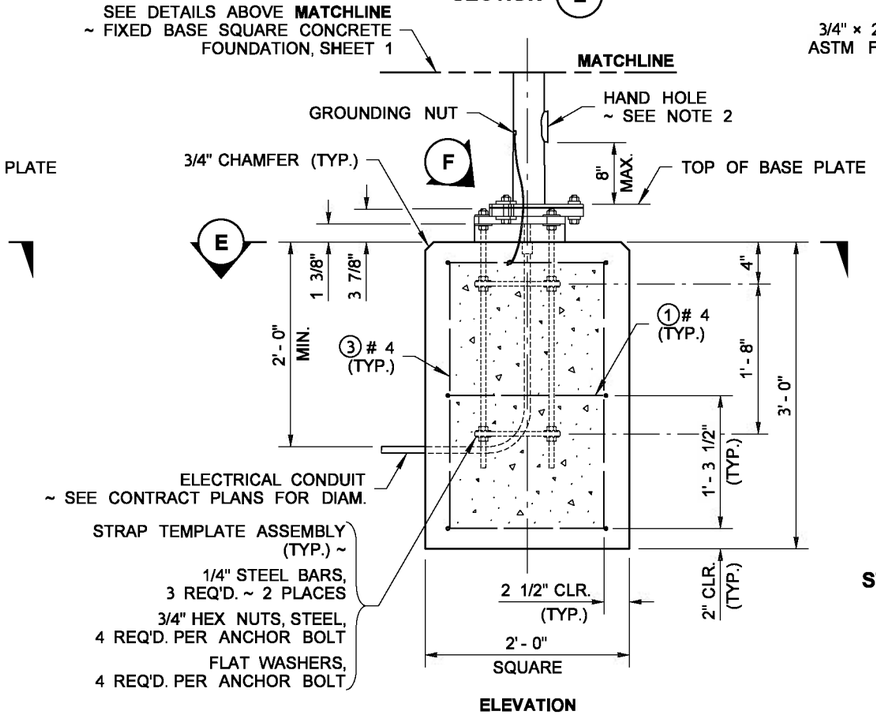

ELEVATION

SQUARE CONCRETE FOUNDATION DETAIL

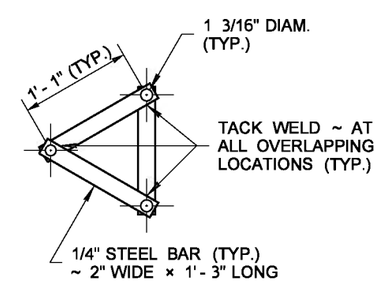

STRAP TEMPLATE DETAIL

SLIP BASE

NOTE: THIS PLAN IS NOT A LEGAL ENGINEERING DOCUMENT BUT AN ELECTRONIC DUPLICATE. THE ORIGINAL SIGNED BY THE ENGINEER AND APPROVED FOR PUBLICATION, IS KEPT ON FILE AT THE WASHINGTON STATE DEPARTMENT OF TRANSPORTATION. A COPY MAY BE OBTAINED UPON REQUEST.

TYPE PS, TYPE 1, RM & FB SIGNAL STANDARD FOUNDATION DETAILS

STANDARD PLAN J-21.10-02

SHEET 2 OF 2 SHEETS

APPROVED FOR PUBLICATION

Pasco Bakotich III — 06-27-11

STATE DESIGN ENGINEER — DATE

Washington State Department of Transportation

DRAWN BY: LISA CYFORD

EFFECTIVE: AUGUST 6, 2012 TO August 4, 2013

EFFECTIVE: AUGUST 6, 2012 TO August 4, 2013
EFFECTIVE: AUGUST 6, 2012 TO August 4, 2013

DRAWN BY: LISA CYFORD

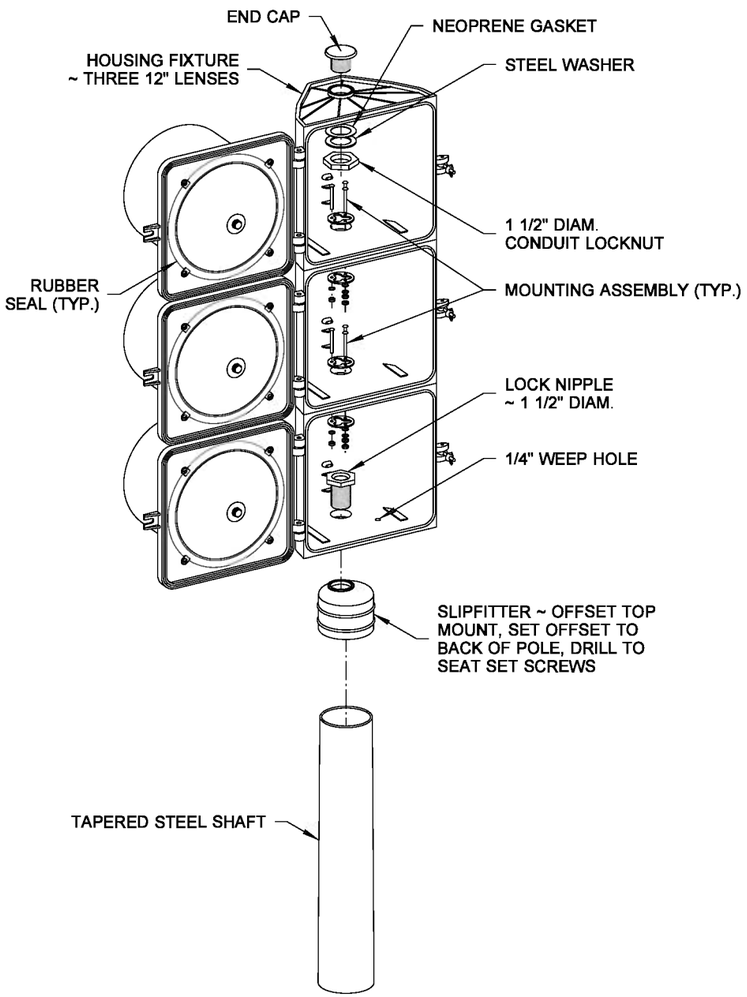

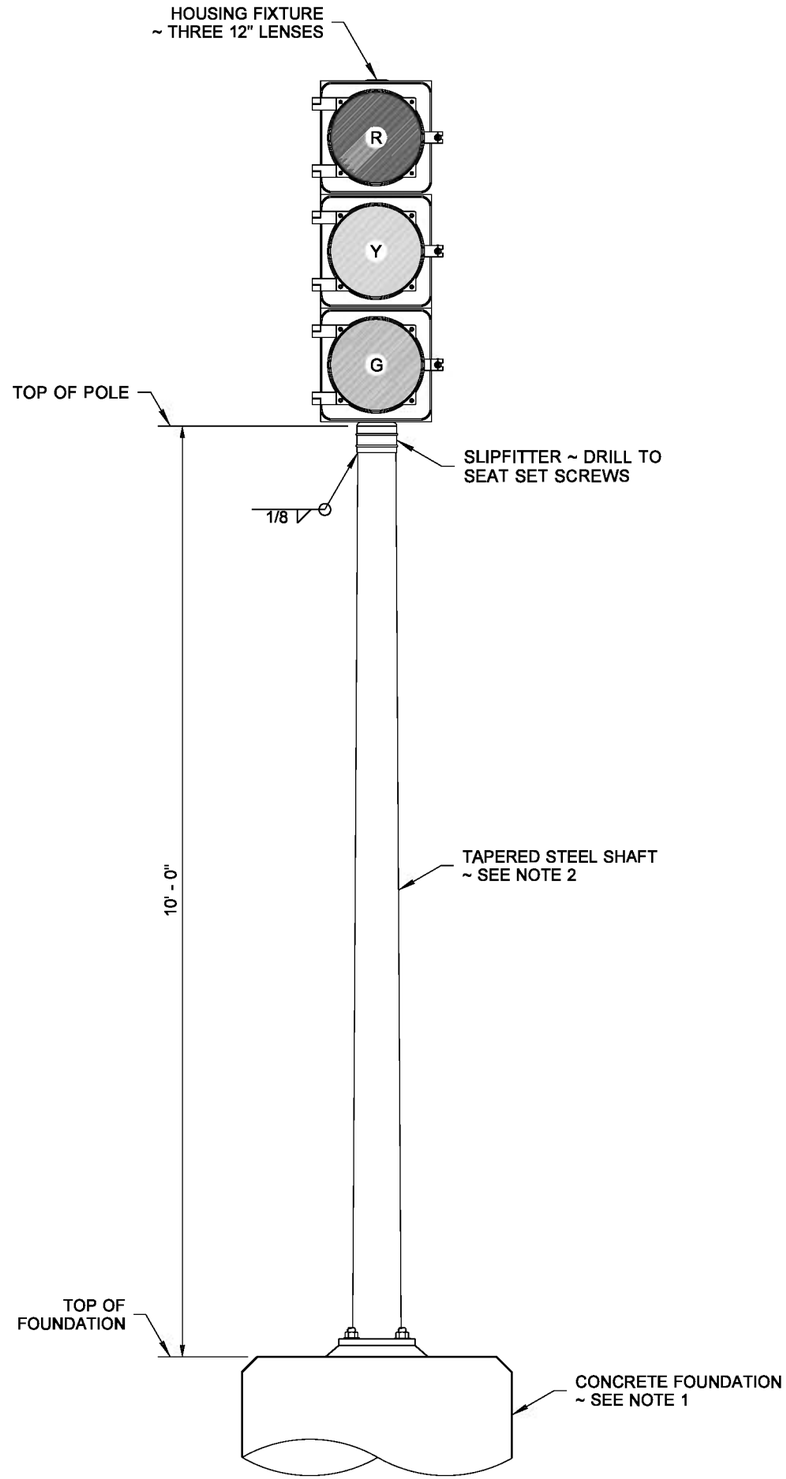

TYPE 1 SIGNAL STANDARD
FIXED BASE SHOWN

NOTES

1. See **Standard Plan J-21.10** for Signal Standard Foundation with Fixed Base and Slip Base details.
2. Steel shaft shall be tapered either round or dodecagon (12 sided), 11 gage, 4 1/2" O.D. at slipfitter weld. Taper shall be 0.14 inches per foot.
3. All poles shall be hot dip galvanized per AASHTO M111.
4. Welding of structures shall be in accordance with the latest edition of the AWS D1.1 Structural Welding Code - Steel. All butt welds shall be ground flush with base metal.
5. See **Standard Plan J-21.20** for Electrical details.

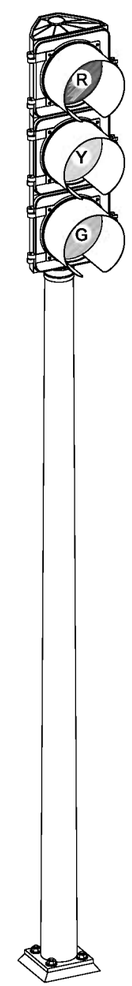

ISOMETRIC VIEW

THEODORE J. TREPANIER
STATE OF WASHINGTON
25335
REGISTERED
PROFESSIONAL ENGINEER

NOTE: THIS PLAN IS NOT A LEGAL ENGINEERING DOCUMENT BUT AN ELECTRONIC DUPLICATE. THE ORIGINAL, SIGNED BY THE ENGINEER AND APPROVED FOR PUBLICATION, IS KEPT ON FILE AT THE WASHINGTON STATE DEPARTMENT OF TRANSPORTATION. A COPY MAY BE OBTAINED UPON REQUEST.

TYPE 1 SIGNAL STANDARD DETAILS

STANDARD PLAN J-21.15-00

SHEET 1 OF 1 SHEET

APPROVED FOR PUBLICATION

Pasco Bakotich III — STATE DESIGN ENGINEER
10-14-09 — DATE

Washington State Department of Transportation

EFFECTIVE: AUGUST 6, 2012 TO August 4, 2013
EFFECTIVE: AUGUST 6, 2012 TO August 4, 2013
EFFECTIVE: AUGUST 6, 2012 TO August 4, 2013
EFFECTIVE: AUGUST 6, 2012 TO August 4, 2013

EFFECTIVE: AUGUST 6, 2012 TO August 4, 2013

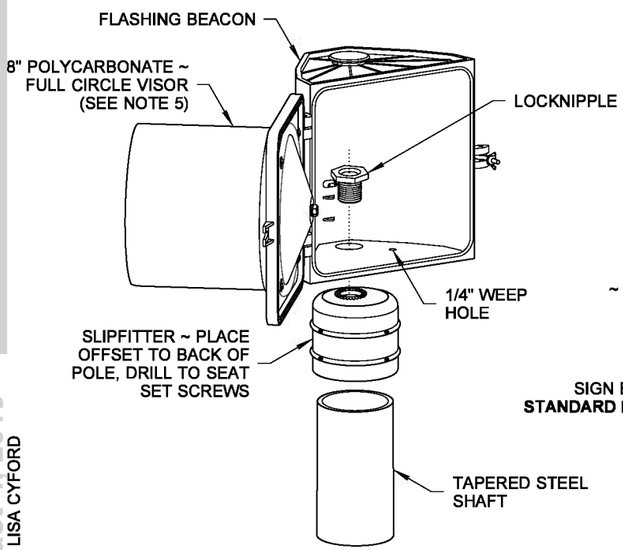

DETAIL (A)

SINGLE FLASHING BEACON DETAIL

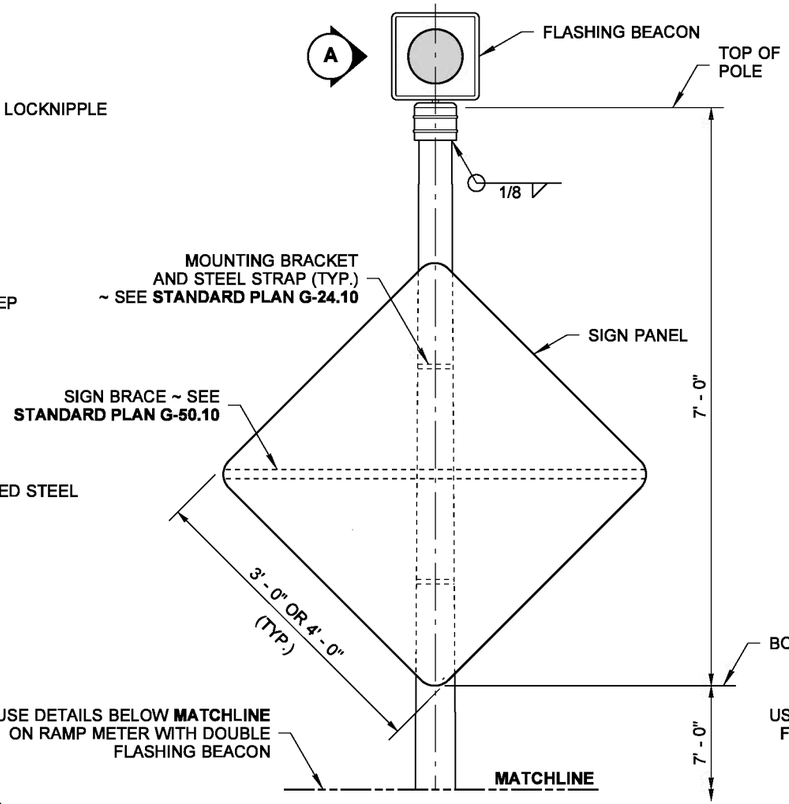

SINGLE FLASHING BEACON

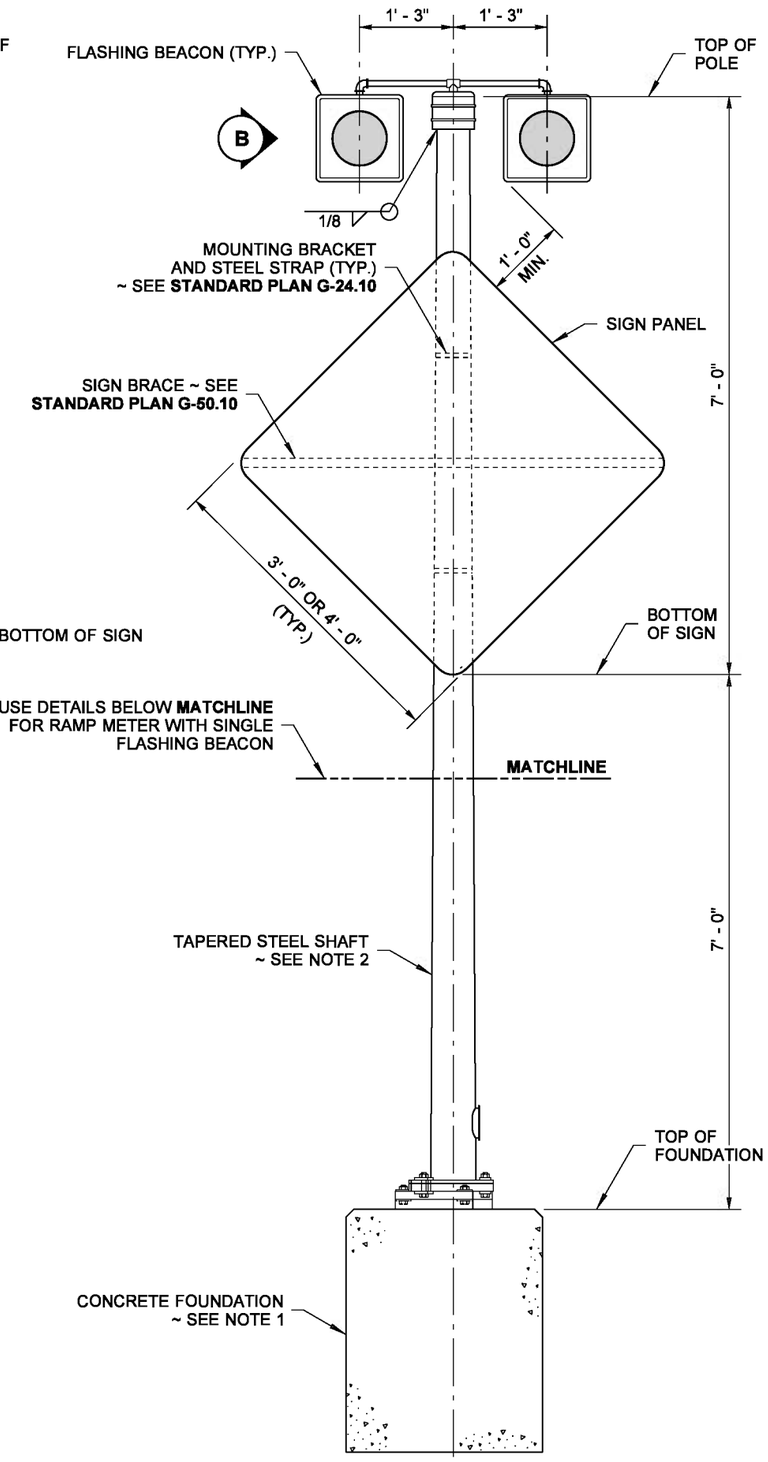

ALTERNATING FLASHING BEACON

FLASHING BEACON TYPE 1

SLIP BASE SHOWN

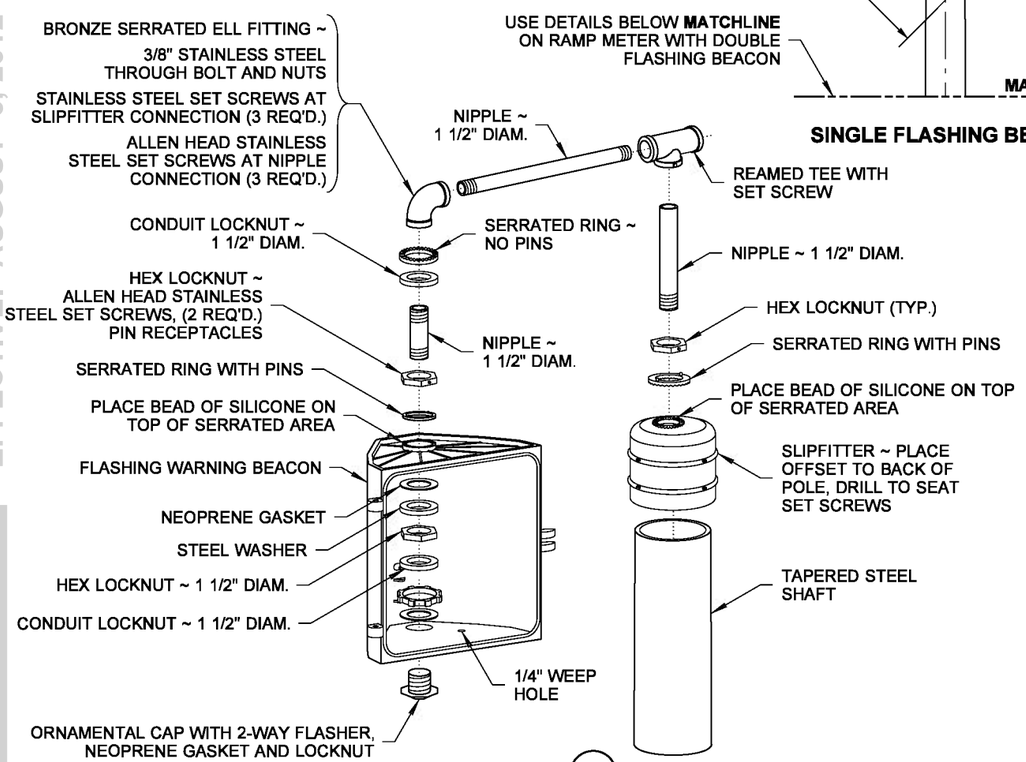

DETAIL (B)

ALTERNATING FLASHING BEACON DETAIL

(SHOWN WITHOUT HINGE DOOR FOR CLARITY)

NOTES

1. See **Standard Plan J-21.10** for Signal Standard Foundation with Fixed Base and Slip Base details.
2. Steel shaft shall be tapered either round or dodecagon (12 sided), 11 gage, 4 1/2" O.D. at slipfitter weld. Taper shall be 0.14 inches per foot. Pedestrian signal displays mounted on an octagonal (8 sided) traffic signal pole with a pole attachment angle other that 0°, 45°, 90°, 135°, 180°, 225°, 270°, or 315° shall utilize:
   - Type A mounting when two pedestrian heads are installed on the same signal pole.
   - Type B mounting when only one pedestrian signal head is mounted on a signal pole.
3. All poles shall be hot dip galvanized per AASHTO M111.
4. Welding of structures shall be in accordance with the latest edition of the AWS D1.1 Structural Welding Code - Steel. All butt welds shall be ground flush with base metal.
5. Visor shall be 8" Polycarbonate, fully enclosed circle at bottom to reduce glare on sign. Display shall be of appropriate color needed.
6. See **Standard Plan J-21.17** for Electrical details.

NOTE: THIS PLAN IS NOT A LEGAL ENGINEERING DOCUMENT BUT AN ELECTRONIC DUPLICATE. THE ORIGINAL, SIGNED BY THE ENGINEER AND APPROVED FOR PUBLICATION, IS KEPT ON FILE AT THE WASHINGTON STATE DEPARTMENT OF TRANSPORTATION. A COPY MAY BE OBTAINED UPON REQUEST.

FLASHING BEACON TYPE 1 SIGNAL STANDARD DETAILS

STANDARD PLAN J-21.16-00

SHEET 1 OF 1 SHEET

APPROVED FOR PUBLICATION

Pasco Bakotich III — STATE DESIGN ENGINEER

10-14-09 — DATE

Washington State Department of Transportation

DRAWN BY: LISA CYFORD

EFFECTIVE: AUGUST 6, 2012 TO August 4, 2013

EFFECTIVE: AUGUST 6, 2012 TO August 4, 2013
EFFECTIVE: AUGUST 6, 2012 TO August 4, 2013

DRAWN BY: LISA CYFORD

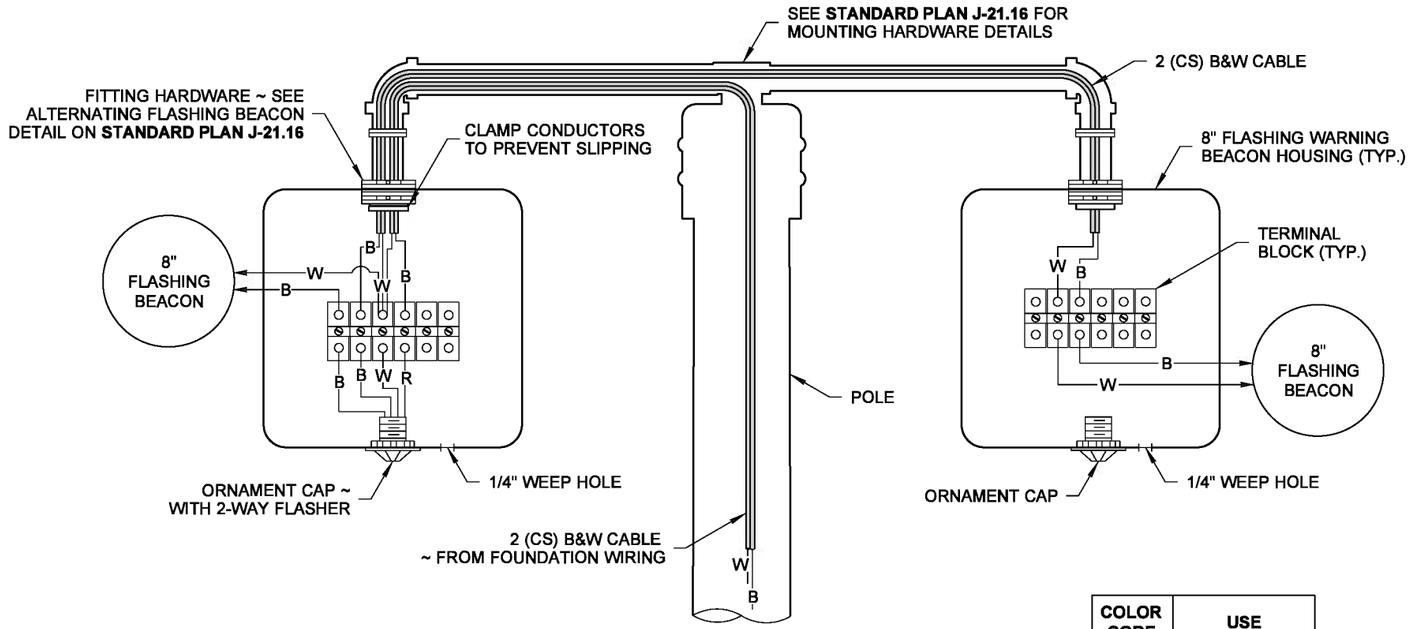

COLOR CODE	USE
R	POWER
W	NEUTRAL
B	FLASHER 1
B	FLASHER 2

DETAIL (A)

FLASHING BEACON WIRING

ALTERNATING FLASH WIRING SHOWN

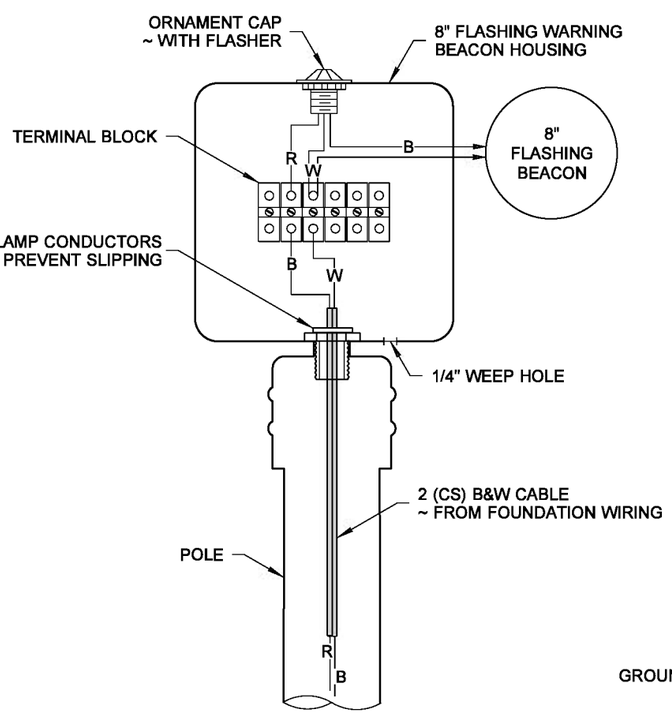

DETAIL (B)

FLASHING BEACON WIRING

SINGLE FLASH WIRING SHOWN

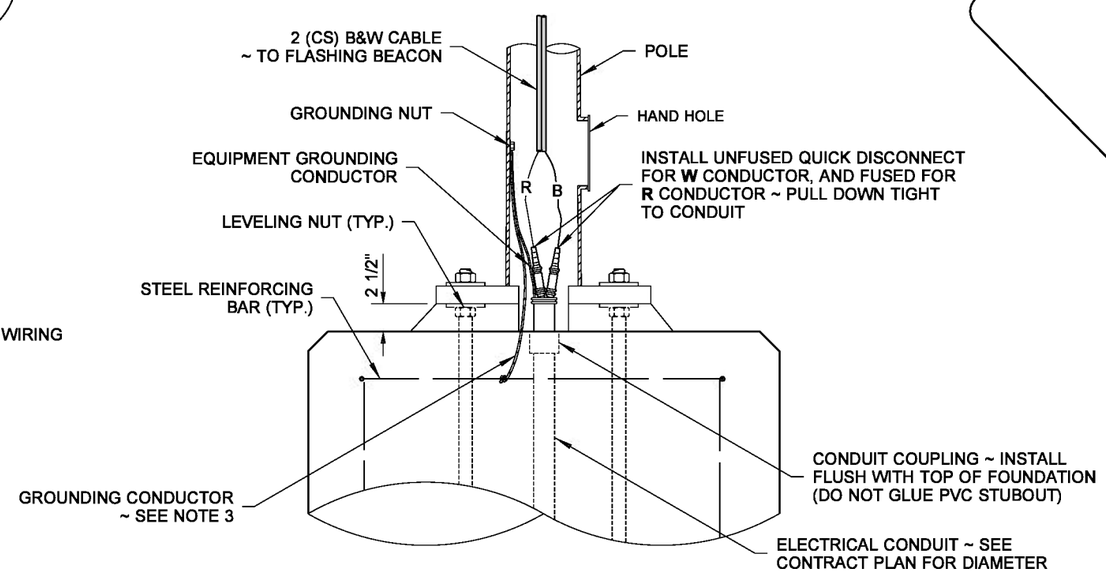

DETAIL (C)

FOUNDATION WIRING

FIXED BASE SHOWN

NOTES

1. See **Standard Specification 9-29.3** for Cable Conductor requirements.
2. See **Standard Plan J-21.16** for Flashing Beacon Type 1 Signal Standard details.
3. Grounding Conductor shall be non-insulated #4 AWG stranded copper, provide 3' - 0" min. slack. Clamp to steel reinforcing bar with listed connector suitable for use embedded in concrete.

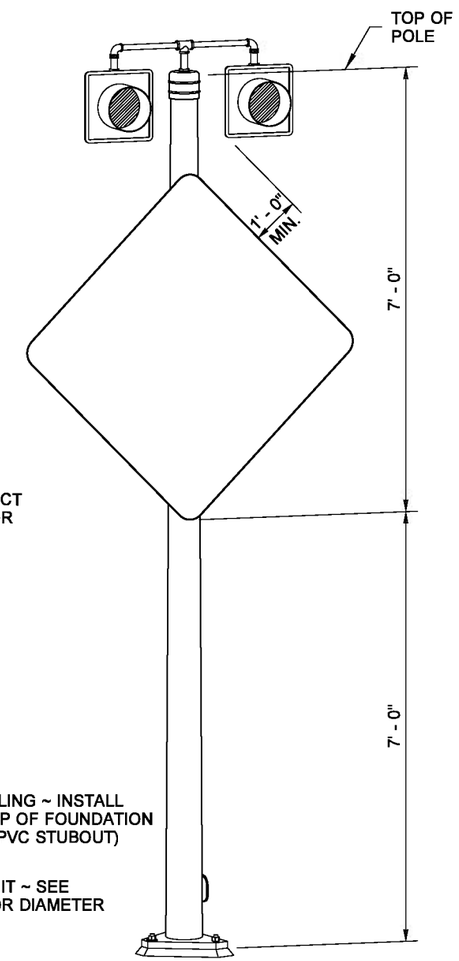

PERSPECTIVE VIEW

FLASHING BEACON TYPE 1

ALTERNATING FLASH BEACON SHOWN

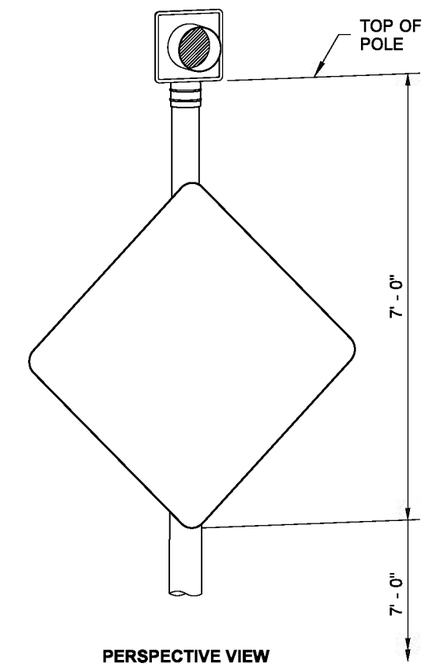

PERSPECTIVE VIEW

FLASHING BEACON TYPE 1

SINGLE FLASH BEACON SHOWN

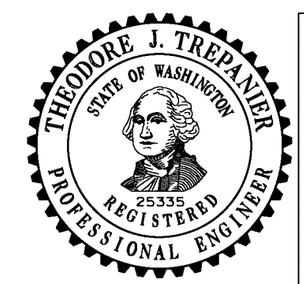

NOTE: THIS PLAN IS NOT A LEGAL ENGINEERING DOCUMENT BUT AN ELECTRONIC DUPLICATE. THE ORIGINAL, SIGNED BY THE ENGINEER AND APPROVED FOR PUBLICATION, IS KEPT ON FILE AT THE WASHINGTON STATE DEPARTMENT OF TRANSPORTATION. A COPY MAY BE OBTAINED UPON REQUEST.

FLASHING BEACON TYPE 1 SIGNAL STANDARD ELECTRICAL DETAILS

STANDARD PLAN J-21.17-00

SHEET 1 OF 1 SHEET

APPROVED FOR PUBLICATION

Pasco Bakotich III — STATE DESIGN ENGINEER

10-14-09 — DATE

Washington State Department of Transportation

EFFECTIVE: AUGUST 6, 2012 TO August 4, 2013
EFFECTIVE: AUGUST 6, 2012 TO August 4, 2013
EFFECTIVE: AUGUST 6, 2012 TO August 4, 2013
EFFECTIVE: AUGUST 6, 2012 TO August 4, 2013

EFFECTIVE: AUGUST 6, 2012 TO August 4, 2013
EFFECTIVE: AUGUST 6, 2012 TO August 4, 2013

DRAWN BY: LISA CYFORD

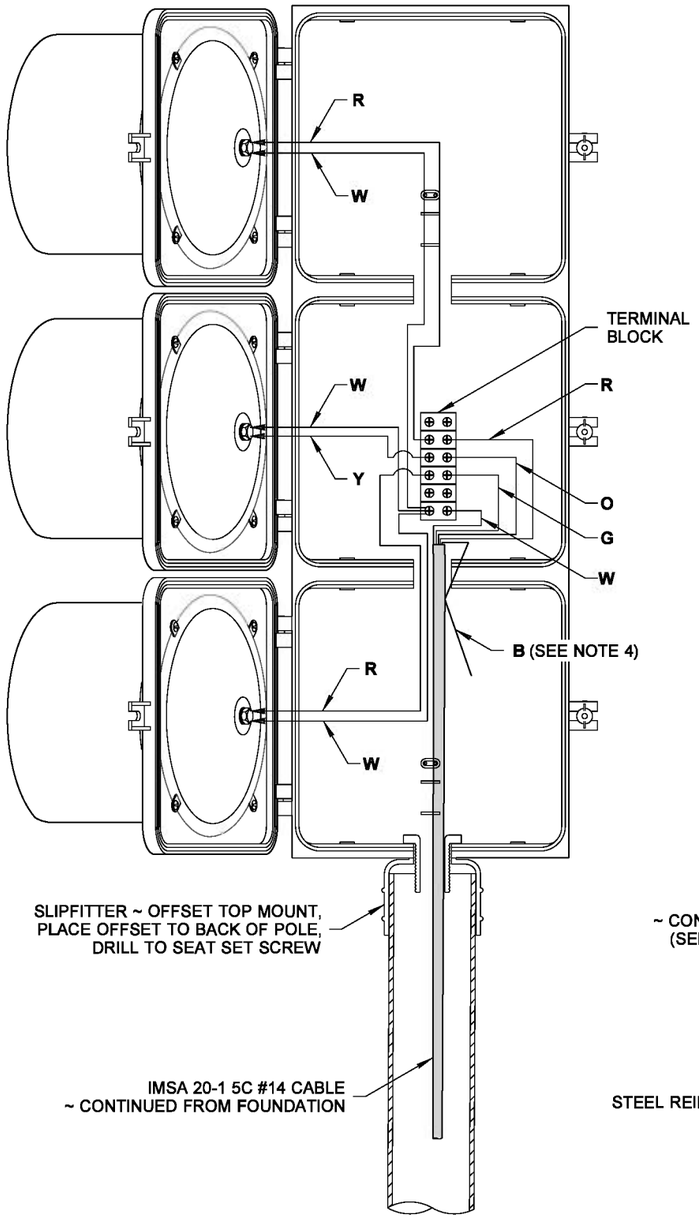

SIGNAL WIRING DETAIL

TERMINAL NUMBER	MARK	DEFINITION
6*1	R	RED DISPLAY
6*2	O	AMBER DISPLAY
6*3	G	GREEN DISPLAY
6*4	B	SPARE CONDUCTOR
6*6	W	NEUTRAL CONDUCTOR

* ASSOCIATED PHASE NUMBER

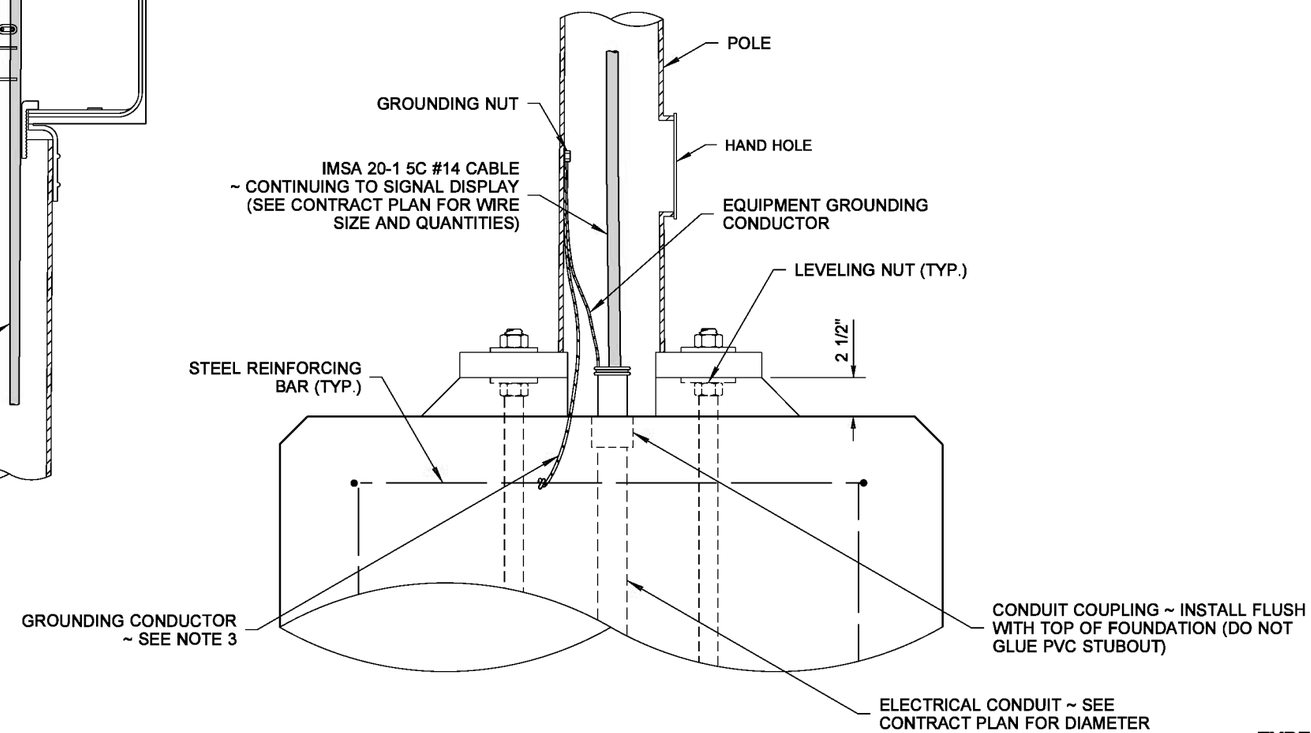

FOUNDATION WIRING DETAIL

NOTES

1. See **Standard Specification 9-29.3** for Cable Conductor requirements.
2. See **Standard Plan J-21.10** for Signal Standard Foundation with Fixed Base and Slip Base details.
3. Grounding Conductor shall be non-insulated **#4** AWG stranded copper, provide 3' - 0" min. slack. Clamp to steel reinforcing bar with connector suitable for use embedded in concrete.
4. Heat shrink cap all spare conductors not terminated on a terminal strip.
5. When a Pedestrian Push Button is specified in contract plans, see **Standard Plan J-20.20** for details.

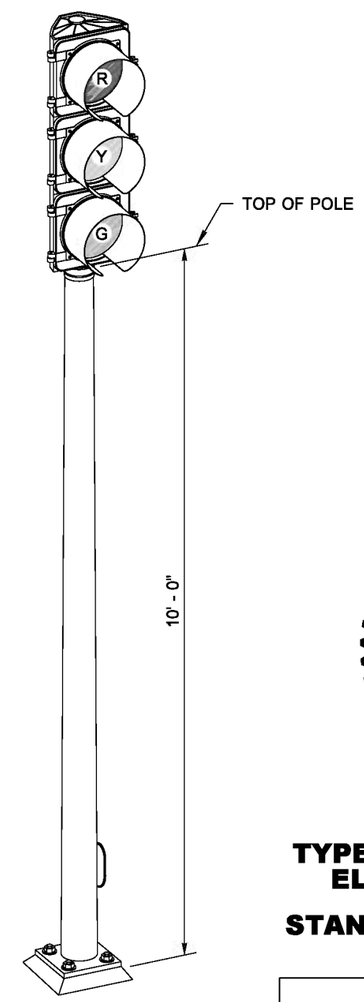

ISOMETRIC VIEW
TYPE 1 SIGNAL STANDARD

THEODORE J. TREPANIER
STATE OF WASHINGTON
25335
REGISTERED
PROFESSIONAL ENGINEER

NOTE: THIS PLAN IS NOT A LEGAL ENGINEERING DOCUMENT BUT AN ELECTRONIC DUPLICATE. THE ORIGINAL, SIGNED BY THE ENGINEER AND APPROVED FOR PUBLICATION, IS KEPT ON FILE AT THE WASHINGTON STATE DEPARTMENT OF TRANSPORTATION. A COPY MAY BE OBTAINED UPON REQUEST.

TYPE 1 SIGNAL STANDARD ELECTRICAL DETAILS

STANDARD PLAN J-21.20-00

SHEET 1 OF 1 SHEET

APPROVED FOR PUBLICATION

Pasco Bakotich III — STATE DESIGN ENGINEER
10-14-09 — DATE

Washington State Department of Transportation

EFFECTIVE: AUGUST 6, 2012 TO August 4, 2013
EFFECTIVE: AUGUST 6, 2012 TO August 4, 2013
EFFECTIVE: AUGUST 6, 2012 TO August 4, 2013
EFFECTIVE: AUGUST 6, 2012 TO August 4, 2013

EFFECTIVE: AUGUST 6, 2012 TO August 4, 2013
EFFECTIVE: AUGUST 6, 2012 TO August 4, 2013

DRAWN BY: LISA CYFORD

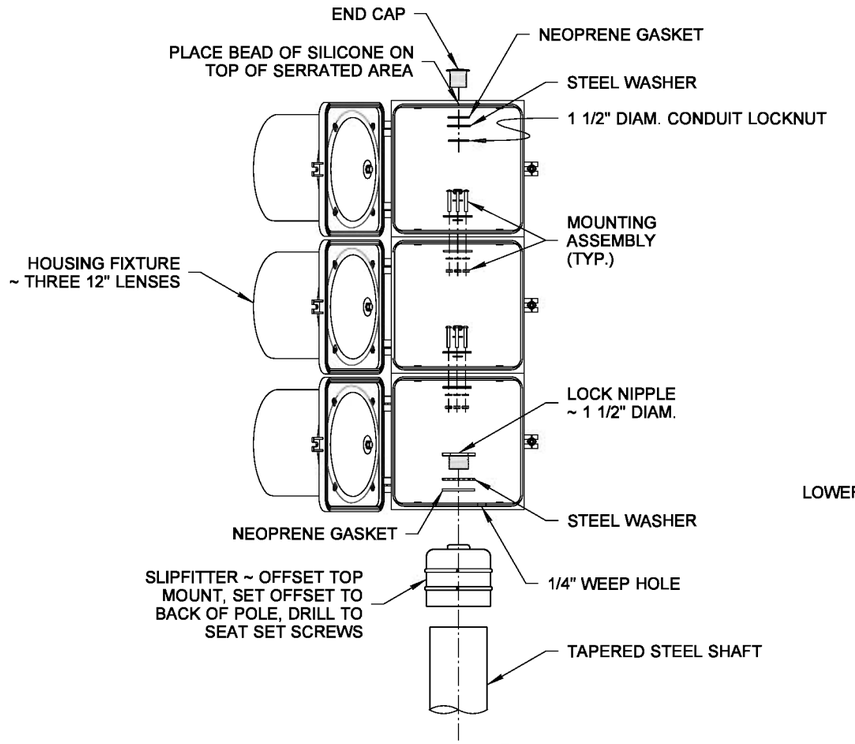

DETAIL A

UPPER TRAFFIC SIGNAL HEAD TOP MOUNT
TYPE D

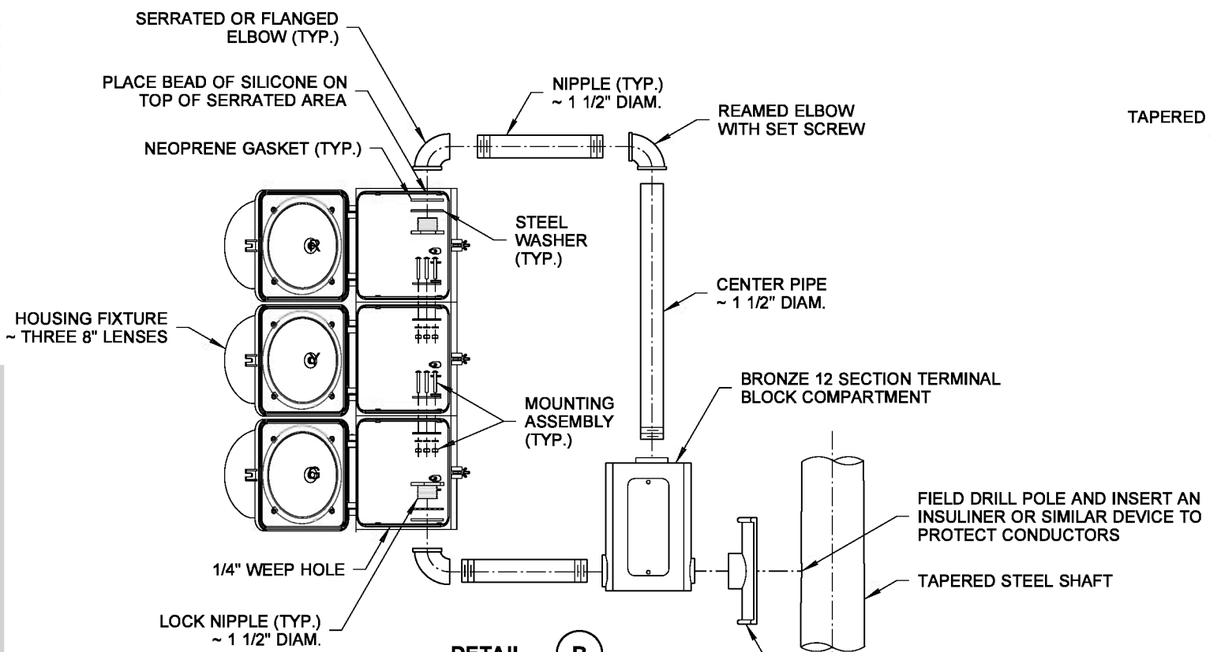

DETAIL B

LOWER TRAFFIC SIGNAL HEAD SIDE MOUNT
TYPE K

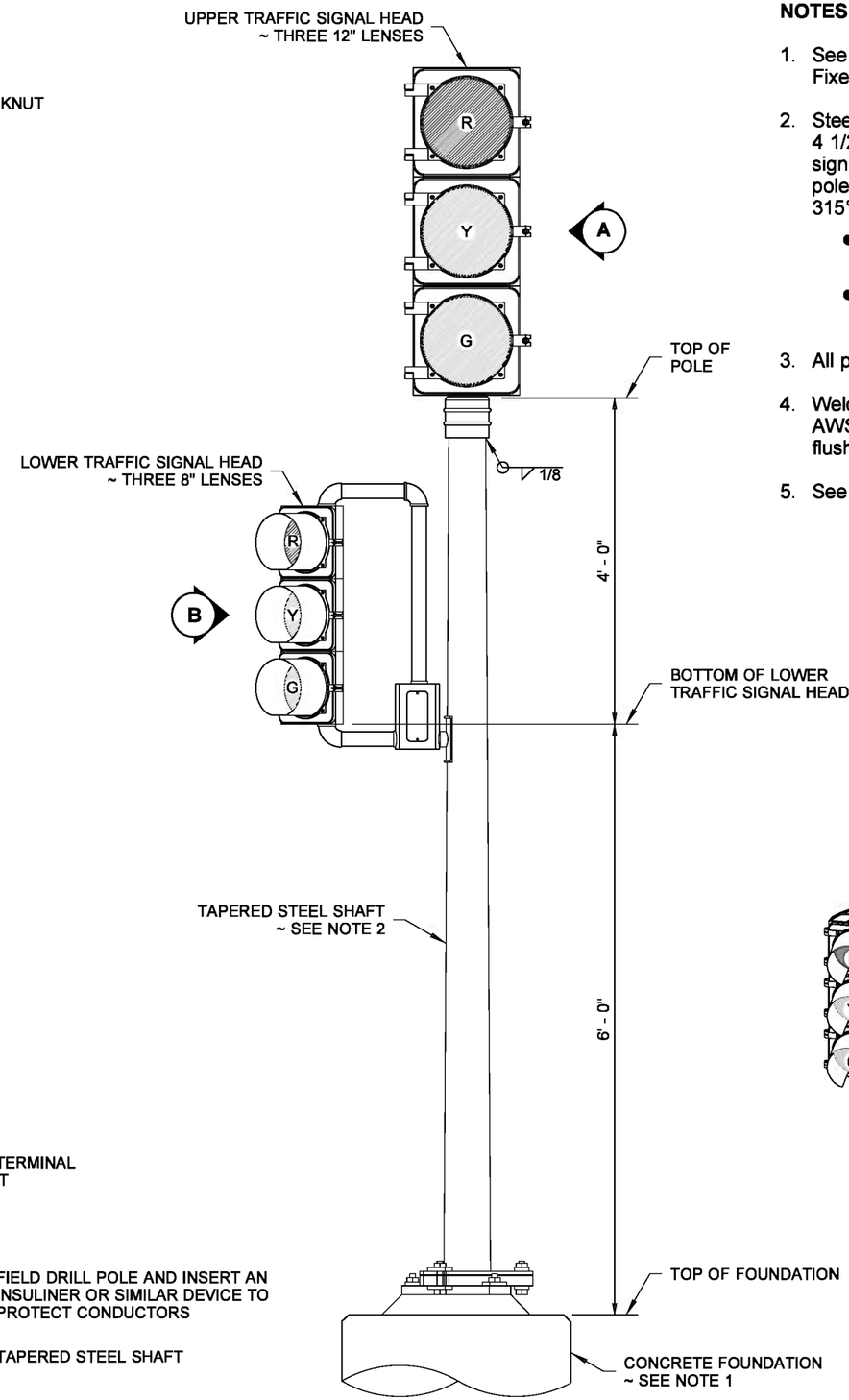

RAMP METER SIGNAL STANDARD
SLIP BASE SHOWN

NOTES

1. See **Standard Plan J-21.10** for Signal Standard Foundation details with a Fixed Base and Slip Base details.
2. Steel shaft shall be tapered either round or dodecagon (12 sided), 11 gage, 4 1/2" O.D. at slipfitter weld. Taper shall be 0.14 inches per foot. Pedestrian signal displays mounted on an octagonal (8 sided) traffic signal pole with a pole attachment angle other than 0°, 45°, 90°, 135°, 180°, 225°, 270°, or 315° shall utilize:
   - Type A mounting when two pedestrian heads are installed on the same signal pole.
   - Type B mounting when only one pedestrian signal head is mounted on a signal pole.
3. All poles shall be hot dip galvanized per AASHTO M111.
4. Welding of structures shall be in accordance with the latest edition of the AWS D1.1 Structural Welding Code - Steel. All butt welds shall be ground flush with base metal.
5. See **Standard Plan J-22.16** for Electrical details.

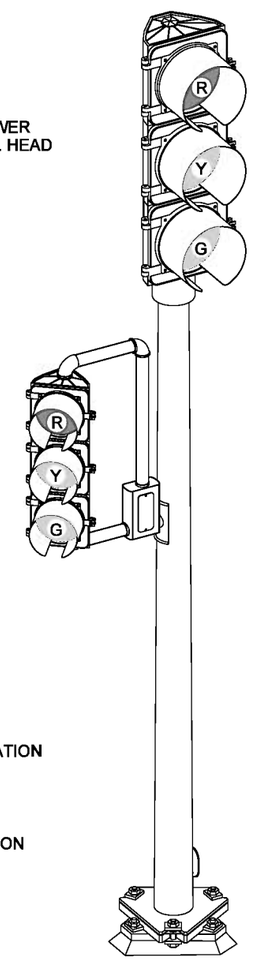

PERSPECTIVE VIEW

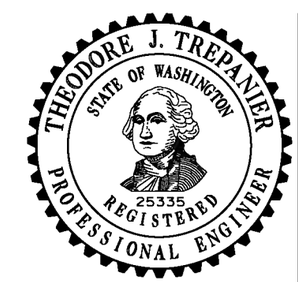

NOTE: THIS PLAN IS NOT A LEGAL ENGINEERING DOCUMENT BUT AN ELECTRONIC DUPLICATE. THE ORIGINAL, SIGNED BY THE ENGINEER AND APPROVED FOR PUBLICATION, IS KEPT ON FILE AT THE WASHINGTON STATE DEPARTMENT OF TRANSPORTATION. A COPY MAY BE OBTAINED UPON REQUEST.

RAMP METER SIGNAL STANDARD DETAILS

STANDARD PLAN J-22.15-00

SHEET 1 OF 1 SHEET

APPROVED FOR PUBLICATION

Pasco Bakotich III — STATE DESIGN ENGINEER
10-14-09 — DATE

Washington State Department of Transportation

EFFECTIVE: AUGUST 6, 2012 TO August 4, 2013
EFFECTIVE: AUGUST 6, 2012 TO August 4, 2013
EFFECTIVE: AUGUST 6, 2012 TO August 4, 2013
EFFECTIVE: AUGUST 6, 2012 TO August 4, 2013

EFFECTIVE: AUGUST 6, 2012 TO August 4, 2013

DRAWN BY: LISA CYFORD

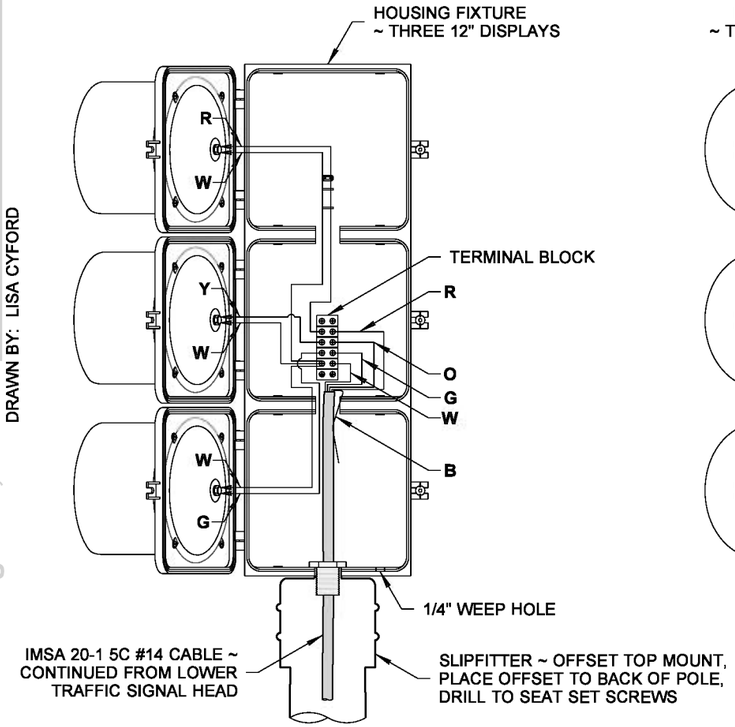

DETAIL (A)

UPPER TRAFFIC SIGNAL HEAD WIRING

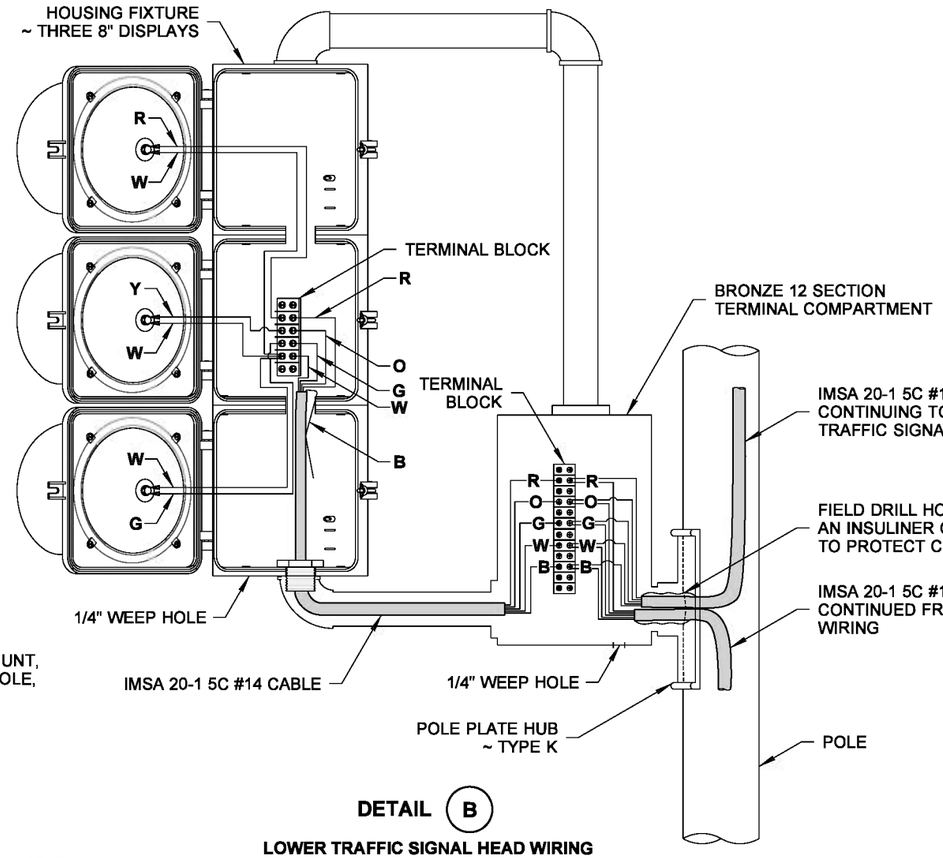

DETAIL (B)

LOWER TRAFFIC SIGNAL HEAD WIRING
(SHOWN LARGER FOR CLARITY)

NOTES

1. See **Standard Plan J-21.10** for Ramp Meter Signal Standard and Foundation Details
2. See **Standard Specifications 9-29.17** for additional Mounting Bracket and Fitting information not shown.
3. Grounding Conductor shall be non-insulated #4 AWG stranded copper, provide 3' - 0" min. slack. Clamp to steel reinforcing bar with connector suitable for use embedded in concrete.
4. Top of Leveling Nut height shall be 1" maximum above foundation.
5. Heat shrink cap all spare conductors not terminated on a terminal strip.

COLOR CODE	USE
R	RED DISPLAY
O	AMBER DISPLAY
G	GREEN DISPLAY
W	NEUTRAL CONDUCTOR
B	SPARE CONDUCTOR

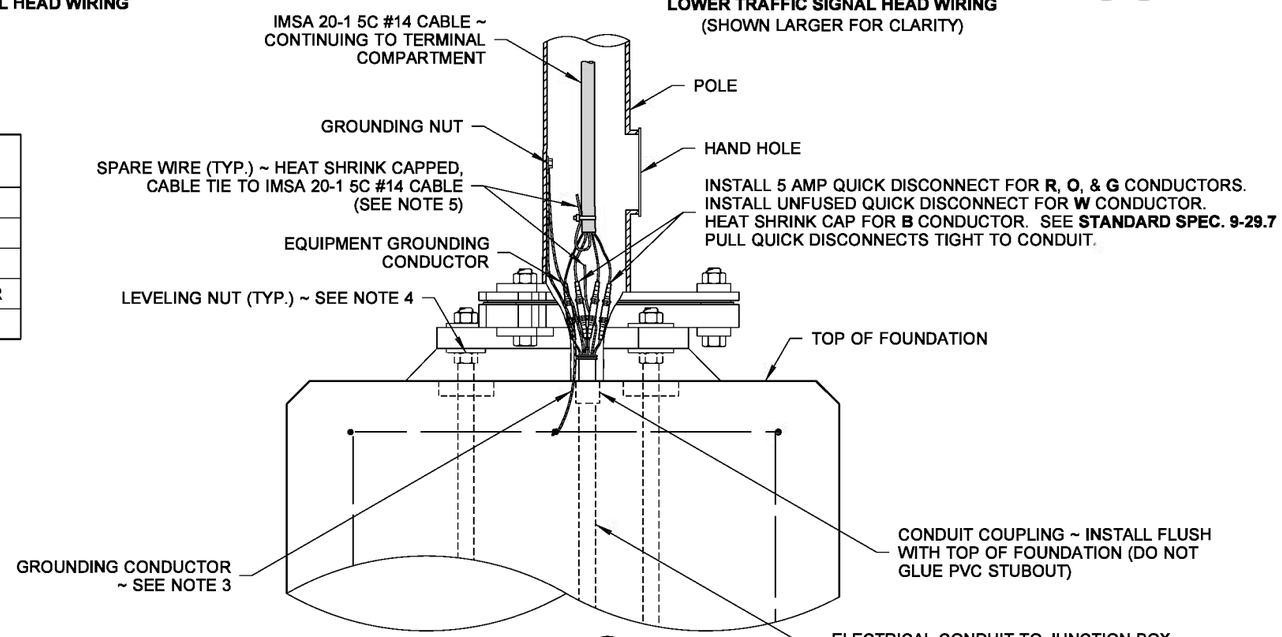

DETAIL (C)

FOUNDATION WIRING

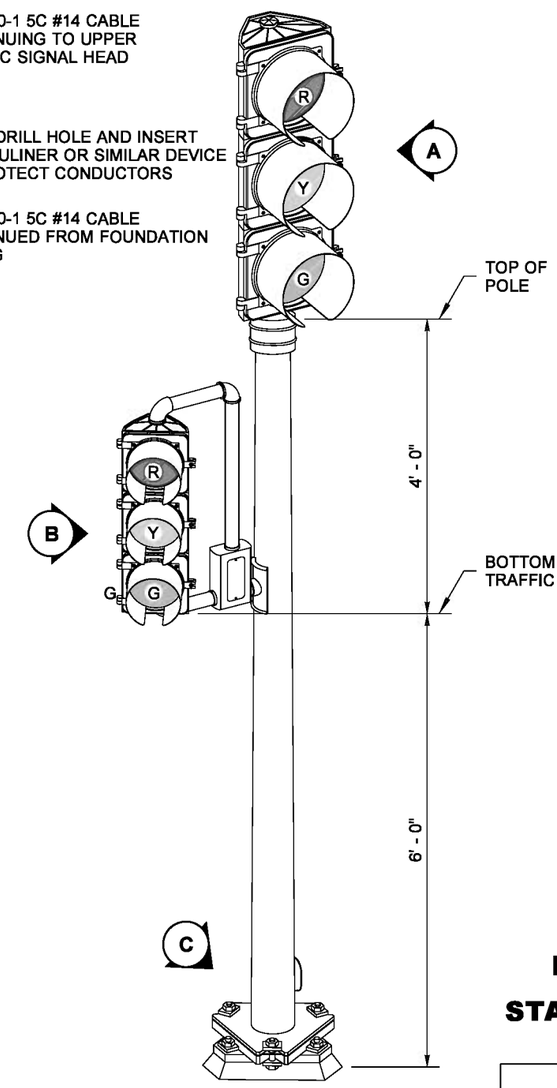

PERSPECTIVE VIEW
RAMP METER

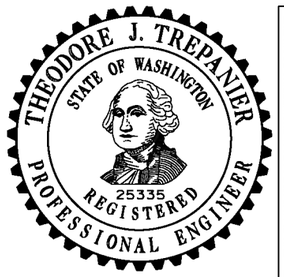

NOTE: THIS PLAN IS NOT A LEGAL ENGINEERING DOCUMENT BUT AN ELECTRONIC DUPLICATE. THE ORIGINAL, SIGNED BY THE ENGINEER AND APPROVED FOR PUBLICATION, IS KEPT ON FILE AT THE WASHINGTON STATE DEPARTMENT OF TRANSPORTATION. A COPY MAY BE OBTAINED UPON REQUEST.

RAMP METER SIGNAL STANDARD ELECTRICAL DETAILS

STANDARD PLAN J-22.16-01

SHEET 1 OF 1 SHEET

APPROVED FOR PUBLICATION

Pasco Bakotich III — STATE DESIGN ENGINEER
06-03-10 — DATE

Washington State Department of Transportation

EFFECTIVE: AUGUST 6, 2012 TO August 4, 2013

EFFECTIVE: AUGUST 6, 2012 TO August 4, 2013

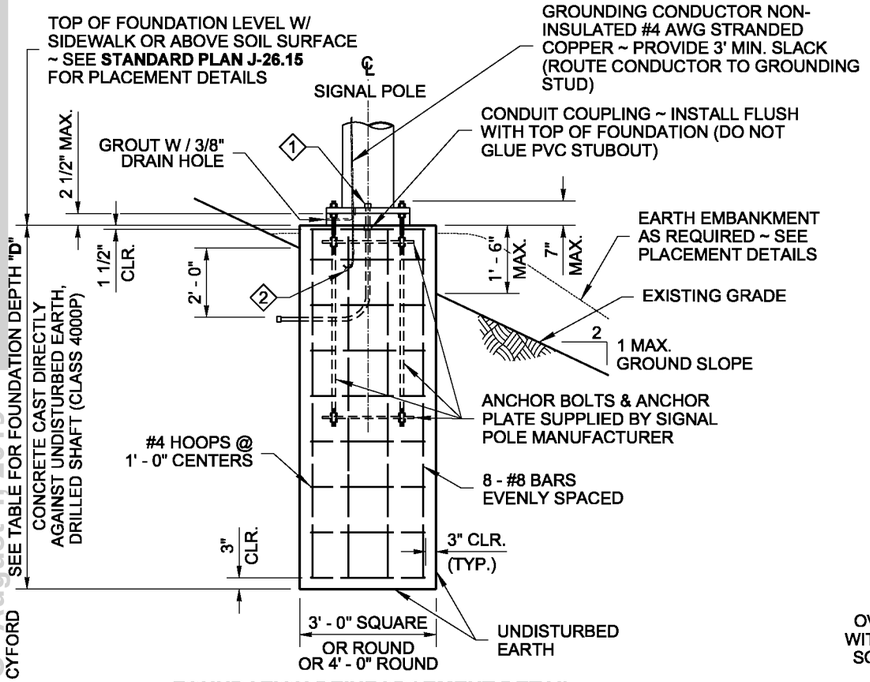

FOUNDATION REINFORCEMENT DETAIL

CONCRETE CAST DIRECTLY AGAINST UNDISTURBED EARTH, DRILLED SHAFT

ALTERNATE # 1

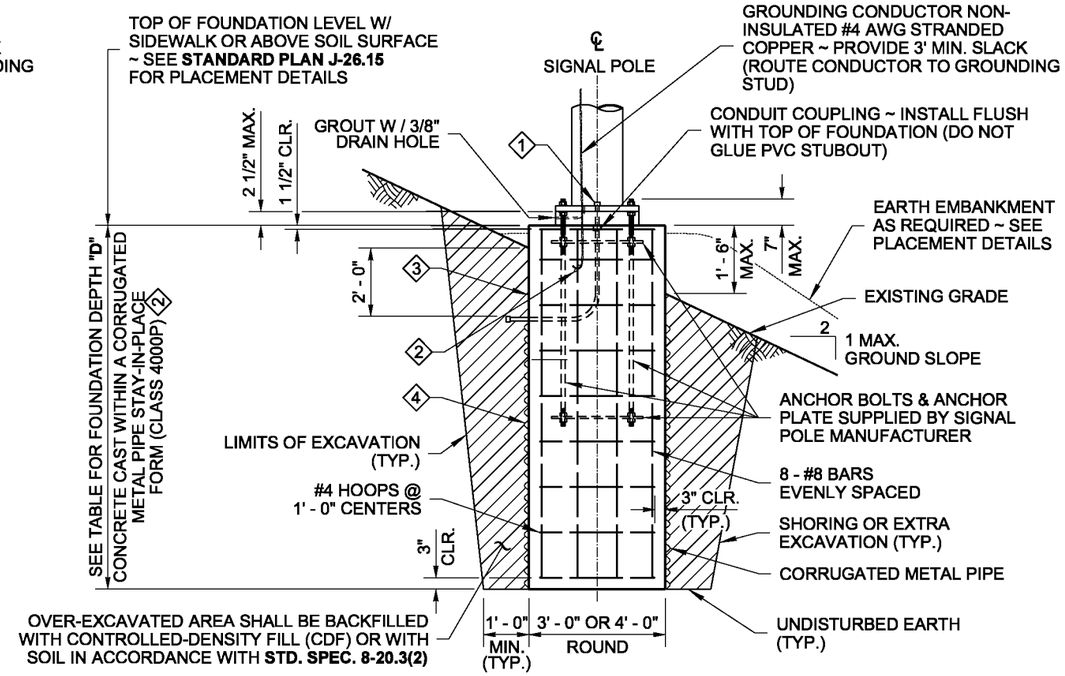

FOUNDATION REINFORCEMENT AND BACKFILL DETAIL

4 CONCRETE CAST WITHIN A CORRUGATED METAL PIPE STAY-IN-PLACE FORM

ALTERNATE # 2

1 CONDUIT SIZE AND QUANTITY AS SHOWN IN THE CONTRACT; CAP BOTH ENDS

2 CLAMP CONDUCTOR TO STEEL REINFORCING WITH LISTED CONNECTOR SUITABLE FOR USE EMBEDDED IN CONCRETE

3 PAPER OR CARDBOARD FORM SHALL NOT STAY-IN-PLACE

NOTES

1. This structure has been designed according to the Fifth Edition 2009 AASHTO Standard Specifications for Structural Supports for Highway Signs, Luminaires and Traffic Signals. Basic wind velocity is 90 mph, Design Life/Recurrence Interval 50 years, and Fatigue Category III
2. Foundations are designed for Type II, III, and SD Signal Standards with a maximum mast arm length of 65'.
3. Foundations are designed for Single Mast Arm Standards and Double Mast Arm Standards with 90° between arms. Special foundation design is required for Double Arm Standards where the angle between mast arms is other than 90°. For Double Mast Arm Standards with 90° between arms, use larger XYZ value for foundation depth selection.
4. Foundations not within the parameters of this standard require Special Design. Contact the WSDOT Bridge and Structures Office through the Engineer for Special Foundation Designs.
5. Foundations constructed within Ecology Embankments shall be increased in depth by the depth of the Ecology Embankment.
6. The top 2 feet of the foundation shall use a smooth form (such as paper or cardboard). After the concrete has cured, this entire form shall be removed.
7. For design parameters between the values listed in Table, depth requirements may be interpolated between the values provided.
8. Install Signal Foundation Identification Tag. See **Standard Plan J-26.15** for details.

FOUNDATION DEPTH "D" TABLE

ALTERNATE # 1 DRILLED SHAFT-TYPE CONSTRUCTION
FOR LATERAL BEARING PRESSURE = 2500 PSF & Ø = 34°, 1500 PSF & Ø = 28°, 1000 PSF & Ø = 26°

GROUND SLOPE = 3H : 1V OR FLATTER

ALLOWABLE LATERAL BEARING PRESSURE	FOUNDATION TYPE	XYZ (FT³) 700	900	1350	1500	1900	2300	2600	3000
1000 PSF	3' - 0" ROUND	10' - 0"	10' - 0"	11' - 0"	11' - 0"	15' - 0"	18' - 0"	20' - 0"	20' - 0"
	3' - 0" SQUARE	8' - 0"	8' - 0"	9' - 0"	9' - 0"	10' - 0"	11' - 0"	12' - 0"	12' - 0"
	4' - 0" ROUND	8' - 0"	8' - 0"	9' - 0"	9' - 0"	10' - 0"	11' - 0"	12' - 0"	12' - 0"
1500 PSF	3' - 0" ROUND	8' - 0"	8' - 0"	9' - 0"	11' - 0"	13' - 0"	15' - 0"	18' - 0"	18' - 0"
	3' - 0" SQUARE	7' - 0"	7' - 0"	7' - 0"	8' - 0"	8' - 0"	9' - 0"	10' - 0"	10' - 0"
	4' - 0" ROUND	7' - 0"	7' - 0"	7' - 0"	8' - 0"	8' - 0"	9' - 0"	10' - 0"	10' - 0"
2500 PSF OR GREATER	3' - 0" ROUND	6' - 0"	6' - 0"	7' - 0"	8' - 0"	9' - 0"	11' - 0"	15' - 0"	15' - 0"
	3' - 0" SQUARE	6' - 0"	6' - 0"	6' - 0"	6' - 0"	7' - 0"	7' - 0"	8' - 0"	8' - 0"
	4' - 0" ROUND	6' - 0"	6' - 0"	6' - 0"	6' - 0"	7' - 0"	7' - 0"	8' - 0"	8' - 0"

GROUND SLOPE = GREATER THAN 3H : 1V TO 2H : 1V

ALLOWABLE LATERAL BEARING PRESSURE	FOUNDATION TYPE	XYZ (FT³) 700	900	1350	1500	1900	2300	2600	3000
1000 PSF	3' - 0" ROUND	SPECIAL FOUNDATION TYPE							
	3' - 0" SQUARE	SPECIAL FOUNDATION TYPE							
	4' - 0" ROUND	SPECIAL FOUNDATION TYPE							
1500 PSF	3' - 0" ROUND	11' - 0"	11' - 0"	12' - 0"	14' - 0"	16' - 0"	18' - 0"	21' - 0"	21' - 0"
	3' - 0" SQUARE	10' - 0"	10' - 0"	10' - 0"	11' - 0"	11' - 0"	12' - 0"	13' - 0"	13' - 0"
	4' - 0" ROUND	10' - 0"	10' - 0"	10' - 0"	11' - 0"	11' - 0"	12' - 0"	13' - 0"	13' - 0"
2500 PSF OR GREATER	3' - 0" ROUND	9' - 0"	9' - 0"	10' - 0"	12' - 0"	12' - 0"	14' - 0"	18' - 0"	18' - 0"
	3' - 0" SQUARE	9' - 0"	9' - 0"	9' - 0"	9' - 0"	10' - 0"	10' - 0"	11' - 0"	11' - 0"
	4' - 0" ROUND	9' - 0"	9' - 0"	9' - 0"	9' - 0"	10' - 0"	10' - 0"	11' - 0"	11' - 0"

ALTERNATE # 2 CORRUGATED METAL PIPE TYPE CONSTRUCTION
FOR LATERAL BEARING PRESSURE = 2500 PSF & Ø = 23°, 1500 PSF & Ø = 18°, 1000 PSF & Ø = 17°

GROUND SLOPE = 3H : 1V OR FLATTER

ALLOWABLE LATERAL BEARING PRESSURE	FOUNDATION TYPE	XYZ (FT³) 700	900	1350	1500	1900	2300	2600	3000
1000 PSF	3' - 0" ROUND	10' - 0"	10' - 0"	11' - 0"	15' - 0"	20' - 0"	25' - 0"	28' - 0"	28' - 0"
	4' - 0" ROUND	8' - 0"	8' - 0"	9' - 0"	12' - 0"	13' - 0"	14' - 0"	15' - 0"	15' - 0"
1500 PSF	3' - 0" ROUND	8' - 0"	8' - 0"	11' - 0"	15' - 0"	18 - 0"	21' - 0"	25' - 0"	25' - 0"
	4' - 0" ROUND	7' - 0"	7' - 0"	7' - 0"	8' - 0"	10' - 0"	13' - 0"	15' - 0"	15' - 0"
2500 PSF OR GREATER	3' - 0" ROUND	6' - 0"	6' - 0"	7' - 0"	11' - 0"	13' - 0"	18' - 0"	20' - 0"	20' - 0"
	4' - 0" ROUND	6' - 0"	6' - 0"	6' - 0"	6' - 0"	7' - 0"	9' - 0"	9' - 0"	9' - 0"

GROUND SLOPE = GREATER THAN 3H : 1V TO 2H : 1V

ALLOWABLE LATERAL BEARING PRESSURE	FOUNDATION TYPE	XYZ (FT³) 700	900	1350	1500	1900	2300	2600	3000
1000 PSF	3' - 0" ROUND	SPECIAL FOUNDATION TYPE							
	4' - 0" ROUND	SPECIAL FOUNDATION TYPE							
1500 PSF	3' - 0" ROUND	11' - 0"	11' - 0"	14' - 0"	18' - 0"	21' - 0"	24' - 0"	28' - 0"	23' - 0"
	4' - 0" ROUND	10' - 0"	10' - 0"	10' - 0"	11' - 0"	13' - 0"	16' - 0"	18' - 0"	18' - 0"
2500 PSF OR GREATER	3' - 0" ROUND	9' - 0"	9' - 0"	10' - 0"	14' - 0"	16' - 0"	21' - 0"	23' - 0"	23' - 0"
	4' - 0" ROUND	9' - 0"	9' - 0"	9' - 0"	9' - 0"	10' - 0"	12' - 0"	12' - 0"	12' - 0"

ALTERNATE #2 - CONSTRUCTION METHOD

METAL (SUBSURFACE) FORM REQUIRED

When the existing soil will not retain a vertical face, over-excavate the foundation area and install a 36" or 48" diameter corrugated metal (pipe) form. The top of the corrugated metal form shall terminate 1 foot below final grade. Continue forming to full height using paper or cardboard form to achieve a smooth finish on final exposed cement concrete. Support the form as necessary to remain plumb.

Place the concrete foundation.

After concrete has cured, remove the entire paper or cardboard form portion.

Backfill with controlled-density fill or compacted borrow in accordance with **Standard Specification 8-20.3(2).**

RICHARD P. ZELDENRUST
STATE OF WASHINGTON
25470
STRUCTURAL ENGINEER
PROFESSIONAL ENGINEER

NOTE: THIS PLAN IS NOT A LEGAL ENGINEERING DOCUMENT BUT AN ELECTRONIC DUPLICATE. THE ORIGINAL, SIGNED BY THE ENGINEER AND APPROVED FOR PUBLICATION, IS KEPT ON FILE AT THE WASHINGTON STATE DEPARTMENT OF TRANSPORTATION. A COPY MAY BE OBTAINED UPON REQUEST.

SIGNAL STANDARD FOUNDATION PLAN

STANDARD PLAN J-26.10-02

SHEET 1 OF 1 SHEET

APPROVED FOR PUBLICATION

Pasco Bakotich III — STATE DESIGN ENGINEER

03-15-12 — DATE

Washington State Department of Transportation

DRAWN BY: LISA CYFORD

EFFECTIVE: AUGUST 6, 2012 TO August 4, 2013

EFFECTIVE: AUGUST 6, 2012 TO August 4, 2013
EFFECTIVE: AUGUST 6, 2012 TO August 4, 2013

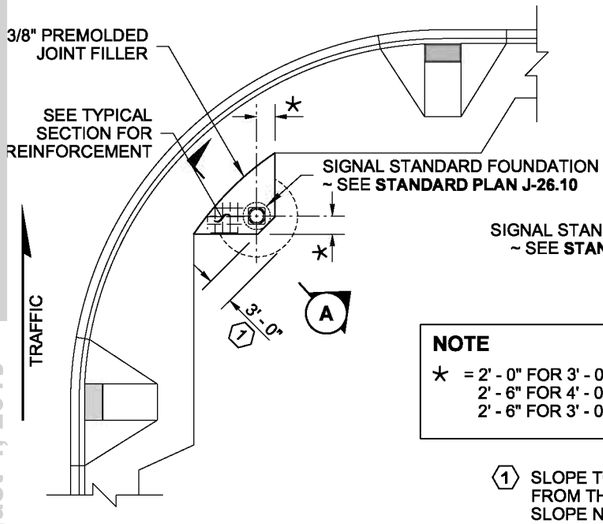

(SHOWN REDUCED)

PLAN

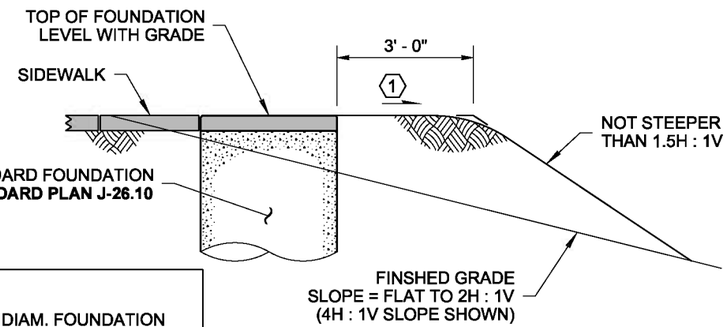

NOTE

* = 2' - 0" FOR 3' - 0" DIAM. FOUNDATION
2' - 6" FOR 4' - 0" DIAM. FOUNDATION
2' - 6" FOR 3' - 0" SQUARE FOUNDATION

(1) SLOPE TO DRAIN AWAY FROM THE FOUNDATION SLOPE NOT STEEPER THAN 5%

SECTION (A)

FOUNDATION IN OR NEAR SIDEWALK

CASE A

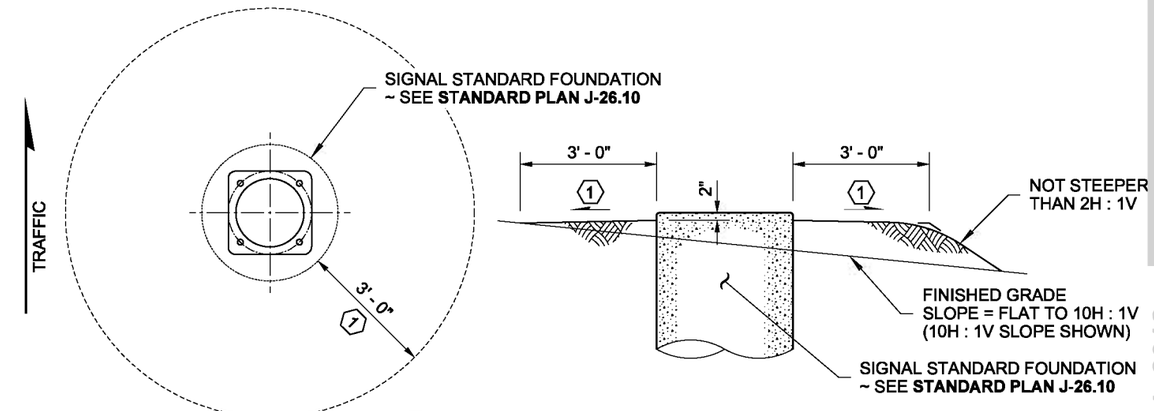

(1) SLOPE TO DRAIN AWAY FROM THE FOUNDATION SLOPE NOT STEEPER THAN 5%

PLAN ELEVATION

EXISTING GRADE OR FILL SLOPE = FLAT TO 10H : 1V

CASE B

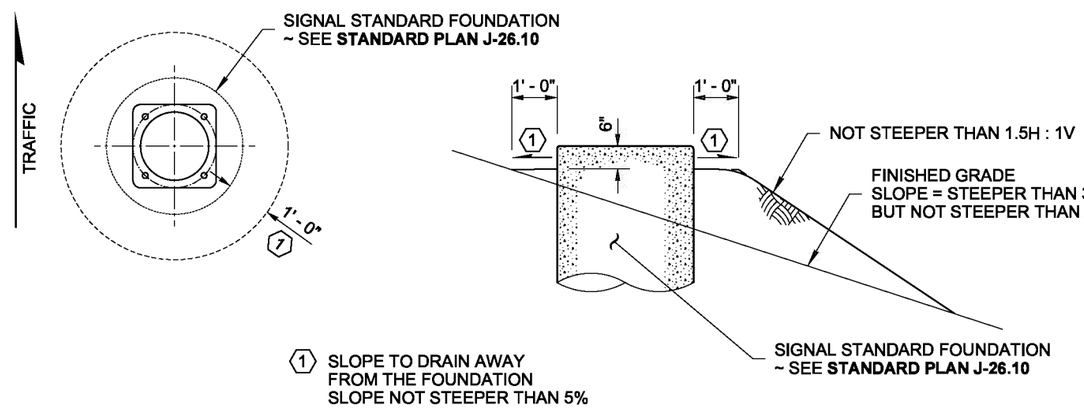

(1) SLOPE TO DRAIN AWAY FROM THE FOUNDATION SLOPE NOT STEEPER THAN 5%

PLAN ELEVATION

EXISTING GRADE OR FILL SLOPE = > 3H : 1V TO 2H : 1V

CASE D

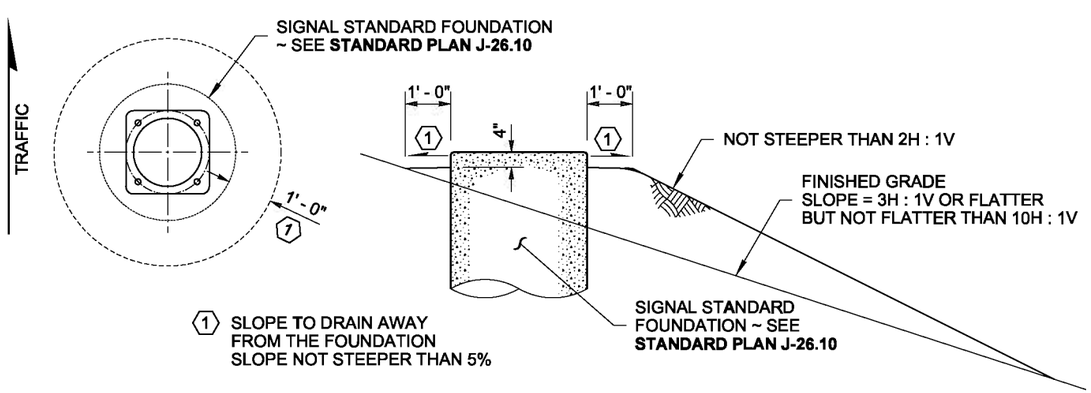

(1) SLOPE TO DRAIN AWAY FROM THE FOUNDATION SLOPE NOT STEEPER THAN 5%

PLAN ELEVATION

EXISTING GRADE OR FILL SLOPE = 10H : 1V TO ≤ 3H : 1V

CASE C

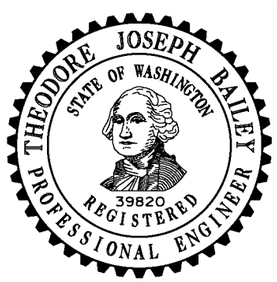

NOTE: THIS PLAN IS NOT A LEGAL ENGINEERING DOCUMENT BUT AN ELECTRONIC DUPLICATE. THE ORIGINAL, SIGNED BY THE ENGINEER AND APPROVED FOR PUBLICATION, IS KEPT ON FILE AT THE WASHINGTON STATE DEPARTMENT OF TRANSPORTATION. A COPY MAY BE OBTAINED UPON REQUEST.

SIGNAL STANDARD FOUNDATION PLACEMENTS

STANDARD PLAN J-26.15-01

SHEET 1 OF 3 SHEETS

APPROVED FOR PUBLICATION

Pasco Bakotich III — STATE DESIGN ENGINEER — *05/17/12* — DATE

Washington State Department of Transportation

DRAWN BY: LISA CYFORD

EFFECTIVE: AUGUST 6, 2012 TO August 4, 2013
EFFECTIVE: AUGUST 6, 2012 TO August 4, 2013
EFFECTIVE: AUGUST 6, 2012 TO August 4, 2013
EFFECTIVE: AUGUST 6, 2012 TO August 4, 2013

EFFECTIVE: AUGUST 6, 2012 TO August 4, 2013

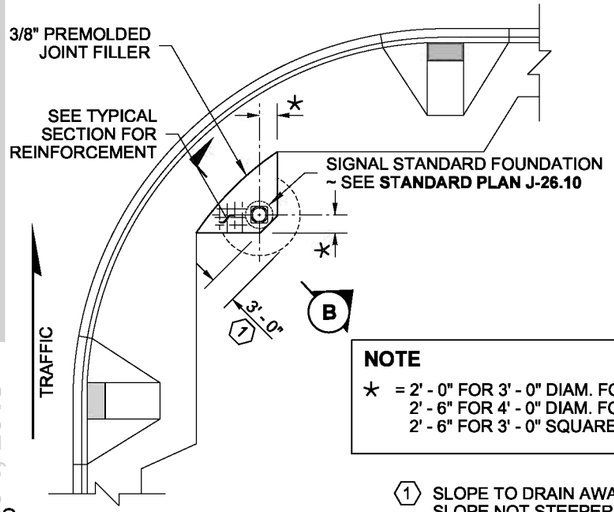

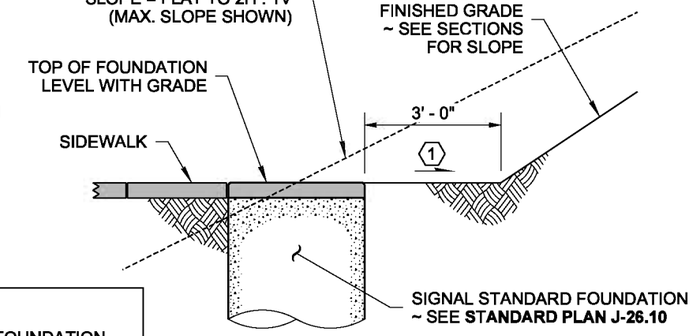

NOTE

* = 2' - 0" FOR 3' - 0" DIAM. FOUNDATION
2' - 6" FOR 4' - 0" DIAM. FOUNDATION
2' - 6" FOR 3' - 0" SQUARE FOUNDATION

1 SLOPE TO DRAIN AWAY FROM THE FOUNDATION SLOPE NOT STEEPER THAN 5%

(SHOWN REDUCED)
PLAN

SECTION B

FOUNDATION IN OR NEAR SIDEWALK
CASE E

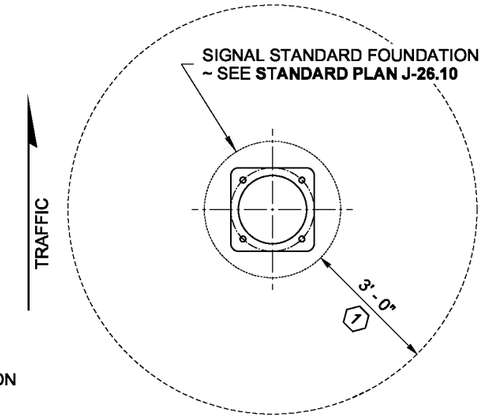

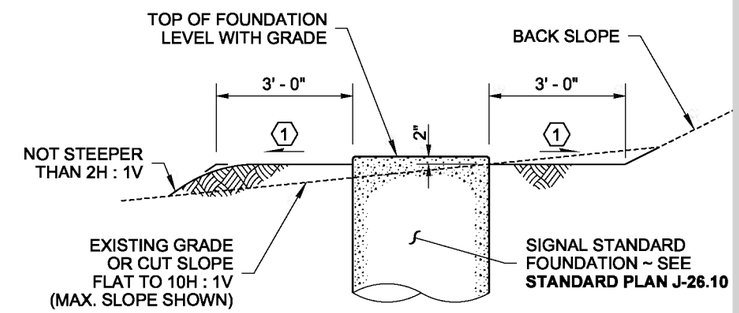

1 SLOPE TO DRAIN AWAY FROM THE FOUNDATION SLOPE NOT STEEPER THAN 5%

PLAN **ELEVATION**

EXISTING GRADE OR CUT SLOPE FLAT TO 10H : 1V
CASE F

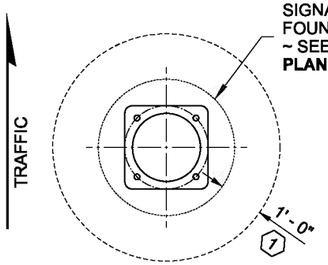

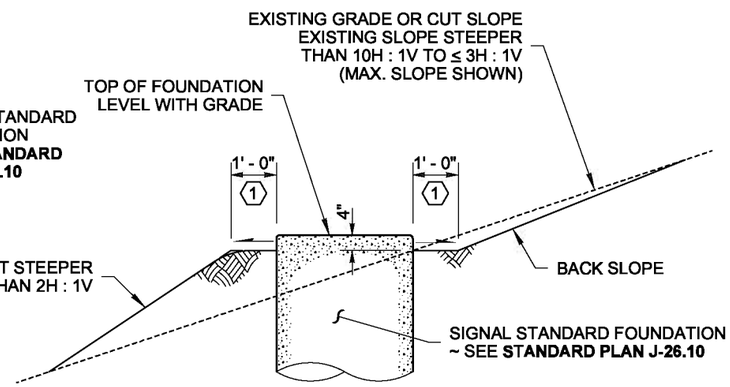

PLAN 1 SLOPE TO DRAIN AWAY FROM THE FOUNDATION SLOPE NOT STEEPER THAN 5% **ELEVATION**

EXISTING GRADE OR CUT SLOPE 10H : 1V TO ≤ 3H : 1V
CASE G

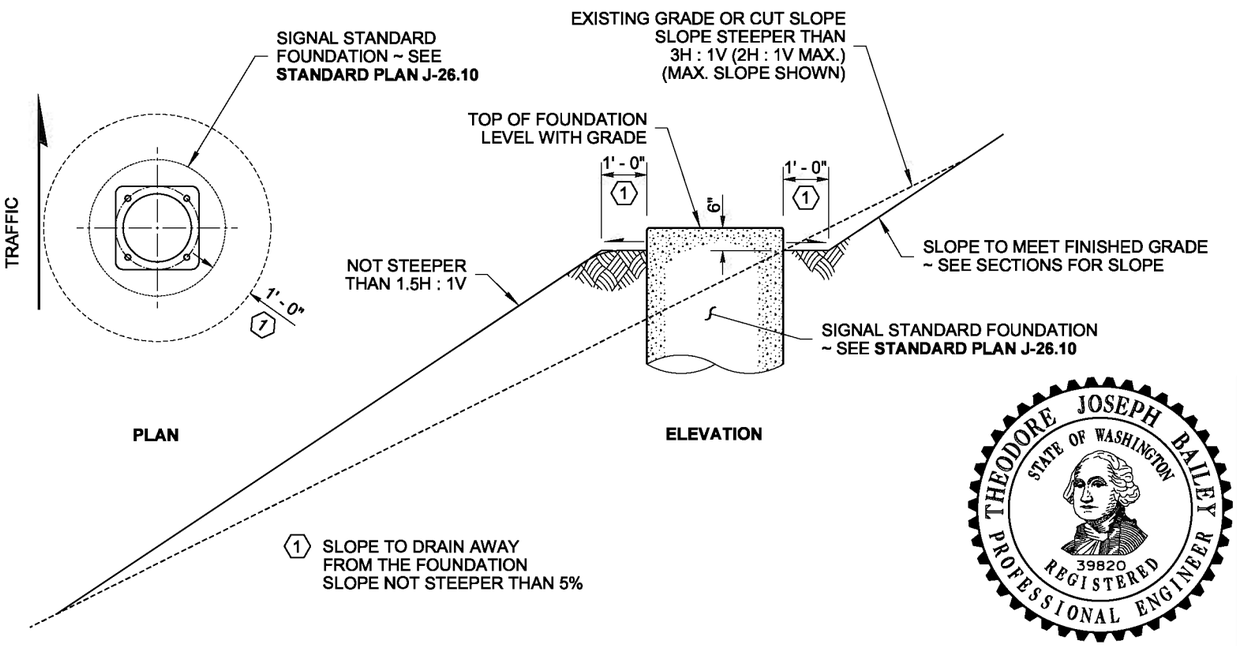

PLAN **ELEVATION**

1 SLOPE TO DRAIN AWAY FROM THE FOUNDATION SLOPE NOT STEEPER THAN 5%

EXISTING GRADE OR CUT SLOPE STEEPER THAN 3H : 1V (2H : 1V MAX.)
CASE H

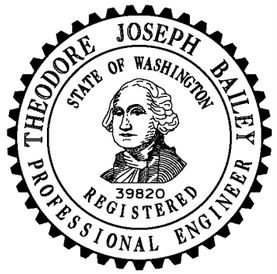

NOTE: THIS PLAN IS NOT A LEGAL ENGINEERING DOCUMENT BUT AN ELECTRONIC DUPLICATE. THE ORIGINAL, SIGNED BY THE ENGINEER AND APPROVED FOR PUBLICATION, IS KEPT ON FILE AT THE WASHINGTON STATE DEPARTMENT OF TRANSPORTATION. A COPY MAY BE OBTAINED UPON REQUEST.

SIGNAL STANDARD FOUNDATION PLACEMENTS

STANDARD PLAN J-26.15-01

SHEET 2 OF 3 SHEETS

APPROVED FOR PUBLICATION

Pasco Bakotich III — STATE DESIGN ENGINEER
05/17/12 — DATE

Washington State Department of Transportation

DRAWN BY: LISA CYFORD

EFFECTIVE: AUGUST 6, 2012 TO August 4, 2013

EFFECTIVE: AUGUST 6, 2012 TO August 4, 2013
EFFECTIVE: AUGUST 6, 2012 TO August 4, 2013

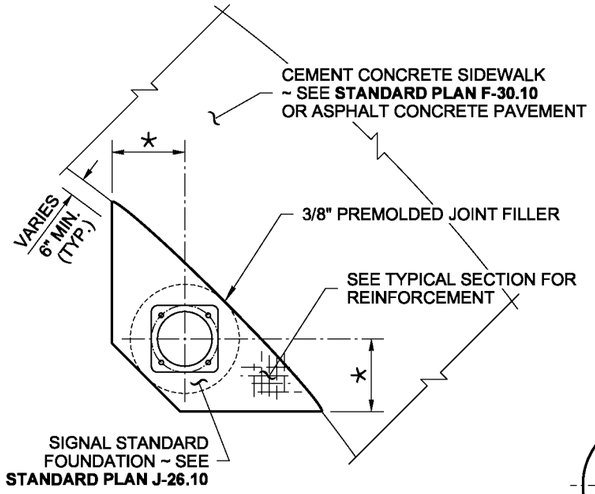

DUAL PEDESTRIAN PUSH BUTTON

NOTE

* = 2' - 0" FOR 3' - 0" DIAM. FOUNDATION
2' - 6" FOR 4' - 0" DIAM. FOUNDATION
2' - 6" FOR 3' - 0" SQUARE FOUNDATION

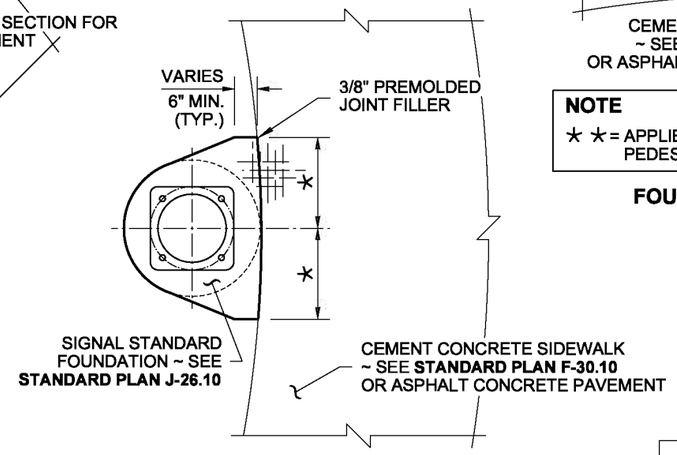

SINGLE PEDESTRIAN PUSH BUTTON

FOUNDATION OUTSIDE THE SIDEWALK SECTION

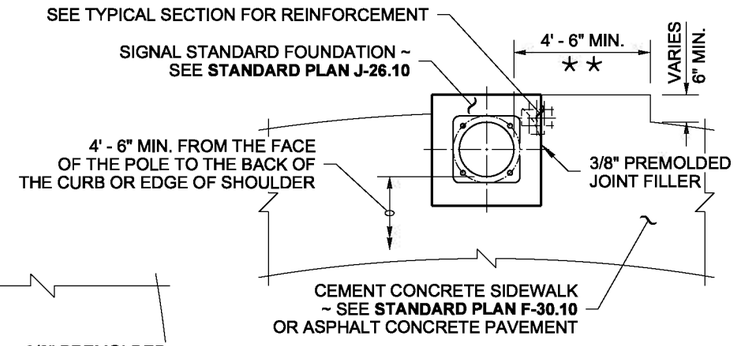

NOTE

* * = APPLIES TO THE SIDE OF THE FOUNDATION WHEN PEDESTRIAN PUSH BUTTON IS TO BE INSTALLED.

FOUNDATION PARTIALLY WITHIN SIDEWALK SECTION

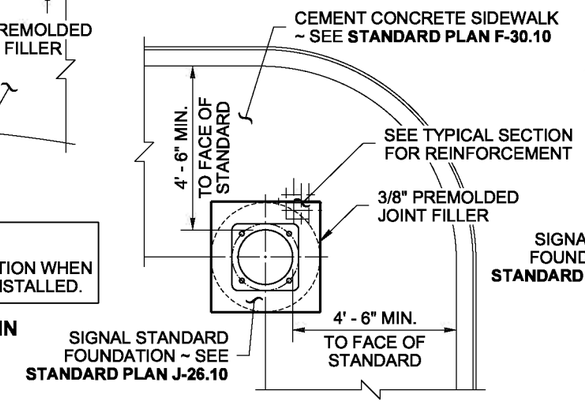

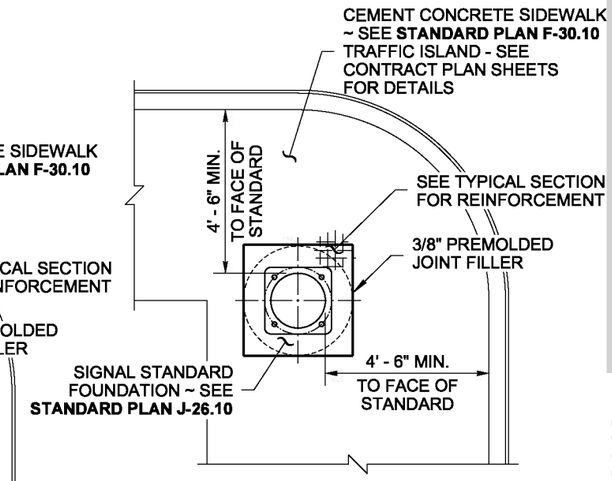

FOUNDATION WITHIN SIDEWALK OR TRAFFIC ISLAND SECTION

NOTE

REFER TO CONTRACT DOCUMENTS FOR PROJECT SPECIFIC INTERSECTION LAYOUTS & TRAFFIC ISLAND MATERIAL TYPE

FOUNDATION PARTIALLY WITHIN SIDEWALK SECTION

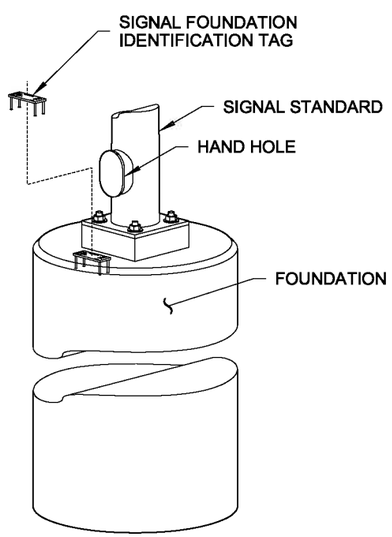

OBLIQUE VIEW

REINFORCING AND ANCHOR BOLTS NOT SHOWN FOR CLARITY (GROUT PAD OPTION SHOWN)

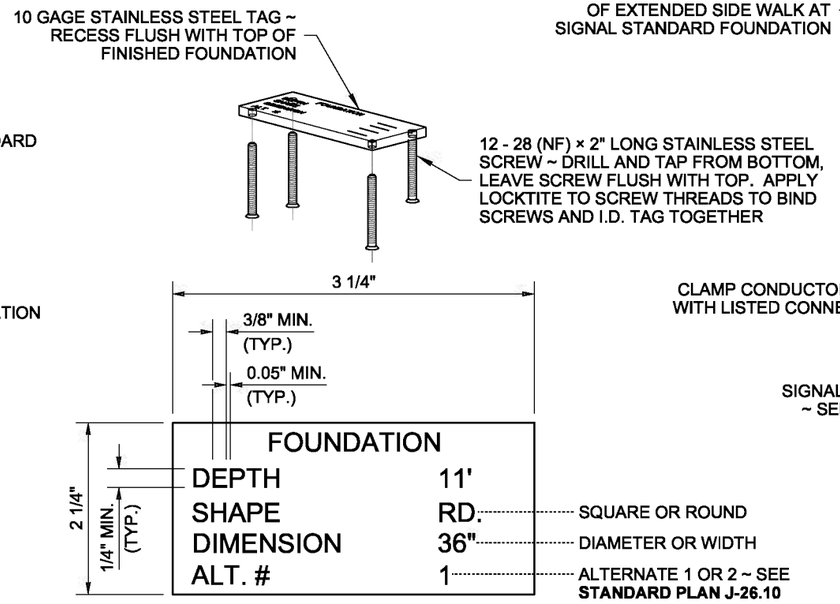

SIGNAL FOUNDATION IDENTIFICATION TAG DETAIL

TEXT SHALL BE ENGRAVED 0.014" DEEP

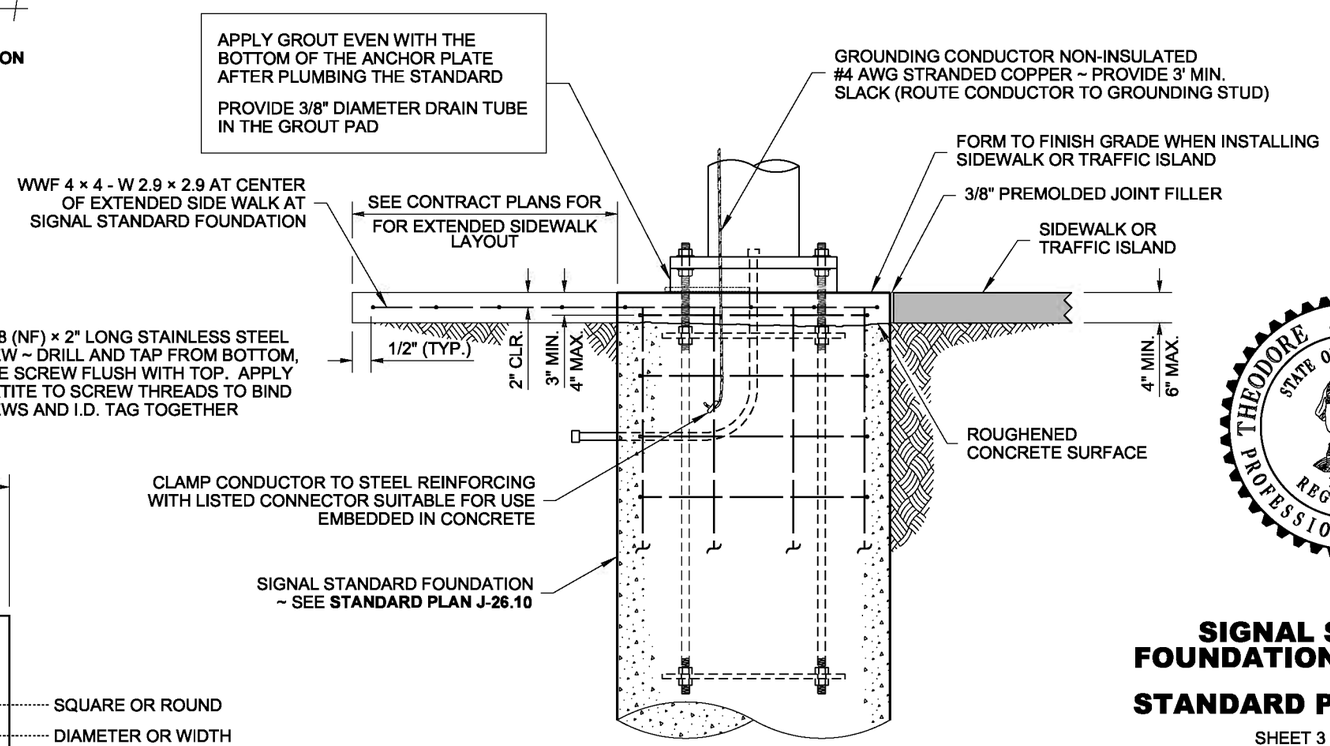

NOTE

FOUNDATION REINFORCING ONLY PARTIALLY SHOWN FOR CLARITY.
~ SEE **STANDARD PLAN J-26.10** FOR DETAILS NOT SHOWN.

TYPICAL SECTION

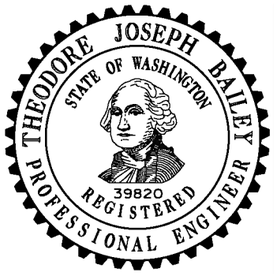

NOTE: THIS PLAN IS NOT A LEGAL ENGINEERING DOCUMENT BUT AN ELECTRONIC DUPLICATE. THE ORIGINAL, SIGNED BY THE ENGINEER AND APPROVED FOR PUBLICATION, IS KEPT ON FILE AT THE WASHINGTON STATE DEPARTMENT OF TRANSPORTATION. A COPY MAY BE OBTAINED UPON REQUEST.

SIGNAL STANDARD FOUNDATION PLACEMENTS

STANDARD PLAN J-26.15-01

SHEET 3 OF 3 SHEETS

APPROVED FOR PUBLICATION

Pasco Bakotich III — STATE DESIGN ENGINEER
05/17/12 — DATE

Washington State Department of Transportation

DRAWN BY: LISA CYFORD

EFFECTIVE: AUGUST 6, 2012 TO August 4, 2013
EFFECTIVE: AUGUST 6, 2012 TO August 4, 2013
EFFECTIVE: AUGUST 6, 2012 TO August 4, 2013
EFFECTIVE: AUGUST 6, 2012 TO August 4, 2013

EFFECTIVE: AUGUST 6, 2012 TO August 4, 2013

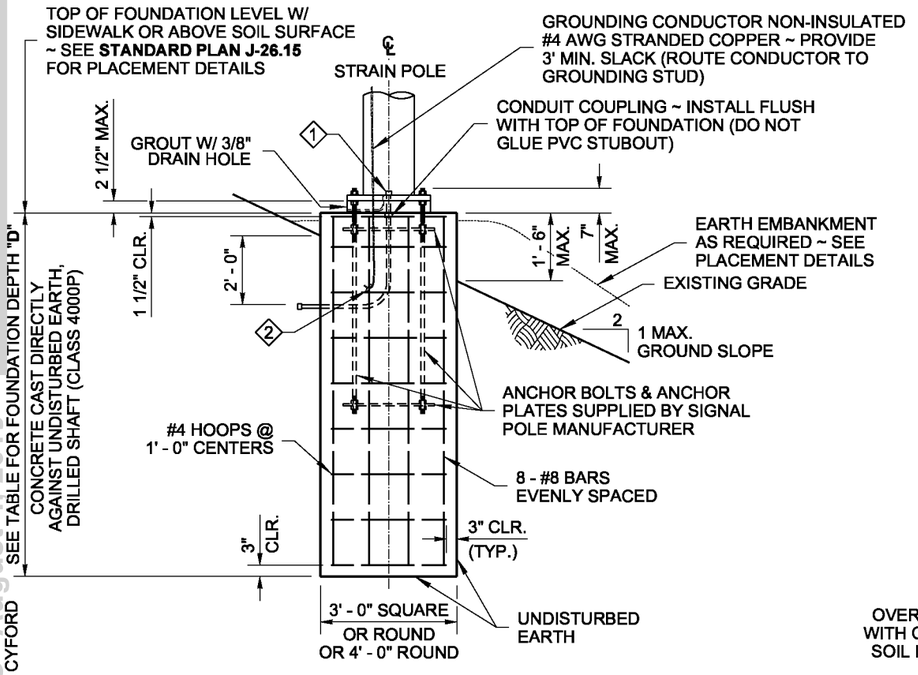

FOUNDATION REINFORCEMENT DETAIL

CONCRETE CAST DIRECTLY AGAINST UNDISTURBED EARTH, DRILLED SHAFT

ALTERNATE #1

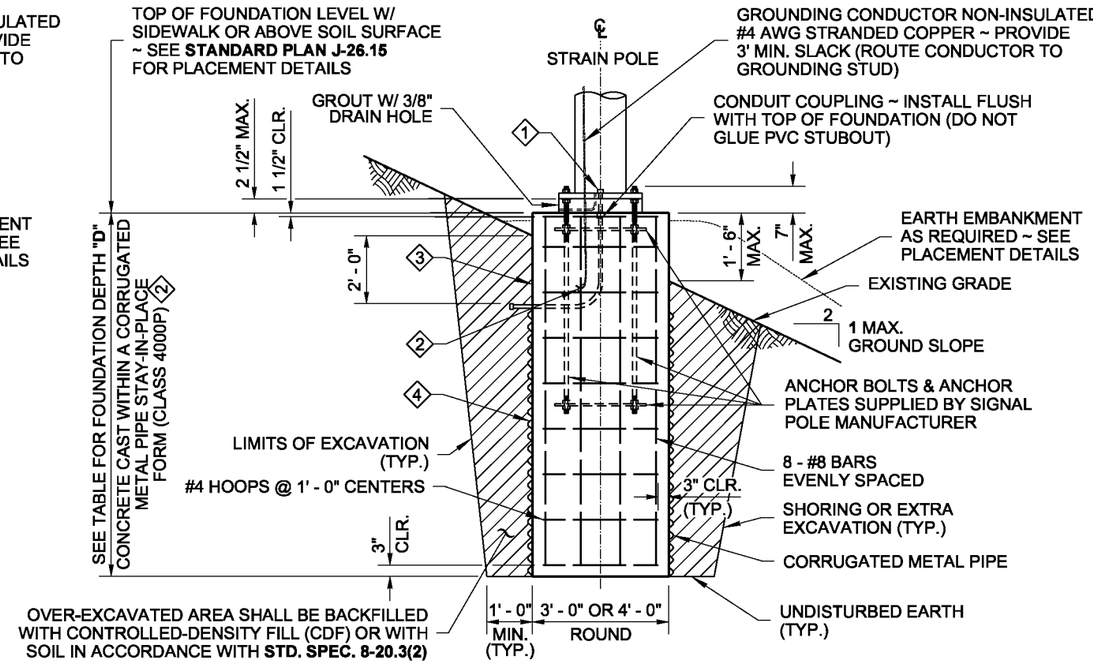

FOUNDATION REINFORCEMENT AND BACKFILL DETAIL

4 CONCRETE CAST WITHIN A CORRUGATED METAL PIPE STAY-IN-PLACE FORM

ALTERNATE #2

1 CONDUIT SIZE AND QUANTITY AS SHOWN IN THE CONTRACT; CAP BOTH ENDS

2 CLAMP CONDUCTOR TO STEEL REINFORCING WITH LISTED CONNECTOR SUITABLE FOR USE EMBEDDED IN CONCRETE

3 PAPER OR CARDBOARD FORM SHALL NOT STAY-IN-PLACE

NOTES

1. This structure has been designed according to the Fifth Edition 2009 AASHTO Standard Specifications for Structural Supports for Highway Signs, Luminaires, and Traffic Signals: Basic wind velocity 90 mph, Design Life/Recurrence Interval 50 years, and Fatigue Category III.
2. Foundations are designed for Type IV and V Strain Pole Standards with a maximum mast arm length of 16' - 0".
3. Foundations not within the parameters of this standard require Special Design. Contact the WSDOT Bridge and Structures Office through the Engineer for Special Foundation Designs.
4. Foundations constructed within Ecology Embankments shall be increased in depth by the depth of the Ecology Embankment.
5. The top 2 feet of the foundation shall use a smooth form (such as paper or cardboard). After the concrete has cured, this entire form shall be removed.
6. See **Standard Plan J-27.15** for Strain Pole Standards Type IV and V details.
7. Install Signal Foundation Identification Tag. See **Standard Plan J-26.15** for details.

ALTERNATE # 1 DRILLED SHAFT-TYPE CONSTRUCTION - DEPTH "D"
FOR LATERAL BEARING PRESSURE = 2500 PSF & Ø = 34°, 1500 PSF & Ø = 28°, 1000 PSF & Ø = 26°

GROUND SLOPE = 3H : 1V OR FLATTER

ALLOWABLE LATERAL BEARING PRESSURE	FOUNDATION TYPE	POLE CLASS - RESULTANT HORIZONTAL TENSION (LBS)						
		1900	2700	3700	4800	5600	6300	7200
1000 PSF	3' - 0" ROUND	11' - 0"	13' - 0"	15' - 0"	16' - 0"	18' - 0"	19' - 0"	20' - 0"
	3' - 0" SQUARE	11' - 0"	13' - 0"	15' - 0"	16' - 0"	18' - 0"	19' - 0"	20' - 0"
	4' - 0" ROUND	10' - 0"	11' - 0"	13' - 0"	15' - 0"	15' - 0"	16' - 0"	18' - 0"
1500 PSF	3' - 0" ROUND	9' - 0"	11' - 0"	12' - 0"	14' - 0"	15' - 0"	15' - 0"	16' - 0"
	3' - 0" SQUARE	9' - 0"	11' - 0"	12' - 0"	14' - 0"	15' - 0"	15' - 0"	16' - 0"
	4' - 0" ROUND	8' - 0"	9' - 0"	10' - 0"	12' - 0"	13' - 0"	13' - 0"	14' - 0"
2500 PSF OR GREATER	3' - 0" ROUND	7' - 0"	8' - 0"	9' - 0"	10' - 0"	11' - 0"	12' - 0"	13' - 0"
	3' - 0" SQUARE	7' - 0"	8' - 0"	9' - 0"	10' - 0"	11' - 0"	12' - 0"	13' - 0"
	4' - 0" ROUND	6' - 0"	7' - 0"	8' - 0"	9' - 0"	10' - 0"	10' - 0"	11' - 0"

GROUND SLOPE = 3H : 1V TO 2H : 1V

ALLOWABLE LATERAL BEARING PRESSURE	FOUNDATION TYPE	POLE CLASS - RESULTANT HORIZONTAL TENSION (LBS)						
		1900	2700	3700	4800	5600	6300	7200
1000 PSF	3' - 0" ROUND	SPECIAL FOUNDATION TYPE						
	3' - 0" SQUARE	SPECIAL FOUNDATION TYPE						
	4' - 0" ROUND	SPECIAL FOUNDATION TYPE						
1500 PSF	3' - 0" ROUND	10' - 0"	12' - 0"	13' - 0"	15' - 0"	16' - 0"	16' - 0"	17' - 0"
	3' - 0" SQUARE	10' - 0"	12' - 0"	13' - 0"	15' - 0"	16' - 0"	16' - 0"	17' - 0"
	4' - 0" ROUND	9' - 0"	10' - 0"	11' - 0"	13' - 0"	14' - 0"	14' - 0"	15' - 0"
2500 PSF OR GREATER	3' - 0" ROUND	8' - 0"	9' - 0"	10' - 0"	11' - 0"	12' - 0"	13' - 0"	14' - 0"
	3' - 0" SQUARE	8' - 0"	9' - 0"	10' - 0"	11' - 0"	12' - 0"	13' - 0"	14' - 0"
	4' - 0" ROUND	7' - 0"	8' - 0"	9' - 0"	10' - 0"	11' - 0"	11' - 0"	12' - 0"

ALTERNATE # 2 CORRUGATED METAL PIPE TYPE CONSTRUCTION - DEPTH "D"
FOR LATERAL BEARING PRESSURE = 2500 PSF & Ø = 23°, 1500 PSF & Ø = 18°, 1000 PSF & Ø = 17°

GROUND SLOPE = 3H : 1V OR FLATTER

ALLOWABLE LATERAL BEARING PRESSURE	FOUNDATION TYPE	POLE CLASS - RESULTANT HORIZONTAL TENSION (LBS)						
		1900	2700	3700	4800	5600	6300	7200
1000 PSF	3' - 0" ROUND	11' - 0"	13' - 0"	15' - 0"	16' - 0"	18' - 0"	19' - 0"	20' - 0"
	4' - 0" ROUND	10' - 0"	11' - 0"	13' - 0"	15' - 0"	15' - 0"	16' - 0"	18' - 0"
1500 PSF	3' - 0" ROUND	9' - 0"	11' - 0"	12' - 0"	14' - 0"	15' - 0"	15' - 0"	16' - 0"
	4' - 0" ROUND	8' - 0"	9' - 0"	10' - 0"	12' - 0"	13' - 0"	13' - 0"	14' - 0"
2500 PSF OR GREATER	3' - 0" ROUND	7' - 0"	8' - 0"	9' - 0"	10' - 0"	11' - 0"	12' - 0"	13' - 0"
	4' - 0" ROUND	6' - 0"	7' - 0"	8' - 0"	9' - 0"	10' - 0"	10' - 0"	11' - 0"

GROUND SLOPE = 3H : 1V TO 2H : 1V

ALLOWABLE LATERAL BEARING PRESSURE	FOUNDATION TYPE	POLE CLASS - RESULTANT HORIZONTAL TENSION (LBS)						
		1900	2700	3700	4800	5600	6300	7200
1000 PSF	3' - 0" ROUND	SPECIAL FOUNDATION TYPE						
	4' - 0" ROUND	SPECIAL FOUNDATION TYPE						
1500 PSF	3' - 0" ROUND	10' - 0"	12' - 0"	13' - 0"	15' - 0"	16' - 0"	16' - 0"	17' - 0"
	4' - 0" ROUND	9' - 0"	10' - 0"	11' - 0"	13' - 0"	14' - 0"	14' - 0"	15' - 0"
2500 PSF OR GREATER	3' - 0" ROUND	8' - 0"	9' - 0"	10' - 0"	11' - 0"	12' - 0"	13' - 0"	14' - 0"
	4' - 0" ROUND	7' - 0"	8' - 0"	9' - 0"	10' - 0"	11' - 0"	11' - 0"	12' - 0"

ALTERNATE #2 - CONSTRUCTION METHOD
METAL (SUBSURFACE) FORM REQUIRED

When the existing soil will not retain a vertical face, over-excavate the foundation area and install a 36" or 48" diameter corrugated metal (pipe) form. The top of the corrugated metal form shall terminate 1 foot below final grade. Continue forming to full height using a paper or cardboard form to achieve a smooth finish on final exposed cement concrete. Support the form as necessary to remain plumb.

Place the concrete foundation.

After concrete has cured, remove the entire paper or cardboard form portion.

Backfill with controlled-density fill or compacted borrow in accordance with **Standard Specification 8-20.3(2).**

RICHARD P. ZELDENRUST
STATE OF WASHINGTON
25470
STRUCTURAL ENGINEER
PROFESSIONAL ENGINEER

NOTE: THIS PLAN IS NOT A LEGAL ENGINEERING DOCUMENT BUT AN ELECTRONIC DUPLICATE. THE ORIGINAL, SIGNED BY THE ENGINEER AND APPROVED FOR PUBLICATION, IS KEPT ON FILE AT THE WASHINGTON STATE DEPARTMENT OF TRANSPORTATION. A COPY MAY BE OBTAINED UPON REQUEST.

TYPE IV AND V STRAIN POLE FOUNDATION

STANDARD PLAN J-27.10-00

SHEET 1 OF 1 SHEET

APPROVED FOR PUBLICATION

Pasco Bakotich III — STATE DESIGN ENGINEER
03-15-12 — DATE

Washington State Department of Transportation

DRAWN BY: LISA CYFORD

EFFECTIVE: AUGUST 6, 2012 TO August 4, 2013

EFFECTIVE: AUGUST 6, 2012 TO August 4, 2013
EFFECTIVE: AUGUST 6, 2012 TO August 4, 2013

DRAWN BY: LISA CYFORD

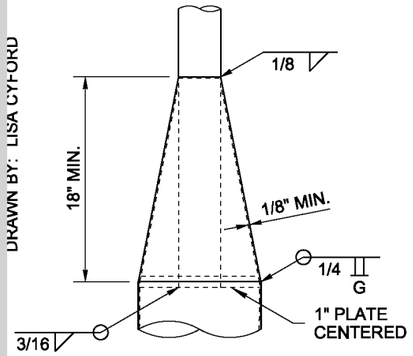

CONE SECTION DETAIL

STRAIN POLE DIMENSION CHART

KEY	ITEM	POLE CLASS (Resultant Horizontal Tension)						
		1900 LB	2700 LB	3700 LB	4800 LB	5600 LB	6300 LB	7200 LB
	POLE GAGE OR THICKNESS *	3	3	1/4	5/16	5/16	5/16	5/16
A	BASE PLATE	15"	17"	19"	20"	20"	22"	22"
B	ANCHOR BOLT CIRCLE DIAM.	15"	17"	19"	20"	20"	22"	22"
C	POLE BASE DIAMETER *	11"	12 1/2"	14"	14"	15"	16"	17"
D	BASE PLATE THICKNESS *	1 1/2"	1 1/2"	1 1/2"	1 3/4"	1 3/4"	1 3/4"	1 3/4"
E	ANCHOR BOLT DIAMETER	1 1/4"	1 1/2"	1 1/2"	1 3/4"	1 3/4"	1 3/4"	1 3/4"

* MINIMUM REQUIRED DIMENSION - CONTRACTOR MAY REVISE WITH ENGINEER APPROVAL

NOTES

1. This structure has been designed according to the Fifth Edition 2009 AASHTO Standard Specifications for Structural Supports for Highway Signs, Luminaires, and Traffic Signals: Basic wind velocity 90 mph, Design Life/Recurrence Interval 50 years, and Fatigue Category III.
2. 2 1/2" diameter weatherhead may be substituted for the elbow and nipple assembly.
3. Pole shaft shall have 0.14" ft/taper.
4. See **Standard Plan J-15.15** for Span Wire Installation details.
5. Hand holes may be 6" × 4", oval or rectangle. Provide a "J" or "C" hook at 90° or 180° off upper hand hole.
6. See **Standard Plan J-27.10** for Type IV and V Strain Pole Foundation.

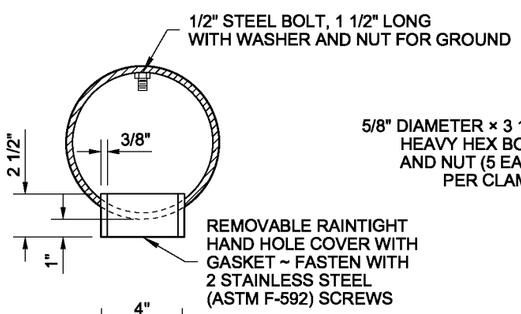

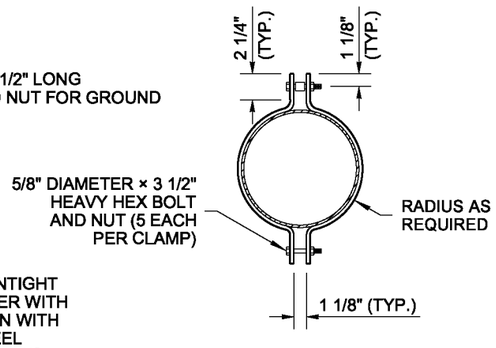

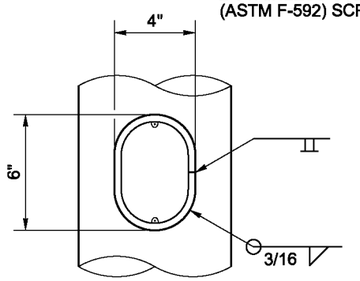

HAND HOLE DETAIL
(SEE NOTE 5)

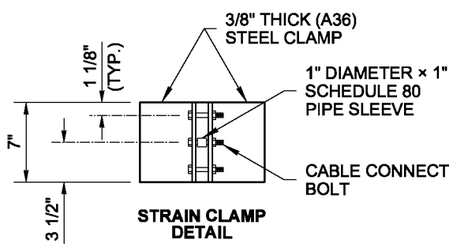

STRAIN CLAMP DETAIL

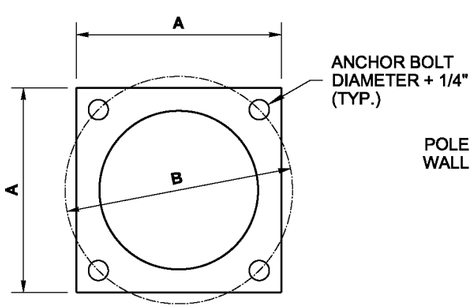

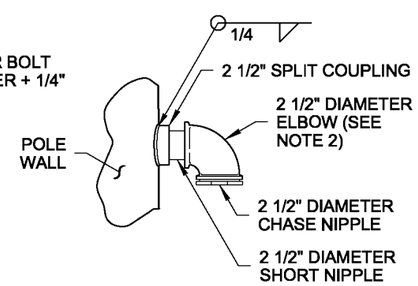

WIREWAY DETAIL

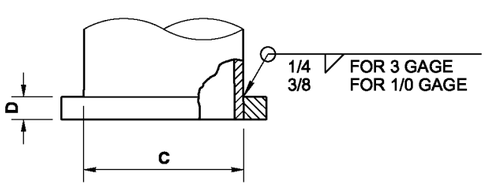

BASE PLATE DETAIL

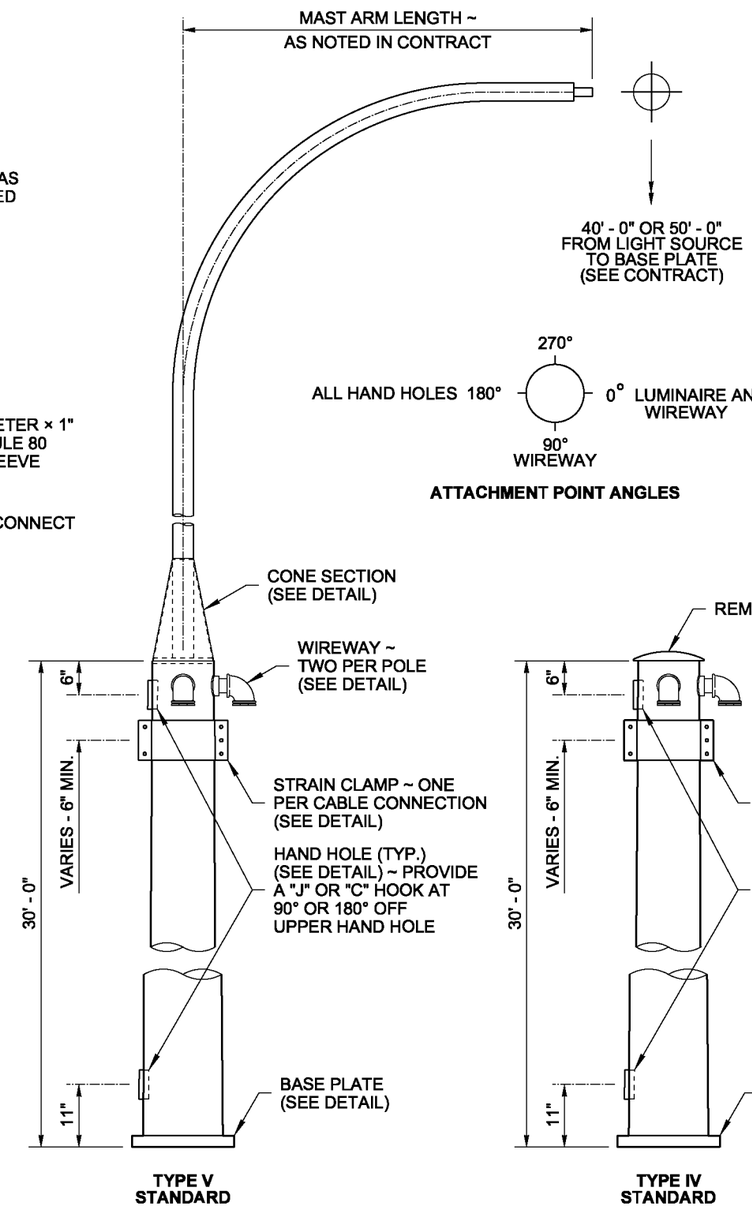

TYPE V STANDARD

ATTACHMENT POINT ANGLES

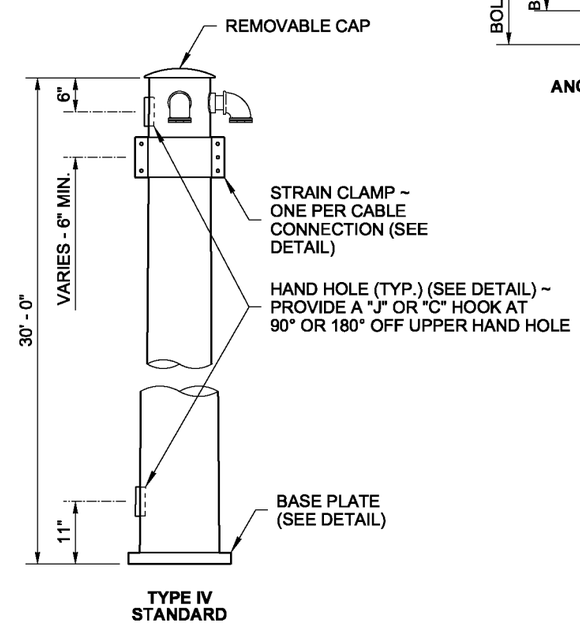

TYPE IV STANDARD

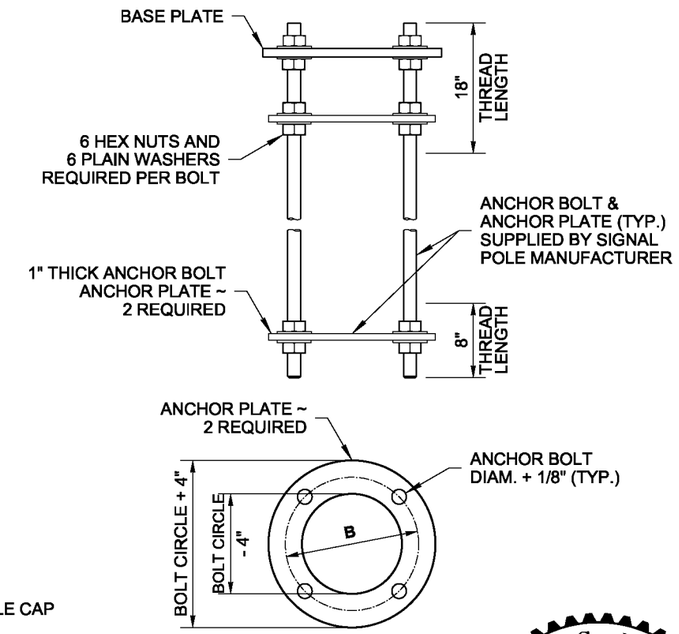

ANCHOR BOLT AND ANCHOR PLATE ASSEMBLY DETAIL

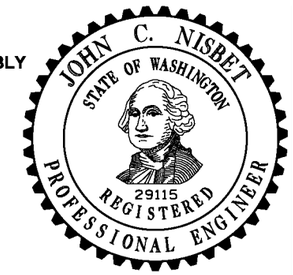

NOTE: THIS PLAN IS NOT A LEGAL ENGINEERING DOCUMENT BUT AN ELECTRONIC DUPLICATE. THE ORIGINAL, SIGNED BY THE ENGINEER AND APPROVED FOR PUBLICATION, IS KEPT ON FILE AT THE WASHINGTON STATE DEPARTMENT OF TRANSPORTATION. A COPY MAY BE OBTAINED UPON REQUEST.

TYPE IV AND V STRAIN POLE STANDARD

STANDARD PLAN J-27.15-00

SHEET 1 OF 1 SHEET

APPROVED FOR PUBLICATION

Pasco Bakotich III — STATE DESIGN ENGINEER — *03-15-12* — DATE

Washington State Department of Transportation

EFFECTIVE: AUGUST 6, 2012 TO August 4, 2013
EFFECTIVE: AUGUST 6, 2012 TO August 4, 2013
EFFECTIVE: AUGUST 6, 2012 TO August 4, 2013
EFFECTIVE: AUGUST 6, 2012 TO August 4, 2013

EFFECTIVE: AUGUST 6, 2012 TO August 4, 2013
EFFECTIVE: AUGUST 6, 2012 TO August 4, 2013

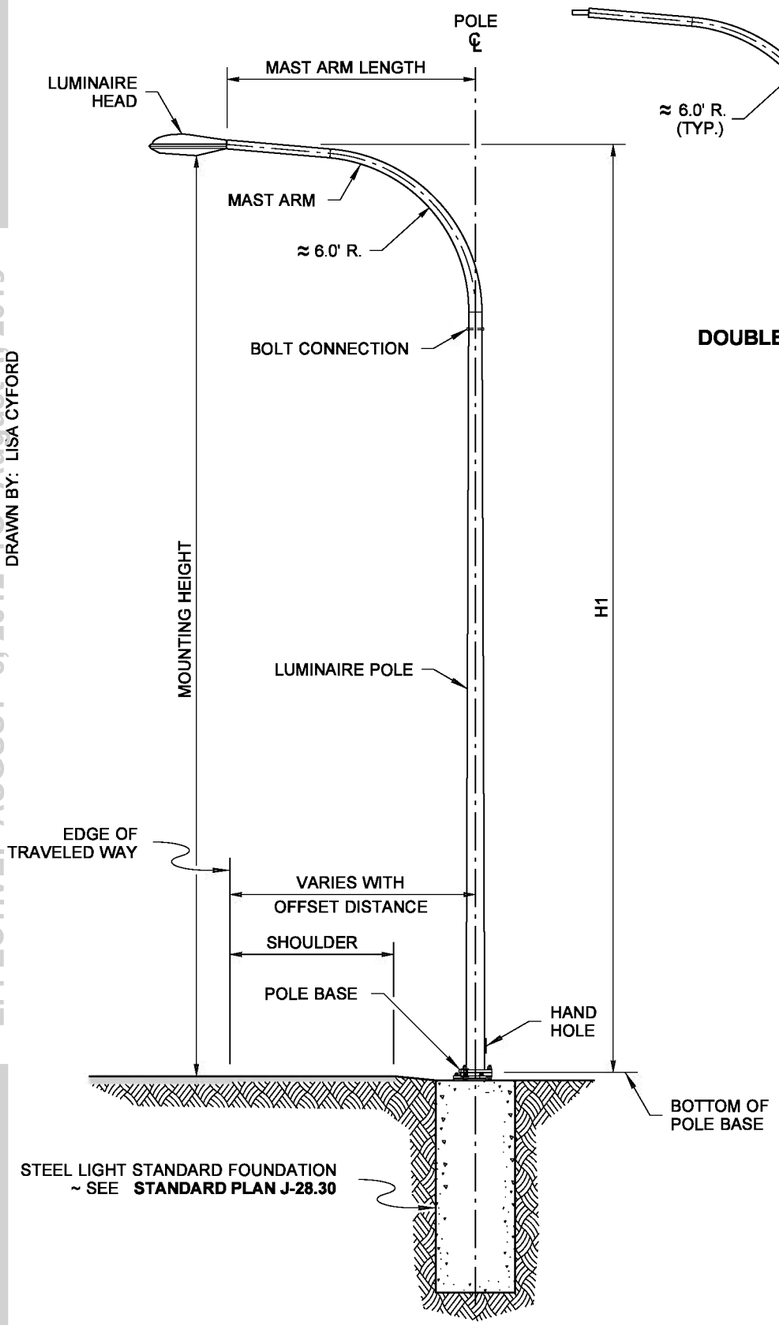

LIGHT STANDARD
WITH TYPE 1 (DAVIT) MAST ARM
(SLIP BASE SHOWN)

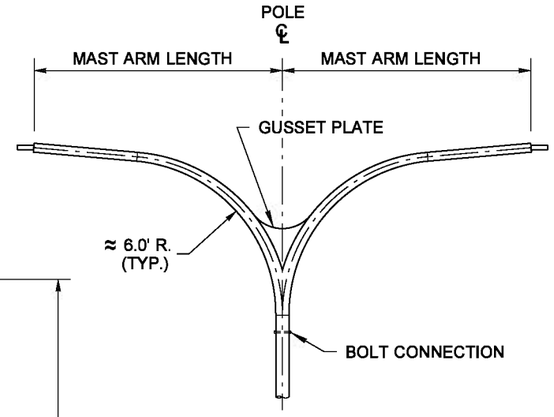

DOUBLE TYPE 1 MAST ARM

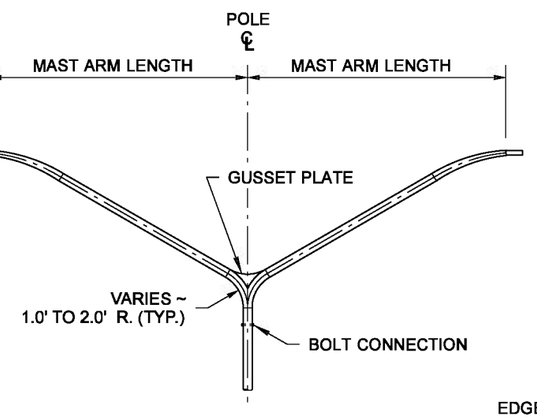

DOUBLE TYPE 2 MAST ARM

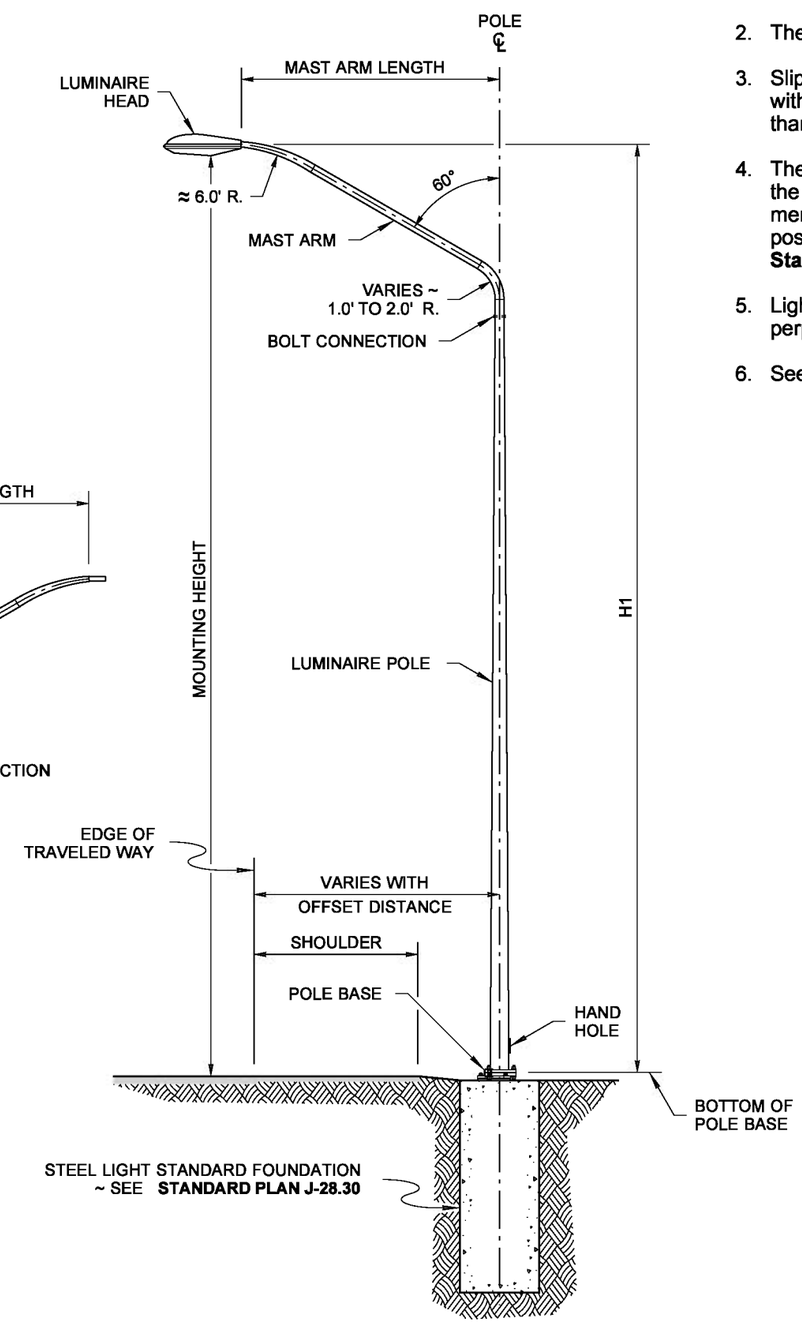

LIGHT STANDARD
WITH TYPE 2 (ELBOW) MAST ARM
(SLIP BASE SHOWN)

NOTES

1. This plan depicts the Steel Light Standard types and terms commonly referred to in the Contract. All Steel Light Standards are fabricated in accordance with the Standard Specifications and the Contract Provisions.
2. The Luminaire Pole height shall not exceed 50' (**H**1).
3. Slip Bases shall not be installed on 50' (**H**1) poles with Double Mast Arms, nor on poles weighing more than 1000 lbs.
4. The optimal location of the Luminaire head is over the edge of the traveled way. Based on the placement of the Steel Light Standard foundation, the position of the Luminaire head may vary. See **Standard Plan J-28.22.**
5. Light Standard mast arm orientation is typically perpendicular to roadway centerline.
6. See **Standard Plan J-28.50** for Hand Hole details.

DRAWN BY: LISA CYFORD

JOHN C. NISBET
STATE OF WASHINGTON
29115
REGISTERED
PROFESSIONAL ENGINEER

NOTE: THIS PLAN IS NOT A LEGAL ENGINEERING DOCUMENT BUT AN ELECTRONIC DUPLICATE. THE ORIGINAL, SIGNED BY THE ENGINEER AND APPROVED FOR PUBLICATION, IS KEPT ON FILE AT THE WASHINGTON STATE DEPARTMENT OF TRANSPORTATION. A COPY MAY BE OBTAINED UPON REQUEST.

STEEL LIGHT STANDARD

STANDARD PLAN J-28.10-01

SHEET 1 OF 2 SHEETS

APPROVED FOR PUBLICATION

Pasco Bakotich III — STATE DESIGN ENGINEER
05-11-11 — DATE

Washington State Department of Transportation

EFFECTIVE: AUGUST 6, 2012 TO August 4, 2013
EFFECTIVE: AUGUST 6, 2012 TO August 4, 2013
EFFECTIVE: AUGUST 6, 2012 TO August 4, 2013
EFFECTIVE: AUGUST 6, 2012 TO August 4, 2013

EFFECTIVE: AUGUST 6, 2012 TO August 4, 2013
EFFECTIVE: AUGUST 6, 2012 TO August 4, 2013

DRAWN BY: LISA CYFORD

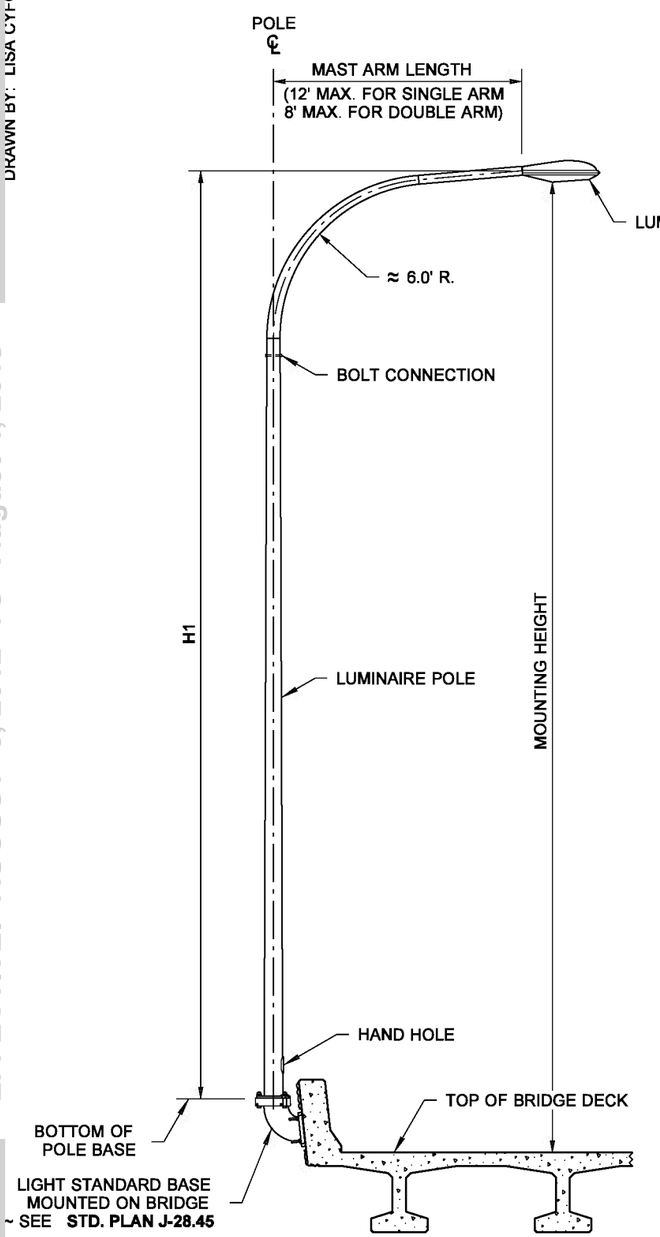

BRIDGE-MOUNTED LUMINAIRE

(TYPE 1 MAST ARM SHOWN)

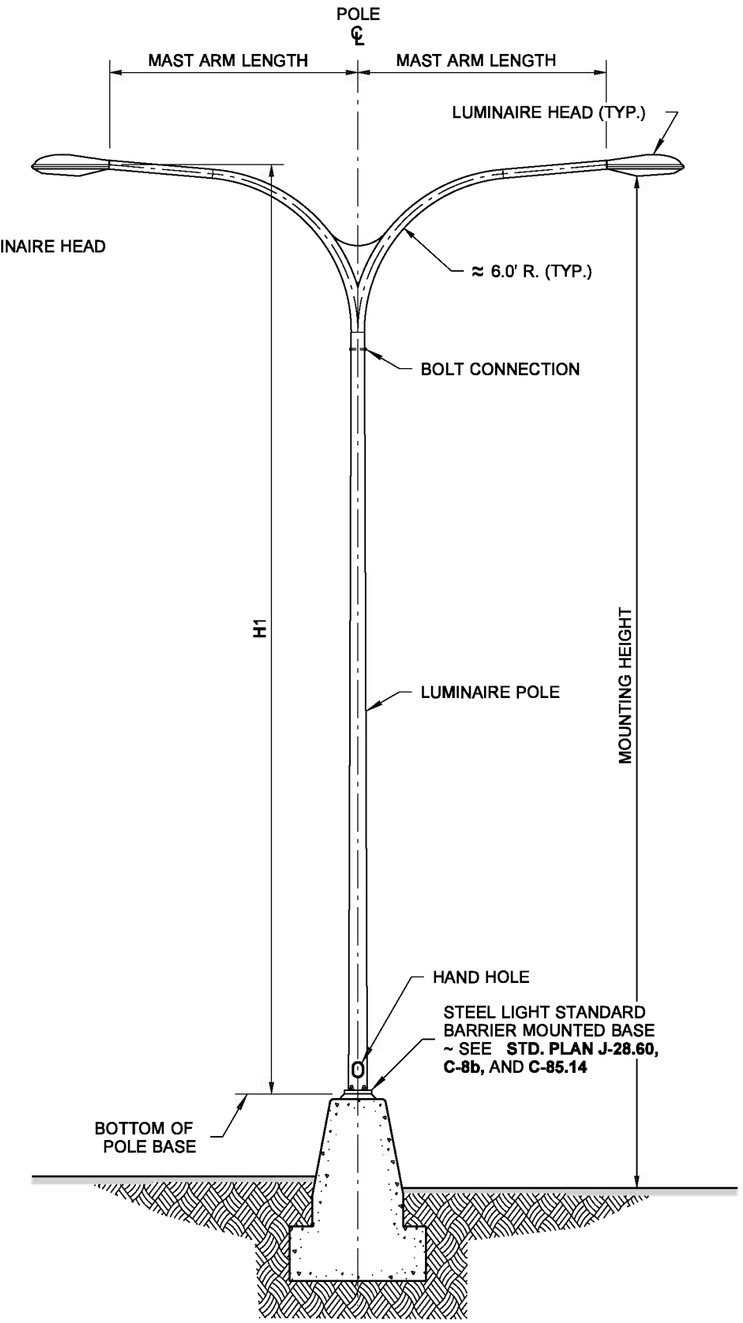

MEDIAN BARRIER-MOUNTED LUMINAIRE

(TYPE 1 MAST ARM SHOWN)

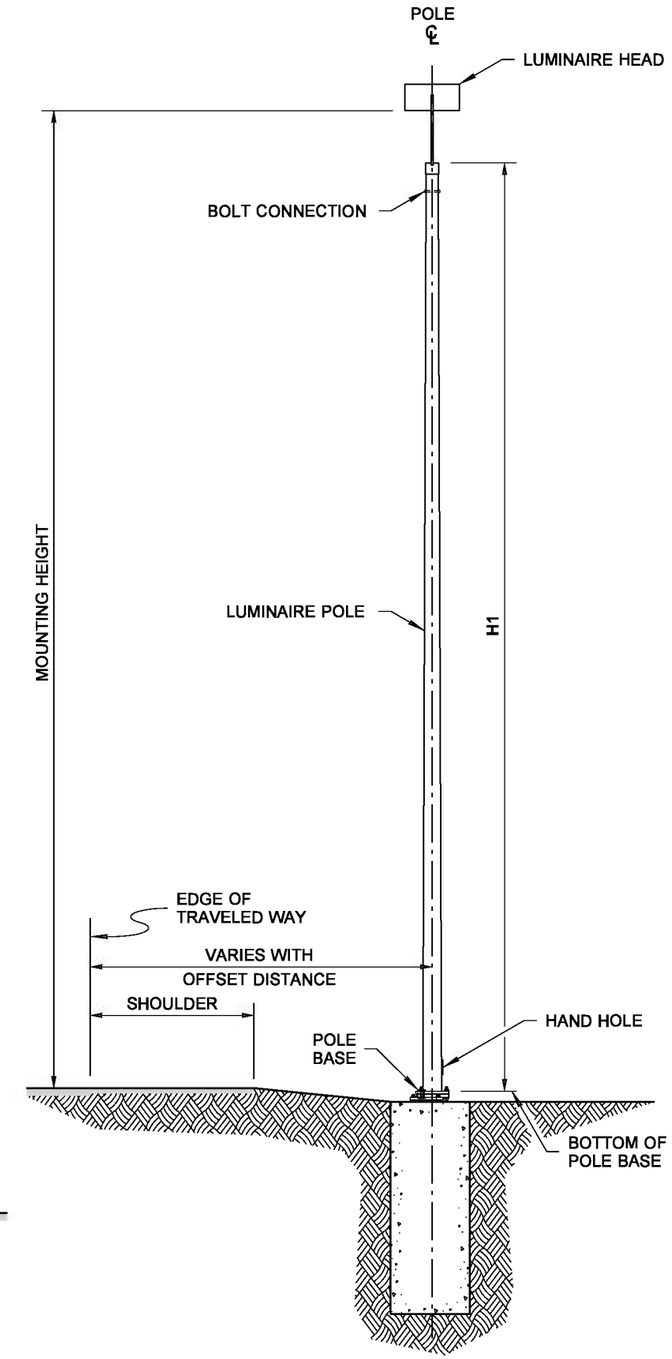

POST TOP-MOUNTED LUMINAIRE

(SLIP BASE SHOWN)

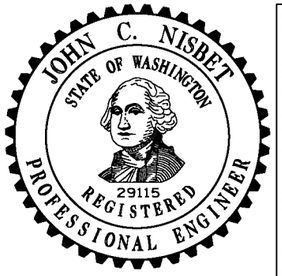

NOTE: THIS PLAN IS NOT A LEGAL ENGINEERING DOCUMENT BUT AN ELECTRONIC DUPLICATE. THE ORIGINAL, SIGNED BY THE ENGINEER AND APPROVED FOR PUBLICATION, IS KEPT ON FILE AT THE WASHINGTON STATE DEPARTMENT OF TRANSPORTATION. A COPY MAY BE OBTAINED UPON REQUEST.

STEEL LIGHT STANDARD

STANDARD PLAN J-28.10-01

SHEET 2 OF 2 SHEETS

APPROVED FOR PUBLICATION

Pasco Bakotich III — STATE DESIGN ENGINEER

05-11-11 — DATE

Washington State Department of Transportation

EFFECTIVE: AUGUST 6, 2012 TO August 4, 2013
EFFECTIVE: AUGUST 6, 2012 TO August 4, 2013
EFFECTIVE: AUGUST 6, 2012 TO August 4, 2013
EFFECTIVE: AUGUST 6, 2012 TO August 4, 2013

EFFECTIVE: AUGUST 6, 2012 TO August 4, 2013
EFFECTIVE: AUGUST 6, 2012 TO August 4, 2013

DRAWN BY: BILL BERENS

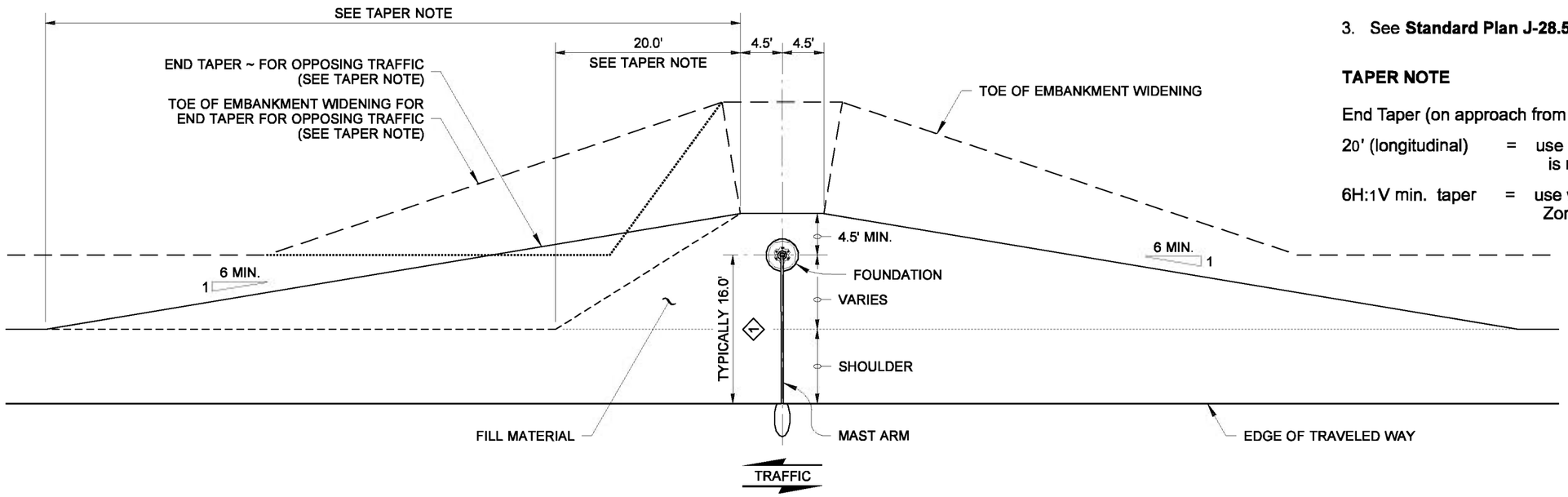

PLAN VIEW

CASES A & B

EMBANKMENTS

NOTES

1. The Steel Light Standard Placement depicted on this plan is only intended for installations where roadside conditions allow its usage. Roadside conditions may require a special design by the Bridge Office, as determined by the Project Engineer.
2. See **Standard Plan J-28.30** for foundation details and construction methods.
3. See **Standard Plan J-28.50** for pole base and hand hole details.

TAPER NOTE

End Taper (on approach from opposing traffic):

20' (longitudinal) = use on one-way roadways or where the Light Standard is not in the Design Clear Zone of the opposing traffic.

6H:1V min. taper = use when the Light Standard is in the Design Clear Zone of the opposing traffic.

1 BASED ON FIELD CONDITIONS, STEEL LIGHT STANDARD PLACEMENT CAN BE ADJUSTED ± 4.0', WHEN APPROVED BY THE PROJECT ENGINEER.

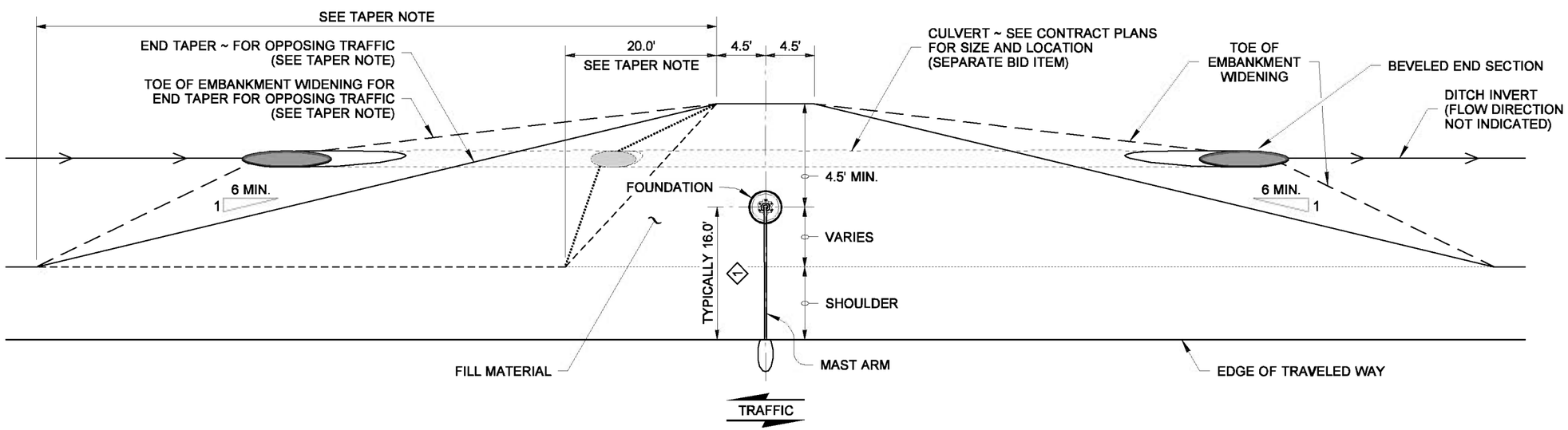

PLAN VIEW

CASE C

DITCH SECTIONS

EXPIRES AUGUST 9, 2007

NOTE: THIS PLAN IS NOT A LEGAL ENGINEERING DOCUMENT BUT AN ELECTRONIC DUPLICATE. THE ORIGINAL, SIGNED BY THE ENGINEER AND APPROVED FOR PUBLICATION, IS KEPT ON FILE AT THE WASHINGTON STATE DEPARTMENT OF TRANSPORTATION. A COPY MAY BE OBTAINED UPON REQUEST.

STEEL LIGHT STANDARD PLACEMENT (SLIP BASE)

STANDARD PLAN J-28.22-00

SHEET 1 OF 2 SHEETS

APPROVED FOR PUBLICATION

Pasco Bakotich III — STATE DESIGN ENGINEER

08-07-07 — DATE

Washington State Department of Transportation

EFFECTIVE: AUGUST 6, 2012 TO August 4, 2013
EFFECTIVE: AUGUST 6, 2012 TO August 4, 2013
EFFECTIVE: AUGUST 6, 2012 TO August 4, 2013
EFFECTIVE: AUGUST 6, 2012 TO August 4, 2013

EFFECTIVE: AUGUST 6, 2012 TO August 4, 2013
EFFECTIVE: AUGUST 6, 2012 TO August 4, 2013

DRAWN BY: BILL BERENS

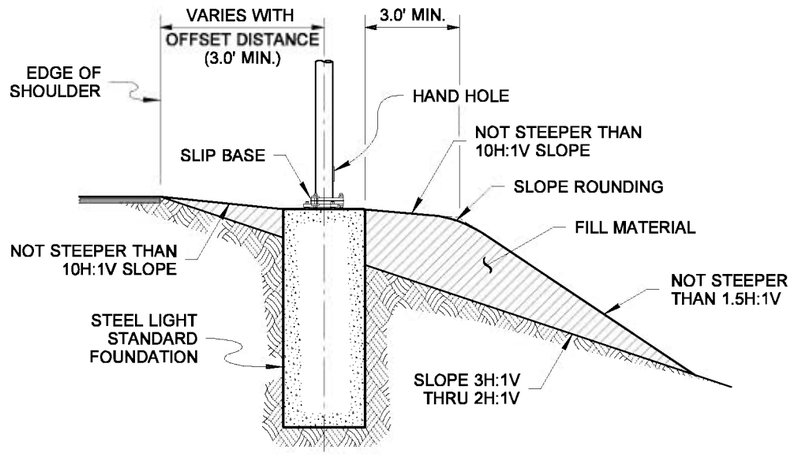

SECTION VIEW

CASE A

SLOPES 3H:1V THRU 2H:1V (MAX.)

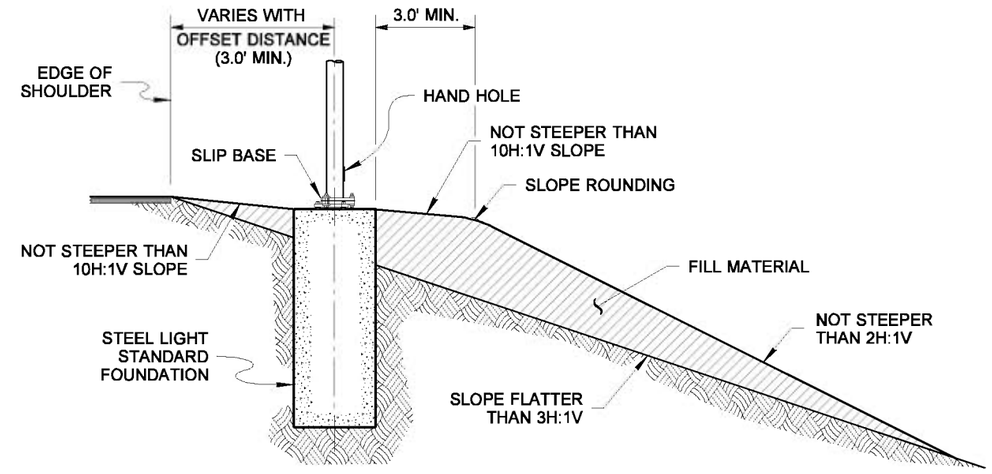

SECTION VIEW

CASE B

SLOPES FLATTER THAN 3H:1V

EMBANKMENTS

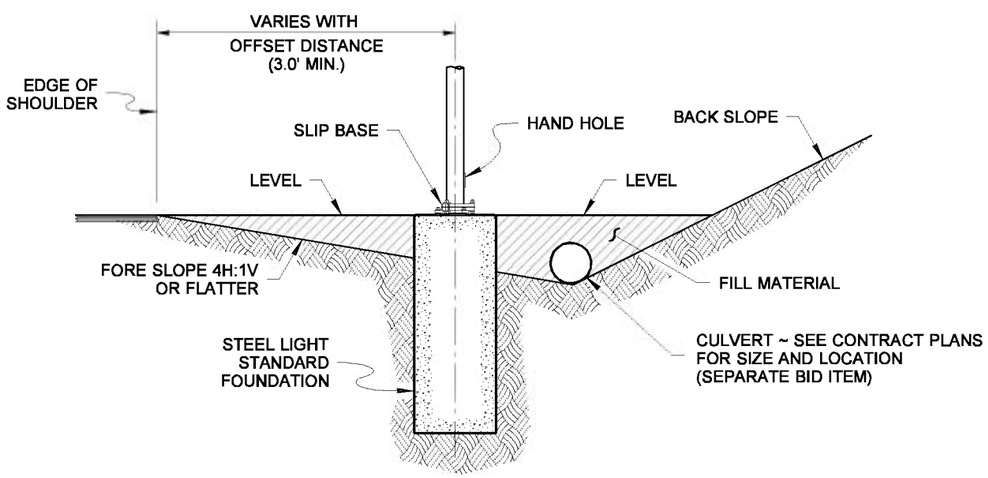

SECTION VIEW

CASE C

FORE SLOPES 4H:1V OR FLATTER

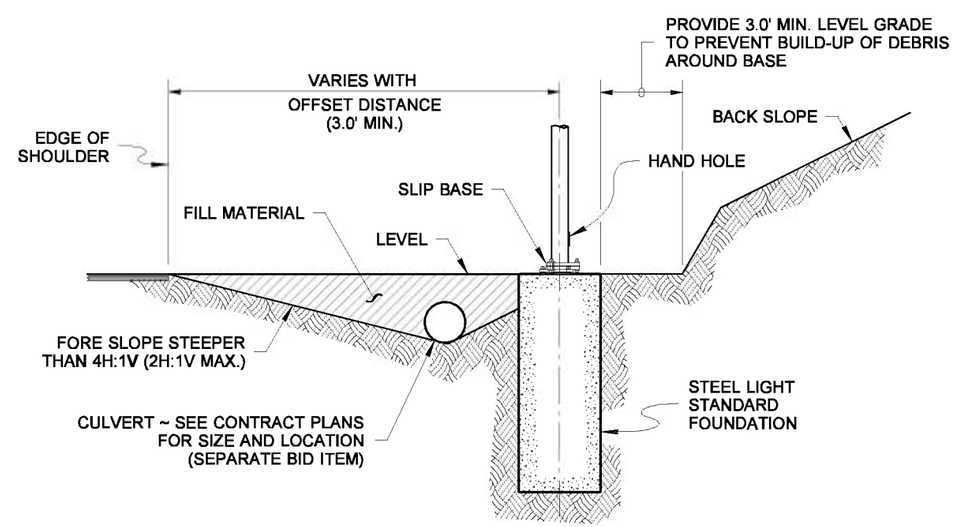

SECTION VIEW

CASE D

FORE SLOPES STEEPER THAN 4H:1V (2H:1V MAX.)

DITCH SECTIONS

EXPIRES AUGUST 9, 2007

NOTE: THIS PLAN IS NOT A LEGAL ENGINEERING DOCUMENT BUT AN ELECTRONIC DUPLICATE. THE ORIGINAL, SIGNED BY THE ENGINEER AND APPROVED FOR PUBLICATION, IS KEPT ON FILE AT THE WASHINGTON STATE DEPARTMENT OF TRANSPORTATION. A COPY MAY BE OBTAINED UPON REQUEST.

STEEL LIGHT STANDARD PLACEMENT (SLIP BASE)

STANDARD PLAN J-28.22-00

SHEET 2 OF 2 SHEETS

APPROVED FOR PUBLICATION

Pasco Bakotich III — STATE DESIGN ENGINEER

08-07-07 — DATE

Washington State Department of Transportation

EFFECTIVE: AUGUST 6, 2012 TO August 4, 2013
EFFECTIVE: AUGUST 6, 2012 TO August 4, 2013
EFFECTIVE: AUGUST 6, 2012 TO August 4, 2013
EFFECTIVE: AUGUST 6, 2012 TO August 4, 2013

EFFECTIVE: AUGUST 6, 2012 TO August 4, 2013

DRAWN BY: BILL BERENS

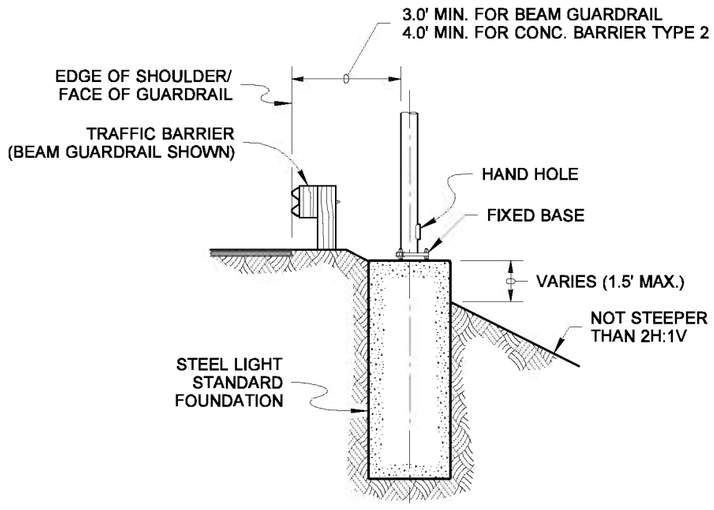

SECTION VIEW

CASE E

SLOPES 2H:1V OR FLATTER BEHIND TRAFFIC BARRIER

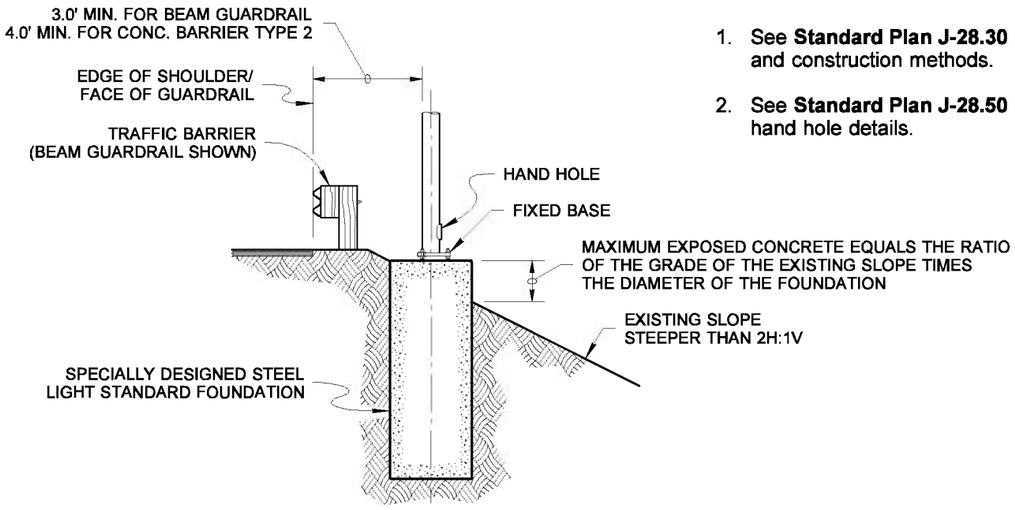

SECTION VIEW

CASE F

SLOPES STEEPER THAN 2H:1V BEHIND TRAFFIC BARRIER (SPECIAL DESIGN FOUNDATION)

NOTES

1. See **Standard Plan J-28.30** for foundation details and construction methods.
2. See **Standard Plan J-28.50** for pole base and hand hole details.

EMBANKMENTS

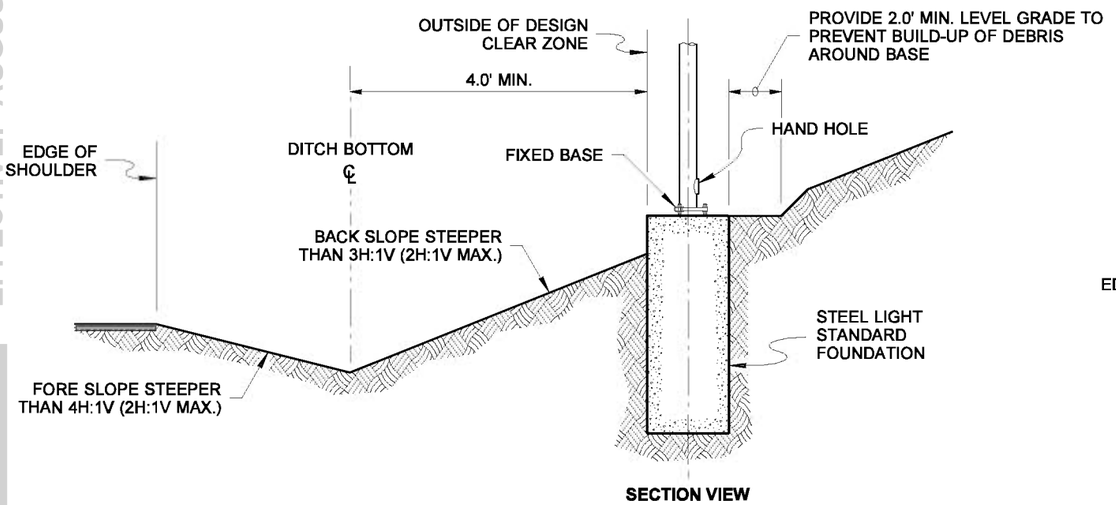

SECTION VIEW

CASE G

ROADSIDE DITCH WITH FORE SLOPE STEEPER THAN 4H:1V (2H:1V MAX.)

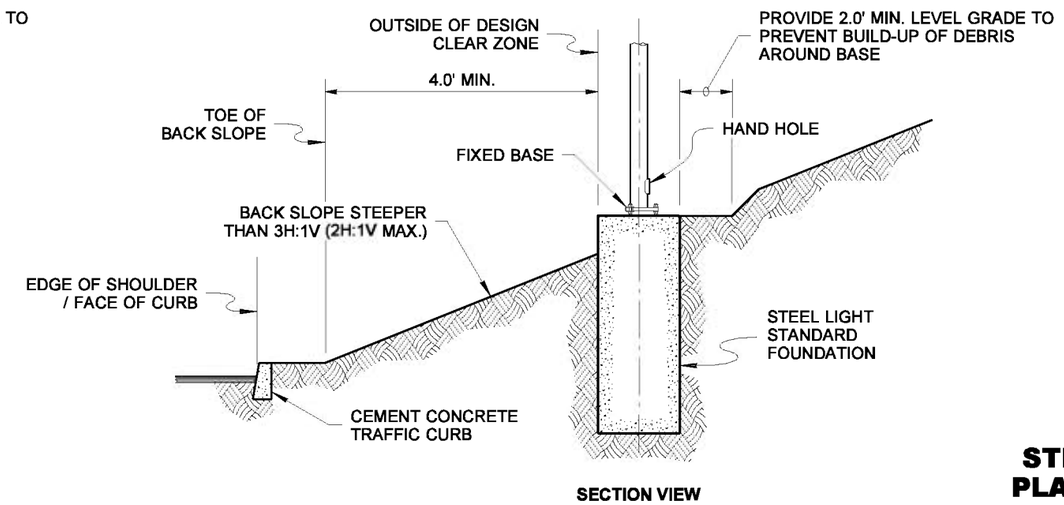

SECTION VIEW

CASE H

CUT SECTION WITH BACK SLOPE STEEPER THAN 3H:1V (2H:1V MAX.)

BACK SLOPES

NOTE: THIS PLAN IS NOT A LEGAL ENGINEERING DOCUMENT BUT AN ELECTRONIC DUPLICATE. THE ORIGINAL, SIGNED BY THE ENGINEER AND APPROVED FOR PUBLICATION, IS KEPT ON FILE AT THE WASHINGTON STATE DEPARTMENT OF TRANSPORTATION. A COPY MAY BE OBTAINED UPON REQUEST.

STEEL LIGHT STANDARD PLACEMENT (FIXED BASE)

STANDARD PLAN J-28.24-00

SHEET 1 OF 1 SHEET

APPROVED FOR PUBLICATION

Pasco Bakotich III — STATE DESIGN ENGINEER

08-07-07 — DATE

Washington State Department of Transportation

EFFECTIVE: AUGUST 6, 2012 TO August 4, 2013

EFFECTIVE: AUGUST 6, 2012 TO August 4, 2013
EFFECTIVE: AUGUST 6, 2012 TO August 4, 2013

DRAWN BY: BILL BERENS

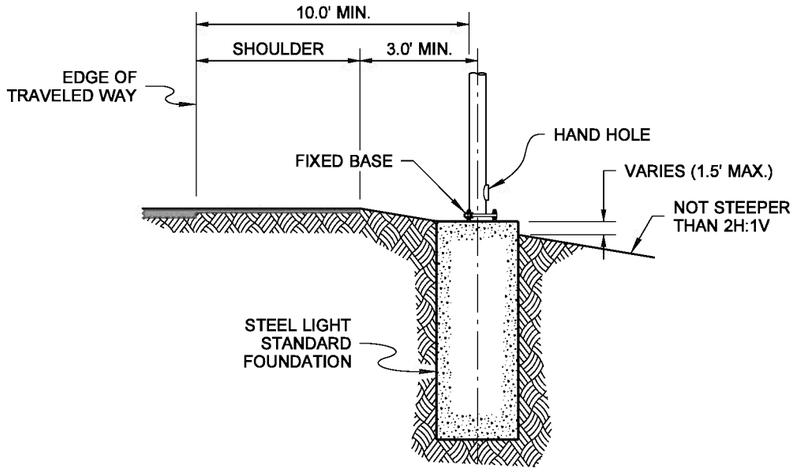

SECTION VIEW

CASE I

POSTED SPEED LIMIT LESS THAN 35 MPH

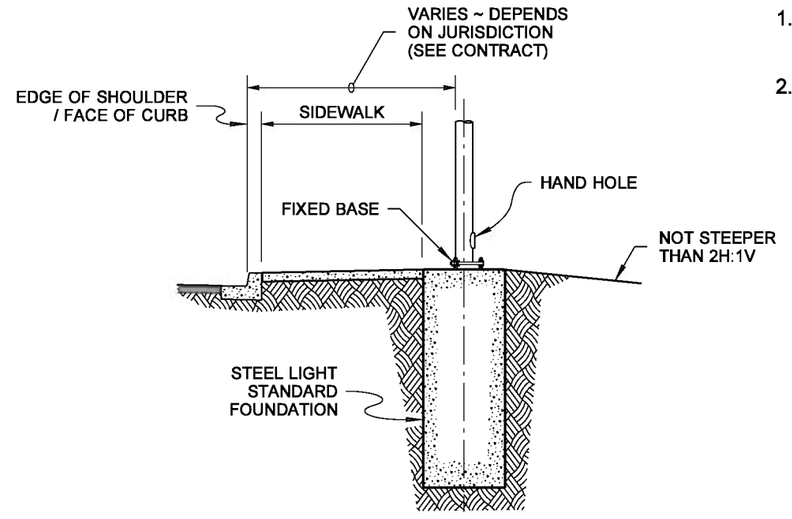

SECTION VIEW

CASE J

POSTED SPEED LIMIT LESS THAN 35 MPH

NOTES

1. See **Standard Plan J-28.30** for foundation details and construction methods.
2. See **Standard Plan J-28.50** for pole base and hand hole details.

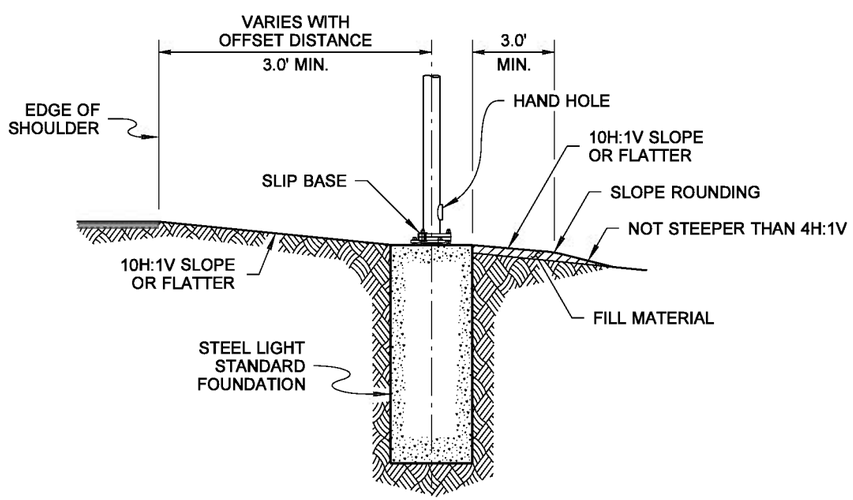

SECTION VIEW

CASE K

ROADWAYS WITH 10H:1V OR FLATTER SIDE SLOPES

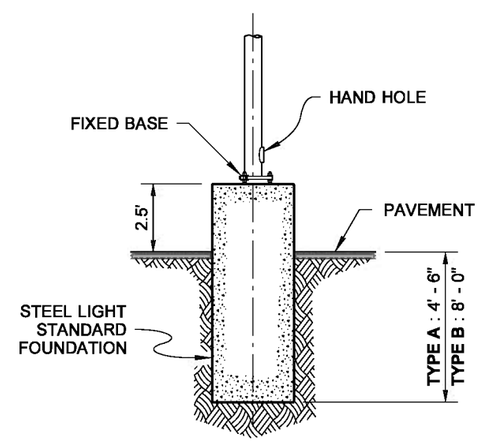

SECTION VIEW

CASE L

PARKING LOTS

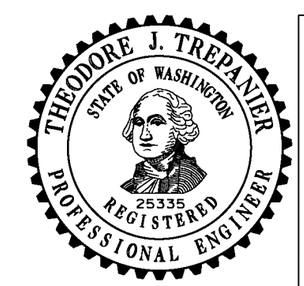

NOTE: THIS PLAN IS NOT A LEGAL ENGINEERING DOCUMENT BUT AN ELECTRONIC DUPLICATE. THE ORIGINAL, SIGNED BY THE ENGINEER AND APPROVED FOR PUBLICATION, IS KEPT ON FILE AT THE WASHINGTON STATE DEPARTMENT OF TRANSPORTATION. A COPY MAY BE OBTAINED UPON REQUEST.

STEEL LIGHT STANDARD PLACEMENT MISCELLANEOUS

STANDARD PLAN J-28.26-01

SHEET 1 OF 1 SHEET

APPROVED FOR PUBLICATION

Pasco Bakotich III — STATE DESIGN ENGINEER

12-02-08 — DATE

Washington State Department of Transportation

EFFECTIVE: AUGUST 6, 2012 TO August 4, 2013
EFFECTIVE: AUGUST 6, 2012 TO August 4, 2013
EFFECTIVE: AUGUST 6, 2012 TO August 4, 2013
EFFECTIVE: AUGUST 6, 2012 TO August 4, 2013

EFFECTIVE: AUGUST 6, 2012 TO August 4, 2013
EFFECTIVE: AUGUST 6, 2012 TO August 4, 2013

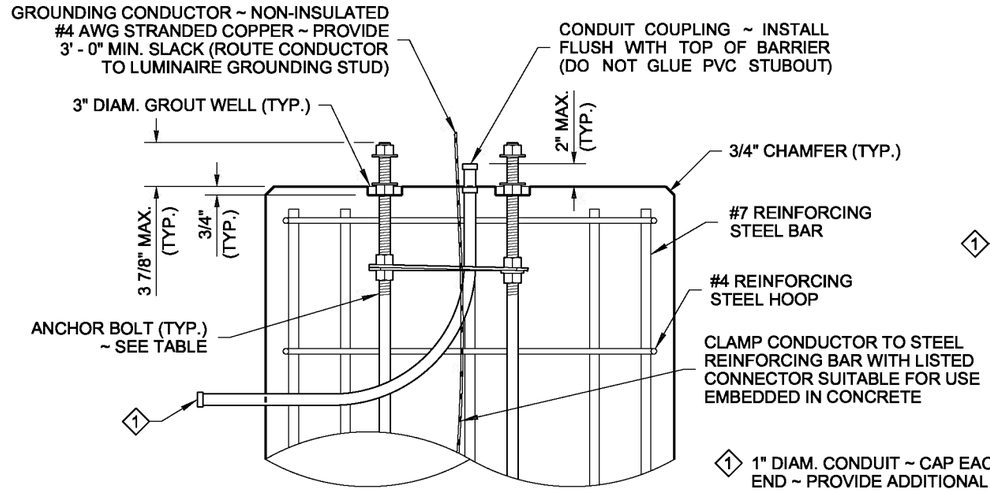

SEE **FIXED BASE** FOR DETAILS NOT SHOWN

PARTIAL ELEVATION VIEW

SLIP BASE

1 1" DIAM. CONDUIT ~ CAP EACH END ~ PROVIDE ADDITIONAL CONDUIT FOR COMMUNICATION OR SIGNAL CABLE WHERE SHOWN IN THE CONTRACT

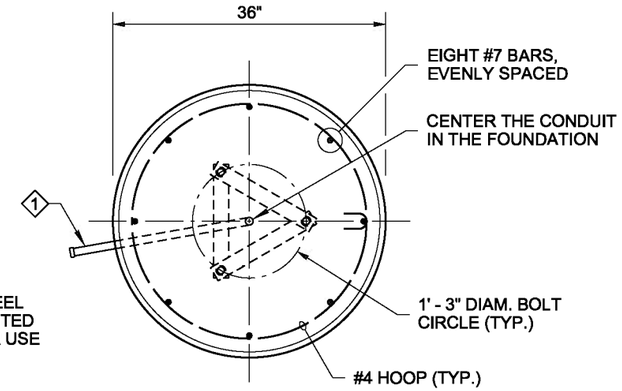

TOP VIEW

FIXED BASE

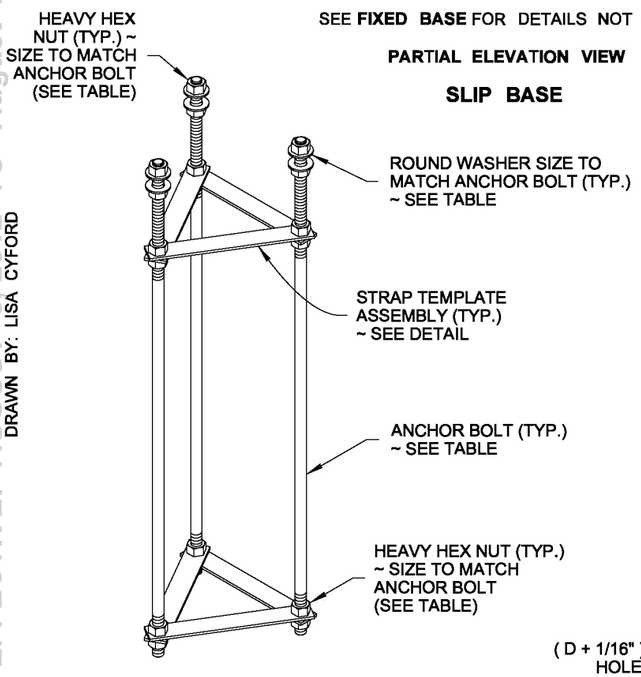

ISOMETRIC VIEW

ANCHOR BOLT ASSEMBLY

(SLIP BASE SHOWN)

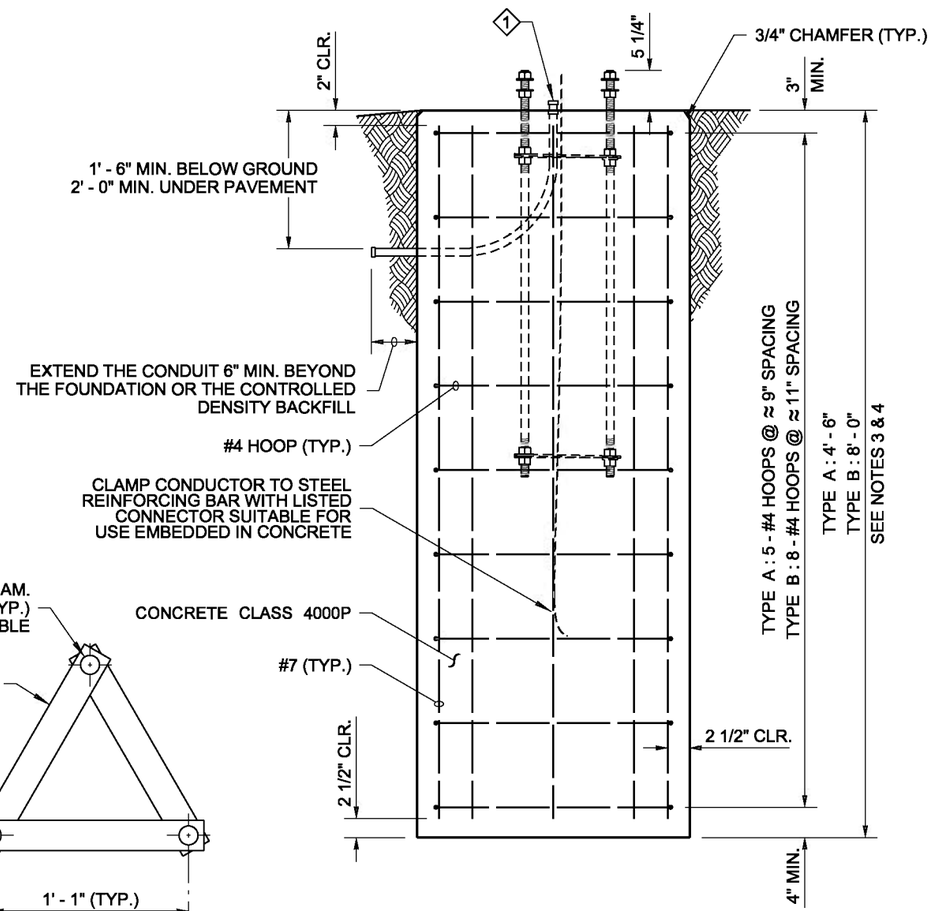

SEE **SLIP BASE** FOR DETAILS NOT SHOWN

ELEVATION VIEW

FIXED BASE

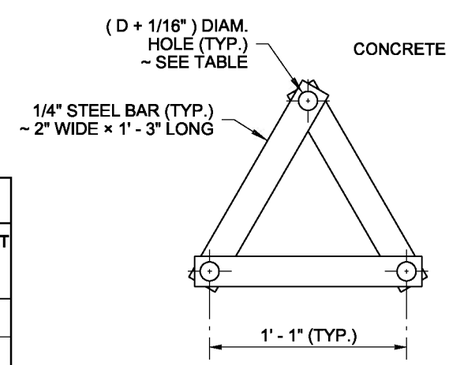

TOP VIEW

STRAP TEMPLATE ASSEMBLY

ANCHOR BOLT TABLE

LUMINAIRE HEIGHT (H1)	MAST ARM TYPE	MAST ARM LENGTH	ANCHOR BOLT DIAMETER "D"
20' TO 50'	SINGLE	6' TO 16'	1"
20' TO 50'	DOUBLE	6' TO 8'	1"
20' TO 45'	DOUBLE	10' TO 16'	1"
46' TO 50'	DOUBLE	10' TO 16'	1 1/8"

NOTES

1. See **Standard Plan J-28.40** for Luminaire Pole base mounting details.
2. The Strap Templates shall be held in place by nuts, 6" from the top of the foundation and 3" from the bottom of the anchor bolts. 18 heavy duty hex nuts and 6 round washers are required for a Slip Base assembly. 18 heavy duty hex nuts and 6 plate washers are required for a Fixed Base assembly.
3. Use Steel Light Standard Foundation **Type A** on level ground or slopes not exceeding 4H : 1V. Use **Type B** for slopes steeper than 4H : 1V, but not exceeding 2H : 1V. Slopes steeper than 2H : 1V shall require a special design.
4. These foundations are designed for a minimum of 2000 PSF **(TYPE A)** or 1500 PSF **(TYPE B)** allowable lateral bearing pressure for the soil. A special foundation shall be required for soil with allowable lateral bearing pressure lower than 1500 PSF.
5. The Luminaire Pole height shall not exceed 50' (H1).
6. Slip Bases shall not be installed on 50' (H1) poles with Double Mast Arms, nor on poles weighing more than 1000 lbs.
7. Slip Bases are not required on poles placed outside of the Design Clear Zone, nor on poles installed behind traffic barrier.
8. Foundations constructed within Ecology Embankments shall be increased in depth by the depth of the Ecology Embankment.
9. Exposed portions of the foundation shall be formed to create a Class 2 surface finish. All forming shall be removed upon completion of foundation construction.
10. For excavation, concrete placement, and backfill options, see METHOD 1 and METHOD 2 on Sheet 2 of 2.
11. The Anchor Bolts shall be high-strength steel, manufactured from ASTM A449, with heavy hex nuts and hardened washers. Galvanize the Anchor Bolts according to AASHTO M232.
12. The foundation shall be grounded in accordance with the requirements of **Standard Specification 8-20.3(4).**
13. See **Standard Plans C-8b** and **C-85.14** for steel light standards on traffic barrier.

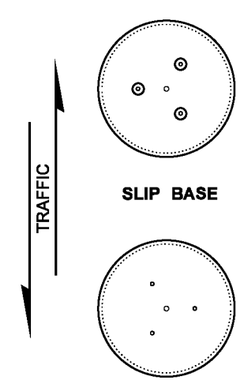

SLIP BASE

FIXED BASE

ANCHOR BOLT LAYOUT

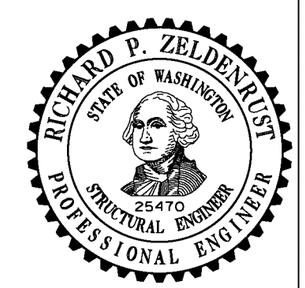

NOTE: THIS PLAN IS NOT A LEGAL ENGINEERING DOCUMENT BUT AN ELECTRONIC DUPLICATE. THE ORIGINAL, SIGNED BY THE ENGINEER AND APPROVED FOR PUBLICATION, IS KEPT ON FILE AT THE WASHINGTON STATE DEPARTMENT OF TRANSPORTATION. A COPY MAY BE OBTAINED UPON REQUEST.

STEEL LIGHT STANDARD FOUNDATION TYPES A & B

STANDARD PLAN J-28.30-02

SHEET 1 OF 2 SHEETS

APPROVED FOR PUBLICATION

Pasco Bakotich III — 06-27-11

STATE DESIGN ENGINEER — DATE

Washington State Department of Transportation

DRAWN BY: LISA CYFORD

EFFECTIVE: AUGUST 6, 2012 TO August 4, 2013
EFFECTIVE: AUGUST 6, 2012 TO August 4, 2013
EFFECTIVE: AUGUST 6, 2012 TO August 4, 2013
EFFECTIVE: AUGUST 6, 2012 TO August 4, 2013

EFFECTIVE: AUGUST 6, 2012 TO August 4, 2013

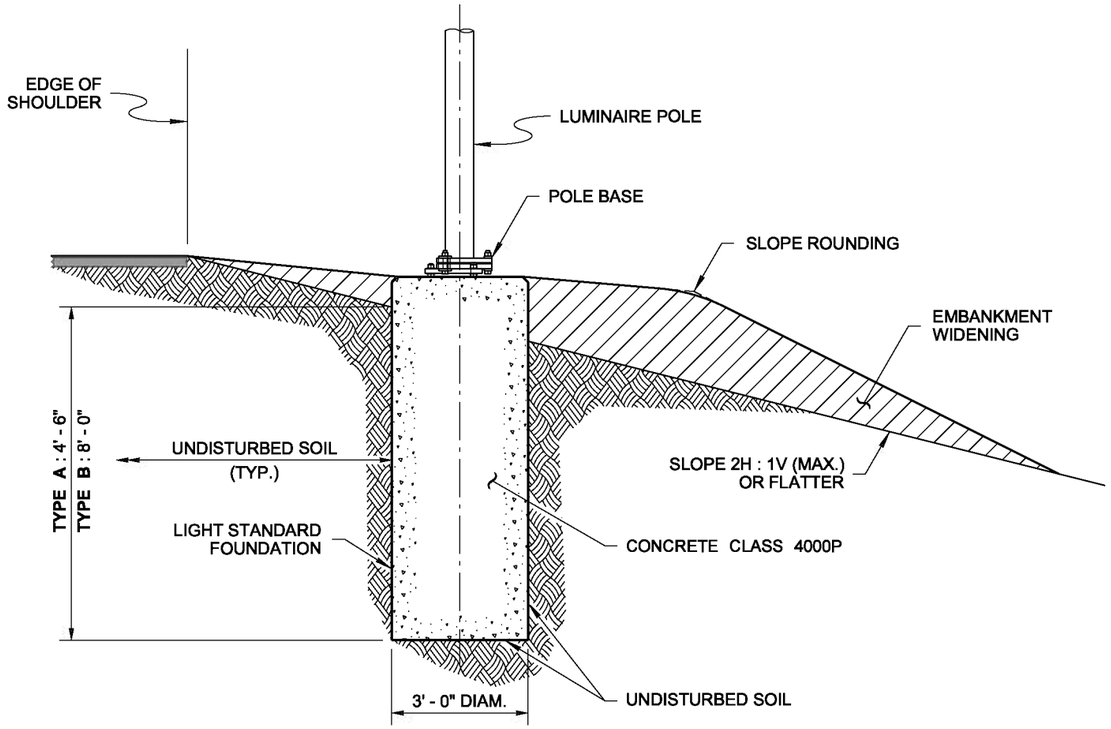

(CASE A SHOWN)

METHOD 1

NO SUBSURFACE FORM

This option is only used when the existing soil in the hole will remain standing and the cement concrete can be placed without causing the soil to collapse. Concrete shall be cast directly against undisturbed soil.

Auger the hole for the foundation. Use paper or cardboard form to achieve a smooth finish on the final exposed cement concrete. Support the form as necessary to remain plumb.

See **Standard Plans J-28.24** and **J-28.26** for maximum heights of exposed foundation when no embankment widening is to be installed.

Place the concrete foundation.

After concrete has cured, remove the paper or cardboard form portion.

Construct the embankment widening (if required).

EFFECTIVE: AUGUST 6, 2012 TO August 4, 2013

NOTE

These foundation Construction Methods are applicable to all Steel Light Standard Placement Cases. See **Standard Plans J-28.22, J-28.24,** and **J-28.26.**

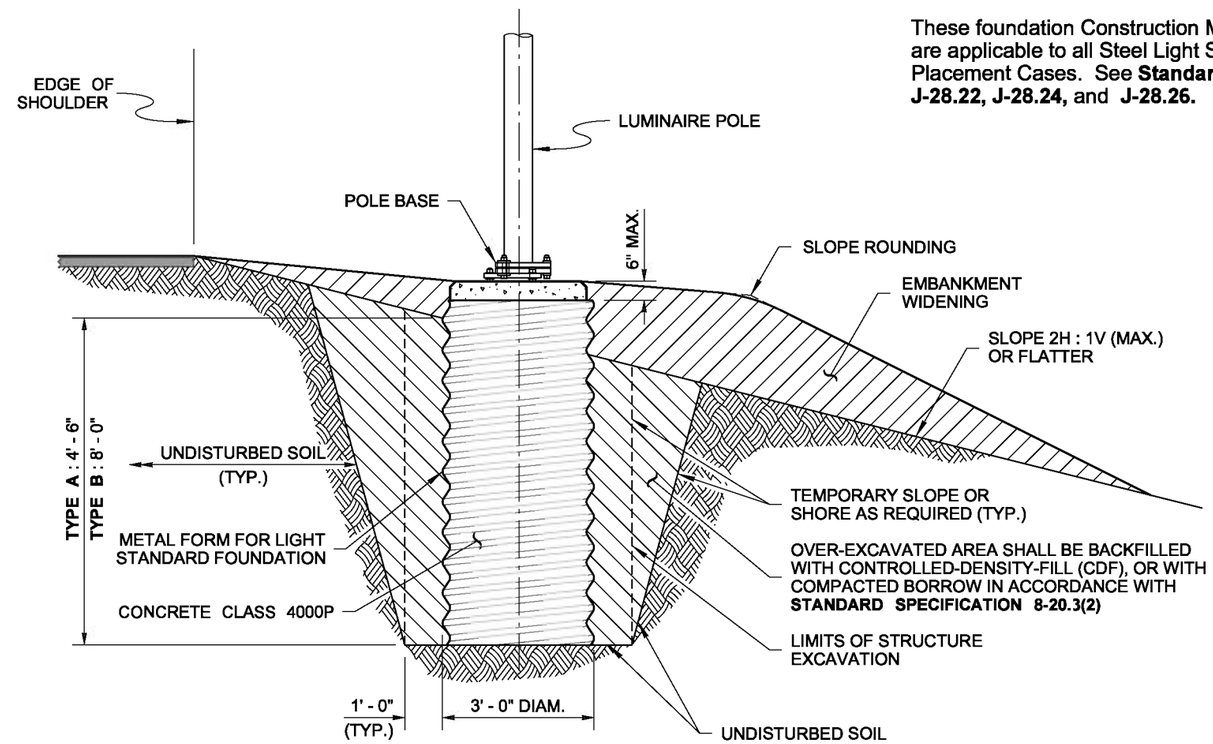

(CASE A SHOWN)

METHOD 2

METAL (SUBSURFACE) FORM REQUIRED

When the existing soil will not retain a vertical face, over-excavate the foundation area and install a 36" diameter, corrugated metal (pipe) form. The corrugated metal form shall not extend more than 6" below any portion of the foundation that will remain exposed upon final grading. Continue forming to full height using paper or cardboard form to achieve a smooth finish on final exposed cement concrete. Support the form as necessary to remain plumb.

See **Standard Plans J-28.24** and **J-28.26** for maximum heights of exposed foundation when no embankment widening is to be installed.

Place the concrete foundation.

After concrete has cured, remove the paper or cardboard form portion.

Backfill with controlled-density fill or compacted borrow in accordance with **Standard Specification 8-20.3(2).**

Construct the embankment widening (if required).

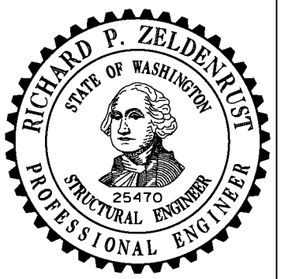

NOTE: THIS PLAN IS NOT A LEGAL ENGINEERING DOCUMENT BUT AN ELECTRONIC DUPLICATE. THE ORIGINAL, SIGNED BY THE ENGINEER AND APPROVED FOR PUBLICATION, IS KEPT ON FILE AT THE WASHINGTON STATE DEPARTMENT OF TRANSPORTATION. A COPY MAY BE OBTAINED UPON REQUEST.

STEEL LIGHT STANDARD FOUNDATION TYPES A & B

STANDARD PLAN J-28.30-02

SHEET 2 OF 2 SHEETS

APPROVED FOR PUBLICATION

Pasco Bakotich III — STATE DESIGN ENGINEER
06-27-11 — DATE

Washington State Department of Transportation

CONSTRUCTION METHODS

EFFECTIVE: AUGUST 6, 2012 TO August 4, 2013

EFFECTIVE: AUGUST 6, 2012 TO August 4, 2013

EFFECTIVE: AUGUST 6, 2012 TO August 4, 2013

EFFECTIVE: AUGUST 6, 2012 TO August 4, 2013

DRAWN BY: LISA CYFORD

EFFECTIVE: AUGUST 6, 2012 TO August 4, 2013
EFFECTIVE: AUGUST 6, 2012 TO August 4, 2013

DRAWN BY: FERN LIDDELL

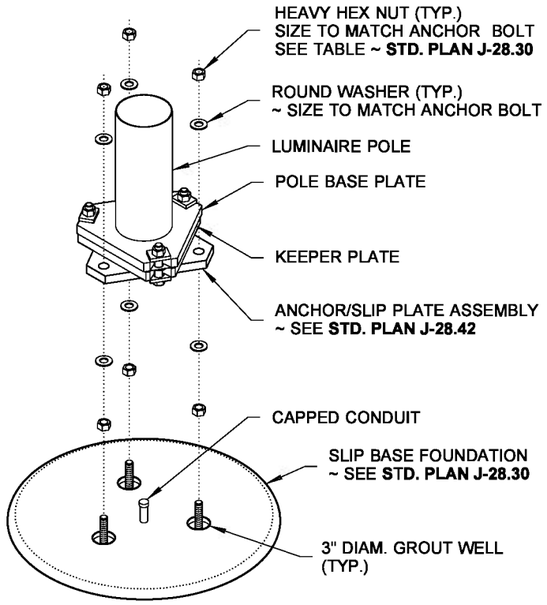

EXPLODED VIEW

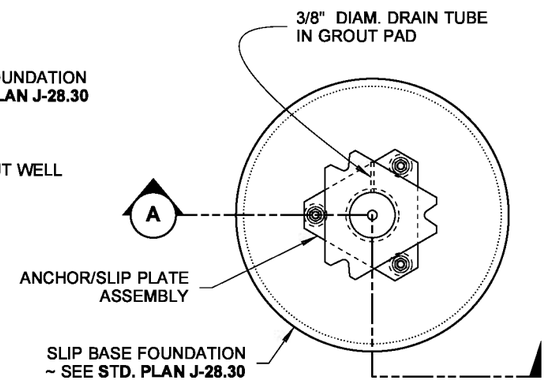

PLAN VIEW

SLIP BASE

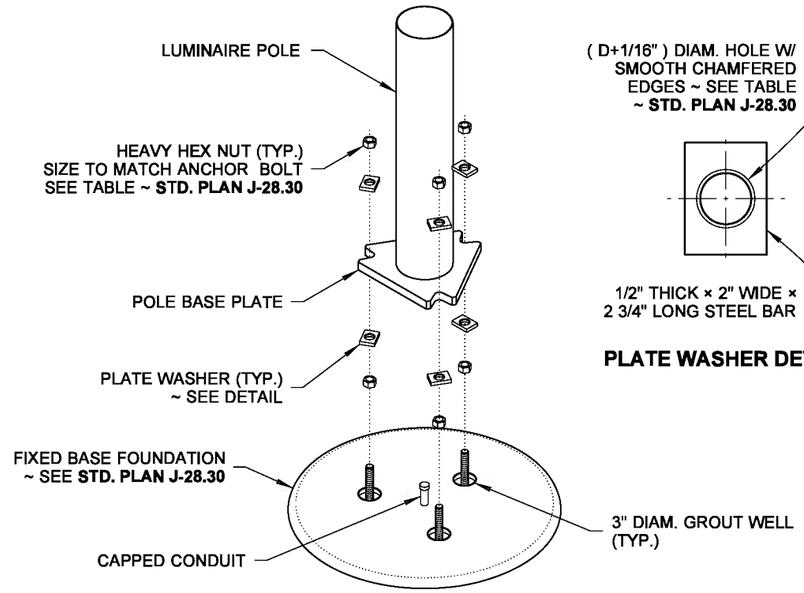

EXPLODED VIEW

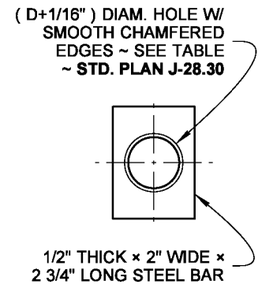

PLATE WASHER DETAIL

NOTES

1. 50' (**H1**) poles with double mast arms or poles weighing in excess of 1000 LBS shall not be installed on a slip base.
2. Galvanizing shall be in accordance with AASHTO M 111.
3. See **Standard Plans C-8b, C-14h,** and **J-28.60** for foundation and base plate requirements when light standards are mounted on cement concrete traffic barrier.
4. See **Standard Specification Section 6-03.3(33)** and **8-20.3 (4)** for the torque requirements for all of the Anchor Bolt installations. Install 1-inch diameter Clamping Bolts in all Slip Bases to **a torque of 95 Foot-Pounds** - See **Standard Specification Section 8-20.3 (13)A.**
   DO NOT OVERTIGHTEN.
   After state inspection, burr threads to prevent nut rotation.
5. For Anchor Bolt Diameter " **D** ", See Table, **Standard Plan J-28.30**.

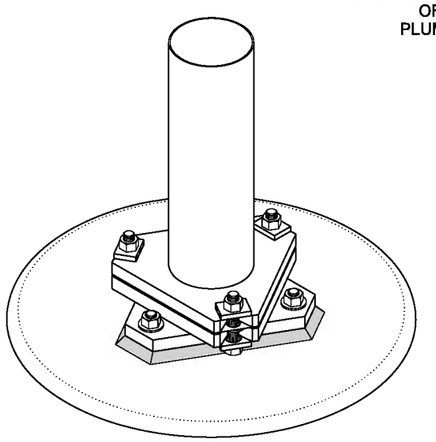

ASSEMBLED

ISOMETRIC VIEW

SLIP BASE

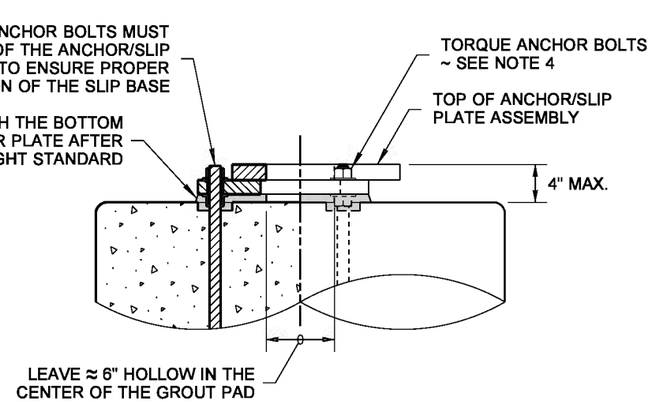

SECTION (A)

(CONDUIT NOT SHOWN)

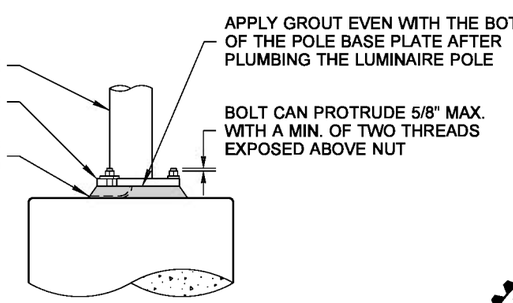

ASSEMBLED AND GROUTED

ELEVATION VIEW

FIXED BASE

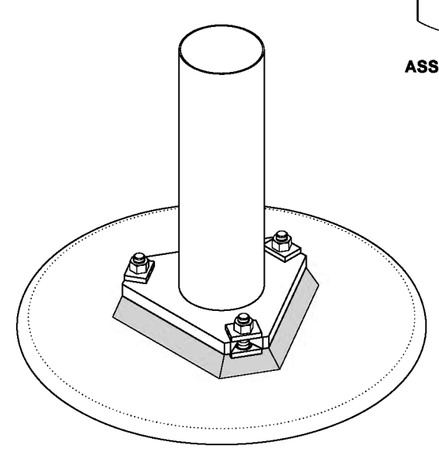

ASSEMBLED

ISOMETRIC VIEW

FIXED BASE

RICHARD P. ZELDENRUST
STATE OF WASHINGTON
25470
STRUCTURAL ENGINEER
PROFESSIONAL ENGINEER

NOTE: THIS PLAN IS NOT A LEGAL ENGINEERING DOCUMENT BUT AN ELECTRONIC DUPLICATE. THE ORIGINAL, SIGNED BY THE ENGINEER AND APPROVED FOR PUBLICATION, IS KEPT ON FILE AT THE WASHINGTON STATE DEPARTMENT OF TRANSPORTATION. A COPY MAY BE OBTAINED UPON REQUEST.

STEEL LIGHT STANDARD BASE MOUNTING

STANDARD PLAN J-28.40-01

SHEET 1 OF 1 SHEET

APPROVED FOR PUBLICATION

Pasco Bakotich III — STATE DESIGN ENGINEER

10-14-09 — DATE

Washington State Department of Transportation

EFFECTIVE: AUGUST 6, 2012 TO August 4, 2013
EFFECTIVE: AUGUST 6, 2012 TO August 4, 2013
EFFECTIVE: AUGUST 6, 2012 TO August 4, 2013
EFFECTIVE: AUGUST 6, 2012 TO August 4, 2013

EFFECTIVE: AUGUST 6, 2012 TO August 4, 2013
EFFECTIVE: AUGUST 6, 2012 TO August 4, 2013

DRAWN BY: BILL BERENS

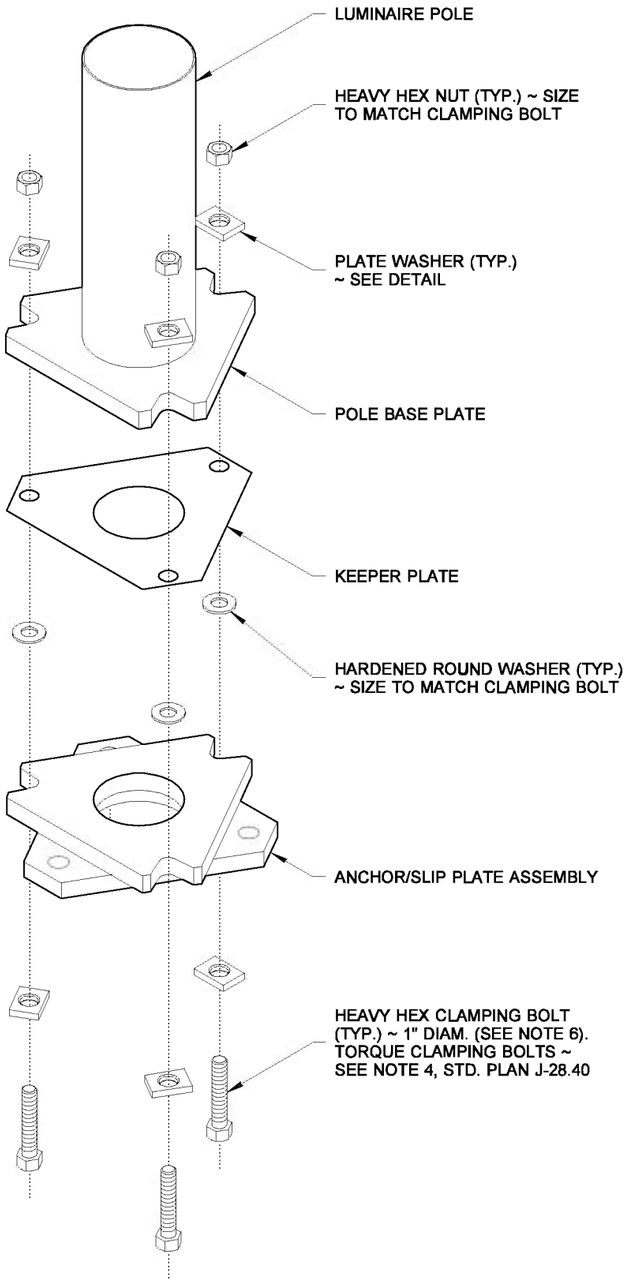

EXPLODED

ISOMETRIC VIEW

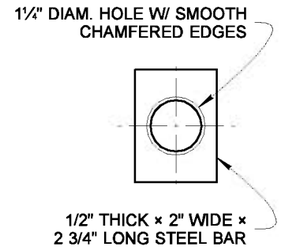

PLATE WASHER DETAIL

CLAMPING BOLT TABLE			
LUMINAIRE HEIGHT (H1)	MAST ARM TYPE	MAST ARM LENGTH	CLAMPING BOLT DIAMETER " D "
20' TO 50'	SINGLE	6' TO 16'	1"
20' TO 45'	DOUBLE	6' TO 8'	1"
46' TO 50'	DOUBLE	6' TO 8'	◇1
20' TO 45'	DOUBLE	10' TO 16'	◇1
46' TO 50'	DOUBLE	10' TO 16'	◇1

◇1 SLIP BASE NOT ALLOWED

NOTES

1. 50' (H1) poles with double mast arms or poles weighing in excess of 1000 lbs. shall not be installed on a Slip Base.
2. The Slip and Anchor Plates shall be manufactured from ASTM A572 GR.50 or ASTM A588. All Slip Plate notched surfaces shall be finished smooth.
3. The Clamping Bolts shall be high strength steel, manufactured from AASHTO M164, with heavy hex nut and hardened washer. Galvanize the Clamping Bolts according to AASHTO M232.
4. Round and smooth all edges along wire-way to protect the conductors. See **Standard Plan J-28.70** for wiring details.
5. Galvanize the Anchor/Slip Plate after fabrication according to AASHTO M 111.
6. Clamping Bolt diameters may vary on existing installations. Replace them with the same size as the originals when repairing or reusing a luminaire pole.

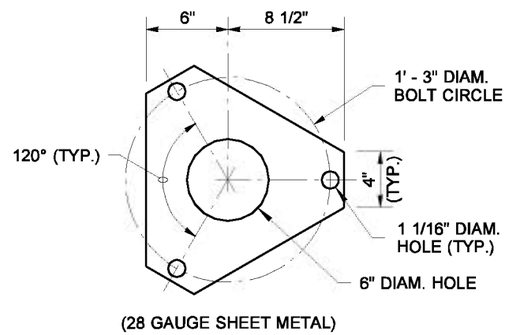

(28 GAUGE SHEET METAL)

TOP VIEW

KEEPER PLATE

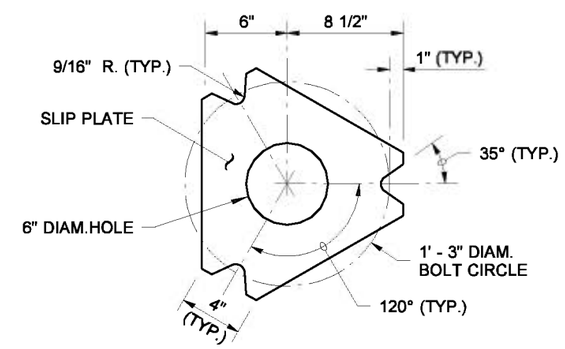

TOP VIEW

SLIP PLATE

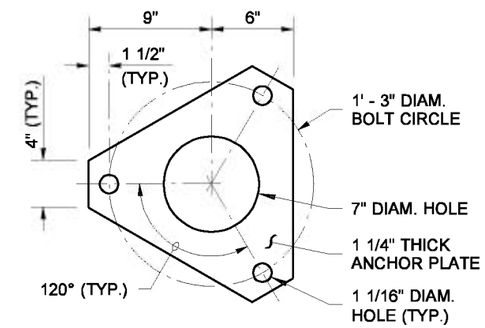

TOP VIEW

ANCHOR PLATE

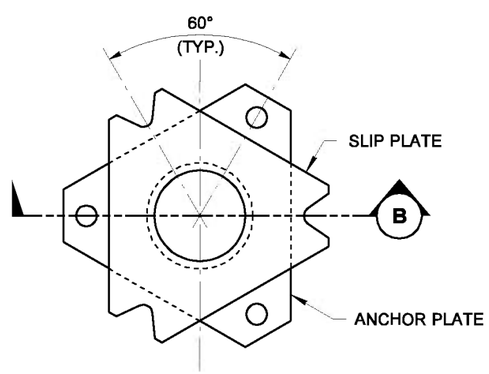

TOP VIEW

ANCHOR/SLIP PLATE ASSEMBLY

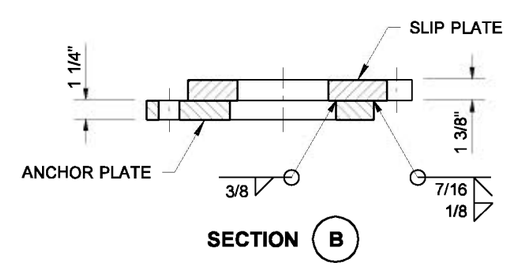

SECTION B

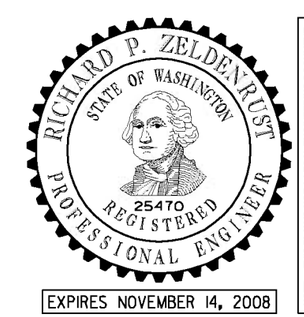

EXPIRES NOVEMBER 14, 2008

NOTE: THIS PLAN IS NOT A LEGAL ENGINEERING DOCUMENT BUT AN ELECTRONIC DUPLICATE. THE ORIGINAL, SIGNED BY THE ENGINEER AND APPROVED FOR PUBLICATION, IS KEPT ON FILE AT THE WASHINGTON STATE DEPARTMENT OF TRANSPORTATION. A COPY MAY BE OBTAINED UPON REQUEST.

STEEL LIGHT STANDARD ANCHOR/SLIP PLATE FOR SLIP BASE

STANDARD PLAN J-28.42-00

SHEET 1 OF 1 SHEET

APPROVED FOR PUBLICATION

Pasco Bakotich III — STATE DESIGN ENGINEER

08-07-07 — DATE

Washington State Department of Transportation

EFFECTIVE: AUGUST 6, 2012 TO August 4, 2013
EFFECTIVE: AUGUST 6, 2012 TO August 4, 2013
EFFECTIVE: AUGUST 6, 2012 TO August 4, 2013
EFFECTIVE: AUGUST 6, 2012 TO August 4, 2013
EFFECTIVE: AUGUST 6, 2012 TO August 4, 2013

EFFECTIVE: AUGUST 6, 2012 TO August 4, 2013

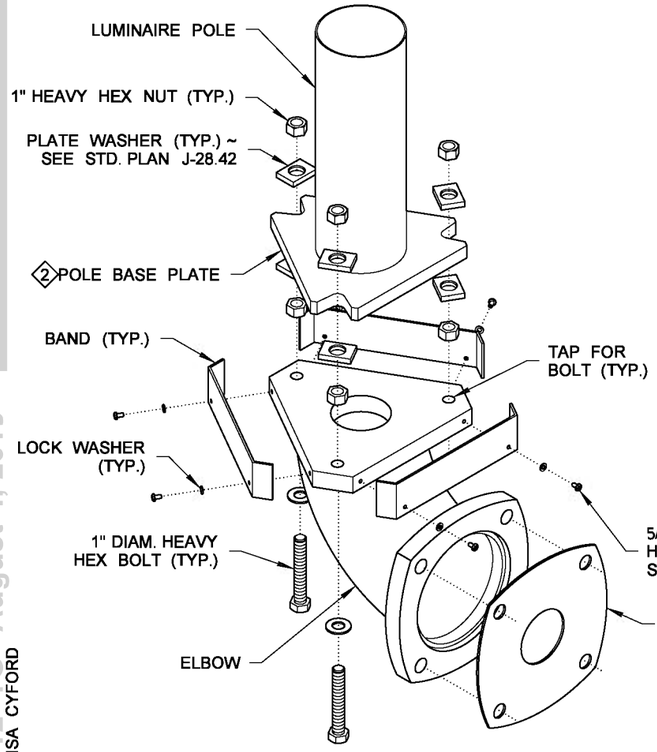

EXPLODED ISOMETRIC VIEW

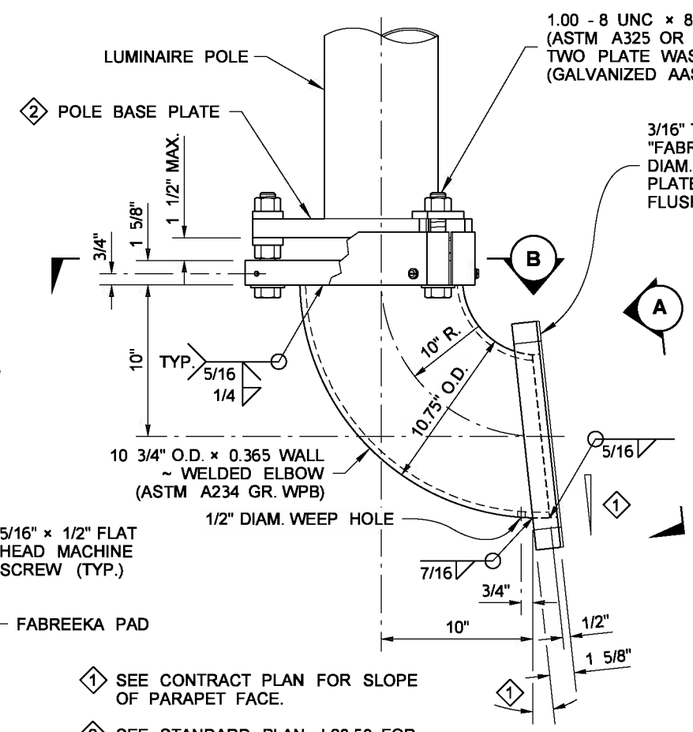

1 SEE CONTRACT PLAN FOR SLOPE OF PARAPET FACE.

2 SEE STANDARD PLAN J-28.50 FOR POLE BASE PLATE REQUIREMENTS.

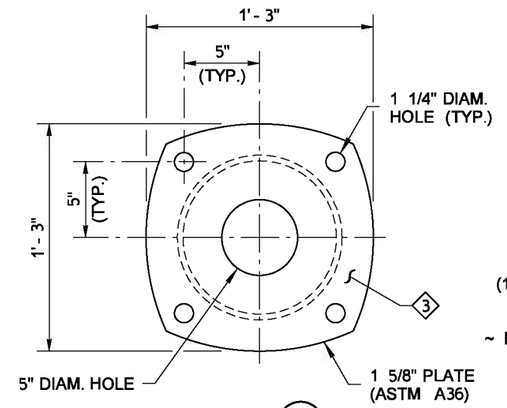

VIEW A

3 THE FACE SHALL BE PLANE AFTER FABRICATION, TO PROVIDE A SEAL BETWEEN THE BARRIER AND THE ELBOW.

NOTES

1. Galvanize the Elbow Assembly after fabrication according to AASHTO M 111.
2. See **Standard Plan J-28.50** for Pole Base and Hand Hole details.

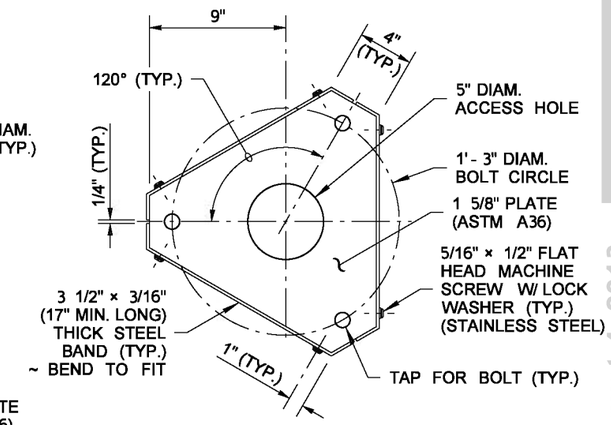

SECTION B

STEEL LIGHT STANDARD ELBOW DETAIL

FOR LUMINAIRE POLES WITH SINGLE MAST ARM 12'-0" OR LESS AND DOUBLE MAST ARMS 8'-0" OR LESS, MOUNTED ON BRIDGE OR RETAINING WALLS.

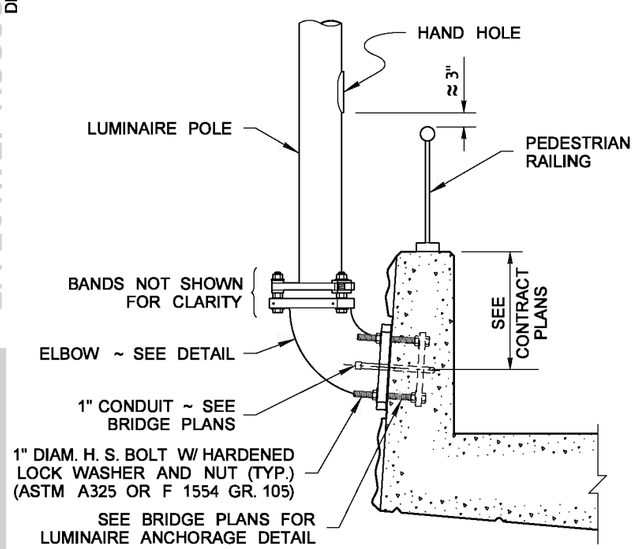

BRIDGE PEDESTRIAN BARRIER

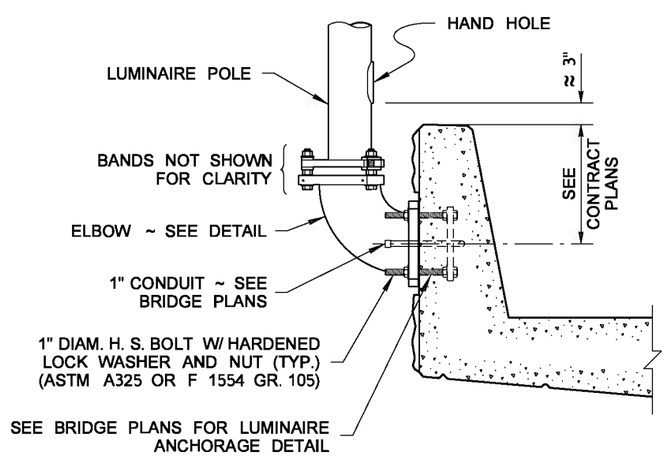

SINGLE-SLOPE BRIDGE TRAFFIC BARRIER

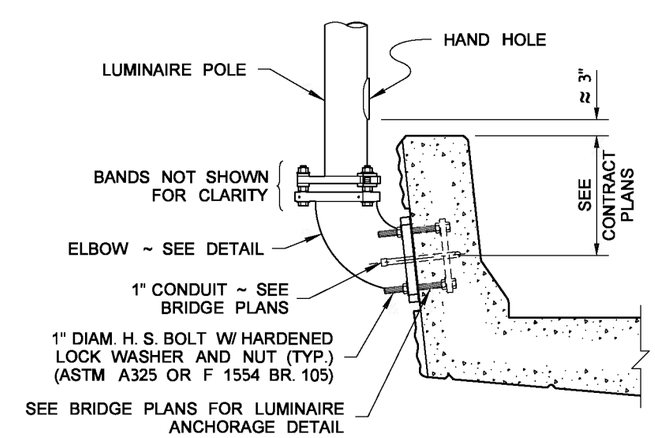

F-SHAPE BRIDGE TRAFFIC BARRIER

WHEN TRAFFIC BARRIER HEIGHT IS 42", MAINTAIN APPROX. HEIGHT FROM TOP OF BARRIER TO HAND HOLE SHOWN.

TYPICAL SECTIONS

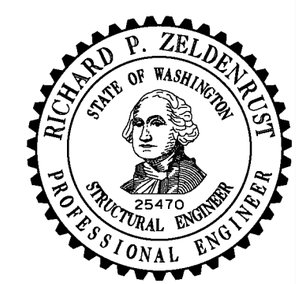

NOTE: THIS PLAN IS NOT A LEGAL ENGINEERING DOCUMENT BUT AN ELECTRONIC DUPLICATE. THE ORIGINAL, SIGNED BY THE ENGINEER AND APPROVED FOR PUBLICATION, IS KEPT ON FILE AT THE WASHINGTON STATE DEPARTMENT OF TRANSPORTATION. A COPY MAY BE OBTAINED UPON REQUEST.

STEEL LIGHT STANDARD ELBOW MOUNTING ON BRIDGE 7 RETAINING WALL

STANDARD PLAN J-28.45-01

SHEET 1 OF 1 SHEET

APPROVED FOR PUBLICATION

Pasco Bakotich III — 06-27-11

STATE DESIGN ENGINEER — DATE

Washington State Department of Transportation

DRAWN BY: LISA CYFORD

EFFECTIVE: AUGUST 6, 2012 TO August 4, 2013

EFFECTIVE: AUGUST 6, 2012 TO August 4, 2013
EFFECTIVE: AUGUST 6, 2012 TO August 4, 2013

DRAWN BY: LISA CYFORD

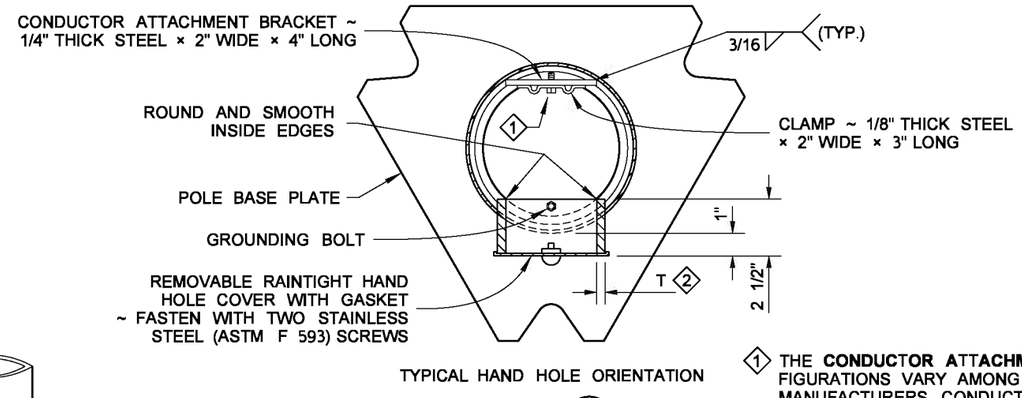

TYPICAL HAND HOLE ORIENTATION

VIEW (A)

1. THE **CONDUCTOR ATTACHMENT** CONFIGURATIONS VARY AMONG DIFFERENT MANUFACTURERS. CONDUCTOR ATTACHMENTS ARE REQUIRED ON ALL POLES, FIXED OR SLIP BASE.
2. T = RIM PLATE THICKNESS BY LUMINAIRE POLE FABRICATOR.

NOTES

1. Pole Base Plate for a Slip Base design shall be 1 1/4" steel manufactured from ASTM A572 GR. 50 or ASTM A588. Pole Base Plate for a Fixed Base design shall be either 1 1/4" steel manufactured from ASTM A572 GR. 50, ASTM A588, or 1 1/2" manufactured from ASTM A36. All Pole Base Plate notched surfaces shall be finished smooth.
2. Round and smooth all edges along wire-way to protect conductors. See **Standard Plan J-28.70** for wiring details.
3. Galvanizing shall be in accordance with AASHTO M 111.
4. See **Standard Plans C-8b, C-85.14,** and **J-28.60** for foundation and base plate requirements when steel light standards are mounted on concrete traffic barrier.
5. See **Standard Plan J-28.42** for details when Slip Base is required.

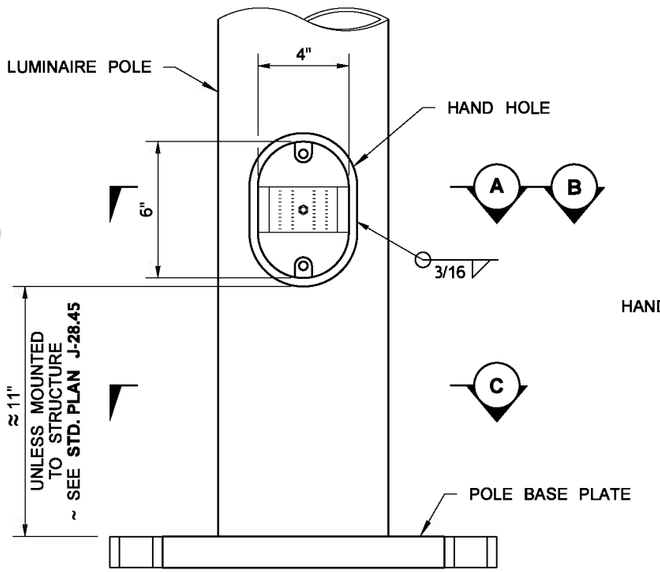

(COVER NOT SHOWN FOR CLARITY)

ELEVATION VIEW

CONFIGURATION AND LOCATION OF THE HAND HOLE VARIES AMONG MANUFACTURERS ~ MINIMUM SIZE OPENING SHOWN

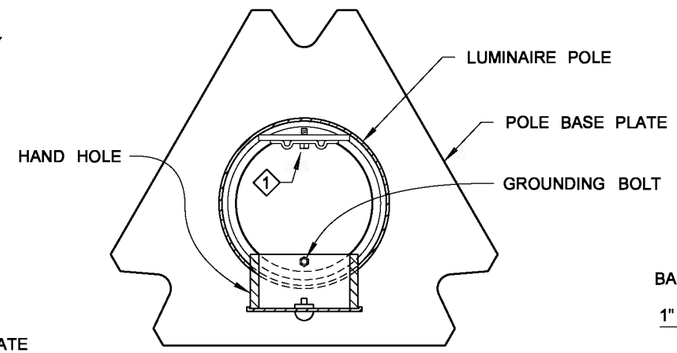

FOR DETAILS NOT SHOWN, SEE VIEW (A) ABOVE

ORIENTATION FOR INSTALLATION ON BRIDGE OR RETAINING WALL ~ SEE **STANDARD PLAN J-28.45**

VIEW (B)

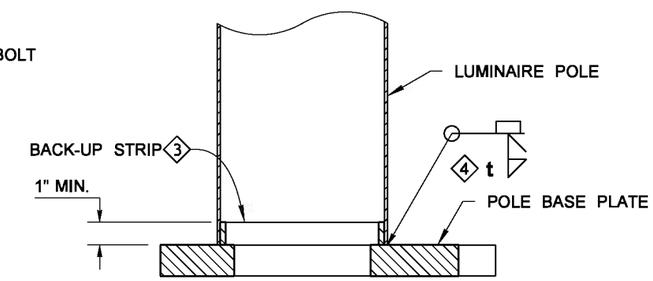

3. 1/4" THICK, OR NO THINNER THAN POLE WALL THICKNESS. TACK WELD OR SEAL WELD TO BASE PLATE.
4. t = SIZE OF FILLET WELD BY LUMINAIRE POLE FABRICATOR.

SECTION (D)

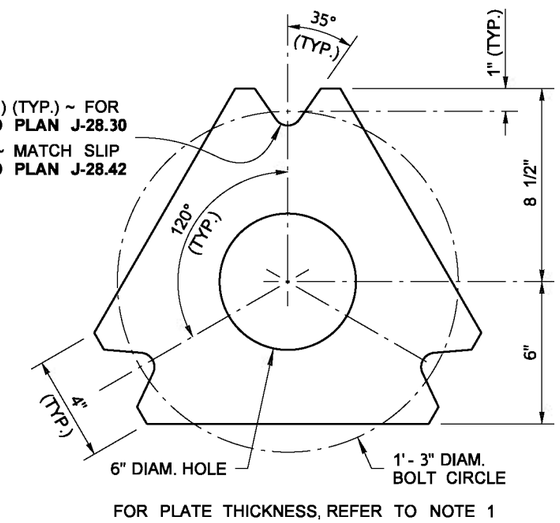

FOR PLATE THICKNESS, REFER TO NOTE 1

TOP VIEW

POLE BASE PLATE DETAIL

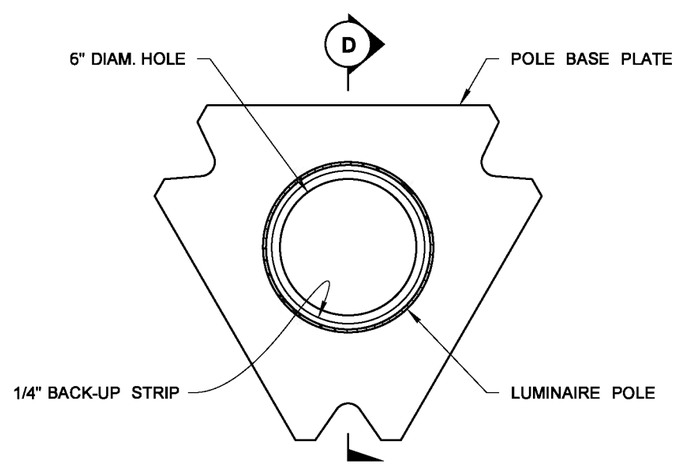

VIEW (C)

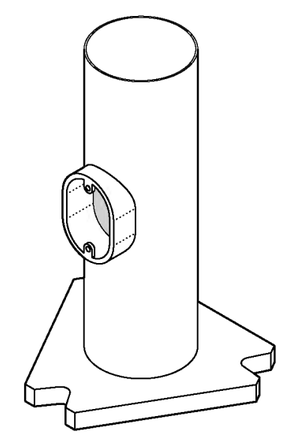

ISOMETRIC VIEW

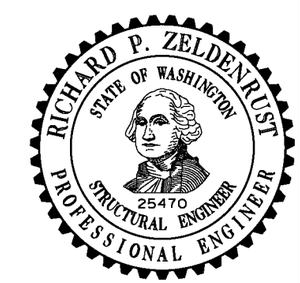

NOTE: THIS PLAN IS NOT A LEGAL ENGINEERING DOCUMENT BUT AN ELECTRONIC DUPLICATE. THE ORIGINAL, SIGNED BY THE ENGINEER AND APPROVED FOR PUBLICATION, IS KEPT ON FILE AT THE WASHINGTON STATE DEPARTMENT OF TRANSPORTATION. A COPY MAY BE OBTAINED UPON REQUEST.

STEEL LIGHT STANDARD POLE BASE AND HAND HOLE DETAILS

STANDARD PLAN J-28.50-02

SHEET 1 OF 1 SHEET

APPROVED FOR PUBLICATION

Pasco Bakotich III — 06-02-11

STATE DESIGN ENGINEER — DATE

Washington State Department of Transportation

EFFECTIVE: AUGUST 6, 2012 TO August 4, 2013
EFFECTIVE: AUGUST 6, 2012 TO August 4, 2013
EFFECTIVE: AUGUST 6, 2012 TO August 4, 2013
EFFECTIVE: AUGUST 6, 2012 TO August 4, 2013

EFFECTIVE: AUGUST 6, 2012 TO August 4, 2013
EFFECTIVE: AUGUST 6, 2012 TO August 4, 2013

DRAWN BY: LISA CYFORD

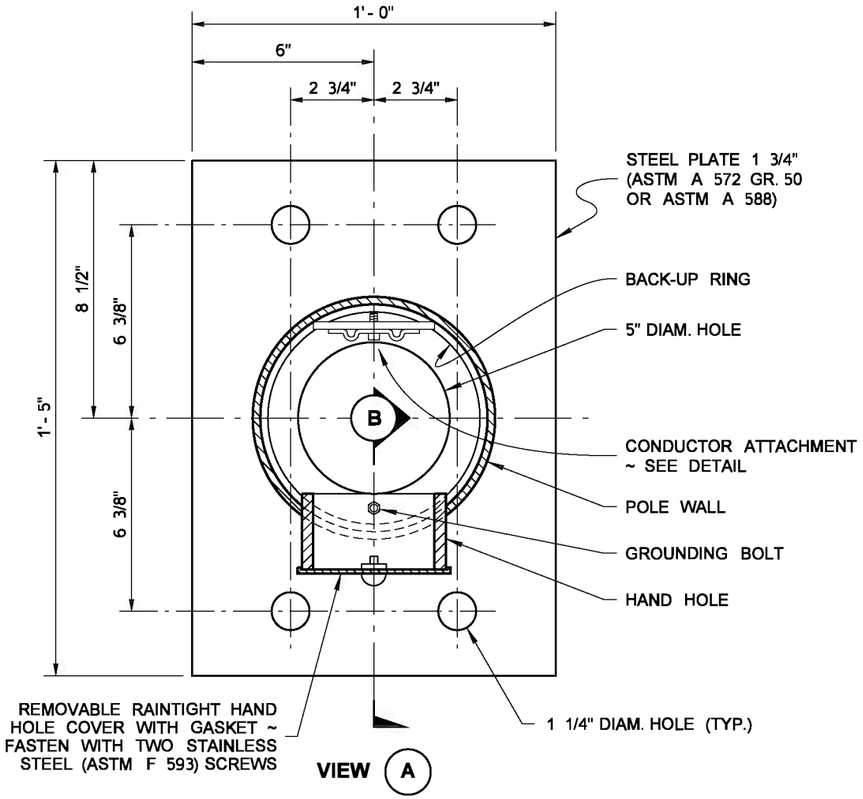

VIEW (A)

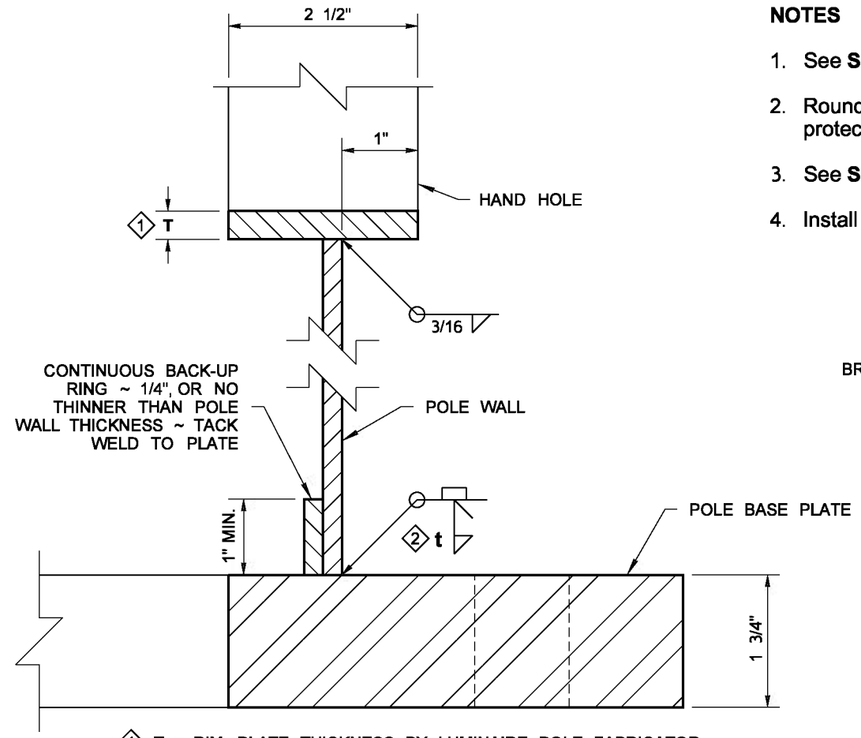

1 T = RIM PLATE THICKNESS BY LUMINAIRE POLE FABRICATOR

2 t = SIZE OF FILLET WELD BY LUMINAIRE POLE FABRICATOR

SECTION (B)

NOTES

1. See **Standard Plans C-8b** and **C-85.14** for foundation and anchor bolt details.
2. Round and smooth all edges around hand hole and along the wire-way to protect the conductors.
3. See **Standard Plan J-28.70** for wiring details.
4. Install grout after plumbing the pole.

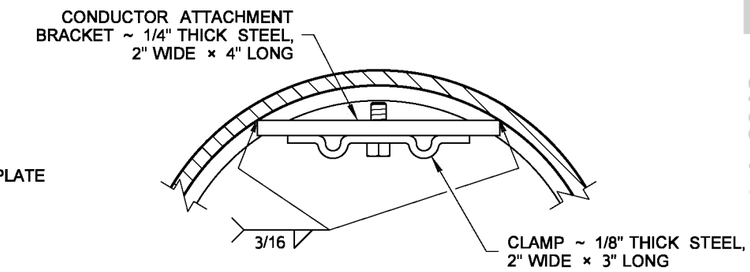

CONDUCTOR ATTACHMENT DETAIL

CONFIGURATIONS VARY AMONG DIFFERENT MANUFACTURERS

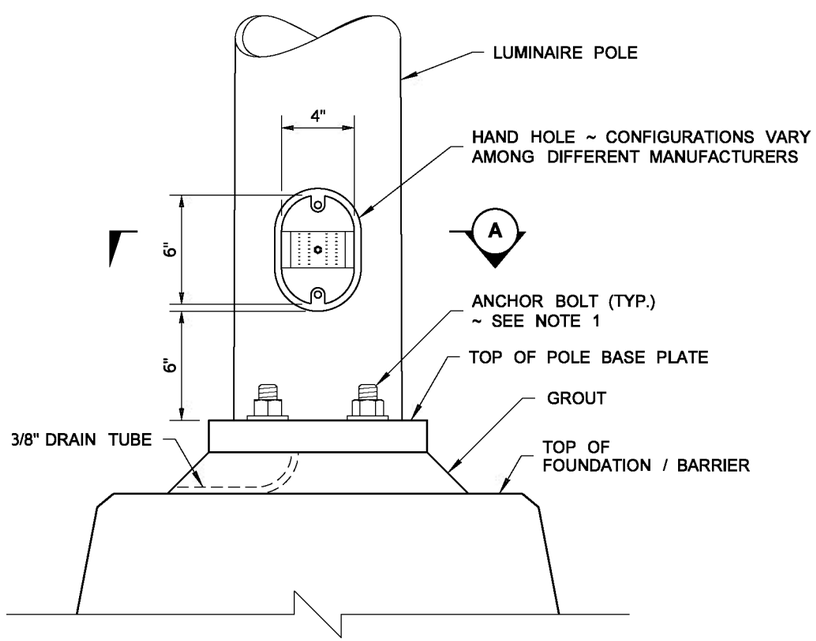

SEE NOTE 4

PLACEMENT DETAIL

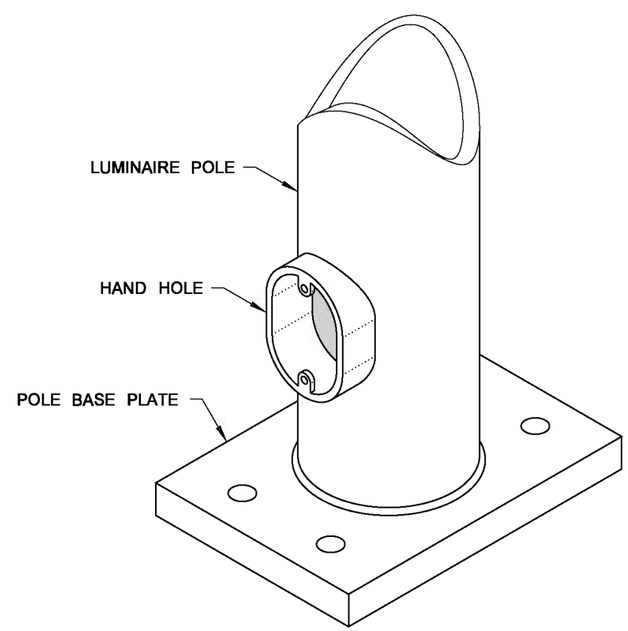

ISOMETRIC VIEW

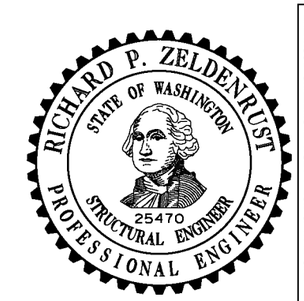

NOTE: THIS PLAN IS NOT A LEGAL ENGINEERING DOCUMENT BUT AN ELECTRONIC DUPLICATE. THE ORIGINAL, SIGNED BY THE ENGINEER AND APPROVED FOR PUBLICATION, IS KEPT ON FILE AT THE WASHINGTON STATE DEPARTMENT OF TRANSPORTATION. A COPY MAY BE OBTAINED UPON REQUEST.

STEEL LIGHT STANDARD BARRIER MOUNTED BASE

STANDARD PLAN J-28.60-01

SHEET 1 OF 1 SHEET

APPROVED FOR PUBLICATION

Pasco Bakotich III — STATE DESIGN ENGINEER

06-02-11 — DATE

Washington State Department of Transportation

EFFECTIVE: AUGUST 6, 2012 TO August 4, 2013
EFFECTIVE: AUGUST 6, 2012 TO August 4, 2013
EFFECTIVE: AUGUST 6, 2012 TO August 4, 2013
EFFECTIVE: AUGUST 6, 2012 TO August 4, 2013

EFFECTIVE: AUGUST 6, 2012 TO August 4, 2013
EFFECTIVE: AUGUST 6, 2012 TO August 4, 2013

DRAWN BY: LISA CYFORD

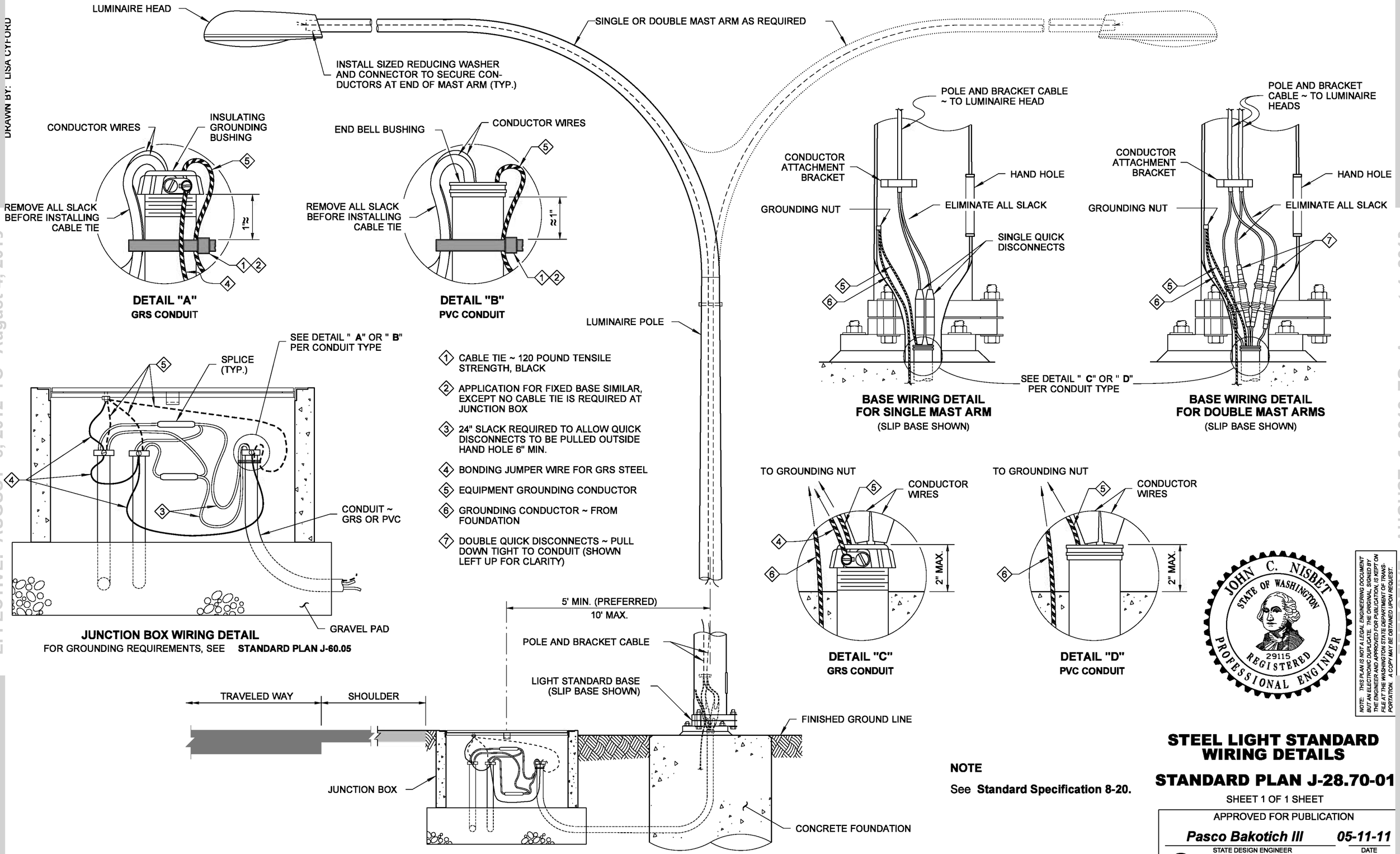

JOHN C. NISBET
STATE OF WASHINGTON
29115
REGISTERED
PROFESSIONAL ENGINEER

NOTE: THIS PLAN IS NOT A LEGAL ENGINEERING DOCUMENT BUT AN ELECTRONIC DUPLICATE. THE ORIGINAL, SIGNED BY THE ENGINEER AND APPROVED FOR PUBLICATION, IS KEPT ON FILE AT THE WASHINGTON STATE DEPARTMENT OF TRANSPORTATION. A COPY MAY BE OBTAINED UPON REQUEST.

NOTE

See **Standard Specification 8-20.**

STEEL LIGHT STANDARD WIRING DETAILS

STANDARD PLAN J-28.70-01

SHEET 1 OF 1 SHEET

APPROVED FOR PUBLICATION

Pasco Bakotich III — STATE DESIGN ENGINEER

05-11-11 — DATE

Washington State Department of Transportation

EFFECTIVE: AUGUST 6, 2012 TO August 4, 2013
EFFECTIVE: AUGUST 6, 2012 TO August 4, 2013
EFFECTIVE: AUGUST 6, 2012 TO August 4, 2013
EFFECTIVE: AUGUST 6, 2012 TO August 4, 2013

EFFECTIVE: AUGUST 6, 2012 TO August 4, 2013

DRAWN BY: LISA CYFORD

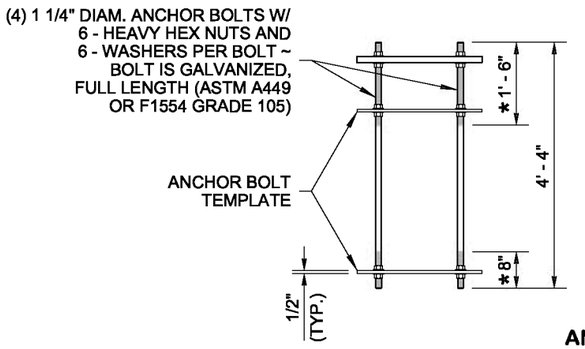

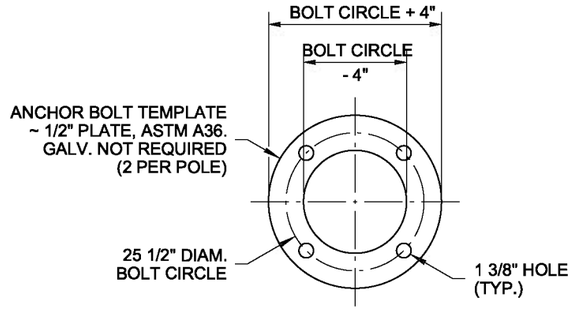

ANCHOR BOLT ASSEMBLY

* THREADED LENGTH

CAMERA POLE HEIGHT	DEPTH OF FOUNDATION "D"		ANCHOR BOLT ASTM A449 OR F1554 GR 105		
FOR LOAD CASES #1 and #2	3H : 1V OR FLATTER	2H : 1V	DIAMETER	LENGTH	BOLT CIRCLE
20' - 30'	4' - 6"	6' - 6"	1 1/4"	4' - 4"	25 1/2"
40'	5' - 6"	7' - 6"	1 1/4"	4' - 4"	25 1/2"
50'	7' - 0"	9' - 0"	1 1/4"	4' - 4"	25 1/2"

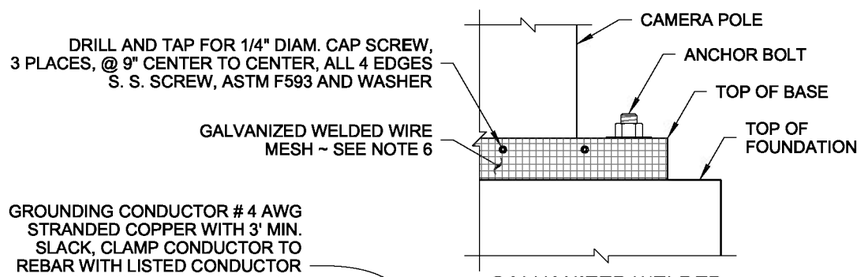

GALVANIZED WELDED WIRE MESH

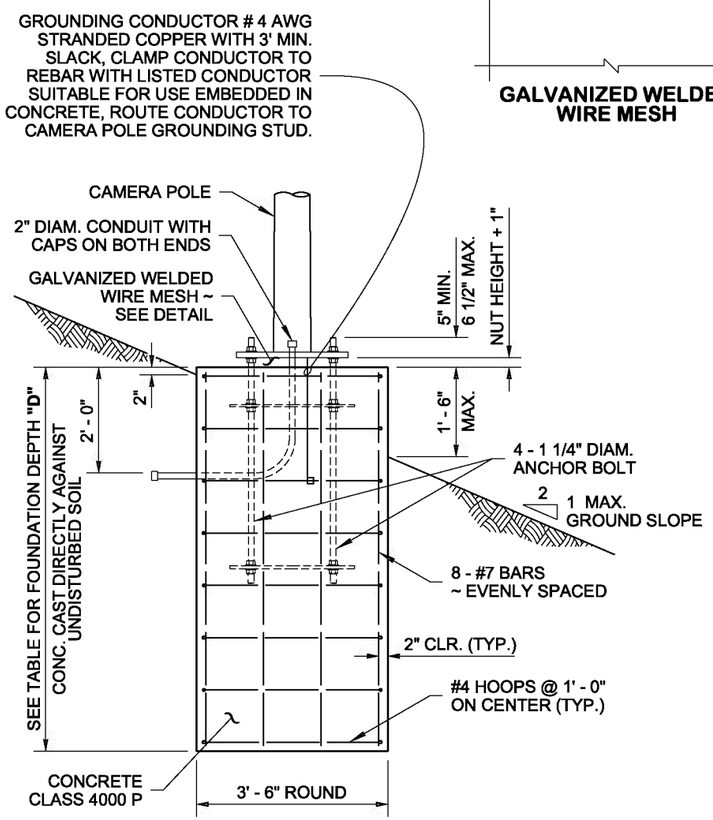

FOUNDATION REINFORCEMENT DETAIL

(CONCRETE CAST DIRECTLY AGAINST UNDISTURBED EARTH)

ALTERNATE # 1

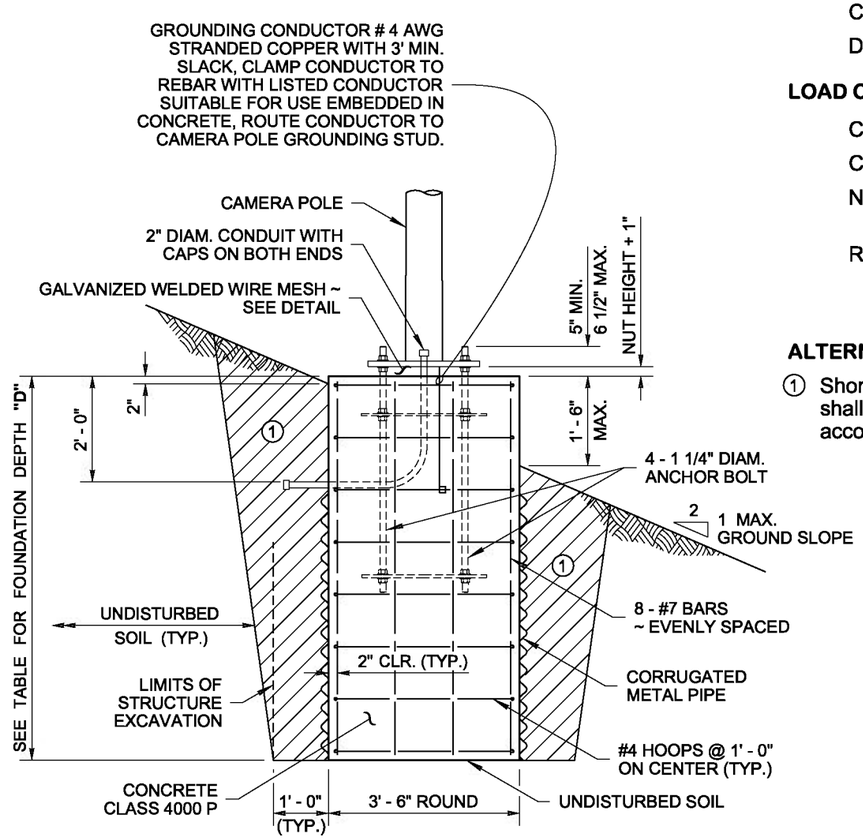

FOUNDATION REINFORCEMENT AND BACKFILL DETAIL

(CONCRETE CAST INSIDE CORRUGATED METAL PIPE STAY-IN-PLACE FORM)

ALTERNATE # 2

NOTES

1. These Foundations are designed for a minimum of 1,500 PSF allowable lateral bearing pressure for the soil. A Special Foundation shall be required for soil with allowable lateral bearing pressure lower than 1,500 PSF.
2. These Foundations are designed for installation on level ground, or on sloping ground, not to exceed 2 : 1 slopes. Slopes steeper than 2 : 1 require a special design.
3. Foundations constructed within ecology embankments shall be increased in depth, by the depth of the ecology embankment.
4. Foundations not within the parameters of this standard require Special Design. Contact the WSDOT Bridge and Structures Office through the Engineer for Special Foundation Designs.
5. The top 2' - 0" of the foundation shall use a smooth form (such as paper or cardboard). After the concrete has cured, this entire form shall be removed.
6. Galvanized Welded Wire Mesh shall be 2 mesh per lineal inch, 0.0625" diam. wire, with 0.4375" overlap. Contractor to form fit and install.

DESIGN CRITERIA:

This structure has been designed according to the Fifth Edition **2009 AASHTO Standard Specifications for Structural Supports for Highway Signs, Luminaires, and Traffic Signals.** Basic wind velocity is 90 MPH. Design Life/Recurrence Interval 50 years and Fatigue Category III.

WIND VELOCITY:

90 MPH
Maximum Pole Deflection shall not exceed 0.7" in 30 MPH and 1.4" in 70 MPH wind.

LOAD CASE # 1

Camera (1) - EPA = 4.00 sq. ft. @ 2' - 0" above pole top, and:

Dish (1) - 1' - 0" diameter @ pole top level.

LOAD CASE # 2

Camera (1) - EPA = 4.00 sq. ft. @ 2' - 0" above pole top, and:

Camera (2) - EPA = 0.54 sq. ft. each @ 1' - 0" and 2' - 0" from pole top, and:

NEMA Cabinet (2) - EPA = 1.33 sq. ft. each @ 3' - 8" from pole top, install both NEMA cabinets back to back, and:

Radio Equipment (2) - EPA = 2.25 sq ft. each @ 2' - 0" and 9' - 0" from pole top.

EPA = Effective Projected Area

ALTERNATE #2 - CONSTRUCTION METHOD

(1) Shoring or Extra Excavation as Required. Excavated area shall be backfilled with Controlled-Density Fill or with soil in accordance with **Standard Specification 8-20.3(2).**

NOTE: THIS PLAN IS NOT A LEGAL ENGINEERING DOCUMENT BUT AN ELECTRONIC DUPLICATE. THE ORIGINAL, SIGNED BY THE ENGINEER AND APPROVED FOR PUBLICATION, IS KEPT ON FILE AT THE WASHINGTON STATE DEPARTMENT OF TRANSPORTATION. A COPY MAY BE OBTAINED UPON REQUEST.

CAMERA POLE FOUNDATION DETAILS

STANDARD PLAN J-29.10-00

SHEET 1 OF 1 SHEET

APPROVED FOR PUBLICATION

Pasco Bakotich III — 06-27-11
STATE DESIGN ENGINEER — DATE

Washington State Department of Transportation

EFFECTIVE: AUGUST 6, 2012 TO August 4, 2013

EFFECTIVE: AUGUST 6, 2012 TO August 4, 2013

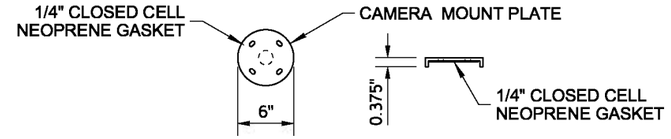

RAIN CAP DETAIL

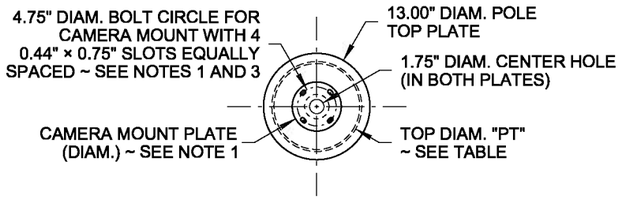

VIEW (A)

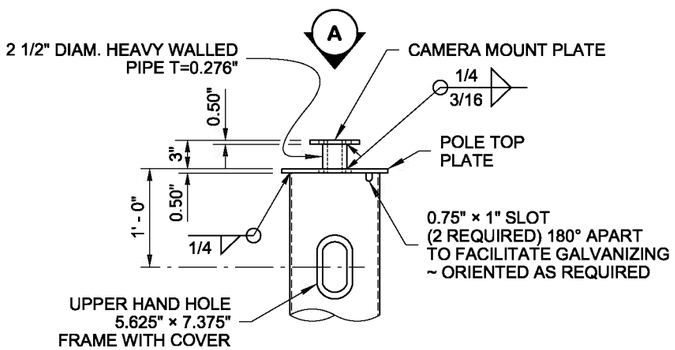

POLE TOP DETAIL

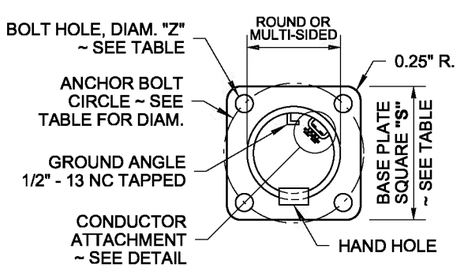

VIEW (B)

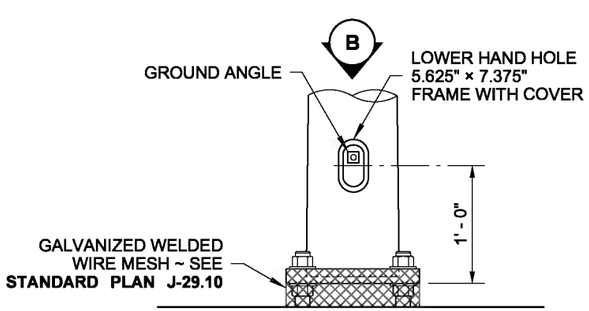

POLE BASE DETAIL

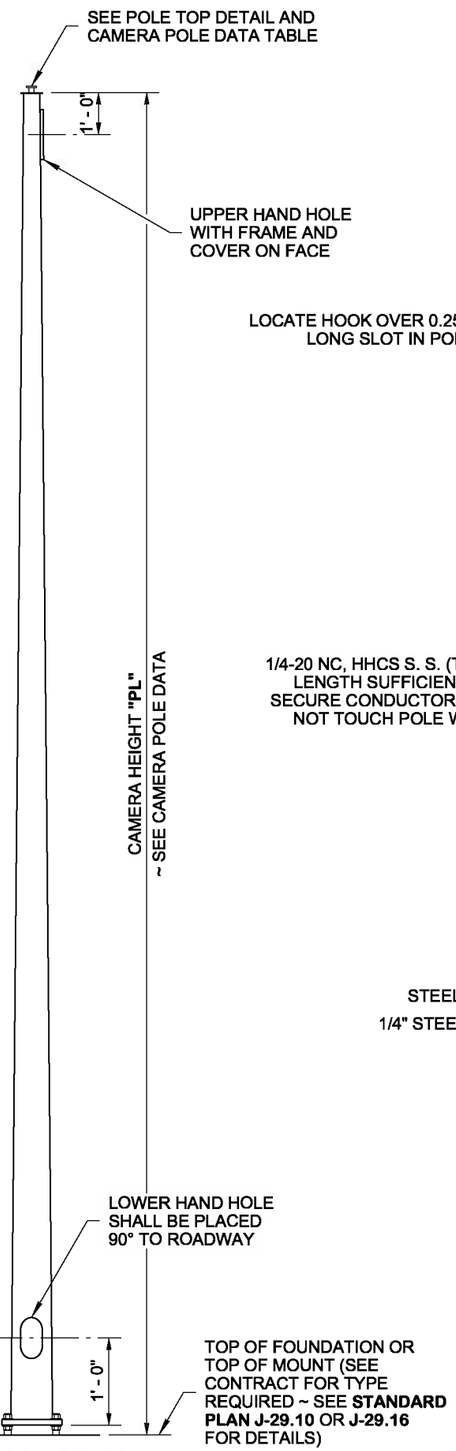

CAMERA POLE

CAMERA POLE FOR LOADING LOAD CASE #1

(TOP MOUNT CAMERA AND 1' - 0" DIAM. DISH)

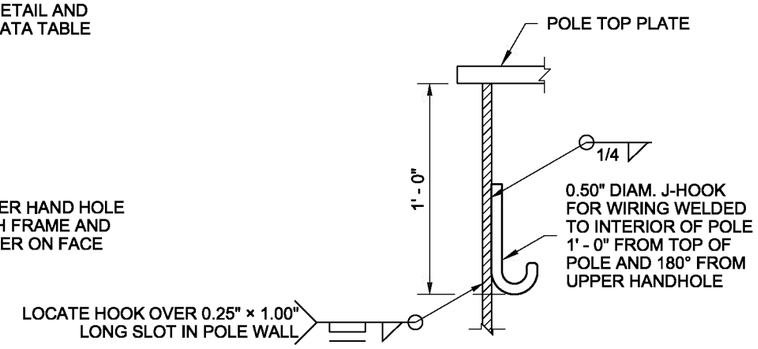

J-HOOK FOR WIRING LOAD CASE #1

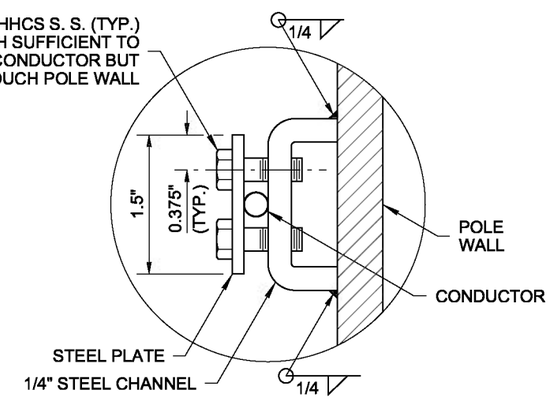

CONDUCTOR ATTACHMENT DETAIL

CONDUCTOR ATTACHMENT DETAILS MAY VARY PER MANUFACTURER

NOTES

1. Verify Pole Top Plate, Camera Mount Plate, Bolt Circle, and Bolt Holes are adequate for the required Camera prior to releasing poles for manufacturing.
2. Steel shall be galvanized after fabrication per AASHTO M111. Hardware shall be galvanized per AASHTO M232. Fasteners less than 0.50" (in.) diameter shall be stainless or brass.
3. Attach Camera to Camera Mount Plate using four (4) 3/8"-16 UNC × 1.75" stainless steel bolts with eight (8) stainless steel washers and four (4) lock-nuts with nylon inserts, or as approved by the Camera Supplier.
4. For Ground Mount Details, see **Standard Plan J-29.10.** For Elbow Mount Details, see **Standard Plan J-29.16.**

DESIGN CRITERIA:

This structure has been designed according to the Fifth Edition **2009 AASHTO Standard Specifications for Structural Supports for Highway Signs, Luminaires, and Traffic Signals**. Basic wind velocity is 90 MPH. Design Life/Recurrence Interval 50 years.

WIND VELOCITY:

90 MPH

Maximum Pole Deflection shall not exceed 0.7" in 30 MPH and 1.4" in 70 MPH wind.

LOAD CASE #1:

Camera (1) - EPA = 4.00 sq. ft. @ 2' - 0" above pole top, and:

Dish (1) - 1' - 0" diameter @ pole top level.

LOAD CASE #2:

Camera (1) - EPA = 4.00 sq. ft. @ 2' - 0" above pole top, and:

Camera (2) - EPA = 0.54 sq. ft. @ 1' - 0" and 2' - 0" from pole top, and:

NEMA Cabinet (2) - EPA = 1.33 sq. ft. @ 3' - 8" from pole top, install back-to-back NEMA Cabinets, and:

Radio Equipment (2) - EPA = 2.25 sq. ft. each @ 2' - 0" and 9' - 0" from pole top.

EPA = Effective Projected Area

CAMERA POLE DATA

CAMERA HEIGHT "PL" (FT.)	POLE MOUNT TYPE	TOP DIAM. "PT" (IN.) (MIN.)	POLE TUBE			ANCHOR BOLT DIAM. (IN.)	CONNECTION BOLT DIAM. (IN.)
			SQUARE "S" (IN.)	BOLT CIRCLE (IN.)	HOLE "Z" (IN.)		
15	ELBOW	8.50	25.00	25.50	1.50	–	1.25
20	ELBOW	8.50	25.00	25.50	1.50	–	1.25
30	ELBOW	9.00	25.00	25.50	1.50	–	1.25
20 - 30	GROUND	9.00	25.00	25.50	1.50	1.25	–
40	ELBOW	9.00	25.00	25.50	1.50	–	1.25
40	GROUND	9.00	25.00	25.50	1.50	1.25	–
50	ELBOW	10.00	25.00	25.50	1.50	–	1.25
50	GROUND	10.00	25.00	25.50	1.50	1.25	–

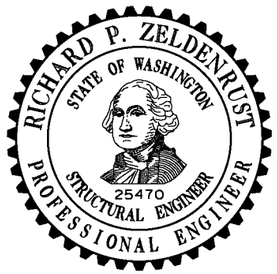

NOTE: THIS PLAN IS NOT A LEGAL ENGINEERING DOCUMENT BUT AN ELECTRONIC DUPLICATE. THE ORIGINAL, SIGNED BY THE ENGINEER AND APPROVED FOR PUBLICATION, IS KEPT ON FILE AT THE WASHINGTON STATE DEPARTMENT OF TRANSPORTATION. A COPY MAY BE OBTAINED UPON REQUEST.

CAMERA POLE STANDARD

STANDARD PLAN J-29.15-00

SHEET 1 OF 2 SHEETS

APPROVED FOR PUBLICATION

Pasco Bakotich III — 06-27-11

STATE DESIGN ENGINEER — DATE

Washington State Department of Transportation

DRAWN BY: LISA CYFORD

EFFECTIVE: AUGUST 6, 2012 TO August 4, 2013

EFFECTIVE: AUGUST 6, 2012 TO August 4, 2013

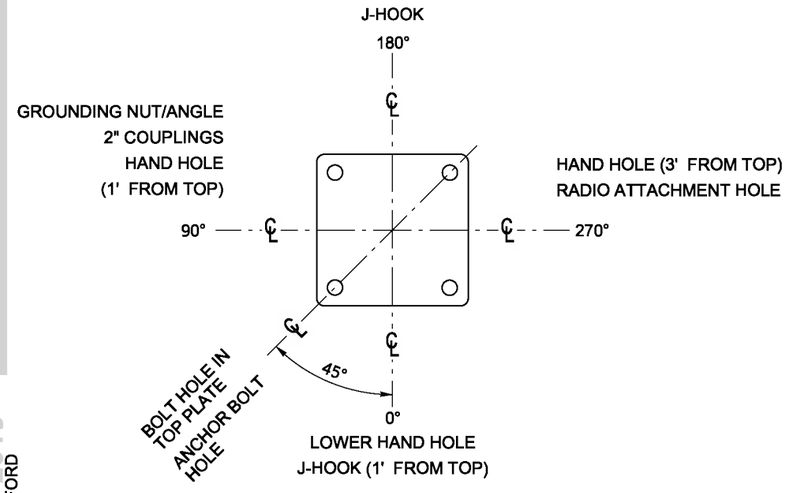

RADIAL INDEX LOAD CASE #2

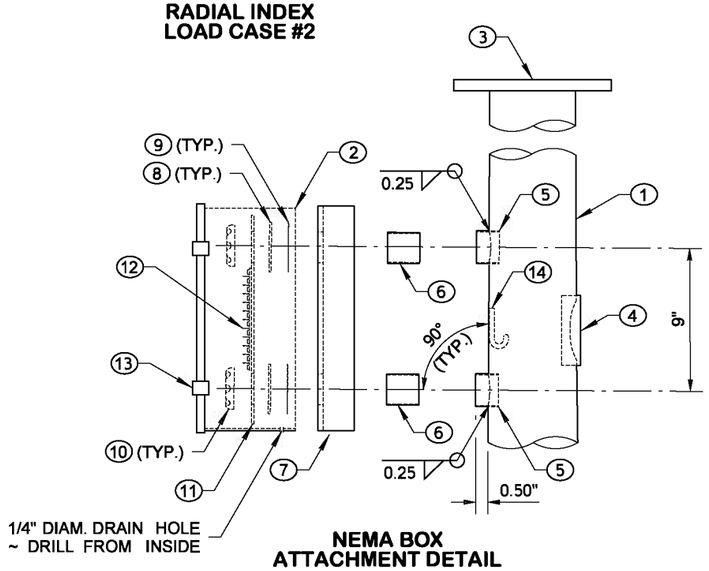

NEMA BOX ATTACHMENT DETAIL

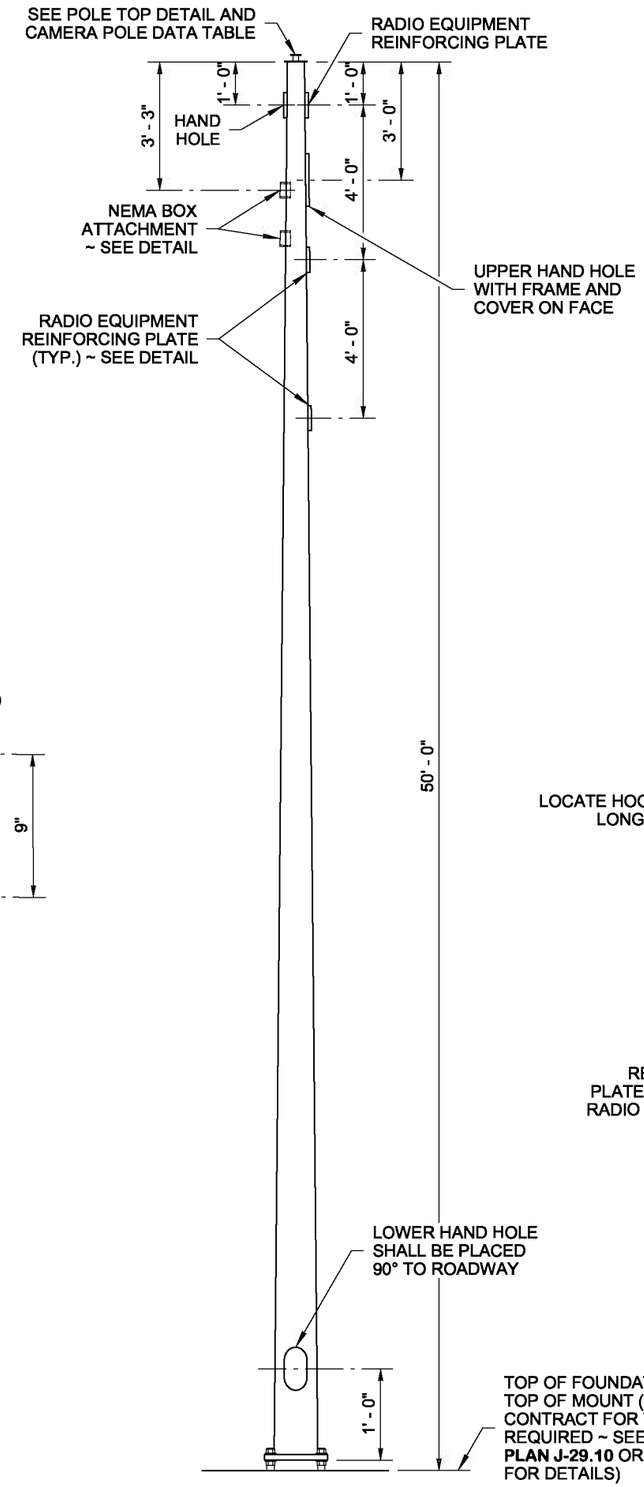

CAMERA POLE FOR LOADING LOAD CASE #2

(TOP MOUNT CAMERA, 2 SIDEMOUNT CAMERAS, 2 NEMA CABINETS & 2 RADIO EQUIPMENTS)

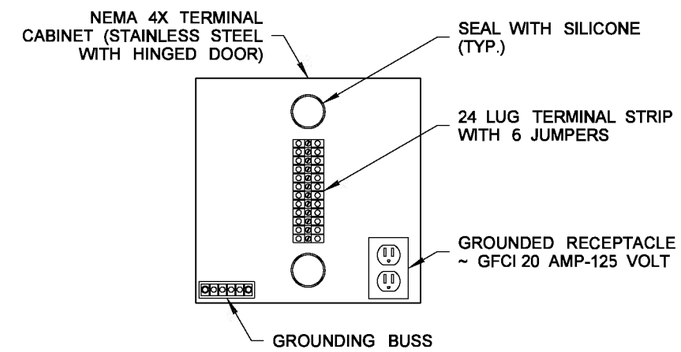

NEMA BOX DETAIL

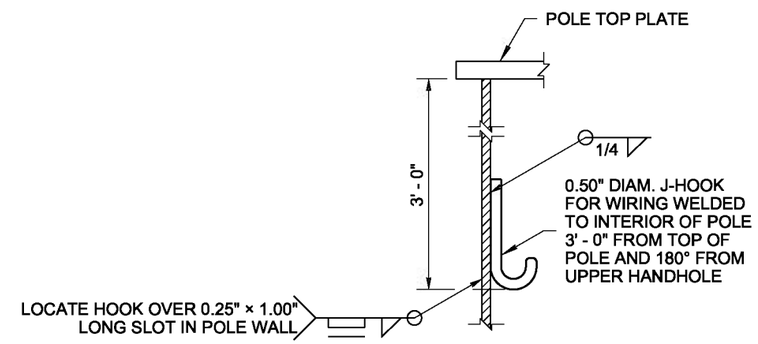

J-HOOK FOR WIRING LOAD CASE #2

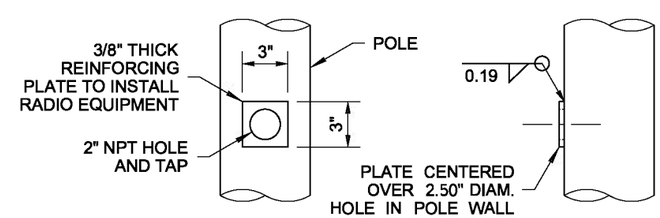

RADIO EQUIPMENT REINFORCING PLATE

KEY

1. CAMERA/TDA POLE MOUNTS
2. NEMA 4X (STAINLESS STEEL) ~ SIZE 16" H × 12" W × 6" D
3. CAMERA MOUNT PLATE
4. CAMERA UPPER HANDHOLE
5. 2" COUPLING
6. 2" SHORT NIPPLE
7. CHANNEL DRILLED 1/8" OVERSIZE OF NIPPLE
8. STEEL WASHER
9. CONDUIT WATERTIGHT LOCKNUT
10. END BUSHING
11. BACK PLATE ~ DRILL OVER SIZE FOR CONDUIT, SEAL WASHER, AND LOCKNUT
12. TERMINAL BLOCK
13. HINGED DOOR WITH TWO PAD-LOCKABLE FLIP LATCHES (TYP.)
14. J-HOOK FOR WIRING

DRAWN BY: LISA CYFORD

RICHARD P. ZELDENRUST
STATE OF WASHINGTON
25470
STRUCTURAL ENGINEER
PROFESSIONAL ENGINEER

NOTE: THIS PLAN IS NOT A LEGAL ENGINEERING DOCUMENT BUT AN ELECTRONIC DUPLICATE. THE ORIGINAL, SIGNED BY THE ENGINEER AND APPROVED FOR PUBLICATION, IS KEPT ON FILE AT THE WASHINGTON STATE DEPARTMENT OF TRANSPORTATION. A COPY MAY BE OBTAINED UPON REQUEST.

CAMERA POLE STANDARD

STANDARD PLAN J-29.15-00

SHEET 2 OF 2 SHEETS

APPROVED FOR PUBLICATION

Pasco Bakotich III — STATE DESIGN ENGINEER
06-27-11 — DATE

Washington State Department of Transportation

EFFECTIVE: AUGUST 6, 2012 TO August 4, 2013

EFFECTIVE: AUGUST 6, 2012 TO August 4, 2013
EFFECTIVE: AUGUST 6, 2012 TO August 4, 2013

DRAWN BY: LISA CYFORD

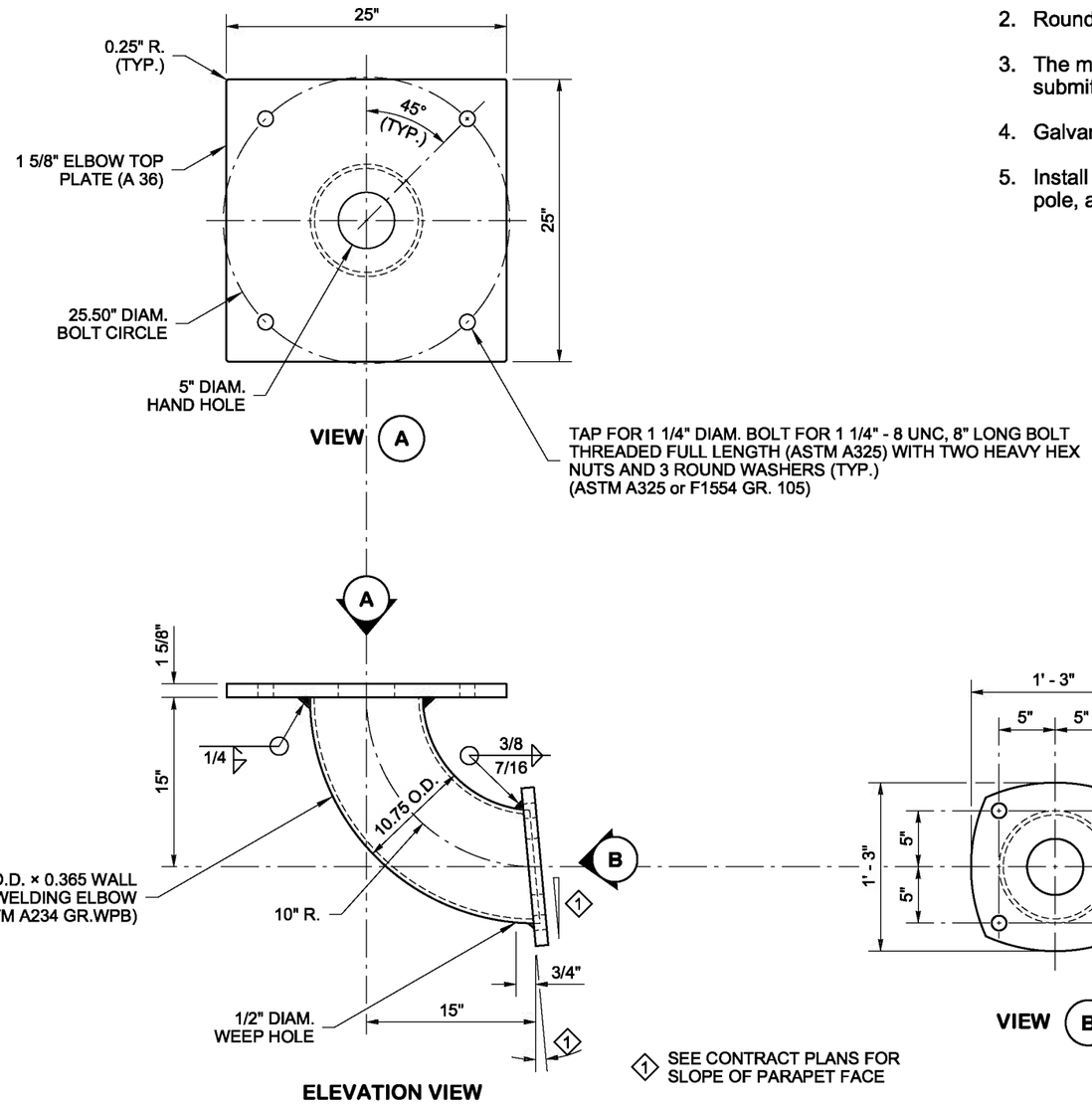

NOTES

1. For information not shown, see Steel Light Standard Elbow detail, **Standard Plan J-28.45.** For Camera Pole Details, see **Standard Plan J-29.15.**
2. Round and smooth all edges along wire-way to protect conductors; see **Standard Plan J-28.70.**
3. The manufacturer shall verify that the Elbow Top Plate matches the Camera Pole Base, and shall submit the shop drawings for approval.
4. Galvanize after fabrication according to AASHTO M111.
5. Install galvanized steel protective band (3/16" thick × 3 1/2" high (A36)) on all four sides after truing pole, as shown in **Standard Plan J-28.45,** except fasten 6" from corners on 25" square base.

CAMERA POLE ELBOW MOUNT ~ 25" SQUARE

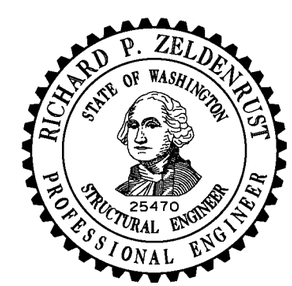

NOTE: THIS PLAN IS NOT A LEGAL ENGINEERING DOCUMENT BUT AN ELECTRONIC DUPLICATE. THE ORIGINAL, SIGNED BY THE ENGINEER AND APPROVED FOR PUBLICATION, IS KEPT ON FILE AT THE WASHINGTON STATE DEPARTMENT OF TRANSPORTATION. A COPY MAY BE OBTAINED UPON REQUEST.

CAMERA POLE STANDARD DETAILS

STANDARD PLAN J-29.16-00

SHEET 1 OF 1 SHEET

APPROVED FOR PUBLICATION

Pasco Bakotich III — 06-27-11

STATE DESIGN ENGINEER — DATE

Washington State Department of Transportation

EFFECTIVE: AUGUST 6, 2012 TO August 4, 2013
EFFECTIVE: AUGUST 6, 2012 TO August 4, 2013
EFFECTIVE: AUGUST 6, 2012 TO August 4, 2013
EFFECTIVE: AUGUST 6, 2012 TO August 4, 2013

EFFECTIVE: AUGUST 6, 2012 TO August 4, 2013
EFFECTIVE: AUGUST 6, 2012 TO August 4, 2013

DRAWN BY: LISA CYFORD

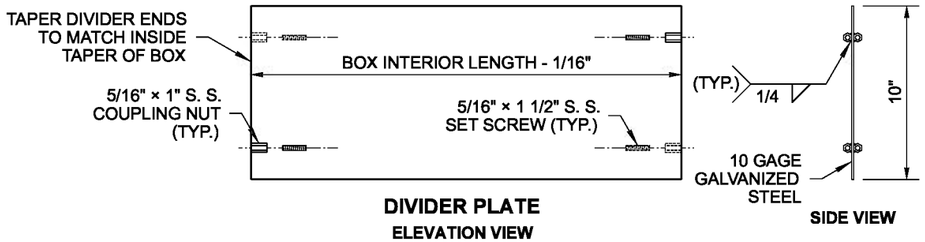

DIVIDER PLATE
ELEVATION VIEW
(FOR TYPE 2 JUNCTION BOX ONLY)

JUNCTION BOX DIMENSION TABLE

MARK	ITEM	BOX TYPE	
		TYPE 1	TYPE 2
A	OUTSIDE LENGTH OF JUNCTION BOX	22"	33"
B	OUTSIDE WIDTH OF JUNCTION BOX	17"	22 1/2"
C	INSIDE LENGTH OF JUNCTION BOX	18" ~ 19"	28" ~ 29"
D	INSIDE WIDTH OF JUNCTION BOX	13" ~ 14"	17" ~ 18"
E	LID LENGTH	17 5/8"	28 5/8"
F	LID WIDTH	12 5/8"	18 1/8"
	CAPACITY ~ CONDUIT DIAMETER	6"	12"

NOTES

1. All box dimensions are approximate. Exact configurations vary among manufacturers.
2. Minimum lid thickness shown. The diamond pattern shall be a minimum of 28% of the overall thickness. Junction Boxes installed in sidewalks, walkways, and shared-use paths shall have a slip-resistant coating on the lid and lip cover plate, and shall be installed with the surface flush with and matched to the grade of the sidewalk, walkway, or shared-use path. The non-slip lid shall be identified with permanent markings on the underside, indicating the type of surface treatment (see Contract Documents for details) and the year of manufacture. The permanent marking shall be 1/8" inch line thickness formed with a stainless steel weld bead and shall be placed prior to hot-dip galvanizing.
3. Lid support members shall be 3/16" minimum thick steel C, L, or T shape, welded to the frame.
4. A 1/4-20 NC × 3/4" S. S. ground stud shall be welded to the bottom of the lid; include (2) S. S. nuts and (2) S. S. flat washers.
5. Bolts and nuts shall be liberally coated with anti-seize compound.
6. Equipment Bonding Jumper shall be #8 AWG min. × 4' of tinned braided copper.
7. The System Identification letters shall be 1/8" line thickness formed by engraving, stamping, or with a S. S. weld bead. See Cover Marking detail. Grind off diamond pattern before forming letters. For System Identification details, see **Standard Specification 9-29.2(4).**
8. When required in the Contract, provide a 10" x 27 1/2", 10 gage divider plate, complete, with fasteners, in each Type 2 Junction Box where specified.
9. When required in Contract, provide a 12" deep extension for each Type 2 Junction Box where specified.
10. See the Standard Specifications for alternative reinforcement and class of concrete.
11. Headed Anchor Shear Studs must be welded to the Steel Cover Lip Plate and wire tied in two places to the vertical Welded Reinforcement Wire when in contact with each other. Wire tie all other Headed Anchor Shear Studs to the horizontal Welded Reinforcement Wire.
12. Lid Bolt Down Attachment Tab provides a method of retrofitting by using a mechanical process in lieu of welding. Attachment Tab shown depicts a typical component arrangement; actual configurations of assembly will vary among manufacturers. See approved manufacturers' shop drawings for specifics.
13. Unless otherwise noted in the plans or approved by the Engineer, Junction Boxes, Cable Vaults, and Pull Boxes shall not be placed within the traveled way or paved shoulders. All Junction Boxes, Cable Vaults, and Pull Boxes placed within the traveled way or paved shoulders shall be Heavy-Duty.
14. Distance between the top of the conduit and the bottom of the Junction Box lid shall be 6" min. to 8" max. for final grade of new construction only. See **Standard Specification 8-20.3(5).** Where adjustments are to be made to existing Junction Boxes, or for interim construction stages during the contract, the limits shall be from 6" min. to 10" max. See **Standard Specification 8-20.3(6).**

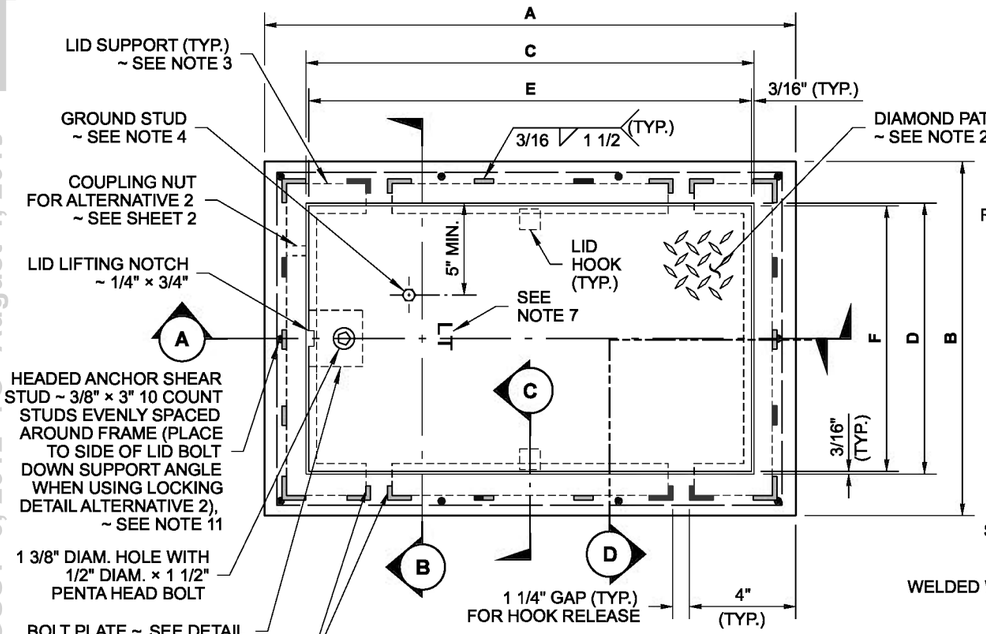

LOCKING LID STANDARD DUTY JUNCTION BOX
(CONDUITS NOT SHOWN)

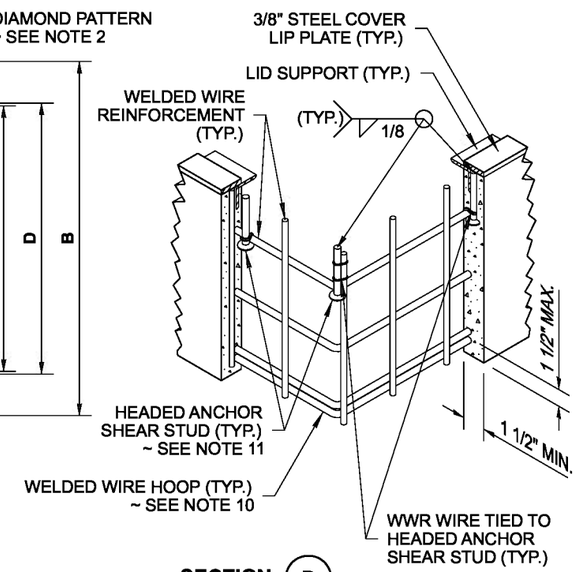

SECTION D
PERSPECTIVE VIEW

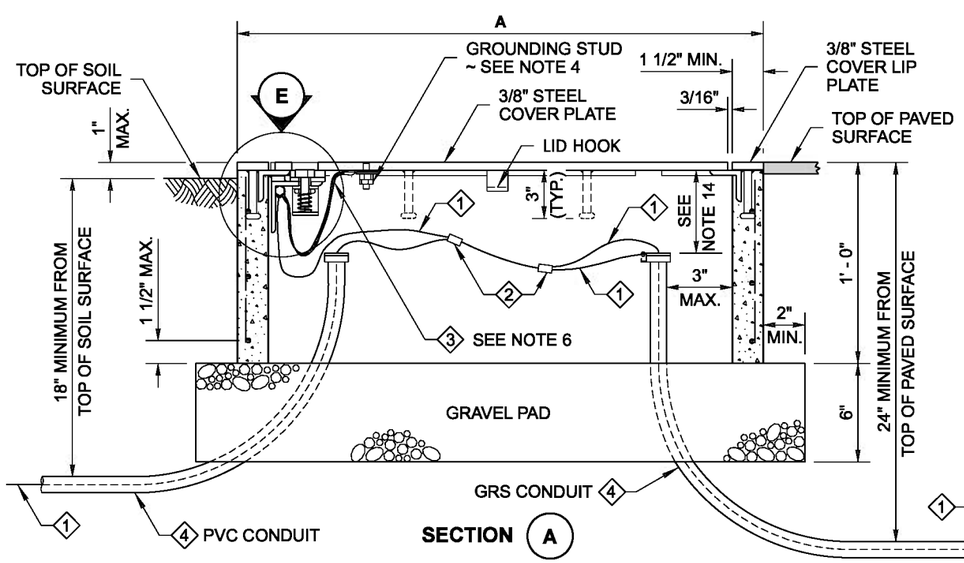

SECTION A

1. Equipment Grounding Conductor
2. Copper Solderless Crimp Connector
3. Equipment Bonding Jumper ~ see note 6
4. See Contract for conduit size and number

COVER MARKING DETAIL

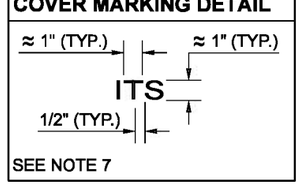

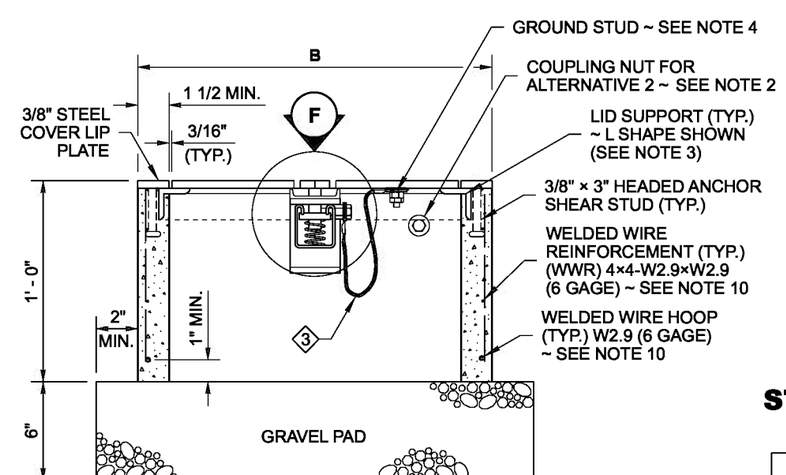

SECTION B
(CONDUITS NOT SHOWN)

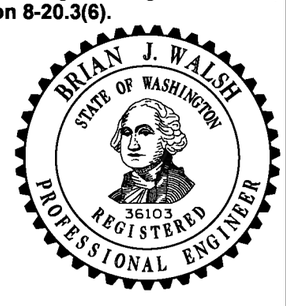

NOTE: THIS PLAN IS NOT A LEGAL ENGINEERING DOCUMENT BUT AN ELECTRONIC DUPLICATE. THE ORIGINAL, SIGNED BY THE ENGINEER AND APPROVED FOR PUBLICATION, IS KEPT ON FILE AT THE WASHINGTON STATE DEPARTMENT OF TRANSPORTATION. A COPY MAY BE OBTAINED UPON REQUEST.

LOCKING LID STANDARD DUTY JUNCTION BOX TYPES 1 & 2
STANDARD PLAN J-40.10-02

SHEET 1 OF 2 SHEETS

APPROVED FOR PUBLICATION

Pasco Bakotich III — STATE DESIGN ENGINEER
05-11-11 — DATE

Washington State Department of Transportation

EFFECTIVE: AUGUST 6, 2012 TO August 4, 2013
EFFECTIVE: AUGUST 6, 2012 TO August 4, 2013
EFFECTIVE: AUGUST 6, 2012 TO August 4, 2013
EFFECTIVE: AUGUST 6, 2012 TO August 4, 2013

EFFECTIVE: AUGUST 6, 2012 TO August 4, 2013

DRAWN BY: LISA CYFORD

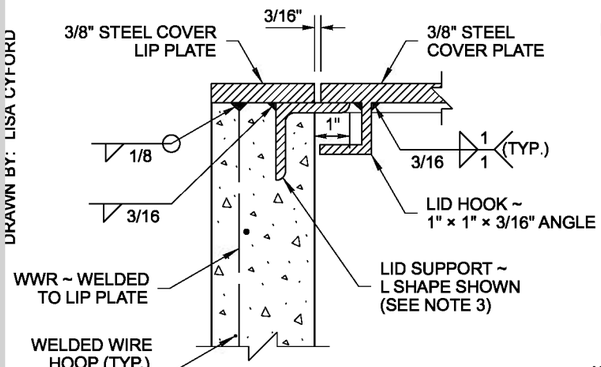

SECTION (C)

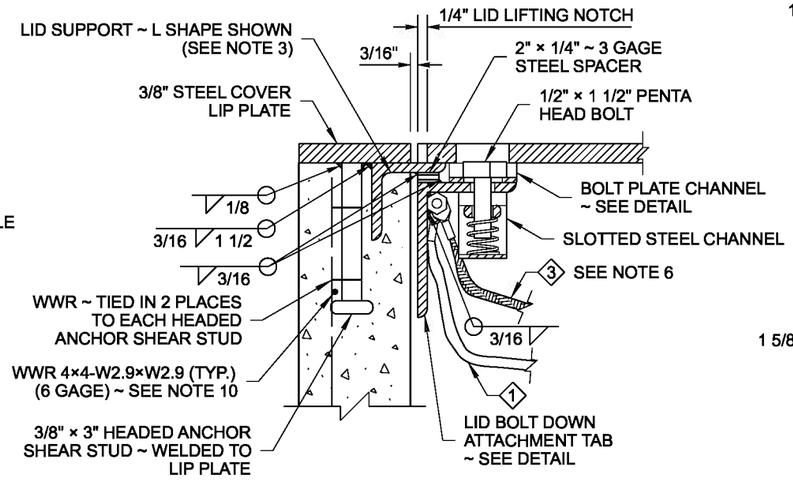

DETAIL (E)

ALTERNATIVE 1 SHOWN

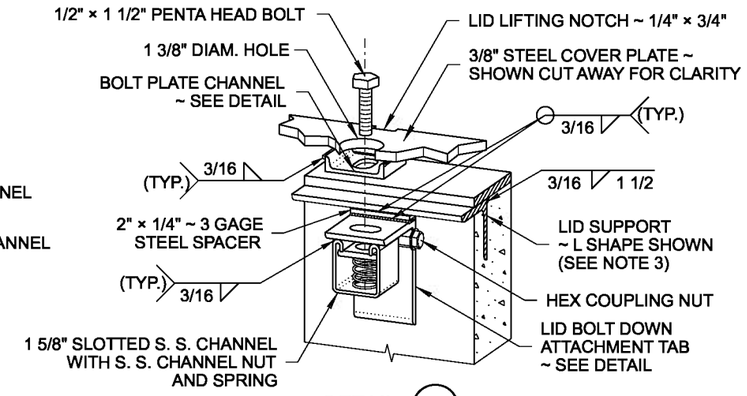

DETAIL (F)

ALTERNATIVE 1 SHOWN
PERSPECTIVE VIEW

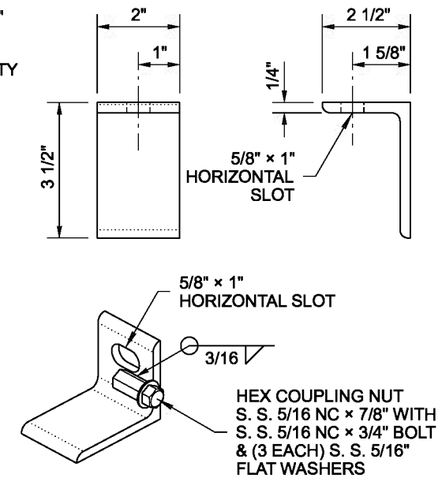

ALTERNATIVE 1
LID BOLT DOWN ATTACHMENT TAB
(SEE NOTE 12)

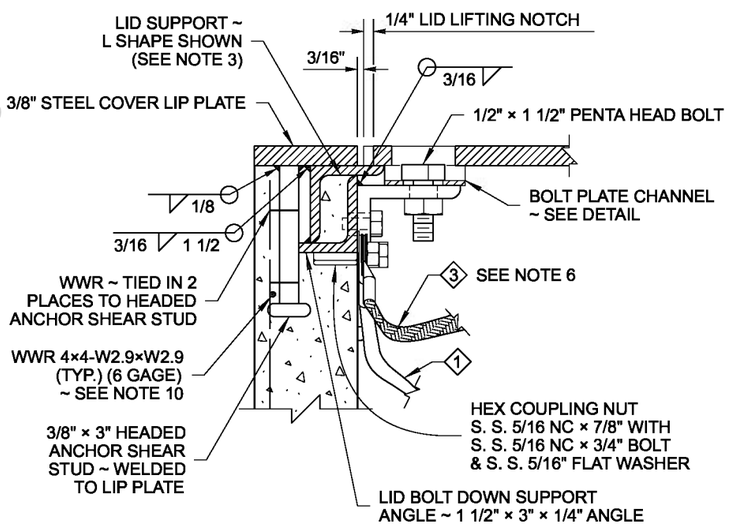

DETAIL (E)

ALTERNATIVE 2 SHOWN

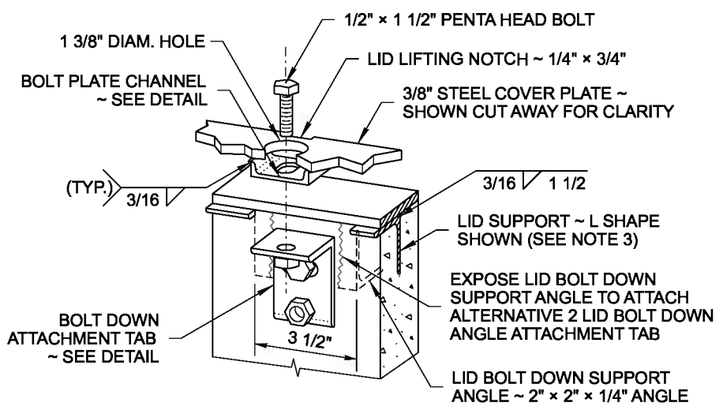

DETAIL (F)

ALTERNATIVE 2 SHOWN
PERSPECTIVE VIEW

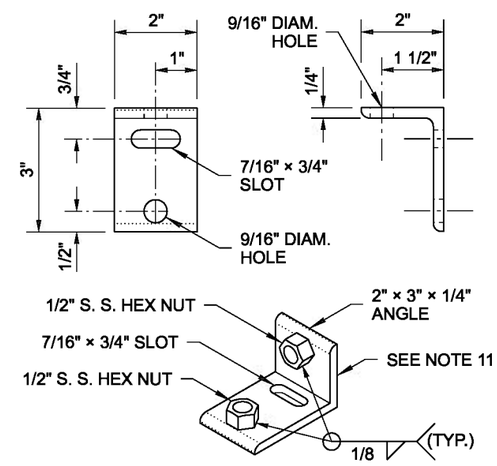

ALTERNATIVE 2
LID BOLT DOWN ATTACHMENT TAB
(SEE NOTE 12)

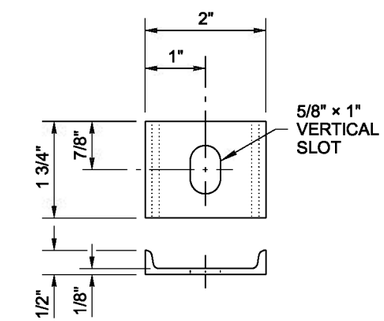

BOLT PLATE CHANNEL

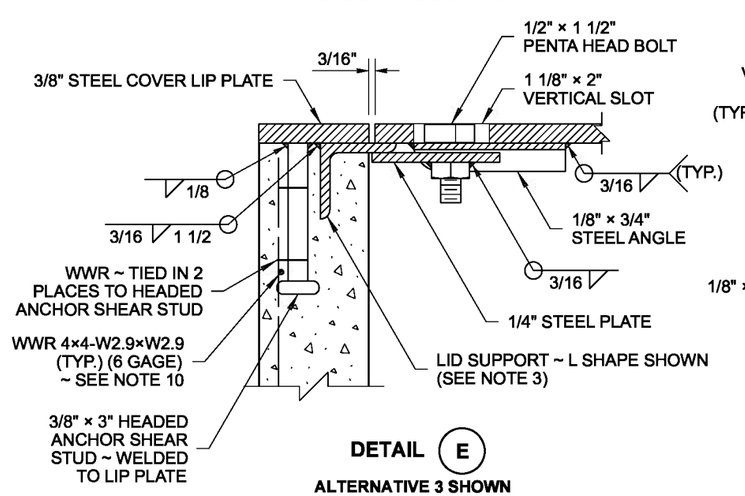

DETAIL (E)

ALTERNATIVE 3 SHOWN

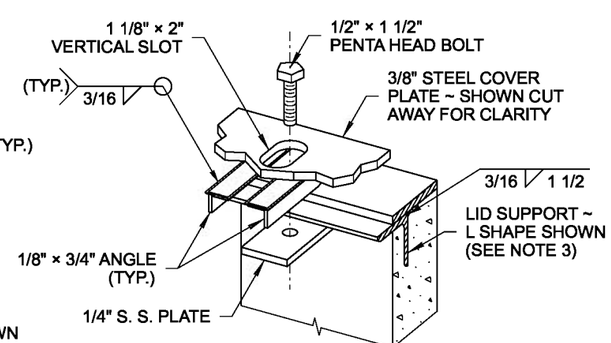

DETAIL (F)

ALTERNATIVE 3 SHOWN
PERSPECTIVE VIEW

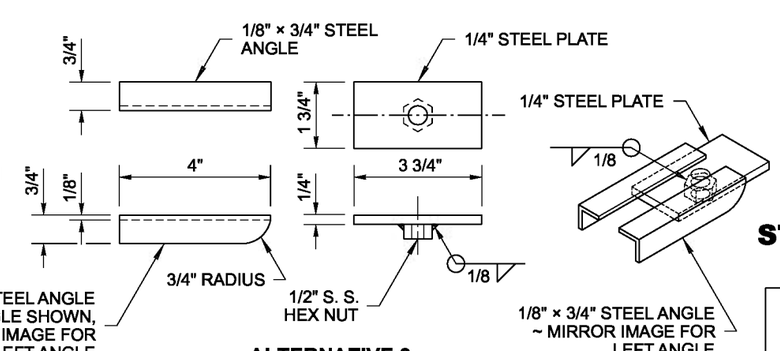

ALTERNATIVE 3
LID BOLT DOWN ATTACHMENT TAB
(SEE NOTE 12)

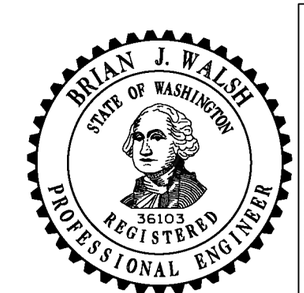

NOTE: THIS PLAN IS NOT A LEGAL ENGINEERING DOCUMENT BUT AN ELECTRONIC DUPLICATE. THE ORIGINAL, SIGNED BY THE ENGINEER AND APPROVED FOR PUBLICATION, IS KEPT ON FILE AT THE WASHINGTON STATE DEPARTMENT OF TRANSPORTATION. A COPY MAY BE OBTAINED UPON REQUEST.

LOCKING LID STANDARD DUTY JUNCTION BOX TYPES 1 & 2

STANDARD PLAN J-40.10-02

SHEET 2 OF 2 SHEETS

APPROVED FOR PUBLICATION

Pasco Bakotich III — STATE DESIGN ENGINEER

05-11-11 — DATE

Washington State Department of Transportation

EFFECTIVE: AUGUST 6, 2012 TO August 4, 2013

EFFECTIVE: AUGUST 6, 2012 TO August 4, 2013
EFFECTIVE: AUGUST 6, 2012 TO August 4, 2013

DRAWN BY: LISA CYFORD

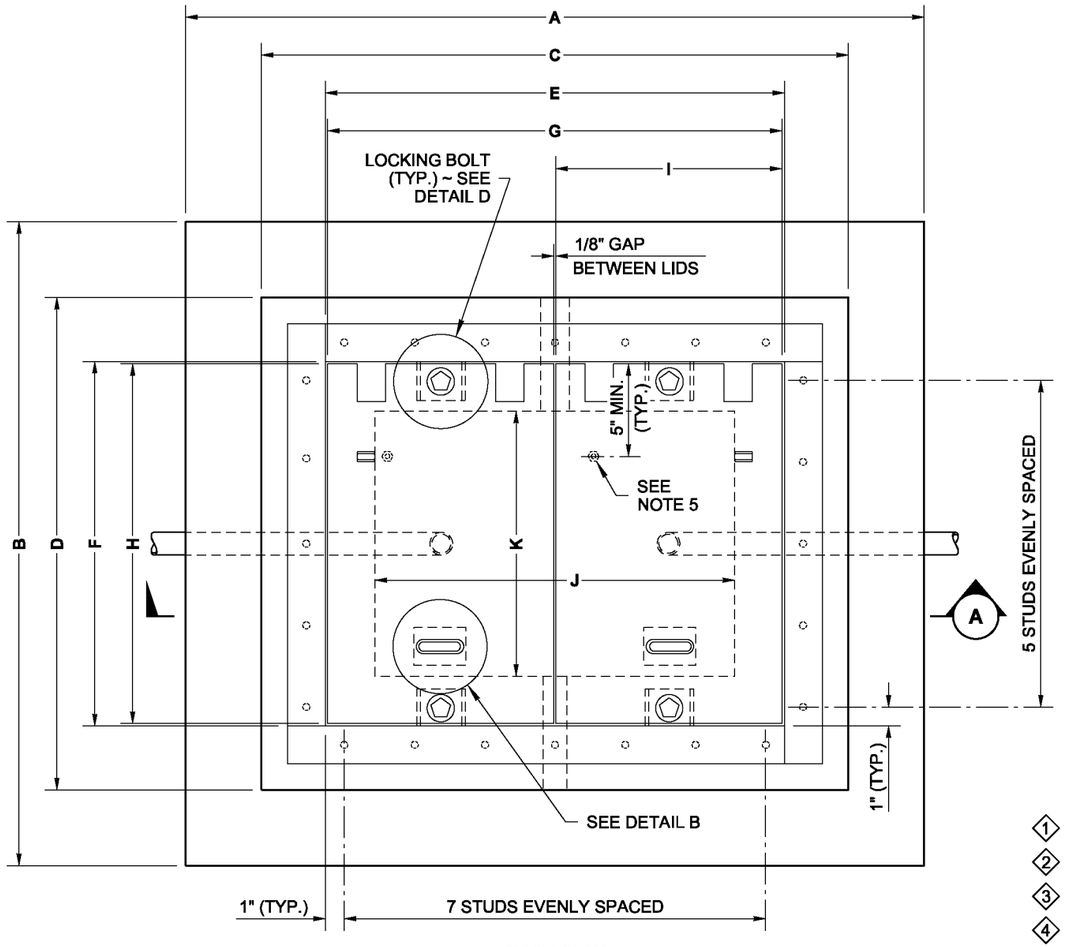

TOP VIEW

JUNCTION BOX DIMENSION TABLE				
MARK	ITEM	BOX TYPE		
		TYPE 4	TYPE 5	TYPE 6
A	OVERALL LENGTH	39"	48 7/16"	56"
B	OVERALL WIDTH	34"	37 7/16"	44"
C	JUNCTION BOX LENGTH	31"	40 7/16"	48"
D	JUNCTION BOX WIDTH	26"	29 7/16"	36"
E	LID OPENING LENGTH	24"	33 1/4"	41 1/8"
F	LID OPENING WIDTH	19"	22 1/4"	29 1/4"
G	TYPE 4 LID LENGTH	24"	——	——
H	TYPE 4, 5 & 6 LID WIDTH	19"	22"	29"
I	TYPE 5 & 6 LID LENGTH	——	16 7/16"	20 3/8"
J	INSIDE BOX LENGTH	19"	28 7/16"	36"
K	INSIDE BOX WIDTH	14"	17 7/16"	24"
X	STIFFENER SPACING	VARIES	VARIES	VARIES
Y	STIFFENER SPACING	VARIES	VARIES	VARIES
Z	STIFFENER LENGTH	18 1/4"	20 1/4"	28 1/8"
CAPACITY ~ CONDUIT DIAM.		6"	12"	24"

1. Equipment Grounding Conductor
2. Copper Solderless Crimp Connector
3. Equipment Bonding Jumper ~ see note 8
4. See Contract Plans and Special Provisions for conduit size and number

NOTES

1. All box dimensions are approximate. Exact configurations vary among manufacturers.
2. All lid thicknesses are minimum. The diamond pattern shall be 3/32" minimum thickness.
3. Lid stiffener plates shall bear on frame. Mill to bearing seat and perimeter bar for full even contact after fabrication of frame and lid. Lid and frame units with uneven bearing will be rejected.
4. The installed lid and frame shall fit with full even contact around the perimeter of a junction box after installation. Care shall be taken to prevent debris accumulation on the contact surfaces.
5. A 1/4-20 NC × 3/4" S. S. ground stud shall be welded to the bottom of each lid: include (2) each S. S. nuts and (2) each S. S. flat washers.
6. The hinges shall allow the lids to open 180°.
7. Bolts and nuts shall be liberally coated with anti-seize compound.
8. Connect Equipment Bonding Jumper to ground stud on lid. As an alternative to ground stud connection, the Equipment Bonding Jumper shall be attached to the front face of the hinge pocket with a 5/16-20 NC × 3/4" S. S. bolt, (2) each S. S. nuts, and (2) each S. S. flat washers. Equipment bonding jumper shall be #8 AWG min. × 4' of tinned braided copper.
9. The System Identification letters shall be 1/8" line thickness formed by engraving, stamping, or with a S. S. weld bead. See Cover Marking details. Grind off diamond pattern before forming letters. See **Standard Specification 9-29.2(4)** for details.
10. See **Standard Specification 9-29.2(1)B** for class of concrete.
11. Unless otherwise noted in the plans or approved by the Engineer, Junction Boxes, Cable Vaults, and Pull Boxes shall not be placed within the traveled way or paved shoulders. All Junction Boxes, Cable Vaults, and Pull Boxes placed within the traveled way or paved shoulders shall be Heavy-Duty. Heavy-Duty Junction Boxes shall not be installed in sidewalks, walkways, and shared use paths.
12. Distance between the top of the conduit and the bottom of the Junction Box lid shall be 6" min. to 8" max. for final grade of new construction only. See **Standard Specification 8-20.3(5).** Where adjustments are to be made to existing Junction Boxes, or for interim construction stages during the contract, the limits shall be from 6" min. to 10" max. See **Standard Specification 8-20.3(6).**

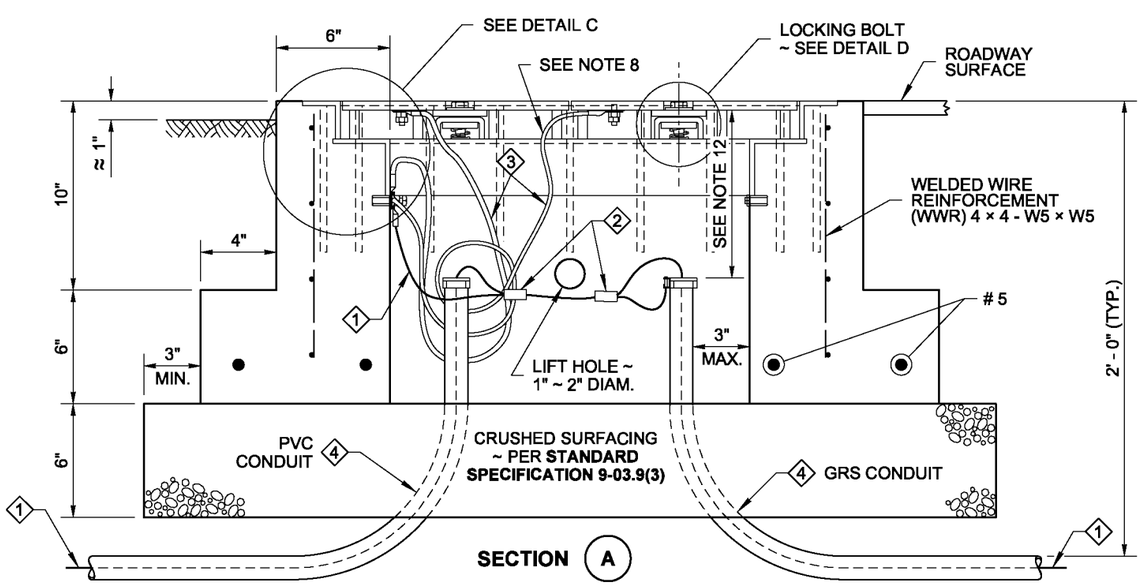

SECTION A

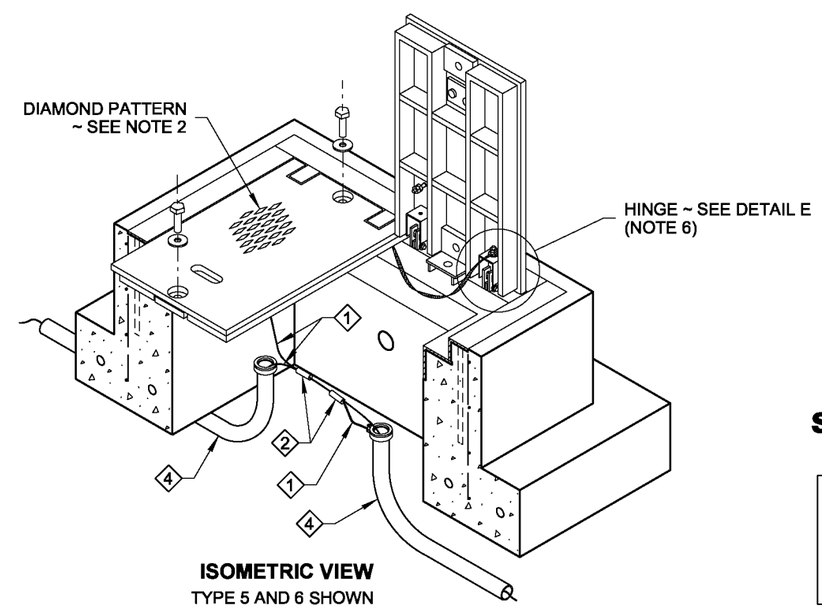

ISOMETRIC VIEW
TYPE 5 AND 6 SHOWN

NOTE: THIS PLAN IS NOT A LEGAL ENGINEERING DOCUMENT BUT AN ELECTRONIC DUPLICATE. THE ORIGINAL, SIGNED BY THE ENGINEER AND APPROVED FOR PUBLICATION, IS KEPT ON FILE AT THE WASHINGTON STATE DEPARTMENT OF TRANSPORTATION. A COPY MAY BE OBTAINED UPON REQUEST.

HEAVY-DUTY JUNCTION BOX TYPES 4, 5, & 6

STANDARD PLAN J-40.20-01

SHEET 1 OF 2 SHEETS

APPROVED FOR PUBLICATION

Pasco Bakotich III — STATE DESIGN ENGINEER
05-17-12 — DATE

Washington State Department of Transportation

EFFECTIVE: AUGUST 6, 2012 TO August 4, 2013
EFFECTIVE: AUGUST 6, 2012 TO August 4, 2013
EFFECTIVE: AUGUST 6, 2012 TO August 4, 2013
EFFECTIVE: AUGUST 6, 2012 TO August 4, 2013

EFFECTIVE: AUGUST 6, 2012 TO August 4, 2013
EFFECTIVE: AUGUST 6, 2012 TO August 4, 2013

DRAWN BY: LISA CYFORD

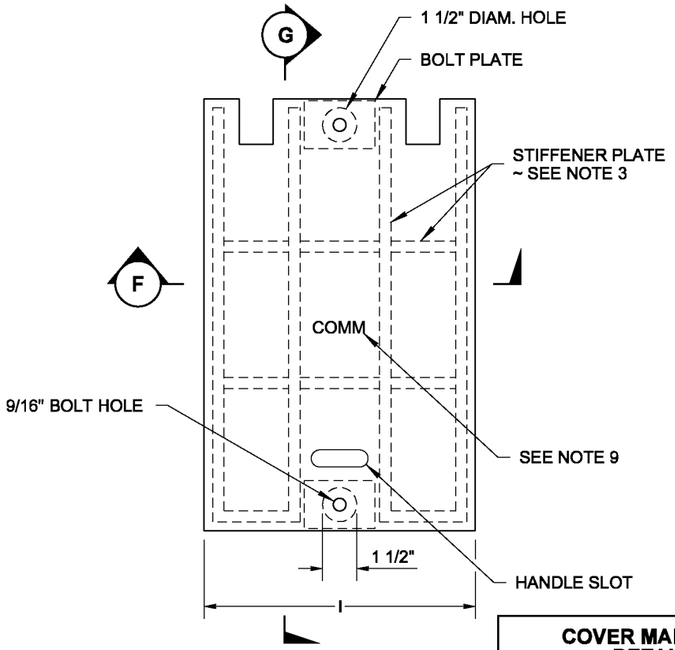

PLAN VIEW
LID

COVER MARKING DETAIL

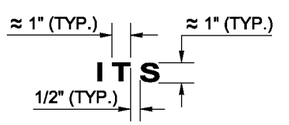

SEE NOTE 9

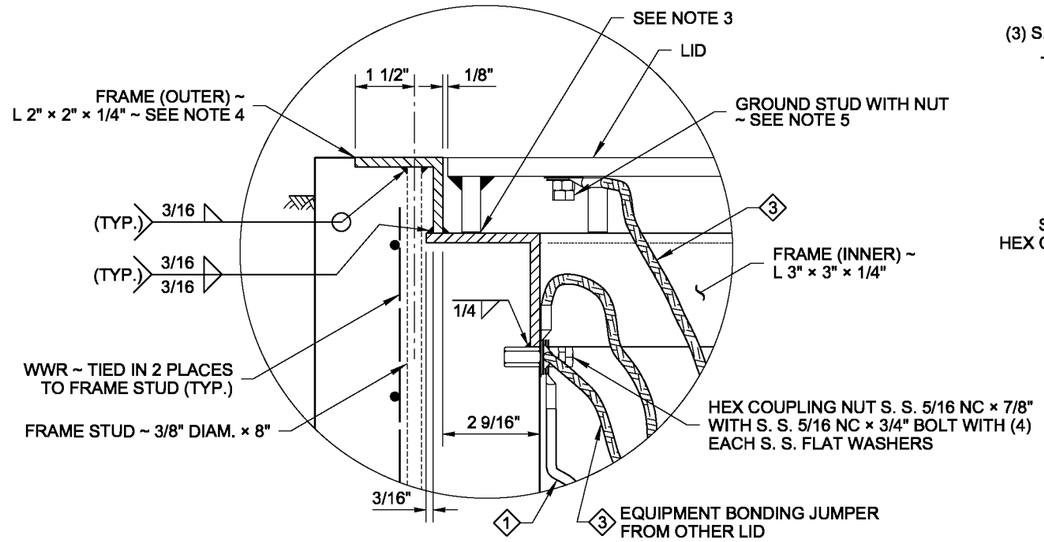

DETAIL C

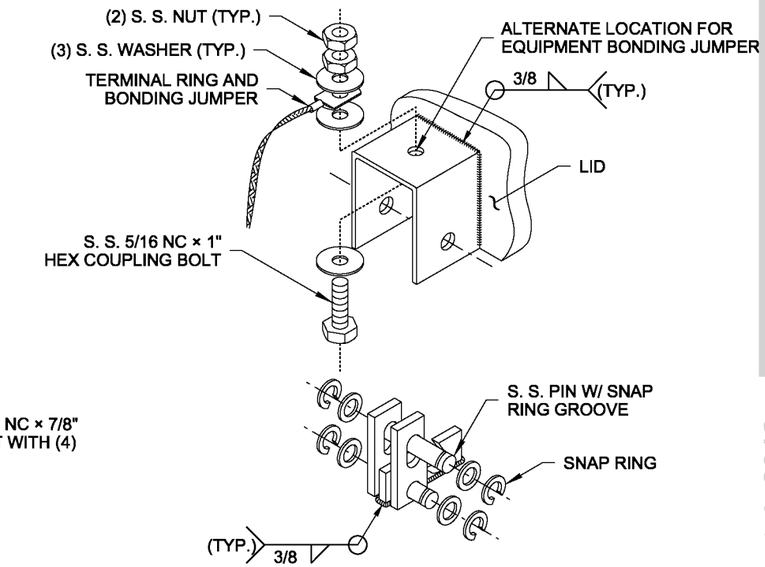

DETAIL E
HINGE

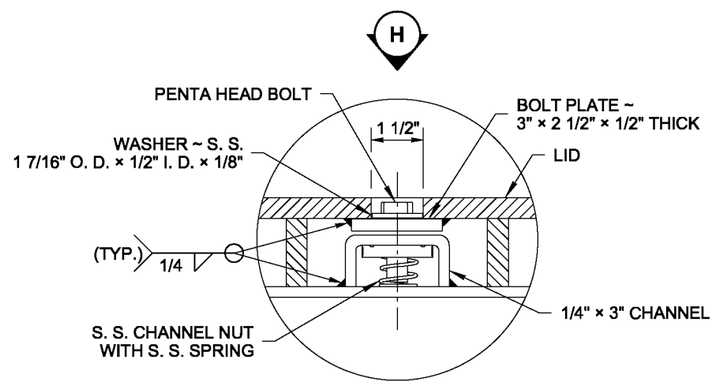

DETAIL D
LOCKING BOLT

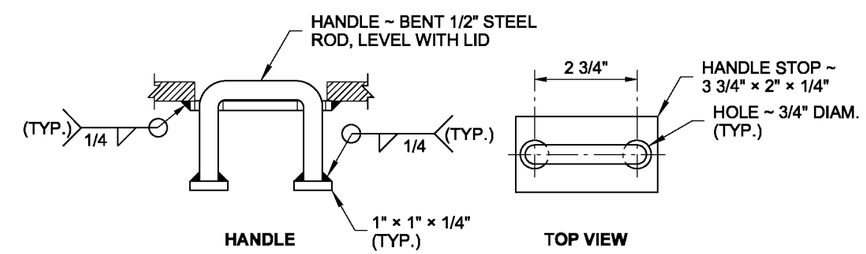

DETAIL B

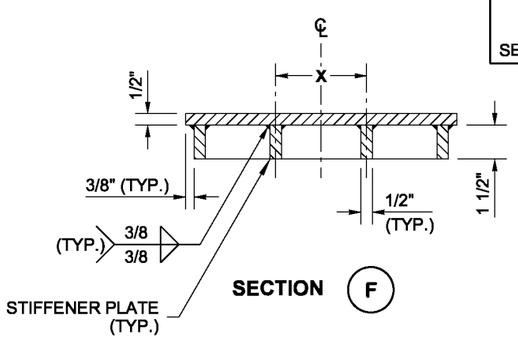

SECTION F

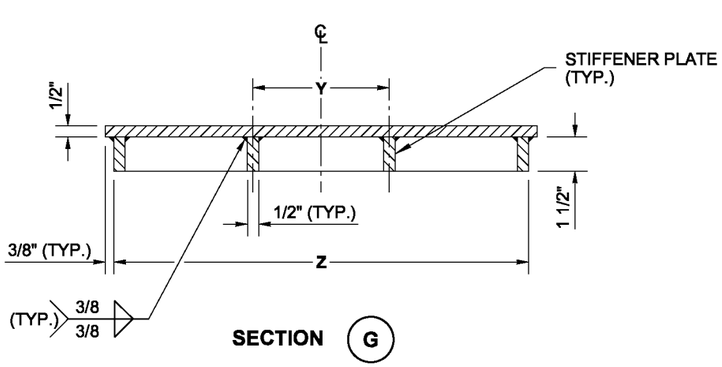

SECTION G

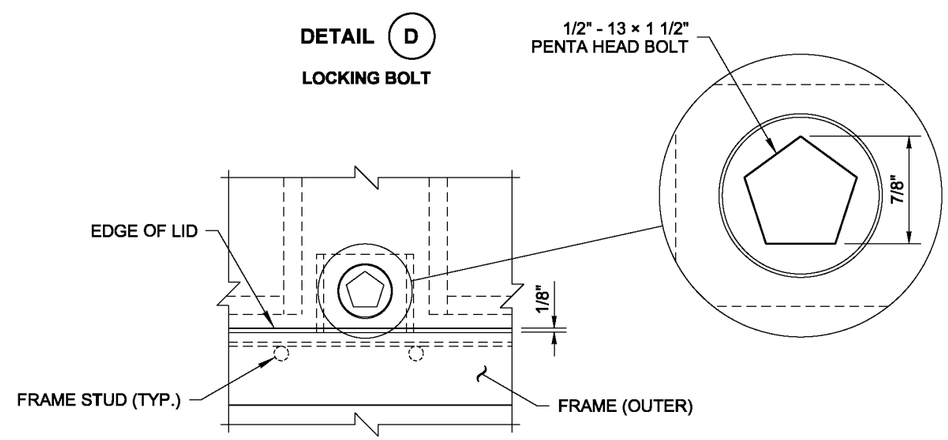

VIEW H

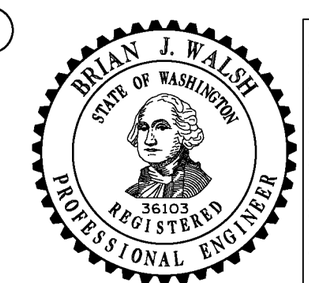

NOTE: THIS PLAN IS NOT A LEGAL ENGINEERING DOCUMENT BUT AN ELECTRONIC DUPLICATE. THE ORIGINAL, SIGNED BY THE ENGINEER AND APPROVED FOR PUBLICATION, IS KEPT ON FILE AT THE WASHINGTON STATE DEPARTMENT OF TRANSPORTATION. A COPY MAY BE OBTAINED UPON REQUEST.

HEAVY-DUTY JUNCTION BOX TYPES 4, 5, & 6

STANDARD PLAN J-40.20-01

SHEET 2 OF 2 SHEETS

APPROVED FOR PUBLICATION

Pasco Bakotich III — STATE DESIGN ENGINEER
05-17-12 — DATE

Washington State Department of Transportation

EFFECTIVE: AUGUST 6, 2012 TO August 4, 2013
EFFECTIVE: AUGUST 6, 2012 TO August 4, 2013
EFFECTIVE: AUGUST 6, 2012 TO August 4, 2013
EFFECTIVE: AUGUST 6, 2012 TO August 4, 2013

EFFECTIVE: AUGUST 6, 2012 TO August 4, 2013

DRAWN BY: LISA CYFORD

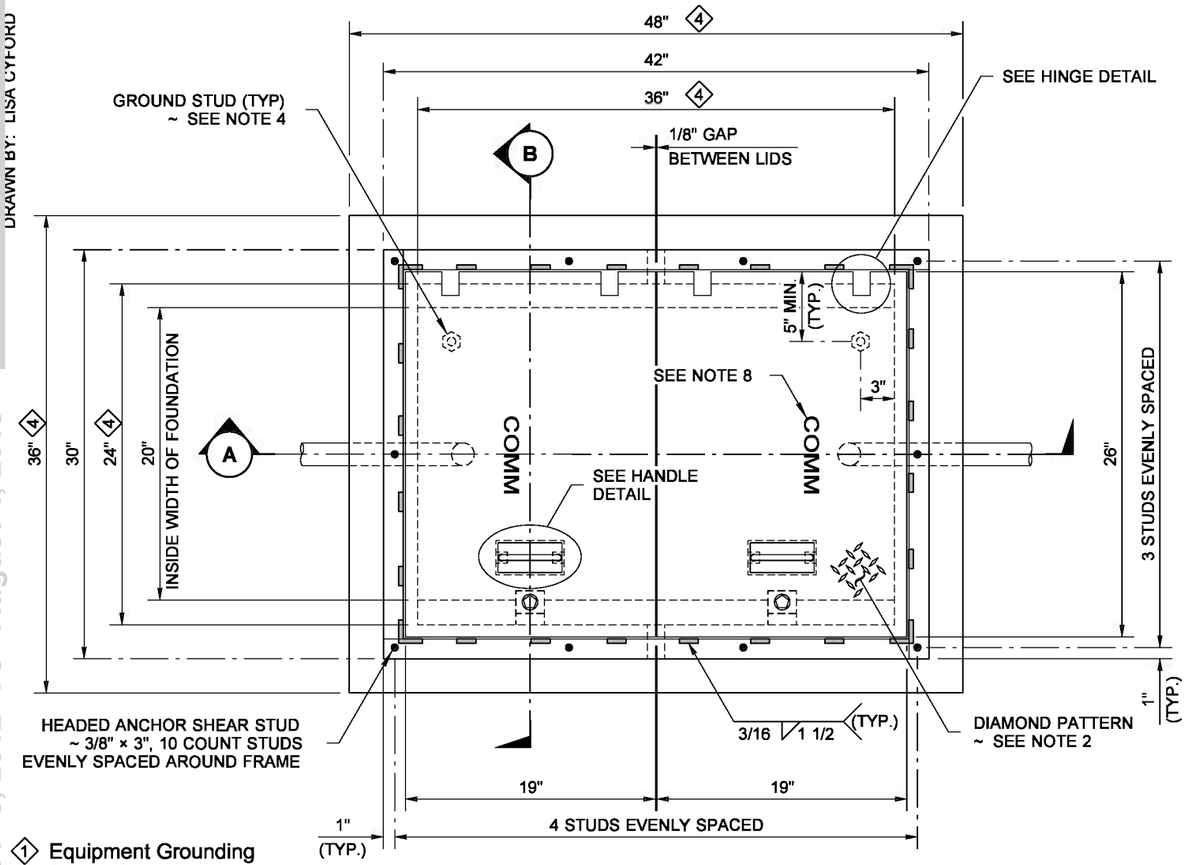

1. Equipment Grounding Conductor
2. Copper Solderless Crimp Connector
3. Equipment Bonding Jumper
4. Foundation
5. See Contract Plan for conduit size and number

PLAN VIEW

LOCKING LID STANDARD DUTY JUNCTION BOX

CONDUITS NOT SHOWN

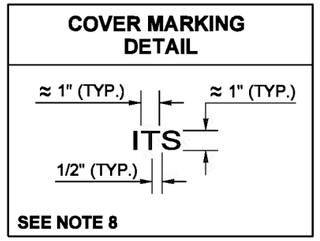

NOTES

1. All box dimensions are approximate. Exact configurations vary among manufacturers.
2. Minimum lid thicknesses are shown. The diamond pattern shall be a minimum of 28% of the overall thickness. Junction Boxes installed in sidewalks, walkways, and shared-use paths shall have a slip-resistant coating on the lid and lip cover plate and shall be installed with the surface flush with and matched to the grade of the sidewalk, walkway, or shared-use path. The non-slip lid shall be identified with permanent markings on the underside, indicating the type of surface treatment (see Contract Documents for details) and the year of manufacture. The permanent marking shall be 1/8" inch line thickness formed with a stainless steel weld bead and shall be placed prior to hot-dip galvanizing.
3. Lid support members shall be 3/16" min. thick steel C, L, or T shape, welded to the frame. Exact configurations vary among manufacturers.
4. A 1/4-20 NC × 3/4" S. S. ground stud shall be welded to the bottom of each lid; include (2) S. S. nuts and (2) S. S. flat washers.
5. The hinges shall allow the lids to open 180°.
6. Bolts and nuts shall be liberally coated with anti-seize compound.
7. Connect Equipment Bonding Jumper to ground stud on lid. As an alternative to the ground stud connection, the Equipment Bonding Jumper shall be attached to the front face of the hinge pocket with a 5/16-20 NC × 3/4" S. S. bolt, (2) each S. S. nuts, and (2) each S. S. flat washers. Equipment Bonding Jumper shall be #8 AWG min. × 4' of tinned braided copper.
8. The System Identification letters shall be 1/8" line thickness formed by engraving, stamping, or with a S. S. weld bead. See Cover Marking detail. Grind off diamond pattern before forming letters. See **Standard Specification 9-29.2(4)** for details.
9. See the Standard Specifications for alternative reinforcement and class of concrete.
10. See **Standard Plan J-40.10** for Welded Wire Reinforcement and Headed Anchor Shear Stud attachment details.
11. Capacity ~ conduit diameter = 24"
12. Lid Bolt Down Attachment Tab provides a method of retrofitting by using a mechanical process in lieu of welding. Attachment Tab shown depicts a typical component arrangement; actual configurations of assembly will vary among manufacturers. See approved manufacturers' shop drawing for specifics.
13. Unless otherwise noted in the plans or approved by the Engineer, Junction Boxes, Cable Vaults and Pull Boxes shall not be placed within the traveled way or paved shoulders. All Junction Boxes, Cable Vaults, and Pull Boxes placed within the traveled way or paved shoulders shall be Heavy-Duty.
14. Distance between the top of the conduit and the bottom of the Junction Box lid shall be 6" min. to 8" max. for final grade of new construction only. See **Standard Specification 8-20.3(5).** Where adjustments are to be made to existing Junction Boxes, or for interim construction stages during the contract, the limits shall be from 6" min. to 10" max. See **Standard Specification 8-20.3(6).**

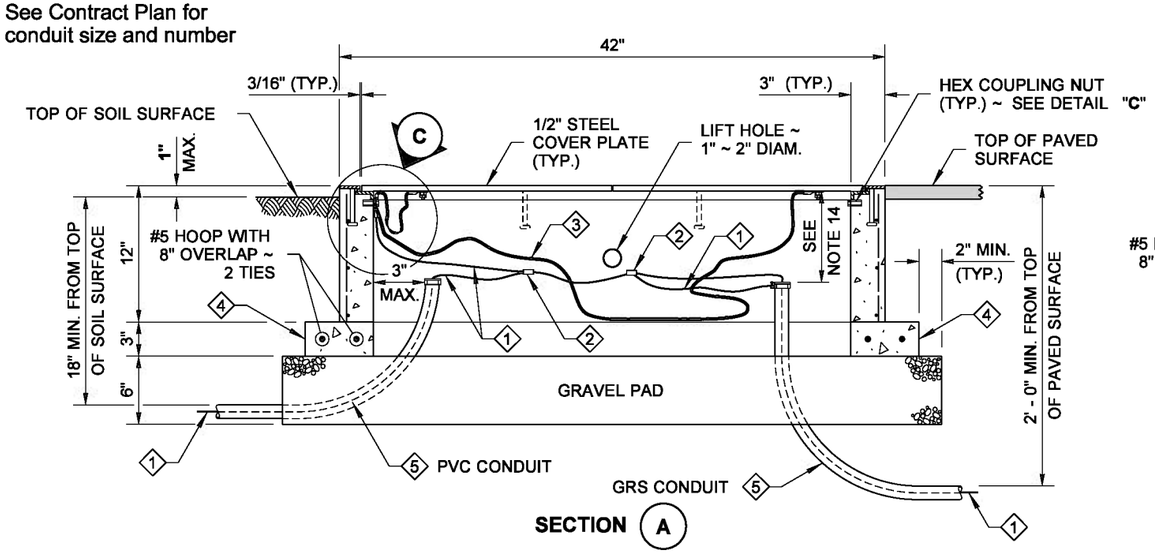

SECTION A

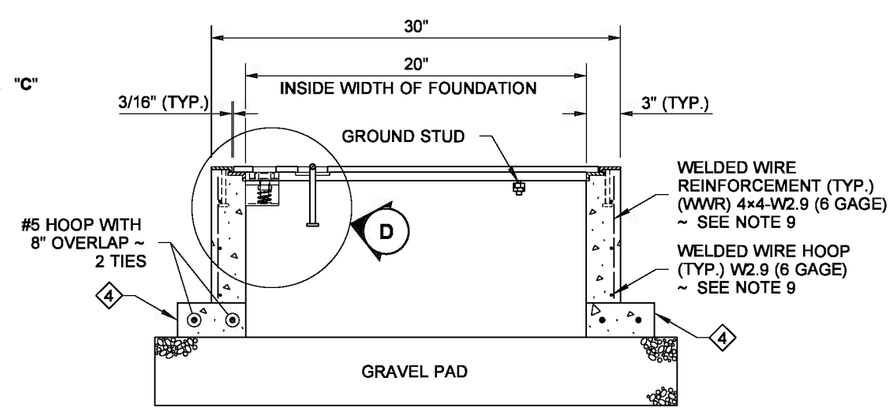

SECTION B

CONDUITS NOT SHOWN

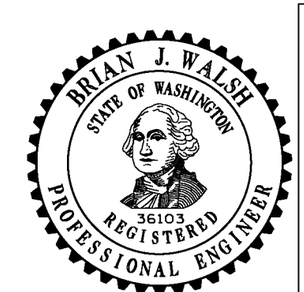

NOTE: THIS PLAN IS NOT A LEGAL ENGINEERING DOCUMENT BUT AN ELECTRONIC DUPLICATE. THE ORIGINAL, SIGNED BY THE ENGINEER AND APPROVED FOR PUBLICATION, IS KEPT ON FILE AT THE WASHINGTON STATE DEPARTMENT OF TRANSPORTATION. A COPY MAY BE OBTAINED UPON REQUEST.

LOCKING LID STANDARD DUTY JUNCTION BOX TYPE 8

STANDARD PLAN J-40.30-02

SHEET 1 OF 2 SHEETS

APPROVED FOR PUBLICATION

Pasco Bakotich III — STATE DESIGN ENGINEER

05-11-11 — DATE

Washington State Department of Transportation

EFFECTIVE: AUGUST 6, 2012 TO August 4, 2013

EFFECTIVE: AUGUST 6, 2012 TO August 4, 2013
EFFECTIVE: AUGUST 6, 2012 TO August 4, 2013

DRAWN BY: LISA CYFORD

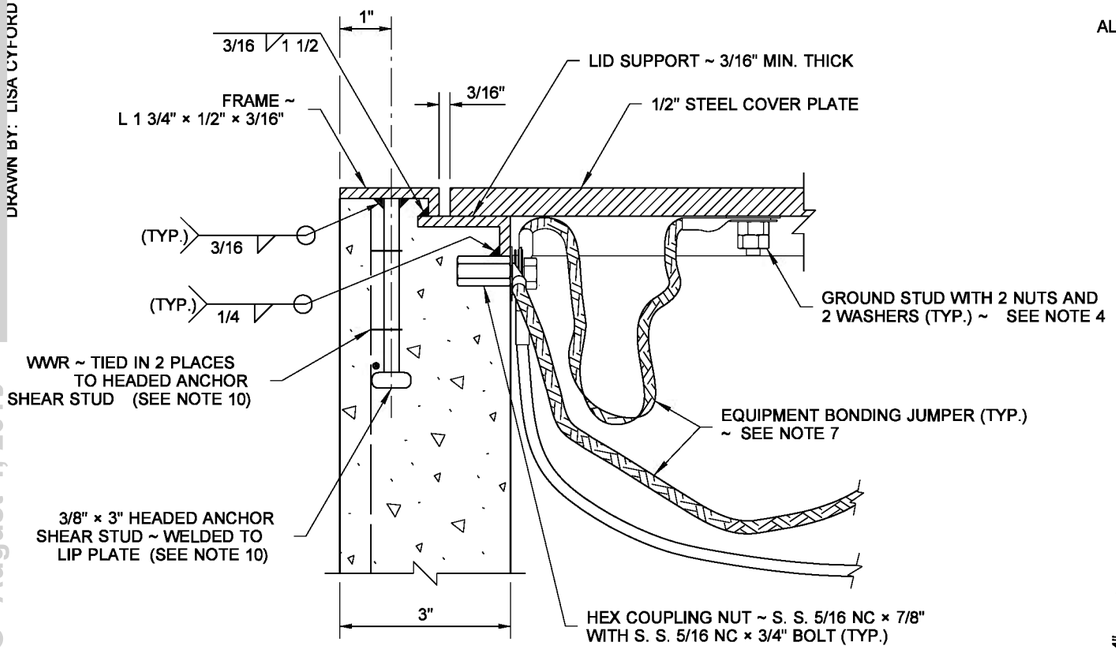

DETAIL C

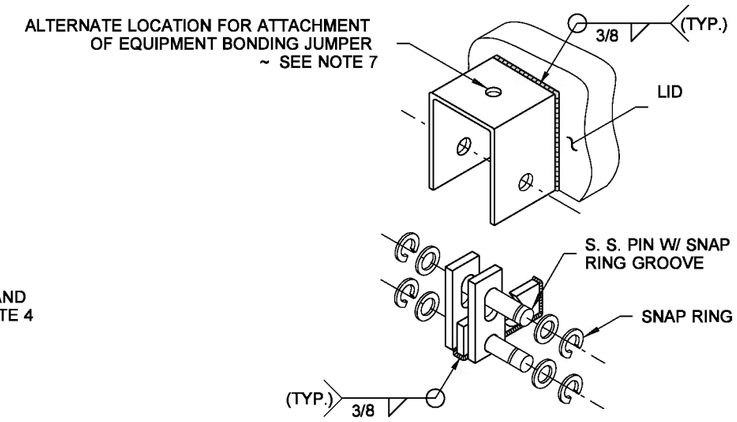

HINGE DETAIL

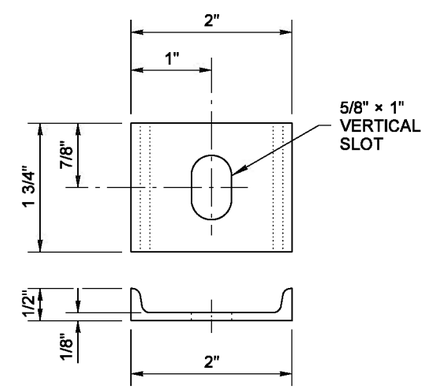

BOLT PLATE CHANNEL

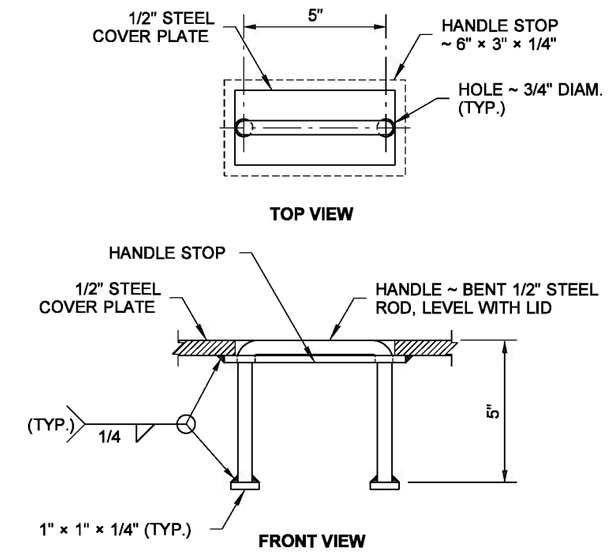

HANDLE DETAIL

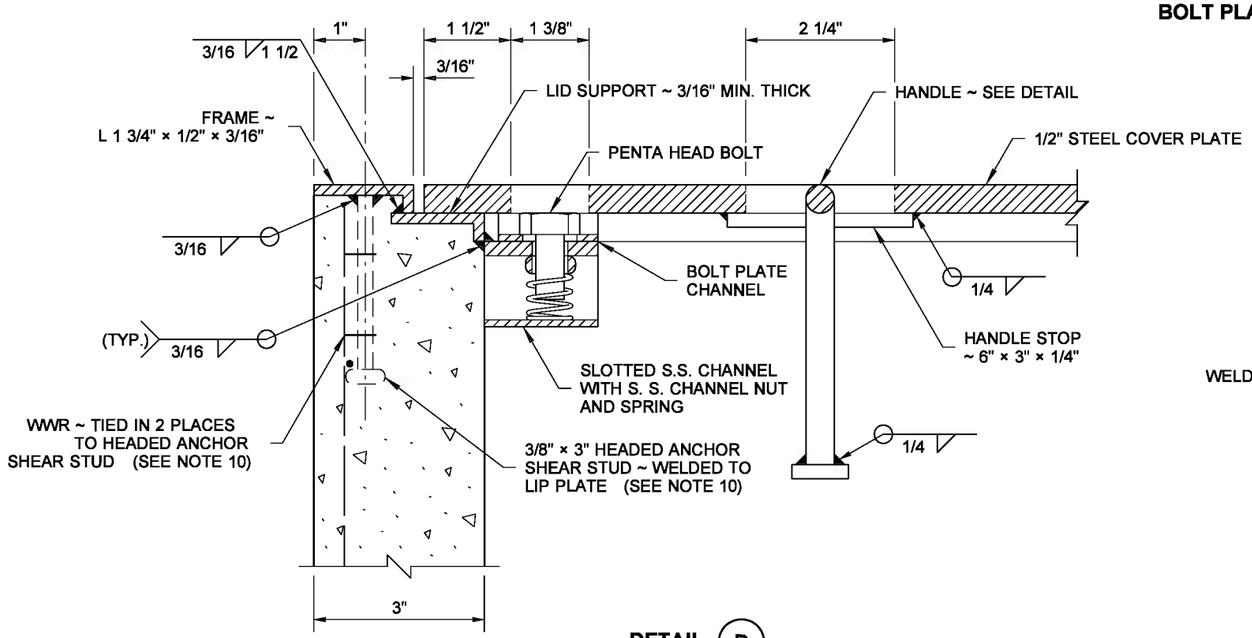

DETAIL D

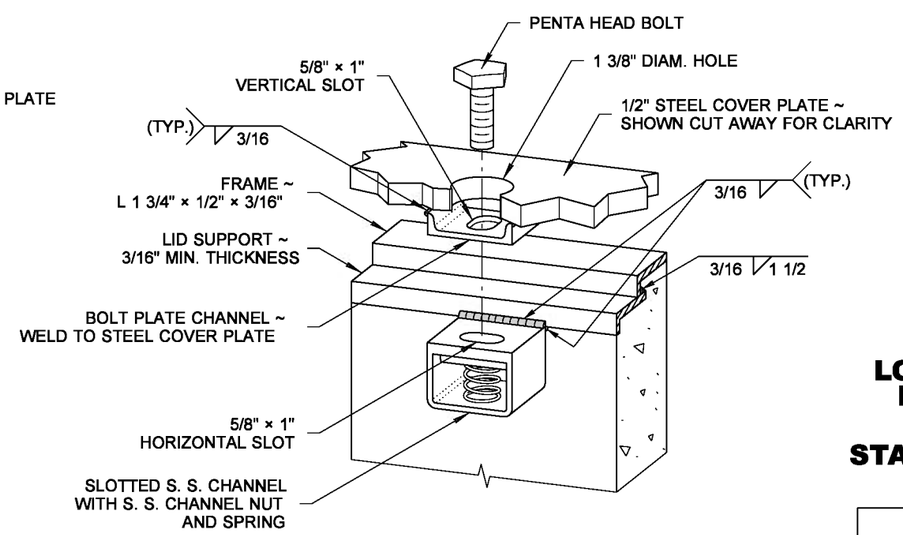

DETAIL D

ISOMETRIC VIEW

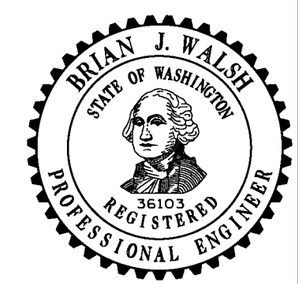

NOTE: THIS PLAN IS NOT A LEGAL ENGINEERING DOCUMENT BUT AN ELECTRONIC DUPLICATE. THE ORIGINAL, SIGNED BY THE ENGINEER AND APPROVED FOR PUBLICATION, IS KEPT ON FILE AT THE WASHINGTON STATE DEPARTMENT OF TRANSPORTATION. A COPY MAY BE OBTAINED UPON REQUEST.

LOCKING LID STANDARD DUTY JUNCTION BOX TYPE 8

STANDARD PLAN J-40.30-02

SHEET 2 OF 2 SHEETS

APPROVED FOR PUBLICATION

Pasco Bakotich III — STATE DESIGN ENGINEER

05-11-11 — DATE

Washington State Department of Transportation

EFFECTIVE: AUGUST 6, 2012 TO August 4, 2013
EFFECTIVE: AUGUST 6, 2012 TO August 4, 2013
EFFECTIVE: AUGUST 6, 2012 TO August 4, 2013
EFFECTIVE: AUGUST 6, 2012 TO August 4, 2013

EFFECTIVE: AUGUST 6, 2012 TO August 4, 2013

DRAWN BY: LISA CYFORD

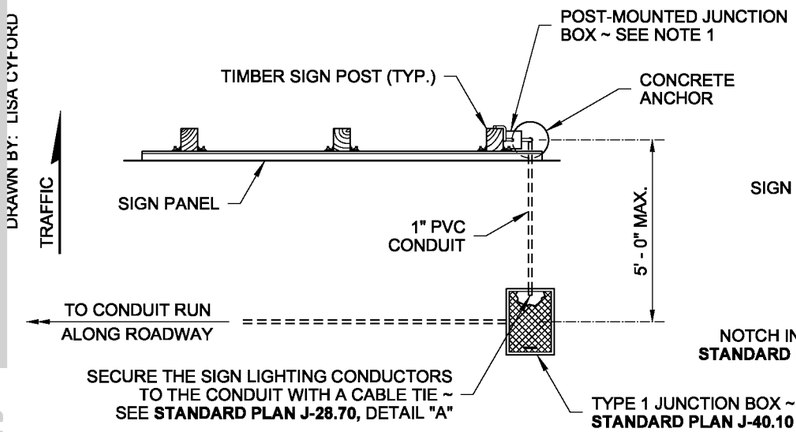

PLAN

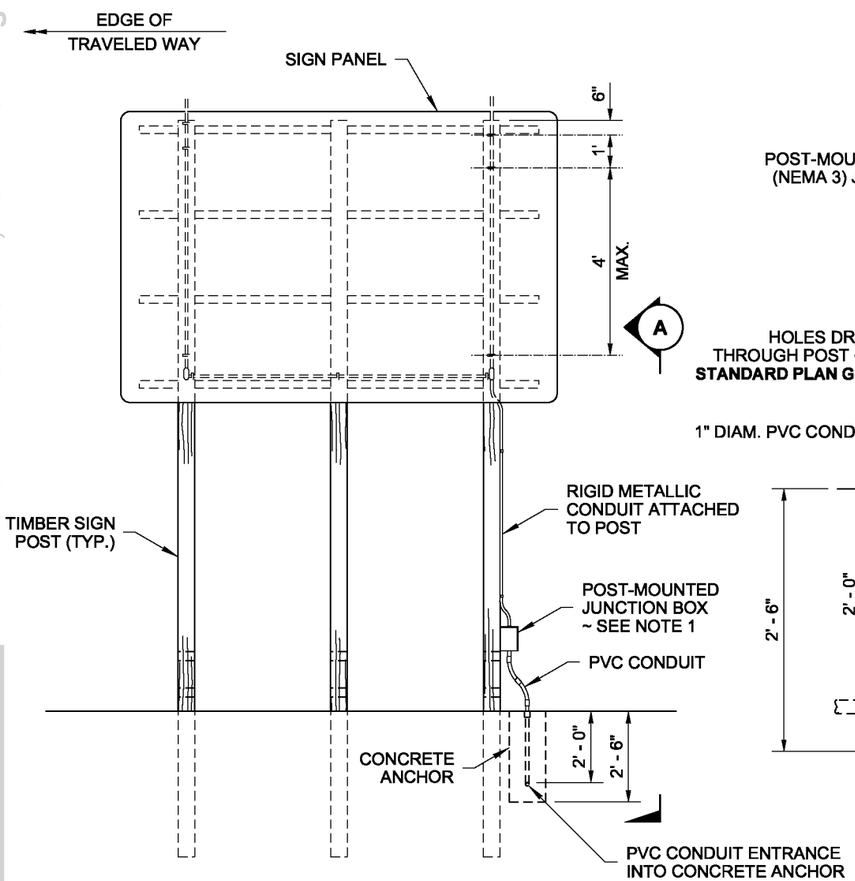

ELEVATION

JUNCTION BOX ATTACHMENT TO TIMBER SIGN SUPPORT

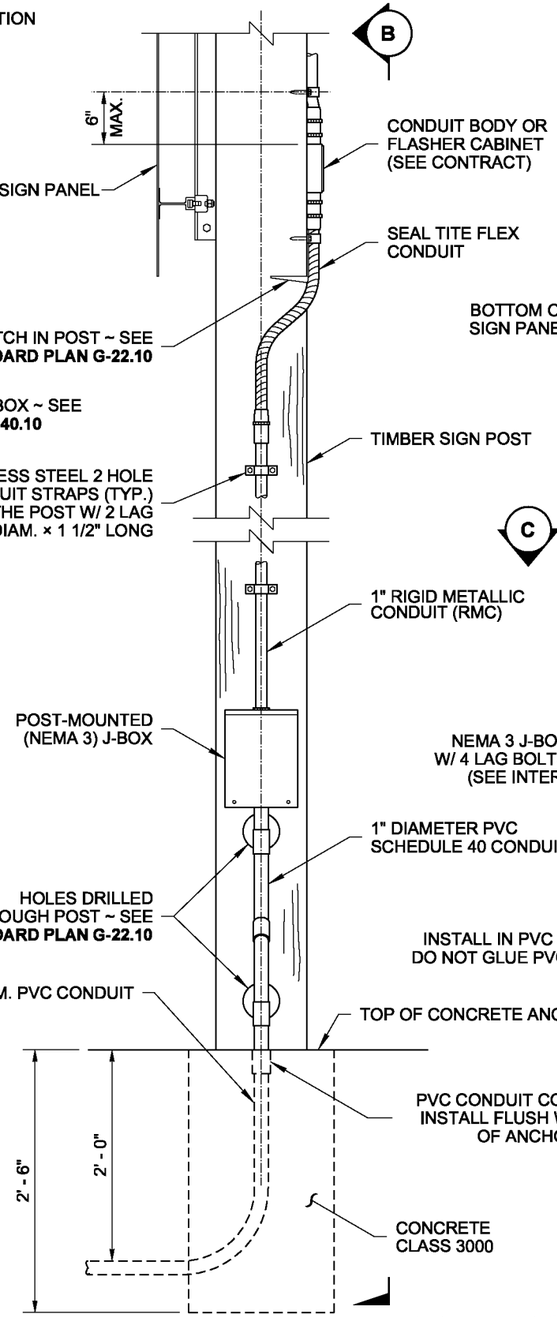

VIEW A

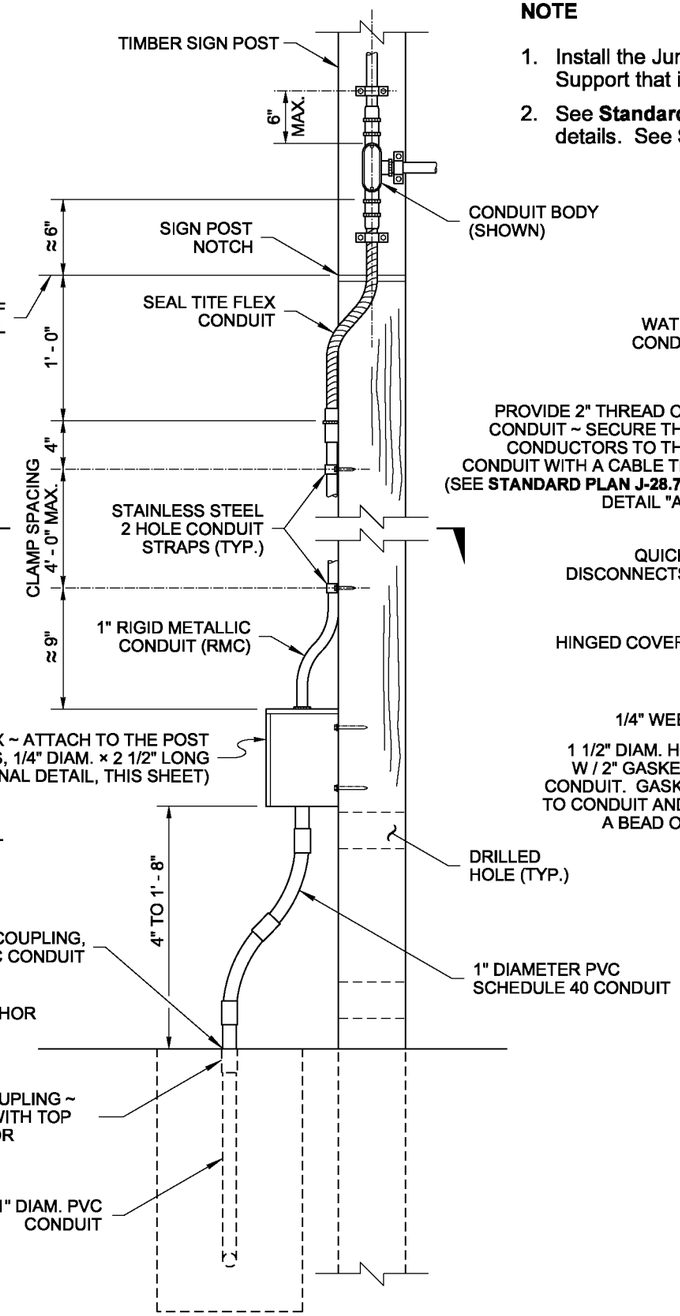

VIEW B

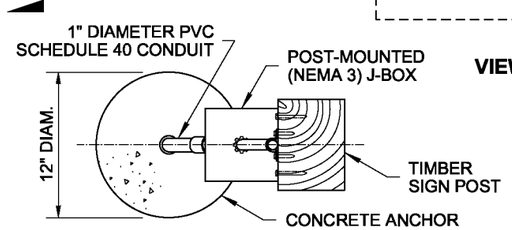

SECTION C

NOTE

1. Install the Junction Box on the Timber Sign Post or the Steel Sign Support that is farthest from the roadway.
2. See **Standard Plan J-21.16** for Flashing Beacon Installation details. See **Standard Plan J-21.17** for Electrical Wiring details.

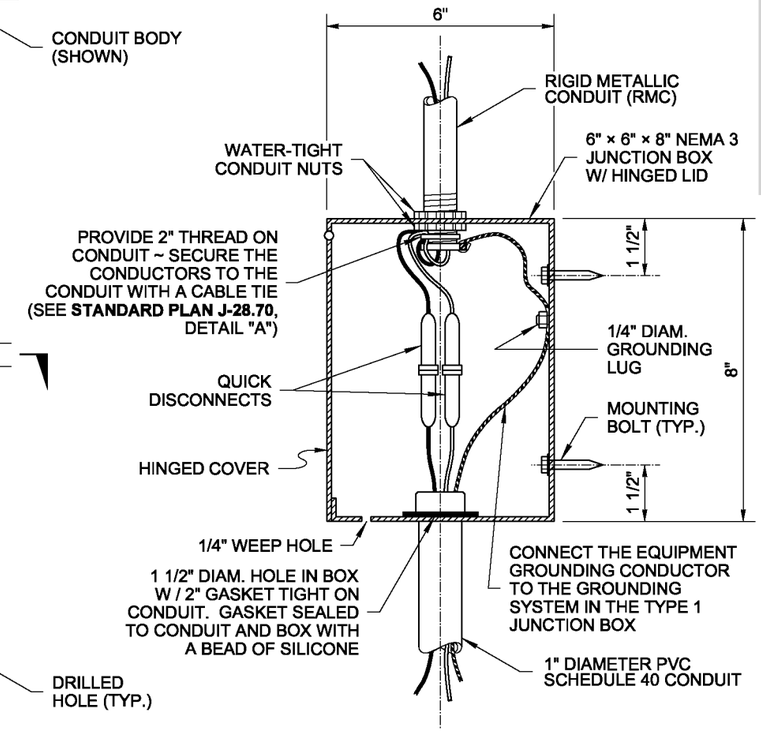

JUNCTION BOX INTERNAL DETAIL

NOTE: THIS PLAN IS NOT A LEGAL ENGINEERING DOCUMENT BUT AN ELECTRONIC DUPLICATE. THE ORIGINAL, SIGNED BY THE ENGINEER AND APPROVED FOR PUBLICATION, IS KEPT ON FILE AT THE WASHINGTON STATE DEPARTMENT OF TRANSPORTATION. A COPY MAY BE OBTAINED UPON REQUEST.

SIGN POST-MOUNTED JUNCTION BOX

STANDARD PLAN J-40.35-00

SHEET 1 OF 3 SHEETS

APPROVED FOR PUBLICATION

Pasco Bakotich III — STATE DESIGN ENGINEER

03-15-12 — DATE

Washington State Department of Transportation

EFFECTIVE: AUGUST 6, 2012 TO August 4, 2013

EFFECTIVE: AUGUST 6, 2012 TO August 4, 2013

DRAWN BY: LISA CYFORD

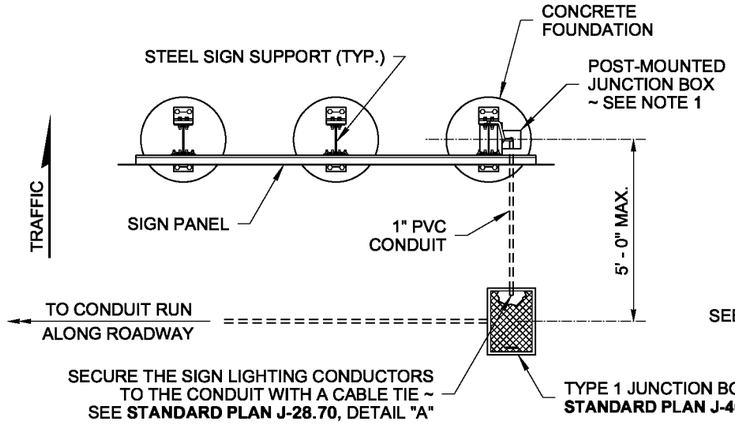

PLAN

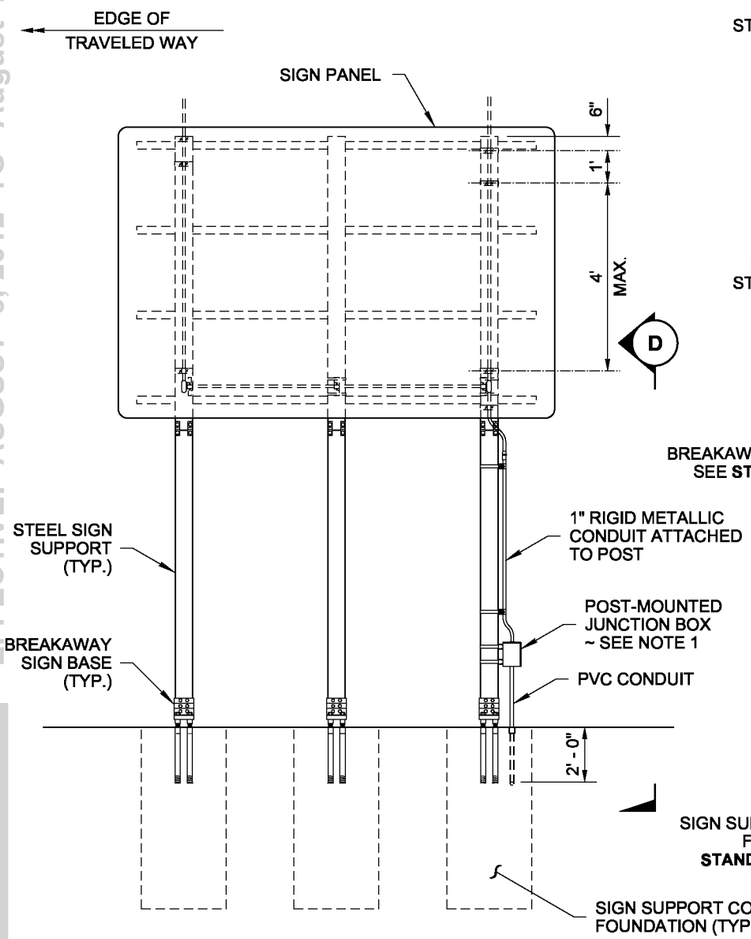

ELEVATION

JUNCTION BOX ATTACHMENT TO STEEL SIGN SUPPORT

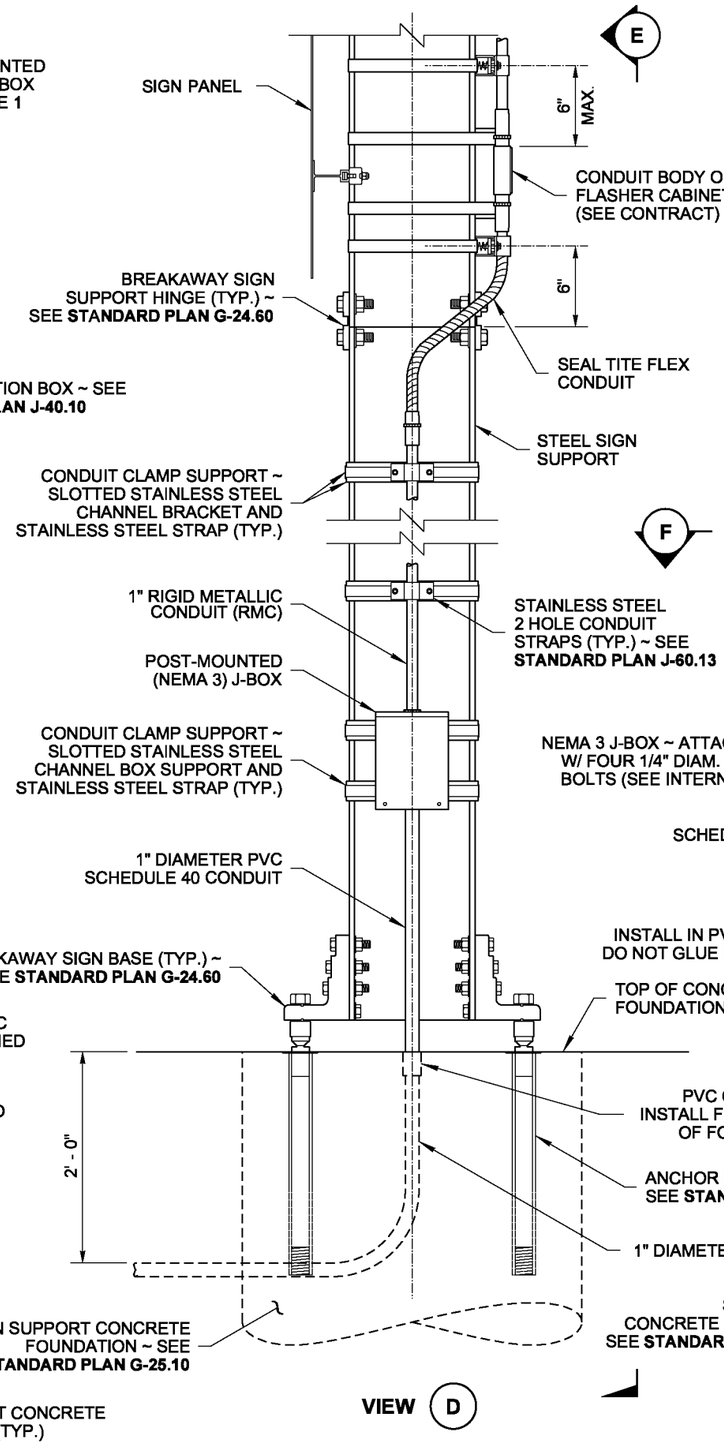

VIEW D

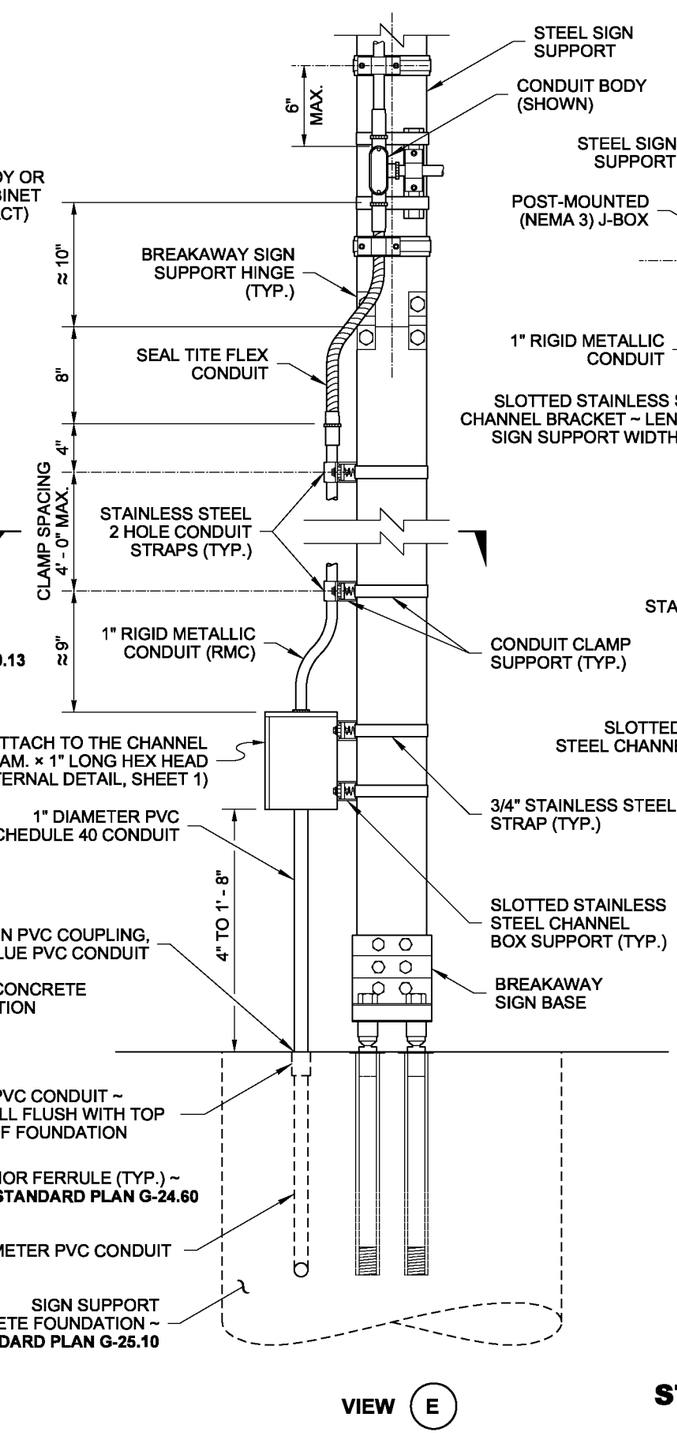

VIEW E

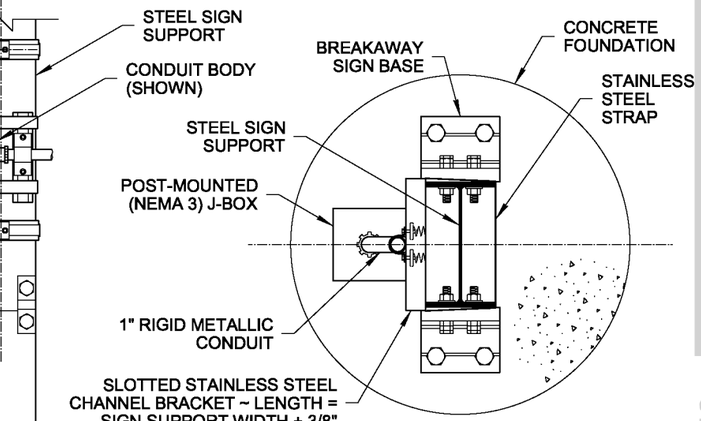

SECTION F

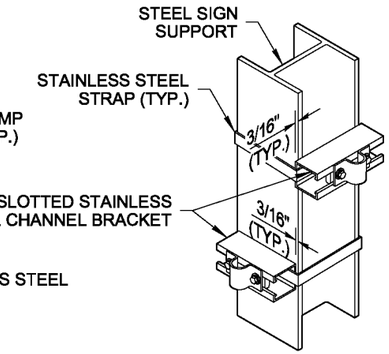

SLOTTED STEEL CHANNEL ATTACHMENT DETAILS

NOTE: THIS PLAN IS NOT A LEGAL ENGINEERING DOCUMENT BUT AN ELECTRONIC DUPLICATE. THE ORIGINAL, SIGNED BY THE ENGINEER AND APPROVED FOR PUBLICATION, IS KEPT ON FILE AT THE WASHINGTON STATE DEPARTMENT OF TRANSPORTATION. A COPY MAY BE OBTAINED UPON REQUEST.

SIGN POST-MOUNTED JUNCTION BOX

STANDARD PLAN J-40.35-00

SHEET 2 OF 3 SHEETS

APPROVED FOR PUBLICATION

Pasco Bakotich III — STATE DESIGN ENGINEER

03-15-12 — DATE

Washington State Department of Transportation

EFFECTIVE: AUGUST 6, 2012 TO August 4, 2013

EFFECTIVE: AUGUST 6, 2012 TO August 4, 2013
EFFECTIVE: AUGUST 6, 2012 TO August 4, 2013

DRAWN BY: LISA CYFORD

G

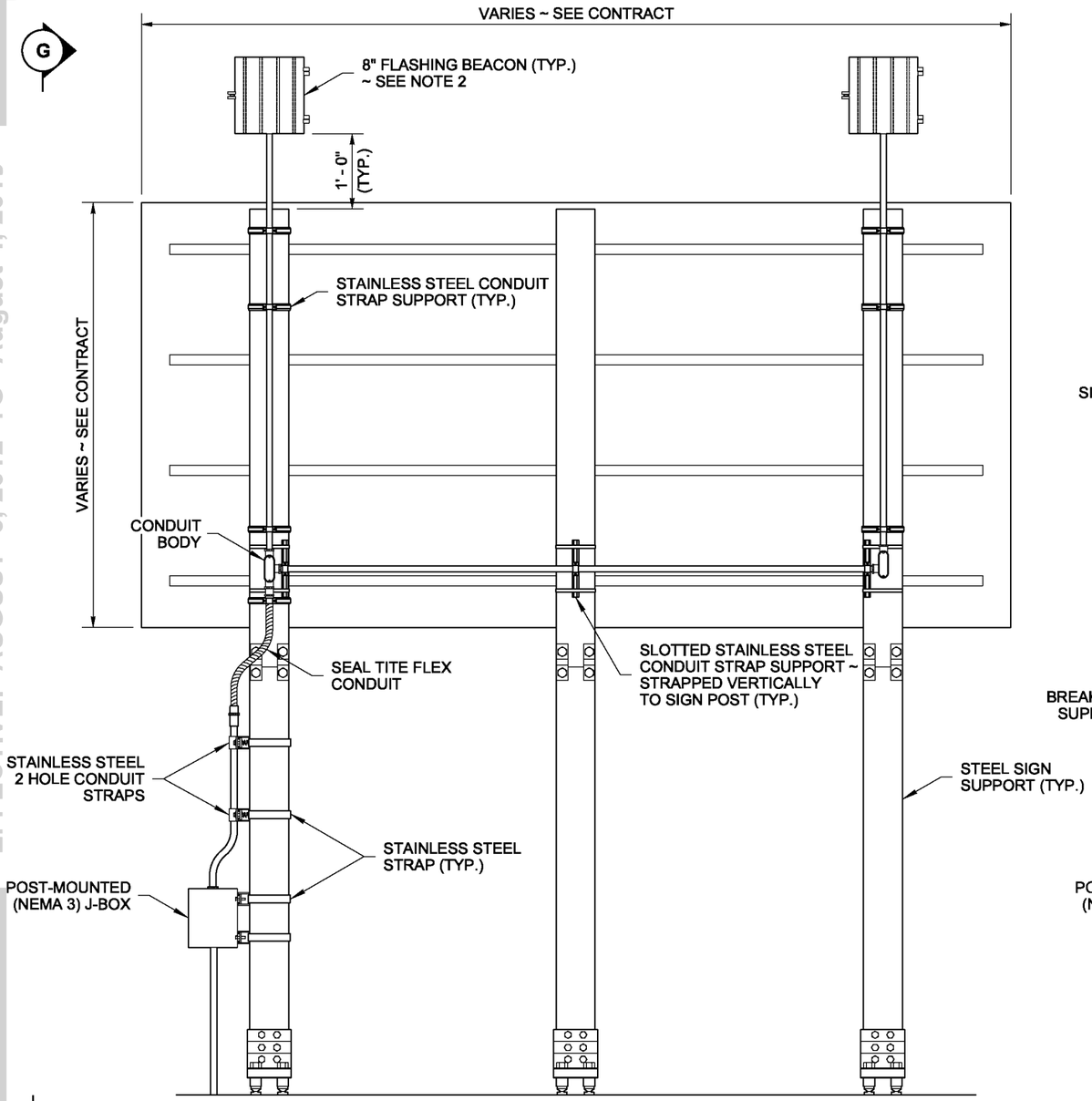

ELEVATION

FLASHING BEACON ATTACHMENT

(STEEL SIGN SUPPORT SHOWN)

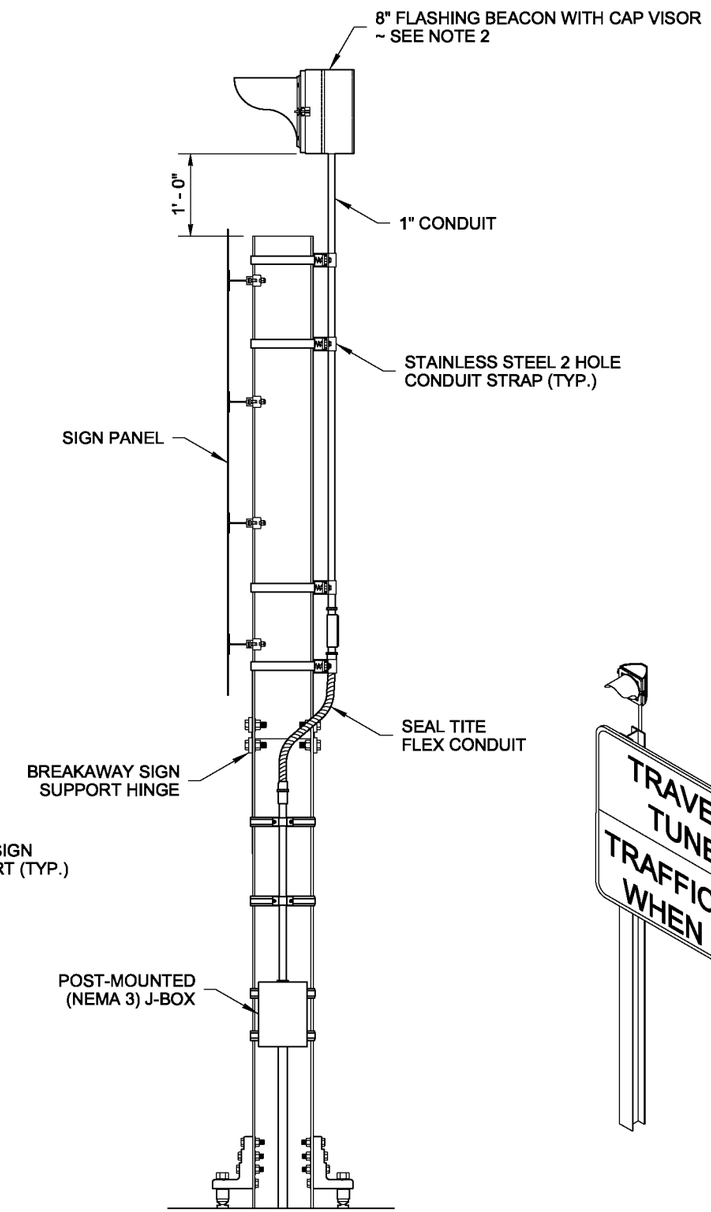

VIEW G

RIGHT ISOMETRIC VIEW

TRAVELER INFORMATION SIGN SHOWN ~
SEE CONTRACT FOR SIGN MESSAGE AND SIZE

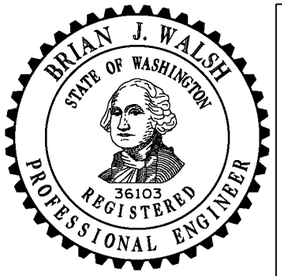

NOTE: THIS PLAN IS NOT A LEGAL ENGINEERING DOCUMENT BUT AN ELECTRONIC DUPLICATE. THE ORIGINAL, SIGNED BY THE ENGINEER AND APPROVED FOR PUBLICATION, IS KEPT ON FILE AT THE WASHINGTON STATE DEPARTMENT OF TRANSPORTATION. A COPY MAY BE OBTAINED UPON REQUEST.

SIGN POST-MOUNTED JUNCTION BOX

STANDARD PLAN J-40.35-00

SHEET 3 OF 3 SHEETS

APPROVED FOR PUBLICATION

Pasco Bakotich III — STATE DESIGN ENGINEER

03-15-12 — DATE

Washington State Department of Transportation

EFFECTIVE: AUGUST 6, 2012 TO August 4, 2013
EFFECTIVE: AUGUST 6, 2012 TO August 4, 2013
EFFECTIVE: AUGUST 6, 2012 TO August 4, 2013
EFFECTIVE: AUGUST 6, 2012 TO August 4, 2013

EFFECTIVE: AUGUST 6, 2012 TO August 4, 2013
EFFECTIVE: AUGUST 6, 2012 TO August 4, 2013

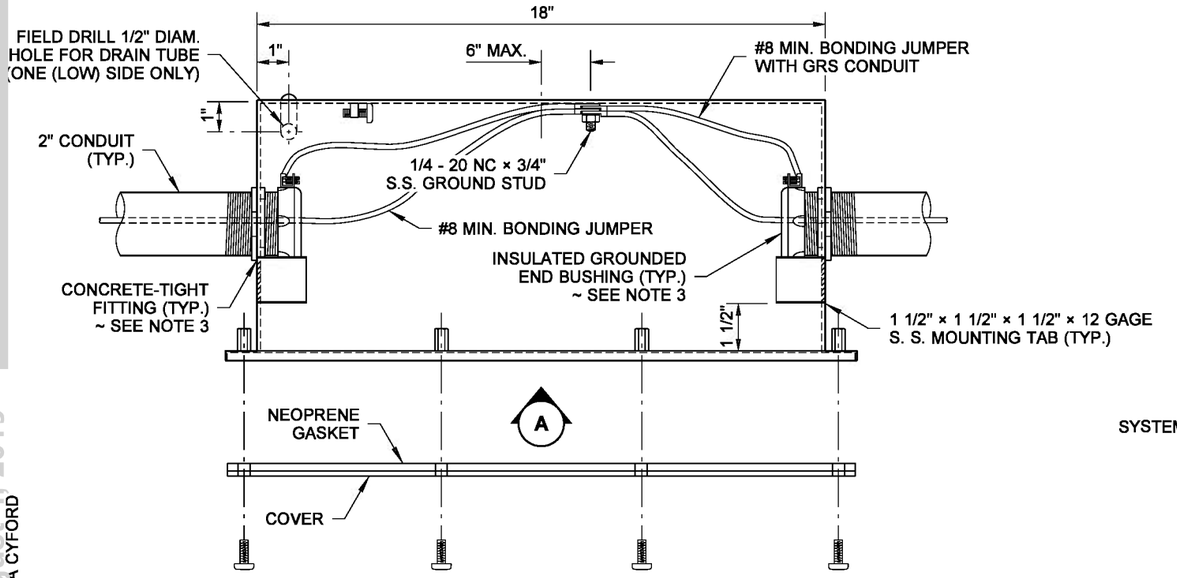

PLAN VIEW

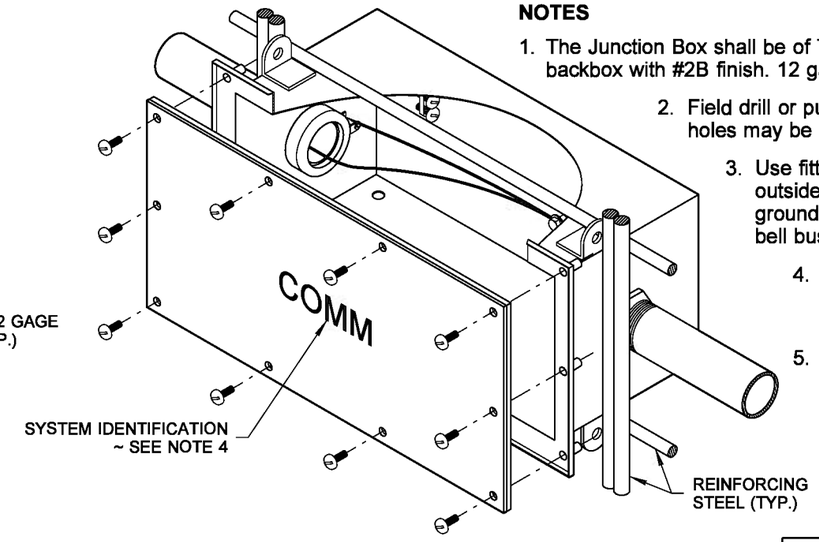

ISOMETRIC VIEW

SHOWN MOUNTED IN REINFORCING STEEL

NOTES

1. The Junction Box shall be of Type 304 stainless steel. welded seam construction: 12 gage backbox with #2B finish. 12 gage cover with #4 finish, and 12 gage mounting tabs.
2. Field drill or punch holes in the center of Junction Box ends. Additional holes may be required. **See Section B.**
3. Use fittings that are UL listed and CSA certified concrete tight on the outside of the Junction Box conduit connection. Use an insulated. grounded end bushing on the inside for GRS conduit. Use an end bell bushing on the inside for PVC conduit.
4. The System Identification letters shall be 1/16" line thickness formed by engraving, stamping, or with a stainless steel weld bead. **See System Identification Detail.**
5. Liberally coat the threads of the cover fasteners with anti-seize compound during construction & before final closure.
6. Details show for box installation in stationary forms.
7. Conduit Capacity = 8"
8. Conduits shall enter Junction Box from ends only.

SYSTEM IDENTIFICATION DETAIL

≈ 1" (TYP.) ≈ 1" (TYP.)

ITS

INTELLIGENT TRANSPORTATION SYSTEM

COMM
COMMUNICATION SYSTEM

LT
LIGHTING SYSTEM

TS
TRAFFIC SIGNAL SYSTEM

TEL
TELEPHONE SYSTEM

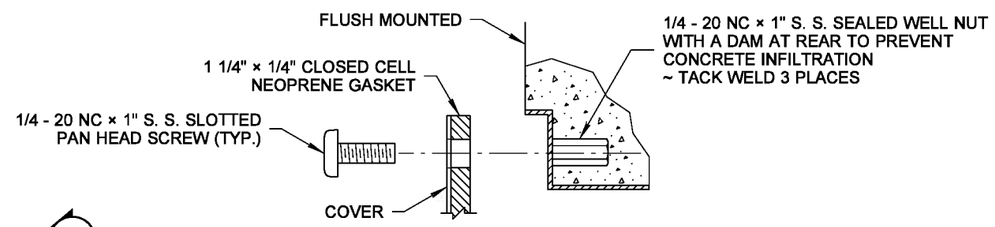

DETAIL C

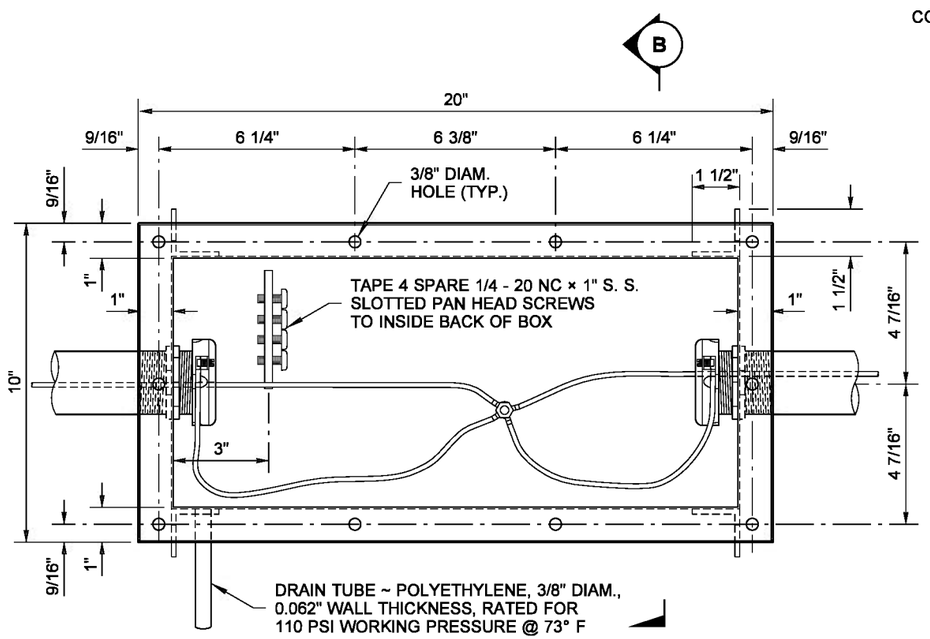

VIEW A

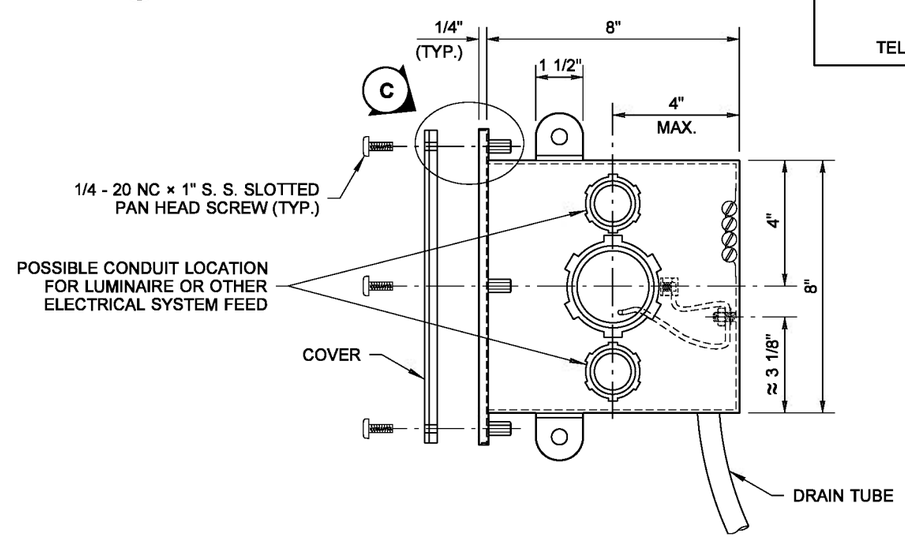

SECTION B

THEODORE J. TREPANIER
STATE OF WASHINGTON
25335
REGISTERED
PROFESSIONAL ENGINEER

NOTE: THIS PLAN IS NOT A LEGAL ENGINEERING DOCUMENT BUT AN ELECTRONIC DUPLICATE. THE ORIGINAL, SIGNED BY THE ENGINEER AND APPROVED FOR PUBLICATION, IS KEPT ON FILE AT THE WASHINGTON STATE DEPARTMENT OF TRANSPORTATION. A COPY MAY BE OBTAINED UPON REQUEST.

NEMA 4X NON-ADJUSTABLE JUNCTION BOX

STANDARD PLAN J-40.36-00

SHEET 1 OF 1 SHEET

APPROVED FOR PUBLICATION

Pasco Bakotich III — STATE DESIGN ENGINEER
06-03-10 — DATE

Washington State Department of Transportation

DRAWN BY: LISA CYFORD

EFFECTIVE: AUGUST 6, 2012 TO August 4, 2013
EFFECTIVE: AUGUST 6, 2012 TO August 4, 2013
EFFECTIVE: AUGUST 6, 2012 TO August 4, 2013
EFFECTIVE: AUGUST 6, 2012 TO August 4, 2013

EFFECTIVE: AUGUST 6, 2012 TO August 4, 2013

DRAWN BY: LISA CYFORD

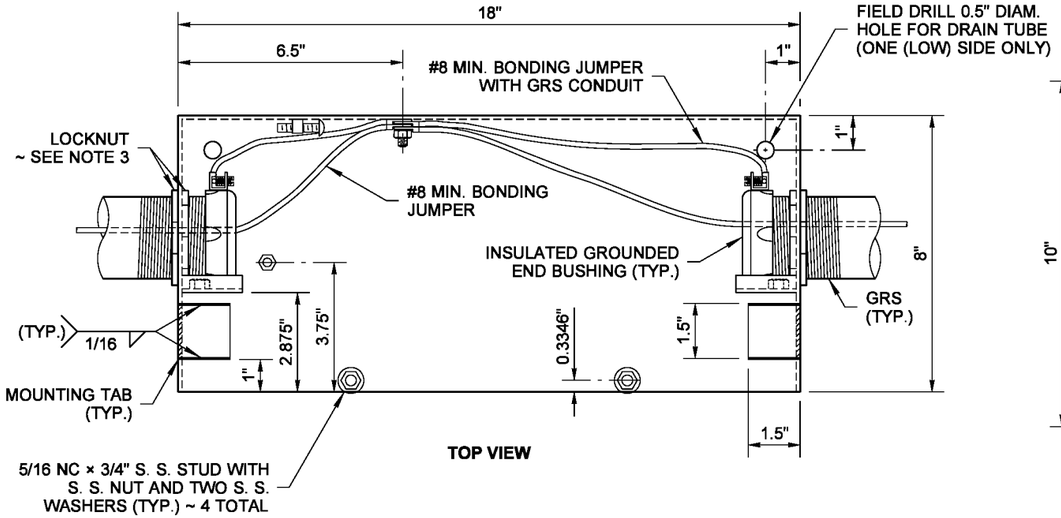

TOP VIEW

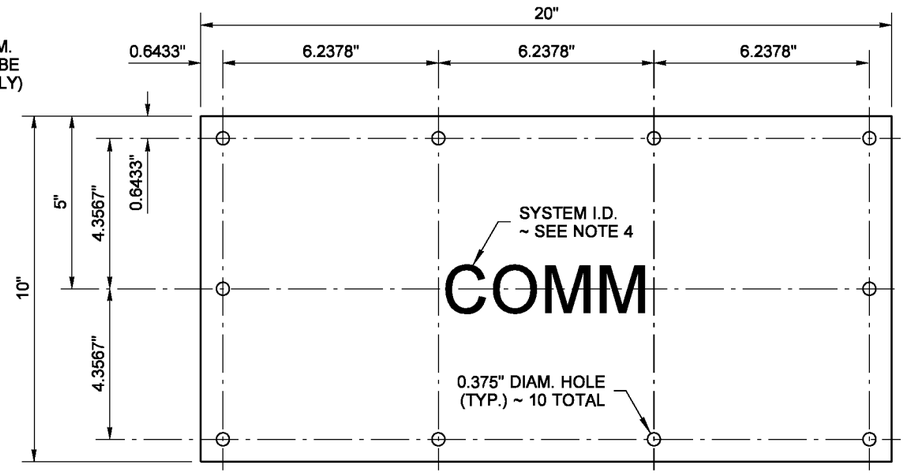

FRONT VIEW

PERMANENT COVER

12 GAGE, TYPE 304 STAINLESS STEEL WITH #4 FINISH

NOTES

1. Junction Box shall be constructed of Type 304 stainless steel, welded seam construction, 12 gage box with #2B finish, 12 gage adjustment tabs, and 12 gage mounting tabs.
2. Field drill or punch holes in the center of Junction Box ends. Additional holes may be required.
3. Use fittings that are UL listed and CSA certified condrete tight on the outside of the Junction Box conduit connection. Use an insulated, grounded end bushing on the inside for GRS conduit. Use an end bell bushing on the inside for PVC conduit
4. The System Identification letters shall be 1/16" line thickness formed by engraving, stamping or with a S.S. weld bead.
5. Liberally coat the threads of the cover fasteners with anti-sieze compound during construction and before final closure.
6. Detail shown for box installation in slip form barrier.
7. Conduit capacity = 8"
8. Conduits shall enter Junction Box from ends only.
9. Not to be used for Stainless Steel Junction Box that are traffic barrier Mounted. See **Standard Plan J-40.36.**

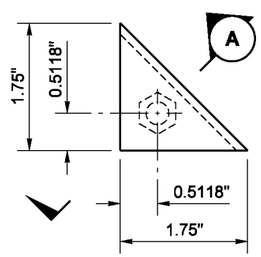

ADJUSTMENT TAB DETAIL

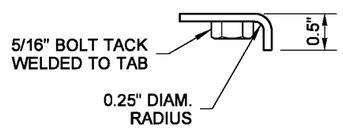

SECTION (A)

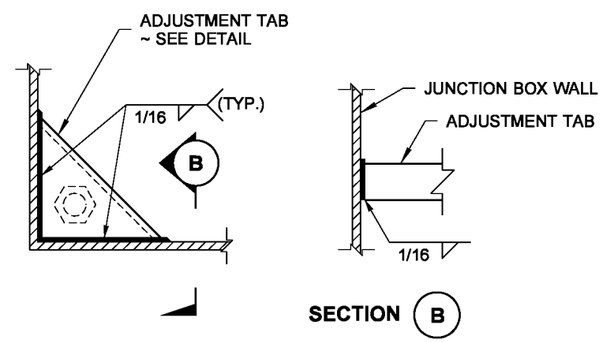

SECTION (B)

ADJUSTMENT TAB MOUNTING DETAIL

SYSTEM IDENTIFICATION DETAIL

≈ 1" (TYP.) ≈ 1" (TYP.)

ITS

INTELLIGENT TRANSPORTATION SYSTEM

COMM

COMMUNICATION SYSTEM

LT

LIGHTING SYSTEM

TS

TRAFFIC SIGNAL SYSTEM

TEL

TELEPHONE SYSTEM

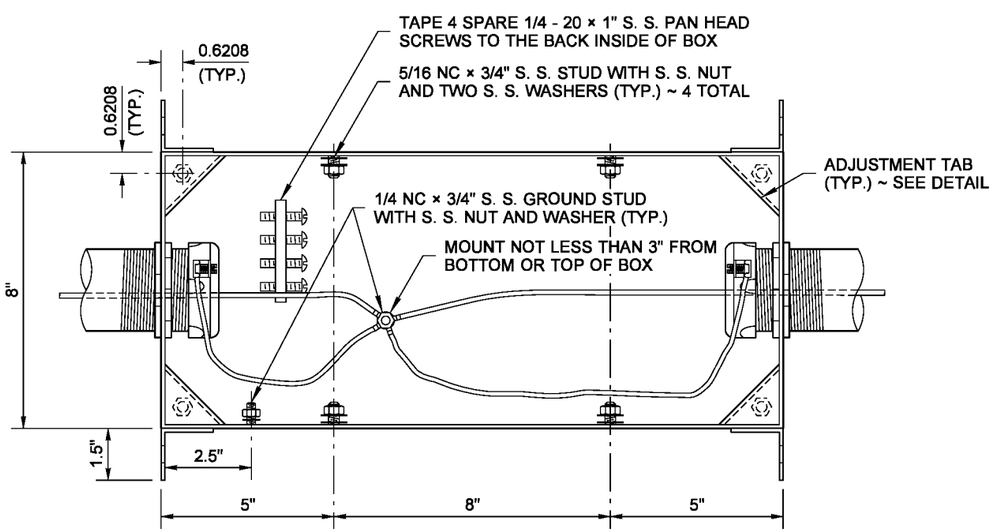

FRONT VIEW

JUNCTION BOX

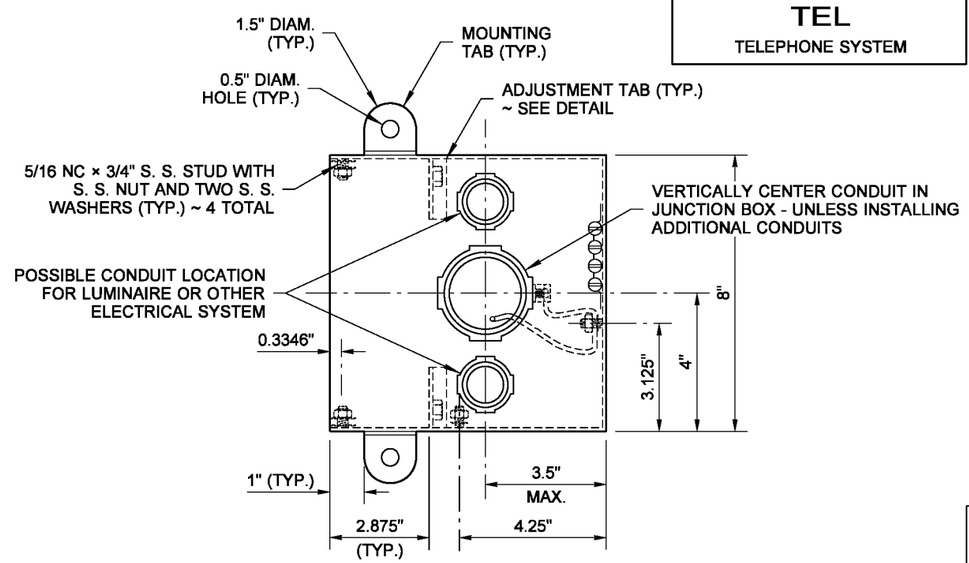

SIDE VIEW

CONDUITS SHALL BE VERTICALLY ALIGNED AND PLACED WITH EQUIDISTANCE FROM ADJACENT CONDUITS TO JUNCTION BOX WALLS

NOTE: THIS PLAN IS NOT A LEGAL ENGINEERING DOCUMENT BUT AN ELECTRONIC DUPLICATE. THE ORIGINAL, SIGNED BY THE ENGINEER AND APPROVED FOR PUBLICATION, IS KEPT ON FILE AT THE WASHINGTON STATE DEPARTMENT OF TRANSPORTATION. A COPY MAY BE OBTAINED UPON REQUEST.

NEMA 3R ADJUSTABLE FLUSH MOUNT JUNCTION BOX

STANDARD PLAN J-40.37-00

SHEET 1 OF 2 SHEETS

APPROVED FOR PUBLICATION

Pasco Bakotich III — STATE DESIGN ENGINEER

06-03-10 — DATE

Washington State Department of Transportation

EFFECTIVE: AUGUST 6, 2012 TO August 4, 2013

EFFECTIVE: AUGUST 6, 2012 TO August 4, 2013
EFFECTIVE: AUGUST 6, 2012 TO August 4, 2013

DRAWN BY: LISA CYFORD

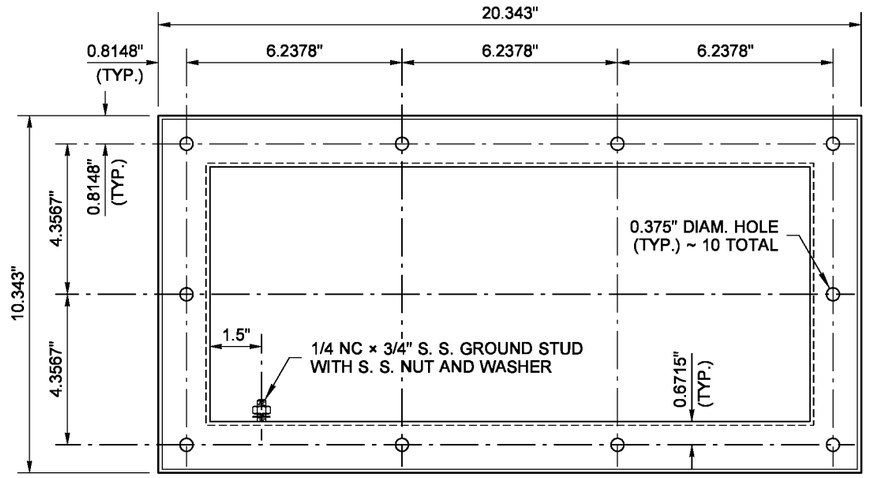

FRONT VIEW

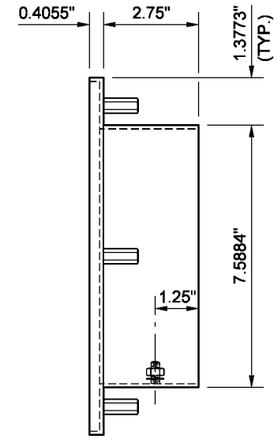

SIDE VIEW

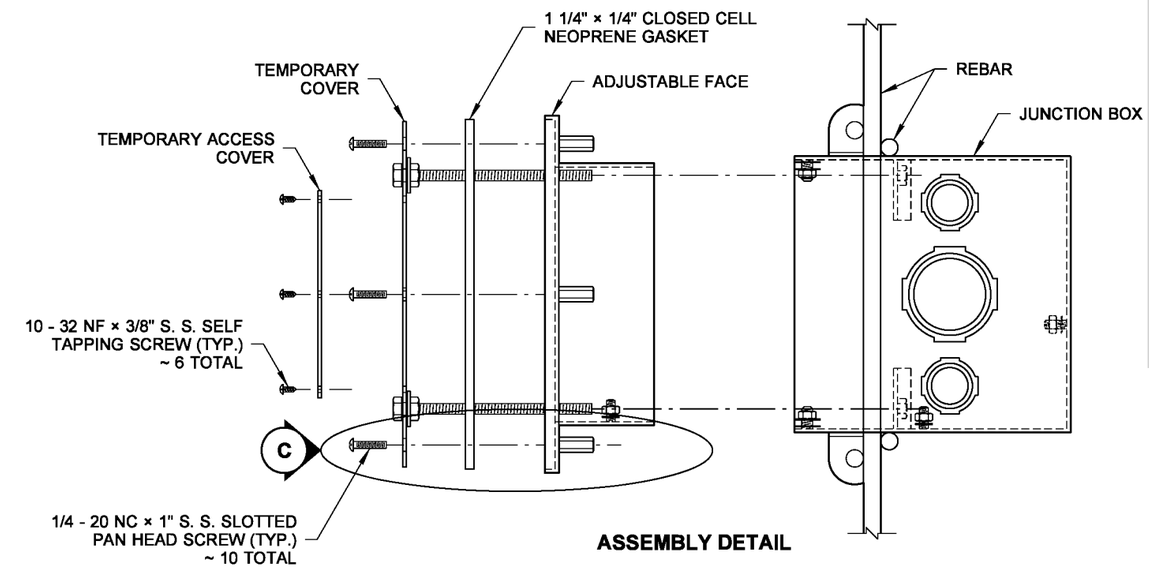

ASSEMBLY DETAIL

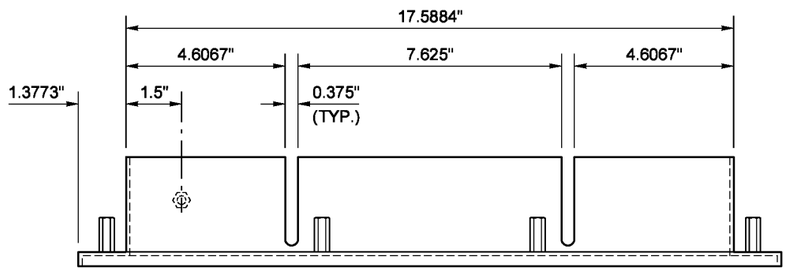

TOP VIEW
ADJUSTABLE FACE

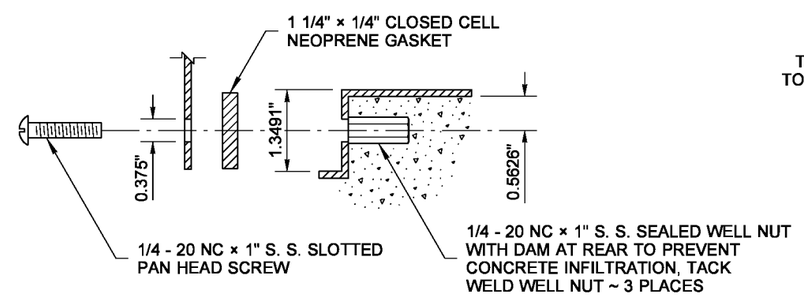

DETAIL C

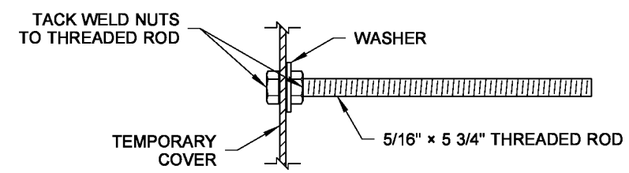

ADJUSTMENT BOLT DETAIL

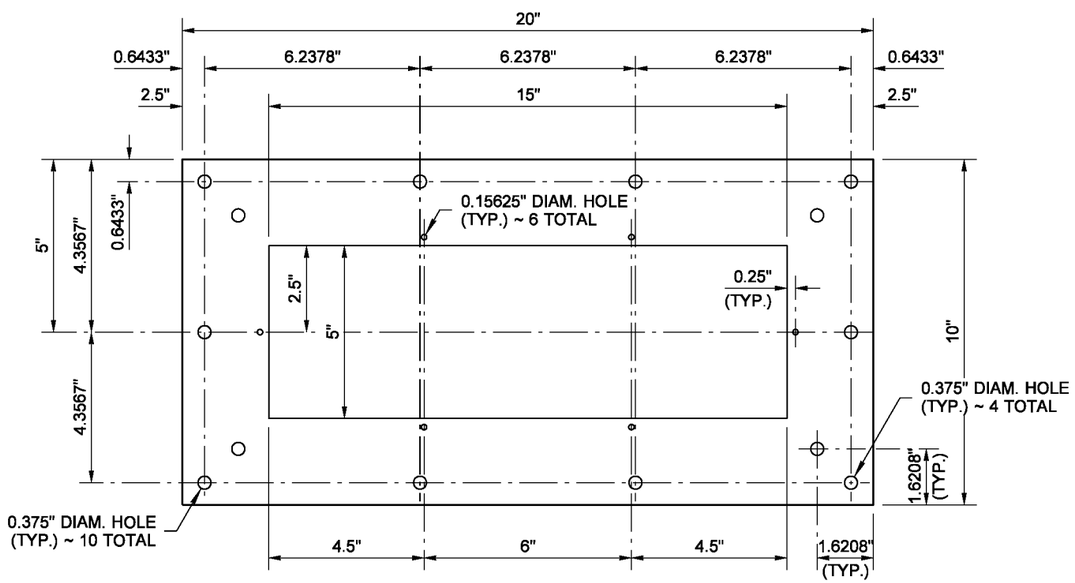

FRONT VIEW
TEMPORARY COVER
12 GAGE STEEL

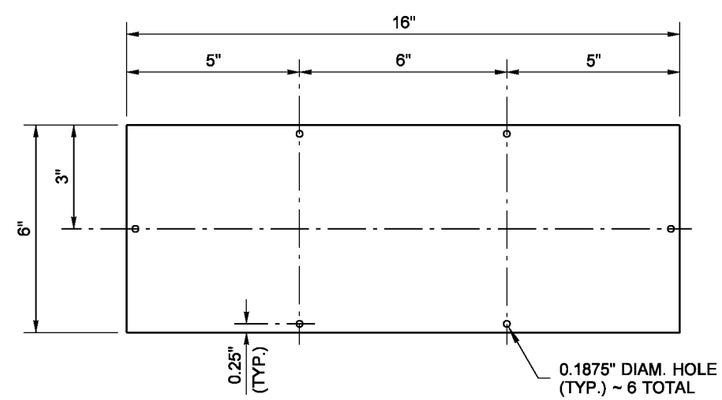

FRONT VIEW
TEMPORARY ACCESS COVER
12 GAGE STEEL

THEODORE J. TREPANIER
STATE OF WASHINGTON
25335
REGISTERED
PROFESSIONAL ENGINEER

NOTE: THIS PLAN IS NOT A LEGAL ENGINEERING DOCUMENT BUT AN ELECTRONIC DUPLICATE. THE ORIGINAL, SIGNED BY THE ENGINEER AND APPROVED FOR PUBLICATION, IS KEPT ON FILE AT THE WASHINGTON STATE DEPARTMENT OF TRANSPORTATION. A COPY MAY BE OBTAINED UPON REQUEST.

NEMA 3R ADJUSTABLE FLUSH MOUNT JUNCTION BOX

STANDARD PLAN J-40.37-00

SHEET 2 OF 2 SHEETS

APPROVED FOR PUBLICATION

Pasco Bakotich III — STATE DESIGN ENGINEER

06-03-10 — DATE

Washington State Department of Transportation

EFFECTIVE: AUGUST 6, 2012 TO August 4, 2013
EFFECTIVE: AUGUST 6, 2012 TO August 4, 2013
EFFECTIVE: AUGUST 6, 2012 TO August 4, 2013
EFFECTIVE: AUGUST 6, 2012 TO August 4, 2013

EFFECTIVE: AUGUST 6, 2012 TO August 4, 2013

DRAWN BY: LISA CYFORD

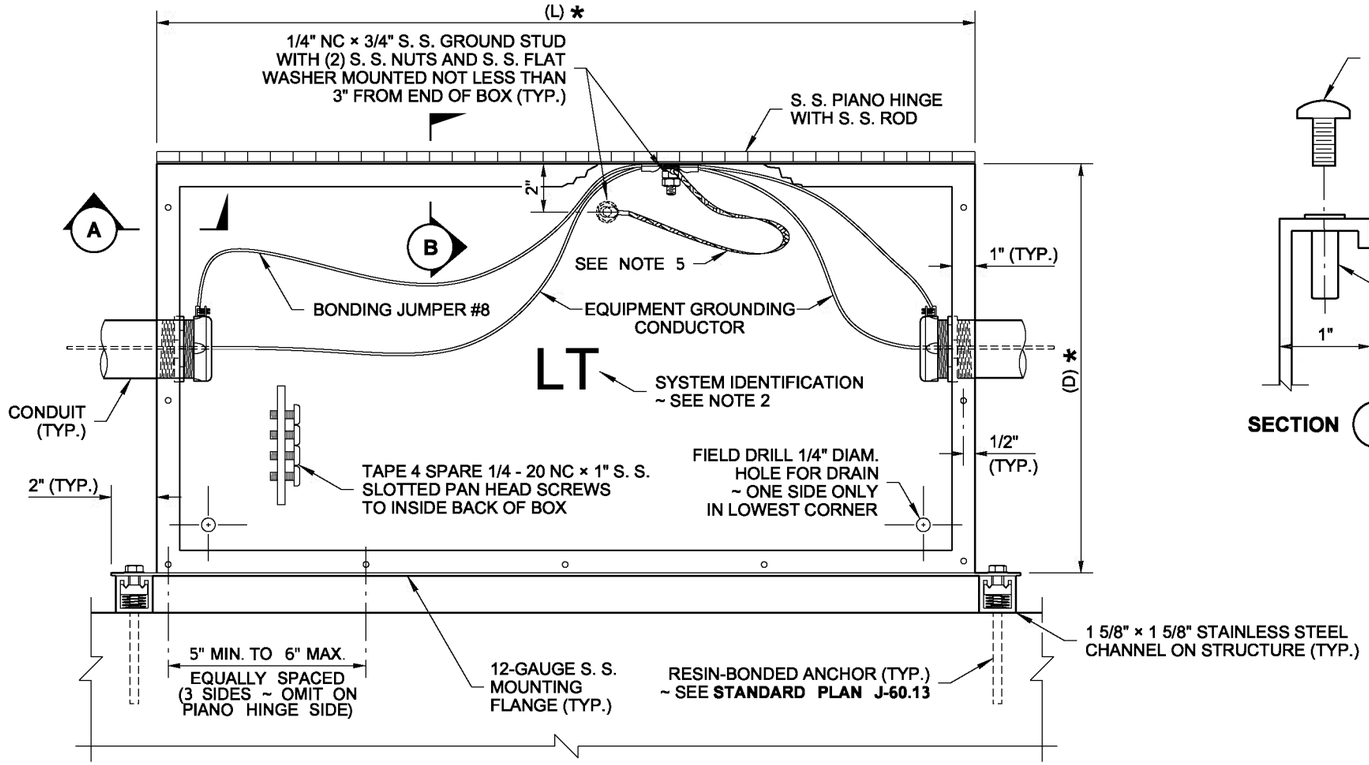

PLAN VIEW

TYPE 304 STAINLESS STEEL, WELDED SEAM CONSTRUCTION
12-GAUGE BACKBOX WITH #4 FINISH

* See Contract Plans for L, W, and D dimensions.

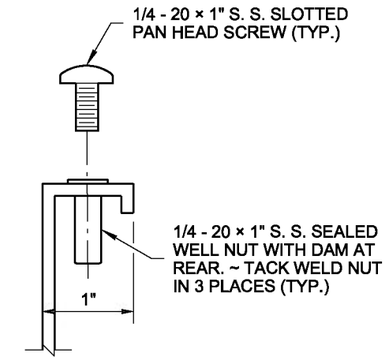

SECTION A

NOTES

1. Drilling through reinforcing steel is not allowed. If steel is hit while drilling, the location shall be moved and the abandoned hole filled with grout conforming to **Standard Specification 6-02.3(20).** There shall be a minimum of 3" edge distance to the centerline of anchor holes in concrete. Mount the stainless steel support using an approved resin-bonded anchor system, installed per manufacturers' recommendation. Resin bonded anchors shall be stainless steel and shall be of 3/8" diameter. (Expansion Anchors are not allowed).
2. The System Identification letters on the box lid shall be 1/8" line thickness formed by engraving, stamping, or with a S. S. weld bead. See System Identification Detail and **Standard Specifications 9-29.2(4)**.
3. See **Standard Plan J-60.13** for Stainless Steel Channel details.
4. Size Junction Box per **NEC 314.28**, with the exception that for all length and width calculations, use the 8 times multiplier instead of the 6 times.
5. Equipment Bonding Jumper shall be #8 AWG (min.) × 1 foot of tinned, braided copper.

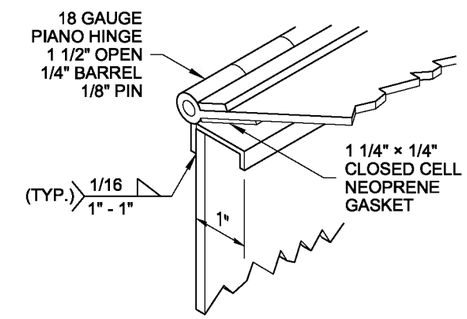

SECTION B

ISOMETRIC VIEW

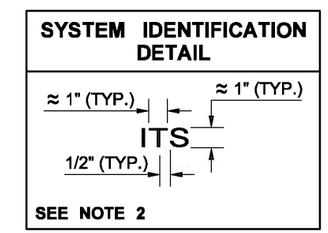

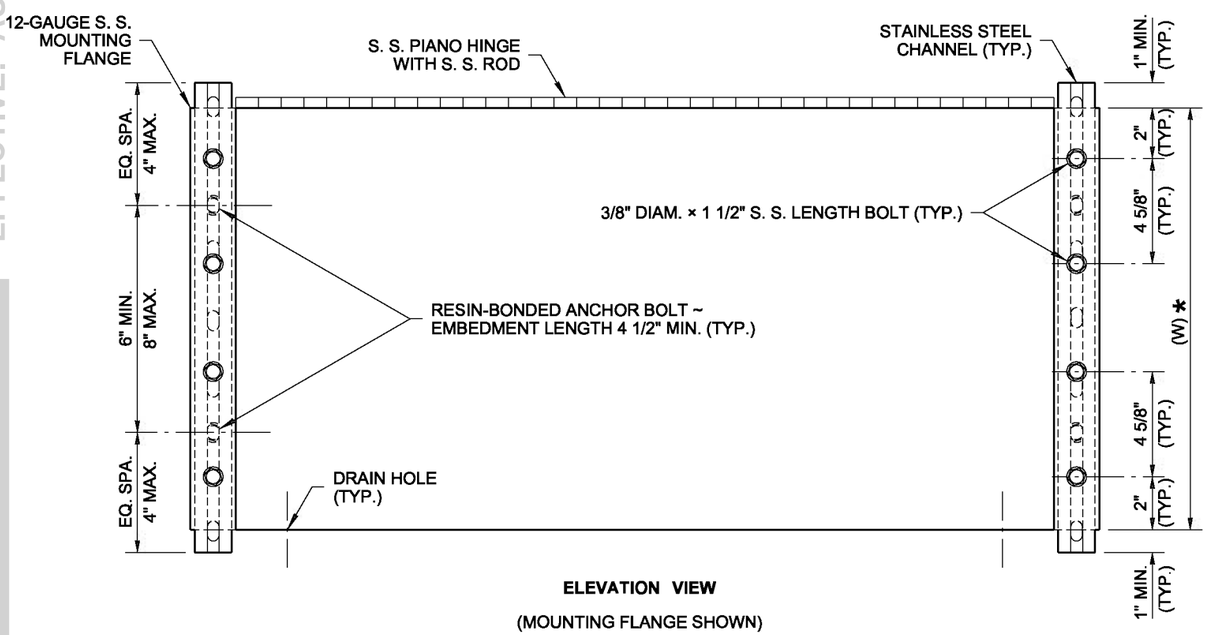

ELEVATION VIEW

(MOUNTING FLANGE SHOWN)

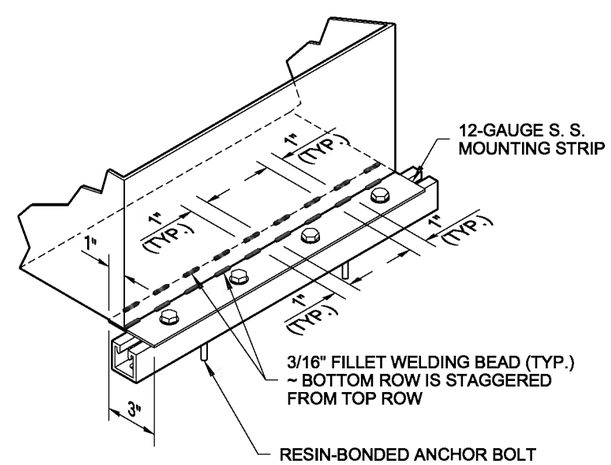

ISOMETRIC VIEW

(MOUNTING STRIP SHOWN)

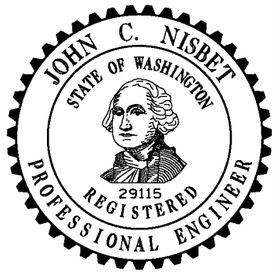

NOTE: THIS PLAN IS NOT A LEGAL ENGINEERING DOCUMENT BUT AN ELECTRONIC DUPLICATE. THE ORIGINAL, SIGNED BY THE ENGINEER AND APPROVED FOR PUBLICATION, IS KEPT ON FILE AT THE WASHINGTON STATE DEPARTMENT OF TRANSPORTATION. A COPY MAY BE OBTAINED UPON REQUEST.

TOP ENTRY NEMA 4X SURFACE-MOUNT JUNCTION BOX

STANDARD PLAN J-40.38-00

SHEET 1 OF 1 SHEET

APPROVED FOR PUBLICATION

Pasco Bakotich III — 06-16-11

STATE DESIGN ENGINEER — DATE

Washington State Department of Transportation

EFFECTIVE: AUGUST 6, 2012 TO August 4, 2013

EFFECTIVE: AUGUST 6, 2012 TO August 4, 2013
EFFECTIVE: AUGUST 6, 2012 TO August 4, 2013

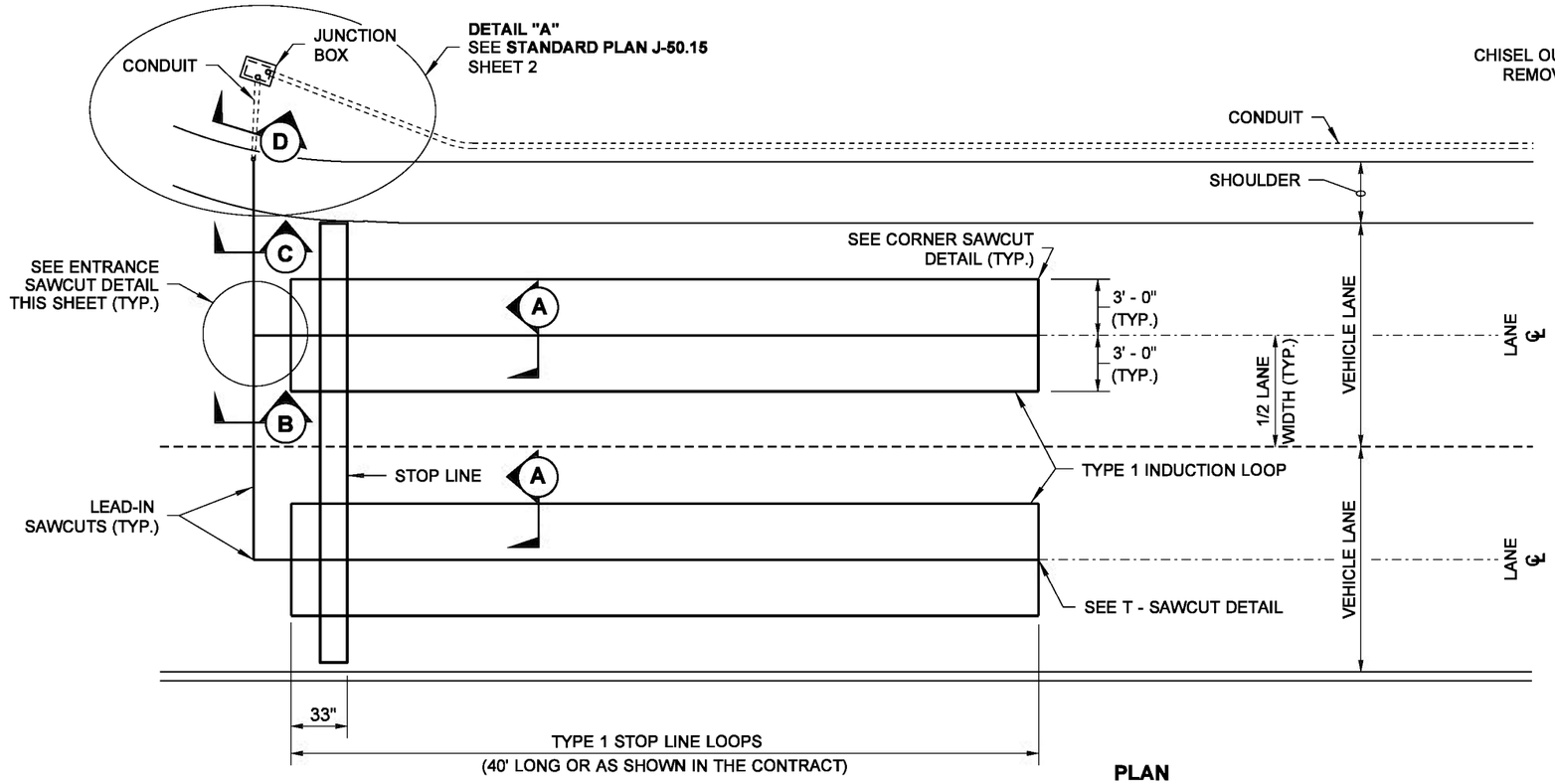

PLAN

TYPE 1 STOP LINE LOOPS

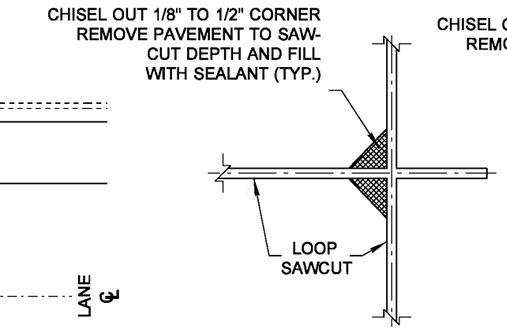

T - SAWCUT DETAIL

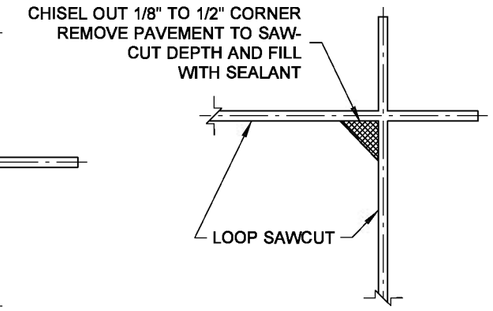

CORNER SAWCUT DETAIL

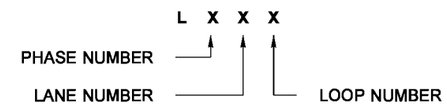

LOOP NUMBER MARKING DETAIL

NOTES

1. For Installation Notes and Details see **Standard Plan J-50.15.**
2. For Sections A, B, C, and D, see **Standard Plan J-50.15.**

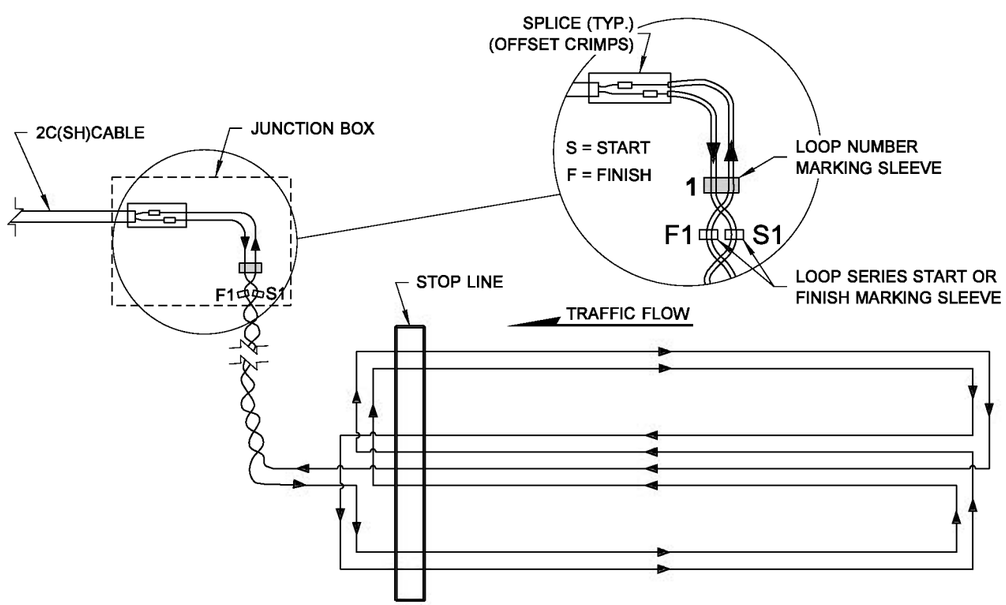

TYPE 1 STOP LINE LOOP WIRING DIAGRAM

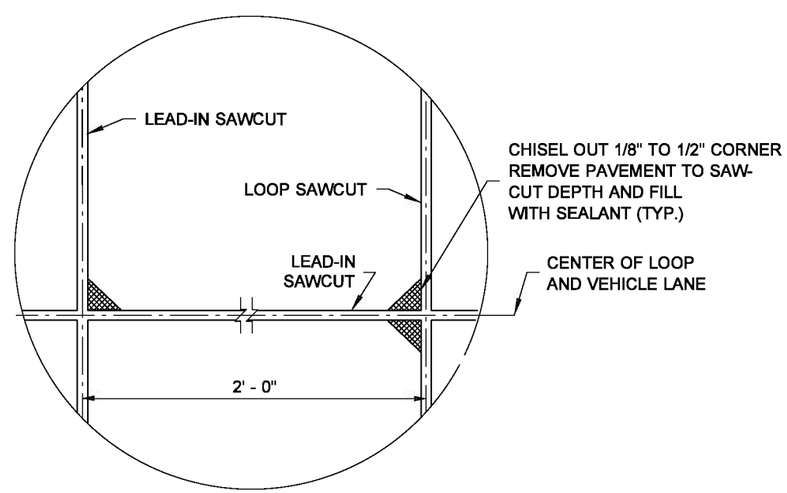

ENTRANCE SAWCUT DETAIL

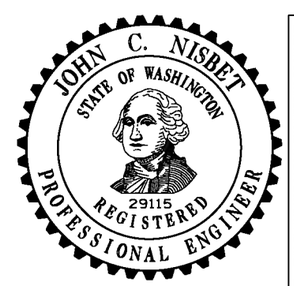

NOTE: THIS PLAN IS NOT A LEGAL ENGINEERING DOCUMENT BUT AN ELECTRONIC DUPLICATE. THE ORIGINAL, SIGNED BY THE ENGINEER AND APPROVED FOR PUBLICATION, IS KEPT ON FILE AT THE WASHINGTON STATE DEPARTMENT OF TRANSPORTATION. A COPY MAY BE OBTAINED UPON REQUEST.

TYPE 1 INDUCTION LOOP

STANDARD PLAN J-50.10-00

SHEET 1 OF 1 SHEET

APPROVED FOR PUBLICATION

Pasco Bakotich III — STATE DESIGN ENGINEER

06-03-11 — DATE

Washington State Department of Transportation

DRAWN BY: FERN LIDDELL

EFFECTIVE: AUGUST 6, 2012 TO August 4, 2013
EFFECTIVE: AUGUST 6, 2012 TO August 4, 2013
EFFECTIVE: AUGUST 6, 2012 TO August 4, 2013
EFFECTIVE: AUGUST 6, 2012 TO August 4, 2013

EFFECTIVE: AUGUST 6, 2012 TO August 4, 2013
EFFECTIVE: AUGUST 6, 2012 TO August 4, 2013

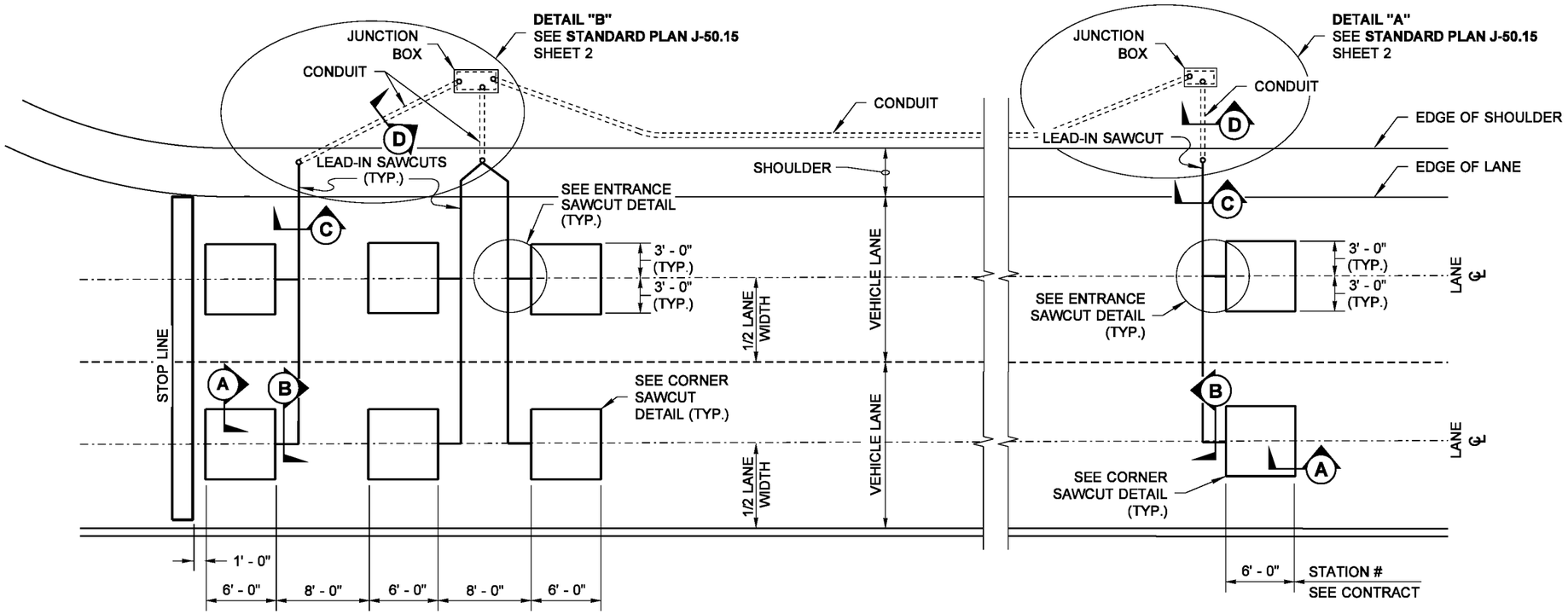

TYPE 2 STOP LINE LOOPS

PLAN

TYPE 2 ADVANCE LOOPS

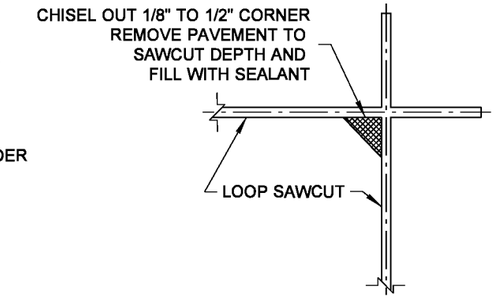

CORNER SAWCUT DETAIL

NOTES

1. For Installation Notes and Details see **Standard Plan J-50.15.**
2. For Sections A, B, C, and D, see **Standard Plan J-50.15.**
3. All of the loop lead-in wires shall return to the Junction Box.
4. For Splice Detail, see **Standard Plan J-50.15.**
5. For additional Induction Loop details, see **Standard Plan J-50.15.**

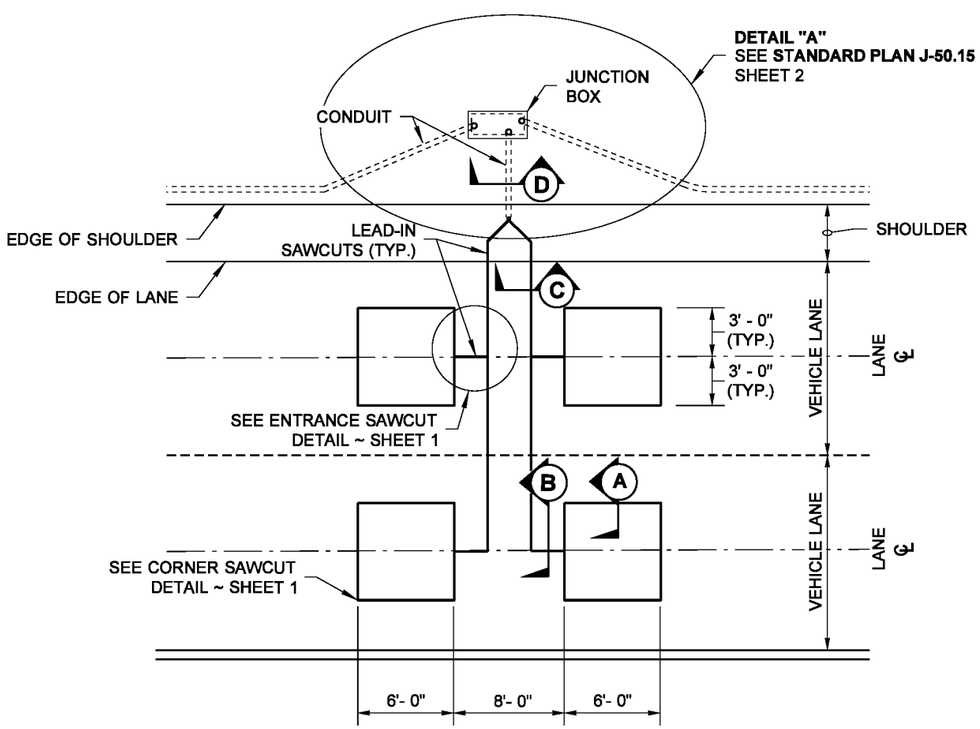

TYPE 2 SAMPLING LOOPS

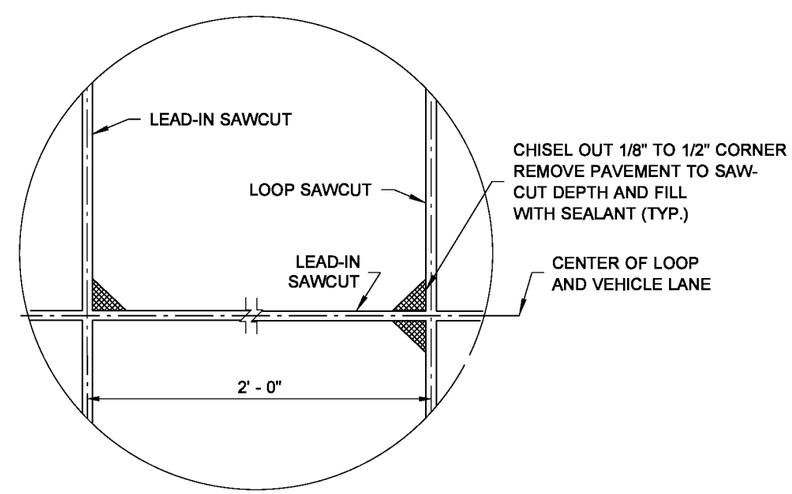

ENTRANCE SAWCUT DETAIL

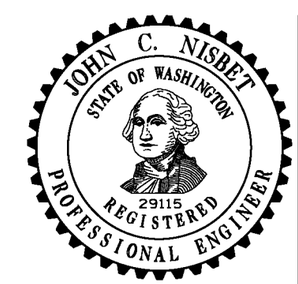

NOTE: THIS PLAN IS NOT A LEGAL ENGINEERING DOCUMENT BUT AN ELECTRONIC DUPLICATE. THE ORIGINAL, SIGNED BY THE ENGINEER AND APPROVED FOR PUBLICATION, IS KEPT ON FILE AT THE WASHINGTON STATE DEPARTMENT OF TRANSPORTATION. A COPY MAY BE OBTAINED UPON REQUEST.

TYPE 2 INDUCTION LOOP

STANDARD PLAN J-50.11-00

SHEET 1 OF 2 SHEETS

APPROVED FOR PUBLICATION

Pasco Bakotich III — STATE DESIGN ENGINEER

06-03-11 — DATE

Washington State Department of Transportation

DRAWN BY: FERN LIDDELL

EFFECTIVE: AUGUST 6, 2012 TO August 4, 2013
EFFECTIVE: AUGUST 6, 2012 TO August 4, 2013
EFFECTIVE: AUGUST 6, 2012 TO August 4, 2013
EFFECTIVE: AUGUST 6, 2012 TO August 4, 2013

EFFECTIVE: AUGUST 6, 2012 TO August 4, 2013
EFFECTIVE: AUGUST 6, 2012 TO August 4, 2013

DRAWN BY: FERN LIDDELL

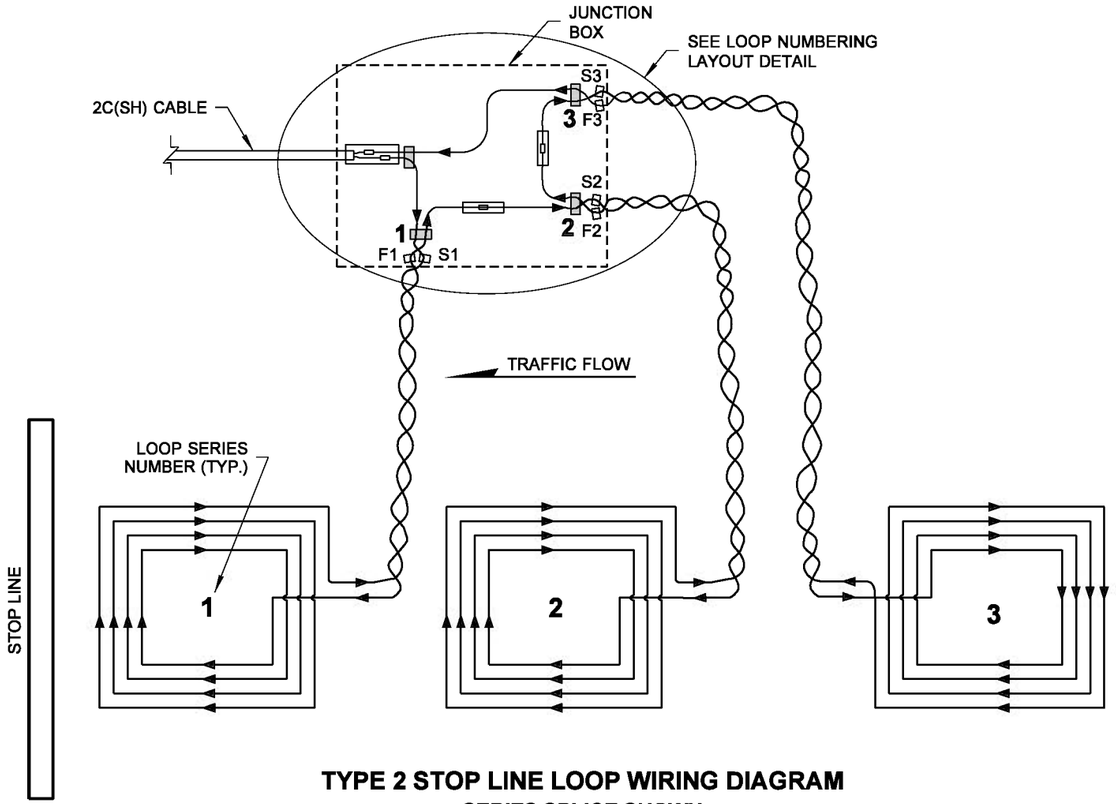

TYPE 2 STOP LINE LOOP WIRING DIAGRAM
SERIES SPLICE SHOWN

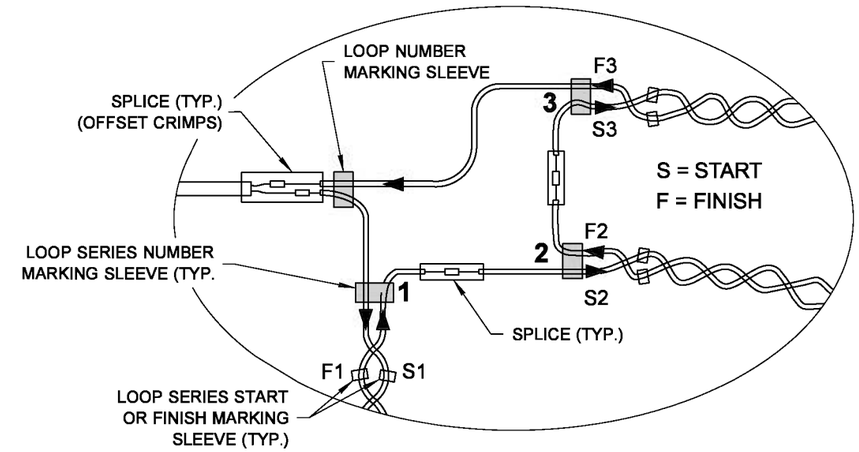

LOOP NUMBERING LAYOUT DETAIL

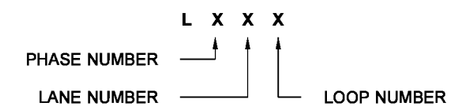

LOOP NUMBER MARKING DETAIL

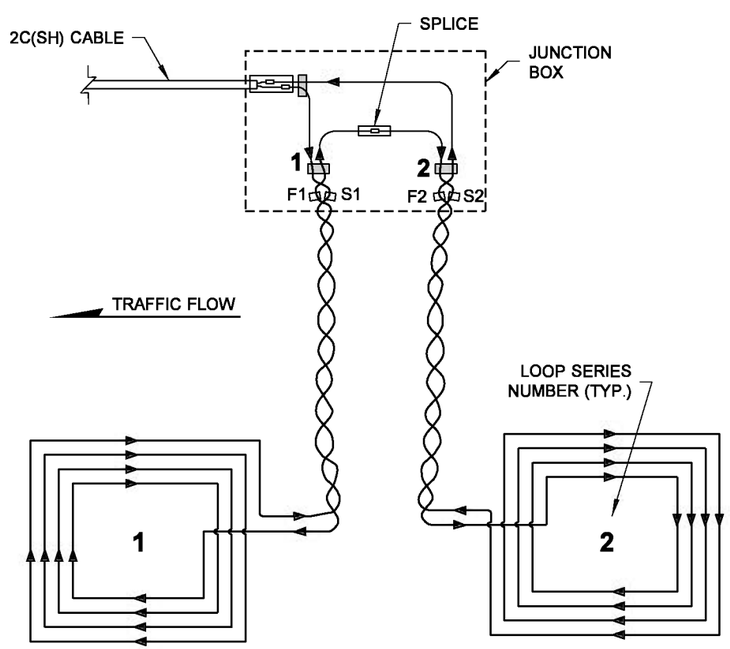

TYPE 2 SAMPLING LOOP WIRING DIAGRAM
SERIES SPLICE SHOWN

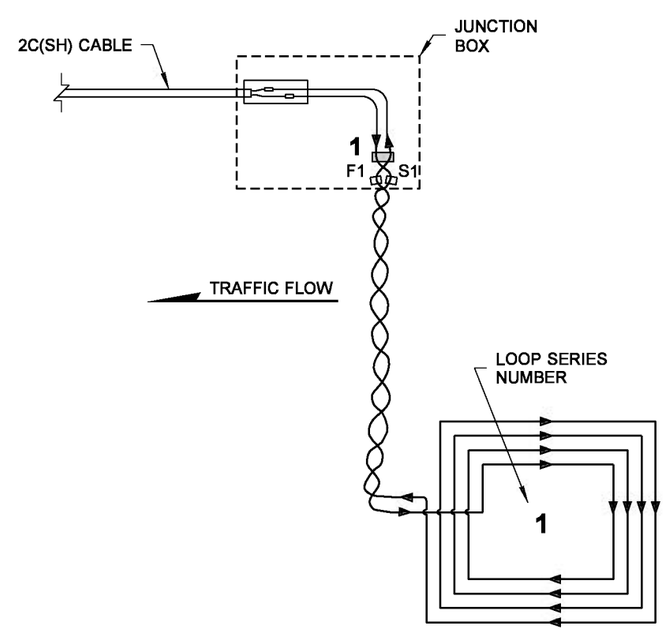

TYPE 2 ADVANCE LOOP WIRING DIAGRAM

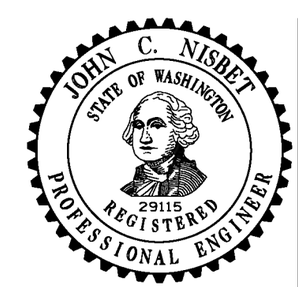

NOTE: THIS PLAN IS NOT A LEGAL ENGINEERING DOCUMENT BUT AN ELECTRONIC DUPLICATE. THE ORIGINAL, SIGNED BY THE ENGINEER AND APPROVED FOR PUBLICATION, IS KEPT ON FILE AT THE WASHINGTON STATE DEPARTMENT OF TRANSPORTATION. A COPY MAY BE OBTAINED UPON REQUEST.

TYPE 2 INDUCTION LOOP

STANDARD PLAN J-50.11-00

SHEET 2 OF 2 SHEETS

APPROVED FOR PUBLICATION

Pasco Bakotich III — STATE DESIGN ENGINEER
06-03-11 — DATE

Washington State Department of Transportation

EFFECTIVE: AUGUST 6, 2012 TO August 4, 2013
EFFECTIVE: AUGUST 6, 2012 TO August 4, 2013
EFFECTIVE: AUGUST 6, 2012 TO August 4, 2013
EFFECTIVE: AUGUST 6, 2012 TO August 4, 2013

EFFECTIVE: AUGUST 6, 2012 TO August 4, 2013
EFFECTIVE: AUGUST 6, 2012 TO August 4, 2013

DRAWN BY: FERN LIDDELL

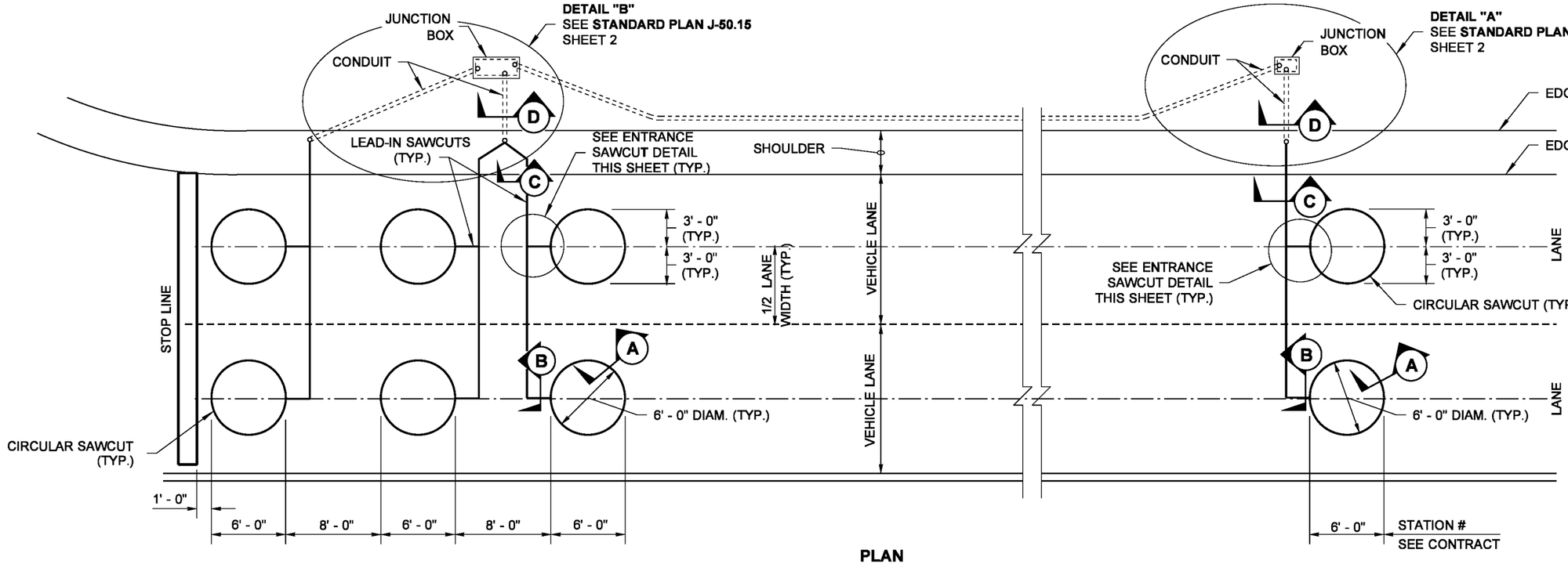

PLAN

TYPE 3 STOP LINE LOOPS

TYPE 3 ADVANCE LOOPS

NOTES

1. For Installation Notes and Details see **Standard Plan J-50.15.**
2. For Sections A, B, C, and D, see **Standard Plan J-50.15.**
3. All of the loop lead-in wires shall return to the Junction Box.
4. For Splice Detail, see **Standard Plan J-50.15.**
5. For Loop numbering Layout Details, see **sheet 3.**
6. For additional Induction Loop Details, see **Standard Plan J-50.15.**

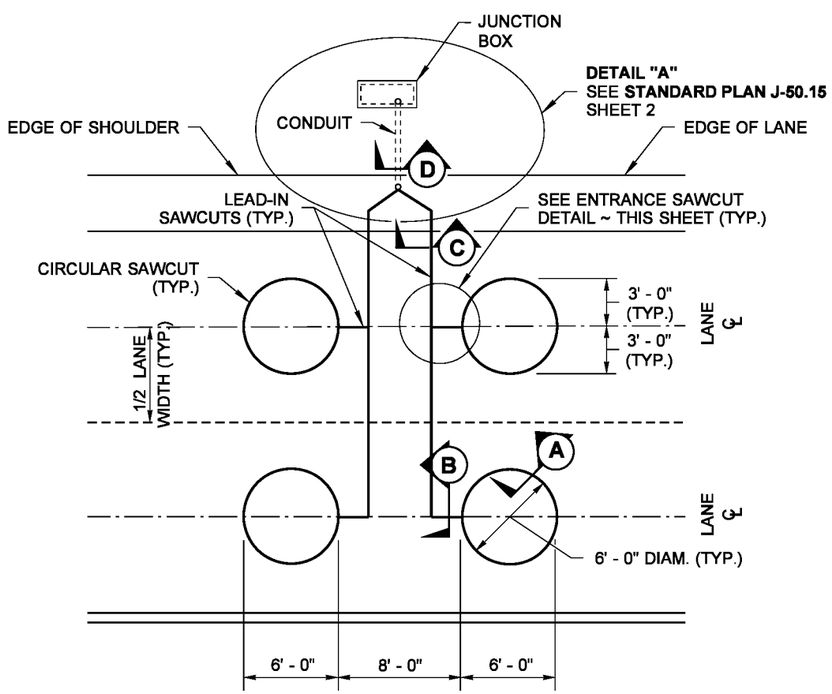

PLAN

TYPE 3 SAMPLING LOOPS

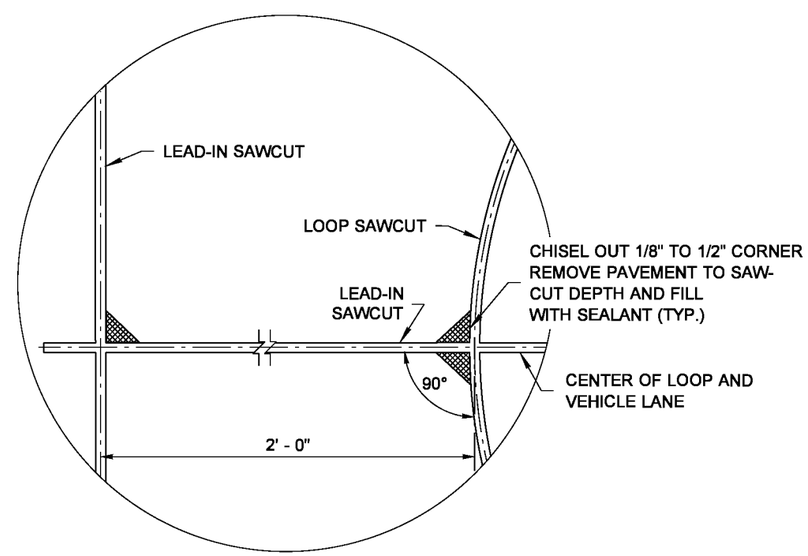

ENTRANCE SAWCUT DETAIL

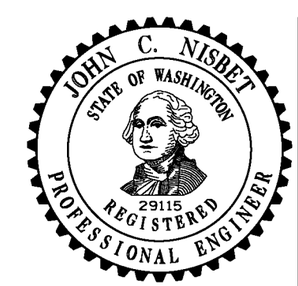

NOTE: THIS PLAN IS NOT A LEGAL ENGINEERING DOCUMENT BUT AN ELECTRONIC DUPLICATE. THE ORIGINAL, SIGNED BY THE ENGINEER AND APPROVED FOR PUBLICATION, IS KEPT ON FILE AT THE WASHINGTON STATE DEPARTMENT OF TRANSPORTATION. A COPY MAY BE OBTAINED UPON REQUEST.

TYPE 3 INDUCTION LOOP

STANDARD PLAN J-50.12-00

SHEET 1 OF 3 SHEETS

APPROVED FOR PUBLICATION

Pasco Bakotich III — STATE DESIGN ENGINEER

06-03-11 — DATE

Washington State Department of Transportation

EFFECTIVE: AUGUST 6, 2012 TO August 4, 2013
EFFECTIVE: AUGUST 6, 2012 TO August 4, 2013
EFFECTIVE: AUGUST 6, 2012 TO August 4, 2013
EFFECTIVE: AUGUST 6, 2012 TO August 4, 2013

EFFECTIVE: AUGUST 6, 2012 TO August 4, 2013
EFFECTIVE: AUGUST 6, 2012 TO August 4, 2013

DRAWN BY: FERN LIDDELL

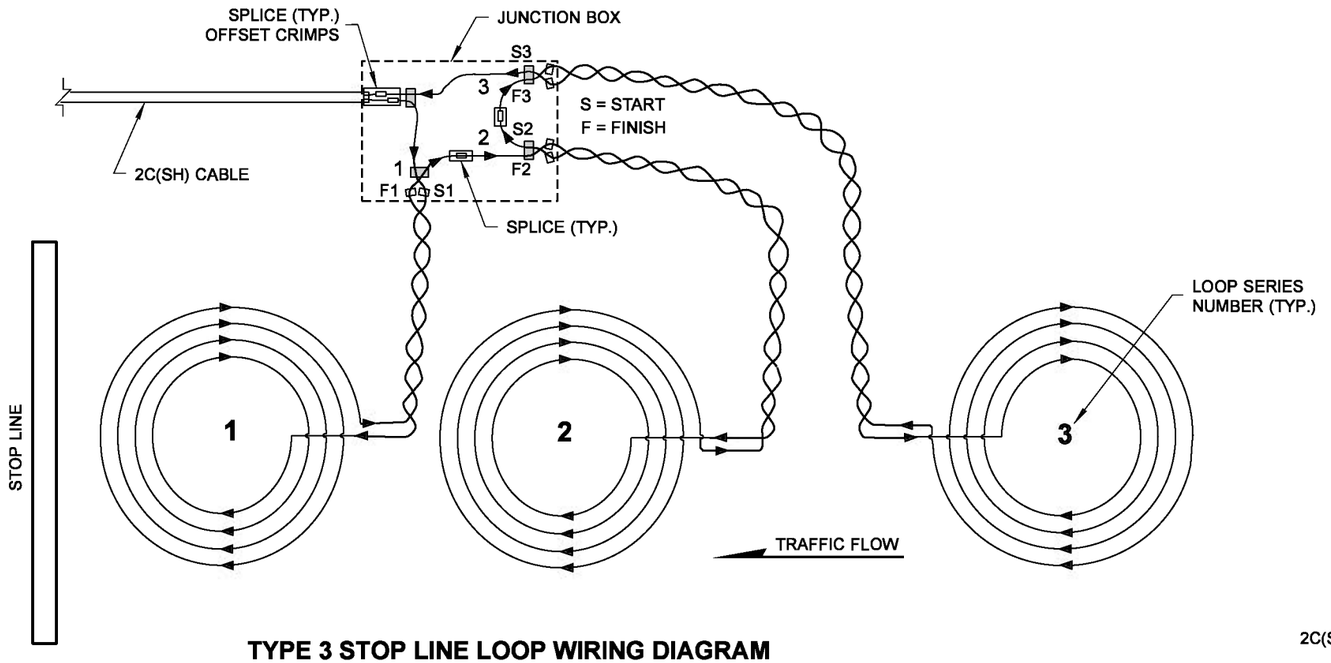

TYPE 3 STOP LINE LOOP WIRING DIAGRAM

SERIES SPLICE SHOWN

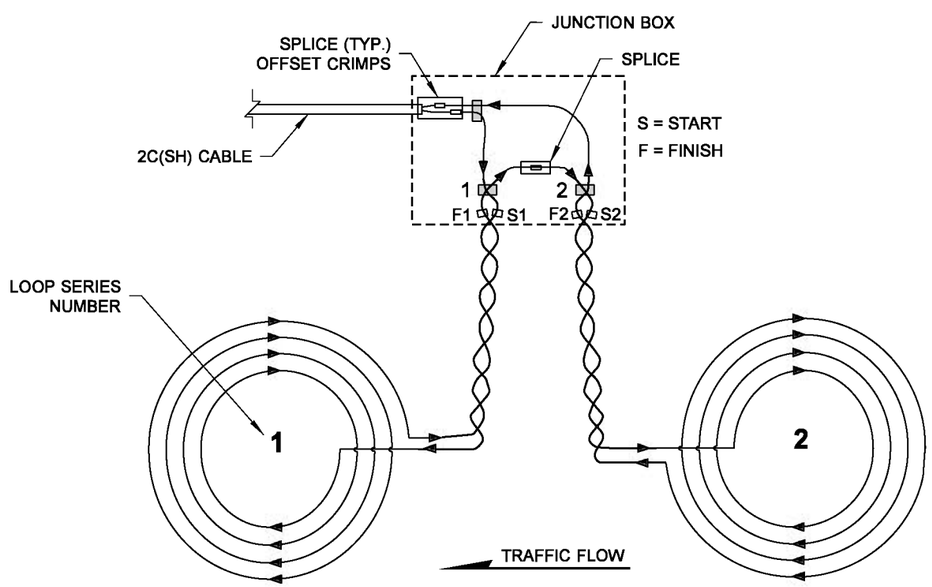

TYPE 3 SAMPLING LOOP WIRING DIAGRAM

SERIES SPLICE SHOWN

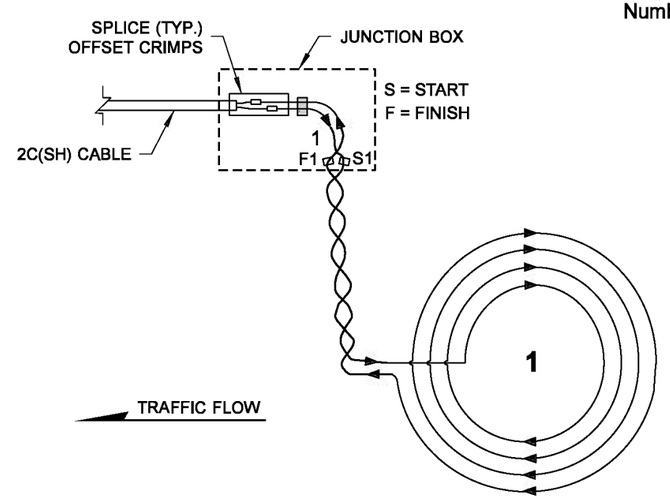

TYPE 3 ADVANCE
LOOP WIRING DIAGRAM

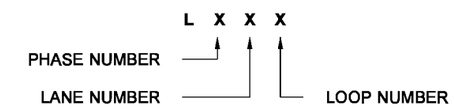

LOOP NUMBER MARKING DETAIL

NOTES

Loop numbering layout will be simillar to Loop Numbering Layout Detail, Sheet 3

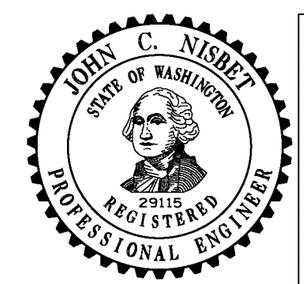

NOTE: THIS PLAN IS NOT A LEGAL ENGINEERING DOCUMENT BUT AN ELECTRONIC DUPLICATE. THE ORIGINAL, SIGNED BY THE ENGINEER AND APPROVED FOR PUBLICATION, IS KEPT ON FILE AT THE WASHINGTON STATE DEPARTMENT OF TRANSPORTATION. A COPY MAY BE OBTAINED UPON REQUEST.

TYPE 3 INDUCTION LOOP

STANDARD PLAN J-50.12-00

SHEET 2 OF 3 SHEETS

APPROVED FOR PUBLICATION

Pasco Bakotich III — STATE DESIGN ENGINEER

06-03-11 — DATE

Washington State Department of Transportation

EFFECTIVE: AUGUST 6, 2012 TO August 4, 2013
EFFECTIVE: AUGUST 6, 2012 TO August 4, 2013
EFFECTIVE: AUGUST 6, 2012 TO August 4, 2013
EFFECTIVE: AUGUST 6, 2012 TO August 4, 2013

EFFECTIVE: AUGUST 6, 2012 TO August 4, 2013
EFFECTIVE: AUGUST 6, 2012 TO August 4, 2013

DRAWN BY: FERN LIDDELL

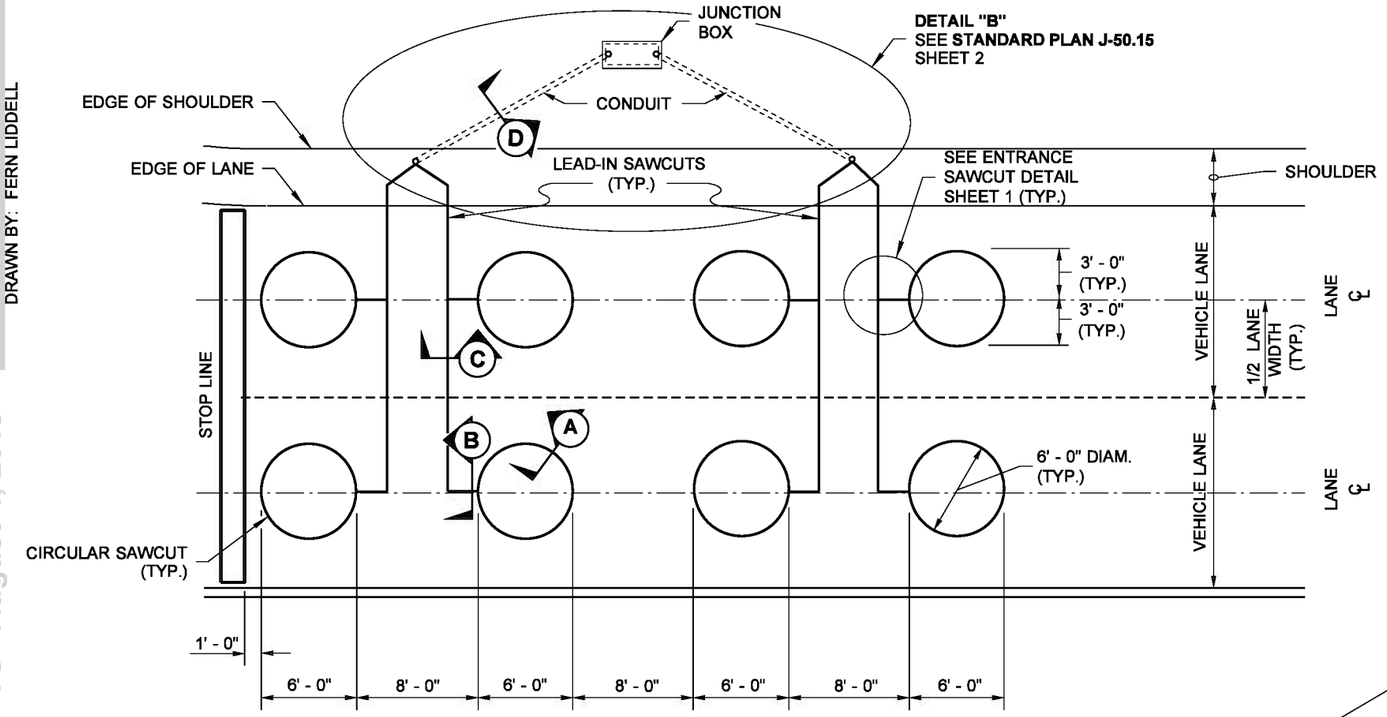

PLAN
TYPE 3A STOP LINE LOOPS

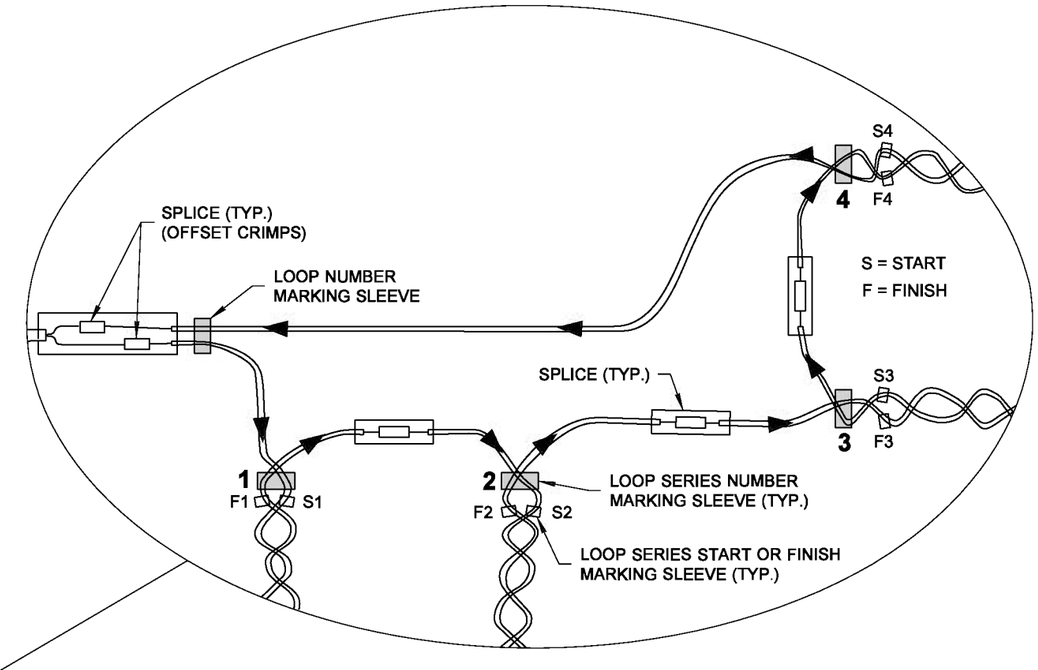

LOOP NUMBERING LAYOUT DETAIL

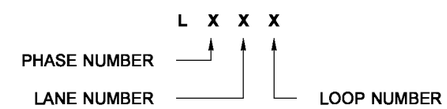

LOOP NUMBER MARKING DETAIL

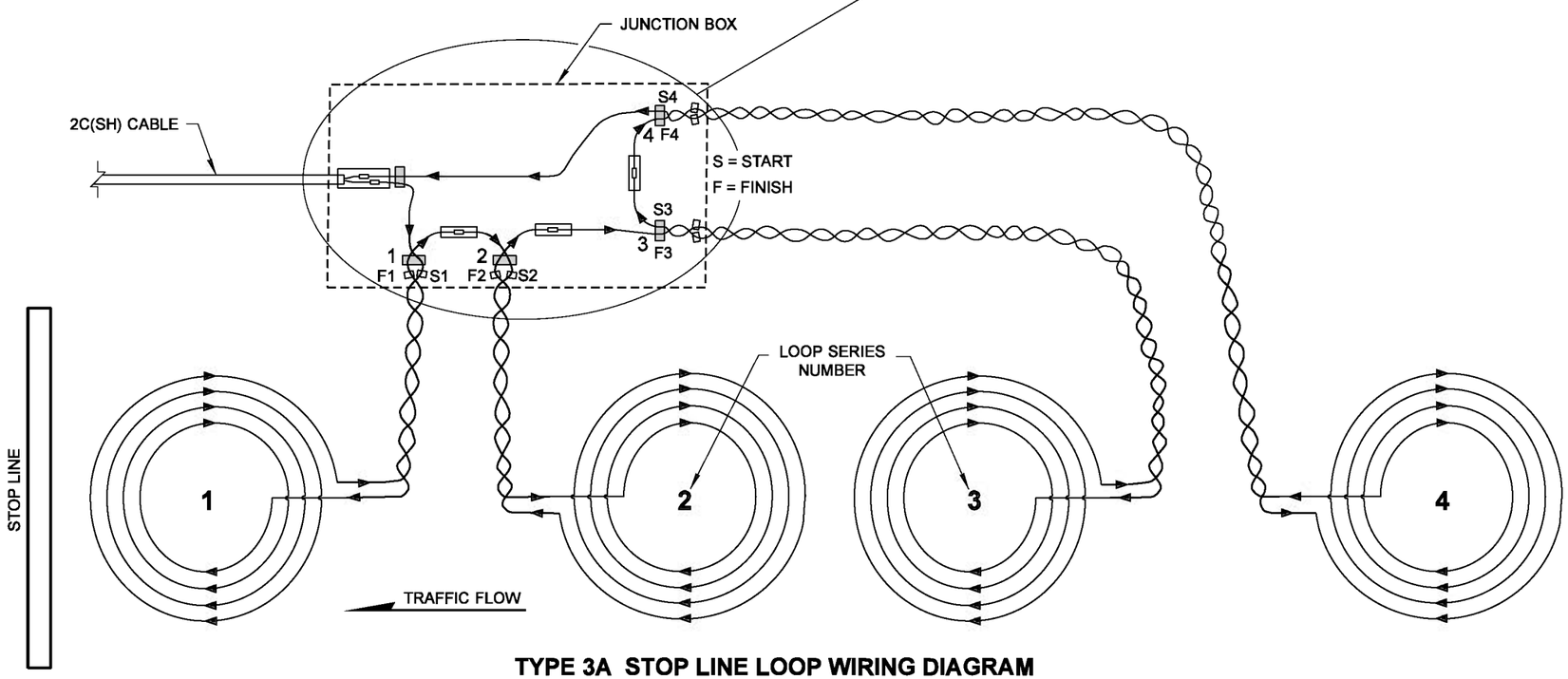

TYPE 3A STOP LINE LOOP WIRING DIAGRAM

SERIES SPLICE SHOWN

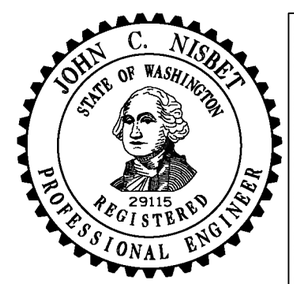

NOTE: THIS PLAN IS NOT A LEGAL ENGINEERING DOCUMENT BUT AN ELECTRONIC DUPLICATE. THE ORIGINAL, SIGNED BY THE ENGINEER AND APPROVED FOR PUBLICATION, IS KEPT ON FILE AT THE WASHINGTON STATE DEPARTMENT OF TRANSPORTATION. A COPY MAY BE OBTAINED UPON REQUEST.

TYPE 3 INDUCTION LOOP

STANDARD PLAN J-50.12-00

SHEET 3 OF 3 SHEETS

APPROVED FOR PUBLICATION

Pasco Bakotich III — STATE DESIGN ENGINEER
06-03-11 — DATE

Washington State Department of Transportation

EFFECTIVE: AUGUST 6, 2012 TO August 4, 2013
EFFECTIVE: AUGUST 6, 2012 TO August 4, 2013
EFFECTIVE: AUGUST 6, 2012 TO August 4, 2013
EFFECTIVE: AUGUST 6, 2012 TO August 4, 2013

EFFECTIVE: AUGUST 6, 2012 TO August 4, 2013

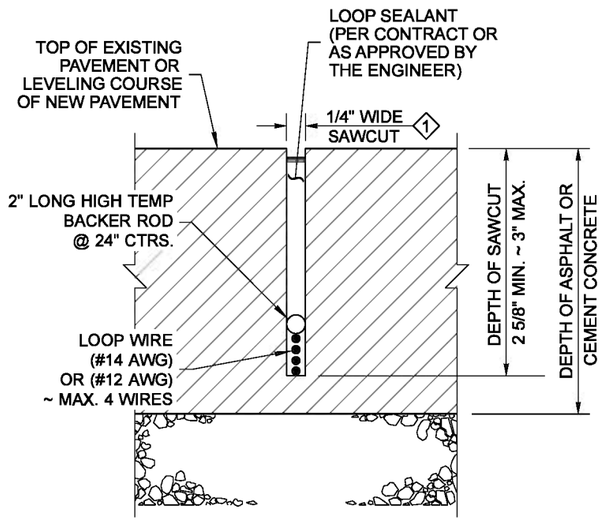

SECTION A

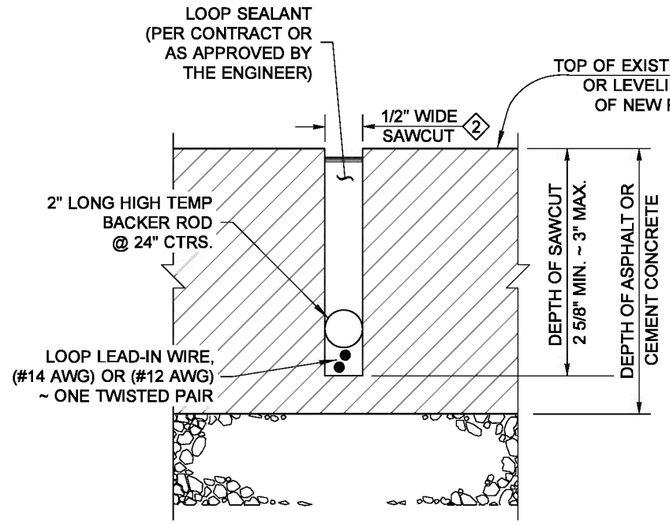

SECTION B

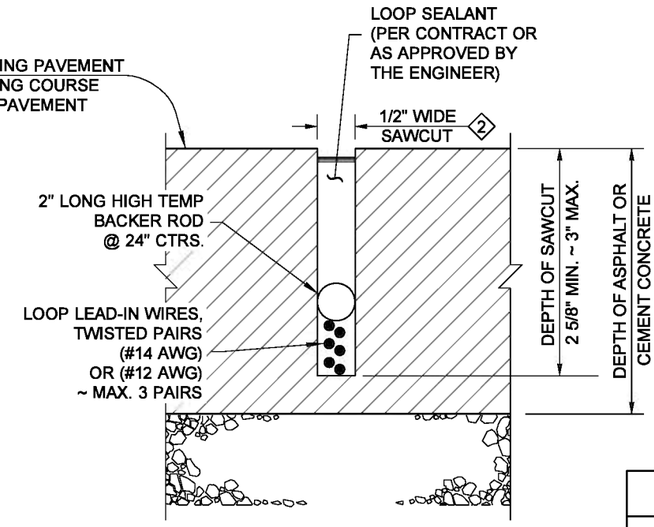

SECTION C

NOTES

1. Fill the conduit trench to the bottom of the existing or new surfacing with CSTC, sand or controlled density fill. See **Standard Specifications Section 2-09.3(1)E**.
2. Minor Regional variations are allowed in the soft pocket closure. Consult with the Engineer or see the Contract for additional requirements.
3. Conductors shall be snug to the bottom of the sawcut. High temperature backer rod shall be snug to the conductors and sides of cut.
4. Fill the sealant to within 1/8" to 3/16" from top of saw cut.
5. See **Standard Plan J-40.10** for additional Junction Box details.

PVC CONDUIT SIZING TABLE

LOOP LEAD PAIRS	1 - 4	5 - 10	11 - 16	17 - 22	23 - 28
NUMBER AND SIZE OF CONDUITS	1 - 2"	2 - 2"	3 - 2"	4 - 2"	3 - 3"

1 ADD 1/16" TO THE SAWCUT FOR IMSA 51 - 7 CONDUCTORS

2 ADD 1/8" TO THE SAWCUT FOR IMSA 51 - 7 CONDUCTORS

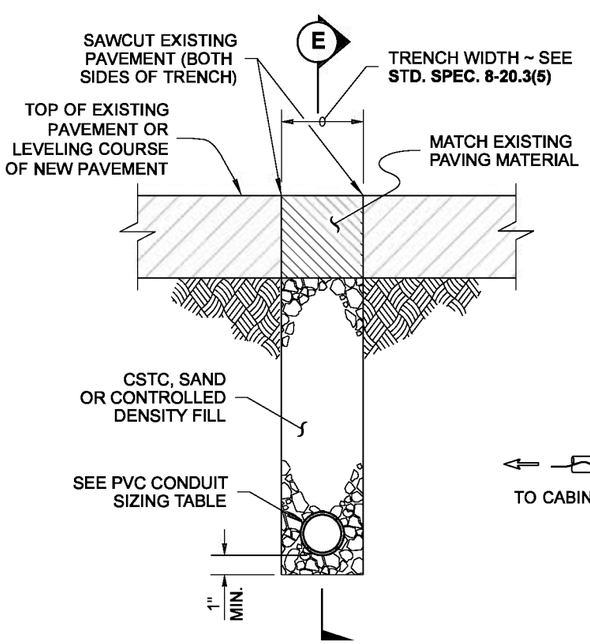

SECTION D

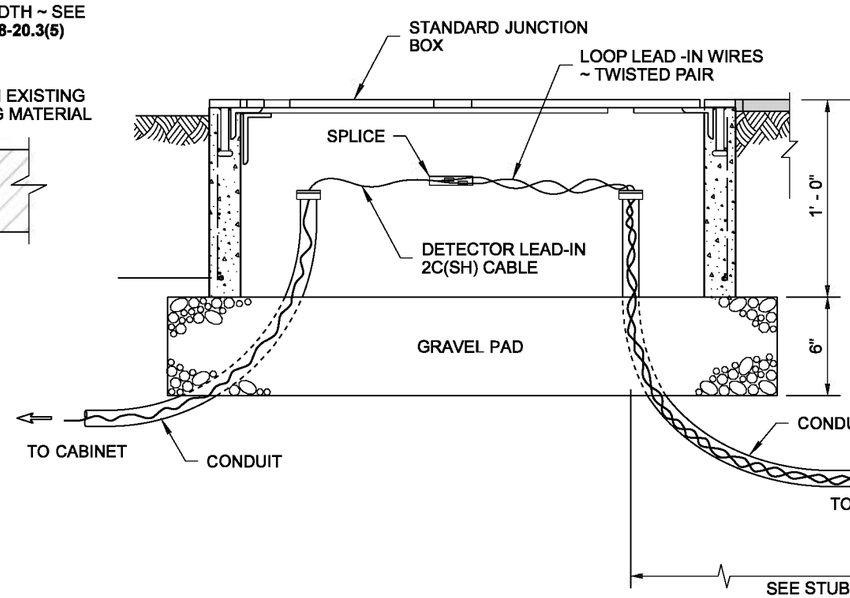

JUNCTION BOX PLACEMENT

SEE NOTE 5

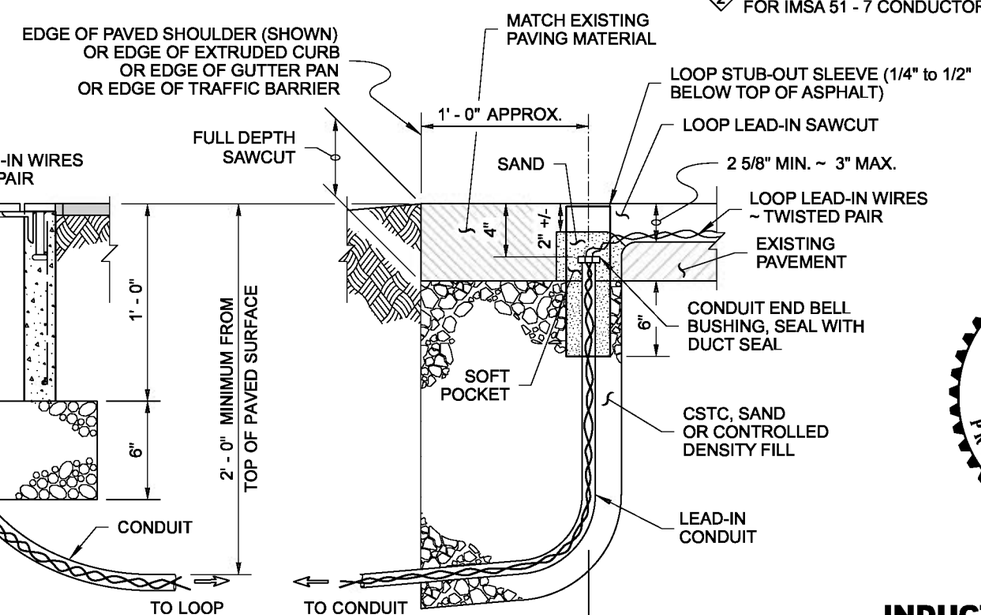

LEAD-IN CONDUIT SECTION

MAX. 50 FT POCKET SECTION

SECTION E

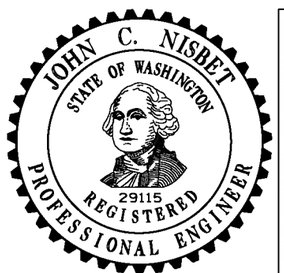

NOTE: THIS PLAN IS NOT A LEGAL ENGINEERING DOCUMENT BUT AN ELECTRONIC DUPLICATE. THE ORIGINAL, SIGNED BY THE ENGINEER AND APPROVED FOR PUBLICATION, IS KEPT ON FILE AT THE WASHINGTON STATE DEPARTMENT OF TRANSPORTATION. A COPY MAY BE OBTAINED UPON REQUEST.

INDUCTION LOOP DETAILS

STANDARD PLAN J-50.15-00

SHEET 1 OF 3 SHEETS

APPROVED FOR PUBLICATION

Pasco Bakotich III — STATE DESIGN ENGINEER

06-03-11 — DATE

Washington State Department of Transportation

EFFECTIVE: AUGUST 6, 2012 TO August 4, 2013

EFFECTIVE: AUGUST 6, 2012 TO August 4, 2013

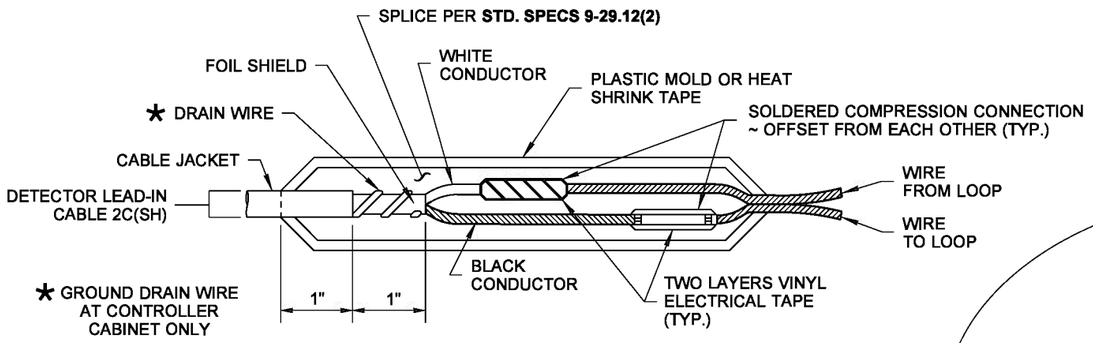

SPLICE DETAIL

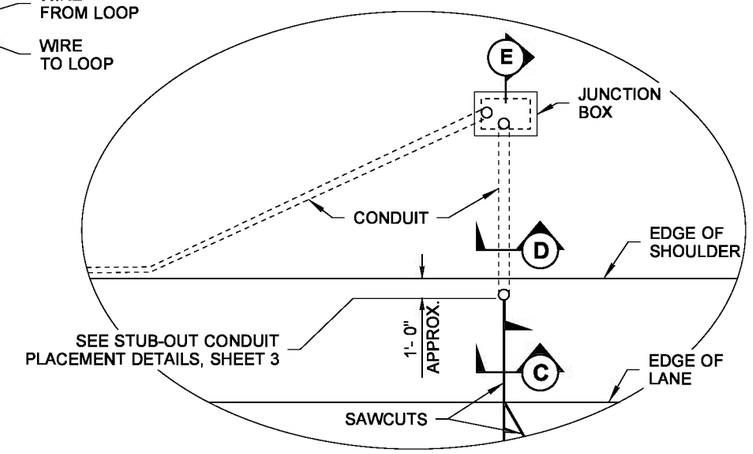

DETAIL "A"

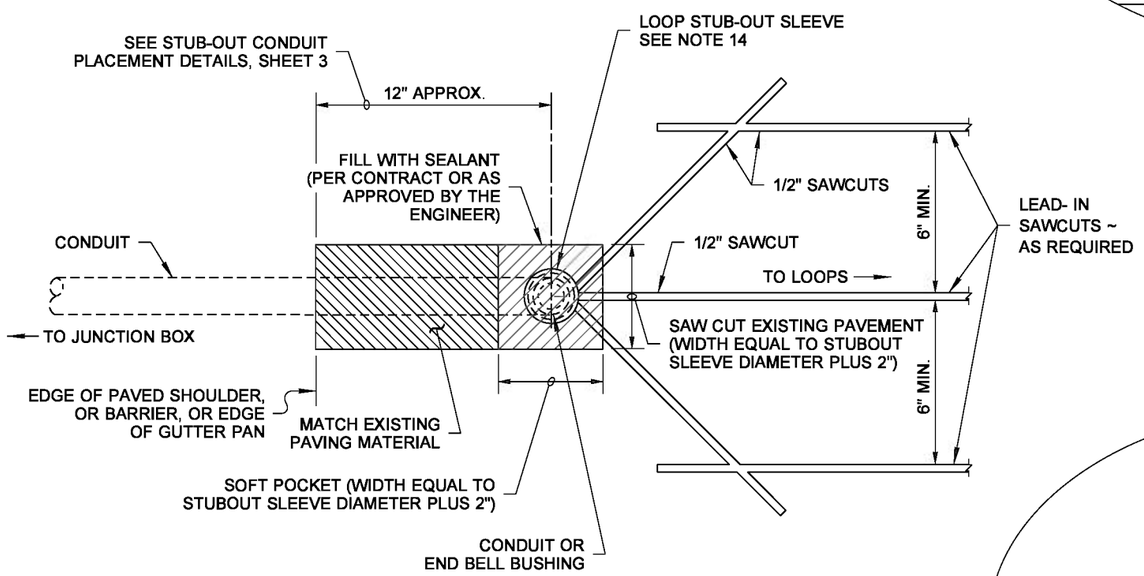

PLAN

SAWCUT AND CONDUIT CONNECTION

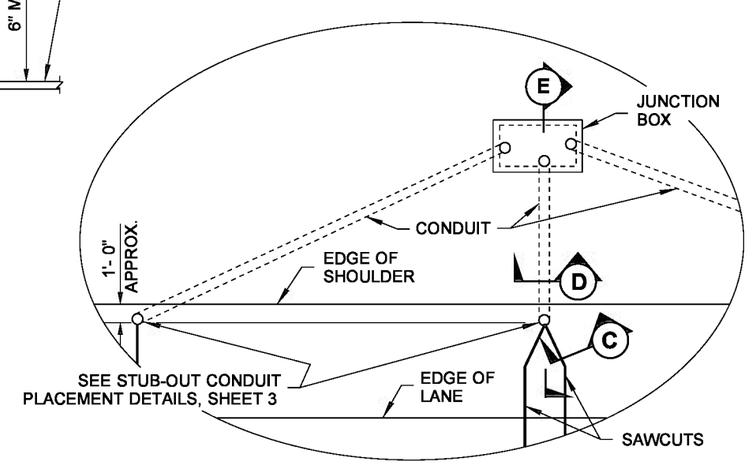

DETAIL "B"

LOOP INSTALLATION NOTES

1. Install the Junction Box and the stub-out conduit with PVC sleeve. Conduit for the loop stub-out shall be as required in the conduit size table shown on sheet 1 of this set.
2. Lay out loops and loop lead-ins to miss cracks/joints in road, when possible. Maintain 18" minimum clearance from manholes and valve boxes.
3. The opening around the loop stub shall be patched with matching paving material if opened larger than PVC sleeve + 2".
4. Sawcut the loop slots and the lead-in slots. Wash/dry cuts. File edges to remove burr of all saw-cuts into stub out sleeve.
5. Lay out the loop wire starting at the Junction Box, allowing 5' minimum slack.
6. Install the wire in the loop slot as shown.
7. Finish laying out the wire at the Junction Box and identify the leads with the loop number, the "S" for start and the "F" for the finish, the loop series number, and the loop lead-in conductor number.
8. Twist each pair of the lead-in wires a minimum of two times per foot each foot, from the loop to the Junction Box. Reverse the direction of the twist for each successive pair installed. Seal loops/sawcuts.
9. Construct a supplemental splice containing any series loop connections in the adjacent junction box as required in the plans. Supplemental splices are subject to the same requirements shown for the loop lead-in and the shielded cable splice.
10. Splice the loop lead-ins to the shielded cable as noted in the Contract.
11. All loop circuits shall be tested per **Standard Specifications 8-20.3(14)D** once installation is complete.
12. Existing stubouts shall be upgraded as necessary to conform to the conduit size table shown on sheet 1.
13. All loop lead-in sawcuts parallel to lane edge shall be at least 12" from edge of pavement and within six inches outside of lane or fog line when possible. Maintain 12" separation between parallel cuts or joints.
14. The loop stub-out sleeve shall have an inside diameter 1" larger than the outside diameter of the End Bell Bushing. Plug conduit and fill sleeve with sand untill loops are installed to keep out Hot Asphalt during paving operations.

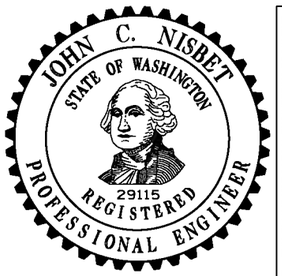

NOTE: THIS PLAN IS NOT A LEGAL ENGINEERING DOCUMENT BUT AN ELECTRONIC DUPLICATE. THE ORIGINAL, SIGNED BY THE ENGINEER AND APPROVED FOR PUBLICATION, IS KEPT ON FILE AT THE WASHINGTON STATE DEPARTMENT OF TRANSPORTATION. A COPY MAY BE OBTAINED UPON REQUEST.

INDUCTION LOOP DETAILS

STANDARD PLAN J-50.15-00

SHEET 2 OF 3 SHEETS

APPROVED FOR PUBLICATION

Pasco Bakotich III — STATE DESIGN ENGINEER

06-03-11 — DATE

Washington State Department of Transportation

EFFECTIVE: AUGUST 6, 2012 TO August 4, 2013

EFFECTIVE: AUGUST 6, 2012 TO August 4, 2013

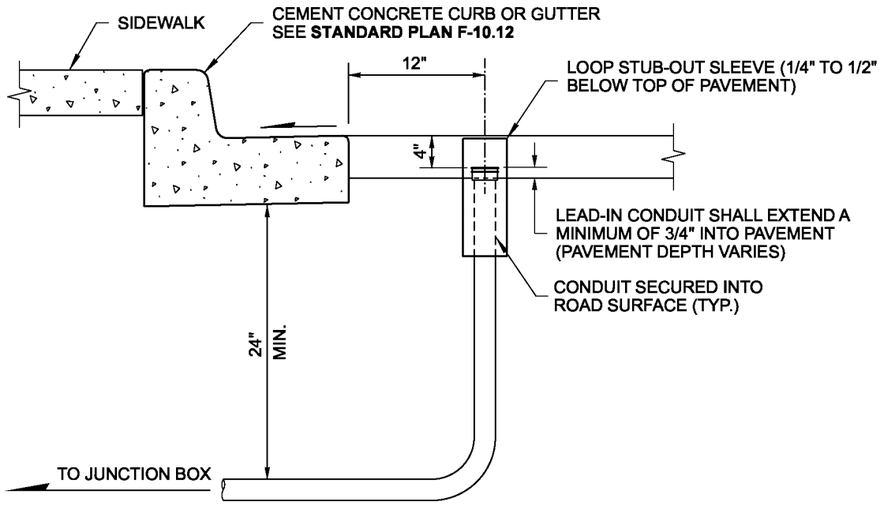

STUB-OUT DETAIL
WITH CEMENT CONCRETE CURB OR GUTTER

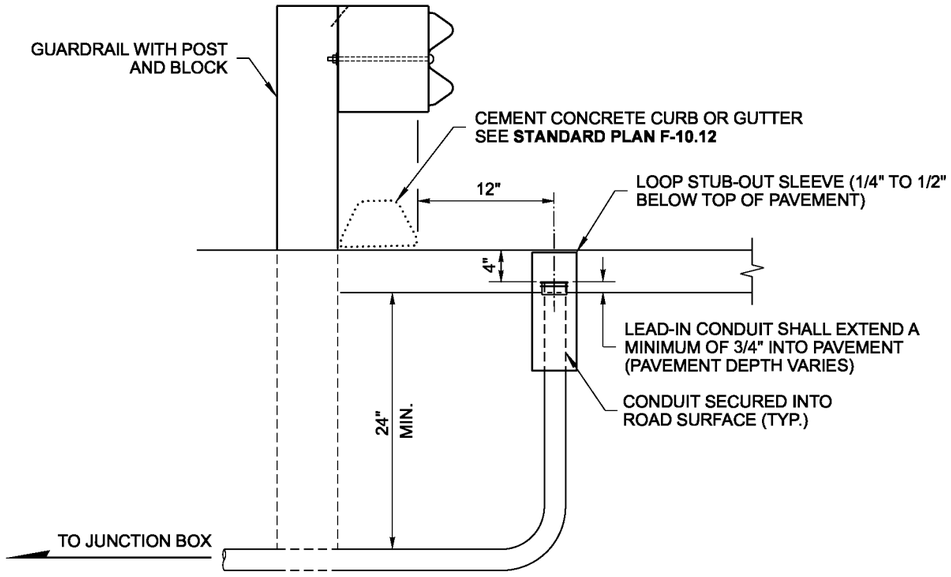

STUB-OUT DETAIL
WITH GUARDRAIL AND CURB

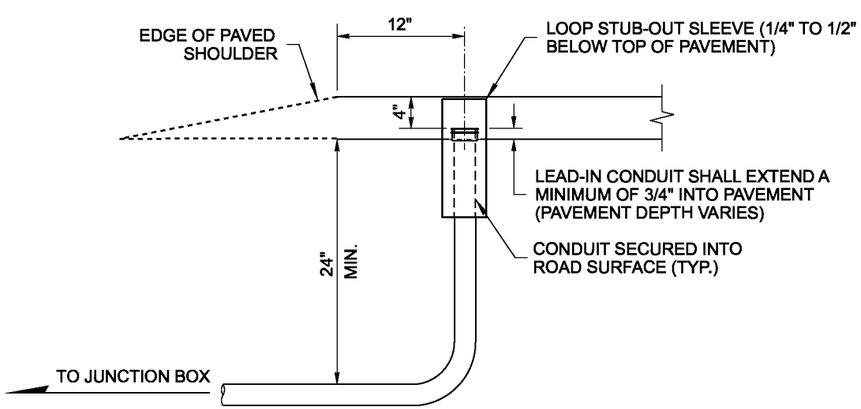

STUB-OUT DETAIL
WITH ROADWAY

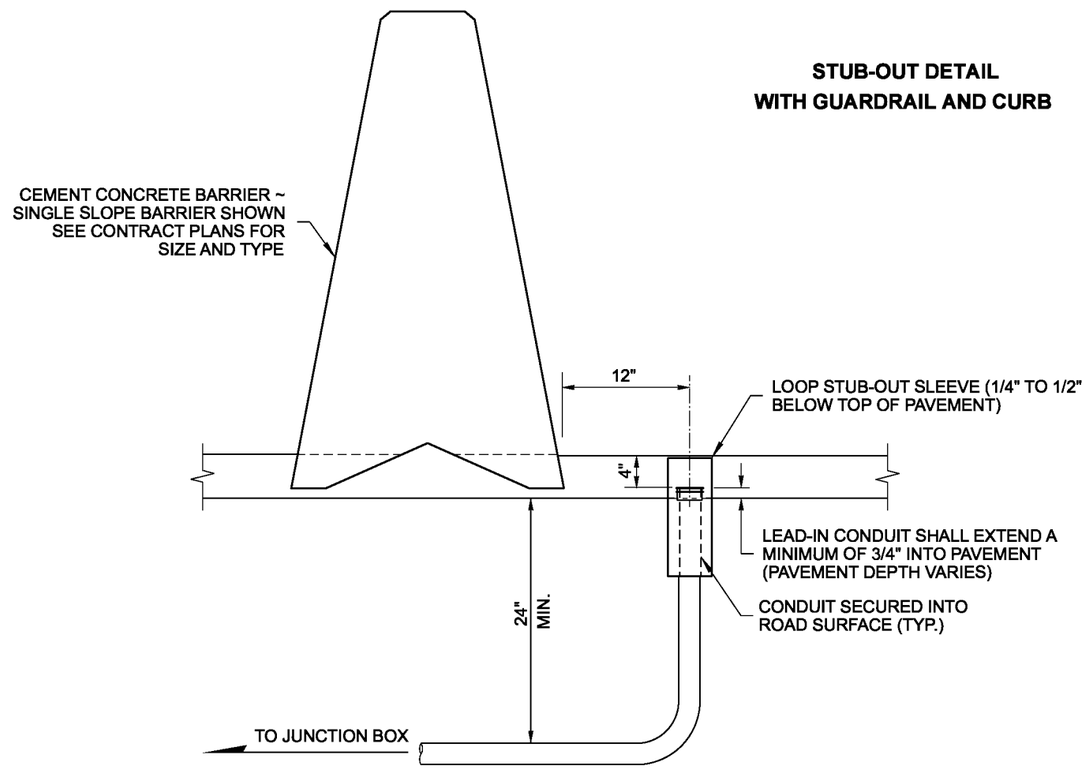

STUB-OUT DETAIL WITH
CEMENT CONCRETE BARRIER

STUBOUT CONDUIT PLACEMENT DETAILS

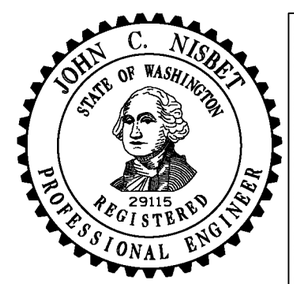

NOTE: THIS PLAN IS NOT A LEGAL ENGINEERING DOCUMENT BUT AN ELECTRONIC DUPLICATE. THE ORIGINAL, SIGNED BY THE ENGINEER AND APPROVED FOR PUBLICATION, IS KEPT ON FILE AT THE WASHINGTON STATE DEPARTMENT OF TRANSPORTATION. A COPY MAY BE OBTAINED UPON REQUEST.

INDUCTION LOOP DETAILS

STANDARD PLAN J-50.15-00

SHEET 3 OF 3 SHEETS

APPROVED FOR PUBLICATION

Pasco Bakotich III — STATE DESIGN ENGINEER
06-03-11 — DATE

Washington State Department of Transportation

EFFECTIVE: AUGUST 6, 2012 TO August 4, 2013
EFFECTIVE: AUGUST 6, 2012 TO August 4, 2013
EFFECTIVE: AUGUST 6, 2012 TO August 4, 2013
EFFECTIVE: AUGUST 6, 2012 TO August 4, 2013

EFFECTIVE: AUGUST 6, 2012 TO August 4, 2013
EFFECTIVE: AUGUST 6, 2012 TO August 4, 2013

DRAWN BY: FERN LIDDELL

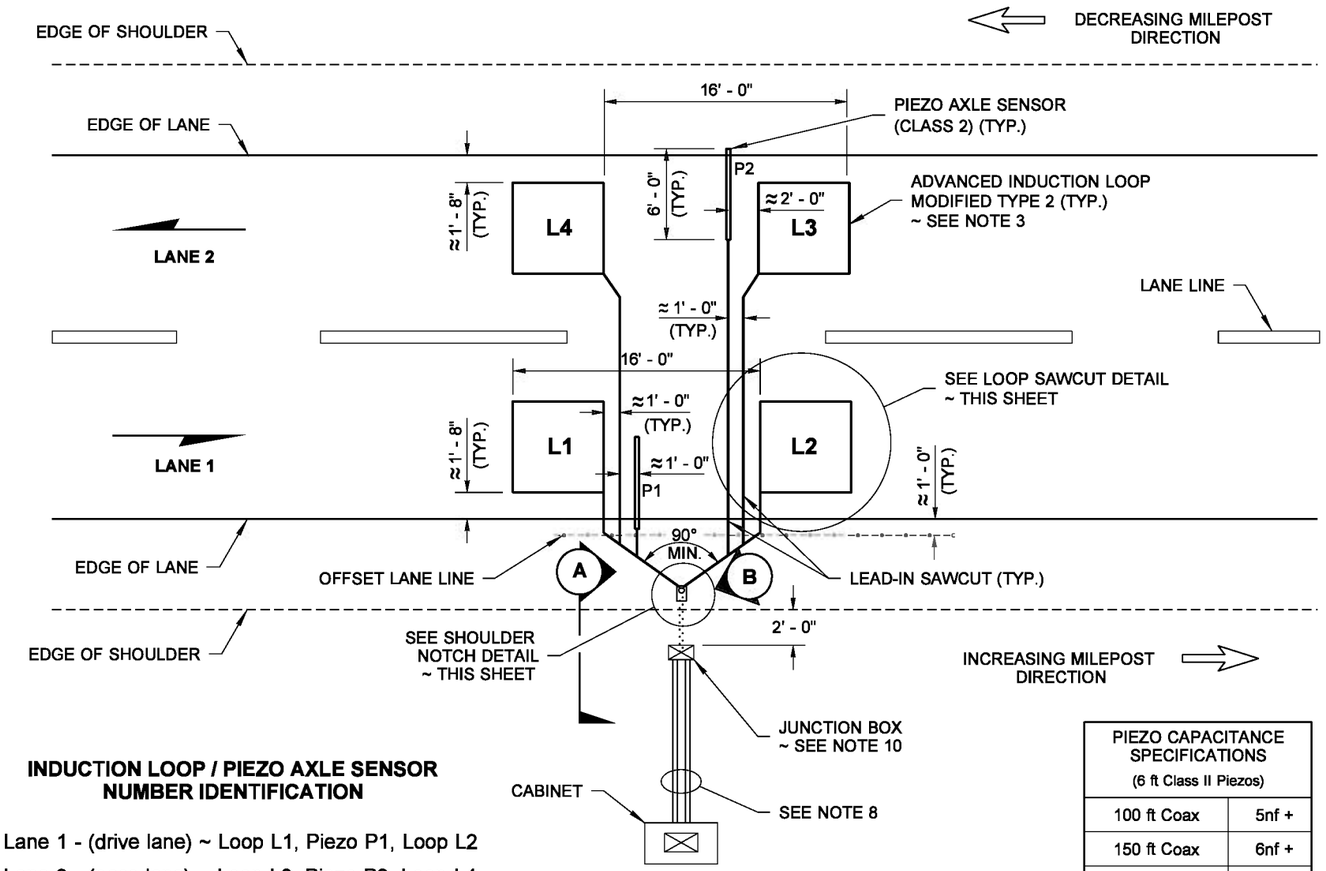

INDUCTION LOOP / PIEZO AXLE SENSOR NUMBER IDENTIFICATION

Lane 1 - (drive lane) ~ Loop L1, Piezo P1, Loop L2

Lane 2 - (pass lane) ~ Loop L3, Piezo P2, Loop L4

PLAN VIEW

TYPICAL 2 LANE PTR LAYOUT

PIEZO CAPACITANCE SPECIFICATIONS (6 ft Class II Piezos)	
100 ft Coax	5nf +
150 ft Coax	6nf +
200 ft Coax	7nf +
250 ft Coax	8nf +

NOTES

1. See **Standard Plan J-50.30** for Piezo axle sensor General Installation instructions, and Modified Type 2 Loop wiring details.
2. The contractor shall notify the Statewide Travel and Collision Data Office (STCDO) (formerlyTDO) a minimum of five working days prior to the scheduled site installation. An inspector from the WSDOT STCDO shall be on site for all phases of installation.
3. The loop inductance of two loops within the same lane shall be within 20 micro henries of each other. all piezo ohms readings shall be O\L from shield to center conductor. See piezo specifications for piezo capacitance readings.
4. The loops and axle sensors shall be cut in the final lift of asphalt after lane striping is completed. All PTR loops shall be spaced @16 ft. leading edge to leading edge.
5. For concrete pavement lanes with asphalt shoulders, install all of the piezo sensors and splices in the concrete lane. Also, for concrete lanes, install the loops 4" and 6" away from the expansion joints.
6. The shoulder notch length along the roadway shall be 4" or the conduit diameter plus 2" or whichever is larger. The shoulder notch width perpendicular to the roadway shall be the conduit size plus 1/4".
7. After all sensor leads are installed, seal the end of the conduit with conduit sealant. Use asphalt cold-patch to fill notch unless otherwise specified in the contract.
8. Use Schedule 40 PVC conduit from the Junction box to the Cabinet. Where there are 2 to 4 lanes, use one 1 1/4" min. conduit for each direction of travel. Where there are 5 lanes in either direction of travel, use one 2" min. conduit in each direction. Where there are 6 or more lanes in either directon, use one 3" min. conduit for each direction.
9. Use Schedule 80 PVC, HDPE, or steel conduit under the roadway. For conduit installation see **Standard Specification 8-20.3(5).**
10. Junction boxes installed in the paved shoulder or median shall be a Heavy Duty Junction box. If box is installed in unpaved shoulder, use type 1 or 2. See **Standard Plan J-40.10** for size and type. See **Standard Specification 9.29.2(1)B.** for further information.
11. All loop wire, loop leads, and piezo leads shall be labeled with colored electrical tape at all Junction Boxes, Pull Boxes and Cabinets, according to the Color Code Identification Chart. For Wire Color Code Detail see **Standard Plan J-50.30.**
12. Cabinet can be placed on either side of road depending on terrain/slope, etc. It does not have to be placed on increasing milepost side of the roadway.
13. For 6 - lane layouts and above, see Contract.

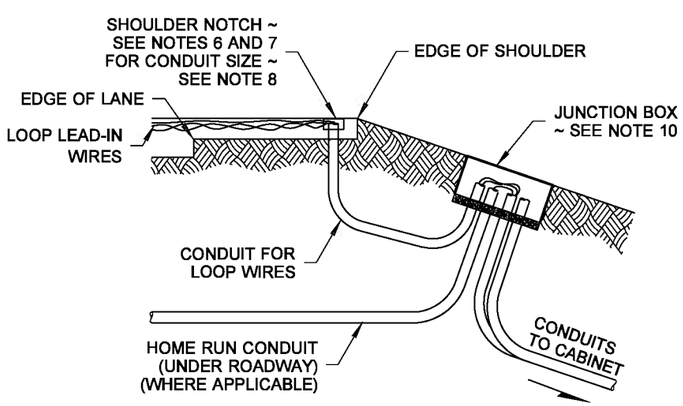

SECTION A

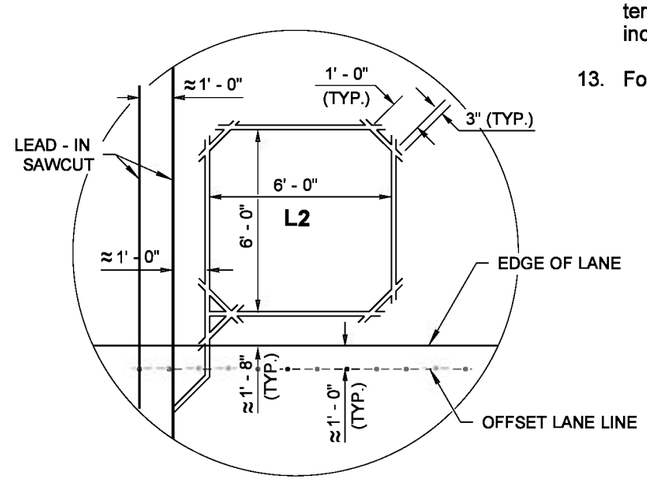

LOOP SAW CUT DETAIL

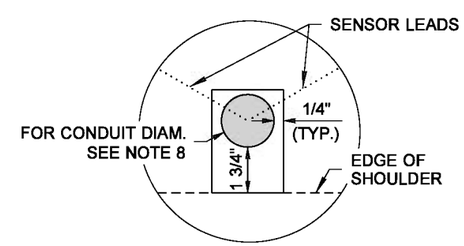

SHOULDER NOTCH

DETAIL B

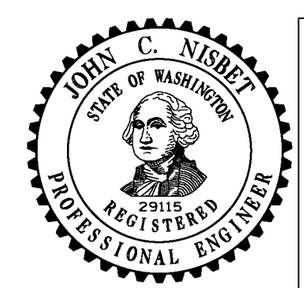

NOTE: THIS PLAN IS NOT A LEGAL ENGINEERING DOCUMENT BUT AN ELECTRONIC DUPLICATE. THE ORIGINAL, SIGNED BY THE ENGINEER AND APPROVED FOR PUBLICATION, IS KEPT ON FILE AT THE WASHINGTON STATE DEPARTMENT OF TRANSPORTATION. A COPY MAY BE OBTAINED UPON REQUEST.

PERMANENT TRAFFIC RECORDER INSTALLATIONS

STANDARD PLAN J-50.20-00

SHEET 1 OF 3 SHEETS

APPROVED FOR PUBLICATION

Pasco Bakotich III — STATE DESIGN ENGINEER — *06-03-11* — DATE

Washington State Department of Transportation

EFFECTIVE: AUGUST 6, 2012 TO August 4, 2013
EFFECTIVE: AUGUST 6, 2012 TO August 4, 2013
EFFECTIVE: AUGUST 6, 2012 TO August 4, 2013
EFFECTIVE: AUGUST 6, 2012 TO August 4, 2013

EFFECTIVE: AUGUST 6, 2012 TO August 4, 2013
EFFECTIVE: AUGUST 6, 2012 TO August 4, 2013

DRAWN BY: FERN LIDDELL

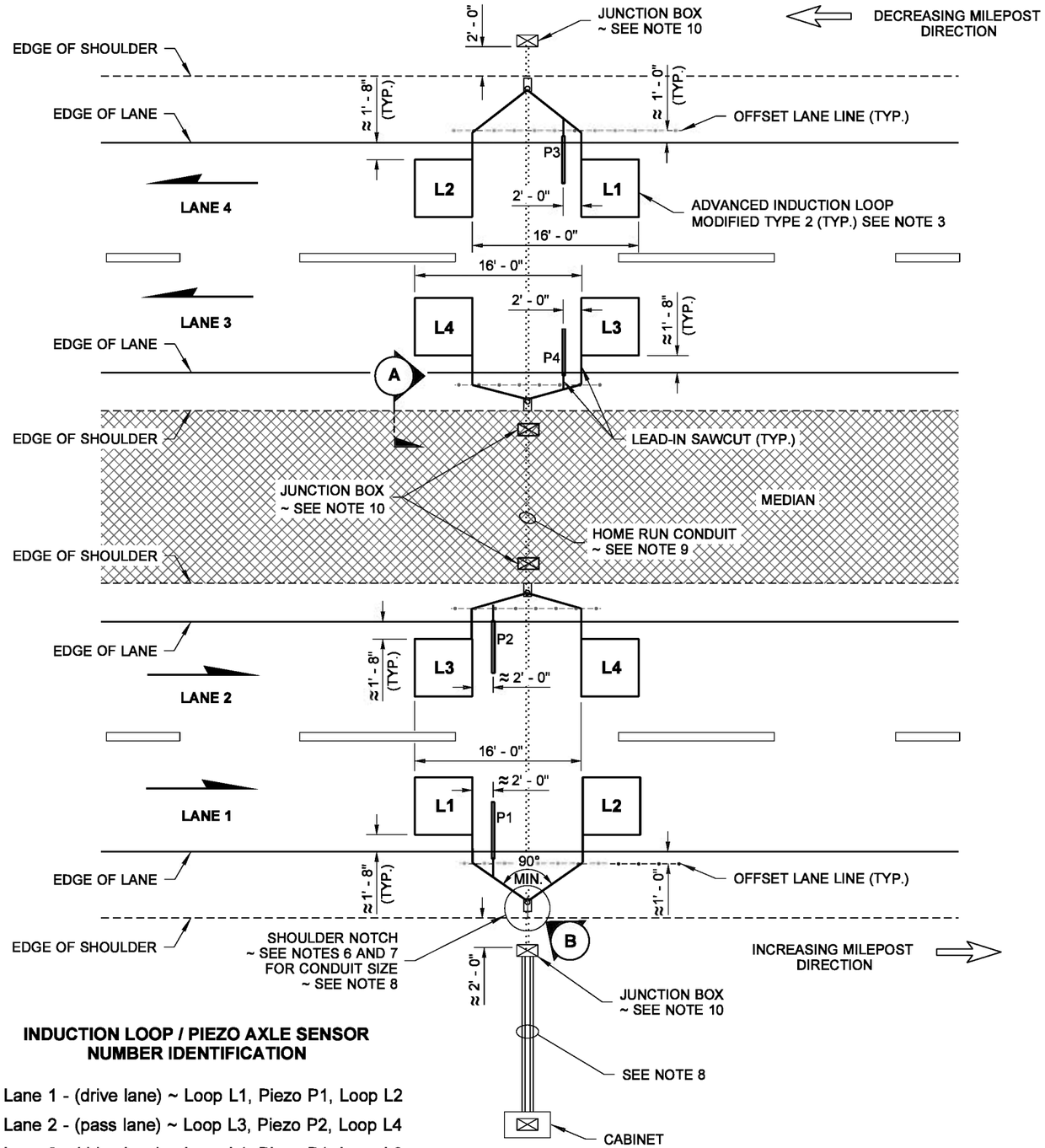

INDUCTION LOOP / PIEZO AXLE SENSOR NUMBER IDENTIFICATION

Lane 1 - (drive lane) ~ Loop L1, Piezo P1, Loop L2
Lane 2 - (pass lane) ~ Loop L3, Piezo P2, Loop L4
Lane 3 - (drive lane) ~ Loop L1, Piezo P1, Loop L2
Lane 4 - (pass lane) ~ Loop L3, Piezo P2, Loop L4

PLAN VIEW

TYPICAL 4 LANE PTR LAYOUT WITH MEDIAN

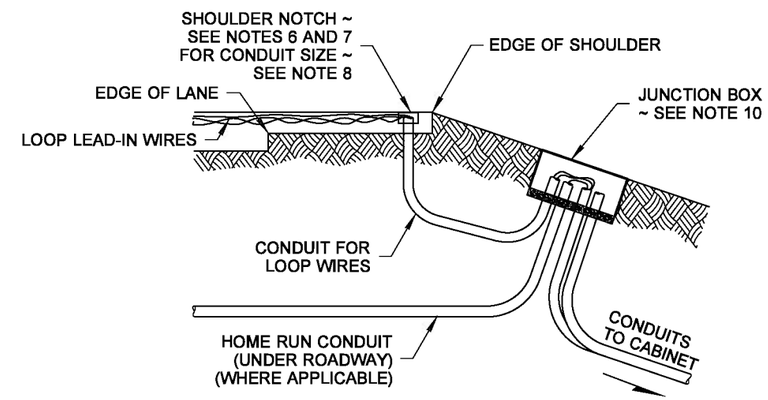

SECTION A

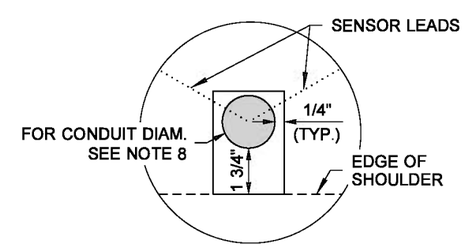

SHOULDER NOTCH

DETAIL B

JOHN C. NISBET
STATE OF WASHINGTON
29115
REGISTERED
PROFESSIONAL ENGINEER

NOTE: THIS PLAN IS NOT A LEGAL ENGINEERING DOCUMENT BUT AN ELECTRONIC DUPLICATE. THE ORIGINAL, SIGNED BY THE ENGINEER AND APPROVED FOR PUBLICATION, IS KEPT ON FILE AT THE WASHINGTON STATE DEPARTMENT OF TRANSPORTATION. A COPY MAY BE OBTAINED UPON REQUEST.

PERMANENT TRAFFIC RECORDER INSTALLATIONS

STANDARD PLAN J-50.20-00

SHEET 2 OF 3 SHEETS

APPROVED FOR PUBLICATION

Pasco Bakotich III — STATE DESIGN ENGINEER
06-03-11 — DATE

Washington State Department of Transportation

EFFECTIVE: AUGUST 6, 2012 TO August 4, 2013
EFFECTIVE: AUGUST 6, 2012 TO August 4, 2013
EFFECTIVE: AUGUST 6, 2012 TO August 4, 2013
EFFECTIVE: AUGUST 6, 2012 TO August 4, 2013

EFFECTIVE: AUGUST 6, 2012 TO August 4, 2013
EFFECTIVE: AUGUST 6, 2012 TO August 4, 2013

DRAWN BY: FERN LIDDELL

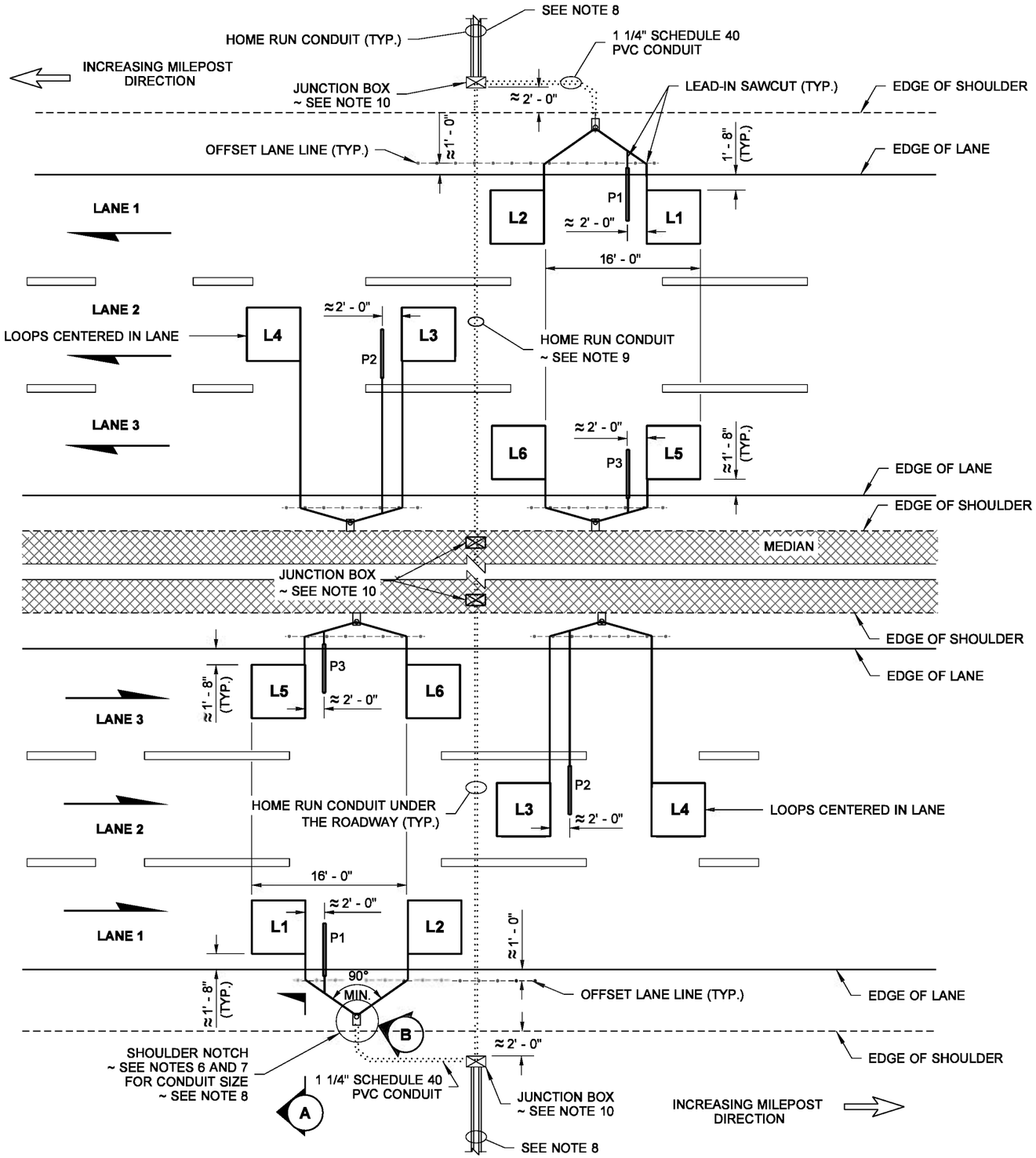

PLAN VIEW

TYPICAL 6 LANE PTR LAYOUT WITH MEDIAN

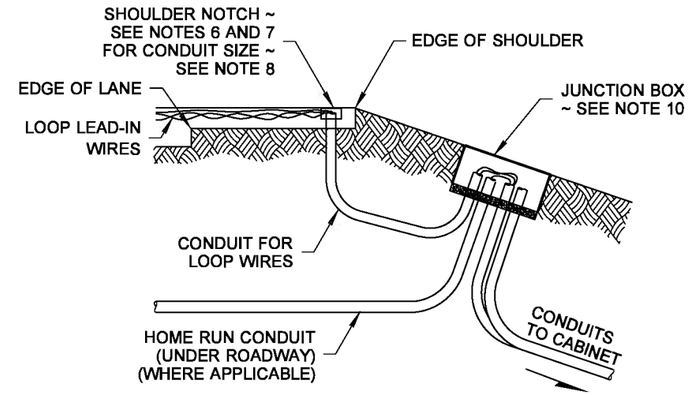

SECTION (A)

INDUCTION LOOP / PIEZO AXLE SENSOR NUMBER IDENTIFICATION

Lane 1 - (drive lane) ~ Loop L1, Piezo P1, Loop L6	Lane 1 - (drive lane) ~ Loop L1, Piezo P1, Loop L2
Lane 2 - (center lane) ~ Loop L3, Piezo P2, Loop L4	Lane 2 - (center lane) ~ Loop L3, Piezo P2, Loop L4
Lane 3 - (drive lane) ~ Loop L1, Piezo P1, Loop L2	Lane 3 - (center lane) ~ Loop L1, Piezo P1, Loop L6

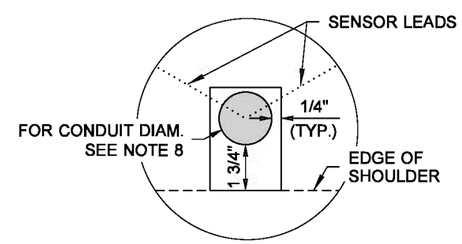

SHOULDER NOTCH

DETAIL (B)

NOTE: THIS PLAN IS NOT A LEGAL ENGINEERING DOCUMENT BUT AN ELECTRONIC DUPLICATE. THE ORIGINAL, SIGNED BY THE ENGINEER AND APPROVED FOR PUBLICATION, IS KEPT ON FILE AT THE WASHINGTON STATE DEPARTMENT OF TRANSPORTATION. A COPY MAY BE OBTAINED UPON REQUEST.

PERMANENT TRAFFIC RECORDER INSTALLATIONS

STANDARD PLAN J-50.20-00

SHEET 3 OF 3 SHEETS

APPROVED FOR PUBLICATION

Pasco Bakotich III — STATE DESIGN ENGINEER

06-03-11 — DATE

Washington State Department of Transportation

EFFECTIVE: AUGUST 6, 2012 TO August 4, 2013
EFFECTIVE: AUGUST 6, 2012 TO August 4, 2013
EFFECTIVE: AUGUST 6, 2012 TO August 4, 2013
EFFECTIVE: AUGUST 6, 2012 TO August 4, 2013

EFFECTIVE: AUGUST 6, 2012 TO August 4, 2013

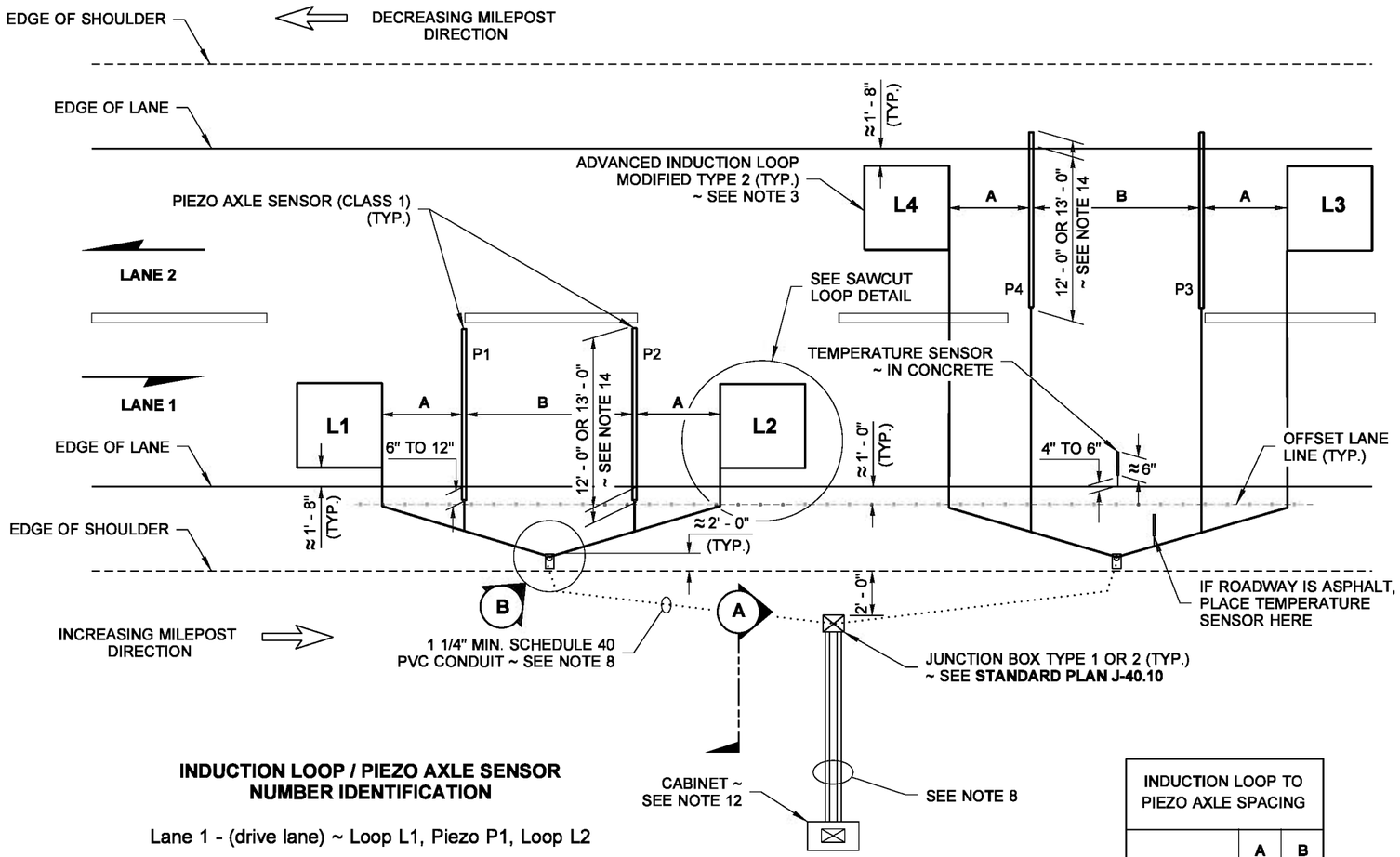

PLAN VIEW

TYPICAL 2 - LANE WIM LAYOUT

INDUCTION LOOP / PIEZO AXLE SENSOR NUMBER IDENTIFICATION

Lane 1 - (drive lane) ~ Loop L1, Piezo P1, Loop L2

Lane 2 - (pass lane) ~ Loop L3, Piezo P2, Loop L4

INDUCTION LOOP TO PIEZO AXLE SPACING		
	A	B
RURAL	6'	12'
URBAN	2'	10'

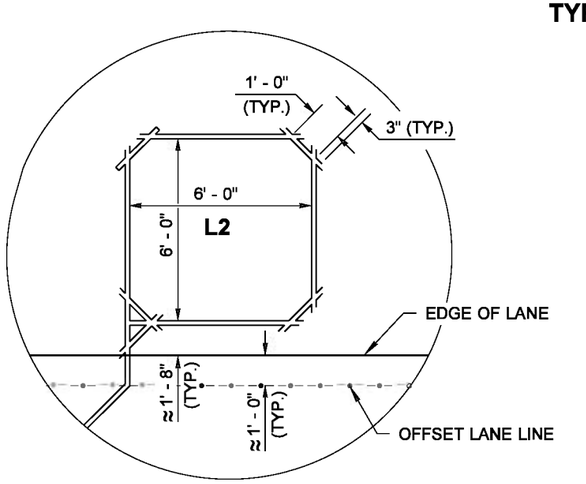

LOOP SAW-CUT DETAIL

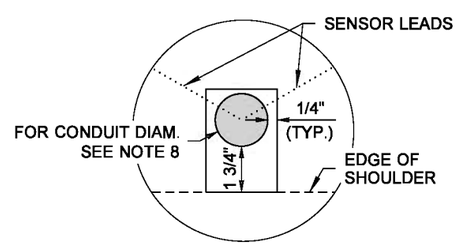

SHOULDER NOTCH

DETAIL (B)

NOTES

1. See **Standard Plan J-50.30** for Piezo Axle Sensor General Installation instructions, and Modified Type 2 Loop Wiring Details.
2. The Contractor shall notify the Statewide Travel and Collision Data Office (STCDO) (formerly TDO) a minimum of five working days prior to the scheduled site installation. An inspector from the WSDOT STCDO shall be on site for all phases of installation.
3. The loop inductance of two loops within the same lane shall be within 20 micro henries of each other. All piezo ohms readings shall be O\L from shield to center conductor. Class WIM piezo capacitance shall be 8nf to 20nf.
4. The loops and axle sensors shall be cut in the final lift of asphalt after lane striping is completed. All PTR loops shall be spaced @ 16 ft. leading edge to leading edge.
5. For concrete pavement lanes with asphalt shoulders, install all of the piezo sensors and splices in the concrete lane. Also, for concrete pavement lanes, install the loops 4" to 6" away from the expansion joints.
6. The shoulder notch length along the roadway shall be 4" or the conduit diameter plus 2" or whichever is larger. The shoulder notch width perpendicular to the roadway shall be the conduit size plus 1/4".
7. After all sensor leads are installed, seal the end of the conduit with conduit sealant. Use asphalt cold-patch to fill notch unless otherwise specified in Contract.
8. Use Schedule 40 PVC conduit from the Junction Box to the Cabinet. Where there are 2 to 4 lanes, use one 1 1/4" min. conduit for each direction of travel. Where there are 5 lanes in either direction of travel, use one 2" min. conduit for each direction. Where there are 6 or more lanes in either direction, use one 3" min. conduit for each direction.
9. Use Schedule 80 PVC, HDPE, or steel conduit under the roadway. For conduit installation, see **Standard Specification 8-20.3(5).**
10. Junction Boxes installed in the paved shoulder or median shall be a Heavy Duty Junction Box. If box is installed in unpaved shoulder use type 1 or 2. **See Standard Plan J-40.10** for size and type. See **Standard Specification 9-29.2(1)B**. for further information.
11. All loop wire, loop leads, and piezo leads shall be labeled with colored electrical tape at all Junction Boxes, Pull Boxes and Cabinets. For Wire Color Code Identification Chart & Detail see **Standard Plan J-50.30.**
12. Cabinet can be placed on either side of the road depending on terrain/slope, etc. It does not have to be placed on increasing milepost side of the roadway.
13. For 6-lane layouts and above, see Contract.
14. Concrete lanes shall use 11' class 1 piezos. Asphalt lanes with 1' shoulder or less may use 12' piezos. For shoulders over 1', use 13' piezos.

NOTE: THIS PLAN IS NOT A LEGAL ENGINEERING DOCUMENT BUT AN ELECTRONIC DUPLICATE. THE ORIGINAL, SIGNED BY THE ENGINEER AND APPROVED FOR PUBLICATION, IS KEPT ON FILE AT THE WASHINGTON STATE DEPARTMENT OF TRANSPORTATION. A COPY MAY BE OBTAINED UPON REQUEST.

WEIGH-IN-MOTION SITE INSTALLATION DETAILS
STANDARD PLAN J-50.25-00

SHEET 1 OF 2 SHEETS

APPROVED FOR PUBLICATION

Pasco Bakotich III — STATE DESIGN ENGINEER — *06-03-11* — DATE

Washington State Department of Transportation

DRAWN BY: FERN LIDDELL

EFFECTIVE: AUGUST 6, 2012 TO August 4, 2013

EFFECTIVE: AUGUST 6, 2012 TO August 4, 2013
EFFECTIVE: AUGUST 6, 2012 TO August 4, 2013

DRAWN BY: FERN LIDDELL

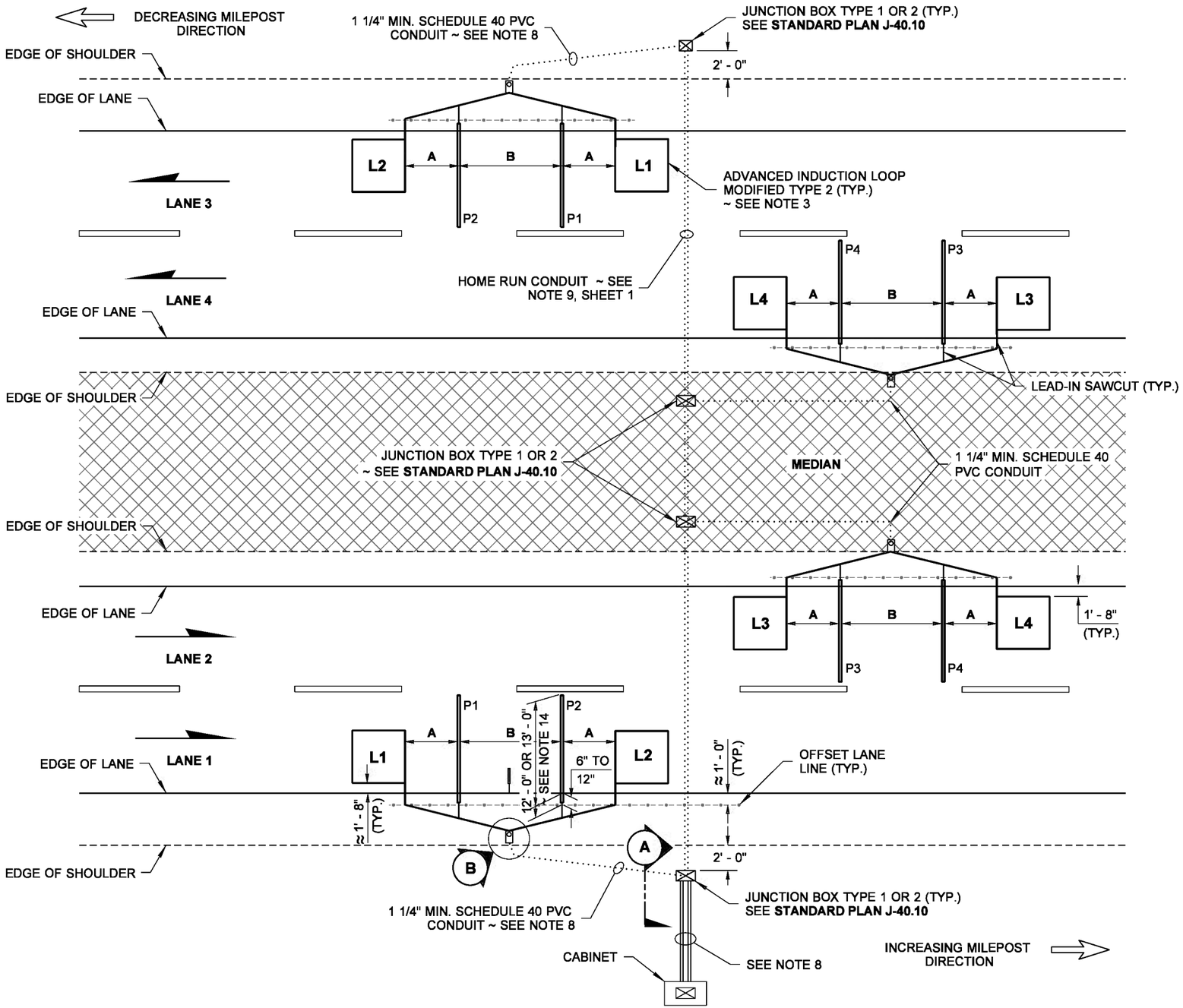

PLAN VIEW

TYPICAL 4 - LANE WIM LAYOUT WITH MEDIAN

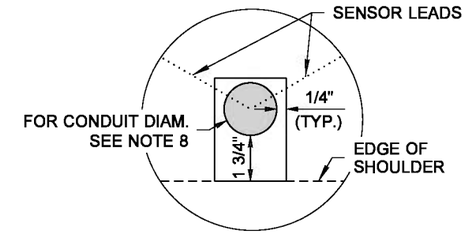

SHOULDER NOTCH

DETAIL (B)

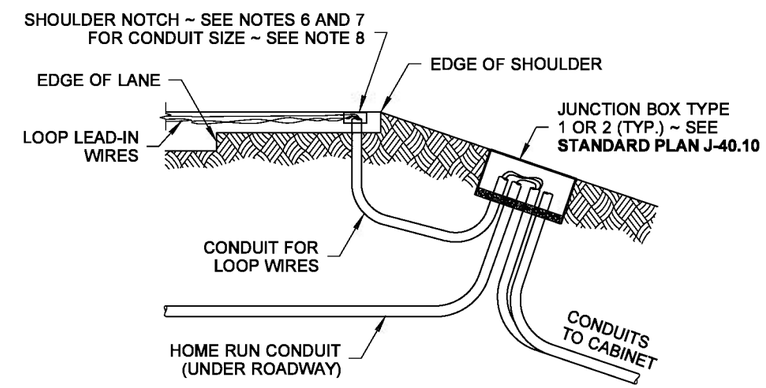

SECTION (A)

INDUCTION LOOP TO PIEZO AXLE SPACING		
	A	B
RURAL	6'	12'
URBAN	2'	10'

INDUCTION LOOP / PIEZO AXLE SENSOR NUMBER IDENTIFICATION

INCREASING DIRECTION

Lane 1 - (drive lane) ~ Loop L1, Piezo P1, Piezo P2, Loop L2

Lane 2 - (pass lane) ~ Loop L3, Piezo P3, Piezo P4, Loop L4

DECREASING DIRECTION

Lane 3 - (drive lane) ~ Loop L1, Piezo P1, Piezo P2, Loop L2

Lane 4 - (drive lane) ~ Loop L3, Piezo P3, Piezo P4, Loop L4

NOTE: THIS PLAN IS NOT A LEGAL ENGINEERING DOCUMENT BUT AN ELECTRONIC DUPLICATE. THE ORIGINAL, SIGNED BY THE ENGINEER AND APPROVED FOR PUBLICATION, IS KEPT ON FILE AT THE WASHINGTON STATE DEPARTMENT OF TRANSPORTATION. A COPY MAY BE OBTAINED UPON REQUEST.

WEIGH-IN-MOTION SITE INSTALLATION DETAILS STANDARD PLAN J-50.25-00

SHEET 2 OF 2 SHEETS

APPROVED FOR PUBLICATION

Pasco Bakotich III — STATE DESIGN ENGINEER

06-03-11 — DATE

Washington State Department of Transportation

EFFECTIVE: AUGUST 6, 2012 TO August 4, 2013
EFFECTIVE: AUGUST 6, 2012 TO August 4, 2013
EFFECTIVE: AUGUST 6, 2012 TO August 4, 2013
EFFECTIVE: AUGUST 6, 2012 TO August 4, 2013

EFFECTIVE: AUGUST 6, 2012 TO August 4, 2013
EFFECTIVE: AUGUST 6, 2012 TO August 4, 2013

DRAWN BY: FERN LIDDELL

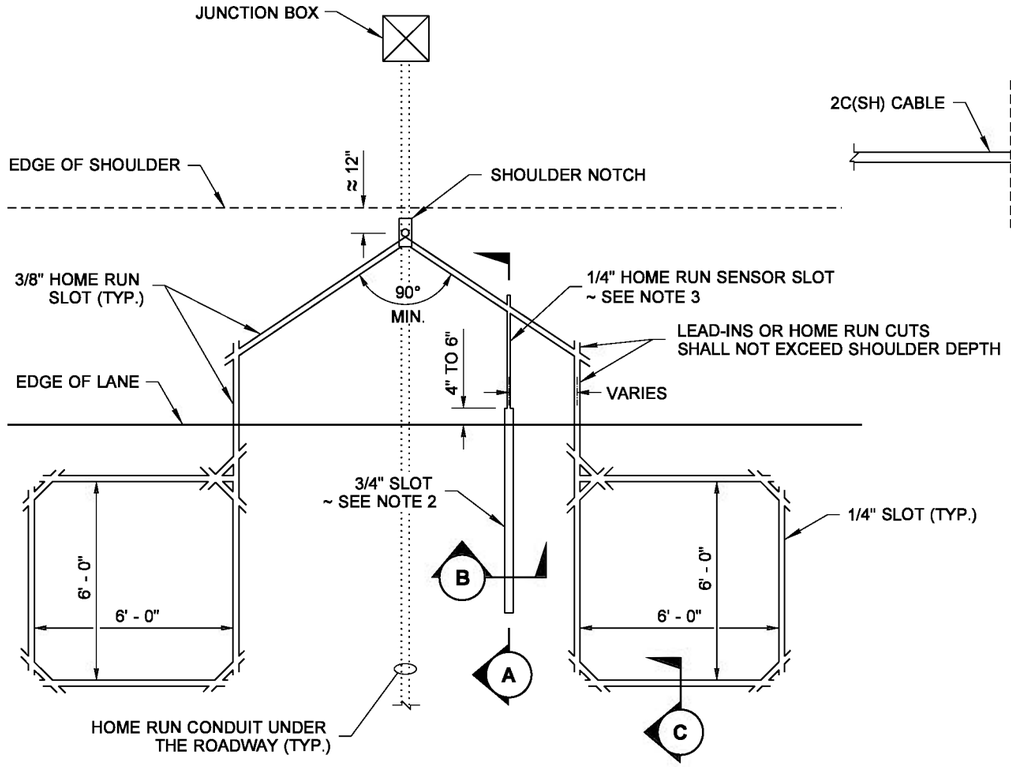

SAWCUT LAYOUT
FOR PERMANENT TRAFFIC RECORDER SITE
(MODIFIED TYPE 2 LOOP SHOWN)

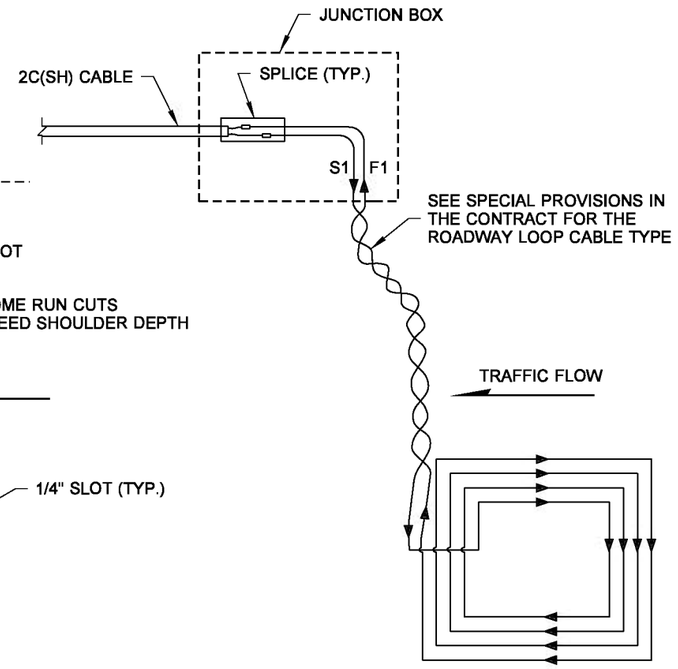

MODIFIED TYPE 2 ADVANCE
LOOP WIRING DIAGRAM

THESE ARE GENERAL INSTALLATION INSTRUCTIONS

SEE SPECIFIC MANUFACTURER'S INSTALLATION INSTRUCTIONS IN THE SPECIAL PROVISIONS OF THE CONTRACT

1. Using paint and a straight edge, carefully mark the layout of the sensor installation. Ensure sensors are placed exactly perpendicular to the flow of traffic and that all lines are straight. Verify that the piezo coax length can reach the cabinet with a minimum of 8 ft. of cable inside the cabinet.
2. Using a wet-cutting pavement saw with a 3/4" blade width, cut the piezo slot approximately 4 to 6 inches longer than the piezo length. The piezo slot depth must be a minimum of 1" to a maximum of 1 1/2".
3. Lead-in cuts for the piezo coax should be 1/4" minimum wide, at a depth of 1 1/2" to 2"
4. Using a pressure washer, remove all slurry and loose material from the piezo slot.
5. Completely dry piezo slot. No moisture or oily residue shall be allowed in piezo slot.
6. After piezo cut is dry, wire brush sides and bottom of entire piezo slot. Blow out loose debris.
7. Install the piezo according to manufacturer's recommendations. Class 2 piezo sensors shall be placed at bottom of piezo slot. Class 1 sensors must be installed at a specific depth particular to each site location. This depth will be measured and set by Statewide Travel and Collision Data Office (formerly TDO) inspector on site.
8. Place two pieces of 2" duct tape along the length of the sensor slot. Tape should be about 1/16" from slot edge.
9. Mix epoxy according to manufacturer's recommendations and pour in slot into small bead. Make sure grout pours into slot slowly to avoid air pockets. Start at the piezo end and pour toward the coax to piezo attachment point. Repeat until the slot is completely full, at least two passes.
10. Use a putty knife with a notched center to spread the epoxy smooth the length of the sensor.
11. Remove tape.
12. Class 2 sensor installation is complete after epoxy has cured. Class 1 WIM sensors shall be sanded flush with the pavement surface the entire length of the piezo sensor. Use a belt sander with a coarse grit paper to get an even surface finish.
13. Lead-in placement and saw-cut methods vary depending on Regional preference and location. Coordination between WSDOT and Contractor is needed to determine method to be used prior to installation.
14. Place the Installation Brackets on the sensor every 12" for class 2 sensor, and every 8" for class 1 sensor, for the length of the sensor. Use the 3/4" brackets.

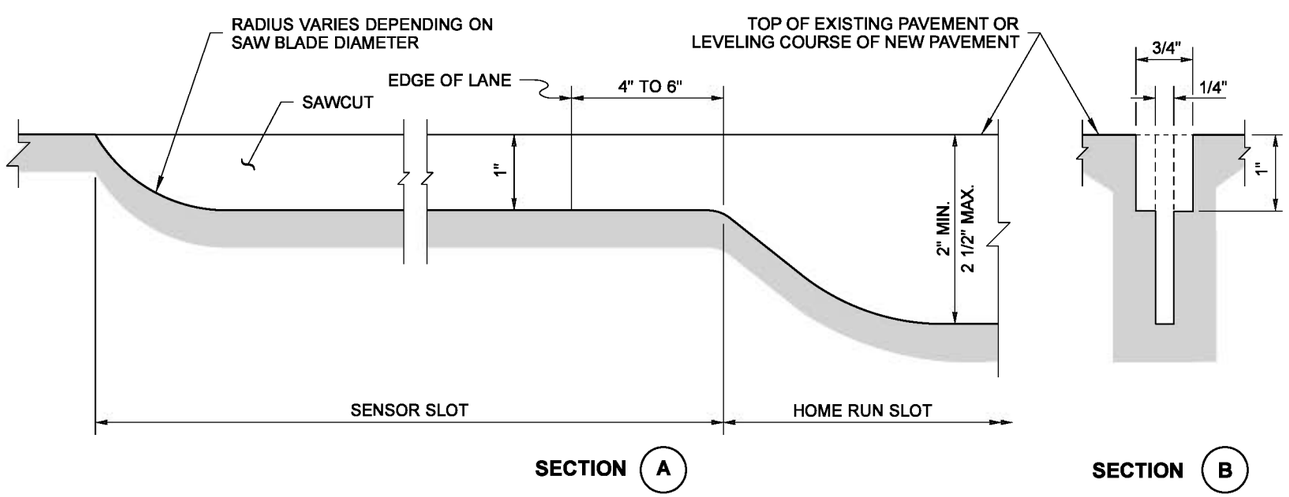

SECTION (A) **SECTION (B)**

BEFORE SENSOR INSTALLATION

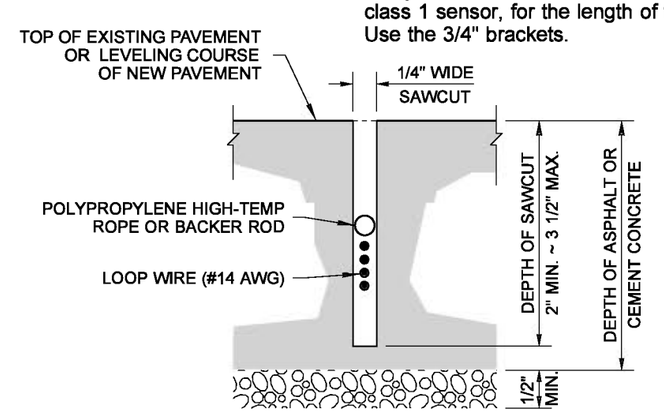

SECTION (C)

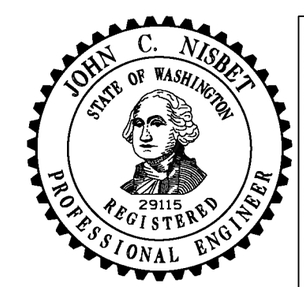

NOTE: THIS PLAN IS NOT A LEGAL ENGINEERING DOCUMENT BUT AN ELECTRONIC DUPLICATE. THE ORIGINAL, SIGNED BY THE ENGINEER AND APPROVED FOR PUBLICATION, IS KEPT ON FILE AT THE WASHINGTON STATE DEPARTMENT OF TRANSPORTATION. A COPY MAY BE OBTAINED UPON REQUEST.

PERMANENT TRAFFIC RECORDER AND WEIGH-IN-MOTION DETAILS STANDARD PLAN J-50.30-00

SHEET 1 OF 3 SHEETS

APPROVED FOR PUBLICATION

Pasco Bakotich III — STATE DESIGN ENGINEER
06-03-11 — DATE

Washington State Department of Transportation

EFFECTIVE: AUGUST 6, 2012 TO August 4, 2013
EFFECTIVE: AUGUST 6, 2012 TO August 4, 2013
EFFECTIVE: AUGUST 6, 2012 TO August 4, 2013
EFFECTIVE: AUGUST 6, 2012 TO August 4, 2013

EFFECTIVE: AUGUST 6, 2012 TO August 4, 2013
EFFECTIVE: AUGUST 6, 2012 TO August 4, 2013

DRAWN BY: FERN LIDDELL

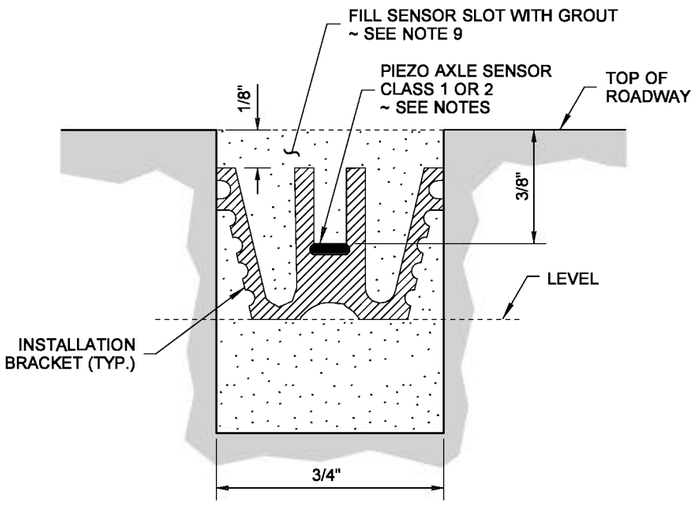

SECTION D

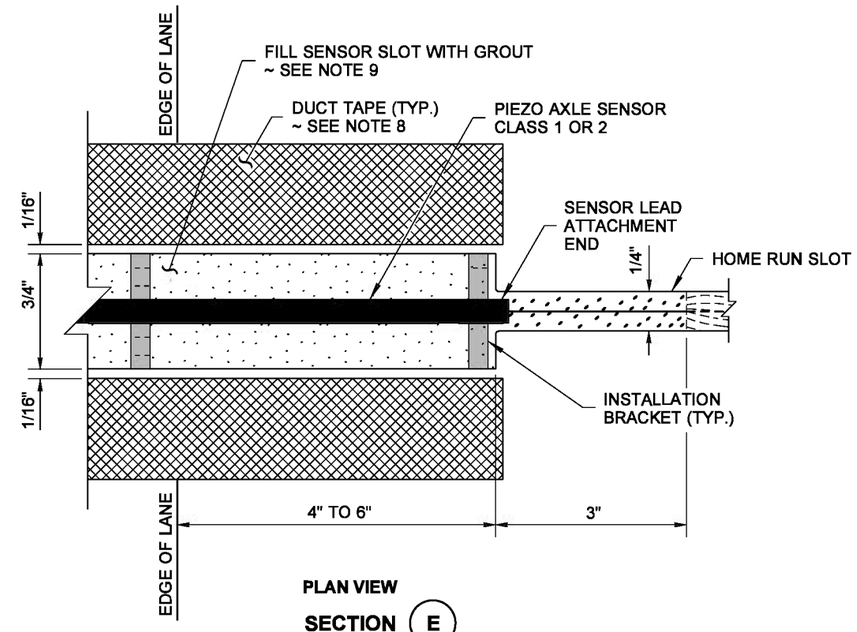

PLAN VIEW

SECTION E

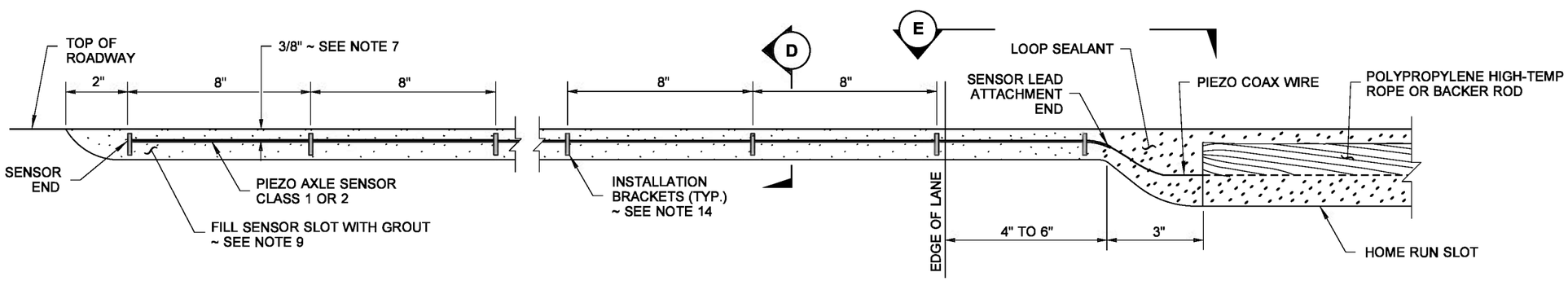

SIDE VIEW

BRACKET AND PIEZO LAYOUT

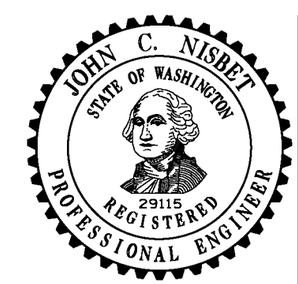

NOTE: THIS PLAN IS NOT A LEGAL ENGINEERING DOCUMENT BUT AN ELECTRONIC DUPLICATE. THE ORIGINAL, SIGNED BY THE ENGINEER AND APPROVED FOR PUBLICATION, IS KEPT ON FILE AT THE WASHINGTON STATE DEPARTMENT OF TRANSPORTATION. A COPY MAY BE OBTAINED UPON REQUEST.

PERMANENT TRAFFIC RECORDER AND WEIGH-IN-MOTION DETAILS STANDARD PLAN J-50.30-00

SHEET 2 OF 3 SHEETS

APPROVED FOR PUBLICATION

Pasco Bakotich III — STATE DESIGN ENGINEER

06-03-11 — DATE

Washington State Department of Transportation

EFFECTIVE: AUGUST 6, 2012 TO August 4, 2013
EFFECTIVE: AUGUST 6, 2012 TO August 4, 2013
EFFECTIVE: AUGUST 6, 2012 TO August 4, 2013
EFFECTIVE: AUGUST 6, 2012 TO August 4, 2013

EFFECTIVE: AUGUST 6, 2012 TO August 4, 2013
EFFECTIVE: AUGUST 6, 2012 TO August 4, 2013

DRAWN BY: FERN LIDDELL

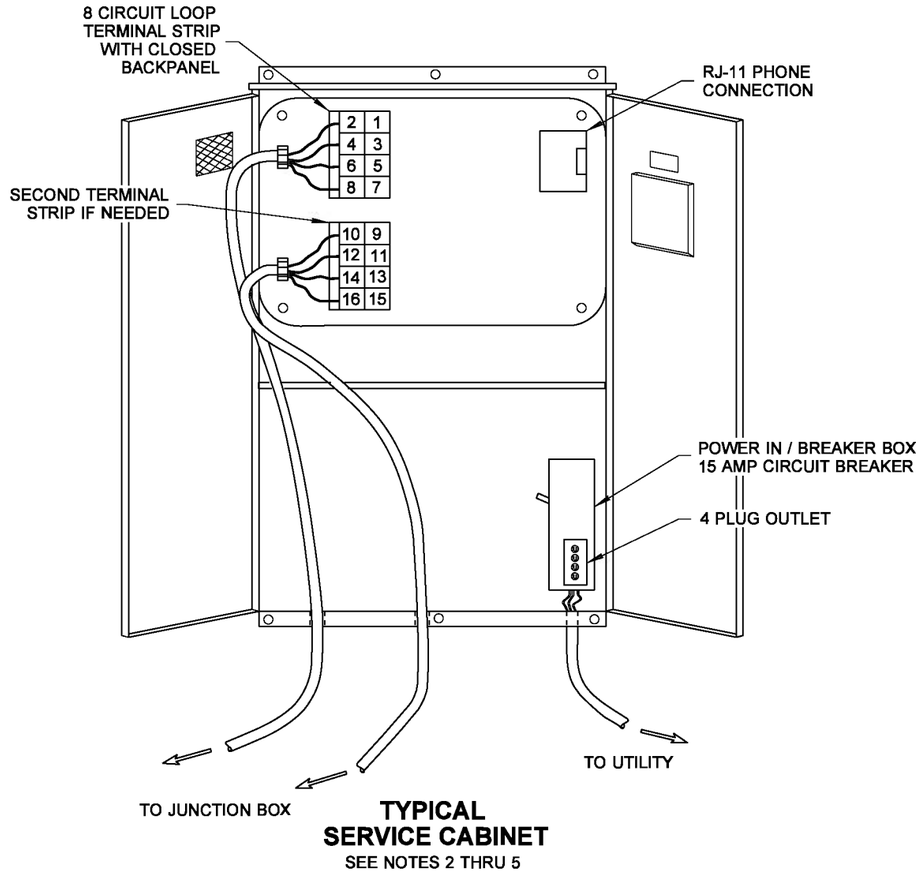

TYPICAL SERVICE CABINET

SEE NOTES 2 THRU 5

COLOR CODE IDENTIFICATION	
COLOR	**WIRE NO.**
BLACK	0
BROWN	1
RED	2
ORANGE	3
YELLOW	4
GREEN	5
BLUE	6
VIOLET	7
GRAY	8
WHITE	9
BROWN & BLACK	10
BROWN & BROWN	11
BROWN & RED	12
BROWN & ORANGE	13
BROWN & YELLOW	14
BROWN & GREEN	15
BROWN & BLUE	16
BROWN & VIOLET	17
WHITE IS ALSO USED FOR DESIGNATING INCREASING MILE POSTS	

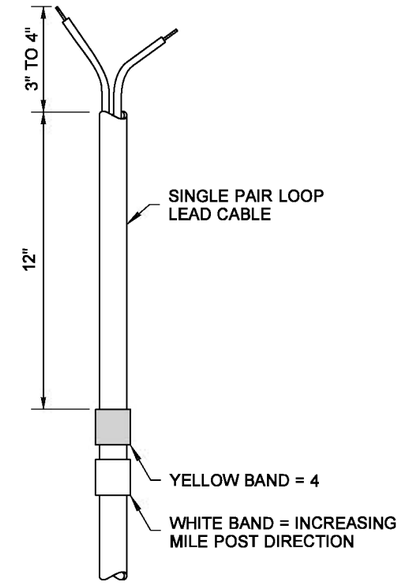

COLOR CODE WIRE DETAIL

NOTES

1. The Loop and Piezo leads in all Junction Boxes and Cabinets are to be color-coded. Use colored tape on each specific wire, see table. Wrap the tape on the wires approximately 6" beyond conduit in all Junction Boxes.
2. The maximum load in the cabinet is 5 Amps.
3. The cabinet may be pedestal or pad mount. See **Standard Plan J-10.10** for details.
4. See **Special Provisions** in the contract for the Cabinet dimensions. See **Standard Specification 9-29.24** for other requirements.
5. For Grounding Details, See **Standard Plan J-60.05**. See **Standard Specification 8-20.3(9)** for other requirements.

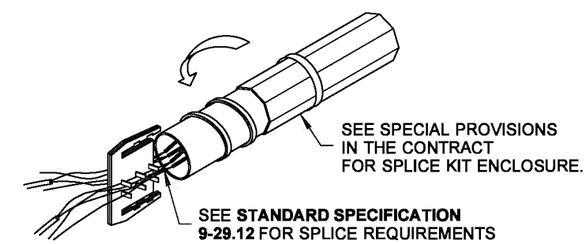

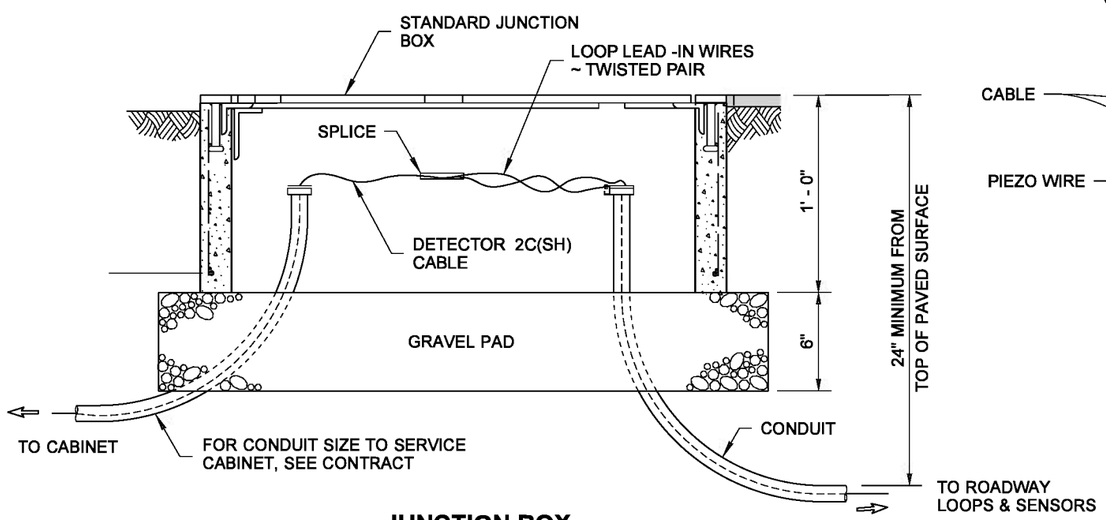

JUNCTION BOX

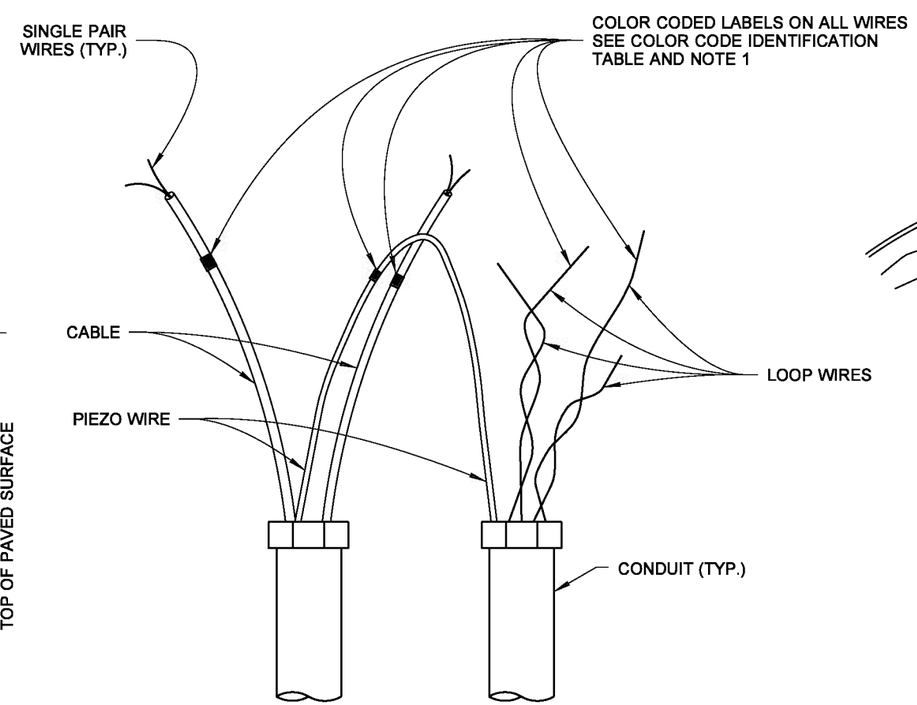

JUNCTION BOX WIRING

(SHOWN PRIOR TO SPLICING)

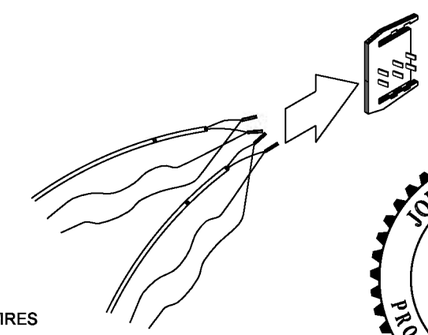

SPLICE DETAIL

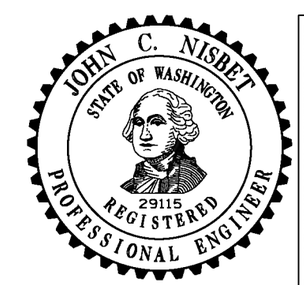

NOTE: THIS PLAN IS NOT A LEGAL ENGINEERING DOCUMENT BUT AN ELECTRONIC DUPLICATE. THE ORIGINAL, SIGNED BY THE ENGINEER AND APPROVED FOR PUBLICATION, IS KEPT ON FILE AT THE WASHINGTON STATE DEPARTMENT OF TRANSPORTATION. A COPY MAY BE OBTAINED UPON REQUEST.

PERMANENT TRAFFIC RECORDER AND WEIGH-IN-MOTION DETAILS STANDARD PLAN J-50.30-00

SHEET 3 OF 3 SHEETS

APPROVED FOR PUBLICATION

Pasco Bakotich III — STATE DESIGN ENGINEER

06-03-11 — DATE

Washington State Department of Transportation

EFFECTIVE: AUGUST 6, 2012 TO August 4, 2013
EFFECTIVE: AUGUST 6, 2012 TO August 4, 2013
EFFECTIVE: AUGUST 6, 2012 TO August 4, 2013
EFFECTIVE: AUGUST 6, 2012 TO August 4, 2013

EFFECTIVE: AUGUST 6, 2012 TO August 4, 2013
EFFECTIVE: AUGUST 6, 2012 TO August 4, 2013

DRAWN BY: LISA CYFORD

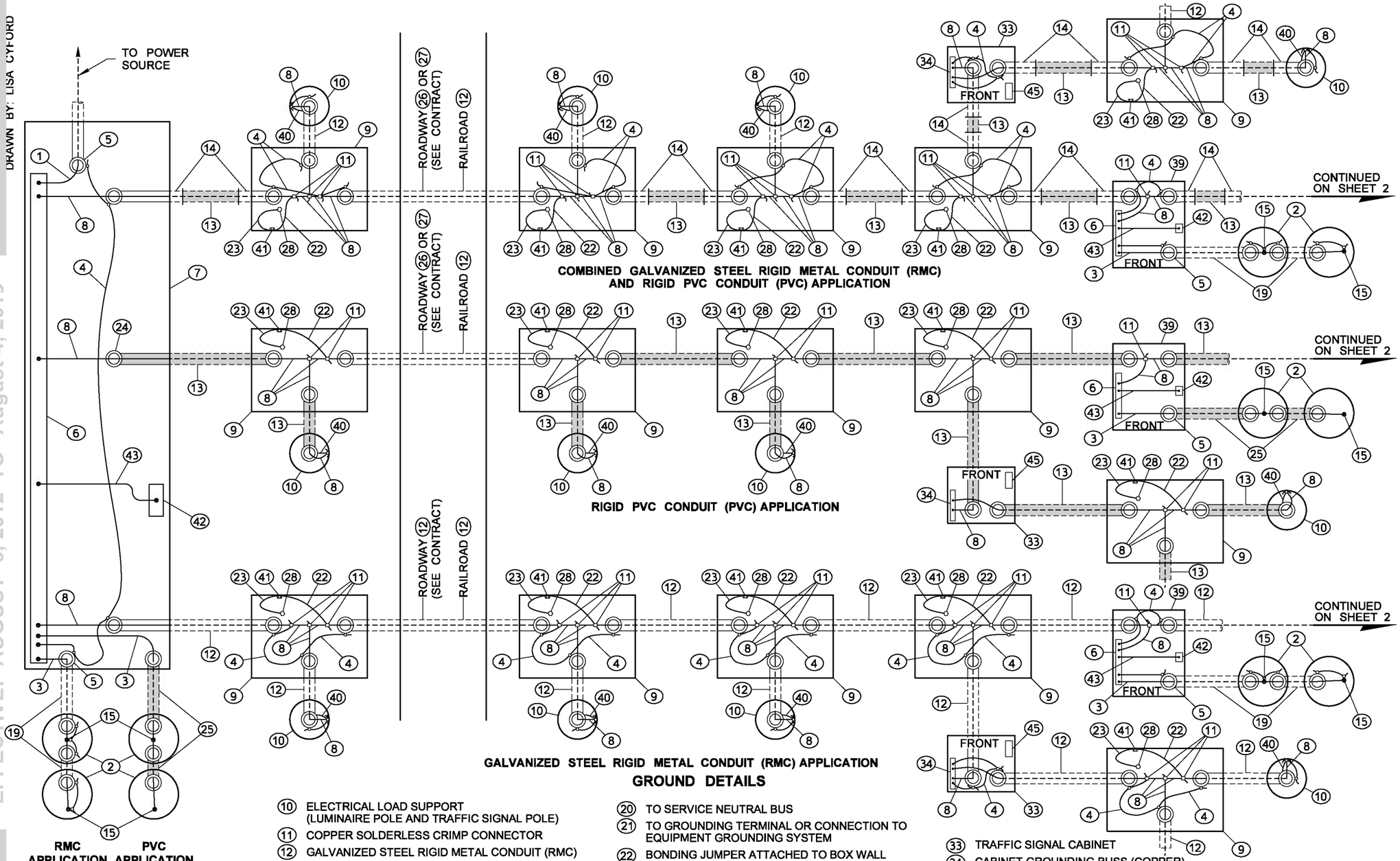

GROUND DETAILS

KEY

1. SERVICE NEUTRAL
2. SERVICE GROUND
3. GROUNDING ELECTRODE CONDUCTOR
4. BONDING JUMPER
5. GROUNDING BUSHING (TYP. ALL RMC CONDUIT TERMINATIONS)
6. GROUNDED NEUTRAL BUS (COPPER)
7. SERVICE ENCLOSURE
8. EQUIPMENT GROUNDING CONDUCTOR
9. JUNCTION BOX
10. ELECTRICAL LOAD SUPPORT (LUMINAIRE POLE AND TRAFFIC SIGNAL POLE)
11. COPPER SOLDERLESS CRIMP CONNECTOR
12. GALVANIZED STEEL RIGID METAL CONDUIT (RMC)
13. RIGID PVC CONDUIT (PVC)
14. OPTION A - 10' RMC WITH FIELD BEND
    - APPROVED ADAPTER FITTING
    - GROUNDING BUSHING

    OPTION B - 10' RMC
    - GS FACTORY ELBOWS
    - APPROVED ADAPTER FITTING
    - GS COUPLING
    - GROUNDING BUSHING
15. GROUND ROD
16. EDGE OF FOUNDATION, POLE OR SERVICE SUPPORT
17. CLAMP
18. JUNCTION BOX OR 8" DRAIN TILE WITH APPROVED COVER
19. CODE SIZE RMC
20. TO SERVICE NEUTRAL BUS
21. TO GROUNDING TERMINAL OR CONNECTION TO EQUIPMENT GROUNDING SYSTEM
22. BONDING JUMPER ATTACHED TO BOX WALL COUPLING NUT
23. BONDING JUMPER ATTACHED TO BOX LID(S) GROUND STUD. # 8 AWG (MIN.) × 4' TINNED BRAIDED COPPER.
24. END BELL BUSHING (TYP. ALL NON-METALLIC CONDUIT TERMINATIONS)
25. CODE SIZED PVC
26. HIGH-DENSITY POLYETHYLENE CONDUIT (HDPE)
27. NON-METALLIC CONDUIT (PVC) SCHEDULE 80
28. BOX LID(S) GROUND STUD
29. CABLE VAULT
30. PULL BOX
31. ITS CABINET
32. EDGE OF FOUNDATION
33. TRAFFIC SIGNAL CABINET
34. CABINET GROUNDING BUSS (COPPER)
35. RIGID PVC OUTERDUCT WITH PVC OR PE INNERDUCT
36. GALVANIZED STEEL RIGID METAL CONDUIT OUTERDUCT WITH PVC OR PE INNERDUCT
37. LOCATE WIRE. COIL 10' INSIDE CABINET, CABLE VAULT, OR PULL BOX
38. DETECTABLE UNDERGROUND WARNING TAPE. COIL 2' INSIDE CABINET, CABLE VAULT, OR PULL BOX
39. TRANSFORMER CABINET
40. GROUNDING CONDUCTOR NON-INSULATED (FROM REINFORCING CAGE)
41. BOX FRAME BONDING ATTACHMENT POINT
42. GROUND LUG WELDED TO CABINET WALL (W/ TINNED COPPER BUSS)
43. CABINET MAIN BONDING JUMPER
44. ITS CAMERA, RAMP METER, TRAFFIC DATA STATION, HIGHWAY ADVISORY RADIO
45. UNGROUNDED CABINET NEUTRAL BUSS (COPPER)

NOTES

1. If parallel circuits of different sizes are contained in one conduit, the size of the grounding conductor shall be determined on the basis of the largest conductor. Only one grounding conductor is required for each conduit, regardless of the number of circuits contained.
2. Service ground per serving utility requirement. If the utility uses aluminum service conductors, an approved Al-Cu pressure-type ground connector shall be used to secure the service neutral to the copper neutral bar in the service enclosure. Except for the above, all grounding conductors shall be copper.
3. Equipment grounding conductors and grounding electrode conductors shall be sized in accordance with the National Electric Code (No. 8 minimum).

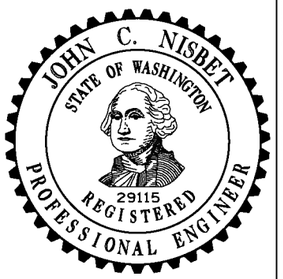

NOTE: THIS PLAN IS NOT A LEGAL ENGINEERING DOCUMENT BUT AN ELECTRONIC DUPLICATE. THE ORIGINAL, SIGNED BY THE ENGINEER AND APPROVED FOR PUBLICATION, IS KEPT ON FILE AT THE WASHINGTON STATE DEPARTMENT OF TRANSPORTATION. A COPY MAY BE OBTAINED UPON REQUEST.

TYPICAL GROUNDING DETAILS

STANDARD PLAN J-60.05-00

SHEET 1 OF 4 SHEETS

APPROVED FOR PUBLICATION

Pasco Bakotich III — 06-16-11

STATE DESIGN ENGINEER — DATE

Washington State Department of Transportation

EFFECTIVE: AUGUST 6, 2012 TO August 4, 2013
EFFECTIVE: AUGUST 6, 2012 TO August 4, 2013
EFFECTIVE: AUGUST 6, 2012 TO August 4, 2013
EFFECTIVE: AUGUST 6, 2012 TO August 4, 2013

EFFECTIVE: AUGUST 6, 2012 TO August 4, 2013

DRAWN BY: LISA CYFORD

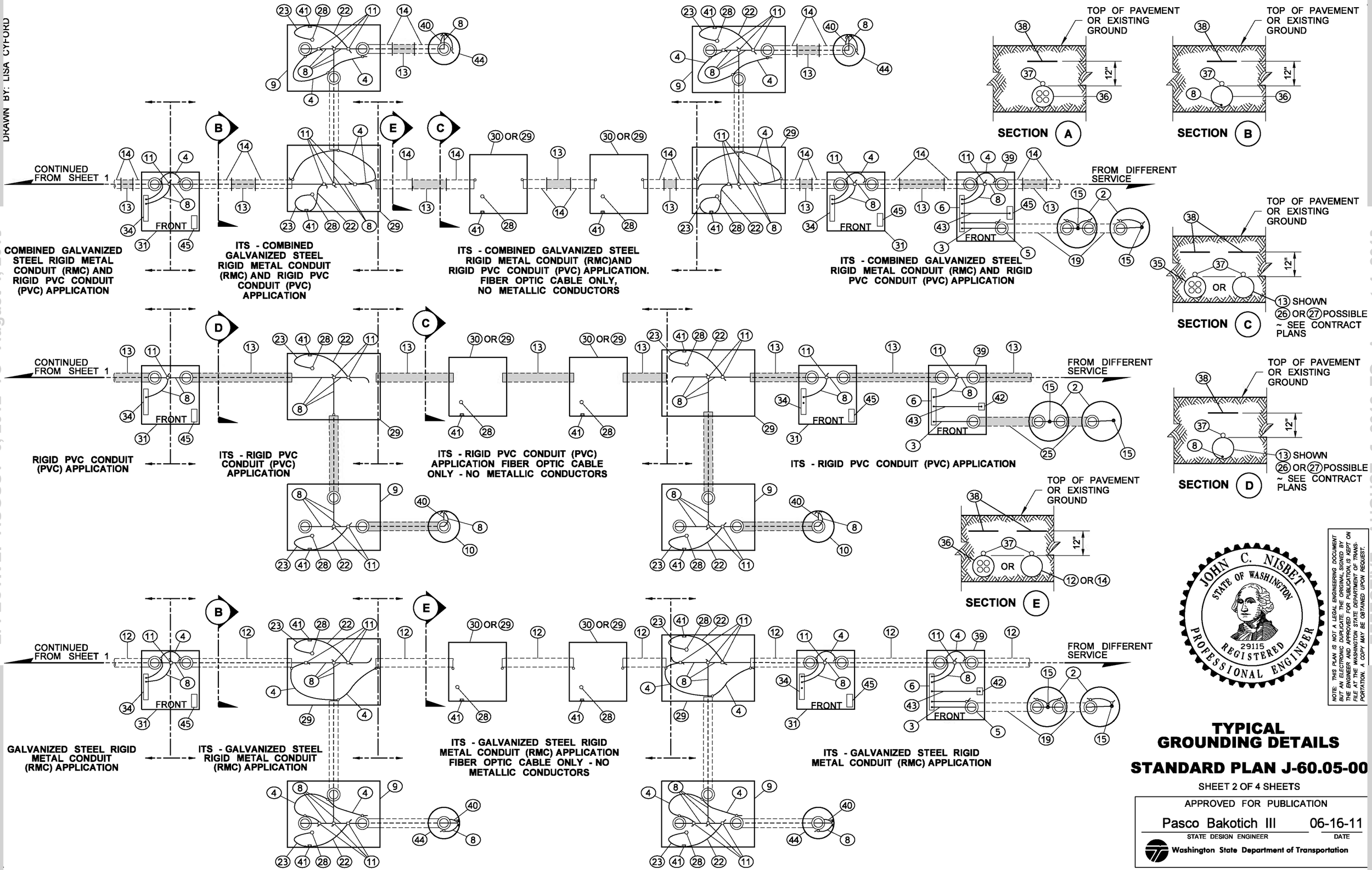

NOTE: THIS PLAN IS NOT A LEGAL ENGINEERING DOCUMENT BUT AN ELECTRONIC DUPLICATE. THE ORIGINAL, SIGNED BY THE ENGINEER AND APPROVED FOR PUBLICATION, IS KEPT ON FILE AT THE WASHINGTON STATE DEPARTMENT OF TRANSPORTATION. A COPY MAY BE OBTAINED UPON REQUEST.

JOHN C. NISBET
STATE OF WASHINGTON
29115
REGISTERED
PROFESSIONAL ENGINEER

TYPICAL GROUNDING DETAILS

STANDARD PLAN J-60.05-00

SHEET 2 OF 4 SHEETS

APPROVED FOR PUBLICATION

Pasco Bakotich III — STATE DESIGN ENGINEER
06-16-11 — DATE

Washington State Department of Transportation

EFFECTIVE: AUGUST 6, 2012 TO August 4, 2013

EFFECTIVE: AUGUST 6, 2012 TO August 4, 2013
EFFECTIVE: AUGUST 6, 2012 TO August 4, 2013

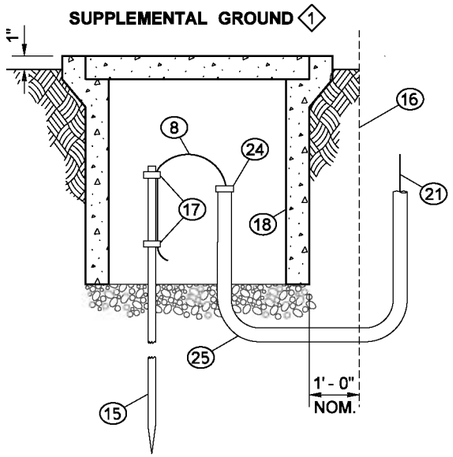

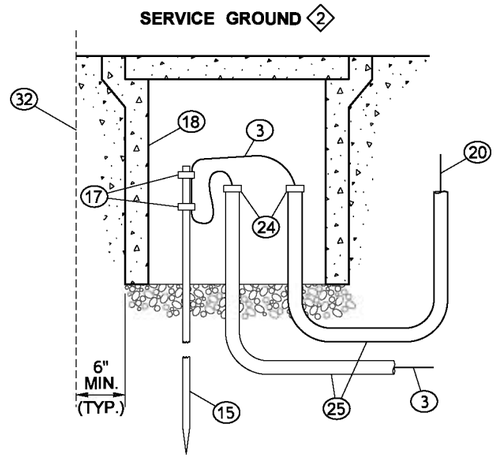

DETAIL A

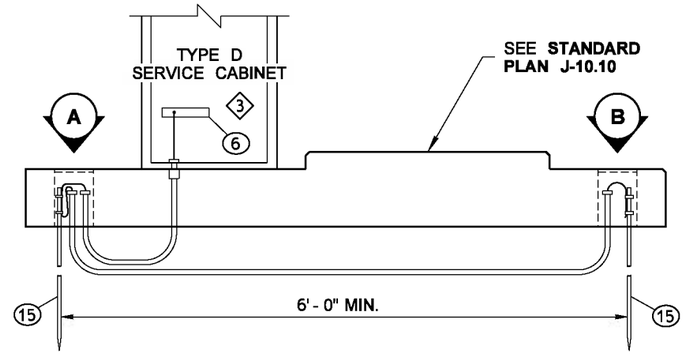

RIGID PVC CONDUIT (PVC) APPLICATION

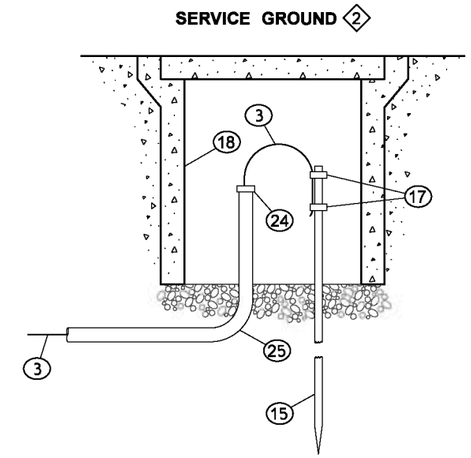

DETAIL B

SEE KEY ON SHEET 1 FOR PARTS

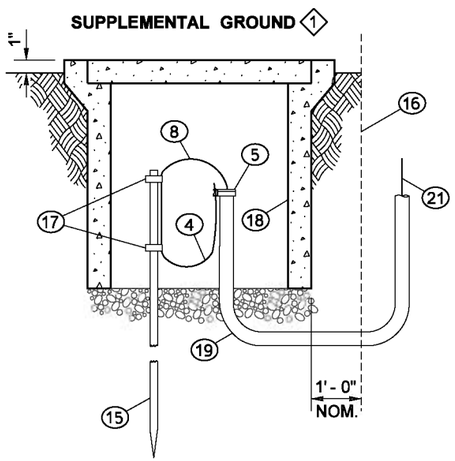

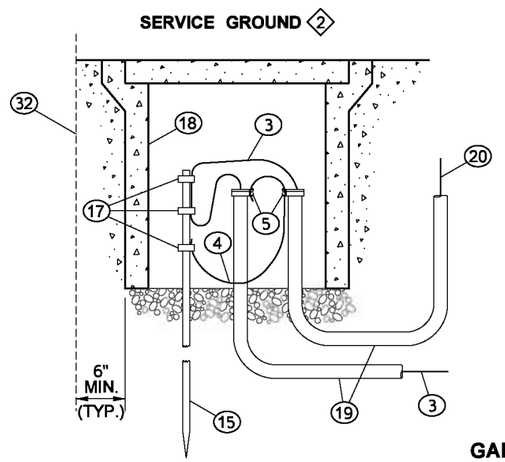

DETAIL C

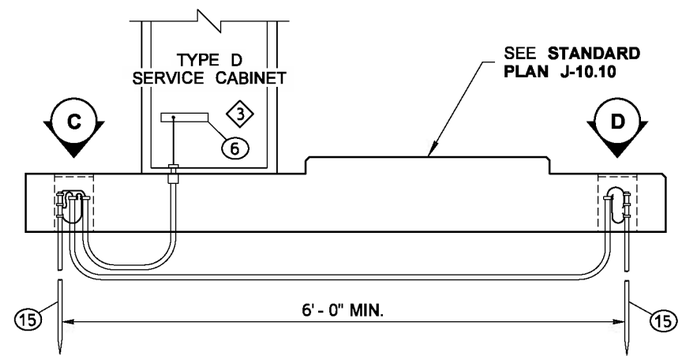

GALVANIZED STEEL RIGID METAL CONDUIT (RMC) APPLICATION

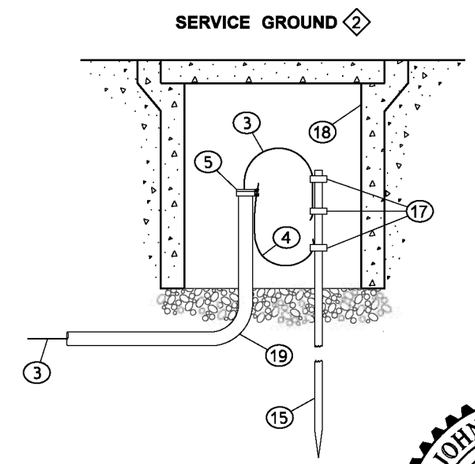

DETAIL D

1. Required to supplement equipment grounding for luminaire standards with direct burial aerial feeds, or where required in the plans
2. Required at all service and separately derived systems
3. Type D service cabinet shown. Use this concept for Type E cabinet or transformer. Type D service cabinet shall be installed on lower surface of foundation only. Type B service cabinet and transformer cabinet shall be installed on raised surface of foundation only.
4. Type B modified service cabinet
5. Grounding electrode conductor and equipment grounding conductor shall not be routed through lug on grounding bushing.

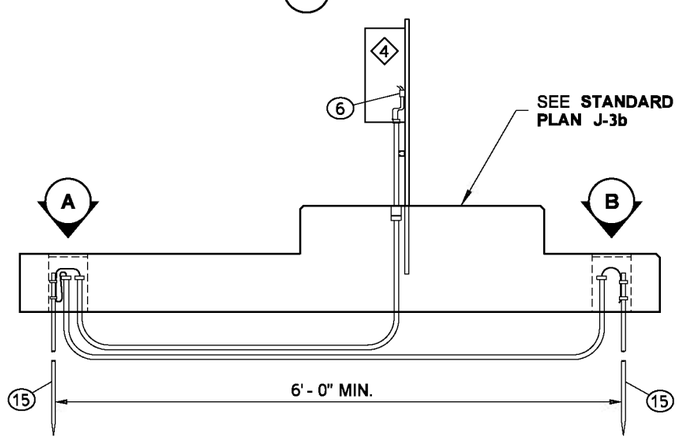

RIGID PVC CONDUIT (PVC) APPLICATION

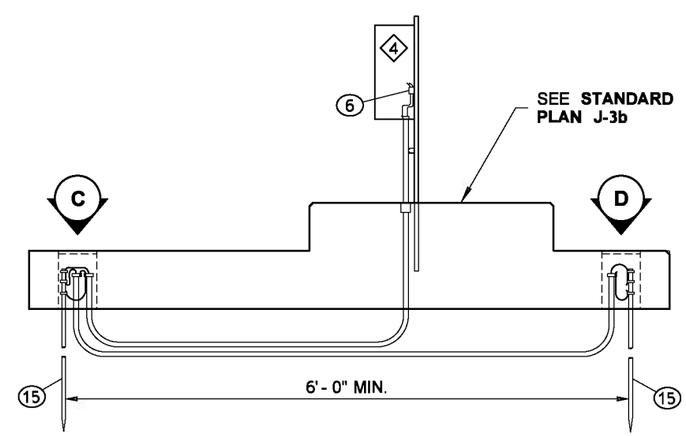

GALVANIZED STEEL RIGID METAL CONDUIT (RMC) APPLICATION

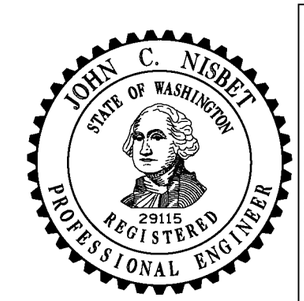

NOTE: THIS PLAN IS NOT A LEGAL ENGINEERING DOCUMENT BUT AN ELECTRONIC DUPLICATE. THE ORIGINAL SIGNED BY THE ENGINEER AND APPROVED FOR PUBLICATION, IS KEPT ON FILE AT THE WASHINGTON STATE DEPARTMENT OF TRANSPORTATION. A COPY MAY BE OBTAINED UPON REQUEST.

TYPICAL GROUNDING DETAILS

STANDARD PLAN J-60.05-00

SHEET 3 OF 4 SHEETS

APPROVED FOR PUBLICATION

Pasco Bakotich III — STATE DESIGN ENGINEER

06-16-11 — DATE

Washington State Department of Transportation

EFFECTIVE: AUGUST 6, 2012 TO August 4, 2013
EFFECTIVE: AUGUST 6, 2012 TO August 4, 2013
EFFECTIVE: AUGUST 6, 2012 TO August 4, 2013
EFFECTIVE: AUGUST 6, 2012 TO August 4, 2013
EFFECTIVE: AUGUST 6, 2012 TO August 4, 2013
EFFECTIVE: AUGUST 6, 2012 TO August 4, 2013

DRAWN BY: LISA CYFORD

EFFECTIVE: AUGUST 6, 2012 TO August 4, 2013
EFFECTIVE: AUGUST 6, 2012 TO August 4, 2013

(1) 3/8" × 2" × 2" Frame Bonding Stud Plate with 1/4NC × 1" Stainless Steel Bonding Stud.

- Weld Bonding Stud to Frame Bonding Plate.
- Weld to lid support frame.
- 1/4" weld ~ 3 sides.
- Grind lid bearing surface flat after welding.
- All corners rounded. Corners along exposed sheared or cut edges shall be broken by light grinding to achieve an approximate 1/16" (inch) chamfer or rounding.
- Protect conductors with fireproof cloth prior to welding.
- Omit Frame Bonding Stud Plate if the Frame Bonding point already exists.

(2) Weld all around lid bonding stud ~ 1/4 NC × 1" stainless steel ~ liberally coat entire assembly w/ anti-seize compound.

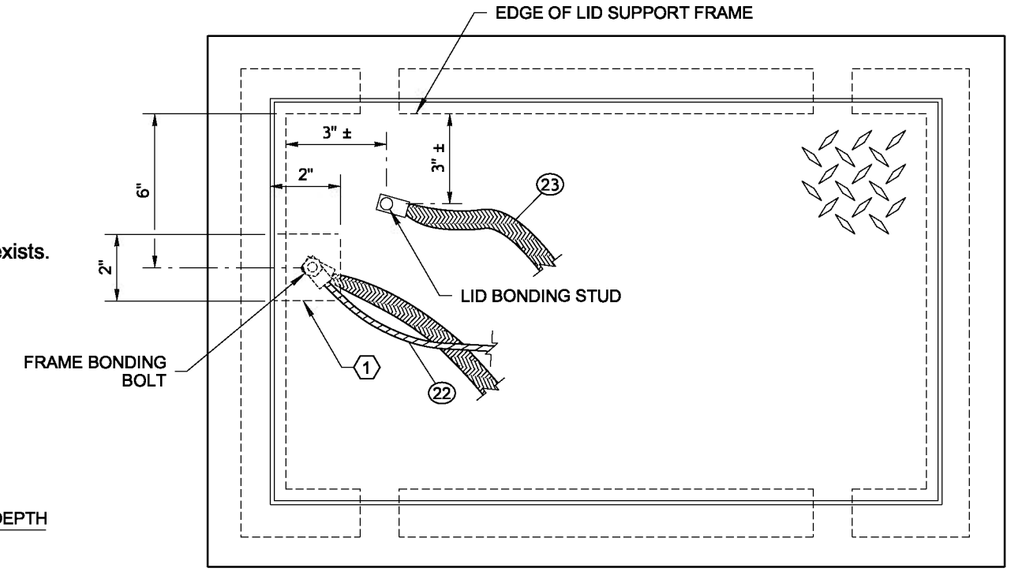

PLAN

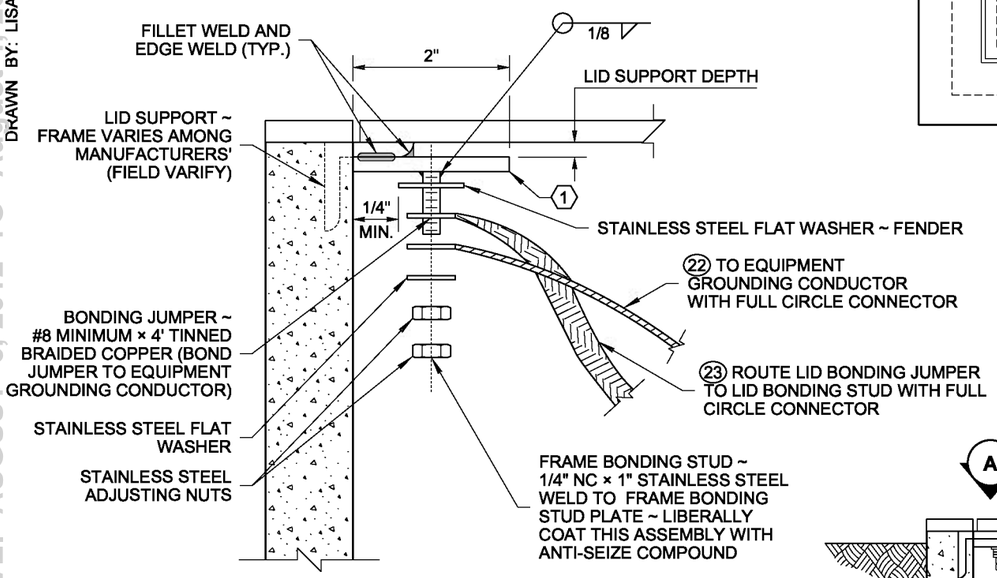

FRAME BONDING DETAIL (A)

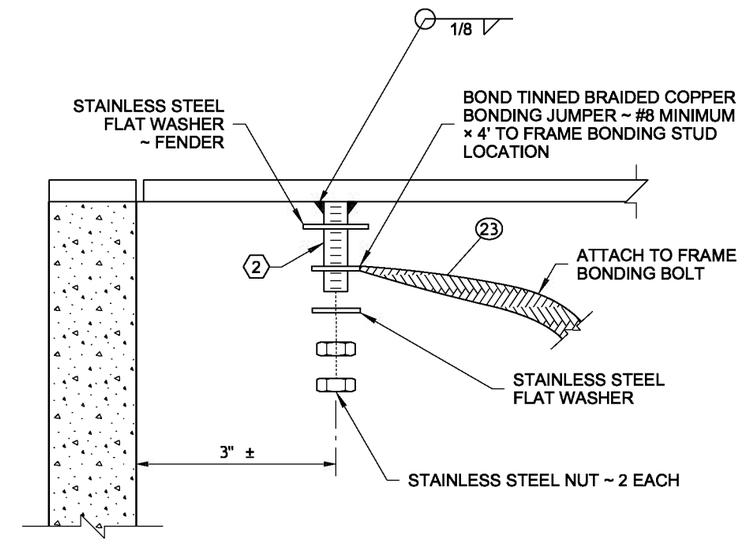

LID BONDING DETAIL (B)

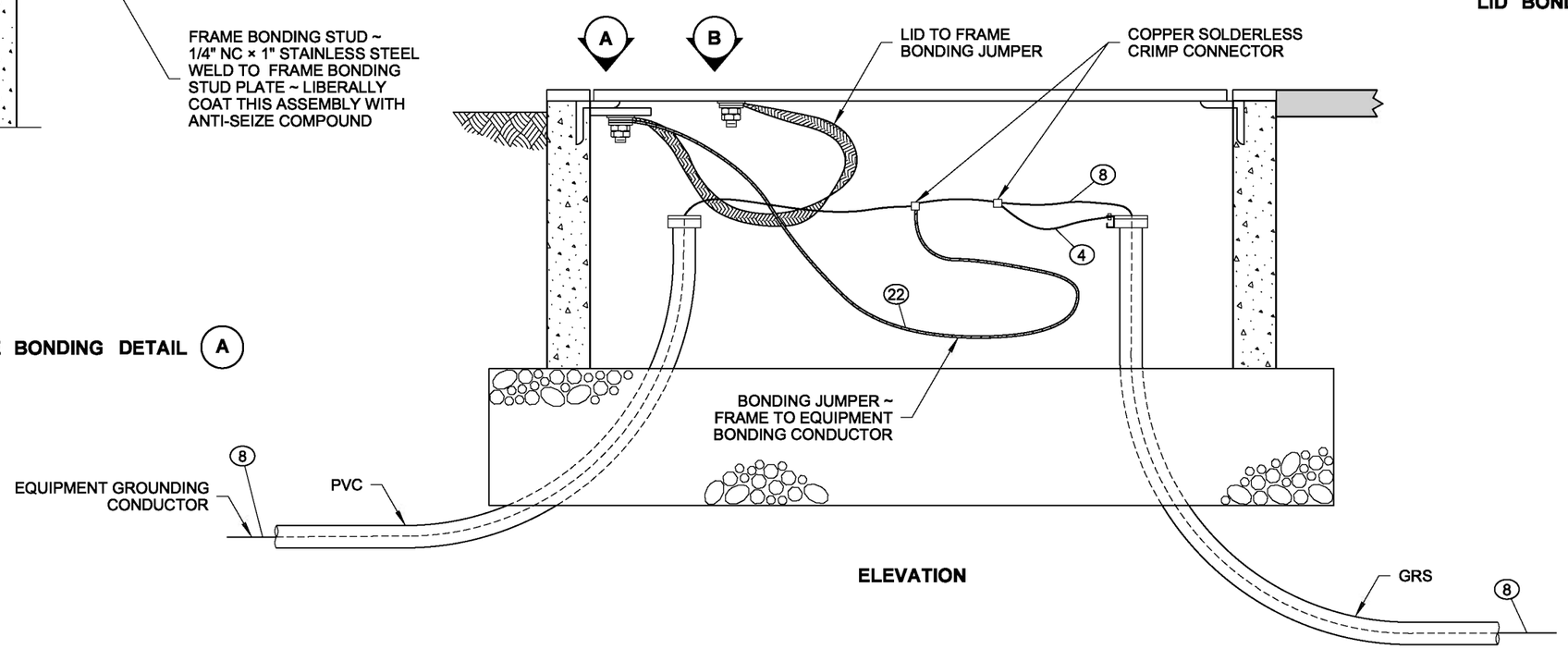

ELEVATION

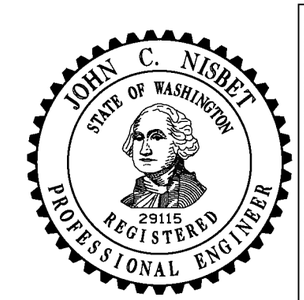

NOTE: THIS PLAN IS NOT A LEGAL ENGINEERING DOCUMENT BUT AN ELECTRONIC DUPLICATE. THE ORIGINAL SIGNED BY THE ENGINEER AND APPROVED FOR PUBLICATION, IS KEPT ON FILE AT THE WASHINGTON STATE DEPARTMENT OF TRANSPORTATION. A COPY MAY BE OBTAINED UPON REQUEST.

TYPICAL GROUNDING DETAILS

STANDARD PLAN J-60.05-00

SHEET 4 OF 4 SHEETS

APPROVED FOR PUBLICATION

Pasco Bakotich III — STATE DESIGN ENGINEER — 06-16-11 — DATE

Washington State Department of Transportation

DRAWN BY: LISA CYFORD

EFFECTIVE: AUGUST 6, 2012 TO August 4, 2013
EFFECTIVE: AUGUST 6, 2012 TO August 4, 2013
EFFECTIVE: AUGUST 6, 2012 TO August 4, 2013
EFFECTIVE: AUGUST 6, 2012 TO August 4, 2013

EFFECTIVE: AUGUST 6, 2012 TO August 4, 2013
EFFECTIVE: AUGUST 6, 2012 TO August 4, 2013

DRAWN BY: LISA STFORD

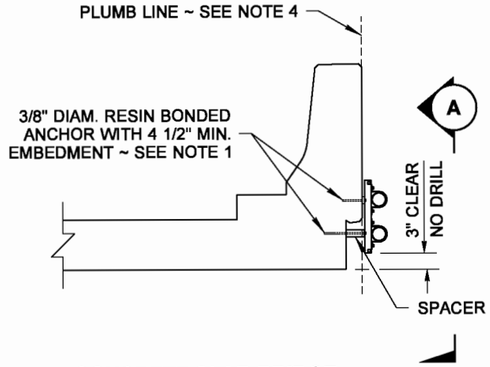

CONCRETE SLAB BRIDGE

(AUTHORIZED ONLY WITH WRITTEN BRIDGE OFFICE APPROVAL, WHERE VERTICAL CLEARANCE IS CONSTRAINED)

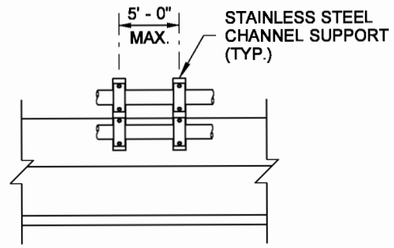

SECTION A

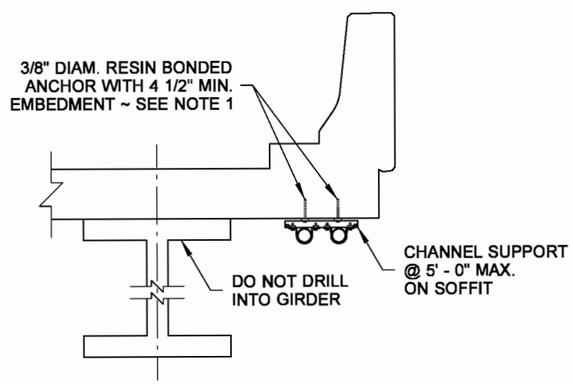

HORIZONTAL CHANNEL MOUNT

(F-SHAPE BARRIER SHOWN APPLY TO ALL BARRIER TYPES)

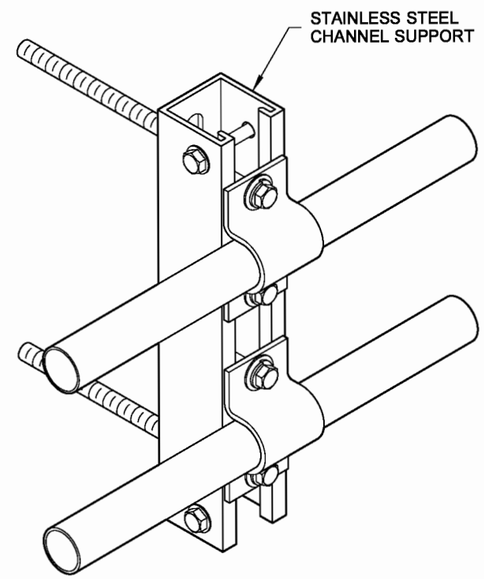

ISOMETRIC VIEW

CONDUIT SUPPORT DETAIL

CONDUIT DIMENSIONS (1)	
NOMINAL TRADE SIZE (IN.)	OUTSIDE DIAMETERS
1/2	0.840
3/4	1.050
1	1.315
1 1/4	1.660
1 1/2	1.900
2	2.375
2 1/2	2.875
3	3.500
3 1/2	4.000
4	4.500
5	5.563
6	6.625

(1) CONDUIT DIAMETERS REFLECT THE DIMENSIONS FOR RIGID GALVANIZED STEEL, SCHEDULE 40 PVC AND SCHEDULE 80 PVC (3 1/2" SCHEDULE 80 PVC IS NOT AVAILABLE)

STRAP THICKNESS CHART	
NOMINAL PIPE SIZE (IN.)	STRAP THICKNESS
1/2 - 2	> OR = 1/8"
> 2 - 5	> OR = 1/4"
6	> OR = 1/4"

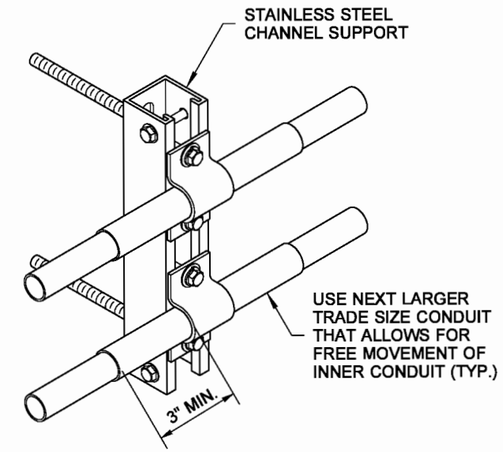

ISOMETRIC VIEW

PVC CONDUIT SUPPORT DETAIL

(FOR UTILITY COMPANY USE - ONLY ALLOWED IN RARE INSTANCES, AUTHORIZED ONLY WITH WRITTEN BRIDGE OFFICE APPROVAL, WHERE VERTICAL CLEARANCE IS CONSTRAINED)

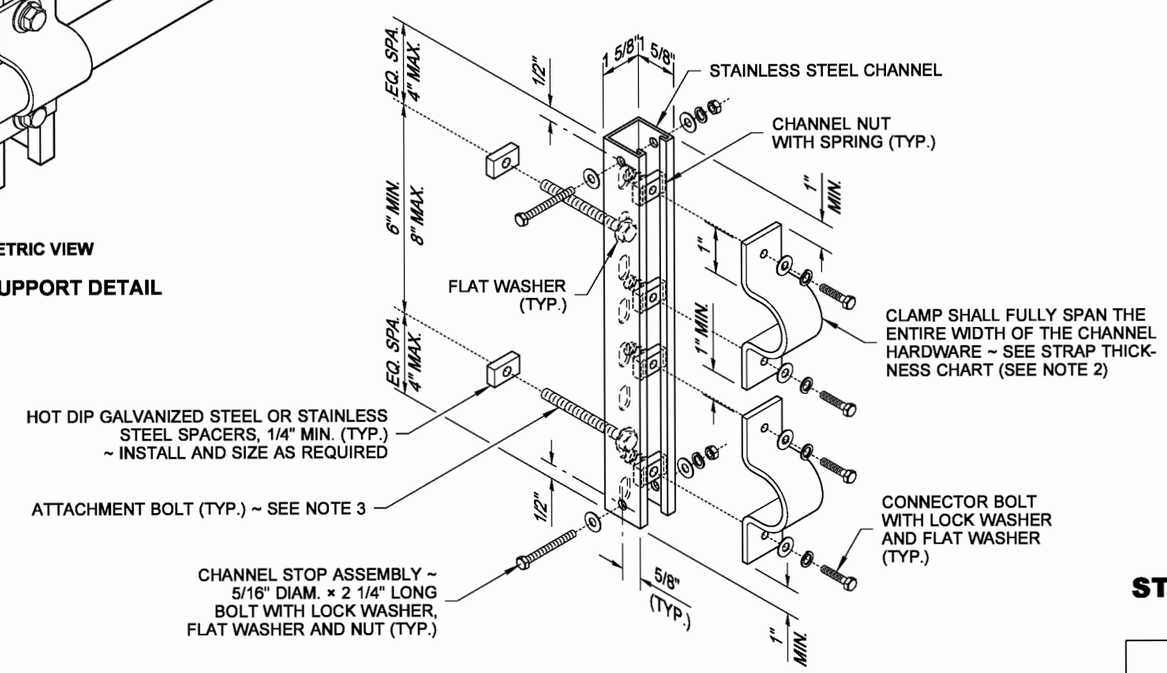

ISOMETRIC VIEW

STAINLESS STEEL CHANNEL SUPPORT DETAIL

(VERTICAL MOUNT SHOWN)

NOTES

1. Drilling through reinforcing steel is not allowed. If steel is hit while drilling, the location shall be moved and the abandoned hole filled with grout conforming to **Standard Specification 6-02.3(20).** There shall be a minimum of a 3" edge distance to the center-line of anchor holes in concrete. Mount the stain-less steel support using an approved resin bonded anchor system. Anchors shall be stainless steel and shall be of 3/8" diameter (expansion anchors are not allowed). Anchor Bolt embedment of 4 1/2" minimum.
2. Number of clamps shall be determined by number of conduits to be attached to the Stainless Steel Channel Support. See Conduit Plans for conduit routing.
3. Add additional Attachment Bolts when required to maintain 8" maximum spacing between adjacent Attachment Bolts.
4. Stainless Steel Channel to be plumb to face of structure. Size spacer to maintain plumb line. When barrier is not plumb, size spacer to maintain back of barrier line.
5. See **Standard Plan J-60.14** for Column Mounting details.

NOTE: THIS PLAN IS NOT A LEGAL ENGINEERING DOCUMENT BUT AN ELECTRONIC DUPLICATE. THE ORIGINAL, SIGNED BY THE ENGINEER AND APPROVED FOR PUBLICATION, IS KEPT ON FILE AT THE WASHINGTON STATE DEPARTMENT OF TRANSPORTATION. A COPY MAY BE OBTAINED UPON REQUEST.

STAINLESS STEEL CHANNEL

STANDARD PLAN J-60.13-00

SHEET 1 OF 1 SHEET

APPROVED FOR PUBLICATION

Pasco Bakotich III — STATE DESIGN ENGINEER

06-16-10 — DATE

Washington State Department of Transportation

EFFECTIVE: AUGUST 6, 2012 TO August 4, 2013
EFFECTIVE: AUGUST 6, 2012 TO August 4, 2013
EFFECTIVE: AUGUST 6, 2012 TO August 4, 2013
EFFECTIVE: AUGUST 6, 2012 TO August 4, 2013

EFFECTIVE: AUGUST 6, 2012 TO August 4, 2013
EFFECTIVE: AUGUST 6, 2012 TO August 4, 2013

DRAWN BY: LISA CYFORD

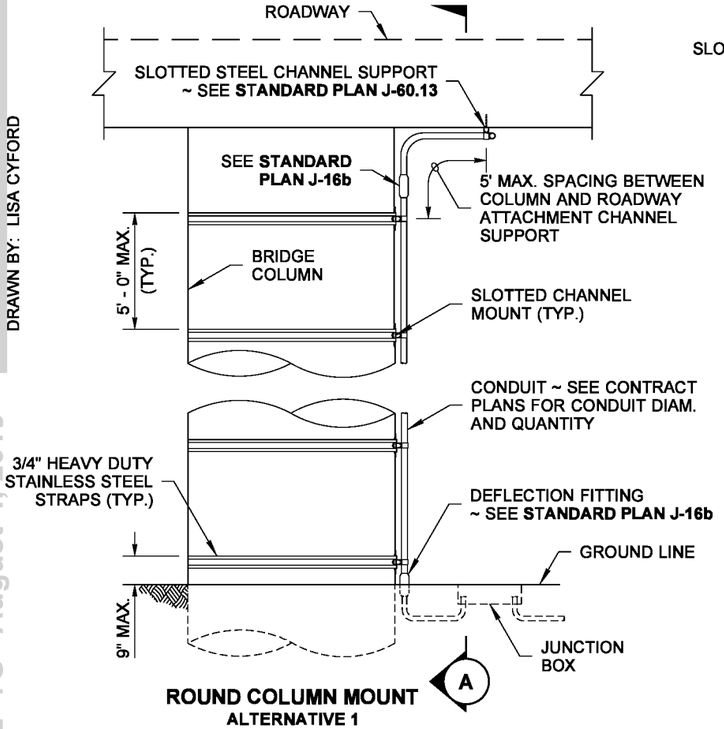

ROUND COLUMN MOUNT
ALTERNATIVE 1

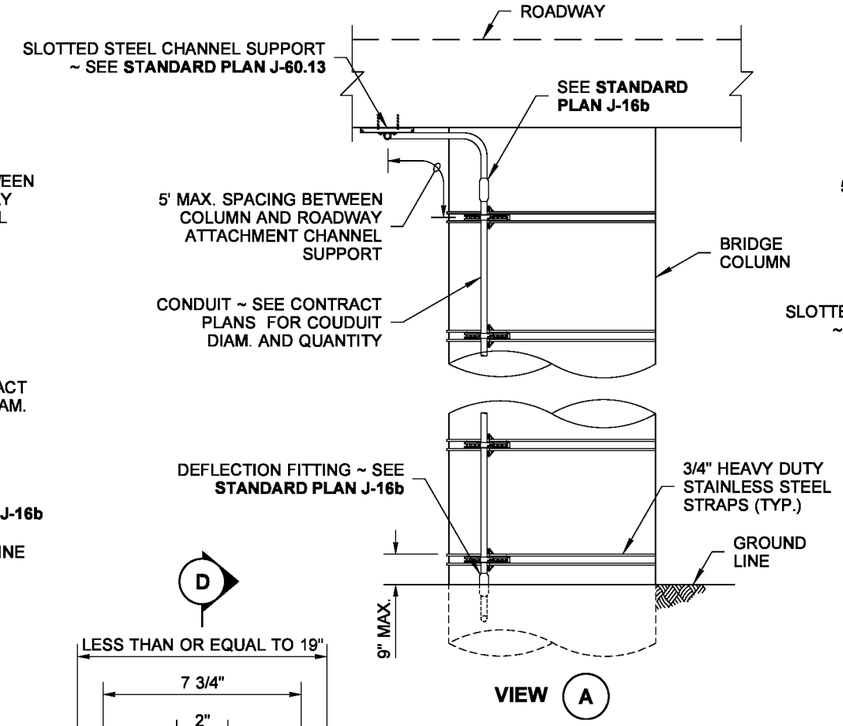

VIEW A

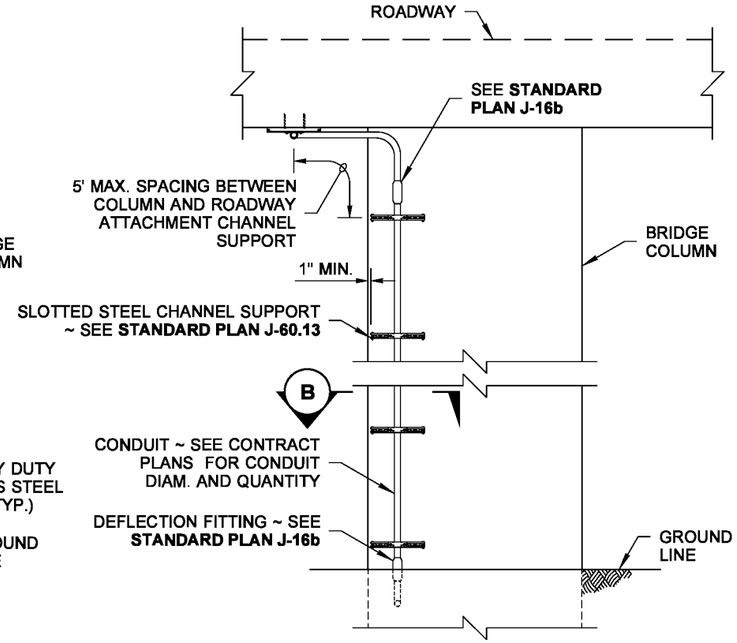

SQUARE COLUMN MOUNT
ALTERNATIVE 2

NOTES

1. See **Standard Plan J-60.13** for Slotted Steel Channel details.
2. Stainless Steel Channel to be plumb to face of structure. Size spacer to maintain plumb line.
3. Slotted Channel mounting plate shall be installed where conduit is routed along column.
4. See Contract Plans for specified Alternative attachment type.

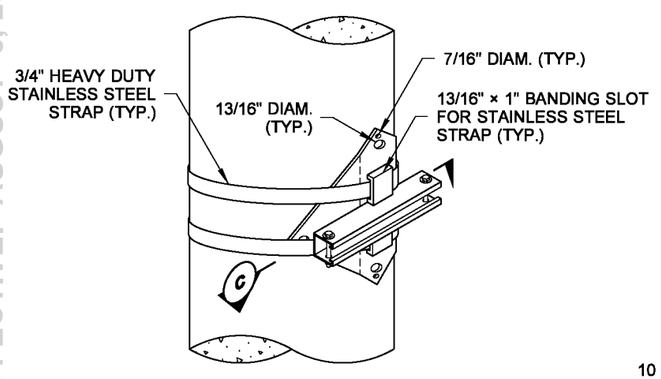

ISOMETRIC VIEW
COLUMN MOUNT DETAILS

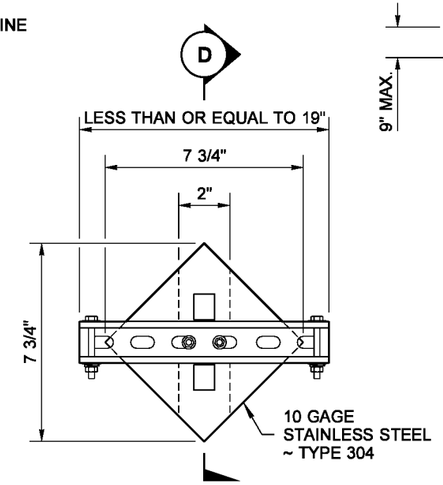

SLOTTED CHANNEL MOUNTING PLATE

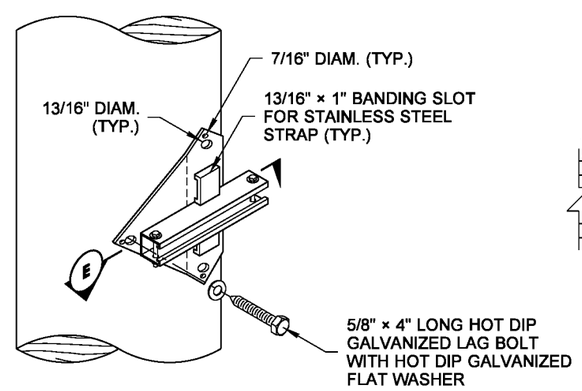

ISOMETRIC VIEW
WOOD POLE MOUNT DETAILS

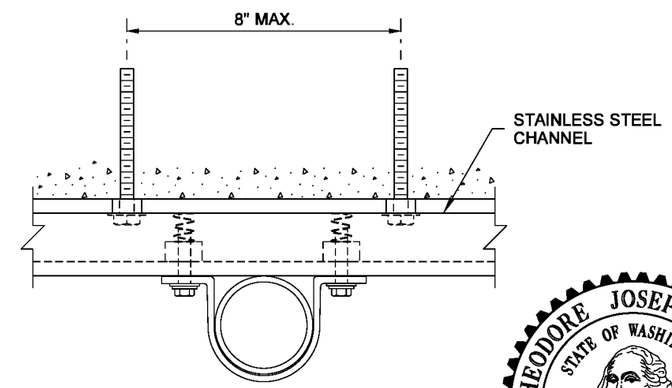

SECTION B
SQUARE COLUMN MOUNT SHOWN

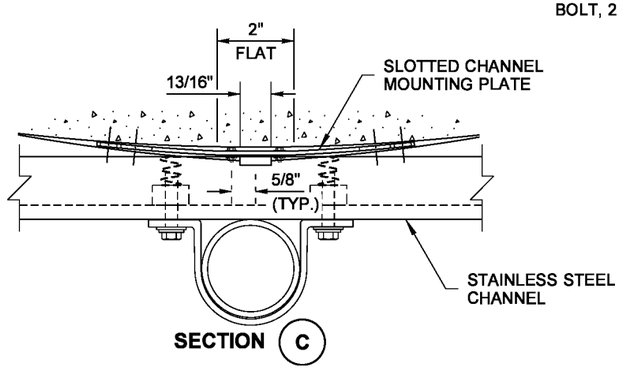

SECTION C

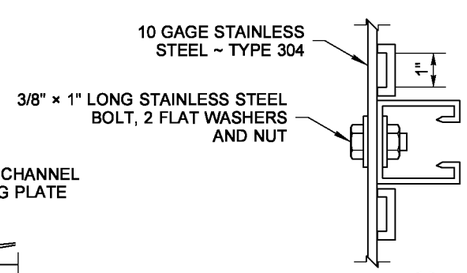

SECTION D

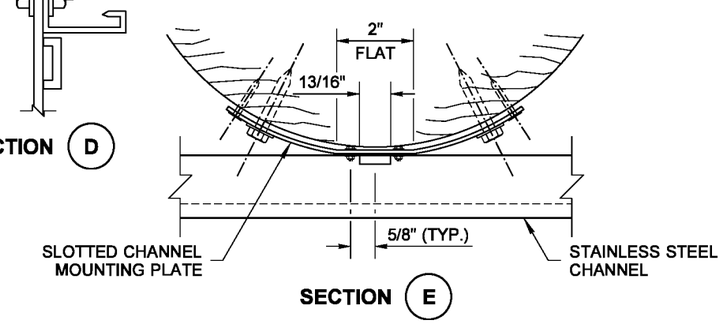

SECTION E

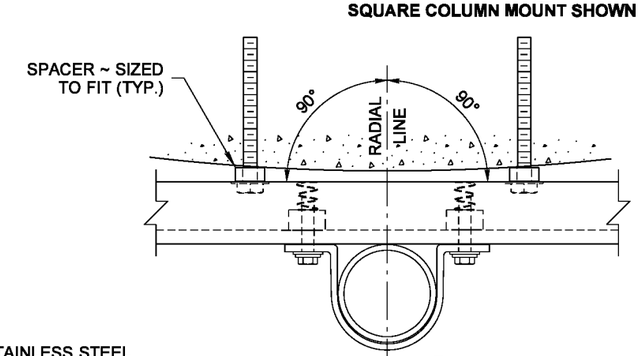

SECTION B
ROUND COLUMN MOUNT SHOWN

THEODORE JOSEPH BAILEY
STATE OF WASHINGTON
39820
REGISTERED
PROFESSIONAL ENGINEER

NOTE: THIS PLAN IS NOT A LEGAL ENGINEERING DOCUMENT BUT AN ELECTRONIC DUPLICATE. THE ORIGINAL, SIGNED BY THE ENGINEER AND APPROVED FOR PUBLICATION, IS KEPT ON FILE AT THE WASHINGTON STATE DEPARTMENT OF TRANSPORTATION. A COPY MAY BE OBTAINED UPON REQUEST.

STAINLESS STEEL CHANNEL MOUNTING DETAILS ON COLUMN OR POLE
STANDARD PLAN J-60.14-00

SHEET 1 OF 1 SHEET

APPROVED FOR PUBLICATION

Pasco Bakotich III — STATE DESIGN ENGINEER
06-16-10 — DATE

Washington State Department of Transportation

EFFECTIVE: AUGUST 6, 2012 TO August 4, 2013
EFFECTIVE: AUGUST 6, 2012 TO August 4, 2013
EFFECTIVE: AUGUST 6, 2012 TO August 4, 2013
EFFECTIVE: AUGUST 6, 2012 TO August 4, 2013

EFFECTIVE: AUGUST 6, 2012 TO August 4, 2013

DRAWN BY: LISA CYFORD

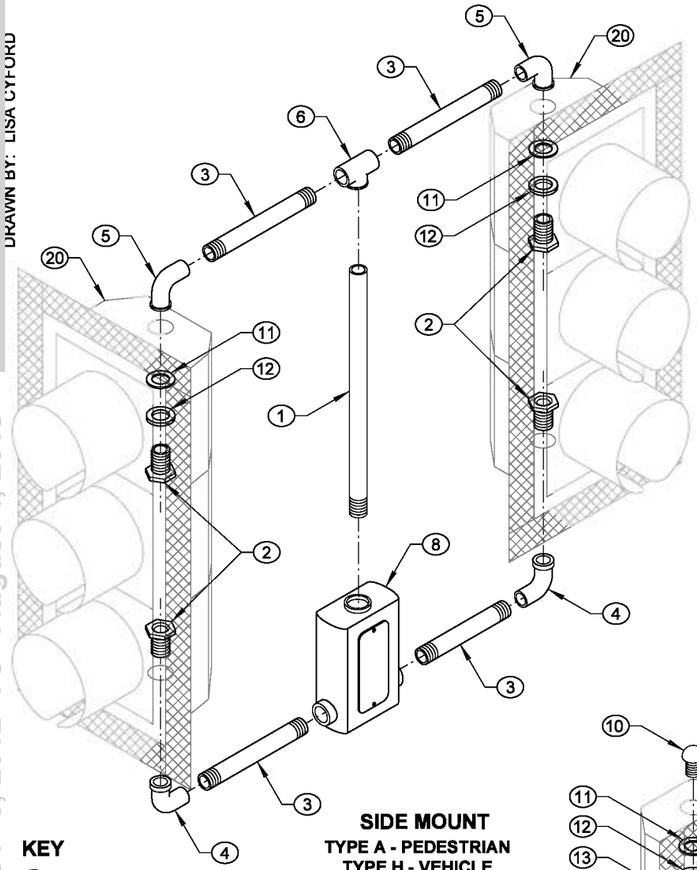

SIDE MOUNT
TYPE A - PEDESTRIAN
TYPE H - VEHICLE

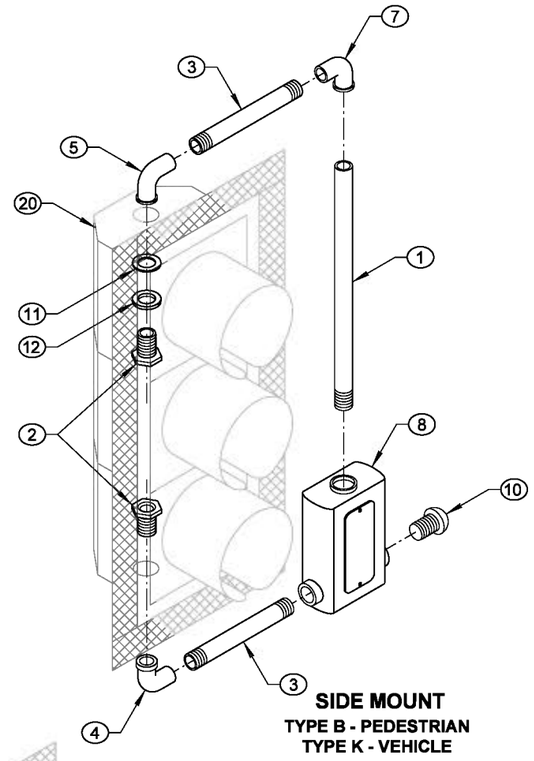

SIDE MOUNT
TYPE B - PEDESTRIAN
TYPE K - VEHICLE

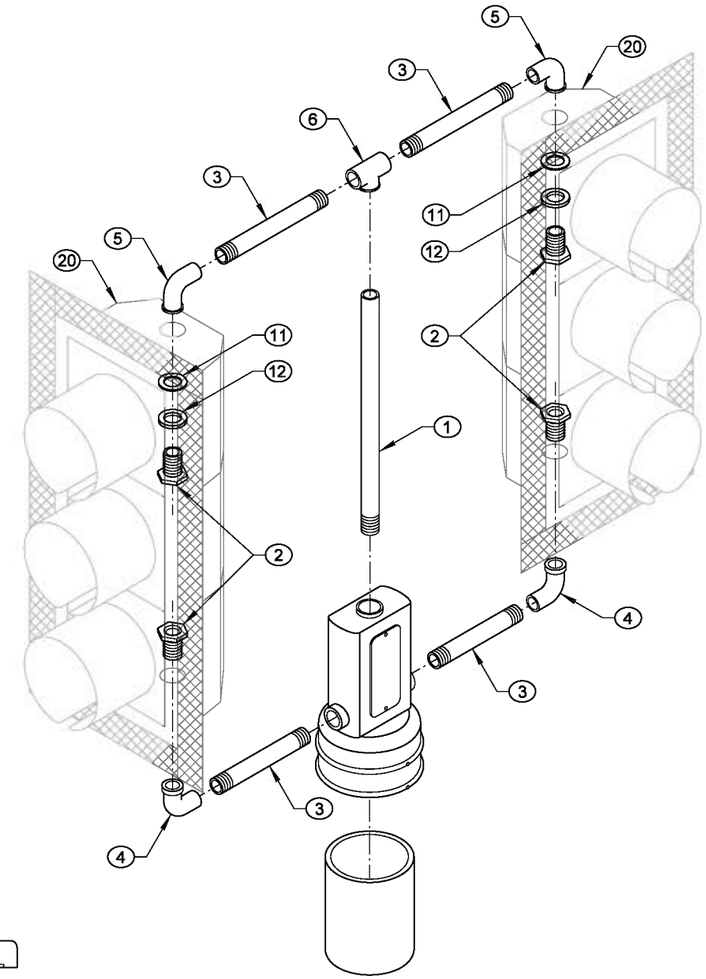

TOP MOUNT
TYPE C - PEDESTRIAN
TYPE F - VEHICLE

KEY

1. CENTER PIPE
2. LOCKNIPPLE
3. NIPPLE
4. SERRATED ELBOW
5. SERRATED OR FLANGED ELBOW
6. REAMED TEE WITH SET SCREW
7. REAMED ELBOW WITH SET SCREW
8. BRONZE TERMINAL COMPARTMENT WITH:
   - GASKETED COVER
   - FASTENERS
   - WIRE LEADS
   - MOUNTING SADDLE FOR SIDE MOUNTS
   - 1/4" DIAM. DRAIN HOLE
   - 12 POSITION TERMINAL STRIP
   - WIREWAY FOR SIDE MOUNTS
9. BRONZE COLLAR ~ 4 1/4" I.D. OFFSET OPENING W/SET SCREWS
10. ORNAMENT CAP
11. NEOPRENE GASKET
12. WASHER
13. CONDUIT LOCKNUT
14. TYPE E HINGE MOUNT ~ LEFT OR RIGHT, SEE CONTRACT
15. FASTENER WITH SPACER ~
    - 1/2" LAG SCREWS ON WOOD POLE
    - 1/2" BOLTS TAPPED TO METAL POLE
16. FLATHEAD SOCKET BOLT
17. 1/2" INSERT HOLE FOR EXTERNAL WIRE ENTRANCE (REQUIRED ON TIMBER POLE MOUNTING ONLY)
18. TERMINAL BLOCK AND PHENOLIC TAG
19. INSULINER ~ 1" MIN. DIAM. HOLE
20. SIGNAL HEAD WITH BACKPLATE

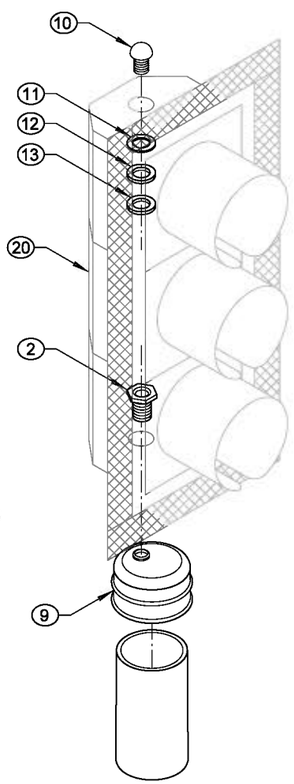

TOP MOUNT

TYPE D - PEDESTRIAN ~ OFFSET BRONZE COLLAR TO FRONT
OR VEHICLE (SHOWN) ~ OFFSET BRONZE COLLAR TO BACK

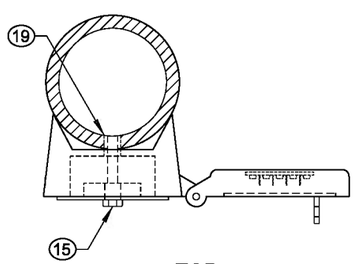

TOP

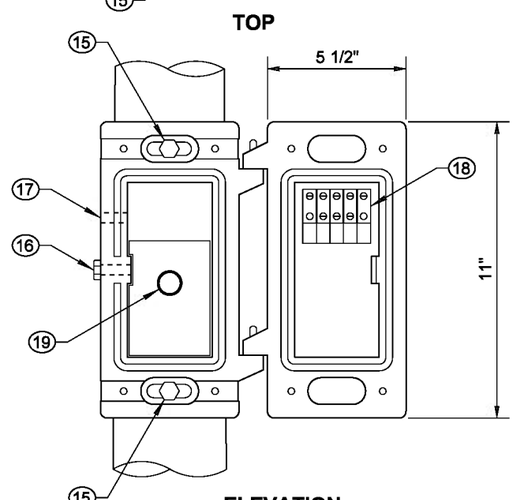

ELEVATION
TYPE E
MOUNTING DETAILS

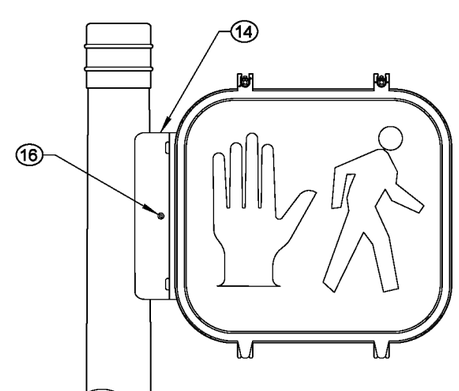

PEDESTRIAN HEAD
SIDE MOUNT
(LEFT SIDE SHOWN)

TYPE E - NEON GRID OR SIMILAR SIZE
LED PEDESTRIAN HEAD

NOTES

1. See Contract for head type, mounting height, and orientation.
2. All nipples, fittings, and center pipes shall be 1 1/2" diameter.
3. Install neoprene gasket inside head when flanged elbows are supplied.
4. Extend wire sheath a minimum of 1" inside all signal and sign housings and terminal compartments.
5. Apply bead of silicone to the serrated ring and around the perimeter of all top openings prior to installation of fittings.
6. Back plates shall be constructed of anodized aluminum and shall be mounted with stainless steel hardware. A 2-inch-wide strip of yellow retro-reflective, type IV prismatic sheeting, conforming to the requirements of **Standard Specification 9-28.12,** shall be applied in accordance with the manufacturer's recommendations. The application surface of the back plate shall be cleaned, degreased with isopropyl alcohol, and dried prior to application of the sheeting. See **Standard Specification 9-29.16(2)D.**
7. Drill a 1/4" drain hole in the bottom of each signal assembly, and one in the bottom of each pedestrian head. When signal assembly is mounted horizontally, drill a 1/4" drain hole at the lowest point of each section of the signal assembly.

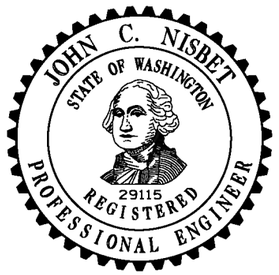

SIGNAL HEAD MOUNTING DETAILS ~ POLE AND POST TOP MOUNTINGS

STANDARD PLAN J-75.10-01

SHEET 1 OF 1 SHEET

APPROVED FOR PUBLICATION

Pasco Bakotich III — STATE DESIGN ENGINEER
05-11-11 — DATE

Washington State Department of Transportation

EFFECTIVE: AUGUST 6, 2012 TO August 4, 2013

EFFECTIVE: AUGUST 6, 2012 TO August 4, 2013
EFFECTIVE: AUGUST 6, 2012 TO August 4, 2013

DRAWN BY: LISA CYFORD

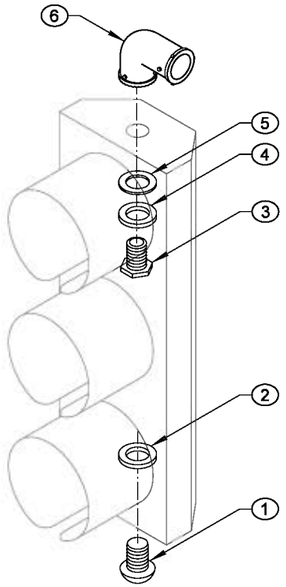

ARM MOUNT TYPE L

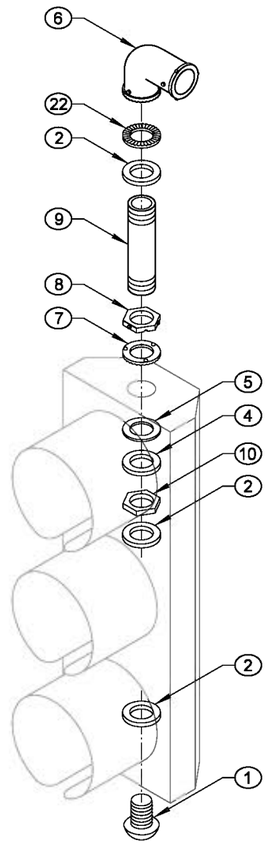

ARM MOUNT TYPE LE
(TYPE L WITH EXTENSION FITTINGS)

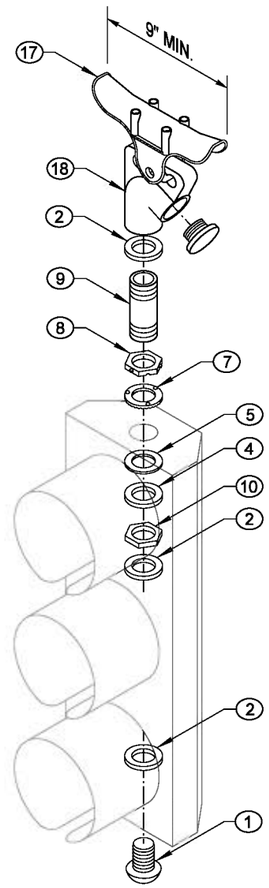

SPAN WIRE TYPE P (1 HEAD)

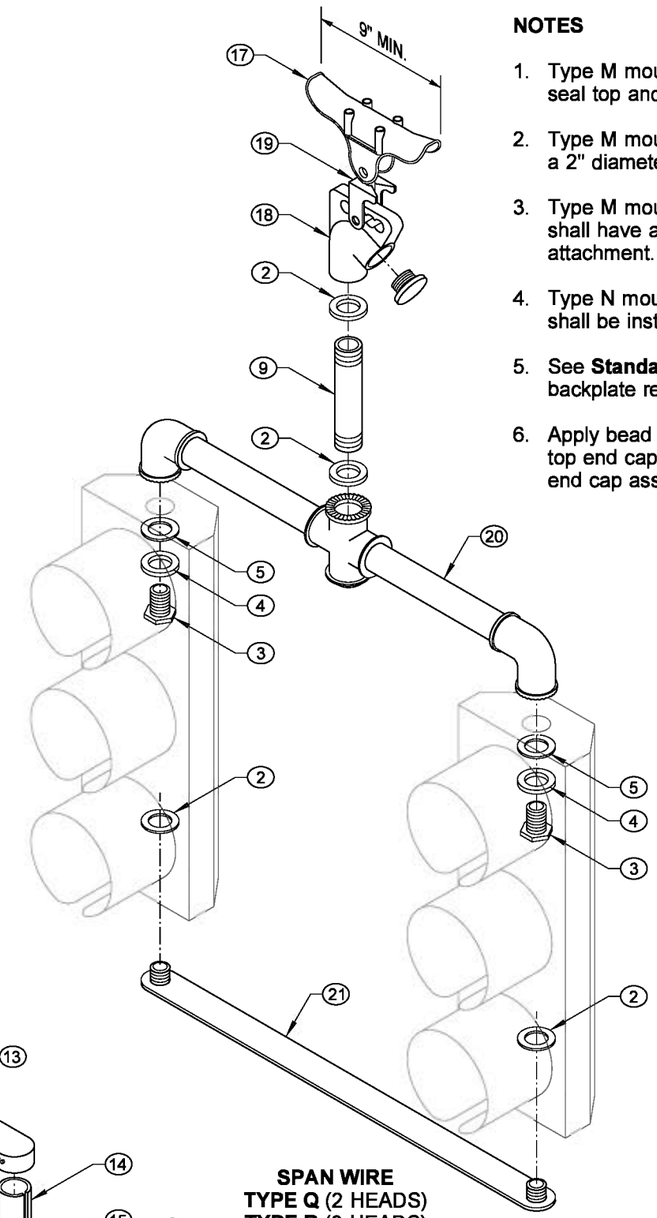

SPAN WIRE
TYPE Q (2 HEADS)
TYPE R (3 HEADS)
TYPE S (4 HEADS)

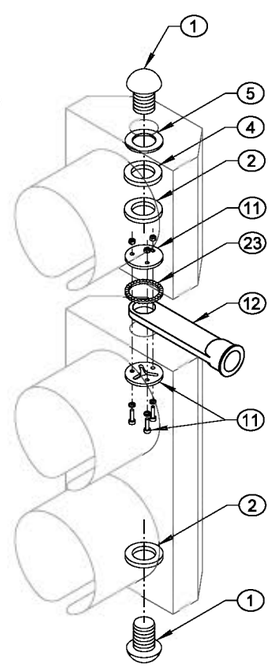

ARM MOUNT TYPE M

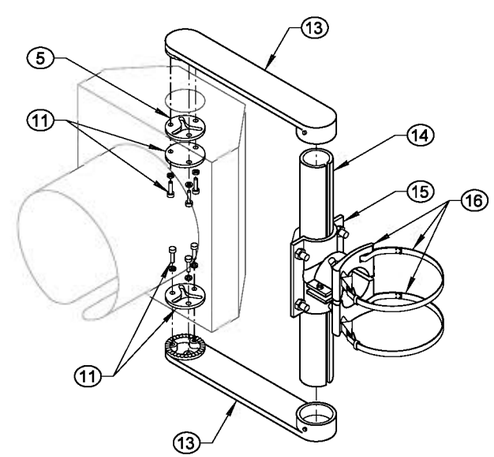

ARM MOUNT TYPE N

KEY

1. END CAP
2. 1 1/2" DIAM. CONDUIT LOCKNUT
3. 1 1/2" DIAM. LOCKNIPPLE
4. STEEL WASHER
5. NEOPRENE GASKET
6. BRONZE SERRATED ELL FITTING WITH:
   - 3/8" STAINLESS STEEL THROUGH BOLT AND NUTS
   - THREE STAINLESS STEEL SET SCREWS AT SLIPFITTER CONNECTION
   - THREE ALLEN HEAD STAINLESS STEEL SET SCREWS AT CONDUIT NIPPLE CONNECTION
7. SERRATED RING WITH PINS
8. HEX LOCKNUT WITH:
   - TWO ALLEN HEAD STAINLESS STEEL SET SCREWS
   - PIN RECEPTACLES
9. 1 1/2" DIAM. CONDUIT NIPPLE
10. 1 1/2" DIAM. HEX LOCKNUT
11. MOUNTING ASSEMBLY
12. BRONZE ELEVATOR PLUMBIZER WITH 3/8" STAINLESS STEEL THROUGH BOLT, WASHERS, AND TWO NUTS
13. ALUMINUM ARM WITH SET SCREW
14. SLOTTED TUBE WITH CLOSURE STRIP
15. 2 1/2" I.D. MIN. TUBE CLAMP
16. INTERNALLY THREADED CLAMP ASSEMBLY WITH:
    - TWO SET SCREWS
    - 1/2" × 0.045" STAINLESS STEEL BANDS
    - 7/16" SCREW BUCKLES, WITH SWIVELS, NUTS, AND WASHERS
    - BAND CLIPS WITH ALLEN HEAD STAINLESS STEEL SET SCREWS
17. BRONZE MESSENGER HANGER WITH:
    - 1/2" DIAM. J-BOLTS
    - CABLE LOCK BAR
    - RIVET
    - COTTER KEY
18. BRONZE INTERNALLY THREADED WIRE ENTRANCE WITH:
    - BUSHING INSERT
    - ALLEN HEAD STAINLESS STEEL SET SCREW
19. BRONZE BALANCE ADJUSTER
20. MULTI-HEAD MOUNTING ASSEMBLY
21. SPIDER ASSEMBLY
22. SERRATED RING WITH NO PINS
23. SERRATED WASHER

NOTES

1. Type M mounting shall have "O" ring groove and seal top and bottom of signal attachment.
2. Type M mounting for conventional heads shall have a 2" diameter opening at the signal attachment.
3. Type M mounting for optically programmed heads shall have a 3 1/2" diameter opening at the signal attachment.
4. Type N mounting with optically programmed heads shall be installed with 14" nominal arms.
5. See **Standard Plan J-75.30** for tether wire, and backplate requirements.
6. Apply bead of silicone around the perimeter of all top end cap openings prior to installation of the end cap assembly.

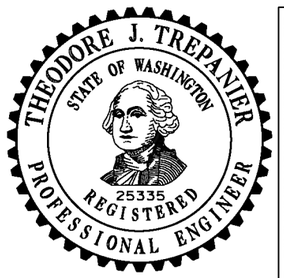

NOTE: THIS PLAN IS NOT A LEGAL ENGINEERING DOCUMENT BUT AN ELECTRONIC DUPLICATE. THE ORIGINAL, SIGNED BY THE ENGINEER AND APPROVED FOR PUBLICATION, IS KEPT ON FILE AT THE WASHINGTON STATE DEPARTMENT OF TRANSPORTATION. A COPY MAY BE OBTAINED UPON REQUEST.

SIGNAL HEAD MOUNTING DETAILS MAST ARM AND SPAN WIRE MOUNTINGS

STANDARD PLAN J-75.20-00

SHEET 1 OF 1 SHEET

APPROVED FOR PUBLICATION

Pasco Bakotich III — STATE DESIGN ENGINEER

02-10-09 — DATE

Washington State Department of Transportation

EFFECTIVE: AUGUST 6, 2012 TO August 4, 2013
EFFECTIVE: AUGUST 6, 2012 TO August 4, 2013
EFFECTIVE: AUGUST 6, 2012 TO August 4, 2013
EFFECTIVE: AUGUST 6, 2012 TO August 4, 2013

EFFECTIVE: AUGUST 6, 2012 TO August 4, 2013
EFFECTIVE: AUGUST 6, 2012 TO August 4, 2013

DRAWN BY: LISA CYFORD

KEY

1. METAL OR TIMBER POLE
2. 2" × 3/16" STAINLESS STEEL BAND WITH 2 EACH:
   - 3/8-16 NC × 3/4" S. S. HEX HEAD BOLT LOCK WASHERS AND NUTS
3. 5/16" EYE AND EYE TURNBUCKLE
4. 3/8" MILD STEEL S-HOOK
5. 1/8" S. S. WIRE ROPE CLAMP (U-BOLT TYPE)
6. 1/8" STAINLESS STEEL TETHER WIRE
7. WIRE CLAMP WITH LEAD WIRE WRAP
8. SIGNAL HEAD
9. 6 × 8.2 LB/FT CHANNEL
10. 2 EACH:
    - 1/2-13 NC × 2 1/2" HEX HEAD BOLT LOCK WASHERS (DRILL AND TAP POLE TO ACCEPT)
11. WIREWAY (SEE DETAIL THIS SHEET)
12. METAL POLE
13. CABINET
14. END BUSHING
15. SEALING LOCKNUT
16. 12-13 NC × 2 1/2" S. S. HEX HEAD BOLT
17. CABINET WALL DRILLED 1/8" OVERSIZE OF NIPPLE
18. CHANNEL DRILLED 1/8" OVERSIZE OF NIPPLE
19. 2" DIAM. × 4" NIPPLE (UNLESS OTHERWISE NOTED)
20. POLE DRILLED SO BUSHING WILL PASS THROUGH
21. 6063 EXTRUDED ALUMINUM FRAME
22. F24T12/CW FLUORESCENT TUBES (4 EACH)
23. TRANSLUCENT PLEXIGLASS SIGN FACE
24. 1 1/2" CAST IRON HUB WITH 5/16" PIN AND COTTER KEY
25. SPAN WIRE MOUNT ASSEMBLY WITH:
    - 1 1/2" DIAM. CONDUIT LOCKNUT
    - 1 1/2" DIAM. CONDUIT NIPPLE
    - BRONZE MESSENGER HANGER WITH:
      - ~ 1/2" DIAM. J-BOLTS
      - ~ CABLE LOCK BAR
      - ~ RIVET
      - ~ COTTER KEY
    - BRONZE INTERNALLY THREADED WIRE ENTRANCE WITH:
      - ~ BUSHING INSERT
      - ~ ALLEN HEAD STAINLESS STEEL SET SCREW
26. ARM MOUNT ASSEMBLY WITH:
    - 1 1/2" DIAM. CONDUIT LOCKNUT
    - BRONZE SERRATED ELL FITTING WITH:
      - ~ 3/8" STAINLESS STEEL THROUGH BOLT AND NUTS
      - ~ THREE STAINLESS STEEL SET SCREWS AT SLIPFITTER CONNECTION
      - ~ THREE ALLEN HEAD STAINLESS STEEL SET SCREWS AT CONDUIT NIPPLE CONNECTION
    - 1 1/2" DIAM. CONDUIT NIPPLE
    - SERRATED RING WITH NO PINS
27. SIDE POLE MOUNT ASSEMBLY WITH:
    - 1 1/2" DIAM. CONDUIT LOCKNUT
    - 1 1/2" DIAM. CONDUIT NIPPLE
    - SERRATED RING WITH NO PINS
28. 1 1/2" SERRATED ELBOW
29. 1 1/2" DIAM. NIPPLE (DRILL AND TAP POLE TO ACCEPT)
30. 2 EACH:
    - 1/2-20 NF × 3/4" STAINLESS STEEL HEX HEAD BOLT
    - LOCK WASHERS (DRILL AND TAP POLE TO ACCEPT)
31. MOUNTING BRACKET

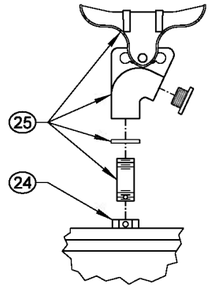

SPAN WIRE MOUNT

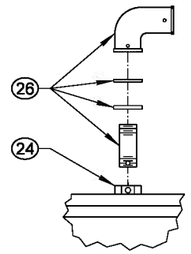

MAST ARM MOUNT

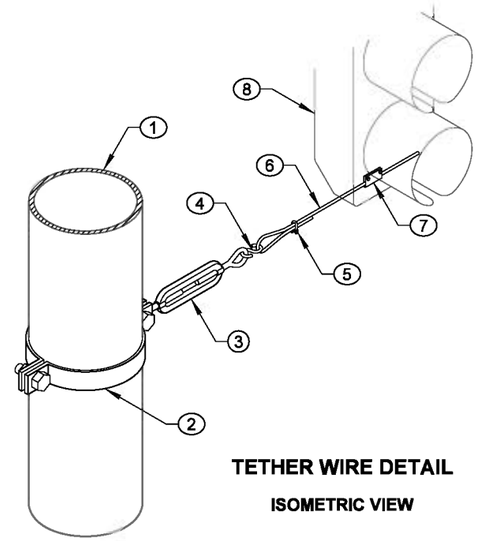

TETHER WIRE DETAIL

ISOMETRIC VIEW

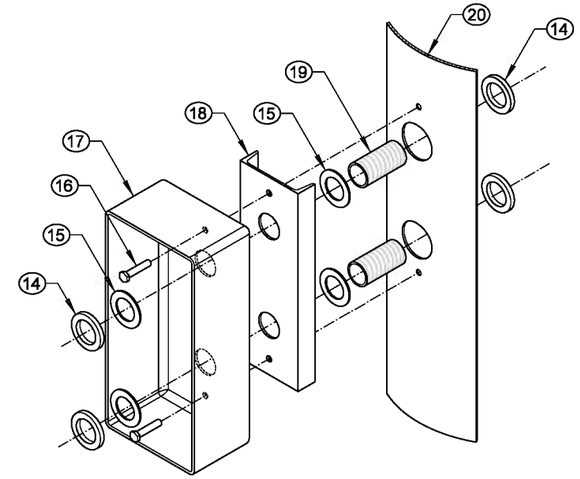

WIREWAY DETAIL

ISOMETRIC VIEW

NOTES

1. Backplates shall be installed with 6 stainless steel screws and washers.
2. Silicone top of channel and around nipples at openings into pole.

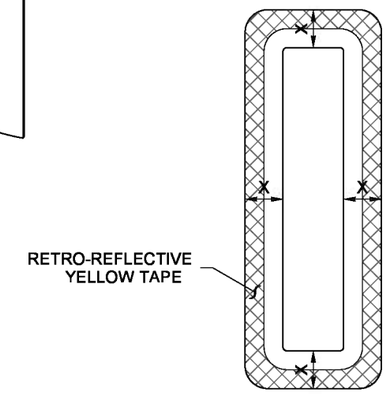

BACKPLATE DETAIL

8" OR 12" SECTIONS

8" SECTION X = 8" ± 1/2"
12" SECTION X = 5 1/2" ± 1/2"

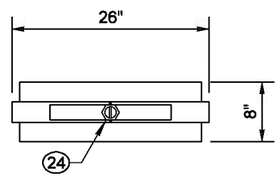

PLAN VIEW

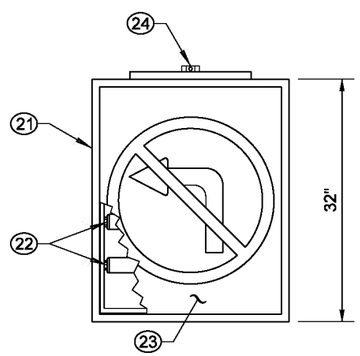

ELEVATION VIEW

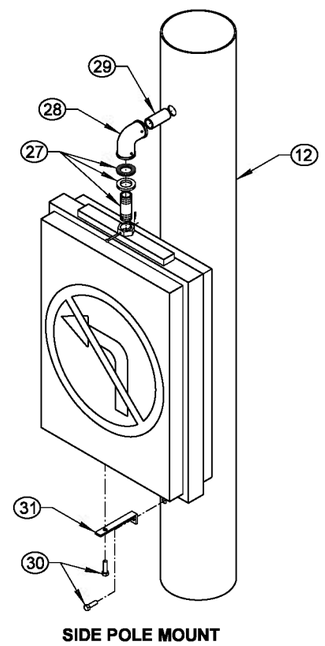

SIDE POLE MOUNT

ISOMETRIC VIEW

INTERNALLY ILLUMINATED SIGN DETAILS

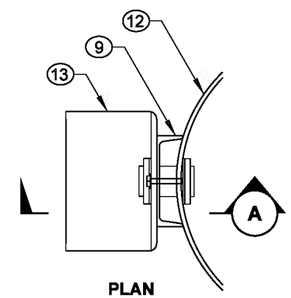

PLAN

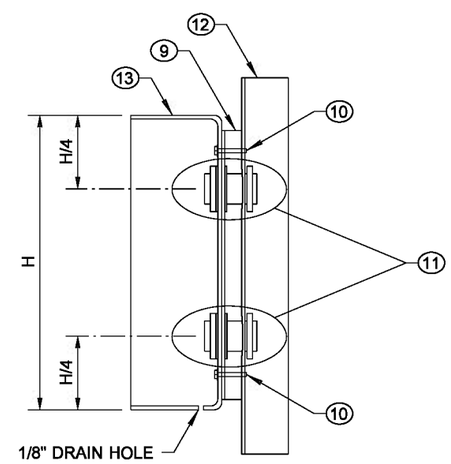

SECTION A

ELEVATION VIEW

CABINET MOUNTING DETAILS

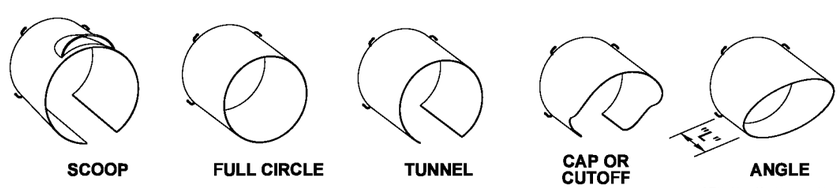

PERSPECTIVE VIEWS
VISORS

45° SHOWN ~ SEE CONTRACT PLANS FOR ANGLE AND LENGTH "L"

JOHN C. NISBET
STATE OF WASHINGTON
29115
REGISTERED
PROFESSIONAL ENGINEER

NOTE: THIS PLAN IS NOT A LEGAL ENGINEERING DOCUMENT BUT AN ELECTRONIC DUPLICATE. THE ORIGINAL, SIGNED BY THE ENGINEER AND APPROVED FOR PUBLICATION, IS KEPT ON FILE AT THE WASHINGTON STATE DEPARTMENT OF TRANSPORTATION. A COPY MAY BE OBTAINED UPON REQUEST.

MISCELLANEOUS SIGNAL DETAILS

STANDARD PLAN J-75.30-01

SHEET 1 OF 1 SHEET

APPROVED FOR PUBLICATION

Pasco Bakotich III — STATE DESIGN ENGINEER
05-11-11 — DATE

Washington State Department of Transportation

EFFECTIVE: AUGUST 6, 2012 TO August 4, 2013
EFFECTIVE: AUGUST 6, 2012 TO August 4, 2013
EFFECTIVE: AUGUST 6, 2012 TO August 4, 2013
EFFECTIVE: AUGUST 6, 2012 TO August 4, 2013

EFFECTIVE: AUGUST 6, 2012 TO August 4, 2013

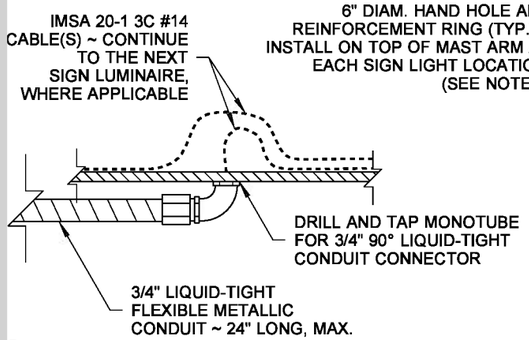

DETAIL A

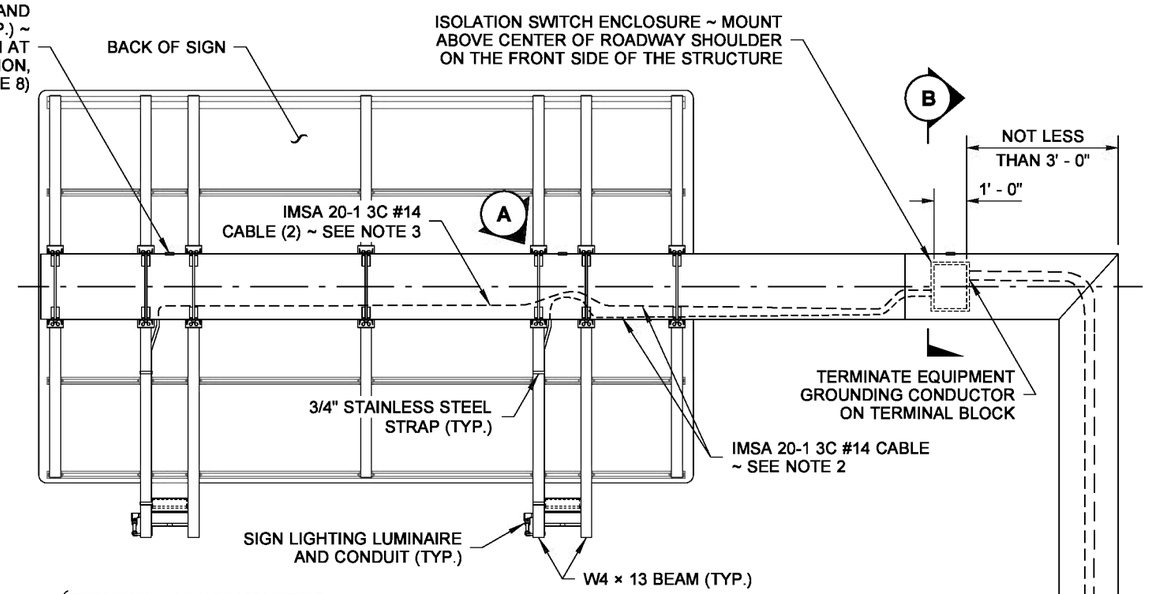

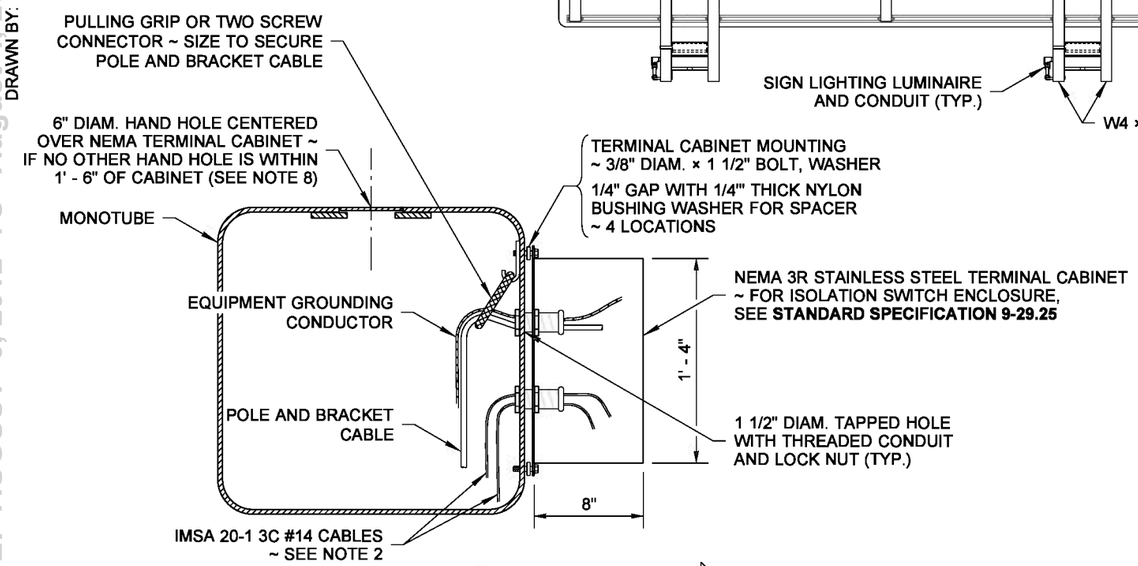

SECTION B

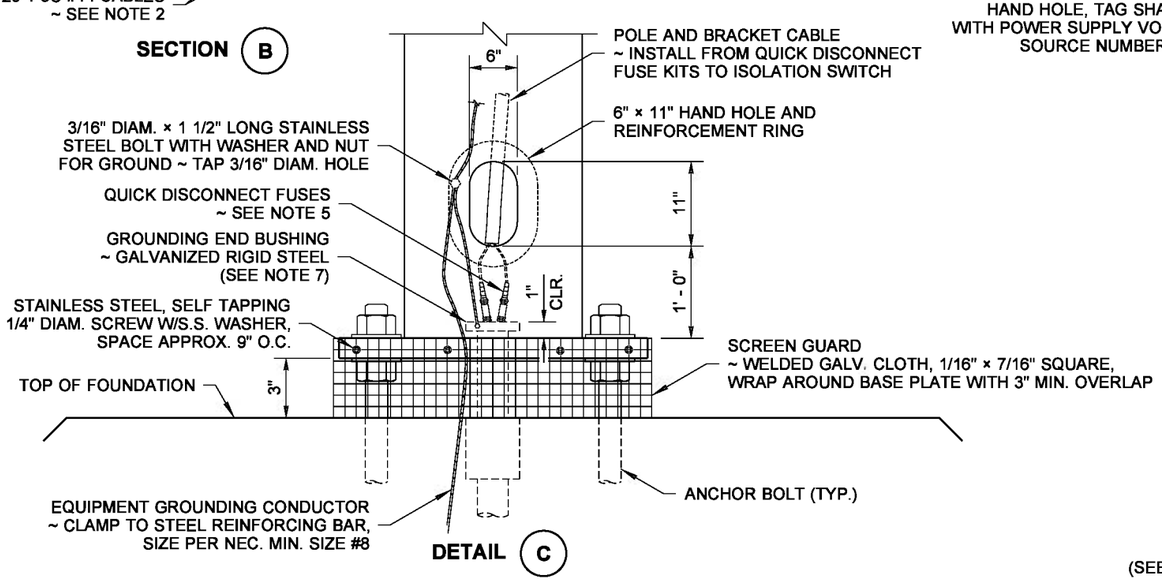

DETAIL C

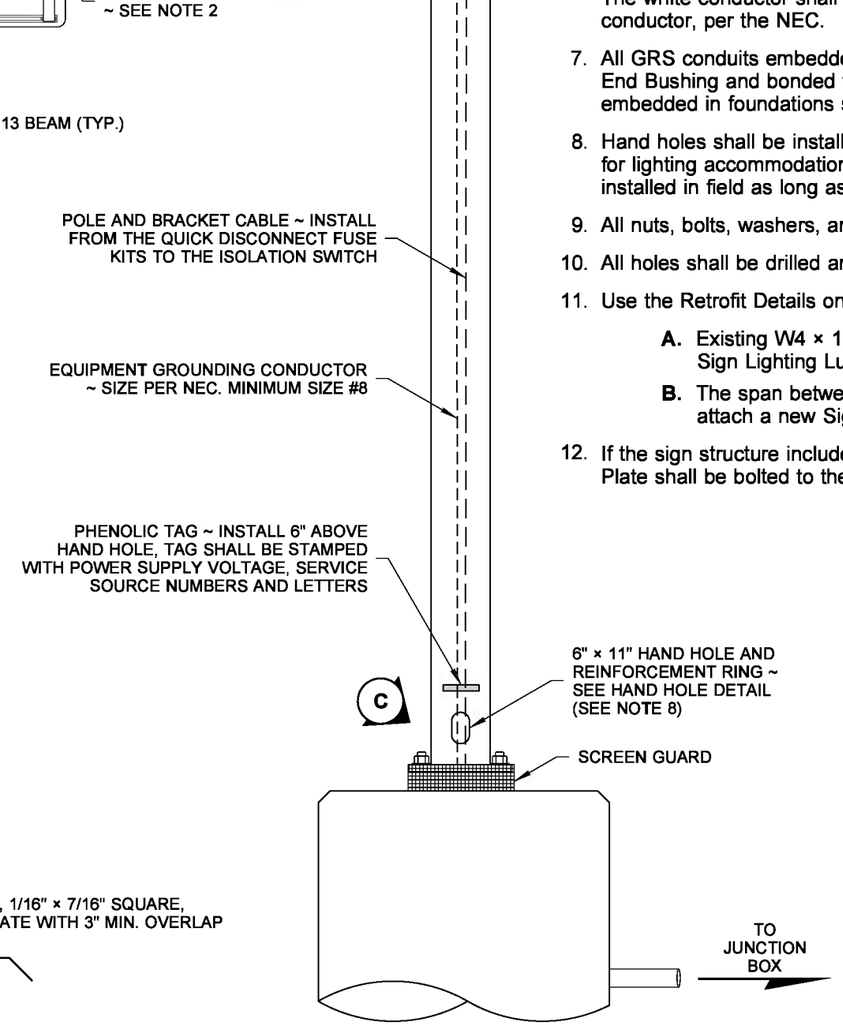

MONOTUBE SIGN STRUCTURE

(SEE CONTRACT PLANS FOR ORIENTATION OF SIGN STRUCTURE)

NOTES

1. Typical view shown. Verify power source location, quantities, location of signs and sign structure fixtures in contract plans.
2. Route IMSA 20-1 3C #14 cable(s) from isolation switch along inside, bottom of the Monotube Mast Arm to the liquid-tight conduit connector(s) at hand hole(s).
3. Route Separate IMSA 20-1 3C #14 cable from load side of terminal strip to each additional light fixture (where applicable) and provide sufficient slack wire per **Standard Specification 8-20.3(8).**
4. Label all conductors with sign light and circuit number at isolation switch, hand hole(s) and ballast enclosure(s). Labels shall be a PVC or Polyolefin wire marking sleeve per **Standard Specification 8-20.3(8).**
5. Install quick-disconnect fuse kits between the power supply wires and the pole and bracket cable, per **Standard Specification 9-29.7.** Fuse size shall be 200% larger than load size.
6. The conductors in the IMSA 20-1 3C #14 cable shall be black, red and white. The white conductor shall be permanently identified as an equipment grounding conductor, per the NEC.
7. All GRS conduits embedded in foundation shall be terminated with Grounding End Bushing and bonded to the Foundation Grounding Bus. All PVC conduits embedded in foundations shall be terminated with End Bell Bushing.
8. Hand holes shall be installed at the time of fabrication. Only additional conduits for lighting accommodations to previously non-illuminated structures may be installed in field as long as the proper repairs are made to the structure.
9. All nuts, bolts, washers, and other hardware shall be stainless steel.
10. All holes shall be drilled and tapped.
11. Use the Retrofit Details only when the following conditions apply:
    - **A.** Existing W4 × 13 Luminaire Brackets are to be reused for a new Sign Lighting Luminaire
    - **B.** The span between the existing Luminaire Brackets is too wide to attach a new Sign Lighting Luminaire and Luminaire Mounting Plate.
12. If the sign structure includes a maintenance walkway, the Luminaire Mounting Plate shall be bolted to the walkway grating.

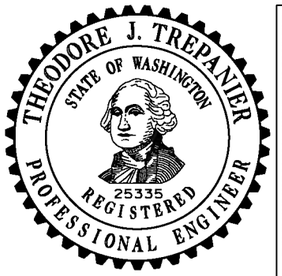

NOTE: THIS PLAN IS NOT A LEGAL ENGINEERING DOCUMENT BUT AN ELECTRONIC DUPLICATE. THE ORIGINAL, SIGNED BY THE ENGINEER AND APPROVED FOR PUBLICATION, IS KEPT ON FILE AT THE WASHINGTON STATE DEPARTMENT OF TRANSPORTATION. A COPY MAY BE OBTAINED UPON REQUEST.

OVERHEAD SIGN ELECTRICAL DETAILS (MONOTUBE STRUCTURE) STANDARD PLAN J-75.40-00

SHEET 1 OF 2 SHEETS

APPROVED FOR PUBLICATION

Pasco Bakotich III — STATE DESIGN ENGINEER

10-14-09 — DATE

Washington State Department of Transportation

DRAWN BY: LISA CYFORD

EFFECTIVE: AUGUST 6, 2012 TO August 4, 2013

EFFECTIVE: AUGUST 6, 2012 TO August 4, 2013
EFFECTIVE: AUGUST 6, 2012 TO August 4, 2013

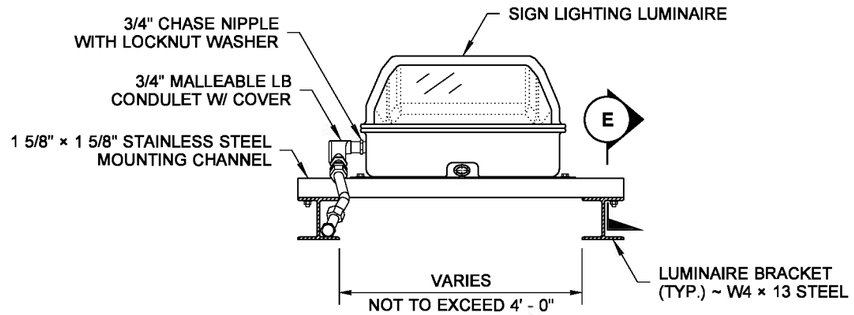

SECTION D

SIGN LIGHTING FIXTURE WITH RETROFIT

FOR DETAILS NOT SHOWN SEE **STANDARD PLAN G-90.40**

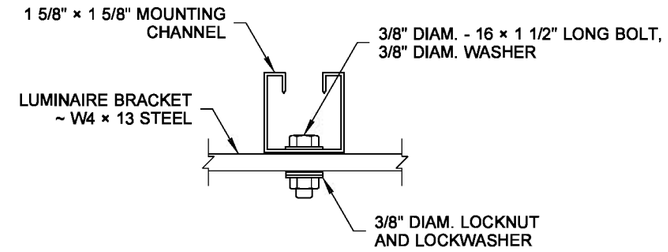

SECTION E

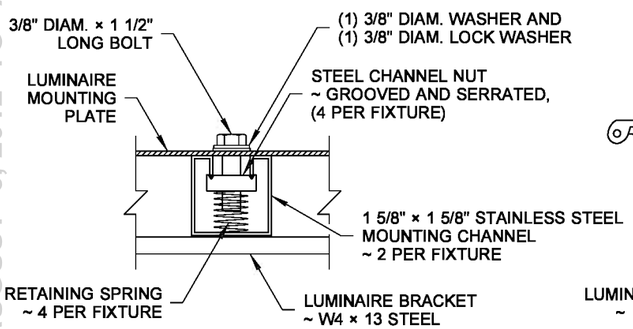

DETAIL F

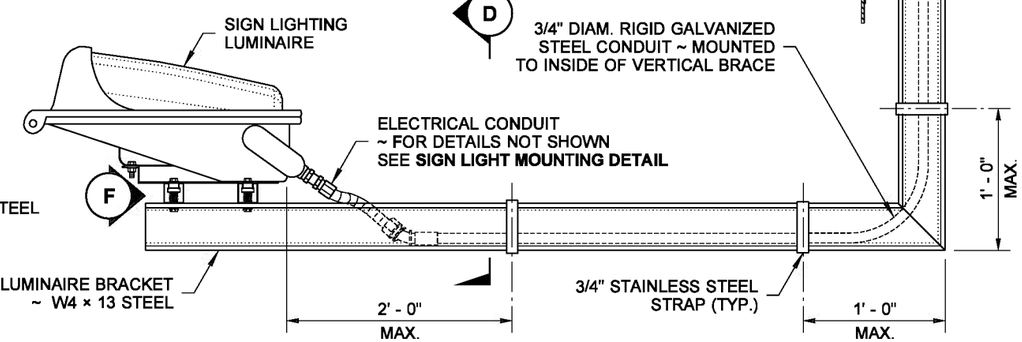

RETROFIT MOUNTING DETAIL

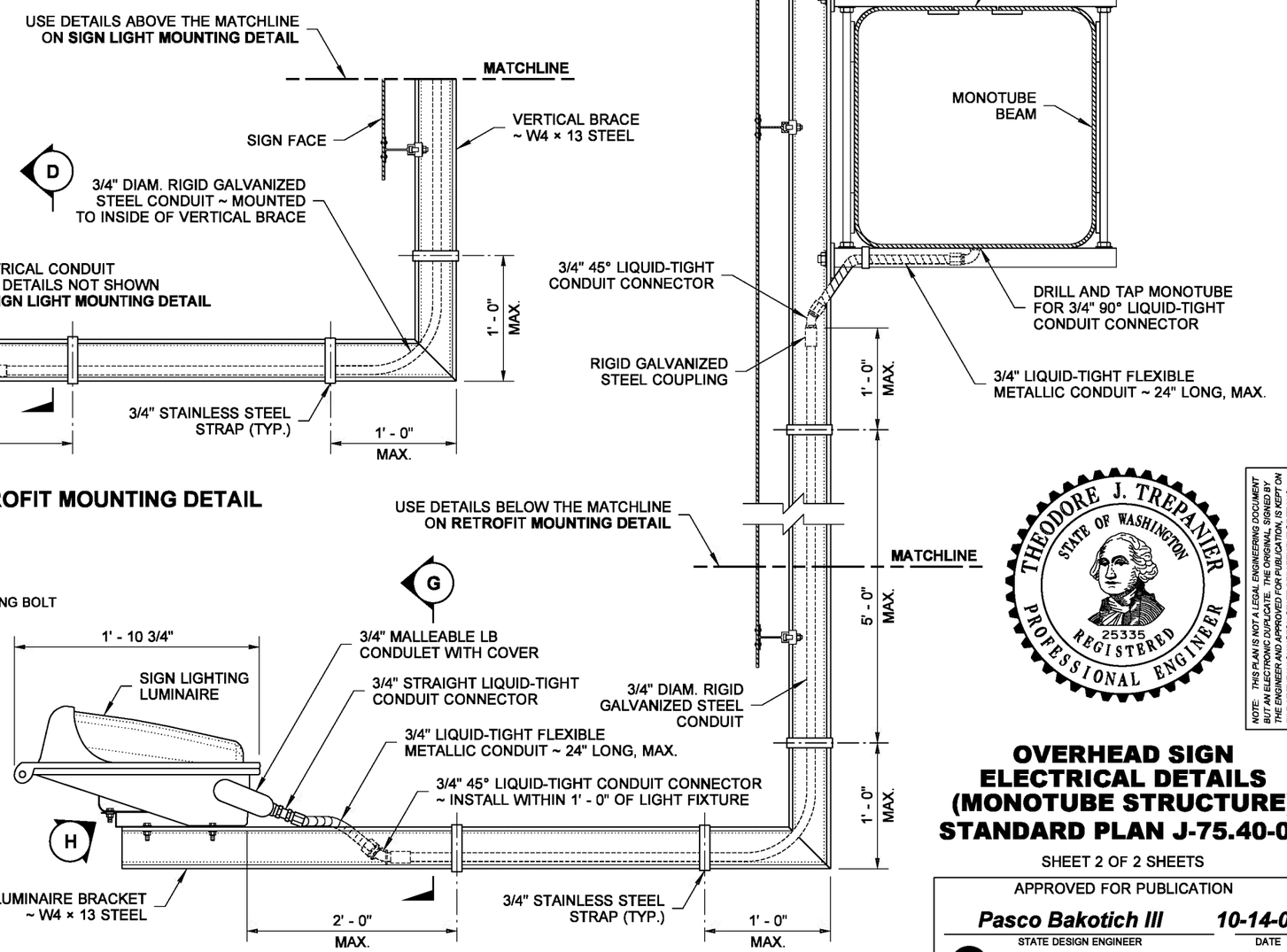

SIGN LIGHT MOUNTING DETAIL

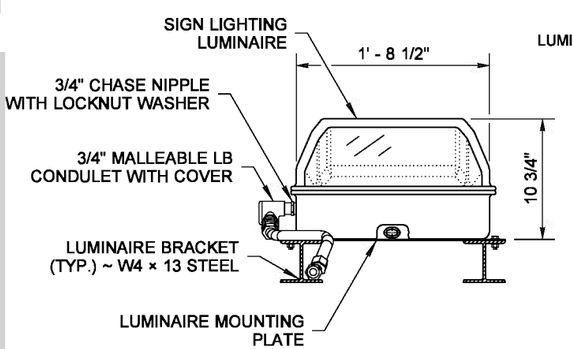

SECTION G

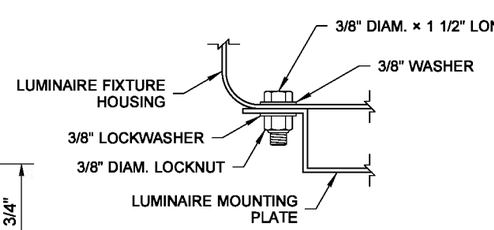

DETAIL H

NOTE: THIS PLAN IS NOT A LEGAL ENGINEERING DOCUMENT BUT AN ELECTRONIC DUPLICATE. THE ORIGINAL, SIGNED BY THE ENGINEER AND APPROVED FOR PUBLICATION, IS KEPT ON FILE AT THE WASHINGTON STATE DEPARTMENT OF TRANSPORTATION. A COPY MAY BE OBTAINED UPON REQUEST.

OVERHEAD SIGN ELECTRICAL DETAILS (MONOTUBE STRUCTURE) STANDARD PLAN J-75.40-00

SHEET 2 OF 2 SHEETS

APPROVED FOR PUBLICATION

Pasco Bakotich III — STATE DESIGN ENGINEER

10-14-09 — DATE

Washington State Department of Transportation

DRAWN BY: LISA CYFORD

EFFECTIVE: AUGUST 6, 2012 TO August 4, 2013
EFFECTIVE: AUGUST 6, 2012 TO August 4, 2013
EFFECTIVE: AUGUST 6, 2012 TO August 4, 2013
EFFECTIVE: AUGUST 6, 2012 TO August 4, 2013

EFFECTIVE: AUGUST 6, 2012 TO August 4, 2013
EFFECTIVE: AUGUST 6, 2012 TO August 4, 2013

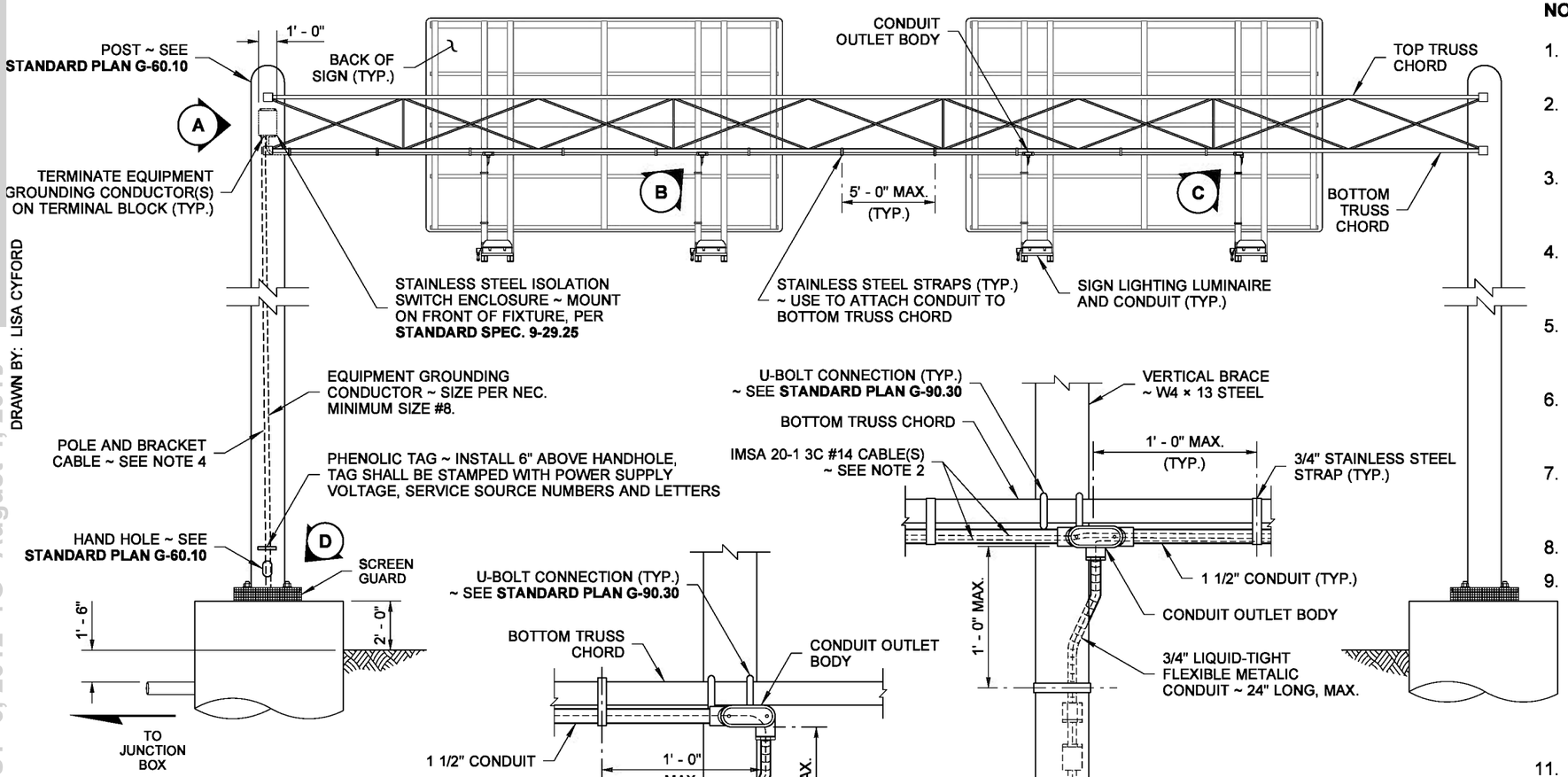

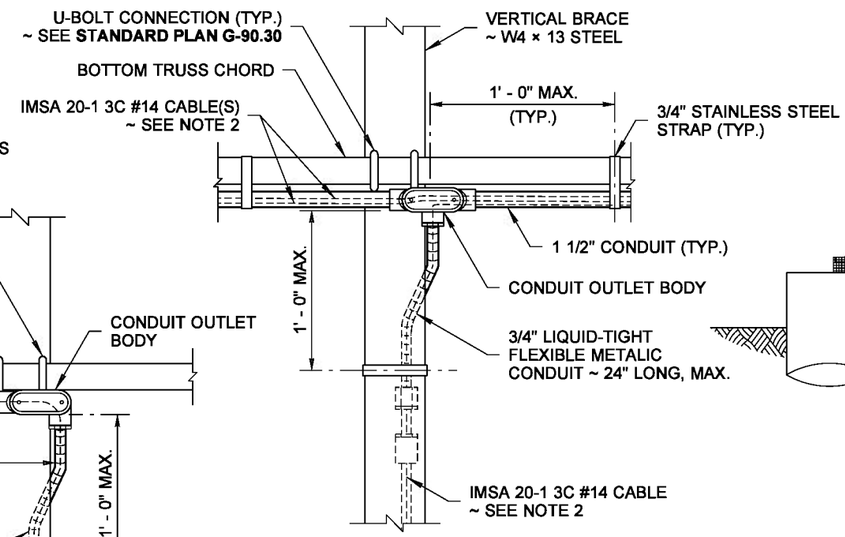

DETAIL B

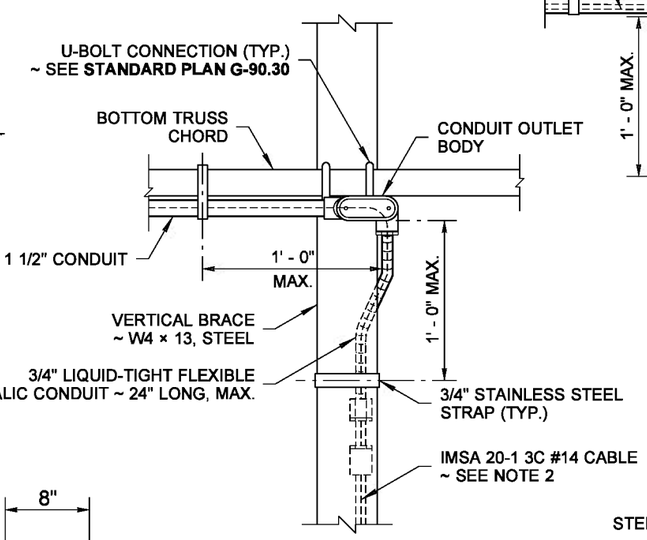

DETAIL C

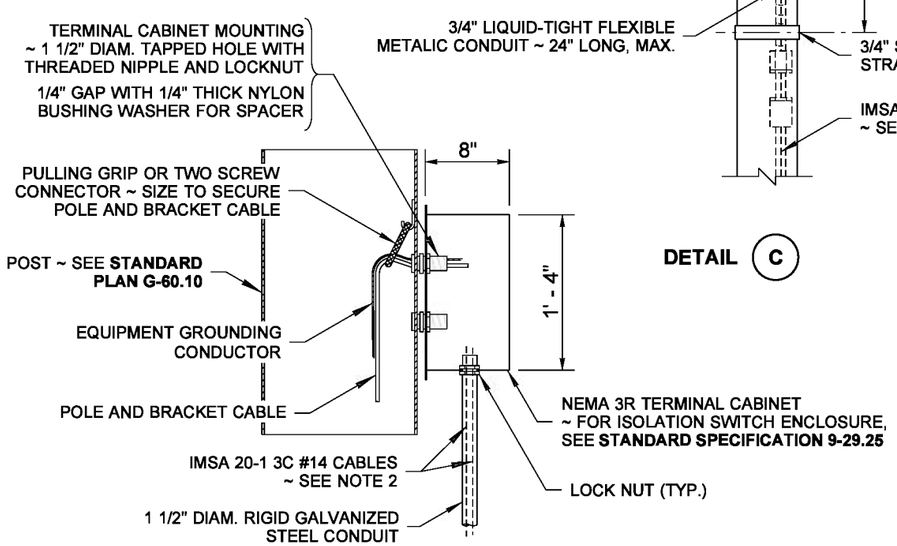

DETAIL A

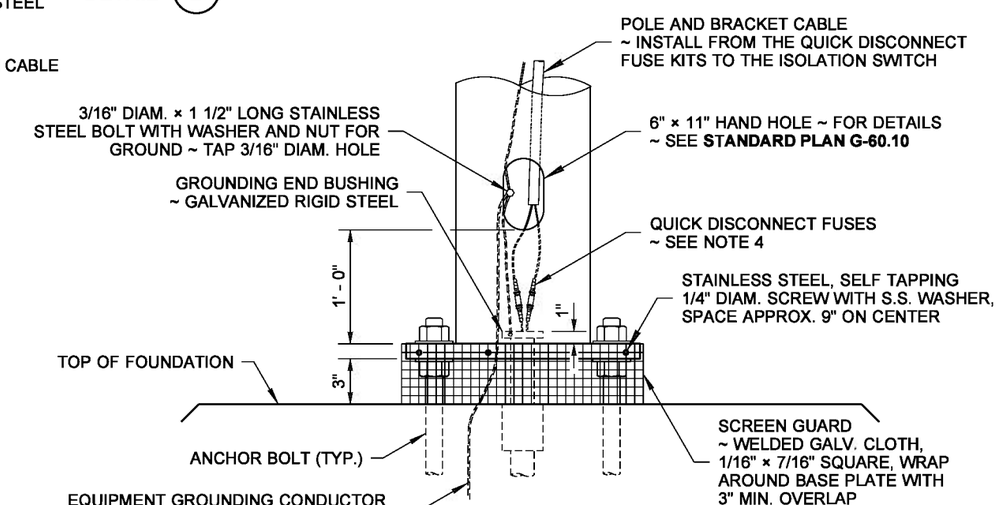

DETAIL D

NOTES

1. Typical view shown. Verify power source location, quantities, and location of signs and sign structure fixtures in contract plans.
2. Route separate IMSA 20-1 3C #14 cables from load side of terminal strip to each additional Sign Lighting Luminaire (where applicable) and provide sufficient slack wire per **Standard Specification 8-20.3(8).**
3. Label all conductors with sign light and circuit number at isolation switch, handhole, and ballast enclosure. Label shall be a PVC or Polyolefin wire marking sleeve per **Standard Specification 8-20.3(8).**
4. Install quick-disconnect fuse kits between the power supply wires and pole and bracket cable per **Standard Specification 9-29.7.** Fuse size shall be 200% larger than load size.
5. The conductors in the IMSA 20-1 3C #14 cable shall be black, red and white. The white conductor shall be permanently identified as an equipment grounding conductor per the NEC.
6. All GRS conduits embedded in foundation shall be terminated with grounding end bushing and bonded to the ground terminal in the base of pole. All PVC conduits embedded in foundations shall be terminated with end bell bushing.
7. Hand holes shall be installed at the time of fabrication. Only additional conduits for lighting accommodations to previously non-illuminated structures may be installed in field as long as the proper repairs are made to structure.
8. All nuts, bolts, washers, and other hardware shall be stainless steel.
9. All holes shall be drilled and tapped.
10. Use the Retrofit details only when the following conditions apply:
    A. Existing W4 × 13 Steel Beam sign brackets are to be reused for a new Sign Lighting Luminaire.
    B. The span between the existing Luminaire Brackets is too wide to attach the new Sign Lighting Luminaire and Luminaire Mounting Plate.
11. If the sign structure includes a maintenance walkway, the Luminaire Mounting Plate shall be bolted to the walkway grating.

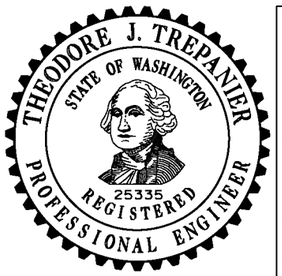

NOTE: THIS PLAN IS NOT A LEGAL ENGINEERING DOCUMENT BUT AN ELECTRONIC DUPLICATE. THE ORIGINAL, SIGNED BY THE ENGINEER AND APPROVED FOR PUBLICATION, IS KEPT ON FILE AT THE WASHINGTON STATE DEPARTMENT OF TRANSPORTATION. A COPY MAY BE OBTAINED UPON REQUEST.

OVERHEAD SIGN ELECTRICAL DETAILS (TRUSS STRUCTURE) STANDARD PLAN J-75.45-00

SHEET 1 OF 2 SHEETS

APPROVED FOR PUBLICATION

Pasco Bakotich III — STATE DESIGN ENGINEER
10-14-09 — DATE

Washington State Department of Transportation

DRAWN BY: LISA CYFORD

EFFECTIVE: AUGUST 6, 2012 TO August 4, 2013
EFFECTIVE: AUGUST 6, 2012 TO August 4, 2013
EFFECTIVE: AUGUST 6, 2012 TO August 4, 2013
EFFECTIVE: AUGUST 6, 2012 TO August 4, 2013

EFFECTIVE: AUGUST 6, 2012 TO August 4, 2013
EFFECTIVE: AUGUST 6, 2012 TO August 4, 2013

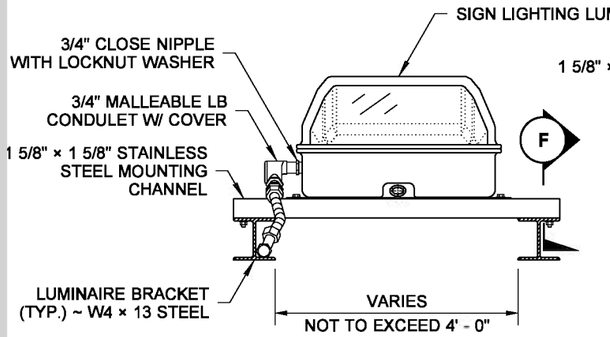

SECTION E

SIGN LIGHTING FIXTURE WITH RETROFIT
FOR DETAILS NOT SHOWN SEE **STANDARD PLAN G-90.40**

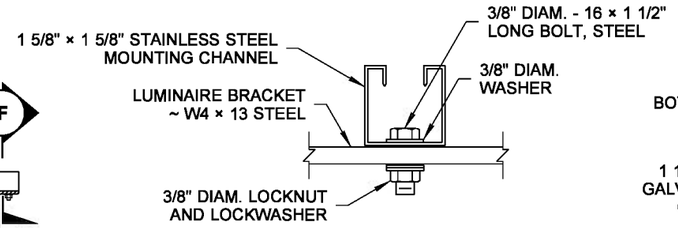

SECTION F

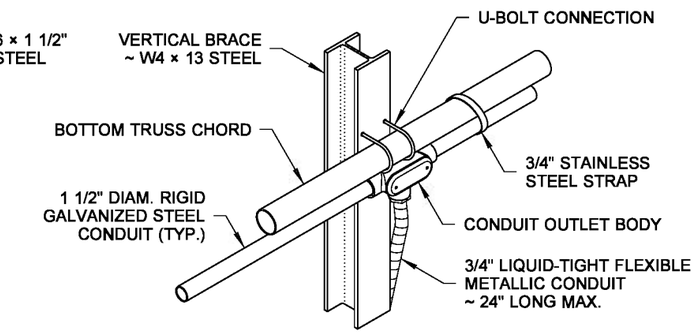

DETAIL J

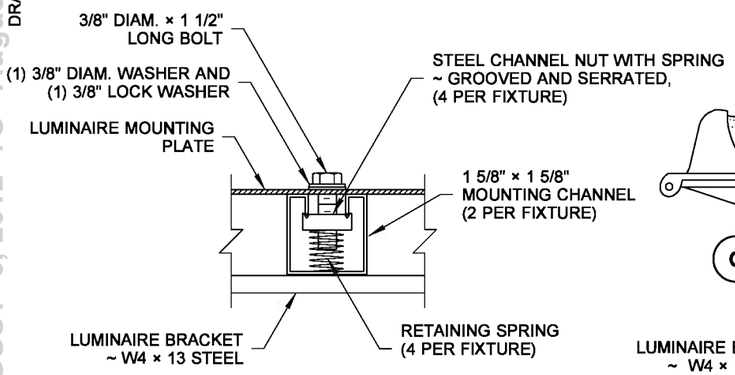

DETAIL G

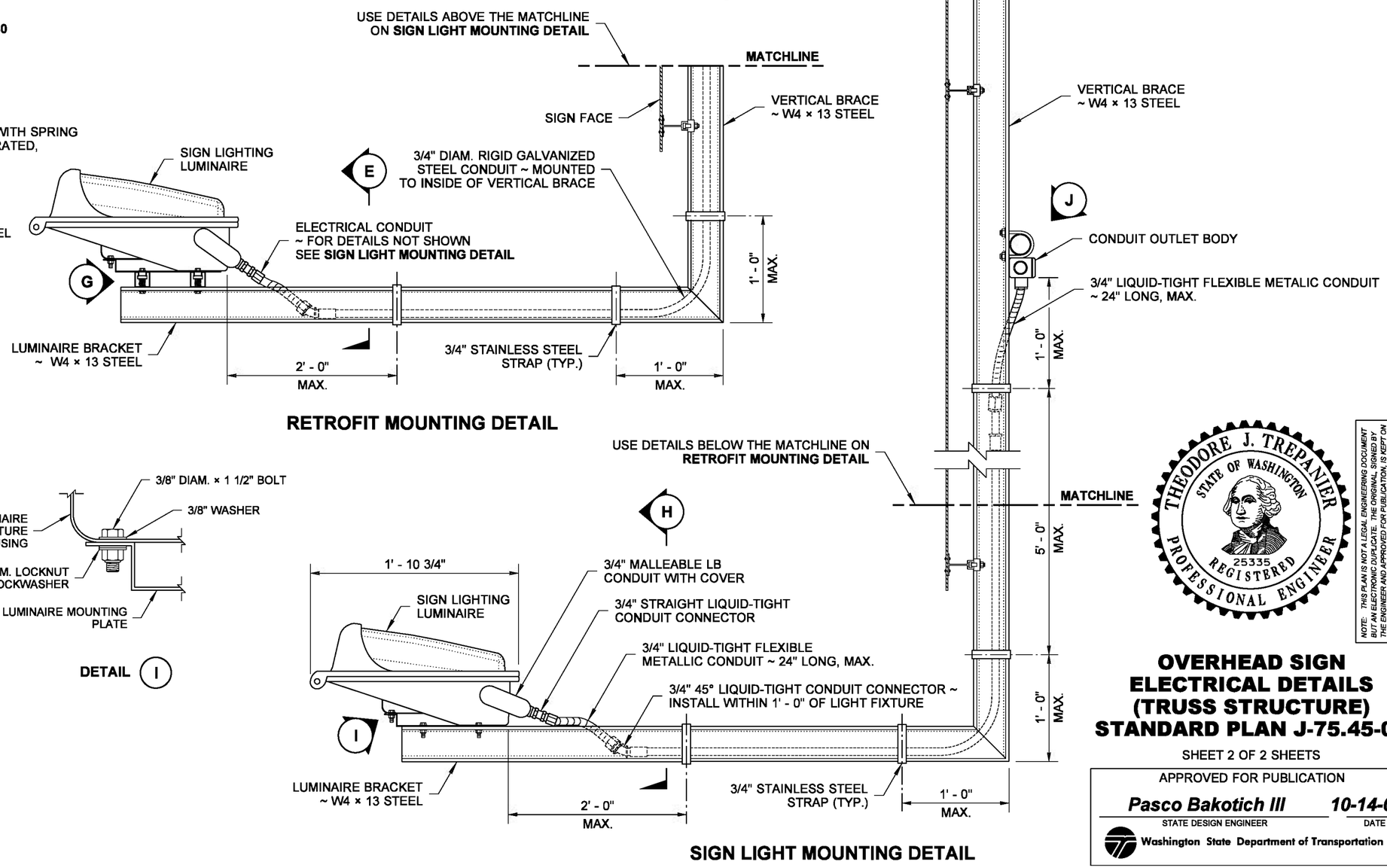

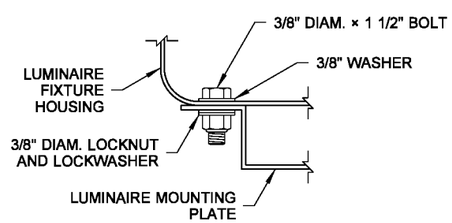

DETAIL I

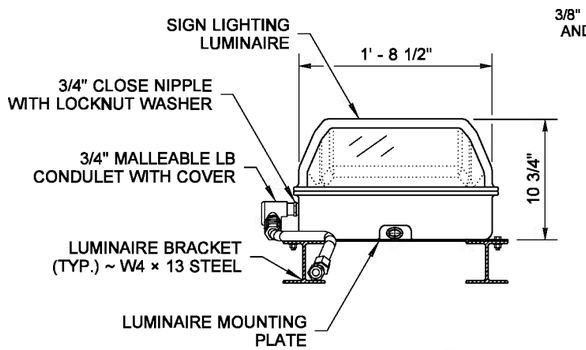

SECTION H

DRAWN BY: LISA CYFORD

THEODORE J. TREPANIER
STATE OF WASHINGTON
25335
REGISTERED
PROFESSIONAL ENGINEER

NOTE: THIS PLAN IS NOT A LEGAL ENGINEERING DOCUMENT BUT AN ELECTRONIC DUPLICATE. THE ORIGINAL, SIGNED BY THE ENGINEER AND APPROVED FOR PUBLICATION, IS KEPT ON FILE AT THE WASHINGTON STATE DEPARTMENT OF TRANSPORTATION. A COPY MAY BE OBTAINED UPON REQUEST.

OVERHEAD SIGN ELECTRICAL DETAILS (TRUSS STRUCTURE) STANDARD PLAN J-75.45-00

SHEET 2 OF 2 SHEETS

APPROVED FOR PUBLICATION

Pasco Bakotich III — STATE DESIGN ENGINEER
10-14-09 — DATE

Washington State Department of Transportation

EFFECTIVE: AUGUST 6, 2012 TO August 4, 2013
EFFECTIVE: AUGUST 6, 2012 TO August 4, 2013

EFFECTIVE: AUGUST 6, 2012 TO August 4, 2013

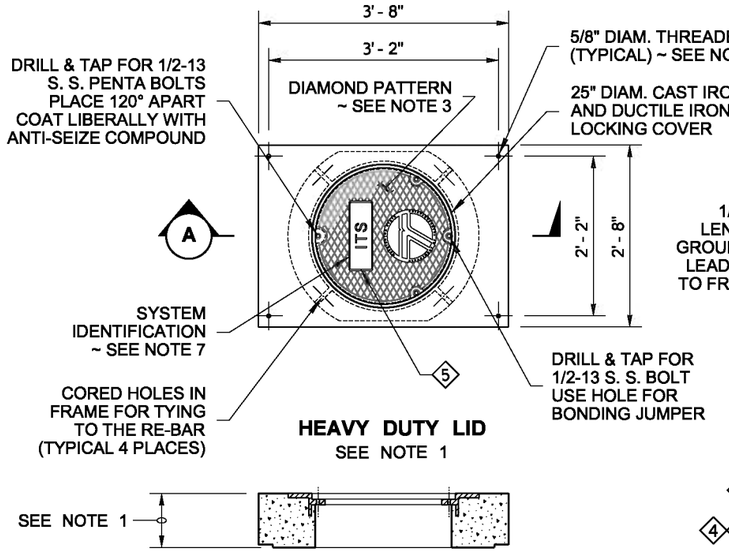

HEAVY DUTY LID
SEE NOTE 1

SECTION (A)
(LID NOT SHOWN)

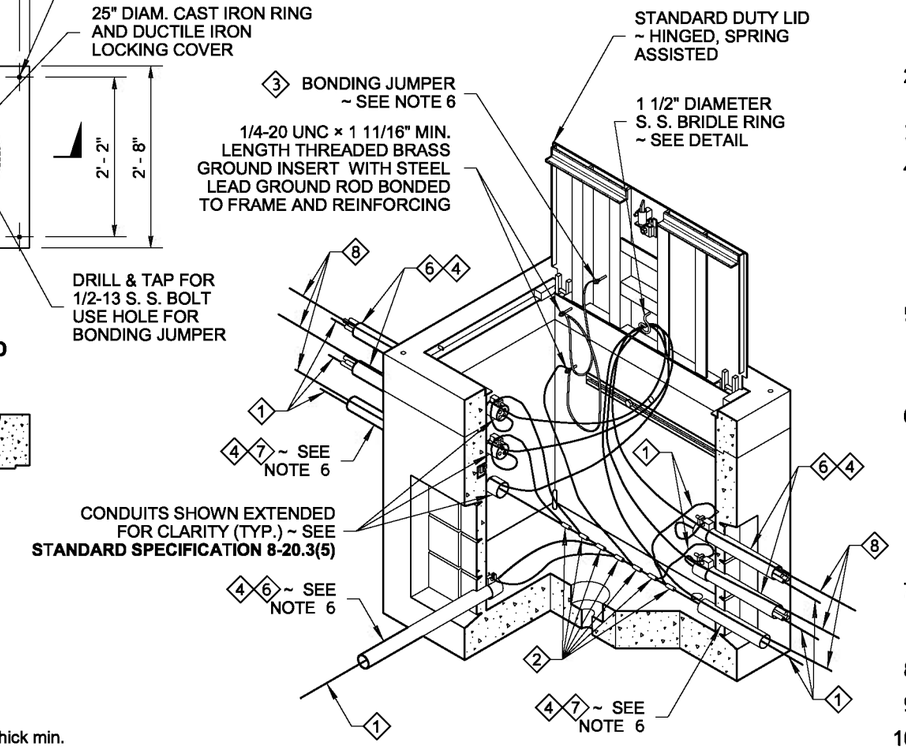

ISOMETRIC CUTAWAY

1. Equipment Grounding Conductor
2. Copper Solderless Crimp Connector
3. Equipment Bonding Jumper ~ See Note 5
4. See Contract for conduit size and number
5. Provide a 1 1/2" wide × 3 1/2" high × 3/16" thick min. flat area for lifting purposes (for Ductile Iron Lid only)
6. GRS Shown ~ See Contract for conduit type
7. PVC Shown ~ See Contract for conduit type
8. Location Wire

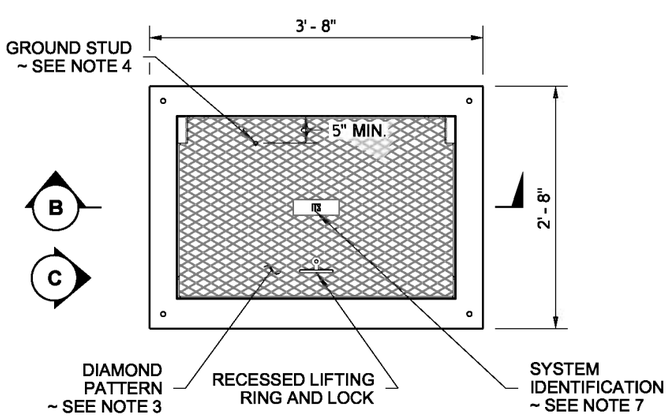

TOP

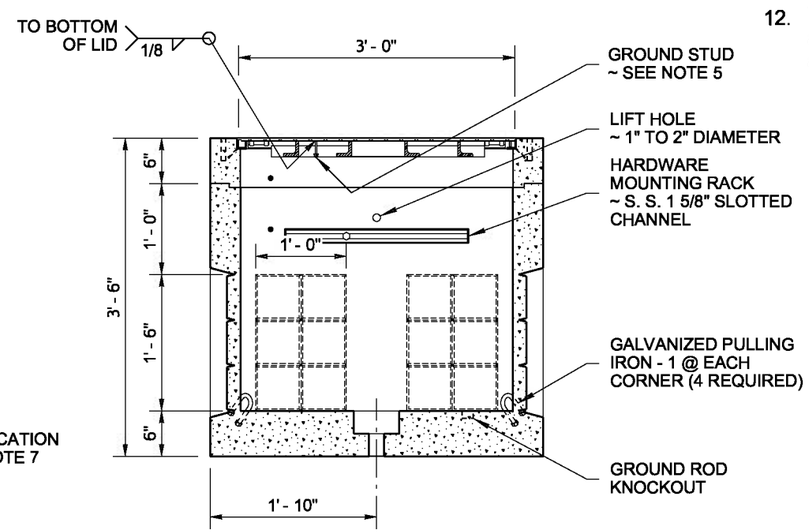

SECTION (B)

PULL BOX ASSEMBLY
(SHOWN WITH STANDARD DUTY LID)

NOTES

1. The Heavy Duty Lid shall be used when a Pull Box is placed in the paved shoulder or the traveled way. Use a 9" thick lid for new Pull Box installations. Use a 6" thick Heavy Duty Lid when converting a Standard Duty Pull Box into a Heavy Duty Pull Box in the paved shoulder or the traveled way and no overlay is called for in the Contract. Otherwise, see Contract Plans for overlay depth and fabricate lid thickness to match overlay depth.
2. Use Standard Duty Pull Box and Lid when placed in unpaved areas. Use Standard Duty Pull Box in sidewalks, walkways, and shared-use paths.
3. Minimum lid thickness shown. The diamond pattern shall be a minimum of 3/32" thick.
4. Standard Duty Pull Boxes installed in sidewalks, walkways, and shared-use paths shall have a slip-resistant coating on lid and shall be installed with the surface flush with and matched to the grade of the sidewalk, walkway and shared-use paths. The non-slip lid shall be identified with permanent marking on the underside indicating the type of surface treatment (see Contract Documents for details) and the year of manufacture. The permanent marking shall be 1/8" inch line thickness formed with a stainless steel weld bead and shall be placed prior to hot-dip galvanizing.
5. A 1/4-20 UNC × 3/4" S. S. ground stud with (2) S. S. nuts and (2) S. S. flat washers shall be attached to the Standard Duty Lid and coated with anti-seize compound. Provide a 5/8" diameter cored hole in the ductile iron lid gusset (Heavy Duty Lid) with 1/2-13 UNC × 1 1/4" S. S. bolt, (3) S. S. flat washers, and (2) S. S. nuts for the Bonding Jumper.
6. Connect a Bonding Jumper to the steel conduit bushing for GRS conduit and connect the steel conduit bushing jumper to the equipment ground at the threaded brass ground insert. Connect the equipment grounding conductors in the PVC and/or GRS conduits to the brass ground insert. The Bonding Jumper shall be #8 min. x 4' (ft.) of tinned braided copper between the lid and the frame of the Heavy Duty tops and from the Heavy Duty top to the threaded brass ground insert. The Bonding Jumper shall be #8 min. x 4' (ft.) of tinned braided copper between the lid on a Standard Duty Pull Box and the threaded brass ground insert. See Contract Plan Sheets and **Standard Plan J-60.05** for Bonding Jumper requirements.
7. The system identification letters shall be 1/8" line thickness formed by engraving, casting, stamping, or with a S. S. weld bead. See COVER MARKING DETAIL. See **Standard Specification 9-29.2(4).** Ductile iron lid lettering shall be recessed.
8. Cement concrete shall be Class 4000.
9. Plastic plugs shall be put into the lid inserts after fabrication and the lid installation.
10. Capacity - conduit diameter = 40" (in.).
11. Excavate material, place 6" crushed surfacing pad per **Standard Specification Section 8-20.3(6).** Field bend #3 reinforcing bar to allow conduit into the Pull Box. Field bend reinforcing bar back into place, wire tie in (2) places, and cast in commercial concrete (commercial concrete only allowed for box bottom/wall completion).
12. This drawing depicts a typical Pull Box assembly. Reinforcing not shown. Each manufacturer's Pull Box assembly will vary. Refer to the approved manufacturer's shop drawings for all dimensions and the actual arrangement.

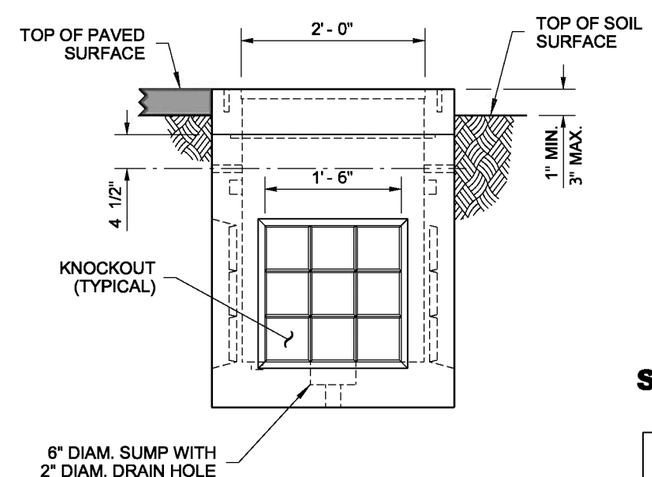

VIEW (C)

NOTE: THIS PLAN IS NOT A LEGAL ENGINEERING DOCUMENT BUT AN ELECTRONIC DUPLICATE. THE ORIGINAL SIGNED BY THE ENGINEER AND APPROVED FOR PUBLICATION, IS KEPT ON FILE AT THE WASHINGTON STATE DEPARTMENT OF TRANSPORTATION. A COPY MAY BE OBTAINED UPON REQUEST.

PULL BOX

STANDARD PLAN J-90.10-01

SHEET 1 OF 2 SHEETS

APPROVED FOR PUBLICATION

Pasco Bakotich III — 06-27-11
STATE DESIGN ENGINEER — DATE

Washington State Department of Transportation

DRAWN BY: LISA CYFORD

EFFECTIVE: AUGUST 6, 2012 TO August 4, 2013

EFFECTIVE: AUGUST 6, 2012 TO August 4, 2013

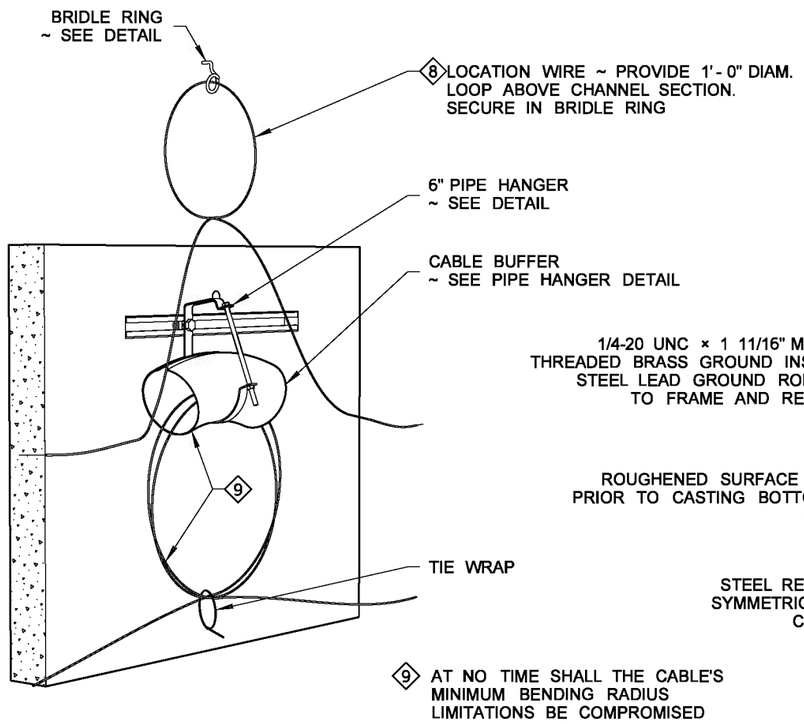

INTERNAL OBLIQUE VIEW

COIL THE CABLE BY USING A "FIGURE 8" FOLDED IN THE MIDDLE TO FORM A LOOP

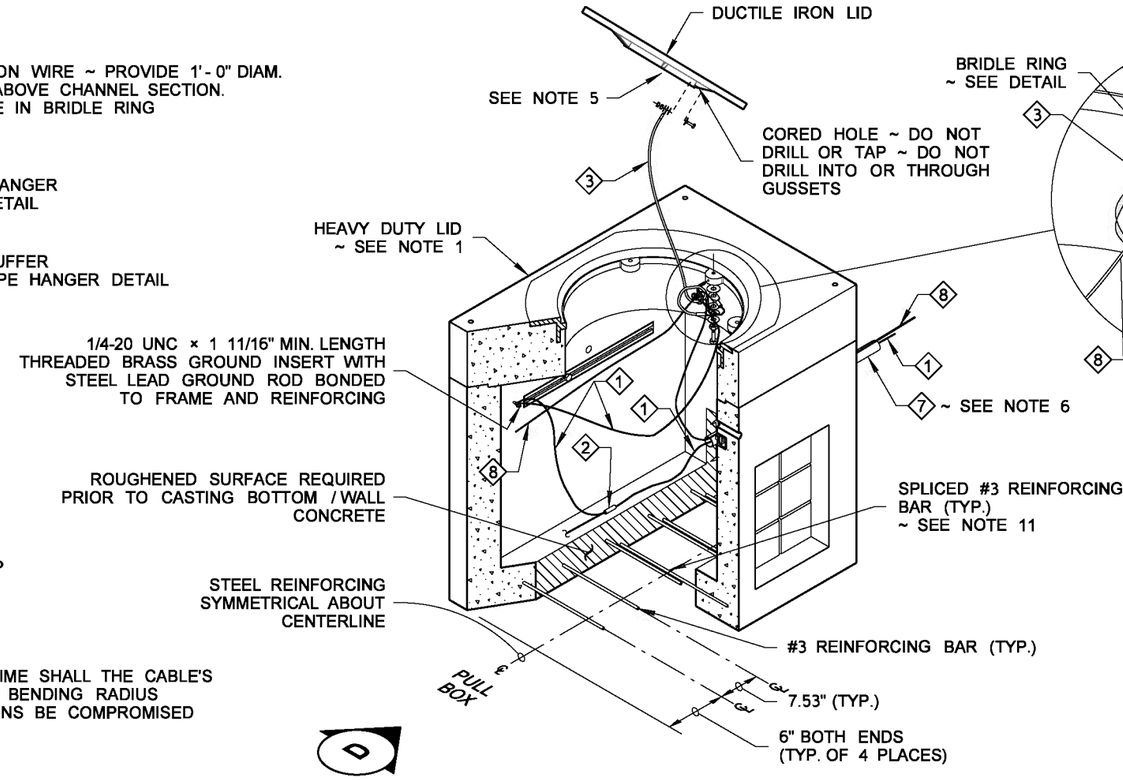

ISOMETRIC CUTAWAY

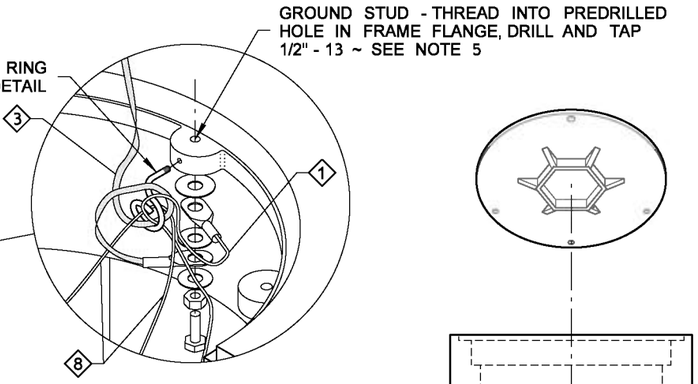

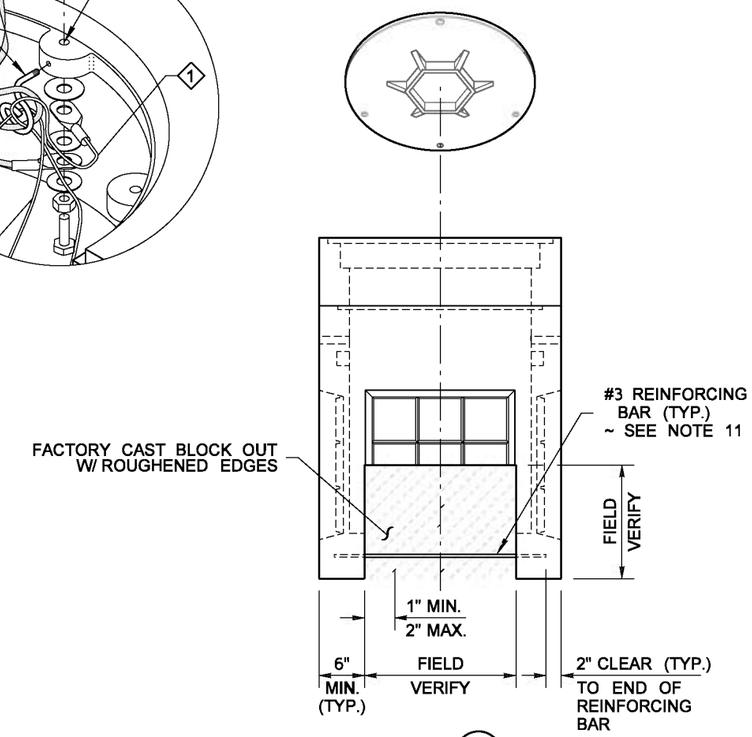

VIEW D

SPLIT PULL BOX ASSEMBLY

(SHOWN WITH HEAVY DUTY LID)

SEE **PULL BOX**, SHEET 1, FOR DIMENSIONS NOT SHOWN

COVER MARKING DETAIL

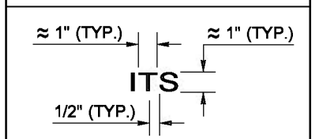

SEE NOTE 7

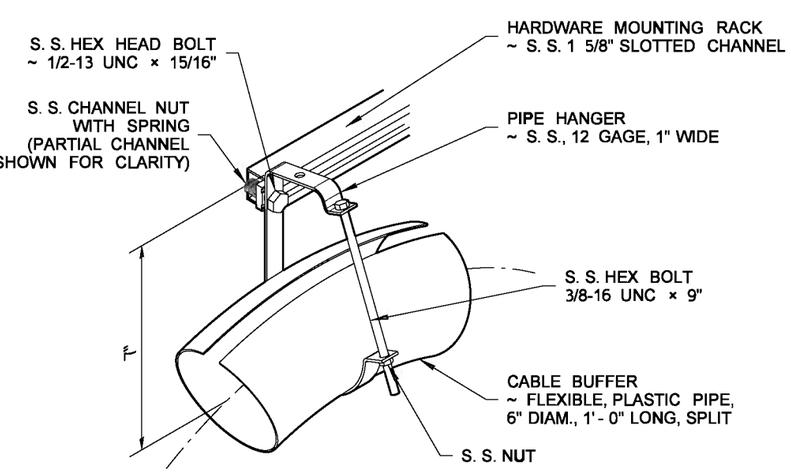

PIPE HANGER DETAIL

FABRICATE IF NOT AVAILABLE COMMERCIALLY

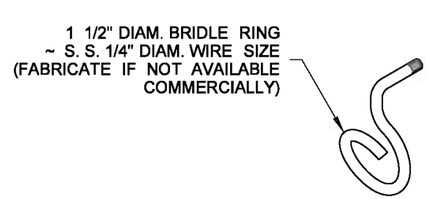

BRIDLE RING DETAIL

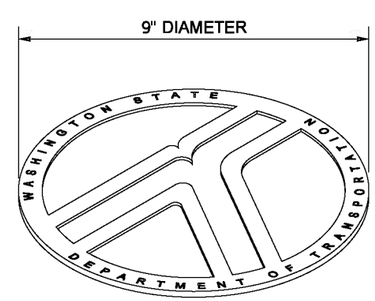

LOGO DETAIL

NOTE: THIS PLAN IS NOT A LEGAL ENGINEERING DOCUMENT BUT AN ELECTRONIC DUPLICATE. THE ORIGINAL, SIGNED BY THE ENGINEER AND APPROVED FOR PUBLICATION, IS KEPT ON FILE AT THE WASHINGTON STATE DEPARTMENT OF TRANSPORTATION. A COPY MAY BE OBTAINED UPON REQUEST.

PULL BOX

STANDARD PLAN J-90.10-01

SHEET 2 OF 2 SHEETS

APPROVED FOR PUBLICATION

Pasco Bakotich III — 06-27-11

STATE DESIGN ENGINEER — DATE

Washington State Department of Transportation

DRAWN BY: LISA CYFORD

EFFECTIVE: AUGUST 6, 2012 TO August 4, 2013

EFFECTIVE: AUGUST 6, 2012 TO August 4, 2013

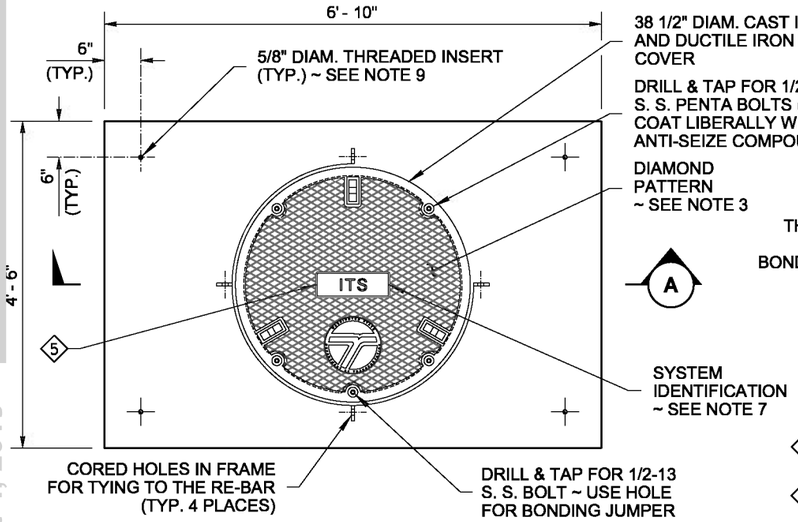

HEAVY DUTY LID
SEE NOTE 1

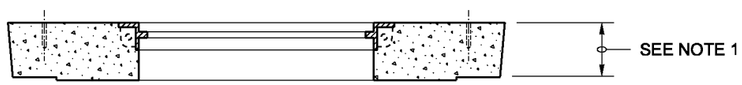

SECTION (A)
(LID NOT SHOWN)

1. Equipment Grounding Conductor
2. Copper Solderless Crimp Connector
3. Equipment Bonding Jumper ~ See Note 6
4. See Contract for Conduct Size and Number
5. Provide a 5" Wide × 3" High × 3/16" Thick Min. Flat Area for Lifting Purposes (for Ductile Iron Lid Only)
6. GRS Shown ~ See Contract for Conduit Type
7. PVC Shown ~ See Contract for Conduit Type
8. Location Wire

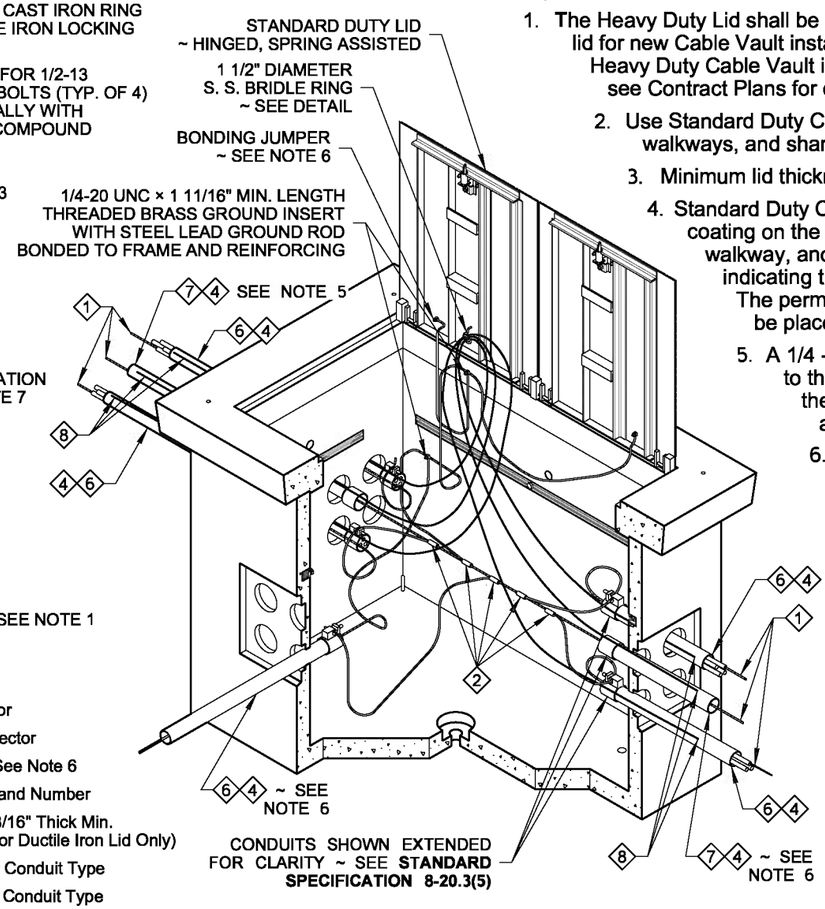

ISOMETRIC CUTAWAY

NOTES

1. The Heavy Duty Lid shall be used when a Cable Vault is placed in the paved shoulder or the traveled way. Use a 9" thick lid for new Cable Vault installations. Use a 6" thick Heavy Duty Lid when converting a Standard Duty Cable Vault into a Heavy Duty Cable Vault in the paved shoulder or the traveled way and no overlay is called for in the Contract. Otherwise, see Contract Plans for overlay depth and fabricate lid thickness to match overlay depth.
2. Use Standard Duty Cable Vault and Lid when placed in unpaved areas. Use Standard Duty Pull Box in sidewalks, walkways, and shared-use paths.
3. Minimum lid thickness shown. The diamond pattern shall be a minimum of 3/32" thick.
4. Standard Duty Cable Vaults installed in sidewalks, walkways, and shared-use paths shall have a slip-resistant coating on the lid and shall be installed with the surface flush with and matched to the grade of the sidewalk, walkway, and shared-use paths. The non-slip lid shall be identified with permanent marking on the underside indicating the type of surface treatment (see Contract Documents for details) and the year of manufacture. The permanent marking shall be 1/8" inch line thickness formed with a stainless steel weld bead and shall be placed prior to hot-dip galvanizing.
5. A 1/4 - 20 UNC × 3/4" S. S. ground stud with (2) S. S. nuts and (2) S. S. flat washers shall be attached to the Standard Duty Lid and coated with anti-seize compound. Provide a 5/8" diameter cored hole in the ductile iron lid gusset (Heavy Duty Lid) with 1/2 - 13 UNC × 1 1/4" S. S. bolt, (3) S. S. flat washers, and (2) S. S. nuts for the Bonding Jumper.
6. Connect a Bonding Jumper to the steel conduit bushing for GRS conduit and connect the steel conduit Bushing Jumper to the equipment ground at the threaded brass ground insert. Connect the equipment grounding conductors in the PVC and/or GRS conduits to the brass ground insert. The Bonding Jumper shall be #8 min. x 4' (ft.) of tinned braided copper between the lid and the frame of the Heavy Duty tops and from the Heavy Duty top to the threaded brass ground insert. The Bonding Jumper shall be #8 min. x 4' (ft.) of tinned braided copper between the lid on a Standard Duty vault and the threaded brass ground insert. See Contract Plan Sheets and **Standard Plan J-60.05** for Bonding Jumper requirements.
7. The system identification letters shall be 1/8" line thickness formed by engraving, casting, stamping, or with a S. S. weld bead. See COVER MARKING DETAIL, **Standard Specification 9-29.2(4).** Ductile iron lid lettering shall be recessed.
8. Cement concrete shall be Class 4000.
9. Plastic plugs shall be put into the lid inserts after fabrication and the lid installation.
10. Capacity - conduit diameter = 60" (in.).
11. Excavate material, place 6" crushed surfacing pad per **Standard Specification 8-20.3(6).** Field bend #3 reinforcing bar to allow conduit into the Cable Vault. Field bend reinforcing bar back into place, wire tie in (2) places and cast in commercial concrete (commercial concrete only allowed for bottom/wall completion).
12. This drawing depicts a typical Cable Vault assembly. Reinforcing not shown. Each manufacturer's Cable Vault assembly will vary. Refer to the approved manufacturer's shop drawings for all dimensions and the actual arrangement.

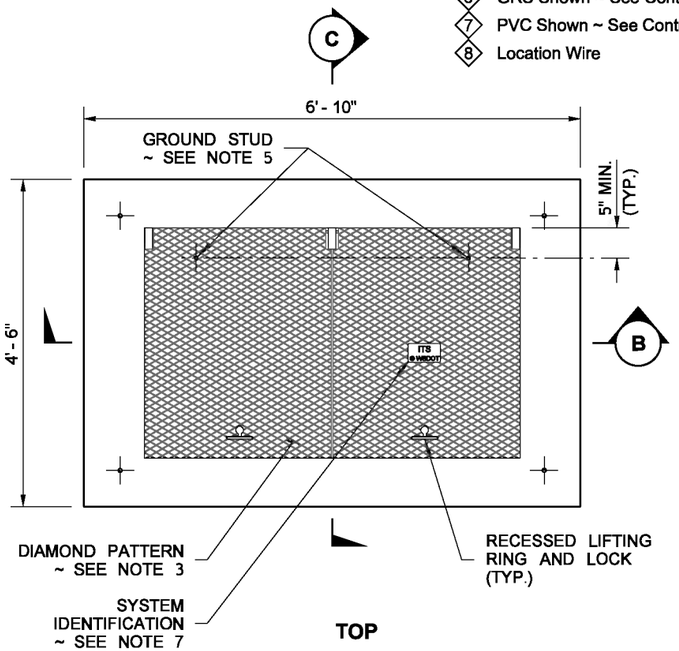

TOP

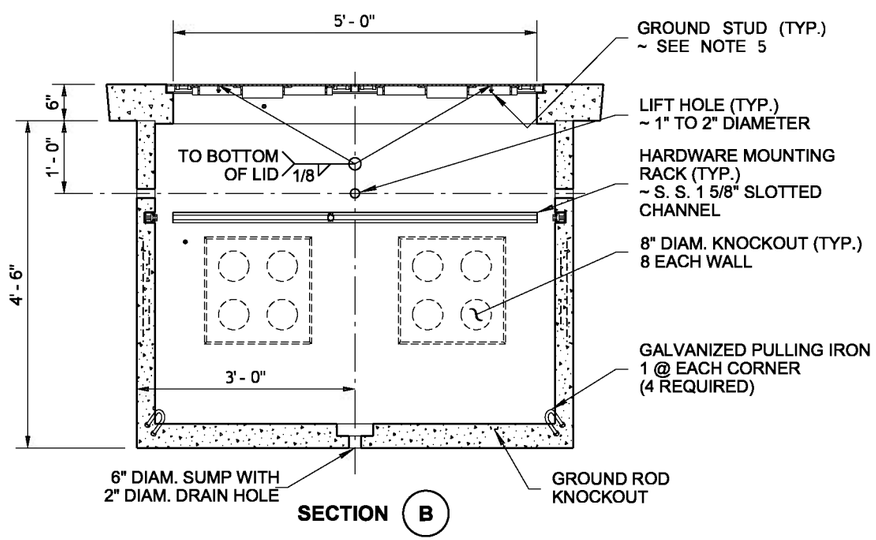

SECTION (B)

CABLE VAULT
(SHOWN WITH STANDARD DUTY LID)

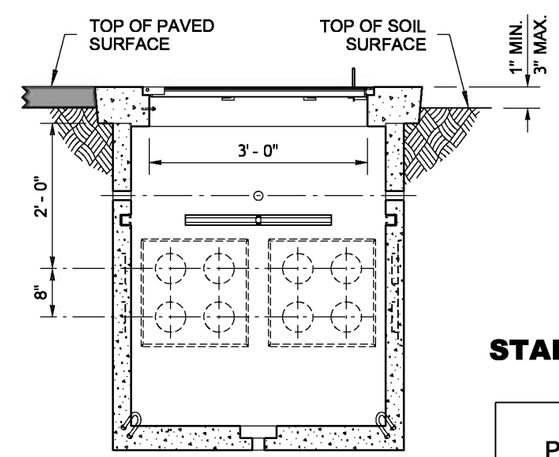

VIEW (C)

NOTE: THIS PLAN IS NOT A LEGAL ENGINEERING DOCUMENT BUT AN ELECTRONIC DUPLICATE. THE ORIGINAL, SIGNED BY THE ENGINEER AND APPROVED FOR PUBLICATION, IS KEPT ON FILE AT THE WASHINGTON STATE DEPARTMENT OF TRANSPORTATION. A COPY MAY BE OBTAINED UPON REQUEST.

CABLE VAULT

STANDARD PLAN J-90.20-01

SHEET 1 OF 2 SHEETS

APPROVED FOR PUBLICATION

Pasco Bakotich III — 06-27-11
STATE DESIGN ENGINEER — DATE

Washington State Department of Transportation

DRAWN BY: LISA CYFORD

EFFECTIVE: AUGUST 6, 2012 TO August 4, 2013

EFFECTIVE: AUGUST 6, 2012 TO August 4, 2013

DRAWN BY: LISA CYFORD

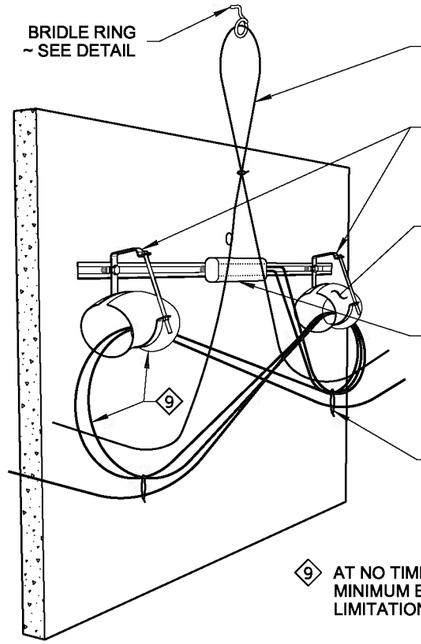

INTERNAL OBLIQUE VIEW

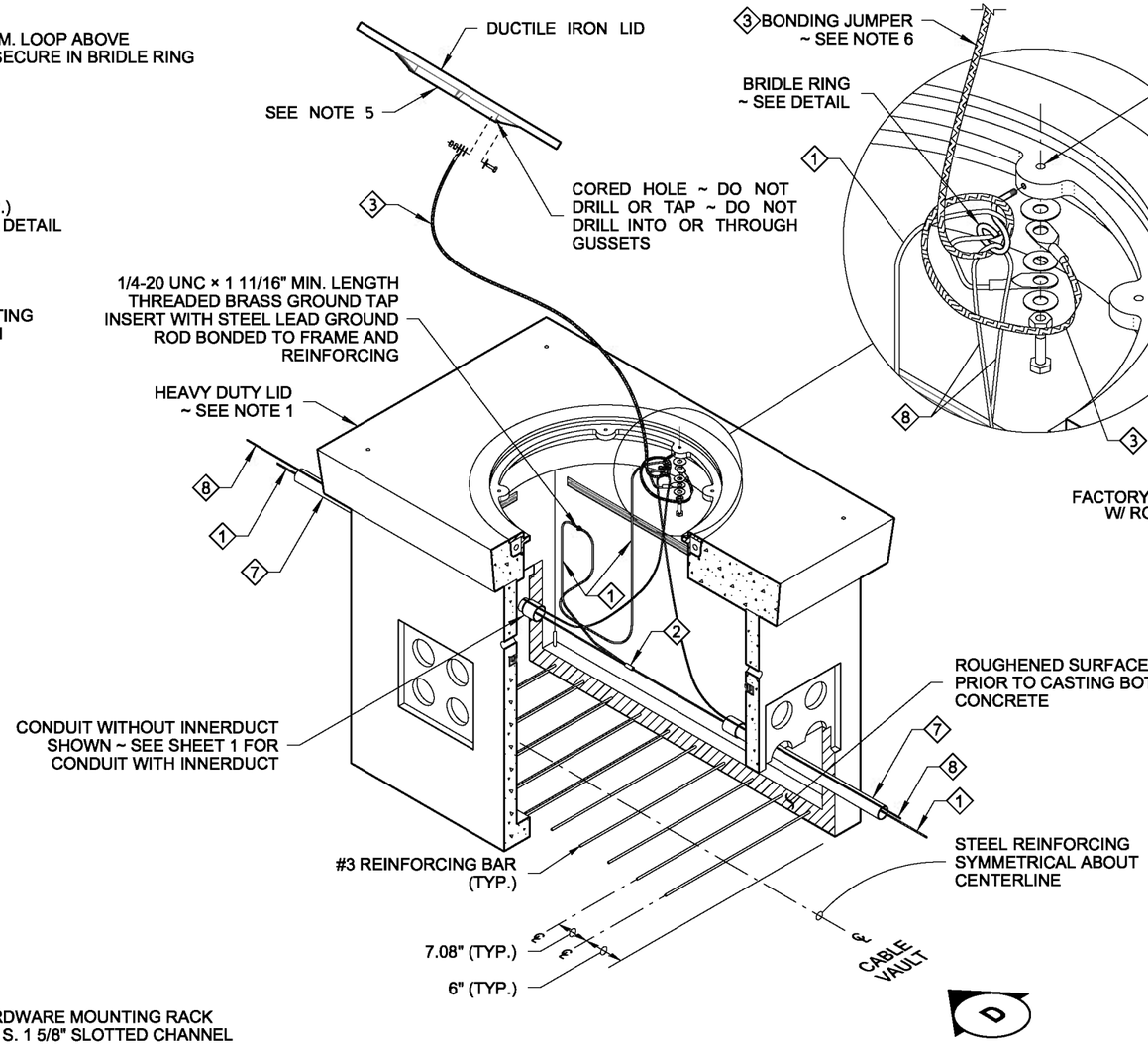

ISOMETRIC CUTAWAY

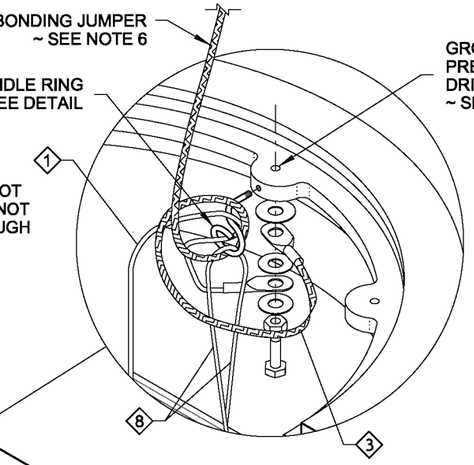

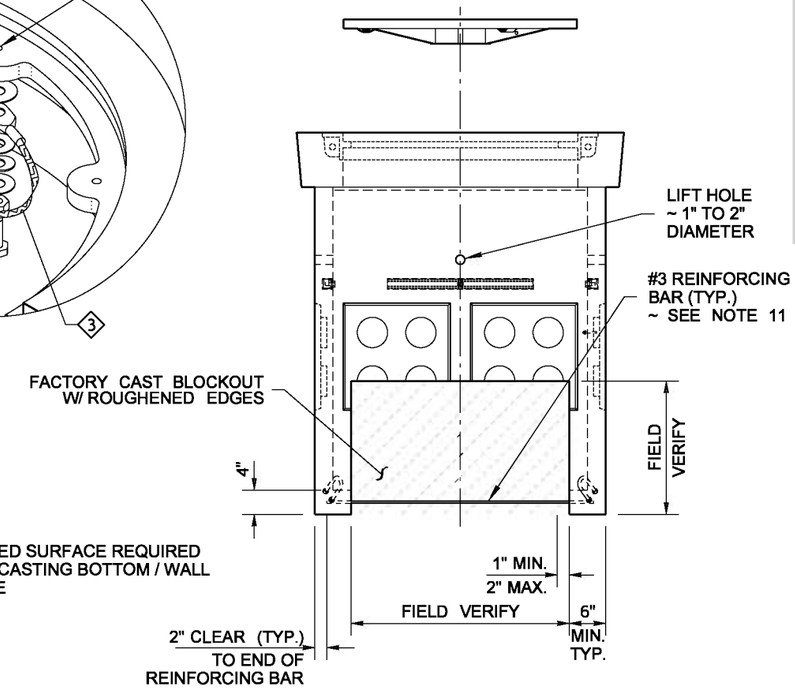

VIEW D

COVER MARKING DETAIL

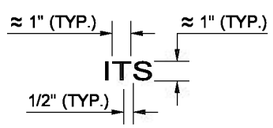

SEE NOTE 7

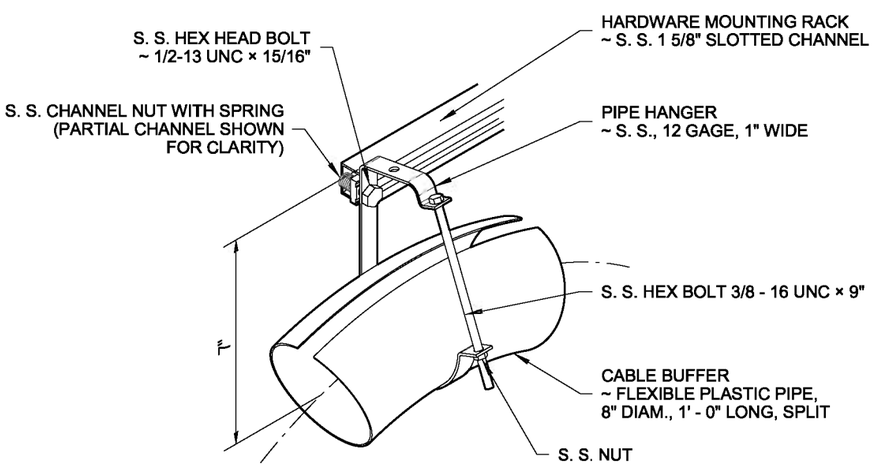

PIPE HANGER DETAIL
FABRICATE IF NOT AVAILABLE COMMERCIALLY

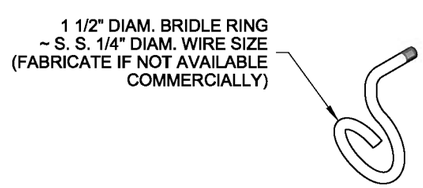

BRIDLE RING DETAIL

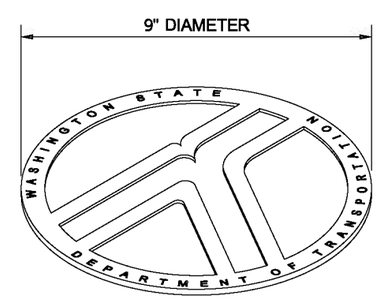

LOGO DETAIL

SPLIT CABLE VAULT
(SHOWN WITH HEAVY DUTY LID)
SEE **CABLE VAULT**, SHEET 1, FOR DIMENSIONS NOT SHOWN

NOTE: THIS PLAN IS NOT A LEGAL ENGINEERING DOCUMENT BUT AN ELECTRONIC DUPLICATE. THE ORIGINAL, SIGNED BY THE ENGINEER AND APPROVED FOR PUBLICATION, IS KEPT ON FILE AT THE WASHINGTON STATE DEPARTMENT OF TRANSPORTATION. A COPY MAY BE OBTAINED UPON REQUEST.

CABLE VAULT

STANDARD PLAN J-90.20-01

SHEET 2 OF 2 SHEETS

APPROVED FOR PUBLICATION

Pasco Bakotich III — 06-27-11
STATE DESIGN ENGINEER — DATE

Washington State Department of Transportation

EFFECTIVE: AUGUST 6, 2012 TO August 4, 2013

EFFECTIVE: AUGUST 6, 2012 TO August 4, 2013
EFFECTIVE: AUGUST 6, 2012 TO August 4, 2013

DRAWN BY: ELENA BRUNSTEIN

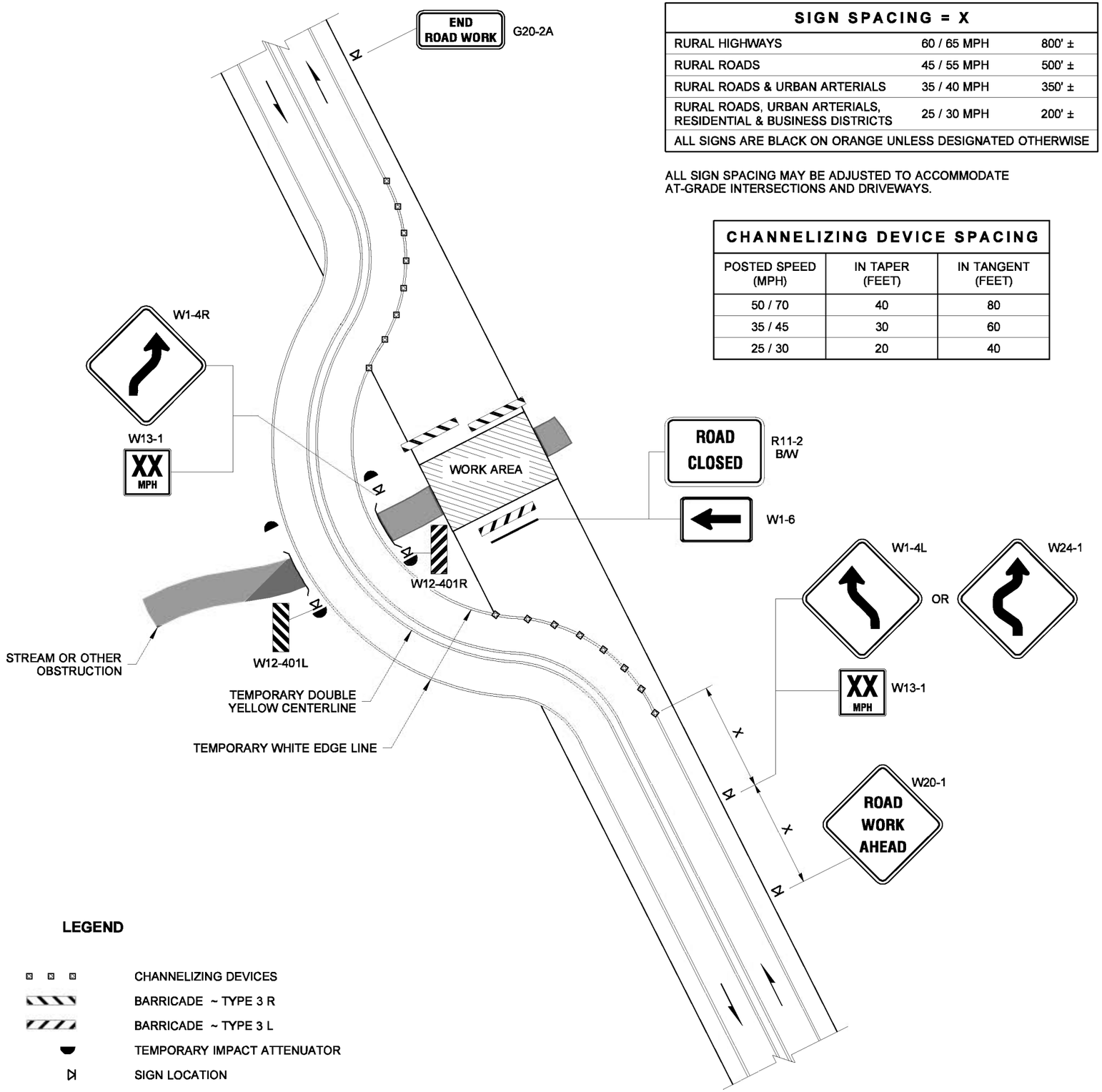

SIGN SPACING = X		
RURAL HIGHWAYS	60 / 65 MPH	800' ±
RURAL ROADS	45 / 55 MPH	500' ±
RURAL ROADS & URBAN ARTERIALS	35 / 40 MPH	350' ±
RURAL ROADS, URBAN ARTERIALS, RESIDENTIAL & BUSINESS DISTRICTS	25 / 30 MPH	200' ±
ALL SIGNS ARE BLACK ON ORANGE UNLESS DESIGNATED OTHERWISE		

ALL SIGN SPACING MAY BE ADJUSTED TO ACCOMMODATE AT-GRADE INTERSECTIONS AND DRIVEWAYS.

CHANNELIZING DEVICE SPACING		
POSTED SPEED (MPH)	IN TAPER (FEET)	IN TANGENT (FEET)
50 / 70	40	80
35 / 45	30	60
25 / 30	20	40

LEGEND

- CHANNELIZING DEVICES
- BARRICADE ~ TYPE 3 R
- BARRICADE ~ TYPE 3 L
- TEMPORARY IMPACT ATTENUATOR
- SIGN LOCATION

NOTES

1. Sign sequence is the same for both directions of travel. Adjust for the direction of roadway curves.
2. Flashing Warning Lights (Type B per MUTCD) and/or flags may be used to call attention to the advance Warning Signs.
3. Existing conflicting pavement markings and signs that are no longer applicable shall be removed or obliterated. Temporary pavement markings shall be used to delineate bypass detour.
4. Raised pavement markers and/or temporary guideposts may be used on bypass as directed by the Engineer.
5. Steady Burning Warning Light (Type C per MUTCD) shall be used to mark Channelizing Devices at night.
6. Where advisory speed is 30 mph or less, reverse turn signs should be used. Other curve or turn Warning Signs may be substituted to depict roadway alignment.
7. Temporary barriers and end treatments shall be crashworthy.
8. To improve visibility, consider use of temporary illumination at closure points.
9. For signs size refer to Manual on Uniform Traffic Control Devices (MUTCD) and WSDOT Sign Fabrication Manual M55-05.
10. Consider using a PCMS for additional advance warning.

FOR LOCAL AGENCY USE ONLY
NOT FOR USE ON STATE ROUTES

THEODORE J. TREPANIER
STATE OF WASHINGTON
25335
REGISTERED
PROFESSIONAL ENGINEER

EXPIRES AUGUST 9, 2009

NOTE: THIS PLAN IS NOT A LEGAL ENGINEERING DOCUMENT BUT AN ELECTRONIC DUPLICATE. THE ORIGINAL, SIGNED BY THE ENGINEER AND APPROVED FOR PUBLICATION, IS KEPT ON FILE AT THE WASHINGTON STATE DEPARTMENT OF TRANSPORTATION. A COPY MAY BE OBTAINED UPON REQUEST.

ROAD CLOSURE WITH DIVERSION

STANDARD PLAN K-10.20-01

SHEET 1 OF 1 SHEET

APPROVED FOR PUBLICATION

Pasco Bakotich III — STATE DESIGN ENGINEER
10-12-07 — DATE

Washington State Department of Transportation

EFFECTIVE: AUGUST 6, 2012 TO August 4, 2013
EFFECTIVE: AUGUST 6, 2012 TO August 4, 2013
EFFECTIVE: AUGUST 6, 2012 TO August 4, 2013
EFFECTIVE: AUGUST 6, 2012 TO August 4, 2013

EFFECTIVE: AUGUST 6, 2012 TO August 4, 2013
EFFECTIVE: AUGUST 6, 2012 TO August 4, 2013

DRAWN BY: ELENA BRUNSTEIN

SIGN SPACING = X (1)		
RURAL ROADS	45 / 55 MPH	500' ±
RURAL ROADS & URBAN ARTERIALS	35 / 40 MPH	350' ±
RURAL ROADS, URBAN ARTERIALS, RESIDENTIAL & BUSINESS DISTRICTS	25 / 30 MPH	200' ± (2)
URBAN STREETS	25 MPH OR LESS	100' ± (2)
ALL SIGNS ARE BLACK ON ORANGE UNLESS DESIGNATED OTHERWISE		

(1) ALL SIGN SPACING MAY BE ADJUSTED TO ACCOMMODATE AT-GRADE INTERSECTIONS AND DRIVEWAYS.

(2) THIS SIGN SPACING MAY BE REDUCED IN URBAN AREAS TO FIT ROADWAY CONDITIONS.

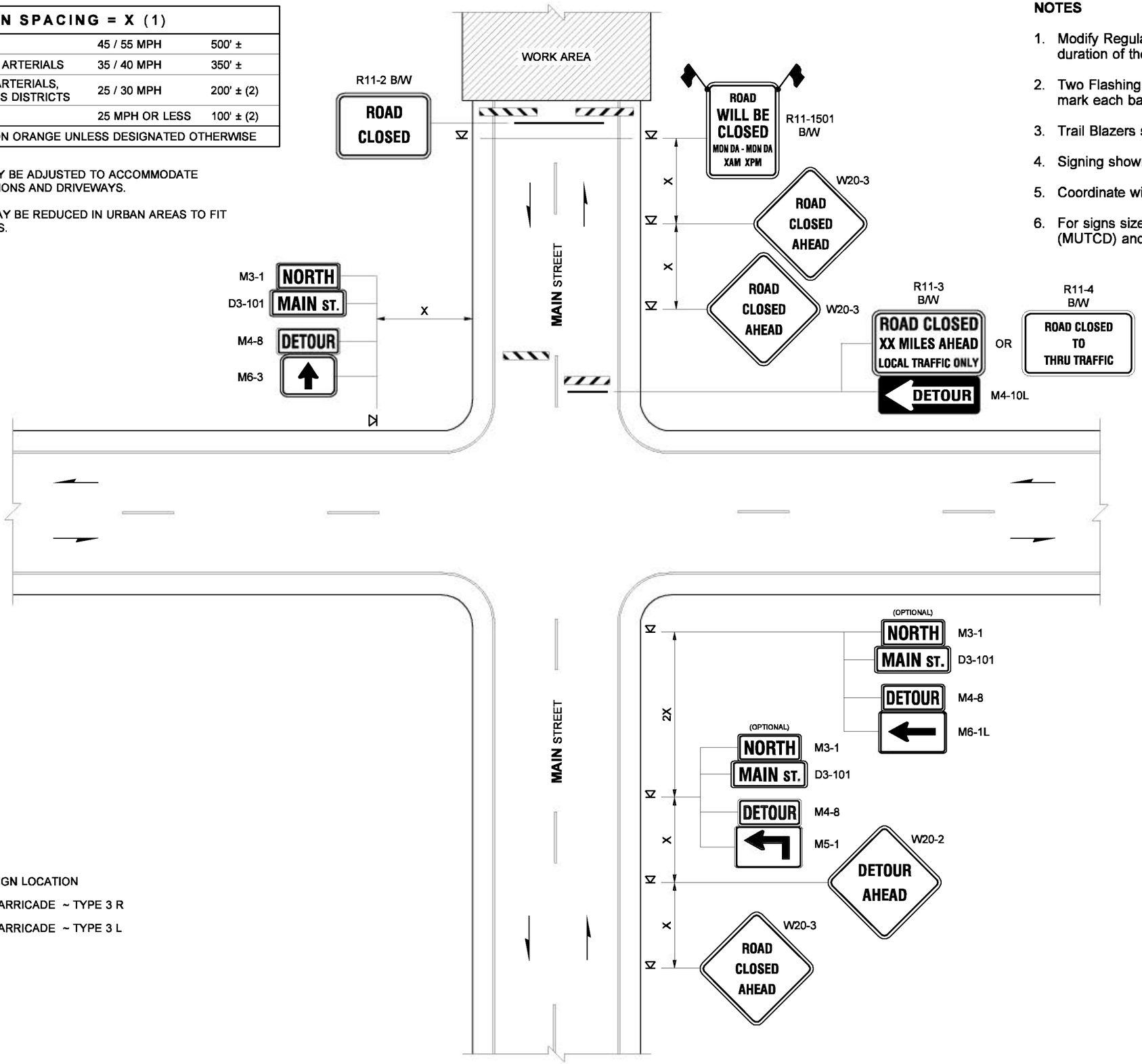

NOTES

1. Modify Regulatory Traffic Control Devices, as needed, for the duration of the detour.
2. Two Flashing Warning Lights (Type A per MUTCD) may be used to mark each barricade at night.
3. Trail Blazers shall be installed throughout the detour, as appropriate.
4. Signing shown for the one direction only.
5. Coordinate with emergency services.
6. For signs size refer to Manual on Uniform Traffic Control Devices (MUTCD) and WSDOT Sign Fabrication Manual M55-05.

LEGEND

- SIGN LOCATION
- BARRICADE ~ TYPE 3 R
- BARRICADE ~ TYPE 3 L

FOR LOCAL AGENCY USE ONLY
NOT FOR USE ON STATE ROUTES

THEODORE J. TREPANIER
STATE OF WASHINGTON
25335
REGISTERED
PROFESSIONAL ENGINEER

EXPIRES AUGUST 9, 2007

NOTE: THIS PLAN IS NOT A LEGAL ENGINEERING DOCUMENT BUT AN ELECTRONIC DUPLICATE. THE ORIGINAL, SIGNED BY THE ENGINEER AND APPROVED FOR PUBLICATION, IS KEPT ON FILE AT THE WASHINGTON STATE DEPARTMENT OF TRANSPORTATION. A COPY MAY BE OBTAINED UPON REQUEST.

ROAD CLOSURE WITH OFF-SITE DETOUR

STANDARD PLAN K-10.40-00

SHEET 1 OF 1 SHEET

APPROVED FOR PUBLICATION

Ken L. Smith — STATE DESIGN ENGINEER
02-15-07 — DATE

Washington State Department of Transportation

EFFECTIVE: AUGUST 6, 2012 TO August 4, 2013
EFFECTIVE: AUGUST 6, 2012 TO August 4, 2013
EFFECTIVE: AUGUST 6, 2012 TO August 4, 2013
EFFECTIVE: AUGUST 6, 2012 TO August 4, 2013

EFFECTIVE: AUGUST 6, 2012 TO August 4, 2013
EFFECTIVE: AUGUST 6, 2012 TO August 4, 2013

DRAWN BY: ELENA BRUNSTEIN

LONGITUDINAL BUFFER SPACE = B					
POSTED SPEED (MPH)	25	30	35	40	45
LENGTH **B** (FEET)	55	85	120	170	270

CHANNELIZING DEVICE SPACING		
POSTED SPEED (MPH)	IN TAPER (FEET)	IN TANGENT (FEET)
35 / 45	30	60
25 / 30	20	40

SIGN SPACING = X		
RURAL ROADS	45 / 55 MPH	500' ±
RURAL ROADS & URBAN ARTERIALS	35 / 40 MPH	350' ±
RURAL ROADS, URBAN ARTERIALS, RESIDENTIAL & BUSINESS DISTRICTS	25 / 30 MPH	200' ±
URBAN STREETS	25 MPH OR LESS	100' ±
ALL SIGNS ARE BLACK ON ORANGE UNLESS DESIGNATED OTHERWISE		

ALL SIGN SPACING MAY BE ADJUSTED TO ACCOMMODATE AT-GRADE INTERSECTIONS AND DRIVEWAYS.

NOTES

1. This plan is intended for use on roadways when traffic volumes create sufficient gaps for motor vehicles to yield.
2. Steady Burning Warning Lights (Type C per MUTCD) shall be used to mark Channelizing Devices at night.
3. Adequate sight distance shall be provided for drivers to see opposing traffic, otherwise use flaggers and/or Temporary Signal.
4. Extend Channelizing Device taper across shoulder ~ recommended.
5. Post mount signs when in place for 3 days or longer.
6. For speed limit 35 mph or higher replace W1-3R with W1-4R.
7. For signs size refer to Manual on Uniform Traffic Control Devices (MUTCD) and WSDOT Sign Fabrication Manual M55-05.
8. Consider using a PCMS for additional advance warning.

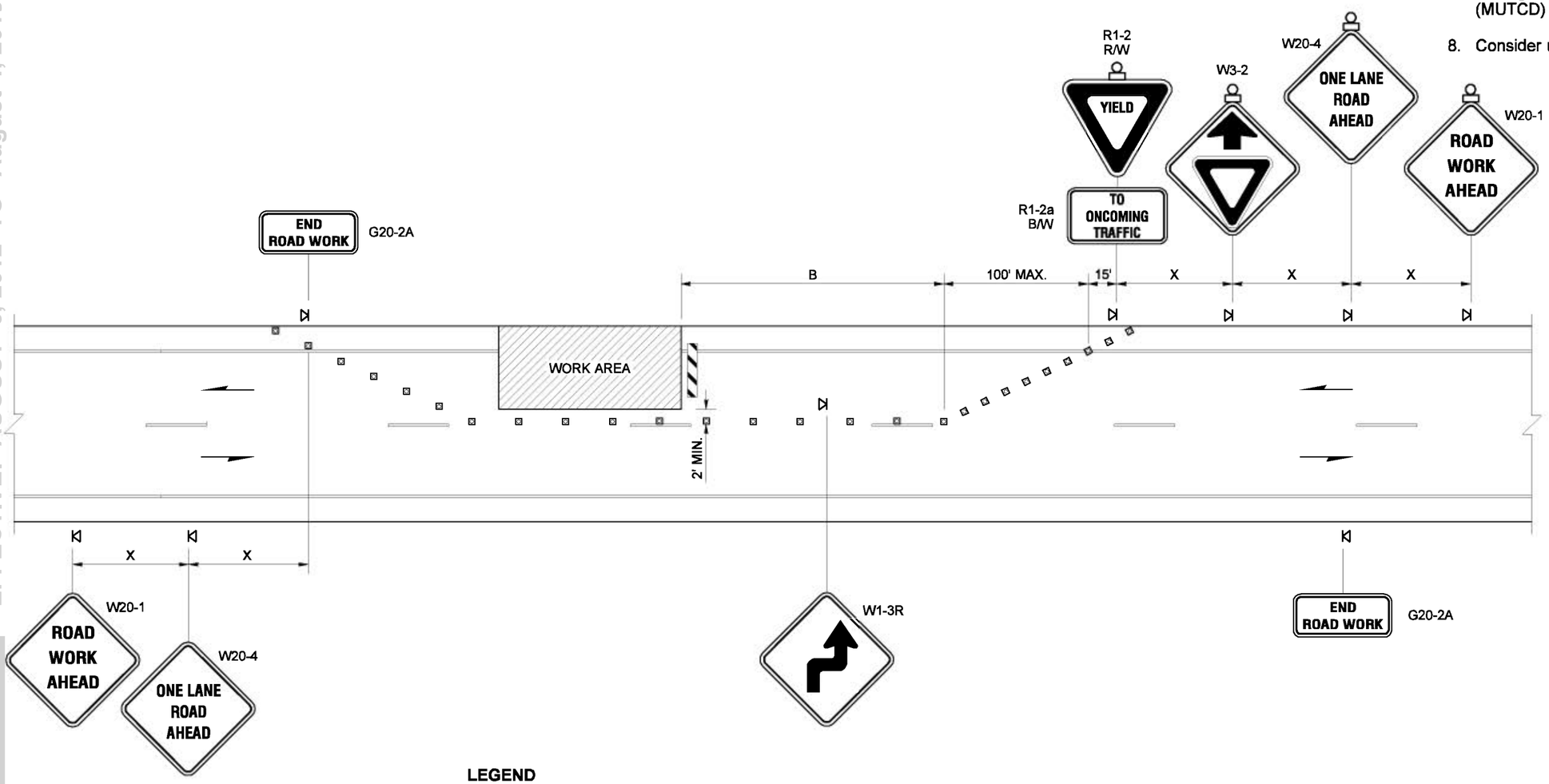

LEGEND

- SIGN LOCATION
- CHANNELIZING DEVICES
- BARRICADE ~ TYPE 3 L
- FLASHING WARNING LIGHT

FOR LOCAL AGENCY USE ONLY
NOT FOR USE ON STATE ROUTES

THEODORE J. TREPANIER
STATE OF WASHINGTON
25335
REGISTERED
PROFESSIONAL ENGINEER

EXPIRES AUGUST 9, 2009

NOTE: THIS PLAN IS NOT A LEGAL ENGINEERING DOCUMENT BUT AN ELECTRONIC DUPLICATE. THE ORIGINAL, SIGNED BY THE ENGINEER AND APPROVED FOR PUBLICATION, IS KEPT ON FILE AT THE WASHINGTON STATE DEPARTMENT OF TRANSPORTATION. A COPY MAY BE OBTAINED UPON REQUEST.

LANE CLOSURE WITHOUT FLAGGERS ~ LOW VOLUME ROAD STANDARD PLAN K-20.20-01

SHEET 1 OF 1 SHEET

APPROVED FOR PUBLICATION

Pasco Bakotich III — STATE DESIGN ENGINEER
10-12-07 — DATE

Washington State Department of Transportation

EFFECTIVE: AUGUST 6, 2012 TO August 4, 2013
EFFECTIVE: AUGUST 6, 2012 TO August 4, 2013
EFFECTIVE: AUGUST 6, 2012 TO August 4, 2013
EFFECTIVE: AUGUST 6, 2012 TO August 4, 2013

EFFECTIVE: AUGUST 6, 2012 TO August 4, 2013
EFFECTIVE: AUGUST 6, 2012 TO August 4, 2013

DRAWN BY: ELENA BRUNSTEIN

LONGITUDINAL BUFFER SPACE = B									
POSTED SPEED (MPH)	25	30	35	40	45	50	55	60	65
LENGTH **B** (FEET)	155	200	250	305	360	425	495	570	645

BUFFER DATA	
TYPICAL PROTECTIVE VEHICLE WITH TMA (SEE NOTE 1)	
VEHICLE TYPE	**LOADED WEIGHT**
4 YARD DUMP TRUCK, SERVICE TRUCK, FLAT BED, ETC.	MINIMUM WEIGHT 15,000 LBS. (MAXIMUM WEIGHT SHALL BE IN ACCORDANCE WITH MANUFACTURER RECOMMENDATION)
1 **ROLL AHEAD STOPPING DISTANCE** = 30 FEET MIN. (DRY PAVEMENT ASSUMED)	

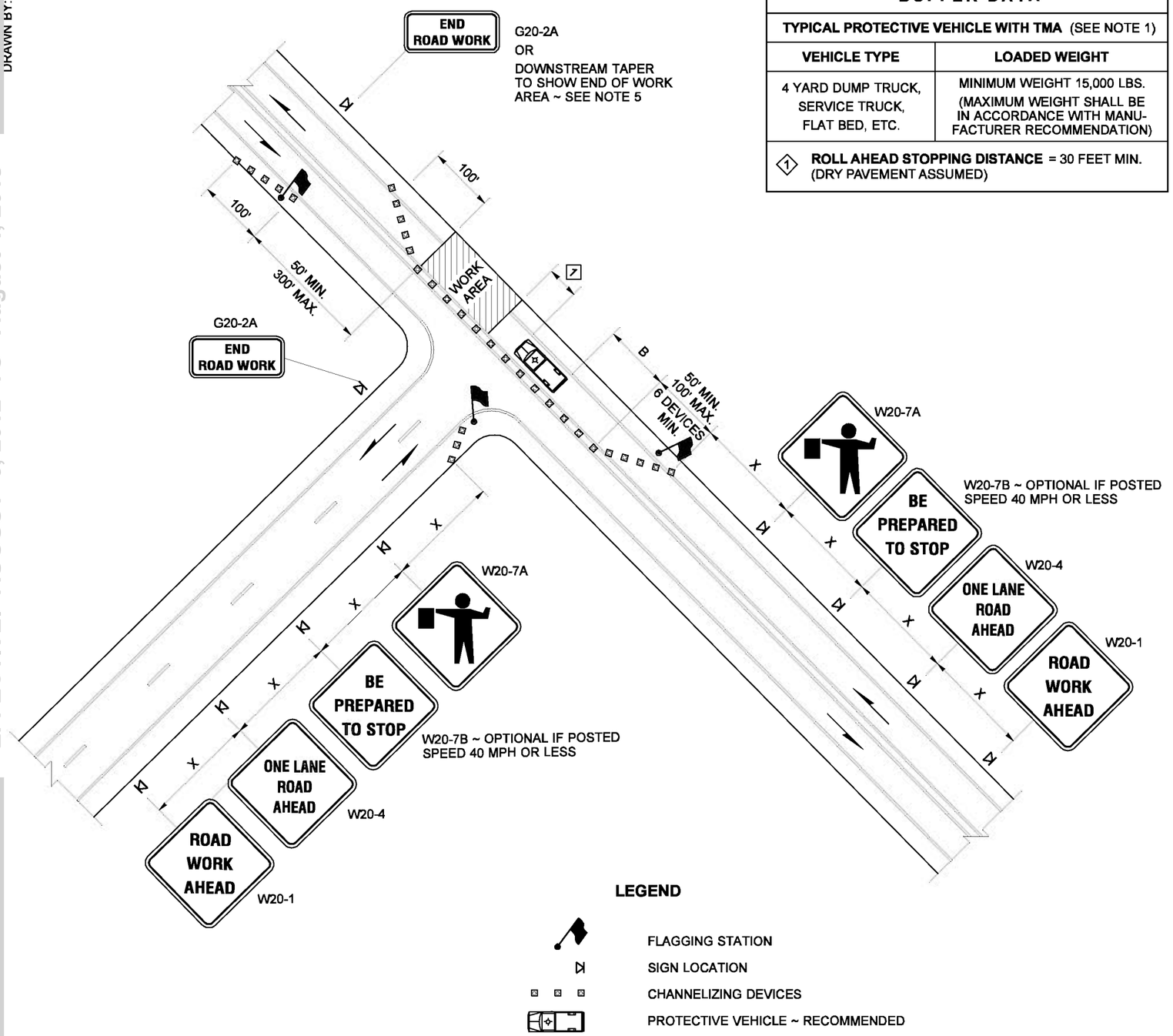

NOTES

1. A Protective Vehicle is recommended regardless if a Truck Mounted Attenuator (TMA) is available; a work vehicle may be used. When no TMA is used, the Protective Vehicle shall be strategically located to shield workers, with no specific Roll-Ahead distance.
2. Night work requires additional roadway lighting at flagging stations. See WSDOT Standard Specifications for additional details.
3. Extend Channelizing Device taper across shoulder ~ recommended.
4. Sign sequence is the same for both directions of travel on the roadway.
5. Channelizing Device spacing for the downstream taper option shall be 20' O.C.
6. For signs size refer to Manual on Uniform Traffic Control Devices (MUTCD) and WSDOT Sign Fabrication Manual M55-05.

SIGN SPACING = X (1)		
RURAL HIGHWAYS	60 / 65 MPH	800' ±
RURAL ROADS	45 / 55 MPH	500' ±
RURAL ROADS & URBAN ARTERIALS	35 / 40 MPH	350' ±
RURAL ROADS, URBAN ARTERIALS, RESIDENTIAL & BUSINESS DISTRICTS	25 / 30 MPH	200' ± (2)
URBAN STREETS	25 MPH OR LESS	100' ± (2)
ALL SIGNS ARE BLACK ON ORANGE UNLESS DESIGNATED OTHERWISE		

(1) ALL SIGN SPACING MAY BE ADJUSTED TO ACCOMMODATE INTERCHANGE RAMPS, AT-GRADE INTERSECTIONS, AND DRIVEWAYS.

(2) THIS SIGN SPACING MAY BE REDUCED IN URBAN AREAS TO FIT ROADWAY CONDITIONS.

FOR LOCAL AGENCY USE ONLY
NOT FOR USE ON STATE ROUTES

THEODORE J. TREPANIER
STATE OF WASHINGTON
25335
REGISTERED
PROFESSIONAL ENGINEER

EXPIRES AUGUST 9, 2007

NOTE: THIS PLAN IS NOT A LEGAL ENGINEERING DOCUMENT BUT AN ELECTRONIC DUPLICATE. THE ORIGINAL, SIGNED BY THE ENGINEER AND APPROVED FOR PUBLICATION, IS KEPT ON FILE AT THE WASHINGTON STATE DEPARTMENT OF TRANSPORTATION. A COPY MAY BE OBTAINED UPON REQUEST.

LANE CLOSURE WITH FLAGGER CONTROL

STANDARD PLAN K-20.40-00

SHEET 1 OF 1 SHEET

APPROVED FOR PUBLICATION

Ken L. Smith — STATE DESIGN ENGINEER
02-15-07 — DATE

Washington State Department of Transportation

EFFECTIVE: AUGUST 6, 2012 TO August 4, 2013
EFFECTIVE: AUGUST 6, 2012 TO August 4, 2013
EFFECTIVE: AUGUST 6, 2012 TO August 4, 2013
EFFECTIVE: AUGUST 6, 2012 TO August 4, 2013

EFFECTIVE: AUGUST 6, 2012 TO August 4, 2013
EFFECTIVE: AUGUST 6, 2012 TO August 4, 2013

DRAWN BY: ELENA BRUNSTEIN

MINIMUM TAPER LENGTH = L (FEET)								
LANE WIDTH (FEET)	POSTED SPEED (MPH)							
	25	30	35	40	45	50	55	60
10	105	150	205	270	450	500	550	-
11	115	165	225	294	495	550	605	660
12	125	180	245	320	540	600	660	720

CHANNELIZING DEVICE SPACING		
POSTED SPEED (MPH)	IN TAPER (FEET)	IN TANGENT (FEET)
50 / 65	40	80
35 / 45	30	60
25 / 30	20	40

NOTES

1. Channelizing Devices are recommended along centerline to separate traffic from work operation. Devices are required at tapers to shift traffic movement between lanes and to protect all flagging stations.
2. Night work requires additional roadway lighting at flagging stations. See WSDOT Standard Specifications for additional details.
3. For signs size refer to Manual on Uniform Traffic Control Devices (MUTCD) and WSDOT Sign Fabrication Manual M55-05.
4. See Standard Plan K-20.40 for additional details.

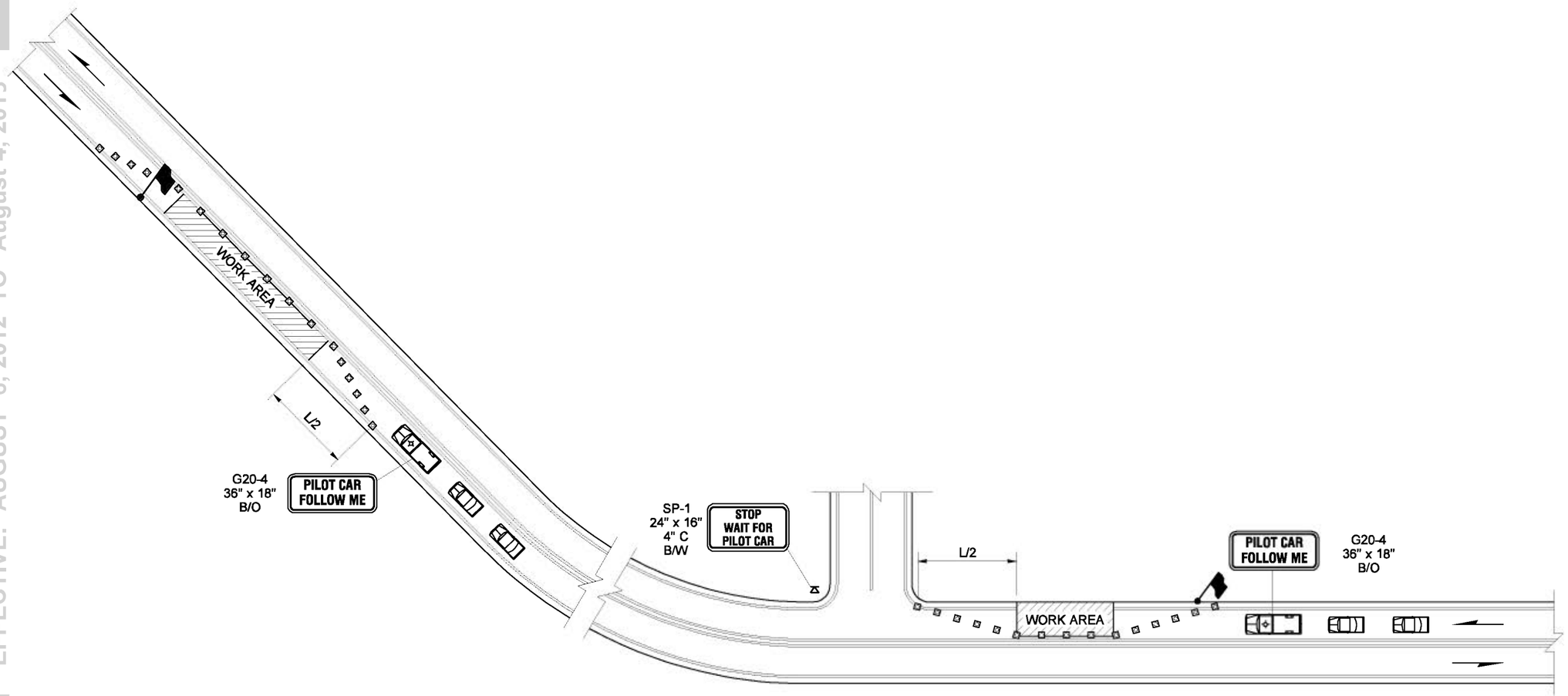

LEGEND

- FLAGGING STATION
- SIGN LOCATION
- CHANNELIZING DEVICES
- PILOT VEHICLE
- MOTORIST VEHICLE

FOR LOCAL AGENCY USE ONLY
NOT FOR USE ON STATE ROUTES

THEODORE J. TREPANIER
STATE OF WASHINGTON
25335
REGISTERED
PROFESSIONAL ENGINEER

EXPIRES AUGUST 9, 2007

NOTE: THIS PLAN IS NOT A LEGAL ENGINEERING DOCUMENT BUT AN ELECTRONIC DUPLICATE. THE ORIGINAL, SIGNED BY THE ENGINEER AND APPROVED FOR PUBLICATION, IS KEPT ON FILE AT THE WASHINGTON STATE DEPARTMENT OF TRANSPORTATION. A COPY MAY BE OBTAINED UPON REQUEST.

LANE CLOSURE WITH PILOT CAR

STANDARD PLAN K-20.60-00

SHEET 1 OF 1 SHEET

APPROVED FOR PUBLICATION

Ken L. Smith — STATE DESIGN ENGINEER
02-15-07 — DATE

Washington State Department of Transportation

EFFECTIVE: AUGUST 6, 2012 TO August 4, 2013
EFFECTIVE: AUGUST 6, 2012 TO August 4, 2013
EFFECTIVE: AUGUST 6, 2012 TO August 4, 2013
EFFECTIVE: AUGUST 6, 2012 TO August 4, 2013

EFFECTIVE: AUGUST 6, 2012 TO August 4, 2013
EFFECTIVE: AUGUST 6, 2012 TO August 4, 2013

DRAWN BY: ELENA BRUNSTEIN

LONGITUDINAL BUFFER SPACE = B								
POSTED SPEED (MPH)	25	30	35	40	45	50	55	60
LENGTH **B** (FEET)	155	200	250	305	360	425	495	570

BUFFER DATA	
TYPICAL PROTECTIVE VEHICLE WITH TMA (SEE NOTE 1)	
VEHICLE TYPE	**LOADED WEIGHT**
4 YARD DUMP TRUCK, SERVICE TRUCK, FLAT BED, ETC.	MINIMUM WEIGHT 15,000 LBS. (MAXIMUM WEIGHT SHALL BE IN ACCORDANCE WITH MANUFACTURER RECOMMENDATION)
(1) **ROLL AHEAD STOPPING DISTANCE** = 30 FEET MIN. (DRY PAVEMENT ASSUMED)	

MINIMUM TAPER LENGTH = L (FEET)								
LANE WIDTH (FEET)	POSTED SPEED (MPH)							
	25	30	35	40	45	50	55	60
10	105	150	205	270	450	500	550	-
11	115	165	225	294	495	550	605	660
12	125	180	245	320	540	600	660	720

CHANNELIZING DEVICE SPACING		
POSTED SPEED (MPH)	IN TAPER (FEET)	IN TANGENT (FEET)
50 / 60	40	80
35 / 45	30	60
25 / 30	20	40

SIGN SPACING = X (1)		
RURAL HIGHWAYS	60 / 65 MPH	800' ±
RURAL ROADS	45 / 55 MPH	500' ±
RURAL ROADS & URBAN ARTERIALS	35 / 40 MPH	350' ±
RURAL ROADS, URBAN ARTERIALS, RESIDENTIAL & BUSINESS DISTRICTS	25 / 30 MPH	200' ± (2)
URBAN STREETS	25 MPH OR LESS	100' ± (2)
ALL SIGNS ARE BLACK ON ORANGE UNLESS DESIGNATED OTHERWISE		

(1) ALL SIGN SPACING MAY BE ADJUSTED TO ACCOMMODATE INTERCHANGE RAMPS, AT-GRADE INTERSECTIONS, DRIVEWAYS.

(2) THIS SIGN SPACING MAY BE REDUCED IN URBAN AREAS TO FIT ROADWAY CONDITIONS.

NOTES

1. A Protective Vehicle is recommended regardless if a Truck Mounted Attenuator (TMA) is available; a work vehicle may be used. When no TMA is used, the Protective Vehicle shall be strategically located to shield workers, with no specific Roll-Ahead distance.
2. Existing conflicting pavement markings that are no longer applicable shall be removed or obliterated. Temporary markings shall be used as necessary, and signs shall be post mounted for long term projects.
3. Steady-Burn Warning Lights (Type C, MUTCD) shall be used to mark Channelizing Devices at night.
4. For speed limits of 30 mph or less, sign W1-3 shall be used in lieu of sign W1-4.
5. Extend device taper (L/3) across shoulder ~ recommended.
6. Portable Changeable Message Sign (PCMS) ~ recommended.
7. Channelizing Device spacing for the downstream taper option shall be 20' O.C.
8. For signs size refer to Manual on Uniform Traffic Control Devices (MUTCD) and WSDOT Sign Fabrication Manual M55-05.

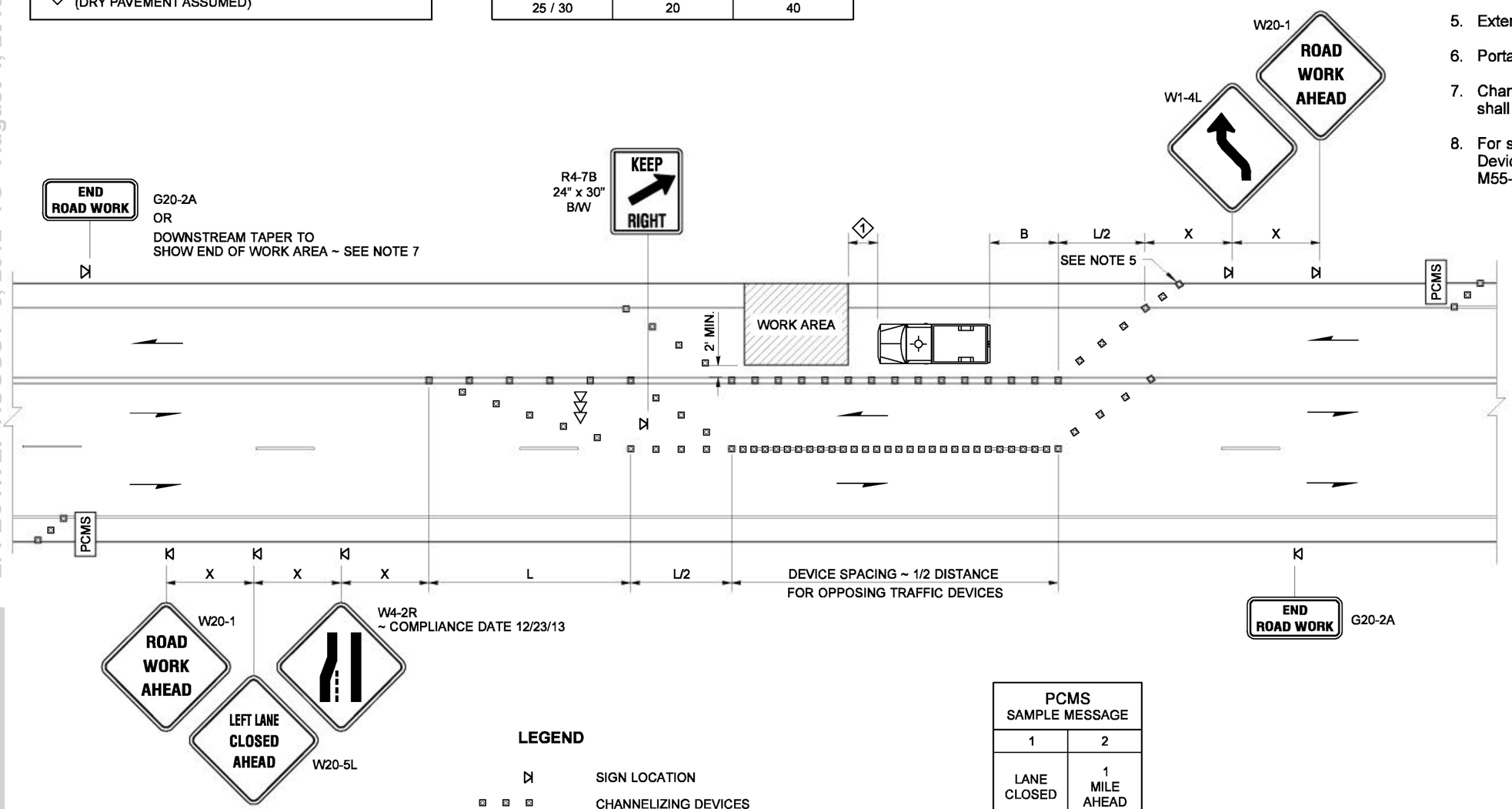

LEGEND

▷	SIGN LOCATION
▫ ▫ ▫	CHANNELIZING DEVICES
	PROTECTIVE VEHICLE ~ RECOMMENDED
PCMS	PORTABLE CHANGEABLE MESSAGE SIGN
▷▷▷	ARROW PANEL

PCMS SAMPLE MESSAGE	
1	2
LANE CLOSED	1 MILE AHEAD
1.5 SEC	1.5 SEC

FIELD LOCATE IN ADVANCE OF LANE CLOSURE SIGNING

FOR LOCAL AGENCY USE ONLY
NOT FOR USE ON STATE ROUTES

THEODORE J. TREPANIER
STATE OF WASHINGTON
25335
REGISTERED
PROFESSIONAL ENGINEER
EXPIRES AUGUST 9, 2009

NOTE: THIS PLAN IS NOT A LEGAL ENGINEERING DOCUMENT BUT AN ELECTRONIC DUPLICATE. THE ORIGINAL, SIGNED BY THE ENGINEER AND APPROVED FOR PUBLICATION, IS KEPT ON FILE AT THE WASHINGTON STATE DEPARTMENT OF TRANSPORTATION. A COPY MAY BE OBTAINED UPON REQUEST.

LANE SHIFT ONTO PASSING LANE

STANDARD PLAN K-22.20-01

SHEET 1 OF 1 SHEET

APPROVED FOR PUBLICATION

Pasco Bakotich III — STATE DESIGN ENGINEER
10-12-07 — DATE

Washington State Department of Transportation

EFFECTIVE: AUGUST 6, 2012 TO August 4, 2013
EFFECTIVE: AUGUST 6, 2012 TO August 4, 2013
EFFECTIVE: AUGUST 6, 2012 TO August 4, 2013
EFFECTIVE: AUGUST 6, 2012 TO August 4, 2013

EFFECTIVE: AUGUST 6, 2012 TO August 4, 2013
EFFECTIVE: AUGUST 6, 2012 TO August 4, 2013

DRAWN BY: ELENA BRUNSTEIN

LONGITUDINAL BUFFER SPACE = B								
POSTED SPEED (MPH)	25	30	35	40	45	50	55	60
LENGTH **B** (FEET)	155	200	250	305	360	425	495	570

BUFFER DATA	
TYPICAL PROTECTIVE VEHICLE WITH TMA (SEE NOTE 1)	
VEHICLE TYPE	**LOADED WEIGHT**
4 YARD DUMP TRUCK, SERVICE TRUCK, FLAT BED, ETC.	MINIMUM WEIGHT 15,000 LBS. (MAXIMUM WEIGHT SHALL BE IN ACCORDANCE WITH MANUFACTURER RECOMMENDATION)
(1) **ROLL AHEAD STOPPING DISTANCE** = 30 FEET MIN. (DRY PAVEMENT ASSUMED)	

MINIMUM TAPER LENGTH = L (FEET)										
LANE WIDTH (FEET)	POSTED SPEED (MPH)									
	25	30	35	40	45	50	55	60	65	70
10	105	150	205	270	450	500	550	-	-	-
11	115	165	225	294	495	550	605	660	-	-
12	125	180	245	320	540	600	660	720	780	840

CHANNELIZING DEVICE SPACING		
POSTED SPEED (MPH)	IN TAPER (FEET)	IN TANGENT (FEET)
50 / 70	40	80
35 / 45	30	60
25 / 30	20	40

SIGN SPACING = X (1)		
RURAL HIGHWAYS	60 / 65 MPH	800' ±
RURAL ROADS	45 / 55 MPH	500' ±
RURAL ROADS & URBAN ARTERIALS	35 / 40 MPH	350' ±
RURAL ROADS, URBAN ARTERIALS, RESIDENTIAL & BUSINESS DISTRICTS	25 / 30 MPH	200' ± (2)
URBAN STREETS	25 MPH OR LESS	100' ± (2)
ALL SIGNS ARE BLACK ON ORANGE UNLESS DESIGNATED OTHERWISE		

(1) ALL SIGN SPACING MAY BE ADJUSTED TO ACCOMMODATE AT-GRADE INTERSECTIONS, AND DRIVEWAYS.

(2) THIS SIGN SPACING MAY BE REDUCED IN URBAN AREAS TO FIT ROADWAY CONDITIONS.

NOTES

1. A Protective Vehicle is recommended regardless if a Truck Mounted Attenuator (TMA) is available; a work vehicle may be used. When no TMA is used, the Protective Vehicle shall be strategically located to shield workers, with no specific Roll-Ahead Stopping Distance.
2. Extend device taper (L/3) across shoulder ~ recommended
3. Portable Changeable Message Sign (PCMS) ~ recommended.
4. Traffic Safety Drums for all tapers on high speed roadway ~ recommended.
5. Transverse Devices in closed lane every 1000' ± ~ recommended.
6. Channelizing Device spacing for the downstream taper option shall be 20' O.C.
7. Use advanced notice for any overwidth loads prior to lane closure for altenative routes if applicable ~ recommended.
8. For signs size refer to Manual on Uniform Traffic Control Devices (MUTCD) and WSDOT Sign Fabrication Manual M55-05.

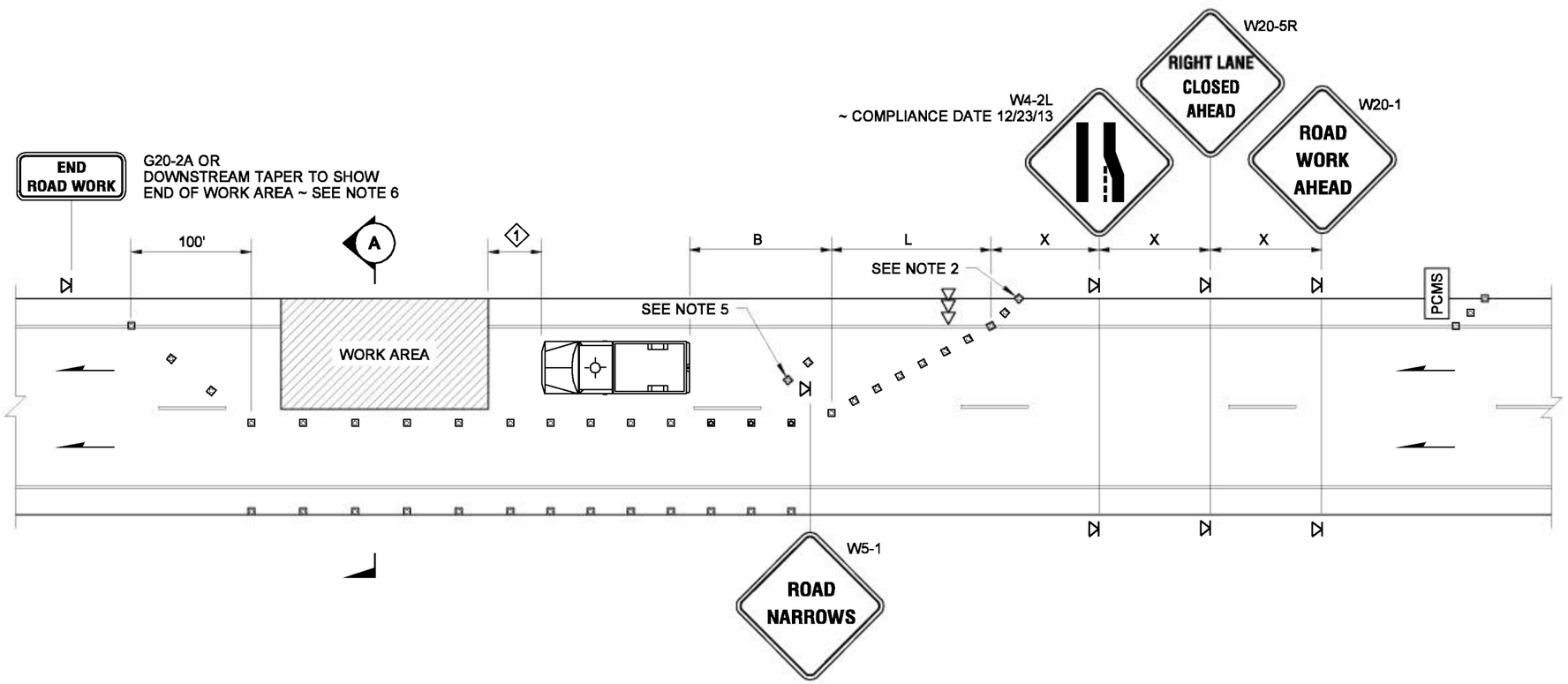

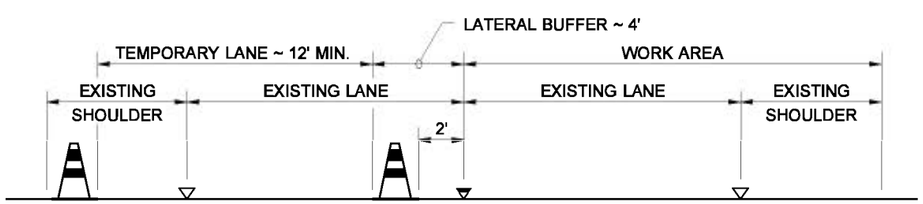

SECTION A

LEGEND

	SIGN LOCATION
	CHANNELIZING DEVICES
	PROTECTIVE VEHICLE ~ RECOMMENDED
PCMS	PORTABLE CHANGEABLE MESSAGE SIGN
	ARROW PANEL
	EXISTING EDGE STRIPE
	EXISTING LANE STRIPE
	TEMPORARY TRAFFIC CONTROL DEVICE

FOR LOCAL AGENCY USE ONLY
NOT FOR USE ON STATE ROUTES

THEODORE J. TREPANIER
STATE OF WASHINGTON
25335
REGISTERED
PROFESSIONAL ENGINEER

EXPIRES AUGUST 9, 2007

NOTE: THIS PLAN IS NOT A LEGAL ENGINEERING DOCUMENT BUT AN ELECTRONIC DUPLICATE. THE ORIGINAL, SIGNED BY THE ENGINEER AND APPROVED FOR PUBLICATION, IS KEPT ON FILE AT THE WASHINGTON STATE DEPARTMENT OF TRANSPORTATION. A COPY MAY BE OBTAINED UPON REQUEST.

SINGLE LANE CLOSURE WITH ENCROACHMENT

STANDARD PLAN K-24.20-00

SHEET 1 OF 1 SHEET

APPROVED FOR PUBLICATION

Ken L. Smith — STATE DESIGN ENGINEER
02-15-07 — DATE

Washington State Department of Transportation

EFFECTIVE: AUGUST 6, 2012 TO August 4, 2013
EFFECTIVE: AUGUST 6, 2012 TO August 4, 2013
EFFECTIVE: AUGUST 6, 2012 TO August 4, 2013
EFFECTIVE: AUGUST 6, 2012 TO August 4, 2013

EFFECTIVE: AUGUST 6, 2012 TO August 4, 2013
EFFECTIVE: AUGUST 6, 2012 TO August 4, 2013

DRAWN BY: ELENA BRUNSTEIN

LONGITUDINAL BUFFER SPACE = B								
POSTED SPEED (MPH)	25	30	35	40	45	50	55	60
LENGTH **B** (FEET)	155	200	250	305	360	425	495	570

BUFFER DATA	
TYPICAL PROTECTIVE VEHICLE WITH TMA (SEE NOTE 1)	
VEHICLE TYPE	**LOADED WEIGHT**
4 YARD DUMP TRUCK, SERVICE TRUCK, FLAT BED, ETC.	MINIMUM WEIGHT 15,000 LBS. (MAXIMUM WEIGHT SHALL BE IN ACCORDANCE WITH MANUFACTURER RECOMMENDATION)
(1) **ROLL AHEAD STOPPING DISTANCE** = 30 FEET MIN. (DRY PAVEMENT ASSUMED)	

MINIMUM TAPER LENGTH = L (FEET)								
LANE WIDTH (FEET)	POSTED SPEED (MPH)							
	25	30	35	40	45	50	55	60
10	-	-	-	270	450	500	550	-
11	-	-	-	294	495	550	605	660
12	-	-	-	320	540	600	660	720

SIGN SPACING = X (1)		
RURAL HIGHWAYS	60 / 65 MPH	800' ±
RURAL ROADS	45 / 55 MPH	500' ±
RURAL ROADS & URBAN ARTERIALS	35 / 40 MPH	350' ±
RURAL ROADS, URBAN ARTERIALS, RESIDENTIAL & BUSINESS DISTRICTS	25 / 30 MPH	200' ± (2)
URBAN STREETS	25 MPH OR LESS	100' ± (2)
ALL SIGNS ARE BLACK ON ORANGE UNLESS DESIGNATED OTHERWISE		

(1) ALL SIGN SPACING MAY BE ADJUSTED TO ACCOMMODATE INTERCHANGE RAMPS, AT-GRADE INTERSECTIONS, AND DRIVEWAYS.

(2) THIS SIGN SPACING MAY BE REDUCED IN URBAN AREAS TO FIT ROADWAY CONDITIONS.

CHANNELIZING DEVICE SPACING		
POSTED SPEED (MPH)	IN TAPER (FEET)	IN TANGENT (FEET)
50 / 70	40	80
40 / 45	30	60

PCMS SAMPLE MESSAGE	
1	2
2 LANES CLOSED	ONE MILE AHEAD
1.5 SEC	1.5 SEC

FIELD LOCATE IN ADVANCE OF LANE CLOSURE SIGNING

LEGEND

- SIGN LOCATION
- CHANNELIZING DEVICES
- PROTECTIVE VEHICLE ~ RECOMMENDED
- PCMS — PORTABLE CHANGEABLE MESSAGE SIGN
- ARROW PANEL

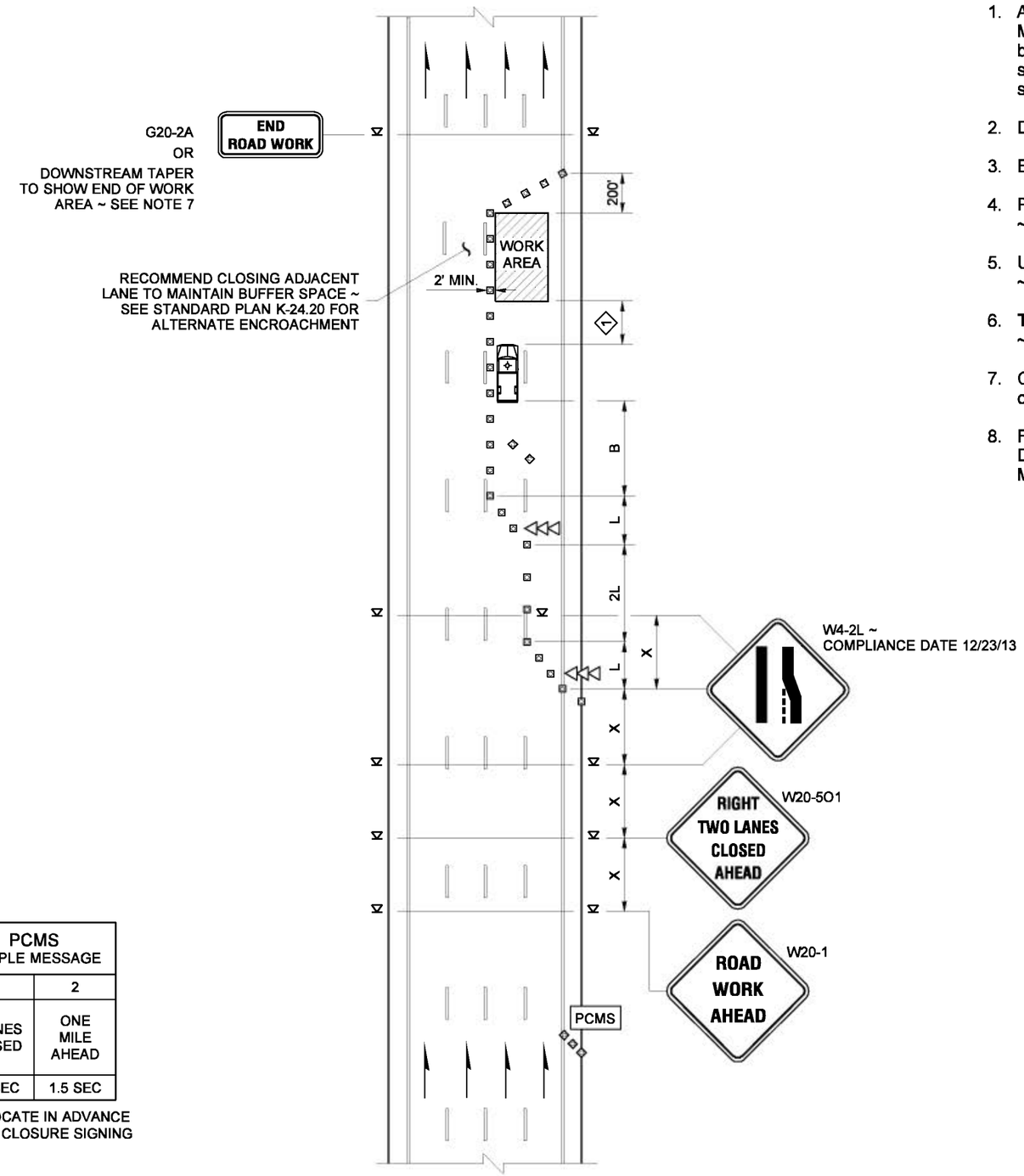

NOTES

1. A Protective Vehicle is recommended regardless if a Truck Mounted Attenuator (TMA) is available; a work vehicle may be used. When no TMA is used, the Protective Vehicle shall be strategically located to shield workers, with no specific Roll-Ahead distance.
2. Devices shall not encroach into adjacent lanes.
3. Extend device taper (L/3) across shoulder ~ recommended.
4. Portable Changeable Message Sign (PCMS) ~ recommended.
5. Use Transverse Devices in closed lane every 1000' ± ~ recommended.
6. Traffic Safety Drums for all tapers on high speed roadway ~ recommended.
7. Channelizing Device spacing for the downstream taper option shall be 20' O.C.
8. For signs size refer to Manual on Uniform Traffic Control Devices (MUTCD) and WSDOT Sign Fabrication Manual M55-05.

FOR LOCAL AGENCY USE ONLY
NOT FOR USE ON STATE ROUTES

THEODORE J. TREPANIER — STATE OF WASHINGTON — 25335 — REGISTERED PROFESSIONAL ENGINEER

EXPIRES AUGUST 9, 2009

NOTE: THIS PLAN IS NOT A LEGAL ENGINEERING DOCUMENT BUT AN ELECTRONIC DUPLICATE. THE ORIGINAL, SIGNED BY THE ENGINEER AND APPROVED FOR PUBLICATION, IS KEPT ON FILE AT THE WASHINGTON STATE DEPARTMENT OF TRANSPORTATION. A COPY MAY BE OBTAINED UPON REQUEST.

DOUBLE LANE CLOSURE ON MULTILANE ROADWAY

STANDARD PLAN K-24.40-01

SHEET 1 OF 1 SHEET

APPROVED FOR PUBLICATION

Pasco Bakotich III — STATE DESIGN ENGINEER — *10-12-07* — DATE

Washington State Department of Transportation

EFFECTIVE: AUGUST 6, 2012 TO August 4, 2013
EFFECTIVE: AUGUST 6, 2012 TO August 4, 2013
EFFECTIVE: AUGUST 6, 2012 TO August 4, 2013
EFFECTIVE: AUGUST 6, 2012 TO August 4, 2013

EFFECTIVE: AUGUST 6, 2012 TO August 4, 2013
EFFECTIVE: AUGUST 6, 2012 TO August 4, 2013

DRAWN BY: ELENA BRUNSTEIN

LONGITUDINAL BUFFER SPACE = B								
POSTED SPEED (MPH)	25	30	35	40	45	50	55	60
LENGTH **B** (FEET)	155	200	250	305	360	425	495	570

BUFFER DATA	
TYPICAL PROTECTIVE VEHICLE WITH TMA (SEE NOTE 1)	
VEHICLE TYPE	**LOADED WEIGHT**
4 YARD DUMP TRUCK, SERVICE TRUCK, FLAT BED, ETC.	MINIMUM WEIGHT 15,000 LBS. (MAXIMUM WEIGHT SHALL BE IN ACCORDANCE WITH MANUFACTURER RECOMMENDATION)
(1) **ROLL AHEAD STOPPING DISTANCE** = 30 FEET MIN. (DRY PAVEMENT ASSUMED)	

MINIMUM TAPER LENGTH = L (FEET)								
LANE WIDTH (FEET)	POSTED SPEED (MPH)							
	25	30	35	40	45	50	55	60
10	105	150	205	270	450	500	550	-
11	115	165	225	294	495	550	605	660
12	125	180	245	320	540	600	660	720

CHANNELIZING DEVICE SPACING		
POSTED SPEED (MPH)	IN TAPER (FEET)	IN TANGENT (FEET)
50 / 70	40	80
35 / 45	30	60
25 / 30	20	40

SIGN SPACING = X (1)		
RURAL HIGHWAYS	60 / 65 MPH	800' ±
RURAL ROADS	45 / 55 MPH	500' ±
RURAL ROADS & URBAN ARTERIALS	35 / 40 MPH	350' ±
RURAL ROADS, URBAN ARTERIALS, RESIDENTIAL & BUSINESS DISTRICTS	25 / 30 MPH	200' ± (2)
URBAN STREETS	25 MPH OR LESS	100' ± (2)
ALL SIGNS ARE BLACK ON ORANGE UNLESS DESIGNATED OTHERWISE		

(1) ALL SIGN SPACING MAY BE ADJUSTED TO ACCOMMODATE INTERCHANGE RAMPS, AT-GRADE INTERSECTIONS, AND DRIVEWAYS.

(2) THIS SIGN SPACING MAY BE REDUCED IN URBAN AREAS TO FIT ROADWAY CONDITIONS.

NOTES

1. A Protective Vehicle is recommended regardless if a Truck Mounted Attenuator (TMA) is available; a work vehicle may be used. When no TMA is used, the Protective Vehicle shall be strategically located to shield workers, with no specific Roll-Ahead distance.
2. Devices shall not encroach into adjacent lanes.
3. Extend device taper (L/3) across shoulder ~ recommended.
4. Portable Changeable Message Sign (PCMS) ~ recommended.
5. Use Transverse Devices in closed lane every 1000' ± ~ recommended.
6. Traffic Safety Drums for all tapers on high speed roadway ~ recommended.
7. Channelizing Device spacing for the downstream taper option shall be 20' O.C.
8. For signs size refer to Manual on Uniform Traffic Control Devices (MUTCD) and WSDOT Sign Fabrication Manual M55-05.

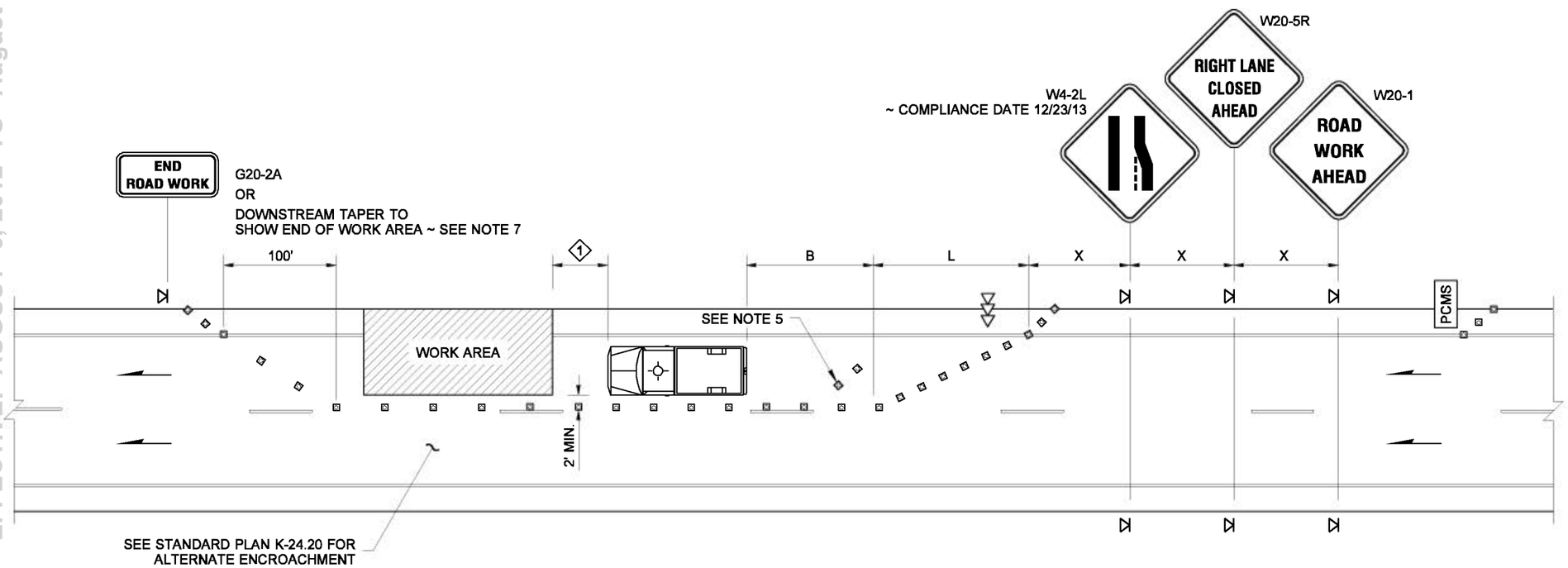

FOR LOCAL AGENCY USE ONLY
NOT FOR USE ON STATE ROUTES

EXPIRES AUGUST 9, 2007

NOTE: THIS PLAN IS NOT A LEGAL ENGINEERING DOCUMENT BUT AN ELECTRONIC DUPLICATE. THE ORIGINAL, SIGNED BY THE ENGINEER AND APPROVED FOR PUBLICATION, IS KEPT ON FILE AT THE WASHINGTON STATE DEPARTMENT OF TRANSPORTATION. A COPY MAY BE OBTAINED UPON REQUEST.

LEGEND

- SIGN LOCATION
- CHANNELIZING DEVICES
- PROTECTIVE VEHICLE ~ RECOMMENDED
- PCMS — PORTABLE CHANGEABLE MESSAGE SIGN
- ARROW PANEL

PCMS SAMPLE MESSAGE	
1	2
LANE CLOSED	ONE MILE AHEAD
1.5 SEC	1.5 SEC

FIELD LOCATE 1 MILE ±, IN ADVANCE OF LANE CLOSURE

SINGLE LANE CLOSURE ON MULTILANE ROADWAY

STANDARD PLAN K-24.60-00

SHEET 1 OF 1 SHEET

APPROVED FOR PUBLICATION

Ken L. Smith — STATE DESIGN ENGINEER — *02-15-07* — DATE

Washington State Department of Transportation

EFFECTIVE: AUGUST 6, 2012 TO August 4, 2013
EFFECTIVE: AUGUST 6, 2012 TO August 4, 2013
EFFECTIVE: AUGUST 6, 2012 TO August 4, 2013
EFFECTIVE: AUGUST 6, 2012 TO August 4, 2013

EFFECTIVE: AUGUST 6, 2012 TO August 4, 2013
EFFECTIVE: AUGUST 6, 2012 TO August 4, 2013

DRAWN BY: ELENA BRUNSTEIN

LONGITUDINAL BUFFER SPACE = B										
POSTED SPEED (MPH)	25	30	35	40	45	50	55	60	65	70
LENGTH **B** (FEET)	155	200	250	305	360	425	495	570	645	730

SIGN SPACING = X (1)		
RURAL HIGHWAYS	60 / 65 MPH	800' ±
RURAL ROADS	45 / 55 MPH	500' ±
RURAL ROADS & URBAN ARTERIALS	35 / 40 MPH	350' ±
RURAL ROADS, URBAN ARTERIALS, RESIDENTIAL & BUSINESS DISTRICTS	25 / 30 MPH	200' ± (2)
URBAN STREETS	25 MPH OR LESS	100' ± (2)
ALL SIGNS ARE BLACK ON ORANGE UNLESS DESIGNATED OTHERWISE		

(1) ALL SIGN SPACING MAY BE ADJUSTED TO ACCOMMODATE INTERCHANGE RAMPS, AT-GRADE INTERSECTIONS, AND DRIVEWAYS.

(2) THIS SIGN SPACING MAY BE REDUCED IN URBAN AREAS TO FIT ROADWAY CONDITIONS.

MINIMUM TAPER LENGTH = L (FEET)										
LANE WIDTH (FEET)	POSTED SPEED (MPH)									
	25	30	35	40	45	50	55	60	65	70
10	105	150	205	270	450	500	550	-	-	-
11	115	165	225	294	495	550	605	660	-	-
12	125	180	245	320	540	600	660	720	780	840

CHANNELIZING DEVICE SPACING		
POSTED SPEED (MPH)	IN TAPER (FEET)	IN TANGENT (FEET)
50 / 65	40	80
35 / 45	30	60
25 / 30	20	40

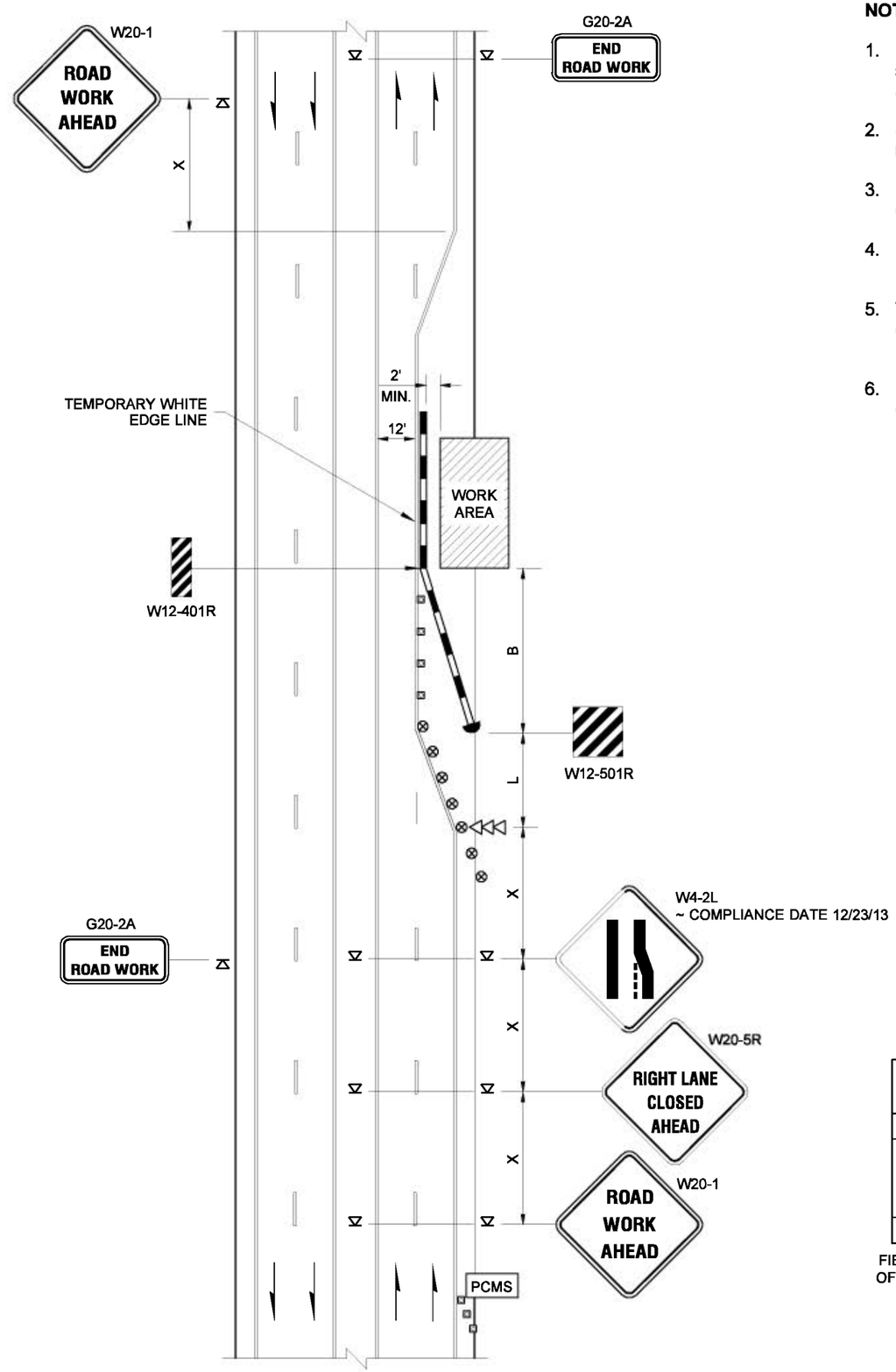

NOTES

1. Existing conflicting pavement markings that are no longer applicable shall be removed or obliterated. Temporary markings shall be used as necessary.
2. Steady-Burn Warning Lights (Type C, MUTCD) shall be used to mark Channelizing Devices at night.
3. Exposed ends of Concrete Barriers shall be tapered outside the clear zone or fitted with impact attenuators.
4. Roadside Barrier and End Treatment shall be crashworthy. Refer to Design Manual, Chapter 710 & 720, for barrier and attenuator information.
5. Temporary concrete barrier may be Type 2 (see Standard Plan C-8) or Alternative (see Standard Plan K-80.30). Anchoring may be required (see Standard Plans K-80.35 and K-80.37).
6. For signs size refer to Manual on Uniform Traffic Control Devices (MUTCD) and WSDOT Sign Fabrication Manual M55-05.

LONGITUDINAL BARRIER FLARE RATES		
POSTED SPEED (MPH)	ANCHORED BARRIER	UNANCHORED BARRIER
60	18 : 1	16 : 1
55	16 : 1	14 : 1
50	14 : 1	12 : 1
45	12 : 1	11 : 1
40 OR BELOW	11 : 1	10 : 1

LEGEND

- SIGN LOCATION
- CHANNELIZING DEVICES
- TEMPORARY CONCRETE BARRIER WITH REFLECTORS
- PCMS — PORTABLE CHANGEABLE MESSAGE SIGN
- ARROW PANEL
- TRAFFIC SAFETY DRUM
- TEMPORARY IMPACT ATTENUATOR

PCMS SAMPLE MESSAGE	
1	2
RIGHT LANE CLOSED	ONE MILE AHEAD
1.5 SEC	1.5 SEC

FIELD LOCATE IN ADVANCE OF LANE CLOSURE SIGNING

FOR LOCAL AGENCY USE ONLY
NOT FOR USE ON STATE ROUTES

THEODORE J. TREPANIER — STATE OF WASHINGTON — 25335 — REGISTERED PROFESSIONAL ENGINEER

EXPIRES AUGUST 9, 2009

NOTE: THIS PLAN IS NOT A LEGAL ENGINEERING DOCUMENT BUT AN ELECTRONIC DUPLICATE. THE ORIGINAL, SIGNED BY THE ENGINEER AND APPROVED FOR PUBLICATION, IS KEPT ON FILE AT THE WASHINGTON STATE DEPARTMENT OF TRANSPORTATION. A COPY MAY BE OBTAINED UPON REQUEST.

SINGLE LANE CLOSURE WITH TEMPORARY CONCRETE BARRIER
STANDARD PLAN K-24.80-01

SHEET 1 OF 1 SHEET

APPROVED FOR PUBLICATION

Pasco Bakotich III — STATE DESIGN ENGINEER
10-12-07 — DATE

Washington State Department of Transportation

EFFECTIVE: AUGUST 6, 2012 TO August 4, 2013
EFFECTIVE: AUGUST 6, 2012 TO August 4, 2013
EFFECTIVE: AUGUST 6, 2012 TO August 4, 2013
EFFECTIVE: AUGUST 6, 2012 TO August 4, 2013

EFFECTIVE: AUGUST 6, 2012 TO August 4, 2013
EFFECTIVE: AUGUST 6, 2012 TO August 4, 2013

DRAWN BY: ELENA BRUNSTEIN

LONGITUDINAL BUFFER SPACE = B						
POSTED SPEED (MPH)	25	30	35	40	45	50
LENGTH **B** (FEET)	155	200	250	305	360	425

BUFFER DATA	
TYPICAL PROTECTIVE VEHICLE WITH TMA (SEE NOTE 1)	
VEHICLE TYPE	**LOADED WEIGHT**
4 YARD DUMP TRUCK, SERVICE TRUCK, FLAT BED, ETC.	MINIMUM WEIGHT 15,000 LBS. (MAXIMUM WEIGHT SHALL BE IN ACCORDANCE WITH MANUFACTURER RECOMMENDATION)
1 **ROLL AHEAD STOPPING DISTANCE** = 30 FEET MIN. (DRY PAVEMENT ASSUMED)	

SIGN SPACING = X		
RURAL ROADS	45 / 55 MPH	500' ±
RURAL ROADS & URBAN ARTERIALS	35 / 40 MPH	350' ±
RURAL ROADS, URBAN ARTERIALS, RESIDENTIAL & BUSINESS DISTRICTS	25 / 30 MPH	200' ±
ALL SIGNS ARE BLACK ON ORANGE UNLESS DESIGNATED OTHERWISE		

ALL SIGN SPACING MAY BE ADJUSTED TO ACCOMMODATE AT-GRADE INTERSECTIONS AND DRIVEWAYS.

MINIMUM TAPER LENGTH = L (FEET)						
LANE WIDTH (FEET)	POSTED SPEED (MPH) 25	30	35	40	45	50
10	105	150	205	270	450	500
11	115	165	225	294	495	550
12	125	180	245	320	540	600

CHANNELIZING DEVICE SPACING		
POSTED SPEED (MPH)	IN TAPER (FEET)	IN TANGENT (FEET)
50	40	80
35 / 45	30	60
25 / 30	20	40

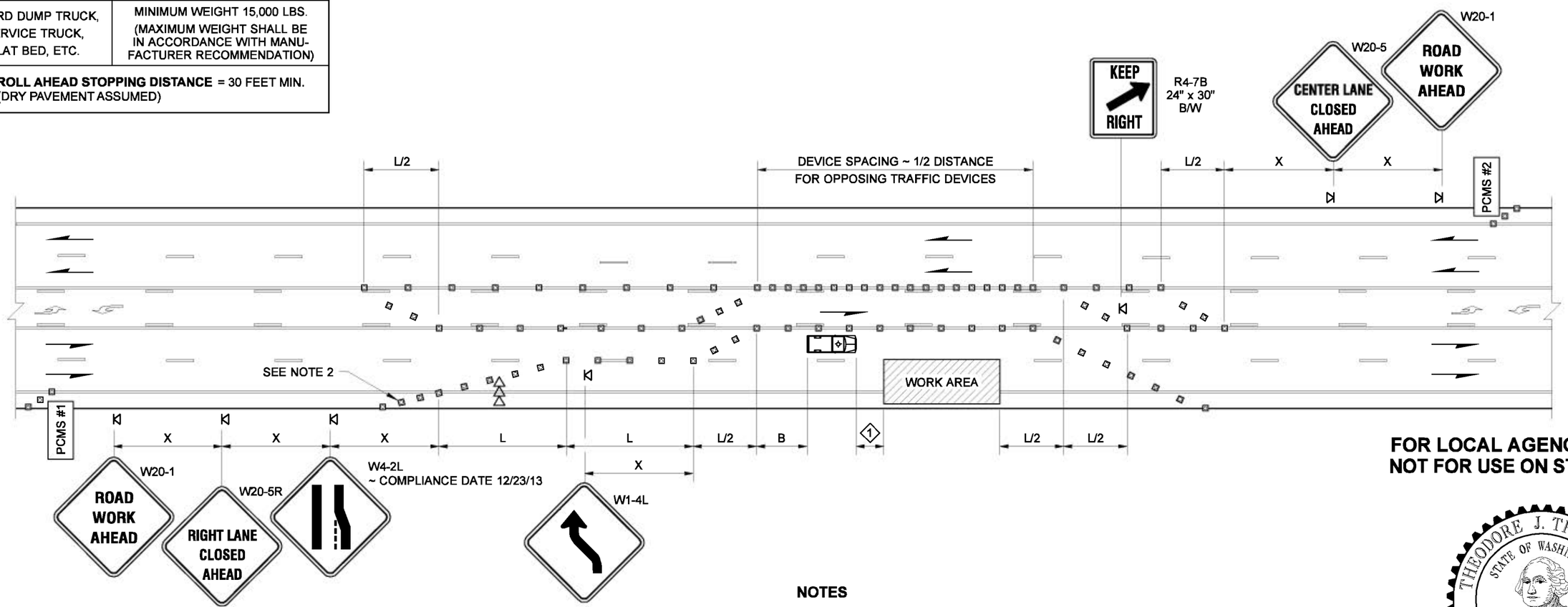

FOR LOCAL AGENCY USE ONLY
NOT FOR USE ON STATE ROUTES

PCMS SAMPLE MESSAGE #1	
1	2
LANES CLOSED AHEAD	NO LEFT TURN
1.5 SEC	1.5 SEC

FIELD LOCATE IN ADVANCE OF LANE CLOSURE SIGNING

PCMS SAMPLE MESSAGE #2	
1	2
CENTER LANE CLOSED	NO LEFT TURN
1.5 SEC	1.5 SEC

FIELD LOCATE IN ADVANCE OF LANE CLOSURE SIGNING

LEGEND

- SIGN LOCATION
- CHANNELIZING DEVICES
- PROTECTIVE VEHICLE ~ RECOMMENDED
- PCMS — PORTABLE CHANGEABLE MESSAGE SIGN
- ARROW PANEL

NOTES

1. A Protective Vehicle is recommended regardless if a Truck Mounted Attenuator (TMA) is available; a work vehicle may be used. When no TMA is used, the Protective Vehicle shall be strategically located to shield workers, with no specific Roll-Ahead distance.
2. Extend device taper (L/3) across shoulder ~ recommended.
3. Portable Changeable Message Sign (PCMS) ~ recommended.
4. If the lane shift is short and has minimal radius curve (30mph or less) use sign W1-3 in lieu of sign W1-4.
5. For signs size refer to Manual on Uniform Traffic Control Devices (MUTCD) and WSDOT Sign Fabrication Manual M55-05.

THEODORE J. TREPANIER
STATE OF WASHINGTON
25335
REGISTERED PROFESSIONAL ENGINEER

EXPIRES AUGUST 9, 2007

NOTE: THIS PLAN IS NOT A LEGAL ENGINEERING DOCUMENT BUT AN ELECTRONIC DUPLICATE. THE ORIGINAL, SIGNED BY THE ENGINEER AND APPROVED FOR PUBLICATION, IS KEPT ON FILE AT THE WASHINGTON STATE DEPARTMENT OF TRANSPORTATION. A COPY MAY BE OBTAINED UPON REQUEST.

LANE SHIFT ONTO TWO-WAY LEFT TURN LANE
STANDARD PLAN K-26.20-00

SHEET 1 OF 1 SHEET

APPROVED FOR PUBLICATION

Ken L. Smith — STATE DESIGN ENGINEER
02-15-07 — DATE

Washington State Department of Transportation

EFFECTIVE: AUGUST 6, 2012 TO August 4, 2013
EFFECTIVE: AUGUST 6, 2012 TO August 4, 2013
EFFECTIVE: AUGUST 6, 2012 TO August 4, 2013
EFFECTIVE: AUGUST 6, 2012 TO August 4, 2013

EFFECTIVE: AUGUST 6, 2012 TO August 4, 2013
EFFECTIVE: AUGUST 6, 2012 TO August 4, 2013

LONGITUDINAL BUFFER SPACE = B						
POSTED SPEED (MPH)	25	30	35	40	45	50
LENGTH **B** (FEET)	155	200	250	305	360	425

BUFFER DATA	
TYPICAL PROTECTIVE VEHICLE WITH TMA (SEE NOTE 1)	
VEHICLE TYPE	**LOADED WEIGHT**
4 YARD DUMP TRUCK, SERVICE TRUCK, FLAT BED, ETC.	MINIMUM WEIGHT 15,000 LBS. (MAXIMUM WEIGHT SHALL BE IN ACCORDANCE WITH MANUFACTURER RECOMMENDATION)
1 **ROLL AHEAD STOPPING DISTANCE** = 30 FEET MIN. (DRY PAVEMENT ASSUMED)	

SIGN SPACING = X		
RURAL ROADS	45 / 55 MPH	500' ±
RURAL ROADS & URBAN ARTERIALS	35 / 40 MPH	350' ±
RURAL ROADS, URBAN ARTERIALS, RESIDENTIAL & BUSINESS DISTRICTS	25 / 30 MPH	200' ±
ALL SIGNS ARE BLACK ON ORANGE UNLESS DESIGNATED OTHERWISE		

ALL SIGN SPACING MAY BE ADJUSTED TO ACCOMMODATE INTERCHANGE RAMPS, AT-GRADE INTERSECTIONS, AND DRIVEWAYS.

MINIMUM TAPER LENGTH = L (FEET)						
LANE WIDTH (FEET)	POSTED SPEED (MPH) 25	30	35	40	45	50
10	105	150	205	270	450	500
11	115	165	225	294	495	550
12	125	180	245	320	540	600

CHANNELIZING DEVICE SPACING		
POSTED SPEED (MPH)	IN TAPER (FEET)	IN TANGENT (FEET)
50	40	80
35 / 45	30	60
25 / 30	20	40

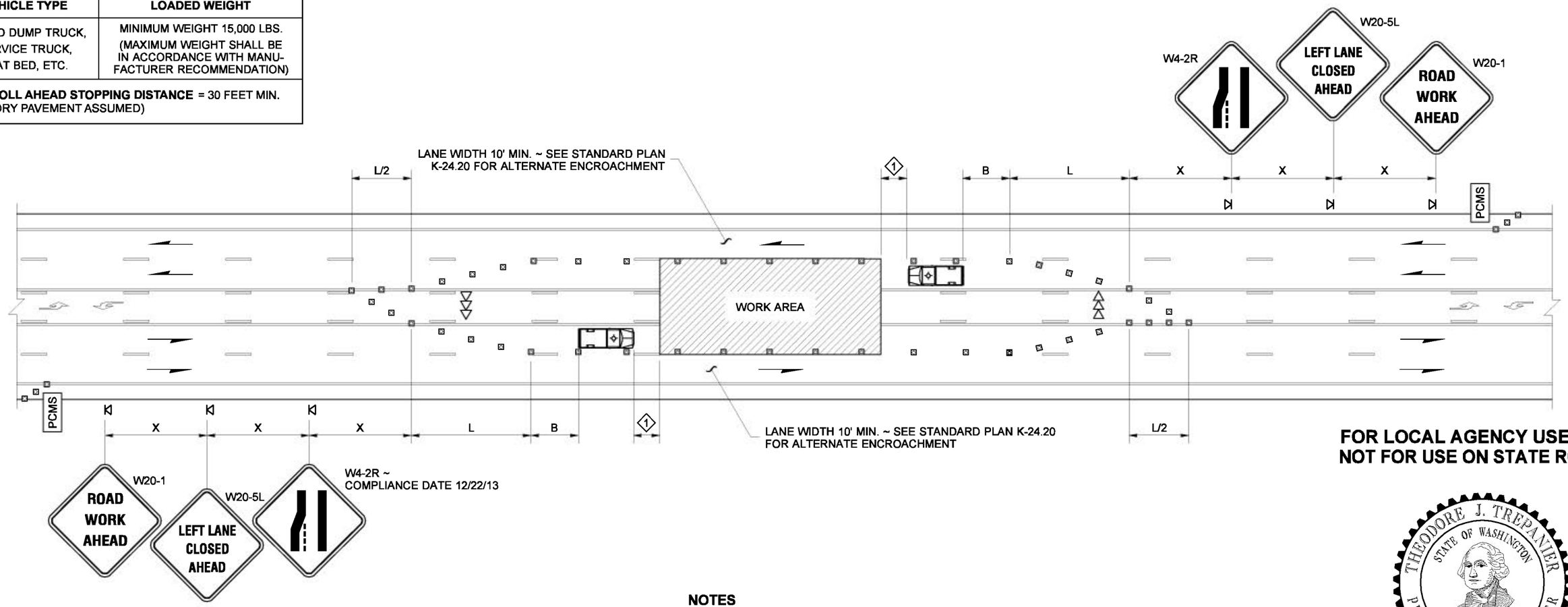

FOR LOCAL AGENCY USE ONLY
NOT FOR USE ON STATE ROUTES

PCMS SAMPLE MESSAGE	
1	2
LEFT LANE CLOSED	NO LEFT TURN
1.5 SEC	1.5 SEC

FIELD LOCATE IN ADVANCE OF LANE CLOSURE SIGNING

LEGEND

- SIGN LOCATION
- CHANNELIZING DEVICES
- PROTECTIVE VEHICLE ~ RECOMMENDED
- PCMS — PORTABLE CHANGEABLE MESSAGE SIGN
- ARROW PANEL

NOTES

1. A Protective Vehicle is recommended regardless if a Truck Mounted Attenuator (TMA) is available; a work vehicle may be used. When no TMA is used, the Protective Vehicle shall be strategically located to shield workers, with no specific Roll-Ahead distance.
2. Portable Changeable Message Sign (PCMS) ~ recommended.
3. Prohibit turns as necessary for traffic conditions.
4. For signs size refer to Manual on Uniform Traffic Control Device (MUTCD) and WSDOT Sign Fabrication Manual M55-05.

THEODORE J. TREPANIER — STATE OF WASHINGTON — 25335 — REGISTERED PROFESSIONAL ENGINEER

EXPIRES AUGUST 9, 2009

NOTE: THIS PLAN IS NOT A LEGAL ENGINEERING DOCUMENT BUT AN ELECTRONIC DUPLICATE. THE ORIGINAL, SIGNED BY THE ENGINEER AND APPROVED FOR PUBLICATION, IS KEPT ON FILE AT THE WASHINGTON STATE DEPARTMENT OF TRANSPORTATION. A COPY MAY BE OBTAINED UPON REQUEST.

LEFT AND CENTER LANE CLOSURE ~ TWO-WAY LEFT TURN LANE
STANDARD PLAN K-26.40-01

SHEET 1 OF 1 SHEET

APPROVED FOR PUBLICATION

Pasco Bakotich III — STATE DESIGN ENGINEER — *10-12-07* — DATE

Washington State Department of Transportation

DRAWN BY: ELENA BRUNSTEIN

EFFECTIVE: AUGUST 6, 2012 TO August 4, 2013
EFFECTIVE: AUGUST 6, 2012 TO August 4, 2013
EFFECTIVE: AUGUST 6, 2012 TO August 4, 2013
EFFECTIVE: AUGUST 6, 2012 TO August 4, 2013

EFFECTIVE: AUGUST 6, 2012 TO August 4, 2013
EFFECTIVE: AUGUST 6, 2012 TO August 4, 2013

DRAWN BY: ELENA BRUNSTEIN

LONGITUDINAL BUFFER SPACE = B								
POSTED SPEED (MPH)	25	30	35	40	45	50	55	60
LENGTH **B** (FEET)	155	200	250	305	360	425	495	570

SIGN SPACING = X (1)		
RURAL HIGHWAYS	60 / 65 MPH	800' ±
RURAL ROADS	45 / 55 MPH	500' ±
RURAL ROADS & URBAN ARTERIALS	35 / 40 MPH	350' ±
RURAL ROADS, URBAN ARTERIALS, RESIDENTIAL & BUSINESS DISTRICTS	25 / 30 MPH	200' ± (2)
URBAN STREETS	25 MPH OR LESS	100' ± (2)
ALL SIGNS ARE BLACK ON ORANGE UNLESS DESIGNATED OTHERWISE		

(1) ALL SIGN SPACING MAY BE ADJUSTED TO ACCOMMODATE AT-GRADE INTERSECTIONS AND DRIVEWAYS.

(2) THIS SIGN SPACING MAY BE REDUCED IN URBAN AREAS TO FIT ROADWAY CONDITIONS.

NOTES

1. A Protective Vehicle is recommended regardless if a Truck Mounted Attenuator (TMA) is available; a work vehicle may be used. When no TMA is used, the Protective Vehicle shall be strategically located to shield workers, with no specific Roll-Ahead distance.
2. If an existing signal is present, the signal shall be set to "red flash mode" or turned off during flagging operations.
3. Extend device taper (L/3) across shoulder ~ recommended.
4. Law enforcement officer may be used in lieu of flaggers to control intersection traffic.
5. For speed limit of 30 mph or less use sign W1-3 in lieu of sign W1-4.
6. Maintain a minimum of one access point for each business within the Work Area limits.
7. Portable Changeable Message Sign (PCMS) ~ recommended.
8. For signs size refer to Manual on Uniform Traffic Control Devices (MUTCD) and WSDOT Sign Fabrication Manual M55-05.

BUFFER DATA	
TYPICAL PROTECTIVE VEHICLE WITH TMA (SEE NOTE 1)	
VEHICLE TYPE	**LOADED WEIGHT**
4 YARD DUMP TRUCK, SERVICE TRUCK, FLAT BED, ETC.	MINIMUM WEIGHT 15,000 LBS. (MAXIMUM WEIGHT SHALL BE IN ACCORDANCE WITH MANUFACTURER RECOMMENDATION)
(1) **ROLL AHEAD STOPPING DISTANCE** = 30 FEET MIN. (DRY PAVEMENT ASSUMED)	

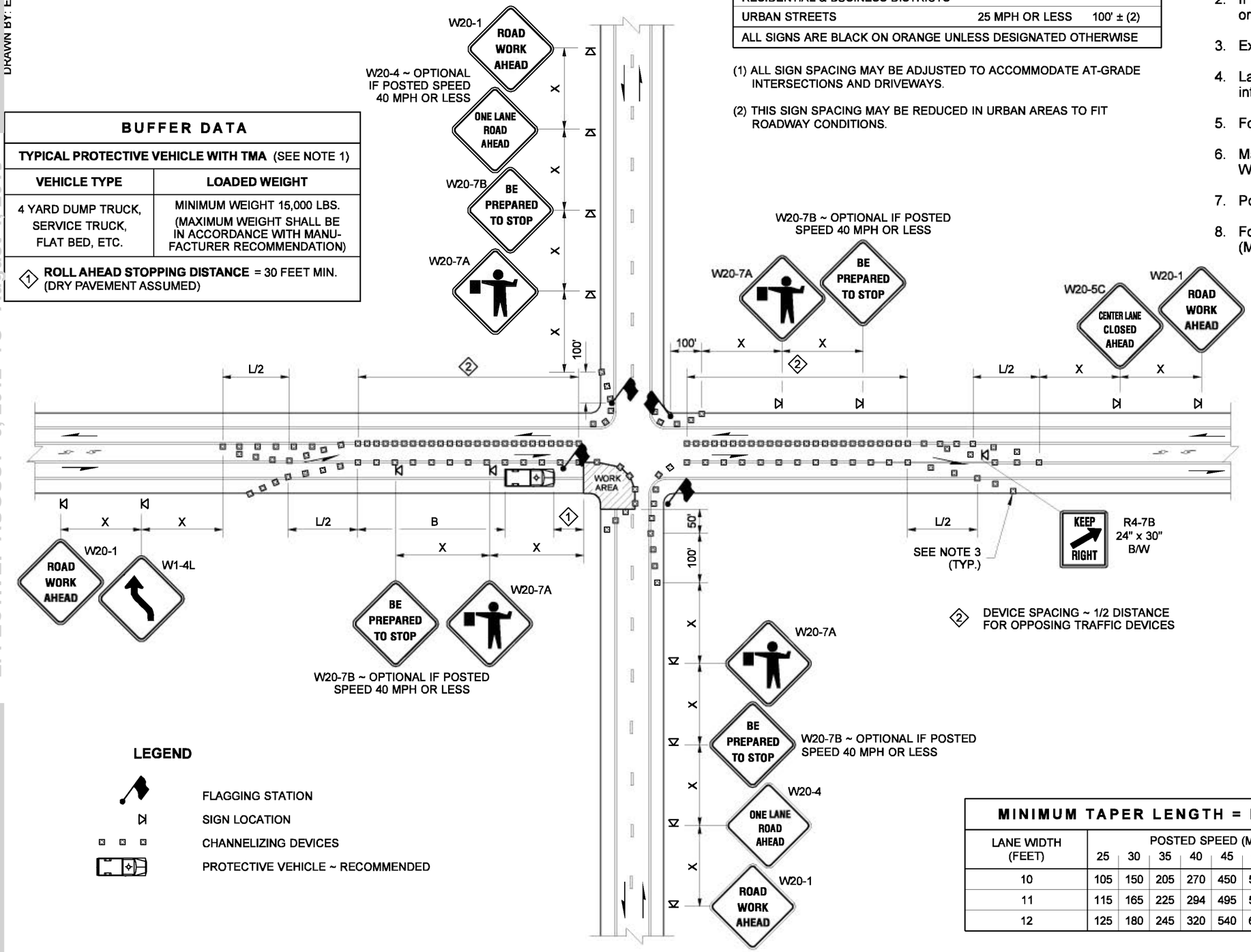

CHANNELIZING DEVICE SPACING		
POSTED SPEED (MPH)	IN TAPER (FEET)	IN TANGENT (FEET)
50 / 70	40	80
35 / 45	30	60
25 / 30	20	40

FOR LOCAL AGENCY USE ONLY
NOT FOR USE ON STATE ROUTES

THEODORE J. TREPANIER
STATE OF WASHINGTON
25335
REGISTERED
PROFESSIONAL ENGINEER

EXPIRES AUGUST 9, 2007

NOTE: THIS PLAN IS NOT A LEGAL ENGINEERING DOCUMENT BUT AN ELECTRONIC DUPLICATE. THE ORIGINAL, SIGNED BY THE ENGINEER AND APPROVED FOR PUBLICATION, IS KEPT ON FILE AT THE WASHINGTON STATE DEPARTMENT OF TRANSPORTATION. A COPY MAY BE OBTAINED UPON REQUEST.

LEGEND

- FLAGGING STATION
- SIGN LOCATION
- CHANNELIZING DEVICES
- PROTECTIVE VEHICLE ~ RECOMMENDED

MINIMUM TAPER LENGTH = L (FEET)								
LANE WIDTH (FEET)	POSTED SPEED (MPH)							
	25	30	35	40	45	50	55	60
10	105	150	205	270	450	500	550	-
11	115	165	225	294	495	550	605	660
12	125	180	245	320	540	600	660	720

INTERSECTION ~ LANE SHIFT ON THREE LANE TWO-WAY LEFT TURN LANE
STANDARD PLAN K-30.20-00

SHEET 1 OF 1 SHEET

APPROVED FOR PUBLICATION

Ken L. Smith — STATE DESIGN ENGINEER
02-15-07 — DATE

Washington State Department of Transportation

EFFECTIVE: AUGUST 6, 2012 TO August 4, 2013
EFFECTIVE: AUGUST 6, 2012 TO August 4, 2013
EFFECTIVE: AUGUST 6, 2012 TO August 4, 2013
EFFECTIVE: AUGUST 6, 2012 TO August 4, 2013

EFFECTIVE: AUGUST 6, 2012 TO August 4, 2013
EFFECTIVE: AUGUST 6, 2012 TO August 4, 2013

DRAWN BY: ELENA BRUNSTEIN

LONGITUDINAL BUFFER SPACE = B									
POSTED SPEED (MPH)	25	30	35	40	45	50	55	60	65
LENGTH **B** (FEET)	155	200	250	305	360	425	495	570	645

BUFFER DATA	
TYPICAL PROTECTIVE VEHICLE WITH TMA (SEE NOTE 1)	
VEHICLE TYPE	**LOADED WEIGHT**
4 YARD DUMP TRUCK, SERVICE TRUCK, FLAT BED, ETC.	MINIMUM WEIGHT 15,000 LBS. (MAXIMUM WEIGHT SHALL BE IN ACCORDANCE WITH MANUFACTURER RECOMMENDATION)
(1) **ROLL AHEAD STOPPING DISTANCE** = 30 FEET MIN. (DRY PAVEMENT ASSUMED)	

MINIMUM TAPER LENGTH = L (FEET)									
LANE WIDTH (FEET)	POSTED SPEED (MPH)								
	25	30	35	40	45	50	55	60	65
10	105	150	205	270	450	500	550	-	-
11	115	165	225	294	495	550	605	660	-
12	125	180	245	320	540	600	660	720	780

CHANNELIZING DEVICE SPACING		
POSTED SPEED (MPH)	IN TAPER (FEET)	IN TANGENT (FEET)
50 / 70	40	80
35 / 45	30	60
25 / 30	20	40

NOTES

1. A Protective Vehicle is recommended regardless if a Truck Mounted Attenuator (TMA) is available; a work vehicle may be used. When no TMA is used, the Protective Vehicle shall be strategically located to shield workers, with no specific Roll-Ahead distance.
2. If an existing signal is present, the signal shall be set to "red flash mode" or turned off during flagging operations.
3. Extend device taper (L/3) across shoulder ~ recommended.
4. Law enforcement officer may be used in lieu of flaggers to control intersection traffic.
5. Closing lane in advance of flagging location when multiple lanes are on approach leg ~ recommended.
6. Maintain a minimum of one access point for each business within the Work Area limits.
7. Consider using a PCMS, field located in advance of signing, on the five lane roadway.
8. For signs size refer to Manual on Uniform Traffic Control Devices (MUTCD) and WSDOT Sign Fabrication Manual M55-05.
9. A four sign sequence is required with posted speed 45 mph or higher. An appropriate standard warning sign reflecting the road condition or work operation may be used in place of the "WORKERS" sign. An acceptable alternative would be to repeat any of the signs from the sequence.

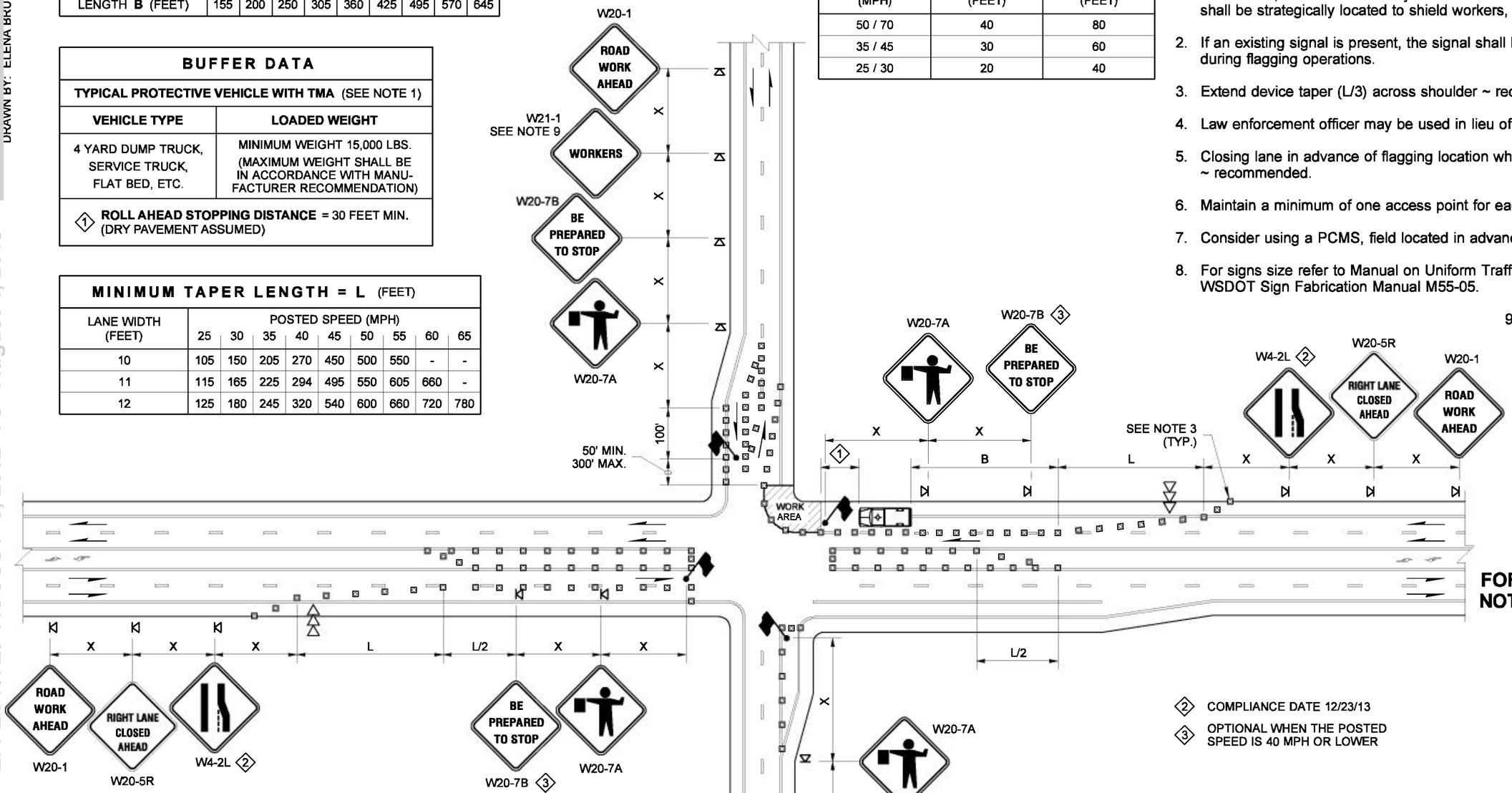

(2) COMPLIANCE DATE 12/23/13

(3) OPTIONAL WHEN THE POSTED SPEED IS 40 MPH OR LOWER

SIGN SPACING = X (1)		
RURAL HIGHWAYS	60 / 65 MPH	800' ±
RURAL ROADS	45 / 55 MPH	500' ±
RURAL ROADS & URBAN ARTERIALS	35 / 40 MPH	350' ±
RURAL ROADS, URBAN ARTERIALS, RESIDENTIAL & BUSINESS DISTRICTS	25 / 30 MPH	200' ± (2)
URBAN STREETS	25 MPH OR LESS	100' ± (2)
ALL SIGNS ARE BLACK ON ORANGE UNLESS DESIGNATED OTHERWISE		

(1) ALL SIGN SPACING MAY BE ADJUSTED TO ACCOMMODATE AT-GRADE INTERSECTIONS AND DRIVEWAYS.

(2) THIS SIGN SPACING MAY BE REDUCED IN URBAN AREAS TO FIT ROADWAY CONDITIONS.

LEGEND

- FLAGGING STATION
- SIGN LOCATION
- CHANNELIZING DEVICES
- PROTECTIVE VEHICLE ~ RECOMMENDED
- ARROW PANEL

FOR LOCAL AGENCY USE ONLY
NOT FOR USE ON STATE ROUTES

THEODORE J. TREPANIER
STATE OF WASHINGTON
25335
REGISTERED
PROFESSIONAL ENGINEER

EXPIRES AUGUST 9, 2009

NOTE: THIS PLAN IS NOT A LEGAL ENGINEERING DOCUMENT BUT AN ELECTRONIC DUPLICATE. THE ORIGINAL, SIGNED BY THE ENGINEER AND APPROVED FOR PUBLICATION, IS KEPT ON FILE AT THE WASHINGTON STATE DEPARTMENT OF TRANSPORTATION. A COPY MAY BE OBTAINED UPON REQUEST.

INTERSECTION ~ LANE SHIFT ON FIVE LANE TWO-WAY LEFT TURN LANE STANDARD PLAN K-30.40-01

SHEET 1 OF 1 SHEET

APPROVED FOR PUBLICATION

Pasco Bakotich III — STATE DESIGN ENGINEER
10-12-07 — DATE

Washington State Department of Transportation

EFFECTIVE: AUGUST 6, 2012 TO August 4, 2013
EFFECTIVE: AUGUST 6, 2012 TO August 4, 2013
EFFECTIVE: AUGUST 6, 2012 TO August 4, 2013
EFFECTIVE: AUGUST 6, 2012 TO August 4, 2013

EFFECTIVE: AUGUST 6, 2012 TO August 4, 2013
EFFECTIVE: AUGUST 6, 2012 TO August 4, 2013

DRAWN BY: ELENA BRUNSTEIN

SIGN SPACING = X		
RURAL ROADS	45 / 55 MPH	500' ±
RURAL ROADS & URBAN ARTERIALS	35 / 40 MPH	350' ±
RURAL ROADS, URBAN ARTERIALS, RESIDENTIAL & BUSINESS DISTRICTS	25 / 30 MPH	200' ±
URBAN STREETS	25 MPH OR LESS	100' ±
ALL SIGNS ARE BLACK ON ORANGE UNLESS DESIGNATED OTHERWISE		

ALL SIGN SPACING MAY BE ADJUSTED TO ACCOMMODATE AT-GRADE INTERSECTIONS AND DRIVEWAYS.

CHANNELIZING DEVICE SPACING		
POSTED SPEED (MPH)	IN TAPER (FEET)	IN TANGENT (FEET)
50 / 70	40	80
35 / 45	30	60
25 / 30	20	40

MINIMUM TAPER LENGTH = L (FEET)							
LANE WIDTH (FEET)	POSTED SPEED (MPH)						
	25	30	35	40	45	50	55
10	105	150	205	270	450	500	550
11	115	165	225	294	495	550	605
12	125	180	245	320	540	600	660

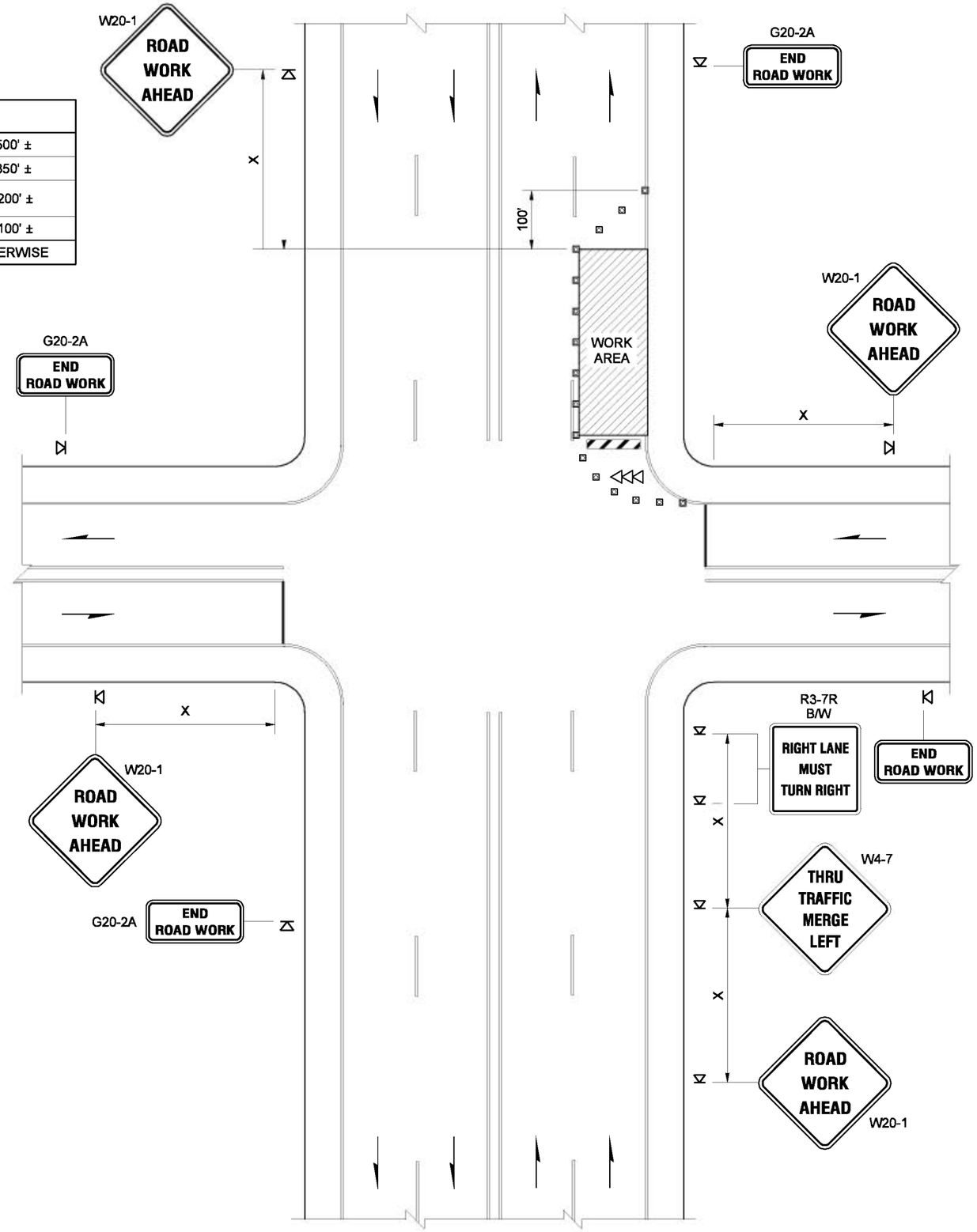

NOTES

1. If the work space extends across a crosswalk, the crosswalk should be closed (see Standard Plan K-34.20).
2. The normal procedure is to close on the near side of the intersection any lane that is not carried through the intersection. However, when this results in the closure of a right lane having significant right turning movements, then the right lane may be restricted to right turn only, as shown. This procedure increases the through capacity by eliminating right turns from the open through lane.
3. Prohibit turns as necessary for traffic conditions.
4. Flashing Warning Lights (Type A per MUTCD) should be used, as needed, to mark barricades at night.
5. Steady Burning Warning Lights (Type C per MUTCD) shall be used to mark channelizing devices at night.
6. For long term projects, conflicting pavement markings that are no longer applicable shall be removed or obliterated. Temporary markings shall be used as necessary.
7. For signs size refer to Manual on Uniform Traffic Control Devices (MUTCD) and WSDOT Sign Fabrication Manual M55-05.

LEGEND

- SIGN LOCATION
- CHANNELIZING DEVICES
- BARRICADE ~ TYPE 3 L
- ARROW PANEL

FOR LOCAL AGENCY USE ONLY
NOT FOR USE ON STATE ROUTES

THEODORE J. TREPANIER
STATE OF WASHINGTON
25335
REGISTERED
PROFESSIONAL ENGINEER

EXPIRES AUGUST 9, 2007

NOTE: THIS PLAN IS NOT A LEGAL ENGINEERING DOCUMENT BUT AN ELECTRONIC DUPLICATE. THE ORIGINAL, SIGNED BY THE ENGINEER AND APPROVED FOR PUBLICATION, IS KEPT ON FILE AT THE WASHINGTON STATE DEPARTMENT OF TRANSPORTATION. A COPY MAY BE OBTAINED UPON REQUEST.

INTERSECTION ~ RIGHT LANE CLOSURE FAR SIDE
STANDARD PLAN K-32.20-00

SHEET 1 OF 1 SHEET

APPROVED FOR PUBLICATION

Ken L. Smith — STATE DESIGN ENGINEER
02-15-07 — DATE

Washington State Department of Transportation

EFFECTIVE: AUGUST 6, 2012 TO August 4, 2013
EFFECTIVE: AUGUST 6, 2012 TO August 4, 2013
EFFECTIVE: AUGUST 6, 2012 TO August 4, 2013
EFFECTIVE: AUGUST 6, 2012 TO August 4, 2013

EFFECTIVE: AUGUST 6, 2012 TO August 4, 2013
EFFECTIVE: AUGUST 6, 2012 TO August 4, 2013

DRAWN BY: ELENA BRUNSTEIN

SIGN SPACING = X		
RURAL ROADS	45 / 55 MPH	500' ±
RURAL ROADS & URBAN ARTERIALS	35 / 40 MPH	350' ±
RURAL ROADS, URBAN ARTERIALS, RESIDENTIAL & BUSINESS DISTRICTS	25 / 30 MPH	200' ±
URBAN STREETS	25 MPH OR LESS	100' ±
ALL SIGNS ARE BLACK ON ORANGE UNLESS DESIGNATED OTHERWISE		

ALL SIGN SPACING MAY BE ADJUSTED TO ACCOMMODATE AT-GRADE INTERSECTIONS AND DRIVEWAYS.

MINIMUM TAPER LENGTH = L (FEET)							
LANE WIDTH (FEET)	POSTED SPEED (MPH)						
	25	30	35	40	45	50	55
10	105	150	205	270	450	500	550
11	115	165	225	294	495	550	605
12	125	180	245	320	540	600	660

CHANNELIZING DEVICE SPACING		
POSTED SPEED (MPH)	IN TAPER (FEET)	IN TANGENT (FEET)
50 / 70	40	80
35 / 45	30	60
25 / 30	20	40

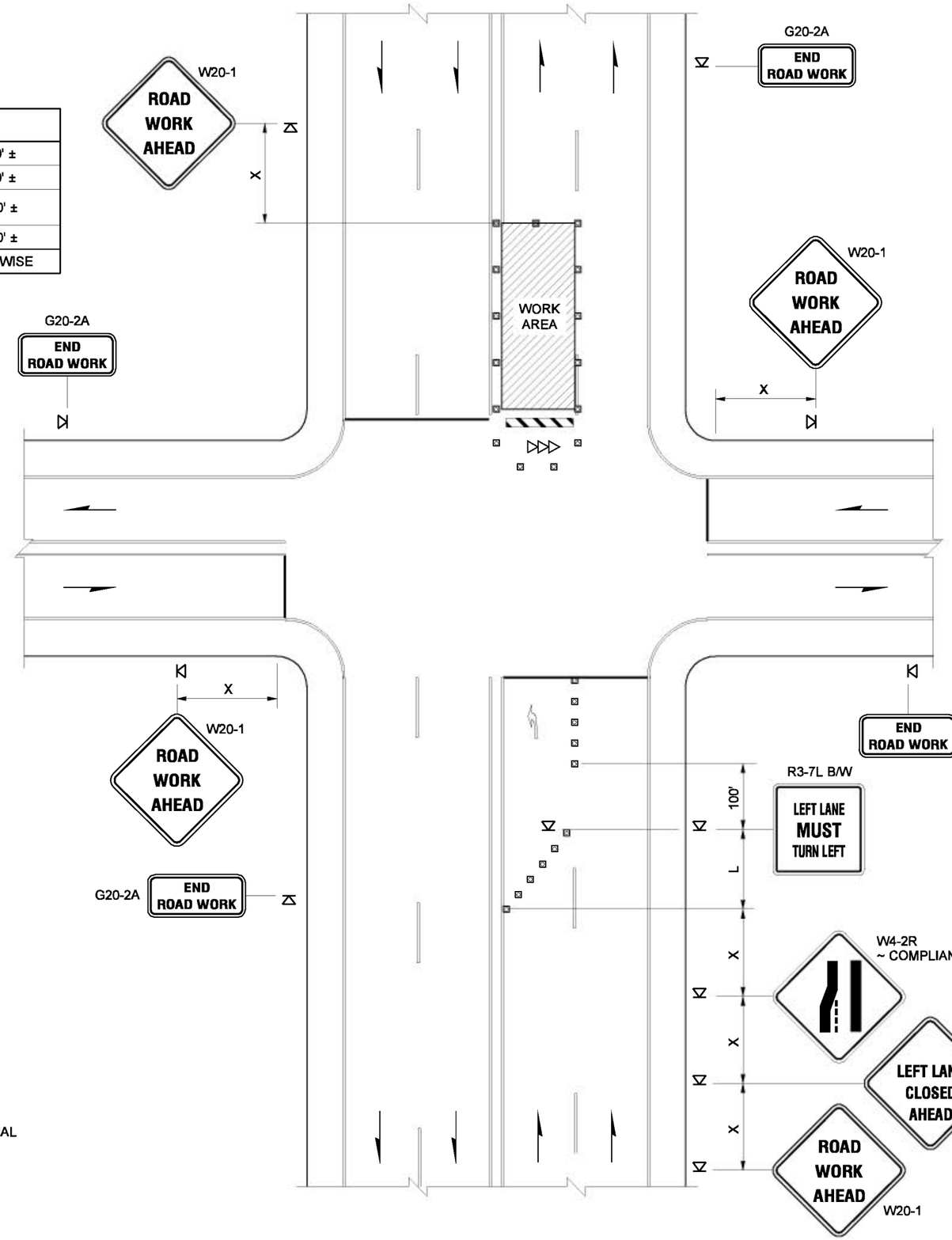

NOTES

1. If the work space extends across a crosswalk, the crosswalk should be closed (see Standard Plan K-34.20).
2. The normal procedure is to close on the near side of the intersection any lane that is not carried through the intersection. However, when this results in the closure of a left lane having significant left-turning movements, then the left lane may be reopened as a turn bay for left turns only, as shown.
3. Prohibit turns as necessary for traffic conditions.
4. Flashing Warning Lights (Type A per MUTCD) should be used, as needed, to mark barricades at night.
5. Steady Burning Warning Lights (Type C per MUTCD) shall be used to mark channelizing devices at night.
6. For long term projects, conflicting pavement markings that are no longer applicable shall be removed or obliterated. Temporary markings shall be used as necessary.
7. For signs size refer to Manual on Uniform Traffic Control Devices (MUTCD) and WSDOT Sign Fabrication Manual M55-05.

LEGEND

- SIGN LOCATION
- CHANNELIZING DEVICES
- TEMPORARY TRAFFIC ARROW ~ OPTIONAL
- ARROW PANEL
- BARRICADE ~ TYPE 3 R

FOR LOCAL AGENCY USE ONLY
NOT FOR USE ON STATE ROUTES

THEODORE J. TREPANIER
STATE OF WASHINGTON
25335
REGISTERED
PROFESSIONAL ENGINEER
EXPIRES AUGUST 9, 2007

NOTE: THIS PLAN IS NOT A LEGAL ENGINEERING DOCUMENT BUT AN ELECTRONIC DUPLICATE. THE ORIGINAL, SIGNED BY THE ENGINEER AND APPROVED FOR PUBLICATION, IS KEPT ON FILE AT THE WASHINGTON STATE DEPARTMENT OF TRANSPORTATION. A COPY MAY BE OBTAINED UPON REQUEST.

INTERSECTION ~ LEFT LANE CLOSURE FAR SIDE
STANDARD PLAN K-32.40-00

SHEET 1 OF 1 SHEET

APPROVED FOR PUBLICATION

Ken L. Smith — STATE DESIGN ENGINEER
02-15-07 — DATE

Washington State Department of Transportation

EFFECTIVE: AUGUST 6, 2012 TO August 4, 2013
EFFECTIVE: AUGUST 6, 2012 TO August 4, 2013
EFFECTIVE: AUGUST 6, 2012 TO August 4, 2013
EFFECTIVE: AUGUST 6, 2012 TO August 4, 2013

EFFECTIVE: AUGUST 6, 2012 TO August 4, 2013
EFFECTIVE: AUGUST 6, 2012 TO August 4, 2013

DRAWN BY: ELENA BRUNSTEIN

SIGN SPACING = X		
RURAL ROADS	45 / 55 MPH	500' ±
RURAL ROADS & URBAN ARTERIALS	35 / 40 MPH	350' ±
RURAL ROADS, URBAN ARTERIALS, RESIDENTIAL & BUSINESS DISTRICTS	25 / 30 MPH	200' ±
URBAN STREETS	25 MPH OR LESS	100' ±
ALL SIGNS ARE BLACK ON ORANGE UNLESS DESIGNATED OTHERWISE		

ALL SIGN SPACING MAY BE ADJUSTED TO ACCOMMODATE AT-GRADE INTERSECTIONS AND DRIVEWAYS.

MINIMUM TAPER LENGTH = L (FEET)							
LANE WIDTH (FEET)	POSTED SPEED (MPH)						
	25	30	35	40	45	50	55
10	105	150	205	270	450	500	550
11	115	165	225	294	495	550	605
12	125	180	245	320	540	600	660

CHANNELIZING DEVICE SPACING		
POSTED SPEED (MPH)	IN TAPER (FEET)	IN TANGENT (FEET)
50 / 70	40	80
35 / 45	30	60
25 / 30	20	40

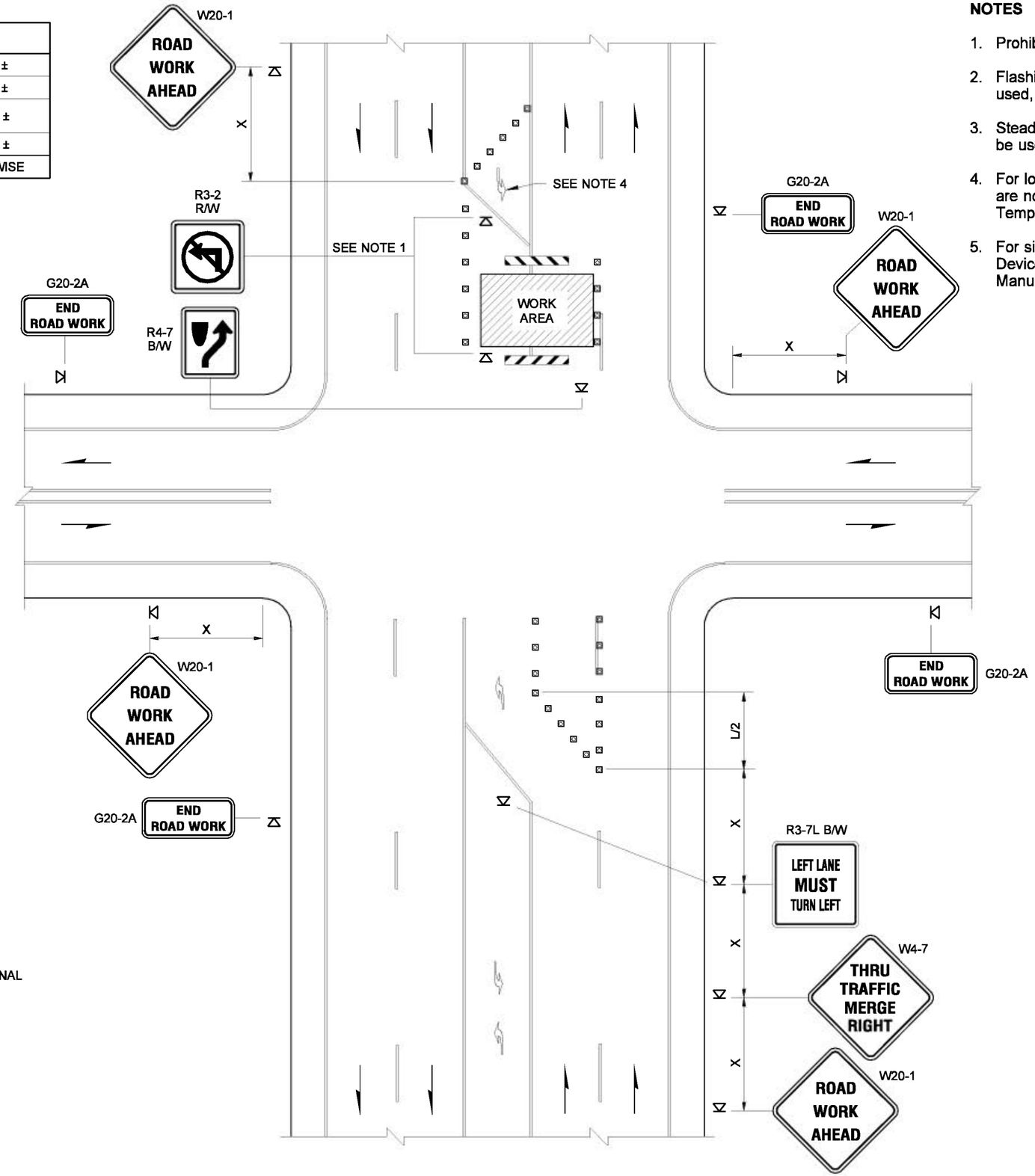

NOTES

1. Prohibit turns as necessary for traffic conditions.
2. Flashing Warning Lights (Type A per MUTCD) should be used, as needed, to mark barricades at night.
3. Steady Burning Warning Lights (Type C per MUTCD) shall be used to mark channelizing devices at night.
4. For long term projects, conflicting pavement markings that are no longer applicable shall be removed or obliterated. Temporary markings shall be used as necessary.
5. For signs size refer to Manual on Uniform Traffic Control Devices (MUTCD) and WSDOT Sign Fabrication Manual M55-05.

LEGEND

- SIGN LOCATION
- CHANNELIZING DEVICES
- TEMPORARY TRAFFIC ARROW ~ OPTIONAL
- BARRICADE ~ TYPE 3 R

FOR LOCAL AGENCY USE ONLY
NOT FOR USE ON STATE ROUTES

THEODORE J. TREPANIER
STATE OF WASHINGTON
25335
REGISTERED
PROFESSIONAL ENGINEER

EXPIRES AUGUST 9, 2007

NOTE: THIS PLAN IS NOT A LEGAL ENGINEERING DOCUMENT BUT AN ELECTRONIC DUPLICATE. THE ORIGINAL, SIGNED BY THE ENGINEER AND APPROVED FOR PUBLICATION, IS KEPT ON FILE AT THE WASHINGTON STATE DEPARTMENT OF TRANSPORTATION. A COPY MAY BE OBTAINED UPON REQUEST.

INTERSECTION ~ MULTIPLE LANE CLOSURE

STANDARD PLAN K-32.60-00

SHEET 1 OF 1 SHEET

APPROVED FOR PUBLICATION

Ken L. Smith — STATE DESIGN ENGINEER
02-15-07 — DATE

Washington State Department of Transportation

EFFECTIVE: AUGUST 6, 2012 TO August 4, 2013
EFFECTIVE: AUGUST 6, 2012 TO August 4, 2013
EFFECTIVE: AUGUST 6, 2012 TO August 4, 2013
EFFECTIVE: AUGUST 6, 2012 TO August 4, 2013

EFFECTIVE: AUGUST 6, 2012 TO August 4, 2013
EFFECTIVE: AUGUST 6, 2012 TO August 4, 2013

DRAWN BY: ELENA BRUNSTEIN

LONGITUDINAL BUFFER SPACE = B					
POSTED SPEED (MPH)	25	30	35	40	45
LENGTH **B** (FEET)	55	85	120	170	270

SIGN SPACING = X		
RURAL ROADS	45 / 55 MPH	500' ±
RURAL ROADS & URBAN ARTERIALS	35 / 40 MPH	350' ±
RURAL ROADS, URBAN ARTERIALS, RESIDENTIAL & BUSINESS DISTRICTS	25 / 30 MPH	200' ±
URBAN STREETS	25 MPH OR LESS	100' ±
ALL SIGNS ARE BLACK ON ORANGE UNLESS DESIGNATED OTHERWISE		

ALL SIGN SPACING MAY BE ADJUSTED TO ACCOMMODATE AT-GRADE INTERSECTIONS AND DRIVEWAYS.

MINIMUM TAPER LENGTH = L (FEET)							
LANE WIDTH (FEET)	POSTED SPEED (MPH)						
	25	30	35	40	45	50	55
10	105	150	205	270	450	500	550
11	115	165	225	294	495	550	605
12	125	180	245	320	540	600	660

CHANNELIZING DEVICE SPACING		
POSTED SPEED (MPH)	IN TAPER (FEET)	IN TANGENT (FEET)
50 / 70	40	80
35 / 45	30	60
25 / 30	20	40

LEGEND

- SIGN LOCATION
- CHANNELIZING DEVICES
- ARROW PANEL
- BARRICADE ~ TYPE 3 L
- OBLITERATED MARKING

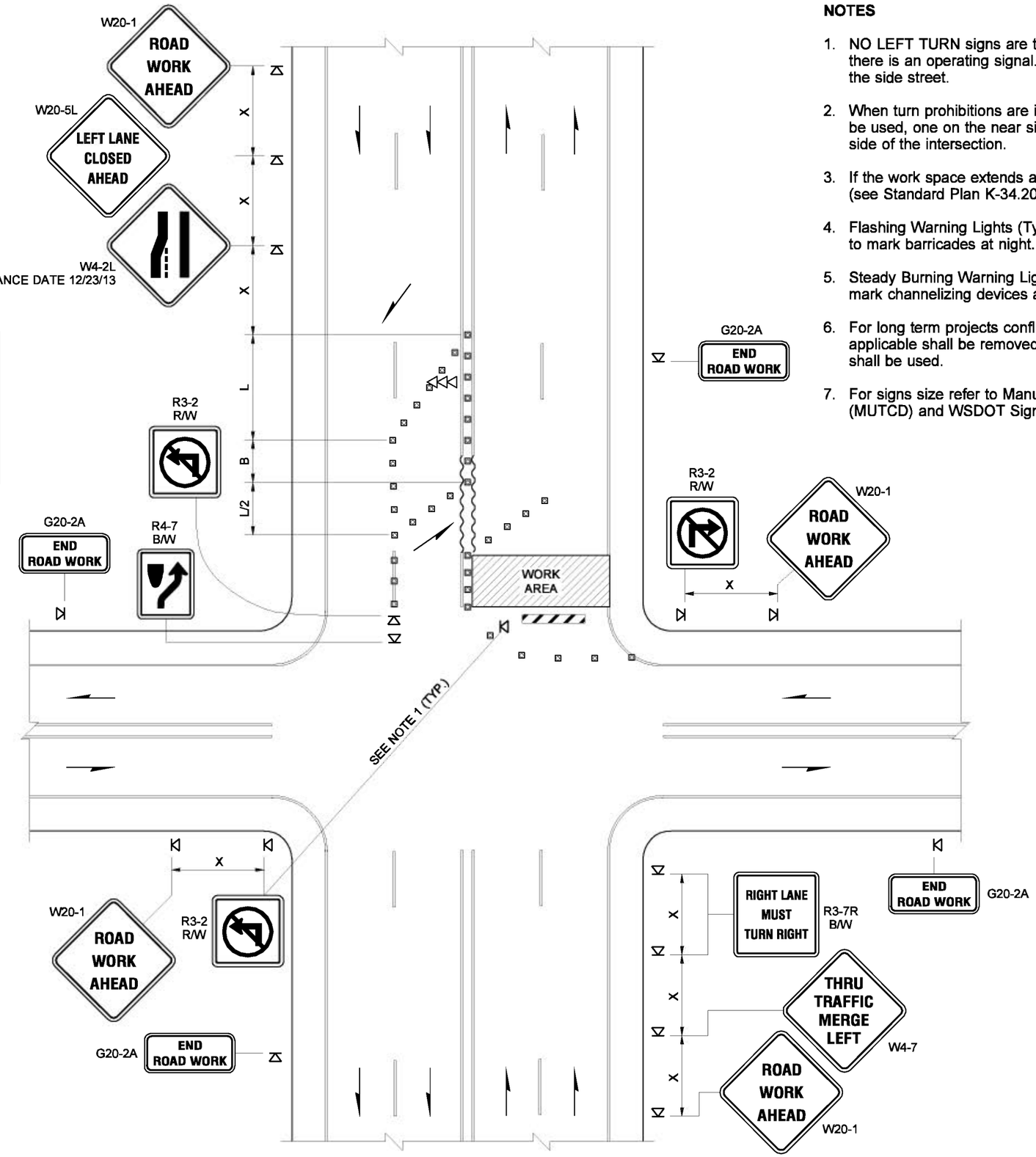

NOTES

1. NO LEFT TURN signs are to be used if traffic volumes are too high or there is an operating signal. Close the left turn pocket if there is one on the side street.
2. When turn prohibitions are implemented, two turn prohibition signs should be used, one on the near side and, space permitting, one on on the far side of the intersection.
3. If the work space extends a crosswalk, the crosswalk should be closed (see Standard Plan K-34.20).
4. Flashing Warning Lights (Type A per MUTCD) should be used, as needed, to mark barricades at night.
5. Steady Burning Warning Lights (Type C per MUTCD) shall be used to mark channelizing devices at night.
6. For long term projects conflicting pavement markings that are no longer applicable shall be removed or obliterated. Temporary markings shall be used.
7. For signs size refer to Manual on Uniform Traffic Control Devices (MUTCD) and WSDOT Sign Fabrication Manual M55-05.

FOR LOCAL AGENCY USE ONLY
NOT FOR USE ON STATE ROUTES

THEODORE J. TREPANIER
STATE OF WASHINGTON
25335
REGISTERED
PROFESSIONAL ENGINEER

EXPIRES AUGUST 9, 2007

NOTE: THIS PLAN IS NOT A LEGAL ENGINEERING DOCUMENT BUT AN ELECTRONIC DUPLICATE. THE ORIGINAL, SIGNED BY THE ENGINEER AND APPROVED FOR PUBLICATION, IS KEPT ON FILE AT THE WASHINGTON STATE DEPARTMENT OF TRANSPORTATION. A COPY MAY BE OBTAINED UPON REQUEST.

INTERSECTION ~ HALF ROAD CLOSURE WITH LANE SHIFT STANDARD PLAN K-32.80-00

SHEET 1 OF 1 SHEET

APPROVED FOR PUBLICATION

Ken L. Smith — STATE DESIGN ENGINEER
02-15-07 — DATE

Washington State Department of Transportation

EFFECTIVE: AUGUST 6, 2012 TO August 4, 2013
EFFECTIVE: AUGUST 6, 2012 TO August 4, 2013

EFFECTIVE: AUGUST 6, 2012 TO August 4, 2013

DRAWN BY: ELENA BRUNSTEIN

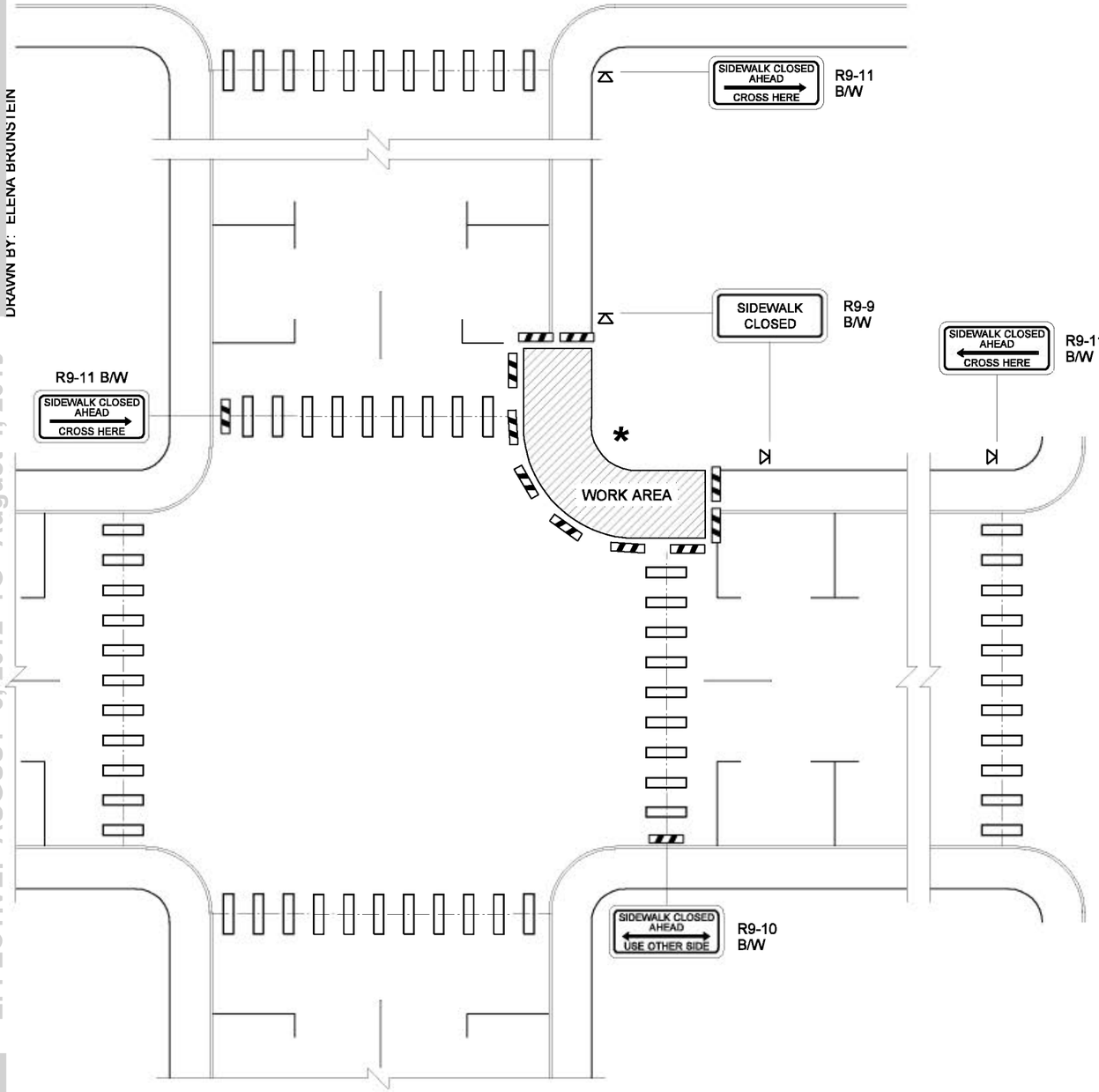

PEDESTRIAN DETOUR
WORKING HOURS

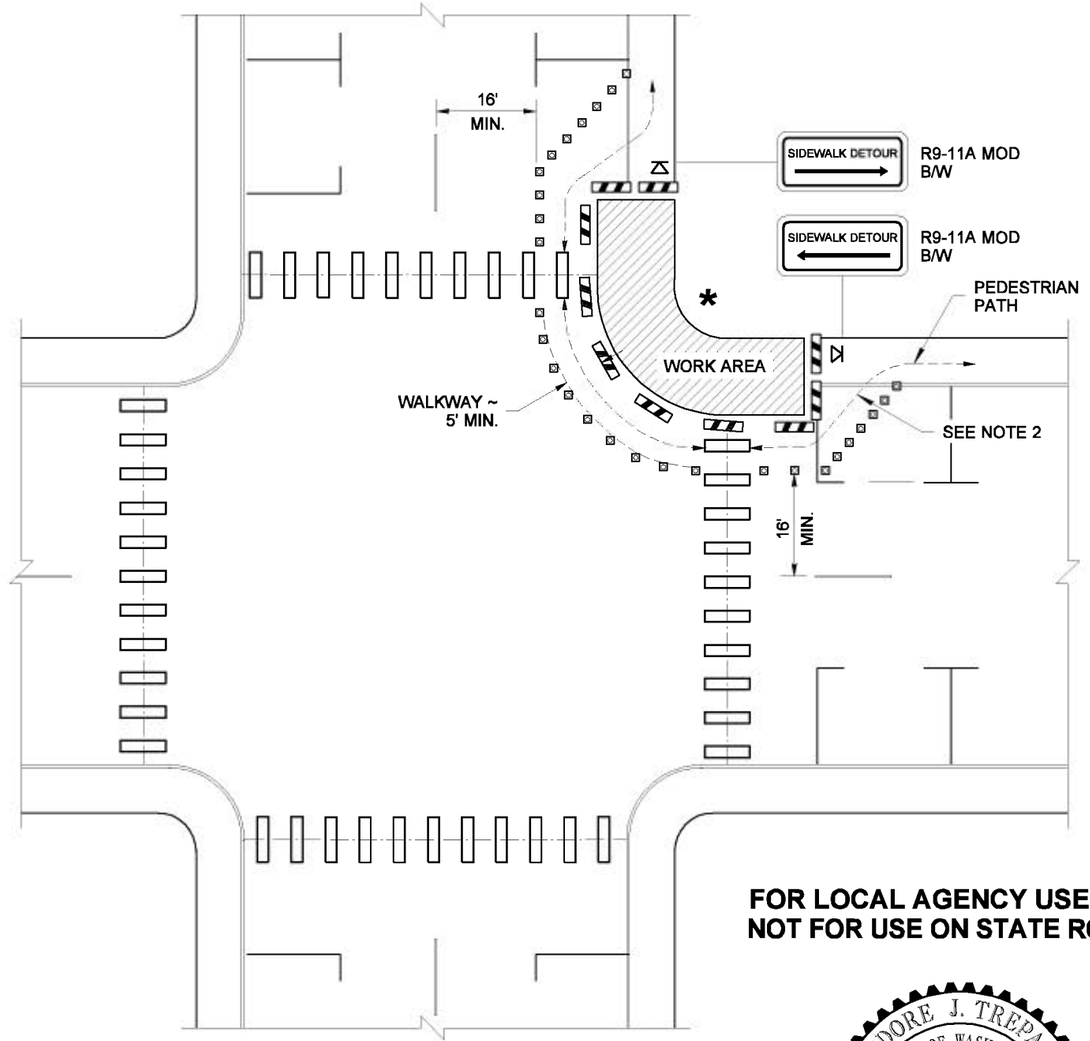

PEDESTRIAN DETOUR
NON-WORKING HOURS

FOR LOCAL AGENCY USE ONLY
NOT FOR USE ON STATE ROUTES

LEGEND

- SIGN LOCATION
- CHANNELIZING DEVICES
- TYPE 2 BARRICADE

R8-3 B/W

* NO PARKING

Install on Type 2 Barricades throughout the work area 24 hours prior to implementing traffic control. Prior notification of Local Law Enforcement required.

NOTES

1. When crosswalks or other pedestrian facilities are closed or relocated, temporary facilities shall be detectable and shall include accessibility features consistent with the features present in the existing pedestrian facility.
2. Controls shown are for pedestrian traffic only.
3. Use Warning Lights on barricades.
4. Maintain a minimum width of 3 feet for pedestrian path.
5. For signs size refer to Manual on Uniform Traffic Control Devices (MUTCD) and WSDOT Sign Fabrication Manual M55-05.

THEODORE J. TREPANIER
STATE OF WASHINGTON
25335
REGISTERED
PROFESSIONAL ENGINEER

EXPIRES AUGUST 9, 2007

NOTE: THIS PLAN IS NOT A LEGAL ENGINEERING DOCUMENT BUT AN ELECTRONIC DUPLICATE. THE ORIGINAL, SIGNED BY THE ENGINEER AND APPROVED FOR PUBLICATION, IS KEPT ON FILE AT THE WASHINGTON STATE DEPARTMENT OF TRANSPORTATION. A COPY MAY BE OBTAINED UPON REQUEST.

INTERSECTION
~ PEDESTRIAN DETOUR

STANDARD PLAN K-34.20-00

SHEET 1 OF 1 SHEET

APPROVED FOR PUBLICATION

Ken L. Smith — STATE DESIGN ENGINEER
02-15-07 — DATE

Washington State Department of Transportation

EFFECTIVE: AUGUST 6, 2012 TO August 4, 2013

EFFECTIVE: AUGUST 6, 2012 TO August 4, 2013
EFFECTIVE: AUGUST 6, 2012 TO August 4, 2013

DRAWN BY: ELENA BRUNSTEIN

BUFFER DATA	
TYPICAL PROTECTIVE VEHICLE WITH TMA (SEE NOTE 1)	
VEHICLE TYPE	LOADED WEIGHT
4 YARD DUMP TRUCK, SERVICE TRUCK, FLAT BED, ETC.	MINIMUM WEIGHT 15,000 LBS. (MAXIMUM WEIGHT SHALL BE IN ACCORDANCE WITH MANUFACTURER RECOMMENDATION)
① ROLL AHEAD STOPPING DISTANCE = 30 FEET MIN. (DRY PAVEMENT ASSUMED)	

MINIMUM TAPER LENGTH = L (FEET)							
LANE WIDTH (FEET)	POSTED SPEED (MPH)						
	25	30	35	40	45	50	55
10	105	150	205	270	450	500	550
11	115	165	225	294	495	550	605
12	125	180	245	320	540	600	660

SIGN SPACING = X (1)		
RURAL ROADS	45 / 55 MPH	500' ±
RURAL ROADS & URBAN ARTERIALS	35 / 40 MPH	350' ±
RURAL ROADS, URBAN ARTERIALS, RESIDENTIAL & BUSINESS DISTRICTS	25 / 30 MPH	200' ± (2)
URBAN STREETS	25 MPH OR LESS	100' ± (2)
ALL SIGNS ARE BLACK ON ORANGE UNLESS DESIGNATED OTHERWISE		

(1) ALL SIGN SPACING MAY BE ADJUSTED TO ACCOMMODATE AT-GRADE INTERSECTIONS AND DRIVEWAYS.

(2) THIS SIGN SPACING MAY BE REDUCED IN URBAN AREAS TO FIT ROADWAY CONDITIONS.

NOTES

1. A Protective Vehicle is recommended regardless if a Truck Mounted Attenuator (TMA) is available; a work vehicle may be used. When no TMA is used, the Protective Vehicle shall be strategically located to shield workers, with no specific Roll-Ahead distance.
2. For long term projects conflicting pavement markings that are no longer applicable shall be removed. Temporary markings shall be used as necessary and signs shall be post mounted.
3. The sign MOTORCYCLES USE EXTREME CAUTION may be used.
4. For signs size refer to Manual on Uniform Traffic Control Devices (MUTCD) and WSDOT Sign Fabrication Manual M55-05.

CHANNELIZING DEVICE SPACING		
POSTED SPEED (MPH)	IN TAPER (FEET)	IN TANGENT (FEET)
50 / 70	40	80
35 / 45	30	60
25 / 30	20	40

* WHEN APPLICABLE

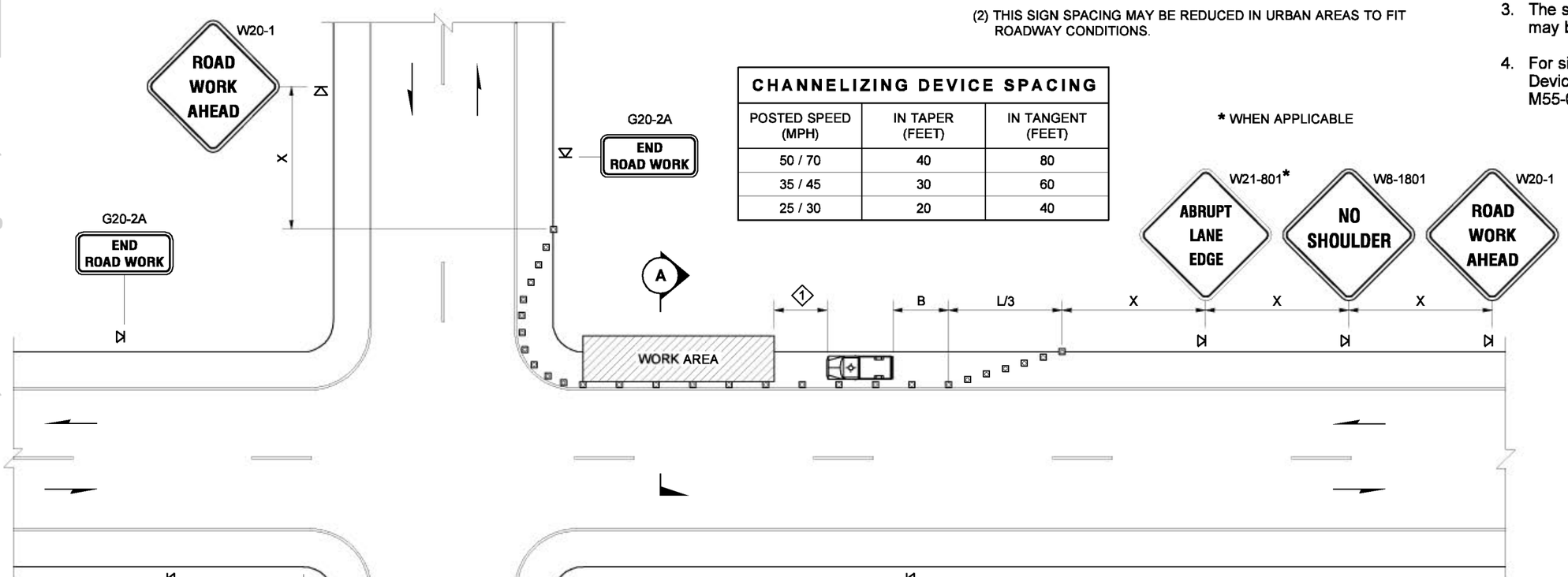

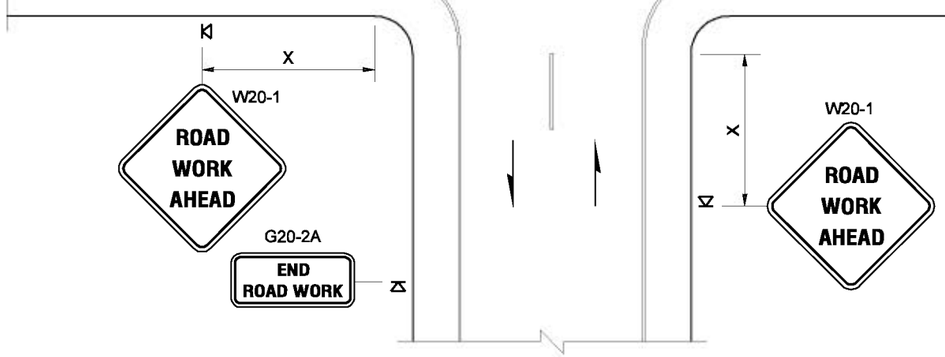

LEGEND

- SIGN LOCATION
- CHANNELIZING DEVICES
- PROTECTIVE VEHICLE ~ RECOMMENDED

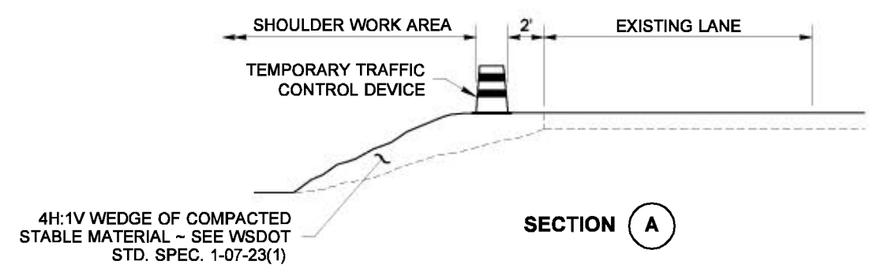

SECTION (A)

SHOULDER WORK AREA PROTECTION
(NOT TO SCALE)

FOR LOCAL AGENCY USE ONLY
NOT FOR USE ON STATE ROUTES

THEODORE J. TREPANIER
STATE OF WASHINGTON
25335
REGISTERED
PROFESSIONAL ENGINEER

EXPIRES AUGUST 9, 2007

NOTE: THIS PLAN IS NOT A LEGAL ENGINEERING DOCUMENT BUT AN ELECTRONIC DUPLICATE. THE ORIGINAL, SIGNED BY THE ENGINEER AND APPROVED FOR PUBLICATION, IS KEPT ON FILE AT THE WASHINGTON STATE DEPARTMENT OF TRANSPORTATION. A COPY MAY BE OBTAINED UPON REQUEST.

INTERSECTION ~ SHOULDER WORK

STANDARD PLAN K-36.20-00

SHEET 1 OF 1 SHEET

APPROVED FOR PUBLICATION

Ken L. Smith — STATE DESIGN ENGINEER
02-15-07 — DATE

Washington State Department of Transportation

EFFECTIVE: AUGUST 6, 2012 TO August 4, 2013
EFFECTIVE: AUGUST 6, 2012 TO August 4, 2013
EFFECTIVE: AUGUST 6, 2012 TO August 4, 2013
EFFECTIVE: AUGUST 6, 2012 TO August 4, 2013

EFFECTIVE: AUGUST 6, 2012 TO August 4, 2013
EFFECTIVE: AUGUST 6, 2012 TO August 4, 2013

DRAWN BY: ELENA BRUNSTEIN

LONGITUDINAL BUFFER SPACE = B										
POSTED SPEED (MPH)	25	30	35	40	45	50	55	60	65	70
LENGTH **B** (FEET)	SEE STD. PLAN K-40.40				360	425	495	570	645	730

BUFFER DATA	
TYPICAL PROTECTIVE VEHICLE WITH TMA (SEE NOTE 1)	
VEHICLE TYPE	**LOADED WEIGHT**
4 YARD DUMP TRUCK, SERVICE TRUCK, FLAT BED, ETC.	MINIMUM WEIGHT 15,000 LBS. (MAXIMUM WEIGHT SHALL BE IN ACCORDANCE WITH MANUFACTURER RECOMMENDATION)
1 **ROLL AHEAD STOPPING DISTANCE** = 30 FEET MIN. (DRY PAVEMENT ASSUMED)	

MINIMUM TAPER LENGTH = L (FEET)										
SHOULDER WIDTH (FEET)	POSTED SPEED (MPH)									
	25	30	35	40	45	50	55	60	65	70
6	SEE STD. PLAN				270	300	330	360	390	420
8	K-40.40				360	400	440	480	520	560
10					450	500	550	600	650	700
LESS THAN 6	3 DEVICES MINIMUM, SPACED 10' O.C.									

CHANNELIZING DEVICE SPACING		
POSTED SPEED (MPH)	IN TAPER (FEET)	IN TANGENT (FEET)
50 / 70	40	80
45 / 50	30	60

NOTES

1. A Protective Vehicle is recommended regardless if a TMA is available; a work vehicle may be used. When no TMA is used, the Protective Vehicle shall be strategically located to shield workers, with no specific Roll-Ahead distance.
2. Channelizing Device spacing for the downstream taper option shall be 20' O.C.
3. No Encroachment on the traveled lane is permitted. If Encroachment is necessary, the lane shall be closed (see Standard Plan K-24.20).
4. Signs to be post mounted for long term projects.
5. For signs size refer to Manual on Uniform Traffic Control Devices (MUTCD) and WSDOT Sign Fabrication Manual M55-05.

SIGN SPACING = X		
RURAL HIGHWAYS	60 / 65 MPH	800' ±
RURAL ROADS	45 / 55 MPH	500' ±
ALL SIGNS ARE BLACK ON ORANGE UNLESS DESIGNATED OTHERWISE		

ALL SIGN SPACING MAY BE ADJUSTED TO ACCOMMODATE INTERCHANGE RAMPS, AT-GRADE INTERSECTIONS, AND DRIVEWAYS.

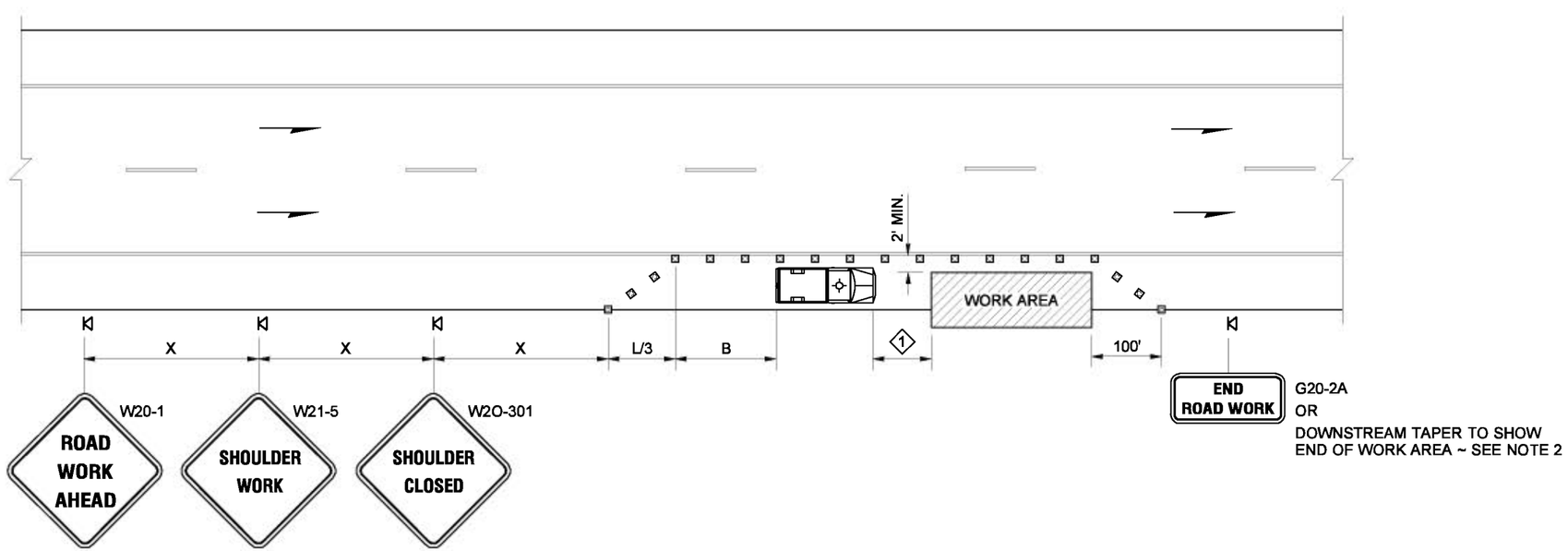

LEGEND

- SIGN LOCATION
- CHANNELIZING DEVICES
- PROTECTIVE VEHICLE ~ RECOMMENDED

FOR LOCAL AGENCY USE ONLY
NOT FOR USE ON STATE ROUTES

THEODORE J. TREPANIER
STATE OF WASHINGTON
25335
REGISTERED
PROFESSIONAL ENGINEER

EXPIRES AUGUST 9, 2007

NOTE: THIS PLAN IS NOT A LEGAL ENGINEERING DOCUMENT BUT AN ELECTRONIC DUPLICATE. THE ORIGINAL, SIGNED BY THE ENGINEER AND APPROVED FOR PUBLICATION, IS KEPT ON FILE AT THE WASHINGTON STATE DEPARTMENT OF TRANSPORTATION. A COPY MAY BE OBTAINED UPON REQUEST.

SHOULDER CLOSURE ~ HIGH SPEED ROADWAY (45 MPH OR HIGHER) STANDARD PLAN K-40.20-00

SHEET 1 OF 1 SHEET

APPROVED FOR PUBLICATION

Ken L. Smith — STATE DESIGN ENGINEER
02-15-07 — DATE

Washington State Department of Transportation

EFFECTIVE: AUGUST 6, 2012 TO August 4, 2013
EFFECTIVE: AUGUST 6, 2012 TO August 4, 2013

EFFECTIVE: AUGUST 6, 2012 TO August 4, 2013
EFFECTIVE: AUGUST 6, 2012 TO August 4, 2013

DRAWN BY: ELENA BRUNSTEIN

LONGITUDINAL BUFFER SPACE = B										
POSTED SPEED (MPH)	25	30	35	40	45	50	55	60	65	70
LENGTH **B** (FEET)	155	200	250	305	SEE STD. PLAN K-40.20					

BUFFER DATA	
TYPICAL PROTECTIVE VEHICLE WITH TMA (SEE NOTE 1)	
VEHICLE TYPE	**LOADED WEIGHT**
4 YARD DUMP TRUCK, SERVICE TRUCK, FLAT BED, ETC.	MINIMUM WEIGHT 15,000 LBS. (MAXIMUM WEIGHT SHALL BE IN ACCORDANCE WITH MANUFACTURER RECOMMENDATION)
1 **ROLL AHEAD STOPPING DISTANCE** = 30 FEET MIN. (DRY PAVEMENT ASSUMED)	

MINIMUM TAPER LENGTH = L (FEET)										
SHOULDER WIDTH (FEET)	POSTED SPEED (MPH)									
	25	30	35	40	45	50	55	60	65	70
6	63	90	123	160						
8	84	120	164	214	SEE STD. PLAN K-40.20					
10	105	150	204	267						
LESS THAN 6	3 DEVICES MINIMUM, SPACED 10' O.C.									

CHANNELIZING DEVICE SPACING		
POSTED SPEED (MPH)	IN TAPER (FEET)	IN TANGENT (FEET)
35 / 40	30	60
25 / 30	20	40

NOTES

1. A Protective Vehicle is recommended regardless if a Truck Mounted Attenuator (TMA) is available; a work vehicle may be used. When no TMA is used, the Protective Vehicle shall be strategically located to shield workers, with no specific Roll-Ahead distance.
2. Channelizing Device spacing for the downstream taper option shall be 20' O.C.
3. For signs size refer to Manual on Uniform Traffic Control Devices (MUTCD) and WSDOT Sign Fabrication Manual M55-05.

SIGN SPACING = X (1)		
RURAL ROADS & URBAN ARTERIALS	35 / 40 MPH	350' ±
RURAL ROADS, URBAN ARTERIALS, RESIDENTIAL & BUSINESS DISTRICTS	25 / 30 MPH	200' ± (2)
URBAN STREETS	25 MPH OR LESS	100' ± (2)
ALL SIGNS ARE BLACK ON ORANGE UNLESS DESIGNATED OTHERWISE		

(1) ALL SIGN SPACING MAY BE ADJUSTED TO ACCOMMODATE INTERCHANGE RAMPS, AT-GRADE INTERSECTIONS, AND DRIVEWAYS.

(2) THIS SIGN SPACING MAY BE REDUCED IN URBAN AREAS TO FIT ROADWAY CONDITIONS.

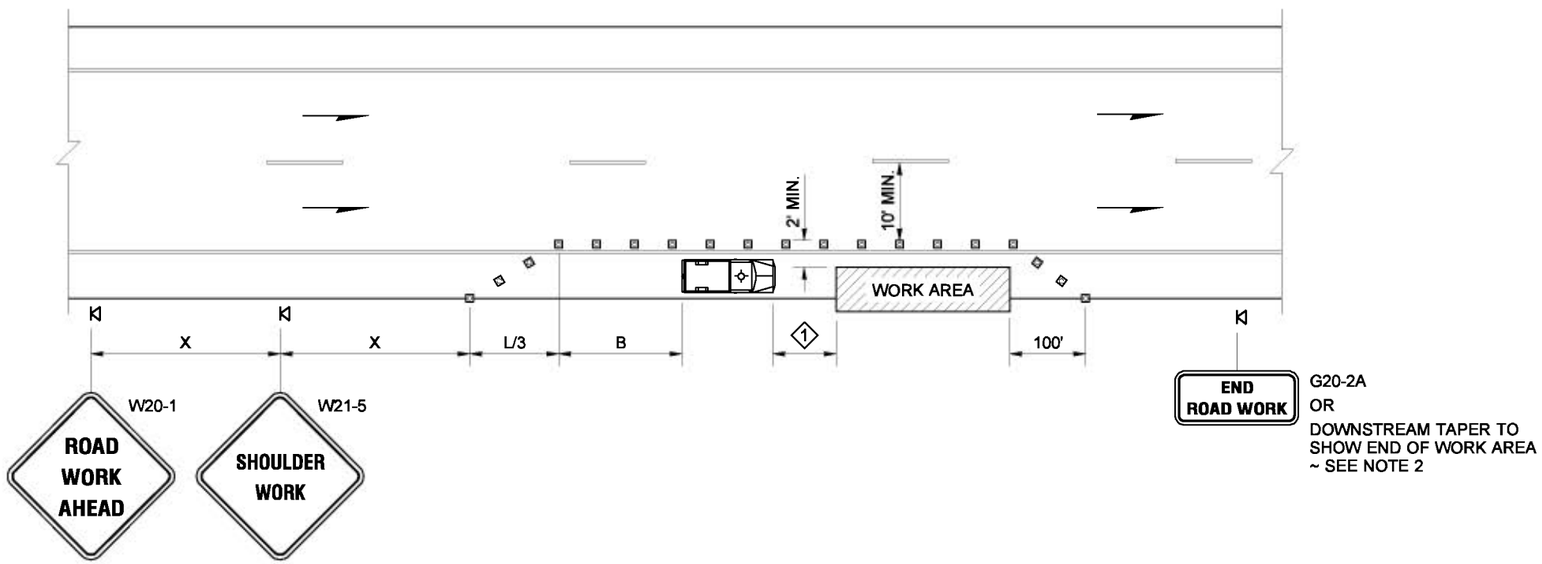

LEGEND

- SIGN LOCATION
- CHANNELIZING DEVICES
- PROTECTIVE VEHICLE ~ RECOMMENDED

FOR LOCAL AGENCY USE ONLY
NOT FOR USE ON STATE ROUTES

THEODORE J. TREPANIER
STATE OF WASHINGTON
25335
REGISTERED
PROFESSIONAL ENGINEER

EXPIRES AUGUST 9, 2007

NOTE: THIS PLAN IS NOT A LEGAL ENGINEERING DOCUMENT BUT AN ELECTRONIC DUPLICATE. THE ORIGINAL, SIGNED BY THE ENGINEER AND APPROVED FOR PUBLICATION, IS KEPT ON FILE AT THE WASHINGTON STATE DEPARTMENT OF TRANSPORTATION. A COPY MAY BE OBTAINED UPON REQUEST.

SHOULDER CLOSURE ~ LOW SPEED ROADWAY (40 MPH OR LESS) STANDARD PLAN K-40.40-00

SHEET 1 OF 1 SHEET

APPROVED FOR PUBLICATION

Ken L. Smith — STATE DESIGN ENGINEER
02-15-07 — DATE

Washington State Department of Transportation

EFFECTIVE: AUGUST 6, 2012 TO August 4, 2013
EFFECTIVE: AUGUST 6, 2012 TO August 4, 2013
EFFECTIVE: AUGUST 6, 2012 TO August 4, 2013
EFFECTIVE: AUGUST 6, 2012 TO August 4, 2013

EFFECTIVE: AUGUST 6, 2012 TO August 4, 2013
EFFECTIVE: AUGUST 6, 2012 TO August 4, 2013

DRAWN BY: ELENA BRUNSTEIN

PROTECTIVE VEHICLE ROLL AHEAD DISTANCE = R		
TYPICAL PROTECTIVE VEHICLE WITH TMA		
VEHICLE TYPE	LOADED WEIGHT	STATIONARY OPERATION
4 YARD DUMP TRUCK, SERVICE TRUCK, FLAT BED, ETC.	MINIMUM WEIGHT 15,000 LBS. (MAXIMUM WEIGHT SHALL BE IN ACCORDANCE WITH MANU-FACTURER RECOMMENDATION)	30 FEET
ROLL AHEAD DISTANCES VARY AND SHALL BE DETERMINED IN FIELD BASED ON WORK OPERATION AND SITE SPECIFIC CONDITIONS		

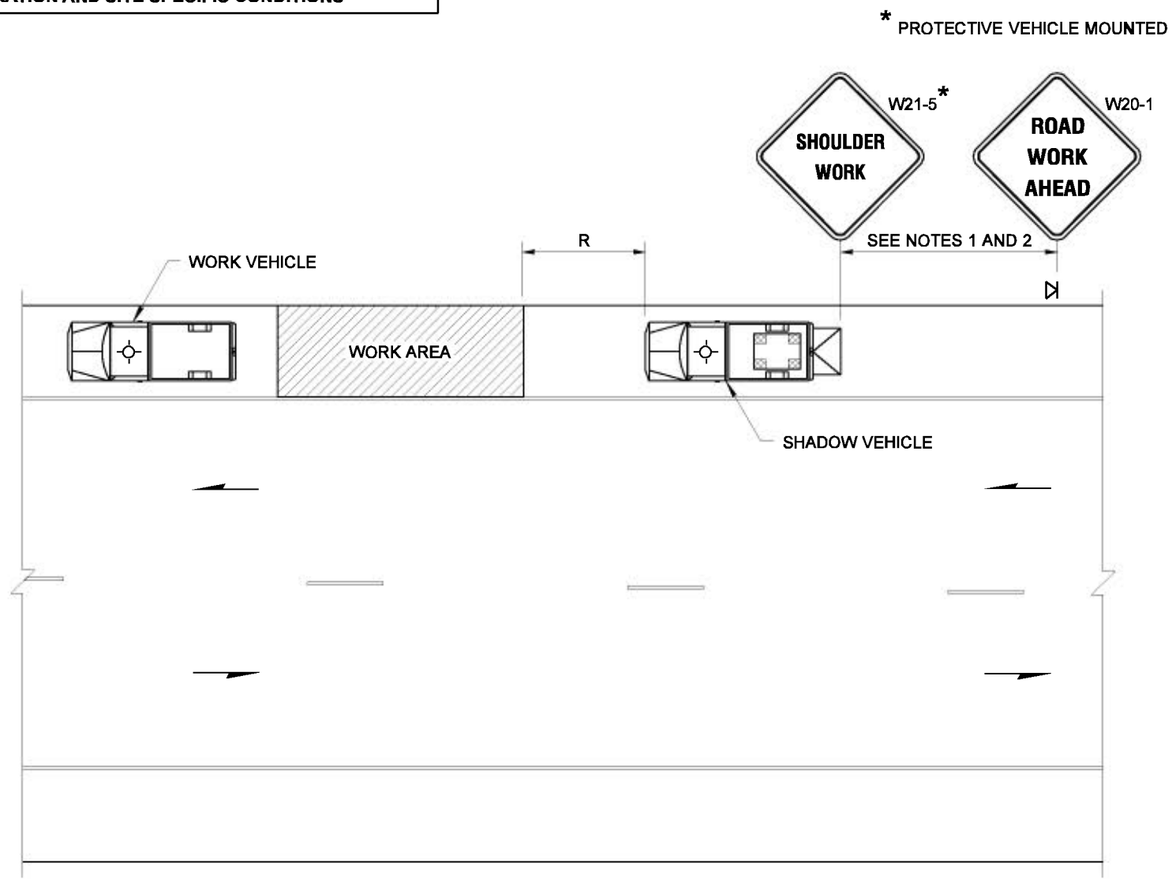

NOTES

1. In those situations where multiple work locations within a limited distance make it practical to place stationary signs, the distance between the advance Warning Sign and the Work Area should not exceed 5 miles.
2. In those situations where the distance between the advance signs and the Work Area is 2 to 5 miles, a Supplemental Distance plaque should be used with the ROAD WORK AHEAD sign.
3. No encroachment into traffic lane is permitted with this plan.
4. Work vehicle and Shadow vehicle shall use Warning Beacons.
5. Shadow vehicle shall maintain 500' to 1000' of sight distance to approaching traffic.
6. For signs size refer to Manual on Uniform Traffic Control Devices (MUTCD) and WSDOT Sign Fabrication Manual M55-05.

LEGEND

- SIGN LOCATION
- PROTECTIVE VEHICLE
- TRUCK MOUNTED ATTENUATOR ~ RECOMMENDED
- SEQUENTIAL ARROW PANEL TYPE "B" ~ CAUTION MODE
- WARNING BEACON ~ REQUIRED

FOR LOCAL AGENCY USE ONLY
NOT FOR USE ON STATE ROUTES

THEODORE J. TREPANIER
STATE OF WASHINGTON
25335
REGISTERED
PROFESSIONAL ENGINEER

EXPIRES AUGUST 9, 2007

NOTE: THIS PLAN IS NOT A LEGAL ENGINEERING DOCUMENT BUT AN ELECTRONIC DUPLICATE. THE ORIGINAL, SIGNED BY THE ENGINEER AND APPROVED FOR PUBLICATION, IS KEPT ON FILE AT THE WASHINGTON STATE DEPARTMENT OF TRANSPORTATION. A COPY MAY BE OBTAINED UPON REQUEST.

SHOULDER CLOSURE ~ SHORT DURATION

STANDARD PLAN K-40.60-00

SHEET 1 OF 1 SHEET

APPROVED FOR PUBLICATION

Ken L. Smith — STATE DESIGN ENGINEER
02-15-07 — DATE

Washington State Department of Transportation

EFFECTIVE: AUGUST 6, 2012 TO August 4, 2013
EFFECTIVE: AUGUST 6, 2012 TO August 4, 2013
EFFECTIVE: AUGUST 6, 2012 TO August 4, 2013
EFFECTIVE: AUGUST 6, 2012 TO August 4, 2013

EFFECTIVE: AUGUST 6, 2012 TO August 4, 2013
EFFECTIVE: AUGUST 6, 2012 TO August 4, 2013

DRAWN BY: ELENA BRUNSTEIN

SIGN SPACING = X (1)		
RURAL ROADS	45 / 55 MPH	500' ±
RURAL ROADS & URBAN ARTERIALS	35 / 40 MPH	350' ±
RURAL ROADS, URBAN ARTERIALS, RESIDENTIAL & BUSINESS DISTRICTS	25 / 30 MPH	200' ± (2)
URBAN STREETS	25 MPH OR LESS	100' ± (2)
ALL SIGNS ARE BLACK ON ORANGE UNLESS DESIGNATED OTHERWISE		

(1) ALL SIGN SPACING MAY BE ADJUSTED TO ACCOMMODATE AT-GRADE INTERSECTIONS AND DRIVEWAYS.

(2) THIS SIGN SPACING MAY BE REDUCED IN URBAN AREAS TO FIT ROADWAY CONDITIONS.

NOTES

1. The sign shown is not required in the following cases: the work space is behind a barrier, or more than 2' behind the curb, or more than 15' from the edge of a roadway.
2. For sign size, refer to Manual on Uniform Traffic Control Devices (MUTCD) and WSDOT Sign Fabrication Manual M55-05.

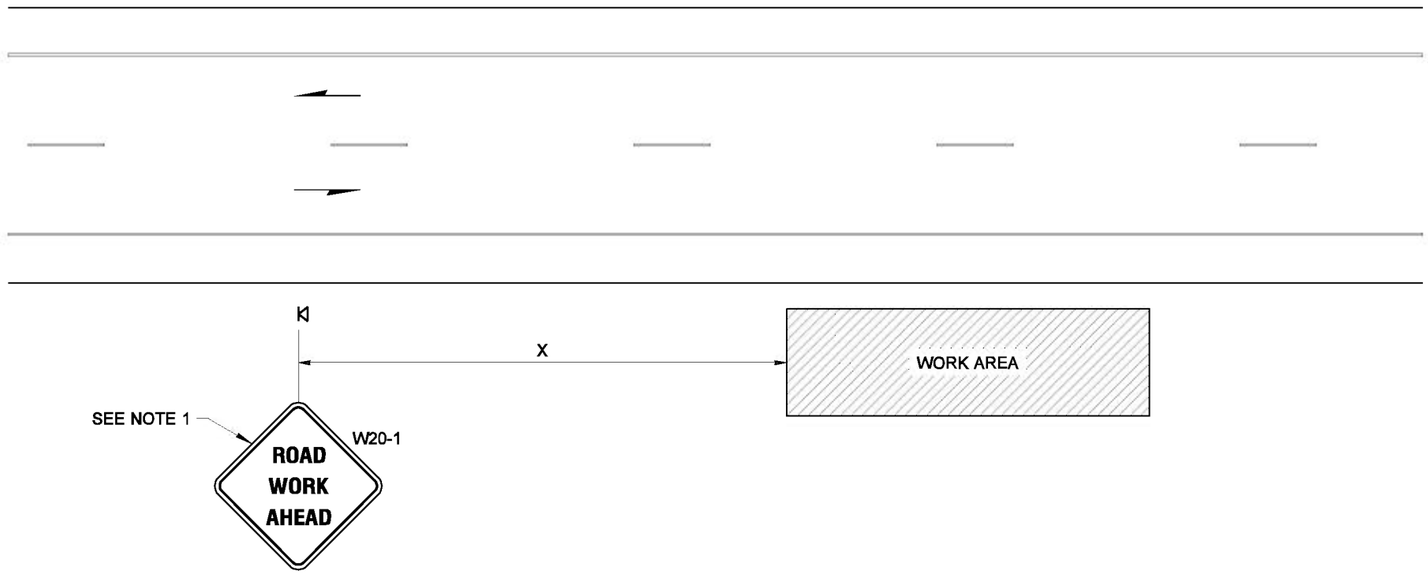

LEGEND

SIGN LOCATION

FOR LOCAL AGENCY USE ONLY
NOT FOR USE ON STATE ROUTES

THEODORE J. TREPANIER
STATE OF WASHINGTON
25335
REGISTERED
PROFESSIONAL ENGINEER

EXPIRES AUGUST 9, 2007

NOTE: THIS PLAN IS NOT A LEGAL ENGINEERING DOCUMENT BUT AN ELECTRONIC DUPLICATE. THE ORIGINAL, SIGNED BY THE ENGINEER AND APPROVED FOR PUBLICATION, IS KEPT ON FILE AT THE WASHINGTON STATE DEPARTMENT OF TRANSPORTATION. A COPY MAY BE OBTAINED UPON REQUEST.

WORK BEYOND THE SHOULDER

STANDARD PLAN K-40.80-00

SHEET 1 OF 1 SHEET

APPROVED FOR PUBLICATION

Ken L. Smith — STATE DESIGN ENGINEER
02-15-07 — DATE

Washington State Department of Transportation

EFFECTIVE: AUGUST 6, 2012 TO August 4, 2013
EFFECTIVE: AUGUST 6, 2012 TO August 4, 2013
EFFECTIVE: AUGUST 6, 2012 TO August 4, 2013
EFFECTIVE: AUGUST 6, 2012 TO August 4, 2013

EFFECTIVE: AUGUST 6, 2012 TO August 4, 2013
EFFECTIVE: AUGUST 6, 2012 TO August 4, 2013

DRAWN BY: ELENA BRUNSTEIN

INSTALL THESE OR OTHER WARNING SIGNS AS NEEDED FOR THE SPECIFIC HAZARD

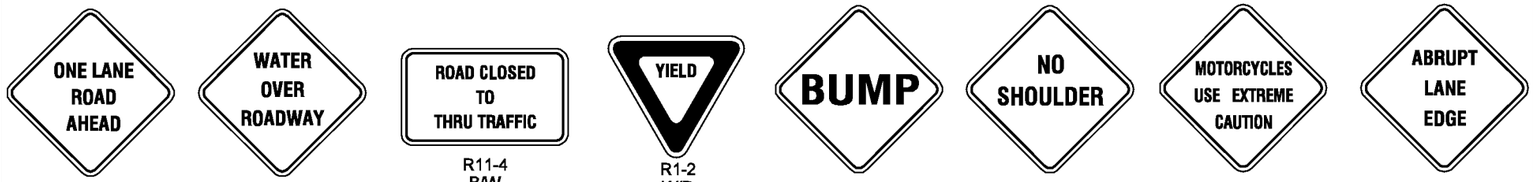

NOTES

1. Implement this plan when the initial roadway assessment is complete and determined to be passable with caution.
2. Portable Changeable Message Sign (PCMS) ~ recommended. For one-lane two-way traffic situations (see Standard Plan K-20.40) for additional details.
3. Spot hazards shall be marked with barricades or channelizing devices to alert motorists.
4. For signs size refer to Manual on Uniform Traffic Control Devices (MUTCD) and WSDOT Sign Fabrication Manual M55-05.

PCMS SAMPLE MESSAGE	
1	2
CAUTION STORM DEBRIS	ON ROAD NEXT XX MILES
1.5 SEC	1.5 SEC

FIELD LOCATE IN ADVANCE OF HAZARD

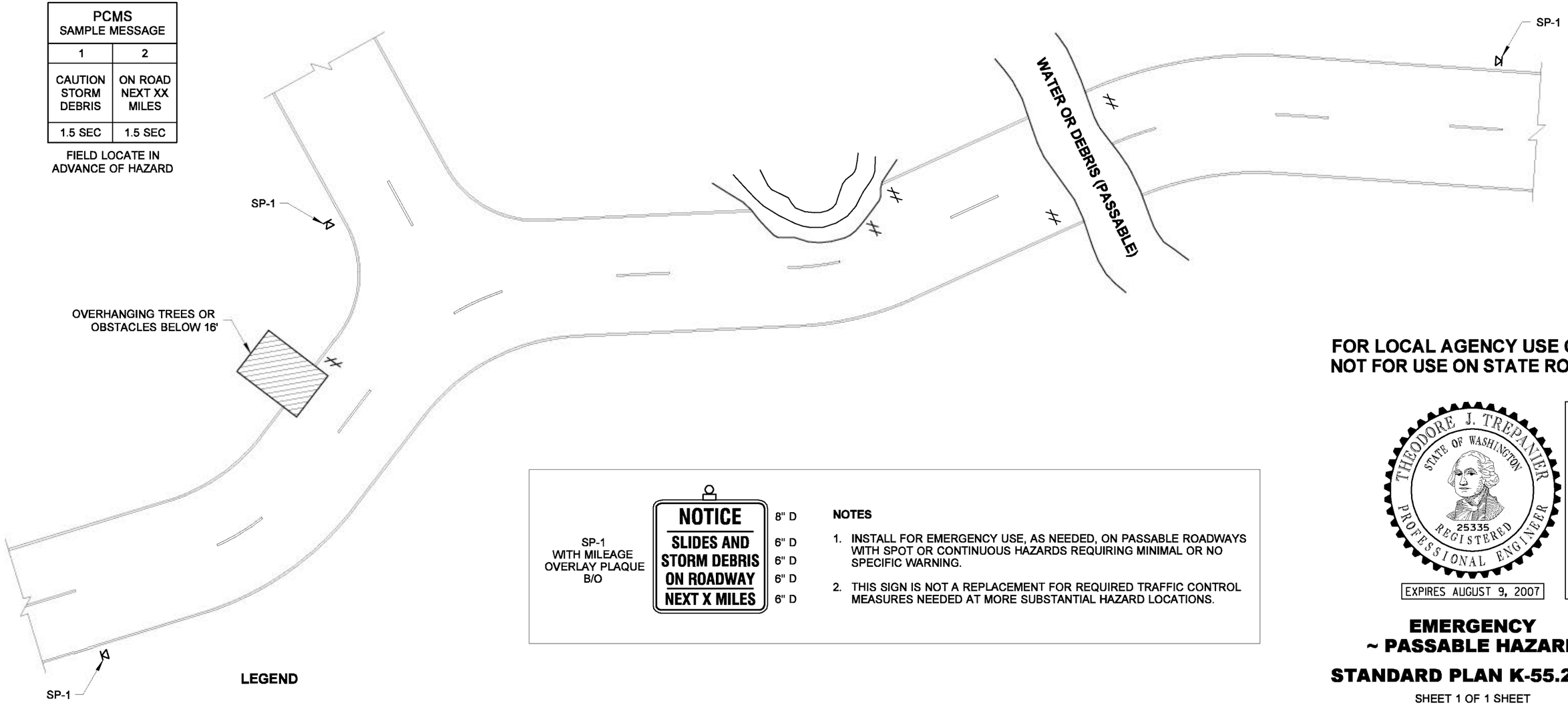

SP-1 WITH MILEAGE OVERLAY PLAQUE B/O

NOTES

1. INSTALL FOR EMERGENCY USE, AS NEEDED, ON PASSABLE ROADWAYS WITH SPOT OR CONTINUOUS HAZARDS REQUIRING MINIMAL OR NO SPECIFIC WARNING.
2. THIS SIGN IS NOT A REPLACEMENT FOR REQUIRED TRAFFIC CONTROL MEASURES NEEDED AT MORE SUBSTANTIAL HAZARD LOCATIONS.

LEGEND

- SIGN LOCATION
- TYPE 2 BARRICADE WITH TYPE "A" WARNING LIGHT OR CHANNELIZING DEVICE
- FLASHING WARNING LIGHT

FOR LOCAL AGENCY USE ONLY
NOT FOR USE ON STATE ROUTES

THEODORE J. TREPANIER
STATE OF WASHINGTON
25335
REGISTERED
PROFESSIONAL ENGINEER

EXPIRES AUGUST 9, 2007

NOTE: THIS PLAN IS NOT A LEGAL ENGINEERING DOCUMENT BUT AN ELECTRONIC DUPLICATE. THE ORIGINAL, SIGNED BY THE ENGINEER AND APPROVED FOR PUBLICATION, IS KEPT ON FILE AT THE WASHINGTON STATE DEPARTMENT OF TRANSPORTATION. A COPY MAY BE OBTAINED UPON REQUEST.

EMERGENCY ~ PASSABLE HAZARD

STANDARD PLAN K-55.20-00

SHEET 1 OF 1 SHEET

APPROVED FOR PUBLICATION

Ken L. Smith — STATE DESIGN ENGINEER
02-15-07 — DATE

Washington State Department of Transportation

EFFECTIVE: AUGUST 6, 2012 TO August 4, 2013
EFFECTIVE: AUGUST 6, 2012 TO August 4, 2013
EFFECTIVE: AUGUST 6, 2012 TO August 4, 2013
EFFECTIVE: AUGUST 6, 2012 TO August 4, 2013

EFFECTIVE: AUGUST 6, 2012 TO August 4, 2013
EFFECTIVE: AUGUST 6, 2012 TO August 4, 2013

DRAWN BY: BILL BEKENS

DECELERATION LENGTH = D (MIN.)						
POSTED SPEED (MPH)	WORK ZONE POSTED SPEED LIMIT (MPH)					
	10	20	30	40	50	60
70	525	500	425	350	250	150
65	425	400	350	275	175	
60	350	300	250	175		
55	275	225	175	100		
50	200	150	100			
45	125					

SIGN SPACING = X (1)		
RURAL HIGHWAYS	60 / 65 MPH	800' ±
RURAL ROADS	45 / 55 MPH	500' ±
RURAL ROADS & URBAN ARTERIALS	35 / 40 MPH	350' ±
RURAL ROADS, URBAN ARTERIALS, RESIDENTIAL & BUSINESS DISTRICTS	25 / 30 MPH	200' ± (2)
URBAN STREETS	25 MPH OR LESS	100' ± (2)
ALL SIGNS ARE BLACK ON ORANGE UNLESS DESIGNATED OTHERWISE		

(1) ALL SIGN SPACING MAY BE ADJUSTED TO ACCOMMODATE AT-GRADE INTERSECTIONS AND DRIVEWAYS.

(2) THIS SIGN SPACING MAY BE REDUCED IN URBAN AREAS TO FIT ROADWAY CONDITIONS.

NOTES

1. Install additional Warning Signs based on site conditions and traffic characteristics. See an appropriate Standard Plan for guidance.
2. Regulatory Speed Limit signs are not a substitute for Work Zone Warning signs. Speed Limit signs shall remain in place as long as the reduced speed condition applies.
3. Motorcycle Warning Signs are required as per Washington Administrative Code (WAC) 468-95-305.
4. Closing a road and restricting traffic shall conform to Revised Code of Washington (RCW) 47.48.
5. For signs size refer to Manual on Uniform Traffic Control Devices (MUTCD) and WSDOT Sign Fabrication Manual M55-05.

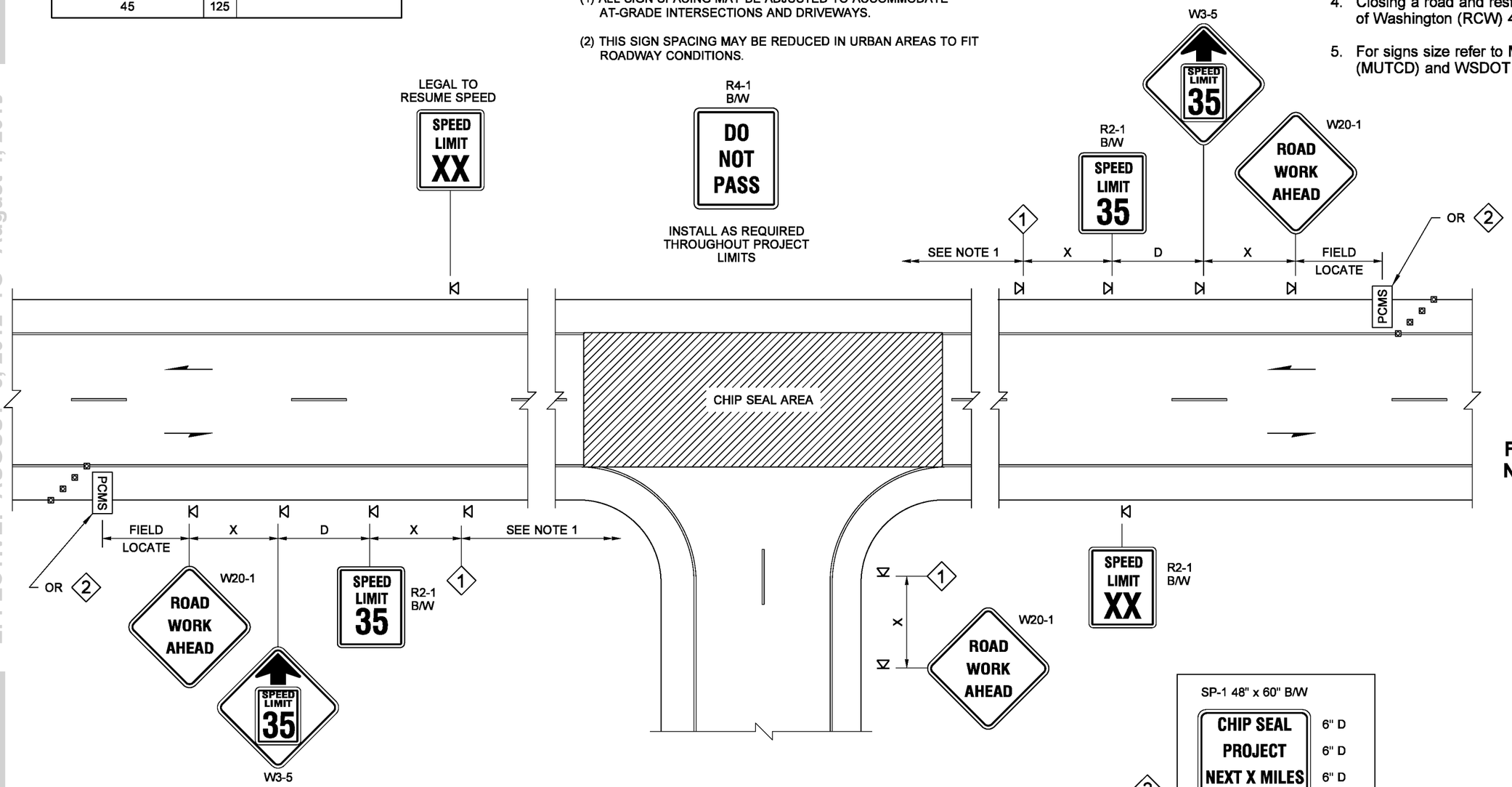

PCMS SAMPLE MESSAGE	
1	2
CHIP SEAL PROJECT	FROM AUG XX TO AUG XX
1.5 SEC	1.5 SEC

FIELD LOCATE IN ADVANCE OF SIGNING

FOR LOCAL AGENCY USE ONLY
NOT FOR USE ON STATE ROUTES

LEGEND

- SIGN LOCATION
- CHANNELIZING DEVICES
- PCMS — PORTABLE CHANGEABLE MESSAGE SIGN

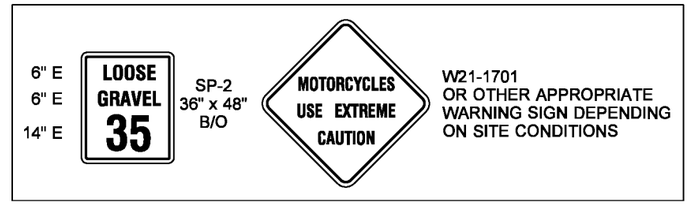

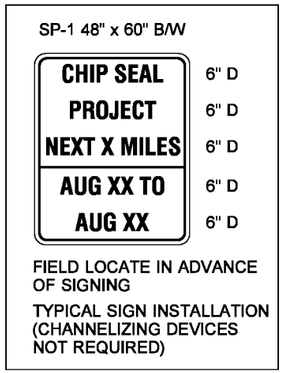

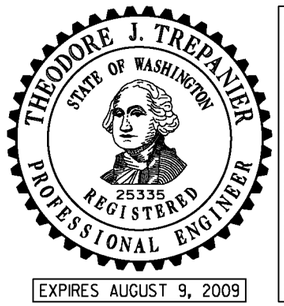

NOTE: THIS PLAN IS NOT A LEGAL ENGINEERING DOCUMENT BUT AN ELECTRONIC DUPLICATE. THE ORIGINAL, SIGNED BY THE ENGINEER AND APPROVED FOR PUBLICATION, IS KEPT ON FILE AT THE WASHINGTON STATE DEPARTMENT OF TRANSPORTATION. A COPY MAY BE OBTAINED UPON REQUEST.

SPEED ZONE SUPPLEMENTAL SIGNING ~ CHIP SEAL PROJECT STANDARD PLAN K-60.20-02

SHEET 1 OF 1 SHEET

APPROVED FOR PUBLICATION

Pasco Bakotich III — STATE DESIGN ENGINEER
07-03-08 — DATE

Washington State Department of Transportation

EFFECTIVE: AUGUST 6, 2012 TO August 4, 2013
EFFECTIVE: AUGUST 6, 2012 TO August 4, 2013
EFFECTIVE: AUGUST 6, 2012 TO August 4, 2013
EFFECTIVE: AUGUST 6, 2012 TO August 4, 2013

EFFECTIVE: AUGUST 6, 2012 TO August 4, 2013
EFFECTIVE: AUGUST 6, 2012 TO August 4, 2013

DRAWN BY: ELENA BRUNSTEIN

SIGN SPACING = X (1)		
RURAL HIGHWAYS	60 / 65 MPH	800' ±
RURAL ROADS	45 / 55 MPH	500' ±
RURAL ROADS & URBAN ARTERIALS	35 / 40 MPH	350' ±
RURAL ROADS, URBAN ARTERIALS, RESIDENTIAL & BUSINESS DISTRICTS	25 / 30 MPH	200' ± (2)
URBAN STREETS	25 MPH OR LESS	100' ± (2)
ALL SIGNS ARE BLACK ON ORANGE UNLESS DESIGNATED OTHERWISE		

(1) ALL SIGN SPACING MAY BE ADJUSTED TO ACCOMMODATE INTERCHANGE RAMPS, AT-GRADE INTERSECTIONS, AND DRIVEWAYS.

(2) THIS SIGN SPACING MAY BE REDUCED IN URBAN AREAS TO FIT ROADWAY CONDITIONS.

CHANNELIZING DEVICE SPACING		
POSTED SPEED (MPH)	IN TAPER (FEET)	IN TANGENT (FEET)
50 / 70	40	80
35 / 45	30	60
25 / 30	20	40

NOTES

1. See Standard Plan K-24.60 for typical lane closure signing details, device spacing requirements, and lane closure taper length.
2. MOTOCYCLES USE EXTREME CAUTION signs shall be installed when the following roadway conditions exist:
   - grooved pavement
   - abrupt lane edge
   - steel plates
   - loose gravel of earth

   Specific signs for each of the conditions noted shall be installed along with MOTORCYCLES USE EXTREME CAUTION signs.
3. For signs size refer to Manual on Uniform Traffic Control Devices (MUTCD) and WSDOT Sign Fabrication Manual M55-05.

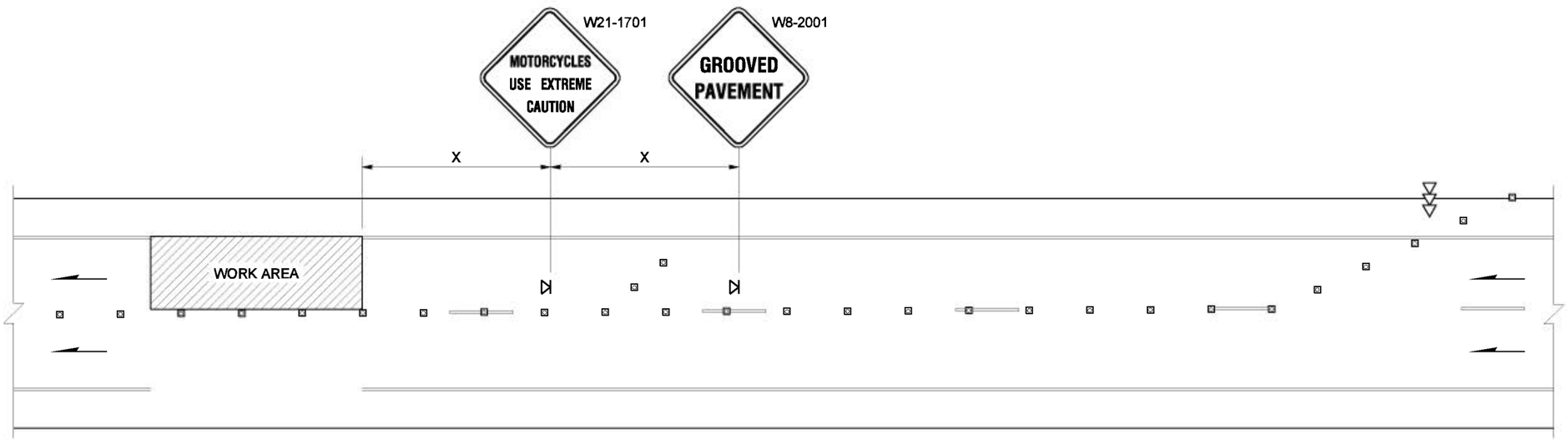

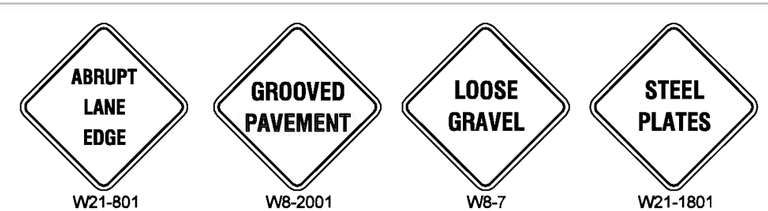

MOTORCYCLE WARNING SIGN (W21-1701) SHOULD BE INSTALLED AT 1 MILE SPACING, THROUGHOUT THE WORK ZONE WHERE THE CONDITION EXISTS, AS PART OF THE SEQUENCE OF OTHER APPROPRIATE STANDARD WARNING SIGNS ON 1 MILE SPACING

LEGEND

- SIGN LOCATION
- CHANNELIZING DEVICES
- ARROW PANEL

FOR LOCAL AGENCY USE ONLY
NOT FOR USE ON STATE ROUTES

THEODORE J. TREPANIER
STATE OF WASHINGTON
25335
REGISTERED
PROFESSIONAL ENGINEER

EXPIRES AUGUST 9, 2007

NOTE: THIS PLAN IS NOT A LEGAL ENGINEERING DOCUMENT BUT AN ELECTRONIC DUPLICATE. THE ORIGINAL, SIGNED BY THE ENGINEER AND APPROVED FOR PUBLICATION, IS KEPT ON FILE AT THE WASHINGTON STATE DEPARTMENT OF TRANSPORTATION. A COPY MAY BE OBTAINED UPON REQUEST.

MOTORCYCLE SUPPLEMENTAL SIGNING

STANDARD PLAN K-60.40-00

SHEET 1 OF 1 SHEET

APPROVED FOR PUBLICATION

Ken L. Smith — STATE DESIGN ENGINEER
02-15-07 — DATE

Washington State Department of Transportation

EFFECTIVE: AUGUST 6, 2012 TO August 4, 2013
EFFECTIVE: AUGUST 6, 2012 TO August 4, 2013
EFFECTIVE: AUGUST 6, 2012 TO August 4, 2013
EFFECTIVE: AUGUST 6, 2012 TO August 4, 2013

EFFECTIVE: AUGUST 6, 2012 TO August 4, 2013
EFFECTIVE: AUGUST 6, 2012 TO August 4, 2013

DRAWN BY: ELENA BRUNSTEIN

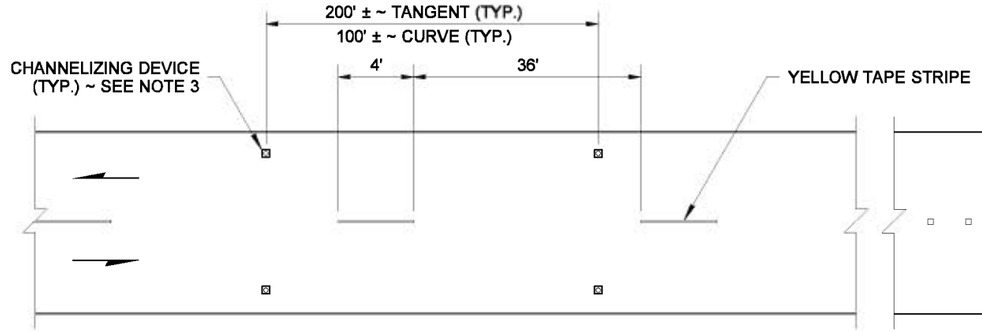

HOT MIXED ASPHALT PAVEMENT

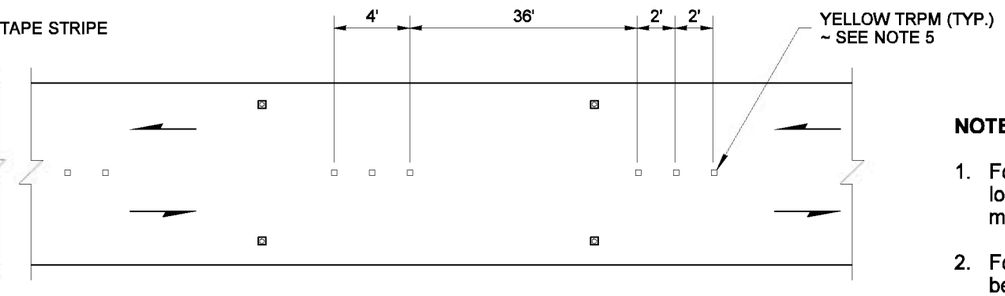

BITUMINOUS SURFACE TREATMENT

TWO-LANE ROADWAY

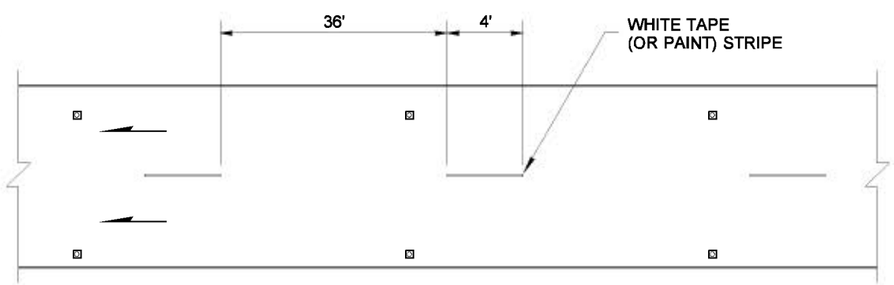

HOT MIXED ASPHALT PAVEMENT

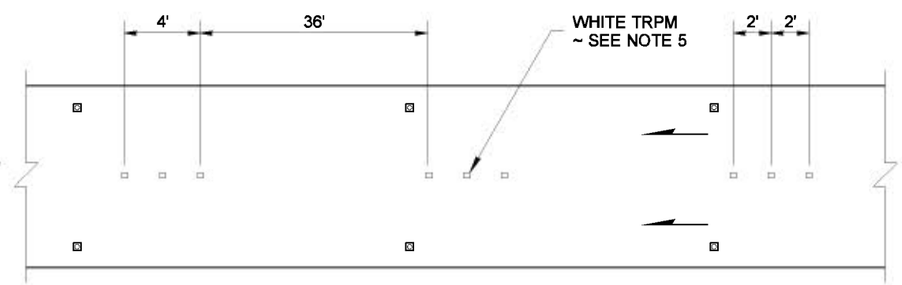

BITUMINOUS SURFACE TREATMENT

ONE-WAY TWO-LANE ROADWAY

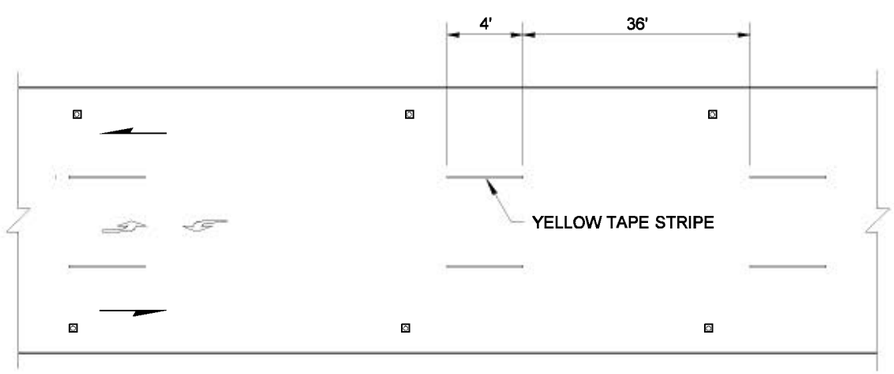

HOT MIXED ASPHALT PAVEMENT

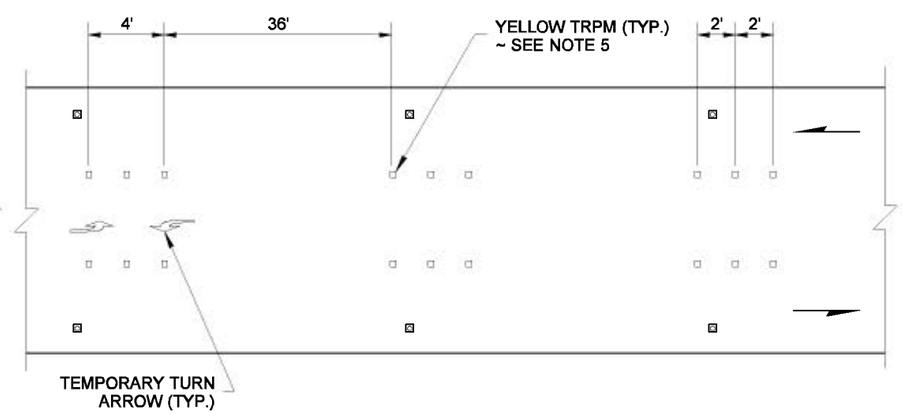

BITUMINOUS SURFACE TREATMENT

TWO-WAY TWO-LANE LEFT TURN ROADWAY

NOTES

1. For long term projects conflicting pavement markings that are no longer applicable shall be removed or obliterated. Temporary markings shall be used as necessary.
2. For Hot Mixed Asphalt Pavement, a temporary striping tape shall be installed in conjunction with DO NOT PASS and "PASS WITH CARE" sign locations.
3. Temporary roadside delineation with Channelization Devices is optional. The appropriate taper length shall be L/2. See Standard Plan K-24.20 for minimum taper length (L).
4. For long term projects a channelization/pavement marking plan should be implemented.
5. Temporary Raised Pavement Marker (TRPM) may be used on a pattern spacing 5' O.C. to simulate a solid line.

THEODORE J. TREPANIER
STATE OF WASHINGTON
25335
REGISTERED
PROFESSIONAL ENGINEER

EXPIRES AUGUST 9, 2007

NOTE: THIS PLAN IS NOT A LEGAL ENGINEERING DOCUMENT BUT AN ELECTRONIC DUPLICATE. THE ORIGINAL, SIGNED BY THE ENGINEER AND APPROVED FOR PUBLICATION, IS KEPT ON FILE AT THE WASHINGTON STATE DEPARTMENT OF TRANSPORTATION. A COPY MAY BE OBTAINED UPON REQUEST.

TEMPORARY CHANNELIZATION

STANDARD PLAN K-70.20-00

SHEET 1 OF 1 SHEET

APPROVED FOR PUBLICATION

Ken L. Smith — STATE DESIGN ENGINEER
02-15-07 — DATE

Washington State Department of Transportation

EFFECTIVE: AUGUST 6, 2012 TO August 4, 2013
EFFECTIVE: AUGUST 6, 2012 TO August 4, 2013
EFFECTIVE: AUGUST 6, 2012 TO August 4, 2013
EFFECTIVE: AUGUST 6, 2012 TO August 4, 2013

EFFECTIVE: AUGUST 6, 2012 TO August 4, 2013
EFFECTIVE: AUGUST 6, 2012 TO August 4, 2013

DRAWN BY: FERN LIDDELL

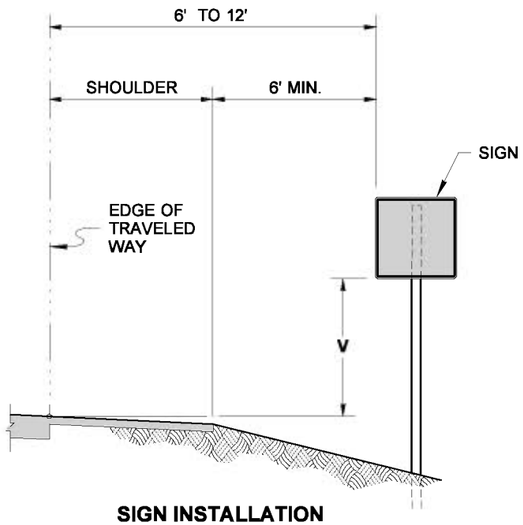

SIGN INSTALLATION (FILL SECTION)

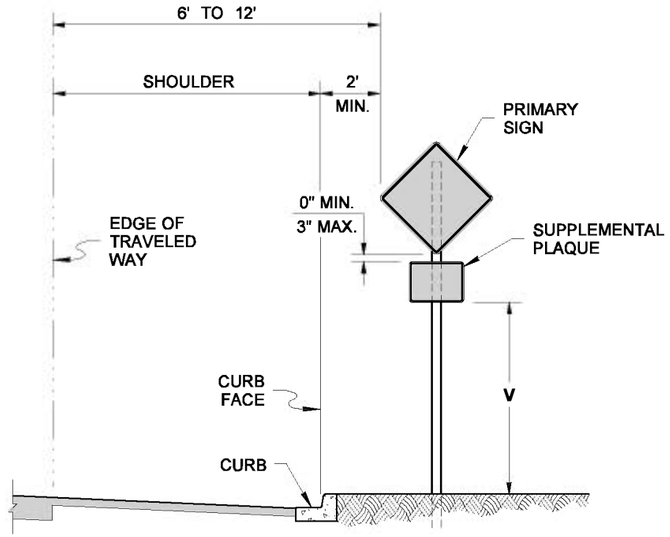

SIGN INSTALLATION (CURB SECTION)

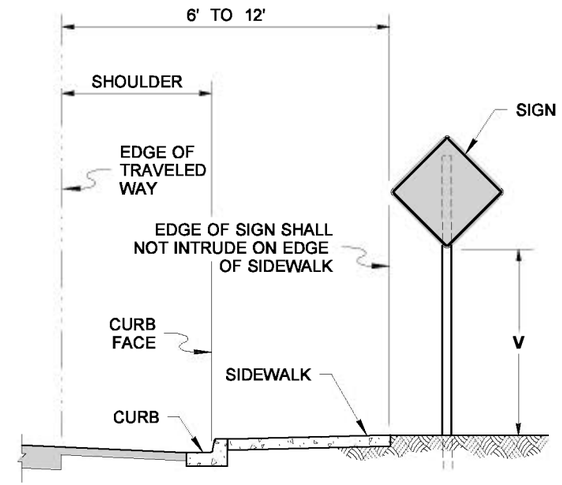

SIGN INSTALLATION (SIDEWALK AND CURB SECTION)

NOTES

1. For sign installation details, see Std. Plan G - series.
2. In rural areas, the "V" Height can be a minimum of 7 feet for primary signs and 6 feet for the supplemental plaques for greater visibility, as directed by the engineer.
3. The "V" height for signs, with an area of more than 50 square feet and two or more sign supports, is 7 feet in both rural and urban areas.

HEIGHT V		
	TO BOTTOM OF SIGN (NO SUPPLEMENTAL PLAQUE)	TO BOTTOM OF SUPPLEMENTAL PLAQUE (WHEN REQUIRED)
RURAL	5' MINIMUM	4' MINIMUM
URBAN	7' MINIMUM	6' MINIMUM

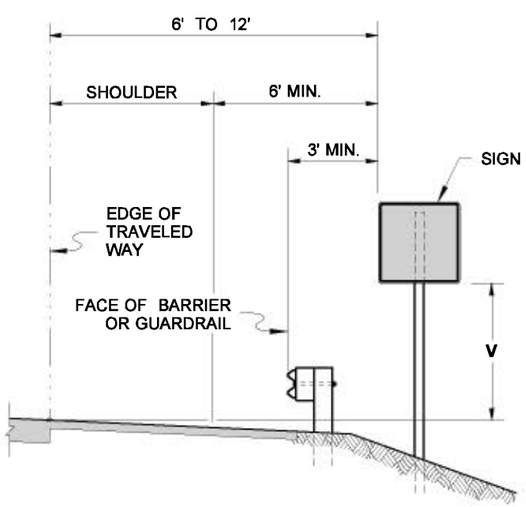

SIGN INSTALLATION (BEHIND TRAFFIC BARRIER)

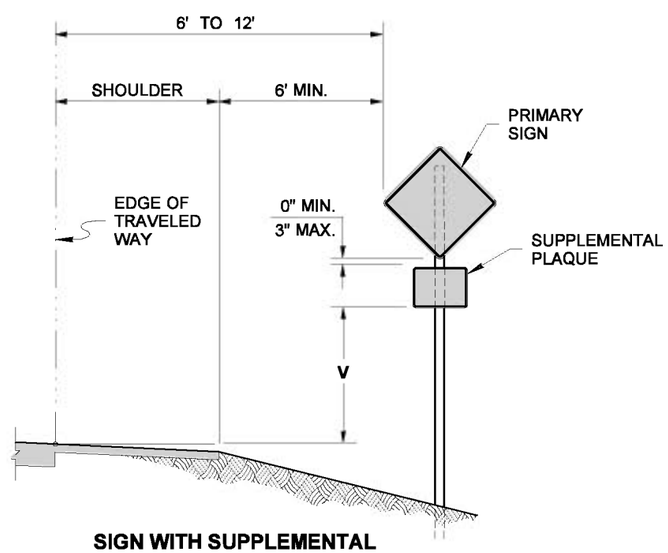

SIGN WITH SUPPLEMENTAL PLAQUE INSTALLATION (FILL SECTION)

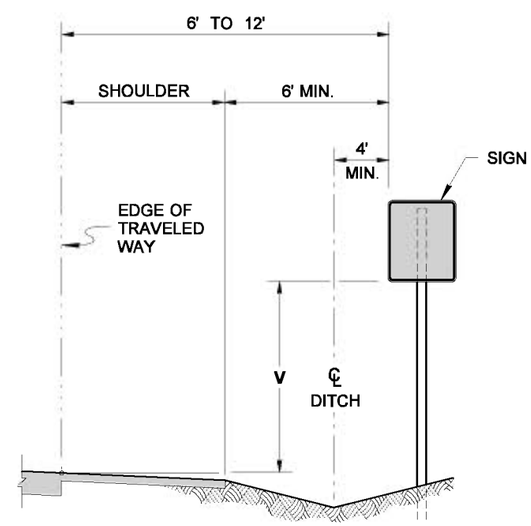

SIGN INSTALLATION (DITCH SECTION)

EXPIRES AUGUST 9, 2007

NOTE: THIS PLAN IS NOT A LEGAL ENGINEERING DOCUMENT BUT AN ELECTRONIC DUPLICATE. THE ORIGINAL, SIGNED BY THE ENGINEER AND APPROVED FOR PUBLICATION, IS KEPT ON FILE AT THE WASHINGTON STATE DEPARTMENT OF TRANSPORTATION. A COPY MAY BE OBTAINED UPON REQUEST.

CLASS A CONSTRUCTION SIGNING INSTALLATION

STANDARD PLAN K-80.10-00

SHEET 1 OF 1 SHEET

APPROVED FOR PUBLICATION

Ken L. Smith — STATE DESIGN ENGINEER

02-21-07 — DATE

Washington State Department of Transportation

EFFECTIVE: AUGUST 6, 2012 TO August 4, 2013
EFFECTIVE: AUGUST 6, 2012 TO August 4, 2013
EFFECTIVE: AUGUST 6, 2012 TO August 4, 2013
EFFECTIVE: AUGUST 6, 2012 TO August 4, 2013

EFFECTIVE: AUGUST 6, 2012 TO August 4, 2013
EFFECTIVE: AUGUST 6, 2012 TO August 4, 2013

DRAWN BY: LISA CYFORD

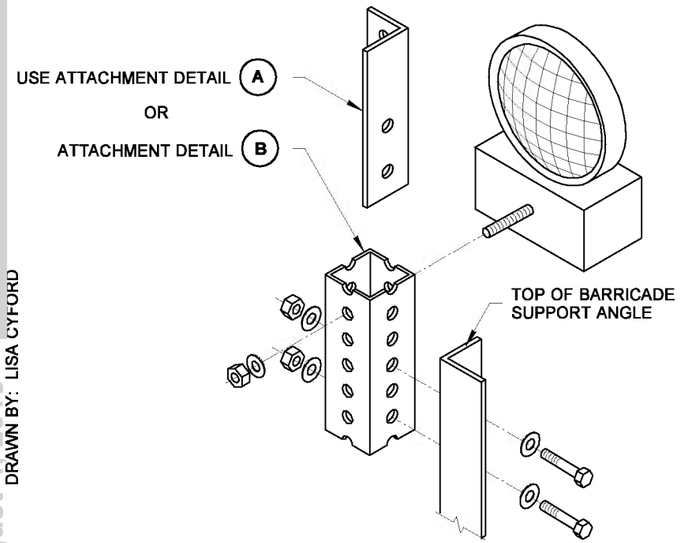

WARNING LIGHT ATTACHMENT DETAIL

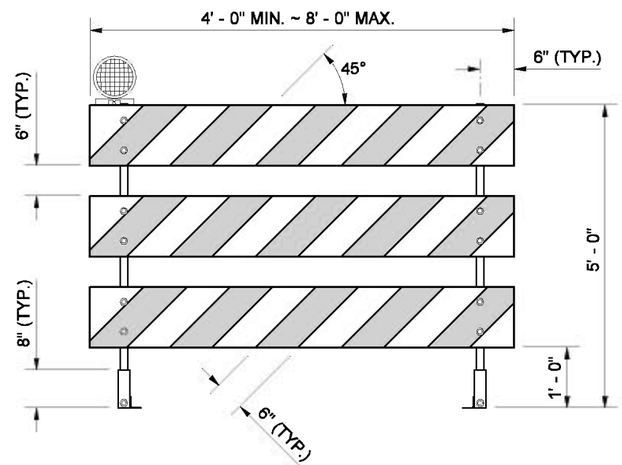

ELEVATION

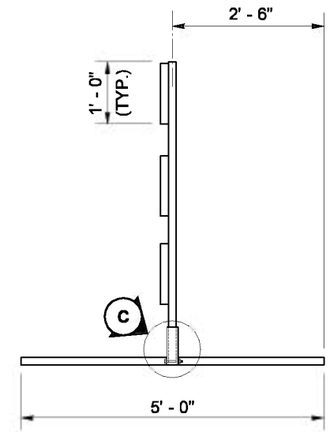

SIDE

TYPE 3 BARRICADE

NOTES

1. All fasteners may be zinc plated, galvanized or stainless steel. All steel angle and tubular steel shall be hot-rolled, high carbon steel, painted or galvanized.
2. Install one lightweight Type A Low-Intensity flashing warning light on the traffic side of the barricade. Install two Type A Low-Intensity flashing warning lights per barricade when the barricades are used to close a roadway. Attach the light to the barricade according to the light manufacturer's recommendations or use the details shown on this plan.
3. Stripes on barricade rails shall be alternating orange and white retroreflective stripes (sloping downward at an angle of 45 degrees in the direction traffic is to pass).
4. The Type 3 barricade design shown on this plan meets the crash test requirements of NCHRP 350. Alternative designs may be approved if they conform to the NCHRP 350 crash test criteria and the MUTCD.
5. When a sign is mounted on the barricade, it shall be securely bolted to at least two plywood panels. The top of the sign shall not be higher than the top panel of the barricade.
6. When sandbags are used in freezing weather, Urea fertilizer shall be mixed with the sand in a quantity to prevent the sand from freezing.

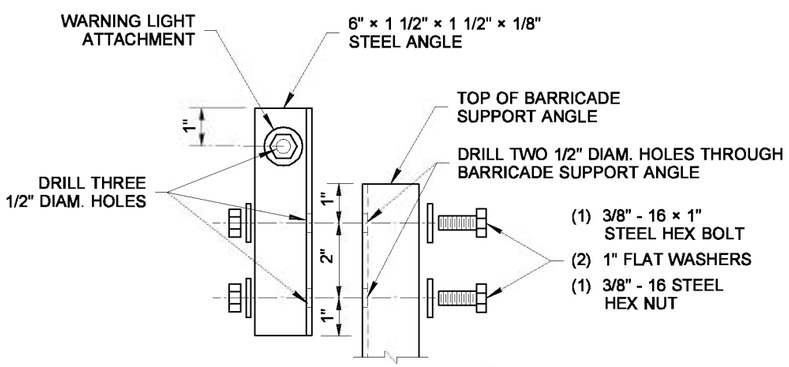

ATTACHMENT DETAIL A

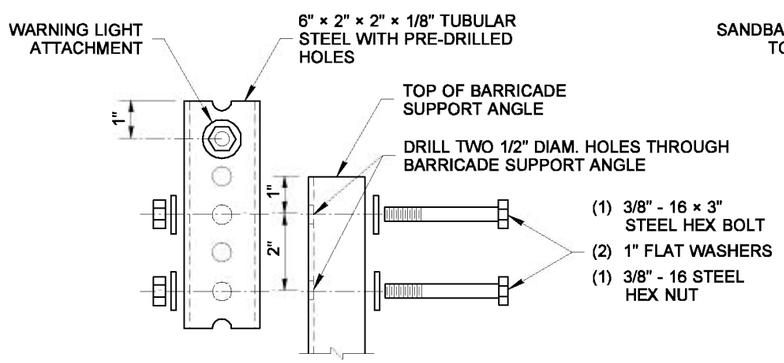

ATTACHMENT DETAIL B

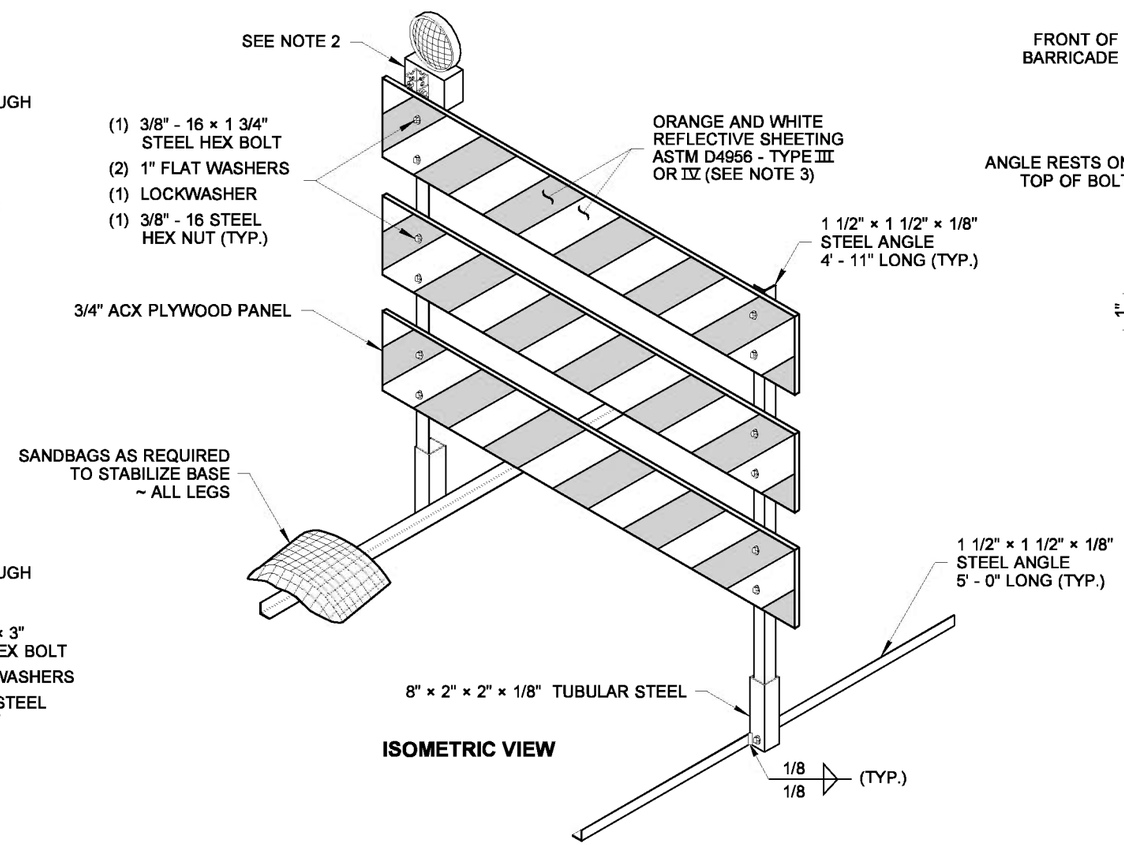

ISOMETRIC VIEW

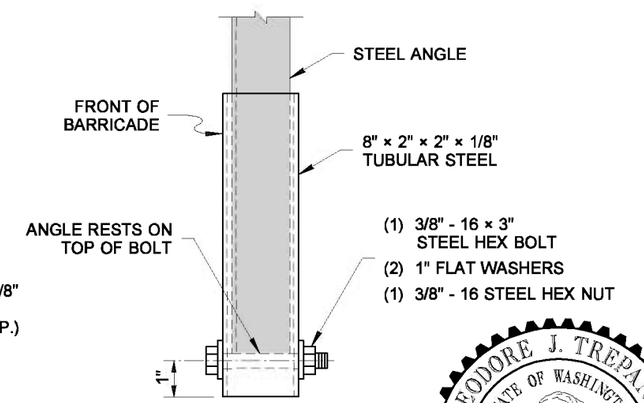

DETAIL C

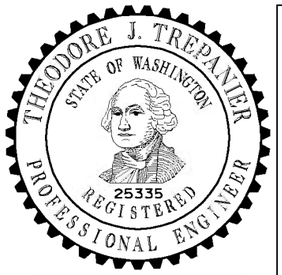

EXPIRES AUGUST 9, 2007

NOTE: THIS PLAN IS NOT A LEGAL ENGINEERING DOCUMENT BUT AN ELECTRONIC DUPLICATE. THE ORIGINAL, SIGNED BY THE ENGINEER AND APPROVED FOR PUBLICATION, IS KEPT ON FILE AT THE WASHINGTON STATE DEPARTMENT OF TRANSPORTATION. A COPY MAY BE OBTAINED UPON REQUEST.

TYPE 3 BARRICADE

STANDARD PLAN K-80.20-00

SHEET 1 OF 2 SHEETS

APPROVED FOR PUBLICATION

Kevin J. Dayton — STATE DESIGN ENGINEER — *12-20-06* — DATE

Washington State Department of Transportation

EFFECTIVE: AUGUST 6, 2012 TO August 4, 2013
EFFECTIVE: AUGUST 6, 2012 TO August 4, 2013
EFFECTIVE: AUGUST 6, 2012 TO August 4, 2013
EFFECTIVE: AUGUST 6, 2012 TO August 4, 2013

EFFECTIVE: AUGUST 6, 2012 TO August 4, 2013
EFFECTIVE: AUGUST 6, 2012 TO August 4, 2013

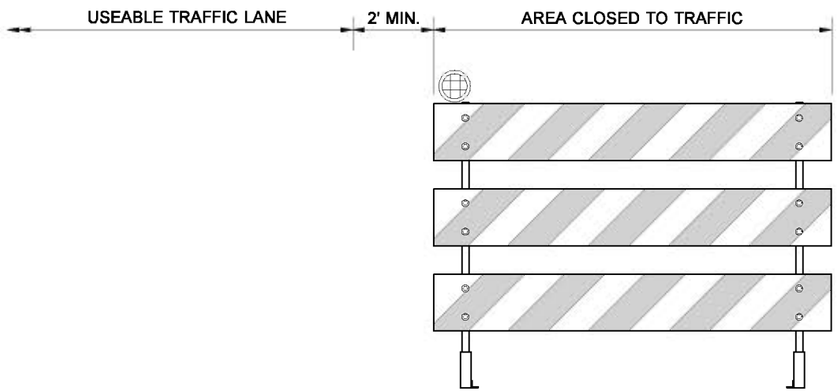

TYPE 3L BARRICADE

STRIPES ON THE BARRICADES SHALL SLOPE DOWNWARD IN THE DIRECTION TRAFFIC IS TO PASS

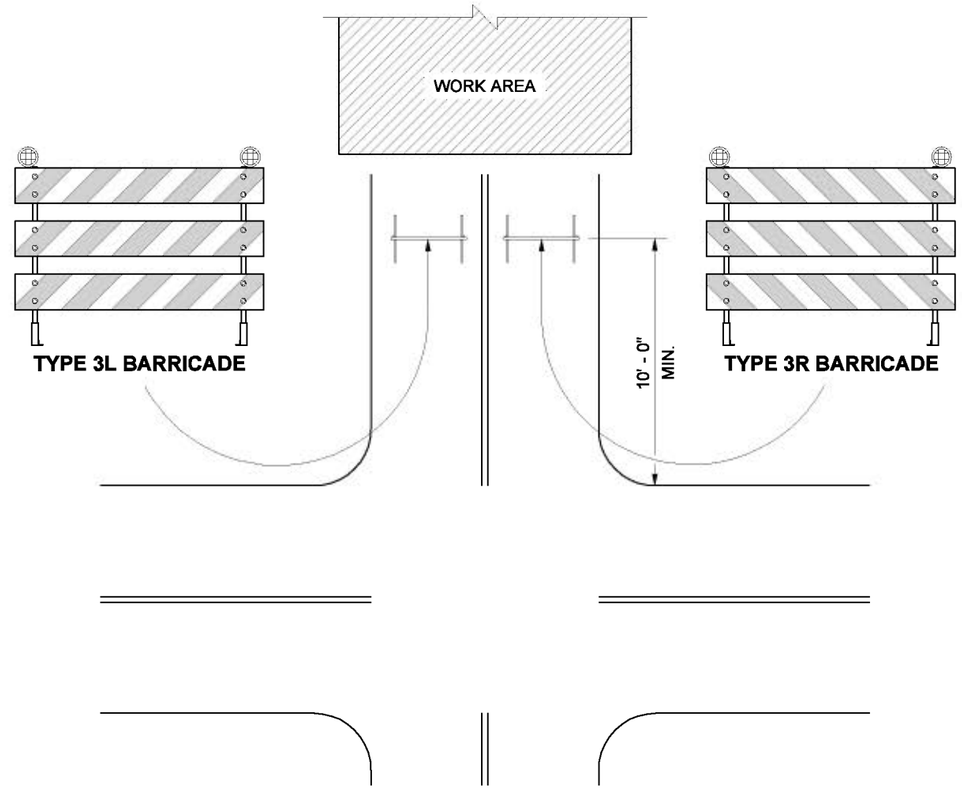

ROAD CLOSURE AT INTERSECTION

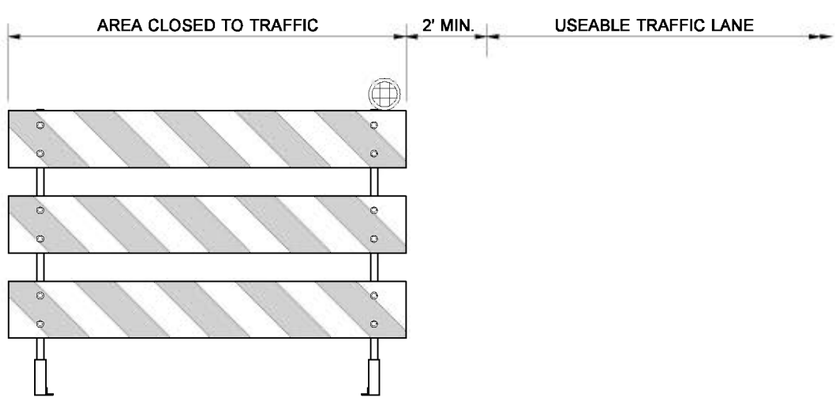

TYPE 3R BARRICADE

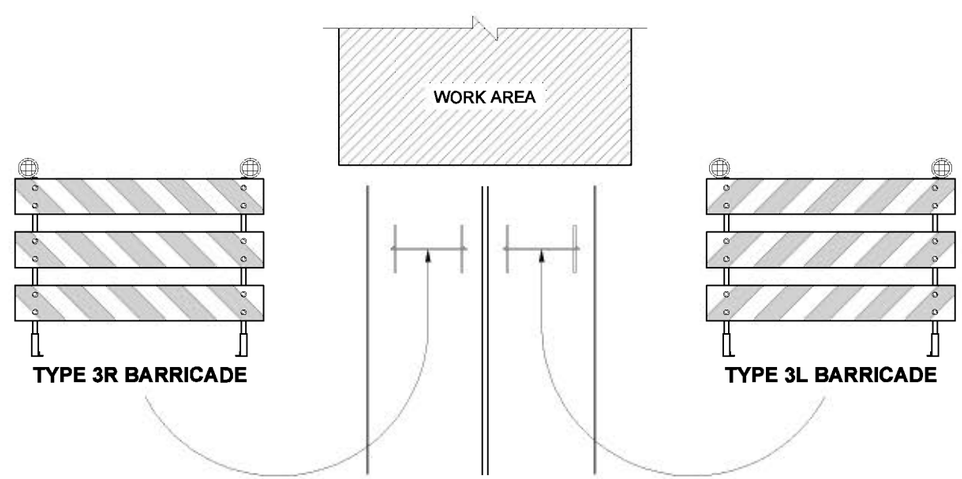

ROAD CLOSURE AT OTHER LOCATIONS

BARRICADE PLACEMENT

THEODORE J. TREPANIER
STATE OF WASHINGTON
25335
REGISTERED
PROFESSIONAL ENGINEER

EXPIRES AUGUST 9, 2007

NOTE: THIS PLAN IS NOT A LEGAL ENGINEERING DOCUMENT BUT AN ELECTRONIC DUPLICATE. THE ORIGINAL, SIGNED BY THE ENGINEER AND APPROVED FOR PUBLICATION, IS KEPT ON FILE AT THE WASHINGTON STATE DEPARTMENT OF TRANSPORTATION. A COPY MAY BE OBTAINED UPON REQUEST.

DRAWN BY: LISA CYFORD

TYPE 3 BARRICADE

STANDARD PLAN K-80.20-00

SHEET 2 OF 2 SHEETS

APPROVED FOR PUBLICATION

Kevin J. Dayton — STATE DESIGN ENGINEER

12-20-06 — DATE

Washington State Department of Transportation

EFFECTIVE: AUGUST 6, 2012 TO August 4, 2013
EFFECTIVE: AUGUST 6, 2012 TO August 4, 2013
EFFECTIVE: AUGUST 6, 2012 TO August 4, 2013
EFFECTIVE: AUGUST 6, 2012 TO August 4, 2013

EFFECTIVE: AUGUST 6, 2012 TO August 4, 2013
EFFECTIVE: AUGUST 6, 2012 TO August 4, 2013

DRAWN BY: MARK SUJKA

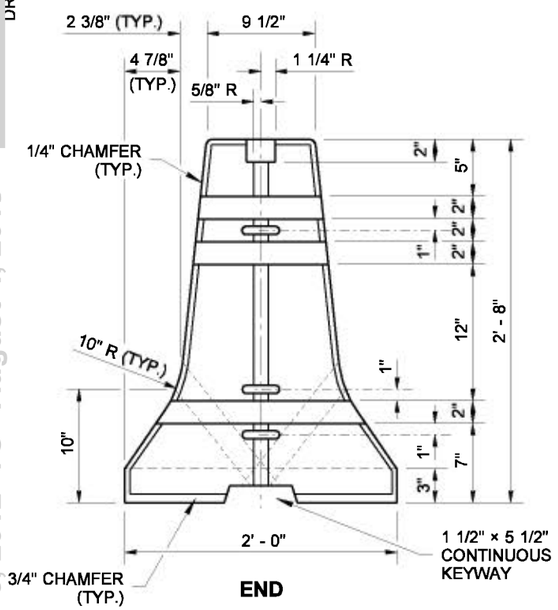

END

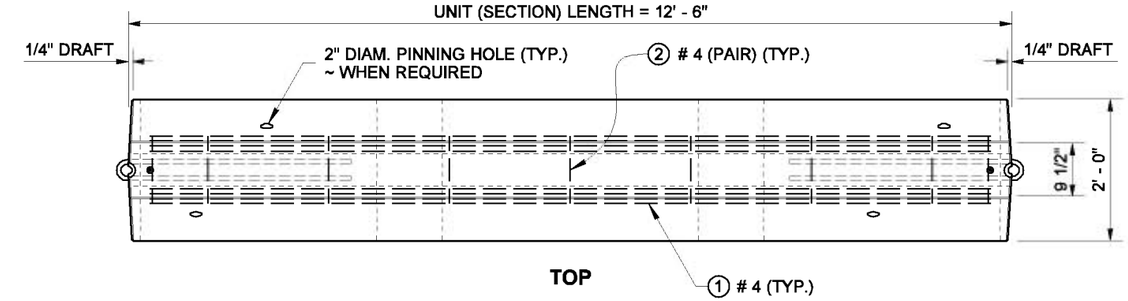

TOP

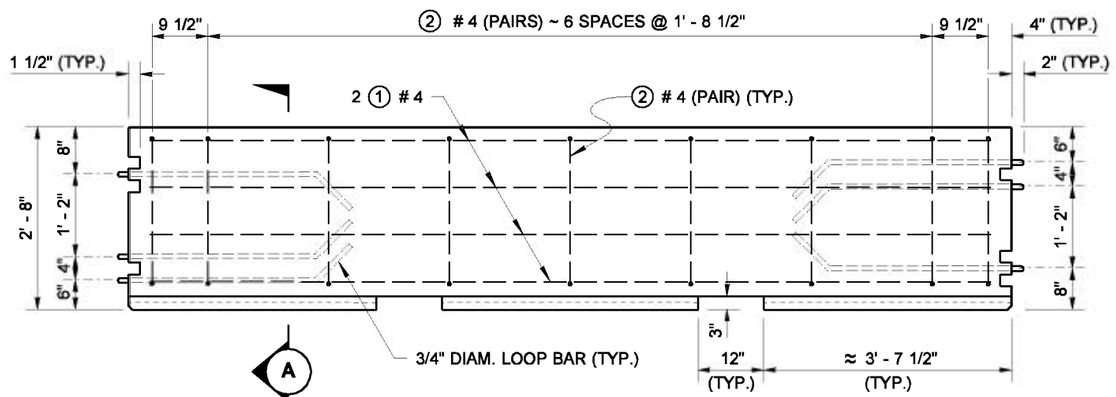

SIDE

NOTES

1. The reinforcing steel details for the NARROW BASE barrier are the same as those shown for the 2' wide barrier except that the bars along the vertical face run vertically with a 1 1/2" clearance.
2. The vertical dimensions for the slots and loop bar locations on the NARROW BASE barrier are the same as those shown on the END views of the 2' wide barrier.

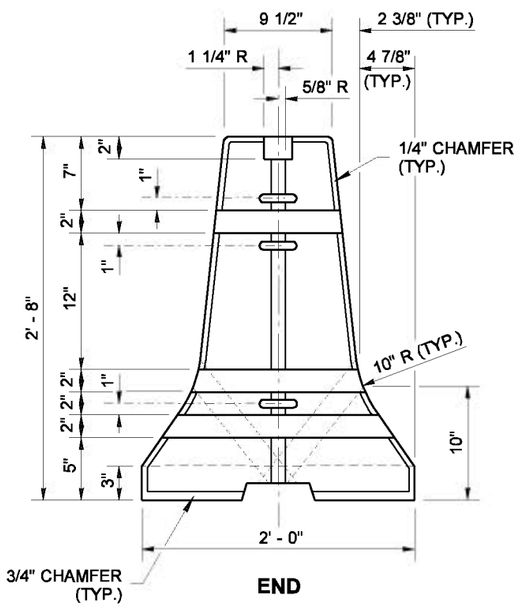

END

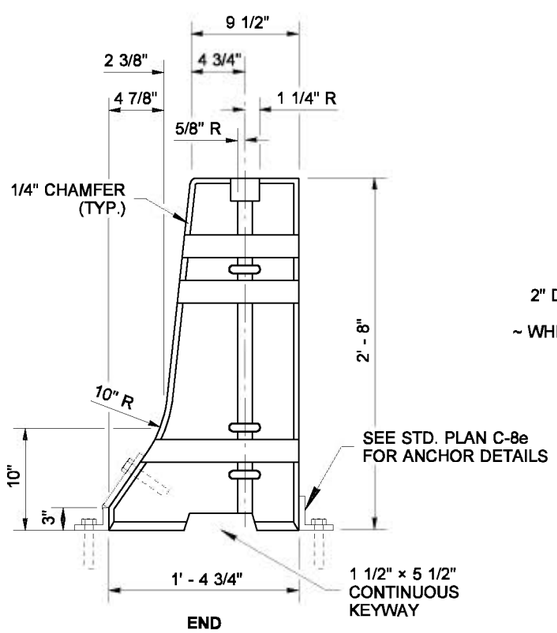

END

NARROW BASE

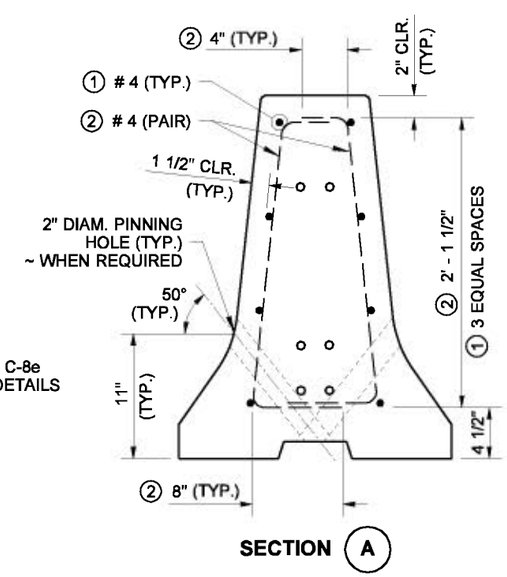

SECTION A

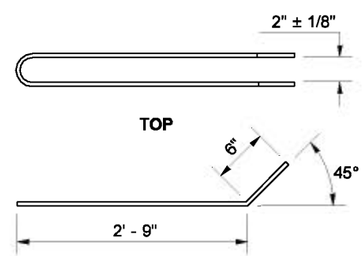

SIDE

ALTERNATIVE LOOP BAR

3/4" DIAM. (ASTM A 36)

HOT DIP GALVANIZE AFTER FABRICATION (ASTM A 123)

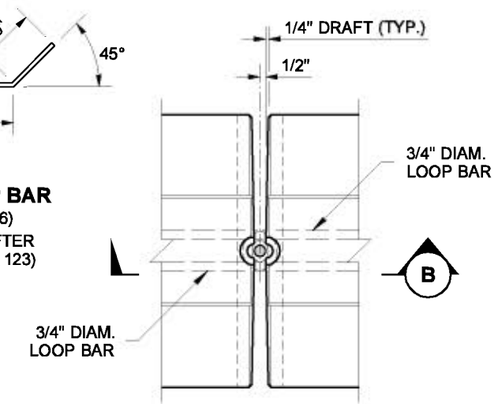

TOP

END DETAIL

JOINING TWO BARRIER SEGMENTS

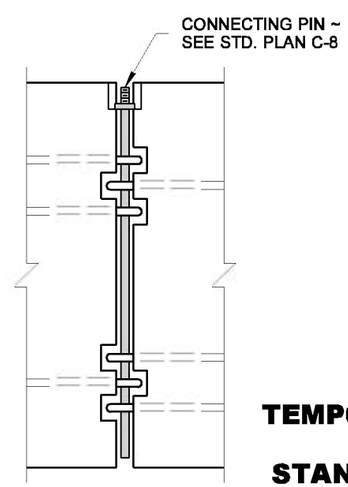

SECTION B

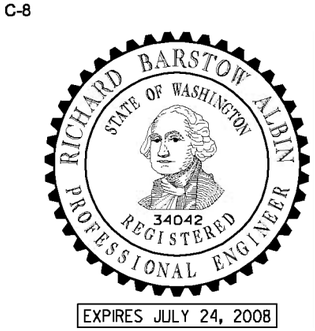

EXPIRES JULY 24, 2008

NOTE: THIS PLAN IS NOT A LEGAL ENGINEERING DOCUMENT BUT AN ELECTRONIC DUPLICATE. THE ORIGINAL, SIGNED BY THE ENGINEER AND APPROVED FOR PUBLICATION, IS KEPT ON FILE AT THE WASHINGTON STATE DEPARTMENT OF TRANSPORTATION. A COPY MAY BE OBTAINED UPON REQUEST.

ALTERNATIVE TEMPORARY CONC. BARRIER (F-SHAPE)

STANDARD PLAN K-80.30-00

SHEET 1 OF 1 SHEET

APPROVED FOR PUBLICATION

Ken L. Smith — STATE DESIGN ENGINEER

02-21-07 — DATE

Washington State Department of Transportation

EFFECTIVE: AUGUST 6, 2012 TO August 4, 2013
EFFECTIVE: AUGUST 6, 2012 TO August 4, 2013
EFFECTIVE: AUGUST 6, 2012 TO August 4, 2013
EFFECTIVE: AUGUST 6, 2012 TO August 4, 2013
EFFECTIVE: AUGUST 6, 2012 TO August 4, 2013
EFFECTIVE: AUGUST 6, 2012 TO August 4, 2013

EFFECTIVE: AUGUST 6, 2012 TO August 4, 2013
EFFECTIVE: AUGUST 6, 2012 TO August 4, 2013

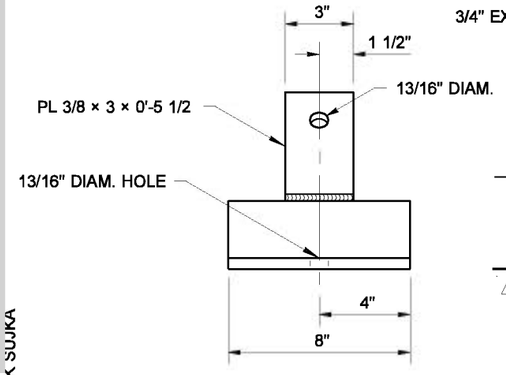

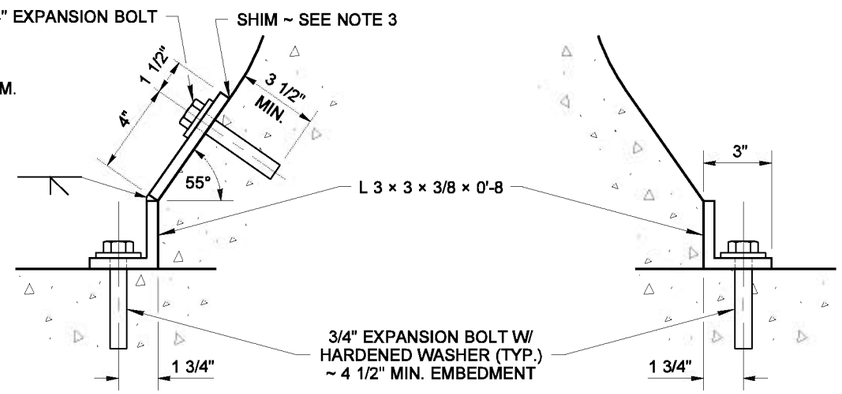

ATTACHMENT "A" DETAIL

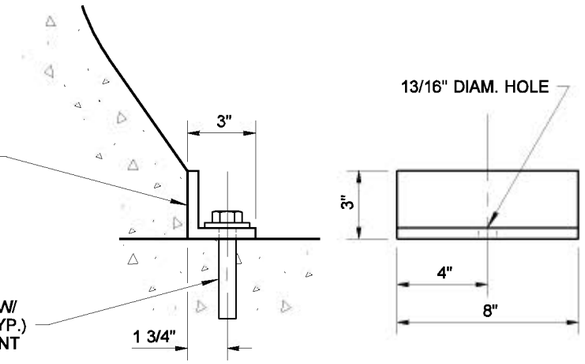

ATTACHMENT "B" DETAIL

NOTES

1. Use Type 1 Anchors when the concrete pavement or bridge deck is 6" or thicker with 2' wide concrete barrier only. Use Type 2 Anchors (Standard Plan K-80.37) with narrow base barrier.
2. Adjust the location of the Type 1 Anchors to avoid the main reinforcing in the deck when drilling holes.
3. Use shims to properly fit the Type 1 Anchors to the barrier and roadway surfaces.
4. Upon removal of the Type 1 Anchors, clean the bolt holes and fill them with grout according to Standard Specification 6.02.3(20).
5. Remove the Type 3 Anchors by first driving the steel pins down through the barrier further into the pavement to allow lifting the barrier without interference, then remove the pins from the pavement.
6. After removing the Type 3 Anchors, clean the pin holes and fill them with sealant according to Standard Specification 9-04.2.

DRAWN BY: MARK SUJKA

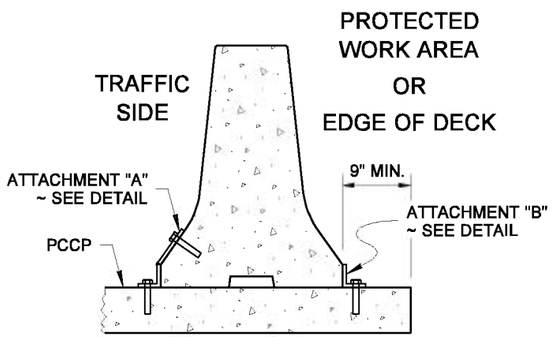

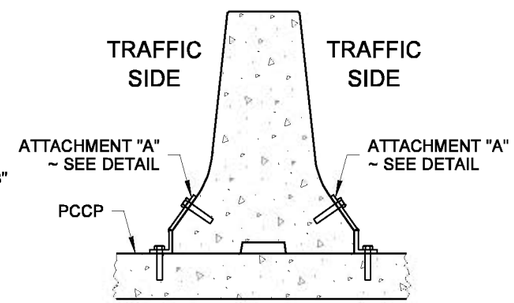

SECTION VIEWS
(F-SHAPE SHOWN)

TYPE 1 ANCHOR
ATTACHMENT LOCATIONS

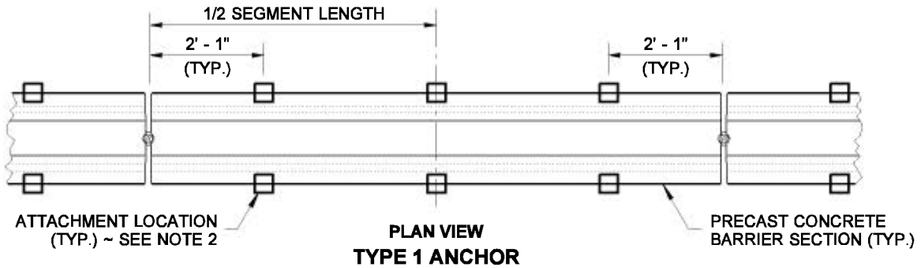

PLAN VIEW
TYPE 1 ANCHOR
ATTACHMENT LOCATIONS

TYPE 1 ANCHOR

TEMPORARY INSTALLATION OF
PRECAST CONC. BARRIER TYPE 2 (STD. PLAN C-8) AND
TEMPORARY CONC. BARRIER (F-SHAPE) (STD. PLAN K-80.30)
ON CEMENT CONC. PAVEMENT OR BRIDGE DECK

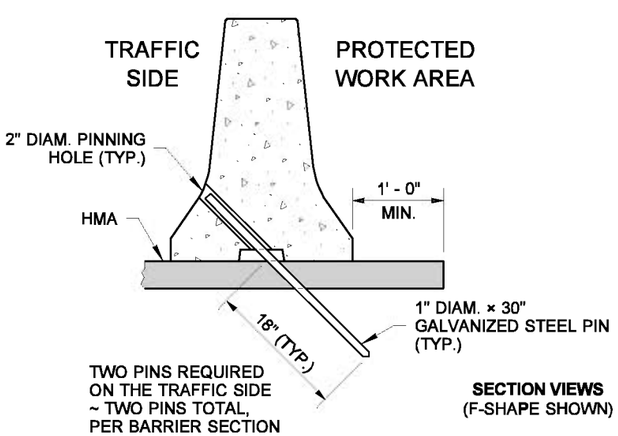

SECTION VIEWS
(F-SHAPE SHOWN)

TYPE 3 ANCHOR
PIN LOCATIONS

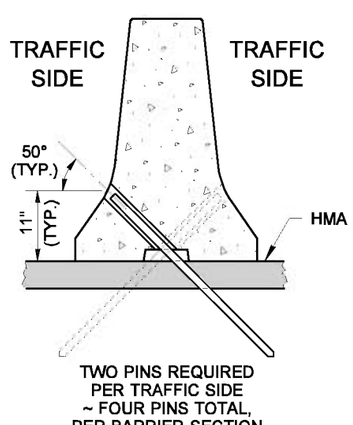

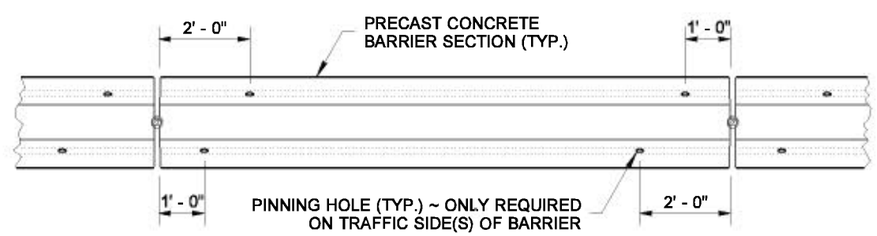

PLAN VIEW

TYPE 3 ANCHOR
PIN LOCATIONS

TYPE 3 ANCHOR

TEMPORARY INSTALLATION OF
PRECAST CONC. BARRIER TYPE 2 (STD. PLAN C-8) AND
TEMPORARY CONC. BARRIER (F-SHAPE) (STD. PLAN K-80.30)
ON HOT MIX ASPHALT PAVEMENT

NOTE: THIS PLAN IS NOT A LEGAL ENGINEERING DOCUMENT BUT AN ELECTRONIC DUPLICATE. THE ORIGINAL, SIGNED BY THE ENGINEER AND APPROVED FOR PUBLICATION, IS KEPT ON FILE AT THE WASHINGTON STATE DEPARTMENT OF TRANSPORTATION. A COPY MAY BE OBTAINED UPON REQUEST.

TEMPORARY CONC. BARRIER ANCHORING

STANDARD PLAN K-80.35-00

SHEET 1 OF 1 SHEET

APPROVED FOR PUBLICATION

Ken L. Smith — STATE DESIGN ENGINEER
02-21-07 — DATE

Washington State Department of Transportation

EFFECTIVE: AUGUST 6, 2012 TO August 4, 2013
EFFECTIVE: AUGUST 6, 2012 TO August 4, 2013
EFFECTIVE: AUGUST 6, 2012 TO August 4, 2013
EFFECTIVE: AUGUST 6, 2012 TO August 4, 2013

EFFECTIVE: AUGUST 6, 2012 TO August 4, 2013
EFFECTIVE: AUGUST 6, 2012 TO August 4, 2013

DRAWN BY: MARK SUJKA

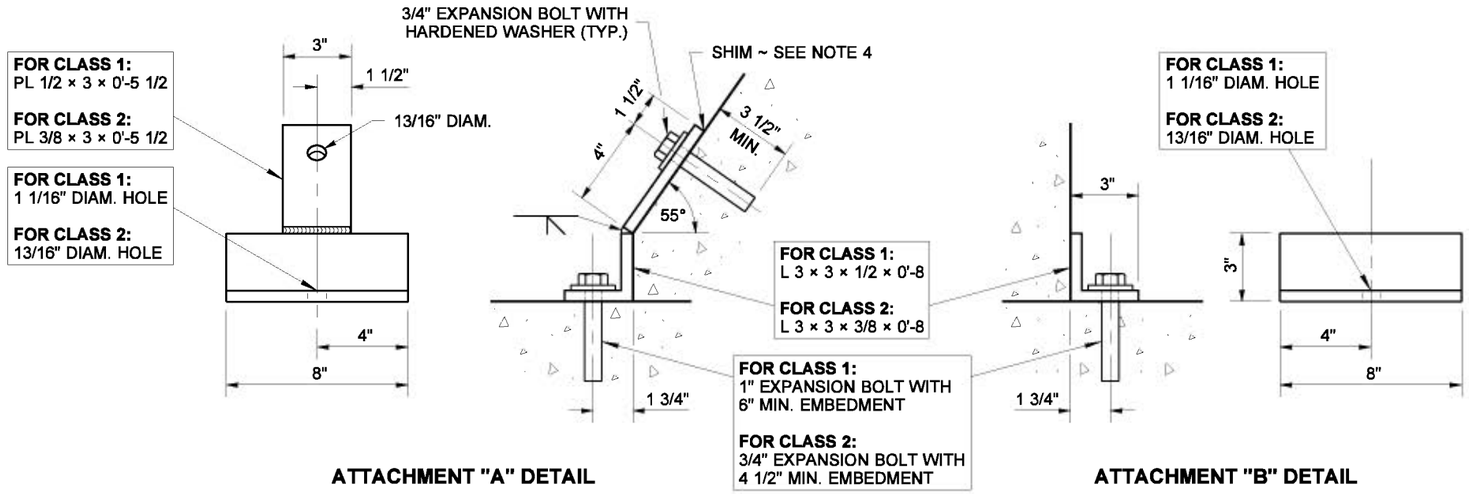

ATTACHMENT "A" DETAIL

ATTACHMENT "B" DETAIL

NOTES

1. The intended use of this plan is for the temporary installation of Alternative Temporary Concrete Barrier (F-Shape), Narrow Base (see Standard Plan K-80.30) on cement concrete pavement or bridge deck.
2. Use Class 1 when the concrete pavement or bridge deck is 9" or thicker; use Class 2 when it is 6" or thicker.
3. Adjust the location of the anchors to avoid the main reinforcing in the deck when drilling holes.
4. Use shims to properly fit the anchors to the barrier and roadway surfaces.
5. Upon removal of the anchors, clean the bolt holes and fill them with grout according to Standard Specification 6.02.3(20).

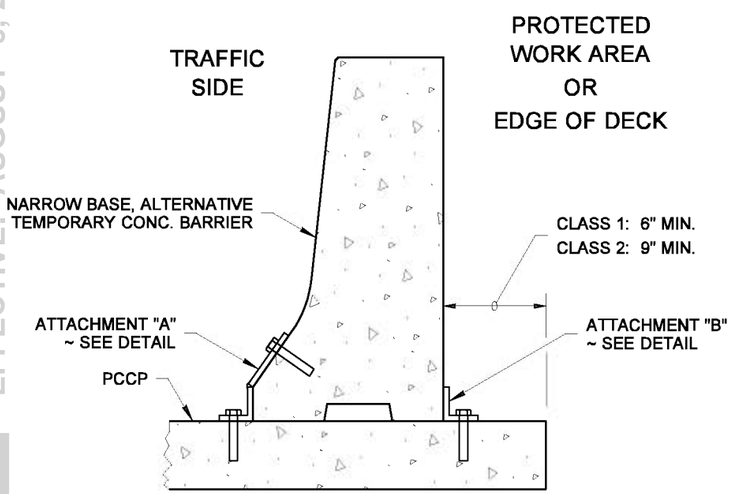

SECTION VIEW

TYPE 2 ANCHOR: CLASS 1 & 2
ATTACHMENT LOCATIONS

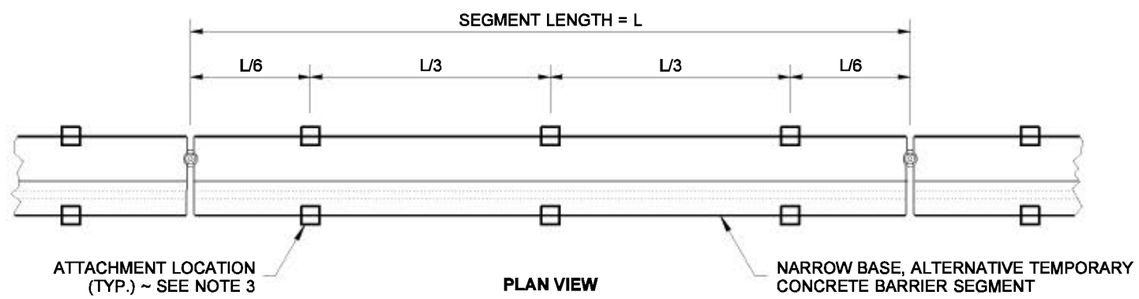

PLAN VIEW

TYPE 2 ANCHOR: CLASS 1
ATTACHMENT LOCATIONS

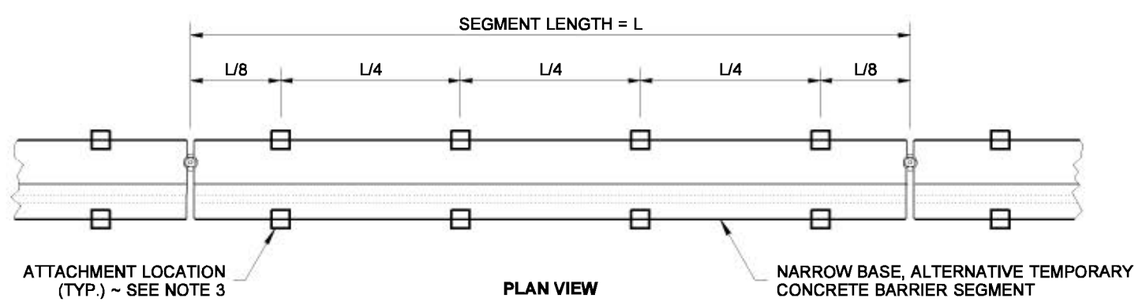

PLAN VIEW

TYPE 2 ANCHOR: CLASS 2
ATTACHMENT LOCATIONS

NOTE: THIS PLAN IS NOT A LEGAL ENGINEERING DOCUMENT BUT AN ELECTRONIC DUPLICATE. THE ORIGINAL, SIGNED BY THE ENGINEER AND APPROVED FOR PUBLICATION, IS KEPT ON FILE AT THE WASHINGTON STATE DEPARTMENT OF TRANSPORTATION. A COPY MAY BE OBTAINED UPON REQUEST.

TEMPORARY CONC. BARRIER ANCHORING ~ NARROW

STANDARD PLAN K-80.37-00

SHEET 1 OF 1 SHEET

APPROVED FOR PUBLICATION

Ken L. Smith — STATE DESIGN ENGINEER — *02-21-07* DATE

Washington State Department of Transportation

EFFECTIVE: AUGUST 6, 2012 TO August 4, 2013
EFFECTIVE: AUGUST 6, 2012 TO August 4, 2013
EFFECTIVE: AUGUST 6, 2012 TO August 4, 2013
EFFECTIVE: AUGUST 6, 2012 TO August 4, 2013

EFFECTIVE: AUGUST 6, 2012 TO August 4, 2013

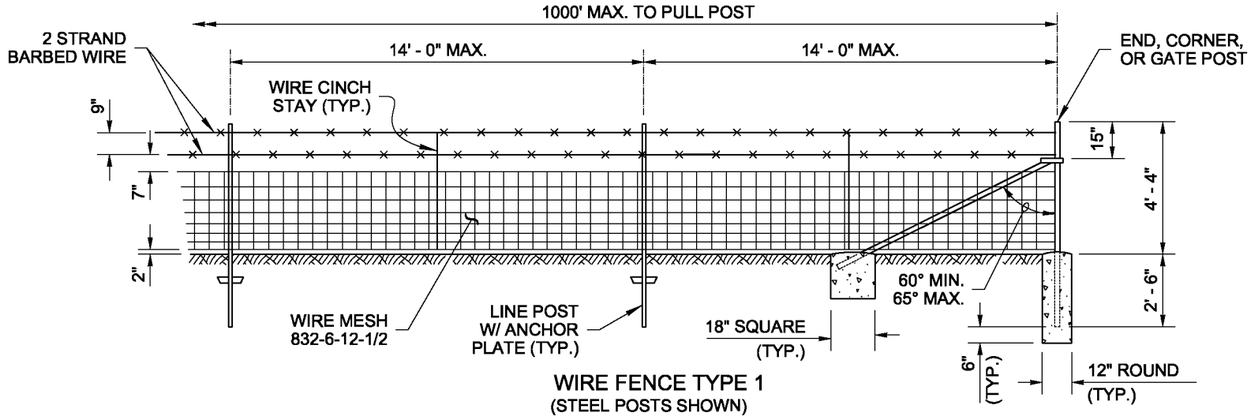

WIRE FENCE TYPE 1
(STEEL POSTS SHOWN)

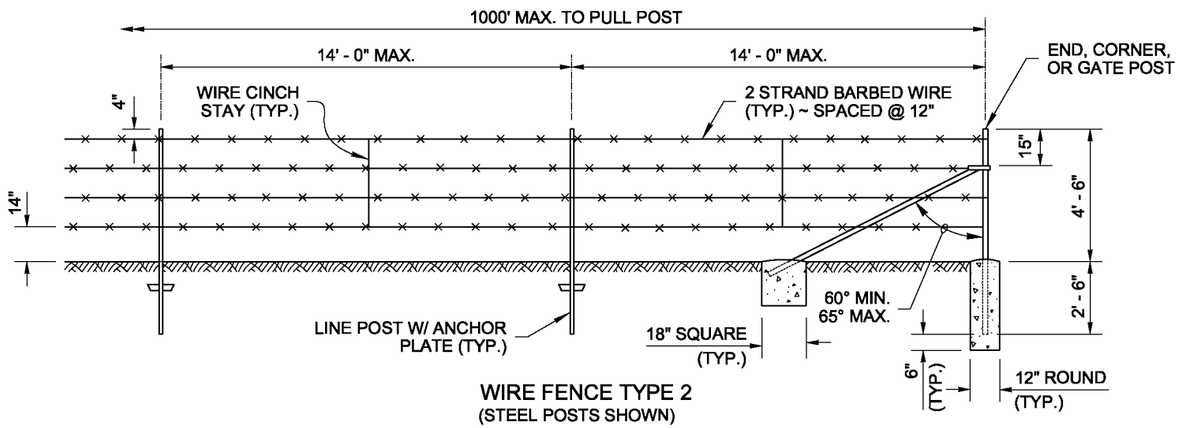

WIRE FENCE TYPE 2
(STEEL POSTS SHOWN)

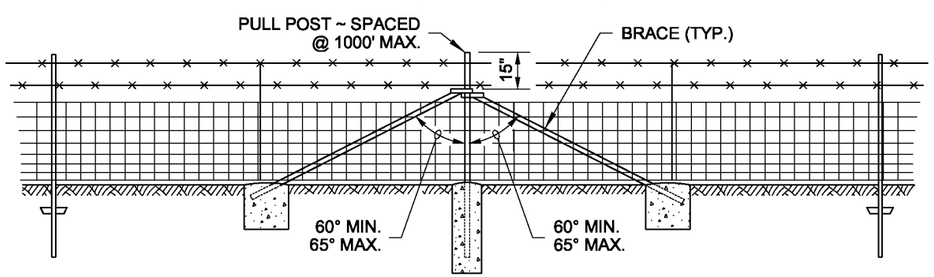

INTERMEDIATE BRACING/PULL POST
(SHOWN FOR WIRE FENCE TYPE 1)

NOTES

1. The bracing and pull post details for Wire Fence Type 2 are the same as for Type 1.
2. Attach the wire mesh to the posts using four fasteners. Three additional fasteners per post are required within and at the limits of sag conditions. Use additional fasteners on posts that mark the angle point of any sudden change in topography.
3. See Standard Specification 9-16.2(1) for wood post sizes. Wood anchors (for wood posts) shall be 2 × 4 lumber, 12" long minimum, and fastened with three 16d galvanized nails.

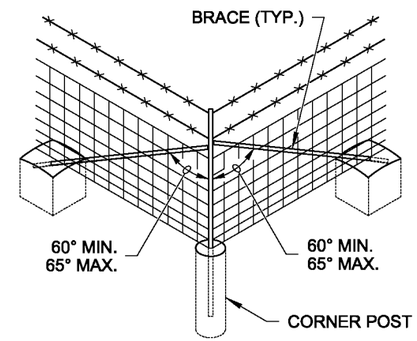

CORNER BRACING
(SHOWN FOR WIRE FENCE TYPE 1)

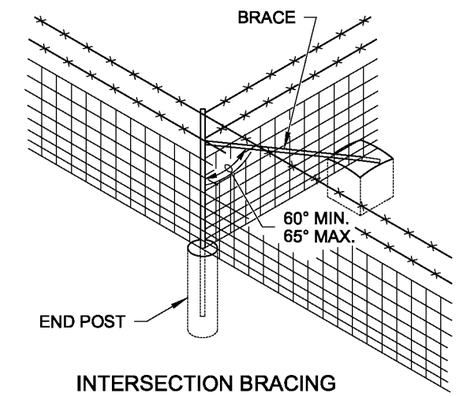

INTERSECTION BRACING
(SHOWN FOR WIRE FENCE TYPE 1)

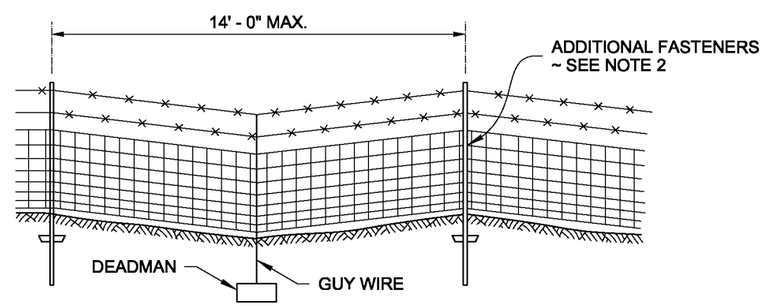

GRADE DEPRESSION (SAG) DETAIL
(STEEL POSTS SHOWN)

STEEL POSTS AND BRACES

POST SPECIFICATIONS

POST	PIPE	ROLL FORMED		T-POST
	NOM. SIZE (SCH. 40) I.D.	SECTION	WEIGHT (lb/ft)	WEIGHT (lb/ft)
END, CORNER, OR PULL POST	2" DIAM.	Y	5.10	
LINE OR BRACE POST	2" DIAM.	Z	1.85	1.33

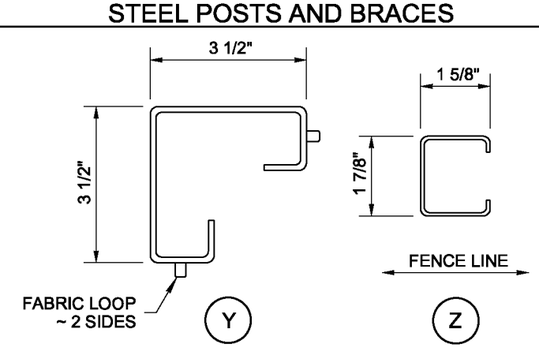

NOTE: THIS PLAN IS NOT A LEGAL ENGINEERING DOCUMENT BUT AN ELECTRONIC DUPLICATE. THE ORIGINAL, SIGNED BY THE ENGINEER AND APPROVED FOR PUBLICATION, IS KEPT ON FILE AT THE WASHINGTON STATE DEPARTMENT OF TRANSPORTATION. A COPY MAY BE OBTAINED UPON REQUEST.

WIRE FENCE TYPES 1 & 2 AND WIRE GATES

STANDARD PLAN L-10.10-02

SHEET 1 OF 2 SHEETS

APPROVED FOR PUBLICATION

Pasco Bakotich III — STATE DESIGN ENGINEER
06/21/12 — DATE

Washington State Department of Transportation

DRAWN BY: LISA CYFORD

EFFECTIVE: AUGUST 6, 2012 TO August 4, 2013

EFFECTIVE: AUGUST 6, 2012 TO August 4, 2013
EFFECTIVE: AUGUST 6, 2012 TO August 4, 2013

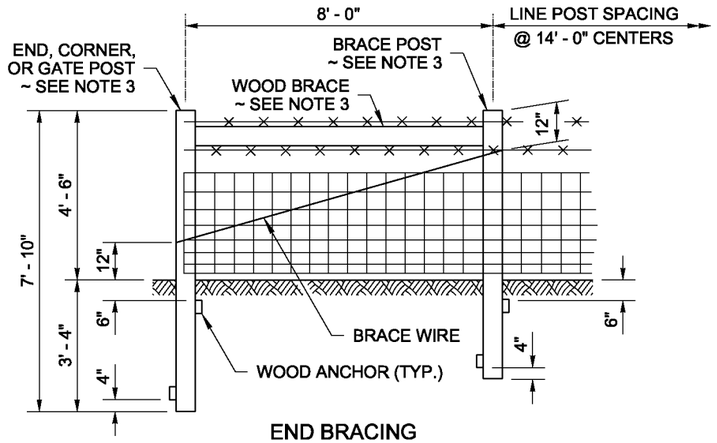

END BRACING
(WIRE FENCE TYPE 1 SHOWN)

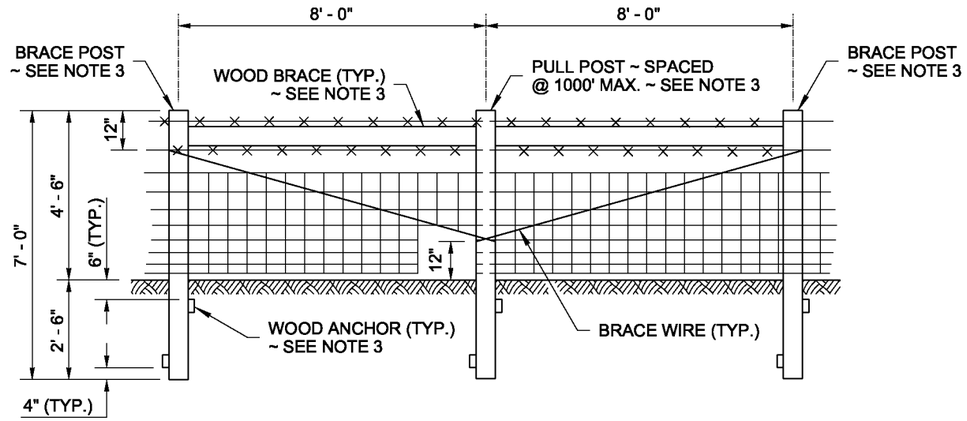

INTERMEDIATE BRACING/PULL POST
(WIRE FENCE TYPE 1 SHOWN)

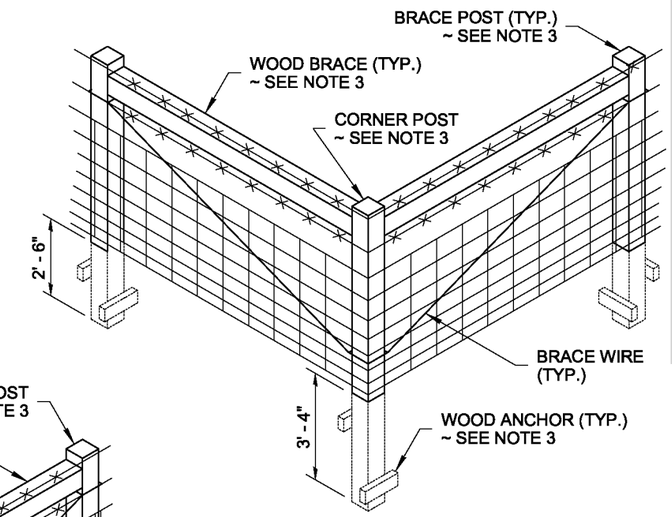

CORNER BRACING
(WIRE FENCE TYPE 1 SHOWN)

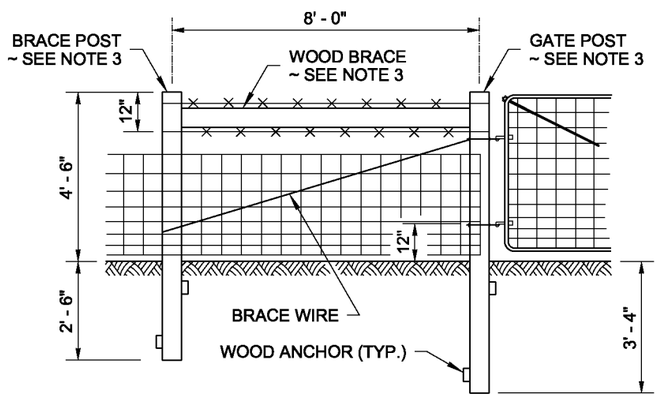

GATE BRACING
(WIRE FENCE TYPE 1 SHOWN)

WOOD POSTS AND BRACES

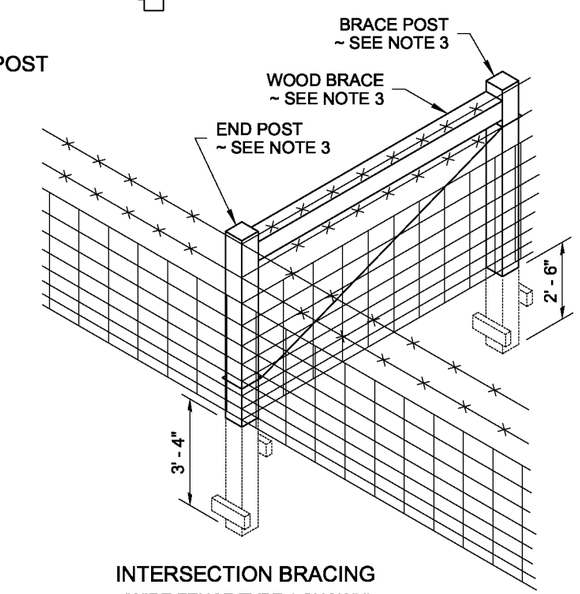

INTERSECTION BRACING
(WIRE FENCE TYPE 1 SHOWN)

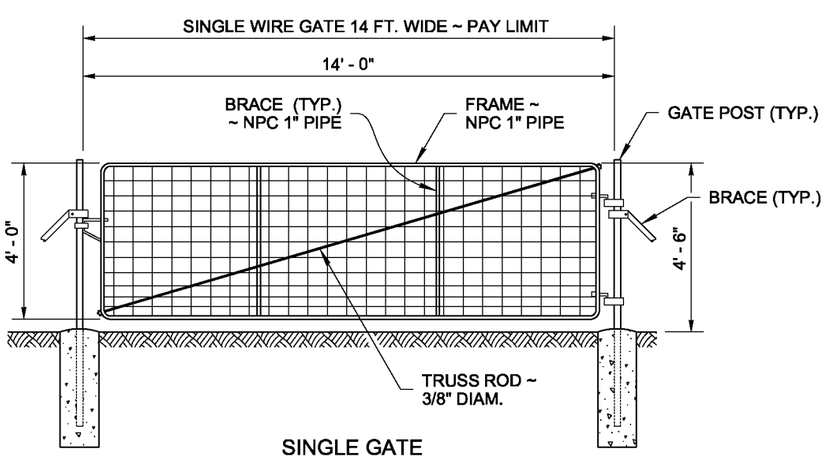

SINGLE GATE
(STEEL POSTS SHOWN)

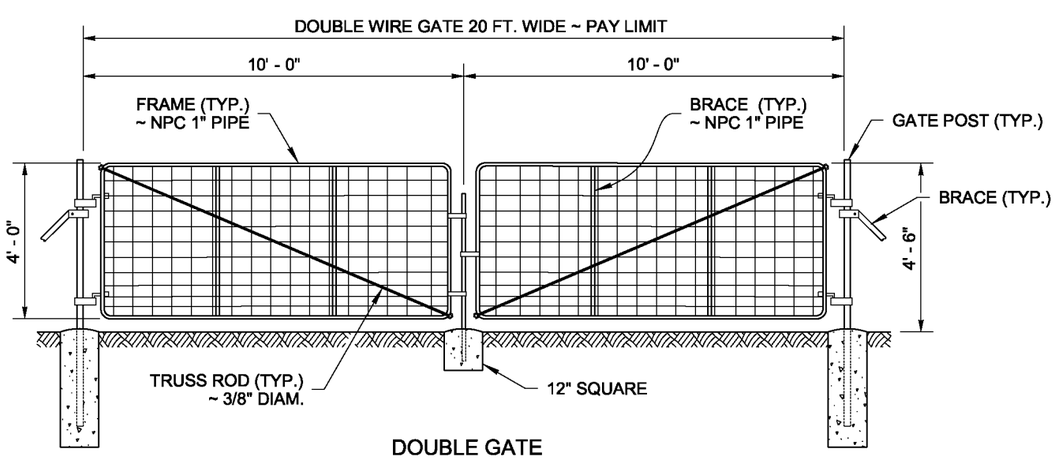

DOUBLE GATE
(STEEL POSTS SHOWN)

GATES

NOTE: THIS PLAN IS NOT A LEGAL ENGINEERING DOCUMENT BUT AN ELECTRONIC DUPLICATE. THE ORIGINAL, SIGNED BY THE ENGINEER AND APPROVED FOR PUBLICATION, IS KEPT ON FILE AT THE WASHINGTON STATE DEPARTMENT OF TRANSPORTATION. A COPY MAY BE OBTAINED UPON REQUEST.

WIRE FENCE TYPES 1 & 2 AND WIRE GATES

STANDARD PLAN L-10.10-02

SHEET 2 OF 2 SHEETS

APPROVED FOR PUBLICATION

Pasco Bakotich III — STATE DESIGN ENGINEER

06/21/12 — DATE

Washington State Department of Transportation

DRAWN BY: LISA CYFORD

EFFECTIVE: AUGUST 6, 2012 TO August 4, 2013
EFFECTIVE: AUGUST 6, 2012 TO August 4, 2013
EFFECTIVE: AUGUST 6, 2012 TO August 4, 2013
EFFECTIVE: AUGUST 6, 2012 TO August 4, 2013

EFFECTIVE: AUGUST 6, 2012 TO August 4, 2013
EFFECTIVE: AUGUST 6, 2012 TO August 4, 2013

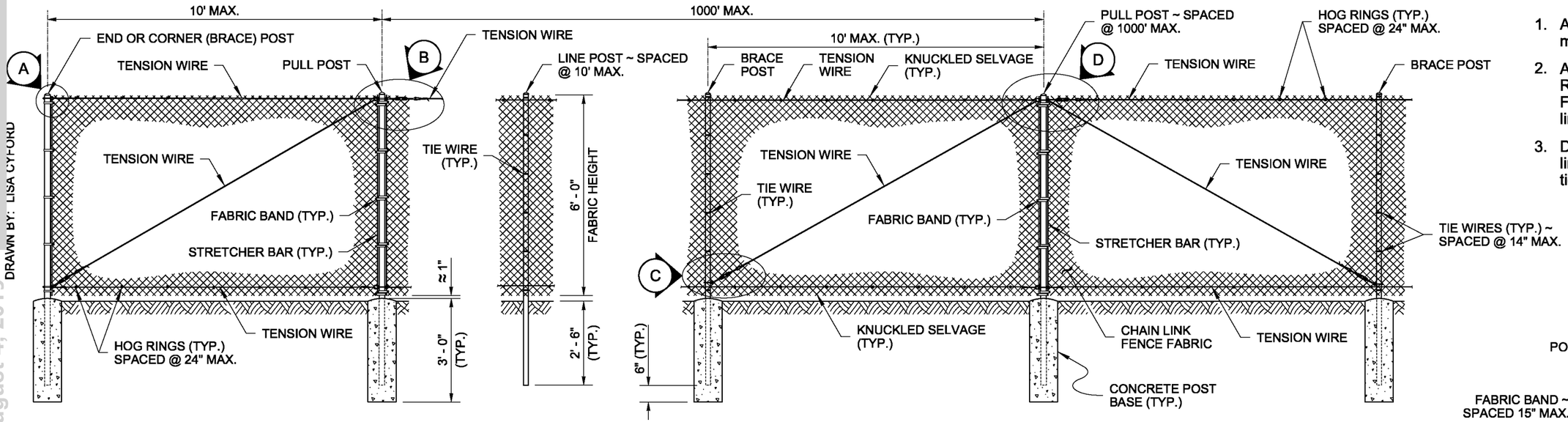

TYPE 3

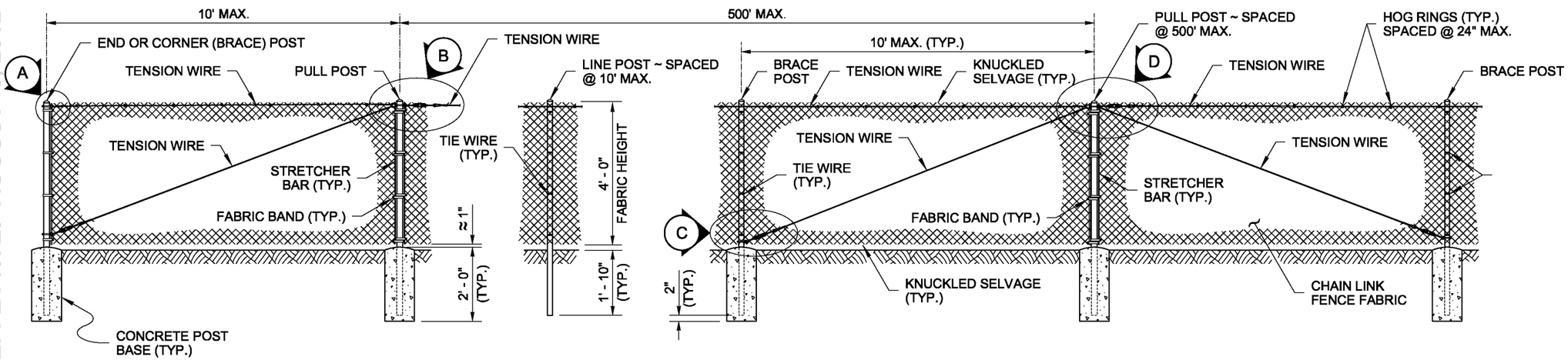

TYPE 4

NOTES

1. All concrete post bases shall be 10" minimum diameter.
2. Along the top and bottom, using Hog Rings, fasten the Chain Link Fence Fabric to the Tension Wire within the limits of the first full fabric weave.
3. Details are illustrative and shall not limit hardware design or post selection of any particular fence type.

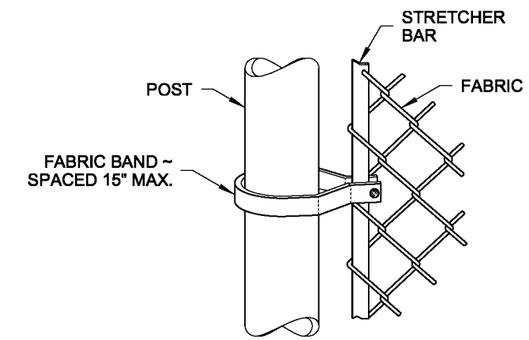

METHOD OF FASTENING STRETCHER BAR TO POST

POST AND RAIL SPECIFICATIONS			
POST	PIPE	ROLL FORMED	
	NOM. SIZE (SCH. 40) I.D.	SECTION	WEIGHT (lb/ft)
END, CORNER, OR PULL POST	2 1/2" DIAM.	Y	5.10
LINE OR BRACE POST	2" DIAM.	Z	1.85

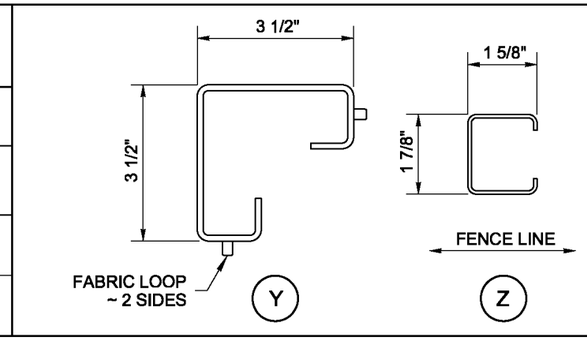

NOTE: THIS PLAN IS NOT A LEGAL ENGINEERING DOCUMENT BUT AN ELECTRONIC DUPLICATE. THE ORIGINAL, SIGNED BY THE ENGINEER AND APPROVED FOR PUBLICATION, IS KEPT ON FILE AT THE WASHINGTON STATE DEPARTMENT OF TRANSPORTATION. A COPY MAY BE OBTAINED UPON REQUEST.

CHAIN LINK FENCE TYPES 3 AND 4

STANDARD PLAN L-20.10-02

SHEET 1 OF 2 SHEETS

APPROVED FOR PUBLICATION

Pasco Bakotich III — STATE DESIGN ENGINEER

06/21/12 — DATE

Washington State Department of Transportation

EFFECTIVE: AUGUST 6, 2012 TO August 4, 2013
EFFECTIVE: AUGUST 6, 2012 TO August 4, 2013
EFFECTIVE: AUGUST 6, 2012 TO August 4, 2013
EFFECTIVE: AUGUST 6, 2012 TO August 4, 2013

EFFECTIVE: AUGUST 6, 2012 TO August 4, 2013
EFFECTIVE: AUGUST 6, 2012 TO August 4, 2013

DRAWN BY: LISA GYFORD

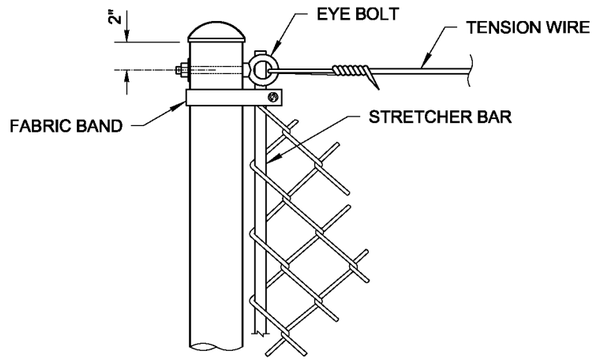

END OR CORNER (BRACE) POST

DETAIL (A)

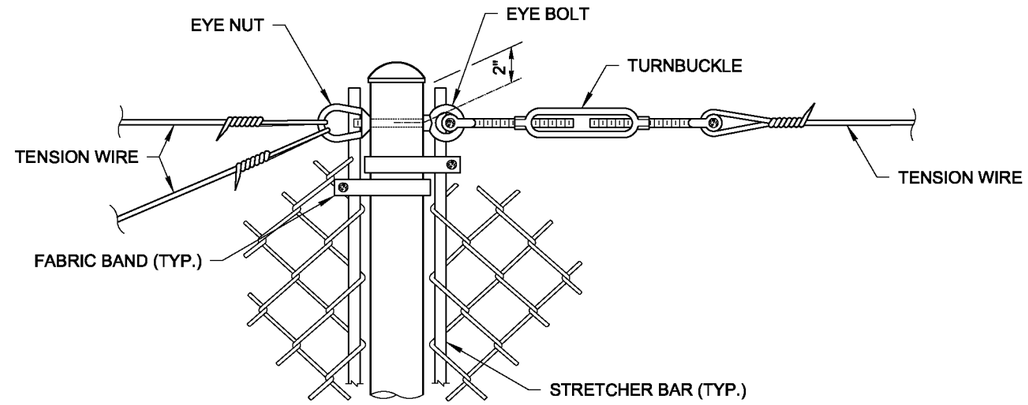

PULL POST (AT END OR CORNER)

DETAIL (B)

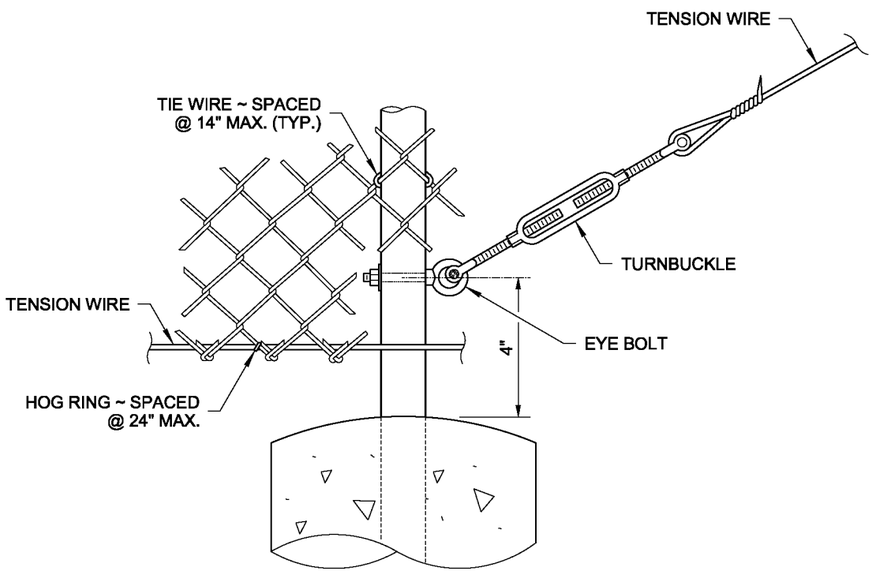

BRACE POST

DETAIL (C)

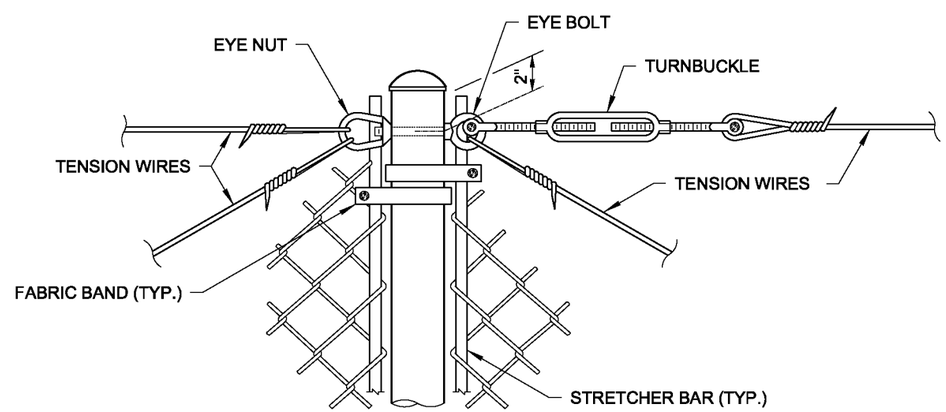

PULL POST (WITHIN RUN)

DETAIL (D)

NOTE: THIS PLAN IS NOT A LEGAL ENGINEERING DOCUMENT BUT AN ELECTRONIC DUPLICATE. THE ORIGINAL, SIGNED BY THE ENGINEER AND APPROVED FOR PUBLICATION, IS KEPT ON FILE AT THE WASHINGTON STATE DEPARTMENT OF TRANSPORTATION. A COPY MAY BE OBTAINED UPON REQUEST.

CHAIN LINK FENCE TYPES 3 AND 4

STANDARD PLAN L-20.10-02

SHEET 2 OF 2 SHEETS

APPROVED FOR PUBLICATION

Pasco Bakotich III — STATE DESIGN ENGINEER

06/21/12 — DATE

Washington State Department of Transportation

EFFECTIVE: AUGUST 6, 2012 TO August 4, 2013
EFFECTIVE: AUGUST 6, 2012 TO August 4, 2013
EFFECTIVE: AUGUST 6, 2012 TO August 4, 2013
EFFECTIVE: AUGUST 6, 2012 TO August 4, 2013

EFFECTIVE: AUGUST 6, 2012 TO August 4, 2013
EFFECTIVE: AUGUST 6, 2012 TO August 4, 2013

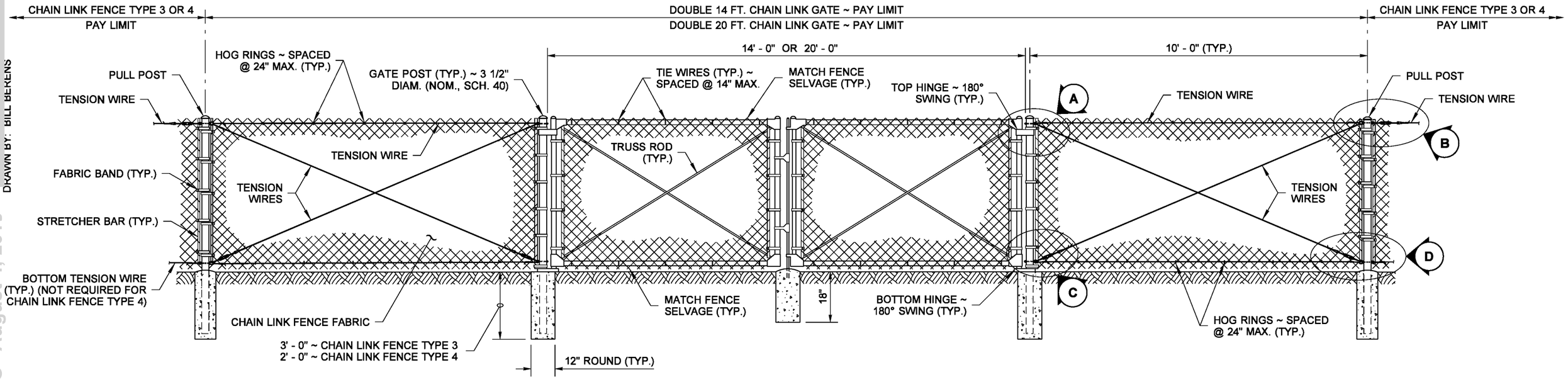

DOUBLE GATE

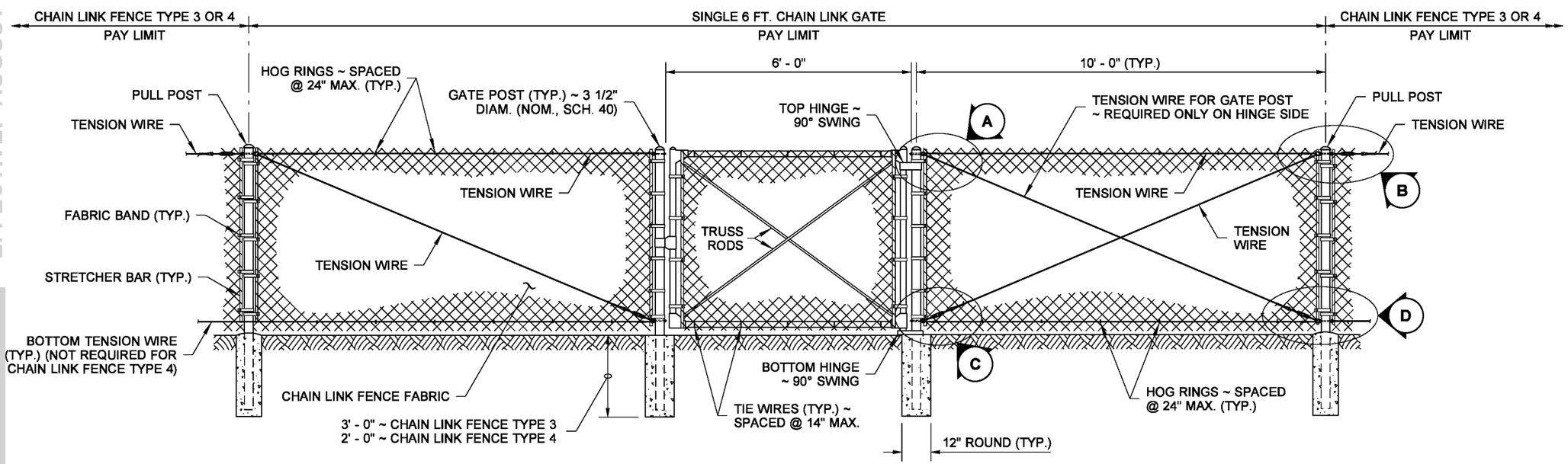

SINGLE GATE

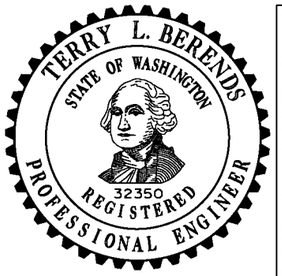

NOTE: THIS PLAN IS NOT A LEGAL ENGINEERING DOCUMENT BUT AN ELECTRONIC DUPLICATE. THE ORIGINAL, SIGNED BY THE ENGINEER AND APPROVED FOR PUBLICATION, IS KEPT ON FILE AT THE WASHINGTON STATE DEPARTMENT OF TRANSPORTATION. A COPY MAY BE OBTAINED UPON REQUEST.

CHAIN LINK GATE

STANDARD PLAN L-30.10-01

SHEET 1 OF 2 SHEETS

APPROVED FOR PUBLICATION

Pasco Bakotich III — STATE DESIGN ENGINEER

06-16-11 — DATE

Washington State Department of Transportation

DRAWN BY: BILL BERENS

EFFECTIVE: AUGUST 6, 2012 TO August 4, 2013
EFFECTIVE: AUGUST 6, 2012 TO August 4, 2013
EFFECTIVE: AUGUST 6, 2012 TO August 4, 2013
EFFECTIVE: AUGUST 6, 2012 TO August 4, 2013

EFFECTIVE: AUGUST 6, 2012 TO August 4, 2013
EFFECTIVE: AUGUST 6, 2012 TO August 4, 2013

DRAWN BY: BILL BERENS

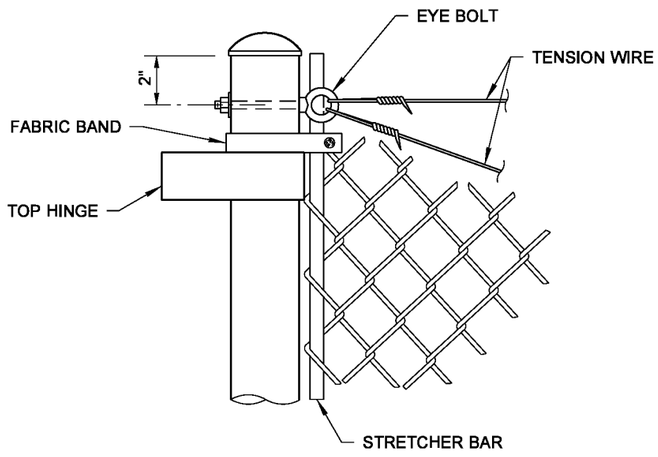

GATE POST

DETAIL (A)

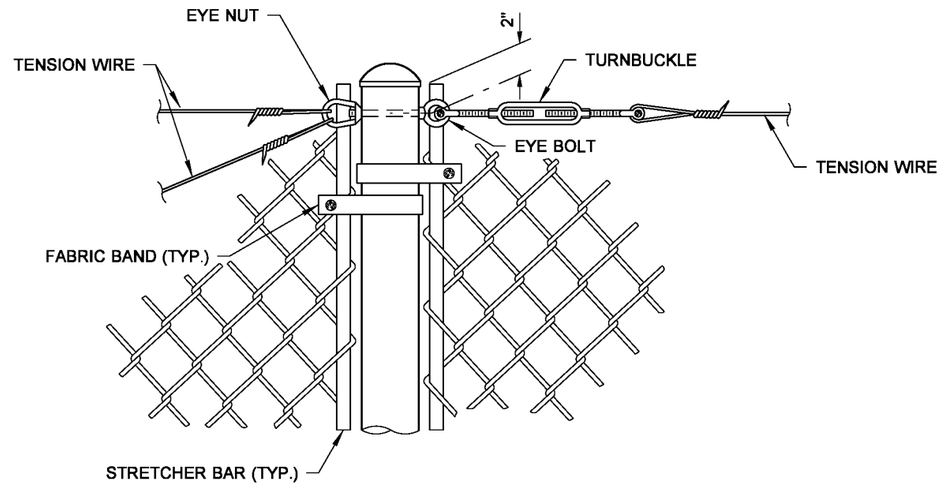

PULL POST

DETAIL (B)

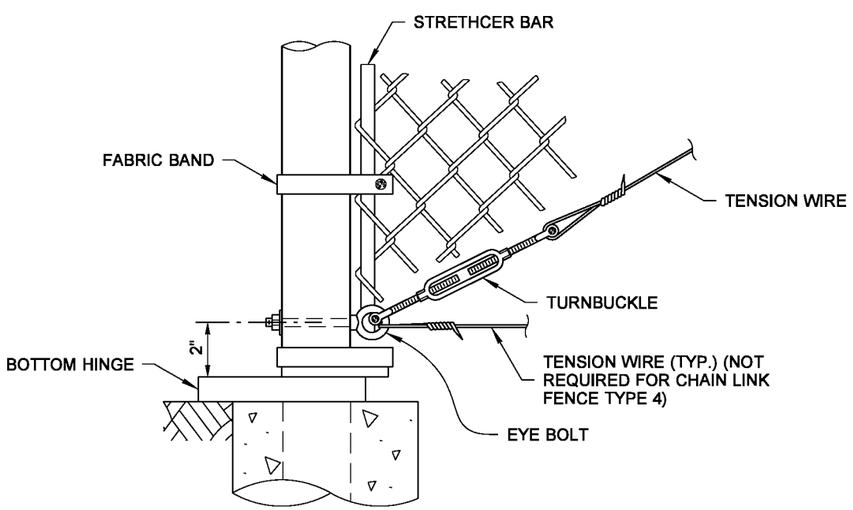

GATE POST

DETAIL (C)

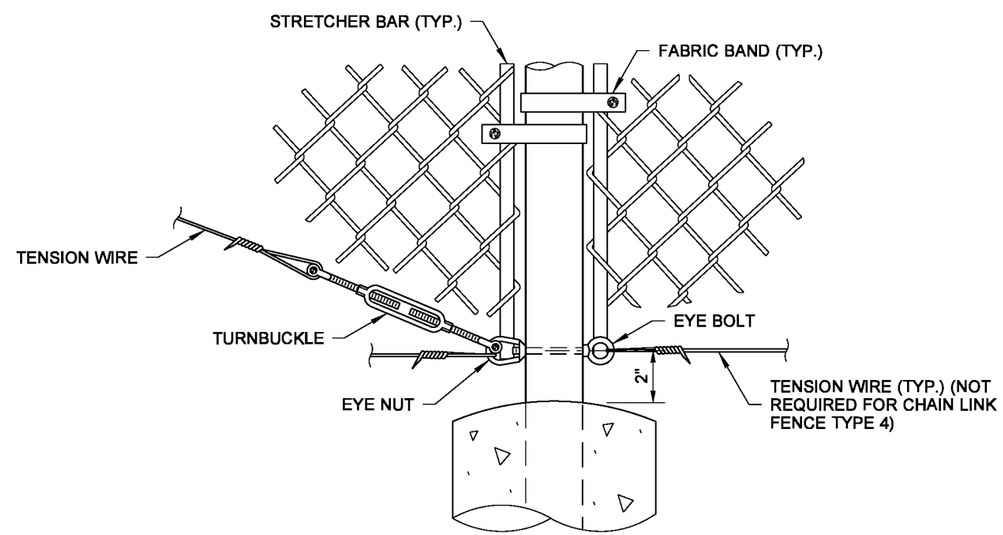

PULL POST

DETAIL (D)

TERRY L. BERENDS
STATE OF WASHINGTON
32350
REGISTERED
PROFESSIONAL ENGINEER

NOTE: THIS PLAN IS NOT A LEGAL ENGINEERING DOCUMENT BUT AN ELECTRONIC DUPLICATE. THE ORIGINAL, SIGNED BY THE ENGINEER AND APPROVED FOR PUBLICATION, IS KEPT ON FILE AT THE WASHINGTON STATE DEPARTMENT OF TRANSPORTATION. A COPY MAY BE OBTAINED UPON REQUEST.

CHAIN LINK GATE

STANDARD PLAN L-30.10-01

SHEET 2 OF 2 SHEETS

APPROVED FOR PUBLICATION

Pasco Bakotich III — STATE DESIGN ENGINEER

06-16-11 — DATE

Washington State Department of Transportation

EFFECTIVE: AUGUST 6, 2012 TO August 4, 2013
EFFECTIVE: AUGUST 6, 2012 TO August 4, 2013
EFFECTIVE: AUGUST 6, 2012 TO August 4, 2013
EFFECTIVE: AUGUST 6, 2012 TO August 4, 2013

EFFECTIVE: AUGUST 6, 2012 TO August 4, 2013
EFFECTIVE: AUGUST 6, 2012 TO August 4, 2013

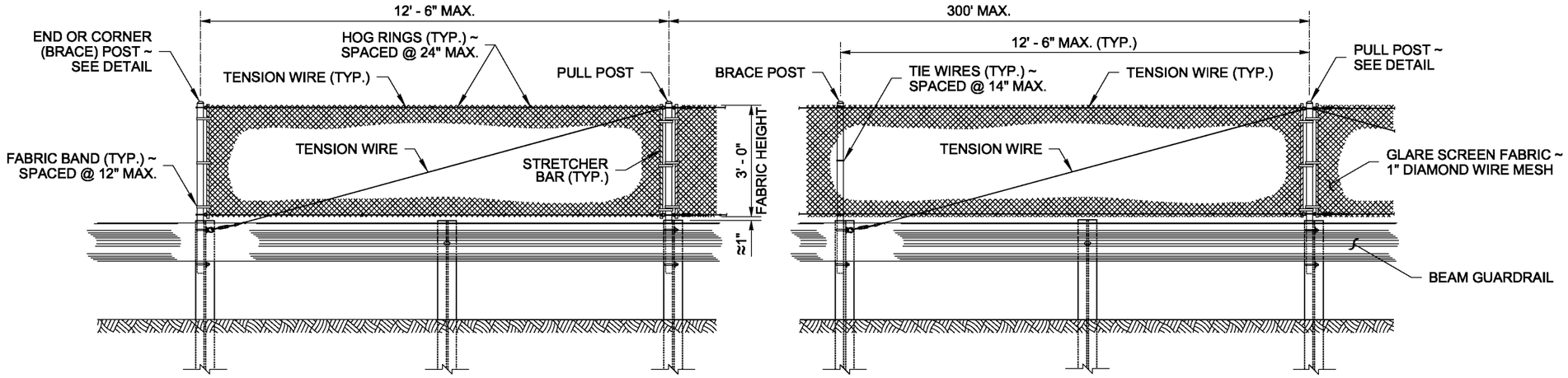

ELEVATION VIEW

NOTES

1. All glare screen posts shall be 2 1/2" I.D. galvanized steel.
2. Wood blocks shown. Blocks of alternate material may be used. Wood blocks shall be toe-nailed to post with 16d galvanized nails to prevent block rotation. See Standard Specification 9-16.3(2).
3. Attach blocks to steel posts using bolt holes on approaching traffic side of post web.
4. See Standard Plan C-1b for posts and wood block details.

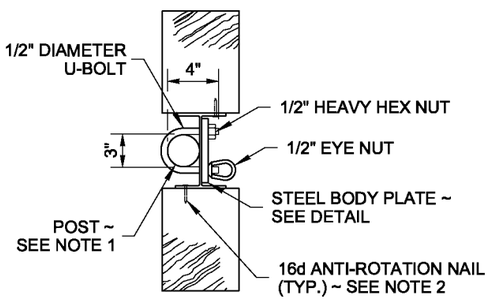

VIEW (B)

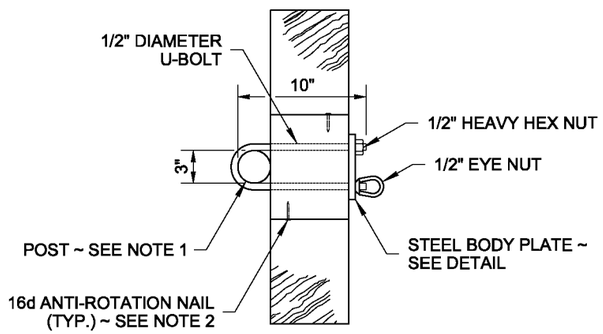

VIEW (B)

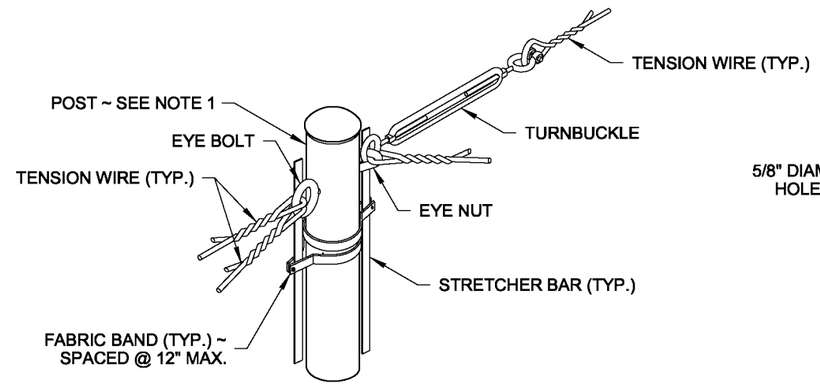

PULL POST (WITHIN RUN)

DETAIL (C)

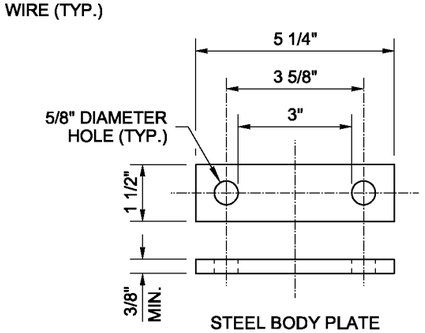

STEEL BODY PLATE

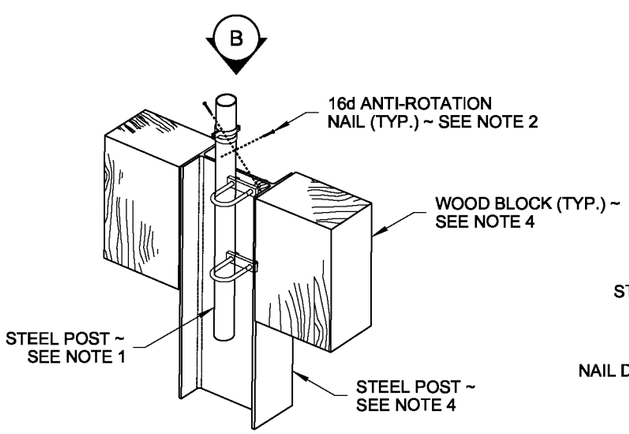

END OR CORNER (BRACE) POST WITH STEEL POST

DETAIL (A)

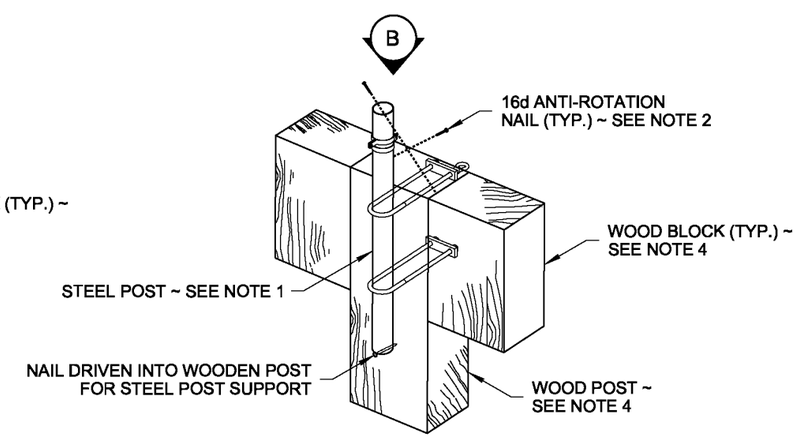

END OR CORNER (BRACE) POST WITH EXISTING WOOD POST

DETAIL (A)

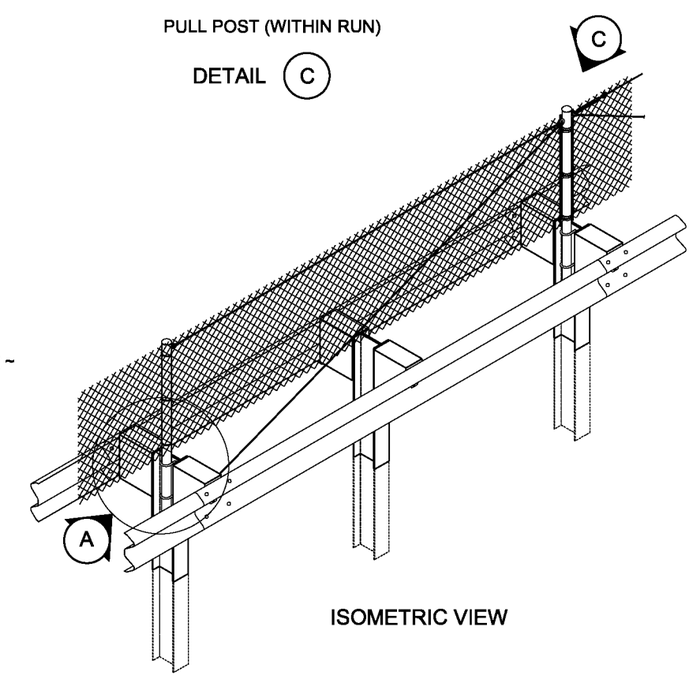

ISOMETRIC VIEW

NOTE: THIS PLAN IS NOT A LEGAL ENGINEERING DOCUMENT BUT AN ELECTRONIC DUPLICATE. THE ORIGINAL, SIGNED BY THE ENGINEER AND APPROVED FOR PUBLICATION, IS KEPT ON FILE AT THE WASHINGTON STATE DEPARTMENT OF TRANSPORTATION. A COPY MAY BE OBTAINED UPON REQUEST.

GLARE SCREEN TYPE 1 DESIGN A

STANDARD PLAN L-40.10-02

SHEET 1 OF 2 SHEETS

APPROVED FOR PUBLICATION

Pasco Bakotich III — STATE DESIGN ENGINEER — *06/21/12* — DATE

Washington State Department of Transportation

DRAWN BY: LISA CYFORD

EFFECTIVE: AUGUST 6, 2012 TO August 4, 2013
EFFECTIVE: AUGUST 6, 2012 TO August 4, 2013
EFFECTIVE: AUGUST 6, 2012 TO August 4, 2013
EFFECTIVE: AUGUST 6, 2012 TO August 4, 2013

EFFECTIVE: AUGUST 6, 2012 TO August 4, 2013
EFFECTIVE: AUGUST 6, 2012 TO August 4, 2013

DRAWN BY: LISA CYFORD

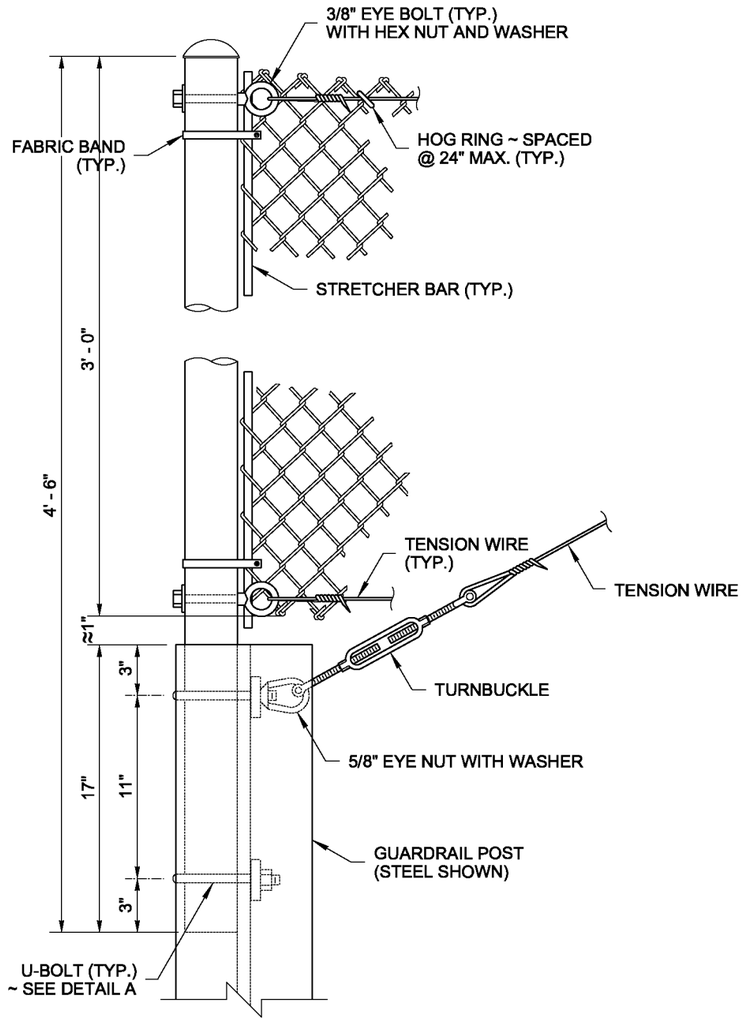

END OR CORNER (BRACE) POST DETAIL

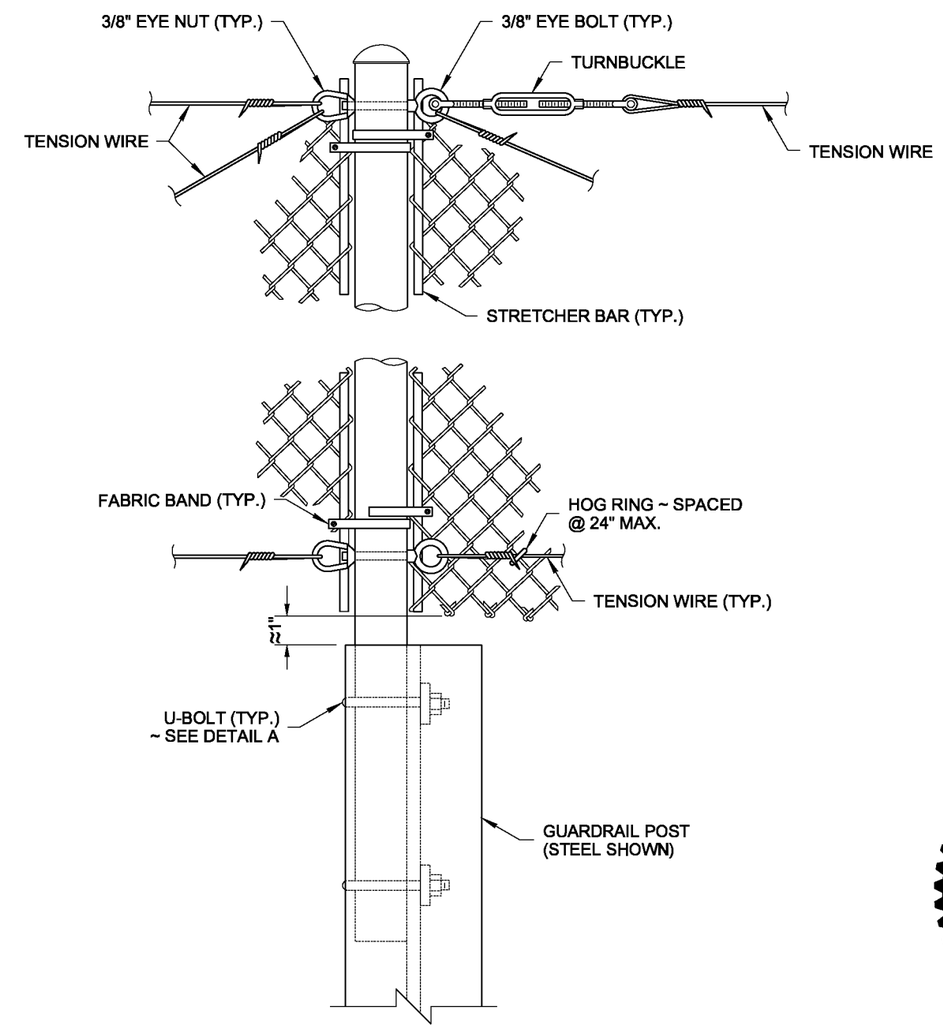

PULL POST (WITHIN RUN) DETAIL

NOTE: THIS PLAN IS NOT A LEGAL ENGINEERING DOCUMENT BUT AN ELECTRONIC DUPLICATE. THE ORIGINAL, SIGNED BY THE ENGINEER AND APPROVED FOR PUBLICATION, IS KEPT ON FILE AT THE WASHINGTON STATE DEPARTMENT OF TRANSPORTATION. A COPY MAY BE OBTAINED UPON REQUEST.

GLARE SCREEN TYPE 1
DESIGN A

STANDARD PLAN L-40.10-02

SHEET 2 OF 2 SHEETS

APPROVED FOR PUBLICATION

Pasco Bakotich III — STATE DESIGN ENGINEER
06/21/12 — DATE

Washington State Department of Transportation

EFFECTIVE: AUGUST 6, 2012 TO August 4, 2013
EFFECTIVE: AUGUST 6, 2012 TO August 4, 2013
EFFECTIVE: AUGUST 6, 2012 TO August 4, 2013
EFFECTIVE: AUGUST 6, 2012 TO August 4, 2013

EFFECTIVE: AUGUST 6, 2012 TO August 4, 2013
EFFECTIVE: AUGUST 6, 2012 TO August 4, 2013

DRAWN BY: BILL BERENS

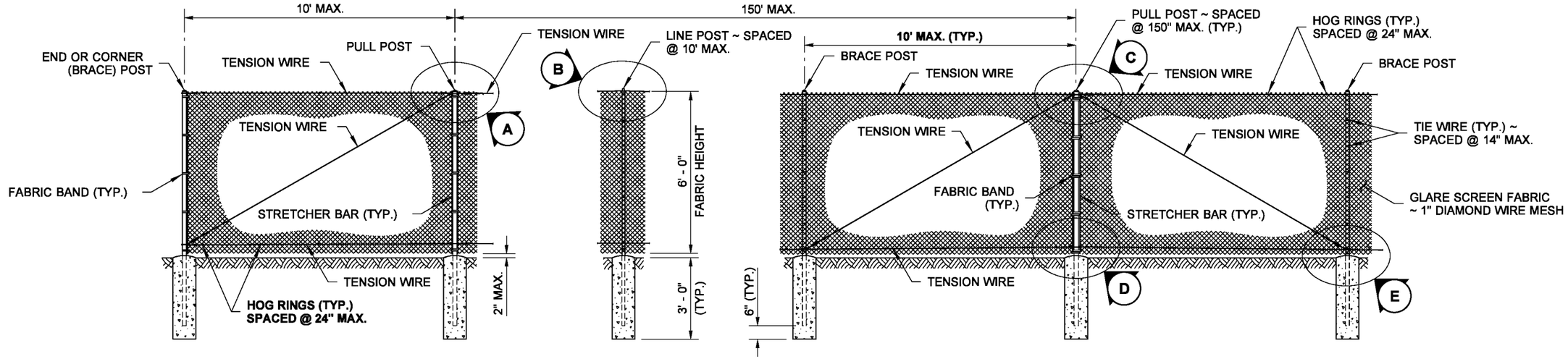

ELEVATION VIEW

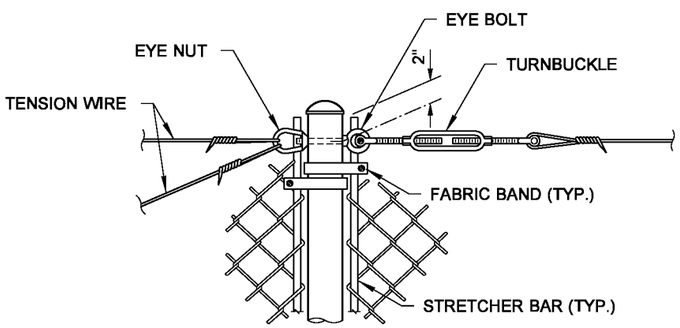

PULL POST

DETAIL A

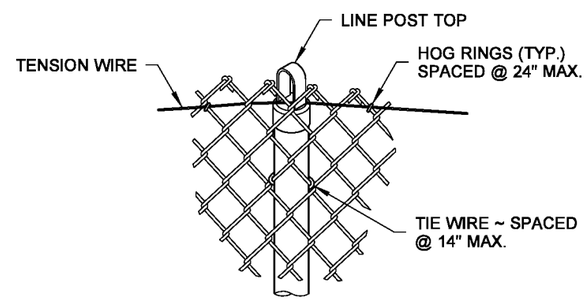

LINE POST

DETAIL B

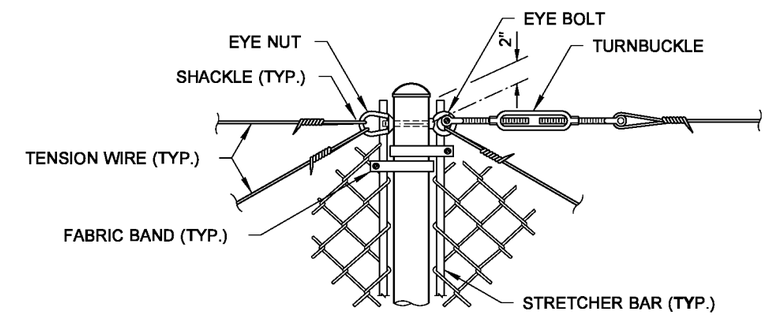

PULL POST (WITHIN RUN)

DETAIL C

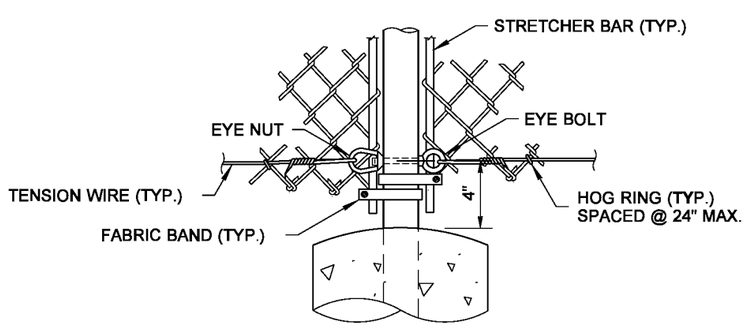

PULL POST

DETAIL D

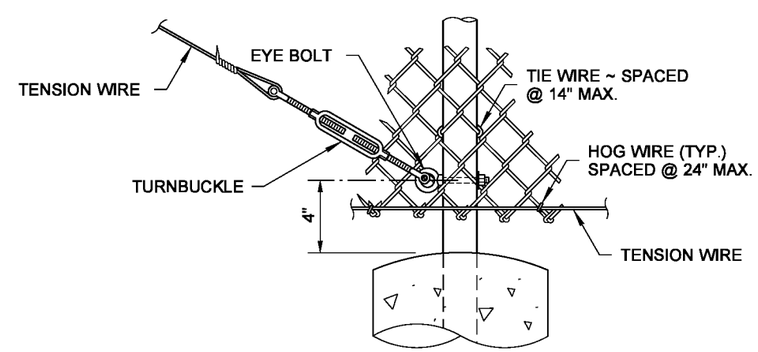

BRACE POST

DETAIL E

NOTE: THIS PLAN IS NOT A LEGAL ENGINEERING DOCUMENT BUT AN ELECTRONIC DUPLICATE. THE ORIGINAL, SIGNED BY THE ENGINEER AND APPROVED FOR PUBLICATION, IS KEPT ON FILE AT THE WASHINGTON STATE DEPARTMENT OF TRANSPORTATION. A COPY MAY BE OBTAINED UPON REQUEST.

GLARE SCREEN TYPE 1 DESIGN B

STANDARD PLAN L-40.15-01

SHEET 1 OF 1 SHEET

APPROVED FOR PUBLICATION

Pasco Bakotich III — STATE DESIGN ENGINEER

06-16-11 — DATE

Washington State Department of Transportation

EFFECTIVE: AUGUST 6, 2012 TO August 4, 2013
EFFECTIVE: AUGUST 6, 2012 TO August 4, 2013
EFFECTIVE: AUGUST 6, 2012 TO August 4, 2013
EFFECTIVE: AUGUST 6, 2012 TO August 4, 2013

EFFECTIVE: AUGUST 6, 2012 TO August 4, 2013
EFFECTIVE: AUGUST 6, 2012 TO August 4, 2013

DRAWN BY: LISA CYFORD

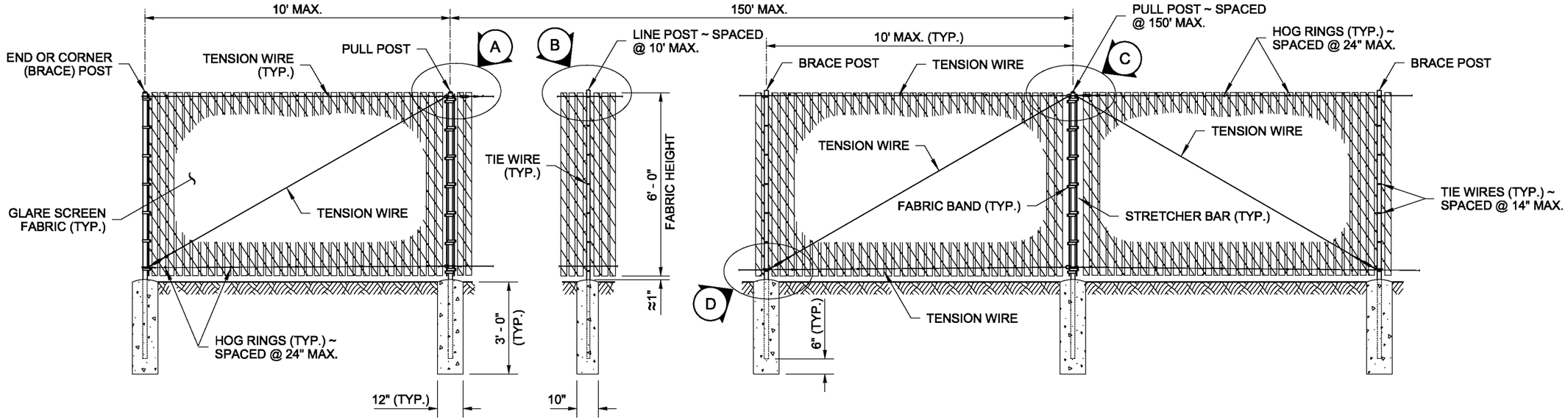

ELEVATION VIEW

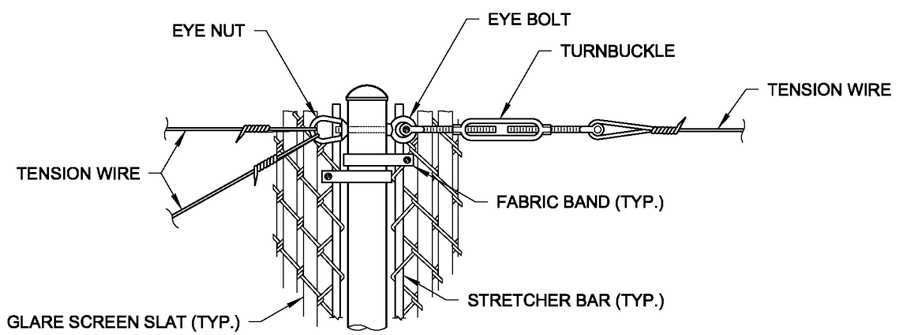

PULL POST

DETAIL A

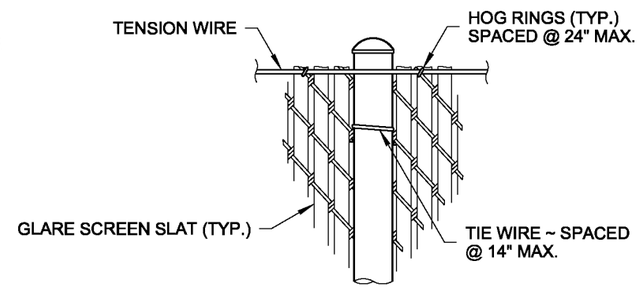

LINE POST

DETAIL B

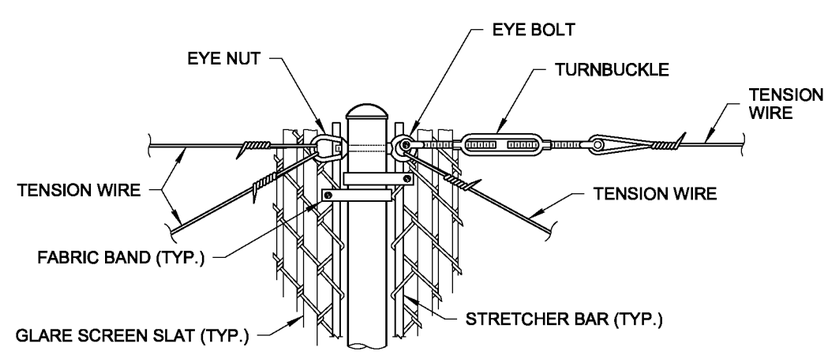

PULL POST (WITHIN RUN)

DETAIL C

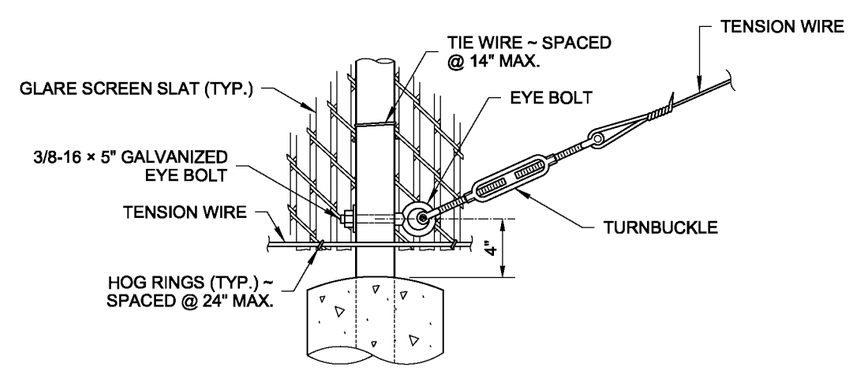

BRACE POST

DETAIL D

NOTE: THIS PLAN IS NOT A LEGAL ENGINEERING DOCUMENT BUT AN ELECTRONIC DUPLICATE. THE ORIGINAL, SIGNED BY THE ENGINEER AND APPROVED FOR PUBLICATION, IS KEPT ON FILE AT THE WASHINGTON STATE DEPARTMENT OF TRANSPORTATION. A COPY MAY BE OBTAINED UPON REQUEST.

GLARE SCREEN TYPE 2 (CHAIN LINK WITH SLATS)

STANDARD PLAN L-40.20-02

SHEET 1 OF 1 SHEET

APPROVED FOR PUBLICATION

Pasco Bakotich III — STATE DESIGN ENGINEER

06/21/12 — DATE

Washington State Department of Transportation

EFFECTIVE: AUGUST 6, 2012 TO August 4, 2013
EFFECTIVE: AUGUST 6, 2012 TO August 4, 2013
EFFECTIVE: AUGUST 6, 2012 TO August 4, 2013
EFFECTIVE: AUGUST 6, 2012 TO August 4, 2013

EFFECTIVE: AUGUST 6, 2012 TO August 4, 2013
EFFECTIVE: AUGUST 6, 2012 TO August 4, 2013

DRAWN BY: BILL BEKENS

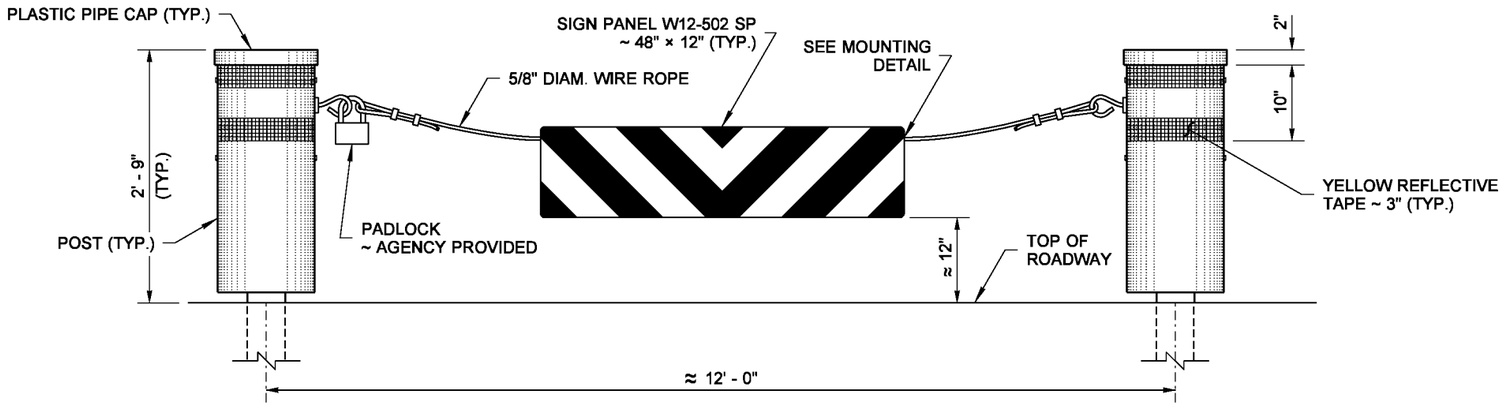

ELEVATION

NOTE

Hardware shall be stainless steel or galvanized in accordance with AASHTO M232.

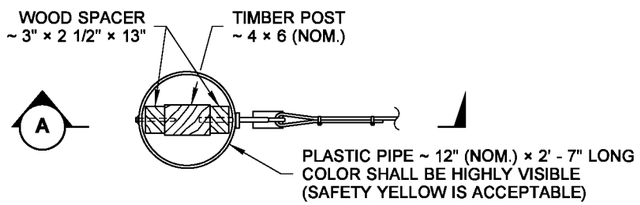

TOP VIEW
(CAP NOT SHOWN)

END POST

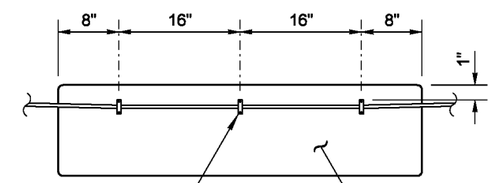

5/8" S.S. EYE STRAP ~ FASTENED TO THE SIGN PANEL WITH 2 1/8" DIAM. SCREWS AND 2 HEX NUTS (TYP.)

SIDE OPPOSITE STRIPES

SIGN PANEL MOUNTING DETAIL

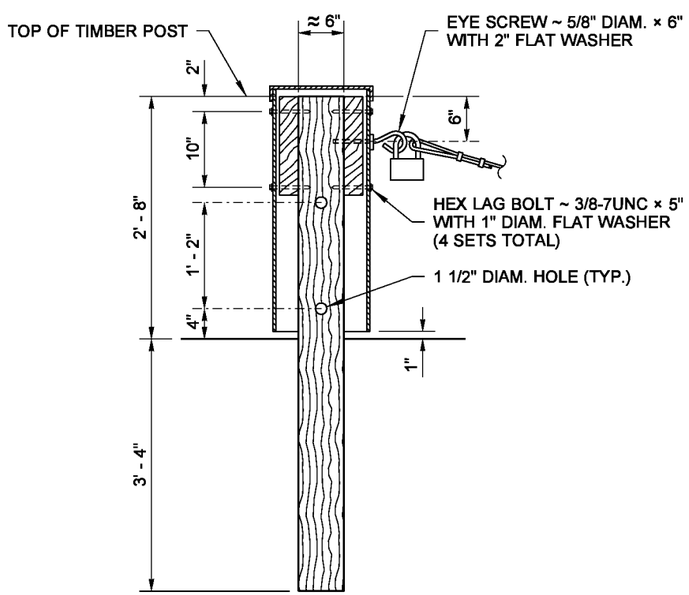

SECTION A

BAKOTICH, PASCO III
STATE OF WASHINGTON
24557
REGISTERED
PROFESSIONAL ENGINEER

EXPIRES JUNE 19, 2008

NOTE: THIS PLAN IS NOT A LEGAL ENGINEERING DOCUMENT BUT AN ELECTRONIC DUPLICATE. THE ORIGINAL, SIGNED BY THE ENGINEER AND APPROVED FOR PUBLICATION, IS KEPT ON FILE AT THE WASHINGTON STATE DEPARTMENT OF TRANSPORTATION. A COPY MAY BE OBTAINED UPON REQUEST.

ACCESS CONTROL GATE

STANDARD PLAN L-70.10-01

SHEET 1 OF 1 SHEET

APPROVED FOR PUBLICATION

Pasco Bakotich III — STATE DESIGN ENGINEER
05-21-08 — DATE

Washington State Department of Transportation

EFFECTIVE: AUGUST 6, 2012 TO August 4, 2013
EFFECTIVE: AUGUST 6, 2012 TO August 4, 2013
EFFECTIVE: AUGUST 6, 2012 TO August 4, 2013
EFFECTIVE: AUGUST 6, 2012 TO August 4, 2013
EFFECTIVE: AUGUST 6, 2012 TO August 4, 2013
EFFECTIVE: AUGUST 6, 2012 TO August 4, 2013

EFFECTIVE: AUGUST 6, 2012 TO August 4, 2013
EFFECTIVE: AUGUST 6, 2012 TO August 4, 2013

DRAWN BY: BILL BEKENS

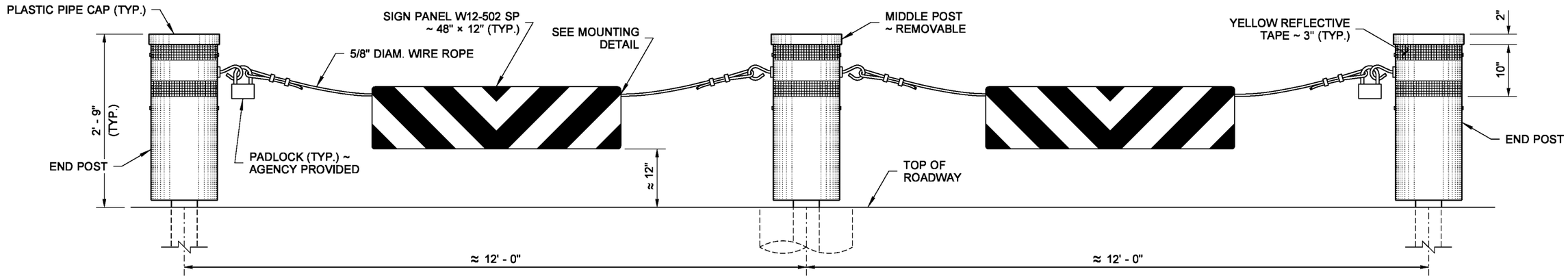

ELEVATION

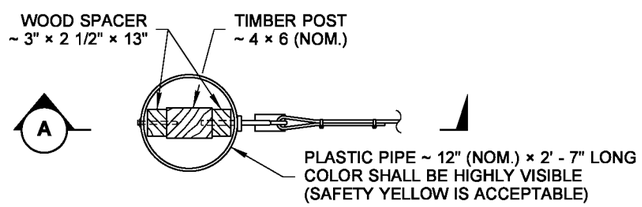

TOP VIEW
(CAP NOT SHOWN)
END POST

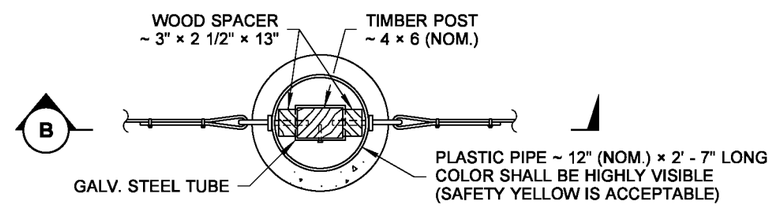

TOP VIEW
(CAP NOT SHOWN)
MIDDLE POST

NOTE

Hardware shall be stainless steel or galvanized in accordance with AASHTO M232.

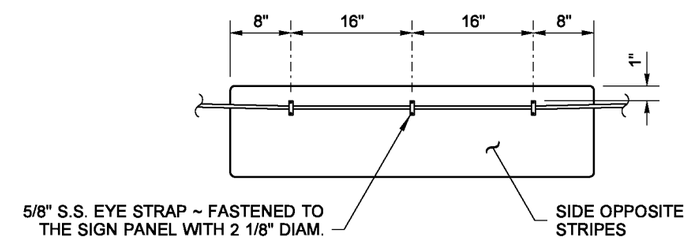

SIGN PANEL MOUNTING DETAIL

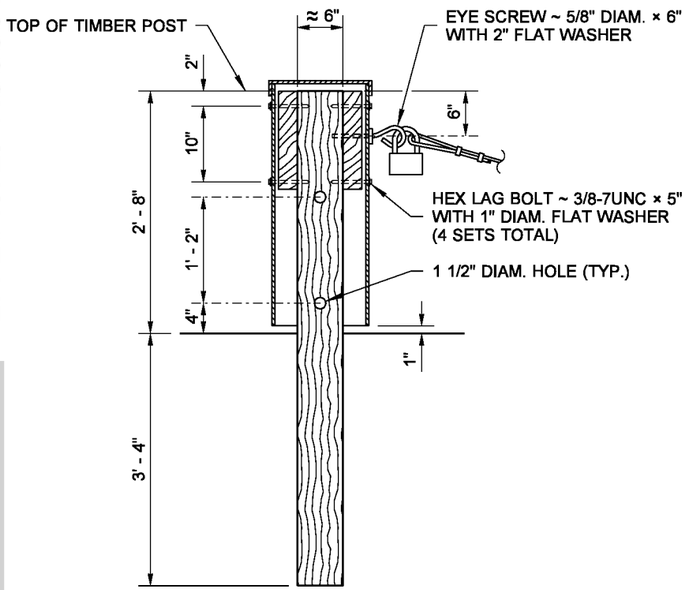

SECTION A

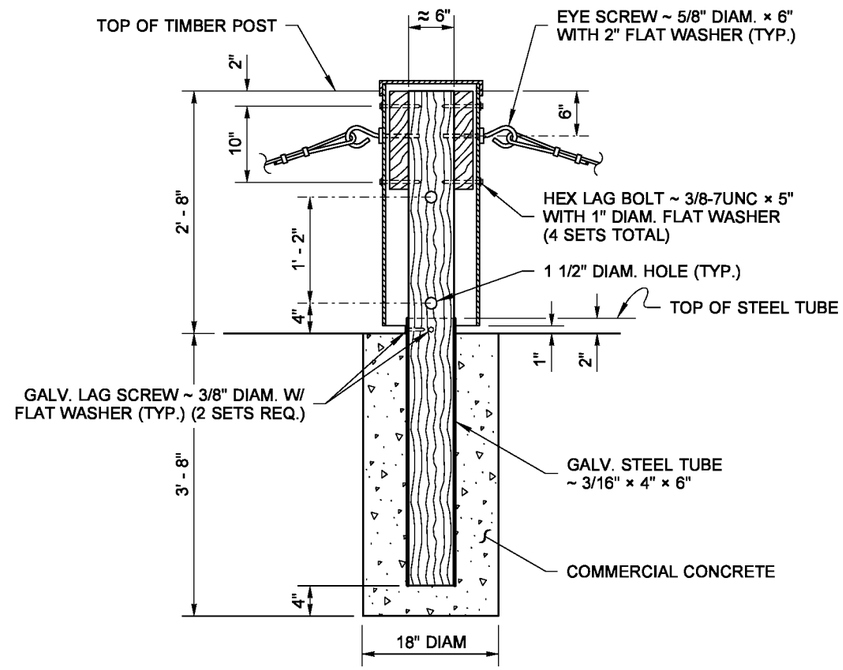

SECTION B

EXPIRES JUNE 19, 2008

NOTE: THIS PLAN IS NOT A LEGAL ENGINEERING DOCUMENT BUT AN ELECTRONIC DUPLICATE. THE ORIGINAL, SIGNED BY THE ENGINEER AND APPROVED FOR PUBLICATION, IS KEPT ON FILE AT THE WASHINGTON STATE DEPARTMENT OF TRANSPORTATION. A COPY MAY BE OBTAINED UPON REQUEST.

ACCESS CONTROL DOUBLE GATE

STANDARD PLAN L-70.20-01

SHEET 1 OF 1 SHEET

APPROVED FOR PUBLICATION

Pasco Bakotich III — STATE DESIGN ENGINEER
05-21-08 — DATE

Washington State Department of Transportation

EFFECTIVE: AUGUST 6, 2012 TO August 4, 2013
EFFECTIVE: AUGUST 6, 2012 TO August 4, 2013
EFFECTIVE: AUGUST 6, 2012 TO August 4, 2013
EFFECTIVE: AUGUST 6, 2012 TO August 4, 2013

EFFECTIVE: AUGUST 6, 2012 TO August 4, 2013

DRAWN BY: LISA CYFORD

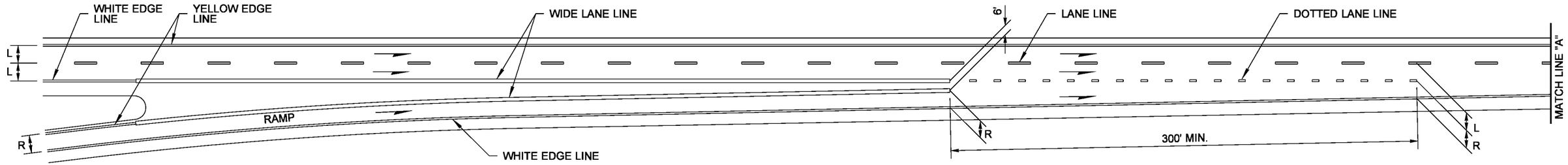

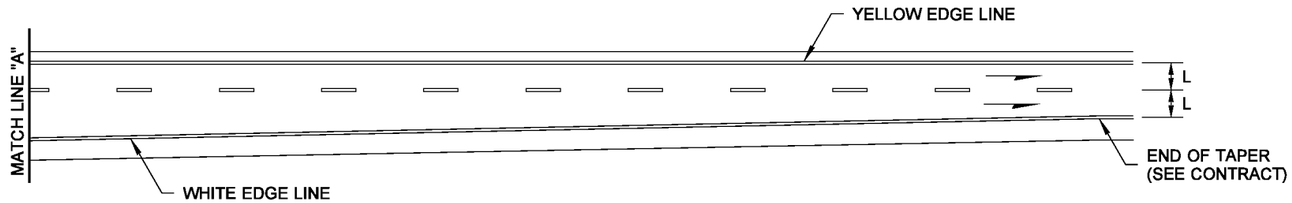

SINGLE-LANE ON-CONNECTION

NOTES

1. Where shown on the plans or specified in the Special Provisions, raised pavement markers shall be used to supplement or substitute for the painted pavement markings shown hereon. See the Standard Plans for RPM supplement and substitution patterns.
2. The channelization shown on this plan assumes optimal roadway geometric design. The dimensions may vary to fit existing conditions. See Contract.

LEGEND

R = RAMP LANE WIDTH
L = LANE WIDTH

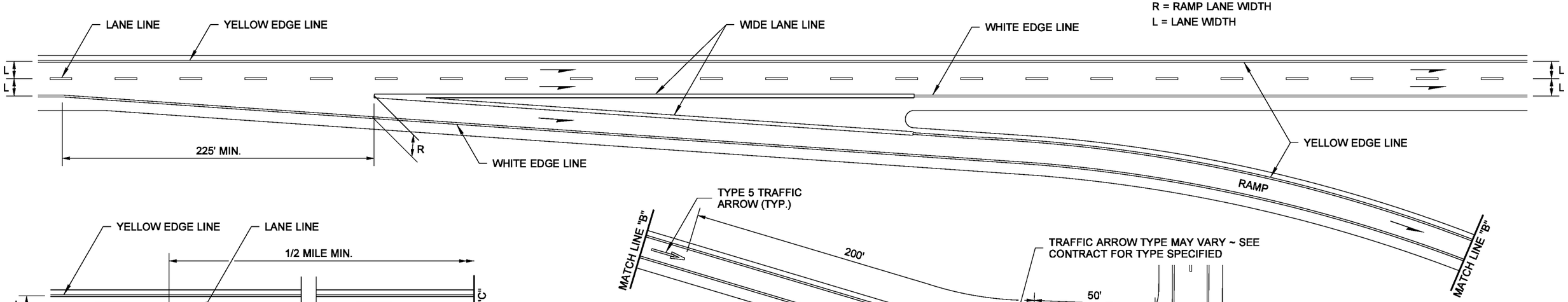

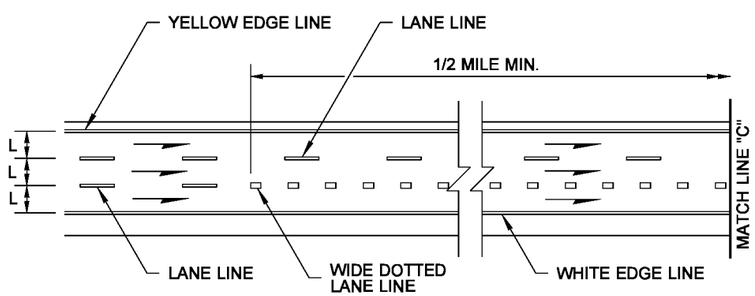

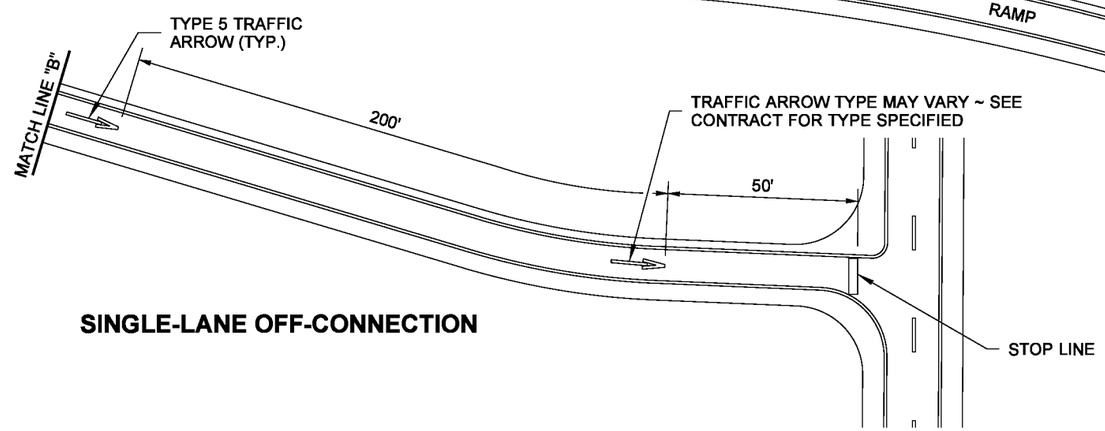

SINGLE-LANE OFF-CONNECTION

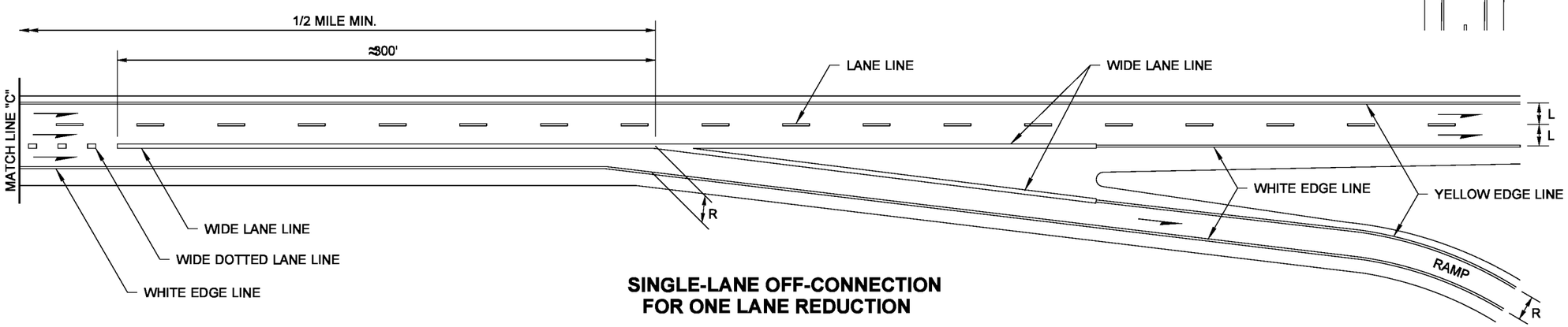

SINGLE-LANE OFF-CONNECTION FOR ONE LANE REDUCTION

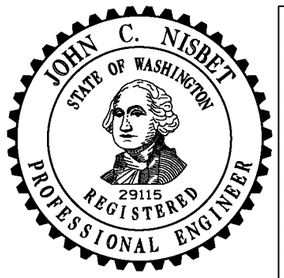

NOTE: THIS PLAN IS NOT A LEGAL ENGINEERING DOCUMENT BUT AN ELECTRONIC DUPLICATE. THE ORIGINAL, SIGNED BY THE ENGINEER AND APPROVED FOR PUBLICATION, IS KEPT ON FILE AT THE WASHINGTON STATE DEPARTMENT OF TRANSPORTATION. A COPY MAY BE OBTAINED UPON REQUEST.

RAMP CHANNELIZATION SINGLE LANE

STANDARD PLAN M-1.20-02

SHEET 1 OF 1 SHEET

APPROVED FOR PUBLICATION

Pasco Bakotich III — STATE DESIGN ENGINEER
06-03-11 — DATE

Washington State Department of Transportation

EFFECTIVE: AUGUST 6, 2012 TO August 4, 2013

EFFECTIVE: AUGUST 6, 2012 TO August 4, 2013
EFFECTIVE: AUGUST 6, 2012 TO August 4, 2013

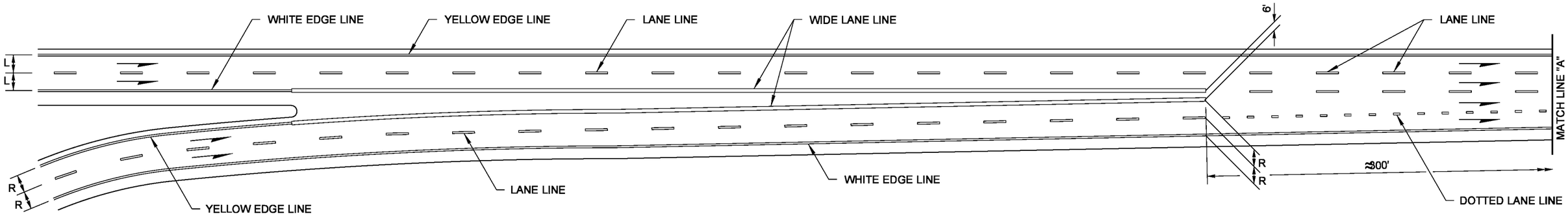

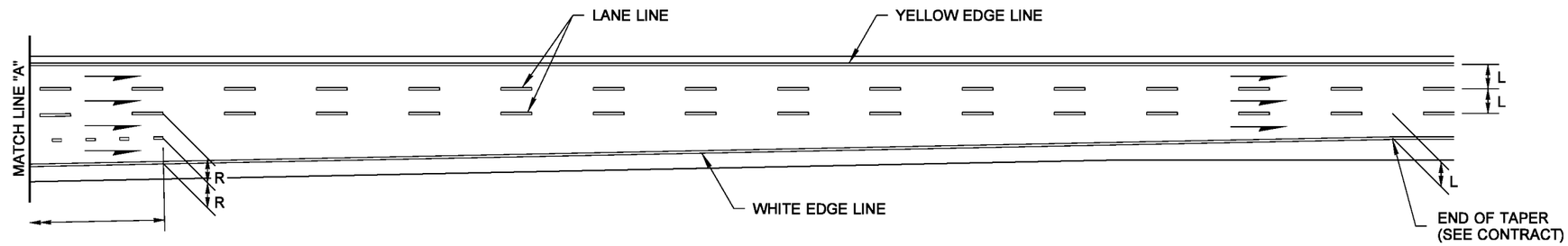

TWO-LANE ON-CONNECTION

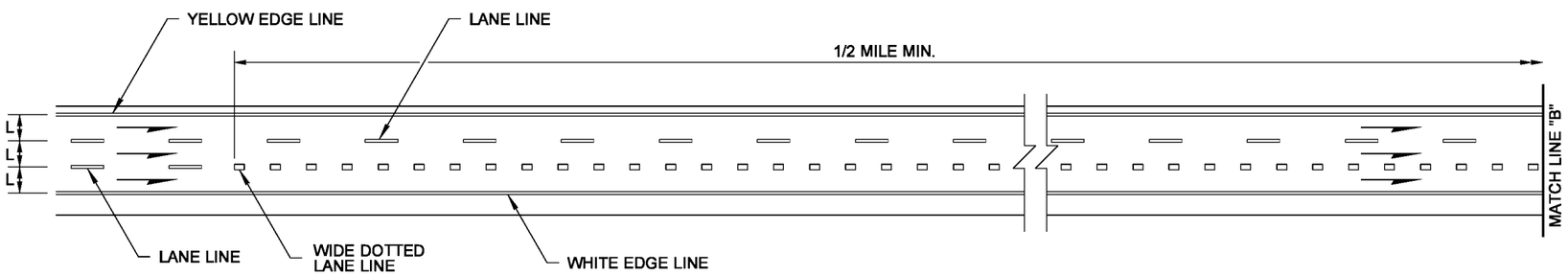

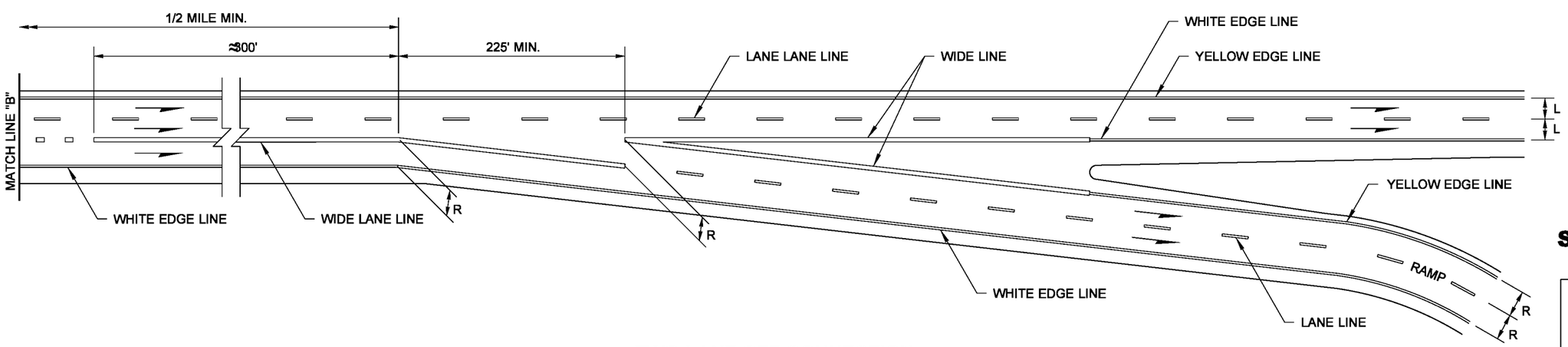

TWO-LANE OFF-CONNECTION

NOTES

1. Where shown on the plans or specified in the Special Provisions, raised pavement markers shall be used to supplement or substitute for the painted pavement markings shown hereon. See the Standard Plans for RPM supplement and substitution patterns.

2. The channelization shown on this plan assumes optimal roadway geometric design. The dimensions may vary to fit existing conditions. See Contract.

LEGEND

R = RAMP LANE WIDTH

L = LANE WIDTH

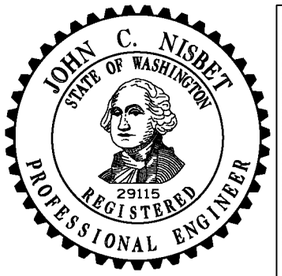

NOTE: THIS PLAN IS NOT A LEGAL ENGINEERING DOCUMENT BUT AN ELECTRONIC DUPLICATE. THE ORIGINAL, SIGNED BY THE ENGINEER AND APPROVED FOR PUBLICATION, IS KEPT ON FILE AT THE WASHINGTON STATE DEPARTMENT OF TRANSPORTATION. A COPY MAY BE OBTAINED UPON REQUEST.

DRAWN BY: LISA CYFORD

RAMP CHANNELIZATION TWO LANE

STANDARD PLAN M-1.40-02

SHEET 1 OF 1 SHEET

APPROVED FOR PUBLICATION

Pasco Bakotich III — STATE DESIGN ENGINEER

06-03-11 — DATE

Washington State Department of Transportation

EFFECTIVE: AUGUST 6, 2012 TO August 4, 2013
EFFECTIVE: AUGUST 6, 2012 TO August 4, 2013
EFFECTIVE: AUGUST 6, 2012 TO August 4, 2013
EFFECTIVE: AUGUST 6, 2012 TO August 4, 2013

EFFECTIVE: AUGUST 6, 2012 TO August 4, 2013
EFFECTIVE: AUGUST 6, 2012 TO August 4, 2013

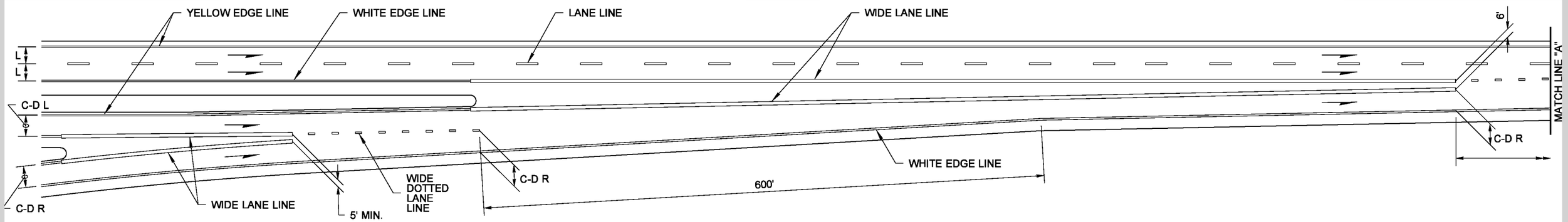

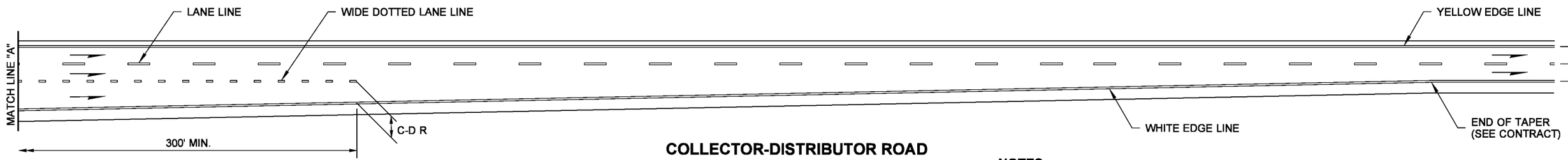

COLLECTOR-DISTRIBUTOR ROAD ON-CONNECTION

LEGEND

C-D R = COLLECTOR DISTRIBUTOR RAMP LANE WIDTH

C-D L = COLLECTOR DISTRIBUTOR LANE WIDTH

R = RAMP LANE WIDTH

L = LANE WIDTH

NOTES

1. Where shown on the plans or specified in the Special Provisions, raised pavement markers shall be used to supplement or substitute for the painted pavement markings shown hereon. See the Standard Plans for RPM supplement and substitution patterns.
2. The channelization shown on this plan assumes optimal geometric design. The dimensions may vary to fit existing conditions. See Contract.

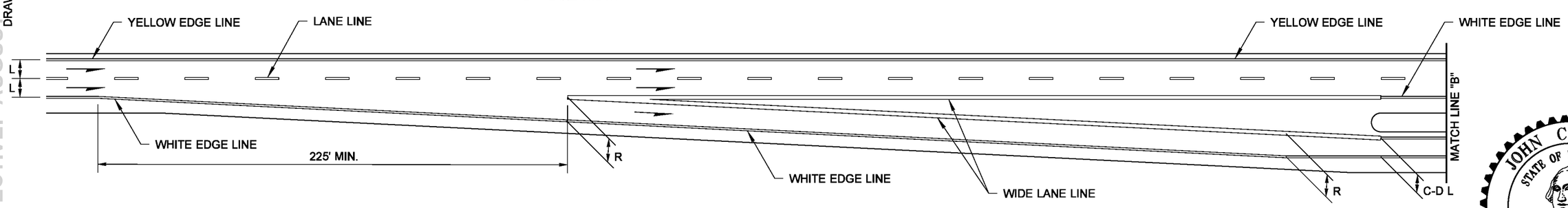

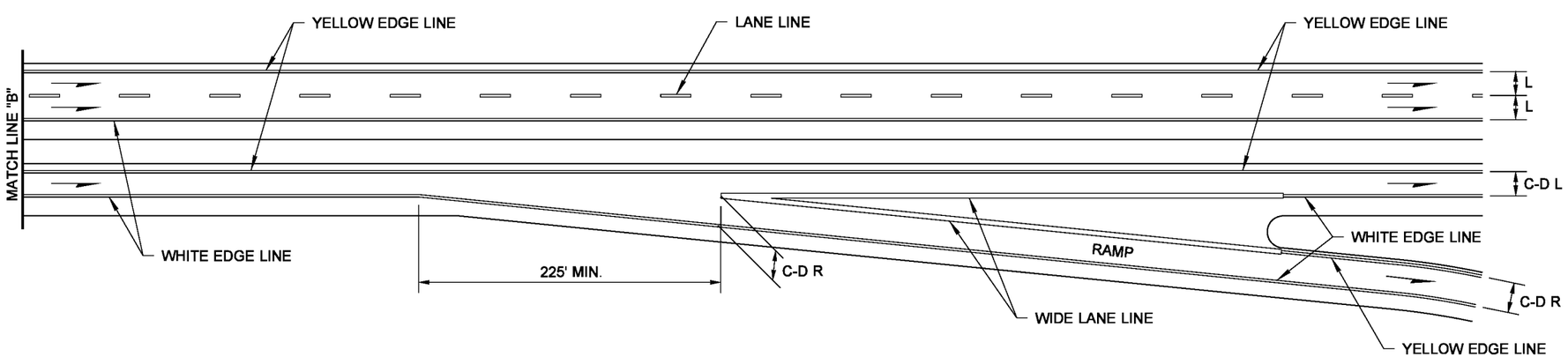

COLLECTOR-DISTRIBUTOR ROAD OFF-CONNECTION

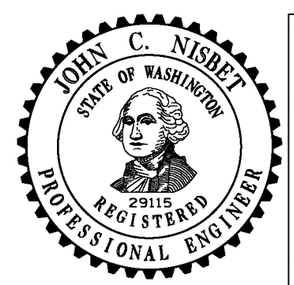

NOTE: THIS PLAN IS NOT A LEGAL ENGINEERING DOCUMENT BUT AN ELECTRONIC DUPLICATE. THE ORIGINAL, SIGNED BY THE ENGINEER AND APPROVED FOR PUBLICATION, IS KEPT ON FILE AT THE WASHINGTON STATE DEPARTMENT OF TRANSPORTATION. A COPY MAY BE OBTAINED UPON REQUEST.

RAMP CHANNELIZATION COLLECTOR-DISTRIBUTOR ROAD

STANDARD PLAN M-1.60-02

SHEET 1 OF 1 SHEET

APPROVED FOR PUBLICATION

Pasco Bakotich III — STATE DESIGN ENGINEER

06-03-11 — DATE

Washington State Department of Transportation

DRAWN BY: LISA CYFORD

EFFECTIVE: AUGUST 6, 2012 TO August 4, 2013
EFFECTIVE: AUGUST 6, 2012 TO August 4, 2013
EFFECTIVE: AUGUST 6, 2012 TO August 4, 2013
EFFECTIVE: AUGUST 6, 2012 TO August 4, 2013

EFFECTIVE: AUGUST 6, 2012 TO August 4, 2013
EFFECTIVE: AUGUST 6, 2012 TO August 4, 2013

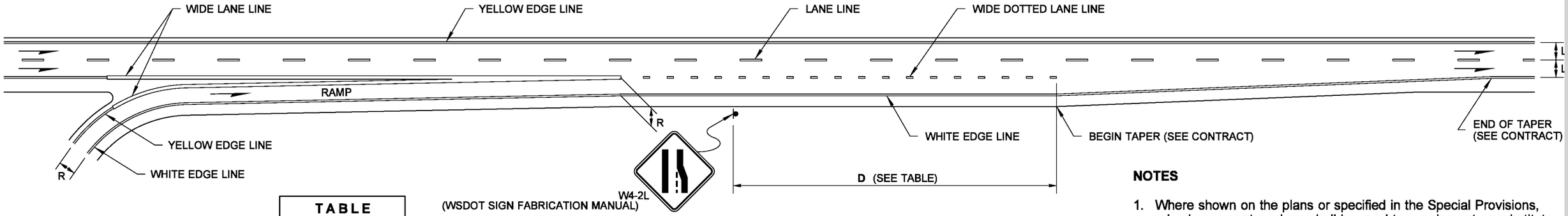

TABLE	
POSTED MAIN LINE SPEED	D
35 MPH	565'
40 MPH	670'
45 MPH	775'
50 MPH	885'
55 MPH	990'
60 MPH	1100'
65 MPH	1200'
70 MPH	1250'

SINGLE-LANE, PARALLEL TYPE ~ ON-CONNECTION

NOTES

1. Where shown on the plans or specified in the Special Provisions, raised pavement markers shall be used to supplement or substitute for the painted pavement markings shown hereon. See the Standard Plans for RPM supplement and substitution patterns.
2. When weaving section is more than 3/4 of a mile in length, use lane line.
3. The channelization shown on this plan assumes optimal roadway geometric design. The dimensions may vary to fit existing conditions. See Contract.

LEGEND

L = LANE WIDTH
R = RAMP LANE WIDTH

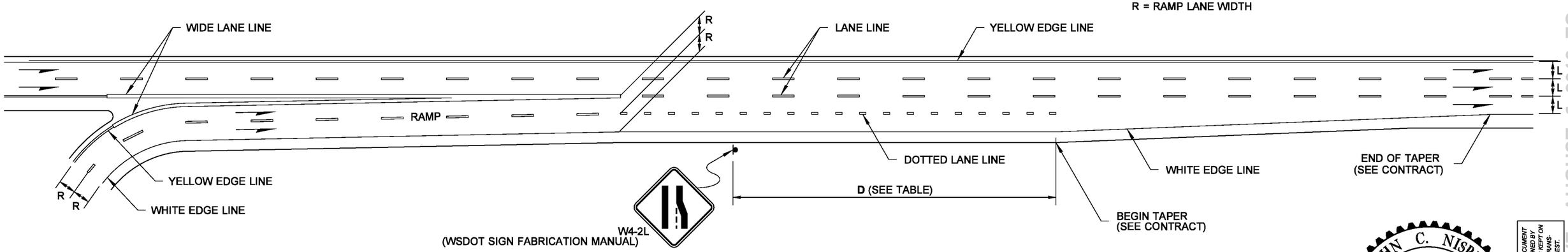

DOUBLE-LANE, PARALLEL TYPE ~ ON-CONNECTION

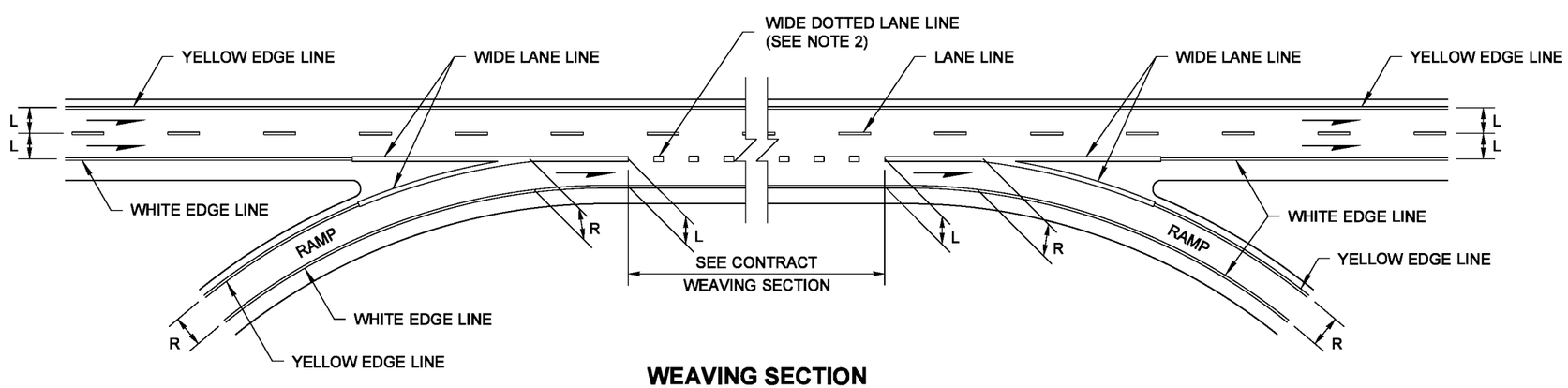

WEAVING SECTION

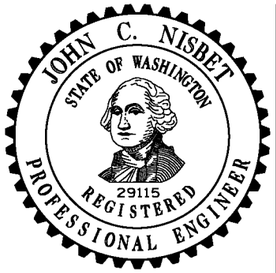

NOTE: THIS PLAN IS NOT A LEGAL ENGINEERING DOCUMENT BUT AN ELECTRONIC DUPLICATE. THE ORIGINAL, SIGNED BY THE ENGINEER AND APPROVED FOR PUBLICATION, IS KEPT ON FILE AT THE WASHINGTON STATE DEPARTMENT OF TRANSPORTATION. A COPY MAY BE OBTAINED UPON REQUEST.

RAMP CHANNELIZATION PARALLEL ON & WEAVING SECTION

STANDARD PLAN M-1.80-03

SHEET 1 OF 1 SHEET

APPROVED FOR PUBLICATION

Pasco Bakotich III — STATE DESIGN ENGINEER
06-03-11 — DATE

Washington State Department of Transportation

DRAWN BY: LISA CYFORD

EFFECTIVE: AUGUST 6, 2012 TO August 4, 2013
EFFECTIVE: AUGUST 6, 2012 TO August 4, 2013
EFFECTIVE: AUGUST 6, 2012 TO August 4, 2013
EFFECTIVE: AUGUST 6, 2012 TO August 4, 2013

EFFECTIVE: AUGUST 6, 2012 TO August 4, 2013
EFFECTIVE: AUGUST 6, 2012 TO August 4, 2013

DRAWN BY: LISA CYFORD

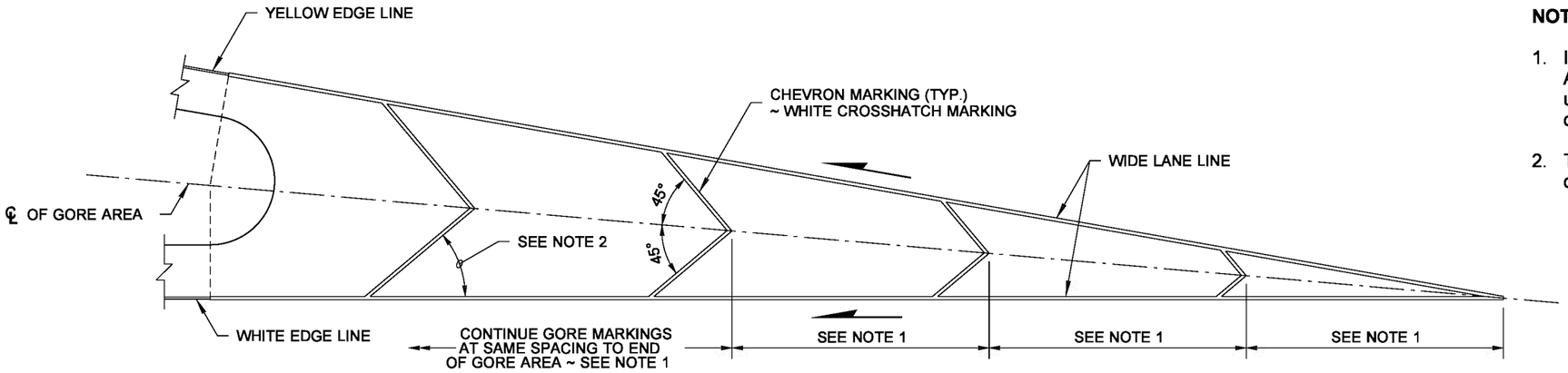

GORE AREA MARKINGS WITH CHEVERONS

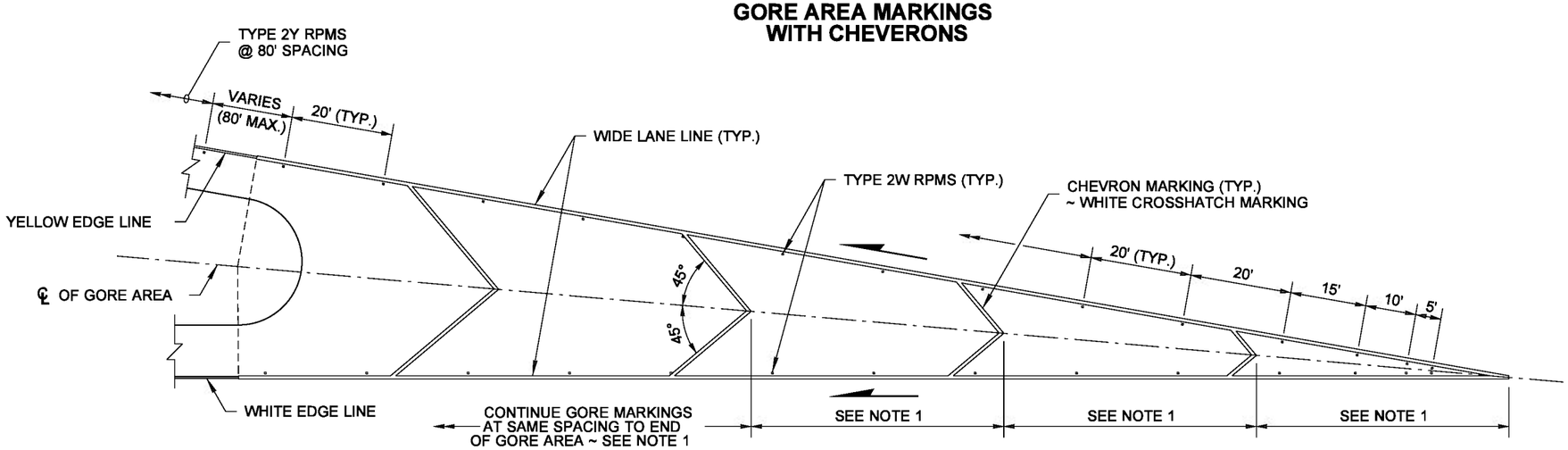

GORE AREA SUPPLEMENT WITH TYPE 2 RAISED PAVEMENT MARKERS

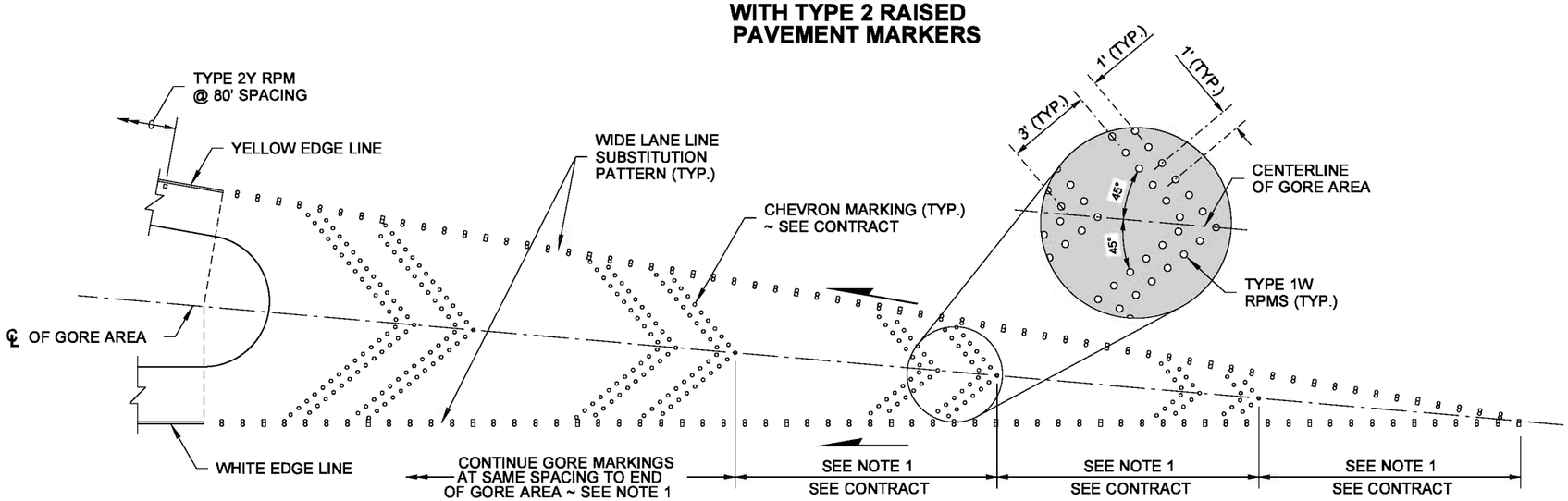

GORE AREA SUBSTITUTION WITH TYPES 1 & 2 RAISED PAVEMENT MARKERS

NOTES

1. Install a minimum of 3 sets of diagonals/chevrons in the gore area. A 50' spacing is standard; however, for gore areas shorter than 150' use a 25' spacing, and for gore areas greater than 400' a spacing of 100' may be used.
2. The acute angle of the diagonals shall always point in the direction of main line traffic.

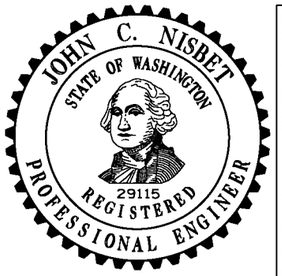

NOTE: THIS PLAN IS NOT A LEGAL ENGINEERING DOCUMENT BUT AN ELECTRONIC DUPLICATE. THE ORIGINAL, SIGNED BY THE ENGINEER AND APPROVED FOR PUBLICATION, IS KEPT ON FILE AT THE WASHINGTON STATE DEPARTMENT OF TRANSPORTATION. A COPY MAY BE OBTAINED UPON REQUEST.

GORE AREA MARKING LAYOUTS

STANDARD PLAN M-2.20-02

SHEET 1 OF 1 SHEET

APPROVED FOR PUBLICATION

Pasco Bakotich III — STATE DESIGN ENGINEER

06-03-11 — DATE

Washington State Department of Transportation

EFFECTIVE: AUGUST 6, 2012 TO August 4, 2013
EFFECTIVE: AUGUST 6, 2012 TO August 4, 2013
EFFECTIVE: AUGUST 6, 2012 TO August 4, 2013
EFFECTIVE: AUGUST 6, 2012 TO August 4, 2013

EFFECTIVE: AUGUST 6, 2012 TO August 4, 2013
EFFECTIVE: AUGUST 6, 2012 TO August 4, 2013

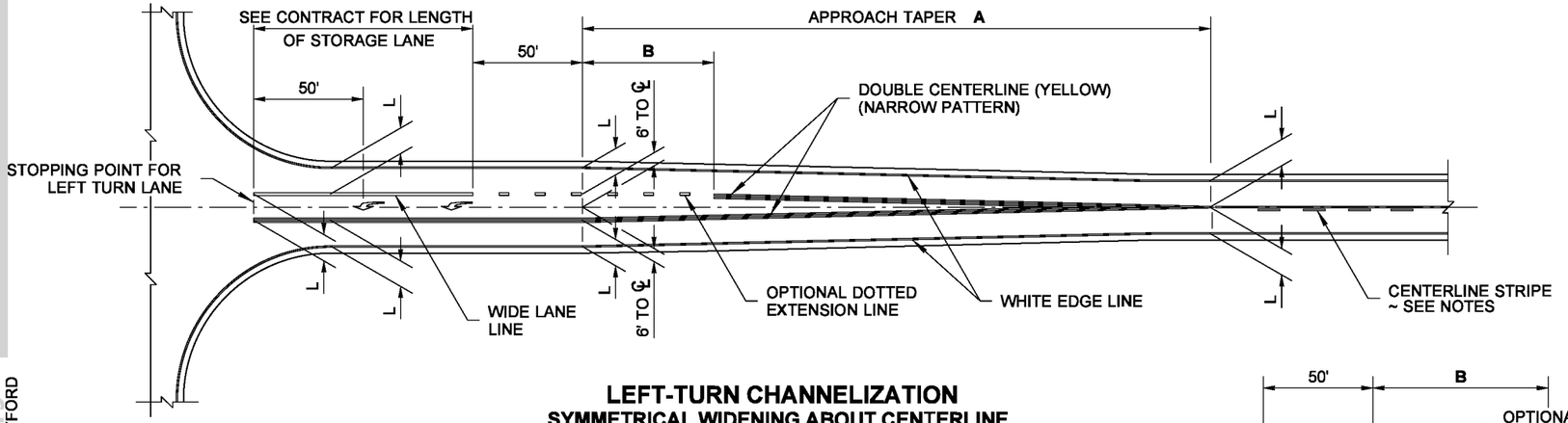

LEFT-TURN CHANNELIZATION
SYMMETRICAL WIDENING ABOUT CENTERLINE

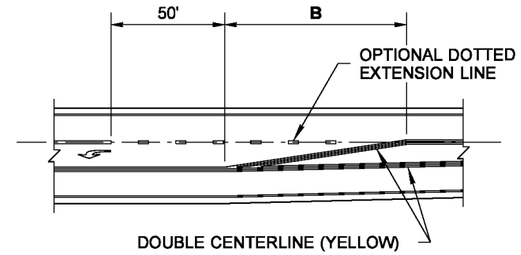

OPTIONAL MARKED DECELERATION TAPER

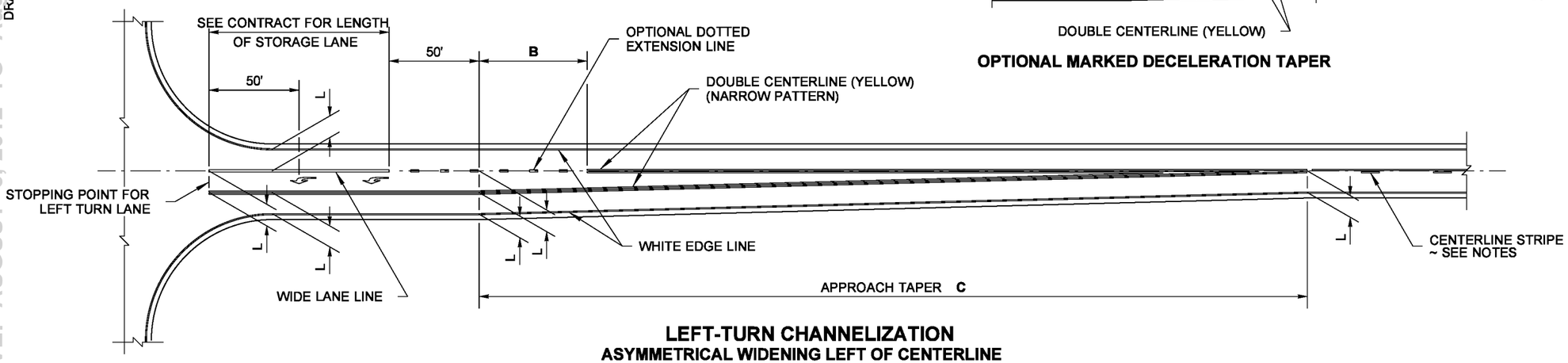

LEFT-TURN CHANNELIZATION
ASYMMETRICAL WIDENING LEFT OF CENTERLINE

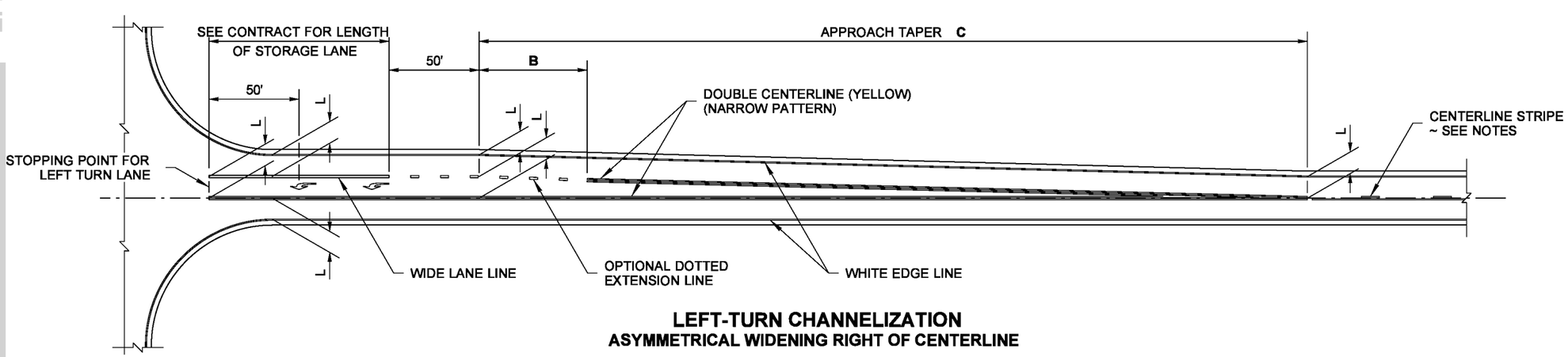

LEFT-TURN CHANNELIZATION
ASYMMETRICAL WIDENING RIGHT OF CENTERLINE

NOTES

1. The channelization shown on this plan assumes optimal roadway geometric design. The dimensions may vary to fit existing conditions. See Contract.
2. The channelization shown on this plan is for a two-lane highway. The channelization plan may be used on four-lane undivided highways, with the appropriate considerations.
3. Centerline striping on the approach to raised channelization shall be No Pass in accordance with MUTCD figure 3B-15. Centerline striping on the departure from raised channelization shall be determined by an engineering study.
4. Centerline striping on the approach to and departure from painted channelization shall be determined by an engineering study.
5. Centerline striping on four-lane undivided highways shall be a double centerline.
6. The two Type 2L (SL) Traffic Arrows shown in the left-turn storage lane are optional, but recommended. Arrows may be added for longer storage lanes or deleted for shorter storage lanes. See Contract Plans.

LEGEND

L = 12' Typical Lane Width. See Contract for specified lane widths.

Type 2L (SL) Traffic Arrow

POSTED SPEED	APPROACH TAPER A	DIMENSION B	APPROACH TAPER C
60 MPH	360'	60'	720'
55 MPH	330'	55'	660'
50 MPH	300'	50'	600'
45 MPH	270'	45'	540'
40 MPH	240'	40'	480'
35 MPH	210'	35'	420'
30 MPH	180'	30'	360'
25 MPH	150'	25'	300'
20 MPH	120'	20'	240'

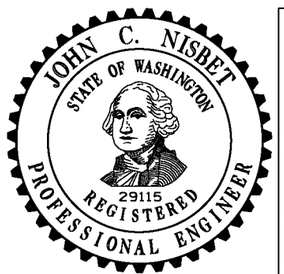

NOTE: THIS PLAN IS NOT A LEGAL ENGINEERING DOCUMENT BUT AN ELECTRONIC DUPLICATE. THE ORIGINAL, SIGNED BY THE ENGINEER AND APPROVED FOR PUBLICATION, IS KEPT ON FILE AT THE WASHINGTON STATE DEPARTMENT OF TRANSPORTATION. A COPY MAY BE OBTAINED UPON REQUEST.

LEFT-TURN CHANNELIZATION
STANDARD PLAN M-3.10-03

SHEET 1 OF 1 SHEET

APPROVED FOR PUBLICATION

Pasco Bakotich III — STATE DESIGN ENGINEER
06-03-11 — DATE

Washington State Department of Transportation

DRAWN BY: LISA CYFORD

EFFECTIVE: AUGUST 6, 2012 TO August 4, 2013
EFFECTIVE: AUGUST 6, 2012 TO August 4, 2013
EFFECTIVE: AUGUST 6, 2012 TO August 4, 2013
EFFECTIVE: AUGUST 6, 2012 TO August 4, 2013

EFFECTIVE: AUGUST 6, 2012 TO August 4, 2013
EFFECTIVE: AUGUST 6, 2012 TO August 4, 2013

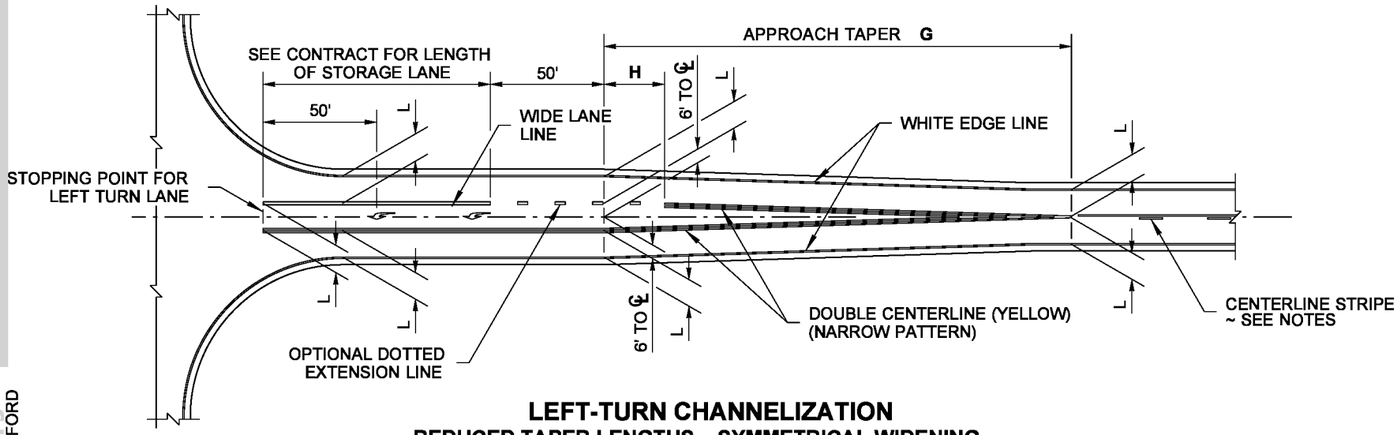

LEFT-TURN CHANNELIZATION
REDUCED TAPER LENGTHS ~ SYMMETRICAL WIDENING
(FOR LIMITED USE IN URBAN AREAS WITH POSTED SPEEDS OF 40 MPH OR LESS)

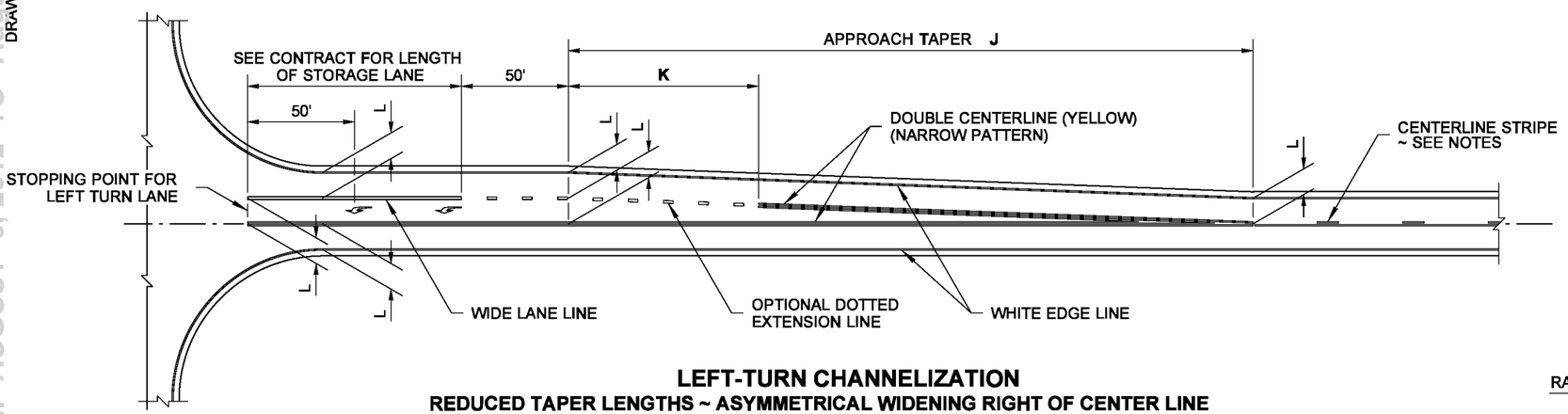

LEFT-TURN CHANNELIZATION
REDUCED TAPER LENGTHS ~ ASYMMETRICAL WIDENING RIGHT OF CENTER LINE
(FOR LIMITED USE IN URBAN AREAS WITH POSTED SPEEDS OF 40 MPH OR LESS)

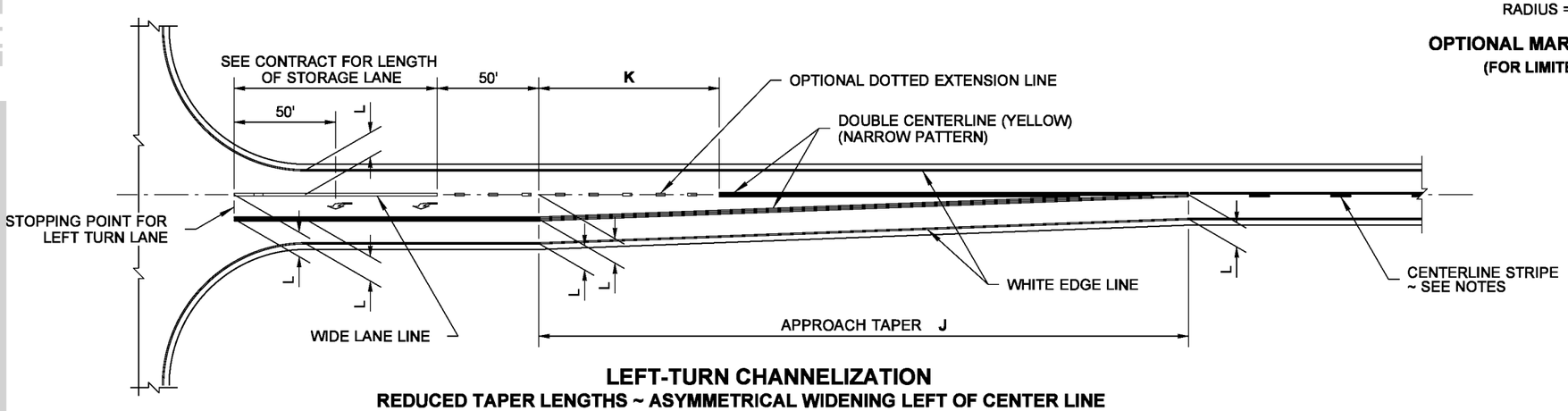

LEFT-TURN CHANNELIZATION
REDUCED TAPER LENGTHS ~ ASYMMETRICAL WIDENING LEFT OF CENTER LINE
(FOR LIMITED USE IN URBAN AREAS WITH POSTED SPEEDS OF 40 MPH OR LESS)

NOTES

1. The channelization shown on this plan assumes optimal roadway geometric design. The dimensions may vary to fit existing conditions. See Contract.
2. The channelization shown on this plan is for a two-lane highway. The channelization plan may be used on four-lane undivided highways with the appropriate considerations
3. Centerline striping on the approach to raised channelization shall be No Pass in accordance with MUTCD figure 3B-15. Centerline striping on the departure from raised channelization shall be determined by an engineering study.
4. Centerline striping on the approach to and departure from painted channelization shall be determined by an engineering study.
5. Centerline striping on four lane undivided highways shall be a double centerline.
6. The two Type 2L (SL) Traffic Arrows shown in the left-turn storage lane are optional, but recommended. Arrows may be added for longer storage lanes or deleted for shorter storage lanes. See Contract Plans.

LEGEND

L = 12' Typical Lane Width. See Contract for specified lane widths.

Type 2L (SL) Traffic Arrow

POSTED SPEED	APPROACH TAPER G	DIMENSION H	APPROACH TAPER J	DIMENSION K
40 MPH	160'	27'	320'	53'
35 MPH	123'	20'	245'	41'
30 MPH	90'	15'	180'	30'
25 MPH	63'	10'	125'	21'
20 MPH	40'	7'	80'	13'

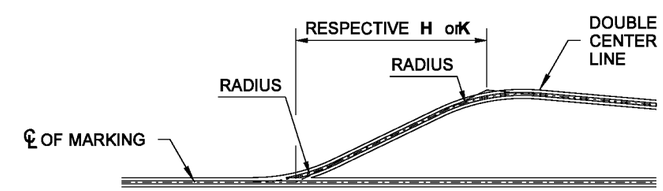

RADIUS = RESPECTIVE H or K

OPTIONAL MARKED DECELERATION TAPER
(FOR LIMITED USE IN URBAN AREAS)

JOHN C. NISBET
STATE OF WASHINGTON
29115
REGISTERED
PROFESSIONAL ENGINEER

NOTE: THIS PLAN IS NOT A LEGAL ENGINEERING DOCUMENT BUT AN ELECTRONIC DUPLICATE. THE ORIGINAL, SIGNED BY THE ENGINEER AND APPROVED FOR PUBLICATION, IS KEPT ON FILE AT THE WASHINGTON STATE DEPARTMENT OF TRANSPORTATION. A COPY MAY BE OBTAINED UPON REQUEST.

LEFT-TURN CHANNELIZATION REDUCED TAPERS
STANDARD PLAN M-3.20-02

SHEET 1 OF 1 SHEET

APPROVED FOR PUBLICATION

Pasco Bakotich III — STATE DESIGN ENGINEER
06-03-11 — DATE

Washington State Department of Transportation

DRAWN BY: LISA CYFORD

EFFECTIVE: AUGUST 6, 2012 TO August 4, 2013
EFFECTIVE: AUGUST 6, 2012 TO August 4, 2013
EFFECTIVE: AUGUST 6, 2012 TO August 4, 2013
EFFECTIVE: AUGUST 6, 2012 TO August 4, 2013

EFFECTIVE: AUGUST 6, 2012 TO August 4, 2013
EFFECTIVE: AUGUST 6, 2012 TO August 4, 2013

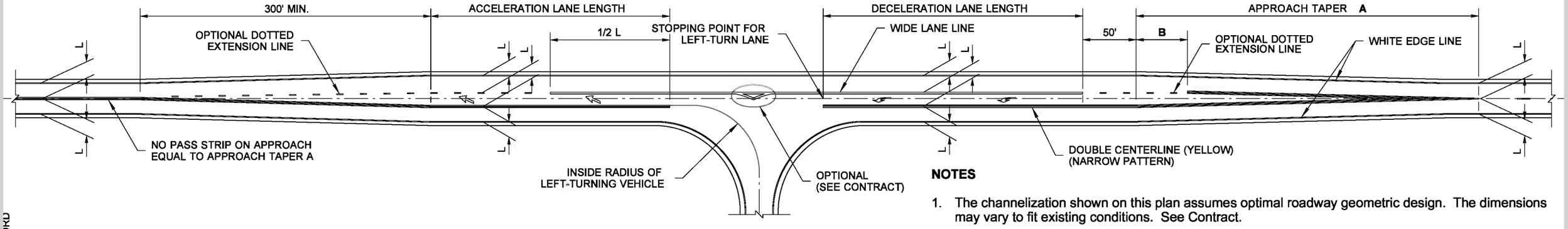

LEFT-TURN CHANNELIZATION
TEE INTERSECTION WITH ACCELERATION LANE

DRAWN BY: LISA CYFORD

NOTES

1. The channelization shown on this plan assumes optimal roadway geometric design. The dimensions may vary to fit existing conditions. See Contract.
2. The channelization shown on this plan is for a two-lane highway. The channelization plan may be used on four-lane undivided highways with the appropriate considerations.
3. Centerline striping on the approach to raised channelization shall be No Pass in accordance with MUTCD figure 3B-15. Centerline striping on the departure from raised channelization shall be determined by an engineering study.
4. Centerline striping on the approach to and departure from painted channelization shall be determined by an engineering study.
5. Centerline striping on four-lane undivided highways shall be a double centerline.
6. The two Type 2L (SL) Traffic Arrows shown in the left-turn storage lane are optional, but recommended. Arrows may be added for longer storage lanes or deleted for shorter storage lanes. See Contract Plans.

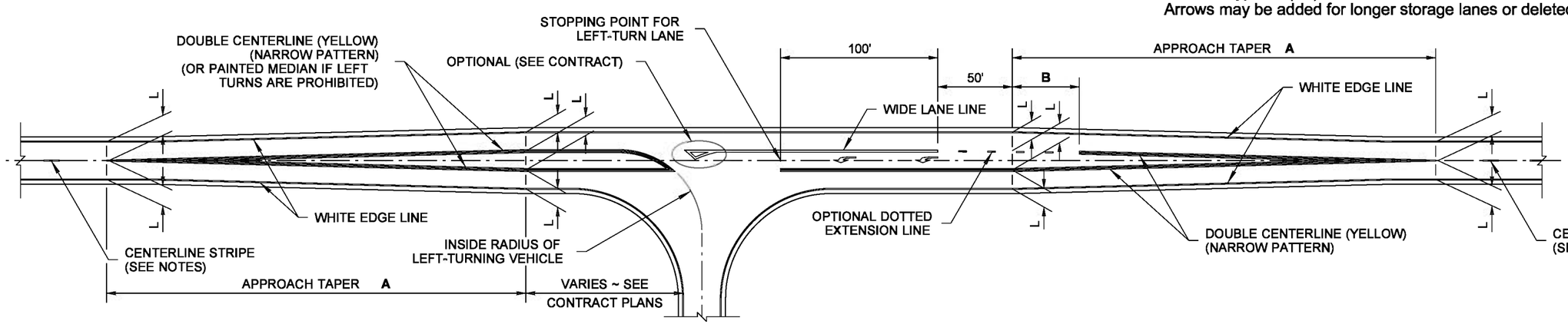

LEFT-TURN CHANNELIZATION
TEE INTERSECTION

LEGEND

L = 12' Typical Lane Width. See Contract for specified lane widths.

Type 2L (SL) Traffic Arrow

Type 6R (SR) Traffic Arrow

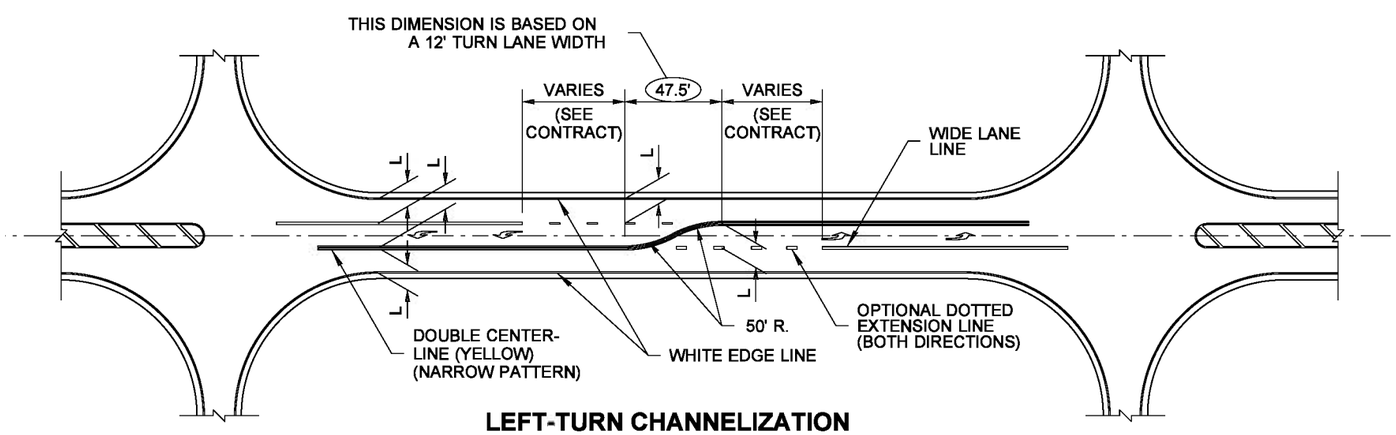

LEFT-TURN CHANNELIZATION
BACK-TO-BACK LEFT-TURN LANES

POSTED SPEED	APPROACH TAPER A	DIMENSION B
60 MPH	360'	60'
55 MPH	330'	55'
50 MPH	300'	50'
45 MPH	270'	45'
40 MPH	240'	40'
35 MPH	210'	35'
30 MPH	180'	30'
25 MPH	150'	25'
20 MPH	120'	20'

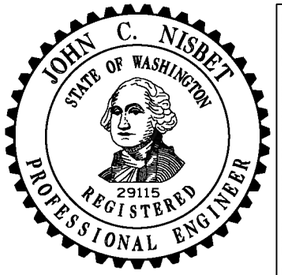

NOTE: THIS PLAN IS NOT A LEGAL ENGINEERING DOCUMENT BUT AN ELECTRONIC DUPLICATE. THE ORIGINAL, SIGNED BY THE ENGINEER AND APPROVED FOR PUBLICATION, IS KEPT ON FILE AT THE WASHINGTON STATE DEPARTMENT OF TRANSPORTATION. A COPY MAY BE OBTAINED UPON REQUEST.

LEFT-TURN CHANNELIZATION TEE INTERSECTION AND BACK-TO-BACK TURN LANES
STANDARD PLAN M-3.30-03

SHEET 1 OF 1 SHEET

APPROVED FOR PUBLICATION

Pasco Bakotich III — STATE DESIGN ENGINEER

06-03-11 — DATE

Washington State Department of Transportation

EFFECTIVE: AUGUST 6, 2012 TO August 4, 2013
EFFECTIVE: AUGUST 6, 2012 TO August 4, 2013
EFFECTIVE: AUGUST 6, 2012 TO August 4, 2013
EFFECTIVE: AUGUST 6, 2012 TO August 4, 2013

EFFECTIVE: AUGUST 6, 2012 TO August 4, 2013
EFFECTIVE: AUGUST 6, 2012 TO August 4, 2013

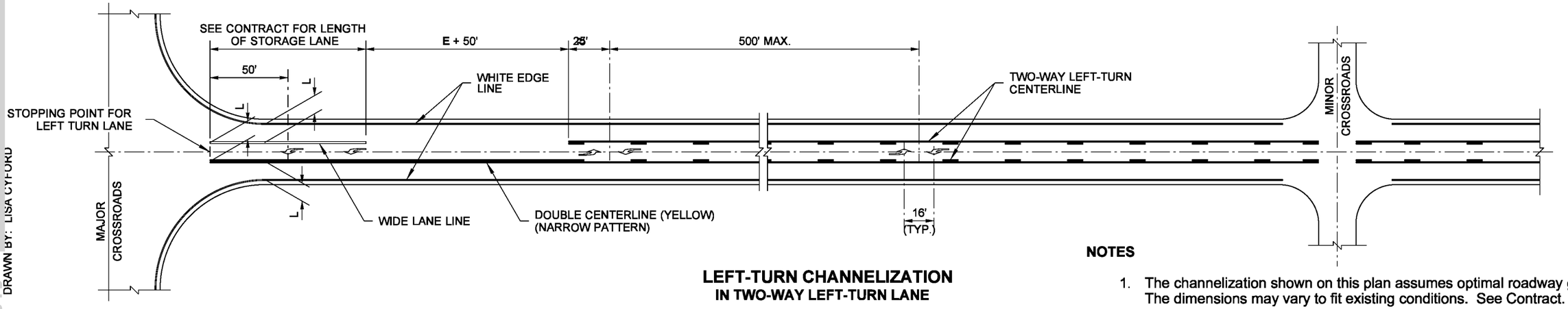

DRAWN BY: LISA CYFORD

LEFT-TURN CHANNELIZATION
IN TWO-WAY LEFT-TURN LANE

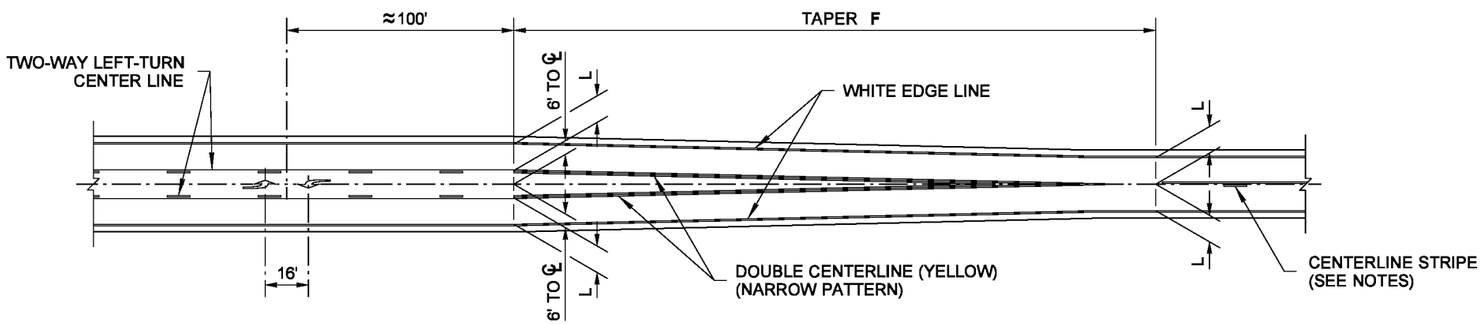

TWO-WAY LEFT-TURN LANE TRANSITION

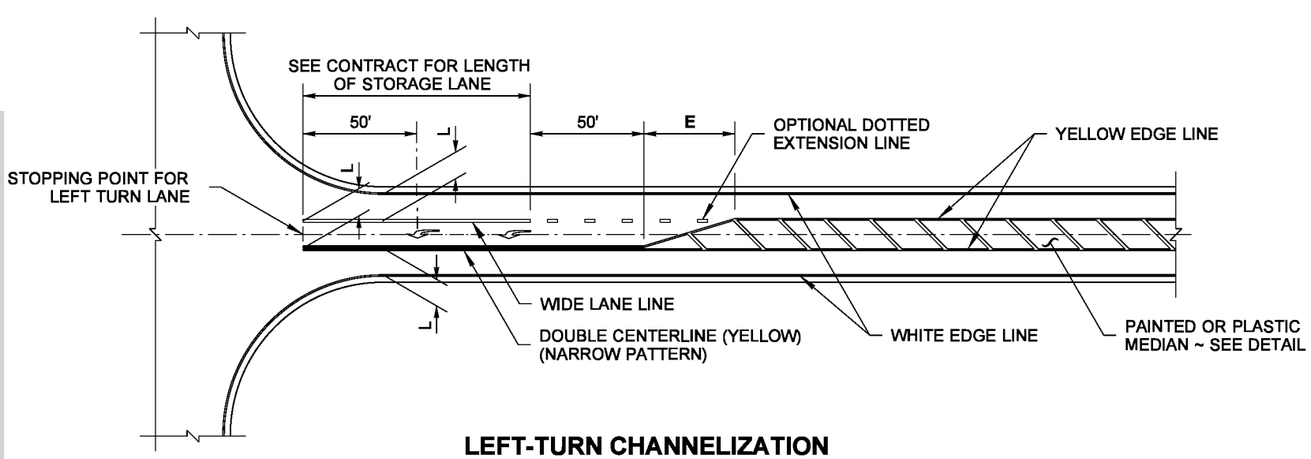

LEFT-TURN CHANNELIZATION
IN PAINTED MEDIAN

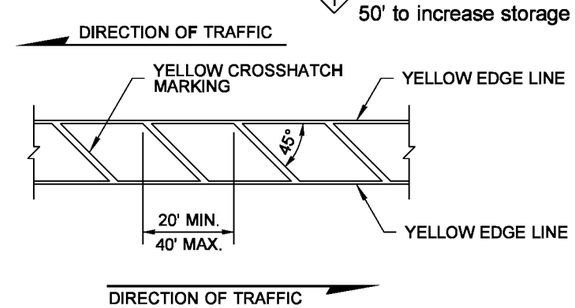

PAINTED OR PLASTIC MEDIAN
COMPOSED OF LONGITUDINAL MARKINGS

NOTES

1. The channelization shown on this plan assumes optimal roadway geometric design. The dimensions may vary to fit existing conditions. See Contract.
2. The channelization shown on this plan is for a two-lane highway. The channelization plan may be used on four-lane undivided highways with the appropriate considerations.
3. Centerline striping on the approach to raised channelization shall be No Pass in accordance with MUTCD figure 3B-15. Centerline striping on the departure from raised channelization shall be determined by an engineering study.
4. Centerline srtiping on the approach to and departure from painted channelization shall be determined by an engineering study.
5. Centerline striping on four-lane undivided highways shall be a double centerline.
6. The two Type 2L (SL) Traffic Arrows shown in the left-turn storage lane are optional, but recommended. Arrows may be added for longer storage lanes or deleted for shorter storage lanes. See Contract Plans.

POSTED SPEED	DIMENSION E (1)	APPROACH TAPER F
HIGH SPEED		
60 MPH	180'	360'
55 MPH	180'	330'
50 MPH	180'	300'
45 MPH	180'	270'
LOW SPEED		
40 MPH	120'	240'
35 MPH	120'	210'
30 MPH	120'	180'
25 MPH	120'	150'
20 MPH	120'	120'

(1) Can be reduced to a minimum of 50' to increase storage capacity.

LEGEND

L = 12' Typical Lane Width. See Contract for specified lane widths.

Type 2L (SL) Traffic Arrow

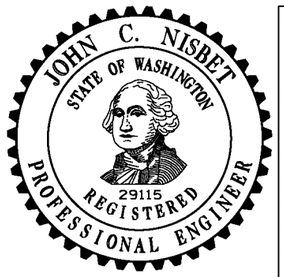

NOTE: THIS PLAN IS NOT A LEGAL ENGINEERING DOCUMENT BUT AN ELECTRONIC DUPLICATE. THE ORIGINAL, SIGNED BY THE ENGINEER AND APPROVED FOR PUBLICATION, IS KEPT ON FILE AT THE WASHINGTON STATE DEPARTMENT OF TRANSPORTATION. A COPY MAY BE OBTAINED UPON REQUEST.

TWO-WAY LEFT-TURN AND MEDIAN CHANNELIZATION
STANDARD PLAN M-3.40-03

SHEET 1 OF 1 SHEET

APPROVED FOR PUBLICATION

Pasco Bakotich III — STATE DESIGN ENGINEER
06-03-11 — DATE

Washington State Department of Transportation

EFFECTIVE: AUGUST 6, 2012 TO August 4, 2013
EFFECTIVE: AUGUST 6, 2012 TO August 4, 2013
EFFECTIVE: AUGUST 6, 2012 TO August 4, 2013
EFFECTIVE: AUGUST 6, 2012 TO August 4, 2013

EFFECTIVE: AUGUST 6, 2012 TO August 4, 2013
EFFECTIVE: AUGUST 6, 2012 TO August 4, 2013

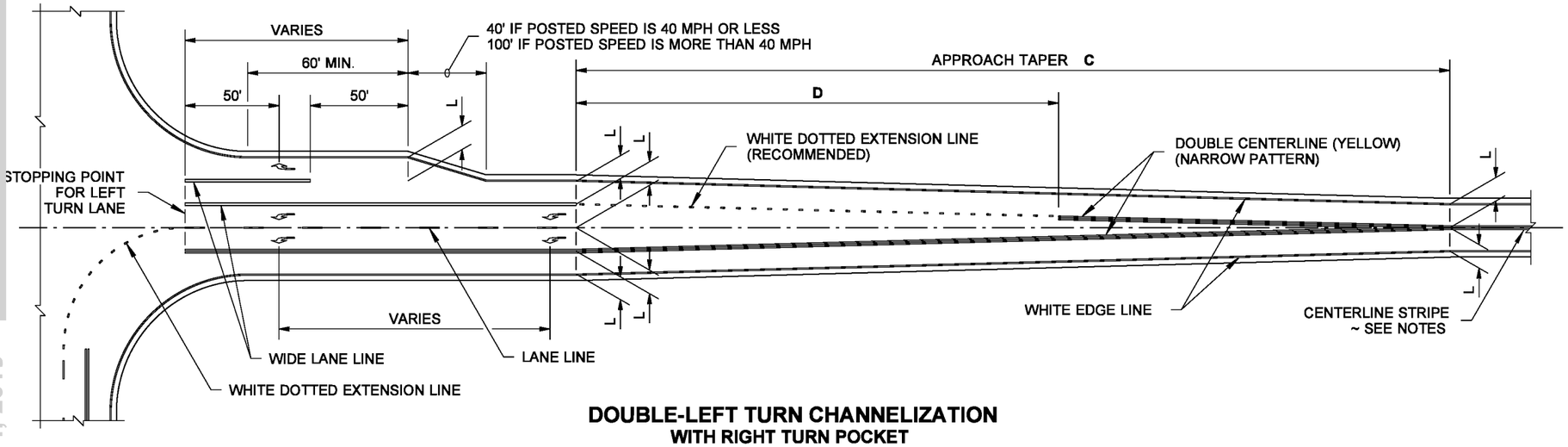

DOUBLE-LEFT TURN CHANNELIZATION
WITH RIGHT TURN POCKET

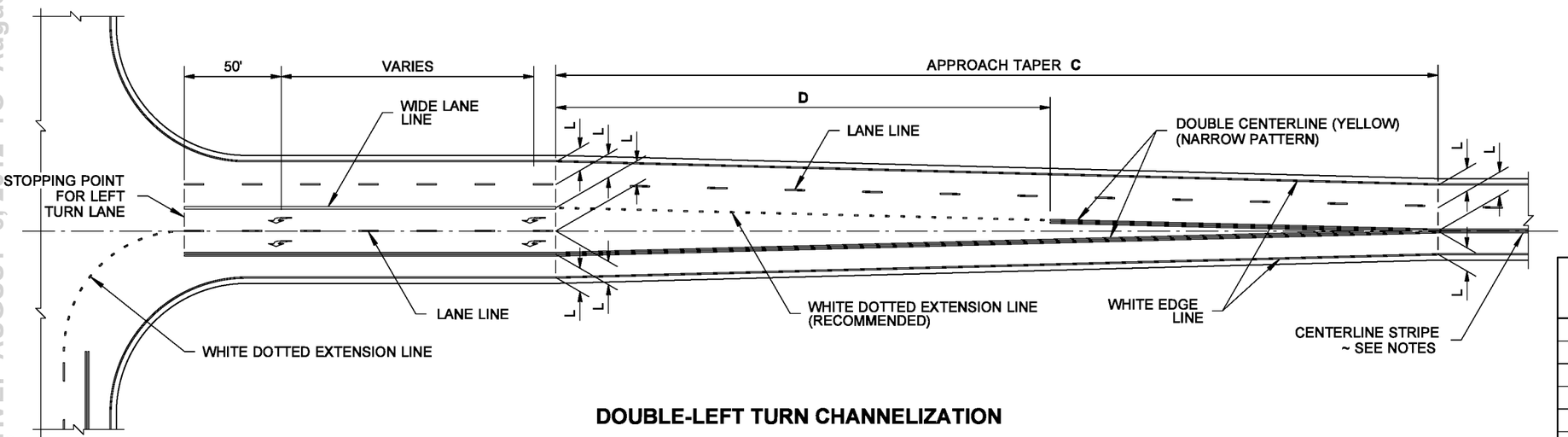

DOUBLE-LEFT TURN CHANNELIZATION

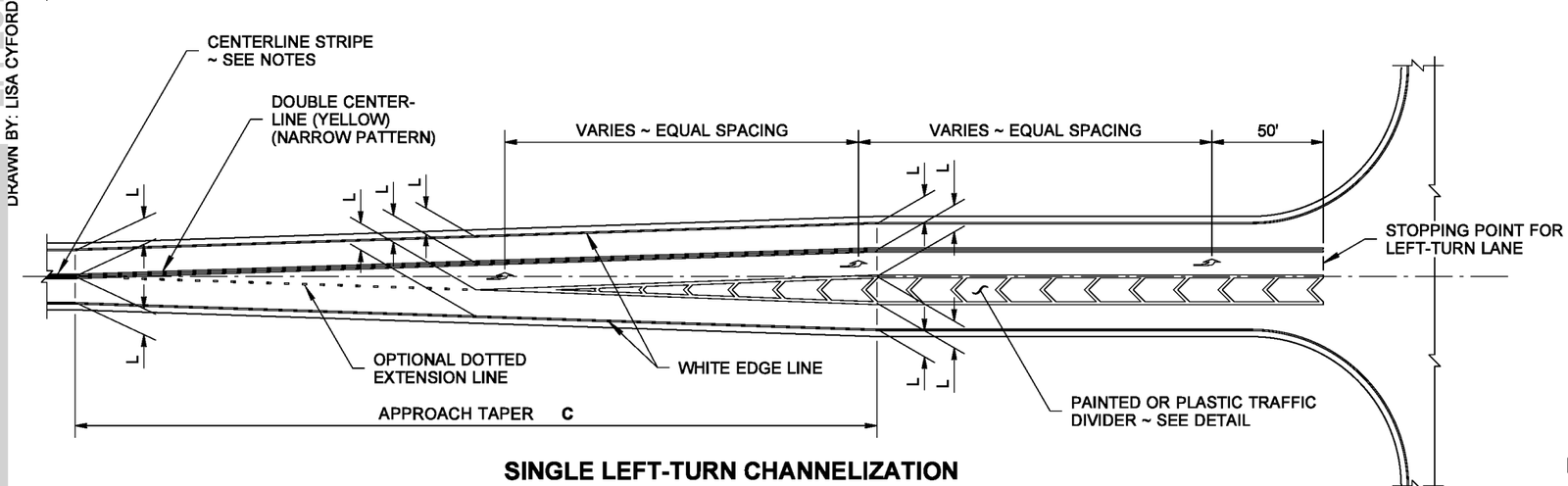

SINGLE LEFT-TURN CHANNELIZATION
FACING OPPOSING DOUBLE LEFT TURNS

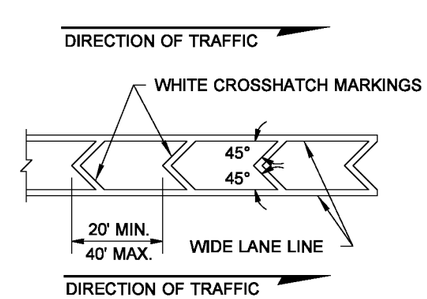

PAINTED OR PLASTIC TRAFFIC DIVIDER
COMPOSED OF LONGITUDINAL MARKINGS

NOTES

1. The channelization shown on this plan assumes optimal roadway geometric design. The dimensions may vary to fit existing conditions. See Contract.
2. The channelization shown on this plan is for a two lane highway. The channelization plan may be used on four lane undivided highways with the appropriate consideratiions.
3. Centerline striping on the approach to raised channelization shall be No Pass in accordance with MUTCD Figure 3B-15. Centerline striping on the departure from raised channel-ization shall be determined by an engineering study.
4. Centerline striping on the approach to and departure from painted channelization shall be determined by an engineering study.
5. Centerline striping on four lane undivided highways shall be double centerline.
6. All turn traffic arrows are optional, but recommended. Arrows may be added for longer storage lanes or deleted for shorter storage lanes. See Contract Plans.

LEGEND

L = 12' Typical Lane Width. See Contract for specified lane widths.
Type 2L (SL) Traffic Arrow
Type 2R (SR) Traffic Arrow

POSTED SPEED	APPROACH TAPER C	D
60 MPH	720'	420'
55 MPH	660'	385'
50 MPH	600'	350'
45 MPH	540'	315'
40 MPH	480'	280'
35 MPH	420'	245'
30 MPH	360'	210'
25 MPH	300'	175'
20 MPH	240'	140'

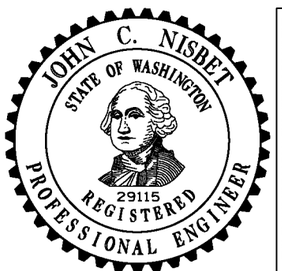

NOTE: THIS PLAN IS NOT A LEGAL ENGINEERING DOCUMENT BUT AN ELECTRONIC DUPLICATE. THE ORIGINAL, SIGNED BY THE ENGINEER AND APPROVED FOR PUBLICATION, IS KEPT ON FILE AT THE WASHINGTON STATE DEPARTMENT OF TRANS-PORTATION. A COPY MAY BE OBTAINED UPON REQUEST.

DOUBLE LEFT-TURN CHANNELIZATION
STANDARD PLAN M-3.50-02

SHEET 1 OF 1 SHEET

APPROVED FOR PUBLICATION

Pasco Bakotich III — STATE DESIGN ENGINEER
06-03-11 — DATE

Washington State Department of Transportation

DRAWN BY: LISA CYFORD

EFFECTIVE: AUGUST 6, 2012 TO August 4, 2013
EFFECTIVE: AUGUST 6, 2012 TO August 4, 2013
EFFECTIVE: AUGUST 6, 2012 TO August 4, 2013
EFFECTIVE: AUGUST 6, 2012 TO August 4, 2013

EFFECTIVE: AUGUST 6, 2012 TO August 4, 2013
EFFECTIVE: AUGUST 6, 2012 TO August 4, 2013

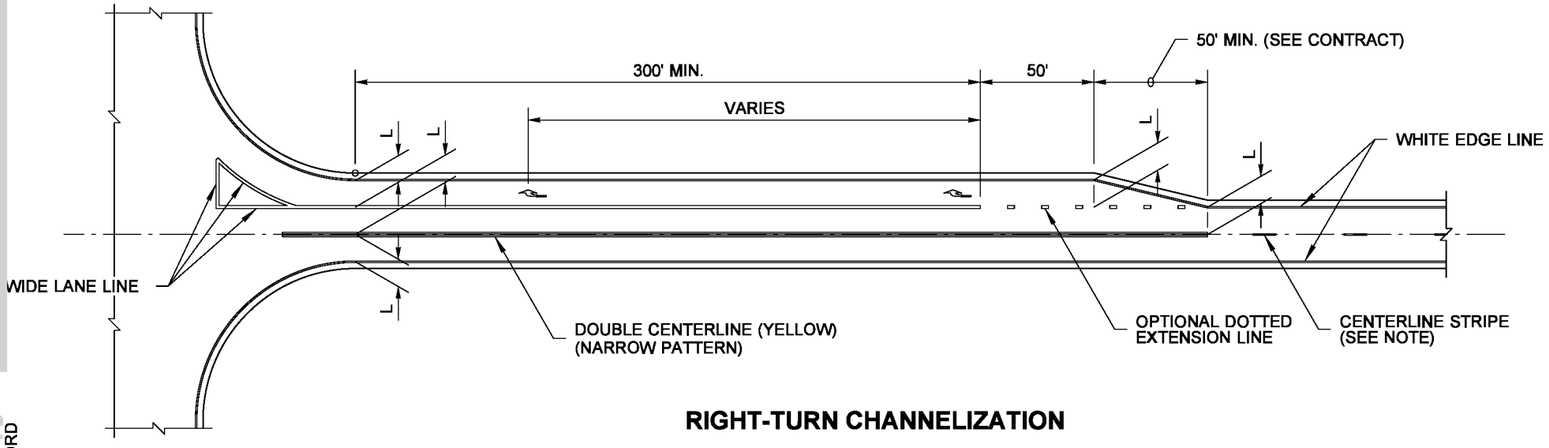

RIGHT-TURN CHANNELIZATION

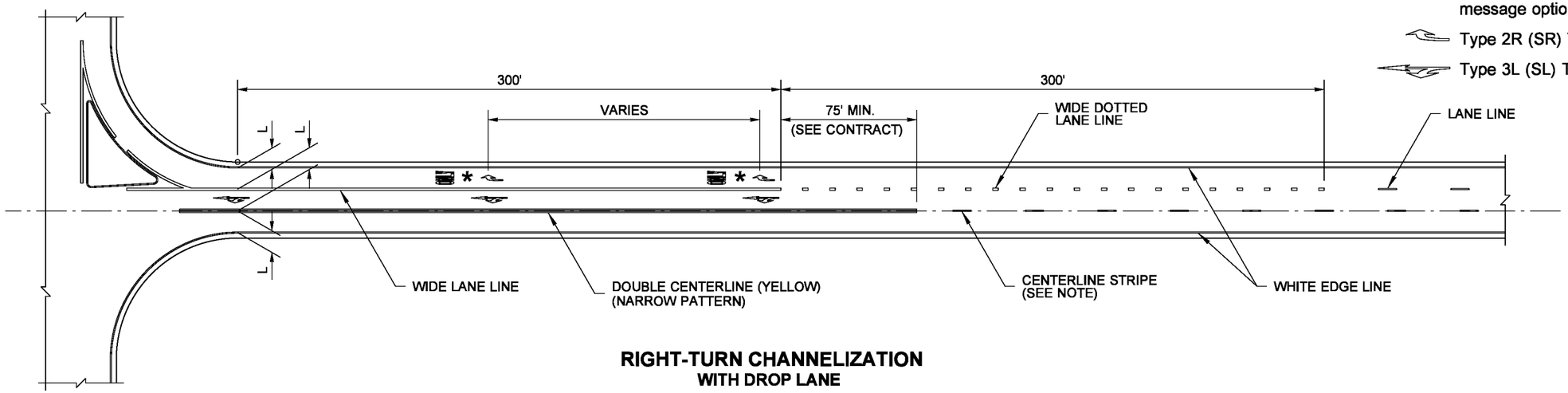

RIGHT-TURN CHANNELIZATION
WITH DROP LANE

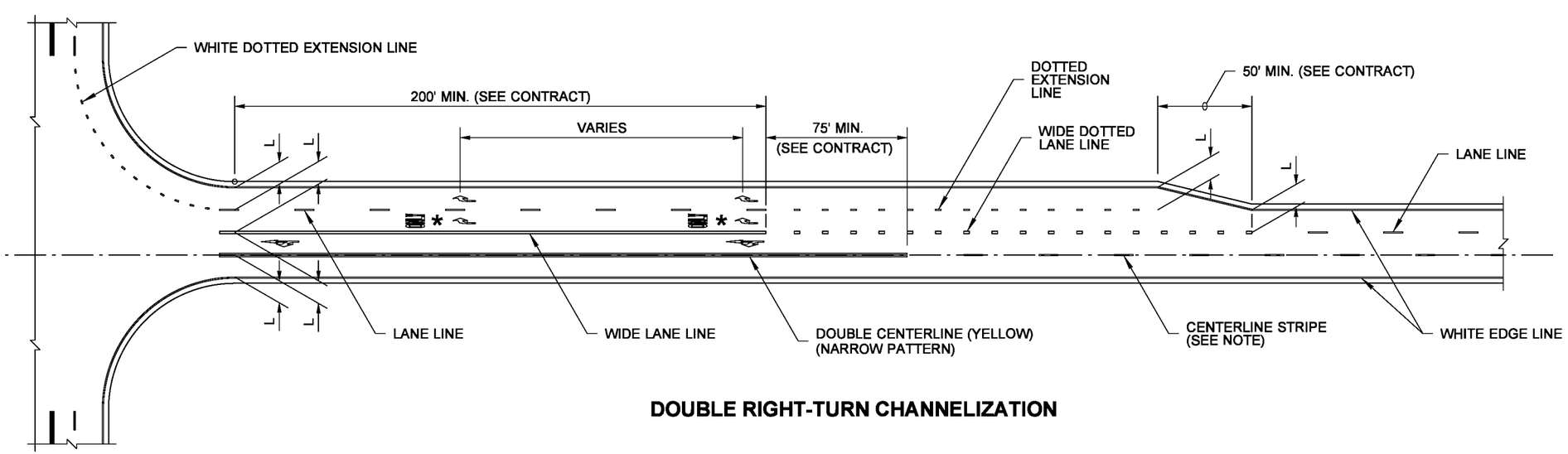

DOUBLE RIGHT-TURN CHANNELIZATION

NOTES

1. The channelization shown on this plan assumes optimal roadway geometric design. The dimensions may vary to fit existing conditions. See Contract.
2. The channelization shown on this plan is for a two-lane highway. The channelization plan may be used on four-lane undivided highways with the appropriate considerations.
3. Centerline striping on the approach to raised channelization shall be No Pass in accordance with MUTCD figure 3B-15. Centerline striping on the departure from raised channelization shall be determined by an engineering study.
4. Centerline striping on the approach to and departure from painted channelization shall be determined by an engineering study.
5. Centerline striping on four-lane undivided highways shall be a double center line.
6. All Traffic Arrows not required are optional, but recommended. Arrows may be added for longer storage lanes, or deleted for shorter storage lanes. See Contract Plans.

LEGEND

L = 12' Typical Lane Width. See Contract for specified lane widths.

* = Denotes required traffic arrow. Accompanying ONLY word message optional. See **Standard Plan M-80.10** for spacing.

Type 2R (SR) Traffic Arrow

Type 3L (SL) Traffic Arrow

DRAWN BY: LISA CYFORD

JOHN C. NISBET
STATE OF WASHINGTON
29115
REGISTERED
PROFESSIONAL ENGINEER

NOTE: THIS PLAN IS NOT A LEGAL ENGINEERING DOCUMENT BUT AN ELECTRONIC DUPLICATE. THE ORIGINAL, SIGNED BY THE ENGINEER AND APPROVED FOR PUBLICATION, IS KEPT ON FILE AT THE WASHINGTON STATE DEPARTMENT OF TRANSPORTATION. A COPY MAY BE OBTAINED UPON REQUEST.

RIGHT-TURN CHANNELIZATION

STANDARD PLAN M-5.10-02

SHEET 1 OF 1 SHEET

APPROVED FOR PUBLICATION

Pasco Bakotich III — STATE DESIGN ENGINEER

06-03-11 — DATE

Washington State Department of Transportation

EFFECTIVE: AUGUST 6, 2012 TO August 4, 2013
EFFECTIVE: AUGUST 6, 2012 TO August 4, 2013
EFFECTIVE: AUGUST 6, 2012 TO August 4, 2013
EFFECTIVE: AUGUST 6, 2012 TO August 4, 2013

EFFECTIVE: AUGUST 6, 2012 TO August 4, 2013
EFFECTIVE: AUGUST 6, 2012 TO August 4, 2013

DRAWN BY: MARK SUJKA

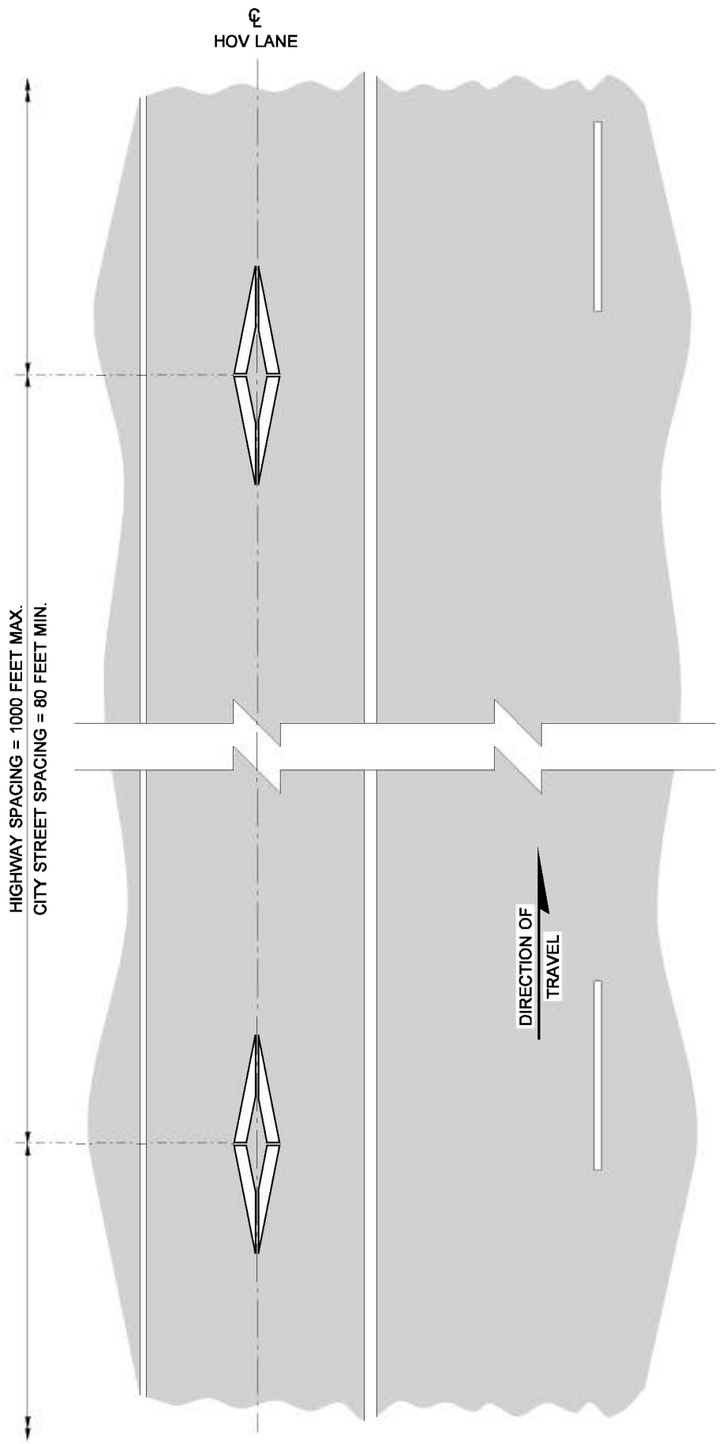

LAYOUT

NOTE

When Specified in the Contract Plans, the HOV Symbol Marking shall be installed with an offset of 1 foot max. from the lane centerline.

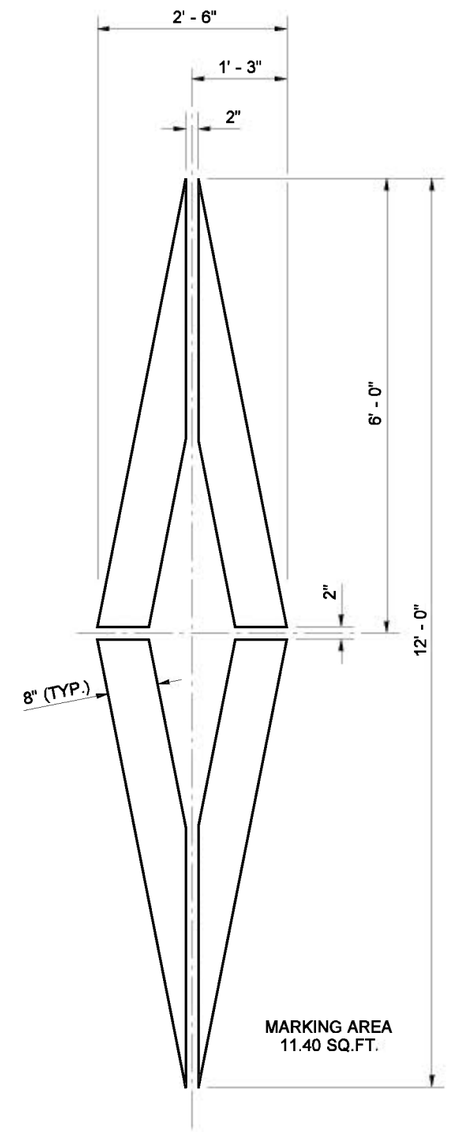

HOV LANE SYMBOL

EXPIRES AUGUST 9, 2007

NOTE: THIS PLAN IS NOT A LEGAL ENGINEERING DOCUMENT BUT AN ELECTRONIC DUPLICATE. THE ORIGINAL, SIGNED BY THE ENGINEER AND APPROVED FOR PUBLICATION, IS KEPT ON FILE AT THE WASHINGTON STATE DEPARTMENT OF TRANSPORTATION. A COPY MAY BE OBTAINED UPON REQUEST.

HIGH OCCUPANCY VEHICLE (HOV) LANE SYMBOL LAYOUT

STANDARD PLAN M-7.50-01

SHEET 1 OF 1 SHEET

APPROVED FOR PUBLICATION

Ken L. Smith — STATE DESIGN ENGINEER

01-30-07 — DATE

Washington State Department of Transportation

EFFECTIVE: AUGUST 6, 2012 TO August 4, 2013
EFFECTIVE: AUGUST 6, 2012 TO August 4, 2013
EFFECTIVE: AUGUST 6, 2012 TO August 4, 2013
EFFECTIVE: AUGUST 6, 2012 TO August 4, 2013

EFFECTIVE: AUGUST 6, 2012 TO August 4, 2013
EFFECTIVE: AUGUST 6, 2012 TO August 4, 2013

DRAWN BY: MARK SUJKA

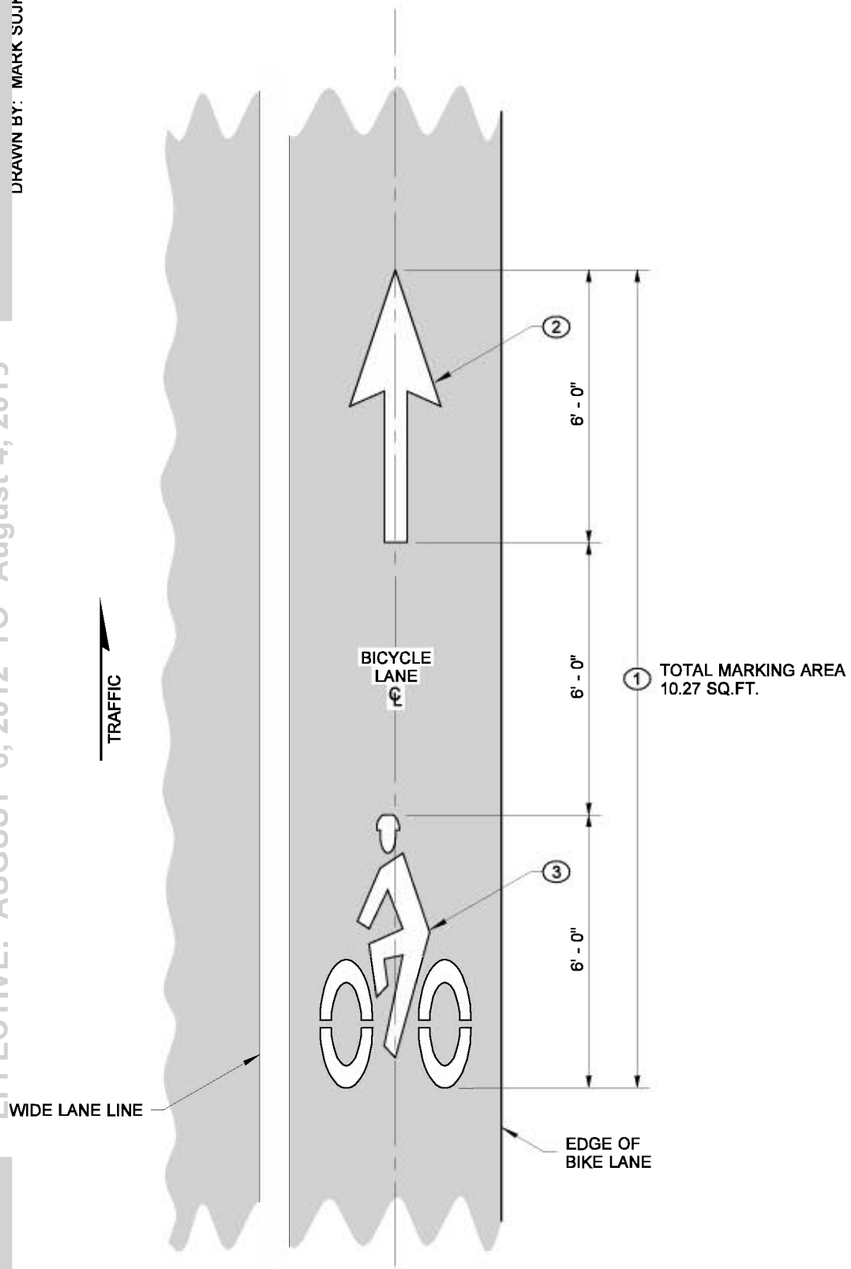

BICYCLE LANE SYMBOL LAYOUT

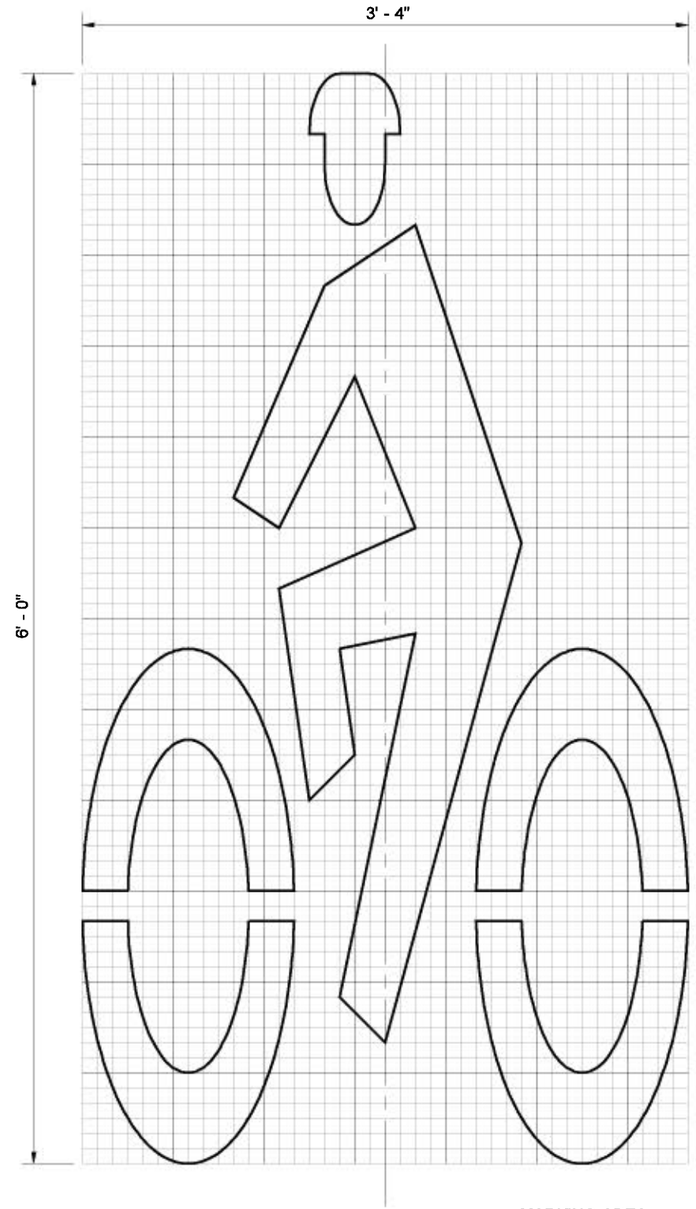

BIKE RIDER SYMBOL DETAIL

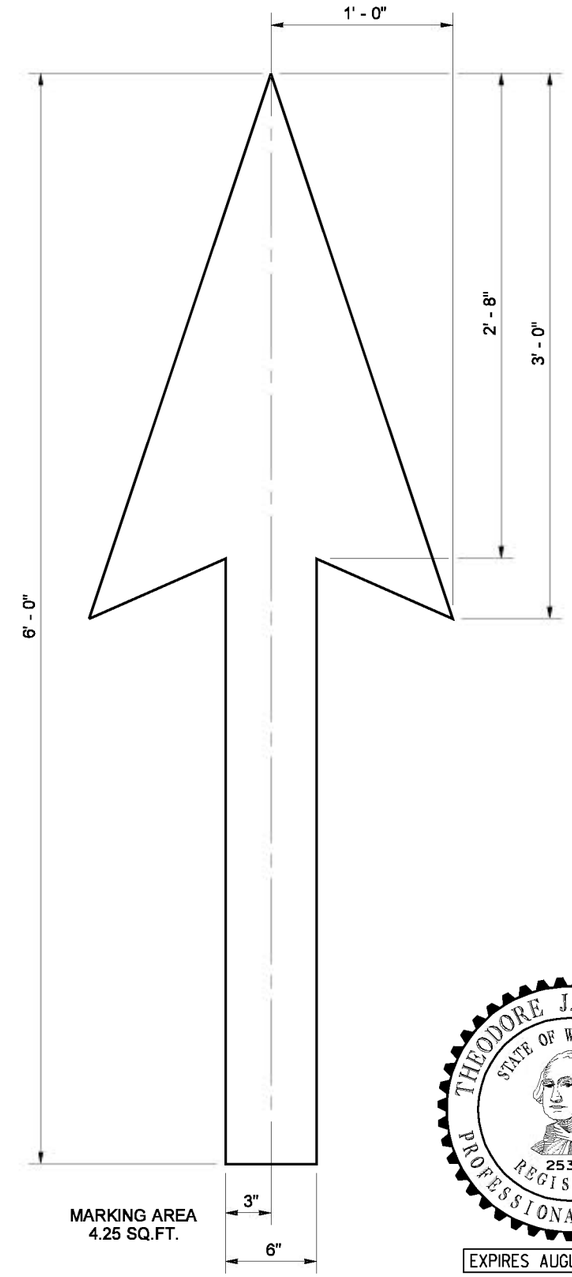

BIKE LANE ARROW DETAIL

KEY NOTES

1. Bid Item "Bicycle Lane Symbol" includes Bike Lane Arrow and Bike Rider Symbol.
2. 2' x 6' White Bike Lane Arrow
3. Bike Rider Symbol

GENERAL NOTE

See contract for location and material requirements.

THEODORE J. TREPANIER
STATE OF WASHINGTON
25335
REGISTERED
PROFESSIONAL ENGINEER

EXPIRES AUGUST 9, 2007

NOTE: THIS PLAN IS NOT A LEGAL ENGINEERING DOCUMENT BUT AN ELECTRONIC DUPLICATE. THE ORIGINAL, SIGNED BY THE ENGINEER AND APPROVED FOR PUBLICATION, IS KEPT ON FILE AT THE WASHINGTON STATE DEPARTMENT OF TRANSPORTATION. A COPY MAY BE OBTAINED UPON REQUEST.

BICYCLE LANE SYMBOL LAYOUT

STANDARD PLAN M-9.50-01

SHEET 1 OF 1 SHEET

APPROVED FOR PUBLICATION

Ken L. Smith — STATE DESIGN ENGINEER
01-30-07 — DATE

Washington State Department of Transportation

EFFECTIVE: AUGUST 6, 2012 TO August 4, 2013
EFFECTIVE: AUGUST 6, 2012 TO August 4, 2013
EFFECTIVE: AUGUST 6, 2012 TO August 4, 2013
EFFECTIVE: AUGUST 6, 2012 TO August 4, 2013

EFFECTIVE: AUGUST 6, 2012 TO August 4, 2013

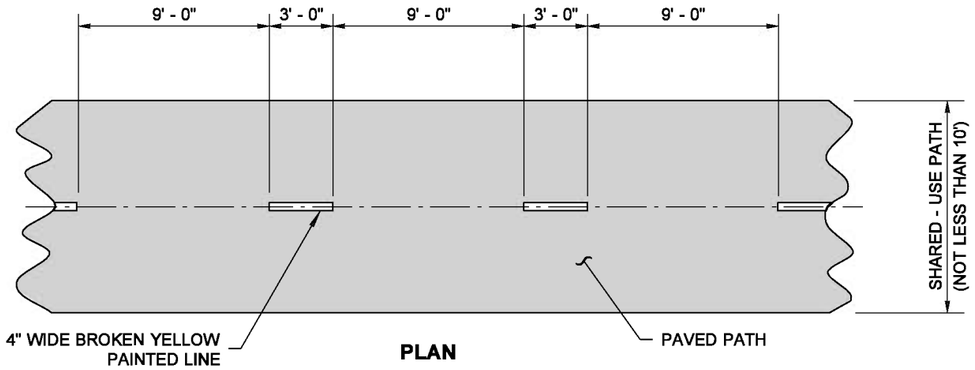

PLAN
CENTERLINE MARKING

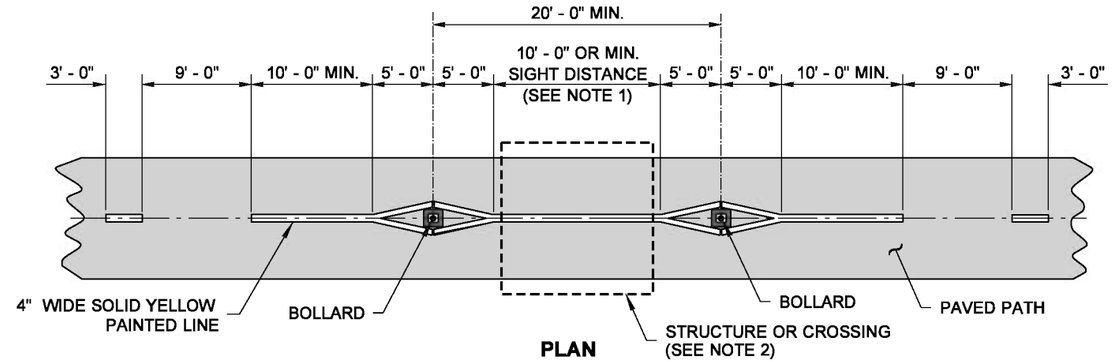

PLAN
MARKING AROUND MULTIPLE BOLLARDS
SHOWN AT REDUCED DRAWING SCALE

NOTE:

1. In cases where the bollard location is not visible to an approaching bicyclist, use the minimum sight distance for the Solid Yellow Painted Line (taper portion), to extend the Solid Yellow Painted Line as needed to provide advanced warning of the upcoming obstruction.
2. In cases where there is a crossing, bridge or other structure on the path that does not support or accomodate a vehicle. (See Contract).
3. Provide Breakaway Bollards within the Roadway Design Clear Zone.

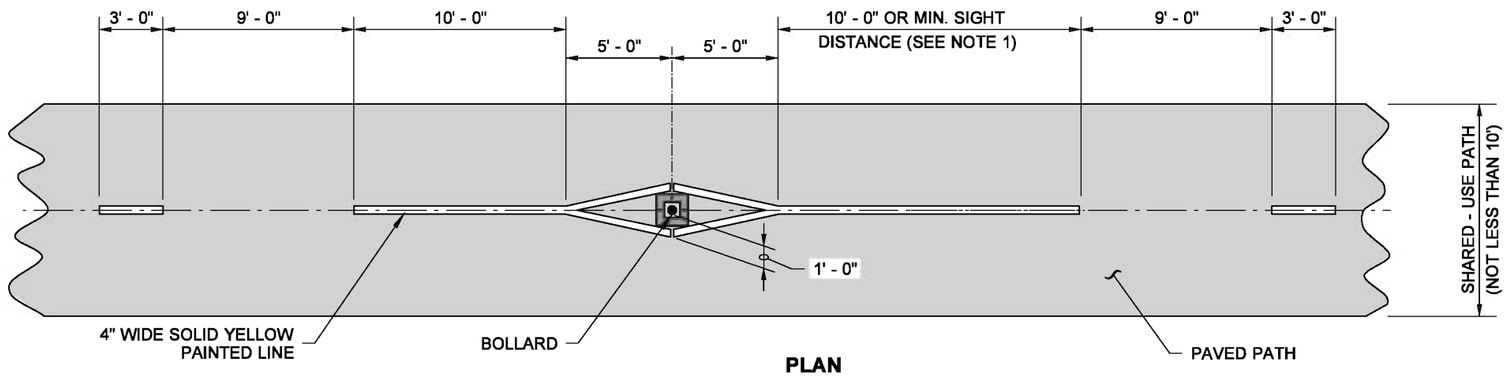

PLAN
MARKING AROUND BOLLARD

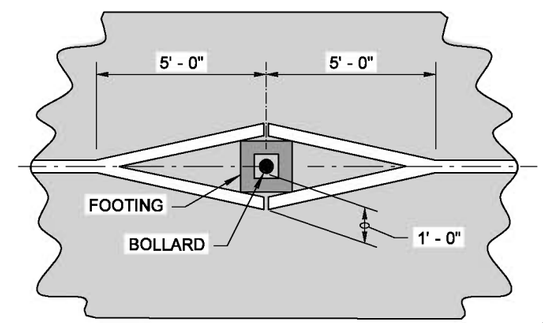

DETAIL

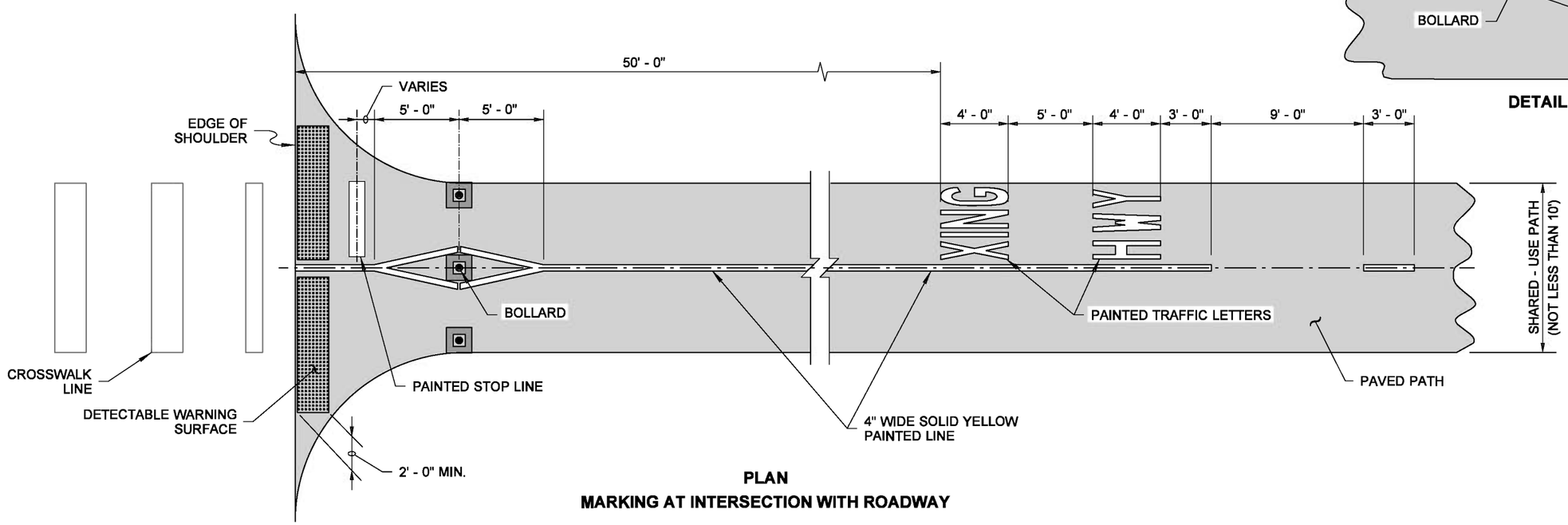

PLAN
MARKING AT INTERSECTION WITH ROADWAY

NOTE: THIS PLAN IS NOT A LEGAL ENGINEERING DOCUMENT BUT AN ELECTRONIC DUPLICATE. THE ORIGINAL, SIGNED BY THE ENGINEER AND APPROVED FOR PUBLICATION, IS KEPT ON FILE AT THE WASHINGTON STATE DEPARTMENT OF TRANSPORTATION. A COPY MAY BE OBTAINED UPON REQUEST.

SHARED - USE PATH MARKINGS

STANDARD PLAN M-9.60-00

SHEET 1 OF 1 SHEET

APPROVED FOR PUBLICATION

Pasco Bakotich III — STATE DESIGN ENGINEER
02-10-09 — DATE

Washington State Department of Transportation

EFFECTIVE: AUGUST 6, 2012 TO August 4, 2013

EFFECTIVE: AUGUST 6, 2012 TO August 4, 2013
EFFECTIVE: AUGUST 6, 2012 TO August 4, 2013

DRAWN BY: MARK SUJKA

GENERAL NOTE

See contract for location and material requirements.

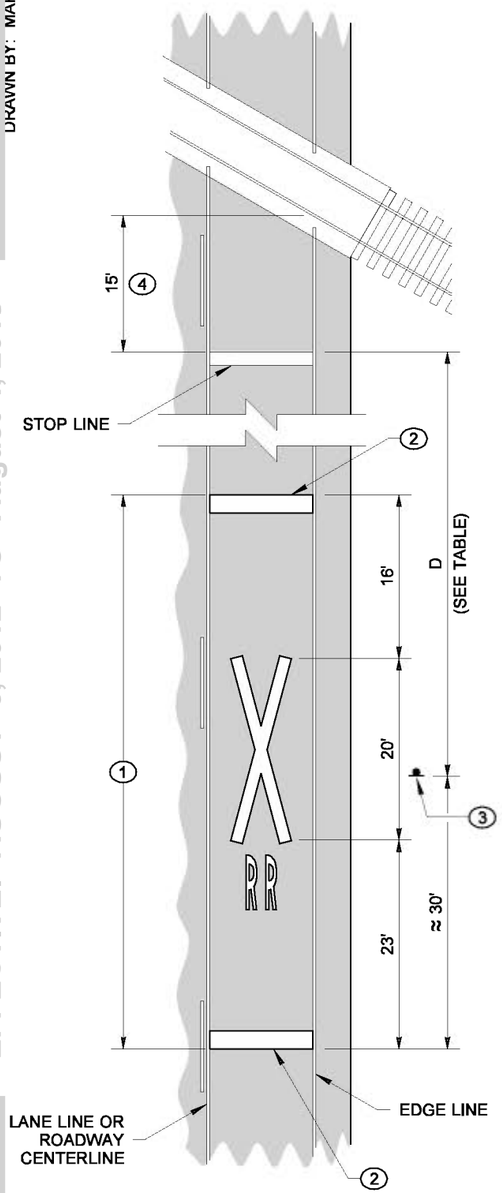

LAYOUT

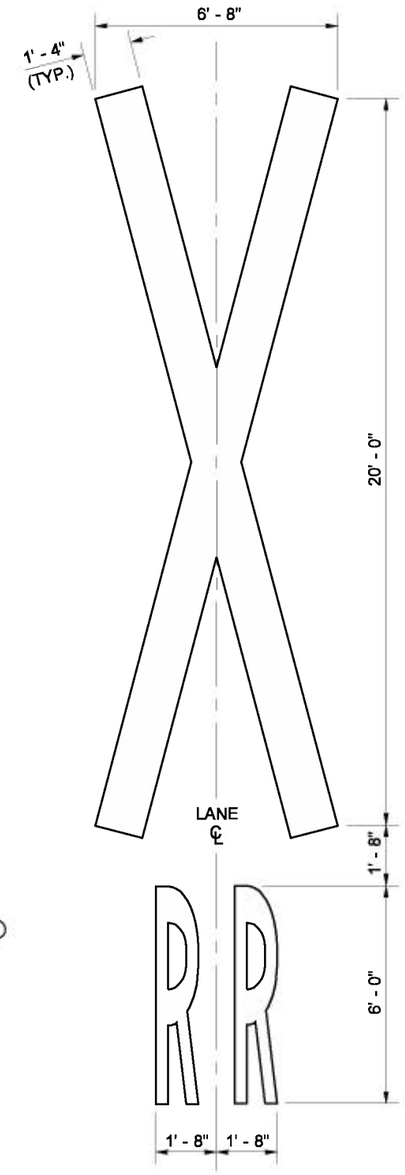

SYMBOL DETAIL

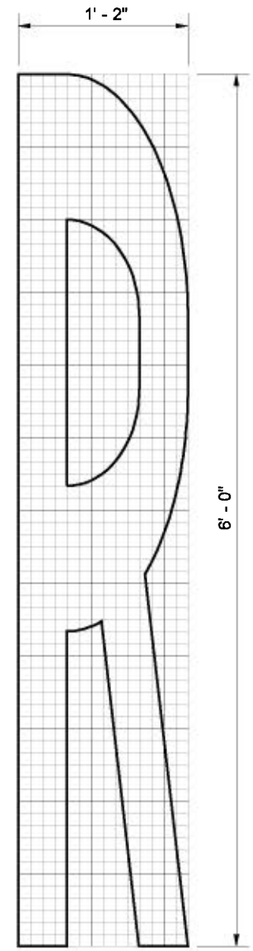

GRID IS 1" SQUARE

"R" DETAIL

MPH	D*
25	50 Ft.
30	100 Ft.
35	150 Ft.
40	225 Ft.
45	300 Ft.
50	375 Ft.
55	450 Ft.
60	550 Ft.
65	650 Ft.

* DIMENSIONS SHOWN ARE APPROXIMATE. SEE CONTRACT.

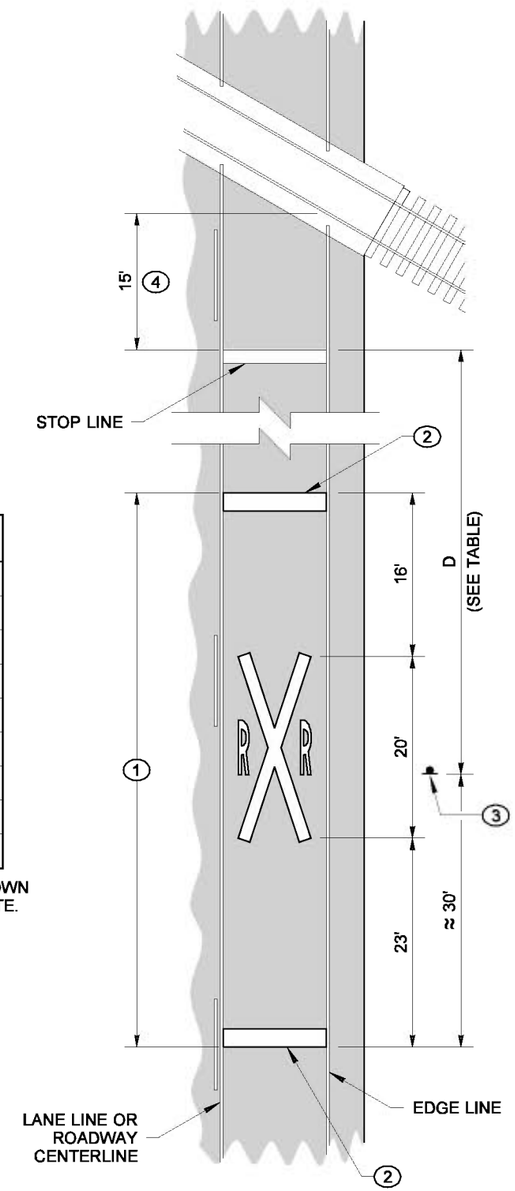

LAYOUT

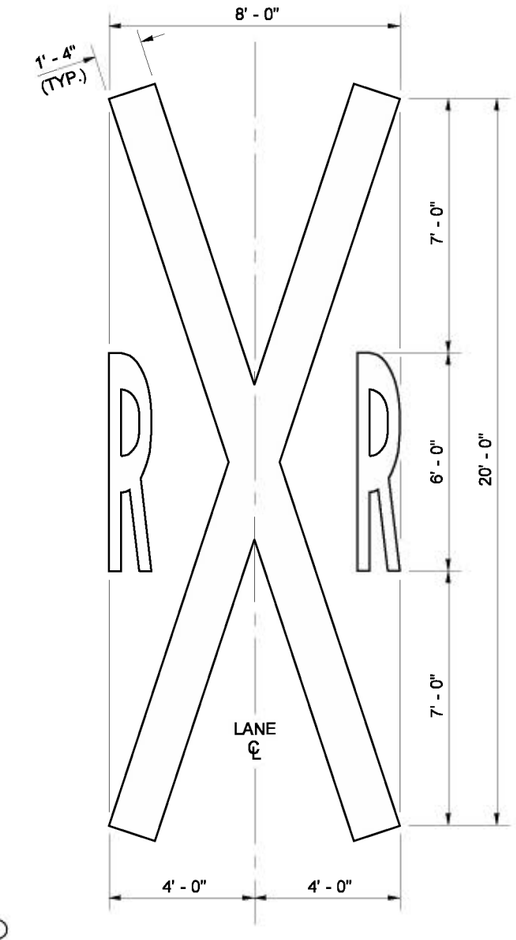

SYMBOL DETAIL

KEY NOTES

1. Bid Item "Railroad Crossing Symbol" includes "X" symbol, letters, and two 24" white transverse lines.
2. 24" white transverse line
3. W10-1 Advance Warning Sign (not included in RR Crossing Symbol Bid Item)
4. Place Stop Line 15' from the nearest rail or approximately 8 feet from RR gate, if present.

(1) TOTAL MARKING AREA (PER 12' WIDE LANE) = 109.75 SQ.FT.

STANDARD SYMBOL

(1) TOTAL MARKING AREA (PER 12' WIDE LANE) = 111.59 SQ.FT.

ALTERNATIVE SYMBOL

THEODORE J. TREPANIER
STATE OF WASHINGTON
25335
REGISTERED
PROFESSIONAL ENGINEER

EXPIRES AUGUST 9, 2007

NOTE: THIS PLAN IS NOT A LEGAL ENGINEERING DOCUMENT BUT AN ELECTRONIC DUPLICATE. THE ORIGINAL, SIGNED BY THE ENGINEER AND APPROVED FOR PUBLICATION, IS KEPT ON FILE AT THE WASHINGTON STATE DEPARTMENT OF TRANSPORTATION. A COPY MAY BE OBTAINED UPON REQUEST.

RAILROAD CROSSING LAYOUT

STANDARD PLAN M-11.10-01

SHEET 1 OF 1 SHEET

APPROVED FOR PUBLICATION

Ken L. Smith — STATE DESIGN ENGINEER
01-30-07 — DATE

Washington State Department of Transportation

EFFECTIVE: AUGUST 6, 2012 TO August 4, 2013
EFFECTIVE: AUGUST 6, 2012 TO August 4, 2013
EFFECTIVE: AUGUST 6, 2012 TO August 4, 2013
EFFECTIVE: AUGUST 6, 2012 TO August 4, 2013

EFFECTIVE: AUGUST 6, 2012 TO August 4, 2013
EFFECTIVE: AUGUST 6, 2012 TO August 4, 2013

DRAWN BY: FERN LIDDELL

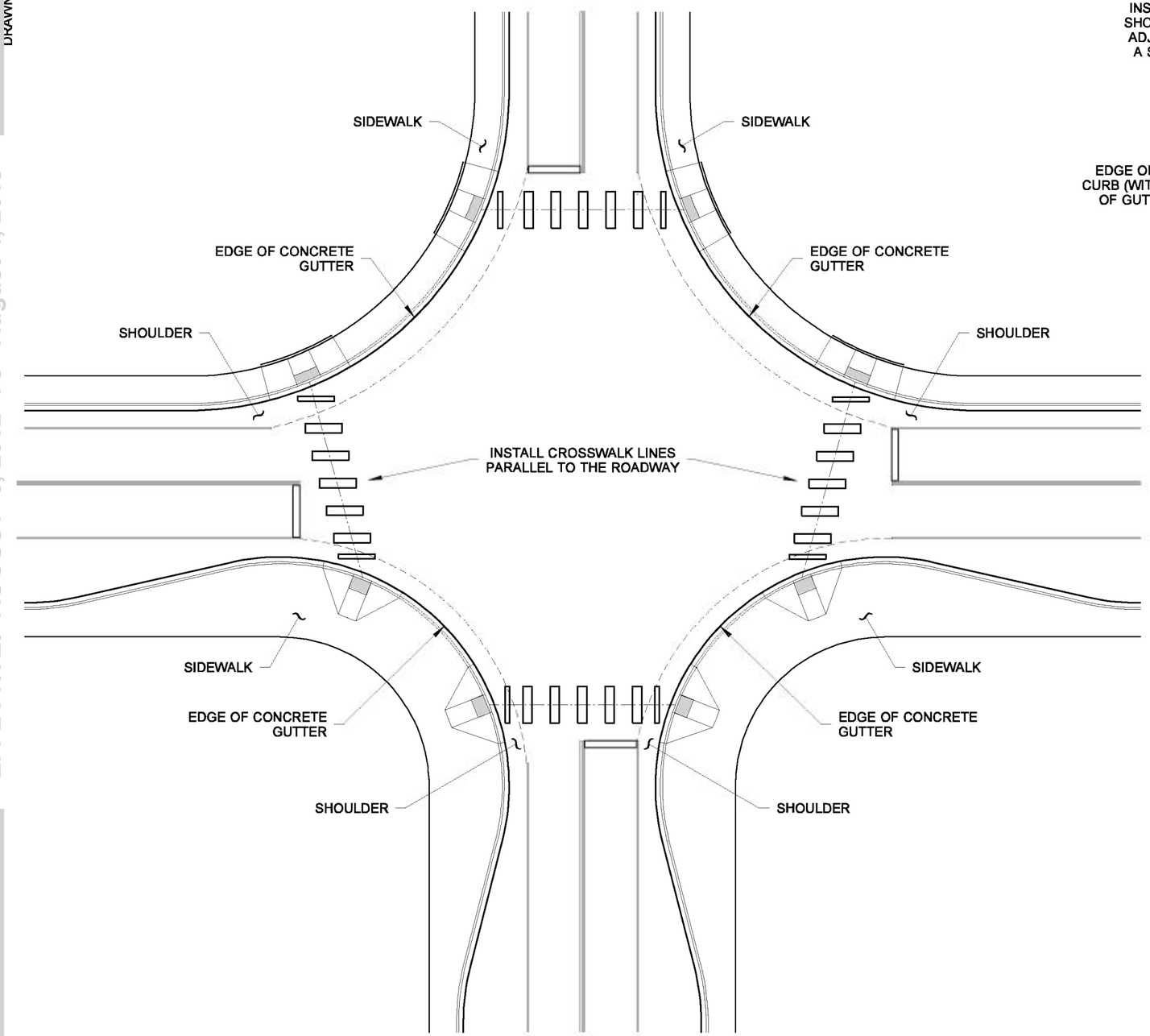

TYPICAL APPLICATIONS

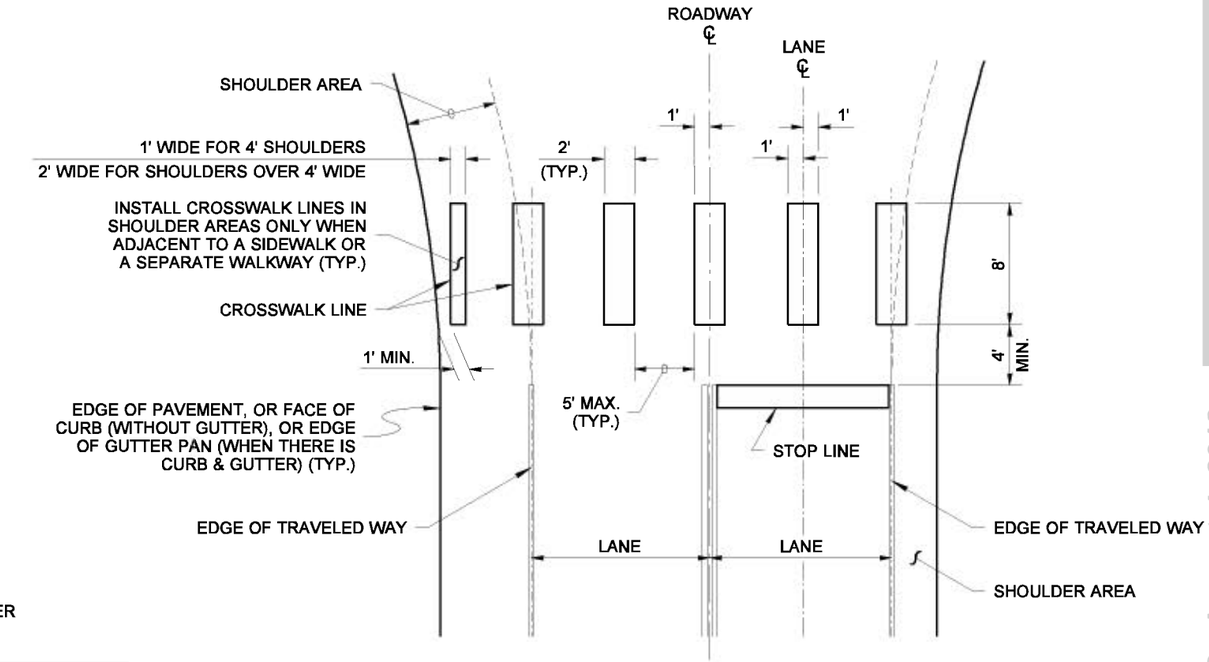

DETAIL

NOTES

1. See the Contract Plans for locations of crosswalk centerlines.
2. To the maximum extent possible, curb ramp centerline should be perpendicular to the crosswalk centerline.
3. To the maximum extent possible, crosswalks should be perpendicular to the centerline of the traveled way.

EXPIRES AUGUST 9, 2007

NOTE: THIS PLAN IS NOT A LEGAL ENGINEERING DOCUMENT BUT AN ELECTRONIC DUPLICATE. THE ORIGINAL, SIGNED BY THE ENGINEER AND APPROVED FOR PUBLICATION, IS KEPT ON FILE AT THE WASHINGTON STATE DEPARTMENT OF TRANSPORTATION. A COPY MAY BE OBTAINED UPON REQUEST.

CROSSWALK LAYOUT

STANDARD PLAN M-15.10-01

SHEET 1 OF 1 SHEET

APPROVED FOR PUBLICATION

Ken L. Smith — STATE DESIGN ENGINEER

02-06-07 — DATE

Washington State Department of Transportation

EFFECTIVE: AUGUST 6, 2012 TO August 4, 2013
EFFECTIVE: AUGUST 6, 2012 TO August 4, 2013
EFFECTIVE: AUGUST 6, 2012 TO August 4, 2013
EFFECTIVE: AUGUST 6, 2012 TO August 4, 2013

EFFECTIVE: AUGUST 6, 2012 TO August 4, 2013
EFFECTIVE: AUGUST 6, 2012 TO August 4, 2013

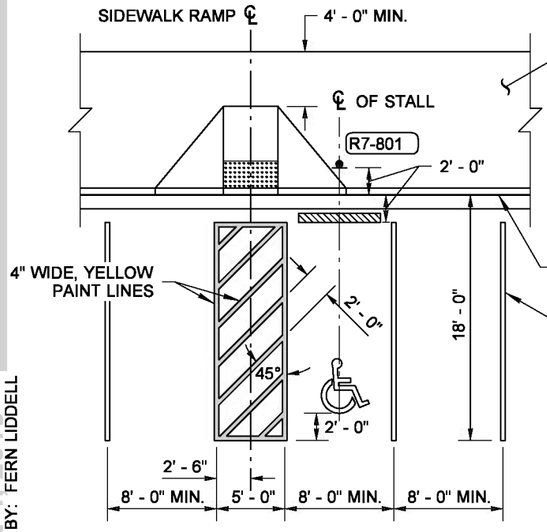

PLAN

ONE ACCESSIBLE STALL

90° PARKING STALL ARRANGEMENT

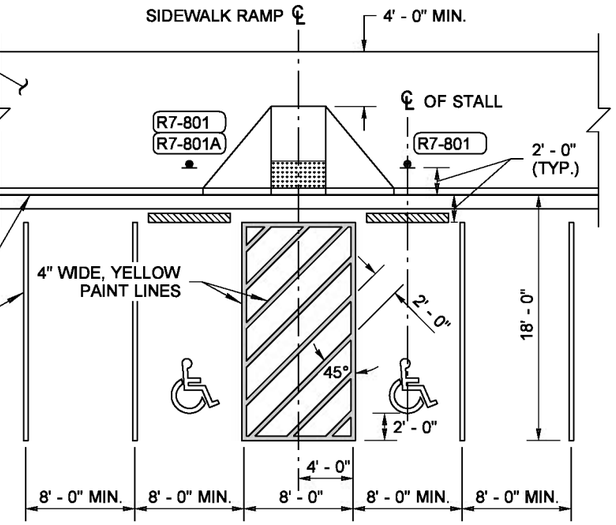

PLAN

TWO ACCESSIBLE STALLS

90° PARKING STALL ARRANGEMENT

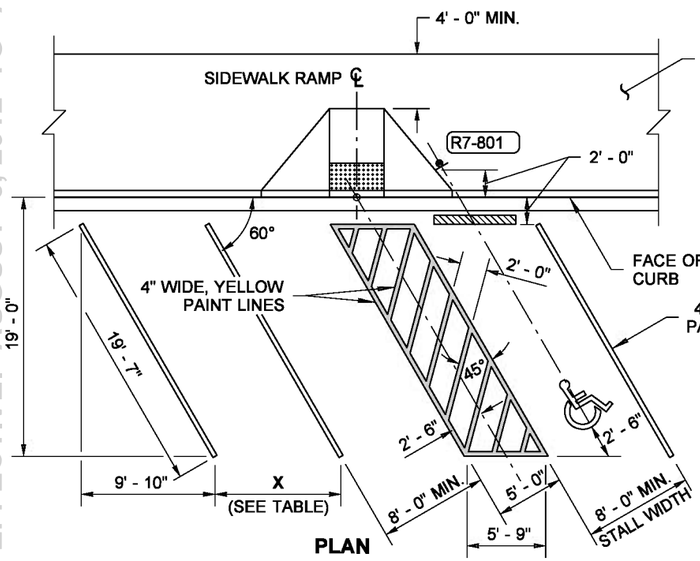

PLAN

ONE ACCESSIBLE STALL

60° PARKING STALL ARRANGEMENT

STALL WIDTH	X
8' - 0"	9' - 3"
9' - 0"	10' - 5"
10' - 0"	11' - 7"
11' - 0"	12' - 8"
12' - 0"	13' - 10"

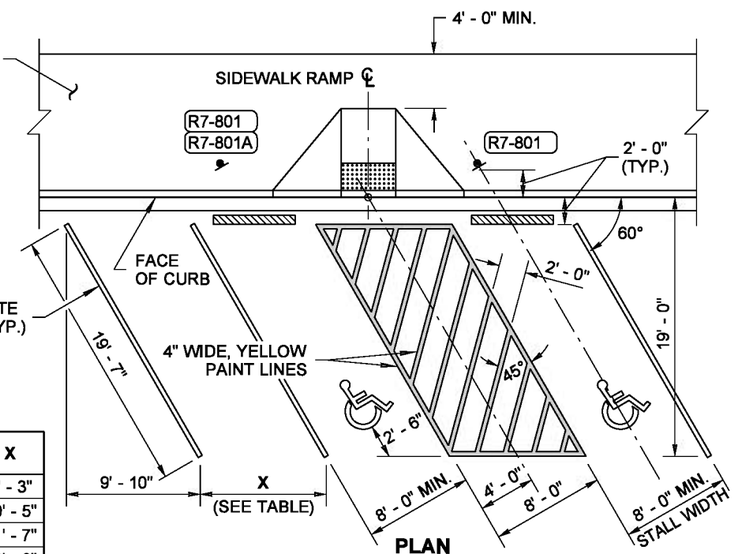

PLAN

TWO ACCESSIBLE STALLS

60° PARKING STALL ARRANGEMENT

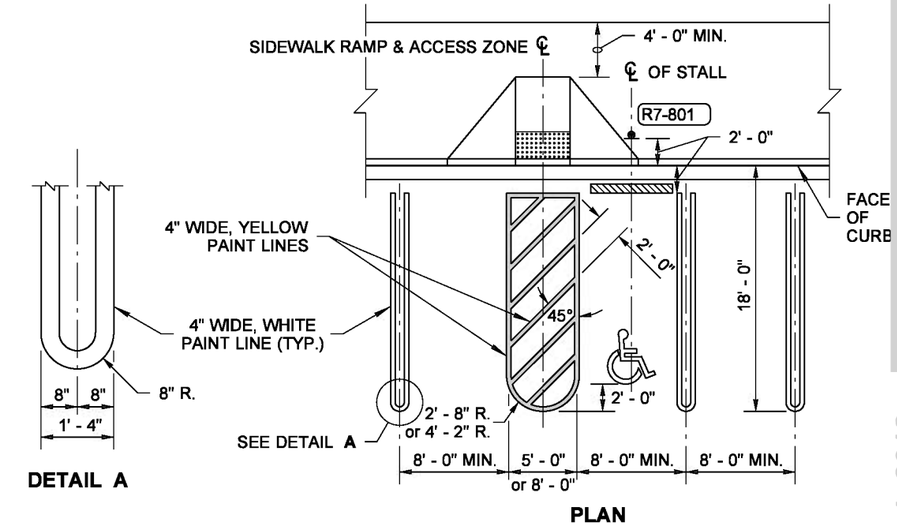

DETAIL A

PLAN

ALTERNATIVE PARKING STALL MARKINGS

USE ONLY WHEN SPECIFIED IN THE CONTRACT

NOTES

1. Three, four and five accessible stall arrangements may be either 60° (angled) or 90° (perpendicular) parking arrangements. See Contract.
2. An Access Parking Space Symbol is required for each accessible parking stall. A blue background and white border are required when the symbol is installed on a cement concrete surface.
3. All accessible stalls shall have wheel stops. Place wheel stops in other stalls when specified in the contract. Wheel stops shall be approximately 6" high and a minimum of 6' long.
4. Refer to the Standard Plans for sidewalk ramp, detectable warning pattern, and curb details.

LEGEND

- R7-801 — Reserved Parking Sign and post with R7-801A Plaque, if indicated (See Sign Fabrication Manual)
- Access Parking Space Symbol
- Manufactured wheel stop
- Detectable Warning Pattern

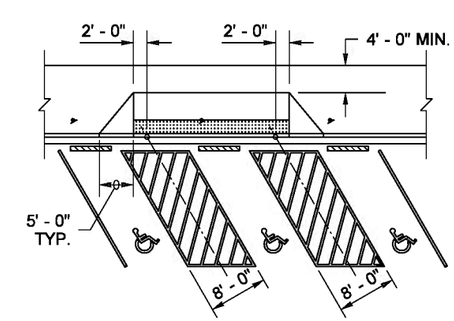

THREE ACCESSIBLE STALLS

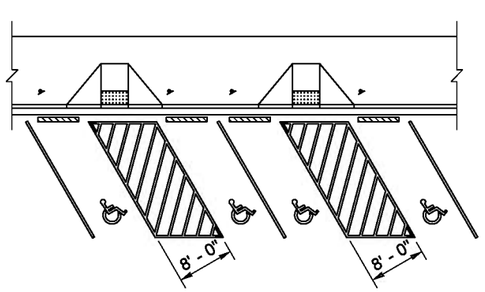

FOUR ACCESSIBLE STALLS

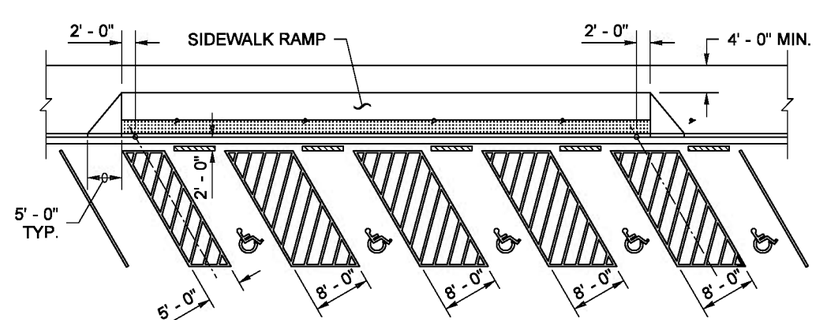

FIVE ACCESSIBLE STALLS

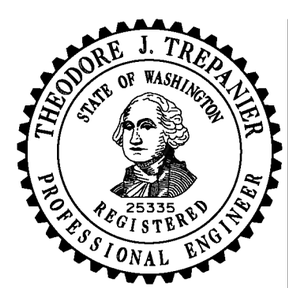

EXPIRES AUGUST 9, 2009

NOTE: THIS PLAN IS NOT A LEGAL ENGINEERING DOCUMENT BUT AN ELECTRONIC DUPLICATE. THE ORIGINAL, SIGNED BY THE ENGINEER AND APPROVED FOR PUBLICATION, IS KEPT ON FILE AT THE WASHINGTON STATE DEPARTMENT OF TRANSPORTATION. A COPY MAY BE OBTAINED UPON REQUEST.

PARKING SPACE LAYOUTS

STANDARD PLAN M-17.10-02

SHEET 1 OF 1 SHEET

APPROVED FOR PUBLICATION

Pasco Bakotich III — STATE DESIGN ENGINEER — *07-03-08* — DATE

Washington State Department of Transportation

DRAWN BY: FERN LIDDELL

EFFECTIVE: AUGUST 6, 2012 TO August 4, 2013
EFFECTIVE: AUGUST 6, 2012 TO August 4, 2013
EFFECTIVE: AUGUST 6, 2012 TO August 4, 2013
EFFECTIVE: AUGUST 6, 2012 TO August 4, 2013

EFFECTIVE: AUGUST 6, 2012 TO August 4, 2013
EFFECTIVE: AUGUST 6, 2012 TO August 4, 2013

DRAWN BY: LISA CYFORD

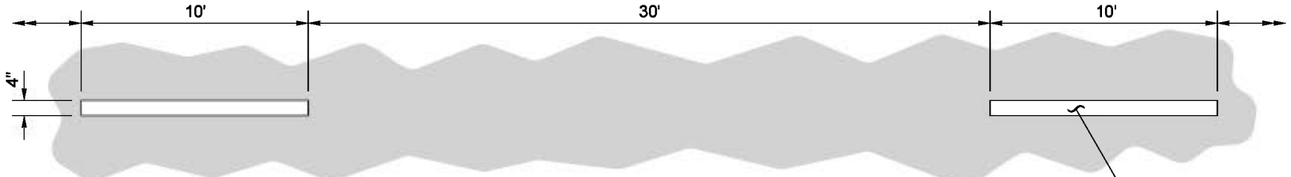

CENTERLINE & LANE LINE

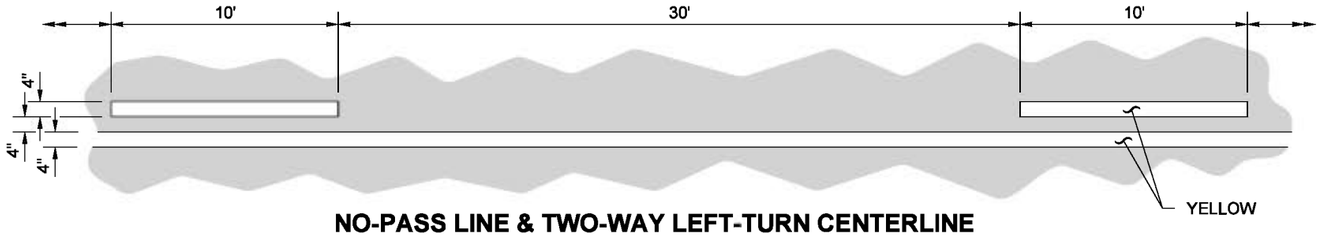

NO-PASS LINE & TWO-WAY LEFT-TURN CENTERLINE

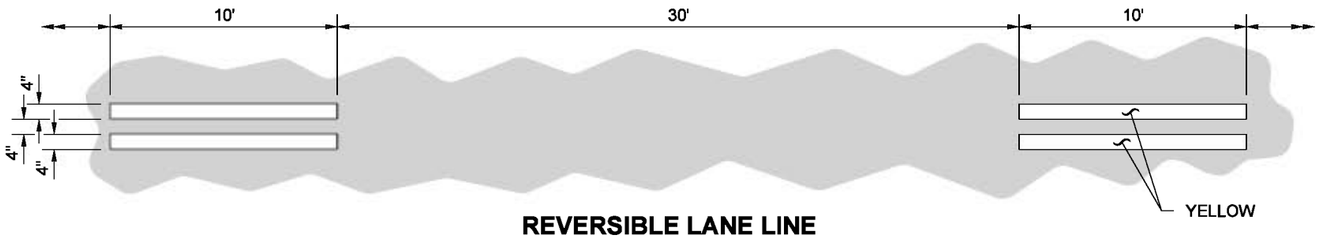

REVERSIBLE LANE LINE

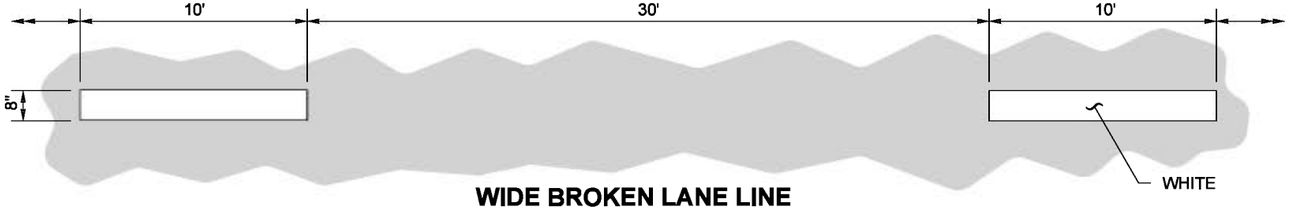

WIDE BROKEN LANE LINE

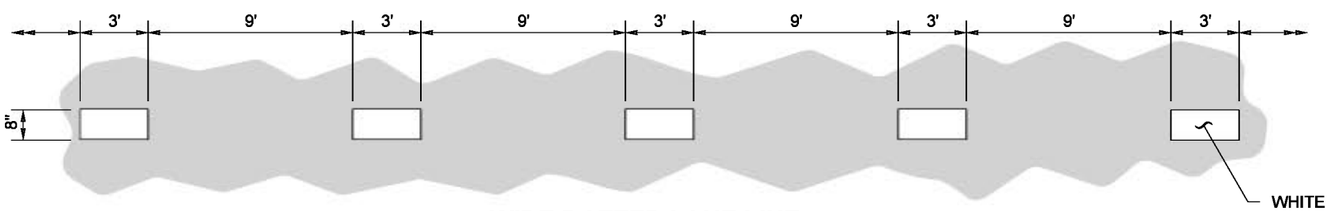

WIDE DOTTED LANE LINE

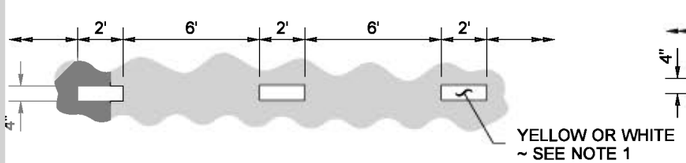

DOTTED EXTENSION LINE

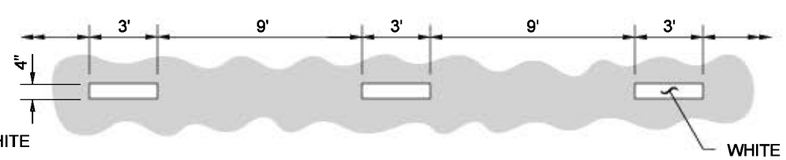

DOTTED LANE LINE

EDGE LINE & SOLID LANE LINE

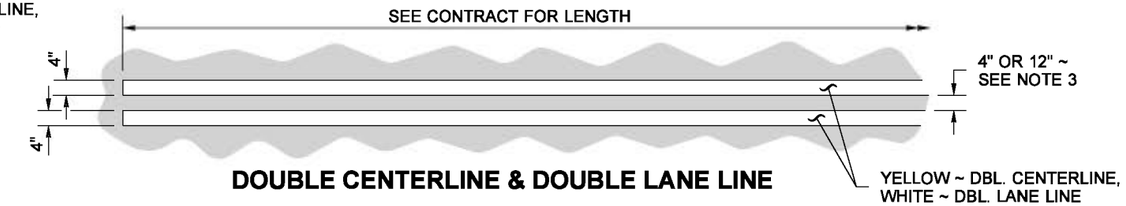

DOUBLE CENTERLINE & DOUBLE LANE LINE

WIDE LANE LINE

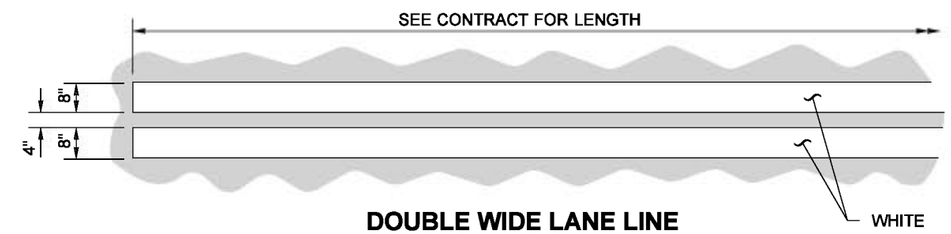

DOUBLE WIDE LANE LINE

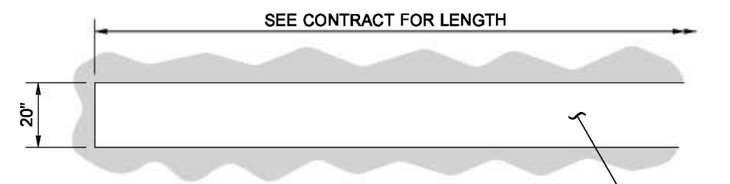

BARRIER CENTERLINE

NOTES

1. Dotted Extension Line shall be the same color as the line it is extending.
2. Edge Line shall be white on the right edge of traveled way, and yellow on the left edge of traveled way (on one-way roadways). Solid Lane Line shall be white.
3. The distance between the lines of the Double Centerline shall be 12" everywhere, except 4" for left-turn channelization and narrow roadways with lane widths of 10 feet or less. Local Agencies (on non-state routes) may specify a 4" distance for all locations.

   The distance between the lines of the Double Lane Line shall be 4".

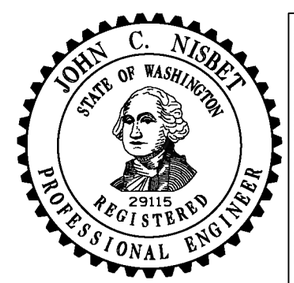

NOTE: THIS PLAN IS NOT A LEGAL ENGINEERING DOCUMENT BUT AN ELECTRONIC DUPLICATE. THE ORIGINAL, SIGNED BY THE ENGINEER AND APPROVED FOR PUBLICATION, IS KEPT ON FILE AT THE WASHINGTON STATE DEPARTMENT OF TRANSPORTATION. A COPY MAY BE OBTAINED UPON REQUEST.

LONGITUDINAL MARKING PATTERNS

STANDARD PLAN M-20.10-02

SHEET 1 OF 1 SHEET

APPROVED FOR PUBLICATION

Pasco Bakotich III — STATE DESIGN ENGINEER

06-03-11 — DATE

Washington State Department of Transportation

EFFECTIVE: AUGUST 6, 2012 TO August 4, 2013
EFFECTIVE: AUGUST 6, 2012 TO August 4, 2013
EFFECTIVE: AUGUST 6, 2012 TO August 4, 2013
EFFECTIVE: AUGUST 6, 2012 TO August 4, 2013

EFFECTIVE: AUGUST 6, 2012 TO August 4, 2013

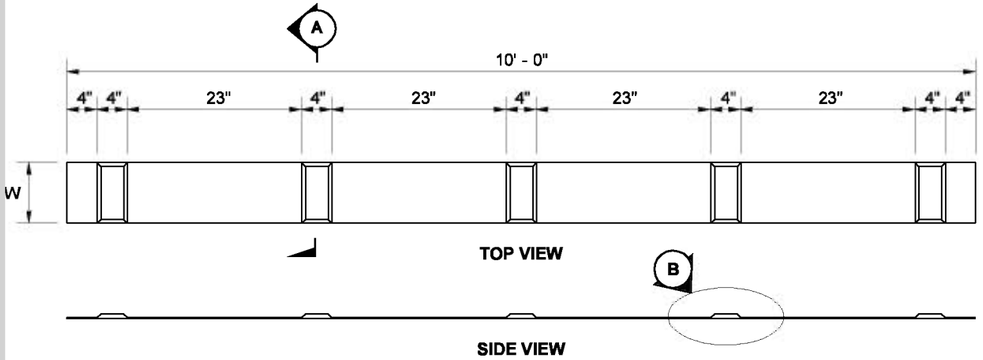

GENERAL NOTE

See Standard Plan M-20.10 for pattern and color requirements.

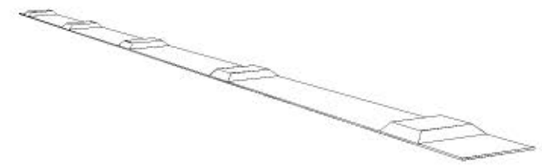

PERSPECTIVE VIEW

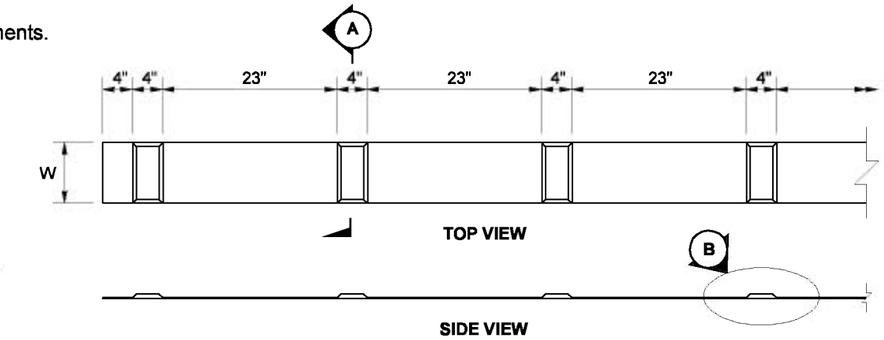

PROFILED PLASTIC
(BROKEN LINE)

FOR:
CENTER LINE & LANE LINE ~ W = 4"
NO-PASS LINE & TWO-WAY LEFT-TURN CENTER LINE ~ W = 4"
REVERSIBLE LANE LINE ~ W = 4"
WIDE BROKEN LANE LINE ~ W = 8"

PROFILED PLASTIC
(SOLID LINE)

FOR:
NO-PASS LINE ~ W = 4"
TWO-WAY LEFT-TURN CENTER LINE ~ W = 4"
DOUBLE CENTER LINE & DOUBLE LANE LINE ~ W = 4"
EDGE LINE & SOLID LANE LINE ~ W = 4"
WIDE LANE LINE & WIDE LINE ~ W = 8"
DOUBLE WIDE LANE LINE ~ W = 8"
BARRIER CENTER LINE ~ W = 20"

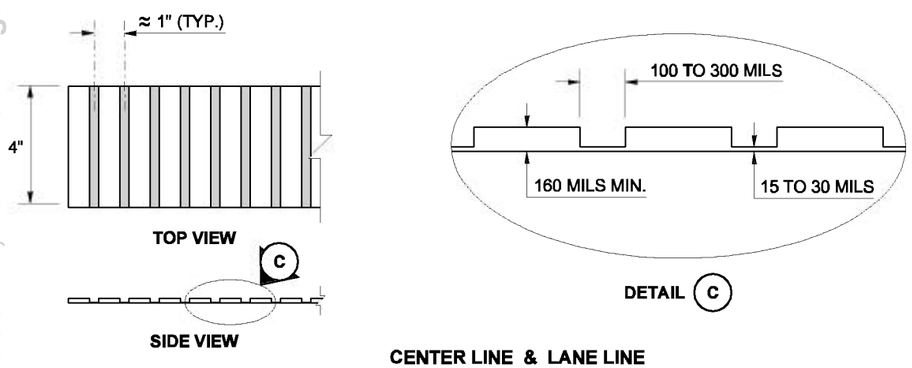

EMBOSSED PLASTIC
(SOLID OR BROKEN LINE)

FOR:
CENTER LINE & LANE LINE
NO-PASS LINE & TWO-WAY LEFT-TURN CENTER LINE
REVERSIBLE LANE LINE
DOUBLE CENTER LINE & DOUBLE LANE LINE
EDGE LINE & SOLID LANE LINE

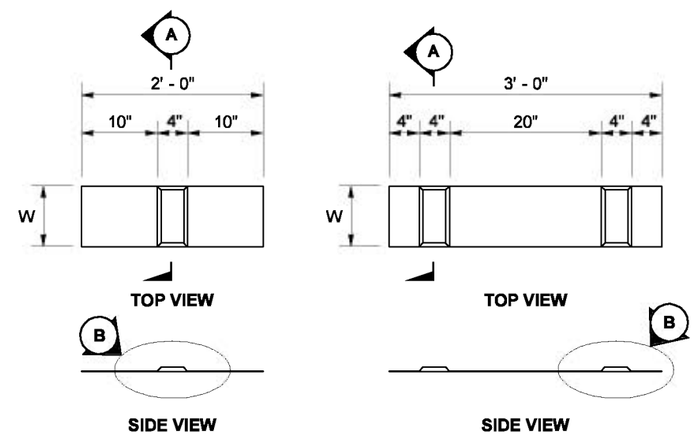

DOTTED EXTENSION LINE ~ W = 4"
WIDE DOTTED LANE LINE ~ W = 8"

DROP LANE LINE ~ W = 8"

PROFILED PLASTIC
(BROKEN LINE)

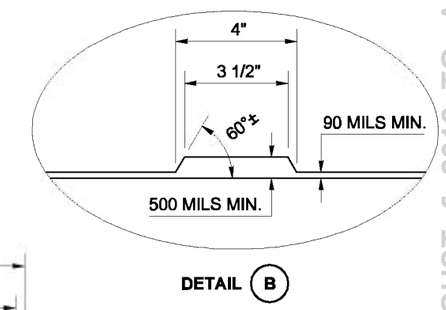

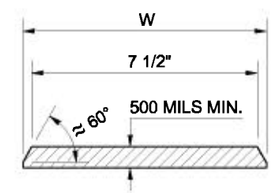

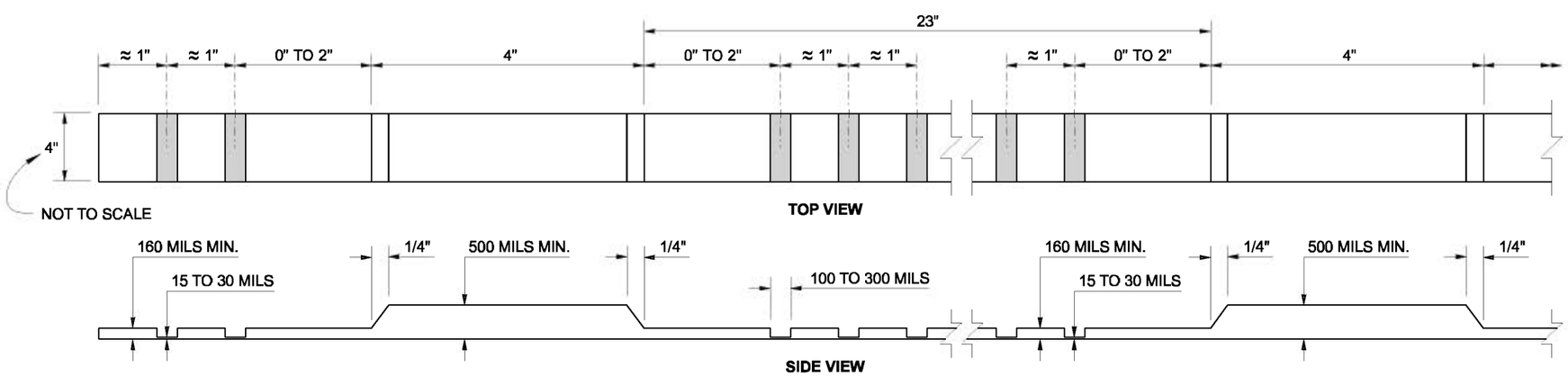

PROFILED EMBOSSED PLASTIC
(SOLID OR BROKEN LINE)

FOR:
CENTER LINE & LANE LINE
NO-PASS LINE
TWO-WAY LEFT-TURN CENTER LINE
REVERSIBLE LANE LINE
DOUBLE CENTER LINE & DOUBLE LANE LINE
EDGE LINE & SOLID LANE LINE

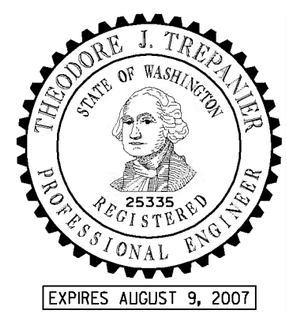

NOTE: THIS PLAN IS NOT A LEGAL ENGINEERING DOCUMENT BUT AN ELECTRONIC DUPLICATE. THE ORIGINAL, SIGNED BY THE ENGINEER AND APPROVED FOR PUBLICATION, IS KEPT ON FILE AT THE WASHINGTON STATE DEPARTMENT OF TRANSPORTATION. A COPY MAY BE OBTAINED UPON REQUEST.

PROFILED AND EMBOSSED PLASTIC LINES

STANDARD PLAN M-20.20-01

SHEET 1 OF 1 SHEET

APPROVED FOR PUBLICATION

Ken L. Smith — STATE DESIGN ENGINEER
01-30-07 — DATE

Washington State Department of Transportation

DRAWN BY: MARK SUJKA

EFFECTIVE: AUGUST 6, 2012 TO August 4, 2013

EFFECTIVE: AUGUST 6, 2012 TO August 4, 2013
EFFECTIVE: AUGUST 6, 2012 TO August 4, 2013

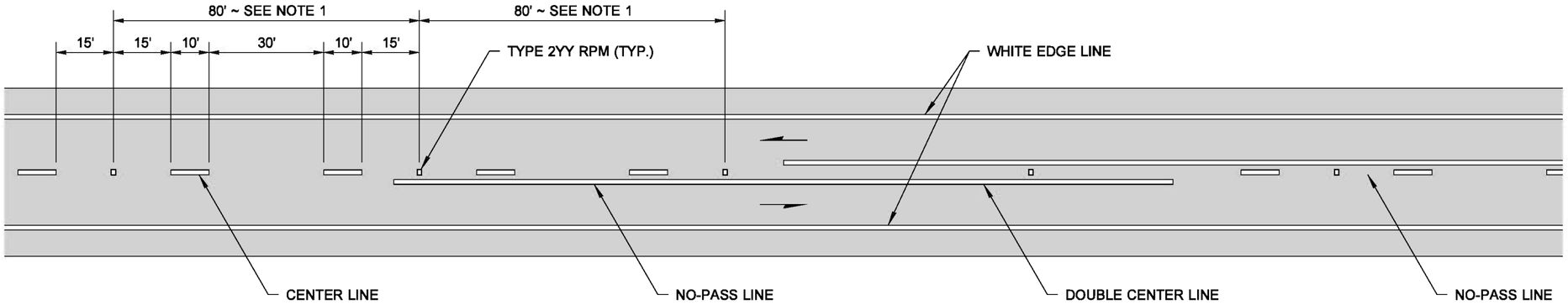

TWO LANE TWO-WAY TRAFFIC

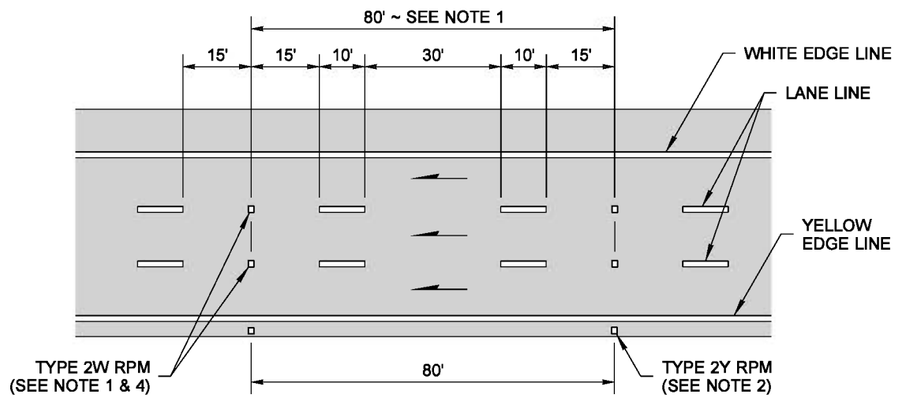

MULTILANE ONE-WAY TRAFFIC

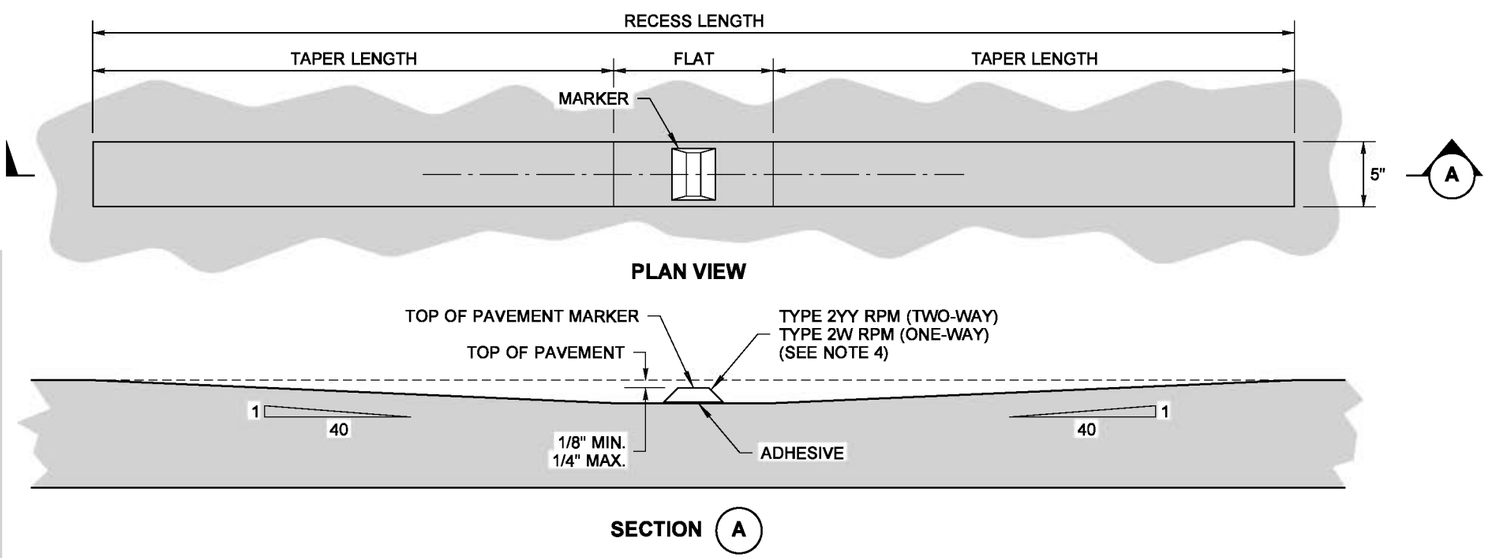

RECESSED PAVEMENT MARKER DETAILS

FOR USE WHERE SPECIFIED IN CONTRACT

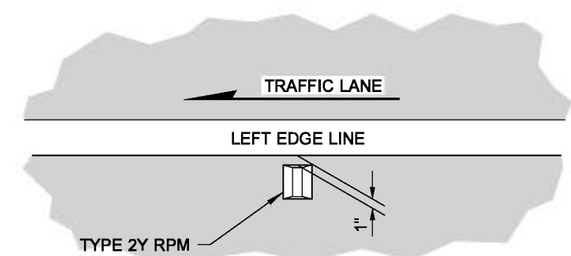

LEFT EDGE OF LANE PLACEMENT DETAIL

SEE NOTE 2

NOTES

1. Raised Pavement Markers Types 2YY and 2W shall be spaced at 80' intervals on tangents and on horizontal curves with a radius of 5000' or more, and at 40' intervals on horizontal curves having radii of less than 5000'. Center the RPM's in the gaps between the pavement marking lines.
2. Type 2Y RPM's, when specified, shall be placed outside the left Edge Line at 80' intervals. See "LEFT EDGE OF LANE PLACEMENT DETAIL".
3. Recessed pavement markers, when specified, shall be installed at the locations shown for Type 2W RPM's on multilane one-way roadways, and Type 2YY RPM's on two lane two-way roadways.
4. The Type 2W RPM's placed on multilane one-way roadways and all RPM's set in recesses shall have an abrasion resistant coating.

TYPE 2 RPM RAISED FACE COLORS	
TYPE 2YY	YELLOW AND YELLOW
TYPE 2W	WHITE ~ ONE SIDE ONLY
TYPE 2Y	YELLOW ~ ONE SIDE ONLY

DRAWN BY: MARK SUJKA

THEODORE J. TREPANIER
STATE OF WASHINGTON
25335
REGISTERED
PROFESSIONAL ENGINEER

NOTE: THIS PLAN IS NOT A LEGAL ENGINEERING DOCUMENT BUT AN ELECTRONIC DUPLICATE. THE ORIGINAL, SIGNED BY THE ENGINEER AND APPROVED FOR PUBLICATION, IS KEPT ON FILE AT THE WASHINGTON STATE DEPARTMENT OF TRANSPORTATION. A COPY MAY BE OBTAINED UPON REQUEST.

LONGITUDINAL MARKING SUPPLEMENT WITH RAISED PAVEMENT MARKERS
STANDARD PLAN M-20.30-02

SHEET 1 OF 1 SHEET

APPROVED FOR PUBLICATION

Pasco Bakotich III — STATE DESIGN ENGINEER
10-14-09 — DATE

Washington State Department of Transportation

EFFECTIVE: AUGUST 6, 2012 TO August 4, 2013
EFFECTIVE: AUGUST 6, 2012 TO August 4, 2013
EFFECTIVE: AUGUST 6, 2012 TO August 4, 2013
EFFECTIVE: AUGUST 6, 2012 TO August 4, 2013

EFFECTIVE: AUGUST 6, 2012 TO August 4, 2013
EFFECTIVE: AUGUST 6, 2012 TO August 4, 2013

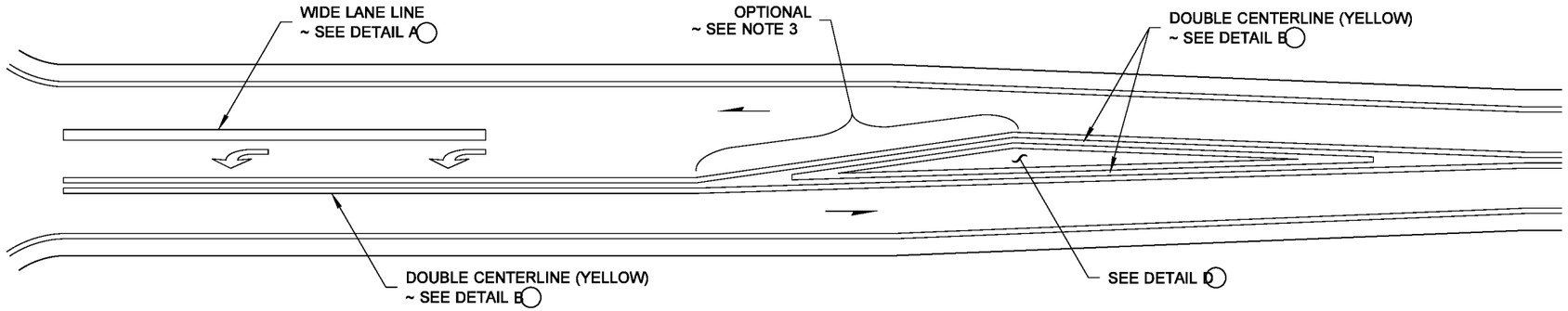

LEFT-TURN LANE

(SEE NOTE 3)

NOTES

1. Raised pavement markers shall be installed only when specified in the Contract Plans.
2. See the Standard Plans for marker designation.
3. The portion labeled "OPTIONAL" is only used when the Optional Marked Deceleration Taper (see **Standard Plans M-3.10 and M-3.20)** is specified in the Contract Plans.

Type 2L (SL) Traffic Arrow

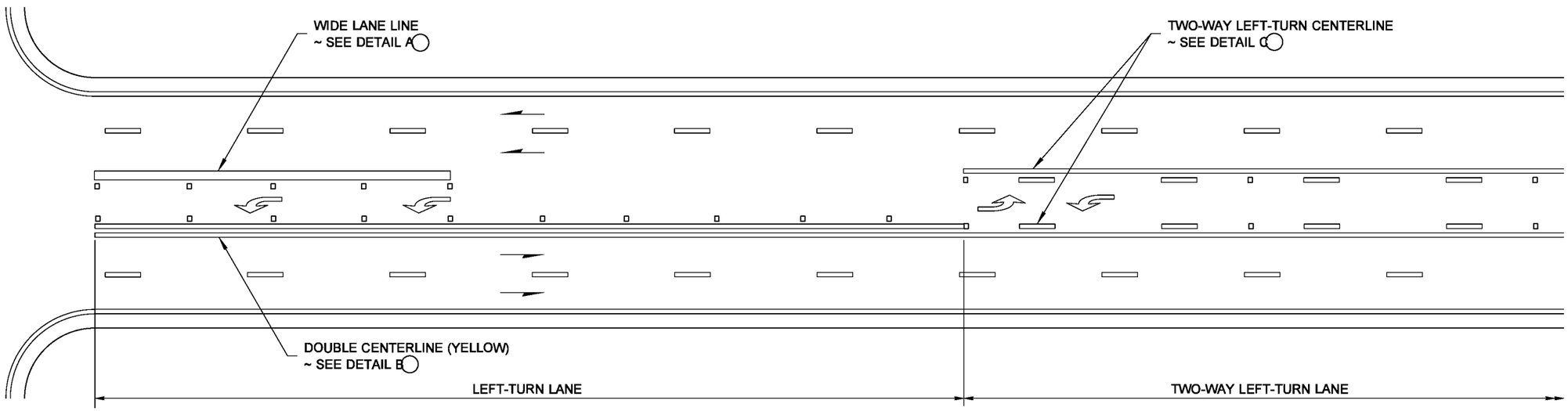

TWO-WAY LEFT-TURN LANE

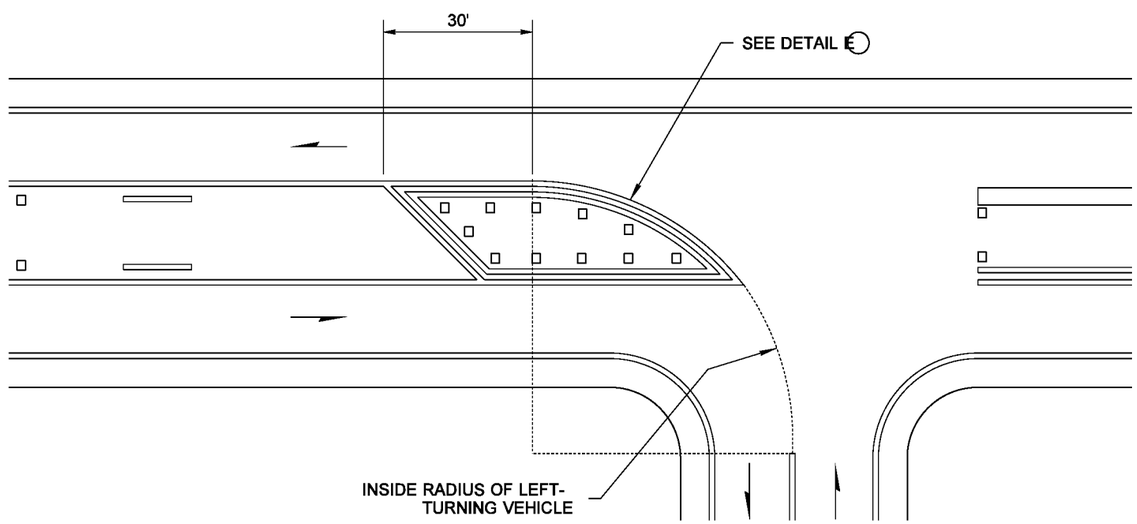

END TWO-WAY LEFT-TURN LANE

DRAWN BY: LISA CYFORD

NOTE: THIS PLAN IS NOT A LEGAL ENGINEERING DOCUMENT BUT AN ELECTRONIC DUPLICATE. THE ORIGINAL, SIGNED BY THE ENGINEER AND APPROVED FOR PUBLICATION, IS KEPT ON FILE AT THE WASHINGTON STATE DEPARTMENT OF TRANSPORTATION. A COPY MAY BE OBTAINED UPON REQUEST.

LONGITUDINAL MARKING SUPPLEMENT WITH RPMs ~ TURN LANES

STANDARD PLAN M-20.40-02

SHEET 1 OF 2 SHEETS

APPROVED FOR PUBLICATION

Pasco Bakotich III — STATE DESIGN ENGINEER

06-03-11 — DATE

Washington State Department of Transportation

EFFECTIVE: AUGUST 6, 2012 TO August 4, 2013
EFFECTIVE: AUGUST 6, 2012 TO August 4, 2013
EFFECTIVE: AUGUST 6, 2012 TO August 4, 2013
EFFECTIVE: AUGUST 6, 2012 TO August 4, 2013

EFFECTIVE: AUGUST 6, 2012 TO August 4, 2013
EFFECTIVE: AUGUST 6, 2012 TO August 4, 2013

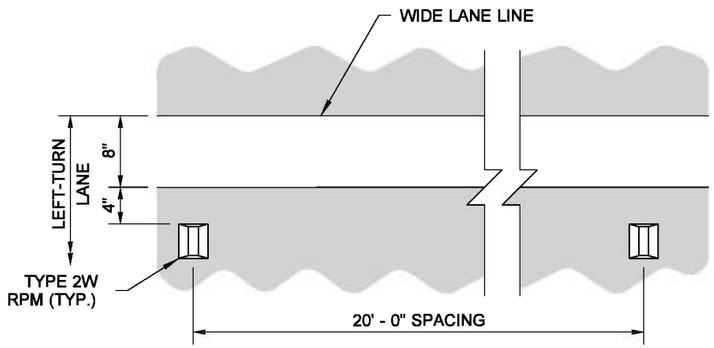

DETAIL (A)

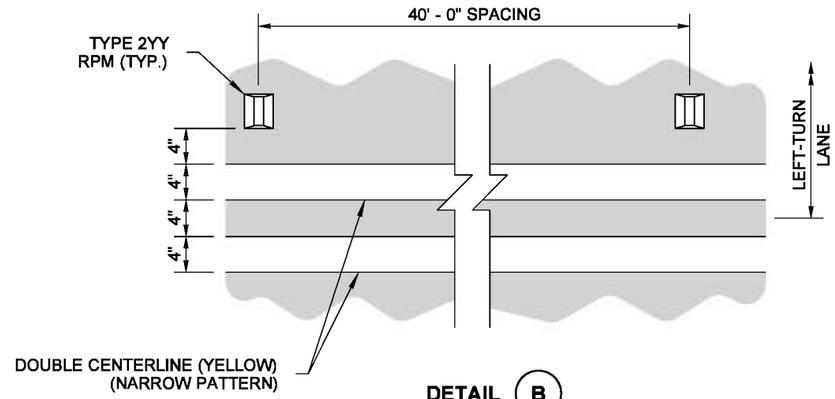

DETAIL (B)

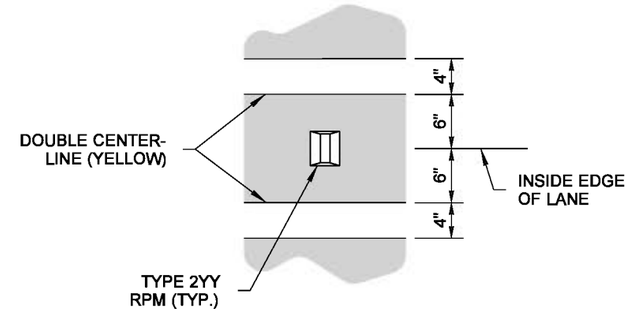

ALTERNATIVE LINE DETAIL

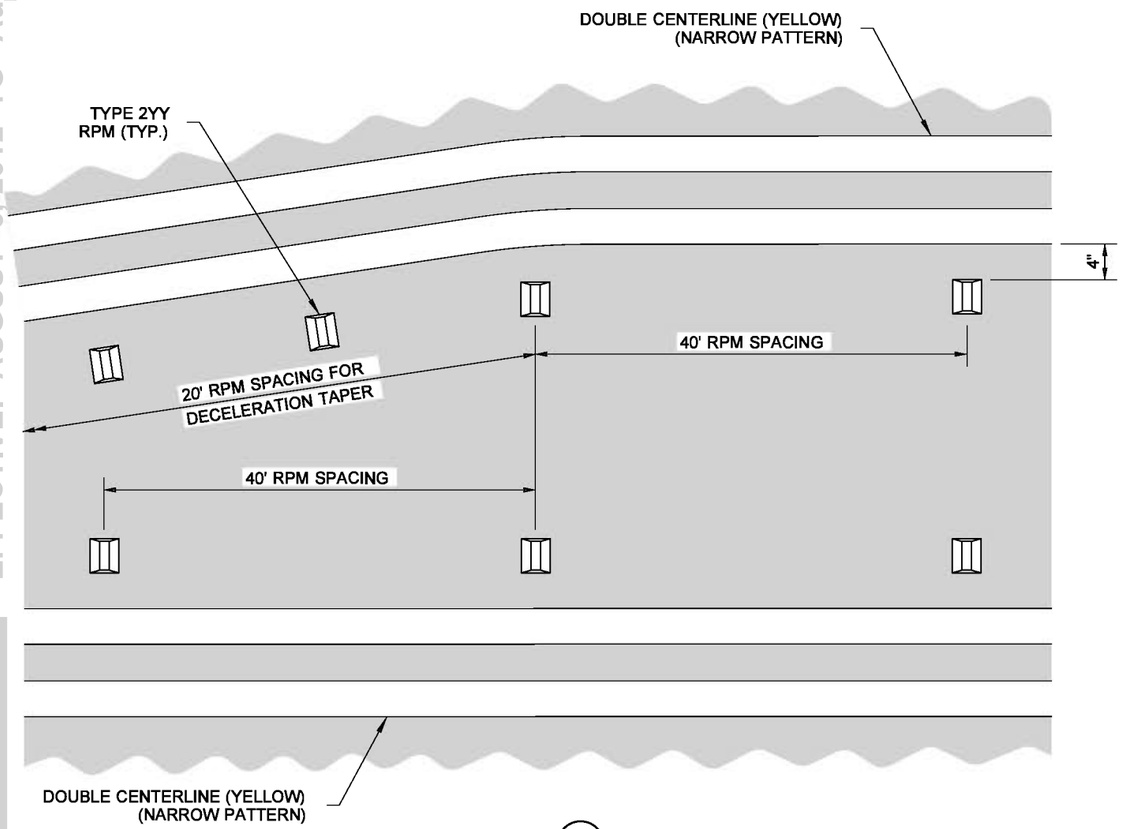

DETAIL (D)

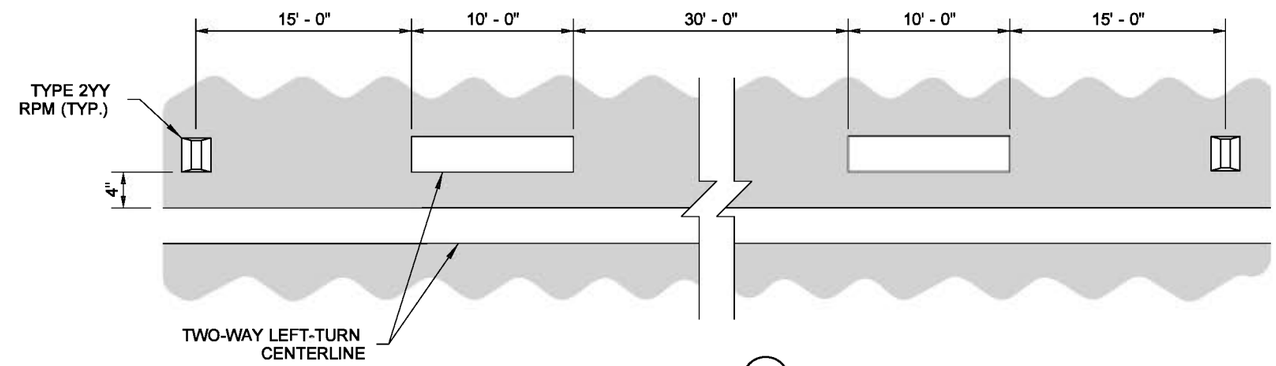

DETAIL (C)

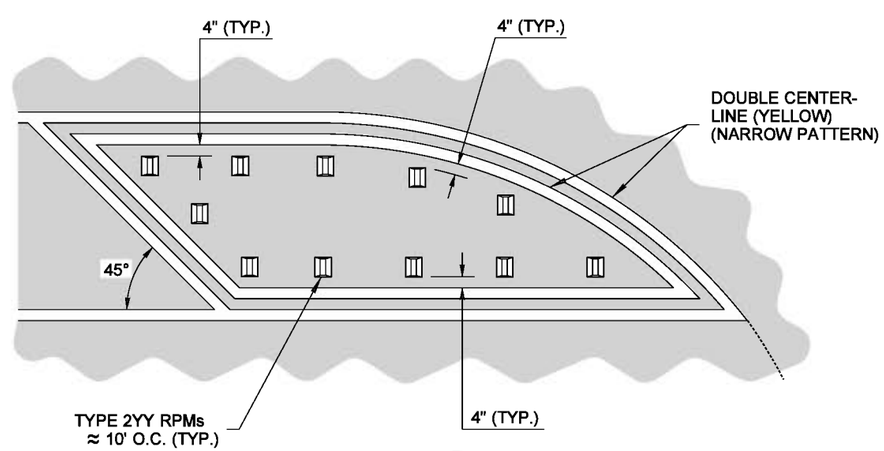

DETAIL (E)

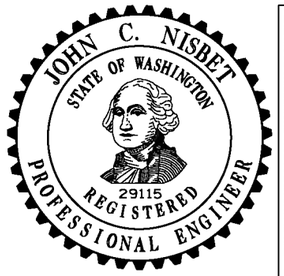

NOTE: THIS PLAN IS NOT A LEGAL ENGINEERING DOCUMENT BUT AN ELECTRONIC DUPLICATE. THE ORIGINAL, SIGNED BY THE ENGINEER AND APPROVED FOR PUBLICATION, IS KEPT ON FILE AT THE WASHINGTON STATE DEPARTMENT OF TRANSPORTATION. A COPY MAY BE OBTAINED UPON REQUEST.

LONGITUDINAL MARKING SUPPLEMENT WITH RPMs ~ TURN LANES

STANDARD PLAN M-20.40-02

SHEET 2 OF 2 SHEETS

APPROVED FOR PUBLICATION

Pasco Bakotich III — STATE DESIGN ENGINEER

06-03-11 — DATE

Washington State Department of Transportation

DRAWN BY: LISA CYFORD

EFFECTIVE: AUGUST 6, 2012 TO August 4, 2013
EFFECTIVE: AUGUST 6, 2012 TO August 4, 2013
EFFECTIVE: AUGUST 6, 2012 TO August 4, 2013
EFFECTIVE: AUGUST 6, 2012 TO August 4, 2013

EFFECTIVE: AUGUST 6, 2012 TO August 4, 2013

DRAWN BY: LISA CYFORD

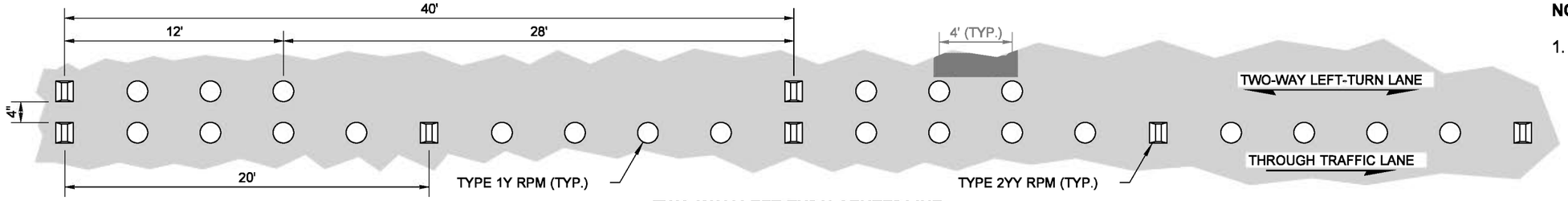

TWO-WAY LEFT-TURN CENTERLINE

NOTE

1. The NO PASS LINE (when required) is applied parallel to the CENTERLINE, 4" away, with the Type 2YY RPM's aligned (similar to TWO-WAY LEFT-TURN LINE).

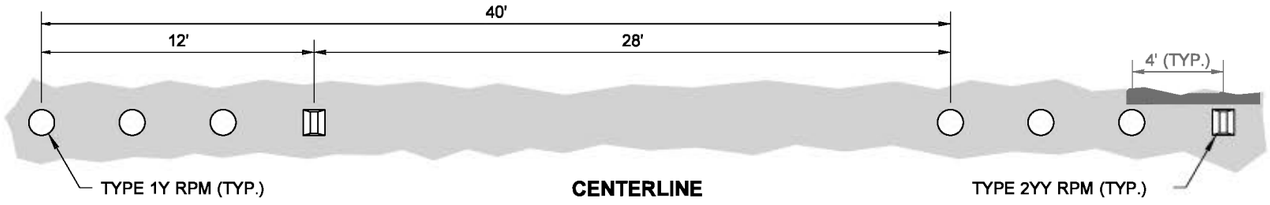

CENTERLINE

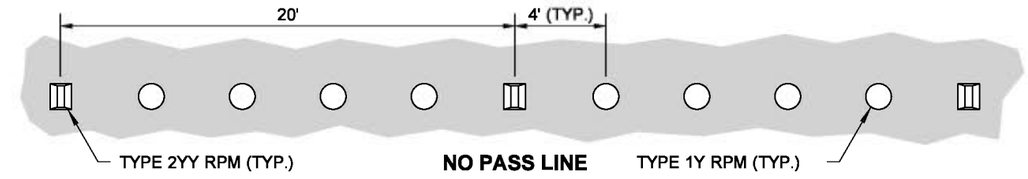

NO PASS LINE
SEE NOTE 1

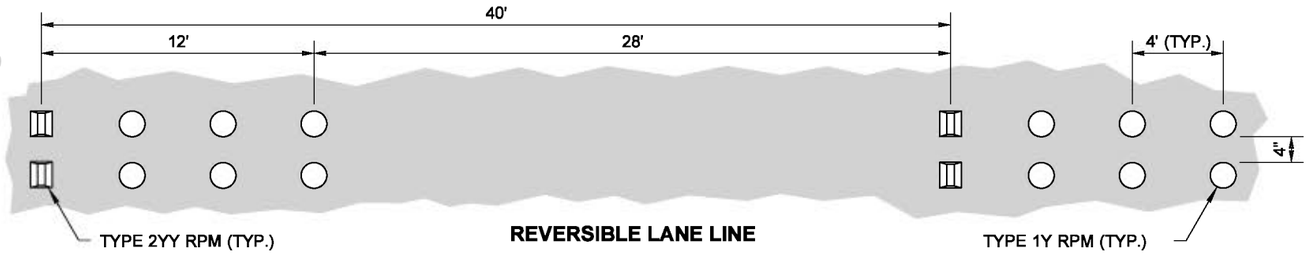

REVERSIBLE LANE LINE

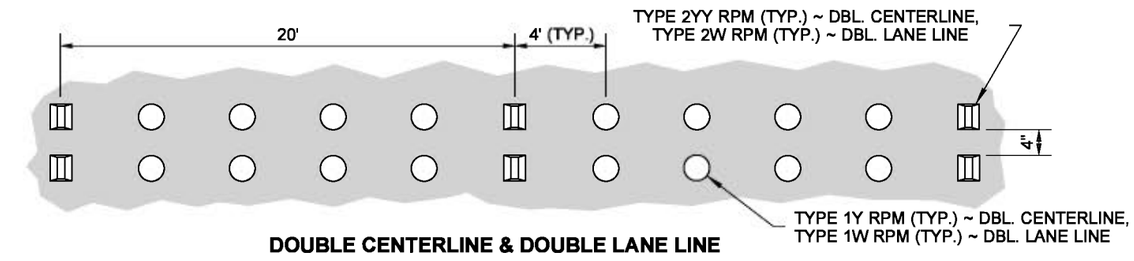

DOUBLE CENTERLINE & DOUBLE LANE LINE

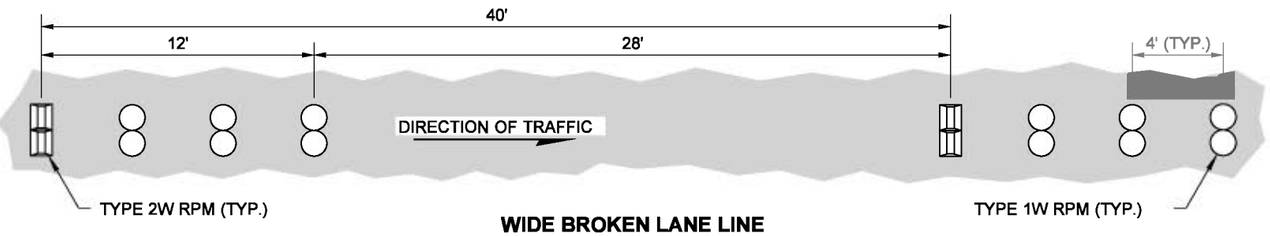

WIDE BROKEN LANE LINE

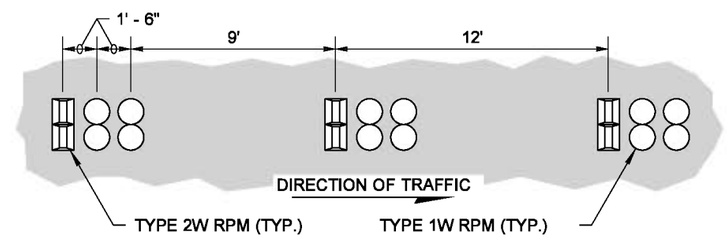

WIDE DOTTED LANE LINE

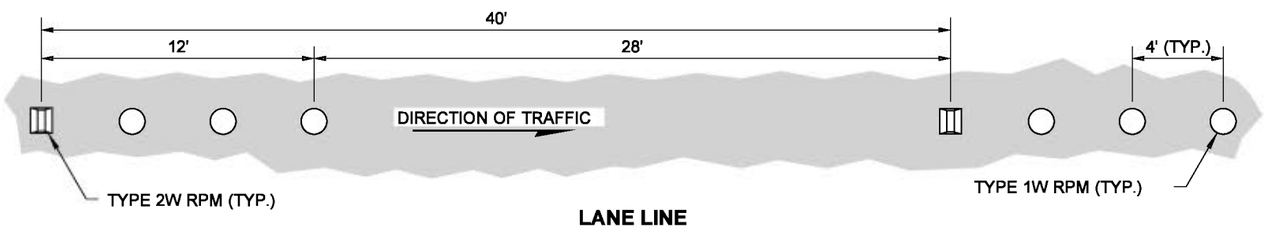

LANE LINE

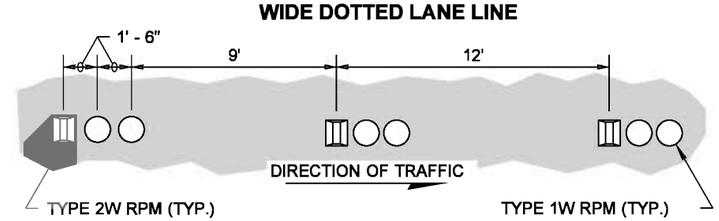

DOTTED LANE LINE

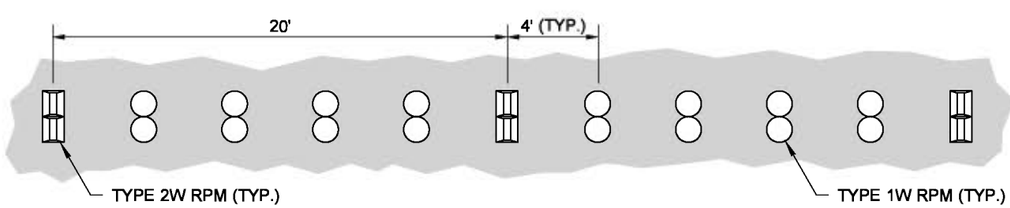

WIDE LANE LINE

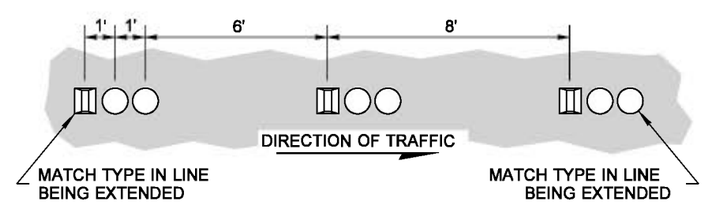

DOTTED EXTENSION LINE

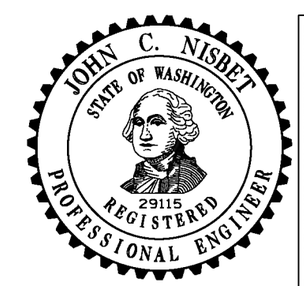

NOTE: THIS PLAN IS NOT A LEGAL ENGINEERING DOCUMENT BUT AN ELECTRONIC DUPLICATE. THE ORIGINAL, SIGNED BY THE ENGINEER AND APPROVED FOR PUBLICATION, IS KEPT ON FILE AT THE WASHINGTON STATE DEPARTMENT OF TRANSPORTATION. A COPY MAY BE OBTAINED UPON REQUEST.

LONGITUDINAL MARKING SUBSTITUTION W/RAISED PAVEMENT MARKERS

STANDARD PLAN M-20.50-02

SHEET 1 OF 1 SHEET

APPROVED FOR PUBLICATION

Pasco Bakotich III — STATE DESIGN ENGINEER

06-03-11 — DATE

Washington State Department of Transportation

EFFECTIVE: AUGUST 6, 2012 TO August 4, 2013

EFFECTIVE: AUGUST 6, 2012 TO August 4, 2013
EFFECTIVE: AUGUST 6, 2012 TO August 4, 2013

DRAWN BY: MARK SUJKA

NOTE

Use the dimensions shown on this plan for each type Traffic Arrow being placed on roadways with a posted speed limit of 45 mph or higher.

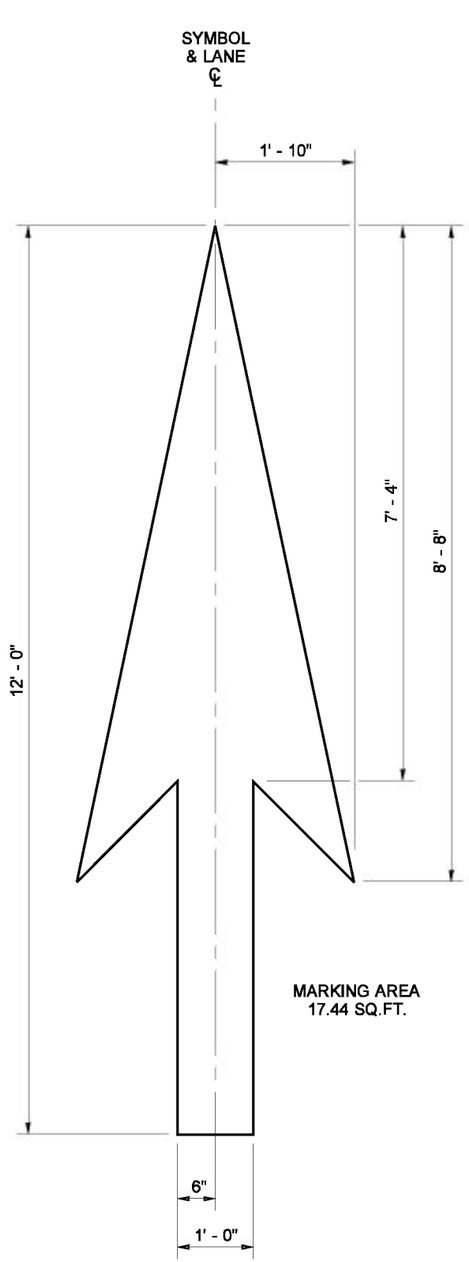

TYPE 1 TRAFFIC ARROW

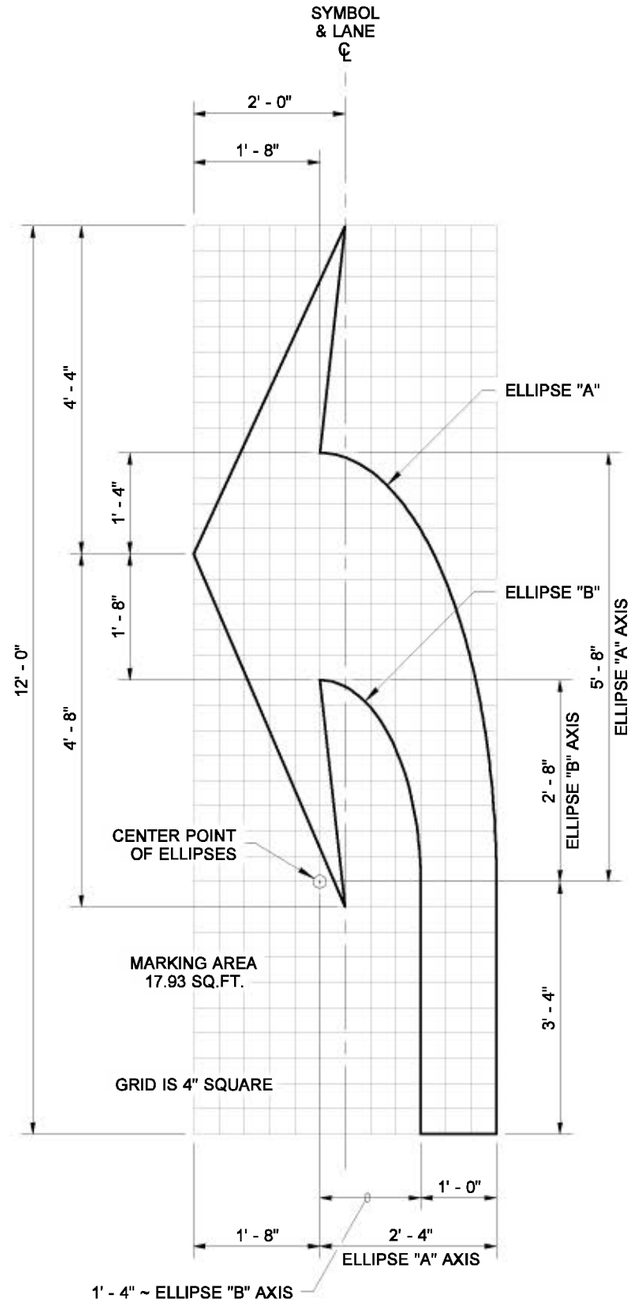

TYPE 2L (LEFT)
TRAFFIC ARROW

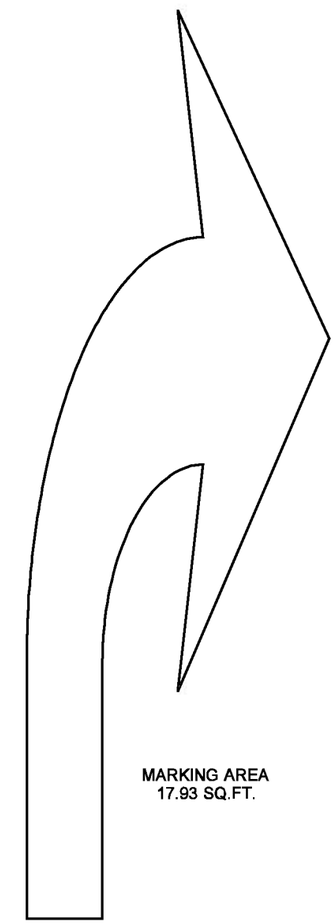

TYPE 2R (RIGHT)
TRAFFIC ARROW

MIRROR IMAGE OF
TYPE 2L TRAFFIC ARROW

EXPIRES AUGUST 9, 2007

NOTE: THIS PLAN IS NOT A LEGAL ENGINEERING DOCUMENT BUT AN ELECTRONIC DUPLICATE. THE ORIGINAL, SIGNED BY THE ENGINEER AND APPROVED FOR PUBLICATION, IS KEPT ON FILE AT THE WASHINGTON STATE DEPARTMENT OF TRANSPORTATION. A COPY MAY BE OBTAINED UPON REQUEST.

SYMBOL MARKINGS TRAFFIC ARROWS FOR HIGH SPEED ROADWAYS STANDARD PLAN M-24.20-01

SHEET 1 OF 3 SHEETS

APPROVED FOR PUBLICATION

Harold J. Peterfeso — STATE DESIGN ENGINEER
05-31-06 — DATE

Washington State Department of Transportation

EFFECTIVE: AUGUST 6, 2012 TO August 4, 2013
EFFECTIVE: AUGUST 6, 2012 TO August 4, 2013
EFFECTIVE: AUGUST 6, 2012 TO August 4, 2013
EFFECTIVE: AUGUST 6, 2012 TO August 4, 2013

EFFECTIVE: AUGUST 6, 2012 TO August 4, 2013

DRAWN BY: MARK SUJKA

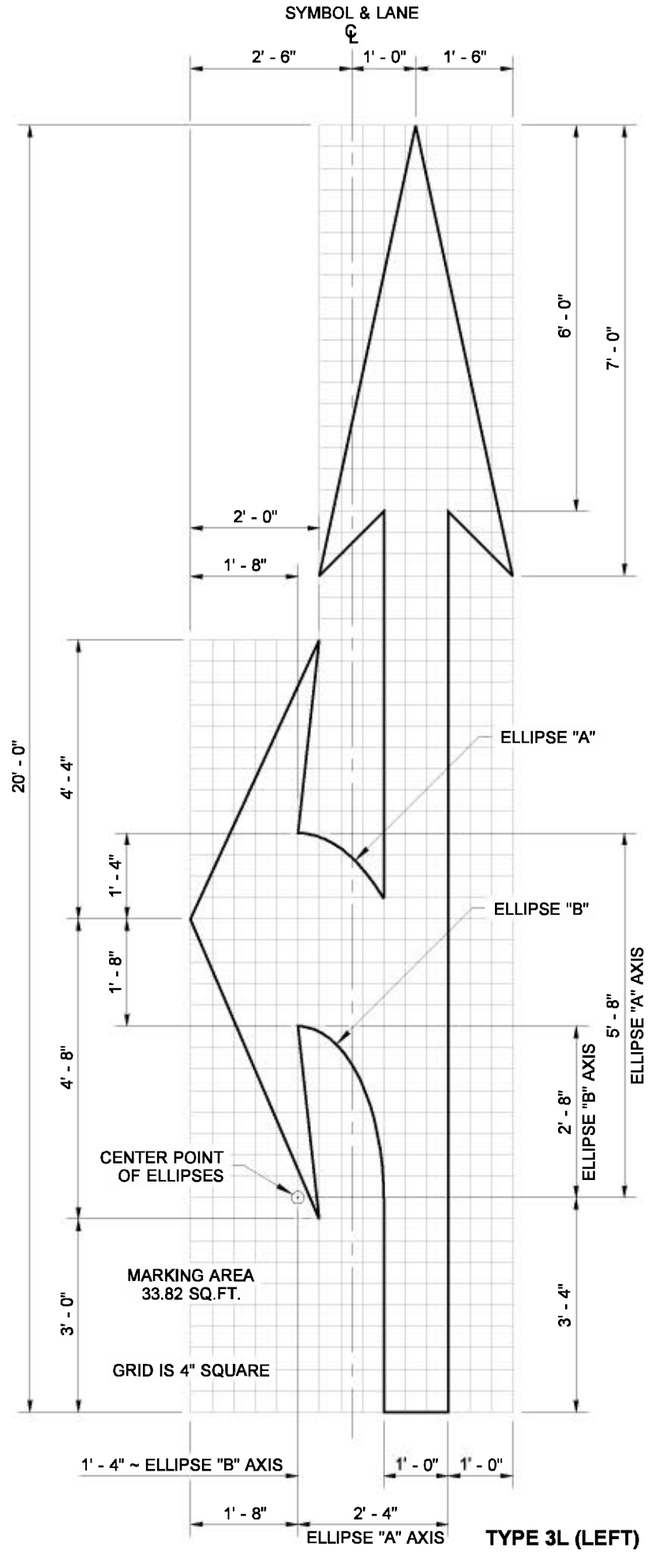

TYPE 3L (LEFT) TRAFFIC ARROW

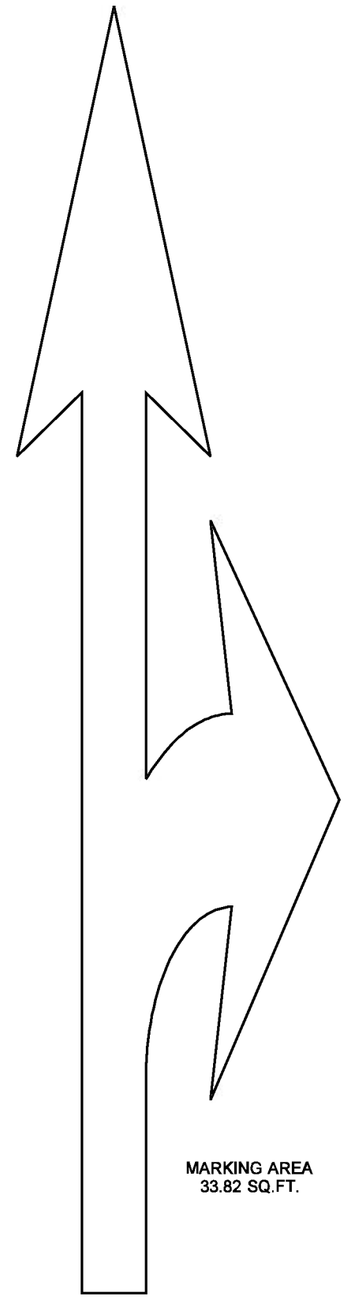

TYPE 3R (RIGHT) TRAFFIC ARROW

MIRROR IMAGE OF
TYPE 3L TRAFFIC ARROW

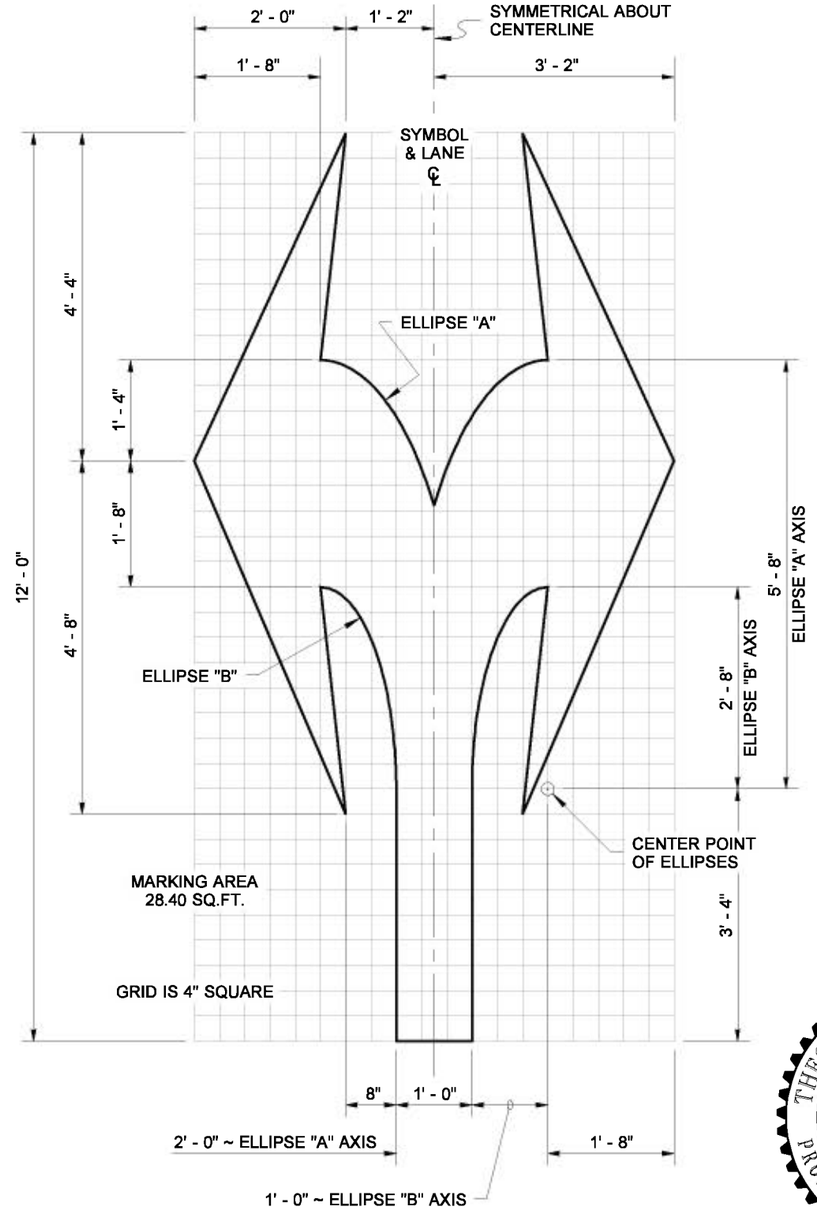

TYPE 4 TRAFFIC ARROW

EXPIRES AUGUST 9, 2007

NOTE: THIS PLAN IS NOT A LEGAL ENGINEERING DOCUMENT BUT AN ELECTRONIC DUPLICATE. THE ORIGINAL, SIGNED BY THE ENGINEER AND APPROVED FOR PUBLICATION, IS KEPT ON FILE AT THE WASHINGTON STATE DEPARTMENT OF TRANSPORTATION. A COPY MAY BE OBTAINED UPON REQUEST.

SYMBOL MARKINGS TRAFFIC ARROWS FOR HIGH SPEED ROADWAYS STANDARD PLAN M-24.20-01

SHEET 2 OF 3 SHEETS

APPROVED FOR PUBLICATION

Harold J. Peterfeso — STATE DESIGN ENGINEER

05-31-06 — DATE

Washington State Department of Transportation

EFFECTIVE: AUGUST 6, 2012 TO August 4, 2013

EFFECTIVE: AUGUST 6, 2012 TO August 4, 2013
EFFECTIVE: AUGUST 6, 2012 TO August 4, 2013

DRAWN BY: MARK SUJKA

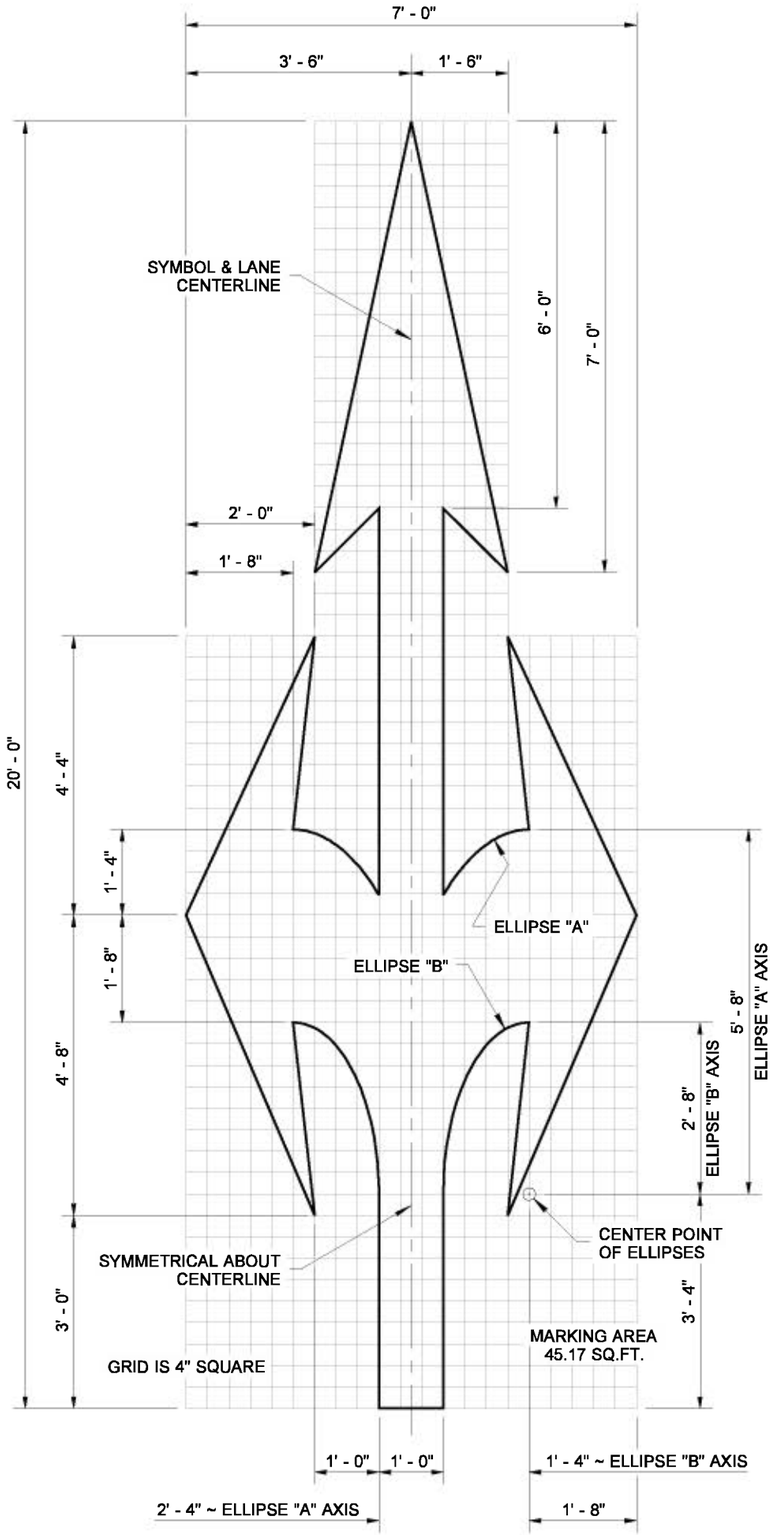

TYPE 7 TRAFFIC ARROW

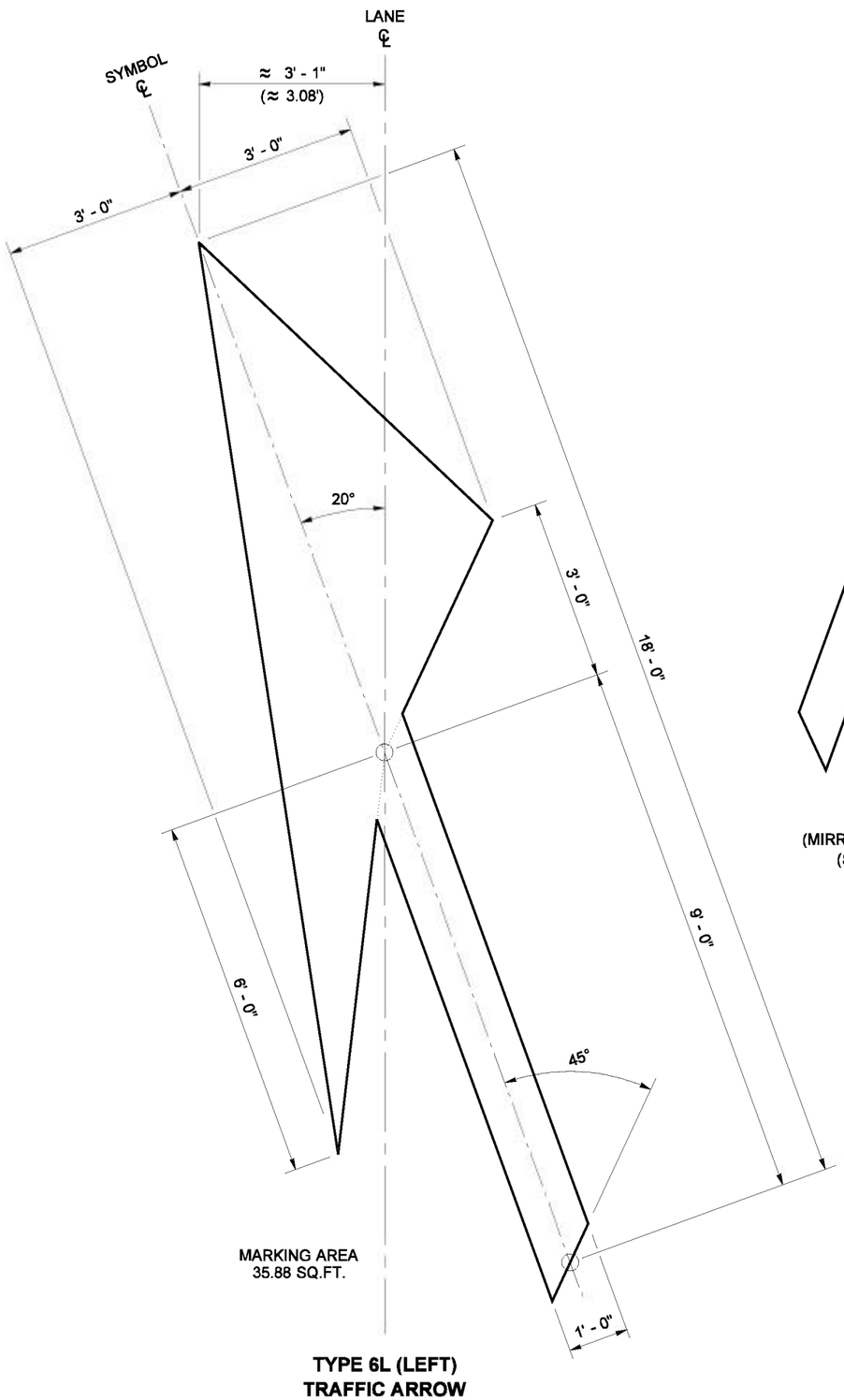

TYPE 6L (LEFT) TRAFFIC ARROW

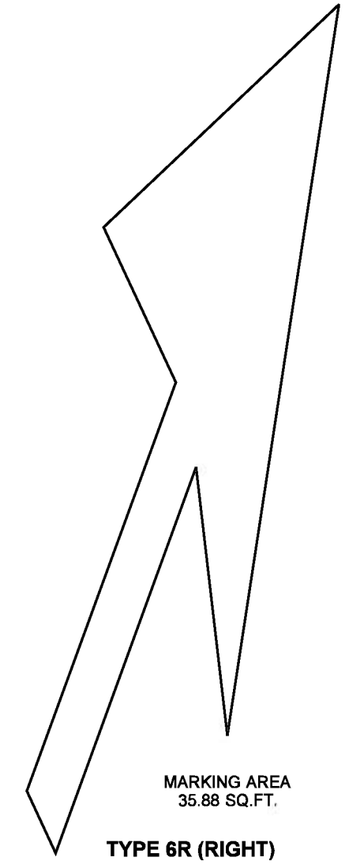

TYPE 6R (RIGHT) TRAFFIC ARROW

MIRROR IMAGE OF TYPE 6L
(MIRRORED ABOUT LANE CENTERLINE)
(SHOWN AT REDUCED SCALE)

THEODORE J. TREPANIER
STATE OF WASHINGTON
25335
REGISTERED
PROFESSIONAL ENGINEER

EXPIRES AUGUST 9, 2007

NOTE: THIS PLAN IS NOT A LEGAL ENGINEERING DOCUMENT BUT AN ELECTRONIC DUPLICATE. THE ORIGINAL, SIGNED BY THE ENGINEER AND APPROVED FOR PUBLICATION, IS KEPT ON FILE AT THE WASHINGTON STATE DEPARTMENT OF TRANSPORTATION. A COPY MAY BE OBTAINED UPON REQUEST.

SYMBOL MARKINGS TRAFFIC ARROWS FOR HIGH SPEED ROADWAYS STANDARD PLAN M-24.20-01

SHEET 3 OF 3 SHEETS

APPROVED FOR PUBLICATION

Harold J. Peterfeso — STATE DESIGN ENGINEER
05-31-06 — DATE

Washington State Department of Transportation

EFFECTIVE: AUGUST 6, 2012 TO August 4, 2013
EFFECTIVE: AUGUST 6, 2012 TO August 4, 2013
EFFECTIVE: AUGUST 6, 2012 TO August 4, 2013
EFFECTIVE: AUGUST 6, 2012 TO August 4, 2013

EFFECTIVE: AUGUST 6, 2012 TO August 4, 2013

NOTE

Use the dimensions shown on this plan for each type Traffic Arrow being placed on roadways with a posted speed limit of 40 mph or lower.

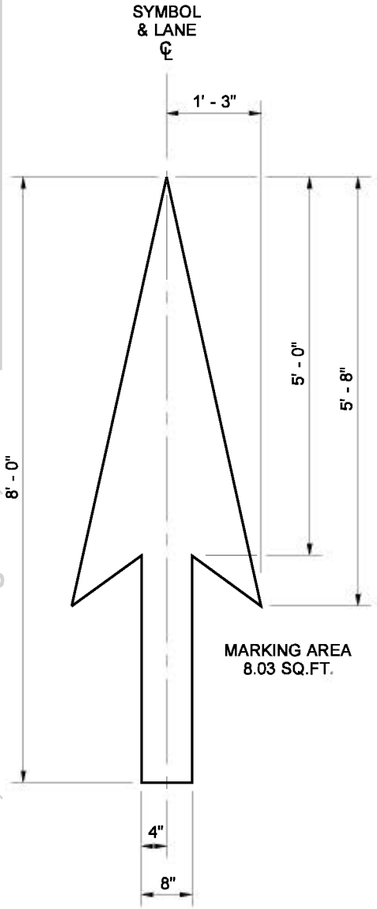

TYPE 1S TRAFFIC ARROW

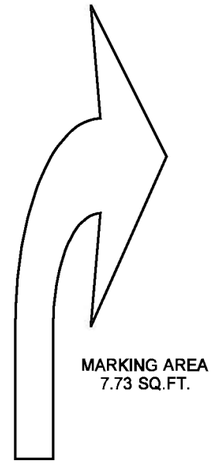

TYPE 2SR (RIGHT) TRAFFIC ARROW

MIRROR IMAGE OF TYPE 2SL TRAFFIC ARROW (SHOWN AT REDUCED SCALE)

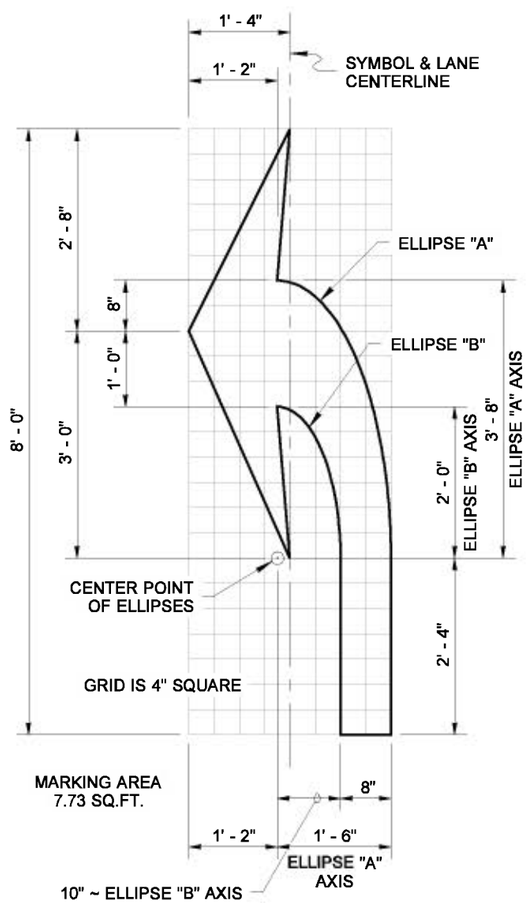

TYPE 2SL (LEFT) TRAFFIC ARROW

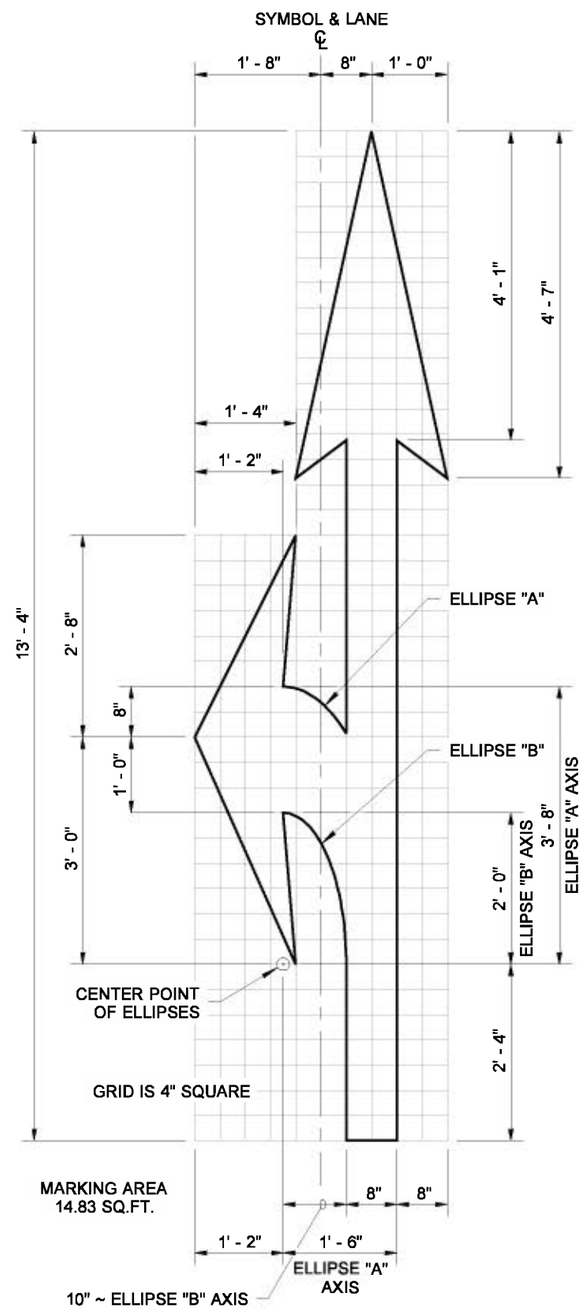

TYPE 3SL (LEFT) TRAFFIC ARROW

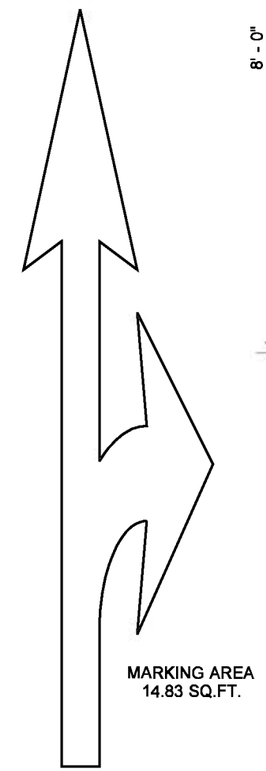

TYPE 3SR (RIGHT) TRAFFIC ARROW

MIRROR IMAGE OF TYPE 3SL TRAFFIC ARROW (SHOWN AT REDUCED SCALE)

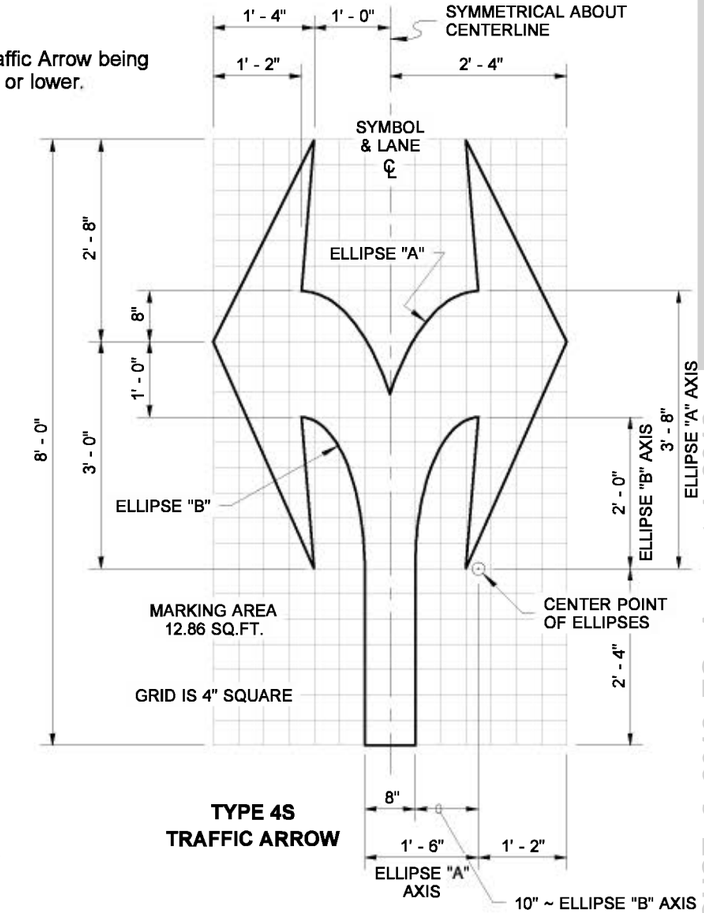

TYPE 4S TRAFFIC ARROW

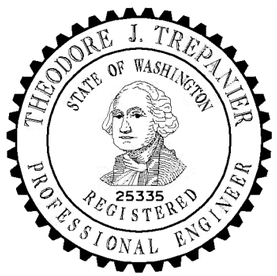

EXPIRES AUGUST 9, 2007

NOTE: THIS PLAN IS NOT A LEGAL ENGINEERING DOCUMENT BUT AN ELECTRONIC DUPLICATE. THE ORIGINAL, SIGNED BY THE ENGINEER AND APPROVED FOR PUBLICATION, IS KEPT ON FILE AT THE WASHINGTON STATE DEPARTMENT OF TRANSPORTATION. A COPY MAY BE OBTAINED UPON REQUEST.

SYMBOL MARKINGS TRAFFIC ARROWS FOR LOW SPEED ROADWAYS STANDARD PLAN M-24.40-01

SHEET 1 OF 2 SHEETS

APPROVED FOR PUBLICATION

Harold J. Peterfeso — STATE DESIGN ENGINEER

05-31-06 — DATE

Washington State Department of Transportation

DRAWN BY: MARK SUJKA

EFFECTIVE: AUGUST 6, 2012 TO August 4, 2013

EFFECTIVE: AUGUST 6, 2012 TO August 4, 2013
EFFECTIVE: AUGUST 6, 2012 TO August 4, 2013

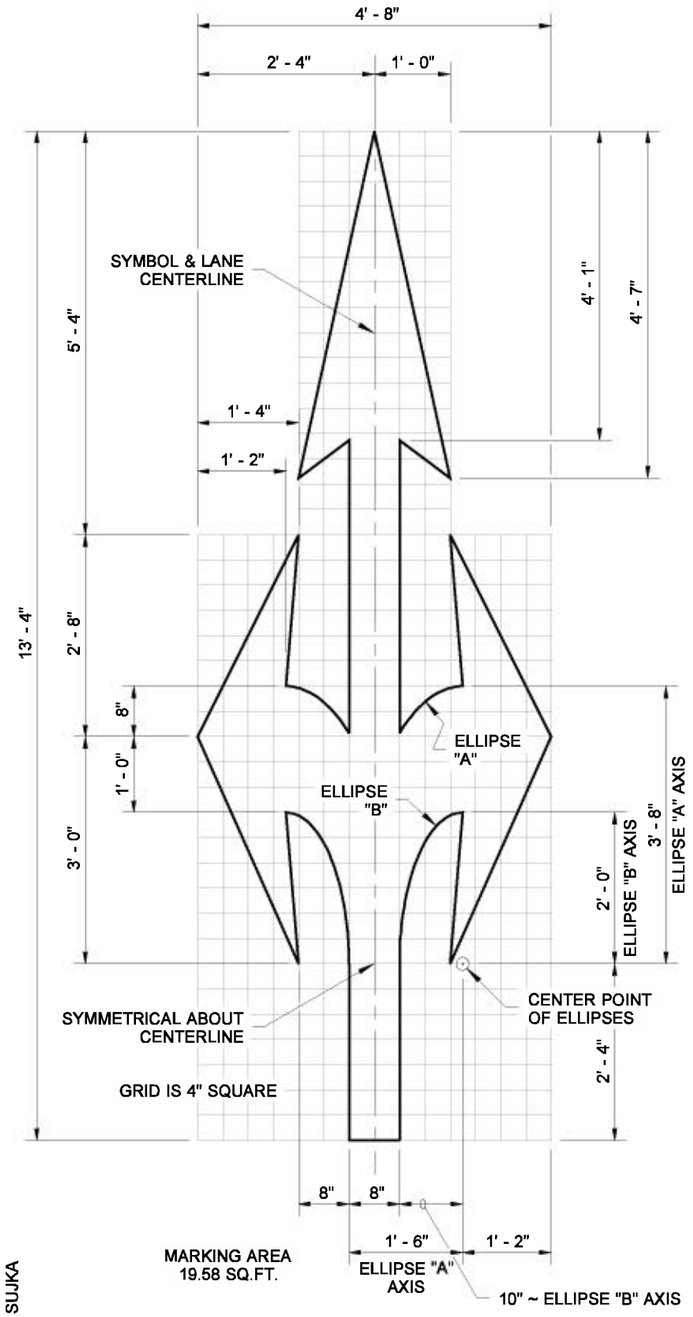

TYPE 7S TRAFFIC ARROW

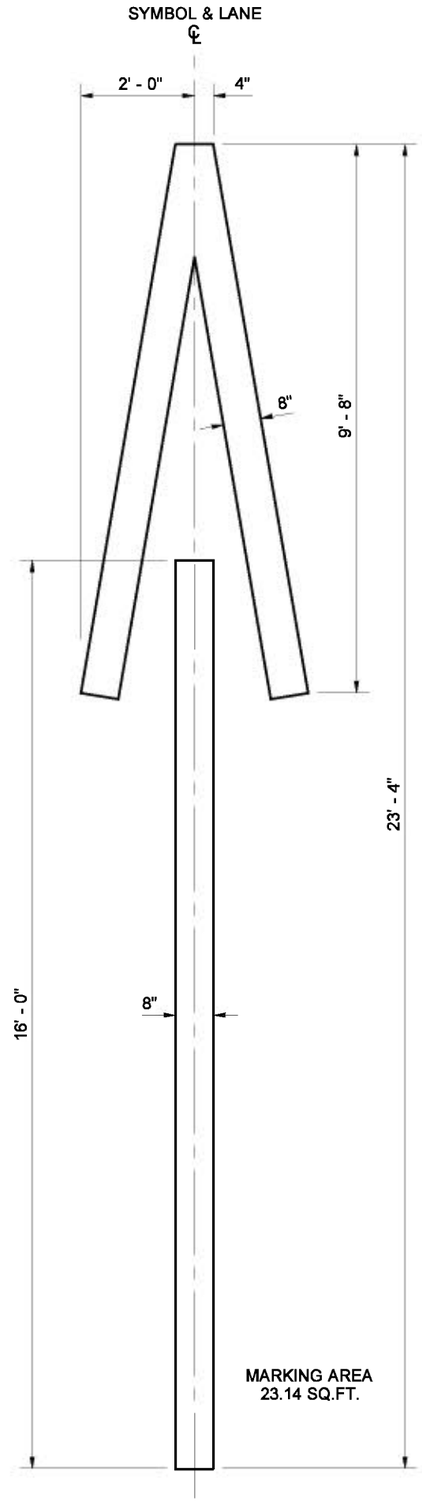

TYPE 5 TRAFFIC ARROW

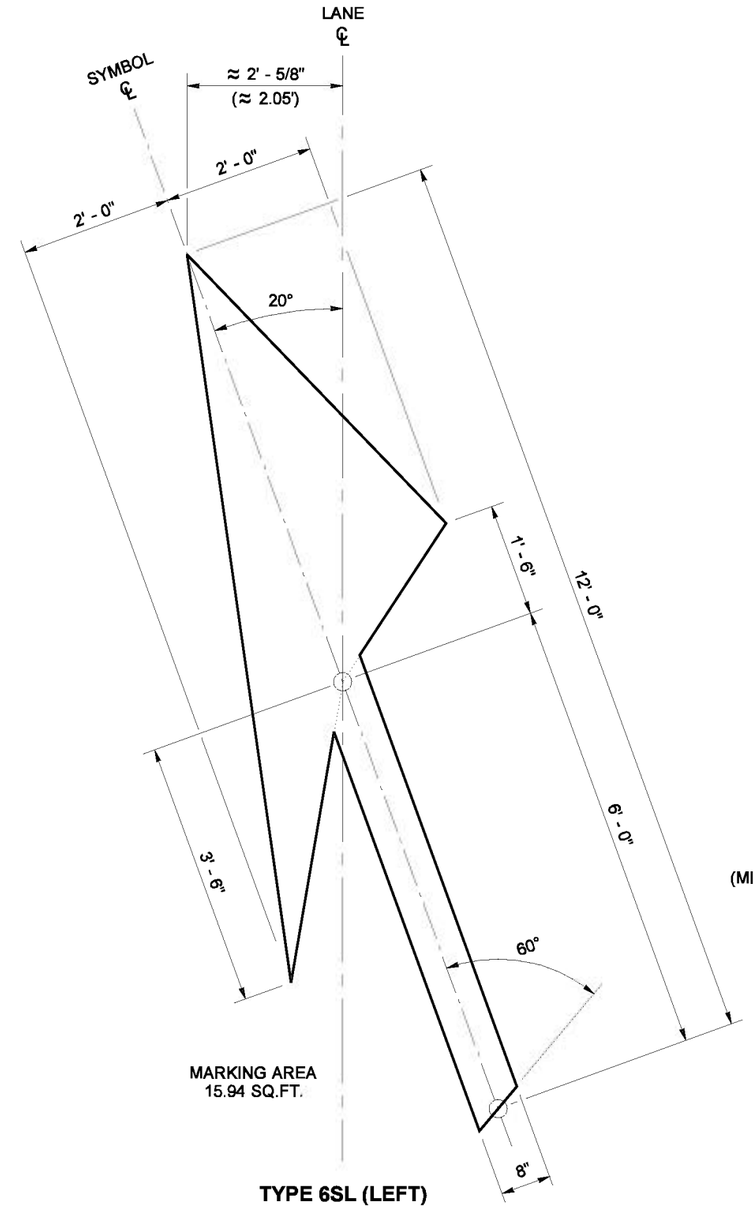

TYPE 6SL (LEFT) TRAFFIC ARROW

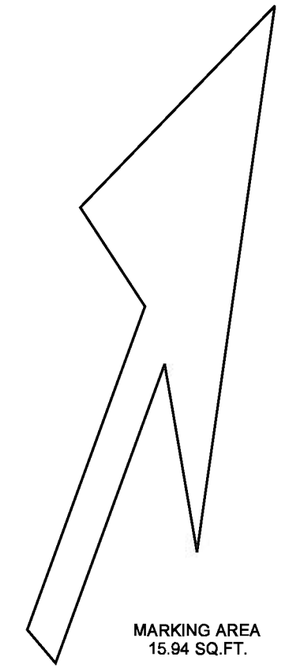

TYPE 6SR (RIGHT) TRAFFIC ARROW

MIRROR IMAGE OF TYPE 6SL
(MIRRORED ABOUT LANE CENTERLINE)
(SHOWN AT REDUCED SCALE)

EXPIRES AUGUST 9, 2007

NOTE: THIS PLAN IS NOT A LEGAL ENGINEERING DOCUMENT BUT AN ELECTRONIC DUPLICATE. THE ORIGINAL, SIGNED BY THE ENGINEER, AND APPROVED FOR PUBLICATION, IS KEPT ON FILE AT THE WASHINGTON STATE DEPARTMENT OF TRANSPORTATION. A COPY MAY BE OBTAINED UPON REQUEST.

SYMBOL MARKINGS TRAFFIC ARROWS FOR LOW SPEED ROADWAYS STANDARD PLAN M-24.40-01

SHEET 2 OF 2 SHEETS

APPROVED FOR PUBLICATION

Harold J. Peterfeso — STATE DESIGN ENGINEER
05-31-06 — DATE

Washington State Department of Transportation

DRAWN BY: MARK SUJKA

EFFECTIVE: AUGUST 6, 2012 TO August 4, 2013
EFFECTIVE: AUGUST 6, 2012 TO August 4, 2013
EFFECTIVE: AUGUST 6, 2012 TO August 4, 2013
EFFECTIVE: AUGUST 6, 2012 TO August 4, 2013

EFFECTIVE: AUGUST 6, 2012 TO August 4, 2013
EFFECTIVE: AUGUST 6, 2012 TO August 4, 2013

DRAWN BY: FERN LIDDELL

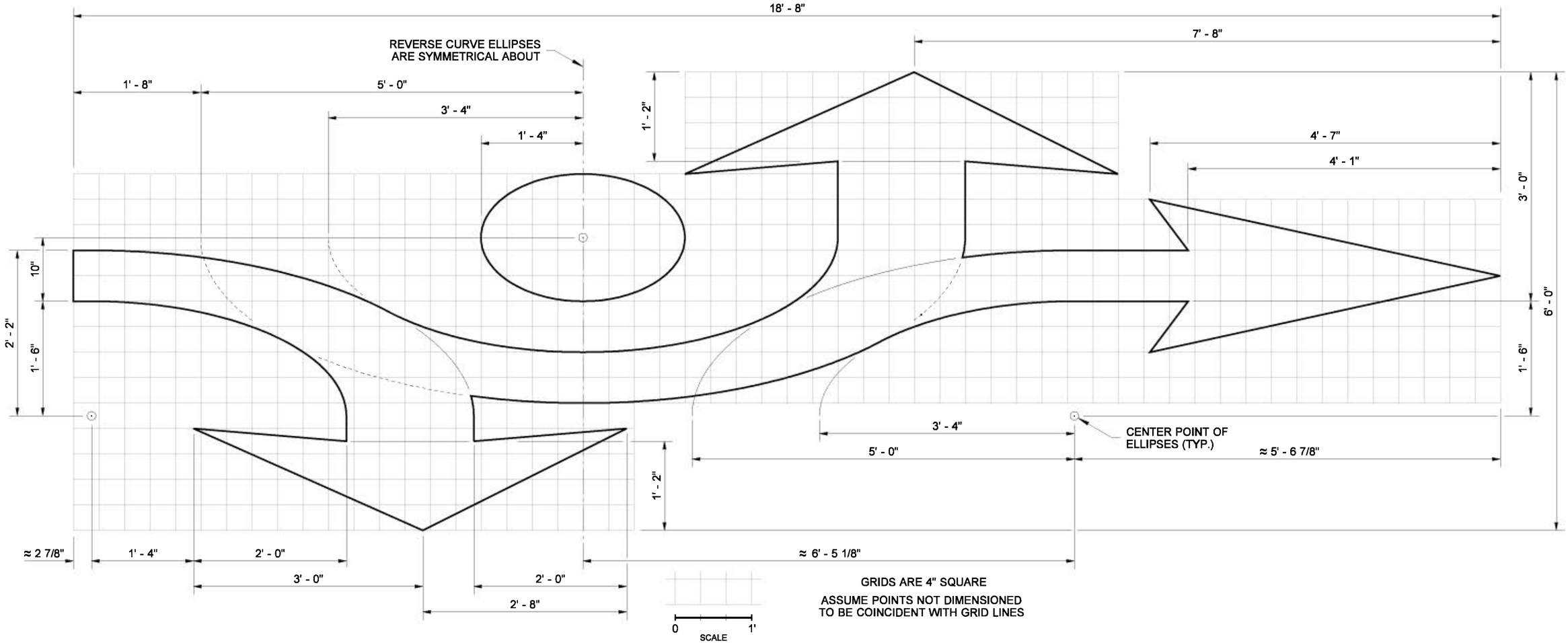

GRIDS ARE 4" SQUARE

ASSUME POINTS NOT DIMENSIONED
TO BE COINCIDENT WITH GRID LINES

DETAIL

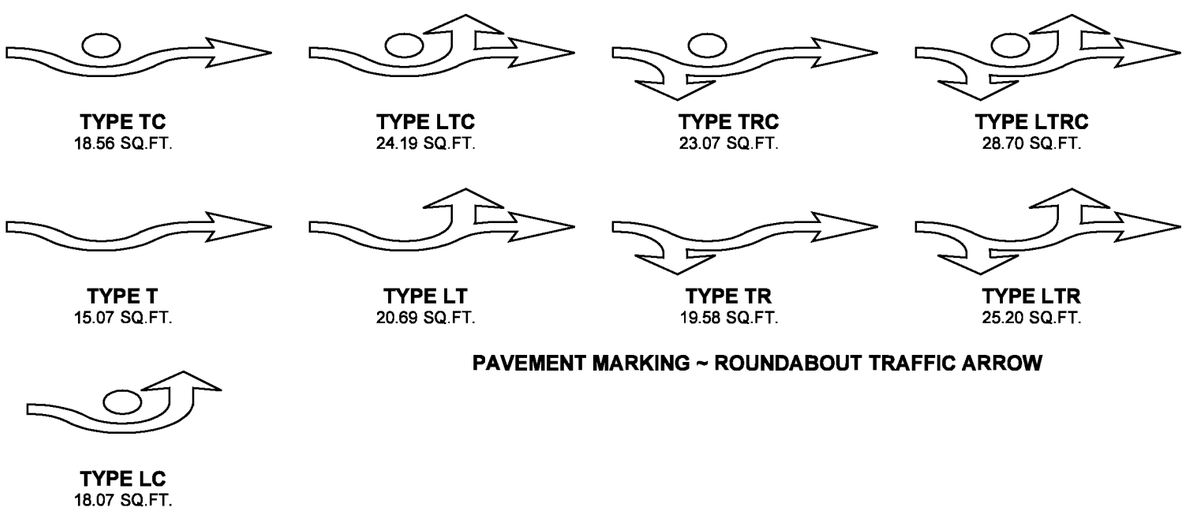

PAVEMENT MARKING ~ ROUNDABOUT TRAFFIC ARROW

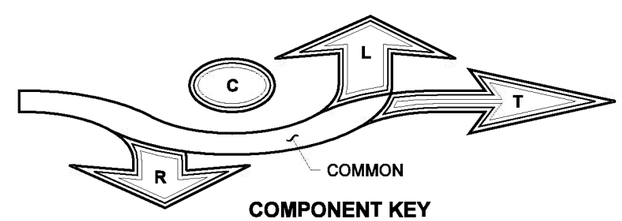

COMPONENT KEY

THE LABELED AREAS ABOVE CORRESPOND TO THE PORTIONS NEEDED FOR EACH TYPE OF ROUNDABOUT TRAFFIC ARROW.

FOR EXAMPLE: THE ROUNDABOUT TRAFFIC ARROW TYPE TRC REQUIRES THE "COMMON", "T", "R", AND "C" AREAS.

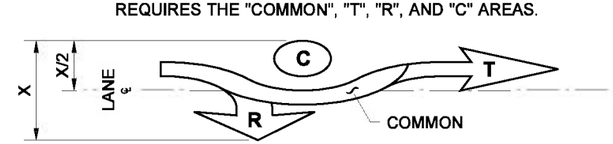

ROUNDABOUT TRAFFIC ARROW TYPE TRC

CENTER THE ARROW ON THE LANE CENTERLINE BETWEEN THE LATERAL EXTREMITIES OF THAT ARROW TYPE.

NOTE: THIS PLAN IS NOT A LEGAL ENGINEERING DOCUMENT BUT AN ELECTRONIC DUPLICATE. THE ORIGINAL, SIGNED BY THE ENGINEER AND APPROVED FOR PUBLICATION, IS KEPT ON FILE AT THE WASHINGTON STATE DEPARTMENT OF TRANSPORTATION. A COPY MAY BE OBTAINED UPON REQUEST.

ROUNDABOUT TRAFFIC ARROWS

STANDARD PLAN M-24.50-00

SHEET 1 OF 1 SHEET

APPROVED FOR PUBLICATION

Pasco Bakotich III — STATE DESIGN ENGINEER

06-16-11 — DATE

Washington State Department of Transportation

EFFECTIVE: AUGUST 6, 2012 TO August 4, 2013
EFFECTIVE: AUGUST 6, 2012 TO August 4, 2013
EFFECTIVE: AUGUST 6, 2012 TO August 4, 2013
EFFECTIVE: AUGUST 6, 2012 TO August 4, 2013

EFFECTIVE: AUGUST 6, 2012 TO August 4, 2013
EFFECTIVE: AUGUST 6, 2012 TO August 4, 2013

DRAWN BY: LISA CYFORD

NOTES

1. If Rumble Strips are present, install marking outside of the Rumble Strip.

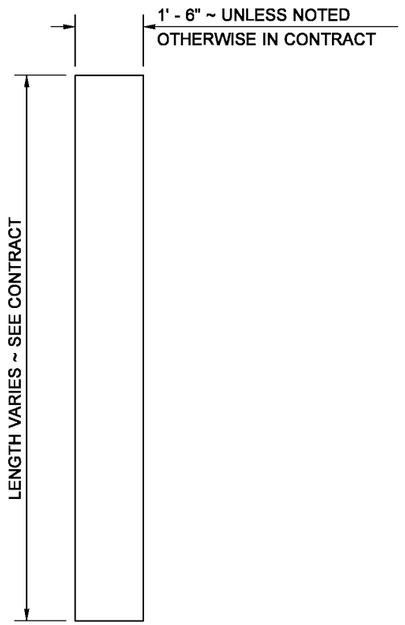

STOP LINE

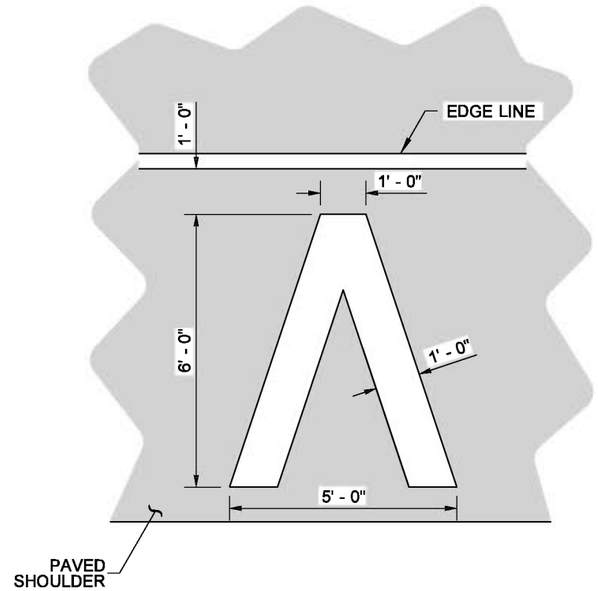

MARKING AREA = 11.73 SQ.FT.

HALF-MILE MARKER

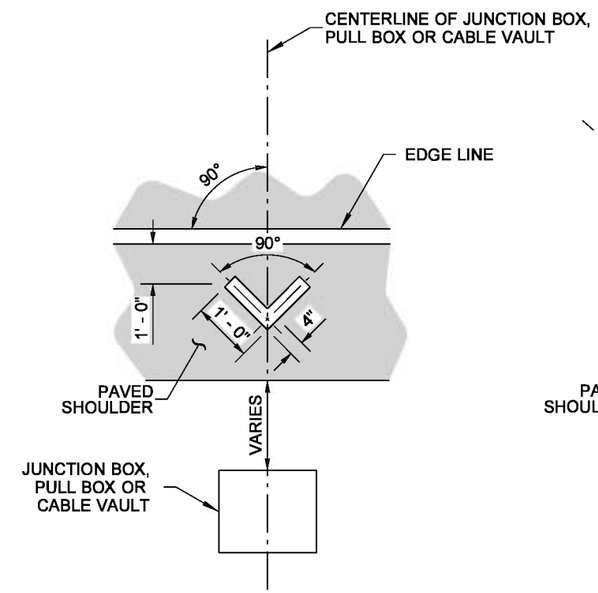

MARKING AREA = 0.56 SQ. FT.

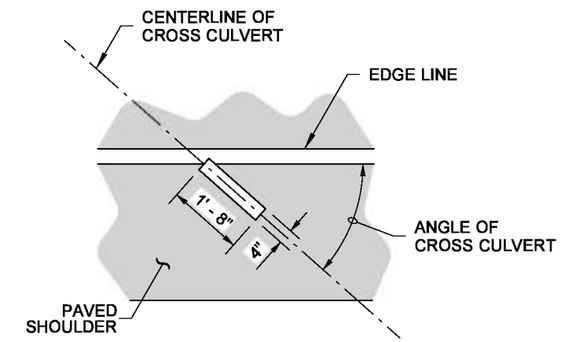

MARKING AREA = 0.56 SQ.FT.

CROSS CULVERT

JUNCTION BOX, PULL BOX, OR CABLE VAULT MARKINGS

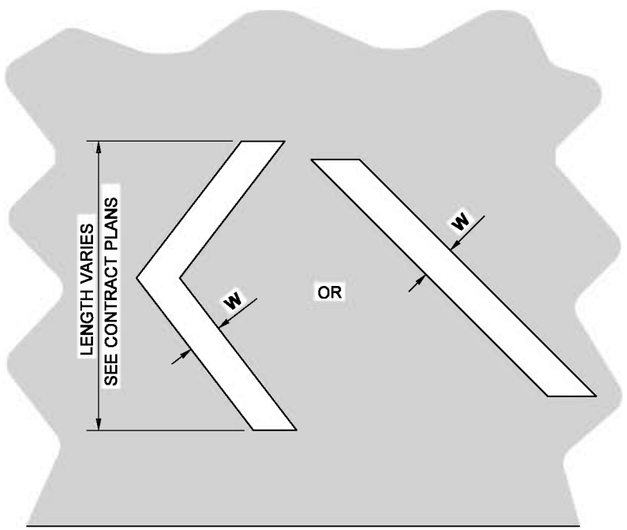

WHITE OR YELLOW ~ SEE CONTRACT PLANS

CHEVRON OR DIAGONAL

CROSSHATCH MARKING

W = 8" FOR POSTED SPEED LIMIT OF 40 MPH OR LOWER
W = 12" FOR POSTED SPEED LIMIT OF 45 MPH OR HIGHER

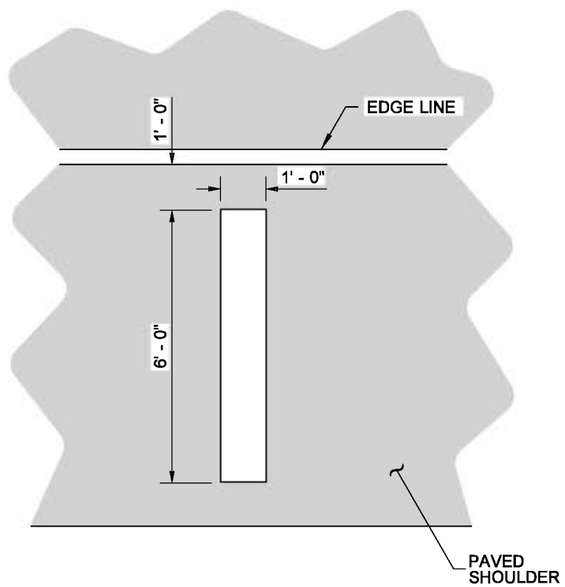

MARKING AREA = 6.00 SQ.FT.

FULL MILE MARKER

AERIAL SURVEILLANCE MARKERS

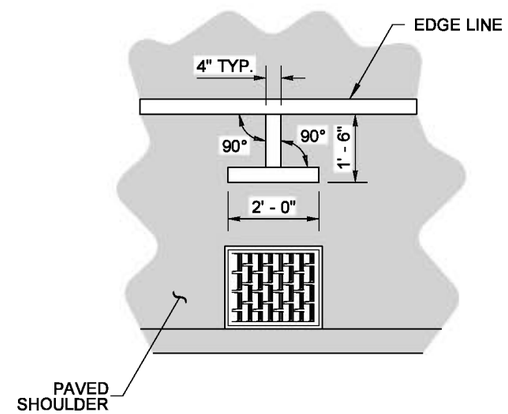

MARKING AREA = 1.06 SQ.FT.

DRAINAGE STRUCTURE INLET

DRAINAGE MARKING

NOTE: THIS PLAN IS NOT A LEGAL ENGINEERING DOCUMENT BUT AN ELECTRONIC DUPLICATE. THE ORIGINAL, SIGNED BY THE ENGINEER AND APPROVED FOR PUBLICATION, IS KEPT ON FILE AT THE WASHINGTON STATE DEPARTMENT OF TRANSPORTATION. A COPY MAY BE OBTAINED UPON REQUEST.

SYMBOL MARKINGS MISCELLANEOUS

STANDARD PLAN M-24.60-03

SHEET 1 OF 2 SHEETS

APPROVED FOR PUBLICATION

Pasco Bakotich III — STATE DESIGN ENGINEER
05-11-11 — DATE

Washington State Department of Transportation

EFFECTIVE: AUGUST 6, 2012 TO August 4, 2013
EFFECTIVE: AUGUST 6, 2012 TO August 4, 2013
EFFECTIVE: AUGUST 6, 2012 TO August 4, 2013
EFFECTIVE: AUGUST 6, 2012 TO August 4, 2013

EFFECTIVE: AUGUST 6, 2012 TO August 4, 2013
EFFECTIVE: AUGUST 6, 2012 TO August 4, 2013

DRAWN BY: LISA CYFORD

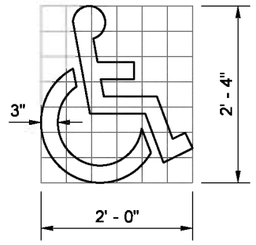

GRID IS 4" SQUARE MARKING AREA = 1.41 SQ.FT.

ACCESS PARKING SPACE SYMBOL (MINIMUM)

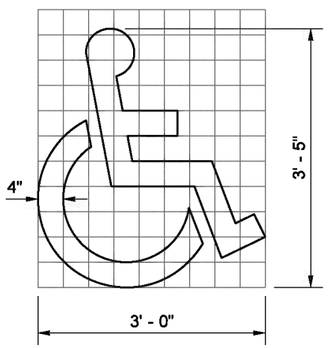

GRID IS 4" SQUARE MARKING AREA = 3.09 SQ.FT.

ACCESS PARKING SPACE SYMBOL (STANDARD)

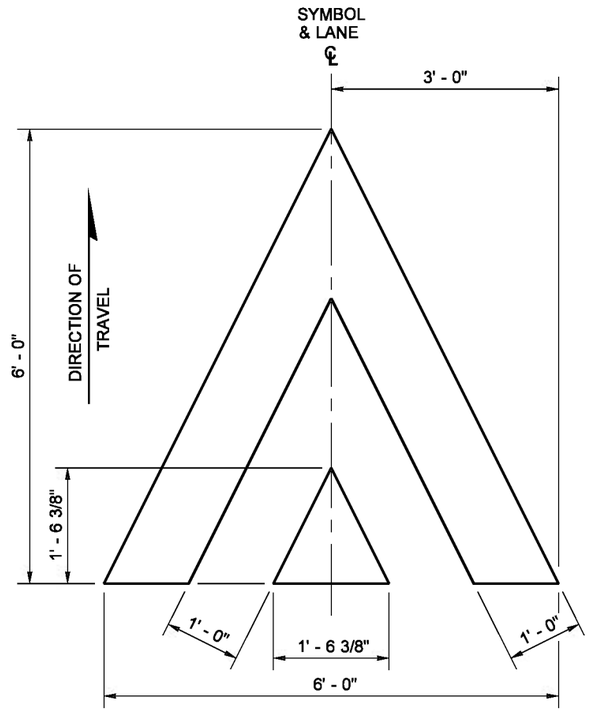

MARKING AREA = 12.08 SQ.FT.

SPEED BUMP SYMBOL

SYMBOL MARKING		A	B	C	D	USE	MARKING AREA
YIELD AHEAD SYMBOL	TYPE 1	6' - 0"	2' - 6"	13' - 0"	N/A	LESS THAN 45 MPH	25.90 SQ.FT.
	TYPE 2	6' - 0"	3' - 0"	20' - 0"	N/A	45 MPH OR GREATER	36.54 SQ.FT.
YIELD LINE SYMBOL	TYPE 1	1' - 0"	6"	1' - 6"	6"	LESS THAN 45 MPH	0.75 SQ.FT.
	TYPE 2	2' - 0"	1' - 0"	3' - 0"	1' - 0"	45 MPH OR GREATER	3.00 SQ.FT.
	TYPE 2	2' - 0"	1' - 0"	3' - 0"	1' - 0"	ROUNDABOUT ENTRY *	3.00 SQ.FT.

* MINIMUM OF 4 IN LANE

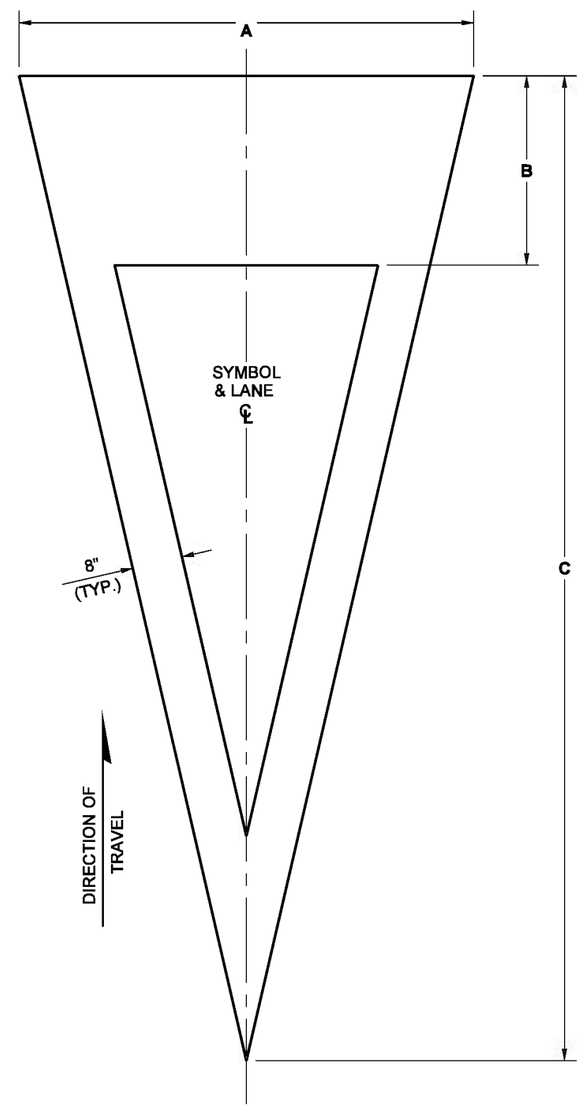

YIELD AHEAD SYMBOL

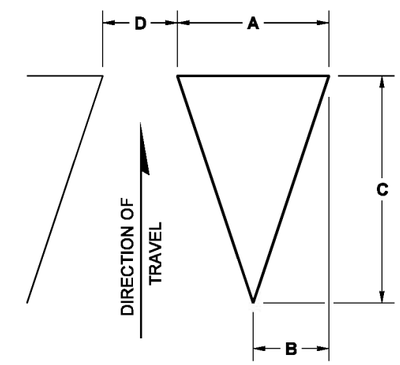

YIELD LINE SYMBOL
(MULTIPLE SYMBOLS REQUIRED FOR TRANSVERSE YIELD LINE ~ SEE CONTRACT)

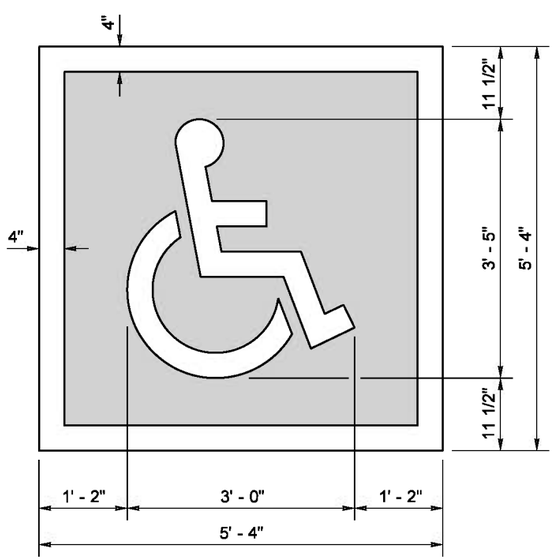

TOTAL MARKING AREA = 28.44 SQ.FT.
WHITE = 9.76 SQ.FT. BLUE = 18.69 SQ.FT.

ACCESS PARKING SPACE SYMBOL (STANDARD)
WITH BLUE BACKGROUND AND WHITE BORDER
(REQUIRED FOR CEMENT CONCRETE SURFACES)

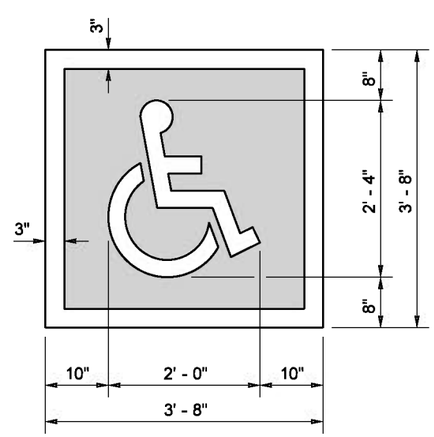

TOTAL MARKING AREA = 13.44 SQ.FT.
WHITE = 4.82 SQ.FT. BLUE = 8.62 SQ.FT.

ACCESS PARKING SPACE SYMBOL (MINIMUM)
WITH BLUE BACKGROUND AND WHITE BORDER
(REQUIRED FOR CEMENT CONCRETE SURFACES)

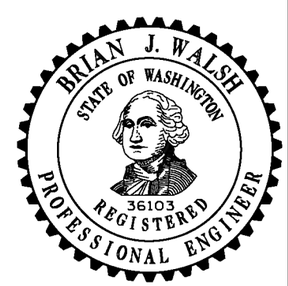

NOTE: THIS PLAN IS NOT A LEGAL ENGINEERING DOCUMENT BUT AN ELECTRONIC DUPLICATE. THE ORIGINAL, SIGNED BY THE ENGINEER AND APPROVED FOR PUBLICATION, IS KEPT ON FILE AT THE WASHINGTON STATE DEPARTMENT OF TRANSPORTATION. A COPY MAY BE OBTAINED UPON REQUEST.

SYMBOL MARKINGS MISCELLANEOUS

STANDARD PLAN M-24.60-03

SHEET 2 OF 2 SHEETS

APPROVED FOR PUBLICATION

Pasco Bakotich III *05-11-11*
STATE DESIGN ENGINEER DATE

Washington State Department of Transportation

EFFECTIVE: AUGUST 6, 2012 TO August 4, 2013
EFFECTIVE: AUGUST 6, 2012 TO August 4, 2013
EFFECTIVE: AUGUST 6, 2012 TO August 4, 2013
EFFECTIVE: AUGUST 6, 2012 TO August 4, 2013

EFFECTIVE: AUGUST 6, 2012 TO August 4, 2013
EFFECTIVE: AUGUST 6, 2012 TO August 4, 2013

DRAWN BY: LISA CYFORD

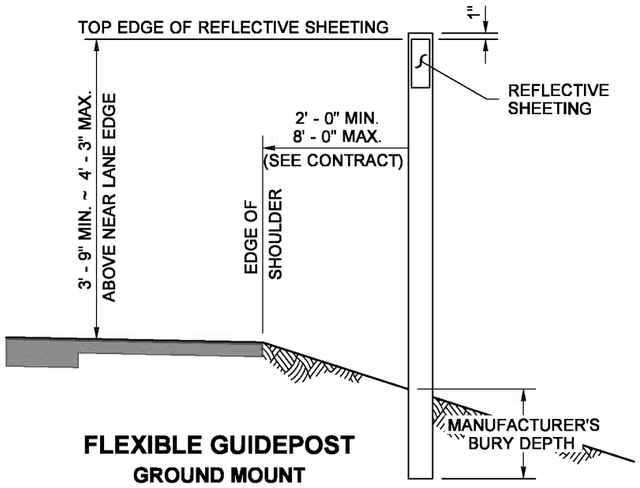

FLEXIBLE GUIDEPOST
GROUND MOUNT

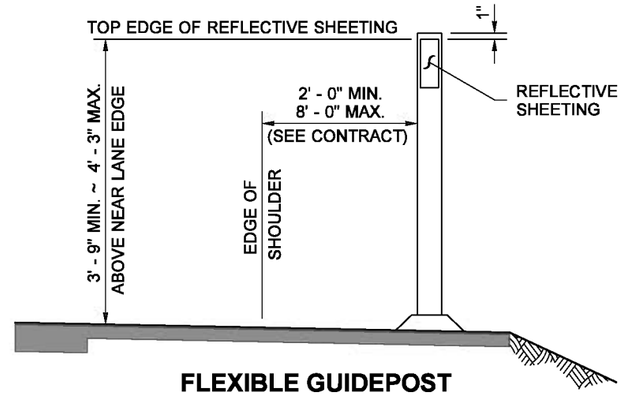

FLEXIBLE GUIDEPOST
SURFACE MOUNT

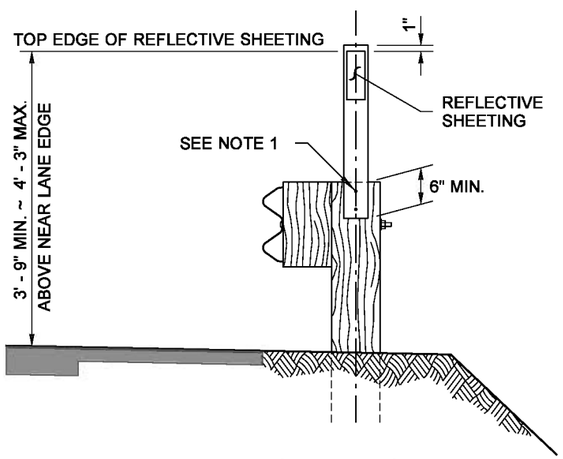

FLEXIBLE GUIDEPOST
GUARDRAIL MOUNT
(USE FOR WOODEN GUARDRAIL POSTS)

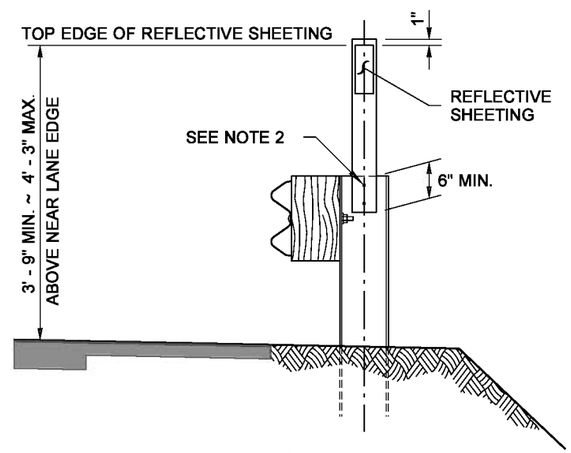

FLEXIBLE GUIDEPOST
GUARDRAIL MOUNT
(USE FOR STEEL GUARDRAIL POSTS)

NOTES

1. When the Contract Plans requires a guidepost with concurrent guardrail runs, the Contractor shall either:
   - **A.** Drive the flexible guidepost in line with the guardrail posts, or
   - **B** Mount the shorter flexible guidepost onto the guardrail post.
2. Guideposts shall be fastened to the wooden guardrail post using two 2" × 3/8" lag screws with washers, along centerline of post. Also acceptable is any approved attachment method submitted by the guidepost manufacturer.
3. Guideposts shall be fastened to the steel guardrail posts using two galvanized 2" × 3/8" bolts with a washer on both sides, a lock washer, and nut. The nut shall be tightened to properly compress the lock washer. The drilled holes in the guardrail post web shall be painted with galvanizing repair paint as described in **Standard Specification Section 8-11.3(1)C** . Also acceptable is any approved attachment method submitted by the guidepost manufacturer.
4. When concrete barrier runs concurrent, the Contractor shall mount Barrier Delineators where guideposts are required.

GUIDEPOST TYPE DEFINITIONS ~ REFLECTIVE SHEETING APPLICATIONS

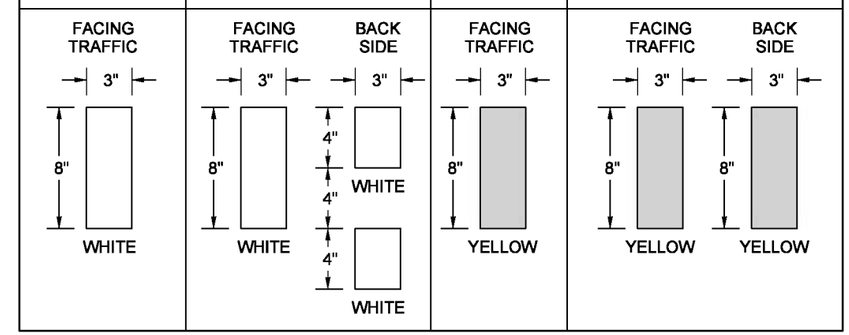

BARRIER DELINEATOR REQUIREMENTS

- Spacing of Barrier Delineators shall be as shown in the Plans.
- The housing or bracket can be flexible or rigid, molded from a durable plastic or other durable material approved by the engineer, and shall be attached to the barrier with an adhesive recommended by the manufacturer. The attachment point on the barrier surface shall be free of dirt, curing compound, moisture, paint, or any other matter that would adversely affect the adhesive bond.
- Barrier Delineators shall be one-sided for single direction traffic, or two-sided for bi-directional traffic. Color shall be white on the right of traffic, and yellow on the left of traffic.
- The reflective surface shall be rectangular or trapezoidal.
- Reflective Sheeting: 12 square inches minimum surface area; Type III, IV, V, or VI, selected from approved materials listed in the Qualified Products List.
- Plastic Reflector: 9 square inches minimum surface area; acrylic or polycarbonate conforming to AASHTO M 290. Reflectors shall equal or exceed the following minimum values of Specific Intensity:

OBSERVATION ANGLE	ENTRANCE ANGLE	SPECIFIC INTENSITY (cd/ft-c)	
		WHITE	YELLOW
0.1°	0°	126	75
0.1°	20°	50	30

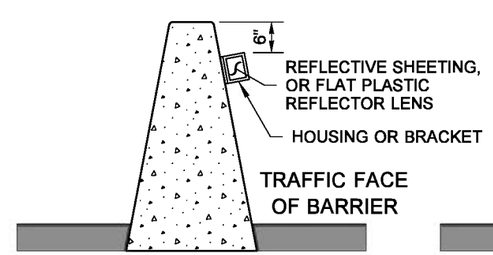

SIDE MOUNT
PER CONTRACT

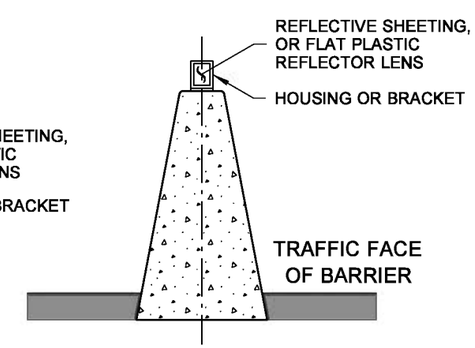

TOP MOUNT
PER CONTRACT

BARRIER DELINEATORS

(CONCRETE BARRIER TYPES AND LOCATIONS VARY, SINGLE SLOPE IN MEDIAN SHOWN)

NOTE: THIS PLAN IS NOT A LEGAL ENGINEERING DOCUMENT BUT AN ELECTRONIC DUPLICATE. THE ORIGINAL, SIGNED BY THE ENGINEER AND APPROVED FOR PUBLICATION, IS KEPT ON FILE AT THE WASHINGTON STATE DEPARTMENT OF TRANSPORTATION. A COPY MAY BE OBTAINED UPON REQUEST.

GUIDEPOSTS AND BARRIER DELINEATORS

STANDARD PLAN M-40.10-02

SHEET 1 OF 1 SHEET

APPROVED FOR PUBLICATION

Pasco Bakotich III — STATE DESIGN ENGINEER
05-11-11 — DATE

Washington State Department of Transportation

EFFECTIVE: AUGUST 6, 2012 TO August 4, 2013
EFFECTIVE: AUGUST 6, 2012 TO August 4, 2013
EFFECTIVE: AUGUST 6, 2012 TO August 4, 2013
EFFECTIVE: AUGUST 6, 2012 TO August 4, 2013

EFFECTIVE: AUGUST 6, 2012 TO August 4, 2013
EFFECTIVE: AUGUST 6, 2012 TO August 4, 2013

DRAWN BY: ADAM COCHRAN

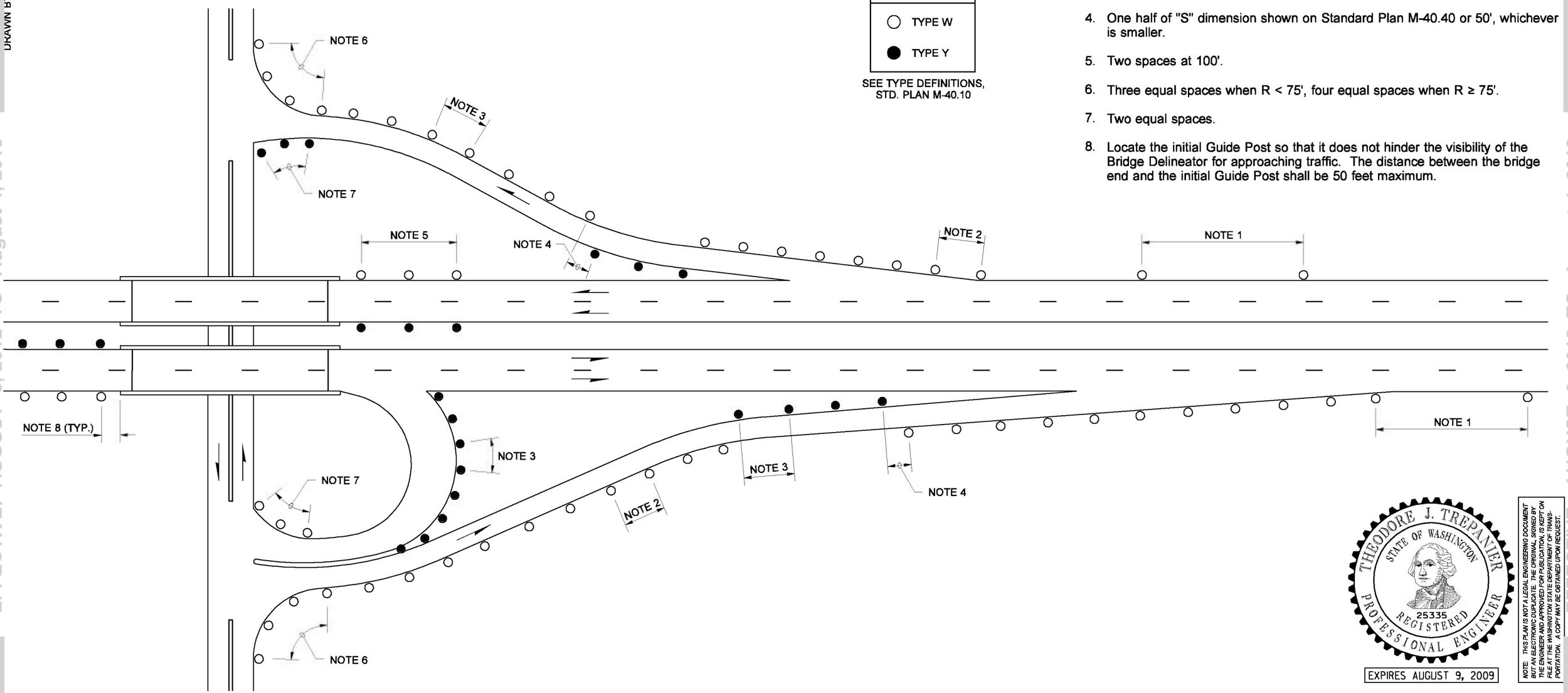

LEGEND

- ○ TYPE W
- ● TYPE Y

SEE TYPE DEFINITIONS, STD. PLAN M-40.10

NOTES

1. See Standard Plan M-40.10 for Guide Post details. See plans for guide post requirements between interchanges.
2. Guide posts shall be placed at 100' spacing on ramp tangents and tapers.
3. "S" dimension shown on Standard Plan M-40.40 or 100', whichever is smaller.
4. One half of "S" dimension shown on Standard Plan M-40.40 or 50', whichever is smaller.
5. Two spaces at 100'.
6. Three equal spaces when R < 75', four equal spaces when R ≥ 75'.
7. Two equal spaces.
8. Locate the initial Guide Post so that it does not hinder the visibility of the Bridge Delineator for approaching traffic. The distance between the bridge end and the initial Guide Post shall be 50 feet maximum.

THEODORE J. TREPANIER
STATE OF WASHINGTON
25335
REGISTERED
PROFESSIONAL ENGINEER

EXPIRES AUGUST 9, 2009

NOTE: THIS PLAN IS NOT A LEGAL ENGINEERING DOCUMENT BUT AN ELECTRONIC DUPLICATE. THE ORIGINAL, SIGNED BY THE ENGINEER AND APPROVED FOR PUBLICATION, IS KEPT ON FILE AT THE WASHINGTON STATE DEPARTMENT OF TRANSPORTATION. A COPY MAY BE OBTAINED UPON REQUEST.

GUIDE POST PLACEMENT INTERCHANGES

STANDARD PLAN M-40.20-00

SHEET 1 OF 1 SHEET

APPROVED FOR PUBLICATION

Pasco Bakotich III — STATE DESIGN ENGINEER

10-12-07 — DATE

Washington State Department of Transportation

EFFECTIVE: AUGUST 6, 2012 TO August 4, 2013
EFFECTIVE: AUGUST 6, 2012 TO August 4, 2013
EFFECTIVE: AUGUST 6, 2012 TO August 4, 2013
EFFECTIVE: AUGUST 6, 2012 TO August 4, 2013

EFFECTIVE: AUGUST 6, 2012 TO August 4, 2013
EFFECTIVE: AUGUST 6, 2012 TO August 4, 2013

DRAWN BY: MARK SUJKA

NOTE

See Standard Plan M-40.10 for Guide Post details

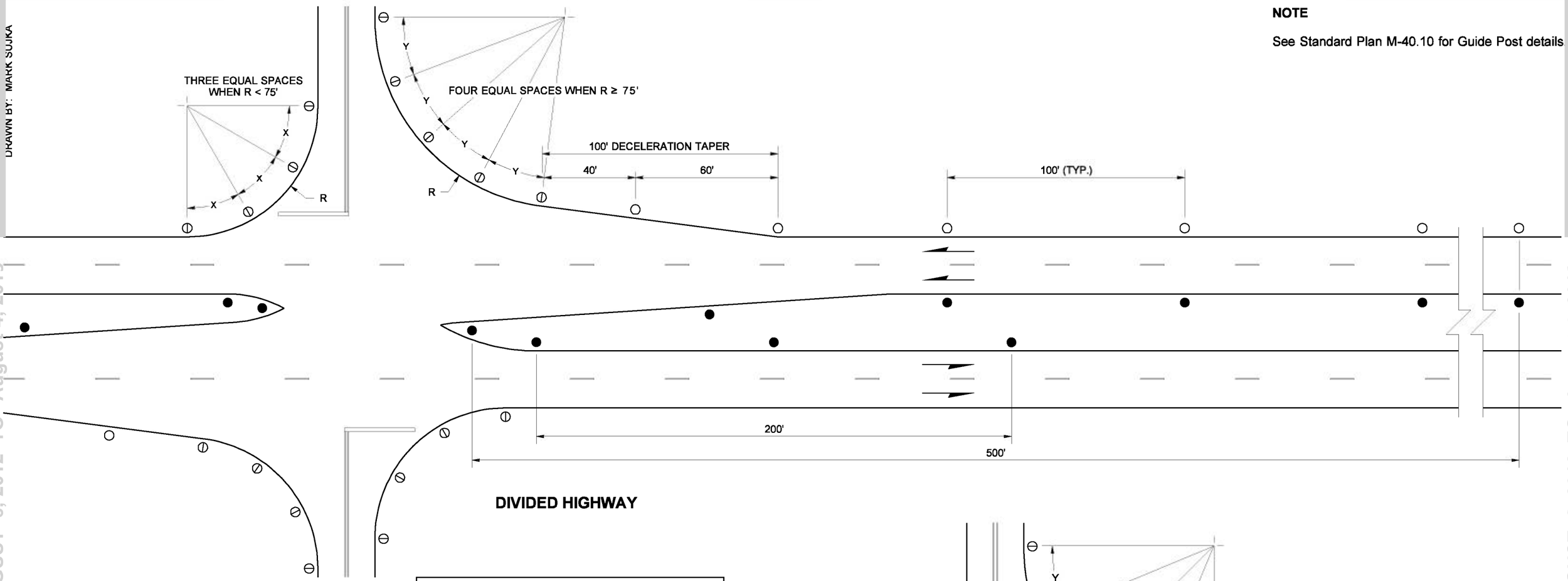

REFLECTIVE SHEETING APPLICATIONS

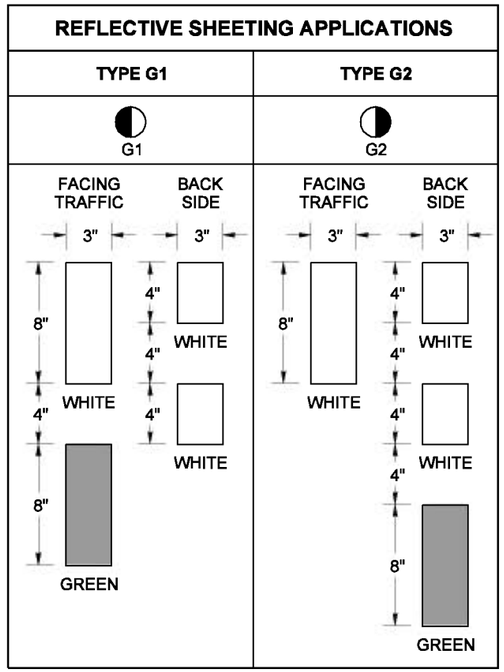

LEGEND

- TYPE W
- TYPE WW
- TYPE Y

SEE TYPE DEFINITIONS, STD. PLAN M-40.10

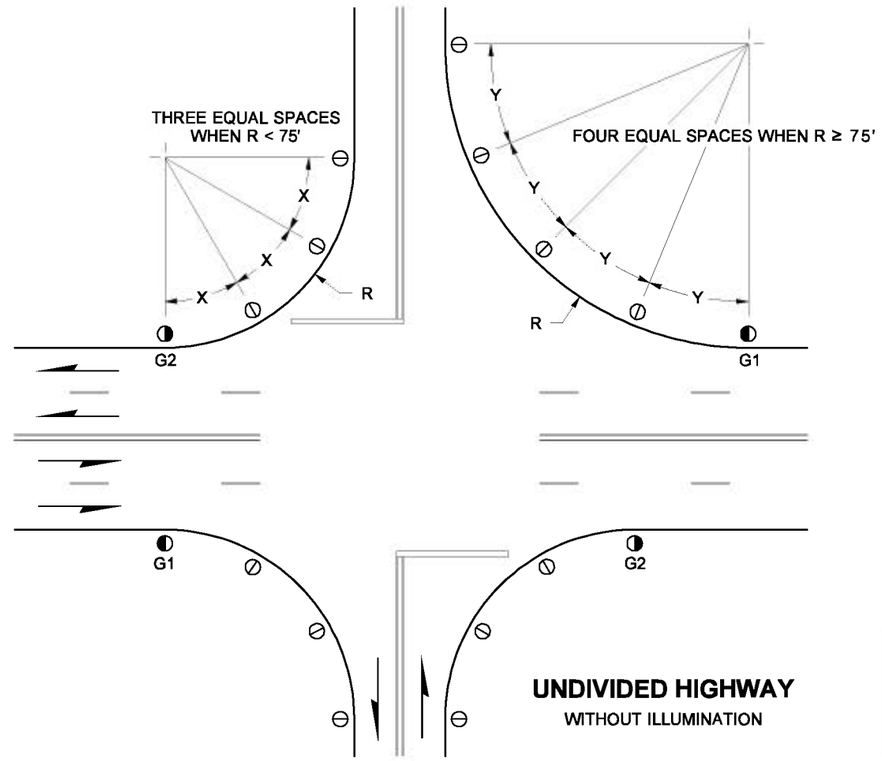

THEODORE J. TREPANIER
STATE OF WASHINGTON
25335
REGISTERED
PROFESSIONAL ENGINEER

EXPIRES AUGUST 9, 2009

NOTE: THIS PLAN IS NOT A LEGAL ENGINEERING DOCUMENT BUT AN ELECTRONIC DUPLICATE. THE ORIGINAL, SIGNED BY THE ENGINEER AND APPROVED FOR PUBLICATION, IS KEPT ON FILE AT THE WASHINGTON STATE DEPARTMENT OF TRANSPORTATION. A COPY MAY BE OBTAINED UPON REQUEST.

GUIDE POST PLACEMENT GRADE INTERSECTIONS

STANDARD PLAN M-40.30-00

SHEET 1 OF 1 SHEET

APPROVED FOR PUBLICATION

Pasco Bakotich III — STATE DESIGN ENGINEER

09-20-07 — DATE

Washington State Department of Transportation

EFFECTIVE: AUGUST 6, 2012 TO August 4, 2013
EFFECTIVE: AUGUST 6, 2012 TO August 4, 2013
EFFECTIVE: AUGUST 6, 2012 TO August 4, 2013
EFFECTIVE: AUGUST 6, 2012 TO August 4, 2013

EFFECTIVE: AUGUST 6, 2012 TO August 4, 2013
EFFECTIVE: AUGUST 6, 2012 TO August 4, 2013

DRAWN BY: MARK SUJKA

GUIDE POST SPACING (FEET)	
RADIUS	S
50	20
115	25
150	30
200	35
250	40
300	50
400	55
500	65
600	70
700	75
800	80
900	85
1,000	90
1,200	100
1,700	120
2,300	140
2,900	160
3,700	180
4,500	200
5,500	220
6,500	240
7,600	260
8,800	280
10,000	300
R>10,000	300

INTERPOLATE FROM THE TABLE FOR RADII NOT SHOWN

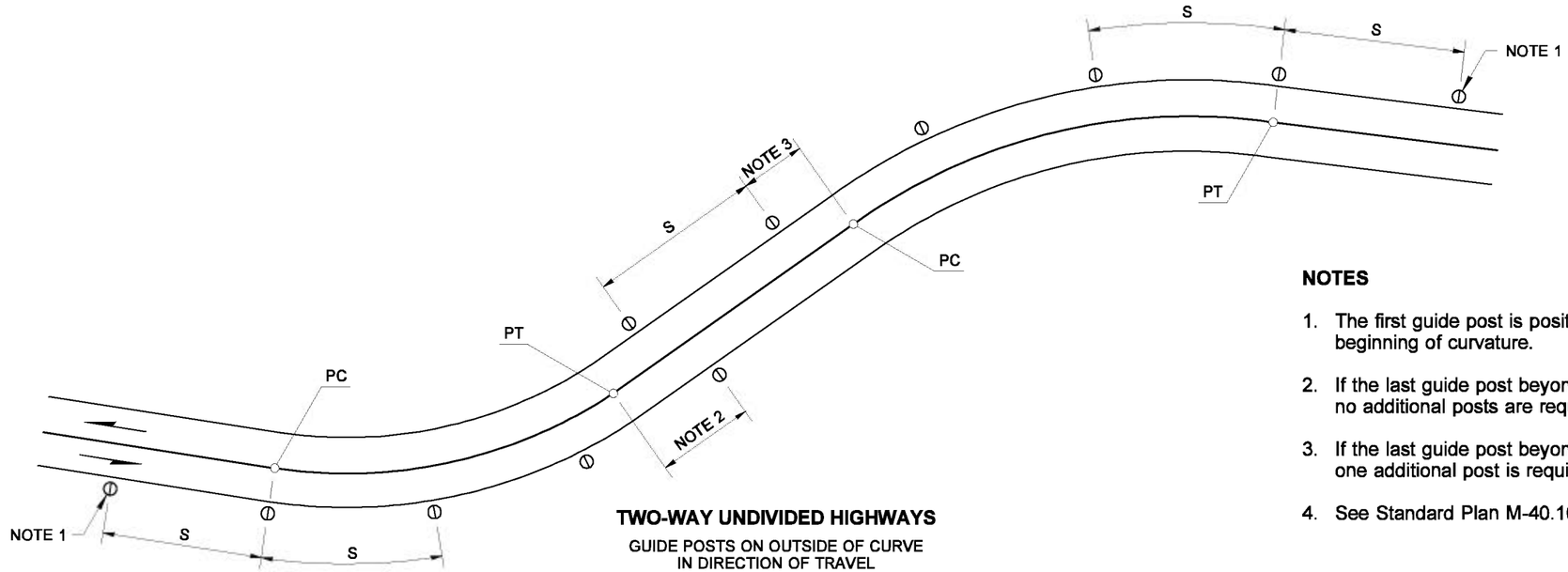

TWO-WAY UNDIVIDED HIGHWAYS

GUIDE POSTS ON OUTSIDE OF CURVE IN DIRECTION OF TRAVEL

NOTES

1. The first guide post is positioned "S" distance from the beginning of curvature.
2. If the last guide post beyond the curve is 1/2 "S" or more, no additional posts are required.
3. If the last guide post beyond the curve is less than 1/2 "S", one additional post is required.
4. See Standard Plan M-40.10 for Guide Post details.

LEGEND

- TYPE W
- TYPE WW
- TYPE Y

SEE TYPE DEFINITIONS, STD. PLAN M-40.10

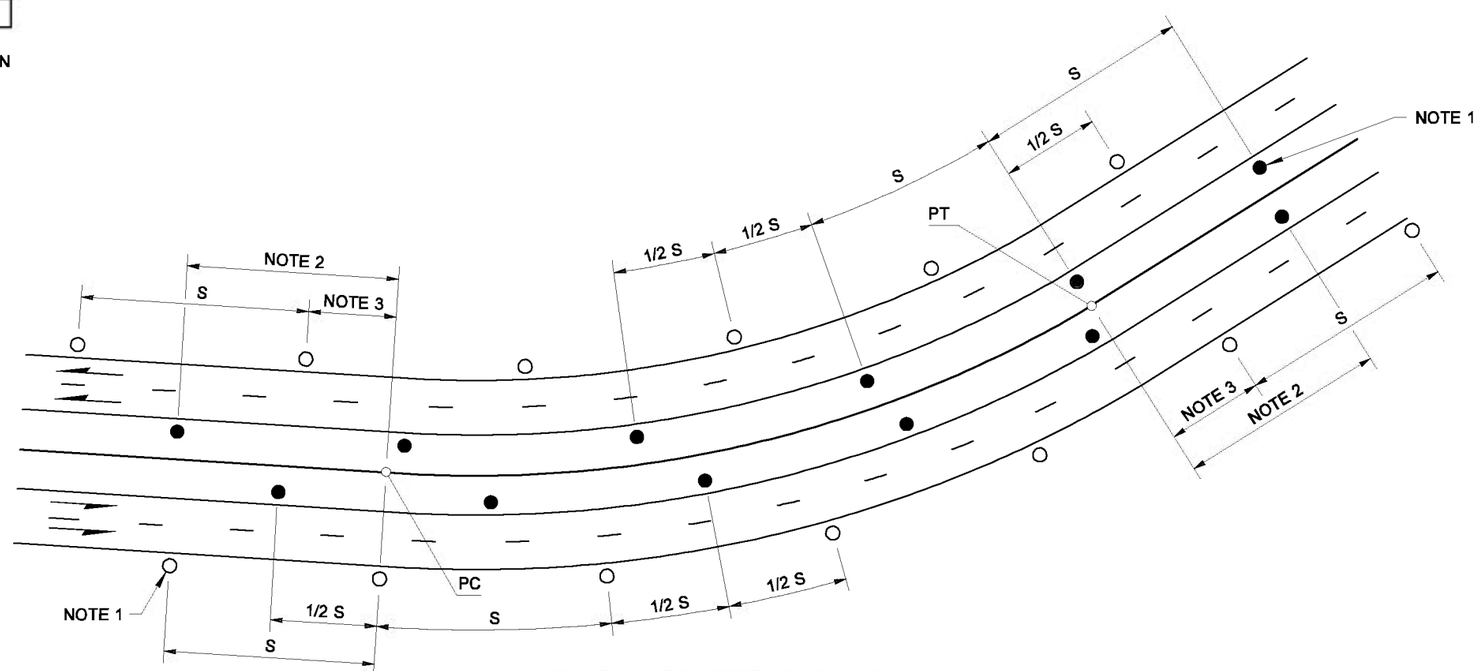

MULTI-LANE DIVIDED HIGHWAYS

GUIDE POSTS ON INSIDE AND OUTSIDE OF CURVE FOR EACH DIRECTION OF TRAVEL

THEODORE J. TREPANIER
STATE OF WASHINGTON
25335
REGISTERED
PROFESSIONAL ENGINEER

EXPIRES AUGUST 9, 2009

NOTE: THIS PLAN IS NOT A LEGAL ENGINEERING DOCUMENT BUT AN ELECTRONIC DUPLICATE. THE ORIGINAL, SIGNED BY THE ENGINEER AND APPROVED FOR PUBLICATION, IS KEPT ON FILE AT THE WASHINGTON STATE DEPARTMENT OF TRANSPORTATION. A COPY MAY BE OBTAINED UPON REQUEST.

GUIDE POST PLACEMENT HORIZONTAL CURVES

STANDARD PLAN M-40.40-00

SHEET 1 OF 1 SHEET

APPROVED FOR PUBLICATION

Pasco Bakotich III — STATE DESIGN ENGINEER

09-20-07 — DATE

Washington State Department of Transportation

EFFECTIVE: AUGUST 6, 2012 TO August 4, 2013
EFFECTIVE: AUGUST 6, 2012 TO August 4, 2013
EFFECTIVE: AUGUST 6, 2012 TO August 4, 2013
EFFECTIVE: AUGUST 6, 2012 TO August 4, 2013

EFFECTIVE: AUGUST 6, 2012 TO August 4, 2013
EFFECTIVE: AUGUST 6, 2012 TO August 4, 2013

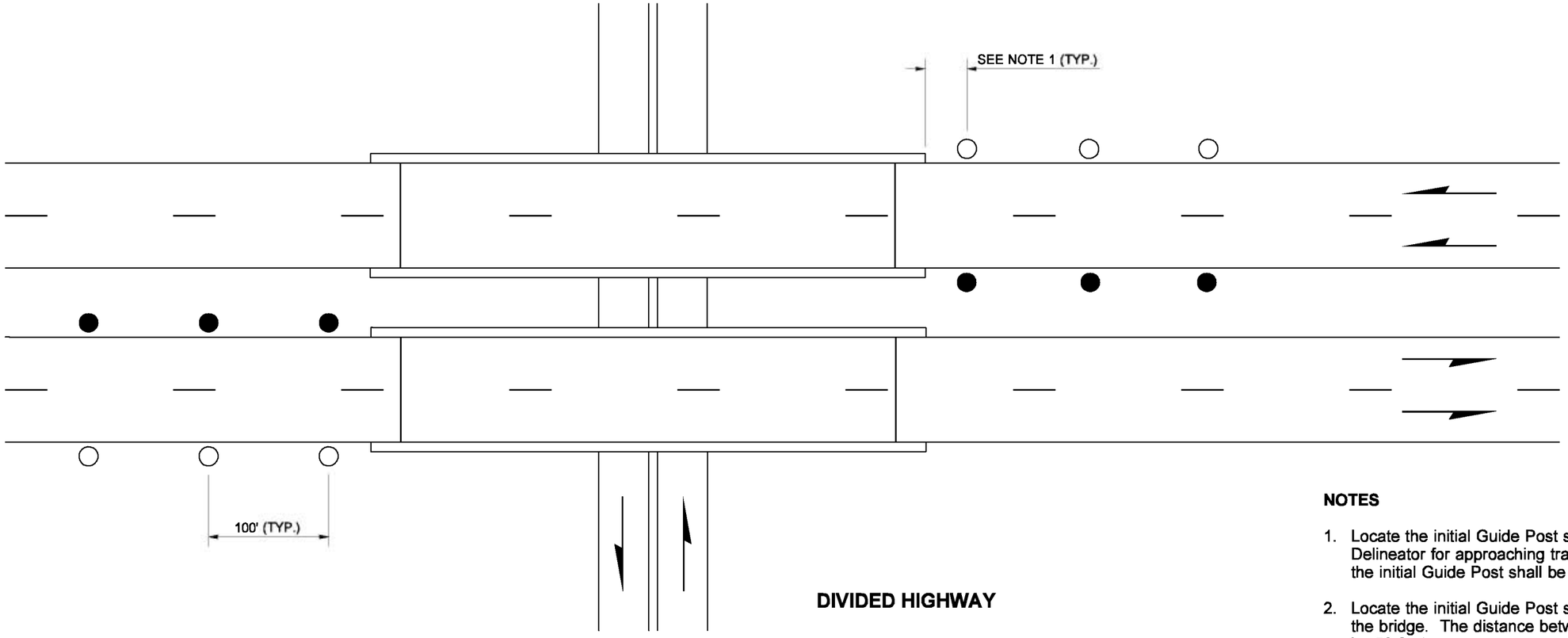

DIVIDED HIGHWAY

LEGEND

- ○ TYPE W
- ⦶ TYPE WW
- ● TYPE Y

SEE TYPE DEFINITIONS, STD. PLAN M-40.10

NOTES

1. Locate the initial Guide Post so that it does not hinder the visibility of the Bridge Delineator for approaching traffic. The distance between the bridge end and the initial Guide Post shall be 50 feet max.
2. Locate the initial Guide Post so that its visibility is unhindered for traffic departing the bridge. The distance between the bridge end and the initial Guide Post shall be 50 feet max.
3. See Standard Plan M-40.10 for Guide Post details.

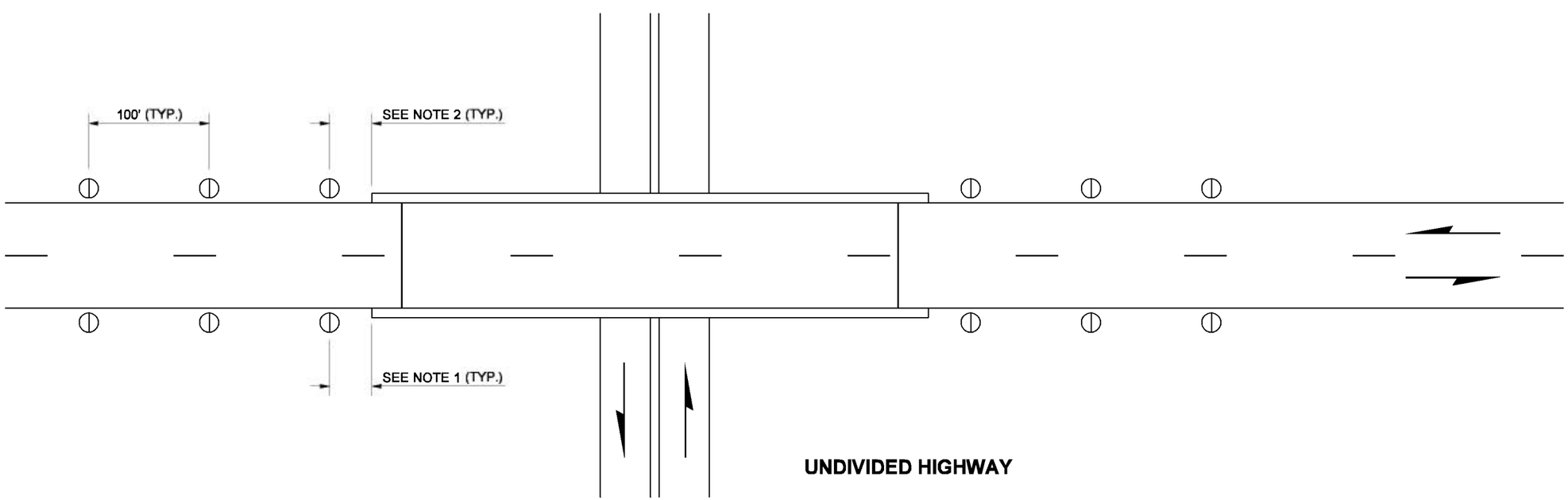

UNDIVIDED HIGHWAY

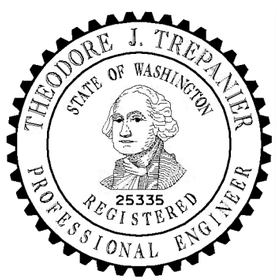

EXPIRES AUGUST 9, 2009

NOTE: THIS PLAN IS NOT A LEGAL ENGINEERING DOCUMENT BUT AN ELECTRONIC DUPLICATE. THE ORIGINAL, SIGNED BY THE ENGINEER AND APPROVED FOR PUBLICATION, IS KEPT ON FILE AT THE WASHINGTON STATE DEPARTMENT OF TRANSPORTATION. A COPY MAY BE OBTAINED UPON REQUEST.

GUIDE POST PLACEMENT BRIDGES

STANDARD PLAN M-40.50-00

SHEET 1 OF 1 SHEET

APPROVED FOR PUBLICATION

Pasco Bakotich III — STATE DESIGN ENGINEER

09-20-07 — DATE

Washington State Department of Transportation

EFFECTIVE: AUGUST 6, 2012 TO August 4, 2013
EFFECTIVE: AUGUST 6, 2012 TO August 4, 2013
EFFECTIVE: AUGUST 6, 2012 TO August 4, 2013
EFFECTIVE: AUGUST 6, 2012 TO August 4, 2013

EFFECTIVE: AUGUST 6, 2012 TO August 4, 2013
EFFECTIVE: AUGUST 6, 2012 TO August 4, 2013

DRAWN BY: MARK SUJKA

NOTE

See Standard Plan M-40.10 for Guide Post details

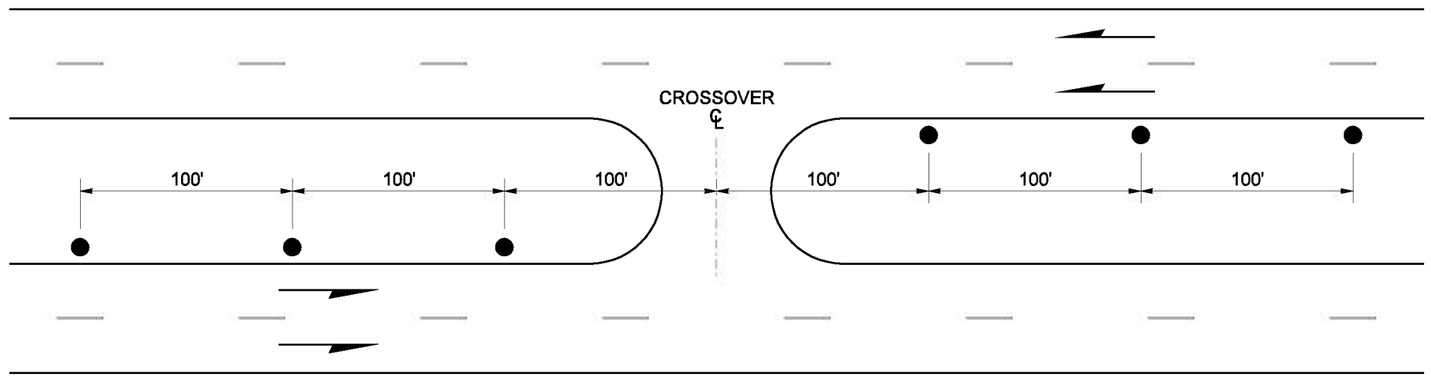

MEDIAN CROSSOVERS

LEGEND
○ TYPE W
● TYPE Y

SEE TYPE DEFINITIONS, STD. PLAN M-40.10

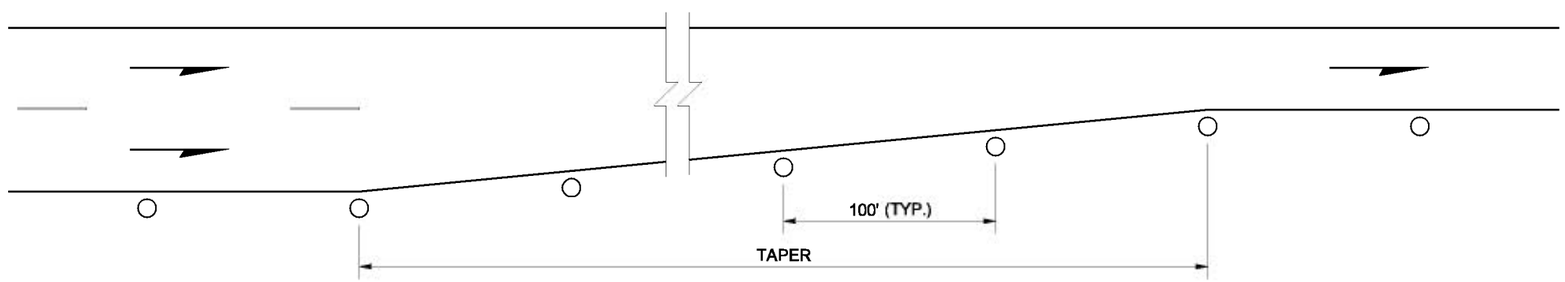

LANE REDUCTIONS

THEODORE J. TREPANIER
STATE OF WASHINGTON
25335
REGISTERED
PROFESSIONAL ENGINEER

EXPIRES AUGUST 9, 2009

NOTE: THIS PLAN IS NOT A LEGAL ENGINEERING DOCUMENT BUT AN ELECTRONIC DUPLICATE. THE ORIGINAL, SIGNED BY THE ENGINEER AND APPROVED FOR PUBLICATION, IS KEPT ON FILE AT THE WASHINGTON STATE DEPARTMENT OF TRANSPORTATION. A COPY MAY BE OBTAINED UPON REQUEST.

GUIDE POST PLACEMENT MISCELLANEOUS

STANDARD PLAN M-40.60-00

SHEET 1 OF 1 SHEET

APPROVED FOR PUBLICATION

Pasco Bakotich III — STATE DESIGN ENGINEER

09-20-07 — DATE

Washington State Department of Transportation

EFFECTIVE: AUGUST 6, 2012 TO August 4, 2013
EFFECTIVE: AUGUST 6, 2012 TO August 4, 2013
EFFECTIVE: AUGUST 6, 2012 TO August 4, 2013
EFFECTIVE: AUGUST 6, 2012 TO August 4, 2013

EFFECTIVE: AUGUST 6, 2012 TO August 4, 2013
EFFECTIVE: AUGUST 6, 2012 TO August 4, 2013

DRAWN BY: LISA CYFORD

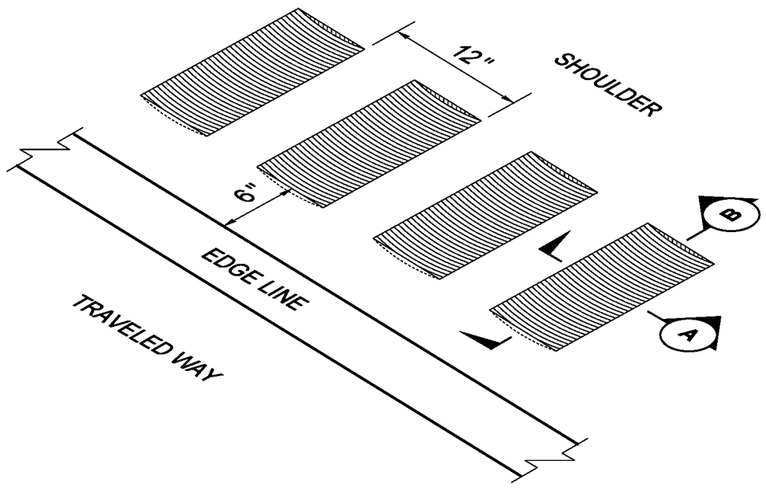

ISOMETRIC VIEW

TYPICAL SHOULDER INSTALLATION

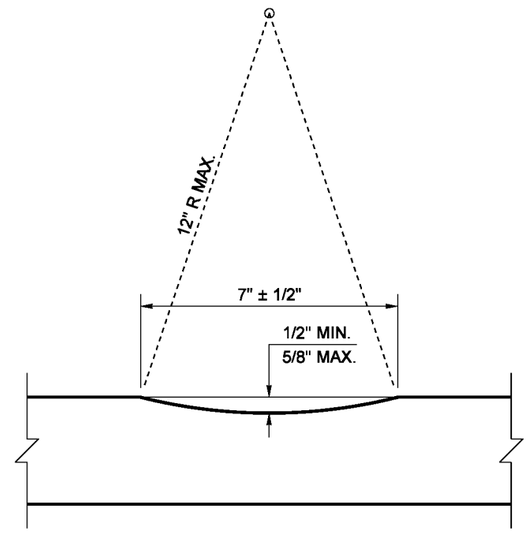

SECTION A

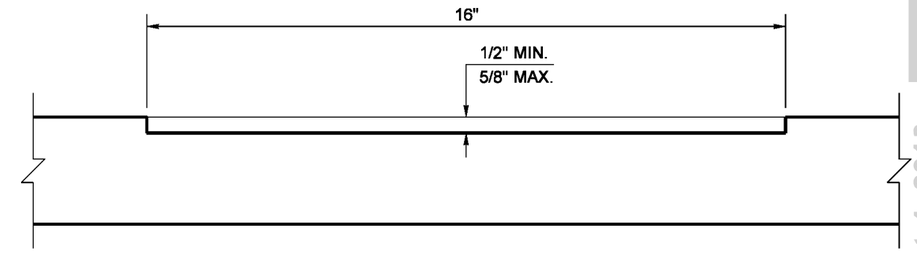

SECTION B

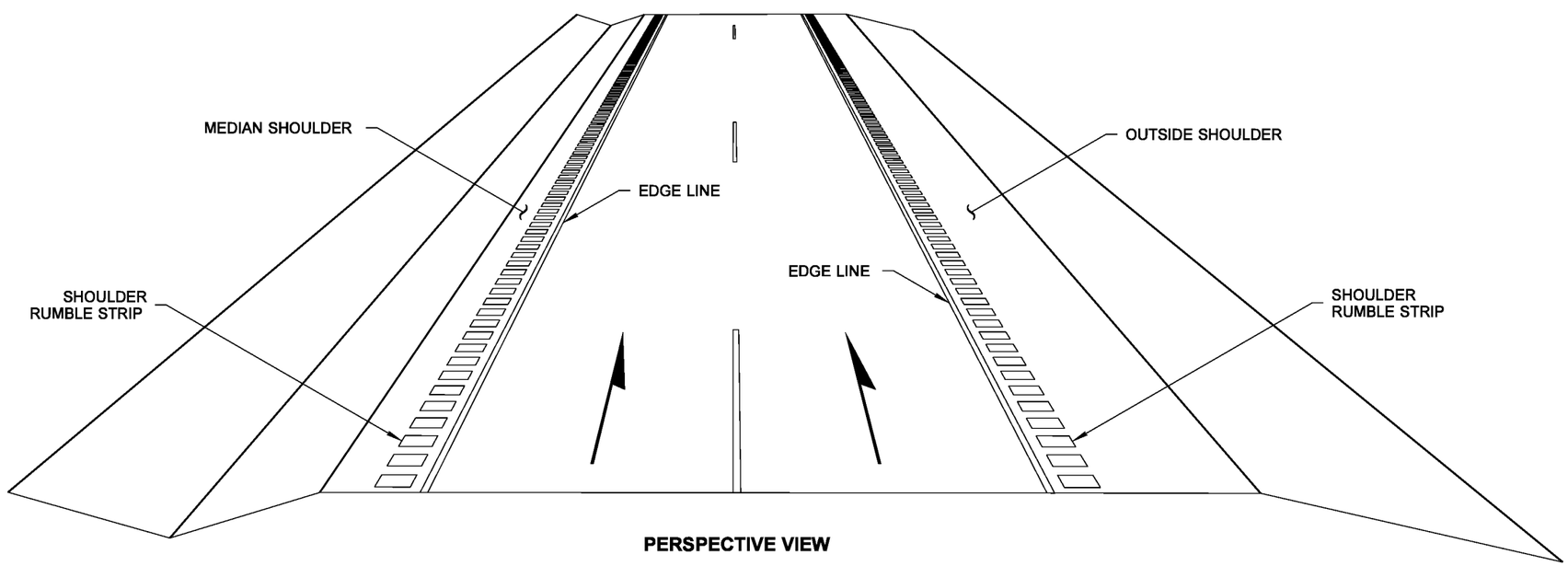

PERSPECTIVE VIEW

MULTI-LANE DIVIDED HIGHWAY

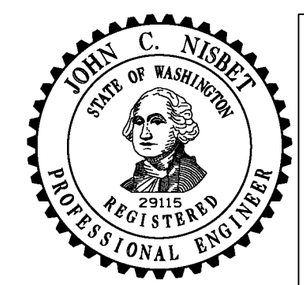

NOTE: THIS PLAN IS NOT A LEGAL ENGINEERING DOCUMENT BUT AN ELECTRONIC DUPLICATE. THE ORIGINAL, SIGNED BY THE ENGINEER AND APPROVED FOR PUBLICATION, IS KEPT ON FILE AT THE WASHINGTON STATE DEPARTMENT OF TRANSPORTATION. A COPY MAY BE OBTAINED UPON REQUEST.

SHOULDER RUMBLE STRIP TYPE 1 FOR DIVIDED HIGHWAYS STANDARD PLAN M-60.10-01

SHEET 1 OF 4 SHEETS

APPROVED FOR PUBLICATION

Pasco Bakotich III — STATE DESIGN ENGINEER

06-03-11 — DATE

Washington State Department of Transportation

EFFECTIVE: AUGUST 6, 2012 TO August 4, 2013
EFFECTIVE: AUGUST 6, 2012 TO August 4, 2013
EFFECTIVE: AUGUST 6, 2012 TO August 4, 2013
EFFECTIVE: AUGUST 6, 2012 TO August 4, 2013

EFFECTIVE: AUGUST 6, 2012 TO August 4, 2013
EFFECTIVE: AUGUST 6, 2012 TO August 4, 2013

DRAWN BY: LISA CYFORD

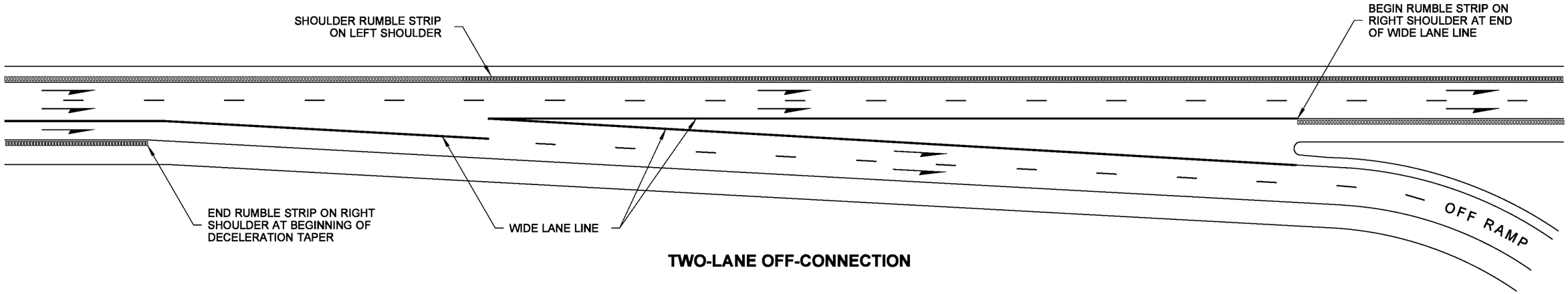

TWO-LANE OFF-CONNECTION

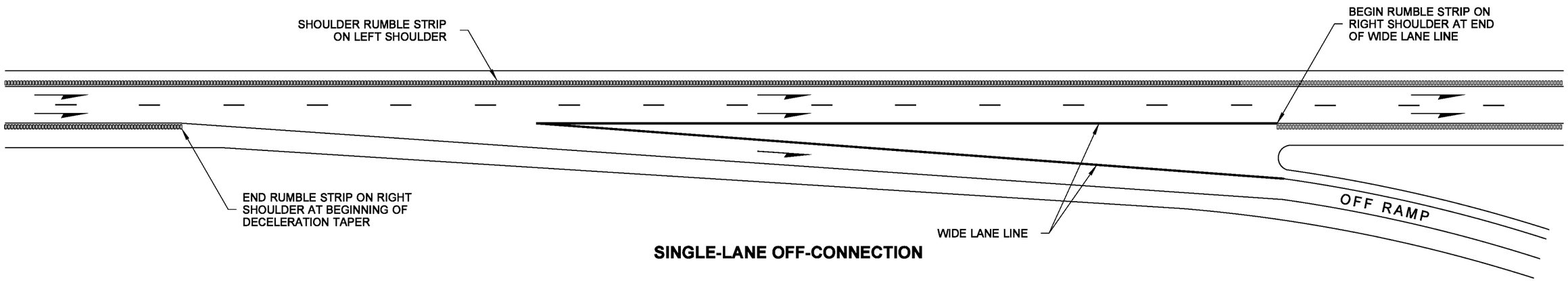

SINGLE-LANE OFF-CONNECTION

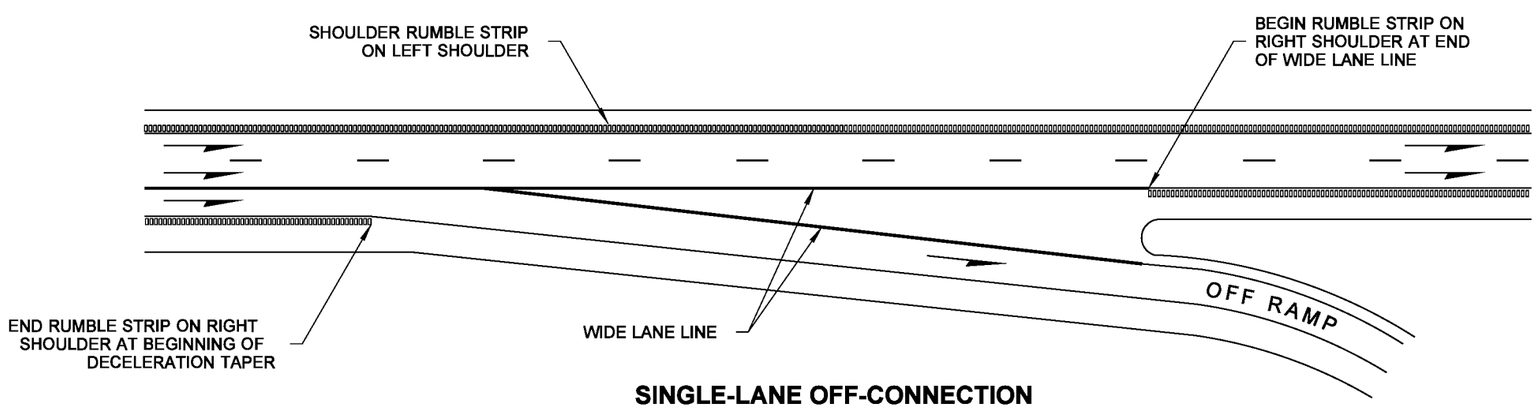

SINGLE-LANE OFF-CONNECTION
FOR ONE LANE REDUCTION

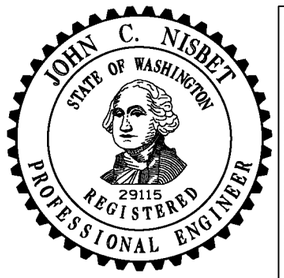

NOTE: THIS PLAN IS NOT A LEGAL ENGINEERING DOCUMENT BUT AN ELECTRONIC DUPLICATE. THE ORIGINAL, SIGNED BY THE ENGINEER AND APPROVED FOR PUBLICATION, IS KEPT ON FILE AT THE WASHINGTON STATE DEPARTMENT OF TRANSPORTATION. A COPY MAY BE OBTAINED UPON REQUEST.

SHOULDER RUMBLE STRIP TYPE 1 FOR DIVIDED HIGHWAYS STANDARD PLAN M-60.10-01

SHEET 2 OF 4 SHEETS

APPROVED FOR PUBLICATION

Pasco Bakotich III	*06-03-11*
STATE DESIGN ENGINEER	DATE

Washington State Department of Transportation

EFFECTIVE: AUGUST 6, 2012 TO August 4, 2013
EFFECTIVE: AUGUST 6, 2012 TO August 4, 2013
EFFECTIVE: AUGUST 6, 2012 TO August 4, 2013
EFFECTIVE: AUGUST 6, 2012 TO August 4, 2013

EFFECTIVE: AUGUST 6, 2012 TO August 4, 2013
EFFECTIVE: AUGUST 6, 2012 TO August 4, 2013

DRAWN BY: LISA CYFORD

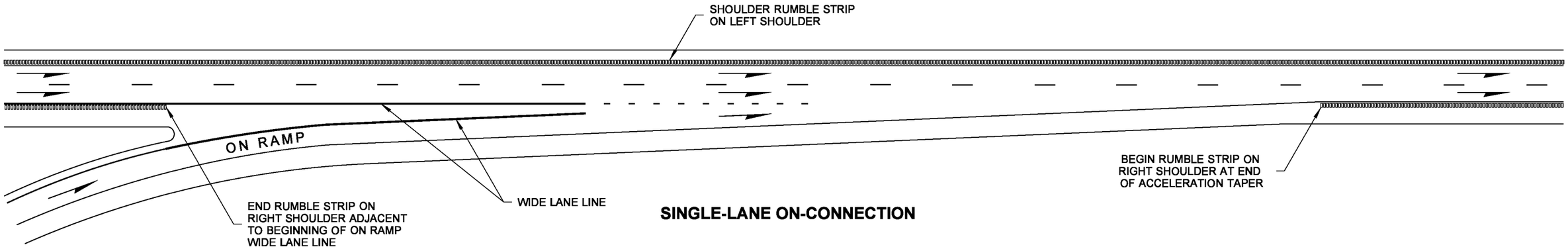

SINGLE-LANE ON-CONNECTION

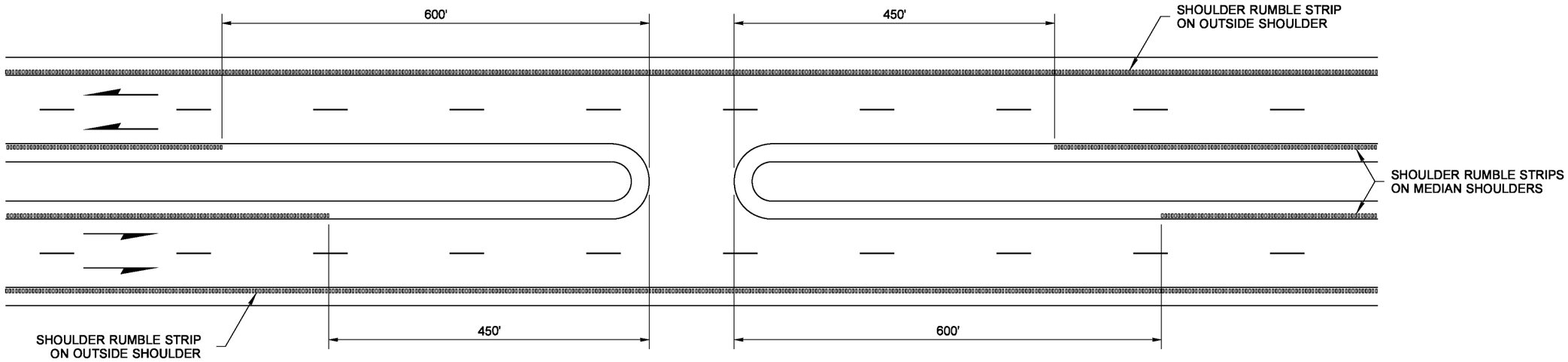

MEDIAN CROSSOVER

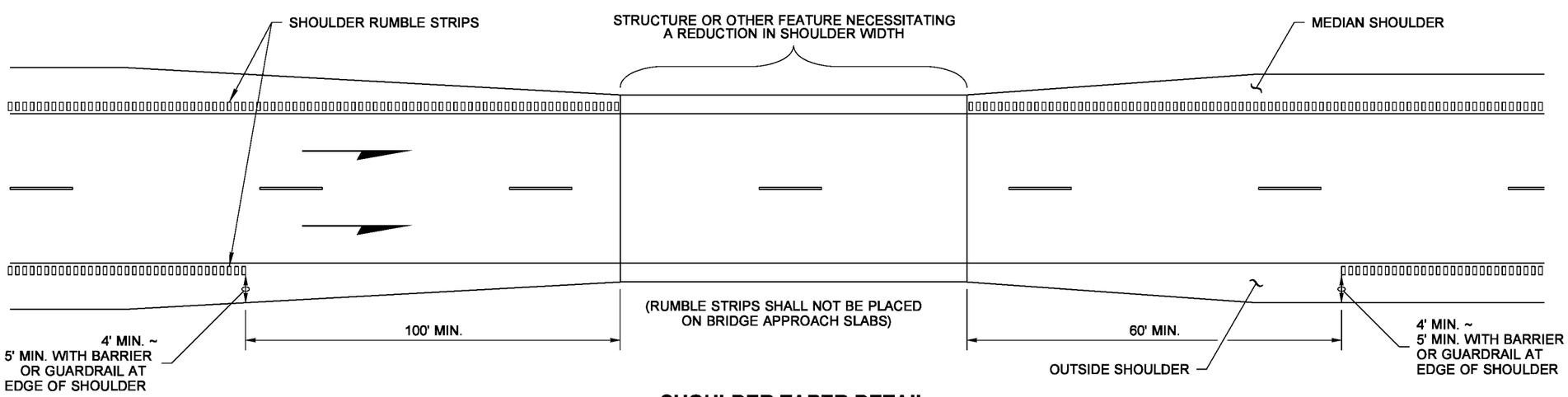

SHOULDER TAPER DETAIL

NOTE: THIS PLAN IS NOT A LEGAL ENGINEERING DOCUMENT BUT AN ELECTRONIC DUPLICATE. THE ORIGINAL, SIGNED BY THE ENGINEER AND APPROVED FOR PUBLICATION, IS KEPT ON FILE AT THE WASHINGTON STATE DEPARTMENT OF TRANSPORTATION. A COPY MAY BE OBTAINED UPON REQUEST.

SHOULDER RUMBLE STRIP TYPE 1 FOR DIVIDED HIGHWAYS STANDARD PLAN M-60.10-01

SHEET 3 OF 4 SHEETS

APPROVED FOR PUBLICATION

Pasco Bakotich III — STATE DESIGN ENGINEER

06-03-11 — DATE

Washington State Department of Transportation

EFFECTIVE: AUGUST 6, 2012 TO August 4, 2013
EFFECTIVE: AUGUST 6, 2012 TO August 4, 2013
EFFECTIVE: AUGUST 6, 2012 TO August 4, 2013
EFFECTIVE: AUGUST 6, 2012 TO August 4, 2013

EFFECTIVE: AUGUST 6, 2012 TO August 4, 2013
EFFECTIVE: AUGUST 6, 2012 TO August 4, 2013

DRAWN BY: LISA CYFORD

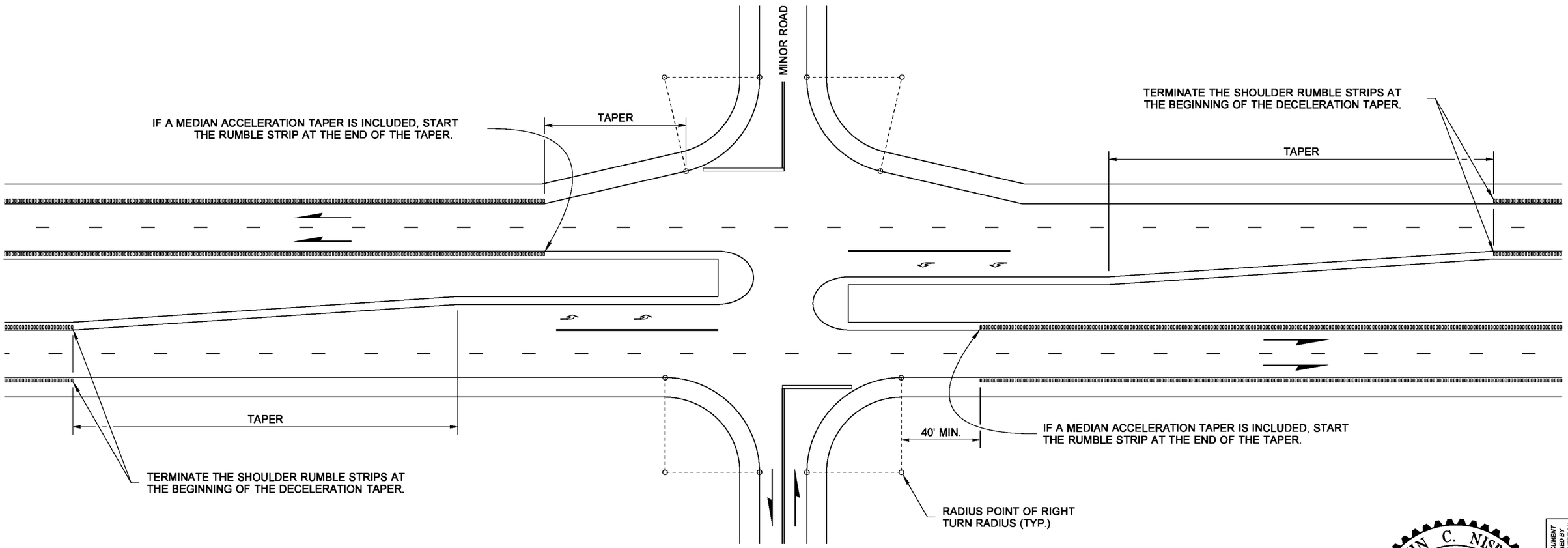

RUMBLE STRIP PLACEMENT AT INTERSECTIONS

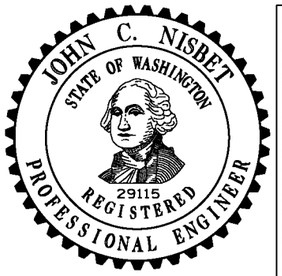

NOTE: THIS PLAN IS NOT A LEGAL ENGINEERING DOCUMENT BUT AN ELECTRONIC DUPLICATE. THE ORIGINAL, SIGNED BY THE ENGINEER AND APPROVED FOR PUBLICATION, IS KEPT ON FILE AT THE WASHINGTON STATE DEPARTMENT OF TRANSPORTATION. A COPY MAY BE OBTAINED UPON REQUEST.

SHOULDER RUMBLE STRIP TYPE 1 FOR DIVIDED HIGHWAYS STANDARD PLAN M-60.10-01

SHEET 4 OF 4 SHEETS

APPROVED FOR PUBLICATION

Pasco Bakotich III — STATE DESIGN ENGINEER

06-03-11 — DATE

Washington State Department of Transportation

EFFECTIVE: AUGUST 6, 2012 TO August 4, 2013
EFFECTIVE: AUGUST 6, 2012 TO August 4, 2013
EFFECTIVE: AUGUST 6, 2012 TO August 4, 2013
EFFECTIVE: AUGUST 6, 2012 TO August 4, 2013

EFFECTIVE: AUGUST 6, 2012 TO August 4, 2013
EFFECTIVE: AUGUST 6, 2012 TO August 4, 2013

DRAWN BY: FERN LIDDELL

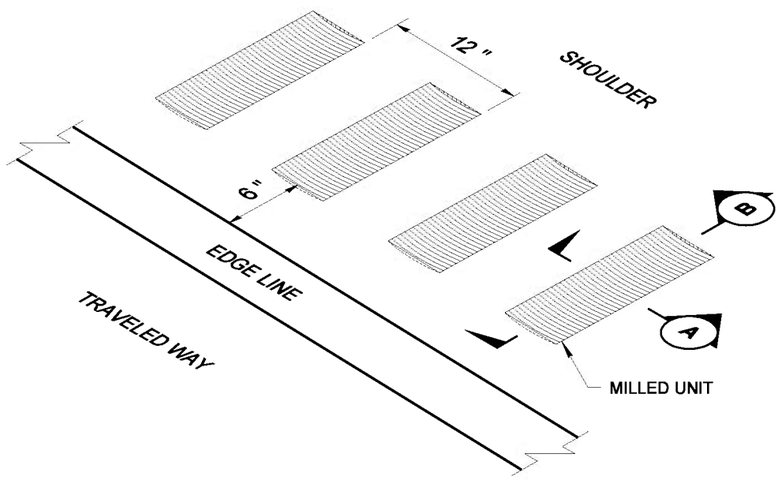

ISOMETRIC VIEW

TYPICAL SHOULDER INSTALLATION

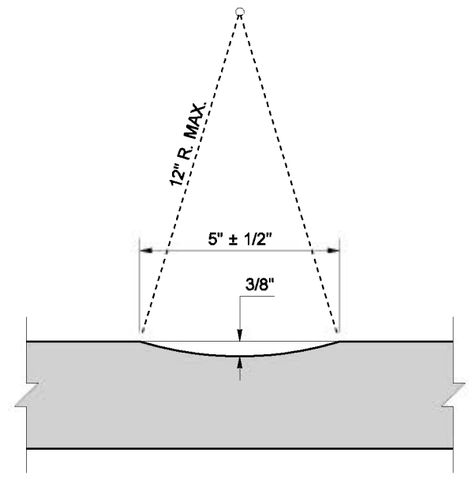

UNIT SECTION (A)

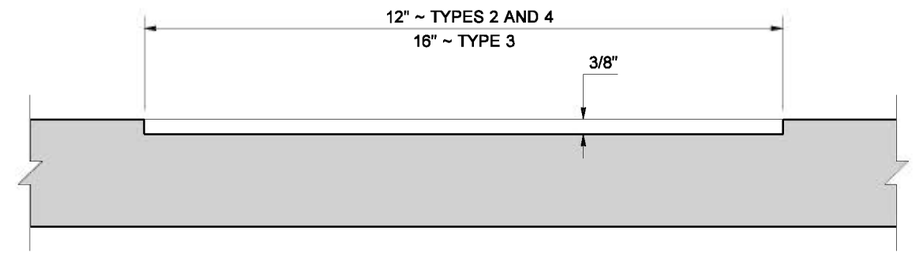

UNIT SECTION (B)

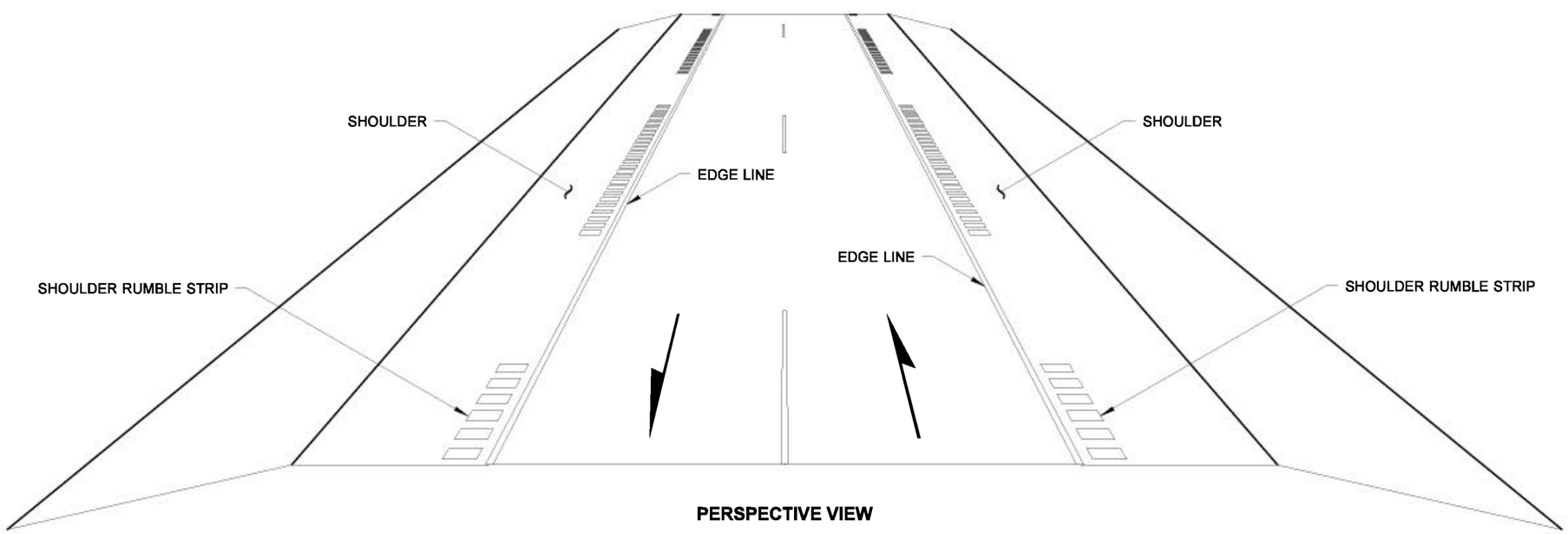

PERSPECTIVE VIEW

UNDIVIDED HIGHWAY
(TYPE 4 PATTERN SHOWN)

NOTE: THIS PLAN IS NOT A LEGAL ENGINEERING DOCUMENT BUT AN ELECTRONIC DUPLICATE. THE ORIGINAL, SIGNED BY THE ENGINEER AND APPROVED FOR PUBLICATION, IS KEPT ON FILE AT THE WASHINGTON STATE DEPARTMENT OF TRANSPORTATION. A COPY MAY BE OBTAINED UPON REQUEST.

SHOULDER RUMBLE STRIP TYPES 2, 3, AND 4 FOR UNDIVIDED HIGHWAYS STANDARD PLAN M-60.20-02

SHEET 1 OF 2 SHEETS

APPROVED FOR PUBLICATION

Pasco Bakotich III — STATE DESIGN ENGINEER

06-27-11 — DATE

Washington State Department of Transportation

EFFECTIVE: AUGUST 6, 2012 TO August 4, 2013
EFFECTIVE: AUGUST 6, 2012 TO August 4, 2013
EFFECTIVE: AUGUST 6, 2012 TO August 4, 2013
EFFECTIVE: AUGUST 6, 2012 TO August 4, 2013

EFFECTIVE: AUGUST 6, 2012 TO August 4, 2013
EFFECTIVE: AUGUST 6, 2012 TO August 4, 2013

DRAWN BY: FERN LIDDELL

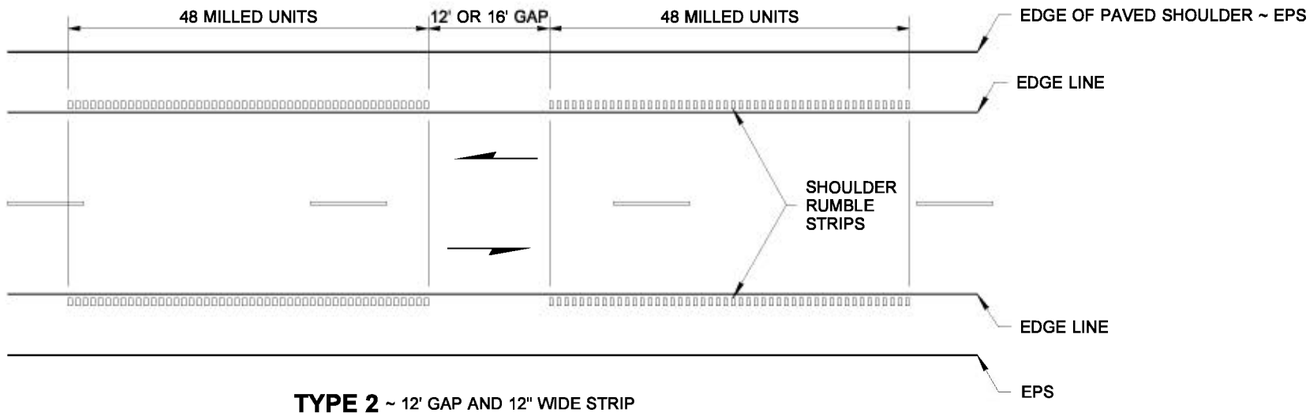

TYPE 2 ~ 12' GAP AND 12" WIDE STRIP

TYPE 3 ~ 16' GAP AND 16" WIDE STRIP

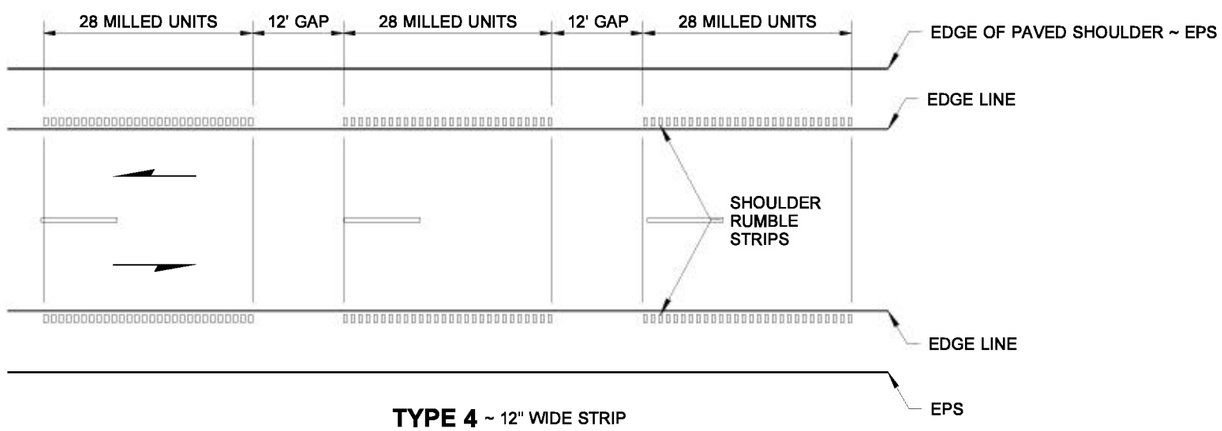

TYPE 4 ~ 12" WIDE STRIP

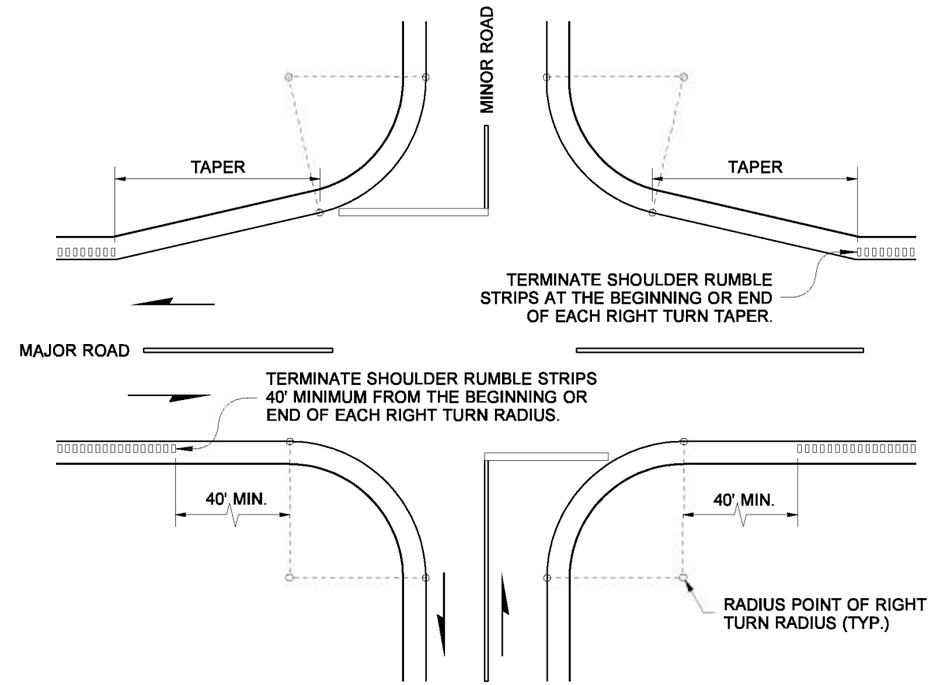

RUMBLE STRIP PLACEMENT AT INTERSECTIONS

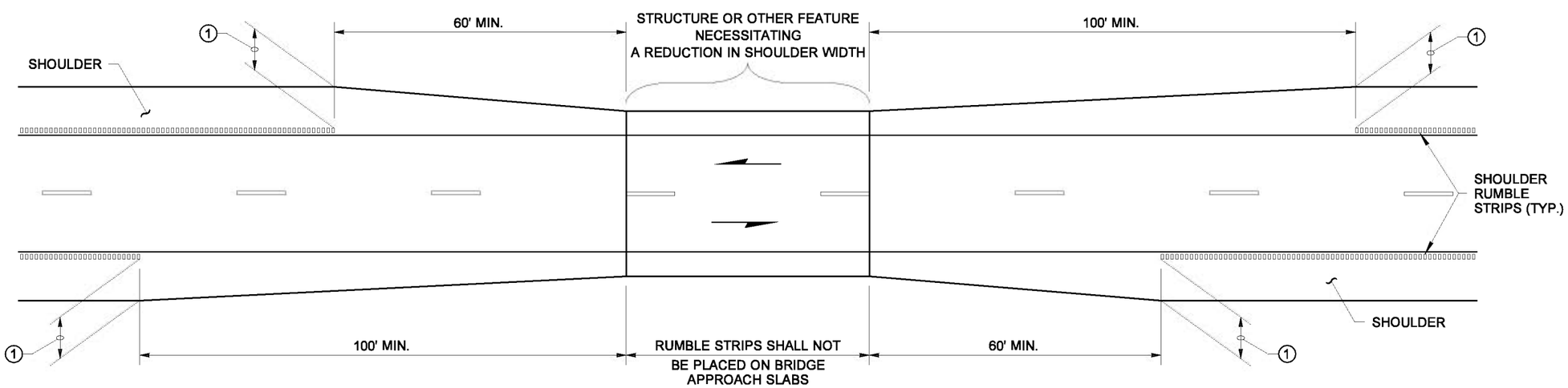

1 NOT LESS THAN 4' ~ PROVIDE 5' WHEN BARRIER OR GUARDRAIL IS PLACED AT EDGE OF SHOULDER

SHOULDER TAPER DETAIL

NOTE: THIS PLAN IS NOT A LEGAL ENGINEERING DOCUMENT BUT AN ELECTRONIC DUPLICATE. THE ORIGINAL, SIGNED BY THE ENGINEER AND APPROVED FOR PUBLICATION, IS KEPT ON FILE AT THE WASHINGTON STATE DEPARTMENT OF TRANSPORTATION. A COPY MAY BE OBTAINED UPON REQUEST.

SHOULDER RUMBLE STRIP TYPES 2, 3, AND 4 FOR UNDIVIDED HIGHWAYS STANDARD PLAN M-60.20-02

SHEET 2 OF 2 SHEETS

APPROVED FOR PUBLICATION

Pasco Bakotich III — STATE DESIGN ENGINEER

06-27-11 — DATE

Washington State Department of Transportation

EFFECTIVE: AUGUST 6, 2012 TO August 4, 2013
EFFECTIVE: AUGUST 6, 2012 TO August 4, 2013
EFFECTIVE: AUGUST 6, 2012 TO August 4, 2013
EFFECTIVE: AUGUST 6, 2012 TO August 4, 2013

EFFECTIVE: AUGUST 6, 2012 TO August 4, 2013
EFFECTIVE: AUGUST 6, 2012 TO August 4, 2013

DRAWN BY: FERN LIDDELL

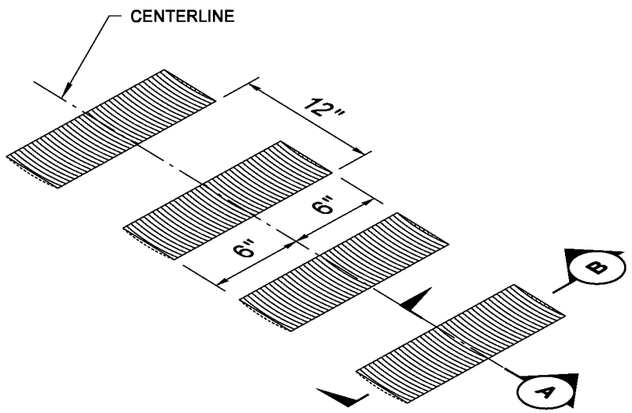

ISOMETRIC VIEW

TYPICAL INSTALLATION

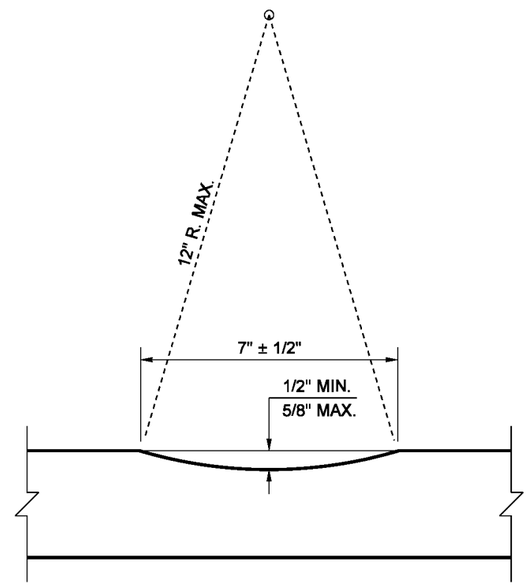

SECTION A

NOTES

1. Centerline Rumble Strip installation requires a minimum distance of 12 feet from Centerline to edge of paved shoulder.
2. When directed by the Engineer, Rumble Strips may be installed along the turn pocket taper where there is a history of rear-end collisions in the turn pocket.

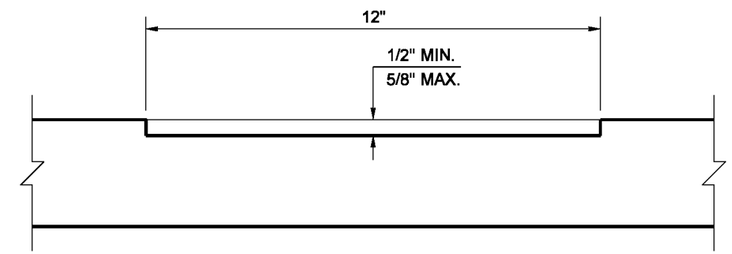

SECTION B

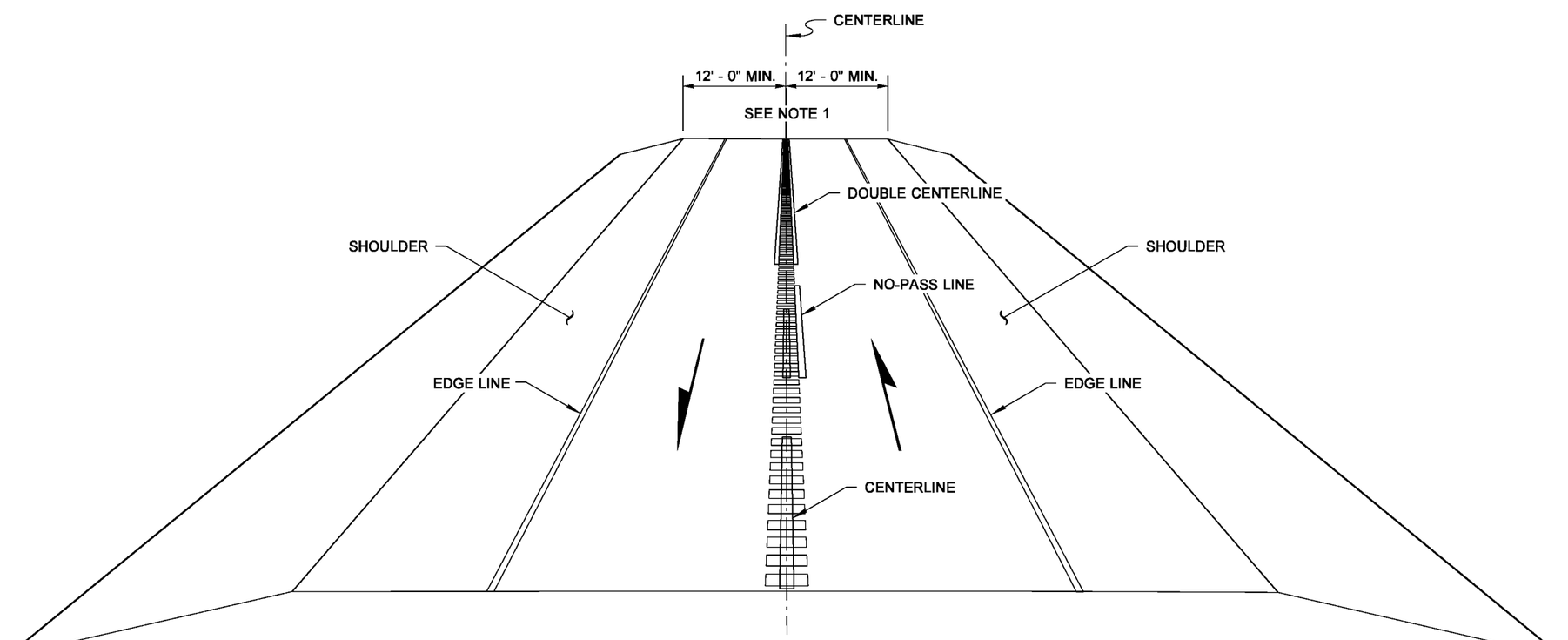

PERSPECTIVE VIEW

UNDIVIDED HIGHWAY

NOTE: THIS PLAN IS NOT A LEGAL ENGINEERING DOCUMENT BUT AN ELECTRONIC DUPLICATE. THE ORIGINAL, SIGNED BY THE ENGINEER AND APPROVED FOR PUBLICATION, IS KEPT ON FILE AT THE WASHINGTON STATE DEPARTMENT OF TRANSPORTATION. A COPY MAY BE OBTAINED UPON REQUEST.

CENTERLINE RUMBLE STRIP

STANDARD PLAN M-65.10-02

SHEET 1 OF 2 SHEETS

APPROVED FOR PUBLICATION

Pasco Bakotich III — STATE DESIGN ENGINEER

05-11-11 — DATE

Washington State Department of Transportation

EFFECTIVE: AUGUST 6, 2012 TO August 4, 2013
EFFECTIVE: AUGUST 6, 2012 TO August 4, 2013
EFFECTIVE: AUGUST 6, 2012 TO August 4, 2013
EFFECTIVE: AUGUST 6, 2012 TO August 4, 2013

EFFECTIVE: AUGUST 6, 2012 TO August 4, 2013
EFFECTIVE: AUGUST 6, 2012 TO August 4, 2013

DRAWN BY: FERN LIDDELL

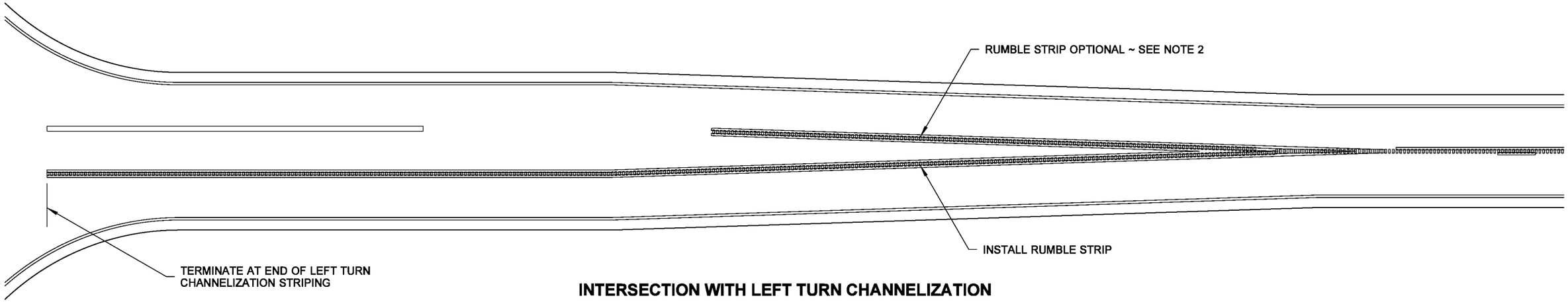

INTERSECTION WITH LEFT TURN CHANNELIZATION

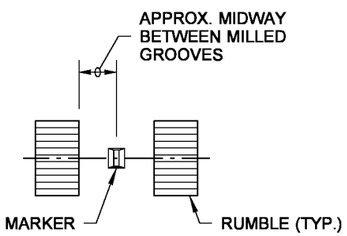

RAISED PAVEMENT MARKER
WHEN SPECIFIED IN CONTRACT

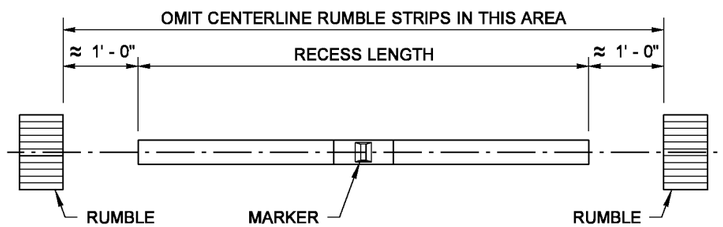

REFER TO **STANDARD PLAN M-20.30** FOR
RECESSED PAVEMENT MARKER DETAIL

RECESSED PAVEMENT MARKER
WHEN SPECIFIED IN CONTRACT

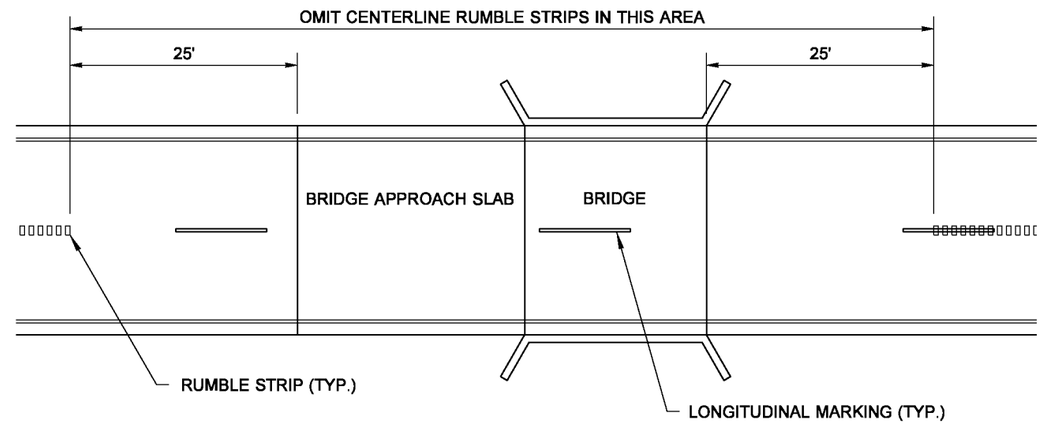

BRIDGE

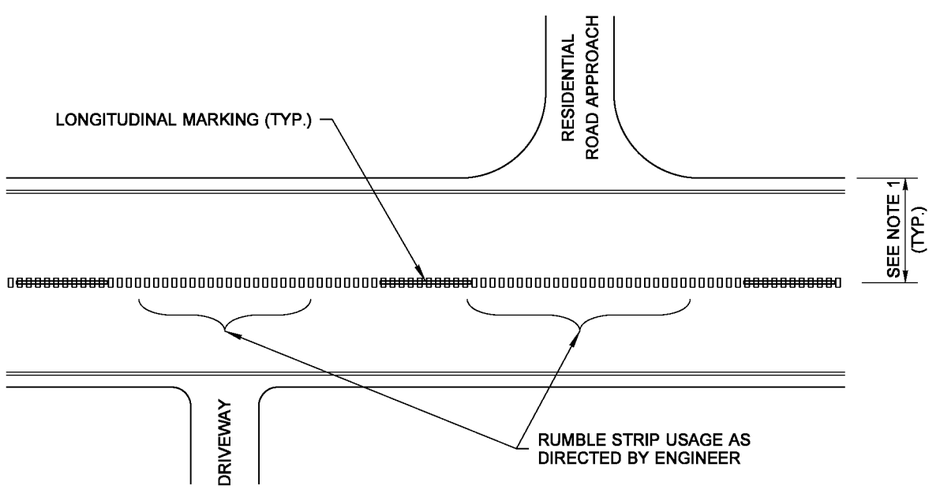

NON-COMMERCIAL ROAD APPROACHES AND DRIVEWAYS

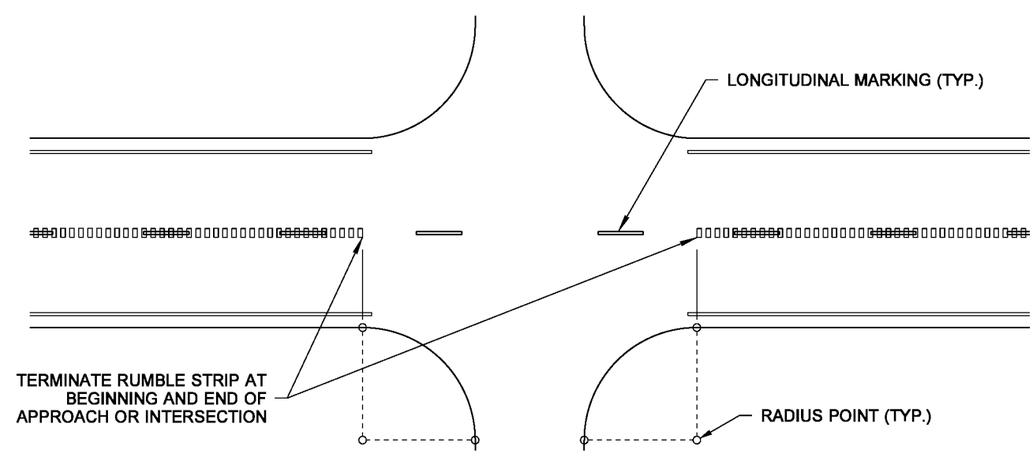

**UNCHANNELIZED INTERSECTIONS
AND COMMERCIAL ROAD APPROACHES**

BAKOTICH, PASCO III
STATE OF WASHINGTON
24557
REGISTERED
PROFESSIONAL ENGINEER

NOTE: THIS PLAN IS NOT A LEGAL ENGINEERING DOCUMENT BUT AN ELECTRONIC DUPLICATE. THE ORIGINAL, SIGNED BY THE ENGINEER AND APPROVED FOR PUBLICATION, IS KEPT ON FILE AT THE WASHINGTON STATE DEPARTMENT OF TRANSPORTATION. A COPY MAY BE OBTAINED UPON REQUEST.

**CENTERLINE
RUMBLE STRIP**

STANDARD PLAN M-65.10-02

SHEET 2 OF 2 SHEETS

APPROVED FOR PUBLICATION

Pasco Bakotich III — STATE DESIGN ENGINEER
05-11-11 — DATE

Washington State Department of Transportation

EFFECTIVE: AUGUST 6, 2012 TO August 4, 2013
EFFECTIVE: AUGUST 6, 2012 TO August 4, 2013
EFFECTIVE: AUGUST 6, 2012 TO August 4, 2013
EFFECTIVE: AUGUST 6, 2012 TO August 4, 2013

EFFECTIVE: AUGUST 6, 2012 TO August 4, 2013
EFFECTIVE: AUGUST 6, 2012 TO August 4, 2013

DRAWN BY: LISA GYFORD

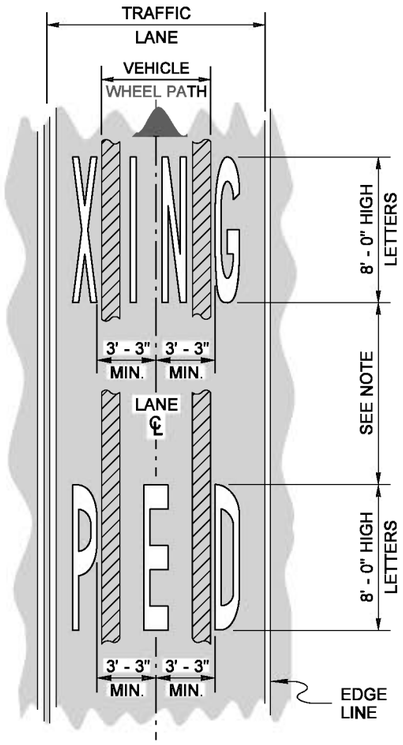

HIGH-SPEED APPLICATION

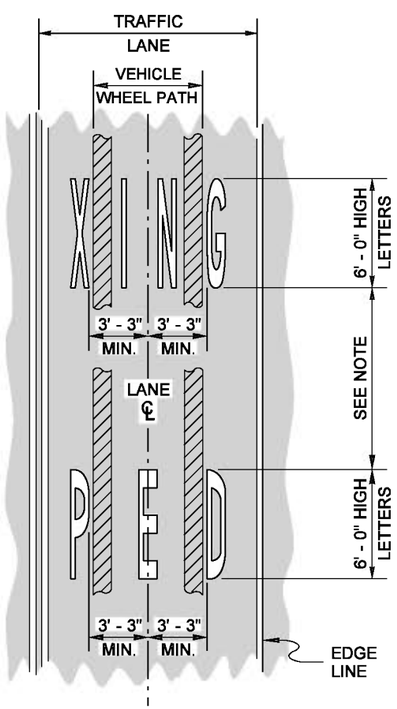

LOW-SPEED APPLICATION

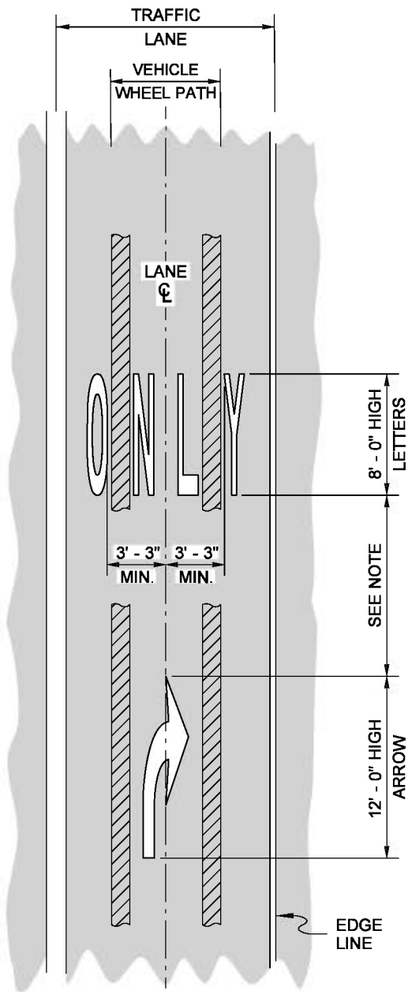

HIGH-SPEED APPLICATION

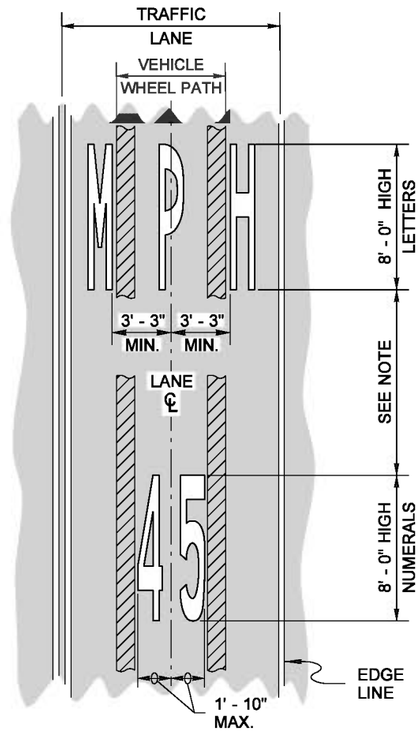

HIGH-SPEED APPLICATION

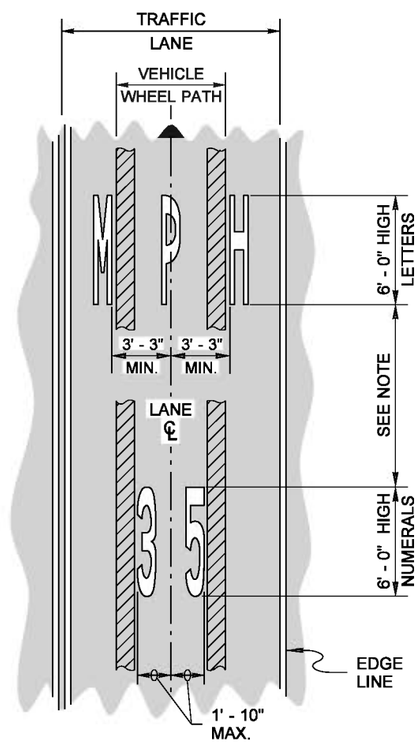

LOW-SPEED APPLICATION

NOTE

1. Typically, four times the letter or numeral height ~ minimum, up to ten times ~ maximum, or according to Plans.

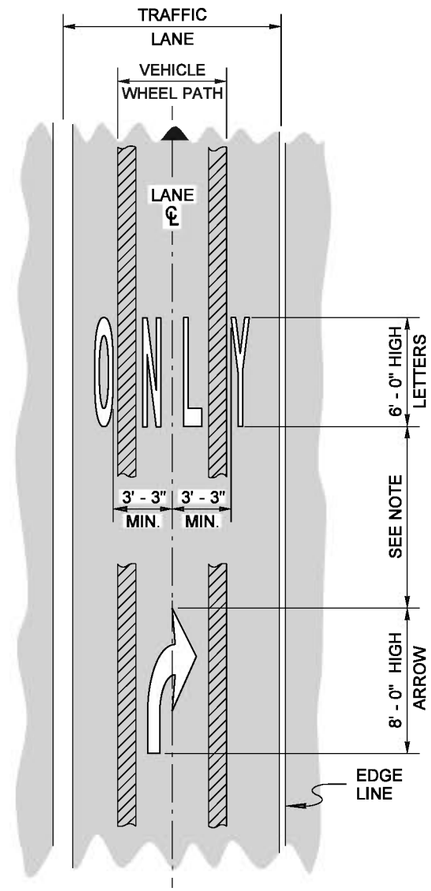

LOW-SPEED APPLICATION

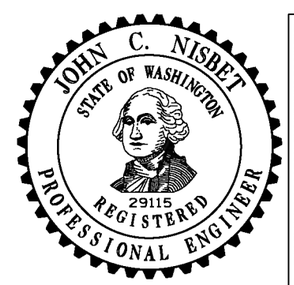

NOTE: THIS PLAN IS NOT A LEGAL ENGINEERING DOCUMENT BUT AN ELECTRONIC DUPLICATE. THE ORIGINAL, SIGNED BY THE ENGINEER AND APPROVED FOR PUBLICATION, IS KEPT ON FILE AT THE WASHINGTON STATE DEPARTMENT OF TRANSPORTATION. A COPY MAY BE OBTAINED UPON REQUEST.

TRAFFIC LETTER AND NUMERAL APPLICATIONS

STANDARD PLAN M-80.10-01

SHEET 1 OF 2 SHEETS

APPROVED FOR PUBLICATION

Pasco Bakotich III — STATE DESIGN ENGINEER

06-03-11 — DATE

Washington State Department of Transportation

EFFECTIVE: AUGUST 6, 2012 TO August 4, 2013
EFFECTIVE: AUGUST 6, 2012 TO August 4, 2013
EFFECTIVE: AUGUST 6, 2012 TO August 4, 2013
EFFECTIVE: AUGUST 6, 2012 TO August 4, 2013

EFFECTIVE: AUGUST 6, 2012 TO August 4, 2013
EFFECTIVE: AUGUST 6, 2012 TO August 4, 2013

DRAWN BY: LISA CYFORD

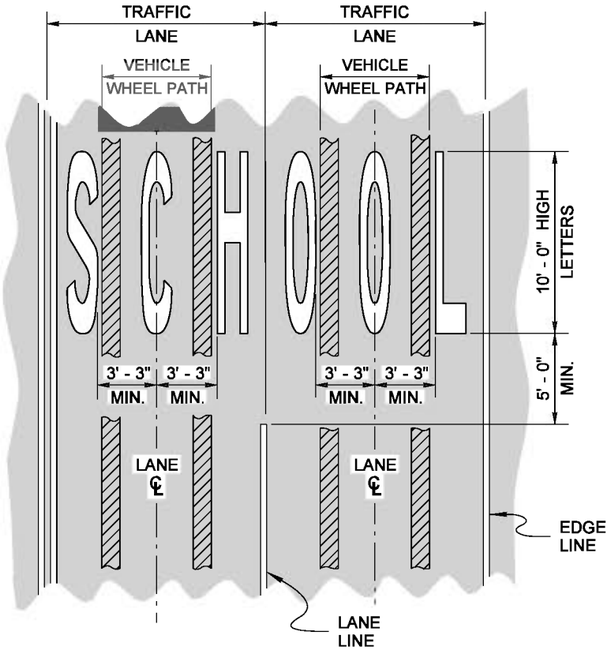

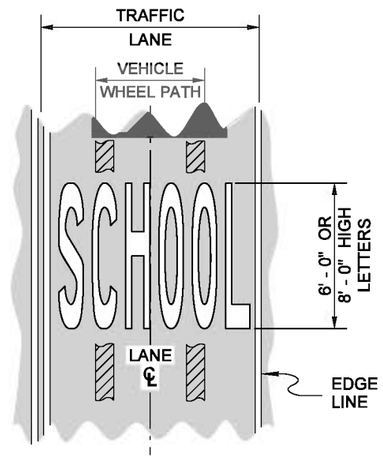

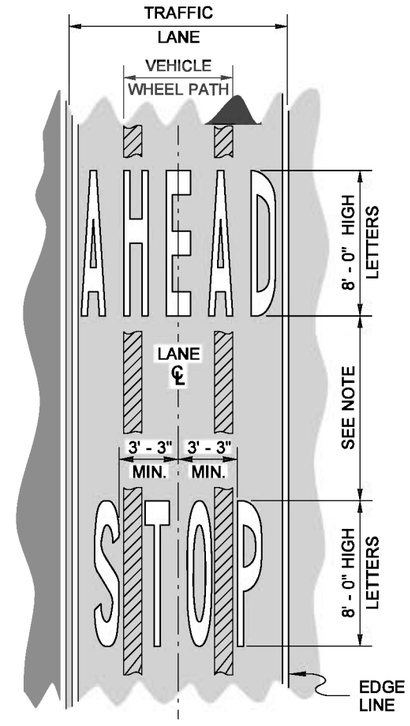

HIGH-SPEED APPLICATION

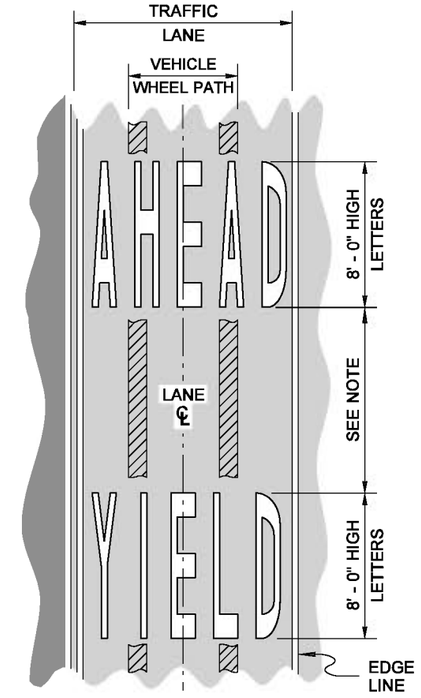

HIGH-SPEED APPLICATION

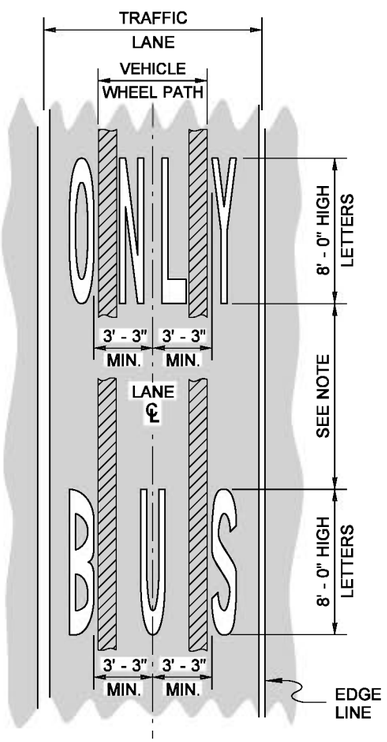

HIGH-SPEED APPLICATION

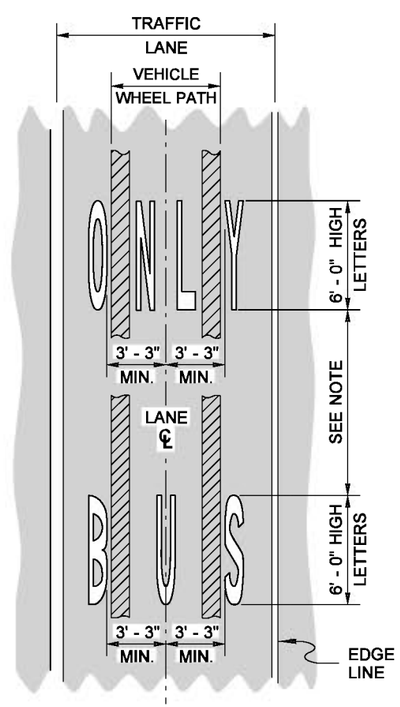

LOW-SPEED APPLICATION

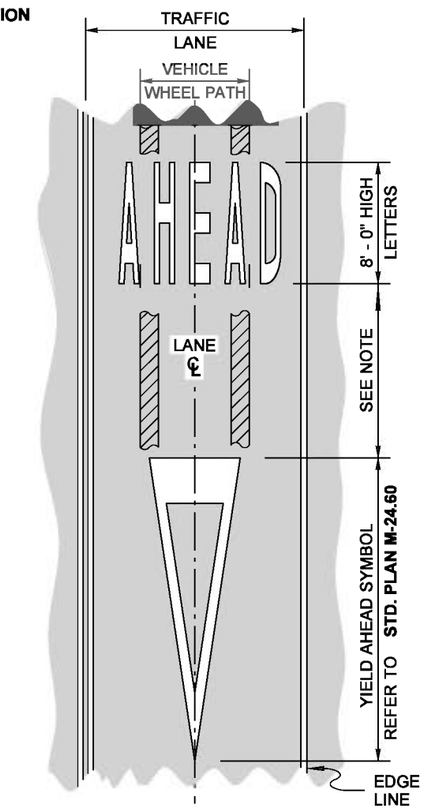

HIGH-SPEED APPLICATION

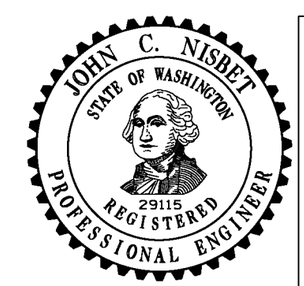

NOTE: THIS PLAN IS NOT A LEGAL ENGINEERING DOCUMENT BUT AN ELECTRONIC DUPLICATE. THE ORIGINAL, SIGNED BY THE ENGINEER AND APPROVED FOR PUBLICATION, IS KEPT ON FILE AT THE WASHINGTON STATE DEPARTMENT OF TRANSPORTATION. A COPY MAY BE OBTAINED UPON REQUEST.

TRAFFIC LETTER AND NUMERAL APPLICATIONS

STANDARD PLAN M-80.10-01

SHEET 2 OF 2 SHEETS

APPROVED FOR PUBLICATION

Pasco Bakotich III — STATE DESIGN ENGINEER

06-03-11 — DATE

Washington State Department of Transportation

EFFECTIVE: AUGUST 6, 2012 TO August 4, 2013
EFFECTIVE: AUGUST 6, 2012 TO August 4, 2013
EFFECTIVE: AUGUST 6, 2012 TO August 4, 2013
EFFECTIVE: AUGUST 6, 2012 TO August 4, 2013

EFFECTIVE: AUGUST 6, 2012 TO August 4, 2013
EFFECTIVE: AUGUST 6, 2012 TO August 4, 2013

DRAWN BY: TERN LIDDELL

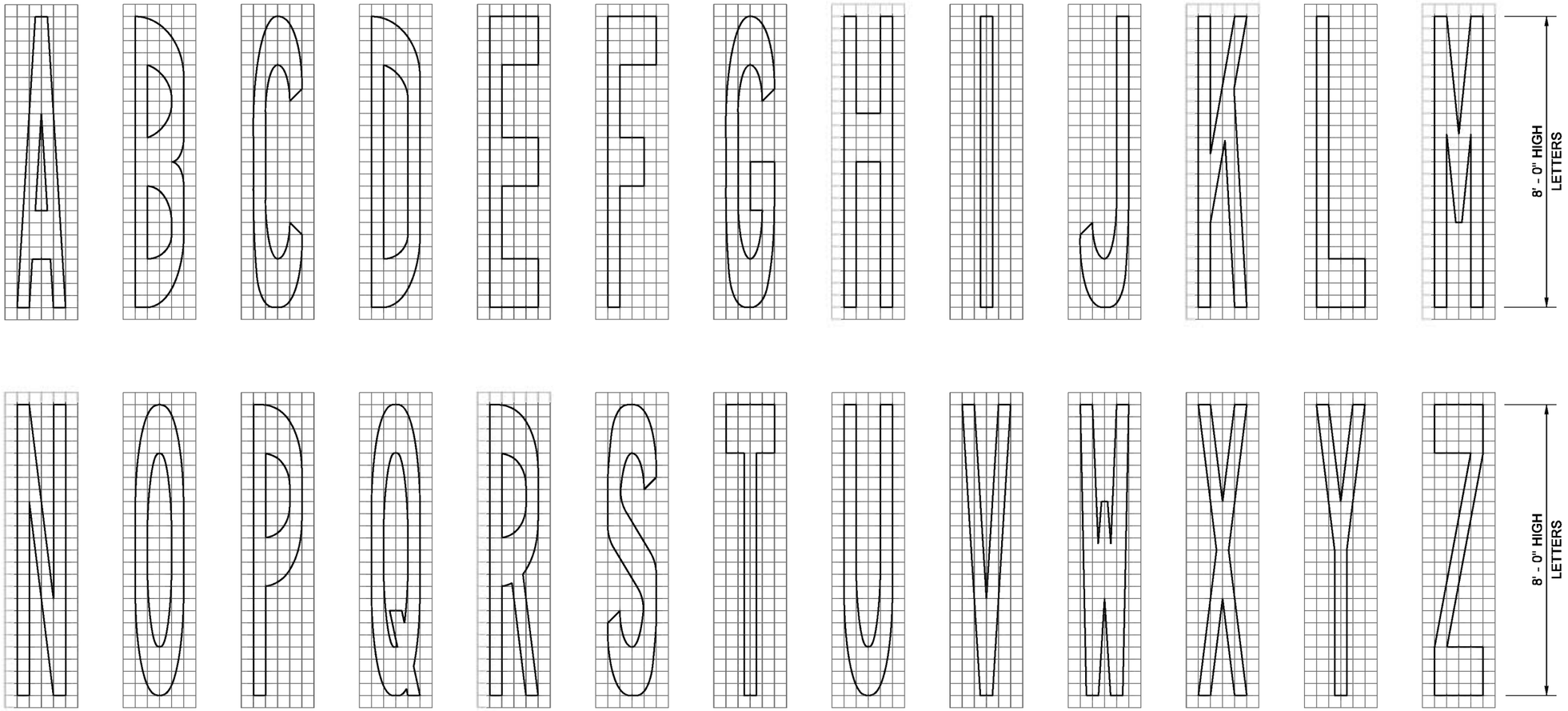

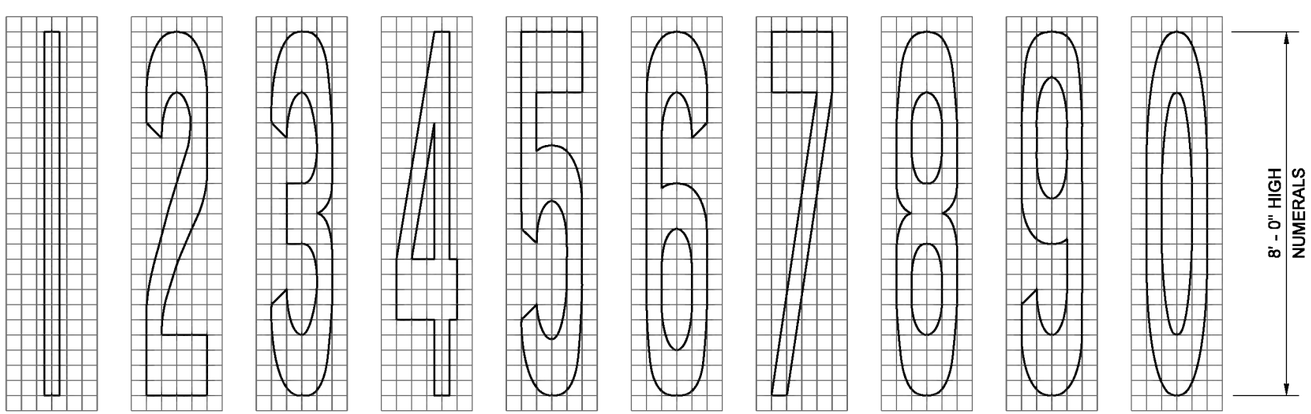

EIGHT FOOT HIGH LETTERS AND NUMERALS ARE SHOWN ON A FOUR-INCH SQUARE GRID

FOR USE ON ROADWAYS WITH A POSTED SPEED OF 45 MPH OR MORE

THEODORE J. TREPANIER
STATE OF WASHINGTON
25335
REGISTERED
PROFESSIONAL ENGINEER

EXPIRES AUGUST 9, 2009

NOTE: THIS PLAN IS NOT A LEGAL ENGINEERING DOCUMENT BUT AN ELECTRONIC DUPLICATE. THE ORIGINAL, SIGNED BY THE ENGINEER AND APPROVED FOR PUBLICATION, IS KEPT ON FILE AT THE WASHINGTON STATE DEPARTMENT OF TRANSPORTATION. A COPY MAY BE OBTAINED UPON REQUEST.

TRAFFIC LETTERS AND NUMERALS (HIGH SPEED ROADWAYS) STANDARD PLAN M-80.20-00

SHEET 1 OF 1 SHEET

APPROVED FOR PUBLICATION

Pasco Bakotich III — STATE DESIGN ENGINEER

06-10-08 — DATE

Washington State Department of Transportation

EFFECTIVE: AUGUST 6, 2012 TO August 4, 2013
EFFECTIVE: AUGUST 6, 2012 TO August 4, 2013
EFFECTIVE: AUGUST 6, 2012 TO August 4, 2013
EFFECTIVE: AUGUST 6, 2012 TO August 4, 2013

EFFECTIVE: AUGUST 6, 2012 TO August 4, 2013
EFFECTIVE: AUGUST 6, 2012 TO August 4, 2013

DRAWN BY: FERN LIDDELL

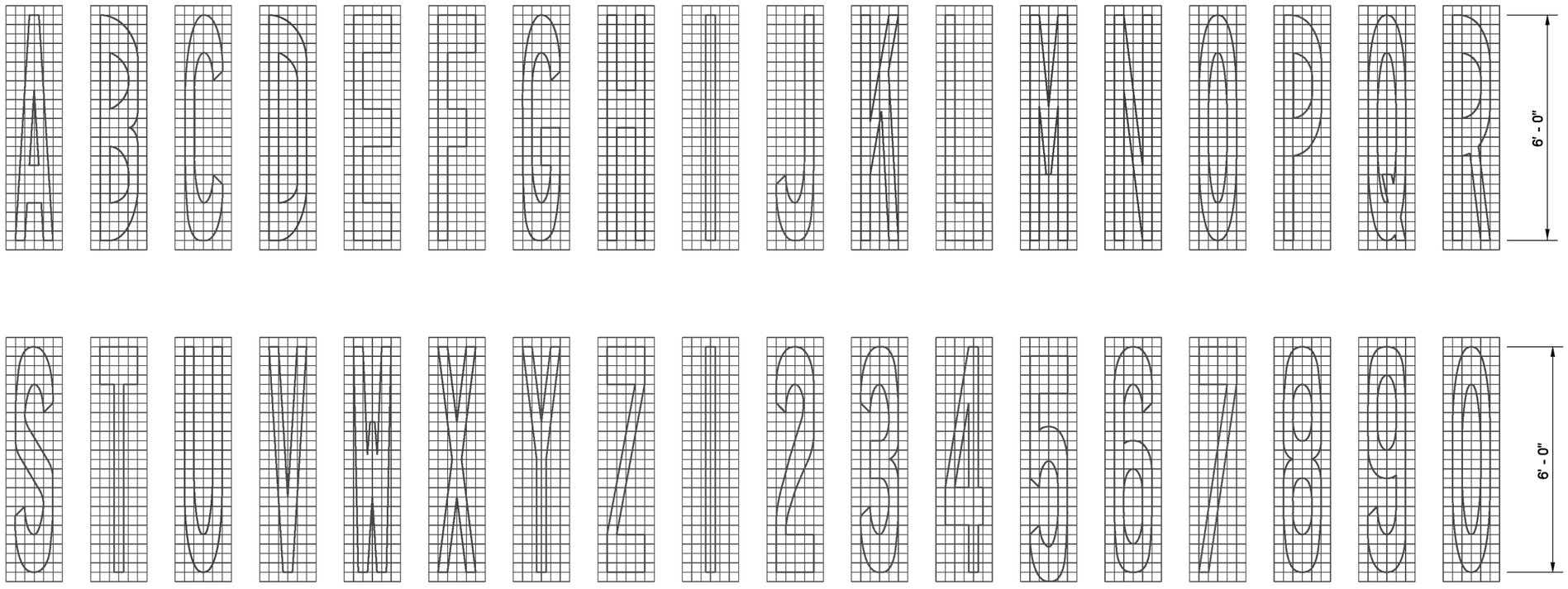

SIX FOOT HIGH LETTERS AND NUMERALS SHOWN ON A THREE -INCH SQUARE GRID

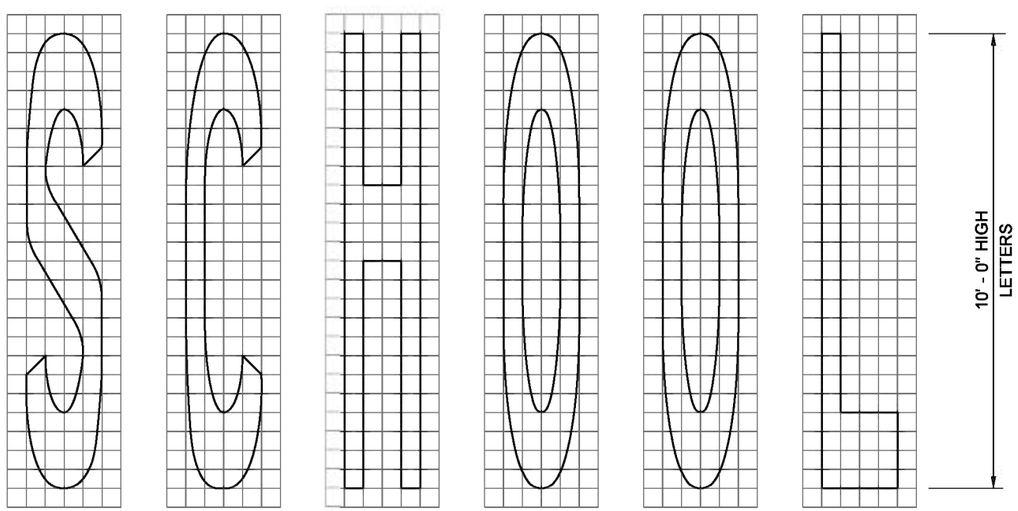

TEN FOOT HIGH LETTERS SHOWN ON A FIVE- INCH SQUARE GRID

FOR USE ON ROADWAYS WITH A POSTED SPEED OF 40 MPH OR LESS

THEODORE J. TREPANIER
STATE OF WASHINGTON
25335
REGISTERED
PROFESSIONAL ENGINEER

EXPIRES AUGUST 9, 2009

NOTE: THIS PLAN IS NOT A LEGAL ENGINEERING DOCUMENT BUT AN ELECTRONIC DUPLICATE. THE ORIGINAL, SIGNED BY THE ENGINEER AND APPROVED FOR PUBLICATION, IS KEPT ON FILE AT THE WASHINGTON STATE DEPARTMENT OF TRANSPORTATION. A COPY MAY BE OBTAINED UPON REQUEST.

TRAFFIC LETTERS AND NUMERALS (LOW SPEED ROADWAYS) STANDARD PLAN M-80.30-00

SHEET 1 OF 1 SHEET

APPROVED FOR PUBLICATION

Pasco Bakotich III — STATE DESIGN ENGINEER

06-10-08 — DATE

Washington State Department of Transportation

EFFECTIVE: AUGUST 6, 2012 TO August 4, 2013
EFFECTIVE: AUGUST 6, 2012 TO August 4, 2013
EFFECTIVE: AUGUST 6, 2012 TO August 4, 2013
EFFECTIVE: AUGUST 6, 2012 TO August 4, 2013