EFFECTIVE: JANUARY 7, 2002 TO AUGUST 4, 2002
EFFECTIVE: JANUARY 7, 2002 TO AUGUST 4, 2002

TABLE OF CONTENTS

Standard Plans
For Road, Bridge, and Municipal Construction

M 21-01
English

Washington State Department of Transportation

American Public Works Association
Washington State Chapter

EFFECTIVE: JANUARY 7, 2002 TO AUGUST 4, 2002
EFFECTIVE: JANUARY 7, 2002 TO AUGUST 4, 2002

EFFECTIVE: JANUARY 7, 2002 TO AUGUST 4, 2002
EFFECTIVE: JANUARY 7, 2002 TO AUGUST 4, 2002

Persons with disabilities may request this information be prepared and supplied in alternate formats by calling the WSDOT ADA Accomodation Hotline collect (206) 389-2839. Persons with hearing impairments may access WA State Telecommunications Relay Service at TT 1-800-833-6388, Tele-Braille 1-800-833-6385, or Voice 1-800-833-6384, and ask to be connected to (360) 705-7097.

Washington State Department of Transportation
Engineering Publications
Transportation Building
P.O. Box 47408
Olympia, WA 98504-7408
(360) 705-7430 (voice)
(360) 705-6861 (fax)
engrpubs@wsdot.wa.gov (e-mail)

EFFECTIVE: JANUARY 7, 2002 TO AUGUST 4, 2002
EFFECTIVE: JANUARY 7, 2002 TO AUGUST 4, 2002
EFFECTIVE: JANUARY 7, 2002 TO AUGUST 4, 2002
EFFECTIVE: JANUARY 7, 2002 TO AUGUST 4, 2002

EFFECTIVE: JANUARY 7, 2002 TO AUGUST 4, 2002
EFFECTIVE: JANUARY 7, 2002 TO AUGUST 4, 2002

Foreword

This *Standard Plans Manual* contains engineering drawings that are used for road, bridge, and municipal construction. These drawings have been prepared under the direct supervision of a professional engineer, licensed in the state of Washington, who is knowledgeable in the specialized field of civil engineering depicted in that drawing. This manual standardizes fabrication, installation and construction methods for specific items of work and complements the contract documents and the English version of the *Standard Specifications for Road, Bridge, and Municipal Construction.*

Updating the manual is a continuous process and revisions are issued periodically. Questions, comments, and recommendations for changes are welcome. The *Comment Request Form* on the reverse side of this page is provided to encourage comments and assure their prompt delivery. Use copies of the form to send any attachments, such as marked copies of specific standard plans. Your comments should be sent to ***Design Standards Graphics***, Transportation Building, Olympia, WA 98504-7329.

Bentley MicroStation DGN CAD files, Adobe PDF files and some AutoCAD DWG CAD files can be downloaded from the Design Standards Graphic website at: **http://www.wsdot.wa.gov/eesc/cae/std_plan/**

Contact the **Standard Plans Office** at **(360) 705-7246** if you have questions about the technical content of this manual.

Additional copies of this manual can be ordered from the **Engineering Publications Office (360) 705-7430.**

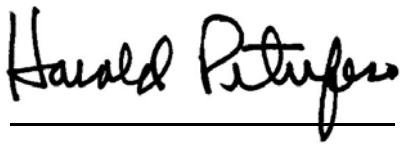

Harold Peterfeso
State Design Engineer

EFFECTIVE: JANUARY 7, 2002 TO AUGUST 4, 2002
EFFECTIVE: JANUARY 7, 2002 TO AUGUST 4, 2002

EFFECTIVE: JANUARY 7, 2002 TO AUGUST 4, 2002
EFFECTIVE: JANUARY 7, 2002 TO AUGUST 4, 2002

Comments

From: _____ Date: _____

_____ Phone: _____

_____

To: Design Standards Graphics
Washington State Department of Transportation
Transportation Building
PO Box 47329
Olympia, WA 98504-7329

Subject: Standard Plans Manual Comment

Comment (marked copies attached):

Preserve this original for future use • Submit copies only

EFFECTIVE: JANUARY 7, 2002 TO AUGUST 4, 2002
EFFECTIVE: JANUARY 7, 2002 TO AUGUST 4, 2002

EFFECTIVE: JANUARY 7, 2002 TO AUGUST 4, 2002
EFFECTIVE: JANUARY 7, 2002 TO AUGUST 4, 2002

Contents

Plan No.	Plan Title	Publication Approval Date	
Section A	**Concrete Pavement**		
A-1	Cement Concrete Pavement Joints	10/8/99	*2 Sheets*
A-2	Bridge Approach Slab	12/23/98	*2 Sheets*
A-3	Transition from Concrete Overlay	5/9/97	*2 Sheets*
A-4	Inlet Placement at Bridge End	3/7/97	
Section B	**Drainage Structures and Hydraulics**		
B-1	Catch Basin Type 1	7/31/01	
B-1a	Catch Basin Type 1L	7/31/01	
B-1b	Catch Basin Type 1P, Parking Lot C.B.	3/7/97	
B-1e	Catch Basin Type 2	3/7/97	
B-1z	Miscellaneous Details for Manholes and Catch Basins	5/30/97	
B-2	Solid Metal Cover for Catch Basin	5/9/97	
B-2a	Metal Frame and Grate for Catch Basin and Inlet	5/9/97	
B-2b	Vaned Grate for Catch Basin and Inlet	4/18/97	
B-2c	Bi-Directional Vaned Grate for Catch Basin and Inlet	7/25/97	
B-3	Catch Basin Type 2 with Flow Restrictor-Oil Separator	5/9/97	
B-3a	Catch Basin Type 2 with Baffle Type Flow Restrictor-Oil Separator	5/9/97	
B-4b	Grate Inlet Type 1	5/9/97	
B-4c	Grate Inlet Type 2	5/9/97	*2 Sheets*
B-4f	Drop Inlet Type 1	5/9/97	
B-4g	Drop Inlet Type 2	7/18/97	
B-4h	Drop Inlet Grates	5/9/97	
B-7	Flared End Sections	5/9/97	
B-7a	Beveled End Sections	3/7/97	
B-8	Structural Plate Underpass Design 1	5/9/97	
B-8a	Structural Plate Underpass Design 2	7/25/97	
B-9	Headwalls for Culvert Pipes	5/9/97	
B-9a	Type 1 Safety Bars for Stepped Culvert Pipe or Pipe Arch	5/9/97	
B-9b	Type 2 Safety Bars for Culvert Pipe or Pipe Arch (On Cross Road)	5/9/97	
B-9c	Tapered End Section with Type 3 Safety Bars	7/18/97	
B-9d	Tapered End Section with Type 4 Safety Bars (On Cross Road)	7/18/97	
B-11	Pipe Zone Bedding and Backfill	7/31/01	
B-13	Coupling Bands for Corrugated Metal Pipe	12/4/98	
B-18	Drop Connection for Sanitary Sewers	5/9/97	
B-18a	Vertical Connection	5/9/97	
B-18b	8 Inch Clean Out	7/18/97	
B-19	Hydrant Setting Types A and B	5/30/97	
B-20d	Residential Sidewalk Drain	7/18/97	
B-21	2 Inch Blowoff Assembly	7/18/97	
B-21a	Combination Air Release/Air Vacuum Valve Assembly	8/10/98	
B-22	Concrete Blocking for Convex Vertical Bends	5/9/97	
B-22a	Concrete Thrust Block	8/1/97	
B-23a	Manhole Type 1	5/9/97	
B-23b	Manhole Type 2	5/9/97	

EFFECTIVE: JANUARY 7, 2002 TO AUGUST 4, 2002
EFFECTIVE: JANUARY 7, 2002 TO AUGUST 4, 2002

EFFECTIVE: JANUARY 7, 2002 TO AUGUST 4, 2002
EFFECTIVE: JANUARY 7, 2002 TO AUGUST 4, 2002

Contents

Plan No.	Plan Title	Publication Approval Date	
B-23c	Manhole Type 3	5/9/97	
B-23d	Manhole Type 4	5/9/97	
B-25	Manhole Ring and Cover	5/9/97	
B-26	Concrete Inlet	7/18/97	
B-27	Precast Concrete Drywell	8/1/97	
B-28	Connection Details for Dissimilar Culvert Pipe	10/6/99	
B-29	Side Sewer	4/24/98	
B-30	Standing Side Sewer Connection	8/10/98	
Section C	**Traffic Barrier**		
C-1	Beam Guardrail (W Beam)	7/31/98	*2 Sheets*
C-1a	Beam Guardrail (Thrie Beam)	7/31/98	
C-1b	Beam Guardrail Posts and Blocks	3/17/00	*2 Sheets*
C-1c	Beam Guardrail	5/30/97	
C-1d	Thrie Beam Guardrail Reducer Section	3/14/97	
C-2	Guardrail Placement (Cases 1, 2, and 3)	1/6/00	
C-2a	Guardrail Placement (Cases 4, 5, and 6)	7/17/98	
C-2b	Guardrail Placement (Cases 7 and 8)	6/12/98	
C-2c	Guardrail Placement, Median Bull Nose (Case 9)	1/8/99	
C-2d	Guardrail Placement (Cases 10a, 10b, and 10c)	5/22/98	
C-2e	Guardrail Placement (Cases 11a, 11b, and 11c)	3/7/97	*2 Sheets*
C-2f	Guardrail Placement, Weak Post Intersection Design (8' - 6" Max. Radius) (Cases 12a, 12b, 12c and 12d)	3/14/97	
C-2g	Guardrail Placement, Weak Post Intersection Design (35' Max. Radius) (Cases 13a, 13b, 13c, and 13d)	7/27/01	
C-2h	Guardrail Placement (Case 14)	3/28/97	
C-2i	Guardrail Placement (Case 15)	3/28/97	
C-2j	Guardrail Placement (Cases 16, 17, and 18)	6/12/98	
C-2k	Guardrail Placement 12'-6" Span (Cases 19a and 19b)	7/27/01	
C-2n	Guardrail Placement 18'-9" Span (Case 20)	7/27/01	
C-2o	Guardrail Placement 25' Span (Case 21)	7/13/01	
C-2p	Guardrail Placement, Strong Post Intersection Design (Cases 22a, 22b, 22c, and 22d)	3/28/97	
C-3	Guardrail Transition Sections	8/10/98	
C-3a	Guardrail Transition Sections	3/14/97	
C-3b	Guardrail Transition Sections	3/14/97	*2 Sheets*
C-3c	Guardrail Transition Sections	3/28/97	
C-4	Beam Guardrail Buried Terminal Type 1	7/13/01	
C-4a	Beam Guardrail Buried Terminal Type 2	7/13/01	
C-4b	Beam Guardrail Flared Terminal	6/23/00	
C-4e	Beam Guardrail Non-Flared Terminal	3/17/00	
C-5	Guardrail Connection to Bridge Rail or Concrete Barrier	3/14/97	
C-6	Beam Guardrail Anchor Type 1	5/30/97	*2 Sheets*
C-6a	Beam Guardrail Anchor Type 2	3/14/97	
C-6c	Beam Guardrail Anchor Type 4	1/6/00	
C-6d	Beam Guardrail Anchor Type 5	5/30/97	
C-6f	Beam Guardrail Anchor Type 7	7/25/97	
C-7	Beam Guardrail End Sections	8/10/98	
C-7a	Thrie Beam End Sections	8/1/97	

EFFECTIVE: JANUARY 7, 2002 TO AUGUST 4, 2002
EFFECTIVE: JANUARY 7, 2002 TO AUGUST 4, 2002

EFFECTIVE: JANUARY 7, 2002 TO AUGUST 4, 2002
EFFECTIVE: JANUARY 7, 2002 TO AUGUST 4, 2002

Contents

Plan No.	Plan Title	Publication Approval Date	
C-8	Concrete Barrier Type 2	8/10/98	*2 Sheets*
C-8a	Concrete Barrier Type 4 and Transition Section	7/25/97	
C-8b	Concrete Barrier Light Standard Section	7/17/98	*2 Sheets*
C-8c	Concrete Barrier Type 5	5/30/97	
C-8d	Alternative Temporary Concrete Barrier	7/25/97	
C-8e	Concrete Barrier Anchors	4/2/99	
C-9a	Redirectional Land Form	3/14/97	
C-10	Box Culvert Guardrail Steel Post	7/31/98	*2 Sheets*
C-11	Cable Barrier	5/30/97	
C-11a	Cable Barrier Placement	2/19/99	
C-11b	Cable Barrier Terminal	9/28/01	*2 Sheets*
C-12	Inertial Barrier Configurations	7/27/01	
C-13	Single Slope Barrier Pre-Cast Type	4/16/99	*2 Sheets*
C-13a	Single Slope Barrier Pre-Cast Type Transition Section	4/16/99	
C-13b	Single Slope Barrier Pre-Cast Type Single Sided Section	4/16/99	

Section D Retaining Walls, Noise Walls, and Slope Protection

D-1a	Reinforced Concrete Retaining Wall Type 1 and 1 SW	10/6/99	*2 Sheets*
D-1b	Reinforced Concrete Retaining Wall Type 2 and 2 SW	10/6/99	*2 Sheets*
D-1c	Reinforced Concrete Retaining Wall Type 3 and 3 SW	10/6/99	*2 Sheets*
D-1d	Reinforced Concrete Retaining Wall Type 4 and 4 SW	10/6/99	*2 Sheets*
D-1e	Reinforced Concrete Retaining Wall Type 5 and 5 SW	10/6/99	*2 Sheets*
D-1f	Reinforced Concrete Retaining Wall Type 6 and 6 SW	10/6/99	*2 Sheets*
D-2a	Noise Barrier - Type 1	3/14/97	
D-2b	Noise Barrier - Type 2	3/14/97	*2 Sheets*
D-2c	Noise Barrier - Type 3	3/14/97	*2 Sheets*
D-2d	Noise Barrier - Type 4	3/14/97	*2 Sheets*
D-2e	Noise Barrier - Type 5	3/14/97	
D-2f	Noise Barrier - Type 6	3/14/97	
D-2g	Noise Barrier - Type 7	3/14/97	
D-2h	Noise Barrier - Type 8	3/14/97	
D-2i	Noise Barrier - Type 9	3/14/97	*2 Sheets*
D-2j	Noise Barrier - Type 10	3/14/97	*2 Sheets*
D-2k	Noise Barrier - Type 11	3/14/97	*3 Sheets*
D-2l	Noise Barrier - Type 12	3/14/97	*2 Sheets*
D-2m	Noise Barrier - Type 13	3/14/97	*2 Sheets*
D-2n	Noise Barrier - Type 14	3/14/97	*2 Sheets*
D-2o	Noise Barrier - Type 15	3/14/97	
D-2p	Noise Barrier - Type 16	3/14/97	*2 Sheets*
D-2q	Noise Barrier - Type 17	3/14/97	*2 Sheets*
D-2r	Noise Barrier - Type 18	3/14/97	*2 Sheets*
D-2s	Noise Barrier - Type 19	3/14/97	*2 Sheets*
D-2t	Noise Barrier - Type 20	3/14/97	*2 Sheets*
D-2u	Access Door - Type 1	3/7/97	
D-2v	Access Door - Type 2	3/7/97	
D-2w	Access Door - Type 3	3/7/97	
D-2x	Access Door - Type 4	3/7/97	

EFFECTIVE: JANUARY 7, 2002 TO AUGUST 4, 2002
EFFECTIVE: JANUARY 7, 2002 TO AUGUST 4, 2002

EFFECTIVE: JANUARY 7, 2002 TO AUGUST 4, 2002
EFFECTIVE: JANUARY 7, 2002 TO AUGUST 4, 2002

Contents

Plan No.	Plan Title	Publication Approval Date	
D-2y	Access Door - Type 5	9/12/97	
D-4	Backfill and Drainage for Retaining Walls	12/11/98	
D-6	Gabions	6/19/98	
D-7	Wire Mesh Slope Protection	10/6/99	
D-7a	Wire Mesh Slope Protection Anchors	10/6/99	
D-9	Concrete Slope Protection	12/11/98	*2 Sheets*
Section E	**Bridges and Trestles**		
E-1	Date Numerals	7/25/97	
E-2	Pile or Frame Detour Bridge with Asphalt Overlay	5/29/98	*2 Sheets*
E-5	Manhole Ring and Cover for Bridges	5/29/98	
Section F	**Curbs, Approaches, Gutters, and Sidewalks**		
F-1	Cement Concrete Curbs and Gutters	7/18/97	
F-2	Precast Traffic Curb	8/27/99	
F-2a	Block Traffic Curb	5/30/97	
F-2b	Extruded Curb	3/14/97	*2 Sheets*
F-3	Cement Concrete Sidewalk and Approach Details	2/9/00	*2 Sheets*
Section G	**Signs and Sign Supports**		
G-1	Ground Mounted Sign Placement	9/12/01	
G-2	Sign Bridge	7/2/98	*3 Sheets*
G-2a	Sign Bridge Foundations	7/2/98	
G-3	Cantilever Sign Structures	7/2/98	
G-3a	Cantilever Sign Structure Foundations	7/2/98	*2 Sheets*
G-4a	Roadside Sign Structures on Timber Posts	4/2/99	
G-4b	Roadside Signs on Laminated Wood Box Posts	8/12/94	
G-7	Milepost	7/18/97	
G-8a	Roadside Sign Structures for Multiple Steel Post Signs	10/6/99	*3 Sheets*
G-8b	Small Steel Sign Support	5/5/00	*3 Sheets*
G-9a	Overhead Sign Mounting Details	4/2/99	*2 Sheets*
G-9b	Sign Mounting Details	4/2/99	*3 Sheets*
Section H	**Delineators and Miscellaneous Construction**		
H-1	Guide Posts	7/18/97	
H-1a	Guide Post Placement Grade Intersection	4/14/00	
H-1b	Guide Post Placement for Interchanges	5/5/00	
H-1c	Guide Post Placement for Horizontal Curves	8/1/97	
H-1d	Miscellaneous Guide Post Placement	7/18/97	
H-1e	Guide Post Placement for Bridges	4/14/00	
H-2	Type III Barricade	8/1/97	
H-3	Raised Pavement Marking Details	4/14/00	
H-3a	Pavement Marking Details	6/23/00	*2 Sheets*
H-4	Continuous Shoulder Rumble Strips	2/18/00	*3 Sheets*
H-5	Striping Details	2/18/00	
H-5a	Striping Details	2/18/00	
H-5b	Striping Details	2/18/00	
H-5c	Pavement Markings	8/1/97	*3 Sheets*

EFFECTIVE: JANUARY 7, 2002 TO AUGUST 4, 2002
EFFECTIVE: JANUARY 7, 2002 TO AUGUST 4, 2002

EFFECTIVE: JANUARY 7, 2002 TO AUGUST 4, 2002
EFFECTIVE: JANUARY 7, 2002 TO AUGUST 4, 2002

Contents

Plan No.	Plan Title	Publication Approval Date	
H-5d	Raised Pavement Marker Substitution Patterns	4/14/00	*2 Sheets*
H-6	Survey Monument	1/6/00	
H-7	Monument Case and Cover	8/10/98	
H-8	Slope Treatment	9/18/98	
H-9	Embankment at Bridge Ends	4/18/97	
H-10	Cement Concrete Stairway Construction Details	5/29/98	
H-12	Mailbox Installation	6/23/00	*3 Sheets*
H-13	Type 1 Bollard	7/25/97	
H-13a	Type 2 Bollard	7/25/97	
H-14	Survey Stakes	4/23/99	*2 Sheets*
Section I	**Roadside and Site Development**		
I-1	Rest Area Septic Tank	7/18/97	
I-2	Crest Gage	4/23/99	
I-3	Automated Ground Water Monitoring Well	8/20/99	
Section J	**Illumination and Signals**		
J-1b	Steel Light Standard Base Details	10/8/99	*3 Sheets*
J-1c	Slip Base Adaptor for 4-Bolt Light Standard Base	4/24/98	
J-1e	Light Standards Wiring Details	8/1/97	
J-1f	Timber Light Standards	6/23/00	
J-3	Type A, B, and C Service Lighting Details	8/1/97	*2 Sheets*
J-3b	Modified Type B Service	4/24/98	*2 Sheets*
J-3c	Type D Service	6/19/98	
J-3d	Type E Service	4/2/99	
J-5	Pedestrian Pushbutton Details	8/1/97	
J-6c	Cabinet Foundation Details	4/24/98	
J-6f	Signal Head Mounting Details Pole and Post Top Mountings	4/24/98	
J-6g	Signal Head Mounting Details Mast Arm and Span Wire Mountings	8/1/97	
J-6h	Miscellaneous Signal Details	4/24/98	
J-7a	Signal Standard Type Designations and Type PPB, PS, I, RM, and FB Details	9/12/01	*2 Sheets*
J-7c	Strain Pole Standards Type IV and V	6/19/98	
J-7d	Span Wire Installation	4/24/98	
J-8a	Induction Loop Details	8/1/97	*2 Sheets*
J-9a	Typical Grounding Details	4/24/98	
J-10	Electrical Conduit Placement	7/18/97	
J-11a	Standard Junction Box	9/12/01	
Section K	**Traffic Control Plans (For Local Agency Use Only)**		
K-1	Traffic Control Plan (one lane detour)	3/7/97	
K-2	Traffic Control Plan (two lanes, one closed)	3/7/97	
K-3	Traffic Control Plan (road closed, detour)	3/7/97	
K-5	Traffic Control Plan (four lanes, one closed)	3/7/97	
K-7	Traffic Control Plan (four lane divided, one closed)	3/7/97	
K-8	Traffic Control Plan (multilane, two closed)	3/7/97	

EFFECTIVE: JANUARY 7, 2002 TO AUGUST 4, 2002
EFFECTIVE: JANUARY 7, 2002 TO AUGUST 4, 2002

EFFECTIVE: JANUARY 7, 2002 TO AUGUST 4, 2002
EFFECTIVE: JANUARY 7, 2002 TO AUGUST 4, 2002

Contents

Plan No.	Plan Title	Publication Approval Date	
K-10	Traffic Control Plan (Intersection, right turn only lane)	3/7/97	
K-11	Traffic Control Plan (Intersection, left turn lane access)	3/7/97	
K-13	Traffic Control Plan (portable barrier around work area)	3/7/97	
K-16	Traffic Control Plan (two lanes, paving operation)	3/7/97	
K-17	Traffic Control Plan (four lane, shoulder work)	3/7/97	
K-18	Traffic Control Plan (urban street, shoulder work)	3/7/97	
Section L	**Fence and Glare Screen**		
L-1	Wire Fence	7/18/97	*2 Sheets*
L-2	Chain Link Fence	7/18/97	*2 Sheets*
L-3	Chain Link Gates	7/18/97	
L-5	Glare Screen Type 1	7/31/98	
L-5a	Glare Screen Type 2	7/31/98	
L-6	Access Control Gate	7/25/97	

EFFECTIVE: JANUARY 7, 2002 TO AUGUST 4, 2002
EFFECTIVE: JANUARY 7, 2002 TO AUGUST 4, 2002

EFFECTIVE: JANUARY 7, 2002 TO AUGUST 4, 2002

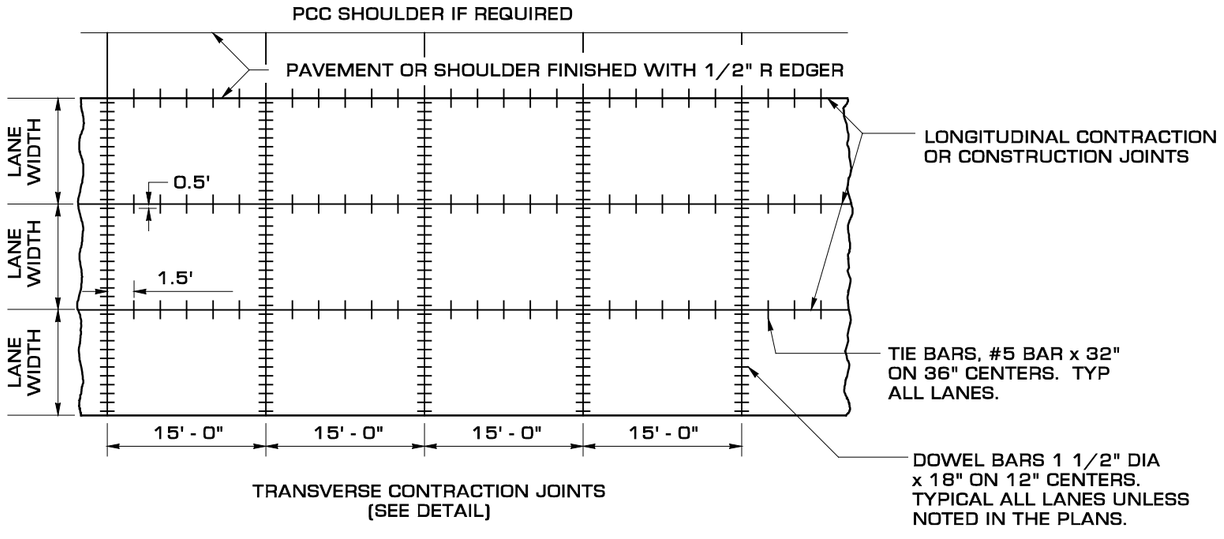

CEMENT CONCRETE PAVEMENT - DOWEL BAR JOINTS

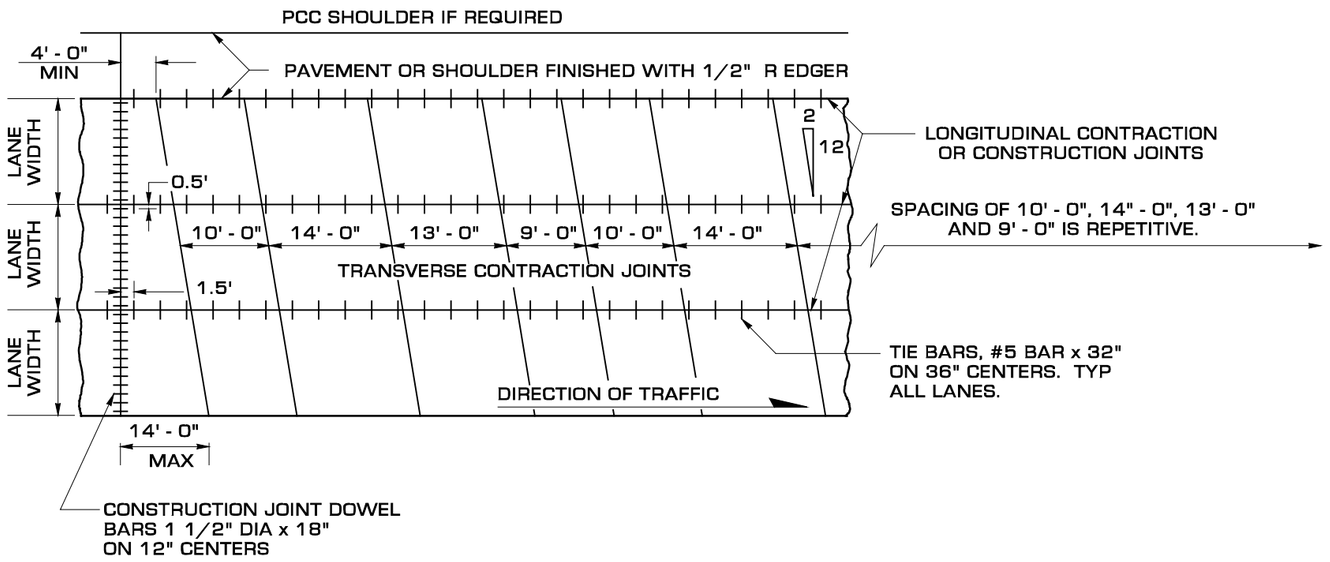

CEMENT CONCRETE PAVEMENT - PLAIN JOINTS

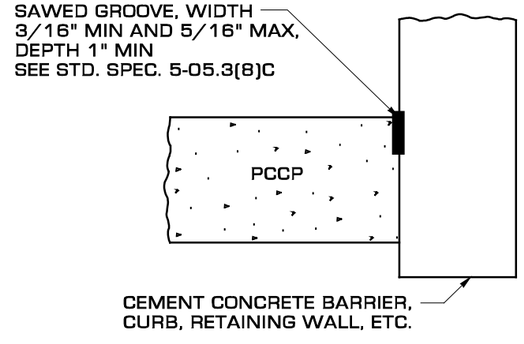

CONSTRUCTION JOINT

RODOLFO MALFABON
STATE OF WASHINGTON
35860
REGISTERED
PROFESSIONAL ENGINEER

EXPIRES APRIL 16, 2001

CEMENT CONCRETE PAVEMENT JOINTS

STANDARD PLAN A-1

SHEET 1 OF 2 SHEETS

NOTE: THIS PLAN IS NOT A LEGAL ENGINEERING DOCUMENT BUT AN ELECTRONIC DUPLICATE. THE ORIGINAL, SIGNED BY THE ENGINEER AND APPROVED FOR PUBLICATION, IS KEPT ON FILE AT THE WASHINGTON STATE DEPARTMENT OF TRANSPORTATION. A COPY MAY BE OBTAINED UPON REQUEST.

APPROVED FOR PUBLICATION

Clifford E. Mansfield *10/08/99*

DEPUTY STATE DESIGN ENGINEER — DATE

WASHINGTON STATE DEPARTMENT OF TRANSPORTATION
OLYMPIA, WASHINGTON

DATE	REVISION	BY
10/99	ADDED SPECIFICATION REFERENCE	TWS

EFFECTIVE: JANUARY 7, 2002 TO AUGUST 4, 2002

EFFECTIVE: JANUARY 7, 2002 TO AUGUST 4, 2002
EFFECTIVE: JANUARY 7, 2002 TO AUGUST 4, 2002

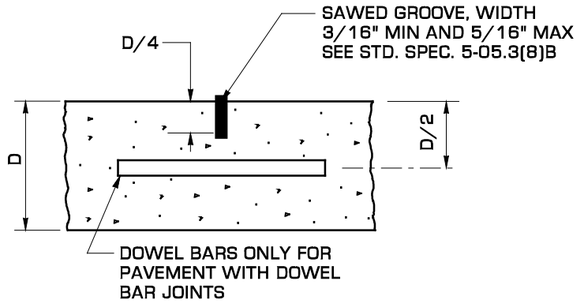

TRANSVERSE CONTRACTION JOINT

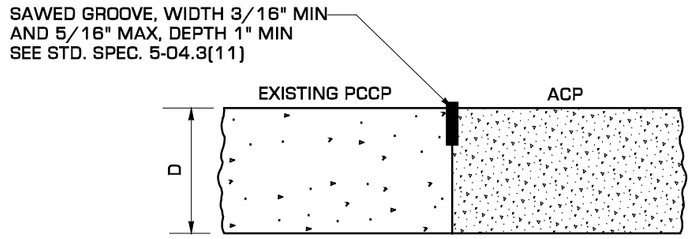

PCCP TO ACP
LONGITUDINAL CONSTRUCTION JOINT

Clifford E. Mansfield 10-08-99

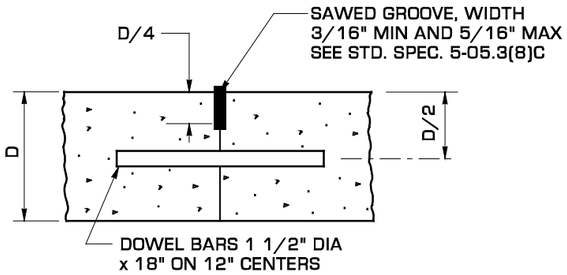

TRANSVERSE CONSTRUCTION JOINT

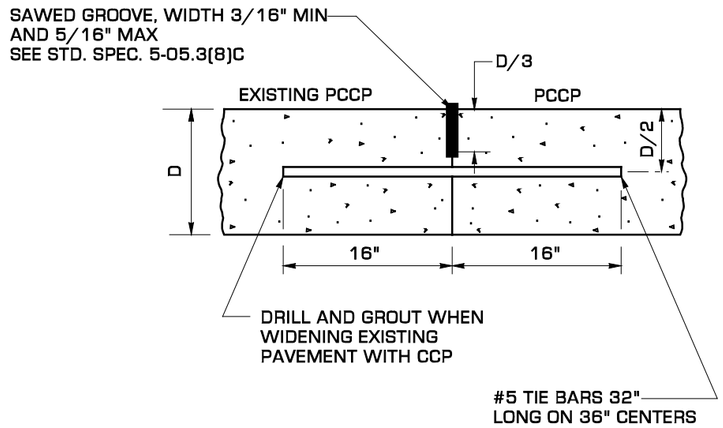

PCCP TO PCCP
LONGITUDINAL CONSTRUCTION JOINT

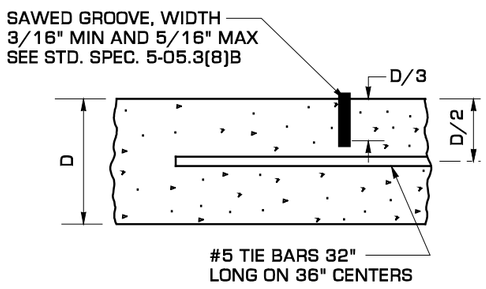

LONGITUDINAL CONTRACTION JOINT

RODOLFO MALFABON
STATE OF WASHINGTON
35860
REGISTERED
PROFESSIONAL ENGINEER

EXPIRES APRIL 16, 2001

CEMENT CONCRETE PAVEMENT JOINTS

STANDARD PLAN A-1

SHEET 2 OF 2 SHEETS

NOTE: THIS PLAN IS NOT A LEGAL ENGINEERING DOCUMENT BUT AN ELECTRONIC DUPLICATE. THE ORIGINAL, SIGNED BY THE ENGINEER AND APPROVED FOR PUBLICATION, IS KEPT ON FILE AT THE WASHINGTON STATE DEPARTMENT OF TRANSPORTATION. A COPY MAY BE OBTAINED UPON REQUEST.

DATE	REVISION	BY
10/99	ADDED NEW "LONGITUDINAL CONSTRUCTION JOINT" DETAIL.	TWS

APPROVED FOR PUBLICATION

Clifford E. Mansfield *10/08/99*

DEPUTY STATE DESIGN ENGINEER — DATE

WASHINGTON STATE DEPARTMENT OF TRANSPORTATION
OLYMPIA, WASHINGTON

EFFECTIVE: JANUARY 7, 2002 TO AUGUST 4, 2002
EFFECTIVE: JANUARY 7, 2002 TO AUGUST 4, 2002

EFFECTIVE: JANUARY 7, 2002 TO AUGUST 4, 2002

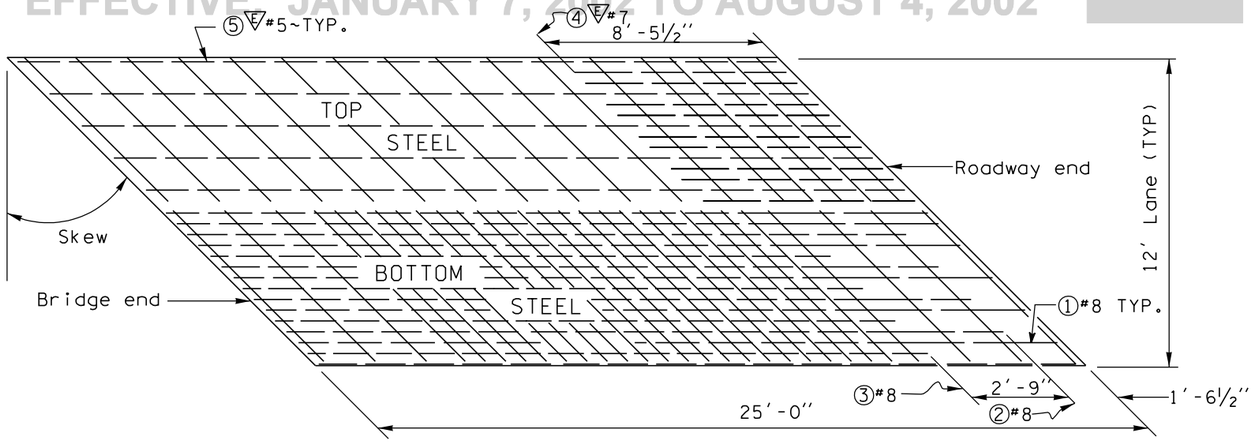

The plan above represents only the basic 12′ x 25′ slab module with skew. All approach slab construction shall be for full width of traffic lanes and shoulders at both ends of the bridge. For slab extension to include shoulders, continue reinforcing steel spacing and slab thickness in the same relationship as in the basic slab module.

PLAN

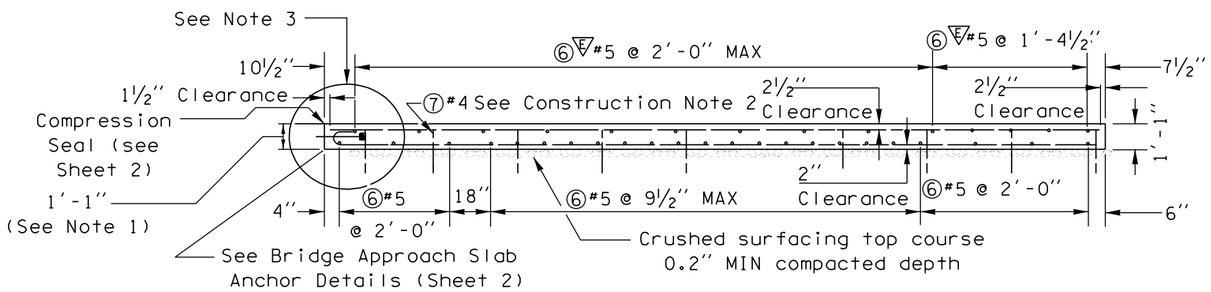

LONGITUDINAL SECTION

TABLE A	
SKEW	LENGTH
0°	11′-8″ Str.
5°	11′-9″ Str.
10°	11′-10″ Str.
15°	12′-1″ Str.

BAR LIST FOR STANDARD 12′ x 25′ SLAB MODULE				
LOCATION	MARK	SIZE	NO	LENGTH
Longitudinal bottom	①	8	10	25′-7″
Longitudinal bottom	②	8	10	24′-3″
Longitudinal bottom	③	8	9	21′-6″
Longitudinal top	④Ⓔ	7	19	8′-3″ Str.
Longitudinal top	⑤Ⓔ	5	10	24′-8″ Str.
Transverse bottom	6	5	19	See Table A
Transverse top	⑥Ⓔ	5	18	See Table A
Vertical tie bar	⑦	4	36	2′-0″ Straight
Transverse tie bar	⑧Ⓔ	5	14	2′-0″ Straight

Ⓔ Epoxy Coated reinforcing steel

APPROXIMATE QUANTITIES (NO SKEW)	
Epoxy coated steel reinforcing bars (lbs.)	862
Total steel reinforcing bars, excluding epoxy coated (lbs.)	2156
Additional steel per joint (lbs.)	30
Concrete (cu. yd.)	12
Bridge approach slab anchor	6

BENDING DIAGRAM

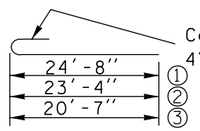

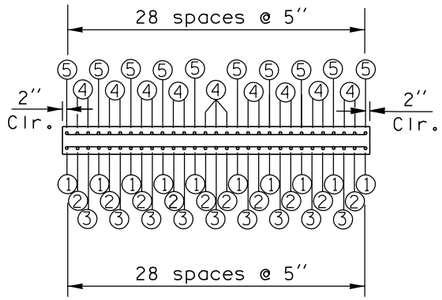

NOTES

1. Design guidance shall be requested from Bridge and Structures Office:
   a. When skew exceeds 45°.
   b. When pavement seat exceeds 1′-1″ (EXCEPT, if bridge deck is overlaid, slab thickness shall be increased to match top of overlay).
2. For multi-lane roadway, or for roadway with shoulders, all transverse steel bars may be full width, less 2″ clear per side.
3. When bridge is "L" Type Abutment, a ½″ premolded joint filler will be used (see "L" Type Abutment Joint Detail, Sheet 2).

TRANSVERSE SECTION

CONSTRUCTION NOTES

1. For PCC roadway, insert dowels parallel to center line at 1′ O.C. along transverse construction joint. Additional details are shown on elevation below.

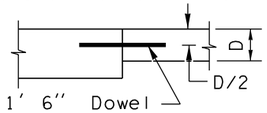

1¼″ DIA x 1′ 6″ Dowel

2. Approach slab edge treatment
   (a) Expansion joint between bridge deck and slab
   - edge both sides with ½″ R.
   (b) Longitudinal exterior edge
   - edge with ½″ R.
   (c) Transverse construction joint between slab and PCC roadway
   - edge both sides with ½″ R.
   (d) Longitudinal construction joint between adjacent lanes, only when required
   - edge first pour only with ⅛″ R.

   Additional details are shown on section below:

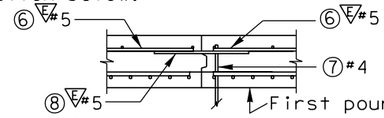

3. Top reinforcement shall be supported by Mark 7 bars driven into subgrade on approximately the following centers:
   3′-0″ longitudinally
   2′-6″ transversely

M. MYINT LWIN
STATE OF WASHINGTON
10536
REGISTERED
PROFESSIONAL ENGINEER

EXPIRES JANUARY 17, 1999

BRIDGE APPROACH SLAB

STANDARD PLAN A-2

SHEET 1 OF 2 SHEETS

APPROVED FOR PUBLICATION

Clifford E. Mansfield — DEPUTY STATE DESIGN ENGINEER — 12/23/98 DATE

WASHINGTON STATE DEPARTMENT OF TRANSPORTATION
OLYMPIA, WASHINGTON

NOTE: THIS PLAN IS NOT A LEGAL ENGINEERING DOCUMENT BUT AN ELECTRONIC DUPLICATE. THE ORIGINAL, SIGNED BY THE ENGINEER AND APPROVED FOR PUBLICATION, IS KEPT ON FILE AT THE WASHINGTON STATE DEPARTMENT OF TRANSPORTATION. A COPY MAY BE OBTAINED UPON REQUEST.

DATE	REVISION	BY
8/98	Added epoxy coated reinf. steel	RJD

EFFECTIVE: JANUARY 7, 2002 TO AUGUST 4, 2002

EFFECTIVE: JANUARY 7, 2002 TO AUGUST 4, 2002

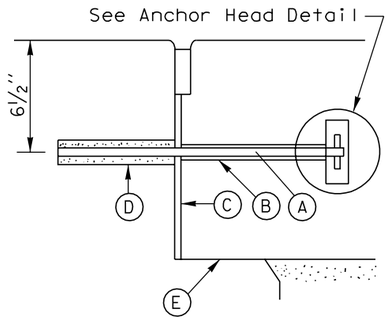

METHOD A

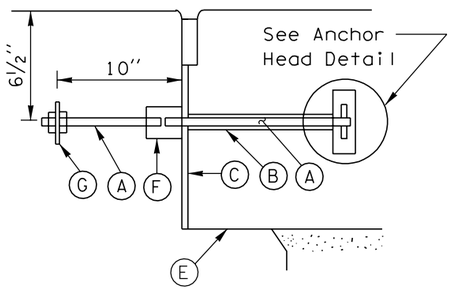

METHOD B

Ⓐ Anchor Rod, ¾'' DIA x length as follows:
Method A: One-piece 1' 10'' long, threaded 8'' MIN, for bridge deck embedment. Grout per Special Provisions.
Method B: Two-piece: 1' 3½'', threaded 2'' MIN, on end away from anchor head. 0' 10'', fully threaded 3'' MIN each end.

Ⓑ Pipe, polyethylene or PVC, 1'' DIA x 1' long

Ⓒ Preformed joint filler, ½'' thick x full depth

Ⓓ 1½'' DIA x 8'' hole, only for one-piece anchor rod installation.

Ⓔ Pavement seat, dimensioned as per plans. Cover with one layer 15# asphaltic building felt.

Ⓕ ¾'' stop type coupler with a minimum ultimate strength of 20,000 pounds. (Williams C2T or approved equal).

Ⓖ ¼'' x 2½'' square plate with 2 nuts.

Bridge Approach Slab Anchors shall be placed 1' from outside edge of pavement and on 2' centers for full roadway width along back of bridge pavement seat, parallel with roadway centerline.

BRIDGE APPROACH SLAB ANCHOR

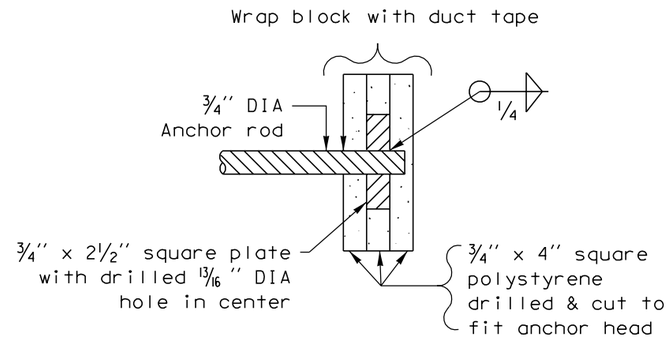

Paint metal components of anchor assembly with one coat of Formula A-9-73 (See Std. Spec. 9-08.2)

ANCHOR HEAD DETAIL

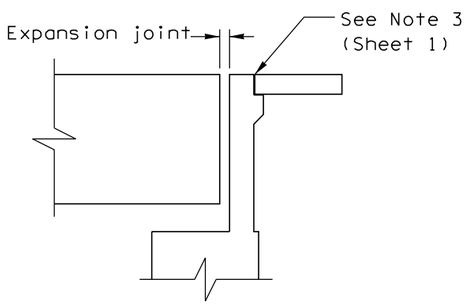

L TYPE ABUTMENT JOINT DETAIL

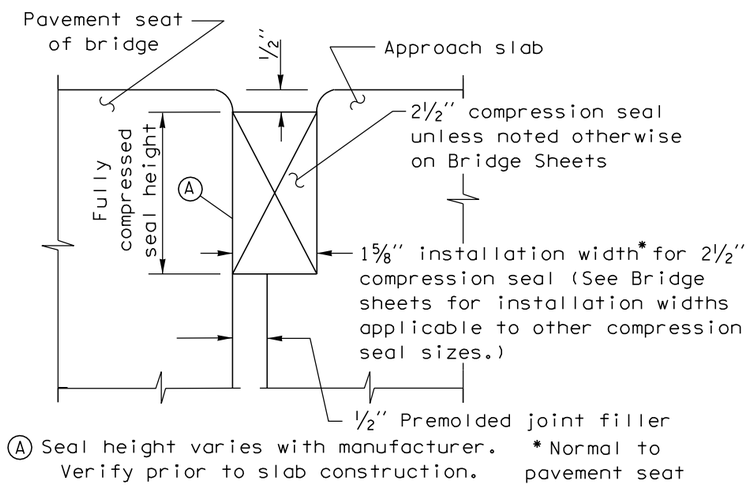

Ⓐ Seal height varies with manufacturer. Verify prior to slab construction.

* Normal to pavement seat

COMPRESSION SEAL INSTALLATION

M. MYINT LWIN
STATE OF WASHINGTON
10536
REGISTERED
PROFESSIONAL ENGINEER

EXPIRES JANUARY 17, 1999

BRIDGE APPROACH SLAB STANDARD PLAN A-2

SHEET 2 OF 2 SHEETS

APPROVED FOR PUBLICATION

Clifford E. Mansfield 12/23/98

DEPUTY STATE DESIGN ENGINEER — DATE

WASHINGTON STATE DEPARTMENT OF TRANSPORTATION
OLYMPIA, WASHINGTON

NOTE: THIS PLAN IS NOT A LEGAL ENGINEERING DOCUMENT BUT AN ELECTRONIC DUPLICATE. THE ORIGINAL, SIGNED BY THE ENGINEER AND APPROVED FOR PUBLICATION, IS KEPT ON FILE AT THE WASHINGTON STATE DEPARTMENT OF TRANSPORTATION. A COPY MAY BE OBTAINED UPON REQUEST.

DATE	REVISION	BY
8/98	Added note to Compression Seal width	RJD

EFFECTIVE: JANUARY 7, 2002 TO AUGUST 4, 2002

EFFECTIVE: JANUARY 7, 2002 TO AUGUST 4, 2002

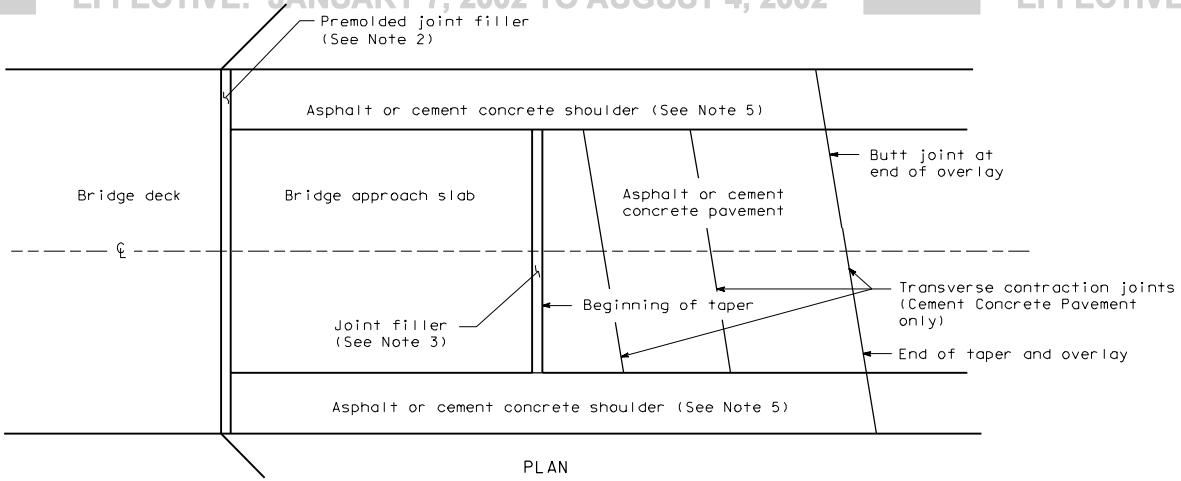

PLAN

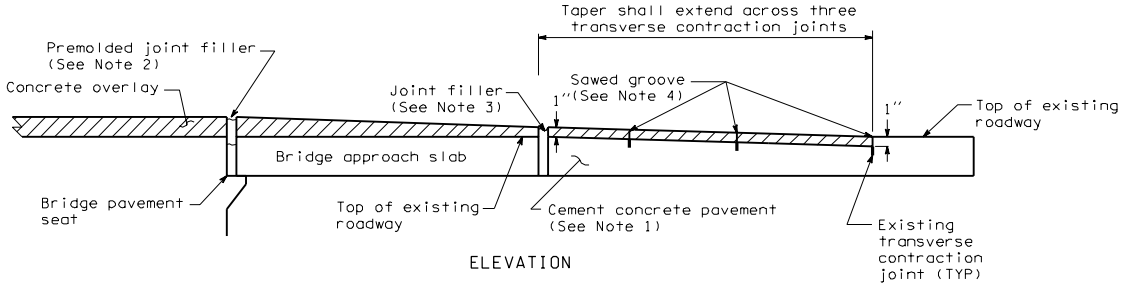

ELEVATION

CASE 1

CEMENT CONCRETE PAVEMENT WITH ASPHALT
OR CEMENT CONCRETE SHOULDER

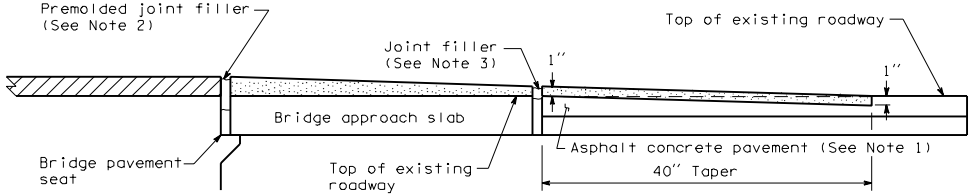

CASE 2

ASPHALT CONCRETE PAVEMENT
(Diaphragm cast on structure)

TRANSITION FROM CONCRETE OVERLAY

A-3

05-09-97

EFFECTIVE: JANUARY 7, 2002 TO AUGUST 4, 2002

EFFECTIVE: JANUARY 7, 2002 TO AUGUST 4, 2002

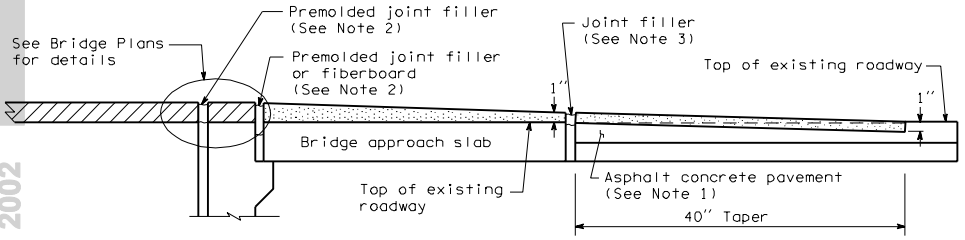

CASE 3

ASPHALT CONCRETE PAVEMENT
(L-Type Abutment)

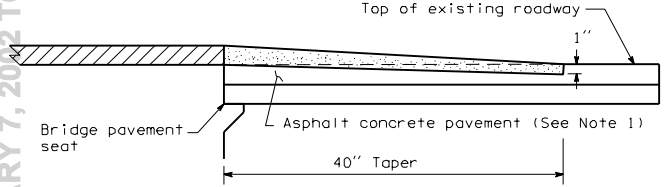

CASE 4

ASPHALT CONCRETE PAVEMENT

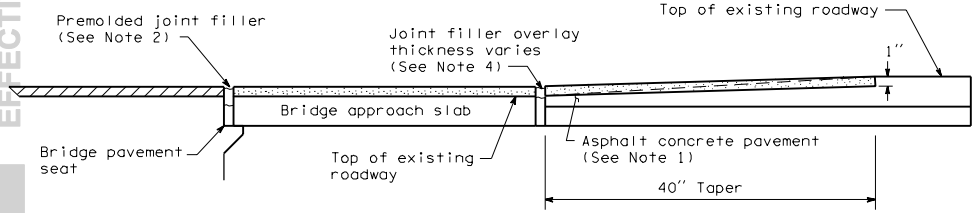

CASE 5

ASPHALT CONCRETE PAVEMENT
(ACP was on bridge and/or roadway grade slopes up from bridge)

NOTES

1. Plane a taper into the existing pavement and shoulders (if paved). Depth shall taper from 0" at the beginning of pavement, to 1" at end of taper. Does not apply when exisitng pavement has been planed.

2. Before placing overlay, remove top 2" of existing joint filler, or 3" if existing joint is fiberboard, and block out the joint. After overlay, install new premolded joint filler. Top of joint filler shall be between 3/16" and 3/8" below overlay. When a compression seal is in place, see Bridge Plans.

3. Before placing overlay, block out the joint. After overlay, install premolded joint filler or rubberized asphalt filler. Top of joint filler shall be between 3/16" and 3/8" below overlay.

4. Full depth sawed grooves between 1/8" and 1/4" wide shall be placed directly over the existing sawed grooves in the cement concrete pavement and cement concrete shoulders.

5. Cement concrete shoulders shall be overlaid with cement concrete. Asphalt concrete shoulders shall be overlaid with asphalt concrete.

LEGEND

Concrete Overlay

Asphalt Concrete Overlay

TRANSITION FROM CONCRETE OVERLAY

A-3

05-09-97

EFFECTIVE: JANUARY 7, 2002 TO AUGUST 4, 2002

EFFECTIVE: JANUARY 7, 2002 TO AUGUST 4, 2002
EFFECTIVE: JANUARY 7, 2002 TO AUGUST 4, 2002

NOTES

1. Curb shall be Extruded Curb Type 1, 2, 4, 4a, 5, or 5a, as specified in the contract.
2. Catch basin or grate inlet shall be located between guardrail posts.

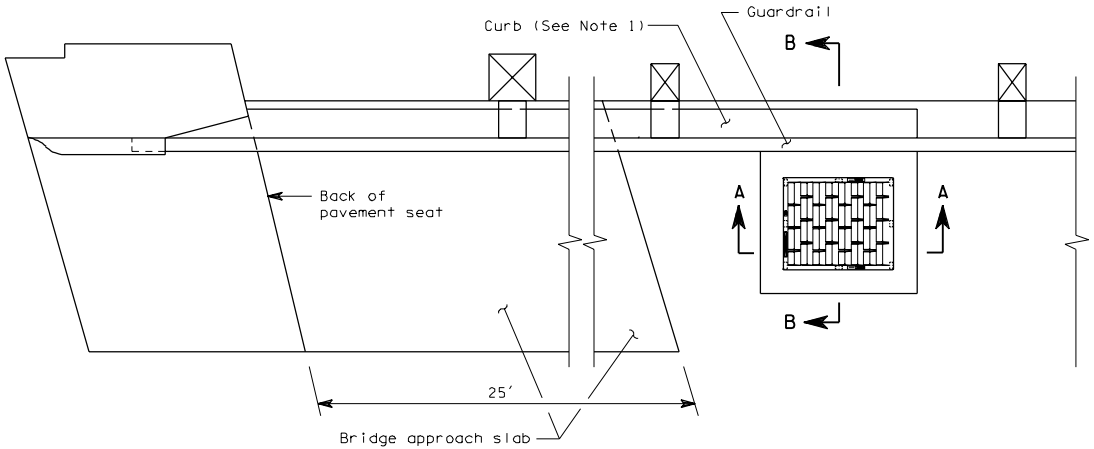

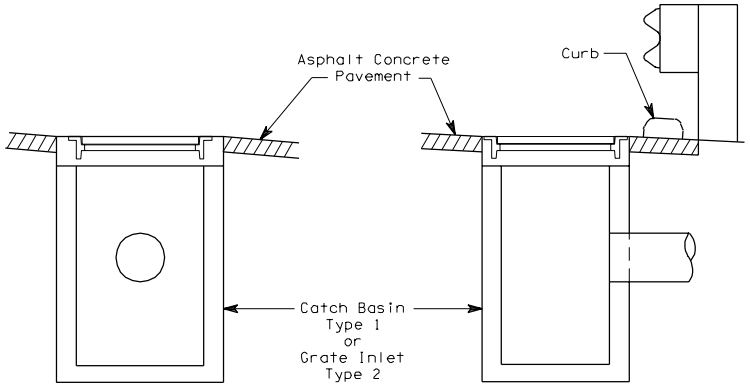

SECTION A-A

SECTION B-B

INLET PLACEMENT AT BRIDGE END

EFFECTIVE: JANUARY 7, 2002 TO AUGUST 4, 2002
EFFECTIVE: JANUARY 7, 2002 TO AUGUST 4, 2002

EFFECTIVE: JANUARY 7, 2002 TO AUGUST 4, 2002

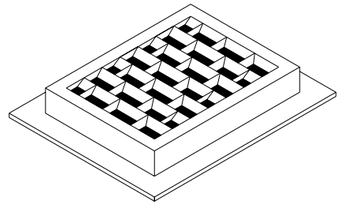

FRAME AND VANED GRATE

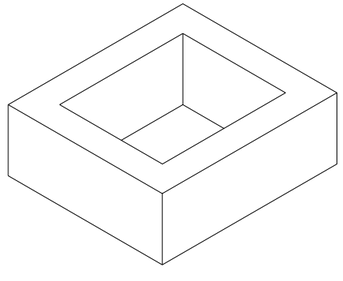

RECTANGULAR ADJUSTMENT SECTION

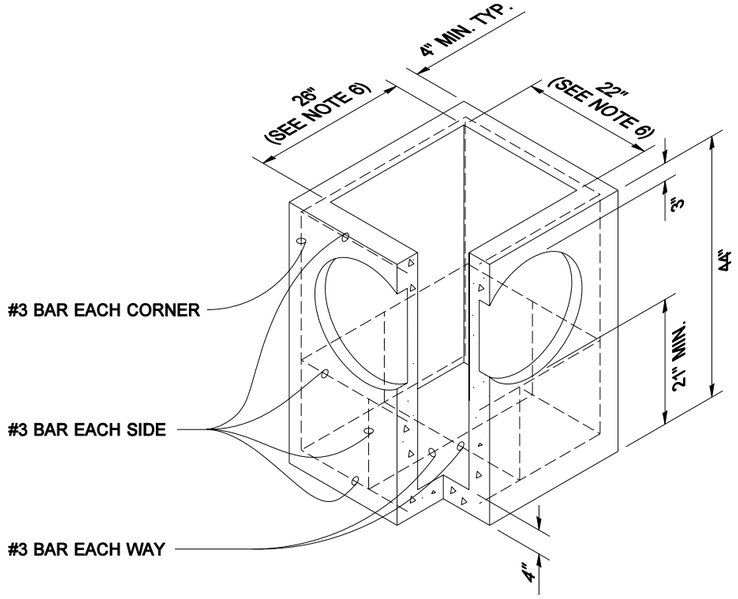

PRECAST BASE SECTION

NOTES

1. As an acceptable alternate to rebar, wire mesh having a minimum area of 0.12 square inches per foot may be used. Wire mesh shall not be placed in knockouts.
2. The knockout diameter shall not be greater than 20". Knockouts shall have a wall thickness of 2" minimum to 2.5" maximum. Provide a 1.5" minimum gap between the knockout wall and the outside of the pipe. After the pipe is installed, fill the gap with joint mortar in accordance with Std. Spec. 9-04.3.
3. The maximum depth from the finished grade to the pipe invert shall be 5'.
4. Frame and grate may be installed with flange down or cast into adjustment section.
5. The precast base section may have a rounded floor and the walls may be sloped at a rate of 1:24 or steeper.
6. Opening shall be measured at the top of the precast base section.

PIPE ALLOWANCES	
PIPE MATERIAL	MAXIMUM INSIDE DIAMETER
REINFORCED OR PLAIN CONCRETE	12"
ALL METAL PIPE	15"
CPSSP * (Std. Spec. 9-05.20)	12"
SOLID WALL PVC (Std. Spec. 9-05.12(1))	15"
PROFILE WALL PVC (Std. Spec. 9-05.12(2))	15"

* CORRUGATED POLYETHYLENE STORM SEWER PIPE

MATTHEW J. WITECKI
STATE OF WASHINGTON
15588
REGISTERED
PROFESSIONAL ENGINEER
EXPIRES JULY 1, 2003

CATCH BASIN TYPE 1

STANDARD PLAN B-1

NOTE: THIS PLAN IS NOT A LEGAL ENGINEERING DOCUMENT BUT AN ELECTRONIC DUPLICATE. THE ORIGINAL, SIGNED BY THE ENGINEER AND APPROVED FOR PUBLICATION, IS KEPT ON FILE AT THE WASHINGTON STATE DEPARTMENT OF TRANSPORTATION. A COPY MAY BE OBTAINED UPON REQUEST.

DATE	REVISION	BY
7/01	ADDED PIPE ALLOWANCES TABLE	MAS

APPROVED FOR PUBLICATION

Clifford E. Mansfield — STATE DESIGN ENGINEER — *07-31-01* DATE

Washington State Department of Transportation

EFFECTIVE: JANUARY 7, 2002 TO AUGUST 4, 2002

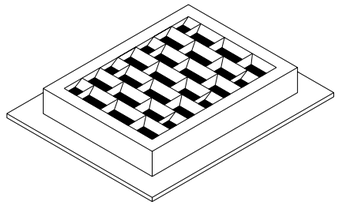

FRAME AND VANED GRATE

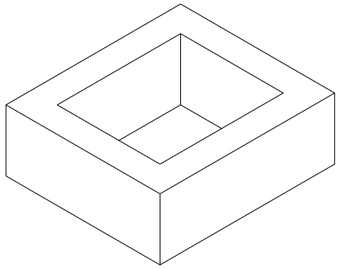

RECTANGULAR ADJUSTMENT SECTION

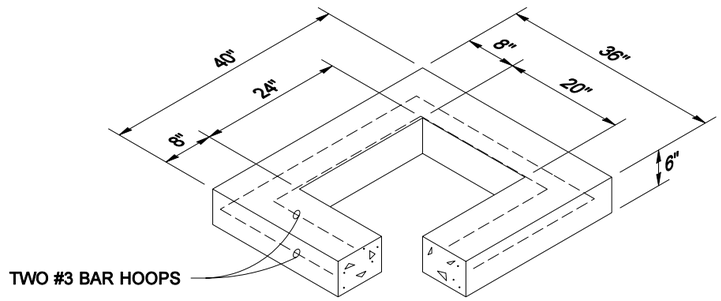

REDUCING SECTION

PIPE ALLOWANCES	
PIPE MATERIAL	MAXIMUM INSIDE DIAMETER
REINFORCED OR PLAIN CONCRETE	18"
ALL METAL PIPE	21"
CPSSP * (Std. Spec. 9-05.20)	18"
SOLID WALL PVC (Std. Spec. 9-05.12(1))	21"
PROFILE WALL PVC (Std. Spec. 9-05.12(2))	21"

* CORRUGATED POLYETHYLENE STORM SEWER PIPE

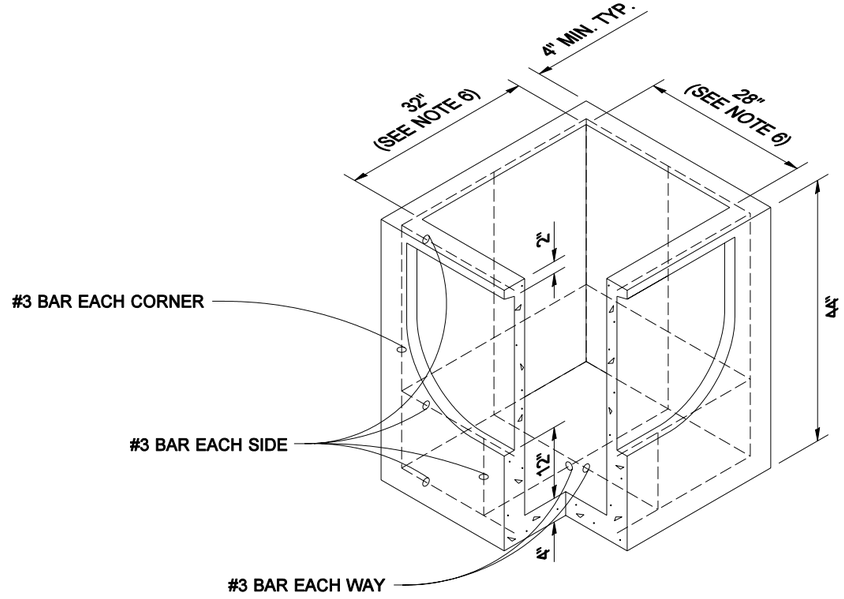

PRECAST BASE SECTION

NOTES

1. As an acceptable alternate to rebar, wire mesh having a minimum area of 0.12 square inches per foot may be used. Wire mesh shall not be placed in knockouts.
2. The knockout diameter shall not be greater than 26". Knockouts shall have a wall thickness of 2" minimum to 2.5" maximum. Provide a 1.5" minimum gap between the knockout wall and the outside of the pipe. After the pipe is installed, fill the gap with joint mortar in accordance with Std. Spec. 9-04.3.
3. The maximum depth from the finished grade to the pipe invert shall be 5'.
4. Frame and grate may be installed with flange down or cast into adjustment section.
5. The precast base section may have a rounded floor and the walls may be sloped at a rate of 1:24 or steeper.
6. Opening shall be measured at the top of the precast base section.

MATTHEW J. WITECKI
STATE OF WASHINGTON
15588
REGISTERED
PROFESSIONAL ENGINEER

EXPIRES JULY 1, 2003

CATCH BASIN TYPE 1L

STANDARD PLAN B-1a

NOTE: THIS PLAN IS NOT A LEGAL ENGINEERING DOCUMENT BUT AN ELECTRONIC DUPLICATE. THE ORIGINAL, SIGNED BY THE ENGINEER AND APPROVED FOR PUBLICATION, IS KEPT ON FILE AT THE WASHINGTON STATE DEPARTMENT OF TRANSPORTATION. A COPY MAY BE OBTAINED UPON REQUEST.

DATE	REVISION	BY
7/01	ADDED PIPE ALLOWANCES TABLE	MAS

APPROVED FOR PUBLICATION

Clifford E. Mansfield — STATE DESIGN ENGINEER — *07-31-01* DATE

Washington State Department of Transportation

EFFECTIVE: JANUARY 7, 2002 TO AUGUST 4, 2002

EFFECTIVE: JANUARY 7, 2002 TO AUGUST 4, 2002

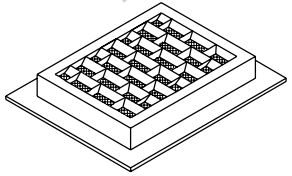

FRAME AND VANED GRATE

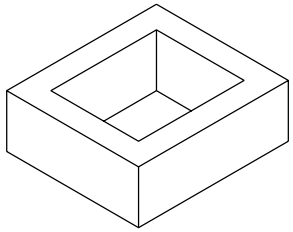

RECTANGULAR ADJUSTMENT SECTION

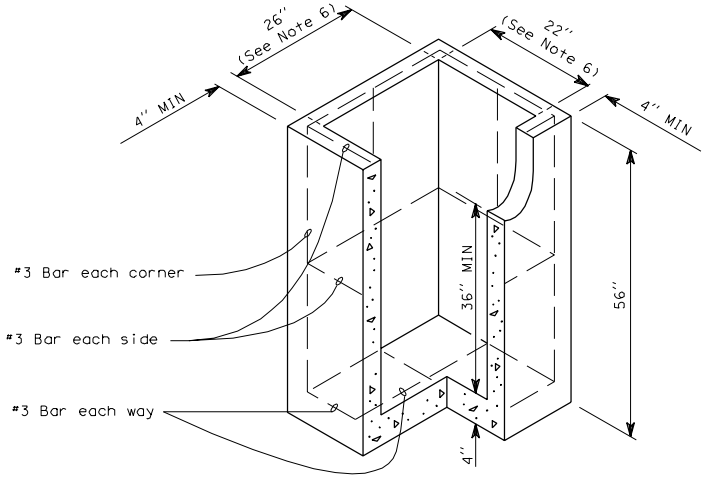

PRECAST BASE SECTION

NOTES

1. As an acceptable alternate to rebar, wire mesh having a minimum area of 0.12 square inches per foot may be used. Wire mesh shall not be placed in knockouts.
2. The knockout diameter shall not be greater than 16". Knockouts shall have a wall thickness of 2" minimum to 2½" maximum.
3. The maximum depth from the finished grade to the pipe invert shall be 5'.
4. Frame and grate may be installed with flange down or cast into adjustment section.
5. The precast base section may have a rounded floor and the walls may be sloped at a rate of 1:24 or steeper.
6. Openings shall be measured at the top of the precast base section.

CATCH BASIN TYPE 1P
PARKING LOT C. B.

EFFECTIVE: JANUARY 7, 2002 TO AUGUST 4, 2002

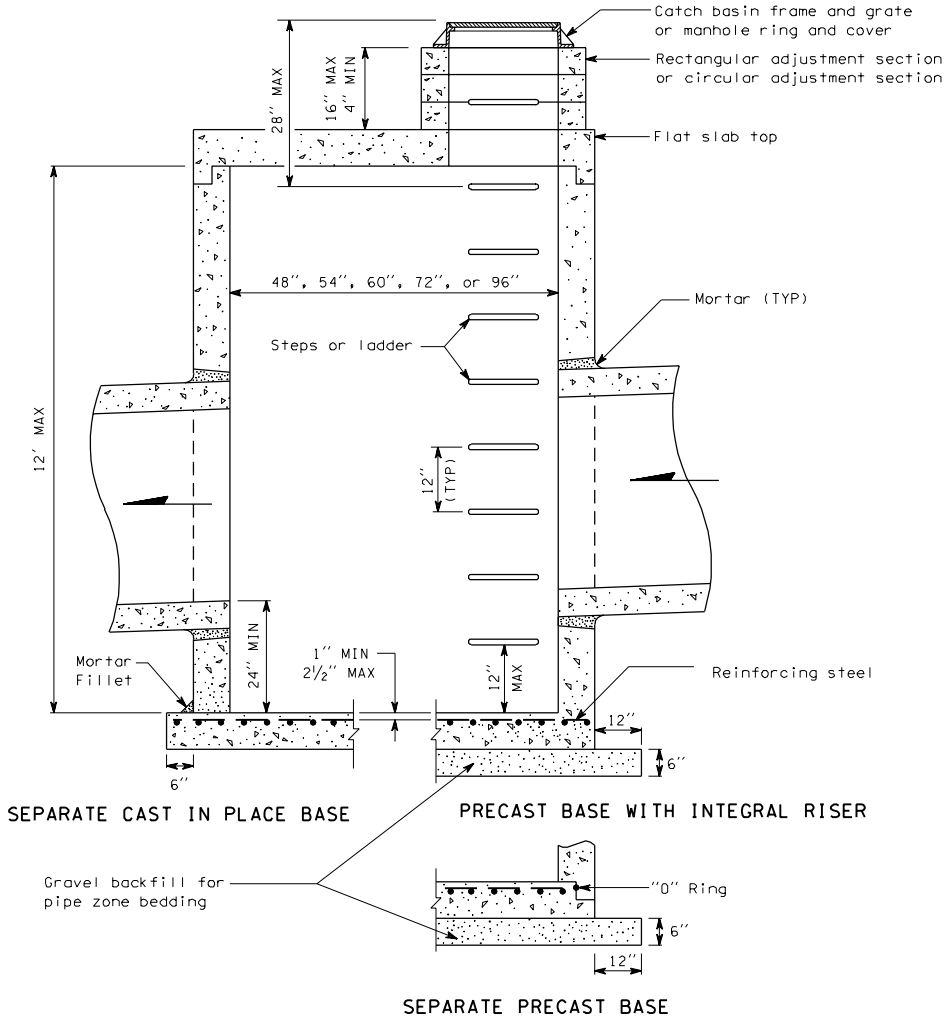

NOTES:

1. No steps are required when height is 4' or less.
2. The bottom of the precast catch basin may be rounded.
3. Frame and grate may be installed with flange down or cast into adjustment section.
4. Knockouts shall have a wall thickness of 2" minimum to 2½" maximum.

CATCH BASIN DIMENSION TABLE

DIA	WALL THICKNESS	BASE THICKNESS	MAXIMUM KNOCKOUT SIZE	MINIMUM DISTANCE BETWEEN KNOCKOUTS	BASE REINFORCING STEEL in^2/ft IN EACH DIRECTION	
					INTEGRAL BASE	SEPARATE BASE
48"	4"	6"	36"	8"	0.15	0.23
54"	4½"	8"	42"	8"	0.19	0.19
60"	5"	8"	48"	8"	0.25	0.25
72"	6"	8"	60"	12"	0.24	0.35
96"	8"	12"	84"	12"	0.29	0.39

CATCH BASIN TYPE 2

EFFECTIVE: JANUARY 7, 2002 TO AUGUST 4, 2002

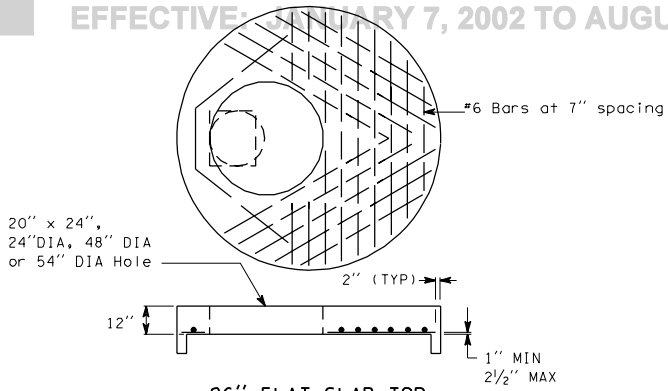

96" FLAT SLAB TOP

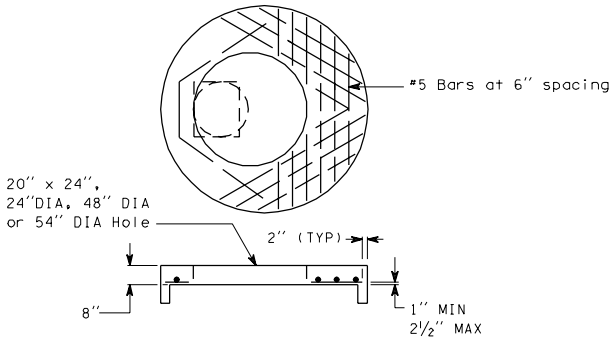

72" FLAT SLAB TOP

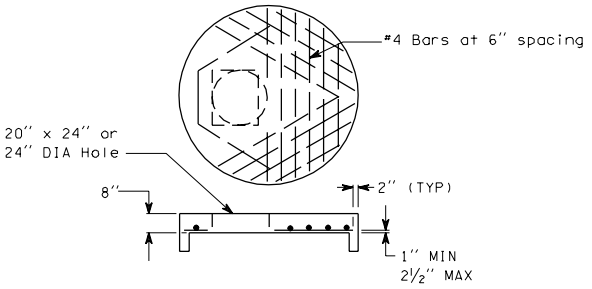

48", 54" or 60"
FLAT SLAB TOP

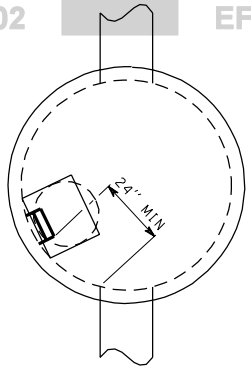

TYPICAL ORIENTATION

FOR ACCESS AND STEPS

NOTES

1. As an acceptable alternate to rebar, wire mesh having a minimum area of 0.12 square inches per foot may be used for adjustment sections.

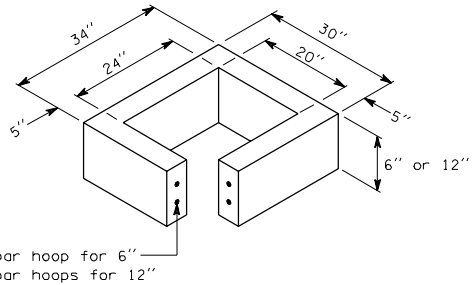

RECTANGULAR ADJUSTMENT SECTION

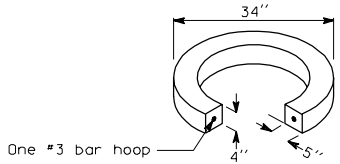

CIRCULAR ADJUSTMENT SECTION

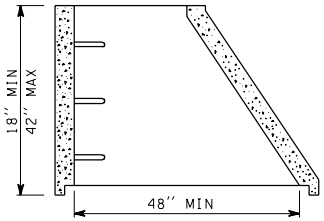

ECCENTRIC CONE SECTION

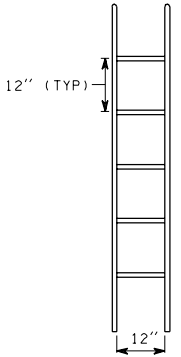

PREFABRICATED LADDER

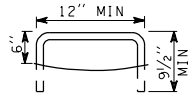

STEP

MISCELLANEOUS DETAILS FOR MANHOLES AND CATCH BASINS

EFFECTIVE: JANUARY 7, 2002 TO AUGUST 4, 2002

EFFECTIVE: JANUARY 7, 2002 TO AUGUST 4, 2002

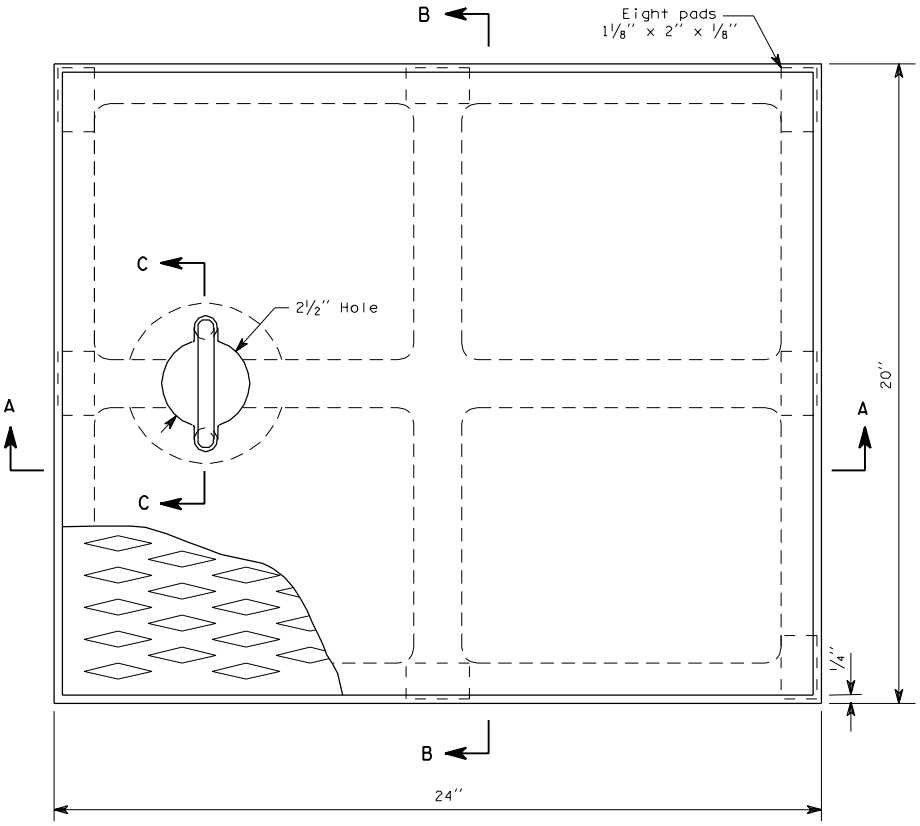

PLAN

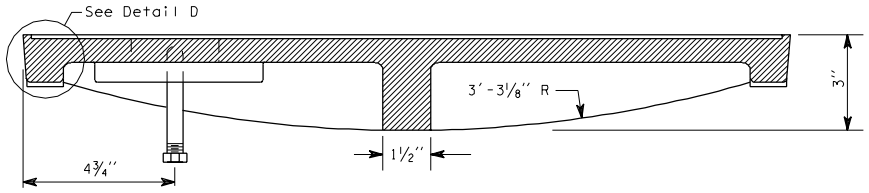

SECTION A-A

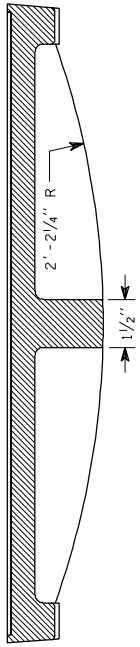

SECTION B-B

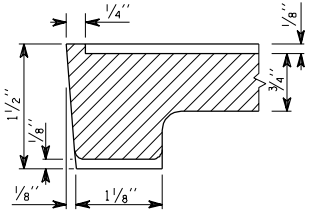

DETAIL D

NOTES

1. Raised designs other than the diamond design shown may be used if approved by the Engineer.

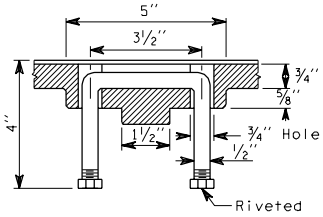

SECTION C-C

SOLID METAL COVER FOR CATCH BASIN

EFFECTIVE: JANUARY 7, 2002 TO AUGUST 4, 2002

EFFECTIVE: JANUARY 7, 2002 TO AUGUST 4, 2002

DIMENSIONS	T	R	D
Standard Grate	1¾″	26″	1⅝″
Grate With Optional Rib	1½″	21″	2¾″

WEIGHT	
Frame	158 Lbs ± 5%
Grate	118 Lbs ± 5%

NOTES

1. 3° to 5° Draft permitted as needed.
2. Seating of grate shall be accomplished by one of the following: Alternate A shall be eight pads 1½″ x ¾″ x ⅛″ to ¼″ integrally cast with the grate. Alternate B shall be a machined surface outside a 17″ circle, bottom only. (See Section B-B).
3. Tolerance on all dimensions shall be ± 1/16″ unless otherwise noted.

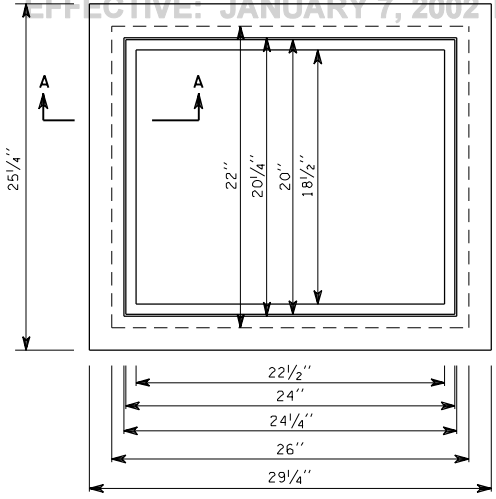

FRAME

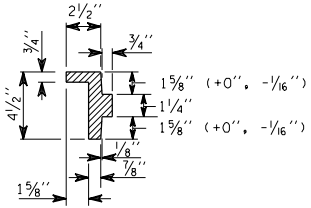

SECTION A-A

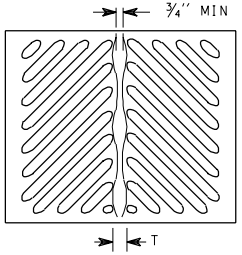

OPTIONAL RIB - BOTTOM VIEW

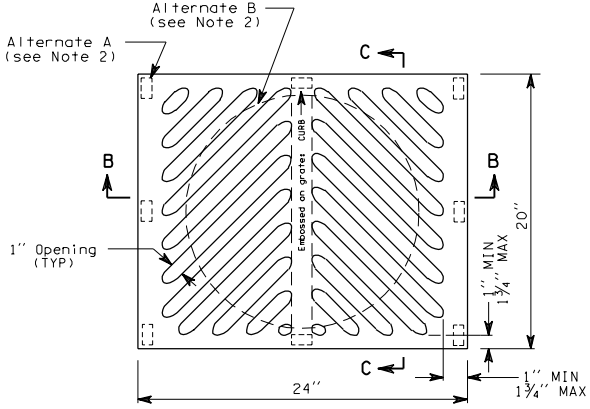

GRATE

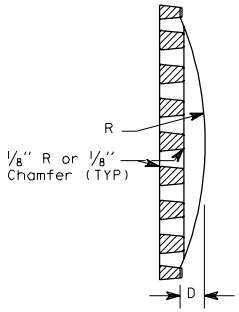

SECTION C-C

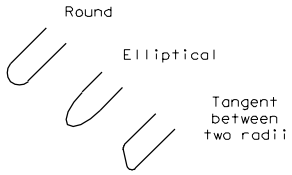

OPTIONAL DESIGN FOR GRATE OPENING ENDS

METAL FRAME AND GRATE FOR CATCH BASIN AND INLET

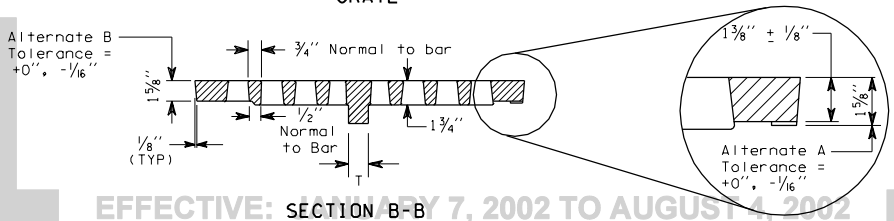

SECTION B-B

EFFECTIVE: JANUARY 7, 2002 TO AUGUST 4, 2002

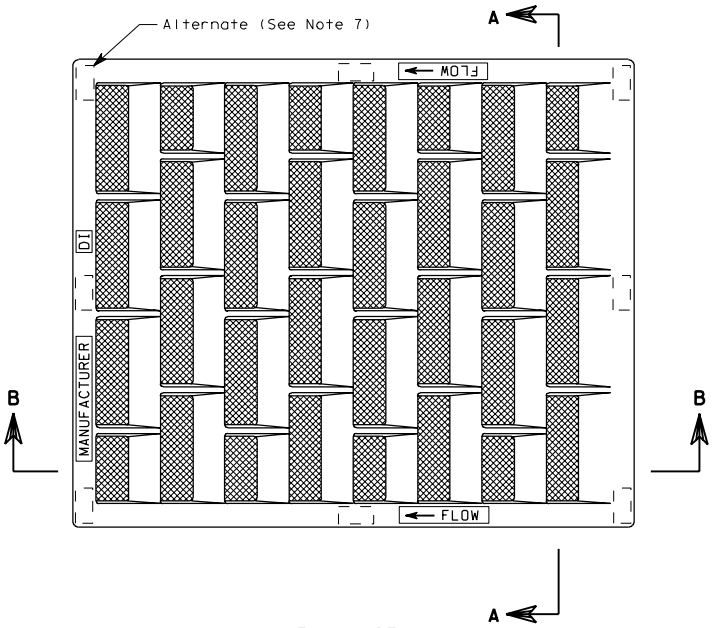

PLAN VIEW

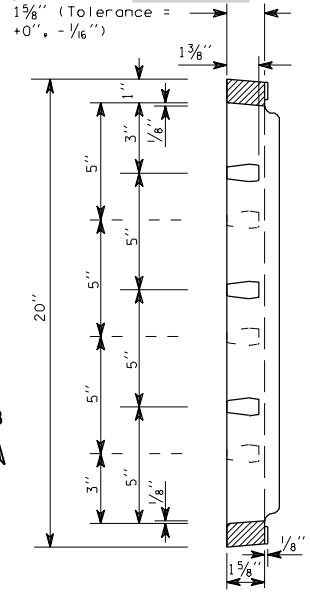

SECTION A-A

NOTES

1. The name of the manufacturer and direction of flow shall be embossed on the top surface of each grate. Lettering to be recessed 1/16".
2. Dimensions shall have a ± 1/16" tolerance, except as noted.
3. Edges shall have 1/8" radius, 1/8" chamfer or complete deburring.
4. As an alternate, eight pads 1½" x ¾" x ⅛" integrally cast with the grate may be used.

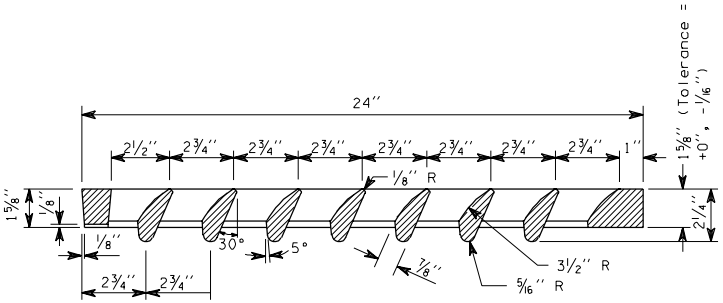

SECTION B-B

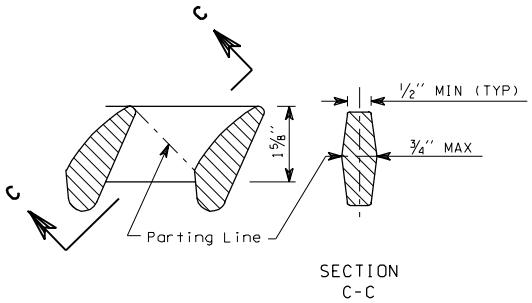

SECTION C-C

VANE DETAIL

VANED GRATE FOR CATCH BASIN AND INLET

EFFECTIVE: JANUARY 7, 2002 TO AUGUST 4, 2002

EFFECTIVE: JANUARY 7, 2002 TO AUGUST 4, 2002

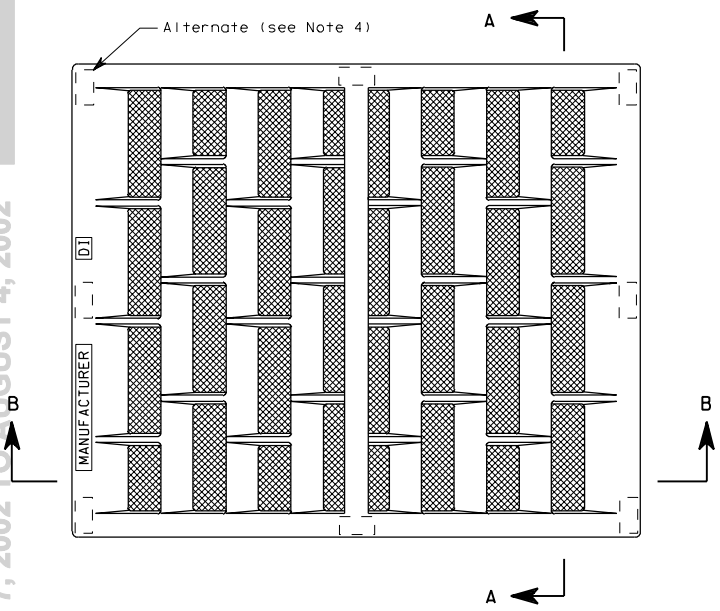

PLAN VIEW

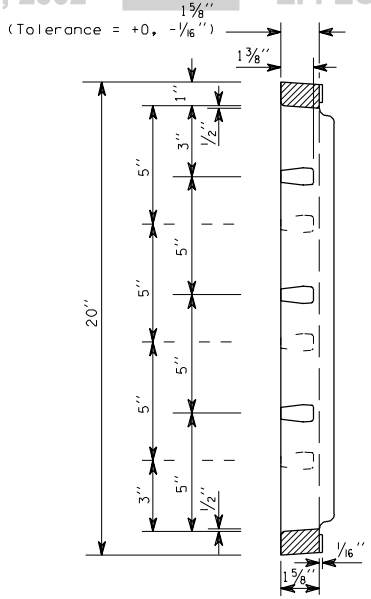

SECTION A-A

NOTES

1. The name of the manufacturer shall be embossed on the top surface of each grate. Lettering to be recessed 1/16".
2. Dimensions shall have a ± 1/16" tolerance except as noted.
3. Edges shall have 1/8" radius, 1/8" chamfer or complete deburring.
4. As an alternate, eight pads 1½" x ¾" x 1/8", integrally cast with the grate may be used.

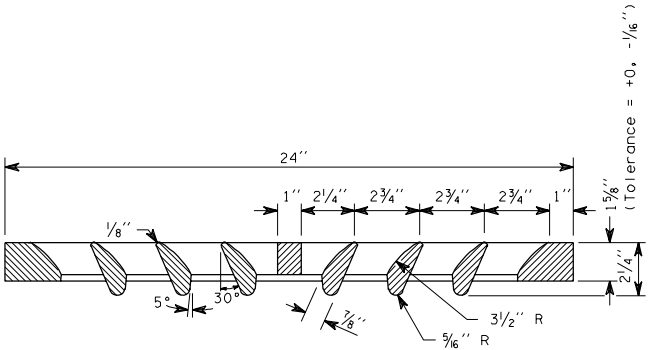

SECTION B-B

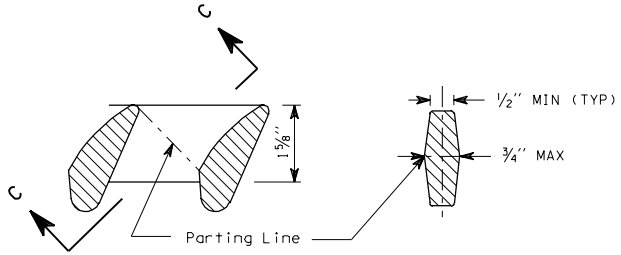

VANE DETAIL

SECTION C-C

BI-DIRECTIONAL VANED GRATE FOR CATCH BASIN AND INLET

EFFECTIVE: JANUARY 7, 2002 TO AUGUST 4, 2002

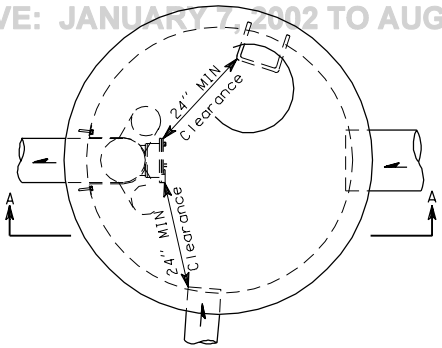

PLAN VIEW

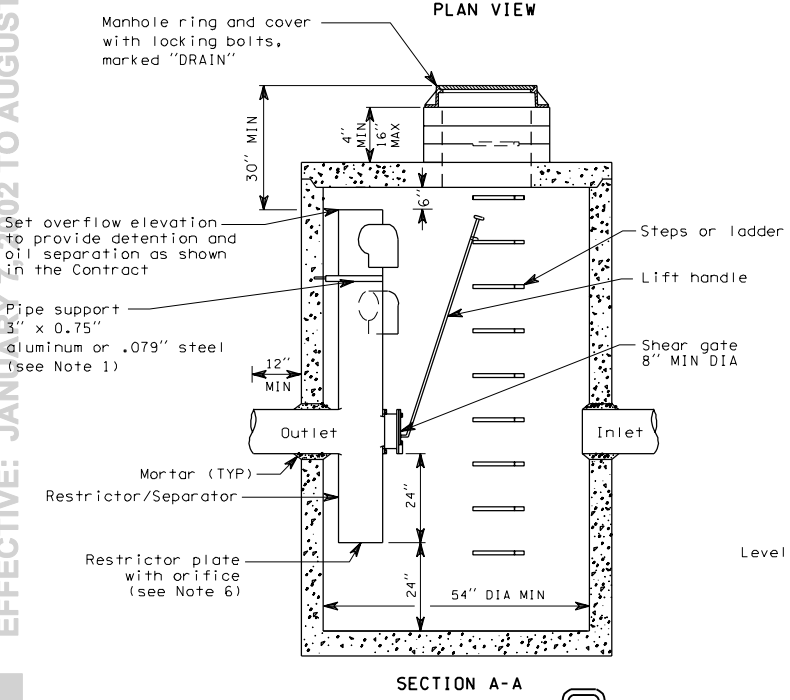

SECTION A-A

NOTES

1. Pipe supports and restrictor/separator shall be constructed of the same material and be anchored at a maximum spacing of 36". Attach pipe supports to manhole with 5/8" stainless steel expansion bolts or embed supports into manhole wall 2".

2. The vertical riser stem of the restrictor/separator shall be the same diameter as the horizontal outlet pipe with a minimum diameter of 8".

3. The flow restrictor/separator shall be fabricated from one of the following materials:
   0.60" Corrugated Aluminum Alloy Drain Pipe
   0.64" Corrugated Galvanized or Aluminized Steel Drain Pipe
   0.60" aluminum alloy flat sheet, in accordance with ASTM B 209M, 5052 H32 or EPS
   Galvanized steel shall have Treatment 1.

4. Frame and ladder or steps are to be offset so that:
   Shear gate is visible from the top; climb-down space is clear of riser and gate; frame is clear of curb.

5. Multi-orifice elbows may be located as shown or all on one side of riser to assure ladder clearence.
   Size of elbows and placement to be specified in the Contract.

6. Restrictor plate with orifice as specified in the Contract. Omit plate if for oil pollution control only.
   Opening is to be cut round and smooth.

7. Shear gate shall be made of aluminum alloy in accordance with ASTM B 26M and ASTM B 275, designation ZG32A or cast iron in accordance with ASTM A 48, Class 30B.
   Lift handle may be solid rod or hollow tubing with adjustable hook as required.
   Neoprene rubber gasket required between riser mounting flange and gate flange.
   Mating surfaces of lid and body shall be machined for proper fit.
   Flange mounting bolts shall be 3/8" diameter stainless steel.

8. Shear gate maximum opening shall be controlled by limited hinge movement, stop tab or some other device.

9. Alternate shear gate designs are acceptable, if material specifications are met and flange bolt pattern matches.

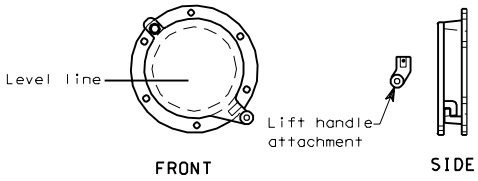

FRONT SIDE

SHEAR GATE

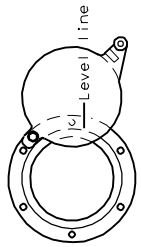

MAXIMUM OPENING OF GATE DETAIL

CATCH BASIN TYPE 2 WITH FLOW RESTRICTOR -OIL SEPARATOR

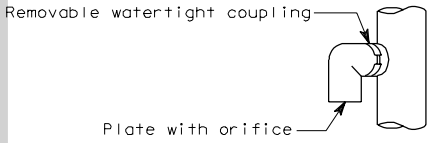

ELBOW DETAIL

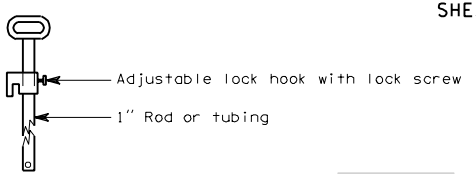

LIFT HANDLE DETAIL

B-3 1 of 1

05-09-97

EFFECTIVE: JANUARY 7, 2002 TO AUGUST 4, 2002

EFFECTIVE: JANUARY 7, 2002 TO AUGUST 4, 2002

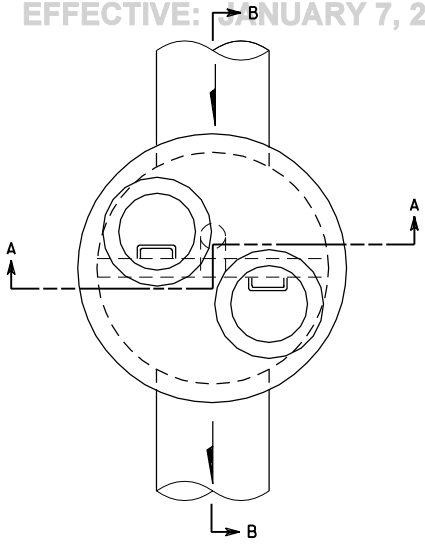

PLAN

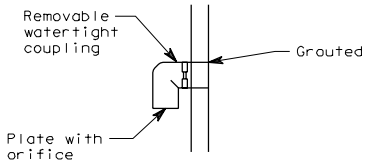

ELBOW DETAIL

NOTES

1. See Contract for size and location of all pipes and orifices.
2. Baffle wall shall have #4 Bar at 12" spacing each way.
3. Precast baffle shall be keyed and grouted in place.
4. Bottom orifice plate shall be galvanized steel with a minimum thickness of 1/4". Attach orifice with 1/2" stainless steel bolts. Orifice plate is not required when only oil separation is desired.
5. Upper flow orifice shall be aluminum, aluminized steel or galvanized steel. Galvanized steel shall have treatment 1.

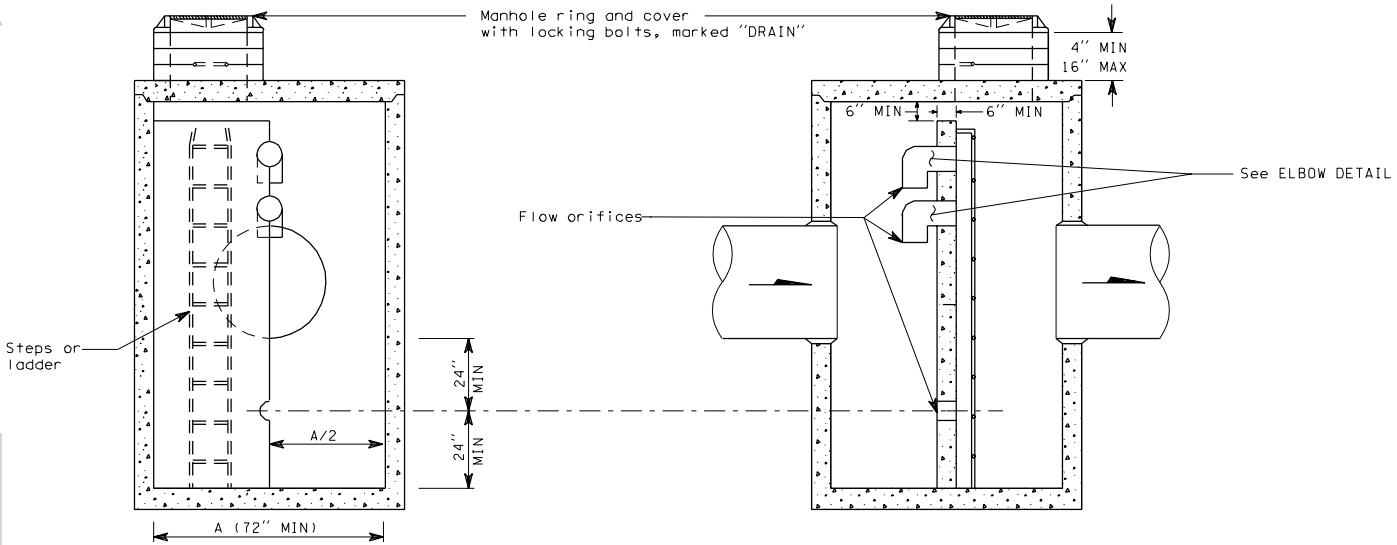

SECTION A-A

SECTION B-B

ELEVATION

CATCH BASIN TYPE 2 WITH BAFFLE TYPE FLOW RESTRICTOR-OIL SEPARATOR

B-3a 1 of 1

05-09-97

EFFECTIVE: JANUARY 7, 2002 TO AUGUST 4, 2002

EFFECTIVE: JANUARY 7, 2002 TO AUGUST 4, 2002

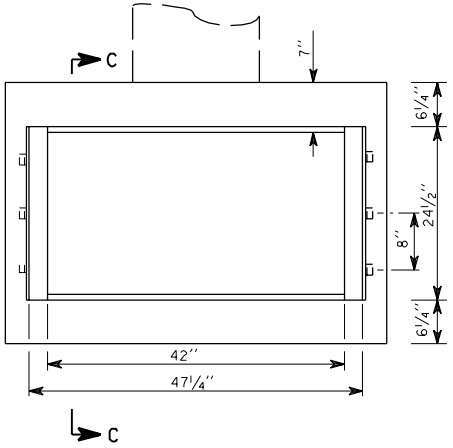

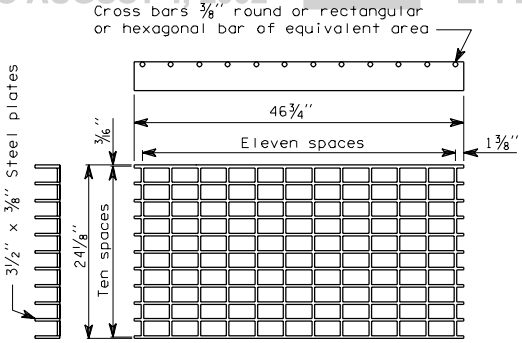

GRATE A

(Weight is approximately 215 Lbs)

NOTES

1. Angles shall be set so that each bearing bar of prefabricated grate shall have full bearing on both ends. The finished top of concrete shall be even with the grate surface.
2. All exposed concrete shall be finished with a ½" radius edger tool.
3. The grade line of the top inside of any pipe shall enter no lower than the grade line of the top inside of the outlet pipe.
4. Culvert or sewer pipes may be set at any angle to the centerline of the highway and may enter the inlet on any side at any reasonable angle, provided the outside of the pipe can be contained between two opposite walls.
5. Grate B will be used only when specified in the Contract.

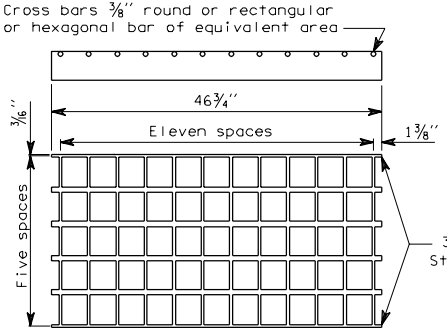

GRATE B

(Weight is approximately 215 Lbs)

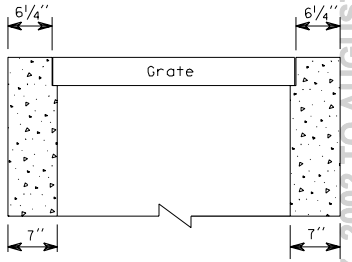

SECTION C-C

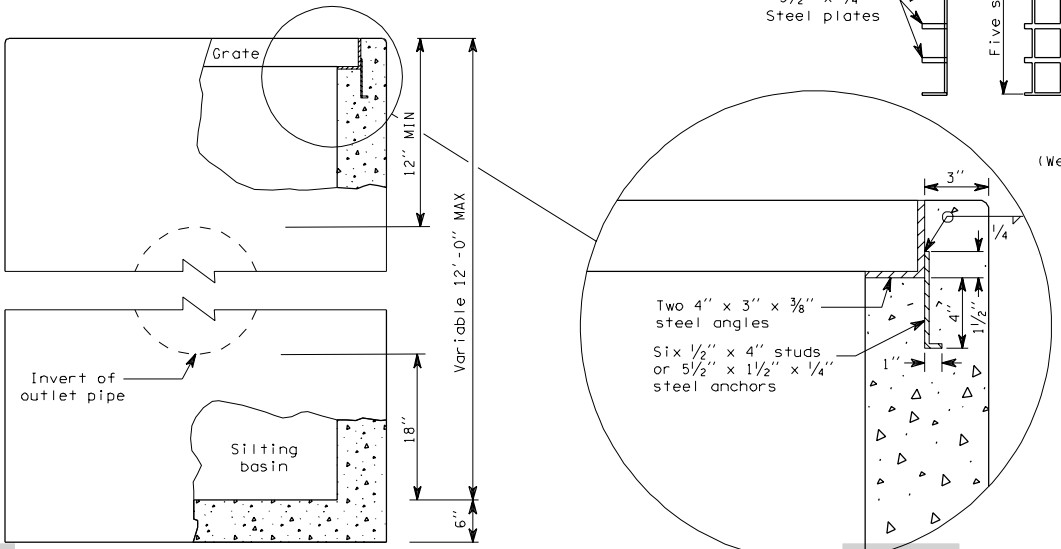

GRATE INLET TYPE 1

B-4b 1 of 1

05-09-97

EFFECTIVE: JANUARY 7, 2002 TO AUGUST 4, 2002

EFFECTIVE: JANUARY 7, 2002 TO AUGUST 4, 2002

MARK	BAR LIST (All dimensions are out to out) LOCATION	QTY	SIZE	LENGTH	
1	Bottom slab and side wall	3		5′-9″	
2	Bottom slab and side wall	2		12′-5″	
3	Bottom slab and side wall	2		7′-2″	
4	Bottom slab and side wall	2		2′-9″	Straight
5	Wall	4		9′-1″	Hoop
6	Side wall	3		14′-6″	Hoop
7	Unit H	2	3	14′-2″	Hoop
8	Unit J	2		14′-2″	Hoop
8	Unit K	3		14′-2″	Hoop
9	Unit K	4		0′-9″	Straight
10	Side wall	8		2′-8″	Straight
11	Bottom slab and side wall	4		7′-5″	
12	Bottom slab and side wall	3		6′-0″	
13	Side wall	4		14′-6″	Hoop

BENDING DIAGRAM

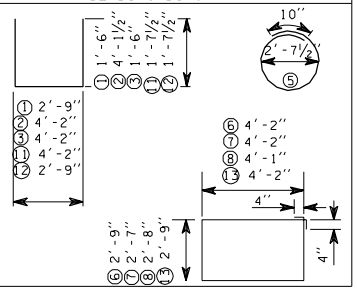

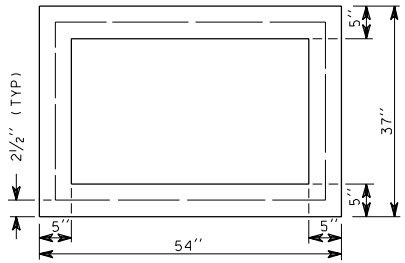

PLAN

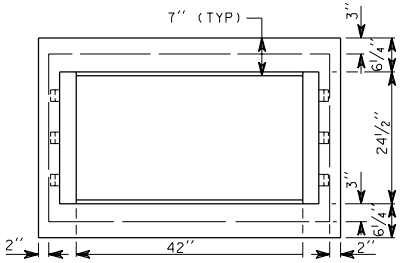

PLAN

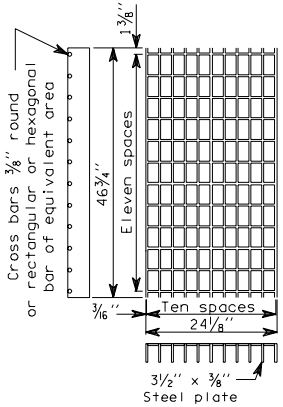

GRATE DETAILS

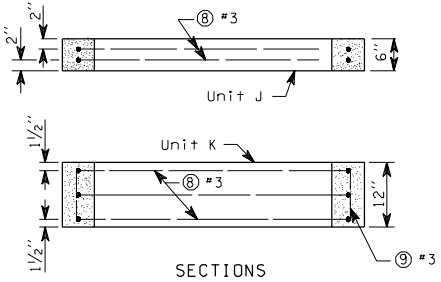

SECTIONS

UNITS J AND K

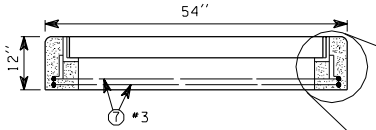

SECTION

UNIT H

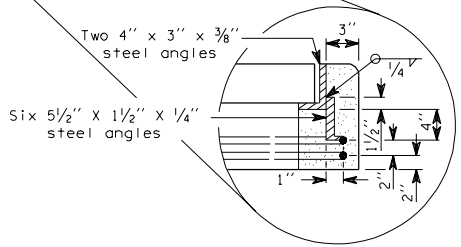

GRATE INLET TYPE 2

B-4c

05-09-97

EFFECTIVE: JANUARY 7, 2002 TO AUGUST 4, 2002

EFFECTIVE: JANUARY 7, 2002 TO AUGUST 4, 2002

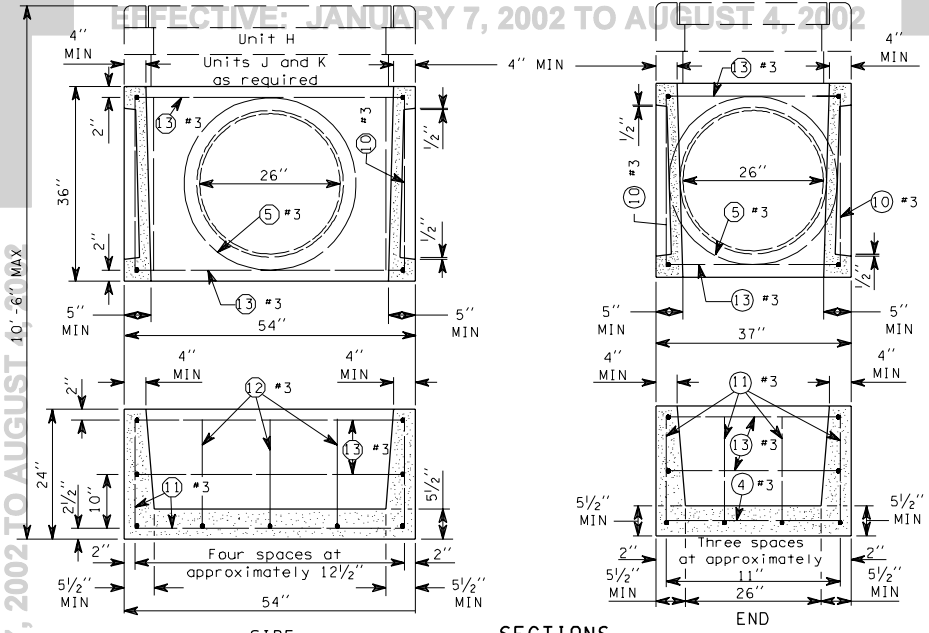

SECTIONS
(Two Piece Base)

NOTES

Angles shall be set so that each bearing bar or prefabricated grate shall have full bearing on both ends. The finished top of concrete shall be even with the grate surface.

Top of inlet grate shall be placed at ground level to present an unobstructed ditch or median section.

All exposed concrete edges shall be finished with a ½" radius edger tool.

Pipes may enter through the knockouts on any side at any reasonable angle, provided the outside of the pipe can be contained between two opposite walls.

The flow line of the outlet pipe shall be 18" minimum above the inside bottom of the inlet structure.

The grade line of the top inside of any inlet pipe shall enter at a point no lower than the grade line of the top inside of the outlet pipe.

Unit H and optional extension units J and K shall be grouted in place to the satisfaction of the Engineer.

All pickup holes shall be grouted full after the basin has been placed.

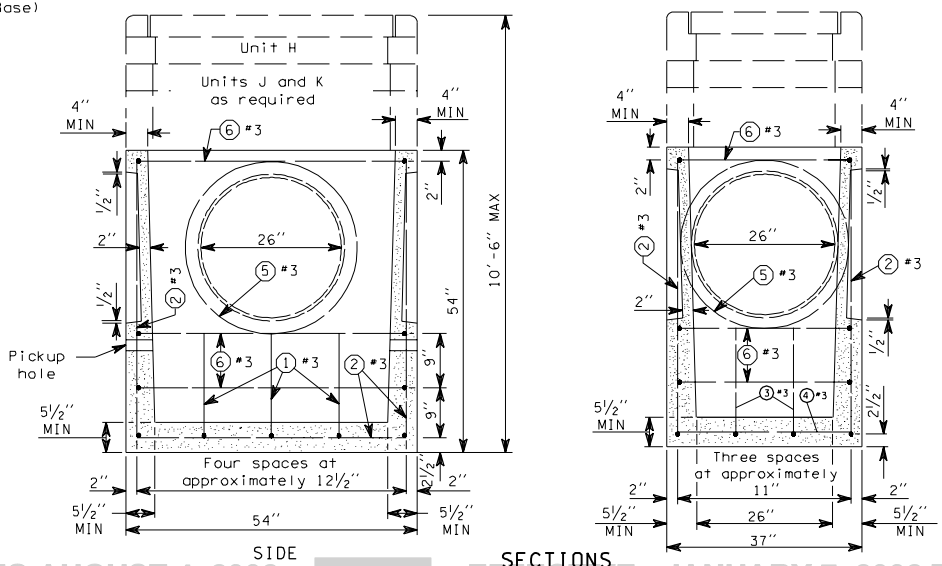

SECTIONS
(One Piece Base)

GRATE INLET TYPE 2

B-4c
05-09-97

EFFECTIVE: JANUARY 7, 2002 TO AUGUST 4, 2002

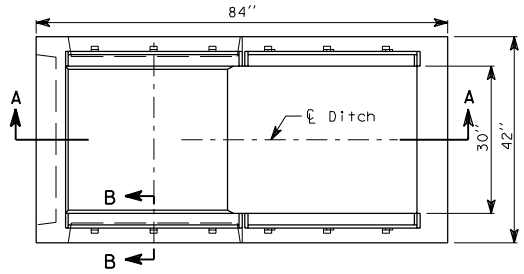

PLAN

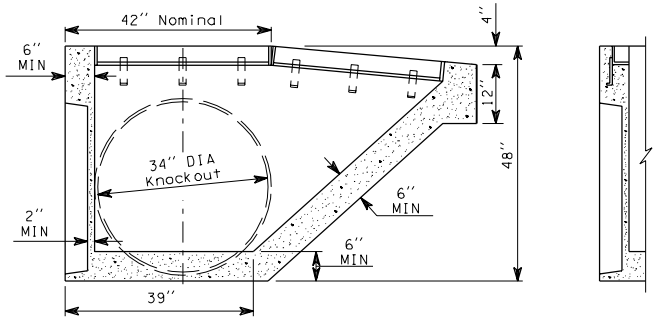

SECTION A-A

SECTION B-B

NOTES

1. Angles shall be set so that each bearing bar on the grate shall have full seating on both ends. The finished top of concrete shall be even with the grate surface.
2. Top of inlet shall be placed at ground level to present an unobstructed ditch or median section.
3. Bevel or round exposed concrete edges ½''.
4. Pipes may enter through the knockouts at any reasonable angle provided the outside of the pipe can be contained within the knockout provided.
5. The grade line of the lowest inlet pipe shall enter the structure at an elevation equal to or higher than the grade line of the outlet pipe.
6. Precast inlet shall be marked with manufacturer's identification inside the structure in some readily accessible location.
7. Inside wall taper for form removal shall not result in any wall section thinner than 6'' except in pipe knockout areas.
8. Amount, type and grade of reinforcing steel is the responsibility of the manufacturer. The manufacturer is responsible for the structure until final acceptance in place with all required knockouts removed.

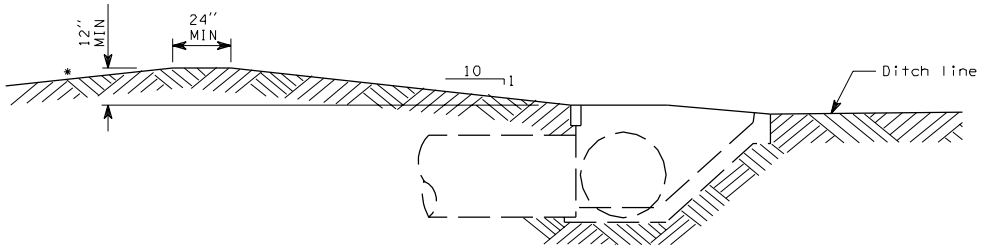

DIKE INSTALLATION FOR PREFERRED SLOPE

*See Contract For Backslope Details

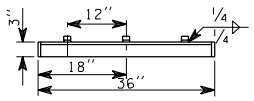

PLAN

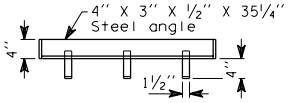

ELEVATION

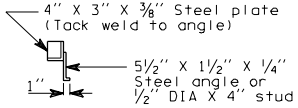

END VIEW

GRATE SUPPORT

(Two required per grate)

DROP INLET TYPE 1

EFFECTIVE: JANUARY 7, 2002 TO AUGUST 4, 2002

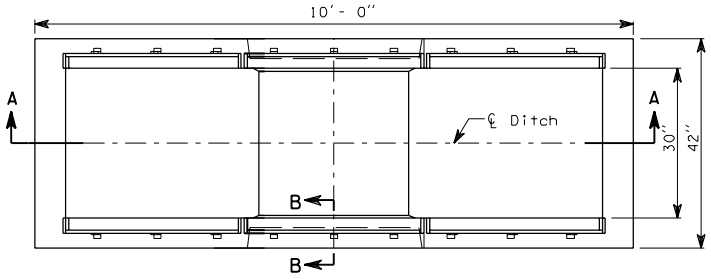

PLAN

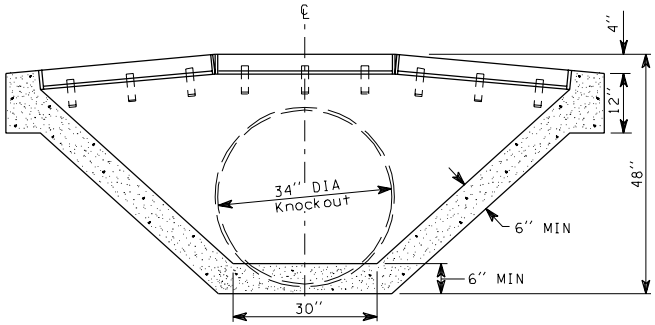

SECTION A-A

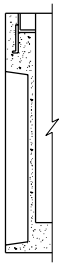

SECTION B-B

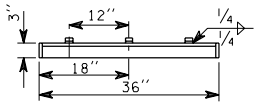

PLAN

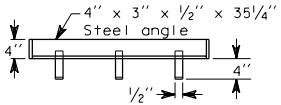

ELEVATION

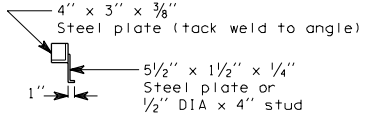

END VIEW

GRATE SUPPORT

(Two required per grate)

NOTES

1. Angles shall be set so that each bearing bar on the grate shall have full seating on both ends. The finished top of concrete shall be even with the grate surface.
2. Top of inlet shall be placed at ground level to present an unobstructed ditch or median section.
3. Bevel or round exposed concrete edges 1/2".
4. Pipes may enter through the knockouts at any reasonable angle provided the outside of the pipe can be contained within the knockout provided.
5. The grade line of the lowest inlet pipe shall enter the structure at an elevation equal to or higher than the grade line of the outlet pipe.
6. Precast inlet shall be marked with the manufacturer's identification inside the structure in some readily accessible location.
7. Inside wall taper for form removal shall not result in any wall section thinner than 6" except in pipe knockout areas.
8. Amount, type and grade of reinforcing steel is the responsibility of the manufacturer. The manufacturer is responsible for the structure until final acceptance in place with all required knockouts removed.

DROP INLET TYPE 2

EFFECTIVE: JANUARY 7, 2002 TO AUGUST 4, 2002

EFFECTIVE: JANUARY 7, 2002 TO AUGUST 4, 2002

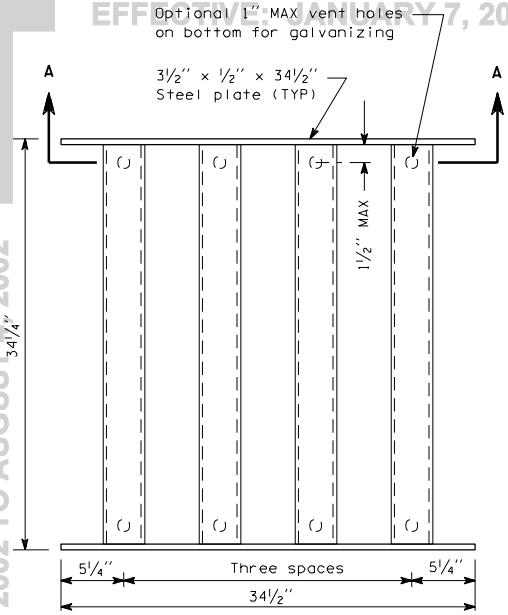

TYPE 1

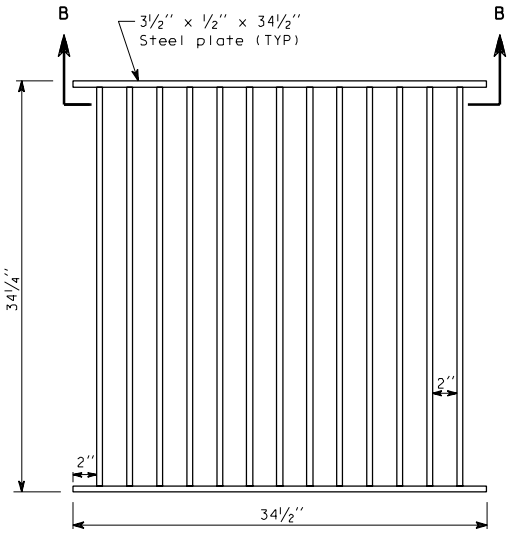

TYPE 2

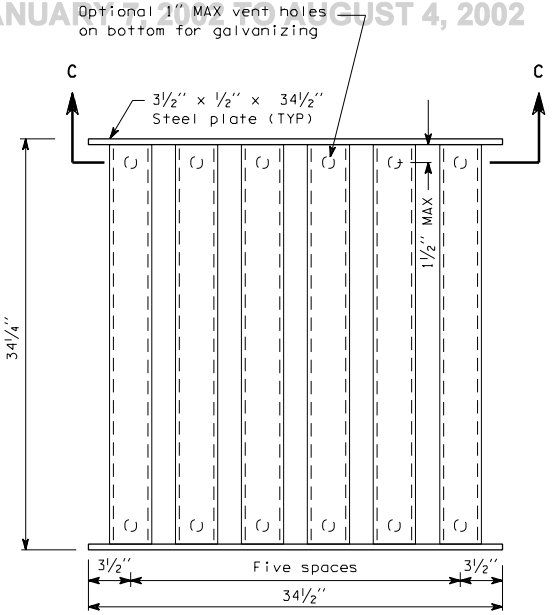

TYPE 3

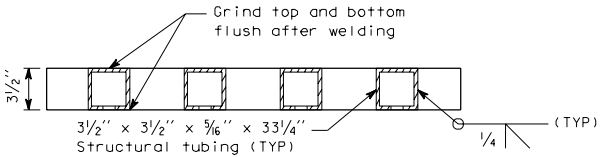

SECTION A-A

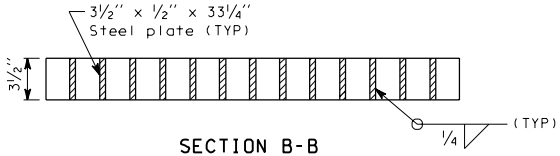

SECTION B-B

DROP INLET GRATES

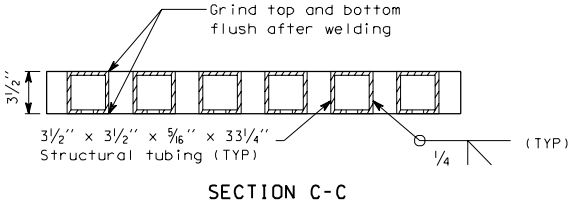

SECTION C-C

EFFECTIVE: JANUARY 7, 2002 TO AUGUST 4, 2002

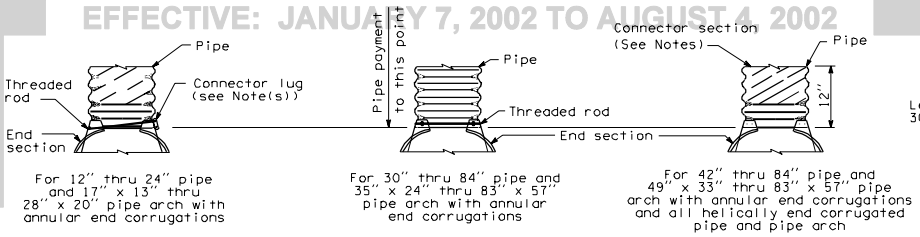

For 12" thru 24" pipe and 17" x 13" thru 28" x 20" pipe arch with annular end corrugations

TYPE 1

For 30" thru 84" pipe and 35" x 24" thru 83" x 57" pipe arch with annular end corrugations

TYPE 2

For 42" thru 84" pipe and 49" x 33" thru 83" x 57" pipe arch with annular end corrugations and all helically end corrugated pipe and pipe arch

TYPE 3

DESIGN A
CONNECTION TO METAL PIPE

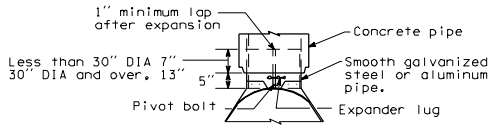

DESIGN B
CONNECTION TO CONCRETE PIPE INLET END ONLY

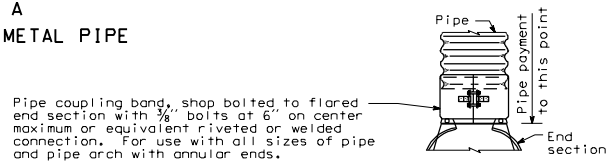

DESIGN C
CONNECTION TO METAL PIPE OR CONCRETE PIPE, OUTLET ONLY

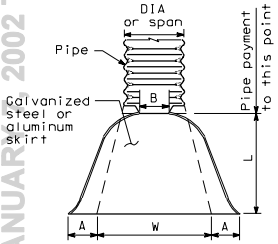

PLAN

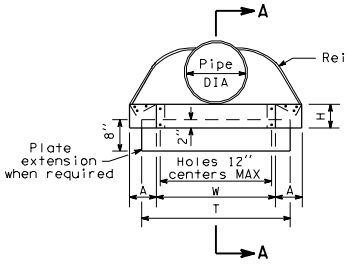

ELEVATION
PIPE

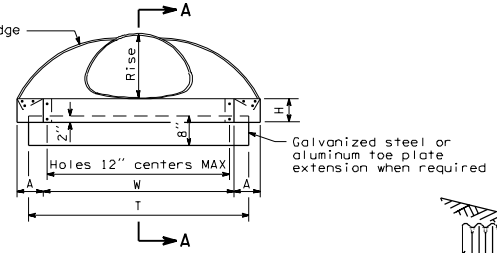

ELEVATION
PIPE ARCH

PIPE AND PIPE ARCH

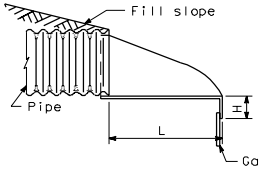

SECTION A-A
PIPE AND PIPE ARCH

NOTES

1. The diameter of the end section of Design B shall match the inside diameter of the concrete pipe.
2. Skirt sections shall be made in one piece for round pipe with a diameter of 12" to 24" inclusive and for pipe arches with a rise of 13" to 20" inclusive. Skirt sections for larger sizes of pipes may be multiple pieces in conformance with the tabulated values shown.
3. Design A end sections for 42" thru 84" diameter and 49" x 33" thru 83" x 57" arch with annular corrugations and all helically corrugated pipe arch include one foot of pipe length as a connector section. The connector section shall be attached to the end section by welds, rivets or bolts and shall be the same thickness as the end section.
4. Design C may be used in lieu of Design A for all metal pipe sizes except as noted. Coupling bands may be any acceptable type for the pipe specified.
5. Multiple panel skirts shall have lap seams which are to be tightly joined by 3/8" galvanized rivets or bolts.
6. For 60" thru 84" diameter pipe and 77" x 52" and 83" x 57" pipe arch, the reinforced end shall be supplemented with galvanized stiffener angles of the following sizes;

   60" thru 72" diameter pipe
   (2" x 2" x 1/4" galvanized angle)

   77" x 52" and 83" x 57" pipe arch
   78" and 84" diameter pipe
   (2" x 2" x 1/4" galvanized angle)

   The above galvanized angles shall be attached by 3/8" galvanized nuts and bolts.
7. Angle reinforcement will be placed under the center panel seams on the 77" x 52" and 83" x 57" pipe arch sizes.
8. As an alternative to the connector lug and threaded rod used on 12" thru 24" culvert pipe, the attachment may be made with a 1" wide strap, 16 gage galvanized steel fastened with a 1/2" diameter, 6" long galvanized bolt and one squarehead nut.

FLARED END SECTIONS

PIPE DIA (Inches)	THICKNESS (Inches)		DIMENSION (Inches) A 1" Toler	B MAX	H 1" Toler	L 1½" Toler	W 2" Toler	T 2" Toler	Skirt	END SECTION SLOPE
	Steel	Alum								
12	0.064	0.060	6	6	6	21	24	34	1 Pc.	2½:1
15	0.064	0.060	7	8	6	26	30	40	1 Pc.	2½:1
18	0.064	0.060	8	10	6	31	36	46	1 Pc.	2½:1
21	0.064	0.060	9	12	6	36	42	52	1 Pc.	2½:1
24	0.064	0.075	10	13	6	41	48	58	1 Pc.	2½:1
30	0.079	0.075	12	16	8	51	60	70	2 Pc.	2½:1
36	0.079	0.105	14	19	9	60	72	94	2 Pc.	2½:1
42	0.109	0.105	16	22	11	69	84	106	2 Pc.	2½:1
48	0.109	0.105	18	27	12	78	90	112	2 Pc.	2½:1
54	0.109	——	18	30	12	84	102	122	2 Pc.	2½:1
60	0.109 / 0.138	——	18	33	12	87	114	134	3 Pc.	1¾:1
66	0.109 / 0.138	——	18	36	12	87	120	142	3 Pc.	1½:1
72	0.109 / 0.138	——	18	39	12	87	126	146	3 Pc.	1⅓:1
78	0.109 / 0.138	——	18	42	12	87	132	152	3 Pc.	1¼:1
84	0.109 / 0.138	——	18	45	12	87	138	158	3 Pc.	1⅛:1

PIPE ARCH DIMENSIONS (Inches)		THICKNESS (Inches)		DIMENSIONS (Inches) A 1" Toler	B MAX	H 1" Toler	L 1½" Toler	W 2" Toler	T 2" Toler	Skirt	END SECTION SLOPE
Span	Rise	Steel	Alum								
17	13	0.064	0.060	7	9	6	19	30	40	1 Pc.	2½:1
21	15	0.064	0.060	7	10	6	23	36	46	1 Pc.	2½:1
24	18	0.064	0.060	8	12	6	28	42	52	1 Pc.	2½:1
28	20	0.064	0.075	9	14	6	32	48	58	1 Pc.	2½:1
35	24	0.079	0.075	10	16	6	39	60	70	1 Pc.	2½:1
42	29	0.079	0.105	12	18	8	46	75	85	2 Pc.	2½:1
49	33	0.109	0.105	13	21	9	53	85	103	2 Pc.	2½:1
57	38	0.109	0.105	18	26	12	63	90	114	3 Pc.	2½:1
64	43	0.109	0.105	18	30	12	70	102	130	3 Pc.	2½:1
71	47	0.109 / 0.135	0.135	18	33	12	77	114	146	3 Pc.	2½:1
77	52	0.109 / 0.135	——	18	36	12	77	126	152	3 Pc.	1¾:1
83	57	0.109 / 0.135	——	18	39	12	77	138	158	3 Pc.	1½:1

EFFECTIVE: JANUARY 7, 2002 TO AUGUST 4, 2002

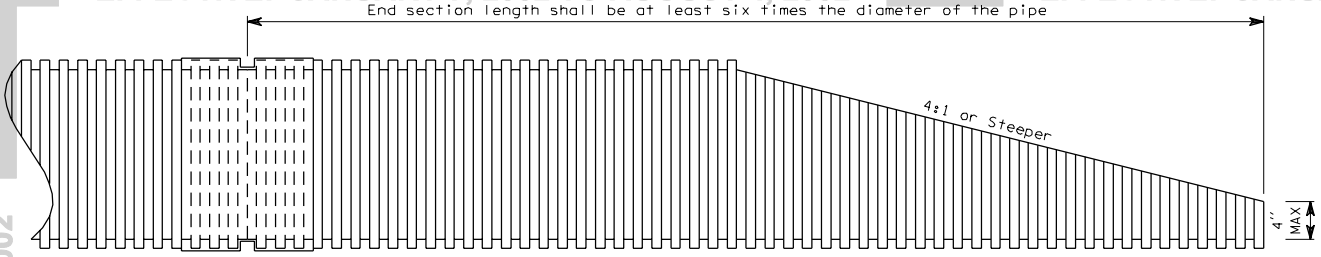

THERMOPLASTIC PIPE

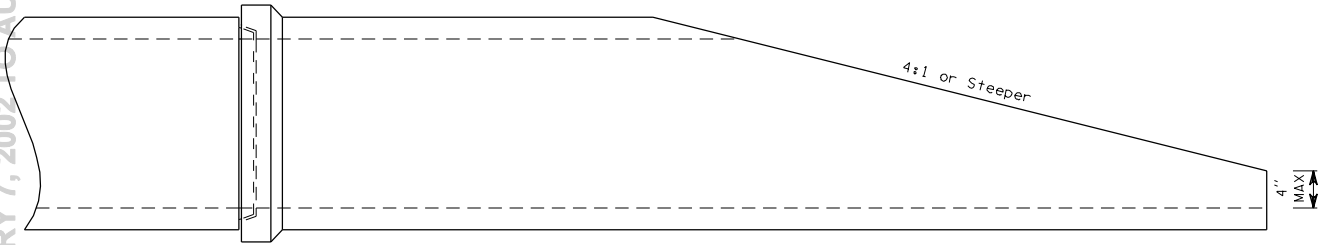

CONCRETE PIPE

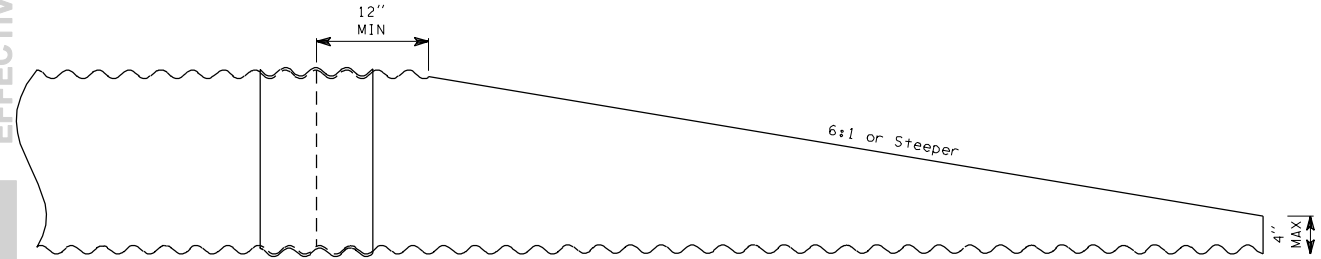

METAL PIPE

NOTES

1. The culvert ends shall be beveled to match the embankment or ditch slope, without exceeding the limits shown on this plan.

2. Field cut of culvert ends is permitted, when approved by the Engineer. All field cut culvert pipe shall be treated with treatment as shown in the Standard Specifications or General Special Provisions.

BEVELED END SECTIONS

EFFECTIVE: JANUARY 7, 2002 TO AUGUST 4, 2002

EFFECTIVE: JANUARY 7, 2002 TO AUGUST 4, 2002

NOTES

1. Span and rise dimensions are nominal and are measured to the inside crests of corrugations.
2. Allowable heights of cover shall be within the limits indicated in the table included hereon. Minimums and maximums are shown.
3. Unless indicated otherwise a 10" depth (over the inside crests of corrugatons) of earth shall be placed in the invert of the Structural Plate Underpass, Design 1, for its full width and length. The earth shall consist of natural occurring materials available in the vicinity of the structural plate underpass installation.
4. Designed for H-20 live load and maximum allowable soil pressure of 6 Kips per square foot.

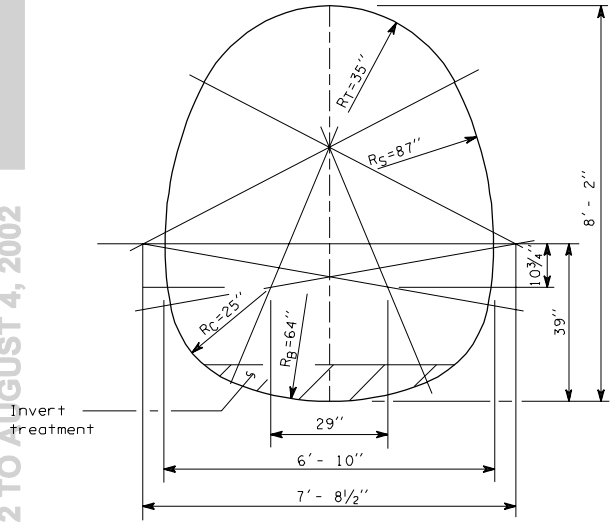

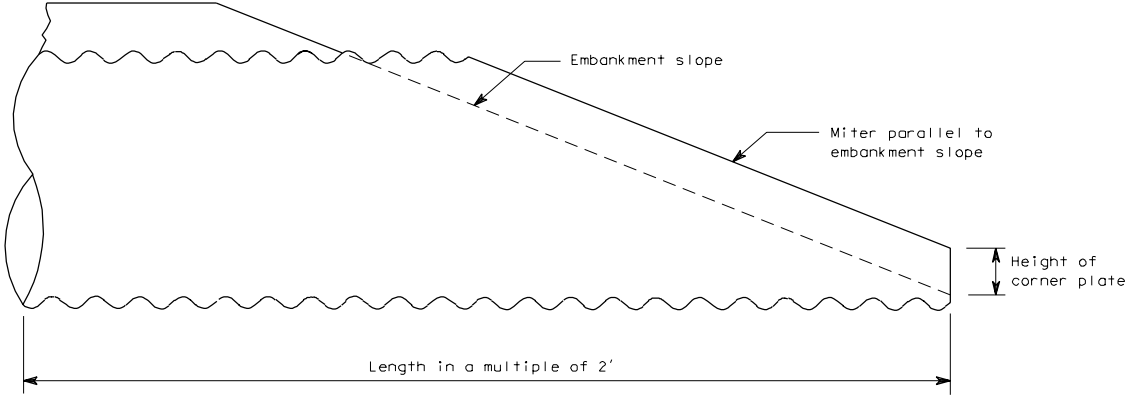

ELEVATION

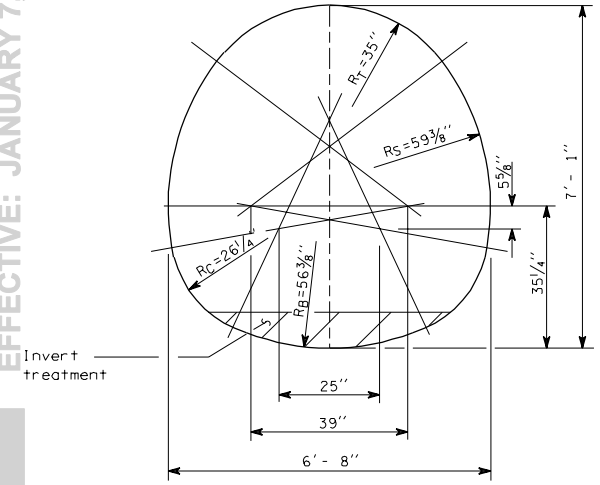

SECTION

ALLOWABLE HEIGHTS OF COVER		
SPAN	RISE	12 GAGE THICK METAL
6'- 8"	7'- 1"	4'- 26'
6'- 10"	8'- 2"	5'- 25'

CORRUGATED METAL

STRUCTURAL PLATE UNDERPASS DESIGN 1

EFFECTIVE: JANUARY 7, 2002 TO AUGUST 4, 2002

EFFECTIVE: JANUARY 7, 2002 TO AUGUST 4, 2002

ALLOWABLE HEIGHTS OF COVER IN FEET				
SPAN	RISE	METAL THICKNESS		
		12 GAGE	10 GAGE	8 GAGE
12'- 2"	11'- 0"	3 - 14	3 - 20	3 - 26
12'- 11"	11'- 3"	3 - 13	3 - 19	3 - 25
13'- 2"	11'- 11"	4 - 13	4 - 19	4 - 24
13'- 10"	12'- 3"	4 - 12	4 - 18	4 - 23
14'- 1"	12'- 10"	4 - 12	4 - 18	4 - 23
14'- 6"	13'- 6"	4 - 11	4 - 17	4 - 22
14'- 10"	14'- 0"	4 - 11	4 - 17	4 - 21
15'- 6"	14'- 4"	4 - 11	4 - 16	4 - 20
15'- 9"	15'- 1"	--	4 - 16	4 - 20
16'- 4"	15'- 5"	--	4 - 15	4 - 19
16'- 5"	16'- 1"	--	4 - 15	4 - 19
16'- 9"	16'- 3"	--	4 - 15	4 - 19
17'- 3"	17'- 0"	--	4 - 14	4 - 18
18'- 4"	16'- 11"	--	4 - 13	4 - 18
19'- 2"	17'- 2"	--	--	4 - 17
19'- 6"	17'- 7"	--	--	4 - 17
20'- 4"	17'- 10"	--	--	4 - 16

CORRUGATED METAL

NOTES

1. Span and rise dimensions are measured to the inside crests of corrugations and may vary slightly depending on manufacturer.

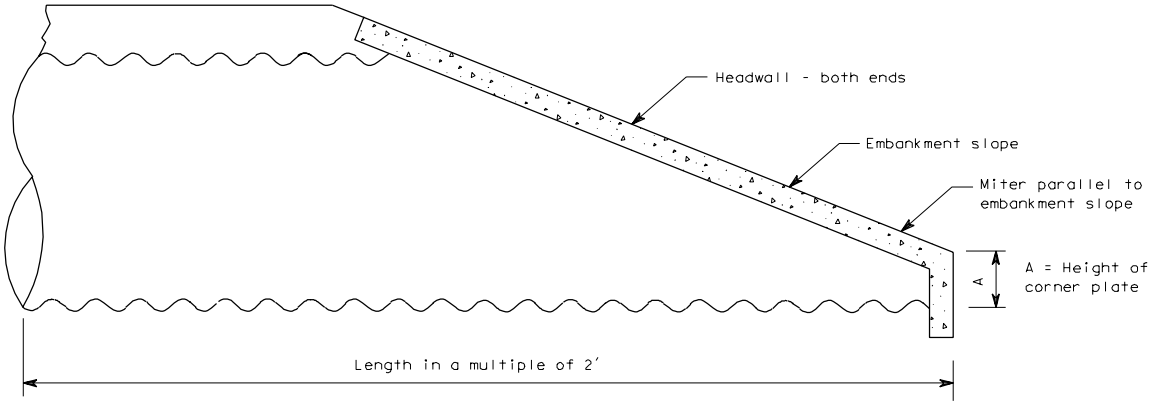

ELEVATION

DIMENSIONS										
SPAN	RISE	ANGLES				RADII (inches)				A (inches)
		AT°	AS°	AC°	AB°	RT	RS	RC	RB	
12'- 2"	11'- 0"	52	42	65	21	68	93	38	134	44
12'- 11"	11'- 3"	52	41	65	21	73	95	38	144	45
13'- 2"	11'- 11"	52	43	65	19	73	103	38	159	43
13'- 10"	12'- 3"	53	41	65	20	77	108	38	164	45
14'- 1"	12'- 10"	53	44	65	18	77	115	38	182	43
14'- 6"	13'- 6"	56	38	65	21	78	131	38	174	46
14'- 10"	14'- 0"	55	41	65	19	79	136	38	192	44
15'- 6"	14'- 4"	55	40	65	19	84	138	38	201	46
15'- 9"	15'- 1"	56	41	65	18	83	150	38	212	45
16'- 4"	15'- 5"	57	39	65	19	86	157	38	215	47
16'- 5"	16'- 1"	58	42	65	14	88	158	38	271	41
16'- 9"	16'- 3"	58	40	65	17	89	167	38	247	43
17'- 3"	17'- 0"	57	38	65	19	90	174	47	215	55
18'- 4"	16'- 11"	55	42	65	18	99	157	47	249	53
19'- 2"	17'- 2"	54	43	65	18	105	156	47	264	53
19'- 6"	17'- 7"	53	46	65	16	107	158	47	297	50
20'- 4"	17'- 10"	53	46	65	16	113	156	47	314	52

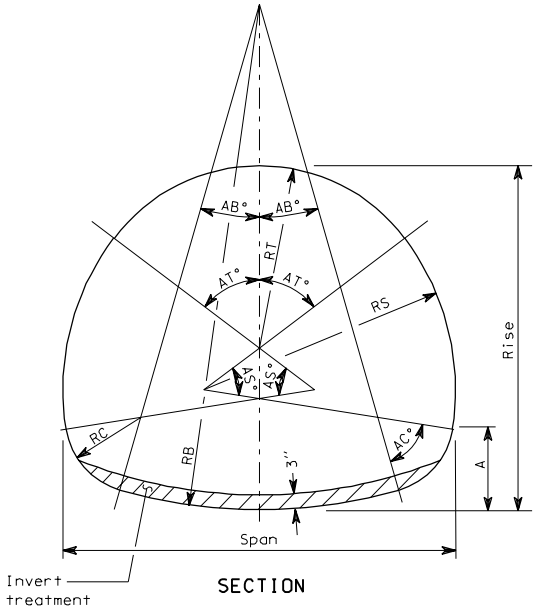

SECTION

STRUCTURAL PLATE UNDERPASS DESIGN 2

B-8a 1 of 1

07-25-97

EFFECTIVE: JANUARY 7, 2002 TO AUGUST 4, 2002

EFFECTIVE: JANUARY 7, 2002 TO AUGUST 4, 2002

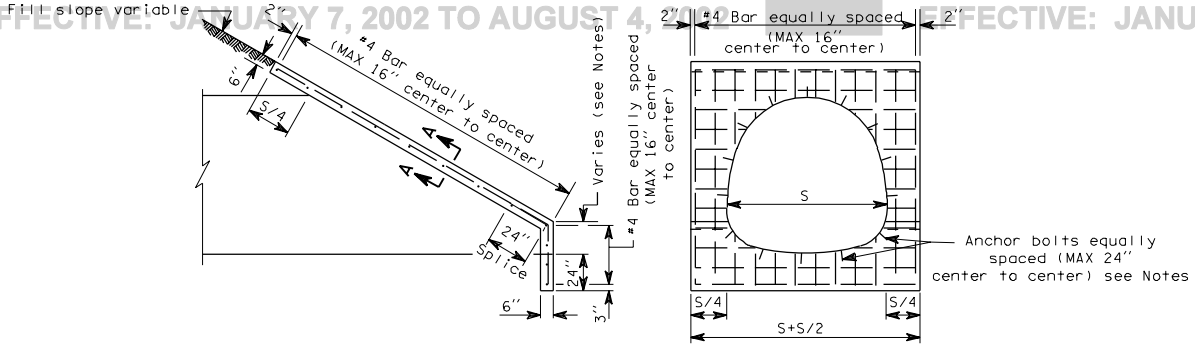

STRUCTURAL PLATE PIPE ARCHES AND UNDERPASSES

NOTES

1. The variable dimension indicated for the height of step for step mitered pipes shall conform to manufacturers recommendations unless specified differently on the plans or in the special provisions.
2. Reinforcing steel shall have 1½" clear cover to all concrete surfaces.
3. Headwalls for concrete culvert pipe may omit anchor bolt attachment.
4. When steel pipe safety bars ar used, headwall thickness shall be increased to 8".

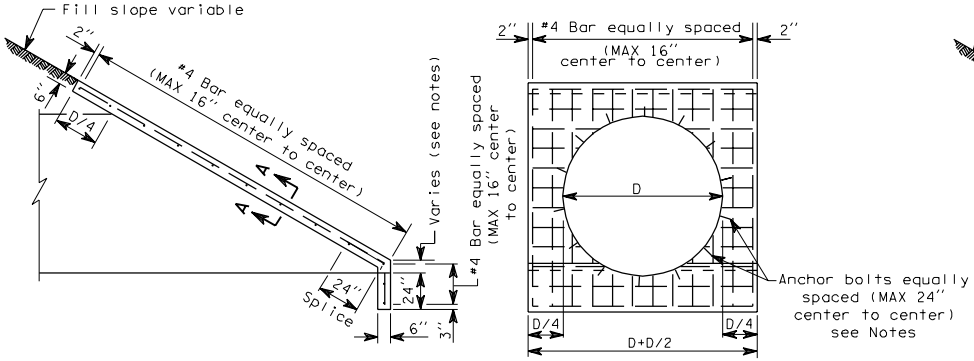

STEP MITERED PIPE

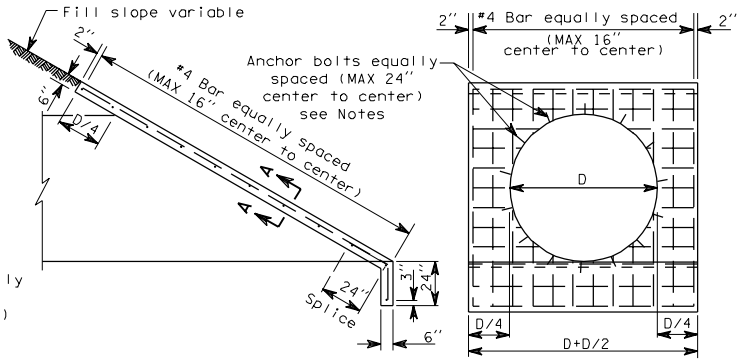

FULL MITERED PIPE

PIPES AND STRUCTURAL PLATE PIPES

HEADWALLS FOR CULVERT PIPES

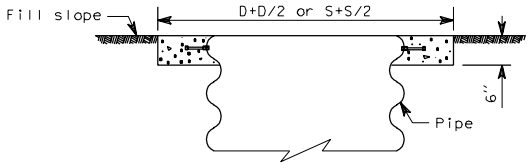

SECTION A-A

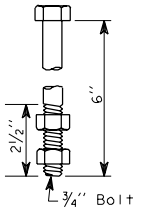

ANCHOR BOLT DETAILS

B-9 1 of 1

05-09-97

EFFECTIVE: JANUARY 7, 2002 TO AUGUST 4, 2002

EFFECTIVE: JANUARY 7, 2002 TO AUGUST 4, 2002

NOTES

1. Sockets shall be 3" extra strong steel pipe (3½" OD). Sockets must be the proper angle to allow safety bar to be easily removed.
2. Safety Bar shall be 4" extra strong (4½" OD) steel pipe.
3. Bevel culvert pipe to match side slope.

Culvert DIA	Required number of pipes
Up to 36"	None
42" - 60"	1
66" - 90"	2
96" - 120"	3

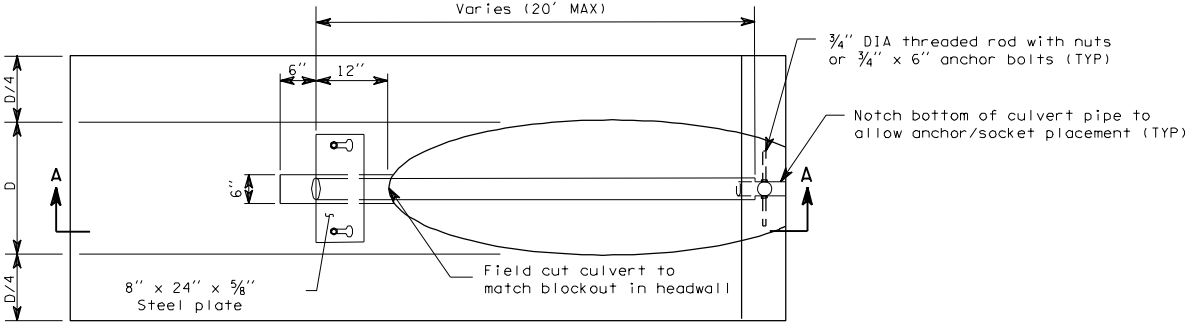

TOP VIEW

Culvert is perpendicular to roadway
Headwall is placed parallel to roadway

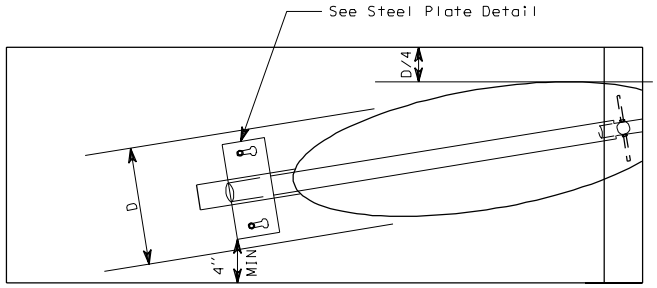

TOP

Culvert is skewed to roadway
Headwall is placed parallel to roadway

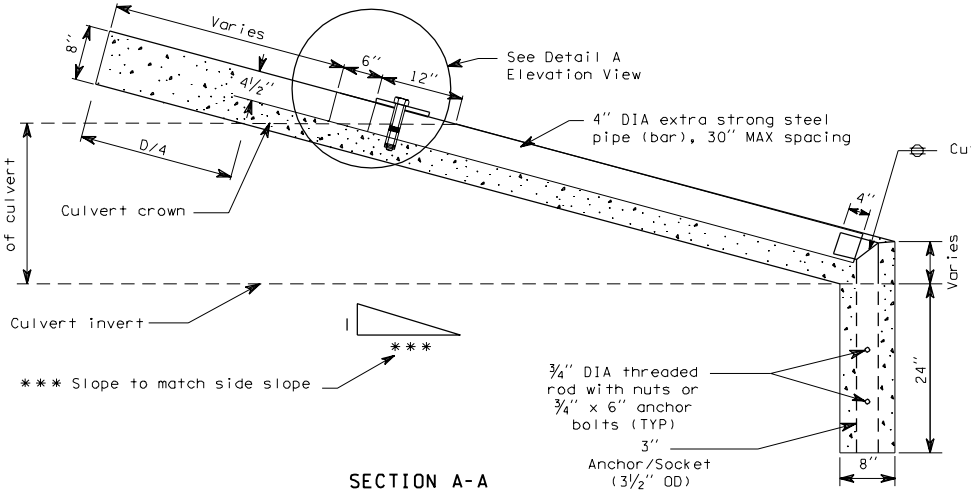

SECTION A-A

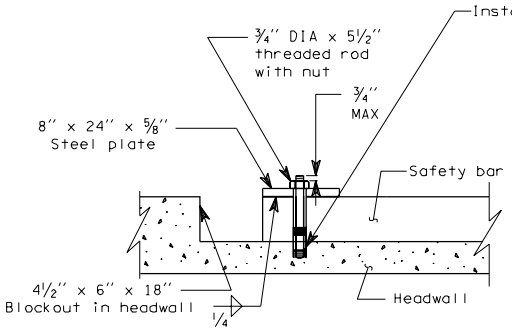

ELEVATION

DETAIL A

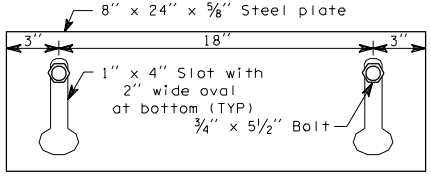

STEEL PLATE

TYPE 1 SAFETY BARS FOR STEPPED CULVERT PIPE OR PIPE ARCH

EFFECTIVE: JANUARY 7, 2002 TO AUGUST 4, 2002

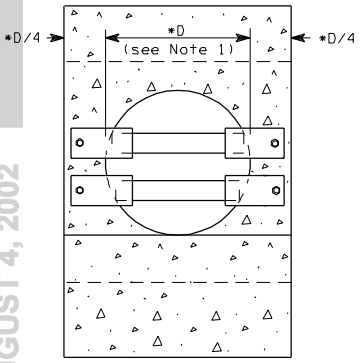

FRONT VIEW OF
CROSS ROAD CULVERT

* D = Inside DIA of culvert
** Slope to match side slope, 6:1 preferred, not steeper than 4:1

NOTES

1. Maximum span width is 54".
2. Spacing between safety bars, or between bars and the culvert crown shall be equal spaces of 30" maximum.

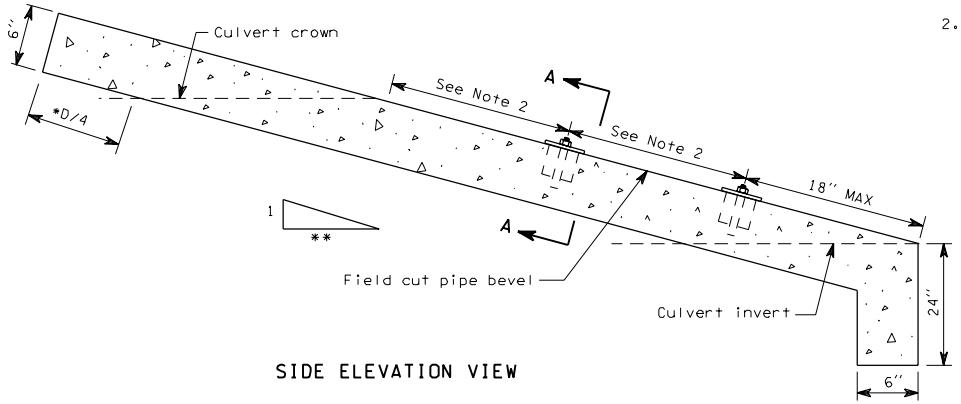

SIDE ELEVATION VIEW

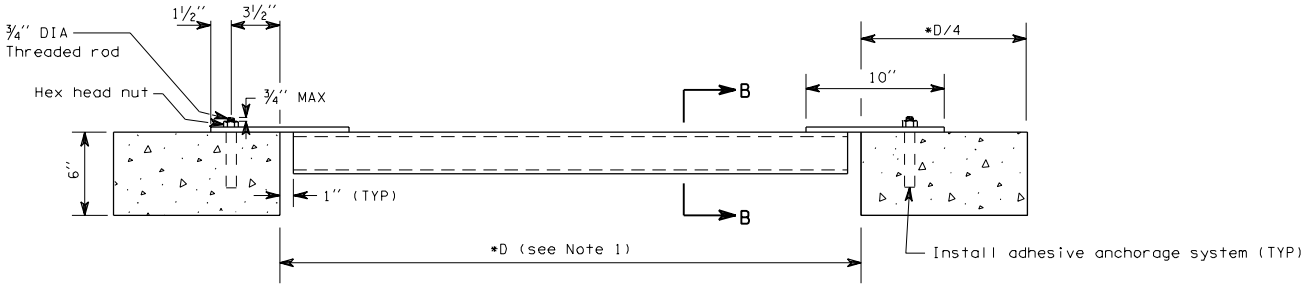

SECTION A-A

TYPE 2 SAFETY BARS FOR
CULVERT PIPE OR PIPE
ARCH (ON CROSS ROAD)

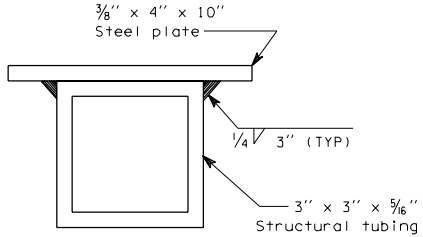

SECTION B-B

EFFECTIVE: JANUARY 7, 2002 TO AUGUST 4, 2002

EFFECTIVE: JANUARY 7, 2002 TO AUGUST 4, 2002

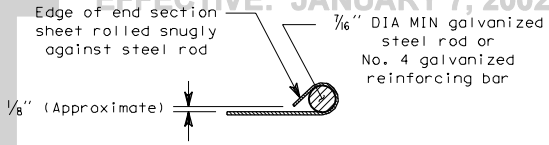

SECTION A-A

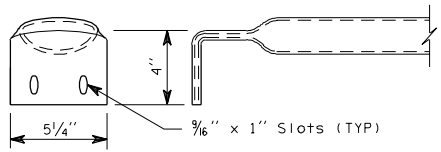

SAFETY BAR END TREATMENT DETAIL

3" Galvanized pipe: flatten end, then bend outside 4" to match end section sides

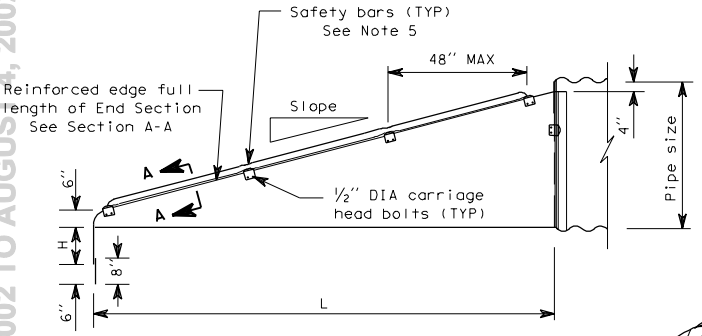

SIDE VIEW

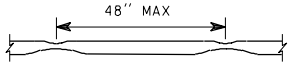

CROSS DRAINAGE BAR DETAIL

NOTES

1. All pipes or pipe arches attach as shown on connector details.
2. When required, toe plate extension shall be the same gage end section. Dimensions shall be 8" high and 6" less than overall width.
3. Cross drainage bar and safety bars shall be 3" Schedule 40 galvanized steel pipe. Bars shall be placed a maximum 30" apart.
4. Slotted holes for safety bar attachment shall be provided on end sections.
5. Number of safety bars required will vary depending upon the length of the end section.

METAL END SECTIONS FOR CIRCULAR PIPES										
Pipe DIA (Inches)	Minimum Thickness		Dimensions (Inches)				L Dimensions			
	Inches	Gage	A	H	W	Overall Width	Slope	Length (Inches)	Slope	Length (Inches)
36	.109	12	12	9	42	66	4:1	104	6:1	156
42	.109	12	16	12	48	80	4:1	128	6:1	192
48	.109	12	16	12	54	86	4:1	152	6:1	228
54	.109	12	16	12	60	92	4:1	176	6:1	264
60	.109	12	16	12	66	98	4:1	200	6:1	300

* Safety Bars are installed on end section when span is greater than 36"

METAL END SECTIONS FOR ARCHED PIPES												
Equiv. DIA (Inches)	Inches		Minimum Thickness		Dimensions (Inches)				L Dimensions			
	Span	Rise	Inches	Gage	A	H	W	Overall Width	Slope	Length (Inches)	Slope	Length (Inches)
30	*35	24	.079	14	12	9	*41	65	4:1	56	6:1	84
36	42	29	.109	12	12	9	48	72	4:1	76	6:1	114
42	49	33	.109	12	16	12	55	87	4:1	92	6:1	138
48	57	38	.109	12	16	12	63	95	4:1	112	6:1	168
54	64	43	.109	12	16	12	70	102	4:1	132	6:1	198
60	71	47	.109	12	16	12	77	109	4:1	148	6:1	222
72	83	57	.109	12	16	12	89	121	4:1	188	6:1	282

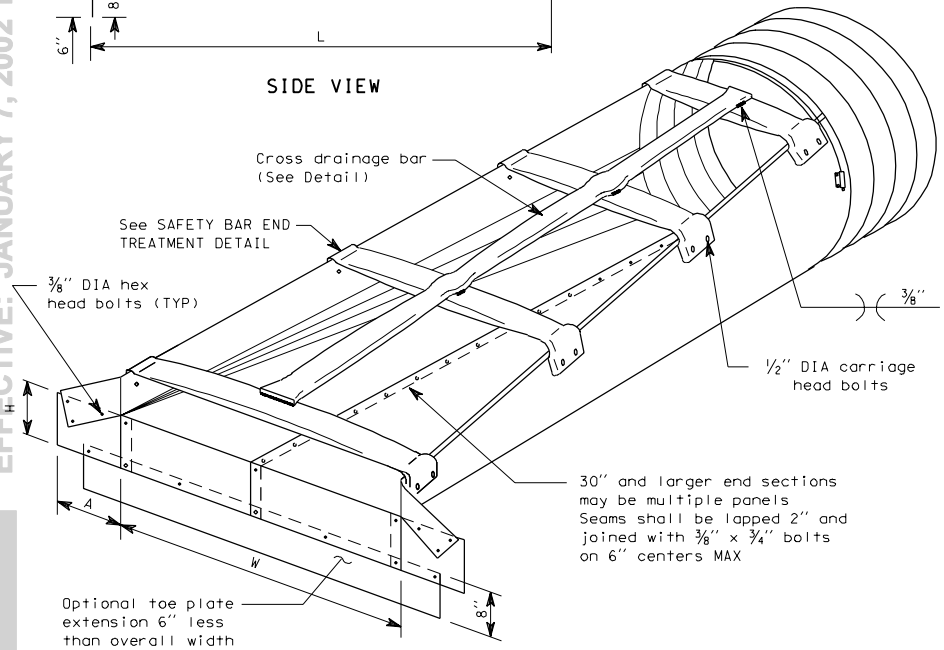

CROSS DRAINAGE STRUCTURE

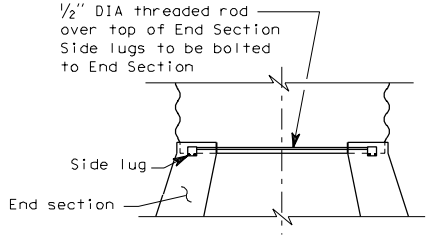

CONNECTOR DETAILS

TAPERED END SECTION WITH TYPE 3 SAFETY BARS

EFFECTIVE: JANUARY 7, 2002 TO AUGUST 4, 2002

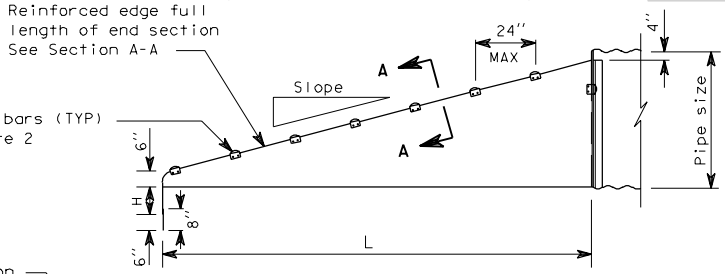

SIDE VIEW

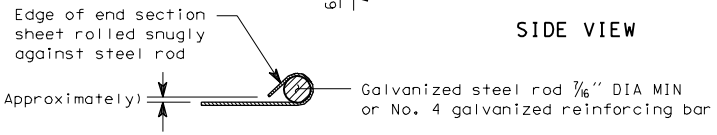

SECTION A-A

NOTES

1. Connection is a 1/2" DIA threaded rod over top of end section; side lugs and bolted to end section. On 15" through 24" pipe, an alternative may be a 1" wide strap 16 gage or 12 gage galvanized steel, fastened with a 1/2" DIA, 6" long galvanized bolt and square head nut.

2. Number of safety bars required will vary depending upon the length of the end section.

METAL END SECTIONS FOR CIRCULAR PIPES

Pipe DIA (Inches)	Minimum Thickness		Dimensions (Inches)				L Dimensions			
	Inches	Gage	A	H	W	Overall Width	Slope	Length (Inches)	Slope	Length (Inches)
15	.064	16	8	6	21	37	4:1	20	6:1	30
18	.064	16	8	6	24	40	4:1	32	6:1	48
21	.064	16	8	6	27	43	4:1	44	6:1	66
24	.064	16	8	6	30	46	4:1	56	6:1	84
30	.109	12	12	9	36	60	4:1	80	6:1	120
36	.109	12	12	9	42	66	4:1	104	6:1	156
42	.109	12	16	12	48	80	4:1	128	6:1	192
48	.109	12	16	12	54	86	4:1	152	6:1	228
54	.109	12	16	12	60	92	4:1	176	6:1	264
60	.109	12	16	12	66	98	4:1	200	6:1	300

METAL END SECTIONS FOR ARCHED PIPES

Equiv. DIA (Inches)	Inches		Minimum Thickness		Dimensions (Inches)				L Dimensions			
	Span	Rise	Inches	Gage	A	H	W	Overall Width	Slope	Length (Inches)	Slope	Length (Inches)
18	21	15	.064	16	8	6	27	43	4:1	20	6:1	30
21	24	18	.064	16	8	6	30	46	4:1	32	6:1	48
24	28	20	.064	16	8	6	34	50	4:1	40	6:1	60
30	35	24	.079	14	12	9	41	65	4:1	56	6:1	84
36	42	29	.109	12	12	9	48	72	4:1	76	6:1	114
42	49	33	.109	12	16	12	55	87	4:1	92	6:1	138
48	57	38	.109	12	16	12	63	95	4:1	112	6:1	168
54	64	43	.109	12	16	12	70	102	4:1	132	6:1	198
60	71	47	.109	12	16	12	77	109	4:1	148	6:1	222
72	83	57	.109	12	16	12	89	121	4:1	188	6:1	282

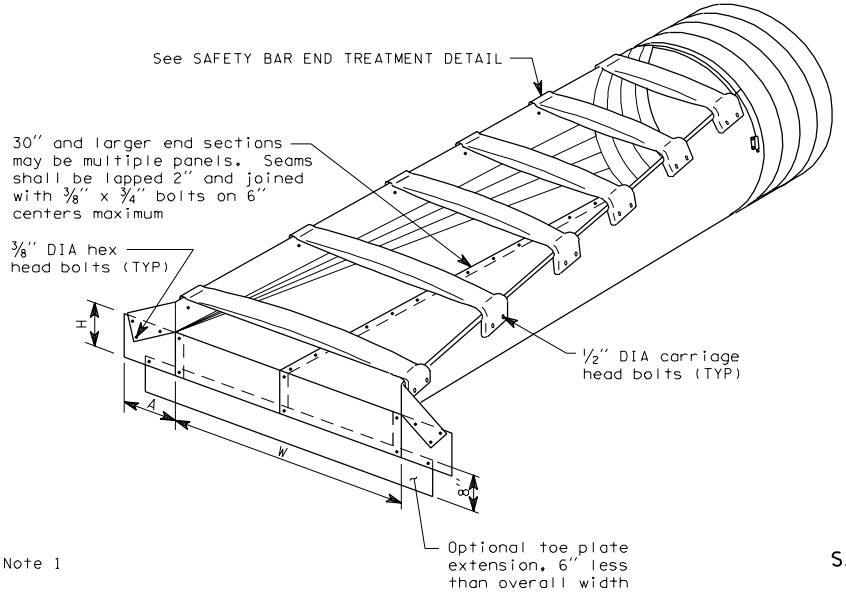

CROSS ROAD DRAINAGE STRUCTURE

TAPERED END SECTION WITH TYPE 4 SAFETY BARS (ON CROSS ROAD)

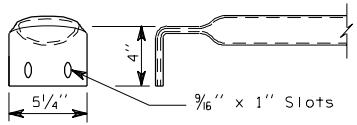

3" Galvanized pipe: Flatten end, then bend outside 4" to match end section sides

SAFETY BAR END TREATMENT DETAIL

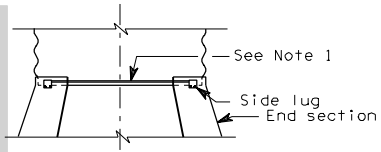

CONNECTOR DETAILS

EFFECTIVE: JANUARY 7, 2002 TO AUGUST 4, 2002

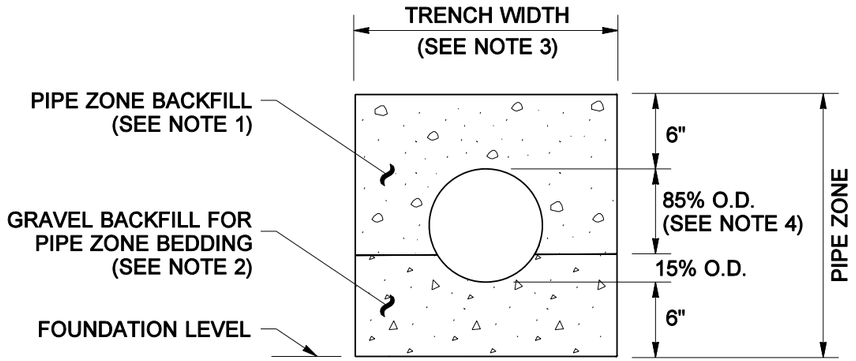

CONCRETE AND DUCTILE IRON PIPE

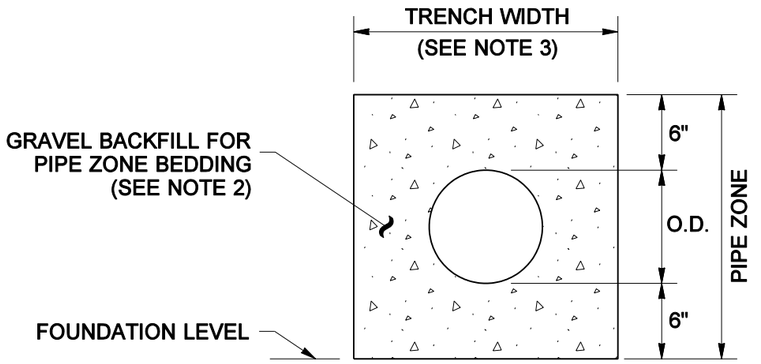

THERMOPLASTIC PIPE

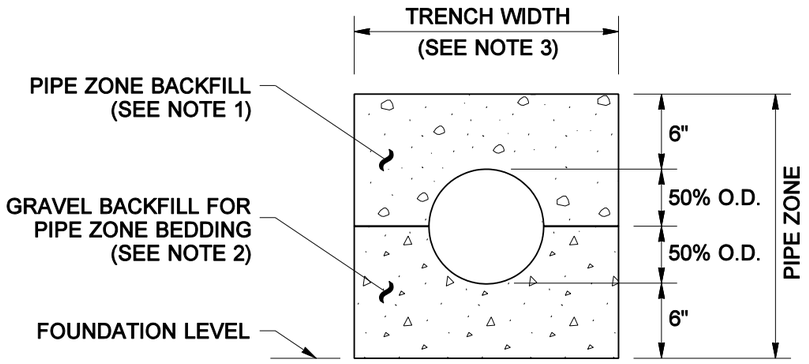

METAL PIPE

EFFECTIVE: JANUARY 7, 2002 TO AUGUST 4, 2002

EFFECTIVE: JANUARY 7, 2002 TO AUGUST 4, 2002

NOTES

1. See Standard Specifications Section 7-08.3(3) for Pipe Zone Backfill.
2. See Standard Specifications Section 9-03.12(3) for Gravel Backfill for Pipe Zone Bedding
3. See Standard Specifications Section 2-09.4 for Measurement of Trench Width.
4. For sanitary sewer installation, concrete pipe shall be bedded to spring line.

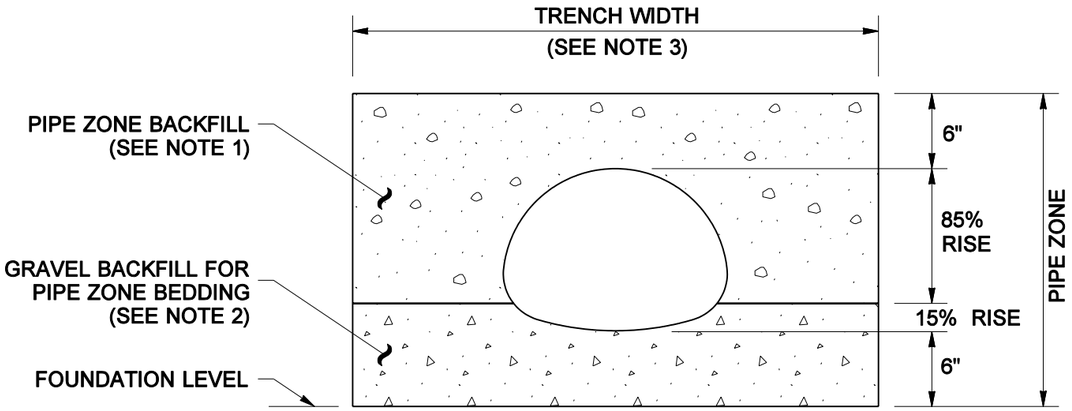

PIPE ARCHES

CLEARANCE BETWEEN PIPES FOR MULTIPLE INSTALLATIONS		
PIPE	SIZE	MINIMUM DISTANCE BETWEEN BARRELS
CIRCULAR PIPE (DIAMETER)	12" to 24" 30" to 96" 102" to 180"	12" DIAM. /2 48"
PIPE ARCH METAL ONLY (SPAN)	18" to 36" 43" to 142" 148" to 200"	12" SPAN /3 48"

MATTHEW J. WITECKI
STATE OF WASHINGTON
15588
REGISTERED
PROFESSIONAL ENGINEER

EXPIRES JULY 1, 2003

PIPE ZONE BEDDING AND BACKFILL

STANDARD PLAN B-11

NOTE: THIS PLAN IS NOT A LEGAL ENGINEERING DOCUMENT BUT AN ELECTRONIC DUPLICATE. THE ORIGINAL, SIGNED BY THE ENGINEER AND APPROVED FOR PUBLICATION, IS KEPT ON FILE AT THE WASHINGTON STATE DEPARTMENT OF TRANSPORTATION. A COPY MAY BE OBTAINED UPON REQUEST.

DATE	REVISION	BY
7/01	DELETED "Bedding material for thermoplastic pipe"	MAS

APPROVED FOR PUBLICATION

Clifford E. Mansfield — STATE DESIGN ENGINEER — *07-31-01* DATE

Washington State Department of Transportation

EFFECTIVE: JANUARY 7, 2002 TO AUGUST 4, 2002

EFFECTIVE: JANUARY 7, 2002 TO AUGUST 4, 2002

EFFECTIVE: JANUARY 7, 2002 TO AUGUST 4, 2002

08 DEC 1998g:\standard plans\dual work\b13dual.dgn SheaT

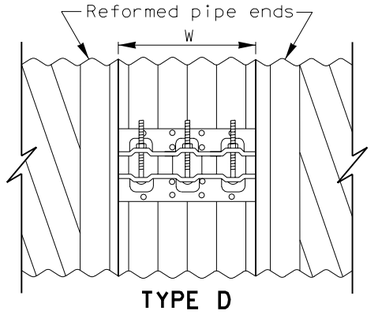

TYPE D
ANNULAR CORRUGATED BAND

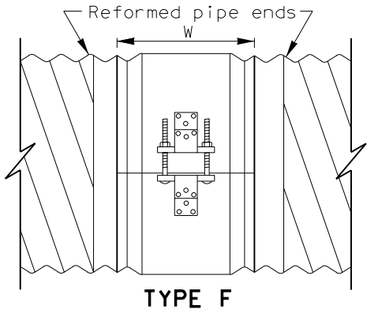

TYPE F
SEMI-CORRUGATED BAND

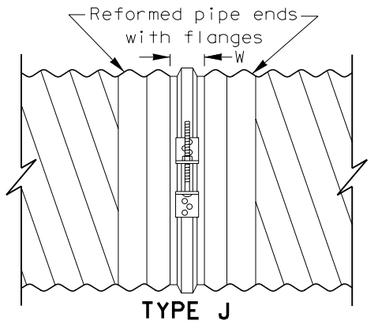

TYPE J
FLANGE BAND

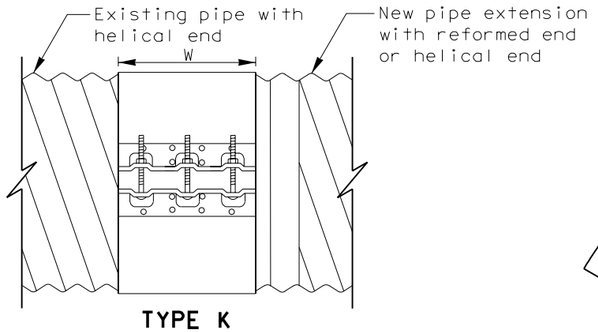

TYPE K
FLAT BAND OR DIMPLE BAND

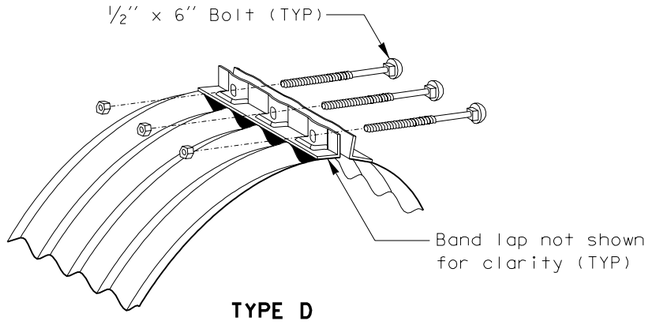

TYPE D
BAND ANGLE CONNECTOR DETAIL

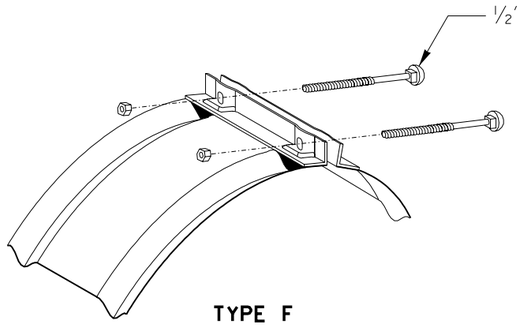

TYPE F
BAND ANGLE CONNECTOR DETAIL

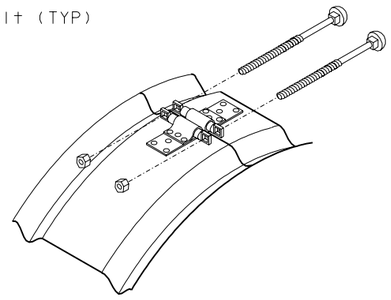

TYPE F
BAR AND STRAP CONNECTOR DETAIL

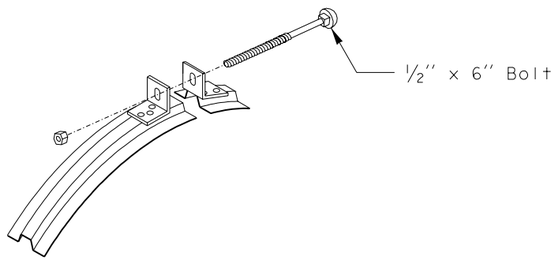

TYPE J
BAND ANGLE CONNECTOR DETAIL

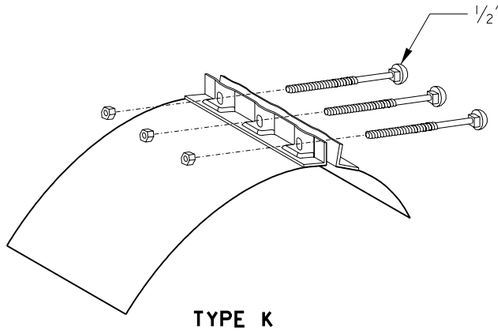

TYPE K
BAND ANGLE CONNECTOR DETAIL

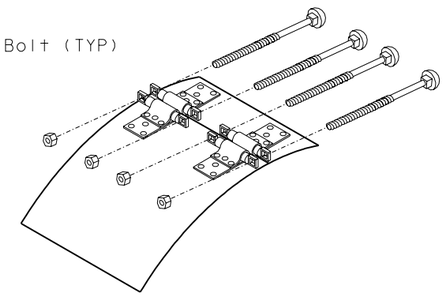

TYPE K
DOUBLE BAR AND
STRAP CONNECTOR
DETAIL

COUPLING BAND DIMENSION TABLE
(All dimensions are in inches)

	BAND TYPE	CORRUGATION PITCH	CORRUGATION DEPTH	PIPE DIA	MIN W	GASKET TYPE
STEEL	D	2⅔	½	12-84	12	SLEEVE
		OR 3	1			
		REFORMED TO 2⅔	½			
		3	1	90-144	24	SLEEVE
		REFORMED TO 2⅔	½			
	F	2⅔	½	12-84	10½	O-RING
		OR 3	1			
		REFORMED TO 2⅔	½			
	J	2⅔	½	12-48	2¾	BUTYL
	K	2⅔	½	12-48	12	
				54-84	24	
		✳3	1	54-144	24	SLEEVE
ALUMINUM	D	2⅔	½	12-72	12	
		3	1	36-60	12	
		REFORMED TO 2⅔	½	66-108	24	SLEEVE
	F	2⅔	½	12-48	10½	O-RING
	K	2⅔	½	12-48	12	
				54-84	24	
		✳3	1	54-96	24	SLEEVE

✳PIPE ARCH ONLY

MATTHEW J. WITECKI
STATE OF WASHINGTON
15588
REGISTERED
PROFESSIONAL ENGINEER

EXPIRES JULY 1, 1999

COUPLING BANDS FOR CORRUGATED METAL PIPE STANDARD PLAN B-13

NOTE: THIS PLAN IS NOT A LEGAL ENGINEERING DOCUMENT BUT AN ELECTRONIC DUPLICATE. THE ORIGINAL, SIGNED BY THE ENGINEER AND APPROVED FOR PUBLICATION, IS KEPT ON FILE AT THE WASHINGTON STATE DEPARTMENT OF TRANSPORTATION. A COPY MAY BE OBTAINED UPON REQUEST.

APPROVED FOR PUBLICATION

Clifford E. Mansfield 12/04/98

DEPUTY STATE DESIGN ENGINEER — DATE

WASHINGTON STATE DEPARTMENT OF TRANSPORTATION
OLYMPIA, WASHINGTON

EFFECTIVE: JANUARY 7, 2002 TO AUGUST 4, 2002

EFFECTIVE: JANUARY 7, 2002 TO AUGUST 4, 2002
EFFECTIVE: JANUARY 7, 2002 TO AUGUST 4, 2002

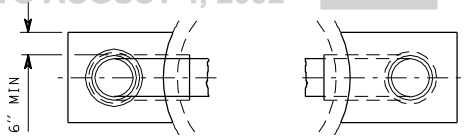

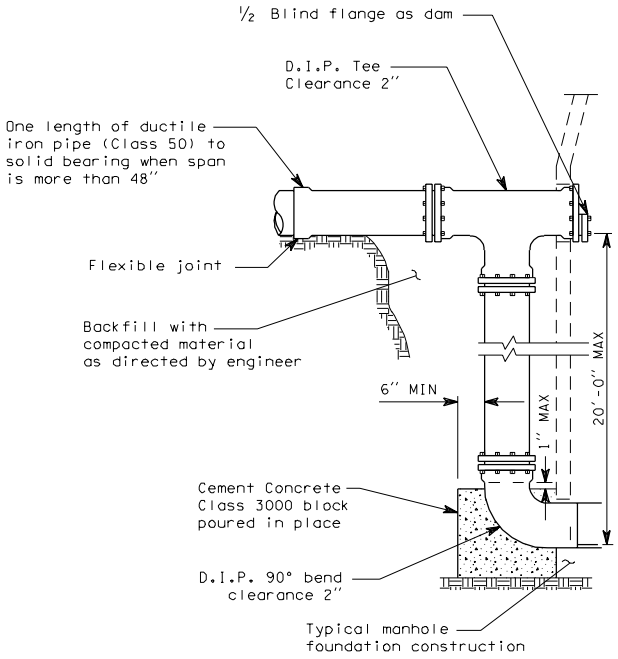

DUCTILE IRON DROP CONNECTION

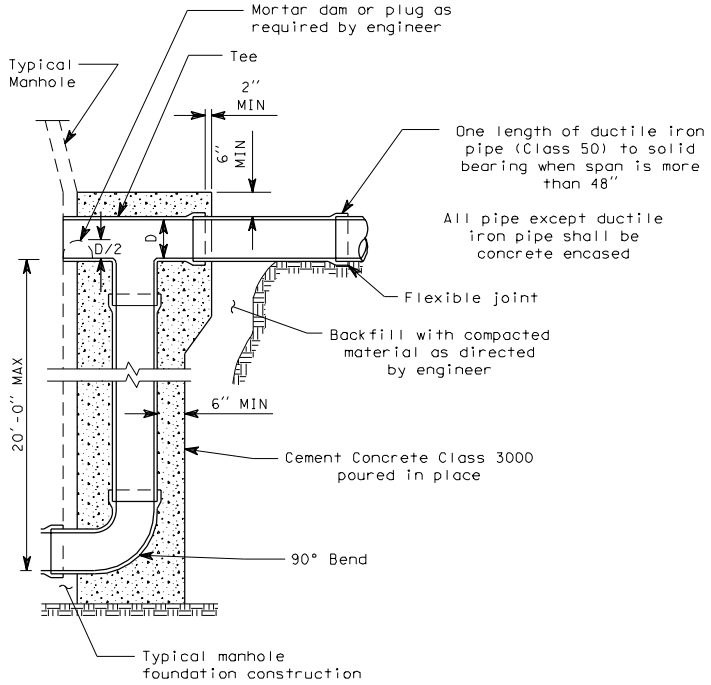

CONCRETE ENCASED DROP CONNECTION

DROP CONNECTION FOR SANITARY SEWERS

EFFECTIVE: JANUARY 7, 2002 TO AUGUST 4, 2002
EFFECTIVE: JANUARY 7, 2002 TO AUGUST 4, 2002

EFFECTIVE: JANUARY 7, 2002 TO AUGUST 4, 2002
EFFECTIVE: JANUARY 7, 2002 TO AUGUST 4, 2002

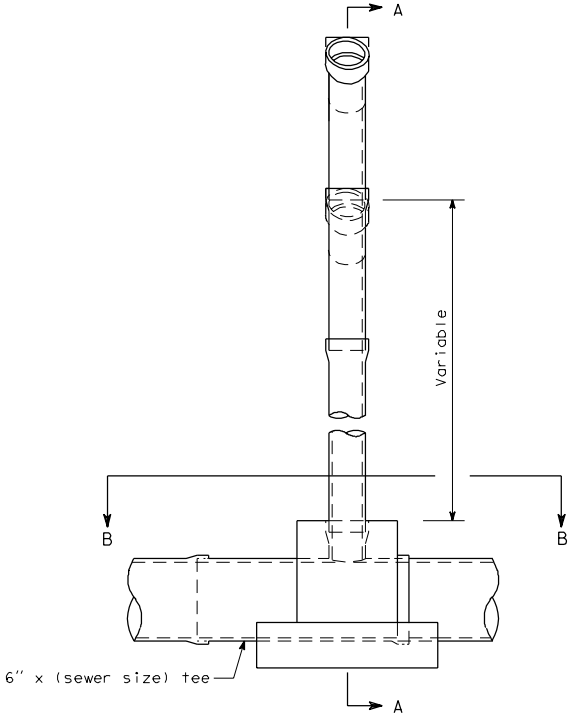

ELEVATION

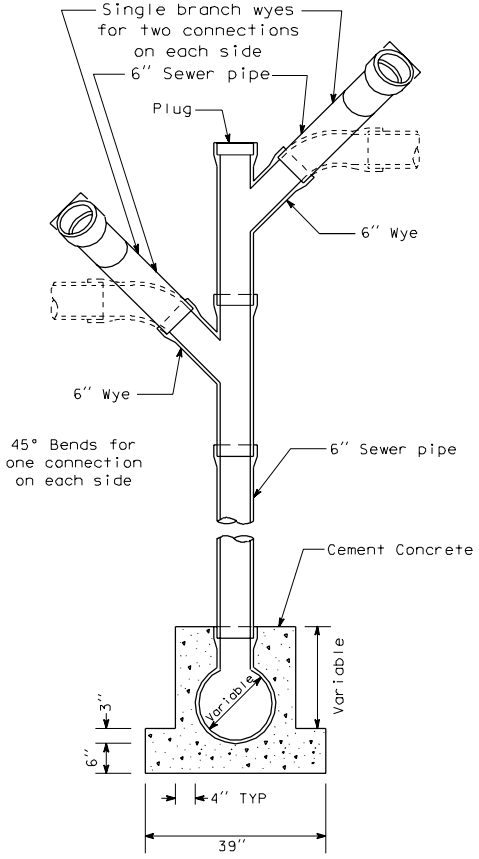

SECTION A-A

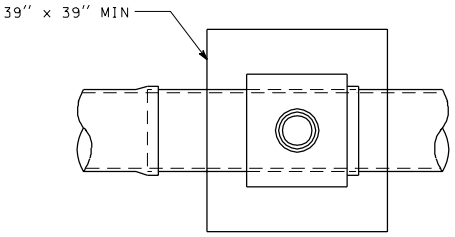

SECTION B-B

VERTICAL CONNECTION

EFFECTIVE: JANUARY 7, 2002 TO AUGUST 4, 2002
EFFECTIVE: JANUARY 7, 2002 TO AUGUST 4, 2002

EFFECTIVE: JANUARY 7, 2002 TO AUGUST 4, 2002
EFFECTIVE: JANUARY 7, 2002 TO AUGUST 4, 2002

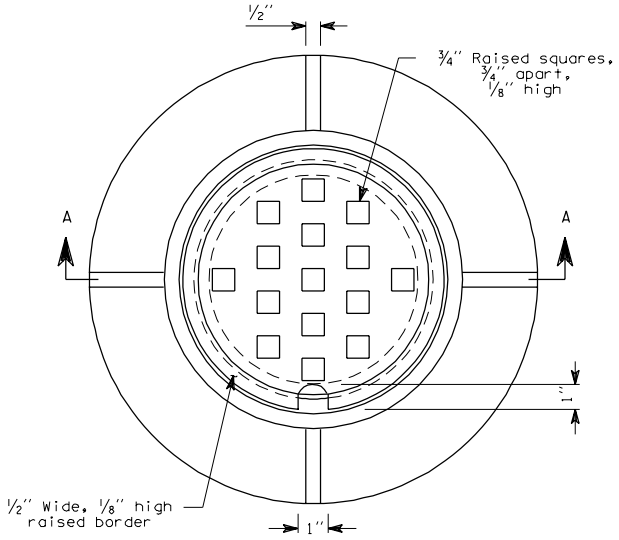

PLAN

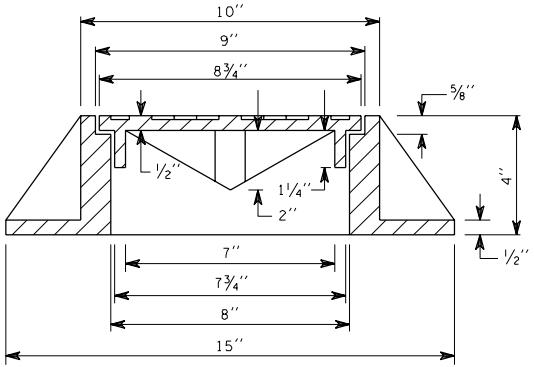

SECTION A-A

CAST IRON RING AND COVER

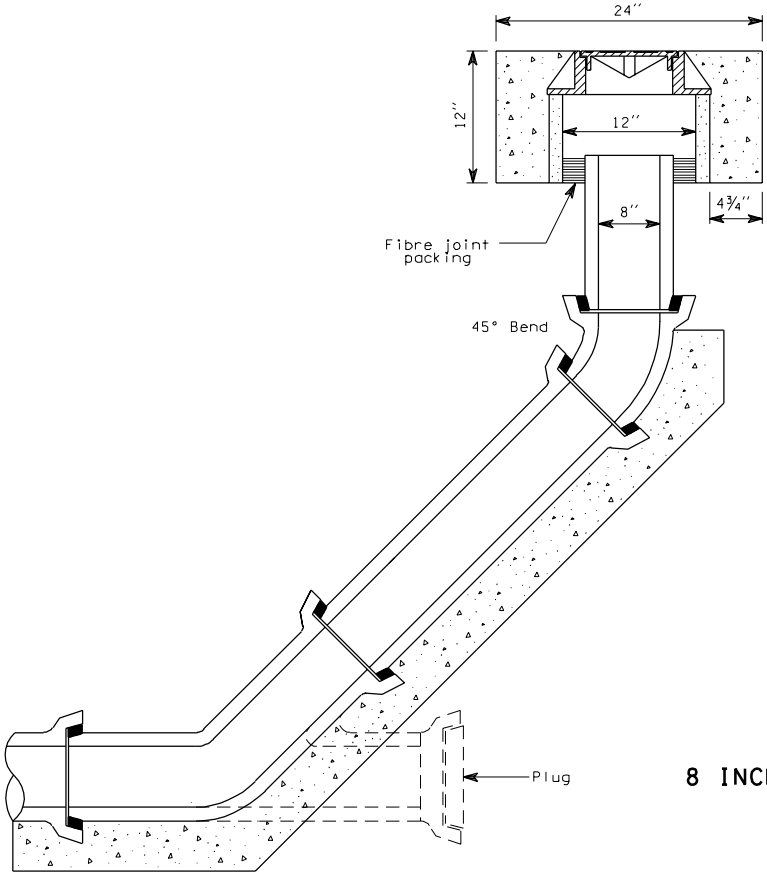

8 INCH CLEAN-OUT

B-18b 1 of 1

07-18-97

EFFECTIVE: JANUARY 7, 2002 TO AUGUST 4, 2002
EFFECTIVE: JANUARY 7, 2002 TO AUGUST 4, 2002

EFFECTIVE: JANUARY 7, 2002 TO AUGUST 4, 2002

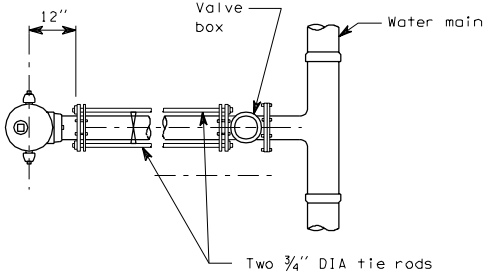

PLAN

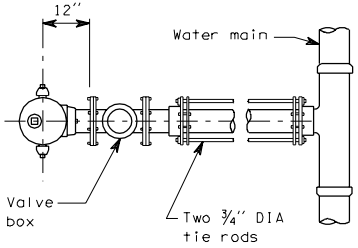

PLAN

NOTES

1. Steel tie rods to be heavily coated with asphalt after installation.
2. Restrained joints may be substituted for tie rods.
3. Surface of ground within 36″ of hydrant shall be smooth.

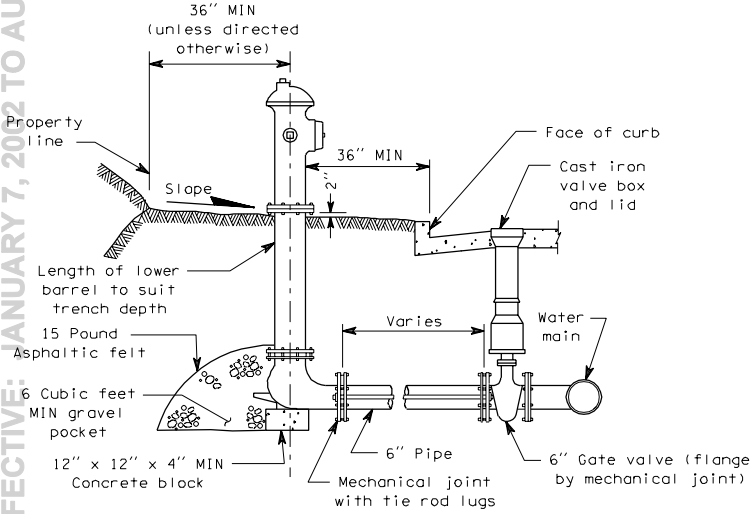

ELEVATION

TYPE A

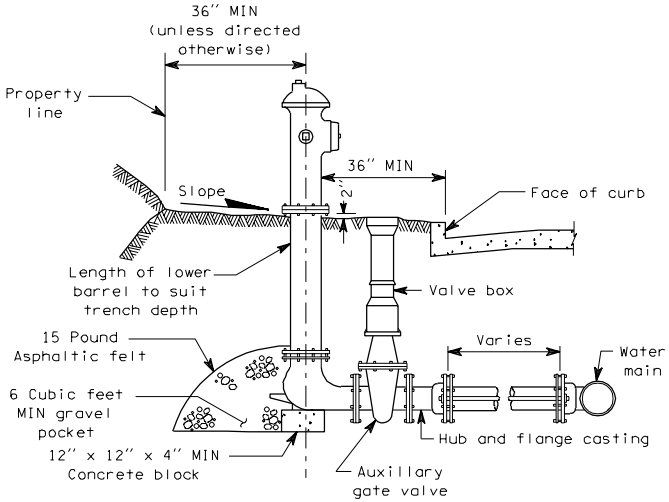

ELEVATION

TYPE B

HYDRANT SETTING TYPES A AND B

EFFECTIVE: JANUARY 7, 2002 TO AUGUST 4, 2002
EFFECTIVE: JANUARY 7, 2002 TO AUGUST 4, 2002

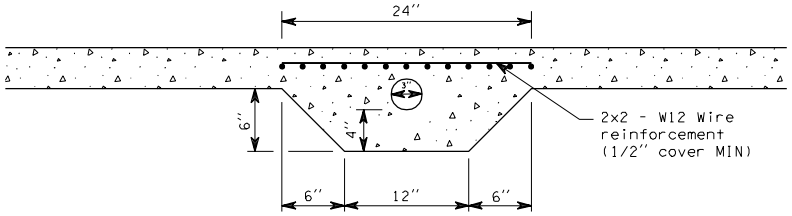

ELEVATION

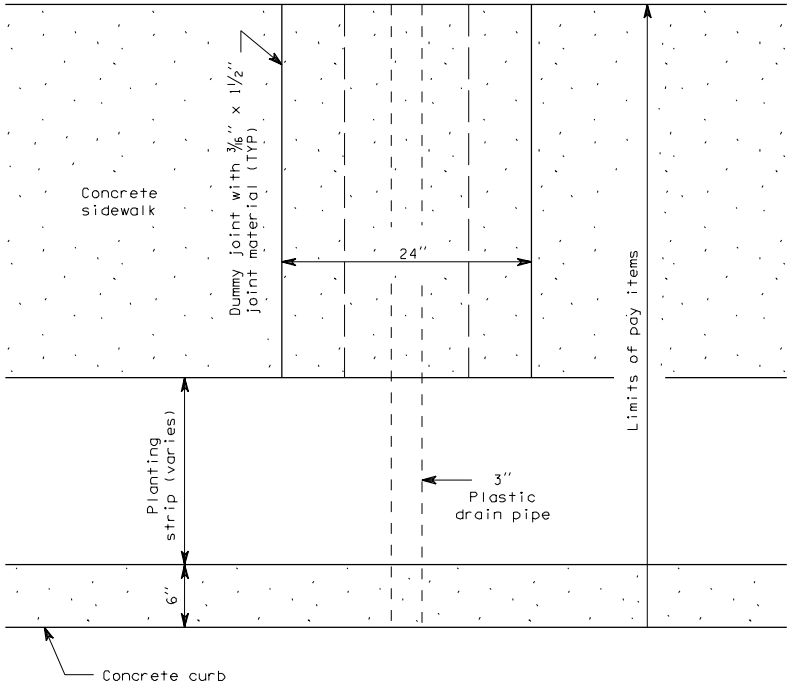

PLAN

RESIDENTIAL SIDEWALK DRAIN

EFFECTIVE: JANUARY 7, 2002 TO AUGUST 4, 2002
EFFECTIVE: JANUARY 7, 2002 TO AUGUST 4, 2002

EFFECTIVE: JANUARY 7, 2002 TO AUGUST 4, 2002
EFFECTIVE: JANUARY 7, 2002 TO AUGUST 4, 2002

NOTES

1. Paint pipe threads with asphalt paint after assembly.
2. All piping to be galvanized steel.
3. Valve and piping to valve to be 2" unless otherwise noted on plan.
4. Locate blowoff outlet near property corner if possible.

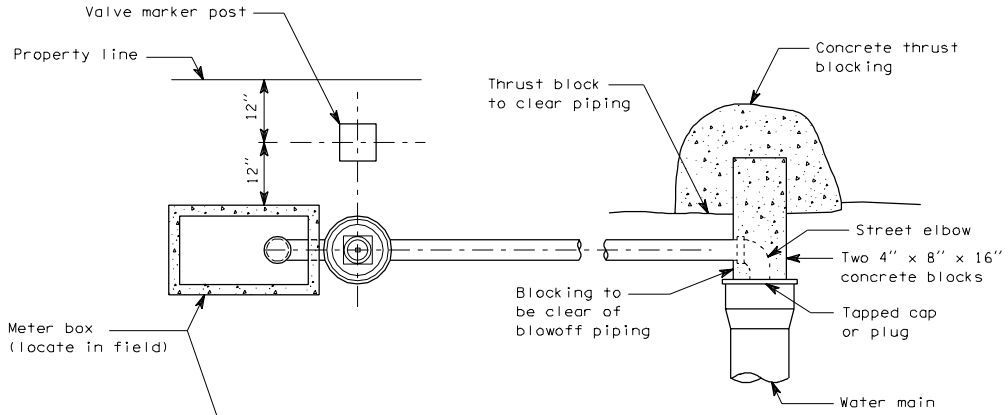

PLAN

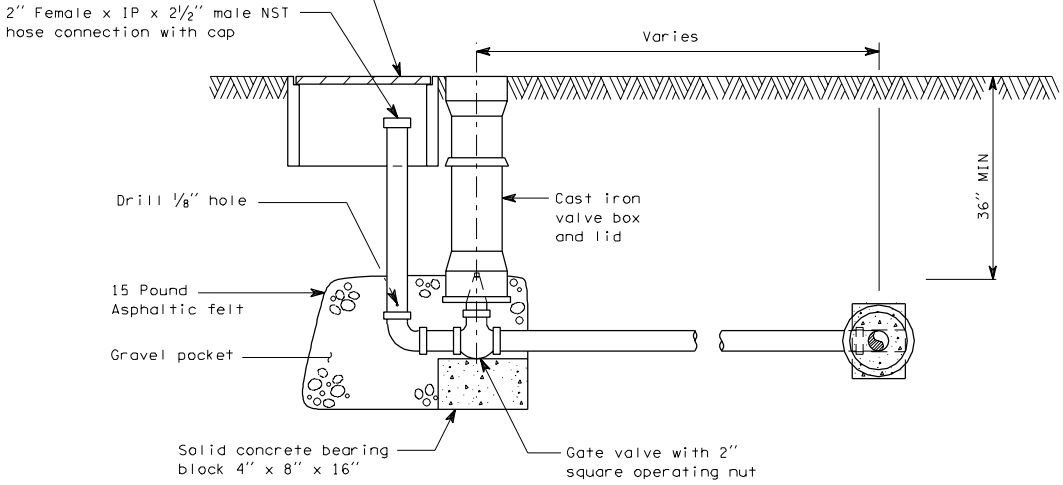

ELEVATION

2 INCH BLOWOFF ASSEMBLY

EFFECTIVE: JANUARY 7, 2002 TO AUGUST 4, 2002
EFFECTIVE: JANUARY 7, 2002 TO AUGUST 4, 2002

EFFECTIVE: JANUARY 7, 2002 TO AUGUST 4, 2002

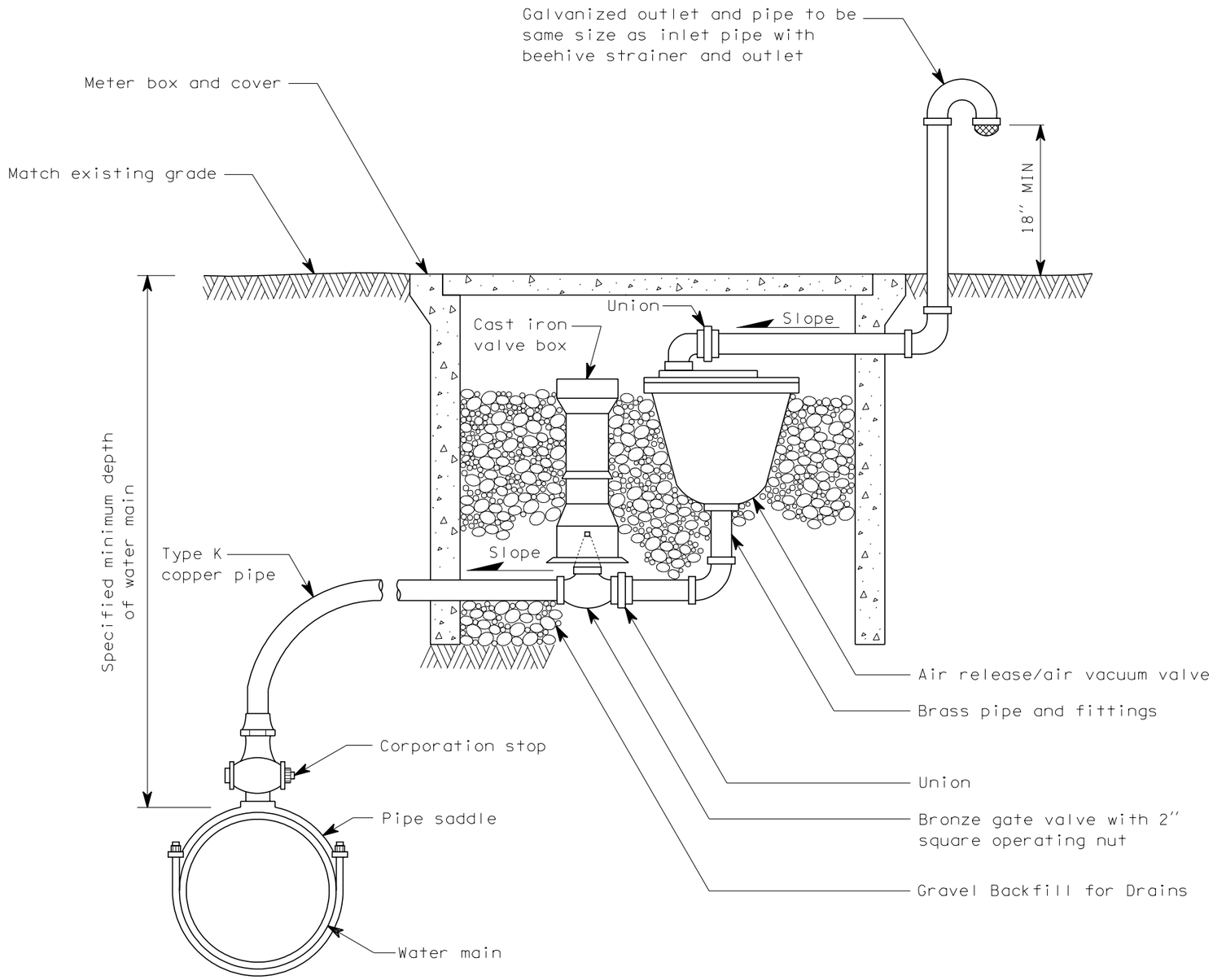

NOTES

1. Size of combination air release/air vacuum valve shall be specified in the Contract. Piping and valves shall be the same size as the combination air release/air vacuum valve.

2. Locate at the high point of the main, tap top of main.

MATTHEW J. WITECKI
STATE OF WASHINGTON
15588
REGISTERED
PROFESSIONAL ENGINEER

EXPIRES JULY 1, 1999

COMBINATION AIR RELEASE/ AIR VACUUM VALVE ASSEMBLY STANDARD PLAN B-21a

NOTE: THIS PLAN IS NOT A LEGAL ENGINEERING DOCUMENT BUT AN ELECTRONIC DUPLICATE. THE ORIGINAL, SIGNED BY THE ENGINEER AND APPROVED FOR PUBLICATION, IS KEPT ON FILE AT THE WASHINGTON STATE DEPARTMENT OF TRANSPORTATION. A COPY MAY BE OBTAINED UPON REQUEST.

APPROVED FOR PUBLICATION

Clifford E. Mansfield — *8/10/98*

DEPUTY STATE DESIGN ENGINEER — DATE

WASHINGTON STATE DEPARTMENT OF TRANSPORTATION
OLYMPIA, WASHINGTON

DATE	REVISION	BY
8/98	DELETED NOTES 3 & 4	RAG

EFFECTIVE: JANUARY 7, 2002 TO AUGUST 4, 2002

EFFECTIVE: JANUARY 7, 2002 TO AUGUST 4, 2002

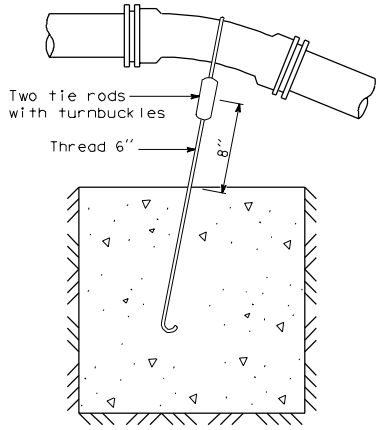

BLOCKING FOR 11.25° OR 22.5° VERTICAL BENDS

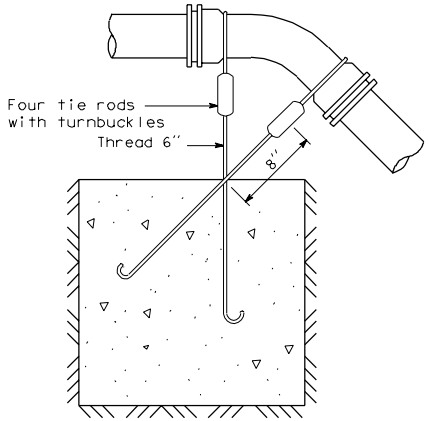

BLOCKING FOR 45° VERTICAL BENDS

NOTES

1. Steel tie rods to be heavily coated wtih asphalt after installation.

DIMENSION TABLE						
PIPE DIA	TEST PRESSURE PSI	BEND ANGLE	CONCRETE VOLUME Ft^3	CUBE SIZE Ft	TIE ROD DIA	TIE ROD EMBEDMENT
4''	250	11.25°	6	1.8	5/8''	17''
		22.5°	12	2.3		
		45°	22	2.8		
6''	250	11.25°	14	2.4	5/8''	17''
		22.5°	27	3.0		
		45°	50	3.7		
8''	250	11.25°	25	2.9	5/8''	17''
		22.5°	48	3.6		
		45°	89	4.5		
10''	250	11.25°	38	3.4	5/8''	17''
		22.5°	75	4.2		
		45°	139	5.2		
12''	250	11.25°	55	3.8	5/8''	17''
		22.5°	108	4.8		
		45°	200	5.8	7/8''	24''
14''	250	11.25°	75	4.2	5/8''	17''
		22.5°	147	5.3	3/4''	20''
		45°	272	6.5	1''	27''
16''	250	11.25°	98	4.6	5/8''	17''
		22.5°	192	5.8	7/8''	24''
		45°	355	7.1	1 1/8''	30''

CONCRETE BLOCKING FOR CONVEX VERTICAL BENDS

EFFECTIVE: JANUARY 7, 2002 TO AUGUST 4, 2002

EFFECTIVE: JANUARY 7, 2002 TO AUGUST 4, 2002

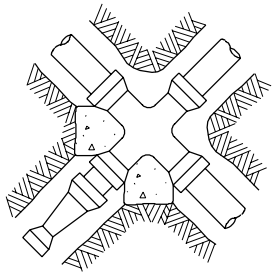

UNBALANCED CROSS
(Use column A)

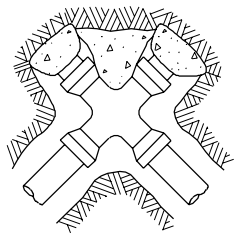

PLUGGED CROSS
(Use column B)

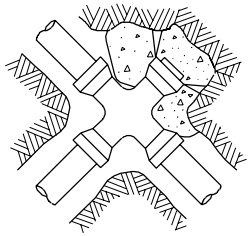

PLUGGED CROSS
(Use column A)

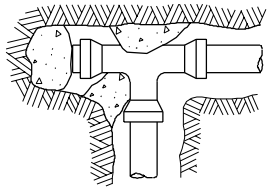

PLUGGED TEE
(Use column B)

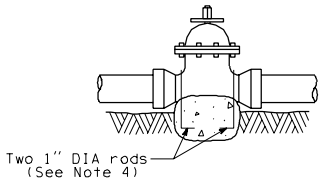

VALVE
(Use column A)

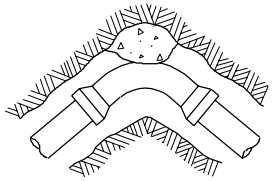

BEND

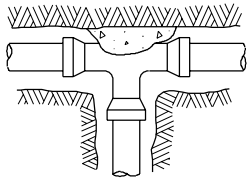

TEE

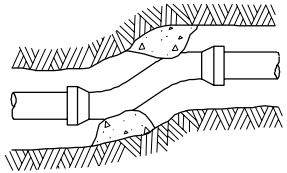

OFFSET
(Use columns B - E)

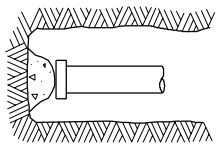

DEAD END

NOTES:

1. Contractor to provide blocking adequate to withstand full test pressure.
2. Divide thrust by safe bearing load to determine required area (in square feet) of concrete to distribute load.
3. Areas to be adjusted for other pressure conditions.
4. Provide two 1" minimum diameter rods on valves up through 10" diameter. Valves larger than 10" require special tie rod design.

Size	Test Pressure PSI	Thrust at Fittings in Pounds				
		A	B	C	D	E
		Tee and Dead Ends	90° Bend	45° Bend	22.5° Bend	11.25° Bend
4"	250	3,140	4,440	2,405	1,225	615
6"	250	7,070	9,995	5,410	2,760	1,385
8"	250	12,565	17,770	9,620	4,905	2,465
10"	250	19,635	27,770	15,030	7,660	3,850
12"	250	28,275	39,985	21,640	11,030	5,545
14"	250	38,485	54,425	29,455	15,015	7,545
16"	250	50,265	71,085	38,470	19,615	9,855

Soil Type	Safe Bearing Load PSF
Muck, peat, etc.	0
Soft clay	1,000
Sand	2,000
Sand and gravel	3,000
Sand and gravel cemented with clay	4,000
Hard shale	10,000

CONCRETE THRUST BLOCK

EFFECTIVE: JANUARY 7, 2002 TO AUGUST 4, 2002

EFFECTIVE: JANUARY 7, 2002 TO AUGUST 4, 2002

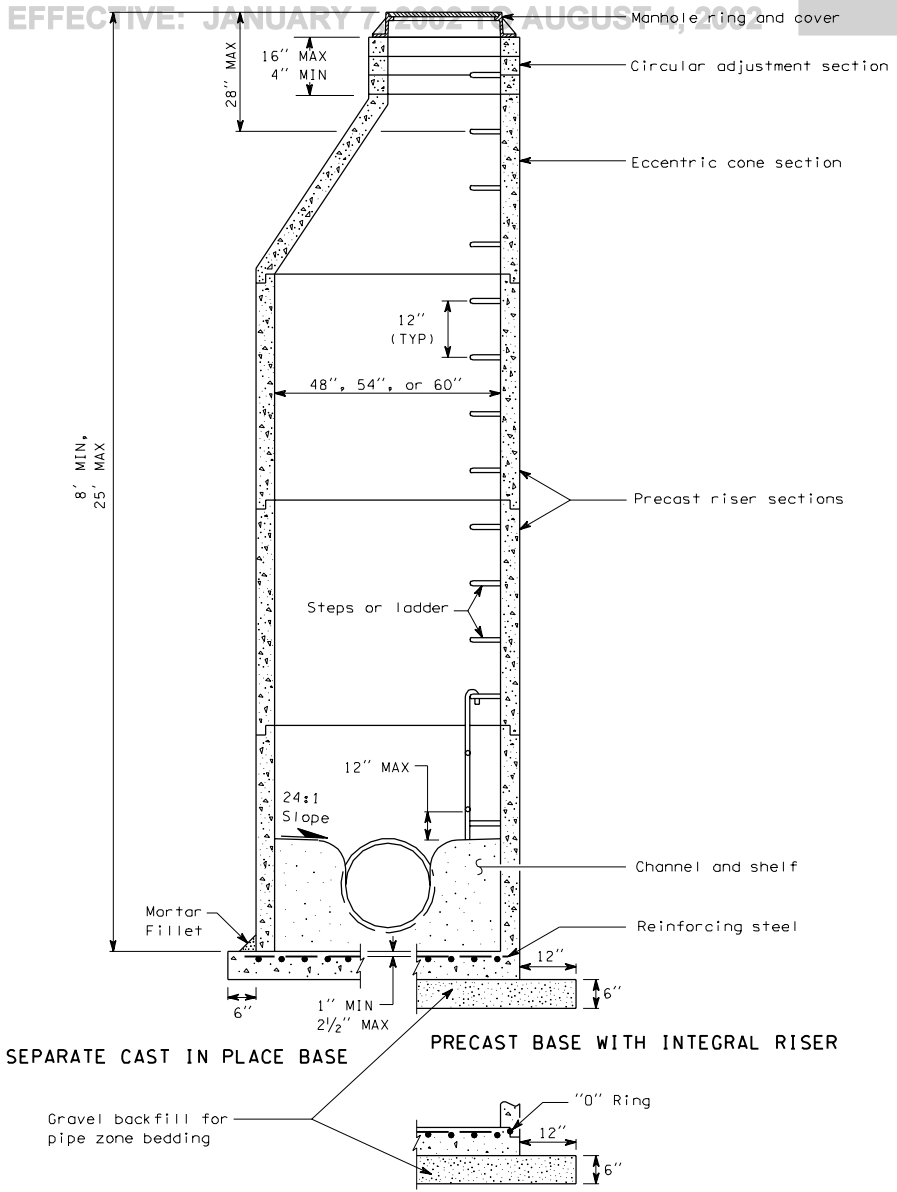

NOTES:

1. Knockouts shall have a wall thickness of 2" minimum to 2½" maximum.

MANHOLE DIMENSION TABLE						
DIA	WALL THICKNESS	BASE THICKNESS	MAXIMUM KNOCKOUT SIZE	MINIMUM DISTANCE BETWEEN KNOCKOUTS	BASE REINFORCING STEEL SQ IN/FT EACH DIRECTION	
					INTEGRAL BASE	SEPARATE BASE
48"	4"	6"	36"	8"	0.15	0.23
54"	4½"	8"	42"	8"	0.19	0.19
60"	5"	8"	48"	8"	0.25	0.25

MANHOLE TYPE 1

EFFECTIVE: JANUARY 7, 2002 TO AUGUST 4, 2002

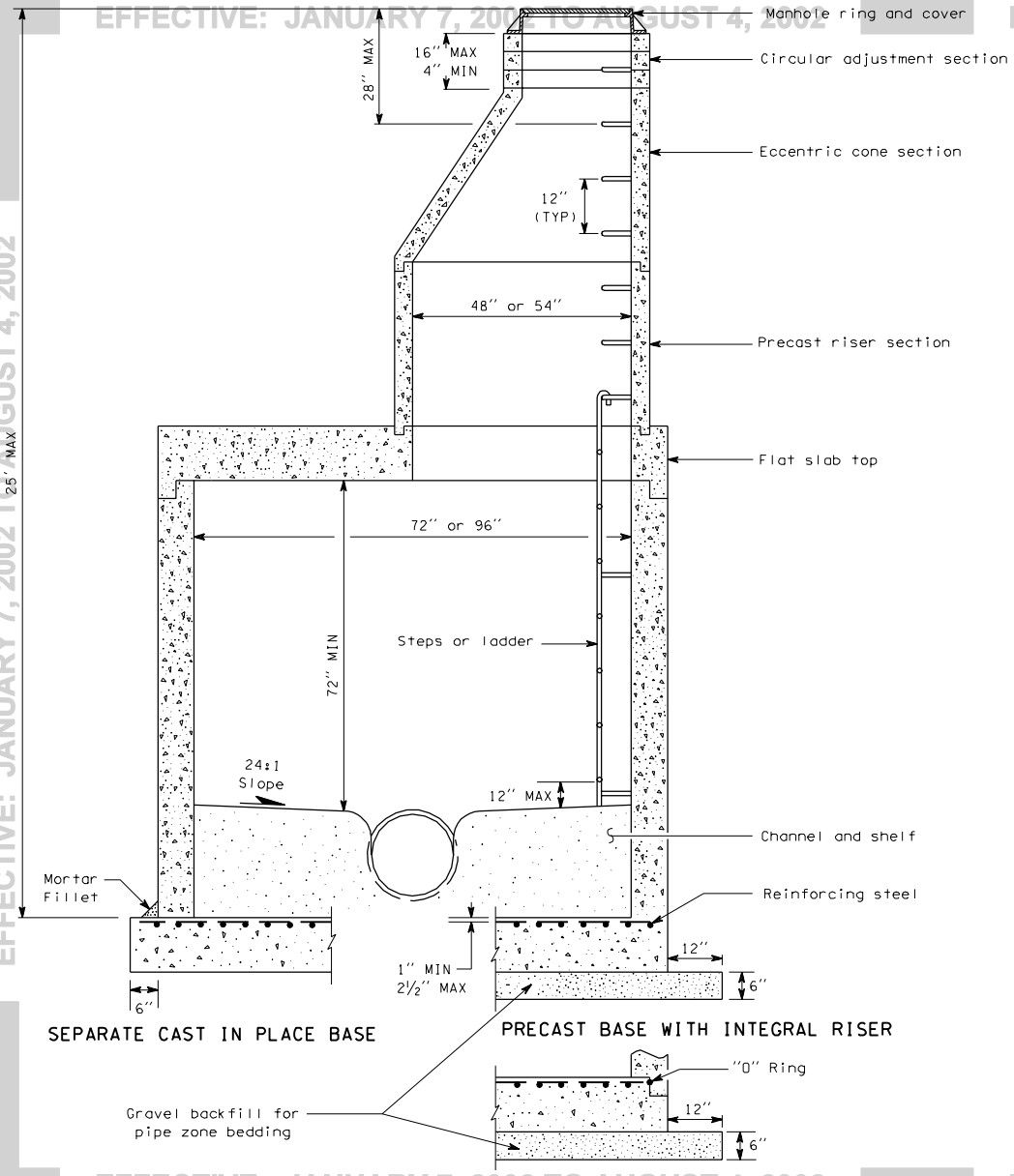

NOTES

1. Knockouts shall have a wall thickness of 2'' minimum to 2½'' maximum.

MANHOLE DIMENSION TABLE						
DIA	WALL THICKNESS	BASE THICKNESS	MAXIMUM KNOCKOUT SIZE	MINIMUM DISTANCE BETWEEN KNOCKOUTS	BASE REINFORCING STEEL in^2/ft IN EACH DIRECTION	
					INTEGRAL BASE	SEPARATE BASE
72''	6''	8''	60''	12''	0.24	0.35
96''	8''	12''	84''	12'	0.29	0.39

MANHOLE TYPE 2

EFFECTIVE: JANUARY 7, 2002 TO AUGUST 4, 2002

NOTES

1. Knockouts shall have a wall thickness of 2″ minimum to 2½″ maximum.

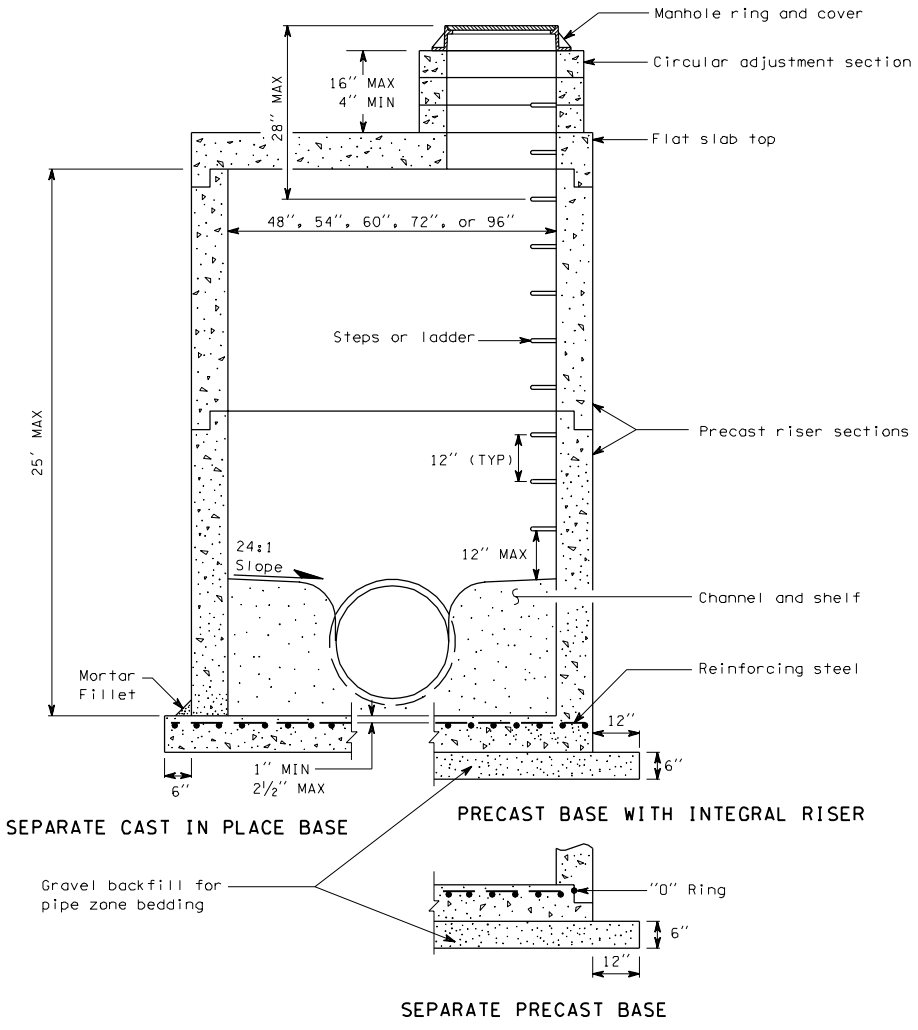

MANHOLE DIMENSION TABLE						
DIA	WALL THICKNESS	BASE THICKNESS	MAXIMUM KNOCKOUT SIZE	MINIMUM DISTANCE BETWEEN KNOCKOUTS	BASE REINFORCING STEEL in²/ft IN EACH DIRECTION	
					INTEGRAL BASE	SEPARATE BASE
48″	4″	6″	36″	8″	0.15	0.23
54″	4½″	8″	42″	8″	0.19	0.19
60″	5″	8″	48″	8″	0.25	0.25
72″	6″	8″	60″	12″	0.24	0.35
96″	8″	12″	84″	12″	0.29	0.39

MANHOLE TYPE 3

EFFECTIVE: JANUARY 7, 2002 TO AUGUST 4, 2002
EFFECTIVE: JANUARY 7, 2002 TO AUGUST 4, 2002

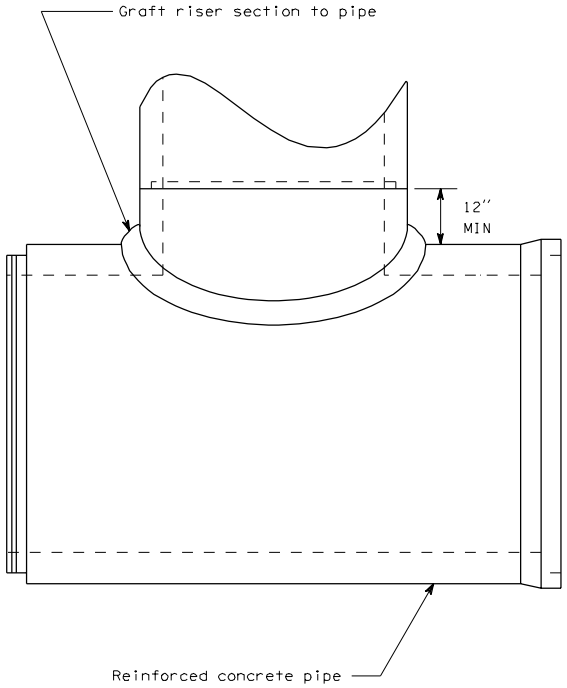

ELEVATION

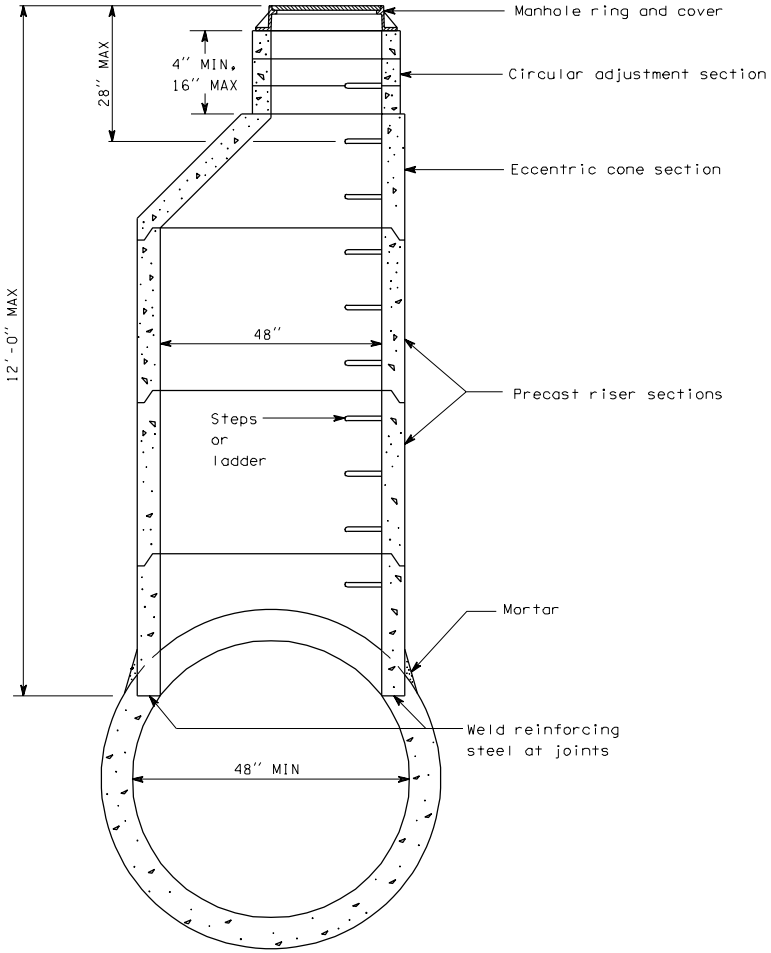

SECTION

MANHOLE TYPE 4

EFFECTIVE: JANUARY 7, 2002 TO AUGUST 4, 2002
EFFECTIVE: JANUARY 7, 2002 TO AUGUST 4, 2002

EFFECTIVE: JANUARY 7, 2002 TO AUGUST 4, 2002

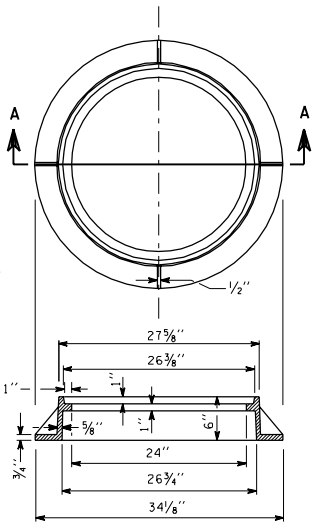

SECTION A-A

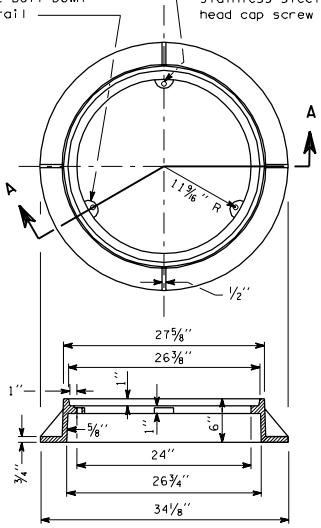

SECTION A-A

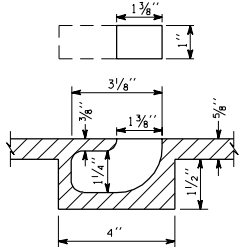

BLIND PICK NOTCH DETAIL

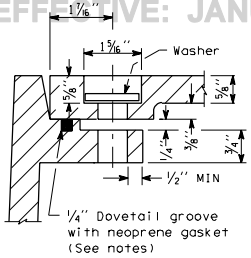

BOLT-DOWN WATERTIGHT DETAIL

NOTES

1. Gasket and groove may be in the seat or underside of cover.
2. For bolt down manhole ring and covers that are not designated "watertight", the neoprene gasket, groove and washer are not required.
3. Washer shall be lead or neoprene.
4. In lieu of blind pick notch for storm sewer manhole covers, drill three 1" diameter holes at 120° spacing.
5. Proprietary manhole covers without bottom ribs are acceptable.

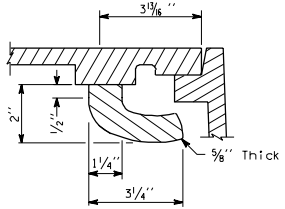

BOLT ON CAM TYPE LOCKING DEVICE-SECTION D

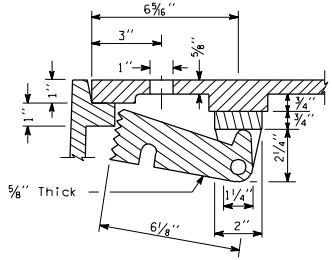

BOLT ON CAM TYPE LOCKING DEVICE-SECTION C

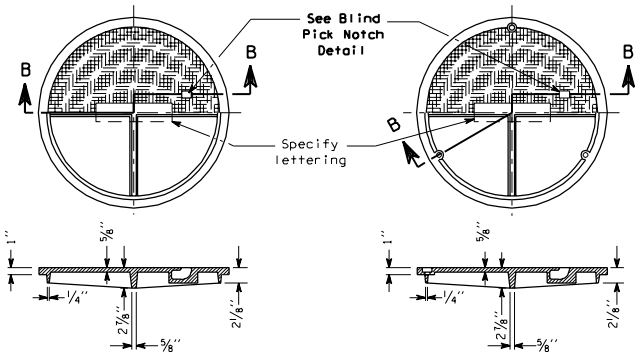

SECTION B-B TYPE 1 STANDARD

SECTION B-B TYPE 2 BOLT-DOWN/WATERTIGHT

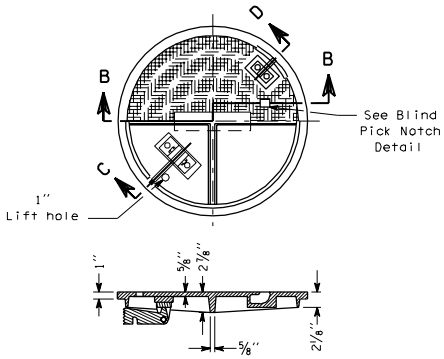

SECTION B-B TYPE 3 CAMLOCK

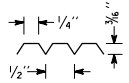

COVER SKID DESIGN DETAIL

MANHOLE RING AND COVER

B-25 1 of 1

05-09-97

EFFECTIVE: JANUARY 7, 2002 TO AUGUST 4, 2002

EFFECTIVE: JANUARY 7, 2002 TO AUGUST 4, 2002
EFFECTIVE: JANUARY 7, 2002 TO AUGUST 4, 2002

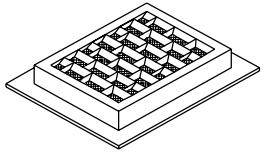

FRAME AND VANED GRATE

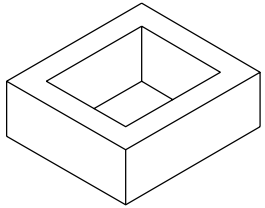

RECTANGULAR ADJUSTMENT SECTION

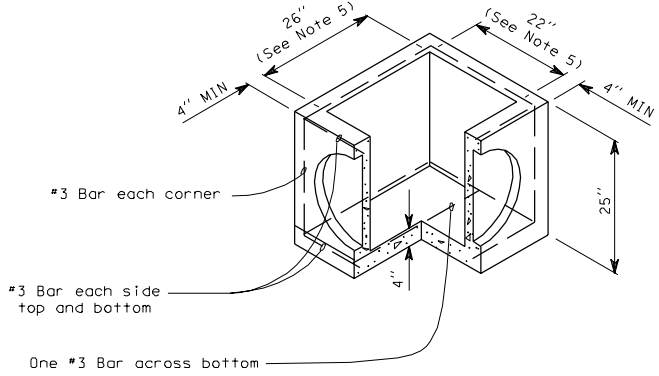

PRECAST BASE SECTION

NOTES

1. As an acceptable alternate to rebar, wire mesh having a minimum area of 0.12 square inches per foot may be used. Wire mesh shall not be placed in knockouts.

2. The knockout diameter shall not be greater than 18". Knockouts shall have a wall thickness of 1½" minimum to 2" maximum.

3. Frame and grate may be installed with flange down or cast into adjustment section.

4. The precast base section may have a rounded floor and the walls may be sloped at a rate of 1:24 or steeper.

5. Opening shall be measured at the top of the precast base section.

CONCRETE INLET

EFFECTIVE: JANUARY 7, 2002 TO AUGUST 4, 2002
EFFECTIVE: JANUARY 7, 2002 TO AUGUST 4, 2002
EFFECTIVE: JANUARY 7, 2002 TO AUGUST 4, 2002
EFFECTIVE: JANUARY 7, 2002 TO AUGUST 4, 2002

EFFECTIVE: JANUARY 7, 2002 TO AUGUST 4, 2002

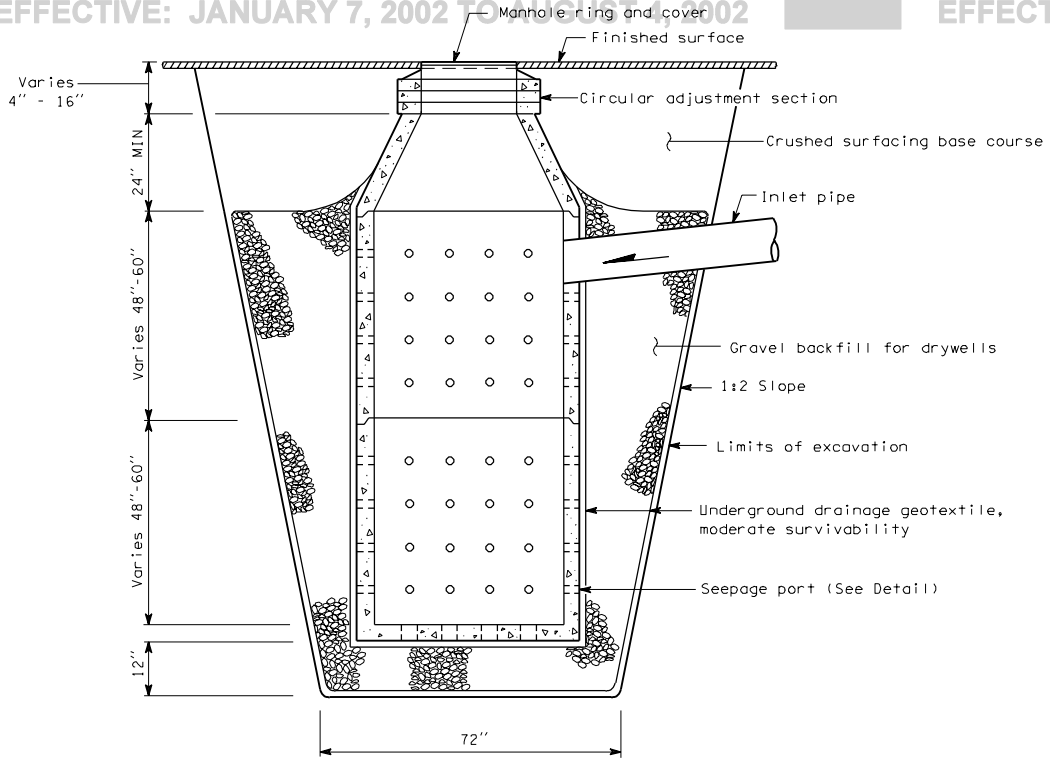

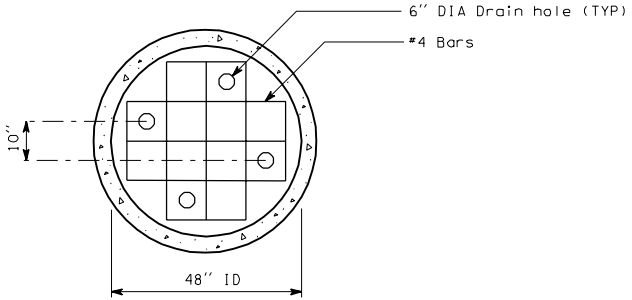

BASE DETAIL

NOTES:

1. Precast cone sections may be eccentric or concentric.
2. Seepage port orientation varies among manufacturers.

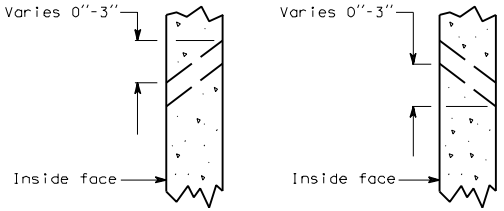

SEEPAGE PORT DETAIL
(See Note 2)

PRECAST CONCRETE DRYWELL

EFFECTIVE: JANUARY 7, 2002 TO AUGUST 4, 2002

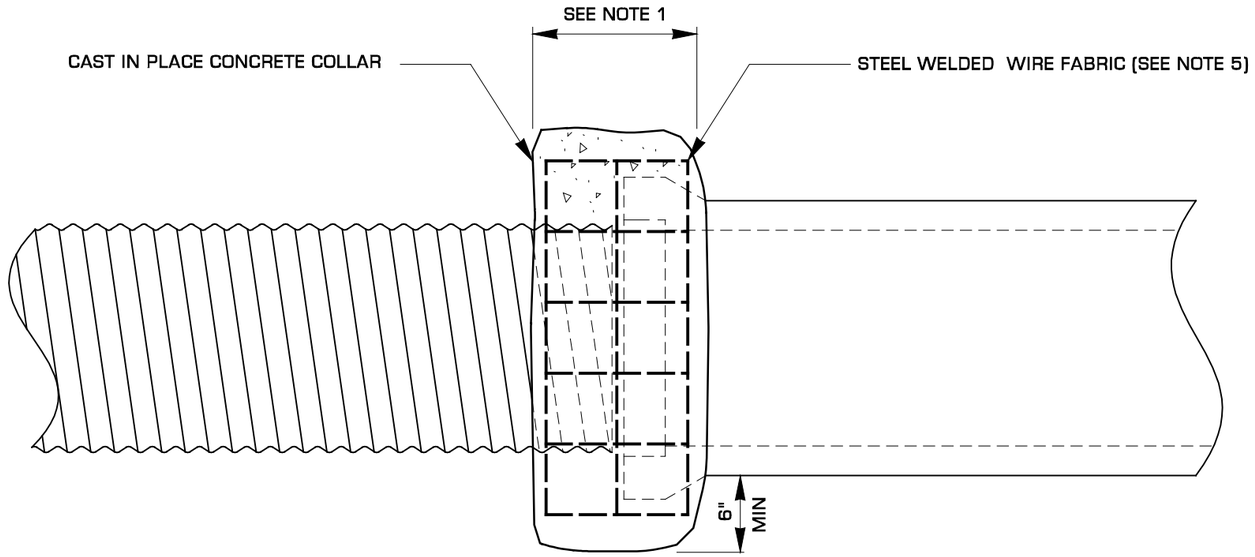

CONCRETE COLLAR OPTION

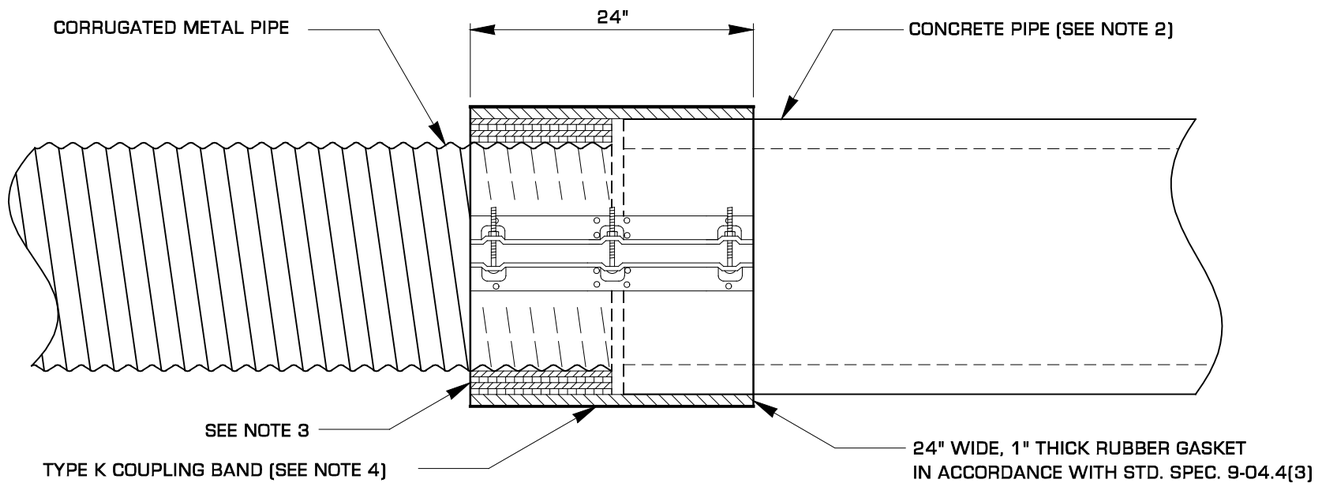

COUPLING BAND OPTION

NOTES

1. CONCRETE COLLAR WIDTH SHALL BE ONE HALF OF THE OUTSIDE PIPE DIAMETER OF THE LARGEST PIPE. THE MINIMUM COLLAR WIDTH SHALL BE 12". CONCRETE COLLARS MAY BE USED WITH ALL PIPE MATERIALS AND DIAMETERS. THE CONCRETE COLLAR OPTION SHALL ONLY BE USED TO EXTEND EXISTING PIPES.

2. WHEN A COUPLING BAND CONNECTION REQUIRES ATTACHING A BELL END OF A CONCRETE PIPE, THE BELL END OF THE PIPE SHALL BE REMOVED BEFORE THE CONNECTION IS INSTALLED.

3. INCREASE THE OUTSIDE DIAMETER OF THE METAL PIPE TO MATCH THE OUTSIDE DIAMETER OF THE CONCRETE PIPE WITH 12" WIDE RUBBER GASKETS, THICKNESS AS REQUIRED. RUBBER GASKETS SHALL BE IN ACCORDANCE WITH SECTION 9-04.4(3) OF THE STANDARD SPECIFICATIONS.

4. USE A FLAT TYPE K COUPLING BAND. TYPE K COUPLING BANDS WITH DIMPLES ARE NOT ALLOWED FOR THE INSTALLATION DETAIL SHOWN. THE COUPLING BAND OPTION SHALL ONLY BE USED FOR EXTENDING EXISTING PIPES THAT HAVE AN INSIDE DIAMETER OF 36" OR LESS.

5. STEEL WELDED WIRE FABRIC SHALL BE IN ACCORDANCE WITH SECTION 9-07.7 OF THE STANDARD SPECIFICATIONS. INSTALL TWO WRAPS FOR SIZE 6 x 6 W1.4 x W1.4 (10 GAGE) STEEL WELDED WIRE FABRIC OR ONE WRAP FOR ANY OF THE FOLLOWING SIZES:
   - 6 x 6 W2.1 x W2.1 (8 GAGE)
   - 6 x 6 W2.9 x W2.9 (6 GAGE)
   - 4 x 4 W2.9 x W2.9 (6 GAGE)
   - 4 x 4 W4.0 x W4.0 (4 GAGE)

MATTHEW J. WITECKI
STATE OF WASHINGTON
15588
REGISTERED
PROFESSIONAL ENGINEER

EXPIRES JULY 1, 2001

CONNECTION DETAILS FOR DISSIMILAR CULVERT PIPE

STANDARD PLAN B-28

NOTE: THIS PLAN IS NOT A LEGAL ENGINEERING DOCUMENT BUT AN ELECTRONIC DUPLICATE. THE ORIGINAL, SIGNED BY THE ENGINEER AND APPROVED FOR PUBLICATION, IS KEPT ON FILE AT THE WASHINGTON STATE DEPARTMENT OF TRANSPORTATION. A COPY MAY BE OBTAINED UPON REQUEST.

DATE	REVISION	BY
10-99	ADDED COUPLING BAND OPTION, REVISED WIRE FABRIC SIZES.	TWS

APPROVED FOR PUBLICATION

Clifford E. Mansfield *10-06-99*

DEPUTY STATE DESIGN ENGINEER — DATE

WASHINGTON STATE DEPARTMENT OF TRANSPORTATION
OLYMPIA, WASHINGTON

EFFECTIVE: JANUARY 7, 2002 TO AUGUST 4, 2002

EFFECTIVE: JANUARY 7, 2002 TO AUGUST 4, 2002

EFFECTIVE: JANUARY 7, 2002 TO AUGUST 4, 2002

NOTES

1. Install sewer saddle with gasket and stainless steel clamps for connection to existing sewers. Install wye or tee sewer fitting with gaskets for new sewer installations.

2. Mark location of sewer stub in accordance with Contracting Agency requirements.

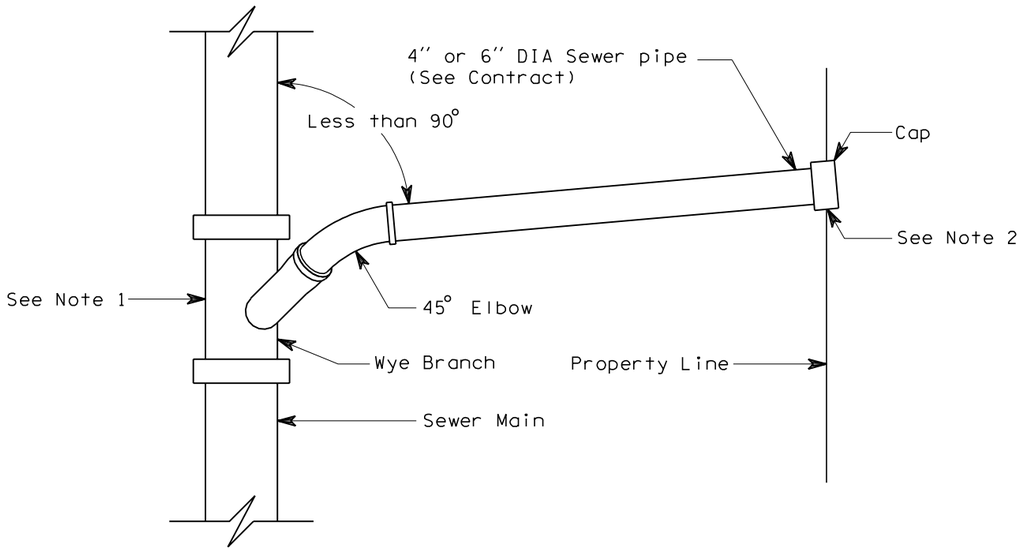

PLAN

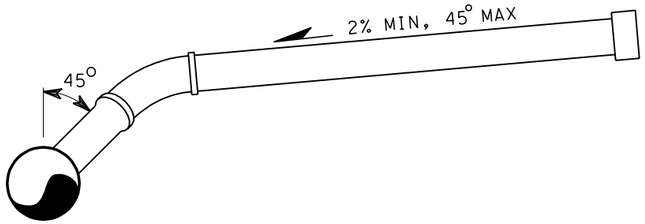

ELEVATION

WYE CONNECTION

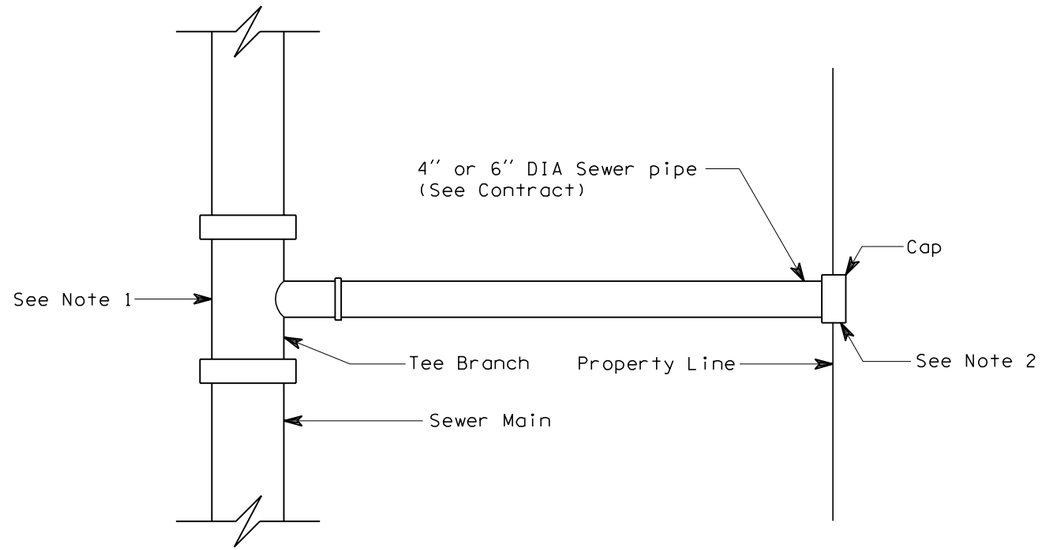

PLAN

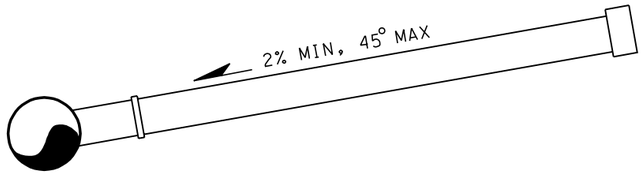

ELEVATION

TEE CONNECTION

EXPIRES JULY 1, 1999

SIDE SEWER
STANDARD PLAN B-29

NOTE: THIS PLAN IS NOT A LEGAL ENGINEERING DOCUMENT BUT AN ELECTRONIC DUPLICATE. THE ORIGINAL, SIGNED BY THE ENGINEER AND APPROVED FOR PUBLICATION, IS KEPT ON FILE AT THE WASHINGTON STATE DEPARTMENT OF TRANSPORTATION. A COPY MAY BE OBTAINED UPON REQUEST.

APPROVED FOR PUBLICATION

Clifford E. Mansfield — *4/24/98*

DEPUTY STATE DESIGN ENGINEER — DATE

WASHINGTON STATE DEPARTMENT OF TRANSPORTATION
OLYMPIA, WASHINGTON

EFFECTIVE: JANUARY 7, 2002 TO AUGUST 4, 2002

EFFECTIVE: JANUARY 7, 2002 TO AUGUST 4, 2002

EFFECTIVE: JANUARY 7, 2002 TO AUGUST 4, 2002

EFFECTIVE: JANUARY 7, 2002 TO AUGUST 4, 2002
EFFECTIVE: JANUARY 7, 2002 TO AUGUST 4, 2002

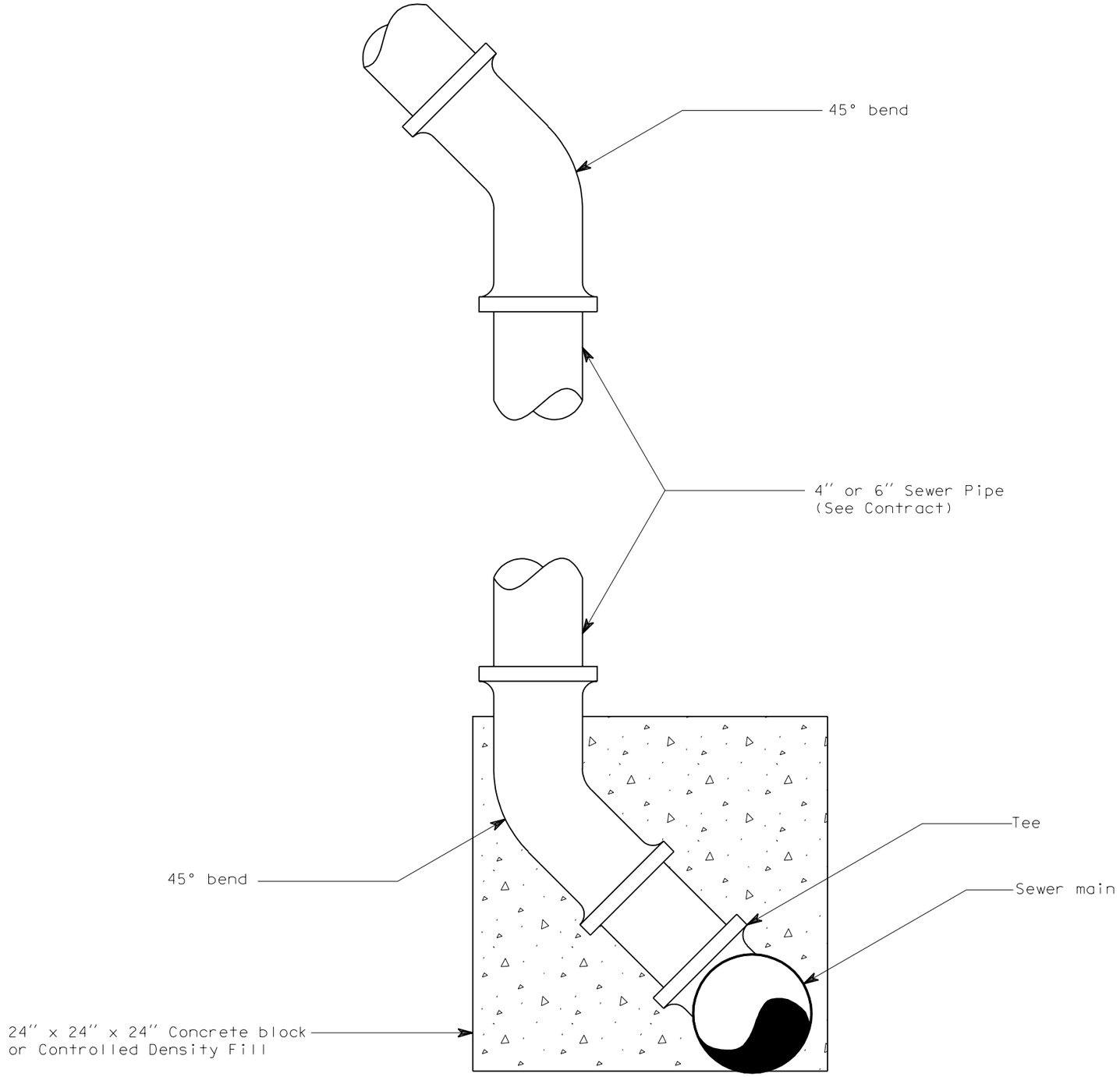

MATTHEW J. WITECKI
STATE OF WASHINGTON
15588
REGISTERED
PROFESSIONAL ENGINEER

EXPIRES JULY 1, 1999

STANDING SIDE SEWER CONNECTION

STANDARD PLAN B-30

NOTE: THIS PLAN IS NOT A LEGAL ENGINEERING DOCUMENT BUT AN ELECTRONIC DUPLICATE. THE ORIGINAL, SIGNED BY THE ENGINEER AND APPROVED FOR PUBLICATION, IS KEPT ON FILE AT THE WASHINGTON STATE DEPARTMENT OF TRANSPORTATION. A COPY MAY BE OBTAINED UPON REQUEST.

APPROVED FOR PUBLICATION

Clifford E. Mansfield — *8/10/98*

DEPUTY STATE DESIGN ENGINEER — DATE

WASHINGTON STATE DEPARTMENT OF TRANSPORTATION
OLYMPIA, WASHINGTON

EFFECTIVE: JANUARY 7, 2002 TO AUGUST 4, 2002
EFFECTIVE: JANUARY 7, 2002 TO AUGUST 4, 2002

EFFECTIVE: JANUARY 7, 2002 TO AUGUST 4, 2002

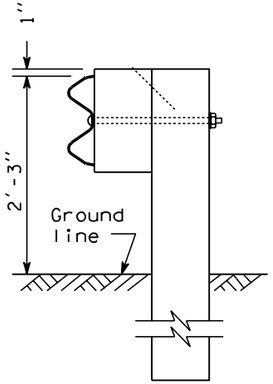

TYPE 1

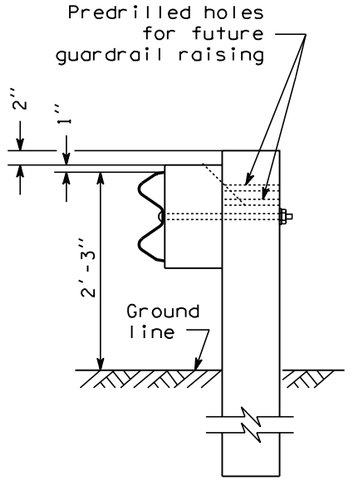

INITIAL INSTALLATION

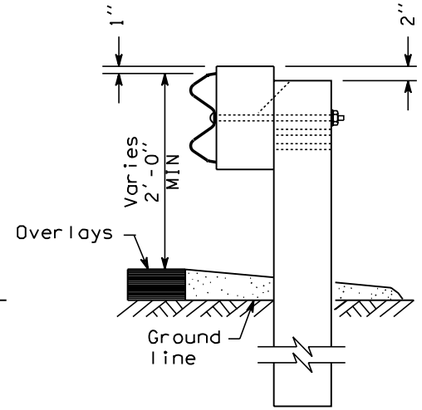

RAIL ELEMENT RAISED

TYPE 1 ALTERNATE

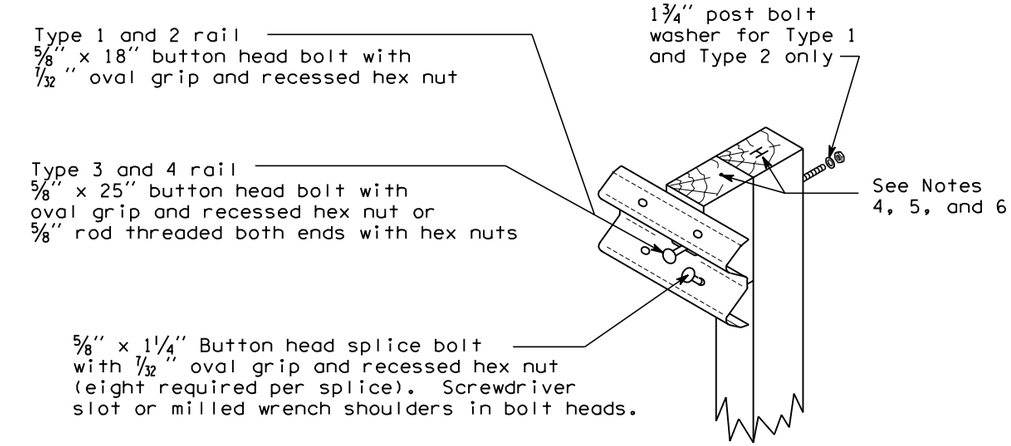

WOOD POST ASSEMBLY DETAIL

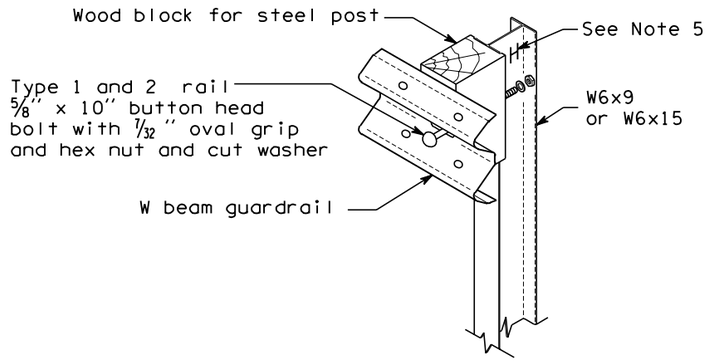

STEEL POST ASSEMBLY DETAIL
(All mounting hardware same as for wood post assembly, except as noted)

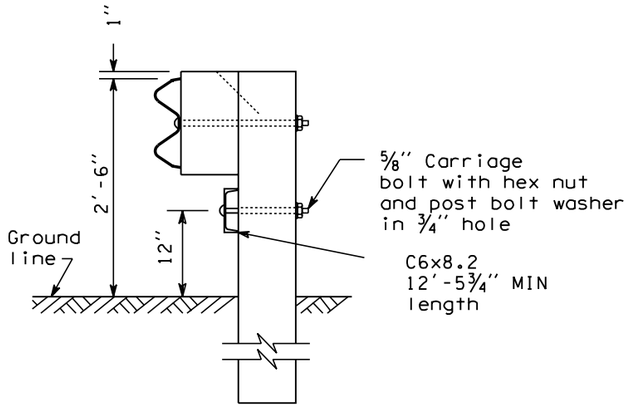

TYPE 2

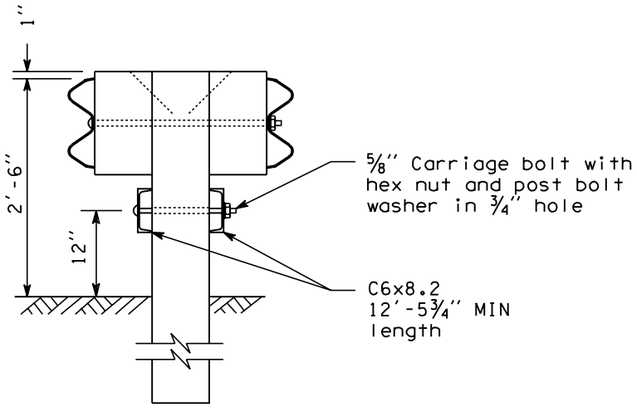

TYPE 3

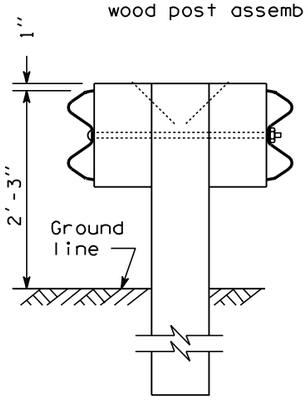

TYPE 4

CLIFFORD E. MANSFIELD
STATE OF WASHINGTON
15224
REGISTERED
PROFESSIONAL ENGINEER

EXPIRES MAY 3, 2000

BEAM GUARDRAIL (W BEAM)
STANDARD PLAN C-1

SHEET 1 OF 2 SHEETS

NOTE: THIS PLAN IS NOT A LEGAL ENGINEERING DOCUMENT BUT AN ELECTRONIC DUPLICATE. THE ORIGINAL, SIGNED BY THE ENGINEER AND APPROVED FOR PUBLICATION, IS KEPT ON FILE AT THE WASHINGTON STATE DEPARTMENT OF TRANSPORTATION. A COPY MAY BE OBTAINED UPON REQUEST.

APPROVED FOR PUBLICATION

Clifford E. Mansfield — DEPUTY STATE DESIGN ENGINEER — *7/31/98* DATE

WASHINGTON STATE DEPARTMENT OF TRANSPORTATION
OLYMPIA, WASHINGTON

DATE	REVISION	BY
7/98	ADD STEEL POST ASSEMBLY DETAIL	RBA

EFFECTIVE: JANUARY 7, 2002 TO AUGUST 4, 2002

EFFECTIVE: JANUARY 7, 2002 TO AUGUST 4, 2002

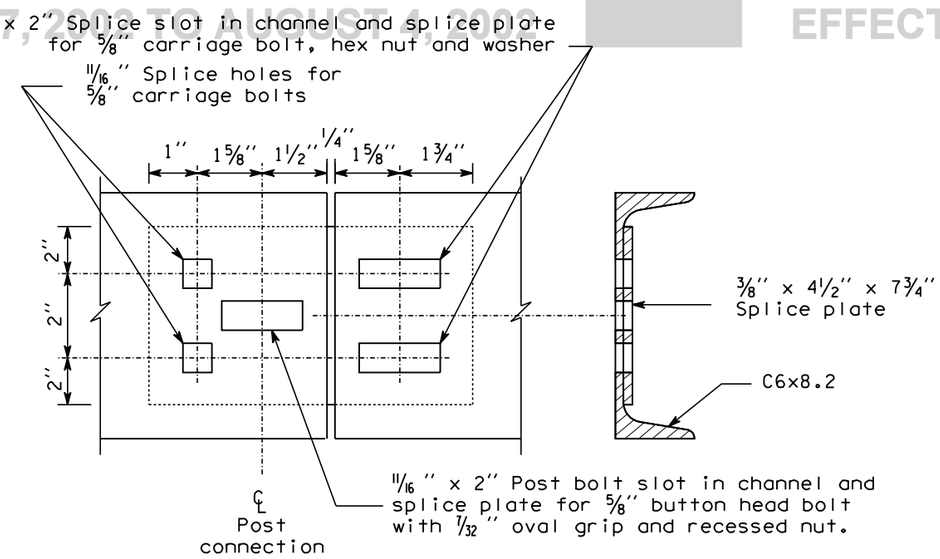

CHANNEL RAIL SPLICE

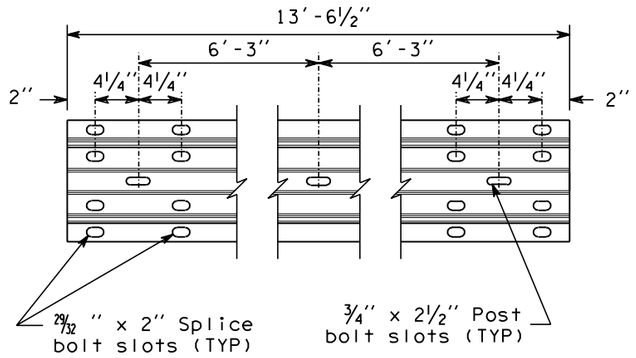

RAIL ELEMENT

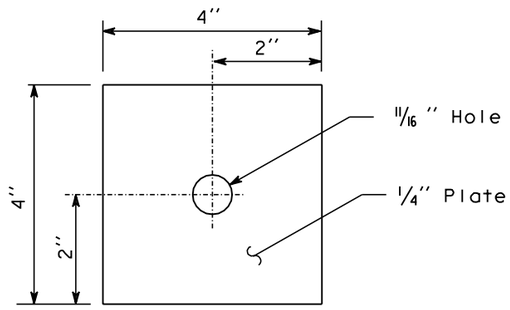

SNOW LOAD
POST WASHER
(See Note 1)

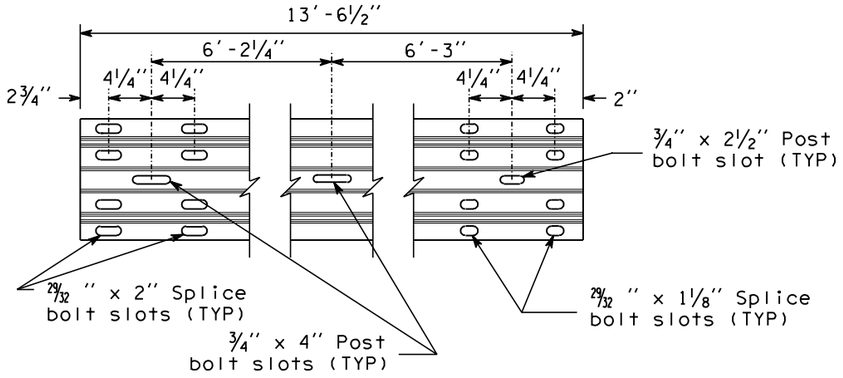

EXPANSION SECTION DETAIL

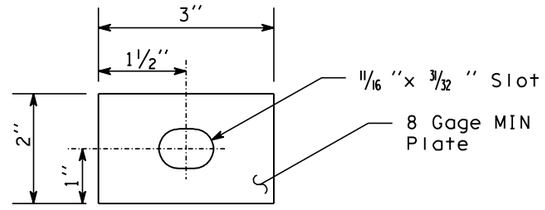

SNOW LOAD
RAIL WASHER

NOTES

1. When required by the contract, a Snow Load Post Washer shall be used on the backside of the post (in lieu of the 1 3/4'' post bolt washer) and a Snow Load Rail Washer shall be placed on the face side of Type 1 and Type 2 Beam Guardrail. Snow load rail washers are not to be installed on terminals.

2. Rail washers, also called "snow load rail washers" are not required on new installations, except as called for in Note 2. Rail washers need not be removed on existing installations, except posts 2 through 8 of a BCT installation.

3. Guardrail post spacing for Types 1 through 4 shall be 6'-3" on centers.

4. Timber block shall be toe-nailed to post with a 16d galvanized nail to restrict block rotation.

5. For post and block details See Standard Plan "Beam Guardrail Posts and Blocks."

6. When Beam Guardrail Type 1, __ Foot Long Post, is specified in Contract, the post length shall be stamped with numbers 1 1/2'' MIN height and 1/4'' deep at the location where the letter "H" is shown on the detail. After installation of long post, it shall be the Contractor's responsiblity to ensure that the stamped numbers are still legible and 1/4'' deep.

7. When Beam Guardrail Type 1, __ Foot Long Post, is specified, in the Contract, steel post lengths shall be increased 1'-0" for auger and backfill installation. The identification stamp of the long post shall remain as specified by the Contract.

CLIFFORD E. MANSFIELD
STATE OF WASHINGTON
15224
REGISTERED
PROFESSIONAL ENGINEER

EXPIRES MAY 3, 2000

BEAM GUARDRAIL (W BEAM)

STANDARD PLAN C-1

SHEET 2 OF 2 SHEETS

NOTE: THIS PLAN IS NOT A LEGAL ENGINEERING DOCUMENT BUT AN ELECTRONIC DUPLICATE. THE ORIGINAL, SIGNED BY THE ENGINEER AND APPROVED FOR PUBLICATION, IS KEPT ON FILE AT THE WASHINGTON STATE DEPARTMENT OF TRANSPORTATION. A COPY MAY BE OBTAINED UPON REQUEST.

APPROVED FOR PUBLICATION

Clifford E. Mansfield — DEPUTY STATE DESIGN ENGINEER

7/31/98 — DATE

WASHINGTON STATE DEPARTMENT OF TRANSPORTATION
OLYMPIA, WASHINGTON

EFFECTIVE: JANUARY 7, 2002 TO AUGUST 4, 2002

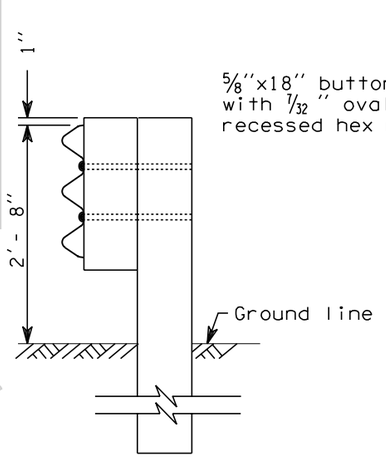

RAIL ASSEMBLY

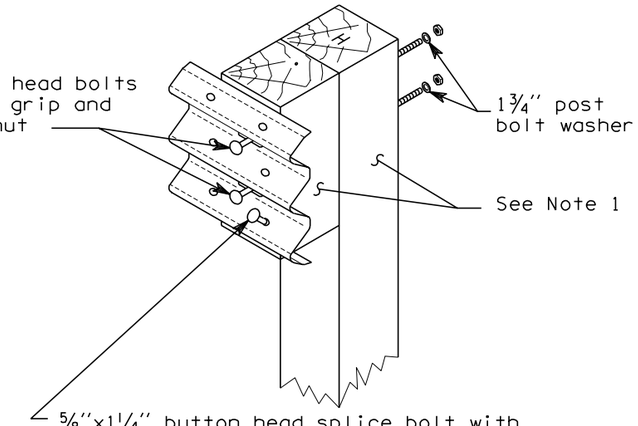

WOOD POST ASSEMBLY

TYPE 10

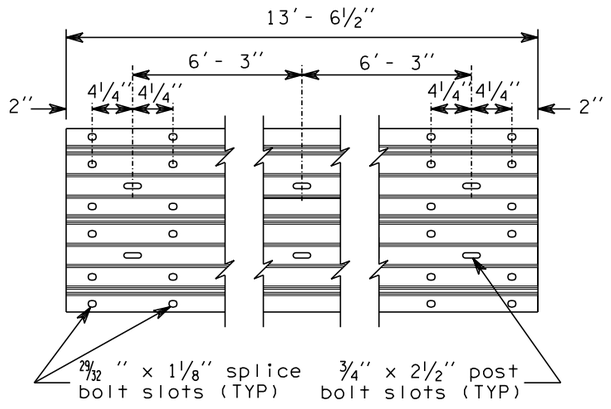

THRIE BEAM RAIL ELEMENT

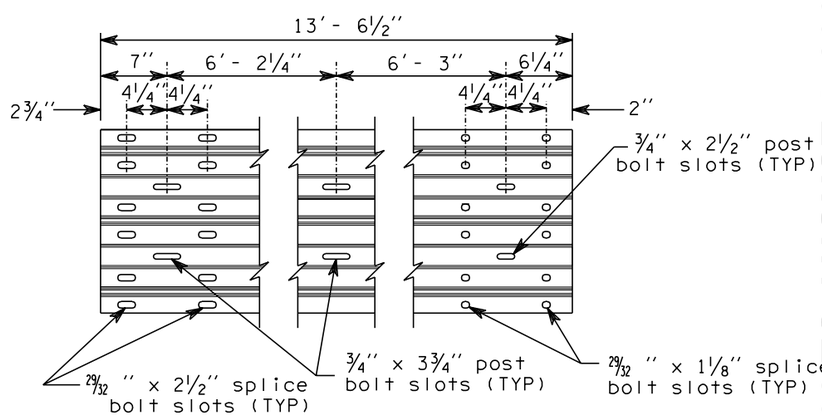

THRIE BEAM EXPANSION SECTION

NOTES
1. Type 10 posts shall be 6x8 timber or W6x9.
   Type 11 posts shall be 10x10 timber or W6x15.
   For details, see "Standard Plan "Beam Guardrail Posts and Blocks."

2. Type 10 guardrail post spacing shall be 6'- 3" on center.
   Type 11 shall be a maximum of 3'- 1½" on center.

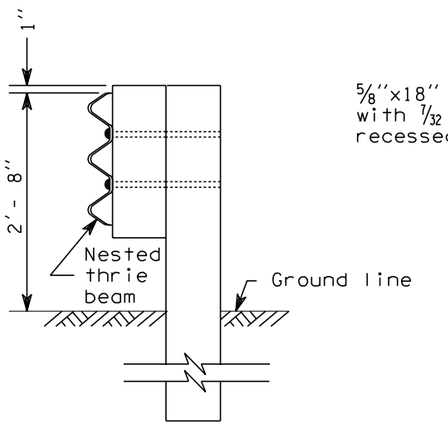

RAIL ASSEMBLY

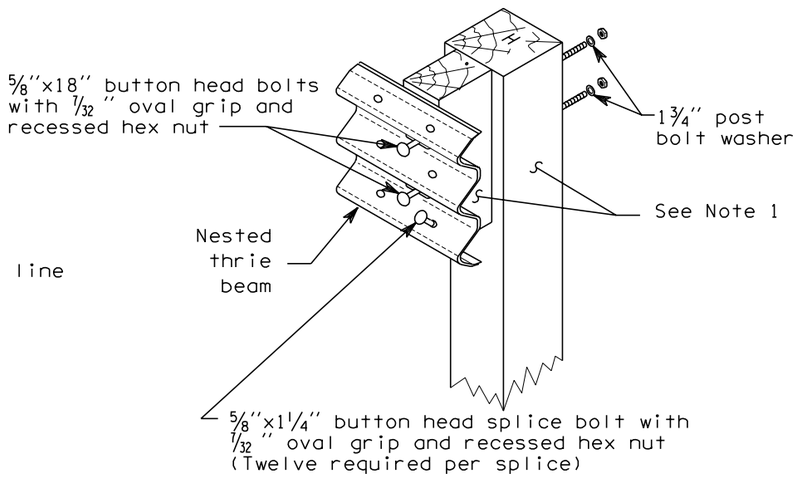

WOOD POST ASSEMBLY

TYPE 11

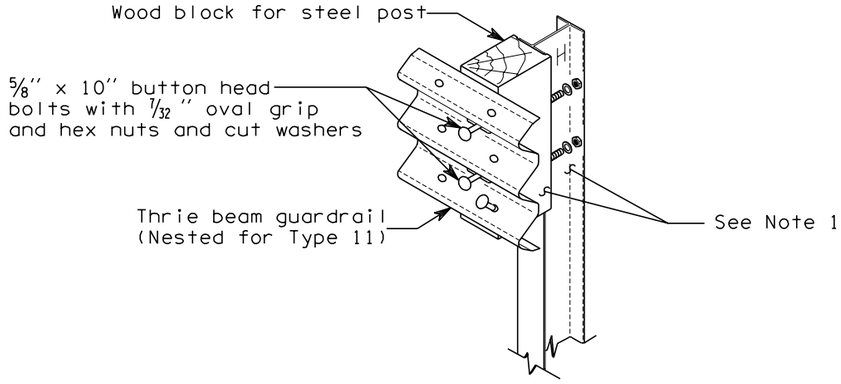

STEEL POST ASSEMBLY

TYPE 10 and 11

CLIFFORD E. MANSFIELD
STATE OF WASHINGTON
15224
REGISTERED
PROFESSIONAL ENGINEER

EXPIRES MAY 3, 2000

BEAM GUARDRAIL (THRIE BEAM)
STANDARD PLAN C-1a

NOTE: THIS PLAN IS NOT A LEGAL ENGINEERING DOCUMENT BUT AN ELECTRONIC DUPLICATE. THE ORIGINAL, SIGNED BY THE ENGINEER AND APPROVED FOR PUBLICATION, IS KEPT ON FILE AT THE WASHINGTON STATE DEPARTMENT OF TRANSPORTATION. A COPY MAY BE OBTAINED UPON REQUEST.

DATE	REVISION	BY
7/98	Add steel post assembly detail	RBA

APPROVED FOR PUBLICATION

Clifford E. Mansfield — DEPUTY STATE DESIGN ENGINEER — *7/31/98* DATE

WASHINGTON STATE DEPARTMENT OF TRANSPORTATION
OLYMPIA, WASHINGTON

EFFECTIVE: JANUARY 7, 2002 TO AUGUST 4, 2002

EFFECTIVE: JANUARY 7, 2002 TO AUGUST 4, 2002

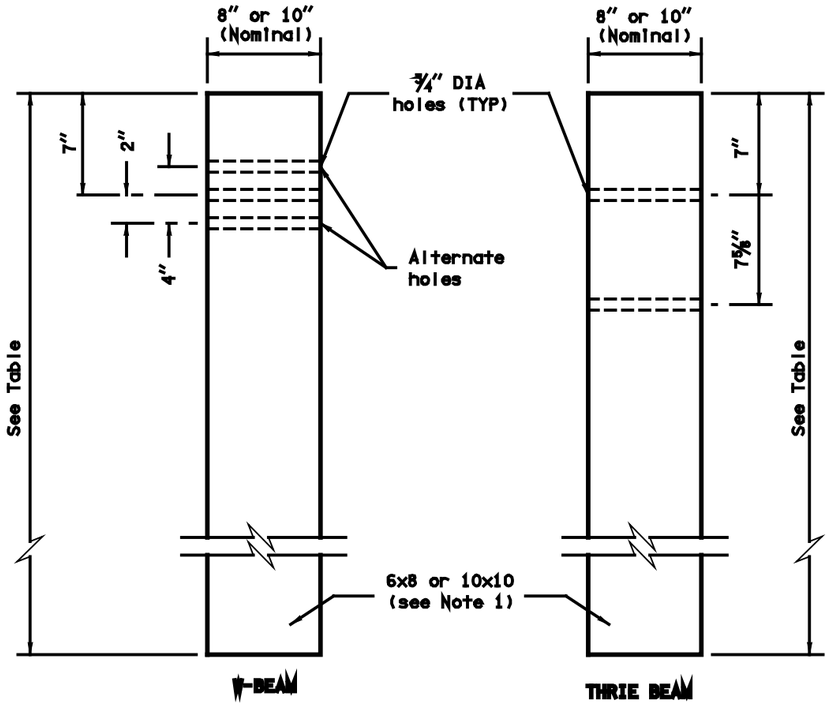

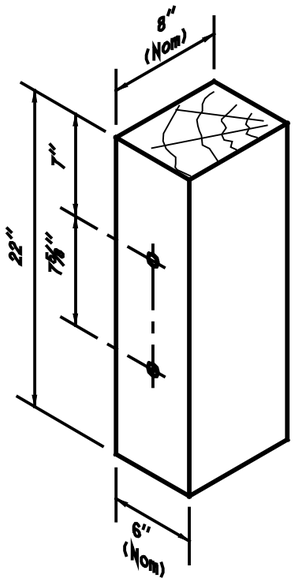

THRIE BEAM WOOD BLOCK FOR WOOD POST

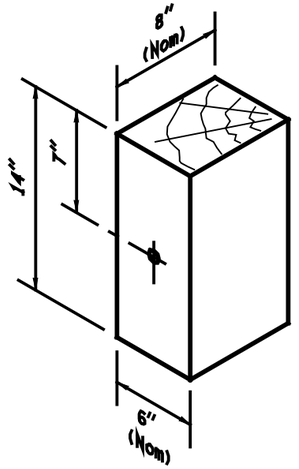

W BEAM WOOD BLOCK FOR WOOD POSTS

POST LENGTH TABLE

GUARDRAIL TYPE	WOOD POSTS	STEEL POSTS	
		Auger and Backfill	Driven
1 through 4	6'-0"	7'-0"	6'-0"
10 or 11	6'-6"	7'-6"	6'-6"

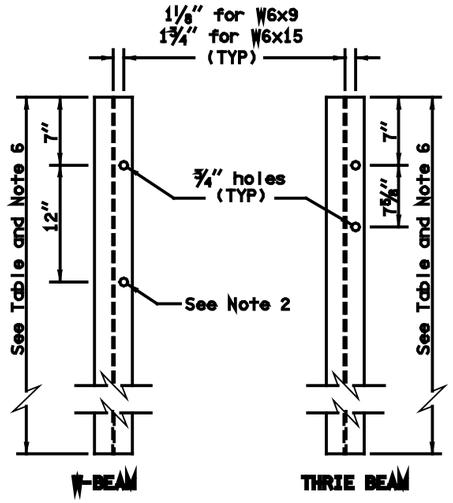

STEEL POST
See Notes 3 and 4

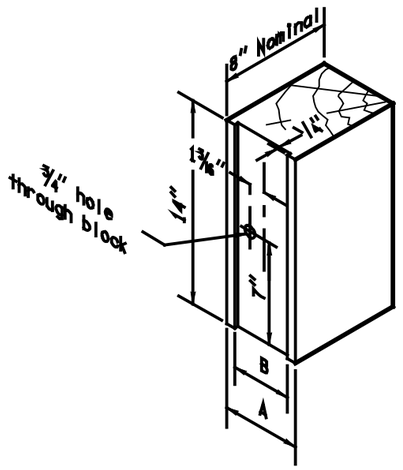

W BEAM WOOD BLOCK FOR STEEL POST

POST	A	B
W6X9	6" •	4¼"
W6X15	8" •	6¼"

•Nominal

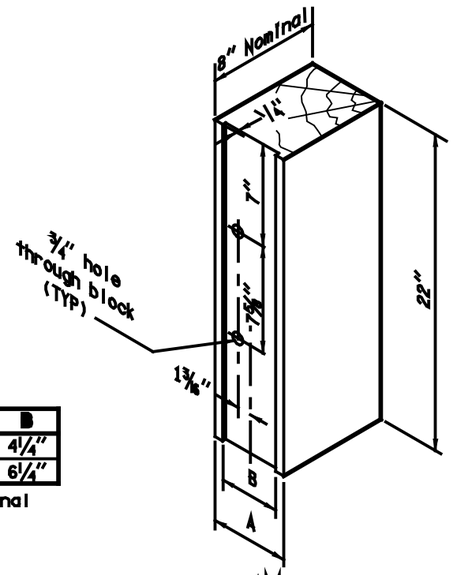

THRIE BEAM WOOD BLOCK FOR STEEL POST

CLIFFORD E. MANSFIELD
STATE OF WASHINGTON
15224
REGISTERED
PROFESSIONAL ENGINEER

EXPIRES MAY 3, 2000

BEAM GUARDRAIL POSTS AND BLOCKS STANDARD PLAN C-1b

SHEET 1 OF 2 SHEETS

NOTE: THIS PLAN IS NOT A LEGAL ENGINEERING DOCUMENT BUT AN ELECTRONIC DUPLICATE. THE ORIGINAL, SIGNED BY THE ENGINEER AND APPROVED FOR PUBLICATION, IS KEPT ON FILE AT THE WASHINGTON STATE DEPARTMENT OF TRANSPORTATION. A COPY MAY BE OBTAINED UPON REQUEST.

DATE	REVISION	BY
3/00	New Approval Date.	TWS

APPROVED FOR PUBLICATION

Clifford E. Mansfield — *3/17/00*

DEPUTY STATE DESIGN ENGINEER — DATE

WASHINGTON STATE DEPARTMENT OF TRANSPORTATION
OLYMPIA, WASHINGTON

EFFECTIVE: JANUARY 7, 2002 TO AUGUST 4, 2002

EFFECTIVE: JANUARY 7, 2002 TO AUGUST 4, 2002

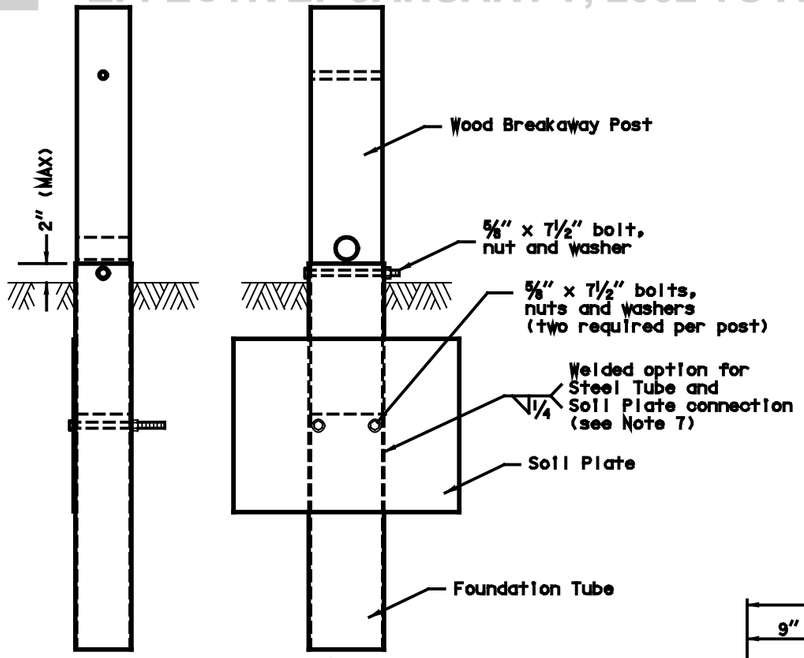

ANCHOR POST ASSEMBLY

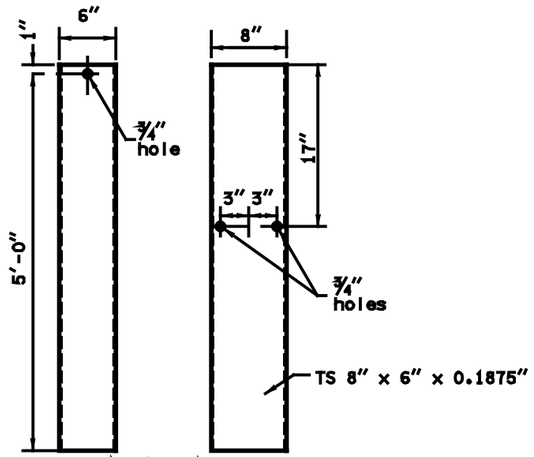

FOUNDATION TUBE

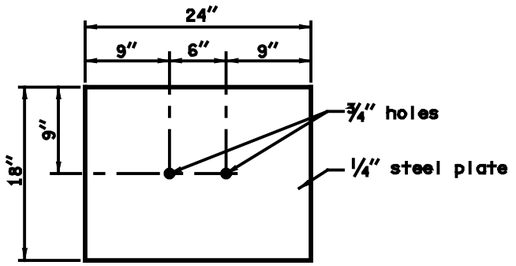

SOIL PLATE

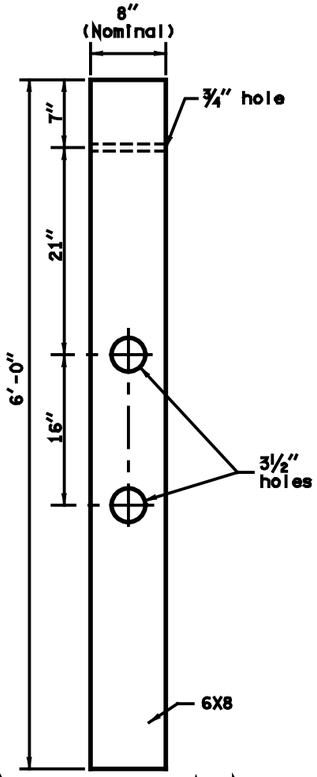

CONTROLLED RELEASING TERMINAL (CRT) POST

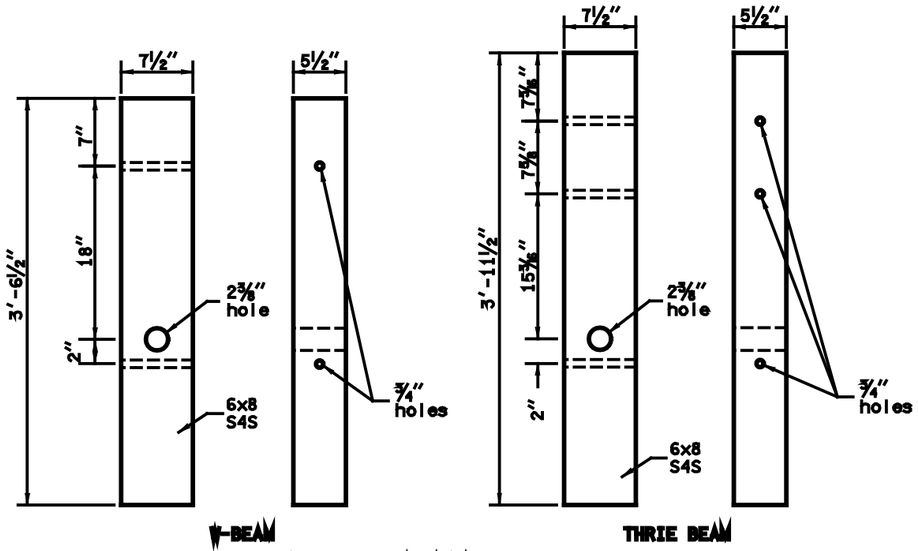

WOOD BREAKAWAY POST

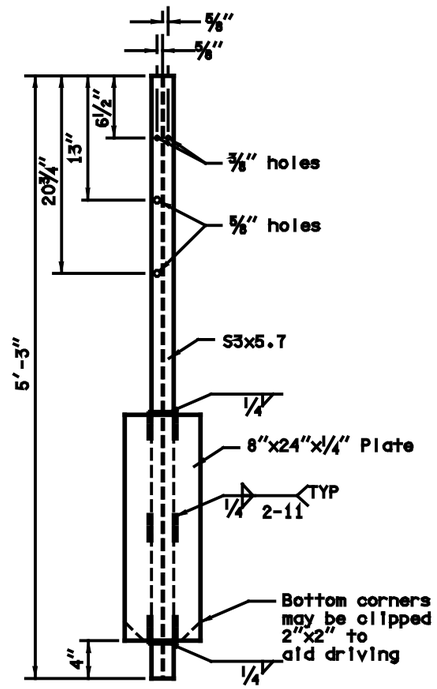

C-2 POST

NOTES

1. Wood posts for all guardrail placement plans shall be 6x8 except where noted otherwise.
2. Lower hole is for rub rail of Type 2 and Type 3 Beam Guardrail.
3. W6x9 steel posts and timber blocks are alternates for 6x8 timber posts and blocks. 7'-0" long W6x15 steel posts and timber blocks are alternates for 6'-0" long 10x10 timber posts and blocks.
4. Holes shall be located on approaching traffic side of web.
5. When contract requires "Beam Guardrail Type 1, __ Foot Long Post," the steel post length shall be marked with numbers to ensure permanent identification at the location where the letter "H" is shown on the detail. The marking shall be 1½" MIN height.
6. When contract requires "Beam Guardrail Type 1, __ Foot Long Post," steel post lengths shall be increased by 0.3 meter for auger and backfill installation. The identification stamp of the long post shall remain as specified by the contract.
7. Soil plate may be welded to foundation tube. If so, holes in soil plate and foundation tube may be omitted.

CLIFFORD E. MANSFIELD — STATE OF WASHINGTON — 15224 — REGISTERED PROFESSIONAL ENGINEER

EXPIRES MAY 3, 2000

BEAM GUARDRAIL POSTS AND BLOCKS STANDARD PLAN C-1b

SHEET 2 OF 2 SHEETS

NOTE: THIS PLAN IS NOT A LEGAL ENGINEERING DOCUMENT BUT AN ELECTRONIC DUPLICATE. THE ORIGINAL, SIGNED BY THE ENGINEER AND APPROVED FOR PUBLICATION, IS KEPT ON FILE AT THE WASHINGTON STATE DEPARTMENT OF TRANSPORTATION. A COPY MAY BE OBTAINED UPON REQUEST.

APPROVED FOR PUBLICATION

Clifford E. Mansfield — 3/17/00

DEPUTY STATE DESIGN ENGINEER — DATE

WASHINGTON STATE DEPARTMENT OF TRANSPORTATION
OLYMPIA, WASHINGTON

DATE	REVISION	BY
3/00	Changed CRT post hole DIA dimensions.	TWS

EFFECTIVE: JANUARY 7, 2002 TO AUGUST 4, 2002

EFFECTIVE: JANUARY 7, 2002 TO AUGUST 4, 2002
EFFECTIVE: JANUARY 7, 2002 TO AUGUST 4, 2002

NOTES

1. For post details see Standard Plan, "Beam Guardrail Posts and Blocks".

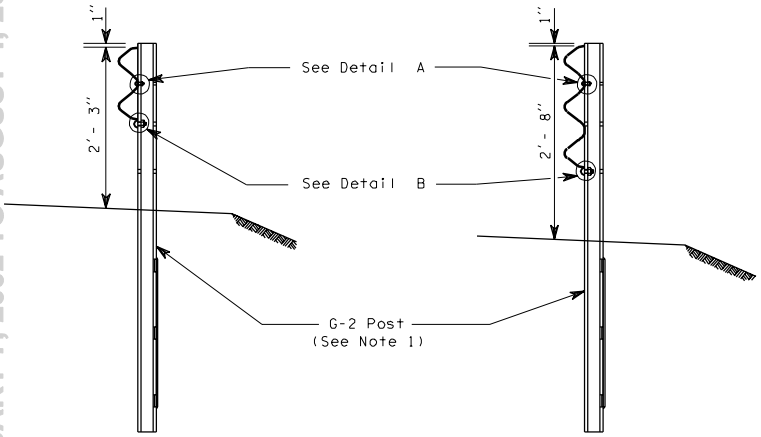

TYPE 20

TYPE 21

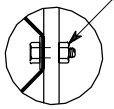

5/16" DIA x 1½" hex head bolt with hex nut and 1¾" square x .135" washer

DETAIL A

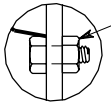

½" DIA x 1½" Hex head bolt with hex nut. Guardrail rests on top of bolt.

DETAIL B

BEAM GUARDRAIL

C-1c 1 of 1

05-30-97

EFFECTIVE: JANUARY 7, 2002 TO AUGUST 4, 2002
EFFECTIVE: JANUARY 7, 2002 TO AUGUST 4, 2002

EFFECTIVE: JANUARY 7, 2002 TO AUGUST 4, 2002

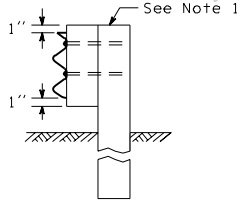

INTERMEDIATE GUARDRAIL
POST CONNECTION DETAILS
(Type A shown)

NOTES

1. Saw top of post and block to 1'' above thrie beam guardrail reducer section.

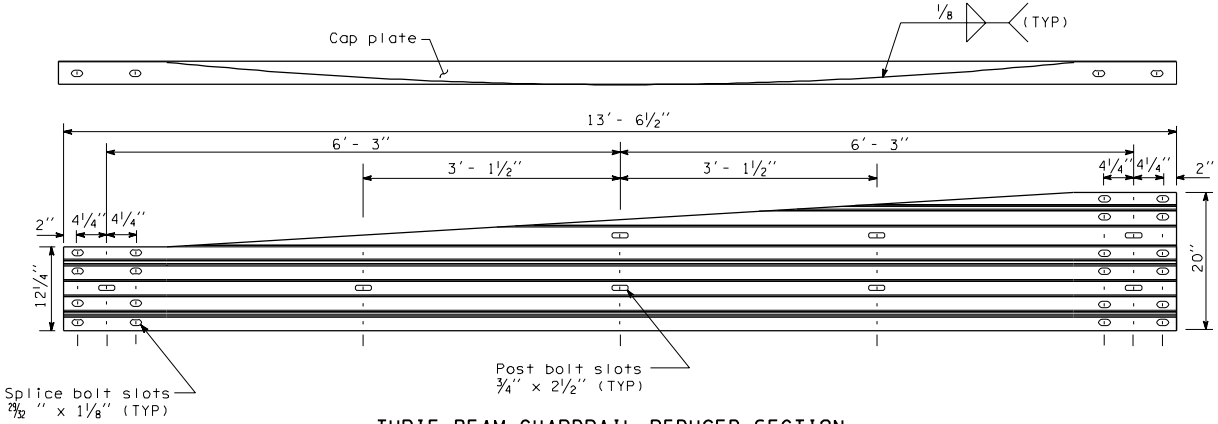

THRIE BEAM GUARDRAIL REDUCER SECTION
TYPE A

(Left section shown, right section reversed)

THRIE BEAM GUARDRAIL
REDUCER SECTION

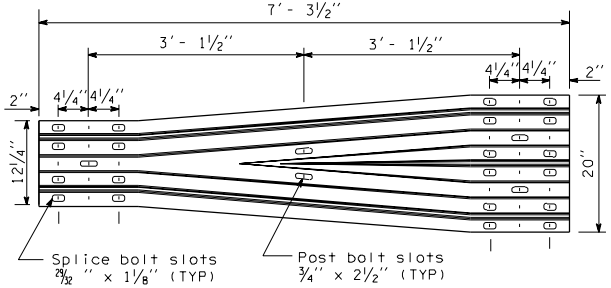

THRIE BEAM GUARDRAIL REDUCER SECTION
TYPE B

EFFECTIVE: JANUARY 7, 2002 TO AUGUST 4, 2002

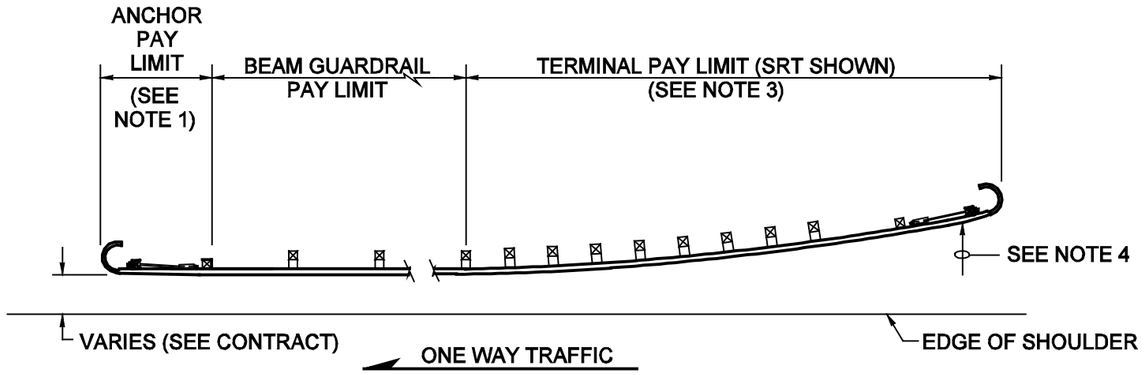

CASE 1

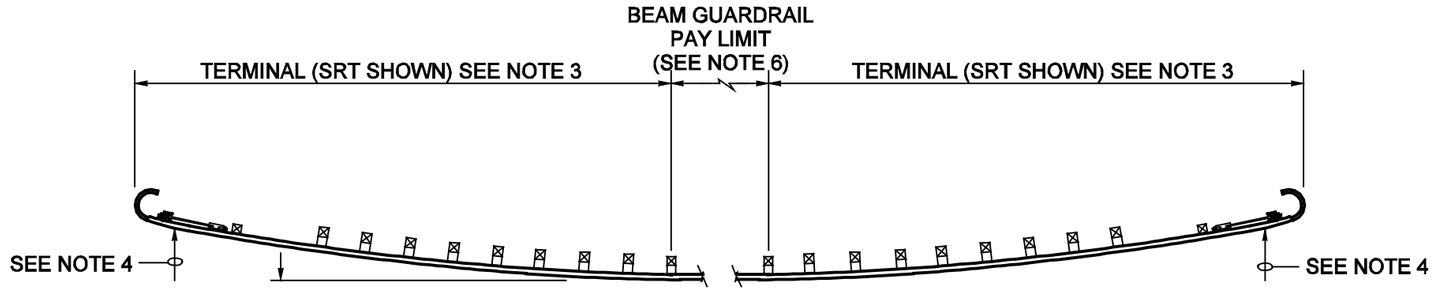

CASE 2

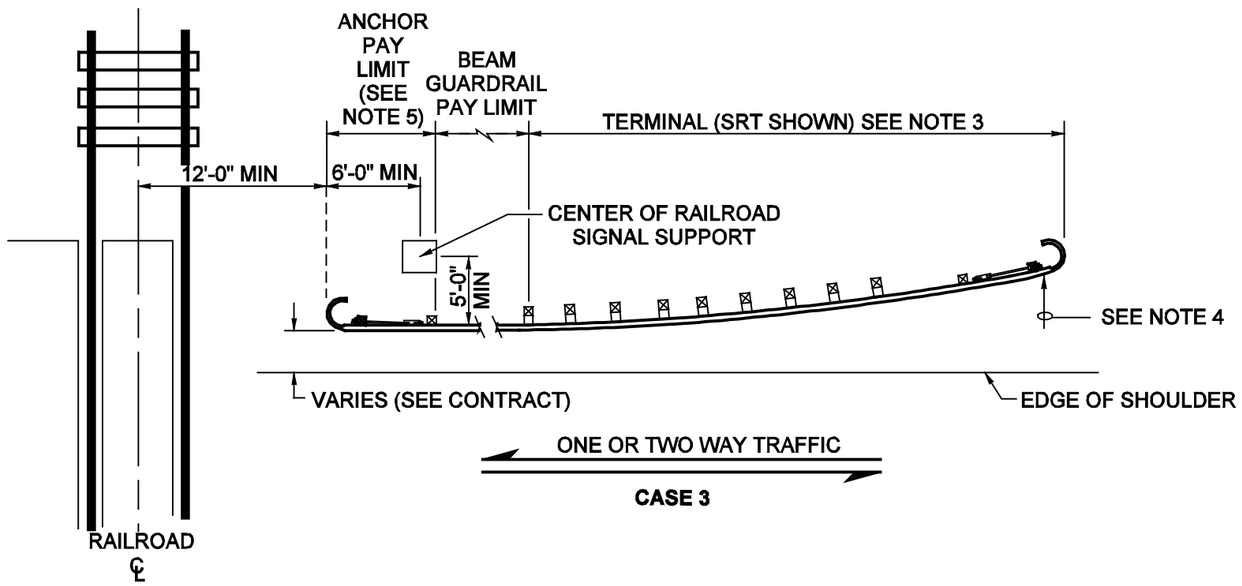

CASE 3

NOTES

1. Type 4 anchor required. For details, see Standard Plan C-6c.
2. Post spacing is 6'-3" unless otherwise shown.
3. For Terminal type and details, see Contract Plans and applicable Standard Plan(s).
4. The slope from the edge of the shoulder into the face of the guardrail should not exceed 10:1 when the face of the guardrail is less than 12'-0" from the edge of the shoulder.
5. For one-way traffic, use Type 4 anchor. For two-way traffic, use Type 1 anchor. See applicable Standard Plan(s) for details.
6. When Beam Guardrail Flared Terminals are used on both ends a minimum of 25'-0" of Beam Guardrail shall be installed.

CLIFFORD E MANSFIELD
STATE OF WASHINGTON
15224
REGISTERED
PROFESSIONAL ENGINEER
EXPIRES MAY 3, 2000

GUARDRAIL PLACEMENT

STANDARD PLAN C-2

NOTE: THIS PLAN IS NOT A LEGAL ENGINEERING DOCUMENT BUT AN ELECTRONIC DUPLICATE. THE ORIGINAL, SIGNED BY THE ENGINEER AND APPROVED FOR PUBLICATION, IS KEPT ON FILE AT THE WASHINGTON STATE DEPARTMENT OF TRANSPORTATION. A COPY MAY BE OBTAINED UPON REQUEST.

DATE	REVISION	BY
12/99	ADDED NOTE 6. MODIFIED THE END SECTIONS TO DESIGN "C".	TWS

APPROVED FOR PUBLICATION

Clifford E. Mansfield *01-06-00*

DEPUTY STATE DESIGN ENGINEER — DATE

WASHINGTON STATE DEPARTMENT OF TRANSPORTATION
OLYMPIA, WASHINGTON

EFFECTIVE: JANUARY 7, 2002 TO AUGUST 4, 2002

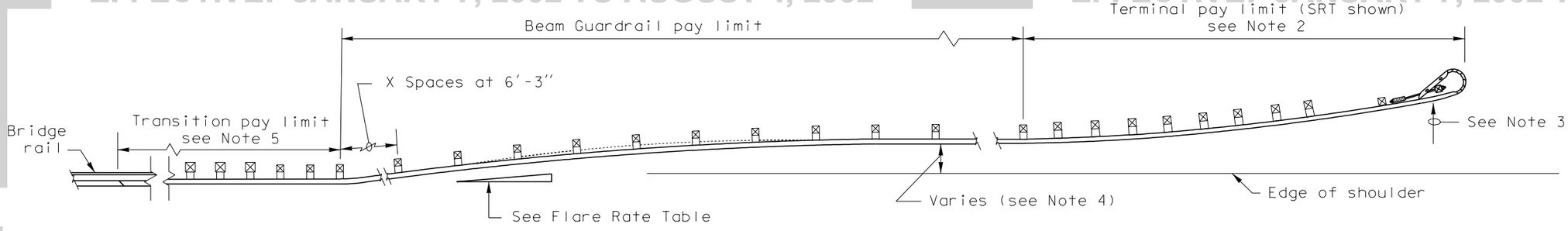

One or Two Way Traffic

CASE 4

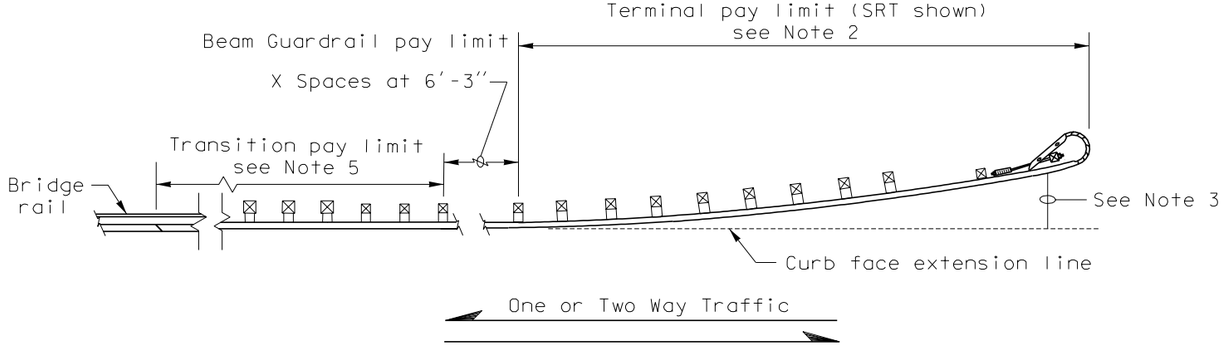

One or Two Way Traffic

CASE 5

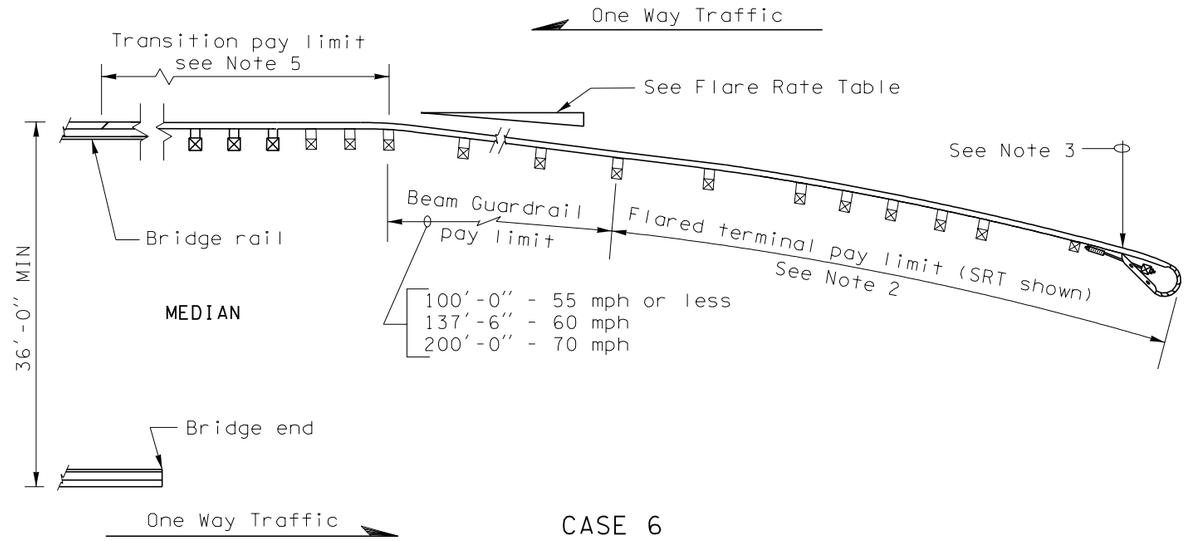

CASE 6

NOTES

1. Post spacing is 6'-3" except where noted.
2. For terminal type and details, see Contract and applicable Standard Plan(s).
3. The slope from the edge of the shoulder into the face of the guardrail should not be steeper than 10:1 when the guardrail is within 12'-0" from the edge of the shoulder.
4. See Contract for dimensions.
5. See Contract for Guardrail Transition Section and Guardrail Connection to Bridge Rail or Concrete Barrier.

FLARE RATE TABLE	
RATE	POSTED SPEED (MPH)
15:1	70
14:1	60
12:1	55
11:1	50
10:1	45
9:1	40 or less

CLIFFORD E. MANSFIELD
STATE OF WASHINGTON
15224
REGISTERED
PROFESSIONAL ENGINEER

EXPIRES MAY 3, 2000

GUARDRAIL PLACEMENT
STANDARD PLAN C-2a

NOTE: THIS PLAN IS NOT A LEGAL ENGINEERING DOCUMENT BUT AN ELECTRONIC DUPLICATE. THE ORIGINAL, SIGNED BY THE ENGINEER AND APPROVED FOR PUBLICATION, IS KEPT ON FILE AT THE WASHINGTON STATE DEPARTMENT OF TRANSPORTATION. A COPY MAY BE OBTAINED UPON REQUEST.

DATE	REVISION	BY
7/98	Revised Flare Rate Table and Case 6 lengths	MKS

APPROVED FOR PUBLICATION

Clifford E. Mansfield — DEPUTY STATE DESIGN ENGINEER — *7/17/98* DATE

WASHINGTON STATE DEPARTMENT OF TRANSPORTATION
OLYMPIA, WASHINGTON

EFFECTIVE: JANUARY 7, 2002 TO AUGUST 4, 2002

EFFECTIVE: JANUARY 7, 2002 TO AUGUST 4, 2002

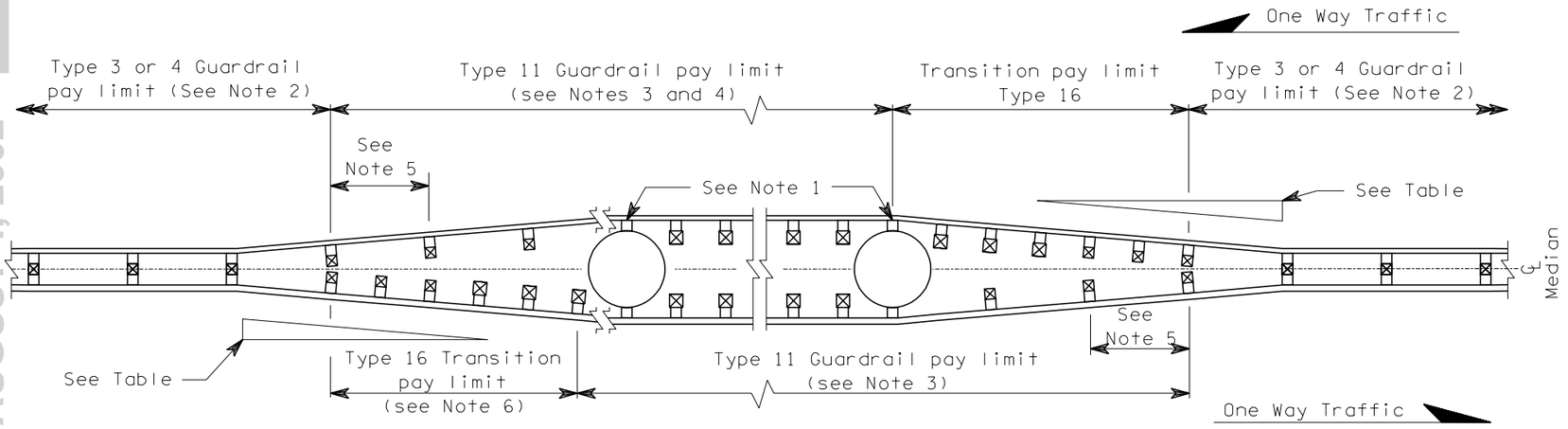

CASE 7

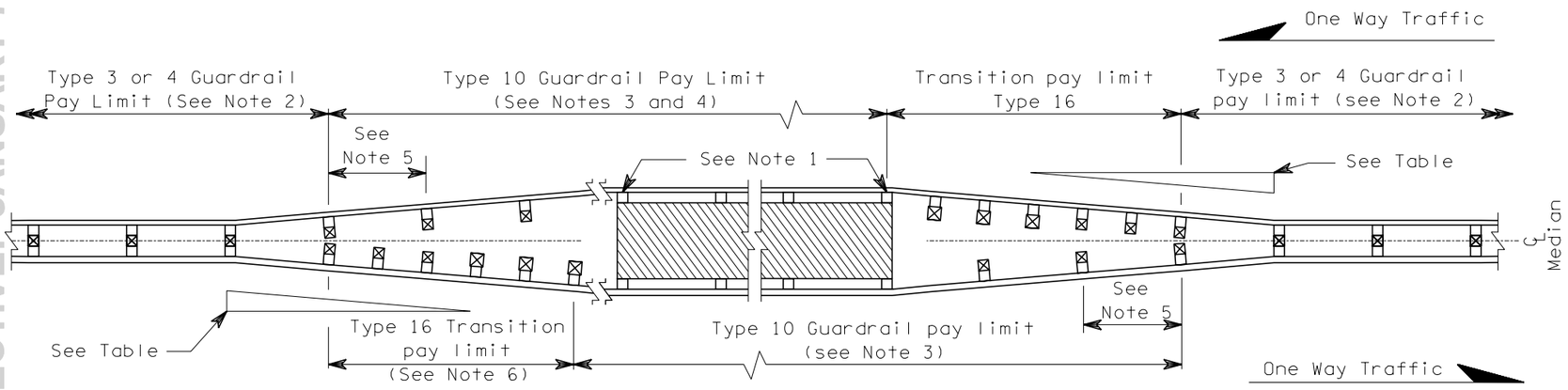

CASE 8

NOTES

1. Attach standard wood or steel blocks to concrete structure with 5/8" expansion anchor or 5/8" threaded rod in a 1" x 8" hole grouted with epoxy.

2. For Type 3 Guardrail, terminate the rub rail by lapping it behind the first 10 x 10 post of the Type 16 Transition Section, or as approved by the Engineer.

3. The Type 10 or Type 11 Guardrail shall extend 12'-6" MIN past the structure to allow installation of the Type 16 transition for the opposing traffic.

4. If the minimum number of 12'-6" thrie beam sections required to span the structure extends more than 6'-3" (but less than 12'-6") past the structure, then a 6'-3" section of nested thrie beam should be added. Otherwise, install an additional 12'-6" section.

5. Thrie Beam Guardrail Reducer Section Type B.

6. This Type 16 Transition shall end at a 10 x 10 post. Place nested thrie beam with 10 x 10 posts at 3'-1½" MAX spacing between the end of the transition and the structure.

FLARE RATE TABLE	
Rate	Posted Speed (MPH)
15:1	70
14:1	60
12:1	55
11:1	50
10:1	45
9:1	40 or less

CLIFFORD E. MANSFIELD
STATE OF WASHINGTON
15224
REGISTERED
PROFESSIONAL ENGINEER

EXPIRES MAY 3, 2000

GUARDRAIL PLACEMENT

STANDARD PLAN C-2b

NOTE: THIS PLAN IS NOT A LEGAL ENGINEERING DOCUMENT BUT AN ELECTRONIC DUPLICATE. THE ORIGINAL, SIGNED BY THE ENGINEER AND APPROVED FOR PUBLICATION, IS KEPT ON FILE AT THE WASHINGTON STATE DEPARTMENT OF TRANSPORTATION. A COPY MAY BE OBTAINED UPON REQUEST.

DATE	REVISION	BY
5/98	Revise Flair Rate Table.	RBA

APPROVED FOR PUBLICATION

Clifford E. Mansfield — *6/12/98*

DEPUTY STATE DESIGN ENGINEER — DATE

WASHINGTON STATE DEPARTMENT OF TRANSPORTATION
OLYMPIA, WASHINGTON

EFFECTIVE: JANUARY 7, 2002 TO AUGUST 4, 2002

EFFECTIVE: JANUARY 7, 2002 TO AUGUST 4, 2002

27 JAN 1999 g:\standard plans\dual signed\vc2c.dgn SheaT

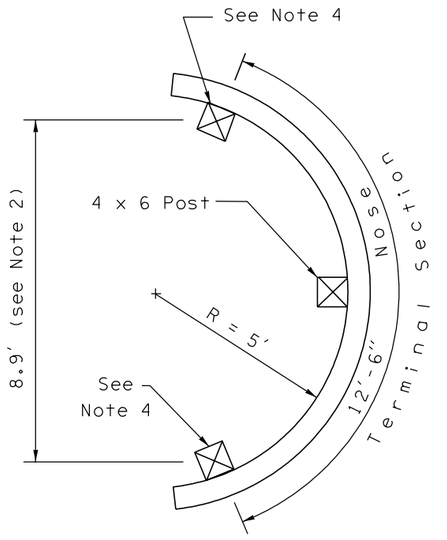

DETAIL A

TABLE - All Dimensions in Feet					
W (ft)	Number of 12'-6" Sections	L_1 See Note 1	X_1 See Note 1	L_2 See Note 1	X_2 See Note 1
14'	3	25.0	1.1	37.2	2.5
15'	3	25.1	1.8	37.2	2.9
16' - 23'	3	24.9	2.1	37.1	3.9
24' - 29'	4	37.4	3.1	49.7	4.9
30' - 35'	5	49.9	4.3	62.2	6.1

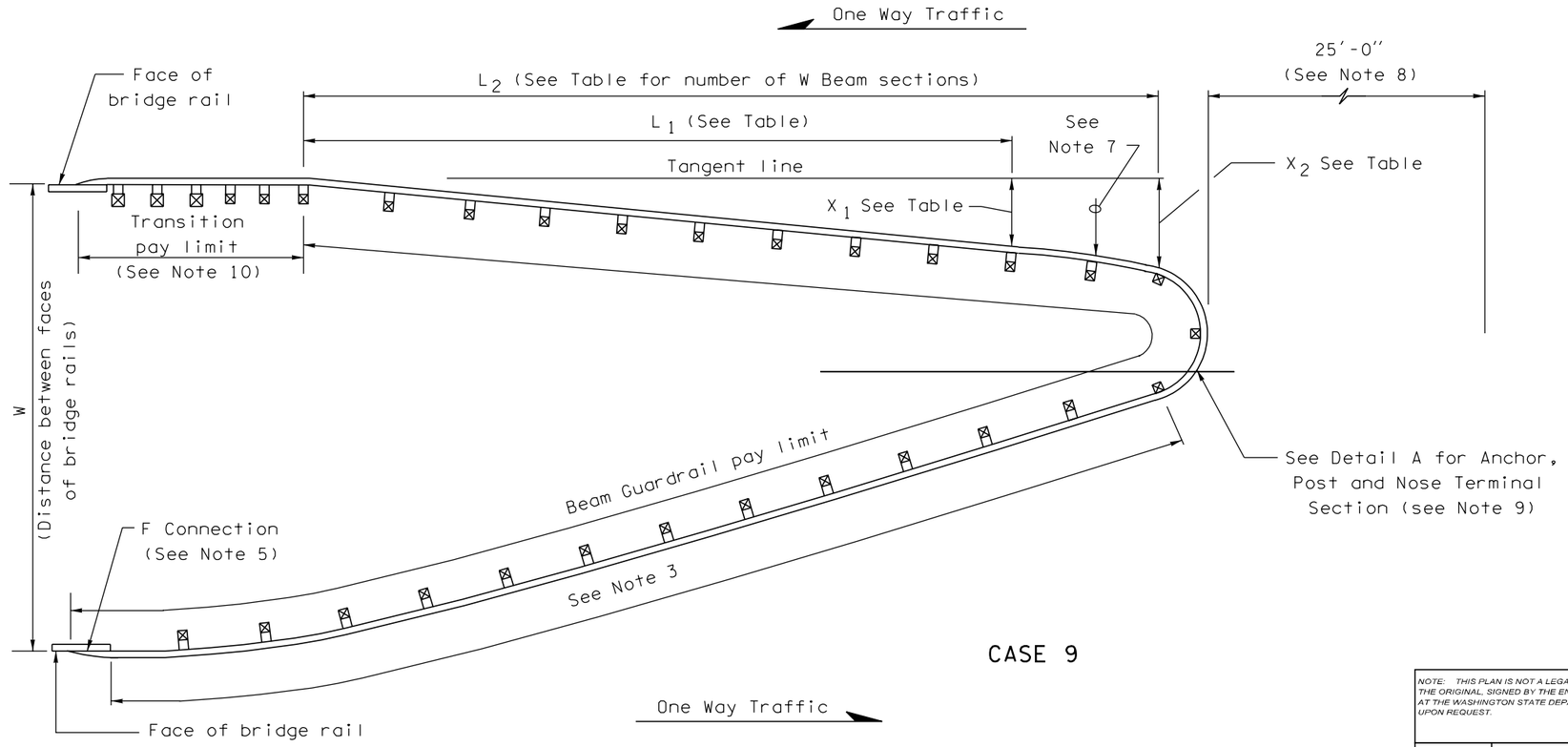

CASE 9

NOTES

1. L_1 and L_2 are measured along the tangent line. X_1 and X_2 are measured from the tangent line to the face of the guardrail.
2. The distance between the Type 7 anchors is measured from centerline to centerline of anchor posts.
3. The guardrail should be curved and tapered to fit. Reverse curves shall not be used.
4. Type 7 anchor required.
5. For bridge connection details, see applicable Standard Plan(s).
6. Post spacing is 6'-3" except where noted.
7. The slope from the edge of the shoulder into the face of the guardrail should not be steeper than 10:1.
8. Within this area, the slope normal from each roadway should not be steeper than 10:1. The slope in the longitudinal direction should be approximately level.
9. The nose terminal section shall be lapped to the outside of each connecting guardrail section. All other laps shall be in the direction of traffic.
10. For Transition Type and details, see the Contract and applicable Standard Plan(s).

CLIFFORD E. MANSFIELD
STATE OF WASHINGTON
15224
REGISTERED
PROFESSIONAL ENGINEER

EXPIRES MAY 3, 2000

GUARDRAIL PLACEMENT MEDIAN BULL NOSE STANDARD PLAN C-2c

NOTE: THIS PLAN IS NOT A LEGAL ENGINEERING DOCUMENT BUT AN ELECTRONIC DUPLICATE. THE ORIGINAL, SIGNED BY THE ENGINEER AND APPROVED FOR PUBLICATION, IS KEPT ON FILE AT THE WASHINGTON STATE DEPARTMENT OF TRANSPORTATION. A COPY MAY BE OBTAINED UPON REQUEST.

DATE	REVISION	BY
12/98	Corrected Detail A, Revised Plan View	RG

APPROVED FOR PUBLICATION

Clifford E. Mansfield — DEPUTY STATE DESIGN ENGINEER — *1/08/99* DATE

WASHINGTON STATE DEPARTMENT OF TRANSPORTATION
OLYMPIA, WASHINGTON

EFFECTIVE: JANUARY 7, 2002 TO AUGUST 4, 2002

EFFECTIVE: JANUARY 7, 2002 TO AUGUST 4, 2002

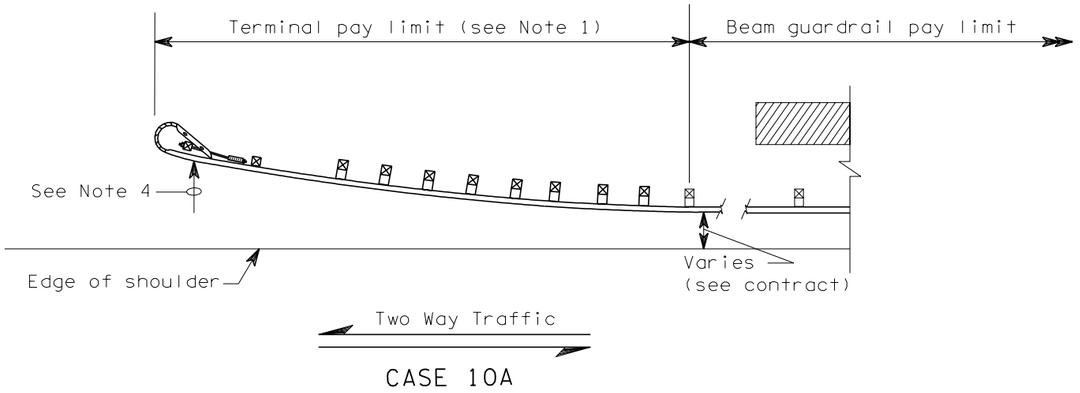

CASE 10A

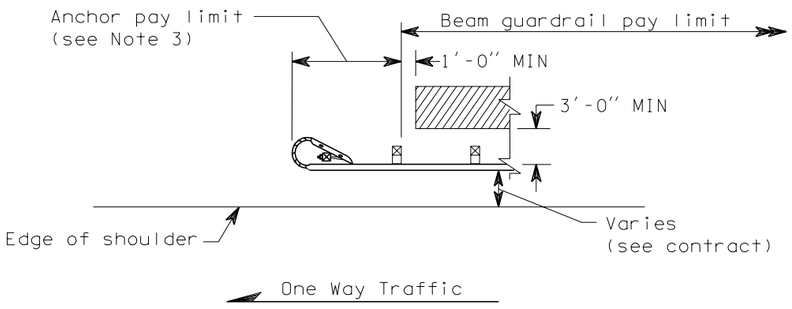

CASE 10B

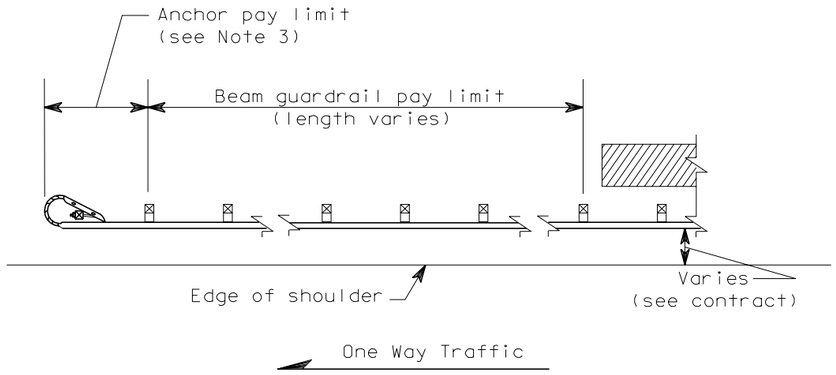

CASE 10C

NOTES

1. SRT Terminal shown, for terminal type and details, see Contract or applicable Standard Plan(s).
2. Post spacing is 6'-3" except where noted.
3. Type 4 anchor required. See applicable Standard Plan(s).
4. The slope from the edge of the shoulder into the face of the guardrail should not exceed 10:1 when the guardrail is within 12'-0" from the edge of the shoulder.

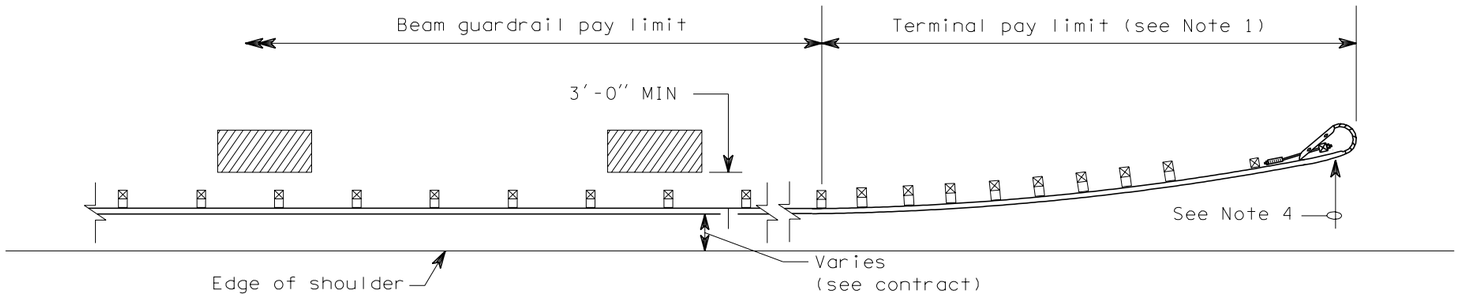

CASE 10 A, B or C

CLIFFORD E. MANSFIELD
STATE OF WASHINGTON
15224
REGISTERED
PROFESSIONAL ENGINEER

EXPIRES MAY 3, 2000

GUARDRAIL PLACEMENT

STANDARD PLAN C-2d

NOTE: THIS PLAN IS NOT A LEGAL ENGINEERING DOCUMENT BUT AN ELECTRONIC DUPLICATE THE ORIGINAL, SIGNED BY THE ENGINEER AND APPROVED FOR PUBLICATION, IS KEPT ON FILE AT THE WASHINGTON STATE DEPARTMENT OF TRANSPORTATION. A COPY MAY BE OBTAINED UPON REQUEST.

DATE	REVISION	BY
5/19/98	Deleted Flare Rate Table.	RBA

APPROVED FOR PUBLICATION

Brian Ziegler — STATE DESIGN ENGINEER — 5/22/98 DATE

WASHINGTON STATE DEPARTMENT OF TRANSPORTATION
OLYMPIA, WASHINGTON

EFFECTIVE: JANUARY 7, 2002 TO AUGUST 4, 2002

EFFECTIVE: JANUARY 7, 2002 TO AUGUST 4, 2002

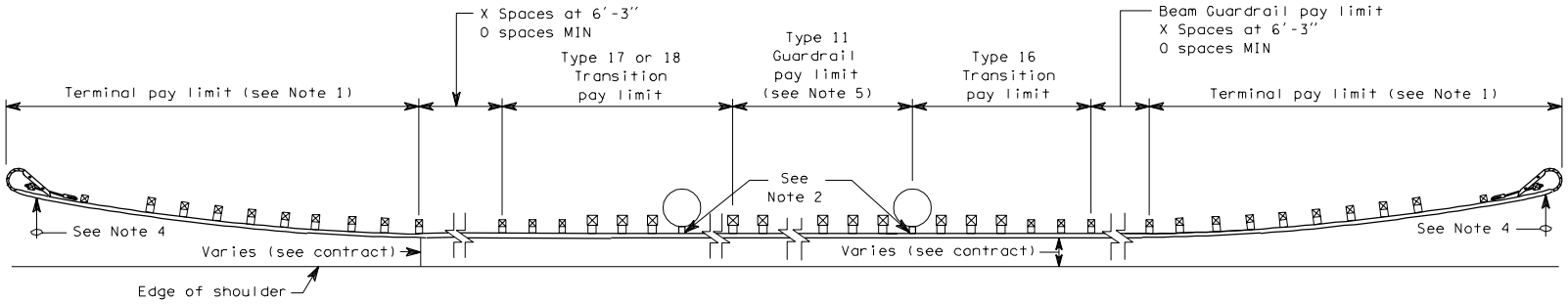

CASE 11A

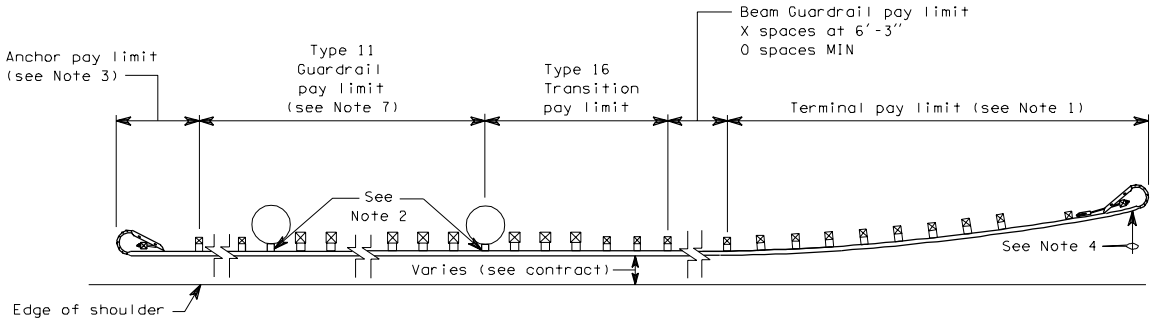

CASE 11B

GUARDRAIL PLACEMENT

C-2e

03-07-97

EFFECTIVE: JANUARY 7, 2002 TO AUGUST 4, 2002

EFFECTIVE: JANUARY 7, 2002 TO AUGUST 4, 2002

NOTES

1. SRT Terminal shown. For terminal type and details see Contract and applicable Standard Plan(s).

2. Attach standard blocks to concrete structure with ⅝" DIA expansion anchor or ⅝" DIA threaded rod in a 1" DIA x 8" hole grouted with epoxy.

3. Type 4 anchor or Type 4 anchor (Thrie Beam) required.

4. The slope from the edge of the shoulder into the face of the guardrail should not be steeper than 10:1 when the guardrail is within 12'-0" from the edge of the shoulder.

5. If the distance from end of Type 11 Guardrail to column/ structure exceeds 6'-3" using 12'-6" thrie beam sections, add a 6'-3" nested section of thrie beam with 10 x 10 posts, spaced at 3'-1½" (MAX), and begin transition.

6. Thrie Beam Guardrail Reducer Section Type B.

7. Guardrail post spacing for Type 11 Guardrail post the End Bridge Pier shall be at 6'-3" spacing, maximum, with 6 x 8 post and standard block.

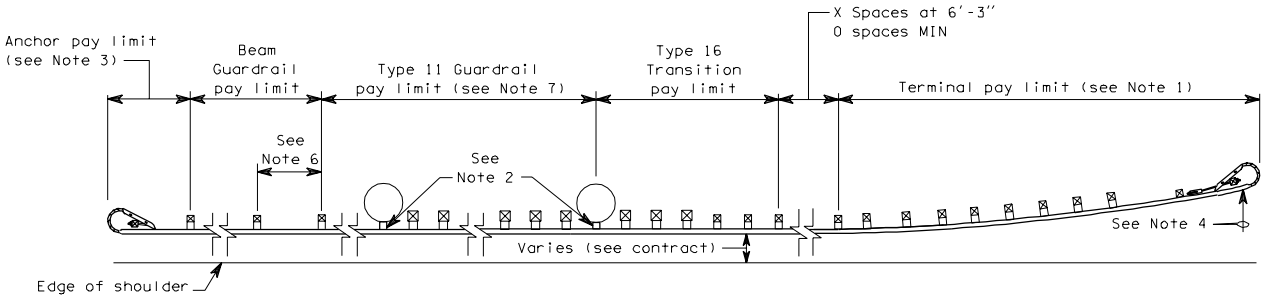

One Way Traffic

CASE 11C

GUARDRAIL PLACEMENT

C-2e

03-07-97

EFFECTIVE: JANUARY 7, 2002 TO AUGUST 4, 2002

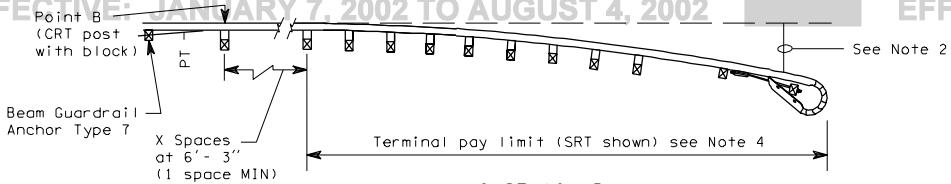

CASE 12 _D
(see Note 7)

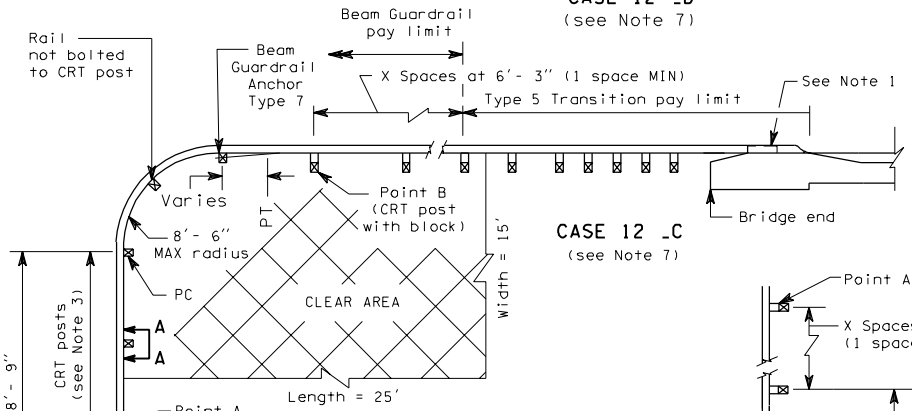

CASE 12 _C
(see Note 7)

CASE 12 A_
(see Note 8)

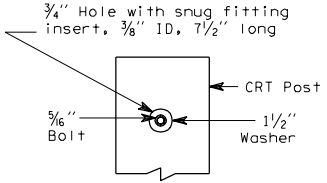

SECTION A-A

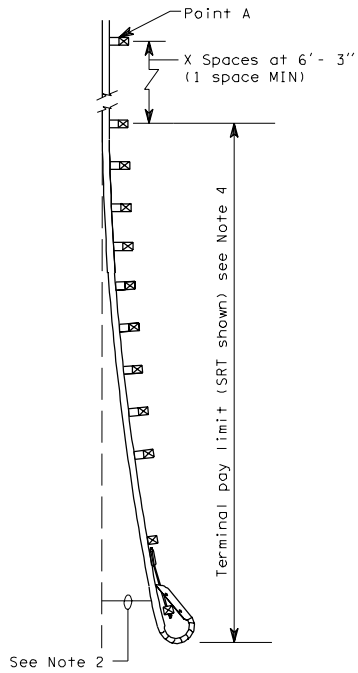

CASE 12 B_
(see Note 7)

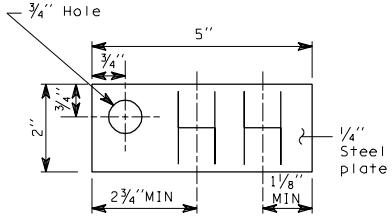

IDENTIFICATION PLATE
(see Note 5)

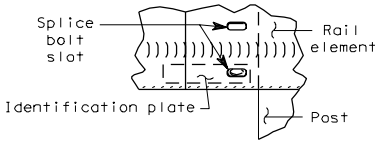

IDENTIFICATION PLATE
MOUNTING DETAIL
(see Note 6)

NOTES

1. See Contract for guardrail connection to bridge rail and concrete barrier.
2. The slope from the edge of the shoulder into the face of the guardrail should not be steeper than 10:1.
3. Attach to rail with 5/16" x 9" long bolt, nut and 1 1/2" washer on back of post.
4. For terminal type and details, see Contract and applicable Standard Plan(s).
5. Radius dimensions shall be etched into plate replacing the letters "HH", shown on the Identification Plate Detail. Digits shall be 1 1/2" MIN height and 3/4" MAX width. The plate shall be galvanized after etching.
6. The guardrail radius Identification Plate shall be mounted on the back side of the Rail Element using the lowest splice bolt at the P.C. of the guardrail radius.
7. First letter of case designation placement indicates end treatment on side road. Second letter indicates end treatment on main road. For instance, a Type 5 Anchor on the side road and a bridge connection on the main road would be Case 12 AC.
8. For the 8'- 6" radius, five CRT posts are required including the CRT post at point B.
9. For CRT post details, see Standard Plan "Beam Guardrail Posts and Blocks".

GUARDRAIL PLACEMENT
WEAK POST INTERSECTION DESIGN (8'- 6" MAX RADIUS)

EFFECTIVE: JANUARY 7, 2002 TO AUGUST 4, 2002
EFFECTIVE: JANUARY 7, 2002 TO AUGUST 4, 2002

REQUIREMENTS			
RADIUS	NUMBER OF CRT POSTS (SEE NOTE 3)	CLEAR AREA	
		L	W
17'- 0"	6	30'	15'
25'- 6"	8	40'	20'
35'- 0"	11	50'	20'

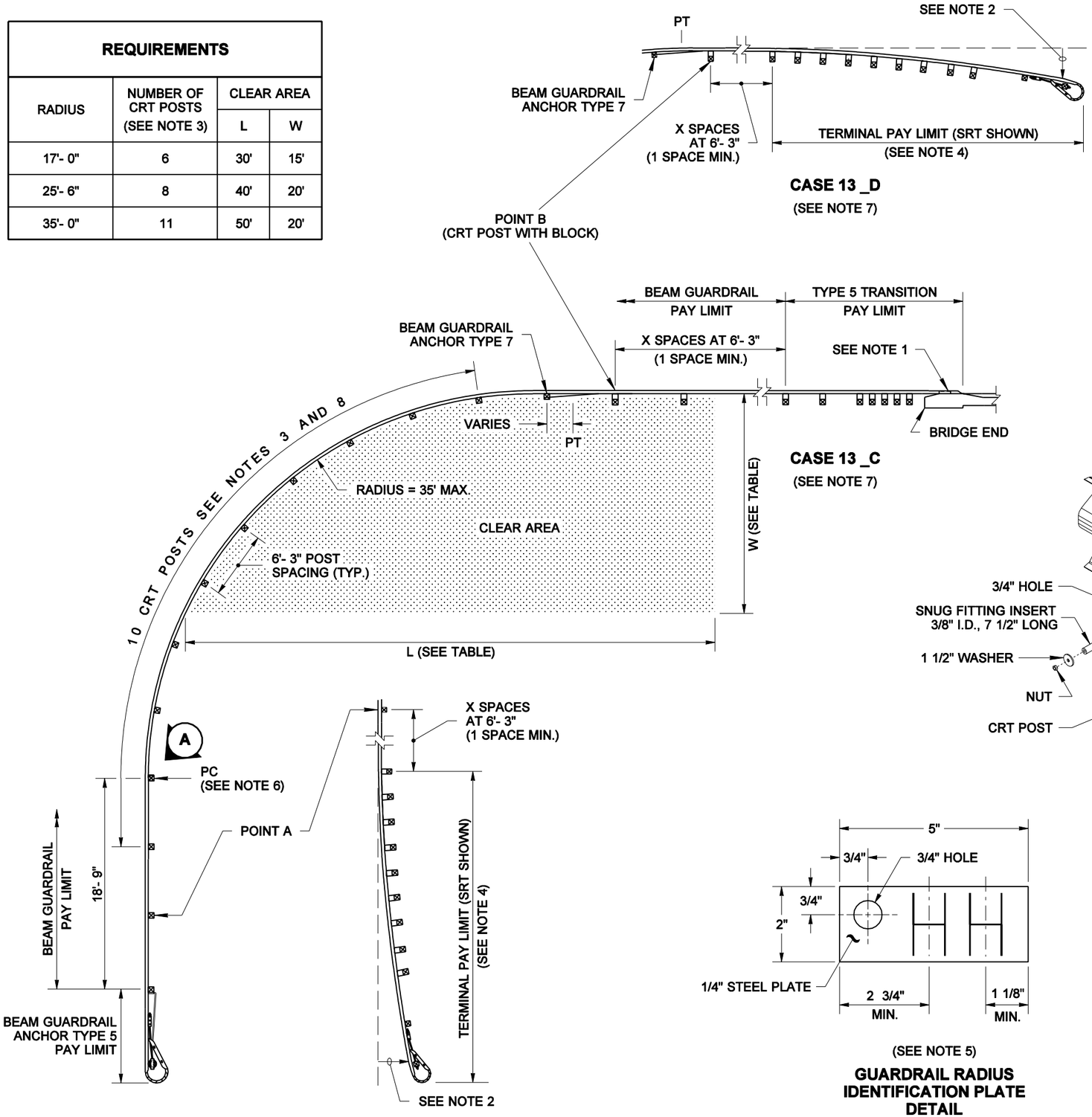

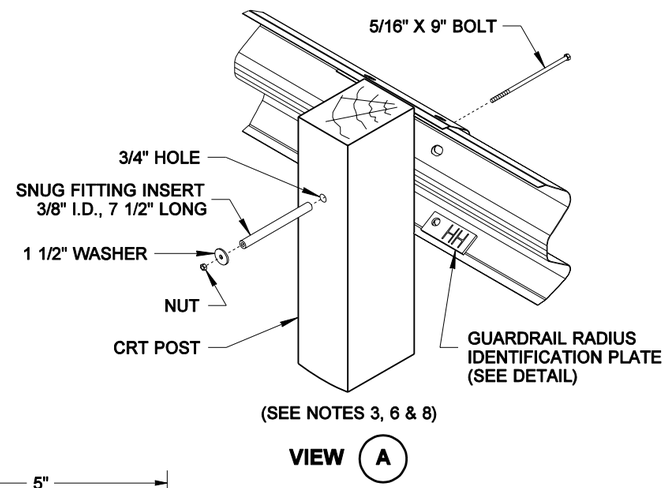

NOTES

1. See Contract Plans for guardrail connection to bridge rail and concrete barrier.
2. The slope from the edge of the shoulder into the face of the guardrail should not be steeper than 10:1.
3. Fewer CRT posts are required for smaller radii; include CRT Post at Point B. Attach guardrail to post with a 5/16" x 9" long bolt, a 3/8" I.D. x 7 1/2" snug fitting insert and a 1 1/2" washer with nut on back of post.
4. For terminal type and details, see Contract and applicable Standard Plan(s).
5. Radius dimensions shall be etched into plate replacing the letters "HH", shown on the GUARDRAIL RADIUS IDENTIFICATION PLATE DETAIL. Digits shall be 1 1/2" minimum height and 3/4" maximum width. Plate shall be galvanized after etching.
6. The guardrail radius Identification Plate shall be mounted on the back side of the rail element using the lowest splice bolt nearest the PC of the guardrail radius (See View A).
7. The first letter of the Case Designation indicates the end treatment on the side road. The second letter indicates the end treatment on the main road. For example, a Type 5 Anchor on the side road with a bridge connection on the main road would be Case 13 AC, the combination shown.
8. For CRT post details, see Standard Plan C-1b.

EXPIRES MAY 3, 2002

GUARDRAIL PLACEMENT WEAK POST INTERSECTION DESIGN (35' MAX. RADIUS)

STANDARD PLAN C-2g

NOTE: THIS PLAN IS NOT A LEGAL ENGINEERING DOCUMENT BUT AN ELECTRONIC DUPLICATE. THE ORIGINAL, SIGNED BY THE ENGINEER AND APPROVED FOR PUBLICATION, IS KEPT ON FILE AT THE WASHINGTON STATE DEPARTMENT OF TRANSPORTATION. A COPY MAY BE OBTAINED UPON REQUEST.

APPROVED FOR PUBLICATION

Clifford E. Mansfield — STATE DESIGN ENGINEER — *07-27-01* DATE

Washington State Department of Transportation

DATE	REVISION	BY
7/01	CORRECTED NOTES; ADDED "VIEW A"	MAS

EFFECTIVE: JANUARY 7, 2002 TO AUGUST 4, 2002
EFFECTIVE: JANUARY 7, 2002 TO AUGUST 4, 2002

EFFECTIVE: JANUARY 7, 2002 TO AUGUST 4, 2002
EFFECTIVE: JANUARY 7, 2002 TO AUGUST 4, 2002

NOTES

1. For Service Level 1, Weak Post Bridge Rail System, see Contract.
2. SRT Terminal shown. For Terminal type and details, see Contract and applicable Standard Plan(s).
3. The slope from the edge of the shoulder into the face of the guardrail should not be steeper than 10:1.
4. See Standard Plan "Beam Guardrail Posts and Blocks".

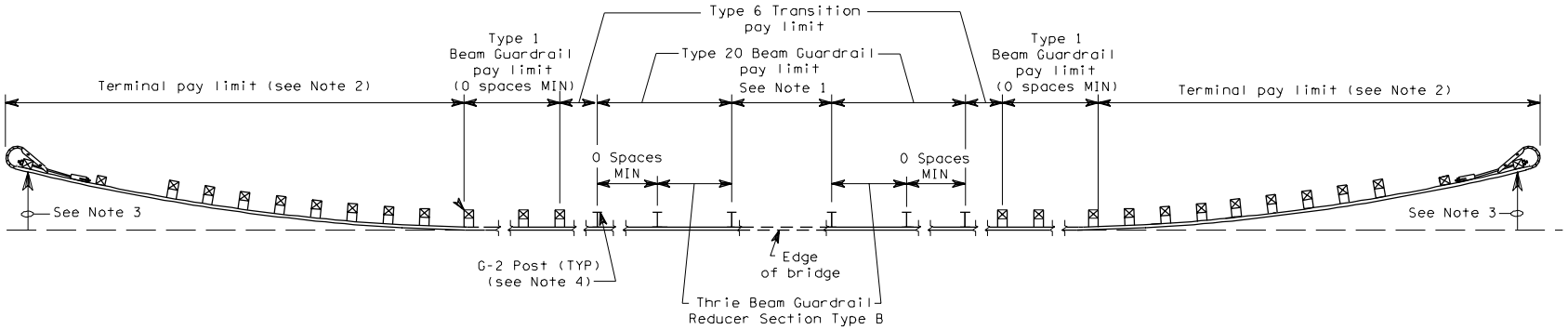

Direction of Traffic

CASE 14

GUARDRAIL PLACEMENT

C-2h 1 of 1

03-28-97

EFFECTIVE: JANUARY 7, 2002 TO AUGUST 4, 2002
EFFECTIVE: JANUARY 7, 2002 TO AUGUST 4, 2002

EFFECTIVE: JANUARY 7, 2002 TO AUGUST 4, 2002

NOTES

1. SRT Terminal shown. For Terminal type and details, see Contract and applicable Standard Plan(s).
2. The slope from the edge of the shoulder into the face of the guardrail should not be steeper than 10:1 .
3. See Standard Plan for Box Culvert Guardrail Steel Post.
4. For spans up to 18′- 9″, see Standard Plan for Guardrail Placement Cases 19, 20, and 21.

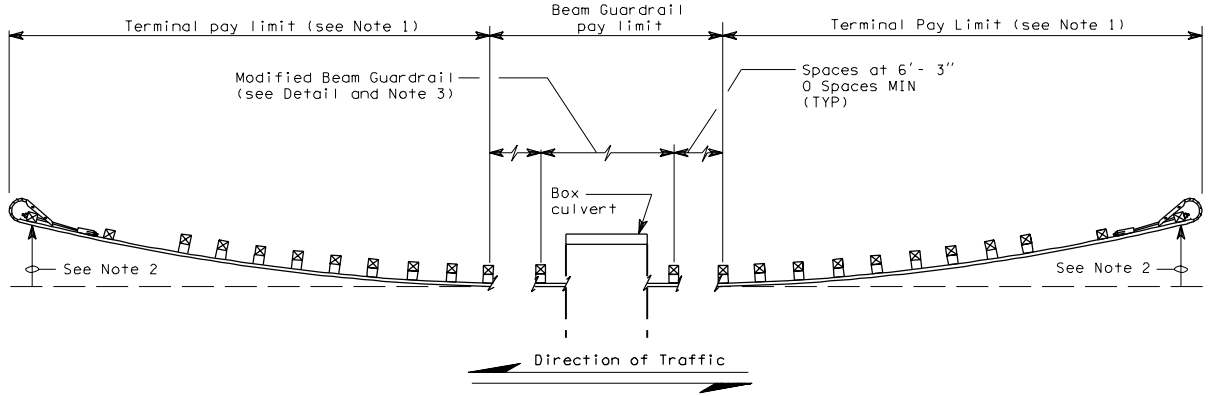

CASE 15

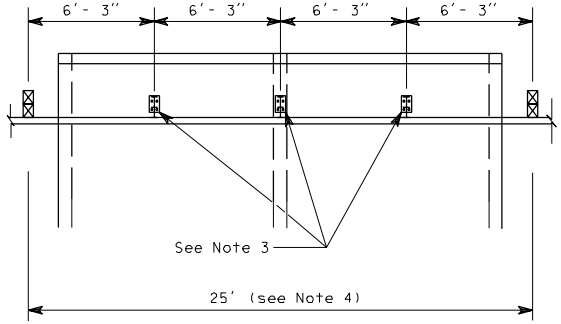

DETAIL

GUARDRAIL PLACEMENT

C-2i 1 of 1

03-28-97

EFFECTIVE: JANUARY 7, 2002 TO AUGUST 4, 2002

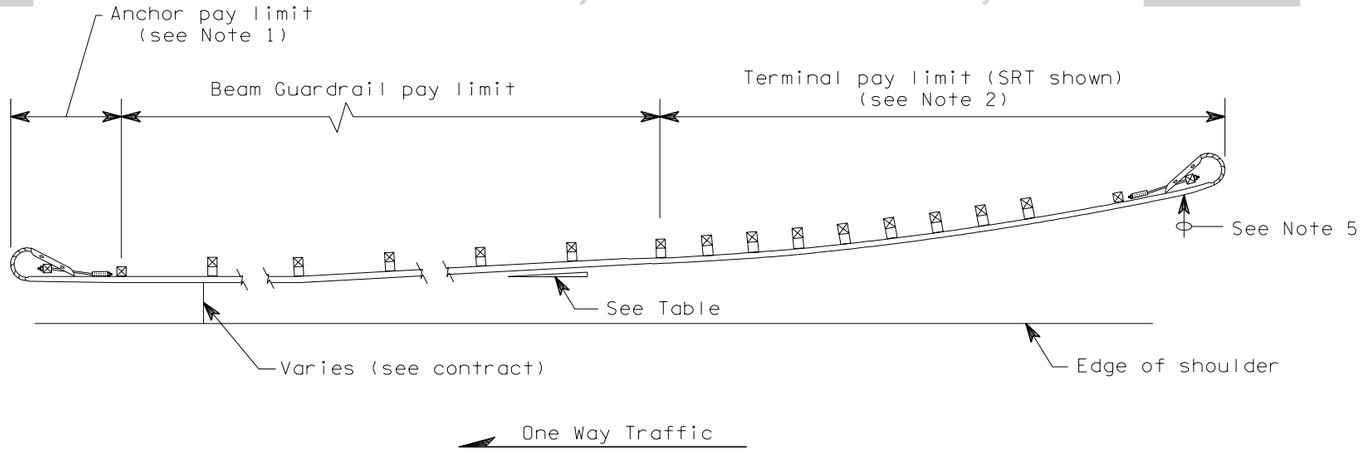

CASE 16

NOTES

1. Type 4 anchor required. For details, see applicable Standard Plan(s).
2. For terminal type and details, see contract and applicable Standard Plan(s).
3. Post spacing is 6′-3″ except where noted.
4. For guardrail to bridge rail connection see applicable Standard Plan(s) or Contract.
5. The slope from the edge of the shoulder into the face of the guardrail should not be steeper than 10:1 when the guardrail is within 12′-0″ from the edge of the shoulder. Beyond 12′-0″, the slope shall not be steeper than 6:1.

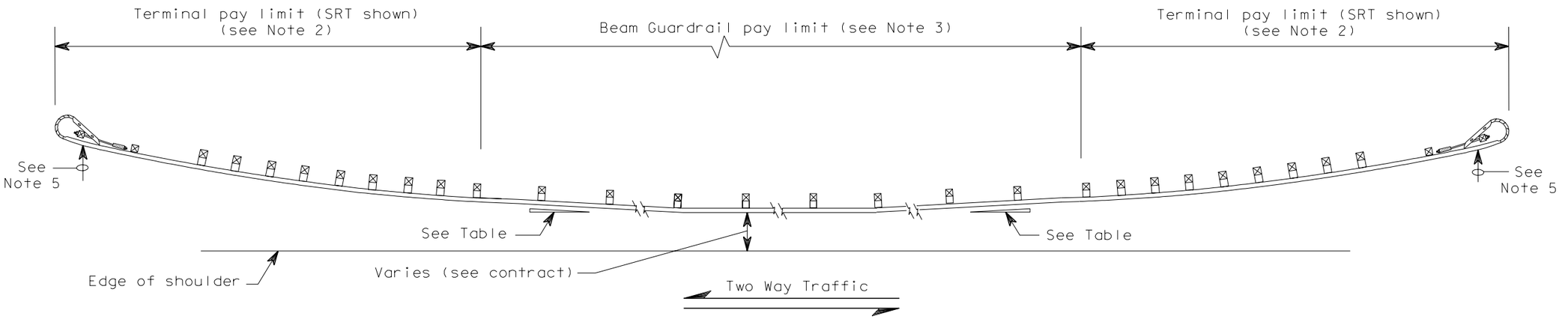

CASE 17

FLARE RATE TABLE	
Rate	Posted Speed (MPH)
15:1	70
14:1	60
12:1	55
11:1	50
10:1	45
9:1	40 or less

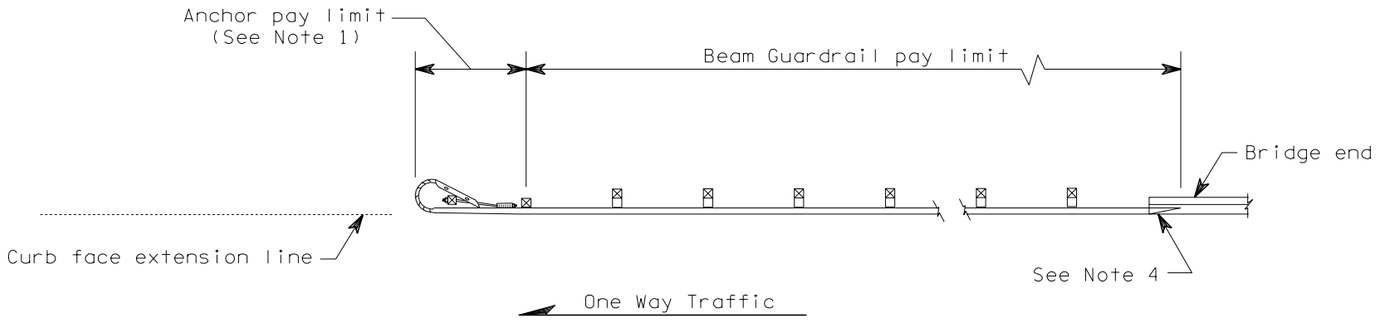

CASE 18

CLIFFORD E. MANSFIELD
STATE OF WASHINGTON
15224
REGISTERED
PROFESSIONAL ENGINEER

EXPIRES MAY 3, 2000

GUARDRAIL PLACEMENT

STANDARD PLAN C-2j

NOTE: THIS PLAN IS NOT A LEGAL ENGINEERING DOCUMENT BUT AN ELECTRONIC DUPLICATE. THE ORIGINAL, SIGNED BY THE ENGINEER AND APPROVED FOR PUBLICATION, IS KEPT ON FILE AT THE WASHINGTON STATE DEPARTMENT OF TRANSPORTATION. A COPY MAY BE OBTAINED UPON REQUEST.

DATE	REVISION	BY
5/98	Revise Flair Rate Table.	RBA

APPROVED FOR PUBLICATION

Clifford E. Mansfield — DEPUTY STATE DESIGN ENGINEER — *6/12/98* DATE

WASHINGTON STATE DEPARTMENT OF TRANSPORTATION
OLYMPIA, WASHINGTON

EFFECTIVE: JANUARY 7, 2002 TO AUGUST 4, 2002

EFFECTIVE: JANUARY 7, 2002 TO AUGUST 4, 2002

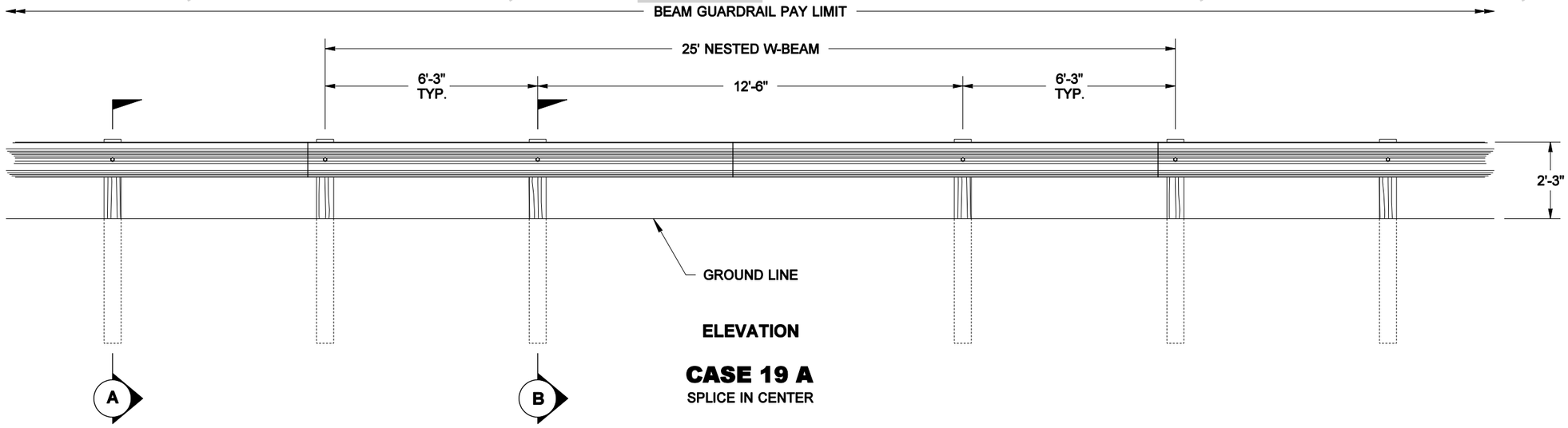

ELEVATION

CASE 19 A

SPLICE IN CENTER

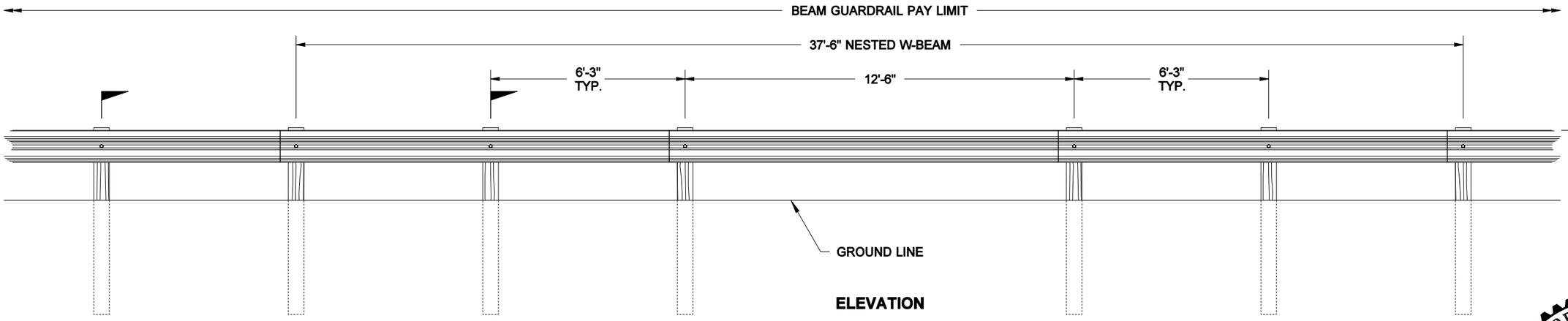

ELEVATION

CASE 19 B

SPLICE AT POSTS

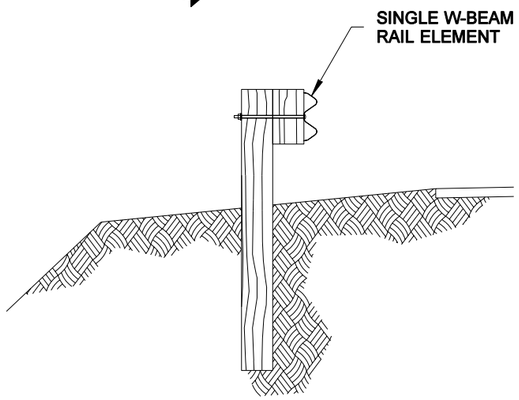

SECTION (A)

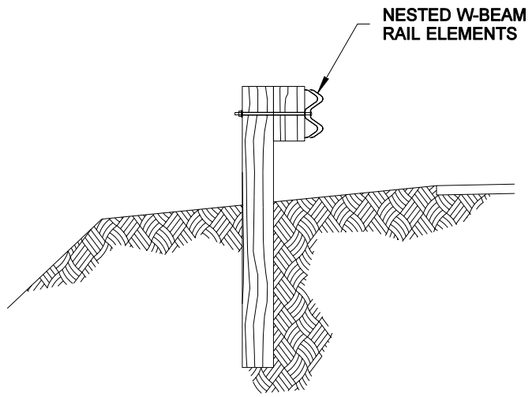

SECTION (B)

NOTE: THIS PLAN IS NOT A LEGAL ENGINEERING DOCUMENT BUT AN ELECTRONIC DUPLICATE. THE ORIGINAL, SIGNED BY THE ENGINEER AND APPROVED FOR PUBLICATION, IS KEPT ON FILE AT THE WASHINGTON STATE DEPARTMENT OF TRANSPORTATION. A COPY MAY BE OBTAINED UPON REQUEST.

CLIFFORD E. MANSFIELD
STATE OF WASHINGTON
15224
REGISTERED
PROFESSIONAL ENGINEER

EXPIRES MAY 3, 2002

GUARDRAIL PLACEMENT
12'-6" SPAN
STANDARD PLAN C-2k

APPROVED FOR PUBLICATION

Clifford E. Mansfield — STATE DESIGN ENGINEER

07-27-01 — DATE

Washington State Department of Transportation

EFFECTIVE: JANUARY 7, 2002 TO AUGUST 4, 2002

EFFECTIVE: JANUARY 7, 2002 TO AUGUST 4, 2002

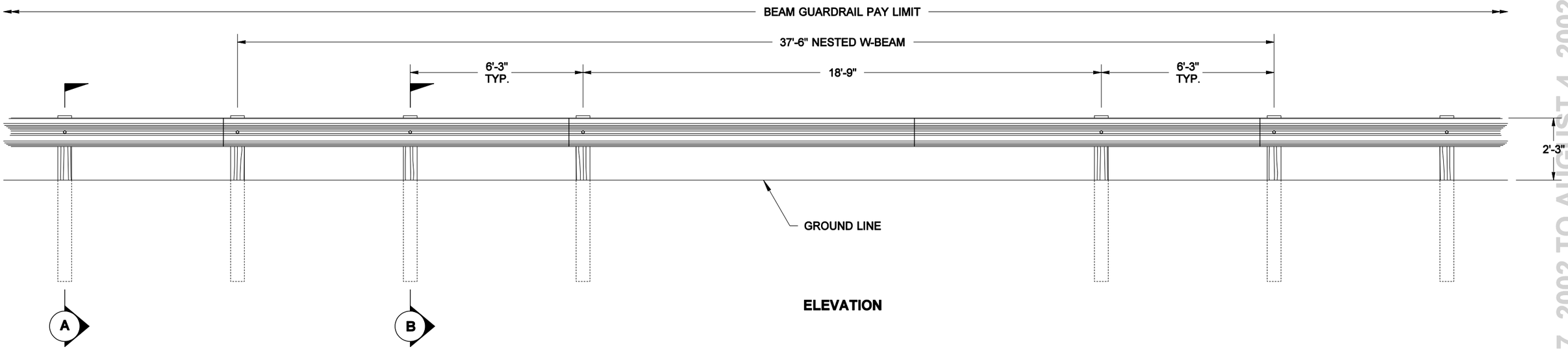

ELEVATION

CASE 20

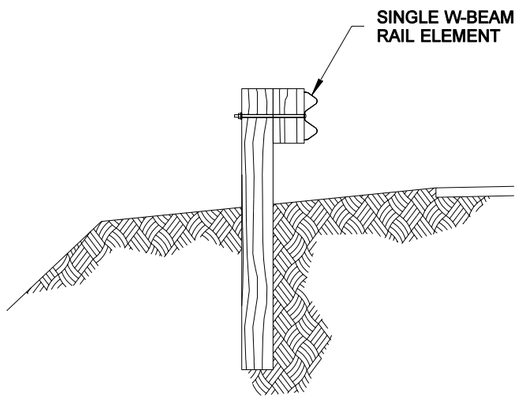

SECTION (A)

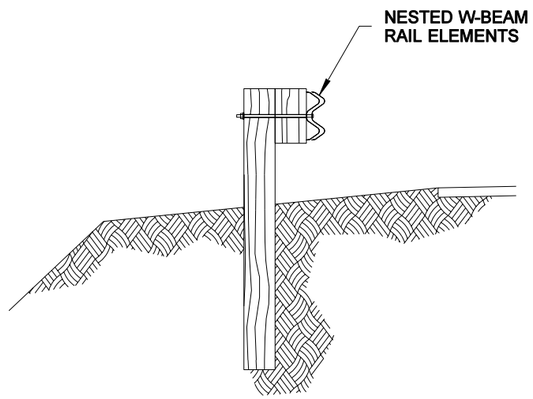

SECTION (B)

CLIFFORD E. MANSFIELD
STATE OF WASHINGTON
15224
REGISTERED
PROFESSIONAL ENGINEER

EXPIRES MAY 3, 2002

GUARDRAIL PLACEMENT
18'-9" SPAN
STANDARD PLAN C-2n

NOTE: THIS PLAN IS NOT A LEGAL ENGINEERING DOCUMENT BUT AN ELECTRONIC DUPLICATE. THE ORIGINAL, SIGNED BY THE ENGINEER AND APPROVED FOR PUBLICATION, IS KEPT ON FILE AT THE WASHINGTON STATE DEPARTMENT OF TRANSPORTATION. A COPY MAY BE OBTAINED UPON REQUEST.

APPROVED FOR PUBLICATION

Clifford E. Mansfield — STATE DESIGN ENGINEER

07-27-01 — DATE

Washington State Department of Transportation

EFFECTIVE: JANUARY 7, 2002 TO AUGUST 4, 2002

EFFECTIVE: JANUARY 7, 2002 TO AUGUST 4, 2002
EFFECTIVE: JANUARY 7, 2002 TO AUGUST 4, 2002

NOTES

1. See Standard Plan C-1b for additional details.
2. One-way traffic layouts are identical to the two-way layout with the exception that only the posts trailing the span need to be CRT's with double blocks.

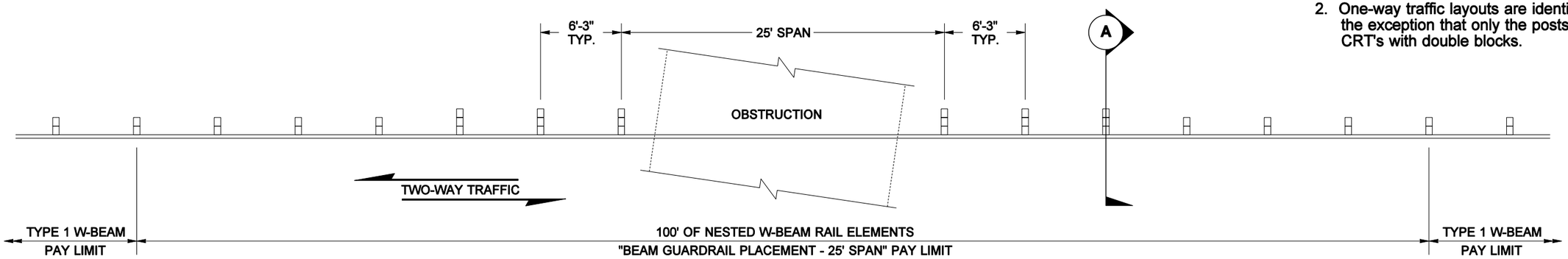

PLAN

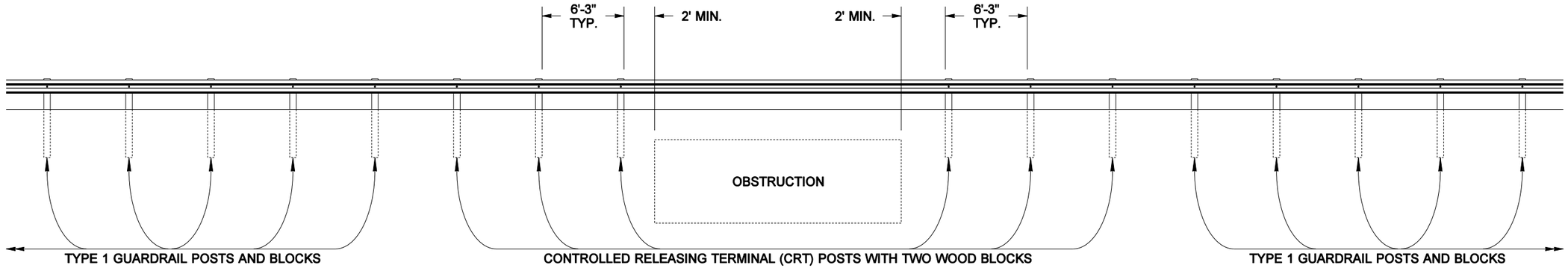

ELEVATION

CASE 21

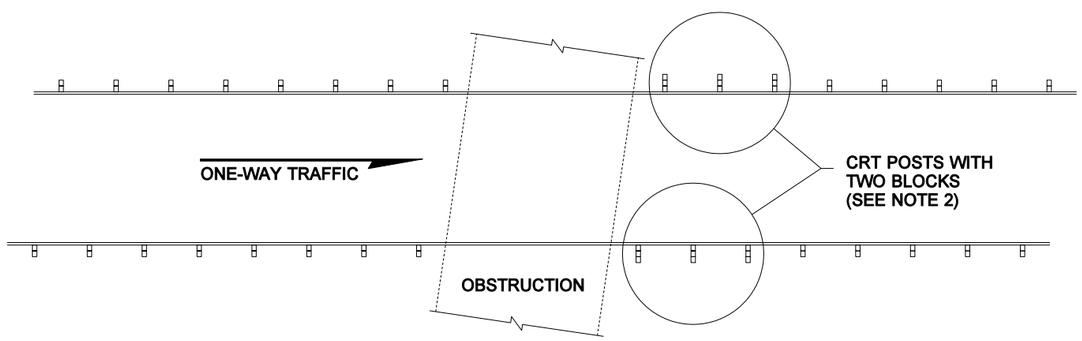

ONE-WAY TRAFFIC LAYOUT

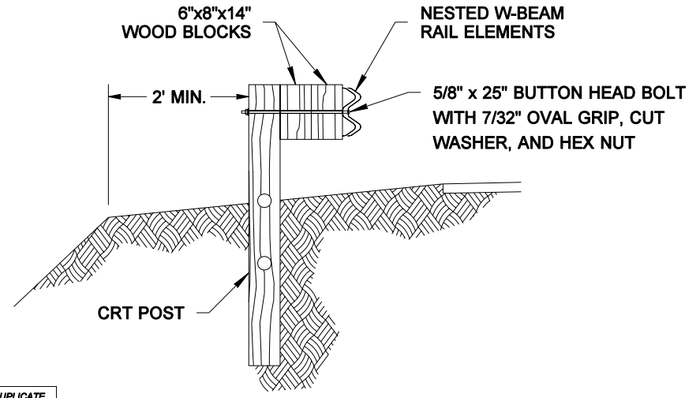

SECTION (A)

NOTE: THIS PLAN IS NOT A LEGAL ENGINEERING DOCUMENT BUT AN ELECTRONIC DUPLICATE. THE ORIGINAL, SIGNED BY THE ENGINEER AND APPROVED FOR PUBLICATION, IS KEPT ON FILE AT THE WASHINGTON STATE DEPARTMENT OF TRANSPORTATION. A COPY MAY BE OBTAINED UPON REQUEST.

CLIFFORD E. MANSFIELD STATE OF WASHINGTON 15224 REGISTERED PROFESSIONAL ENGINEER

EXPIRES MAY 3, 2002

GUARDRAIL PLACEMENT 25' SPAN STANDARD PLAN C-2o

APPROVED FOR PUBLICATION

Clifford E. Mansfield — STATE DESIGN ENGINEER — *07-13-01* — DATE

Washington State Department of Transportation

EFFECTIVE: JANUARY 7, 2002 TO AUGUST 4, 2002
EFFECTIVE: JANUARY 7, 2002 TO AUGUST 4, 2002
EFFECTIVE: JANUARY 7, 2002 TO AUGUST 4, 2002

EFFECTIVE: JANUARY 7, 2002 TO AUGUST 4, 2002

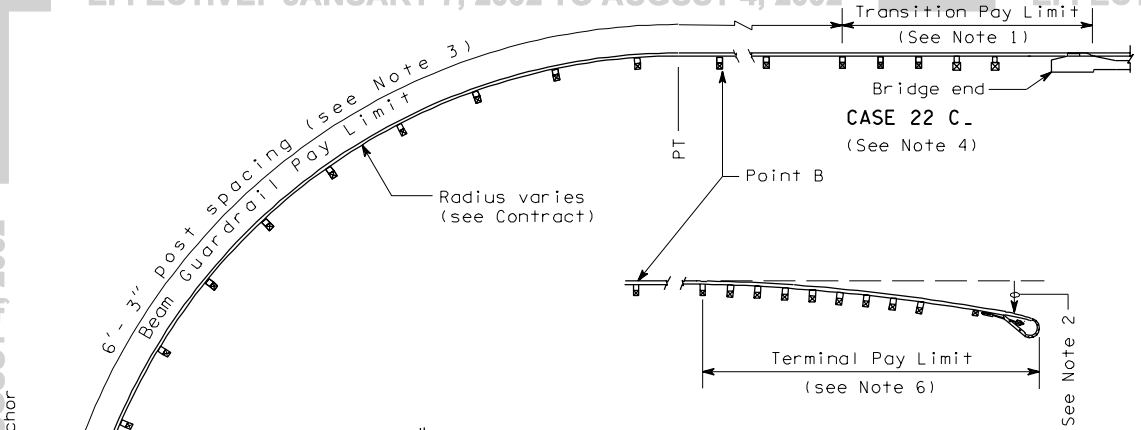

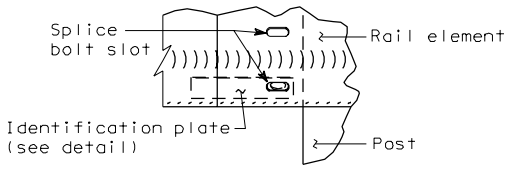

IDENTIFICATION PLATE MOUNTING DETAIL
(See Note 8)

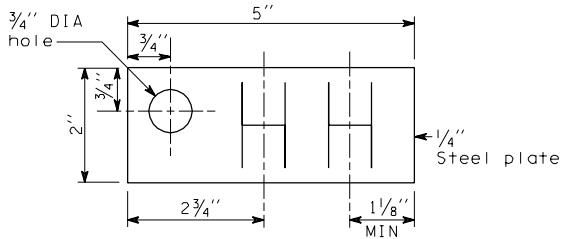

IDENTIFICATION PLATE DETAIL
(See Note 6)

NOTES

1. See Contract for transition and connection type.
2. The slope from the edge of the shoulder into the face of the guardrail should not be steeper than 10:1.
3. Guardrail installation shall be Beam Guardrail Type 1 with standard post and block.
4. First letter of case designation indicates end treatment on side road. Second letter indicates end treatment on main road. For instance a terminal on the side road and a bridge connection on the main road would be Case 22 BC.
5. For terminal type and details, see Contract and applicable Standard Plan(s).
6. Radius dimensions shall be etched into plate replacing the letters "HH" shown on the Identification Plate Detail. Digits shall be 1½" MIN height and ¾" MAX width. Plate shall be galvanized after etching.
7. The guardrail Identification Plate shall be mounted at the lower splice bolt on the back side of the rail element at the PC of the guardrail radius.

GUARDRAIL PLACEMENT

STRONG POST INTERSECTION DESIGN

EFFECTIVE: JANUARY 7, 2002 TO AUGUST 4, 2002

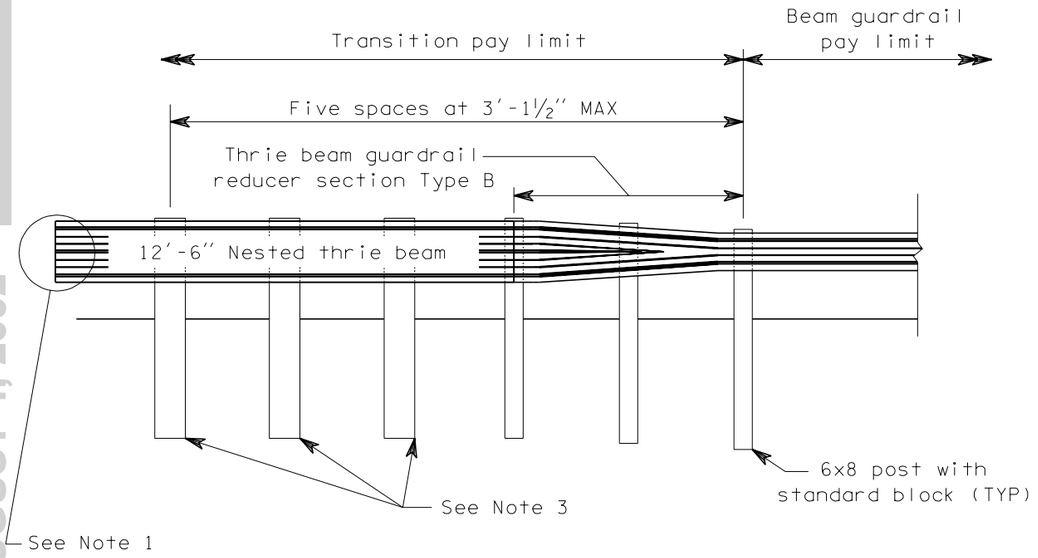

TYPE 1

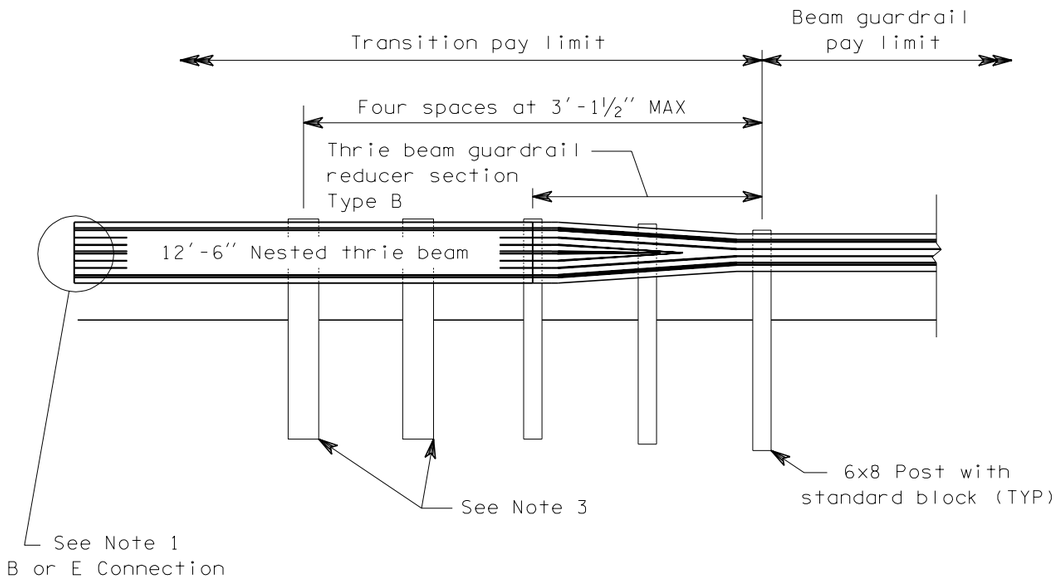

TYPE 1a

NOTES

1. See Standard Plan, "Guardrail Connection to Bridge Rail or Concrete Barrier."
2. Use 6'-0" long 10x10 timber posts with 8x8 blocks.
3. Use 6'-6" long 10x10 timber posts with 8x8 blocks.

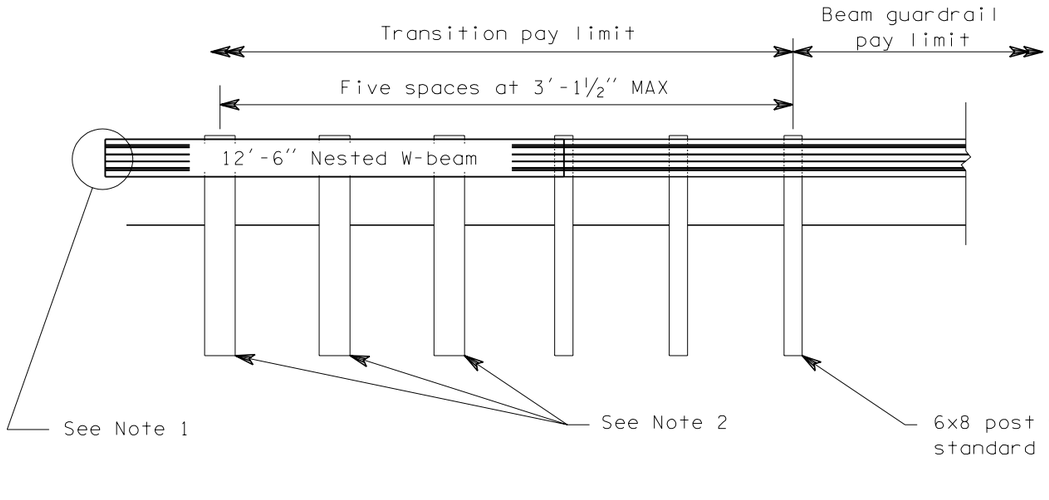

TYPE 2

CLIFFORD E. MANSFIELD
STATE OF WASHINGTON
15224
REGISTERED
PROFESSIONAL ENGINEER

EXPIRES MAY 3, 2000

GUARDRAIL TRANSITION SECTIONS STANDARD PLAN C-3

NOTE: THIS PLAN IS NOT A LEGAL ENGINEERING DOCUMENT BUT AN ELECTRONIC DUPLICATE OF THE ORIGINAL, SIGNED BY THE ENGINEER AND APPROVED FOR PUBLICATION, IS KEPT ON FILE AT THE WASHINGTON STATE DEPARTMENT OF TRANSPORTATION. A COPY MAY BE OBTAINED UPON REQUEST.

DATE	REVISION	BY
8/98	ADDED NOTE 3	RBA

APPROVED FOR PUBLICATION

Clifford E. Mansfield — DEPUTY STATE DESIGN ENGINEER — *8/10/98* DATE

WASHINGTON STATE DEPARTMENT OF TRANSPORTATION
OLYMPIA, WASHINGTON

EFFECTIVE: JANUARY 7, 2002 TO AUGUST 4, 2002

EFFECTIVE: JANUARY 7, 2002 TO AUGUST 4, 2002

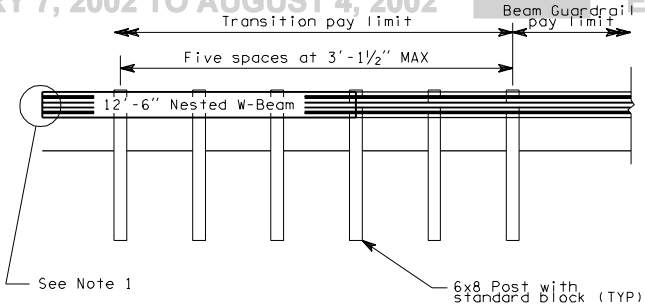

TYPE 3

NOTES

1. See Standard Plan, "Guardrail Connection to Bridge Rail or Concrete Barrier."
2. For post details, see Standard Plan, "Beam Guardrail Posts and Blocks".

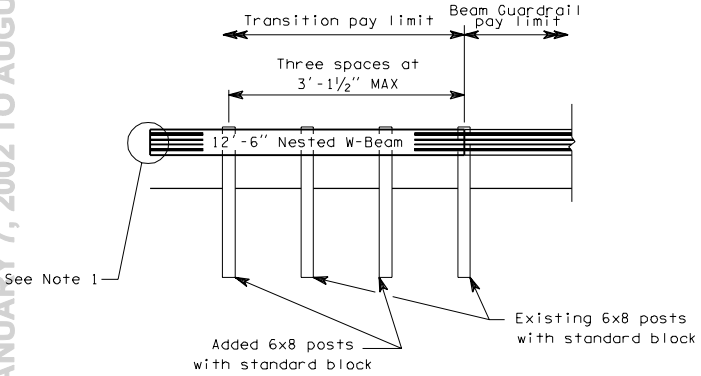

TYPE 4

(For Construction and Maintenance Operations only)

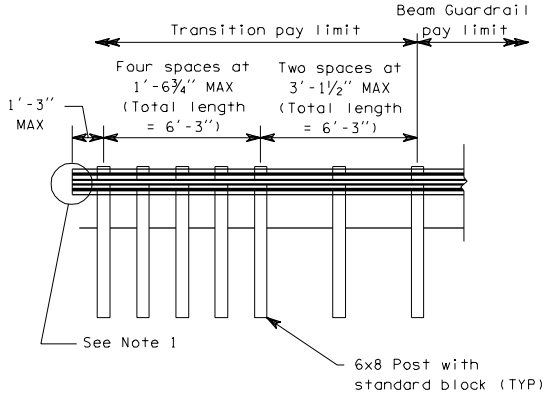

TYPE 5

GUARDRAIL TRANSITION SECTIONS

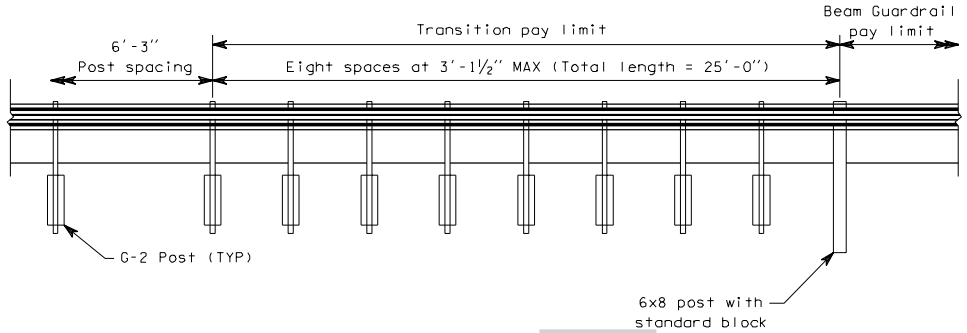

TYPE 6

C-3a 1 of 1

03-14-97

EFFECTIVE: JANUARY 7, 2002 TO AUGUST 4, 2002

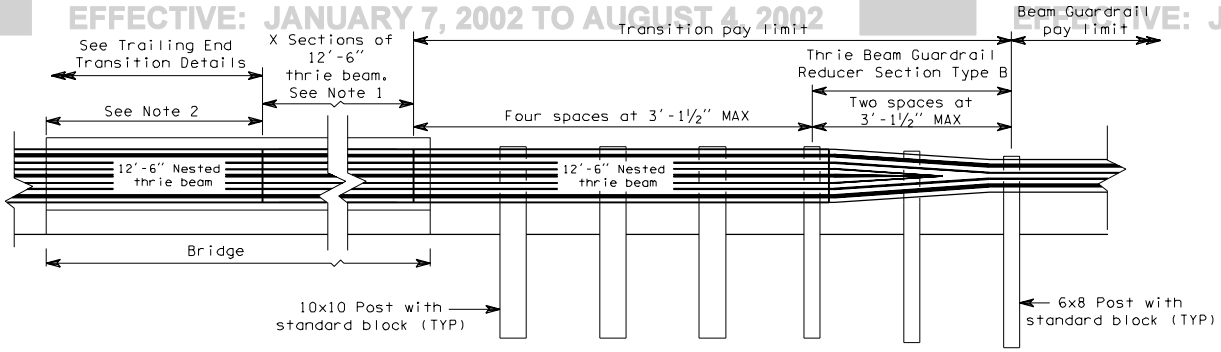

APPROACH END TYPE 10

(Thrie Beam installed at face of curb)

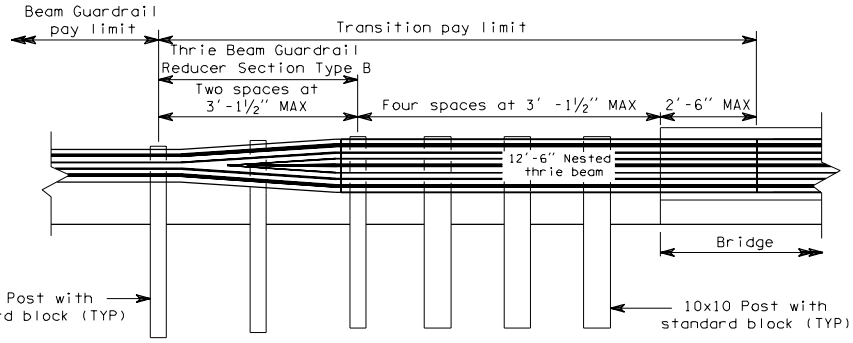

TRAILING END TYPE 11

(Thrie Beam installed at face of curb)

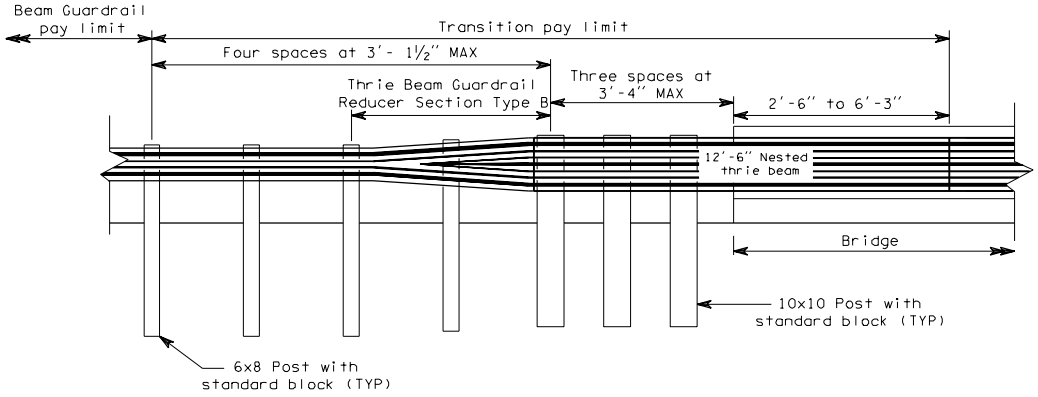

TRAILING END TYPE 12

(Thrie Beam installed at face of curb)

GUARDRAIL TRANSITION SECTIONS

C-3b

03-14-97

EFFECTIVE: JANUARY 7, 2002 TO AUGUST 4, 2002

EFFECTIVE: JANUARY 7, 2002 TO AUGUST 4, 2002

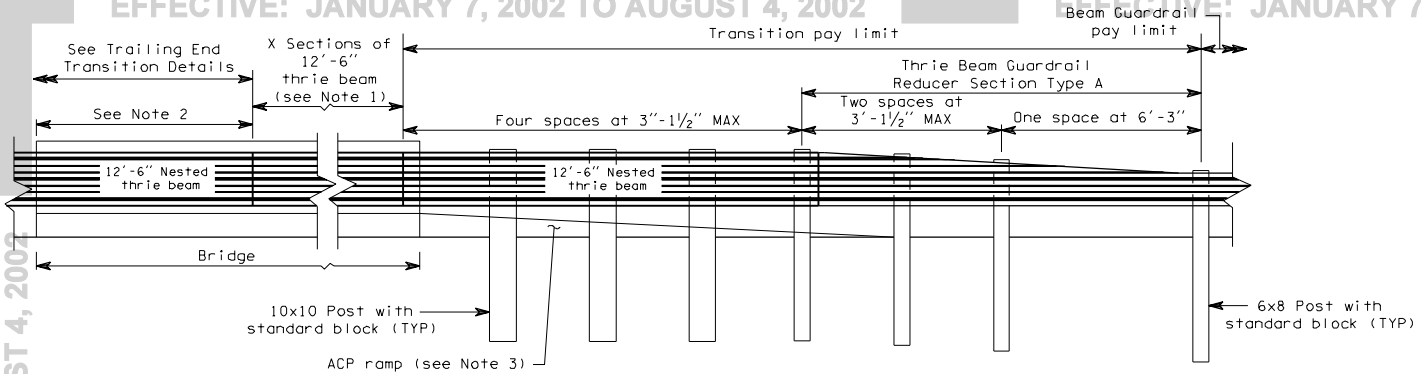

APPROACH END TYPE 13

(Thrie Beam installed at face of Bridge Rail)

NOTES

1. See contract for number of thrie beam sections for bridge rail.
2. If the distance from the end of the bridge to the end of the thrie beam bridge rail section exceeds 6'-3" using 12'-6" thrie beam sections, add a 6'-3" section of thrie beam bridge rail to reduce the length to less than 6'-3".
3. An ACP ramp is required from the roadway surface to the top of the bridge curb or sidewalk. The slope of the ramp shall be 20:1 or flatter.

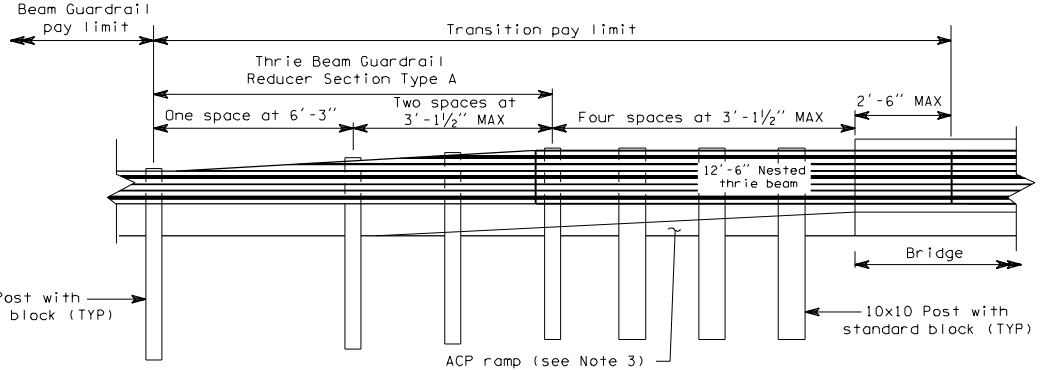

TRAILING END TYPE 14

(Thrie Beam installed at face of Bridge Rail)

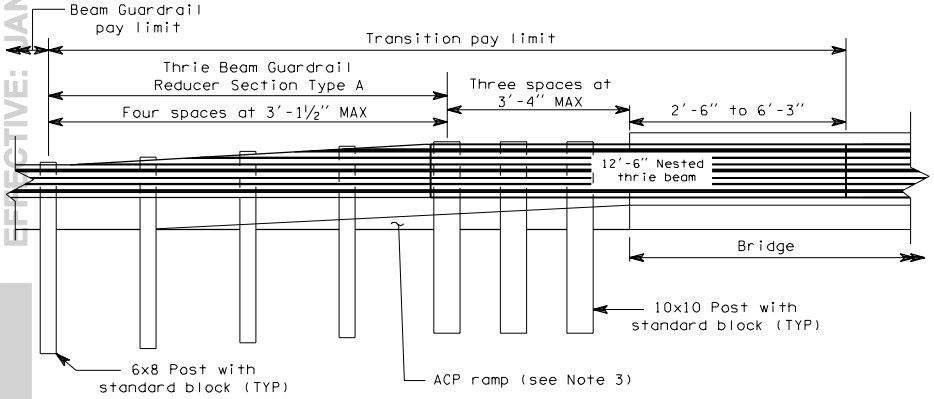

TRAILING END TYPE 15

(Thrie Beam installed at face of Bridge Rail)

GUARDRAIL TRANSITION SECTIONS

C-3b
03-14-97

EFFECTIVE: JANUARY 7, 2002 TO AUGUST 4, 2002

EFFECTIVE: JANUARY 7, 2002 TO AUGUST 4, 2002

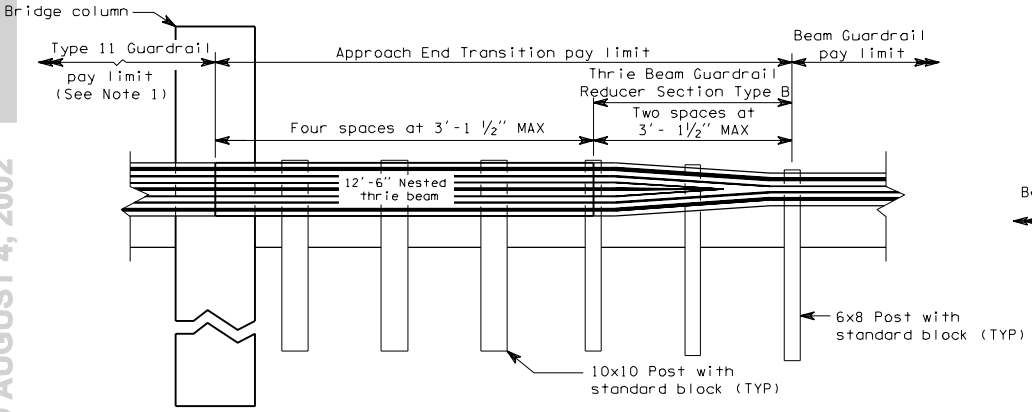

APPROACH END TYPE 16

NOTES

1. See Contract for the number of thrie beam sections for Type 11 Guardrail.
2. If the distance from the end of the Type 11 Guardrail to column/structure exceeds 6'-3" using 12'-6" thrie beam sections, add a 6'-3" nested section of thrie beam to reduce the distance to less than 6'-3".

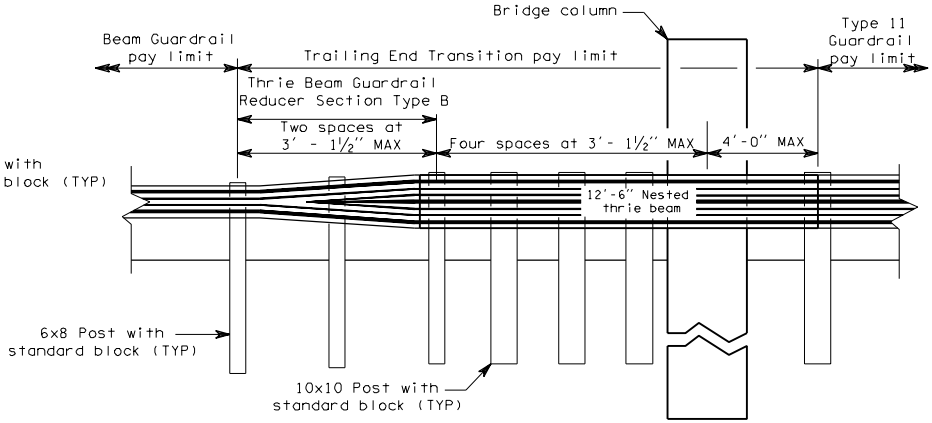

TRAILING END TYPE 17

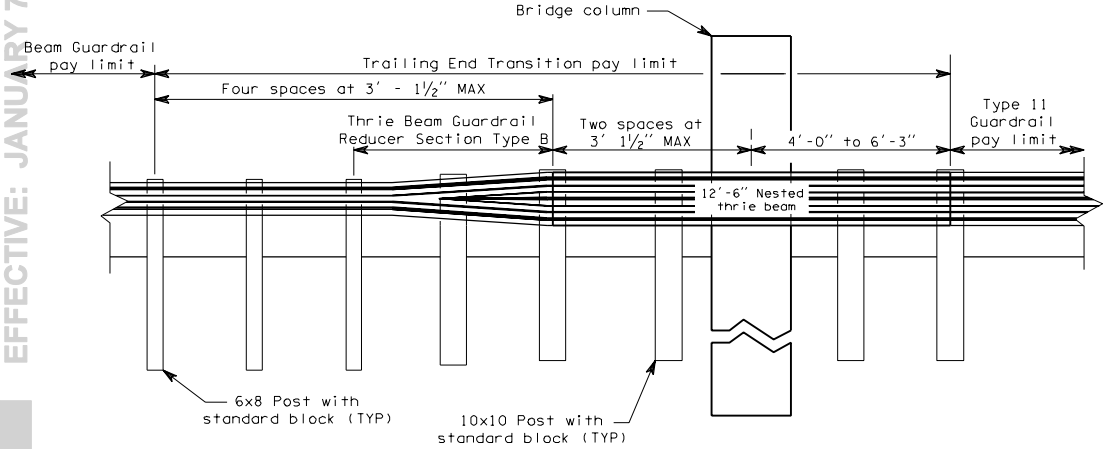

TRAILING END TYPE 18

GUARDRAIL TRANSITION SECTIONS

C-3c 1 of 1

03-28-97

EFFECTIVE: JANUARY 7, 2002 TO AUGUST 4, 2002

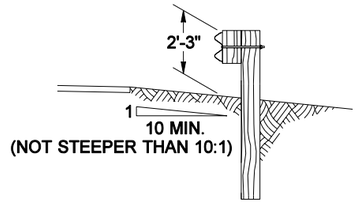

SECTION A

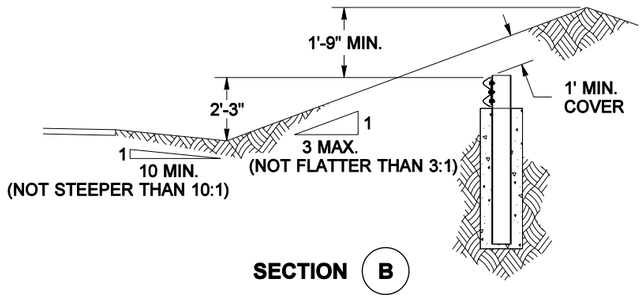

SECTION B

PERSPECTIVE

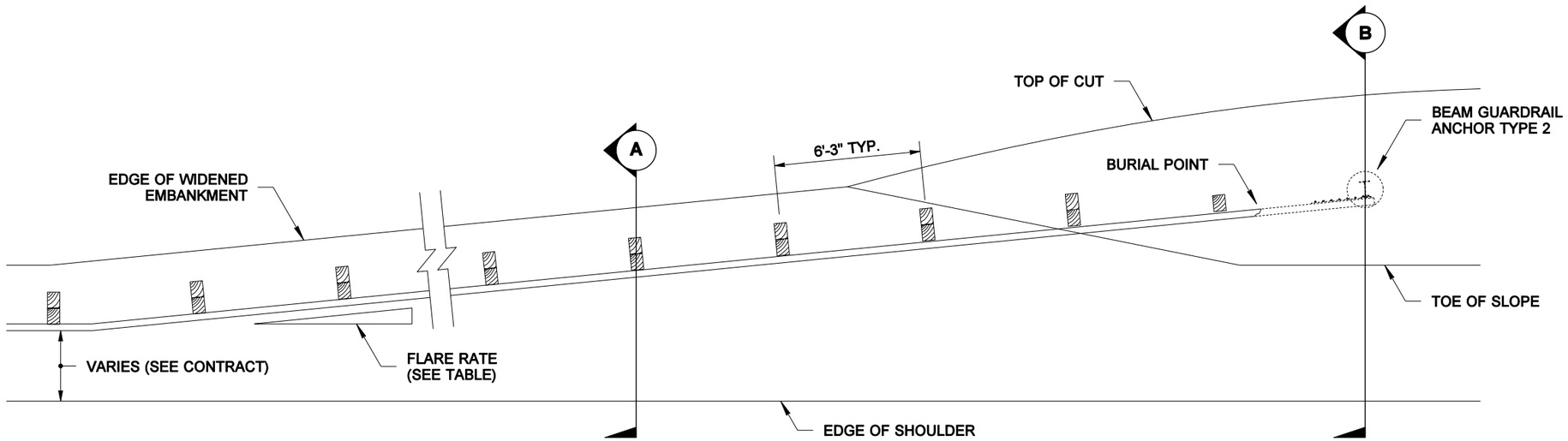

PLAN

FLARE RATE TABLE	
RATE	POSTED SPEED (mph)
15 : 1	70
14 : 1	60
12 : 1	55
11 : 1	50
10 : 1	45
9 : 1	40 or less

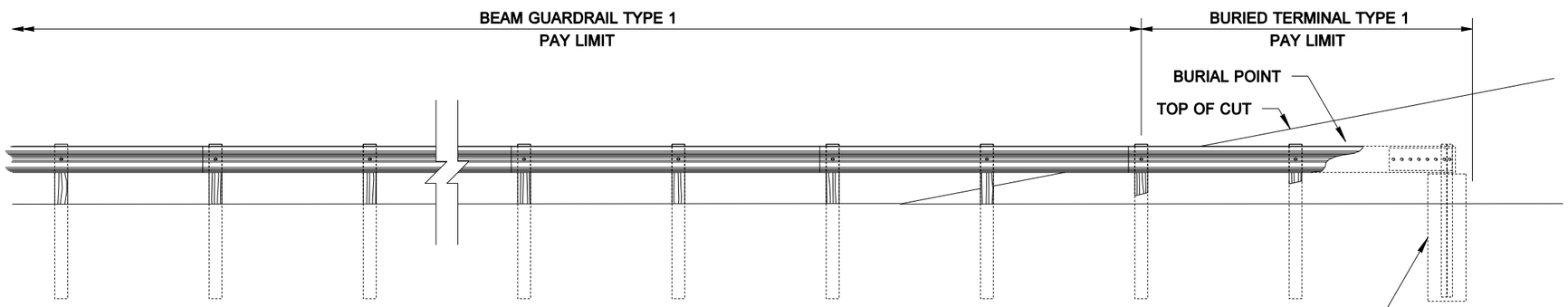

ELEVATION

CLIFFORD E. MANSFIELD
STATE OF WASHINGTON
15224
REGISTERED
PROFESSIONAL ENGINEER

EXPIRES MAY 3, 2002

BEAM GUARDRAIL BURIED TERMINAL TYPE 1 STANDARD PLAN C-4

NOTE: THIS PLAN IS NOT A LEGAL ENGINEERING DOCUMENT BUT AN ELECTRONIC DUPLICATE. THE ORIGINAL, SIGNED BY THE ENGINEER AND APPROVED FOR PUBLICATION, IS KEPT ON FILE AT THE WASHINGTON STATE DEPARTMENT OF TRANSPORTATION. A COPY MAY BE OBTAINED UPON REQUEST.

APPROVED FOR PUBLICATION

Clifford E. Mansfield — STATE DESIGN ENGINEER

07-13-01 — DATE

Washington State Department of Transportation

EFFECTIVE: JANUARY 7, 2002 TO AUGUST 4, 2002

EFFECTIVE: JANUARY 7, 2002 TO AUGUST 4, 2002

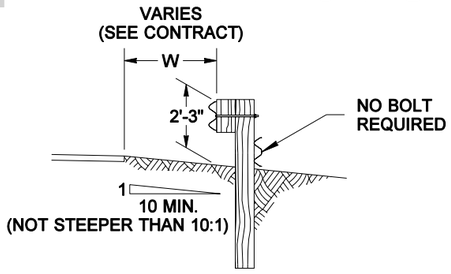

SECTION A

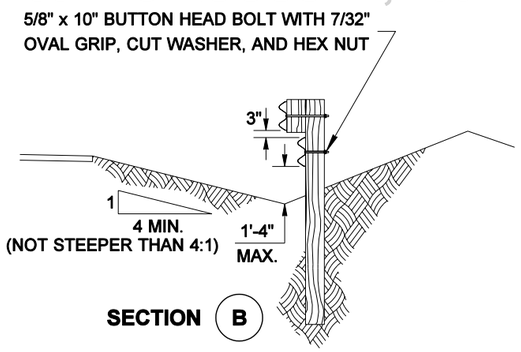

SECTION B

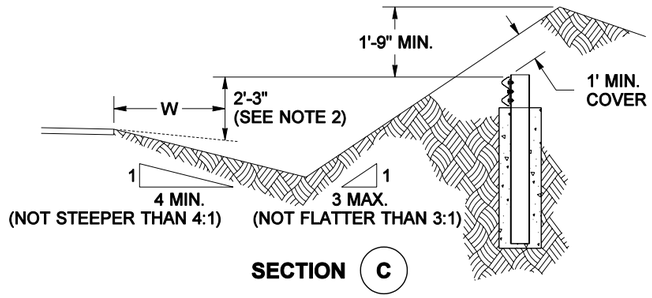

SECTION C

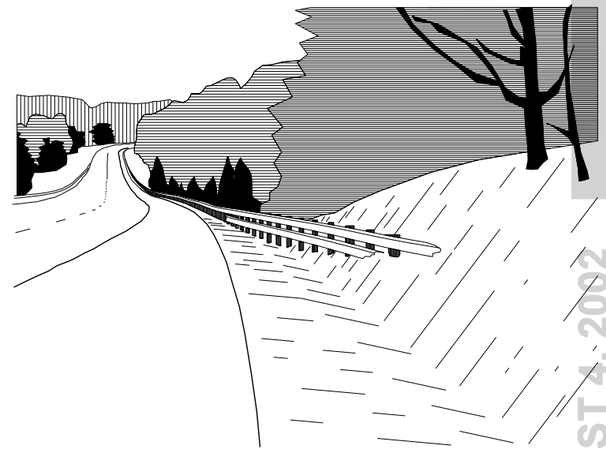

PERSPECTIVE

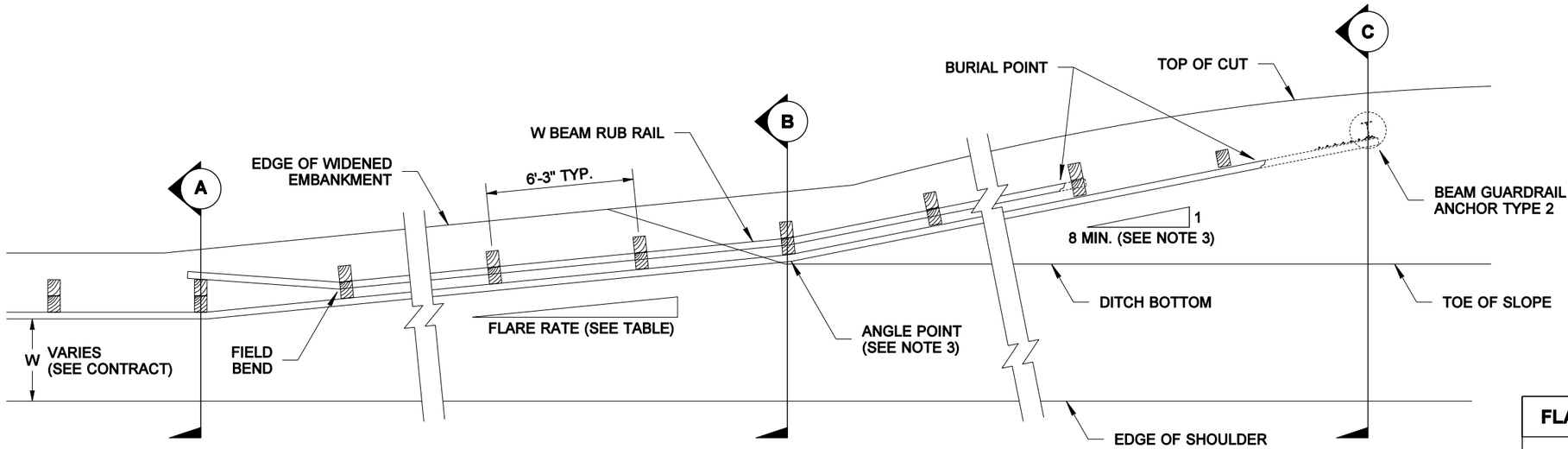

PLAN

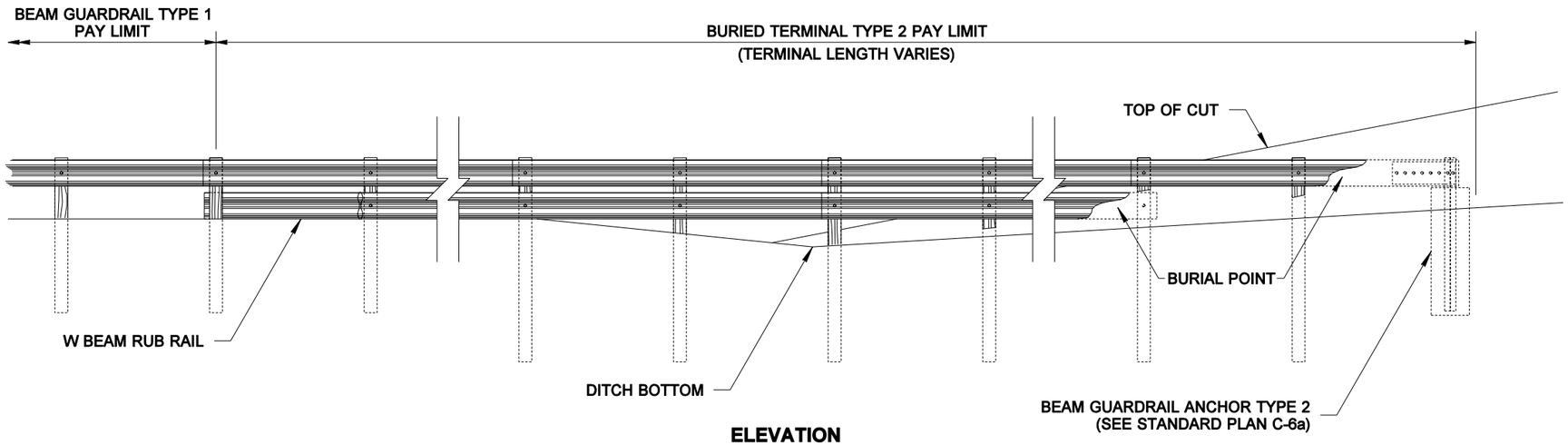

ELEVATION
(PROFILE ALONG RAIL)

NOTES

1. Posts installed on a slope steeper than 10:1 shall be 8' long.
2. The height of the anchor is measured from an imaginary line extending at a slope of 10:1 from the edge of shoulder at an offset, W.
3. The flare rate of the guardrail may be steepened after crossing the ditch bottom to shorten the length of the terminal.

FLARE RATE TABLE	
RATE	POSTED SPEED (mph)
15 : 1	70
14 : 1	60
12 : 1	55
11 : 1	50
10 : 1	45
9 : 1	40 or less

CLIFFORD E. MANSFIELD
STATE OF WASHINGTON
15224
REGISTERED
PROFESSIONAL ENGINEER

EXPIRES MAY 3, 2002

BEAM GUARDRAIL BURIED TERMINAL TYPE 2

STANDARD PLAN C-4a

APPROVED FOR PUBLICATION

Clifford E. Mansfield — STATE DESIGN ENGINEER
07-13-01 — DATE

Washington State Department of Transportation

NOTE: THIS PLAN IS NOT A LEGAL ENGINEERING DOCUMENT BUT AN ELECTRONIC DUPLICATE. THE ORIGINAL, SIGNED BY THE ENGINEER AND APPROVED FOR PUBLICATION, IS KEPT ON FILE AT THE WASHINGTON STATE DEPARTMENT OF TRANSPORTATION. A COPY MAY BE OBTAINED UPON REQUEST.

EFFECTIVE: JANUARY 7, 2002 TO AUGUST 4, 2002

EFFECTIVE: JANUARY 7, 2002 TO AUGUST 4, 2002

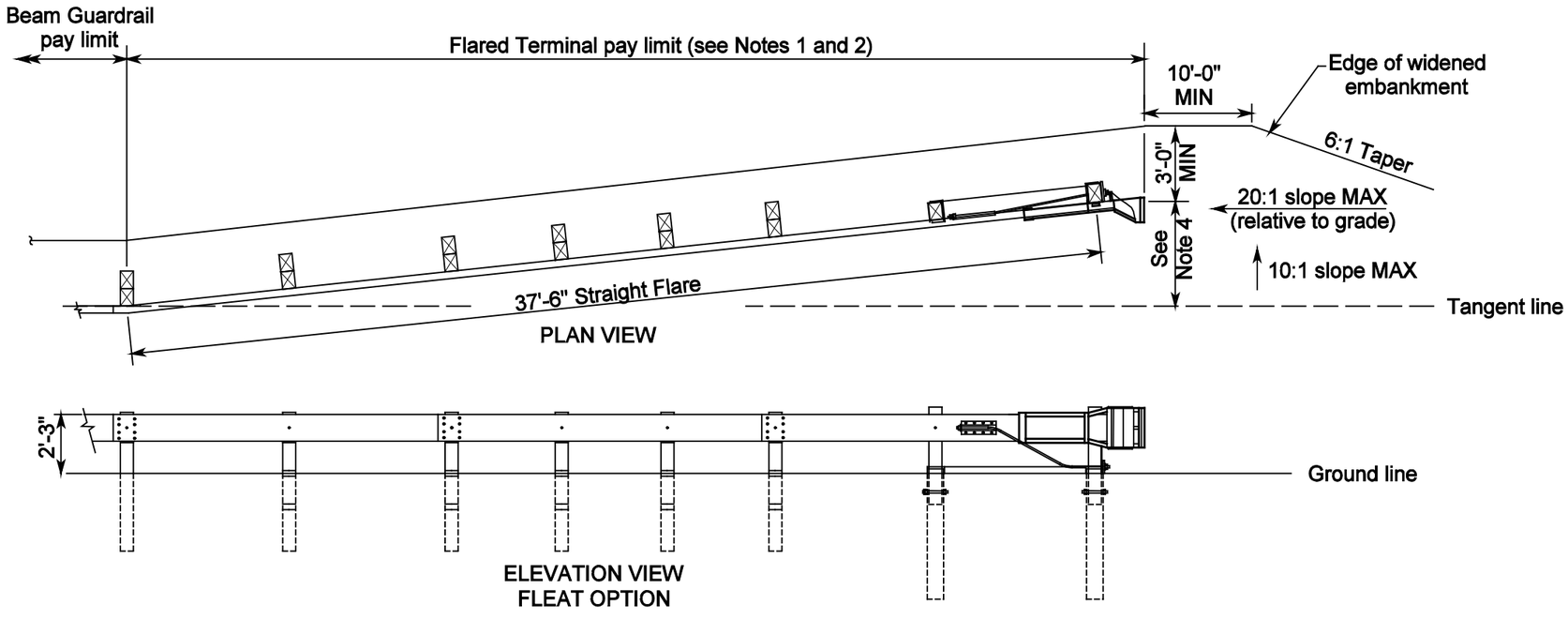

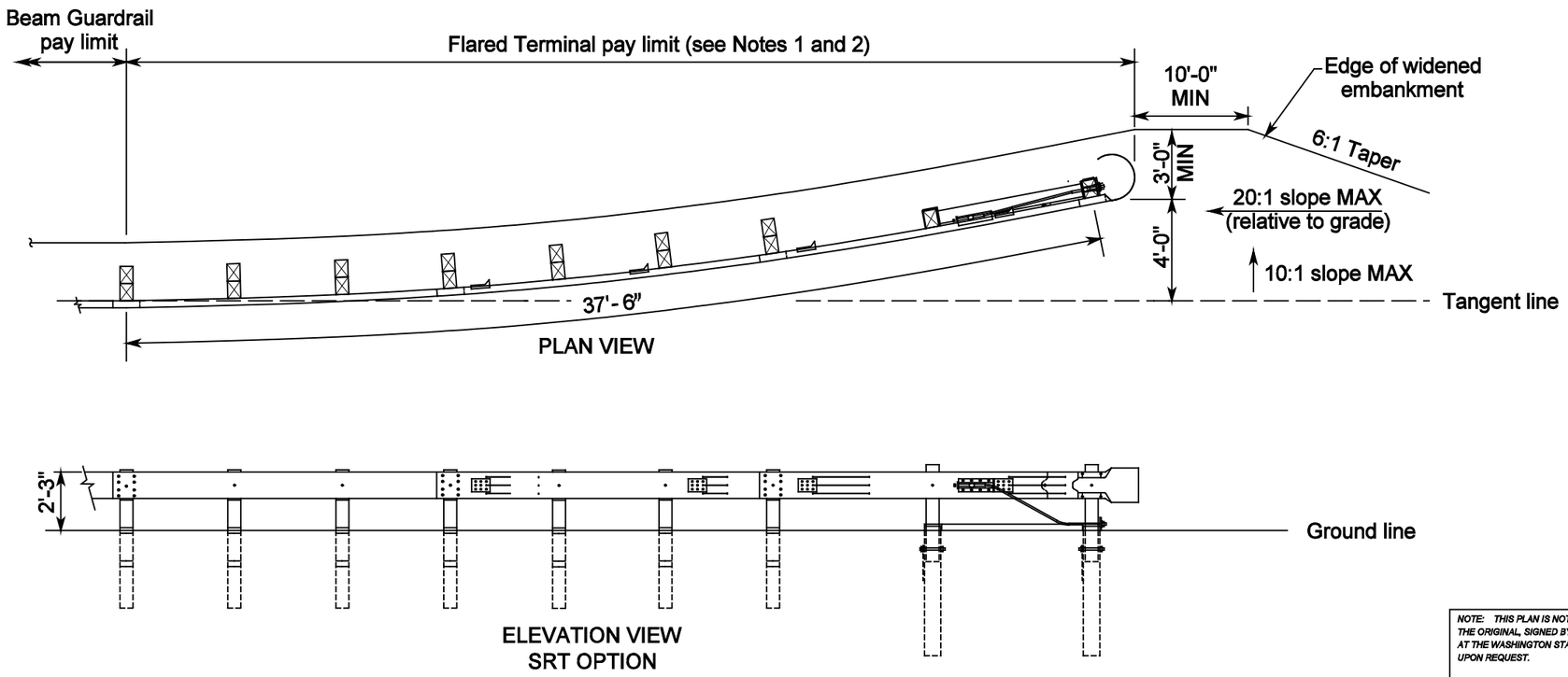

NOTES

1. Unless otherwise indicated in the contract, the SRT - 350 (12.5, 8 Post) as manufactured by Trinity Industries, Inc, or a FLEAT 350 as manufactured by Road Systems Inc, shall be installed per manufacturer's recommendations. If specified in the Contract, the FLEAT TL2 as manufactured by Road Systems, Inc. shall be installed per manufacturers recommendations.

2. Where terminal is placed on a curve, and post offsets would result in the rail encroaching onto the shoulder (e.g., the inside of a curve), the posts shall be installed so that the face of the rail is at the edge of the shoulder.

3. When snow load post washers and snow load rail washers are called for in the contract, the snow load rail washers must be omitted within the terminal limits.

4. Offset distances:
   FLEAT 350 - 4'-0"
   FLEAT TL2 - 1'-8" (MIN)

CLIFFORD E. MANSFIELD
STATE OF WASHINGTON
15224
REGISTERED
PROFESSIONAL ENGINEER

EXPIRES MAY 3, 2002

BEAM GUARDRAIL FLARED TERMINAL
STANDARD PLAN C-4b

NOTE: THIS PLAN IS NOT A LEGAL ENGINEERING DOCUMENT BUT AN ELECTRONIC DUPLICATE. THE ORIGINAL, SIGNED BY THE ENGINEER AND APPROVED FOR PUBLICATION, IS KEPT ON FILE AT THE WASHINGTON STATE DEPARTMENT OF TRANSPORTATION. A COPY MAY BE OBTAINED UPON REQUEST.

APPROVED FOR PUBLICATION

Clifford E. Mansfield — DEPUTY STATE DESIGN ENGINEER — *06/23/00* DATE

WASHINGTON STATE DEPARTMENT OF TRANSPORTATION
OLYMPIA, WASHINGTON

DATE	REVISION	BY
6/00	Revised Note 1 and SRT End Section.	TWS

EFFECTIVE: JANUARY 7, 2002 TO AUGUST 4, 2002

EFFECTIVE: JANUARY 7, 2002 TO AUGUST 4, 2002

NOTES

1. An ET2000-PLUS (TL3) as manufactured by Trinity Industries, Inc. or an SKT-350 as manufactured by Road Systems Inc. shall be installed according to manufacturer's recommendations. When a TL2 terminal is specified in the contract an ET 2000-PLUS (TL2) as manufactured by Trinity Industries, Inc., or an SKT-TL2 as manufactured by Road Systems, Inc. shall be installed according to manufacturer's recommendations.

2. A reflectorized object marker shall be installed according to manufacturer's recommendations.

3. When snow load post washers and snow load rail washers are required by the contract, the snow load rail washers must not be installed within the terminal limits.

4. Terminal shall be installed at a taper, ensuring that end piece is entirely off shoulder.

5. Length for ET 2000-PLUS (TL3) and SKT-350 is 50'. Length for ET 2000-PLUS (TL2) and SKT-TL2 is 25'.

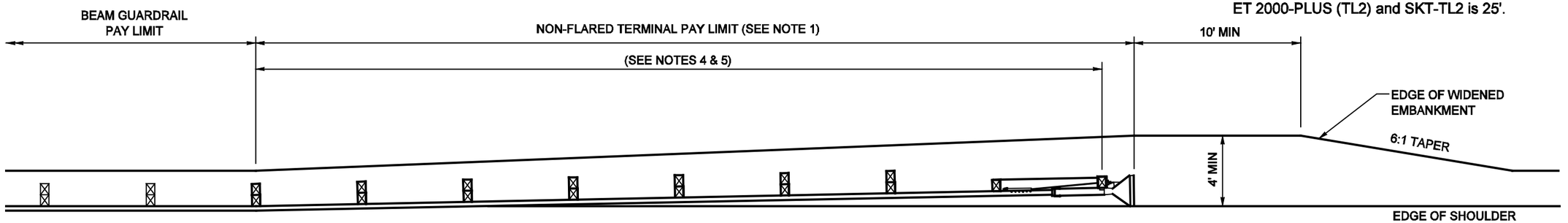

PLAN

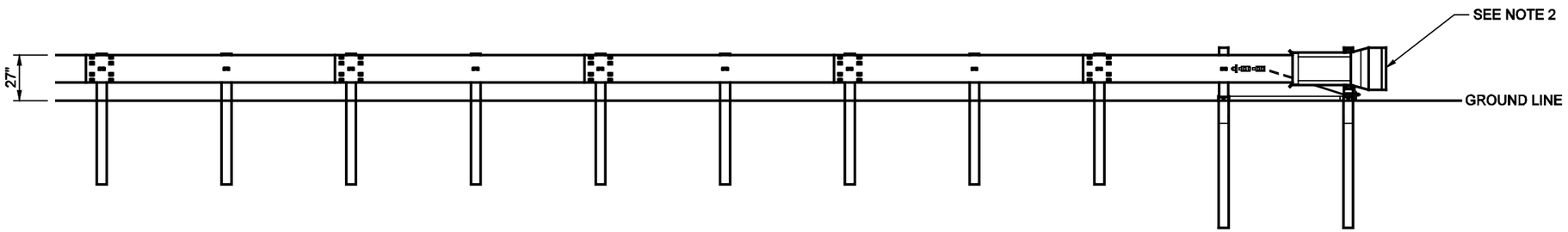

ELEVATION

CLIFFORD E. MANSFIELD
STATE OF WASHINGTON
15224
REGISTERED
PROFESSIONAL ENGINEER

EXPIRES MAY 3, 2000

BEAM GUARDRAIL
NON-FLARED TERMINAL
STANDARD PLAN C-4e

NOTE: THIS PLAN IS NOT A LEGAL ENGINEERING DOCUMENT BUT AN ELECTRONIC DUPLICATE. THE ORIGINAL, SIGNED BY THE ENGINEER AND APPROVED FOR PUBLICATION, IS KEPT ON FILE AT THE WASHINGTON STATE DEPARTMENT OF TRANSPORTATION. A COPY MAY BE OBTAINED UPON REQUEST.

DATE	REVISION	BY
5/00	REVISED NOTE 1 & ADDED NOTE 5.	TMS

APPROVED FOR PUBLICATION

Clifford E. Mansfield — DEPUTY STATE DESIGN ENGINEER — *03-17-00* DATE

WASHINGTON STATE DEPARTMENT OF TRANSPORTATION
OLYMPIA, WASHINGTON

EFFECTIVE: JANUARY 7, 2002 TO AUGUST 4, 2002

EFFECTIVE: JANUARY 7, 2002 TO AUGUST 4, 2002

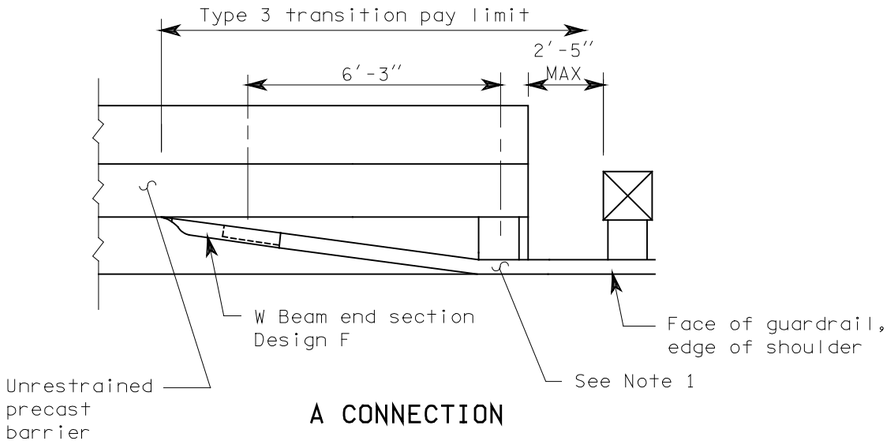

A CONNECTION

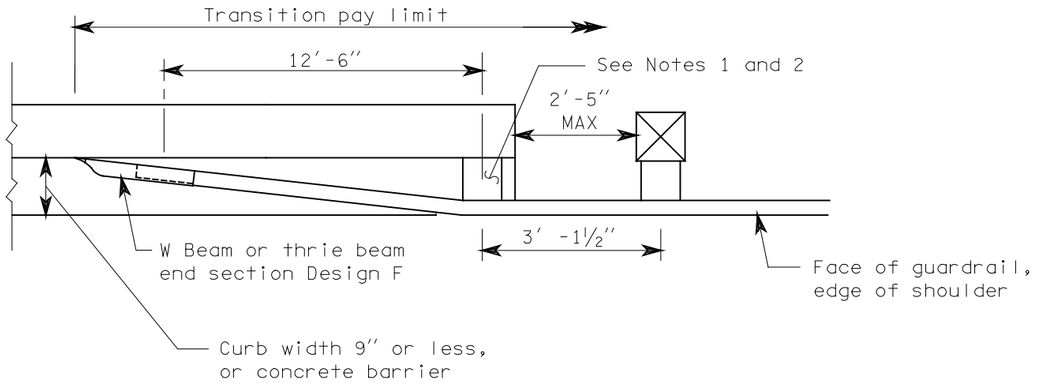

B CONNECTION

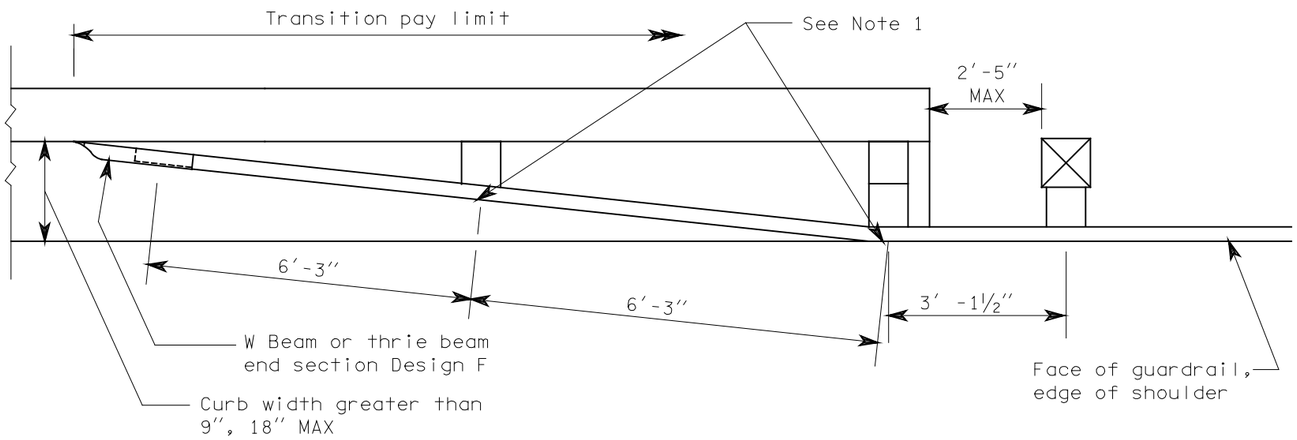

C CONNECTION

NOTES

1. Attach guardrail to bridge rail or concrete barrier using ⅞″ high strength bolts with chemically bonded anchors.
2. If the last guardrail post is 3″ or less from the end of the bridge barrier, this attachment and blockout is not necessary.
3. This case is also applicable for vertical faces with no curbs.

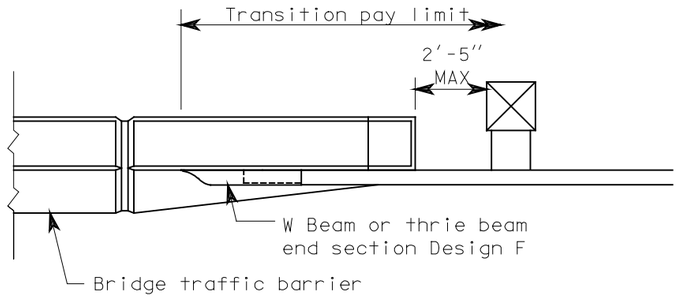

D CONNECTION

See Note 3

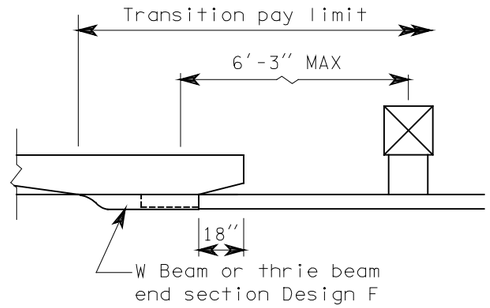

E CONNECTION

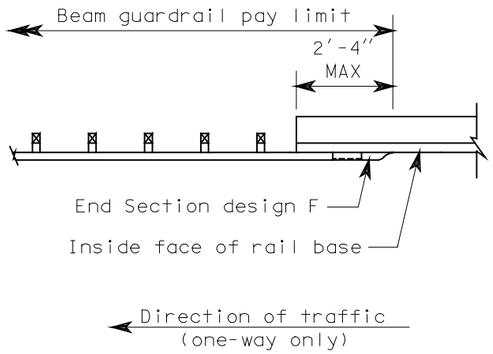

F CONNECTION

GUARDRAIL CONNECTION TO BRIDGE RAIL OR CONCRETE BARRIER

EFFECTIVE: JANUARY 7, 2002 TO AUGUST 4, 2002

EFFECTIVE: JANUARY 7, 2002 TO AUGUST 4, 2002

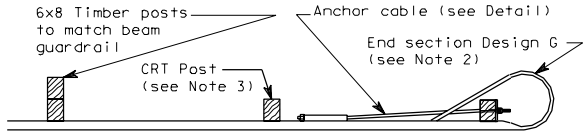

PLAN

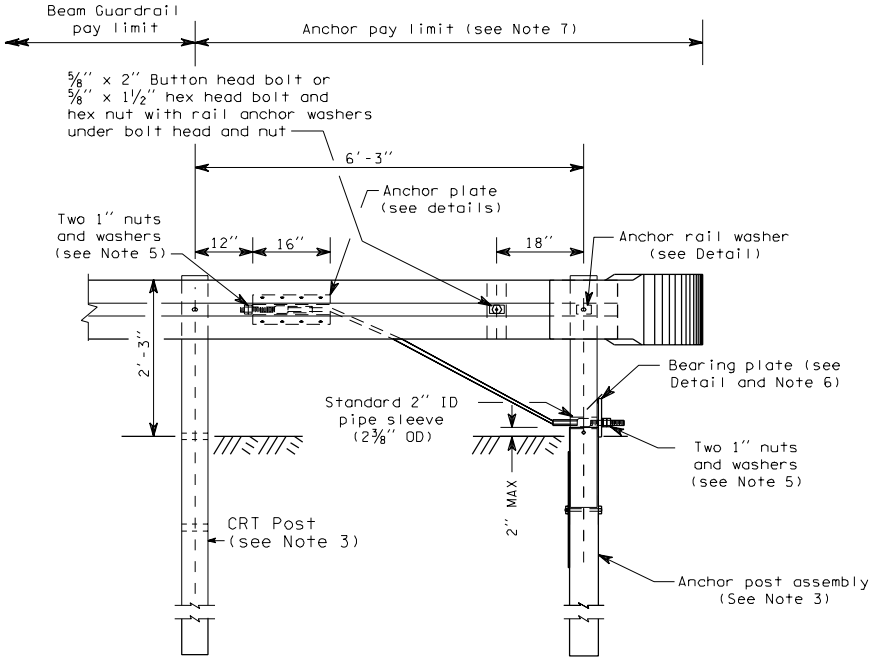

TYPE 1 ANCHOR

NOTES

1. Anchor plate may be constructed from 1/4" plates welded to equal strength and dimensions as shown.
2. For end section details see Standard Plan "Beam Guardrail End Sections".
3. For post details, see Standard Plan "Beam Guardrail Posts and Blocks".
4. Eight 5/8" x 1 1/2" machine bolts with hex nut and washer. Place washer on face side of rail.
5. Outside nut shall be torqued against inside nut a minimum of 100 ft-lbs.
6. Toenail bearing plate with 10d nail at corners to prevent turning.
7. Anchor pay limit does not apply when anchor is included in a Beam Guardrail Terminal.

BEAM GUARDRAIL ANCHOR TYPE 1

C-6

05-30-97

EFFECTIVE: JANUARY 7, 2002 TO AUGUST 4, 2002

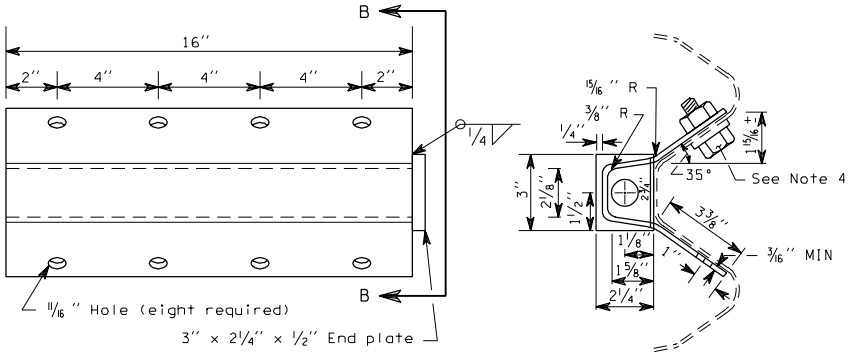

ELEVATION

SECTION B-B

ANCHOR PLATE
(See Note 1)

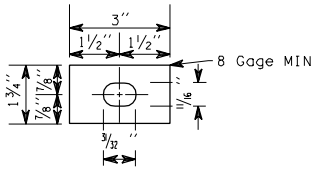

ANCHOR RAIL WASHER

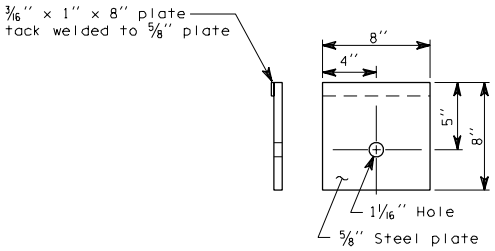

BEARING PLATE

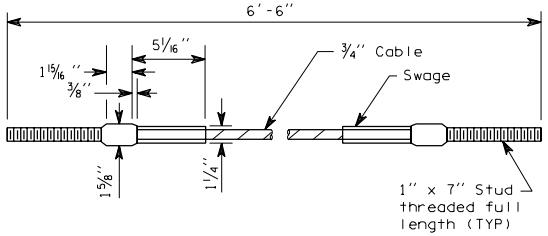

ANCHOR CABLE

BEAM GUARDRAIL ANCHOR TYPE 1

C-6

05-30-97

EFFECTIVE: JANUARY 7, 2002 TO AUGUST 4, 2002

EFFECTIVE: JANUARY 7, 2002 TO AUGUST 4, 2002

NOTES

1. Rail section and W8 x 17 post shall be fabricated to receive 5/8" hex head bolts as shown.
2. All bolts shall be high strength 5/8" hex head bolts with anchor rail washers.

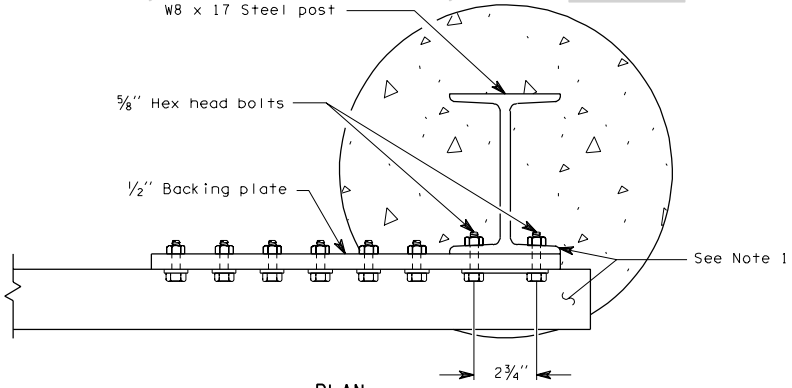

PLAN

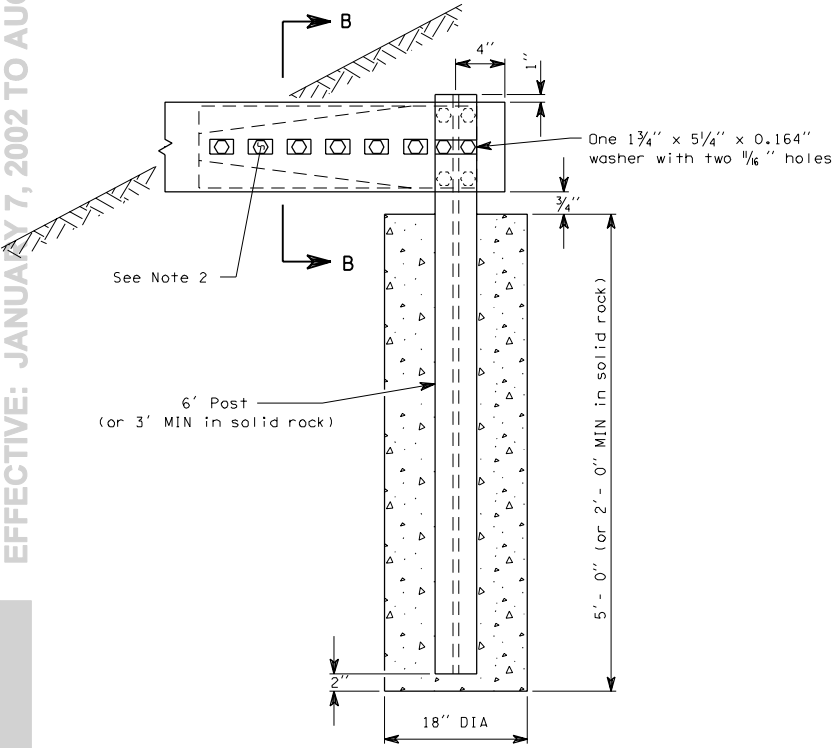

ELEVATION

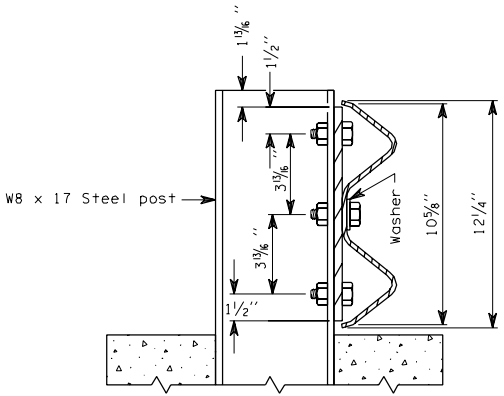

SECTION B-B

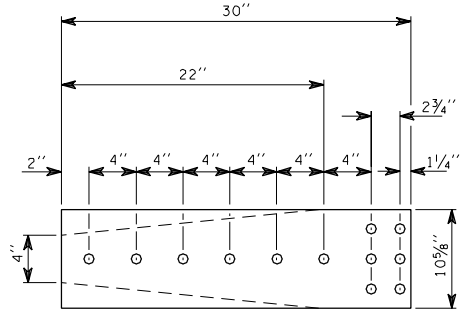

BACKING PLATE

BEAM GUARDRAIL ANCHOR TYPE 2

EFFECTIVE: JANUARY 7, 2002 TO AUGUST 4, 2002

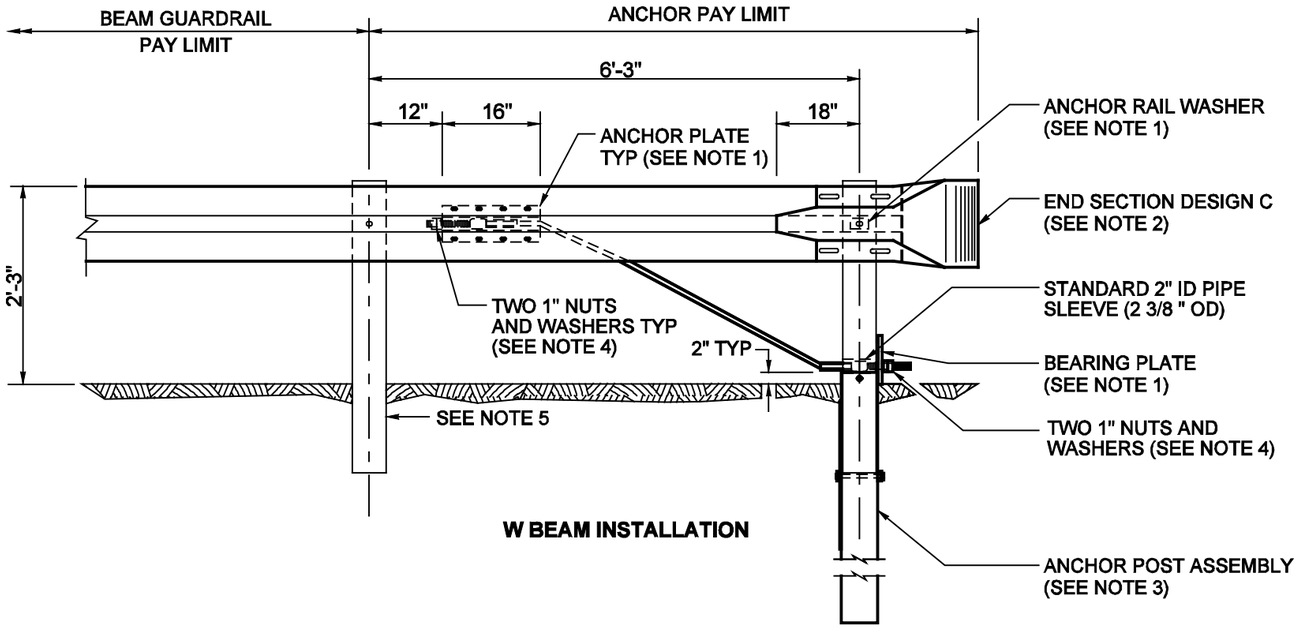

W BEAM INSTALLATION

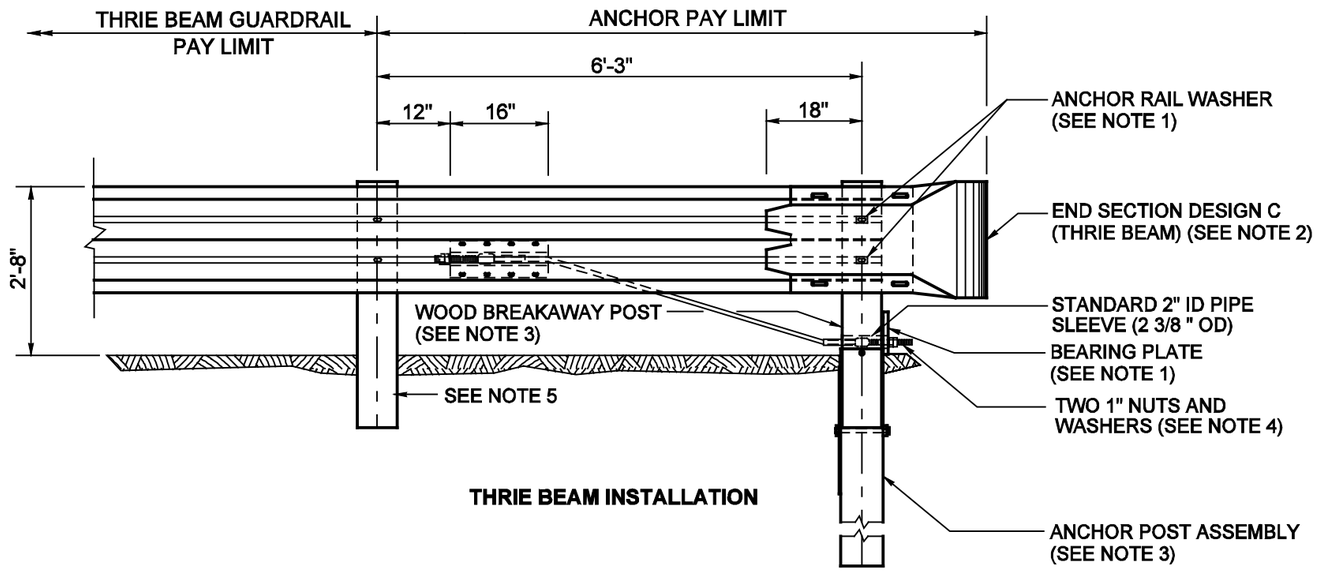

THRIE BEAM INSTALLATION

NOTES

1. For details, see Standard Plan C-6.
2. For end section details see Standard Plan C-7 or C-7a.
3. For details, see Standard Plan C-1b.
4. Outside nut shall be torqued against inside nut a minimum of 100 ft.-lbs.
5. Post and block shall match beam guardrail posts.

CLIFFORD E MANSFIELD
STATE OF WASHINGTON
15224
REGISTERED
PROFESSIONAL ENGINEER

EXPIRES MAY 3, 2000

BEAM GUARDRAIL ANCHOR TYPE 4

STANDARD PLAN C-6c

NOTE: THIS PLAN IS NOT A LEGAL ENGINEERING DOCUMENT BUT AN ELECTRONIC DUPLICATE. THE ORIGINAL, SIGNED BY THE ENGINEER AND APPROVED FOR PUBLICATION, IS KEPT ON FILE AT THE WASHINGTON STATE DEPARTMENT OF TRANSPORTATION. A COPY MAY BE OBTAINED UPON REQUEST.

DATE	REVISION	BY
12/99	MODIFIED "END SECTIONS" TO DESIGN "C", CHANGED NOTE 2 AND DETAIL TITLES.	TWS

APPROVED FOR PUBLICATION

Clifford E. Mansfield *01-06-00*

DEPUTY STATE DESIGN ENGINEER — DATE

WASHINGTON STATE DEPARTMENT OF TRANSPORTATION
OLYMPIA, WASHINGTON

EFFECTIVE: JANUARY 7, 2002 TO AUGUST 4, 2002

EFFECTIVE: JANUARY 7, 2002 TO AUGUST 4, 2002

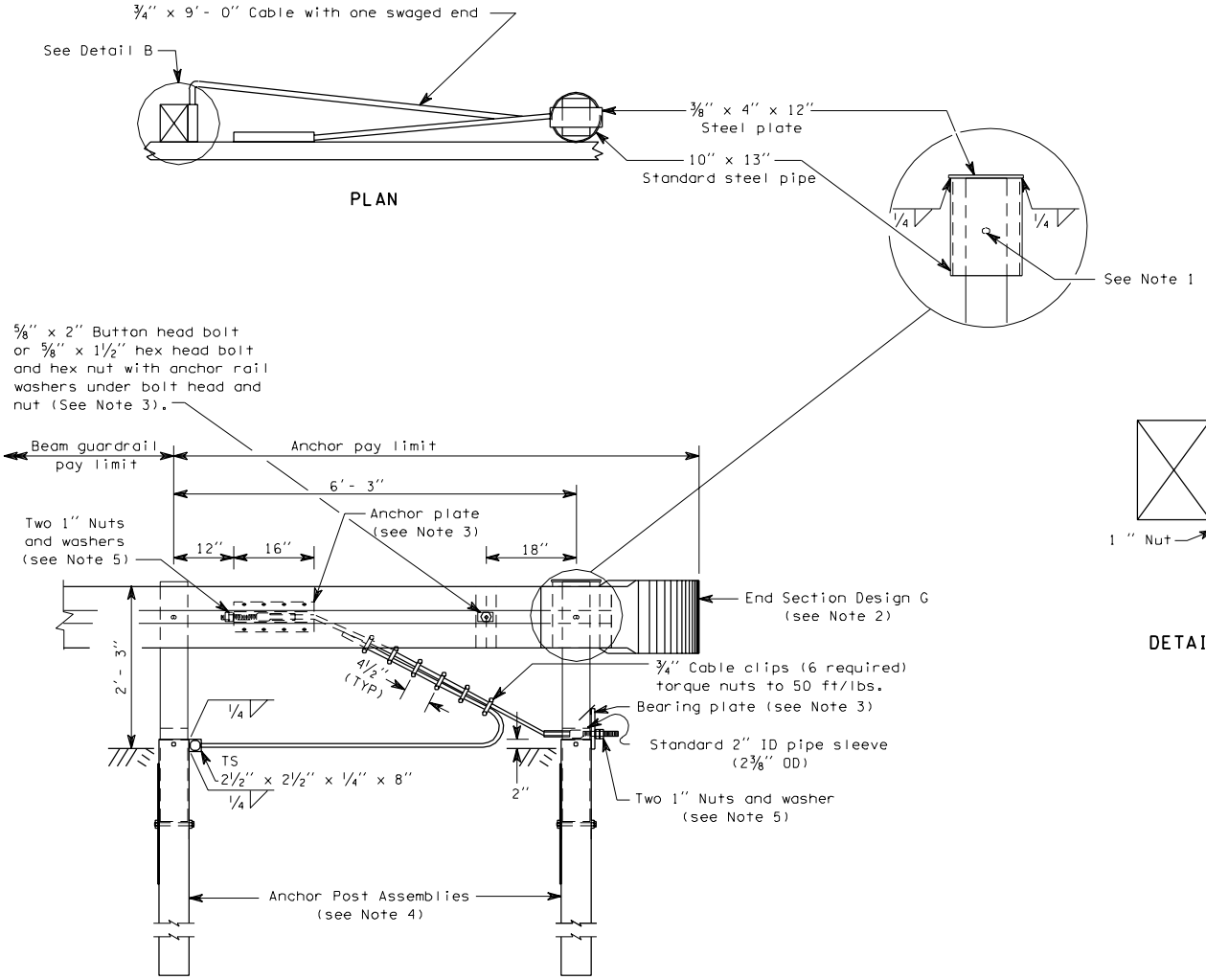

NOTES

1. Attach W-beam to steel pipe with ⅝" x 1¼" button head bolt with no washer. No connection to the post is required.
2. For end section details see Standard Plan, "Beam Guardrail End Sections".
3. For details see Standard Plan, "Beam Guardrail Anchor Type 1".
4. For details see Standard Plan, "Beam Guardrail Posts".
5. Outside nut shall be torqued against inside nut a minimum of 100 ft/lbs.

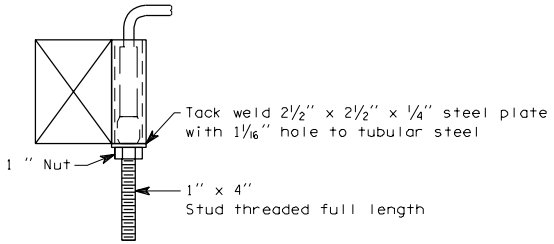

DETAIL B

BEAM GUARDRAIL ANCHOR TYPE 5

EFFECTIVE: JANUARY 7, 2002 TO AUGUST 4, 2002

EFFECTIVE: JANUARY 7, 2002 TO AUGUST 4, 2002
EFFECTIVE: JANUARY 7, 2002 TO AUGUST 4, 2002

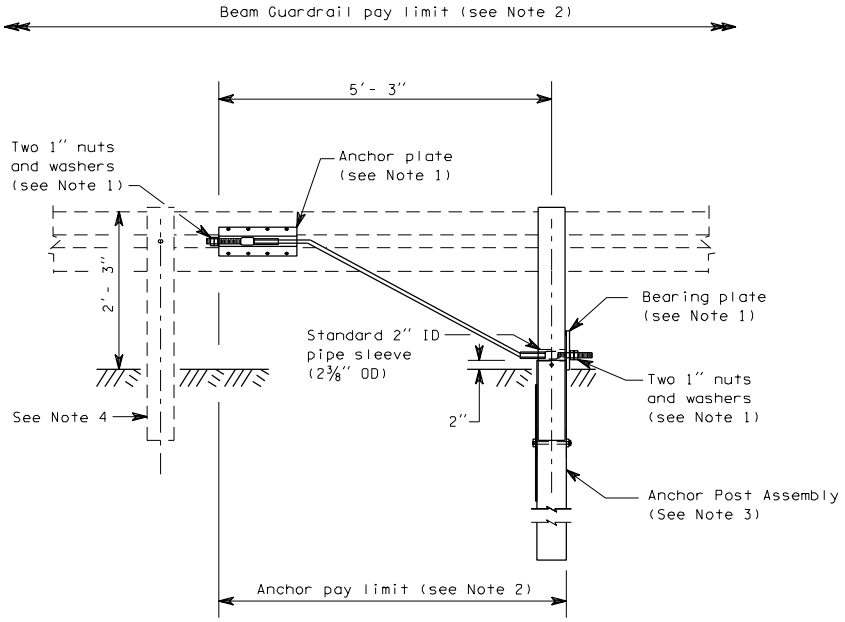

TYPE 7 ANCHOR

NOTES

1. For details, see Standard Plan, "Beam Guardrail Anchor Type 1".

2. The rail element is to be included in the "Beam Guardrail" pay item. The "Anchor" pay item includes the anchor post, anchor plate, anchor cable, bearing plate, nuts and washers.

3. For details, see Standard Plan, "Beam Guardrail Posts and Blocks".

4. Post shall match beam guardrail posts.

BEAM GUARDRAIL ANCHOR TYPE 7

EFFECTIVE: JANUARY 7, 2002 TO AUGUST 4, 2002
EFFECTIVE: JANUARY 7, 2002 TO AUGUST 4, 2002
EFFECTIVE: JANUARY 7, 2002 TO AUGUST 4, 2002
EFFECTIVE: JANUARY 7, 2002 TO AUGUST 4, 2002

EFFECTIVE: JANUARY 7, 2002 TO AUGUST 4, 2002

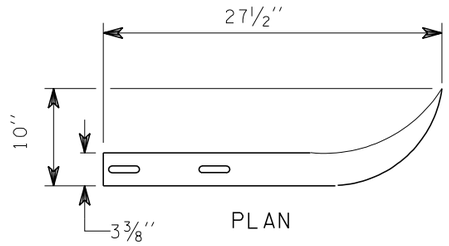

PLAN

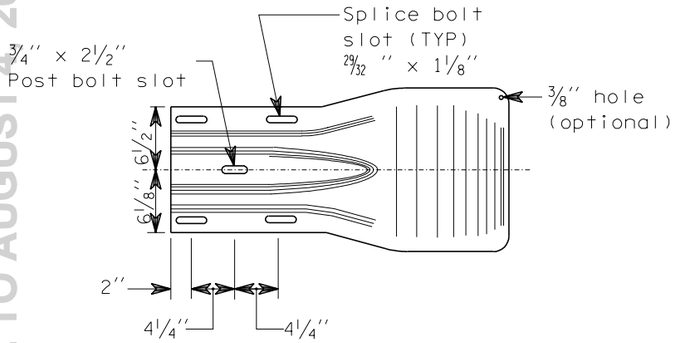

ELEVATION

DESIGN A

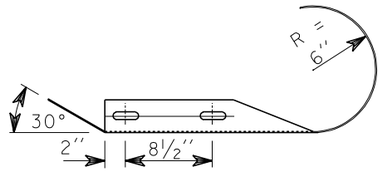

PLAN

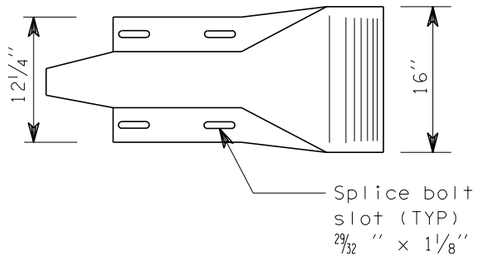

ELEVATION

DESIGN C

NOTES

1. End Section Design G shall be used except where noted on the plans or contract.

2. Bolts shall be ⅞'' ASHTO M 164 chemically bonded anchors. Anchor installation shall be per manufacturer's recommendations, in dry conditions.

3. A single piece having similar dimensional shape to Design G and mating with the W-beam guardrail is an alternate.

4. In cases where Design "F" end section is lapped on the outside of the guardrail, a galvanized 1'' ID, 2'' OD, 0.134'' thick, narrow Type A Plain Washer or a anchor rail washer shall be placed under the splice bolt heads.

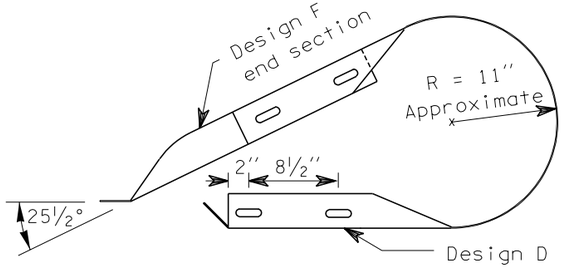

PLAN

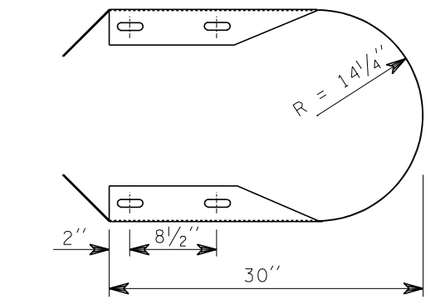

PLAN

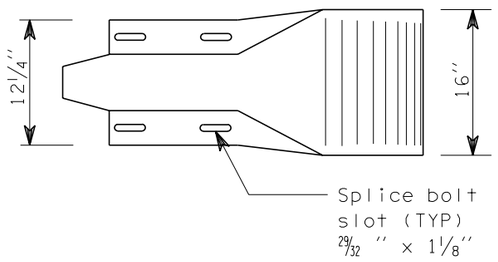

ELEVATION

DESIGN D

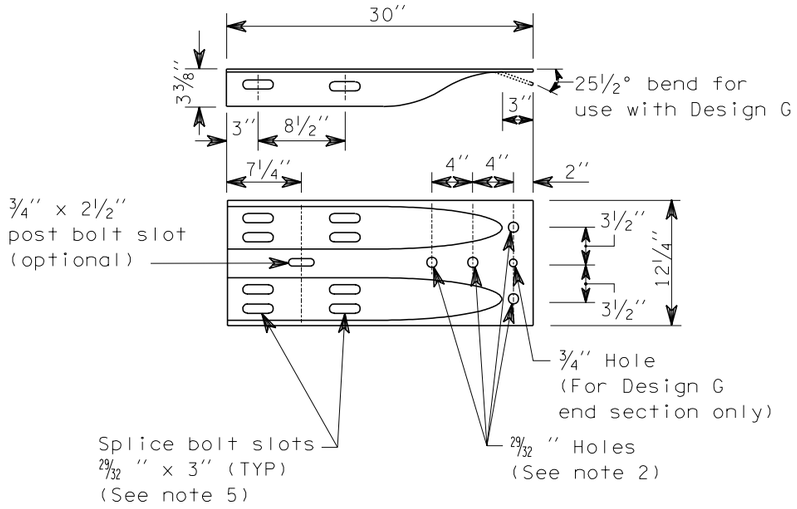

DESIGN F
(See Note 4)

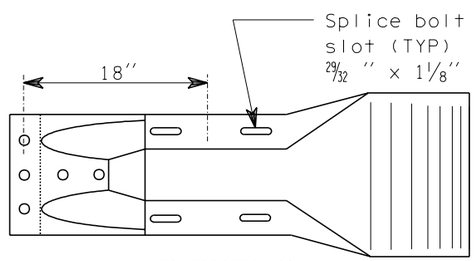

ELEVATION

DESIGN G
(See Note 3)

CLIFFORD E. MANSFIELD
STATE OF WASHINGTON
15224
REGISTERED
PROFESSIONAL ENGINEER

EXPIRES MAY 3, 2000

BEAM GUARDRAIL END SECTIONS STANDARD PLAN C-7

NOTE: THIS PLAN IS NOT A LEGAL ENGINEERING DOCUMENT BUT AN ELECTRONIC DUPLICATE OF THE ORIGINAL, SIGNED BY THE ENGINEER AND APPROVED FOR PUBLICATION, IS KEPT ON FILE AT THE WASHINGTON STATE DEPARTMENT OF TRANSPORTATION. A COPY MAY BE OBTAINED UPON REQUEST.

DATE	REVISION	BY
8/98	Changed "terminal" to "End Section" in NOTE 4 and DESIGN G PLAN	RBA

APPROVED FOR PUBLICATION

Clifford E. Mansfield — *8/10/98*

DEPUTY STATE DESIGN ENGINEER — DATE

WASHINGTON STATE DEPARTMENT OF TRANSPORTATION
OLYMPIA, WASHINGTON

EFFECTIVE: JANUARY 7, 2002 TO AUGUST 4, 2002

EFFECTIVE: JANUARY 7, 2002 TO AUGUST 4, 2002

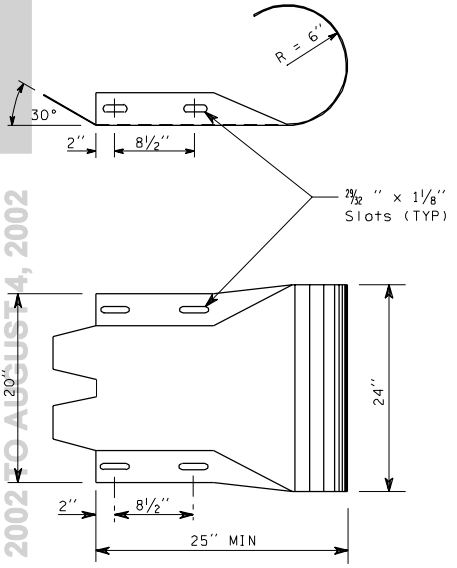

DESIGN C (THRIE BEAM)

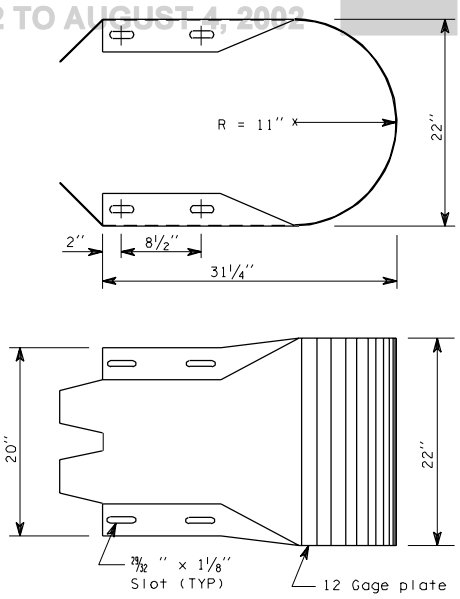

DESIGN D (THRIE BEAM)

NOTES

1. Bolts shall be high strength, ⅞'', with chemically bonded anchors.

2. In cases where Design F End Section is lapped on the outside of the guardrail, a galvanized 1'' ID, 2'' OD, 0.134'' thick, narrow Type A Plain Washer or an anchor rail washer will be placed under the splice bolt heads.

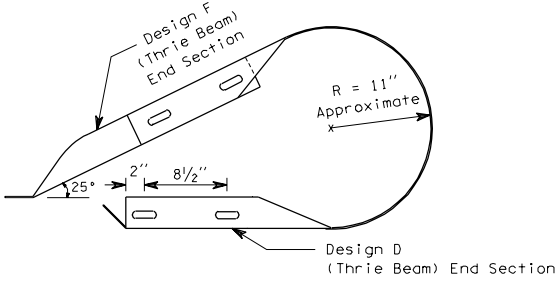

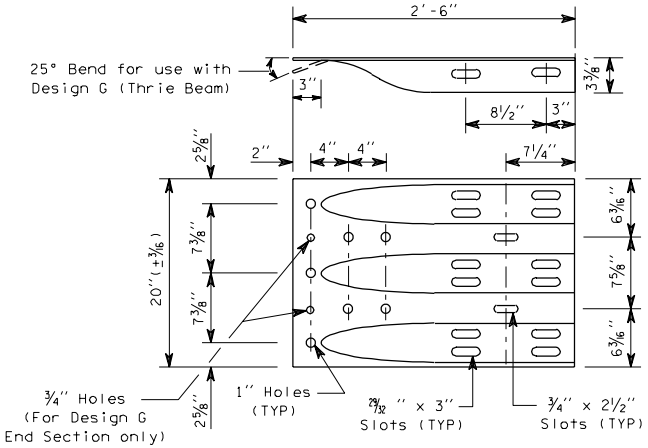

DESIGN F (THRIE BEAM)

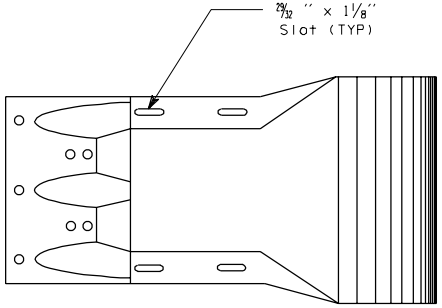

DESIGN G (THRIE BEAM)

THRIE BEAM END SECTIONS

EFFECTIVE: JANUARY 7, 2002 TO AUGUST 4, 2002

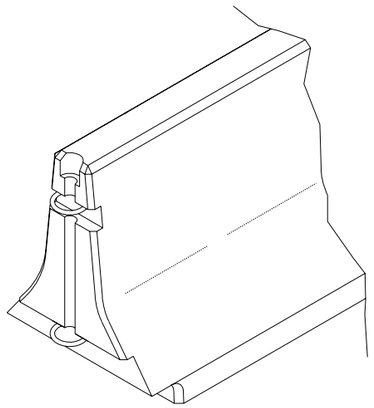

BARRIER SEGMENT
END VIEW

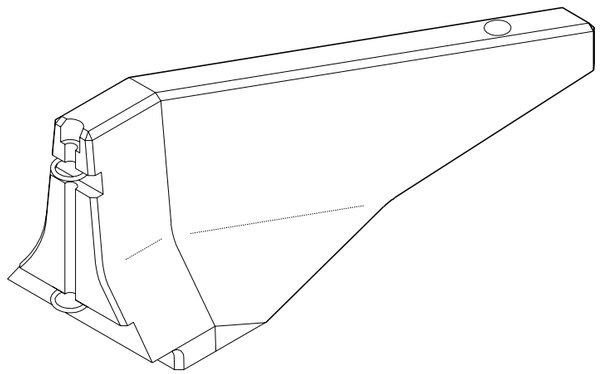

END SECTION VIEW

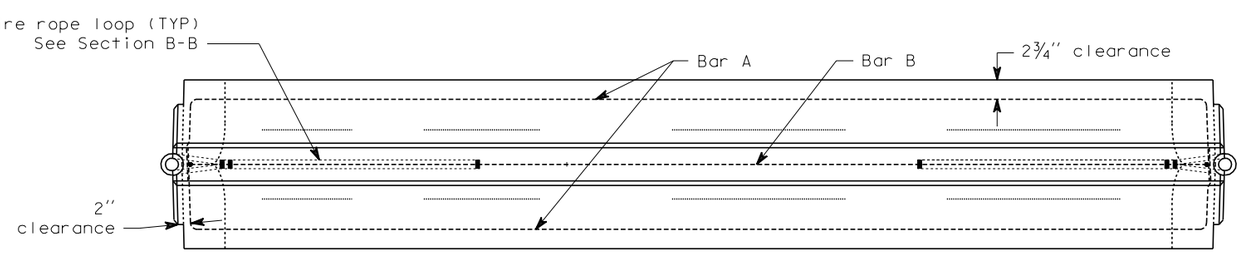

BARRIER SEGMENT
PLAN

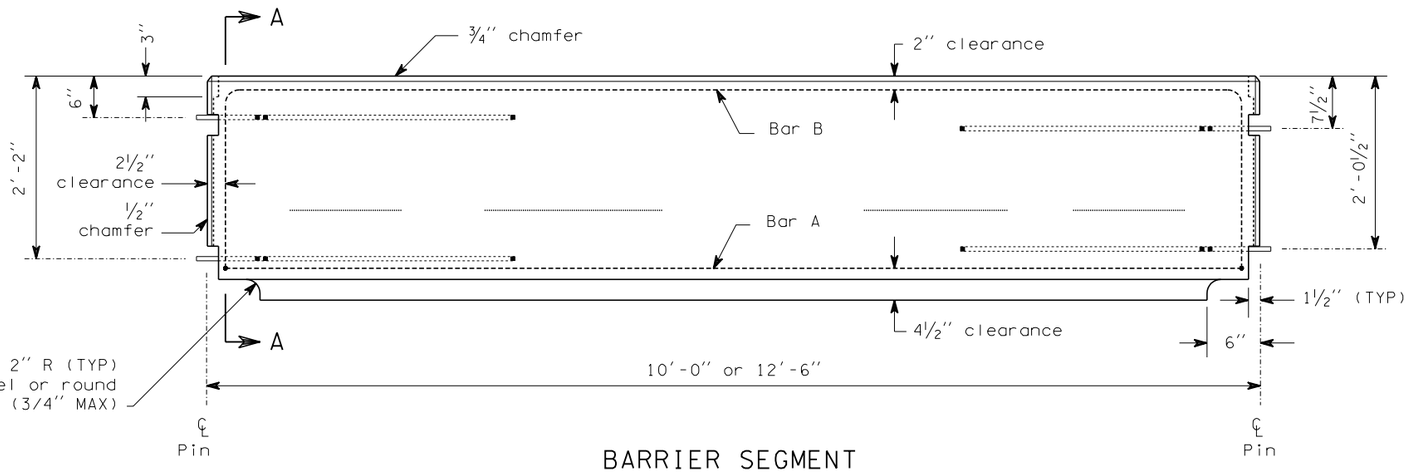

BARRIER SEGMENT
ELEVATION

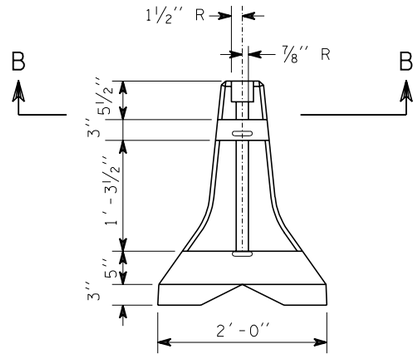

END VIEW

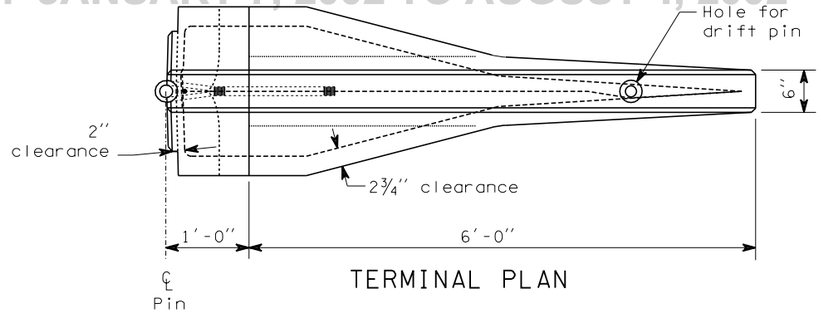

TERMINAL PLAN

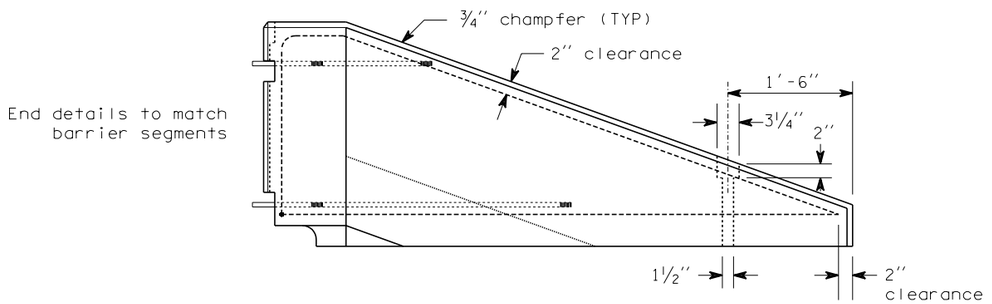

TERMINAL ELEVATION

EXPIRES MAY 3, 2000

CONCRETE BARRIER TYPE 2

STANDARD PLAN C-8

NOTE: THIS PLAN IS NOT A LEGAL ENGINEERING DOCUMENT BUT AN ELECTRONIC DUPLICATE OF THE ORIGINAL, SIGNED BY THE ENGINEER AND APPROVED FOR PUBLICATION, IS KEPT ON FILE AT THE WASHINGTON STATE DEPARTMENT OF TRANSPORTATION. A COPY MAY BE OBTAINED UPON REQUEST.

APPROVED FOR PUBLICATION

Clifford E. Mansfield — DEPUTY STATE DESIGN ENGINEER — 8/10/98 DATE

WASHINGTON STATE DEPARTMENT OF TRANSPORTATION
OLYMPIA, WASHINGTON

DATE	REVISION	BY
8/98	Change wire rope loop seizing, added notes 1 and 1	RAB

EFFECTIVE: JANUARY 7, 2002 TO AUGUST 4, 2002

EFFECTIVE: JANUARY 7, 2002 TO AUGUST 4, 2002

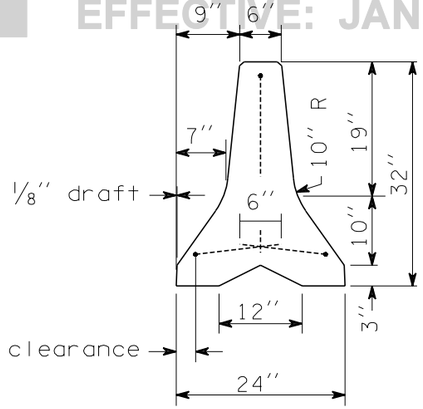

SECTION A-A

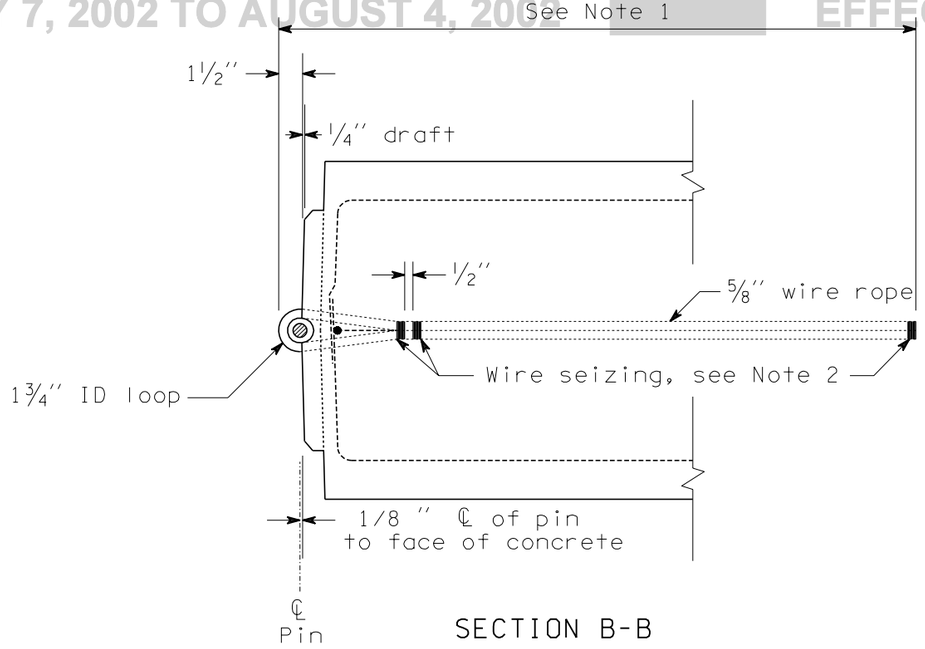

SECTION B-B

NOTES:

1. Wire rope loops shall be 44'' long, except for top loop of Terminal, which shall be 24'' long.
2. Wire seizing shall be eight wraps of 16 guage wire with ends twisted together, or equivalent fastening.

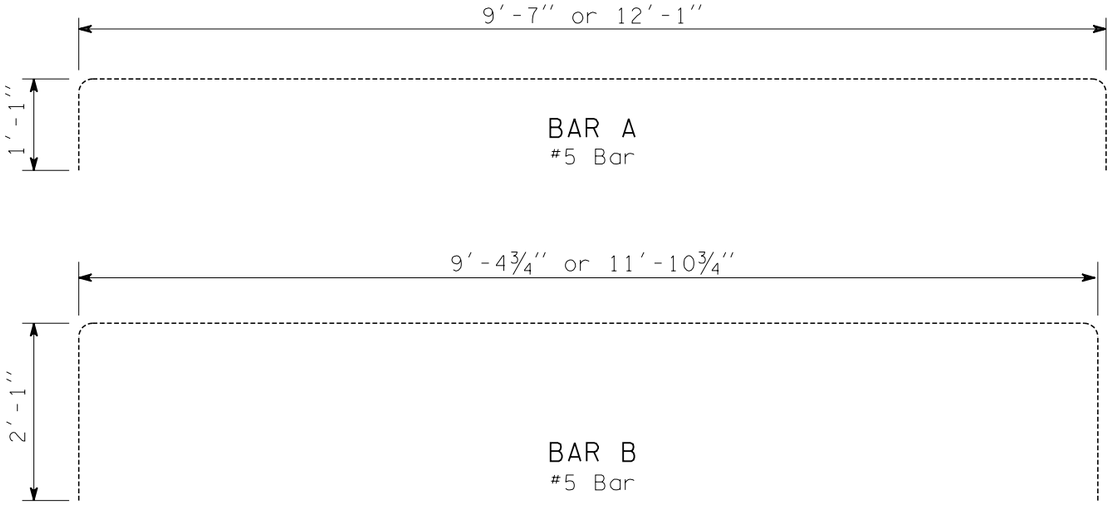

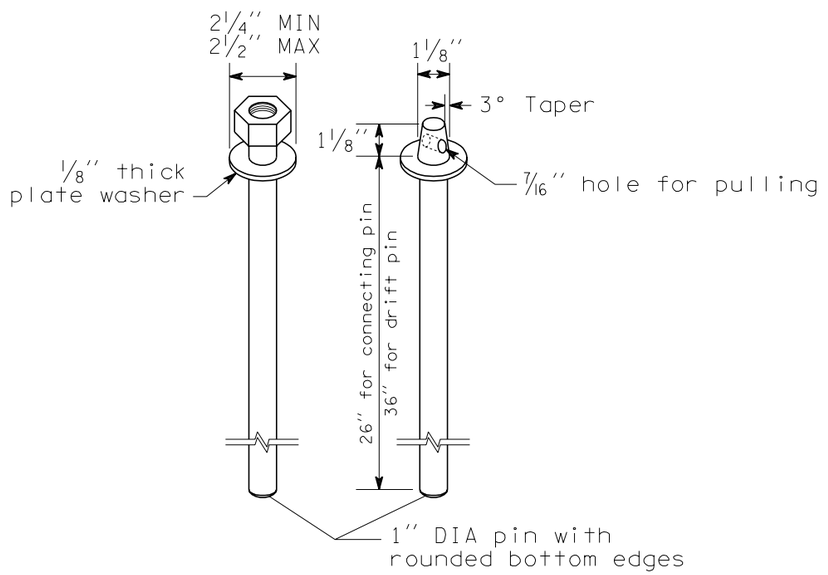

CONNECTING AND DRIFT PINS

CLIFFORD E. MANSFIELD
STATE OF WASHINGTON
15224
REGISTERED
PROFESSIONAL ENGINEER

EXPIRES MAY 3, 2000

CONCRETE BARRIER TYPE 2

STANDARD PLAN C-8

SHEET 2 OF 2 SHEETS

NOTE: THIS PLAN IS NOT A LEGAL ENGINEERING DOCUMENT BUT AN ELECTRONIC DUPLICATE. THE ORIGINAL, SIGNED BY THE ENGINEER AND APPROVED FOR PUBLICATION, IS KEPT ON FILE AT THE WASHINGTON STATE DEPARTMENT OF TRANSPORTATION. A COPY MAY BE OBTAINED UPON REQUEST.

APPROVED FOR PUBLICATION

Clifford E. Mansfield — *8/10/98*

DEPUTY STATE DESIGN ENGINEER — DATE

WASHINGTON STATE DEPARTMENT OF TRANSPORTATION
OLYMPIA, WASHINGTON

DATE	REVISION	BY
8/98	Change wire rope loop seizing, added notes 1 and 1	RAB

EFFECTIVE: JANUARY 7, 2002 TO AUGUST 4, 2002

EFFECTIVE: JANUARY 7, 2002 TO AUGUST 4, 2002

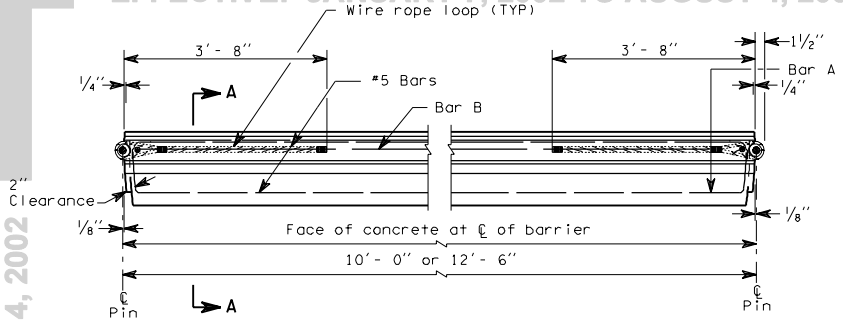

INTERMEDIATE PLAN

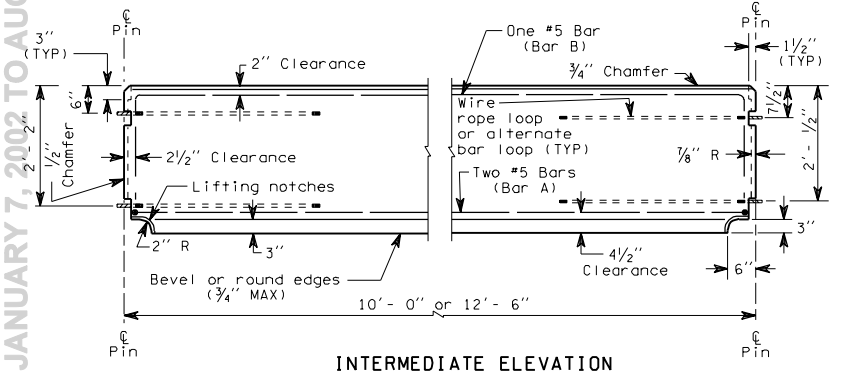

INTERMEDIATE ELEVATION

NOTE

1. For details on wire rope loop, connecting pin and end notches see Standard Plan "Concrete Barrier Type 2."

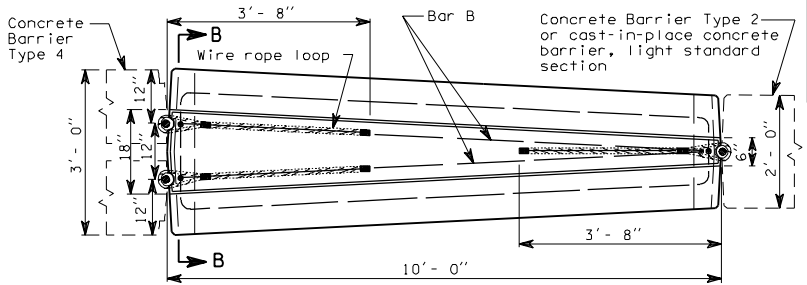

TRANSITION PLAN

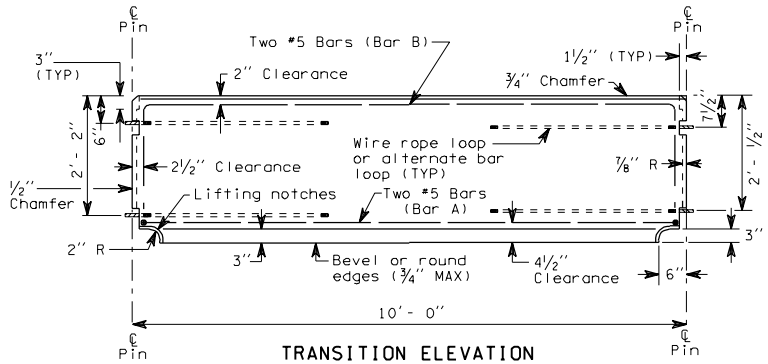

TRANSITION ELEVATION

CONCRETE BARRIER TYPE 4 AND TRANSITION SECTION

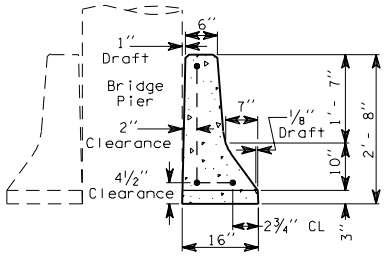

SECTION A-A

TYPE 4

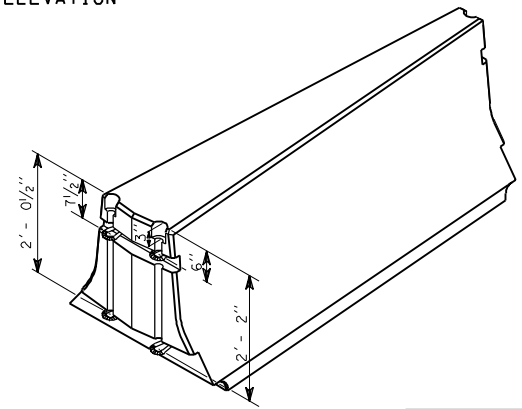

TRANSITION END VIEW

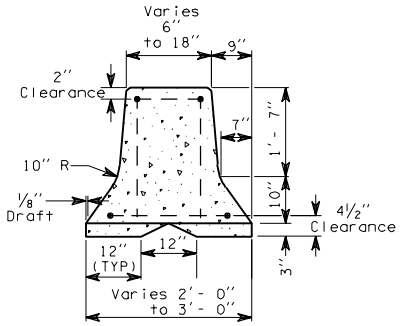

SECTION B-B

TRANSITION SECTION

C-8a 1 of 1

07-25-97

EFFECTIVE: JANUARY 7, 2002 TO AUGUST 4, 2002

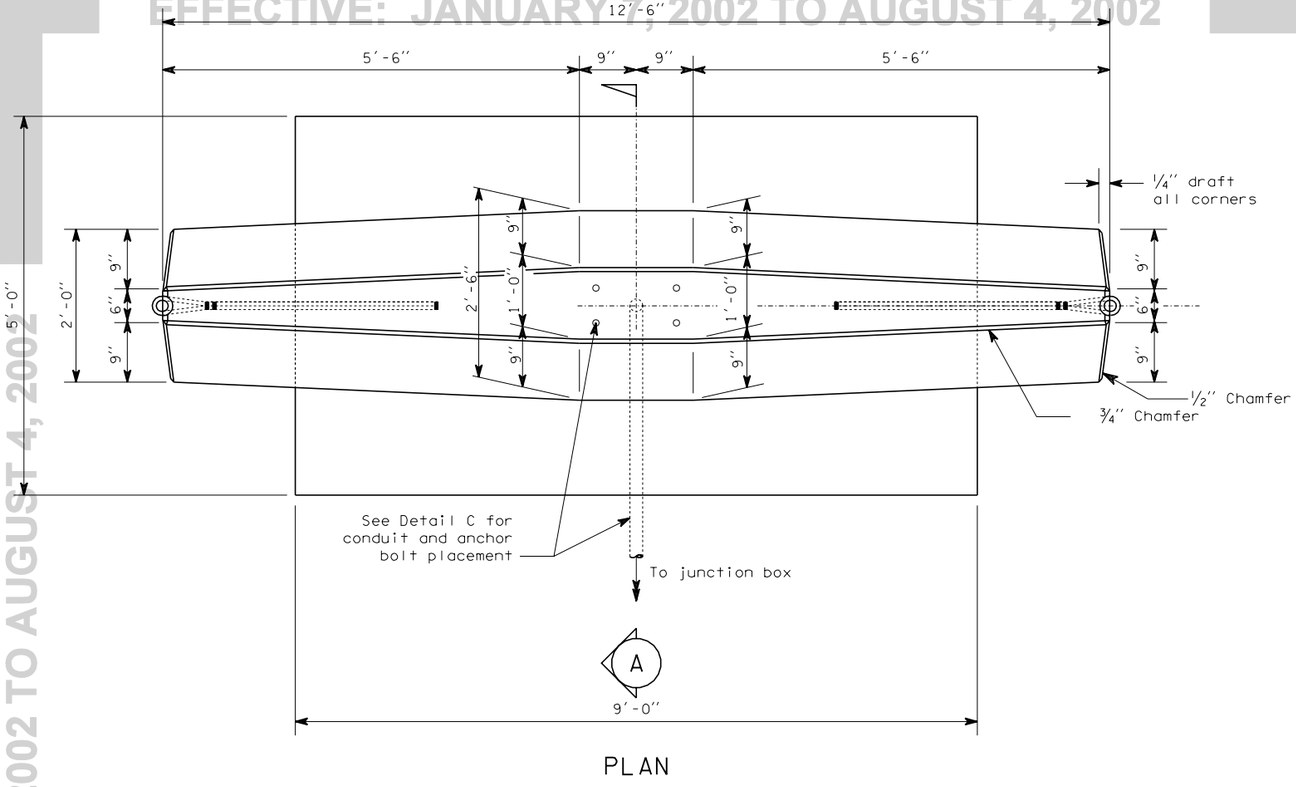

PLAN

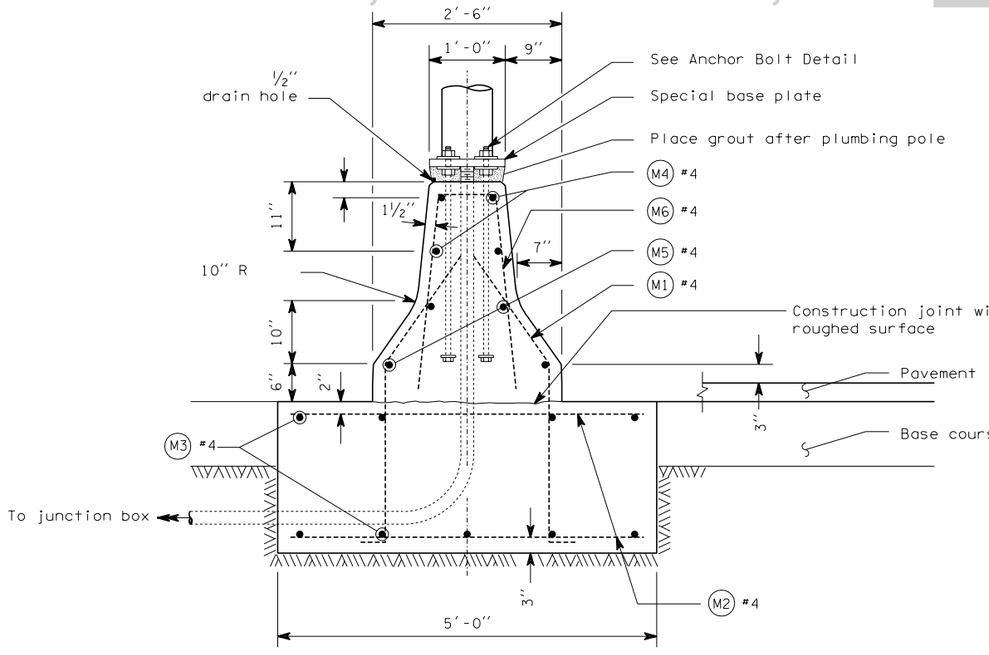

A SECTION

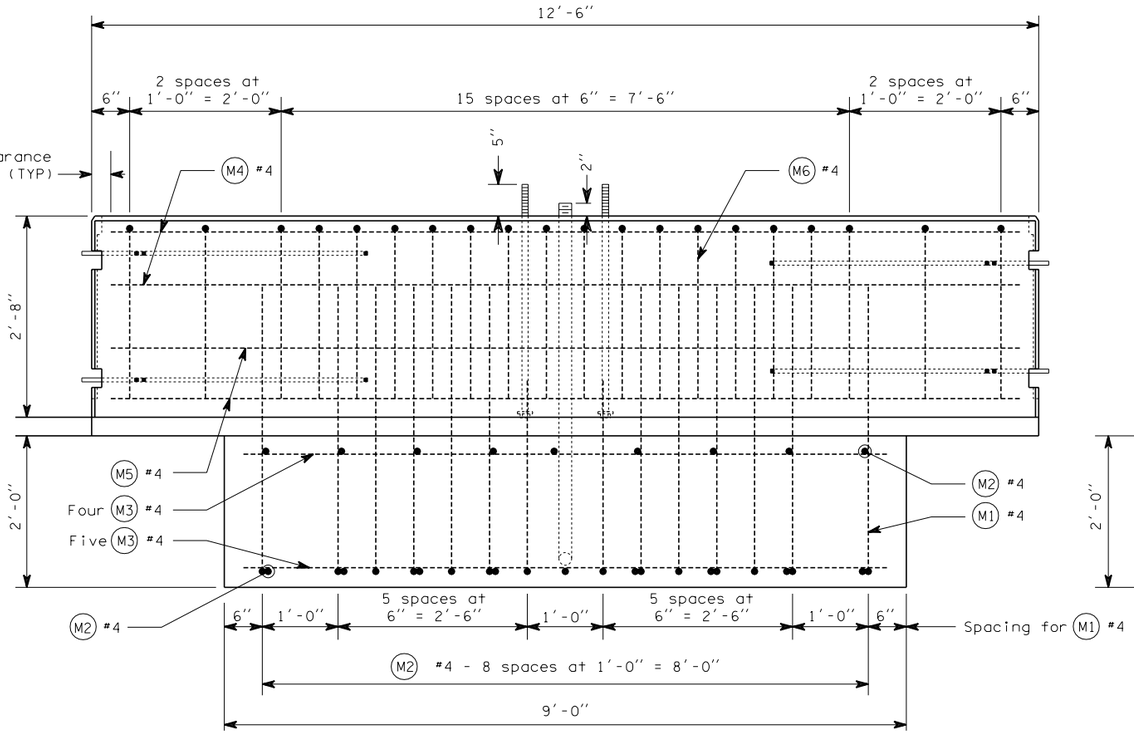

ELEVATION

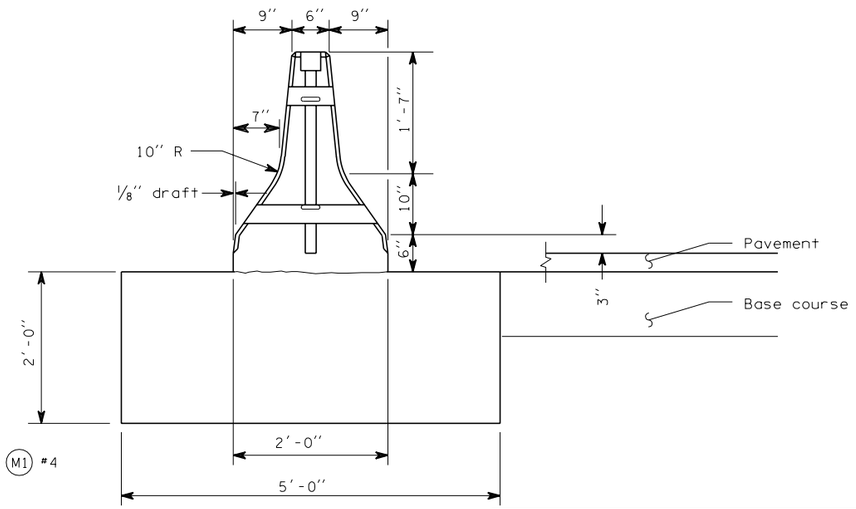

END VIEW

NOTE: THIS PLAN IS NOT A LEGAL ENGINEERING DOCUMENT BUT AN ELECTRONIC DUPLICATE. THE ORIGINAL, SIGNED BY THE ENGINEER AND APPROVED FOR PUBLICATION, IS KEPT ON FILE AT THE WASHINGTON STATE DEPARTMENT OF TRANSPORTATION. A COPY MAY BE OBTAINED UPON REQUEST.

M. MYINT LWIN
STATE OF WASHINGTON
10536
REGISTERED
PROFESSIONAL ENGINEER

EXPIRES JANUARY 17, 1999

CONCRETE BARRIER
LIGHT STANDARD SECTION
STANDARD PLAN C-8b

SHEET 1 OF 2 SHEETS

APPROVED FOR PUBLICATION

Clifford E. Mansfield — 7/17/98

DEPUTY STATE DESIGN ENGINEER — DATE

WASHINGTON STATE DEPARTMENT OF TRANSPORTATION
OLYMPIA, WASHINGTON

EFFECTIVE: JANUARY 7, 2002 TO AUGUST 4, 2002
EFFECTIVE: JANUARY 7, 2002 TO AUGUST 4, 2002

NOTE

1. This plan shall be used for 40' and 50' light standards with 12' MAX length double mast arms.
2. For details on wire rope and connecting pin, see Standard Plan "Concrete Barrier Type 2."

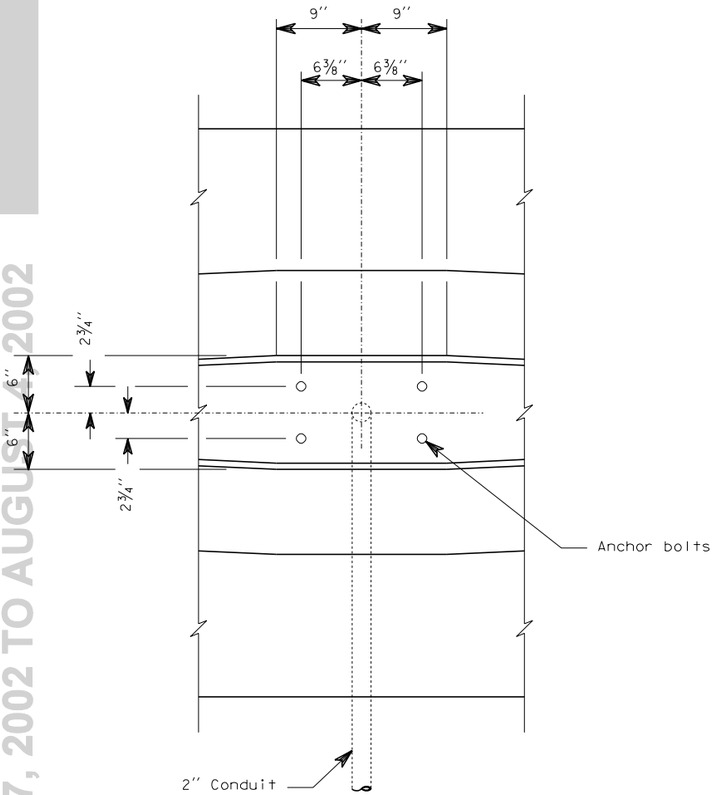

DETAIL C

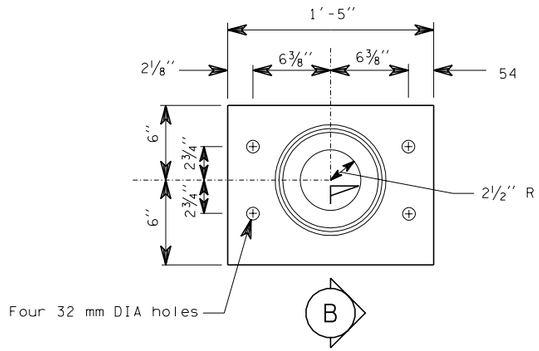

SPECIAL BASE PLATE

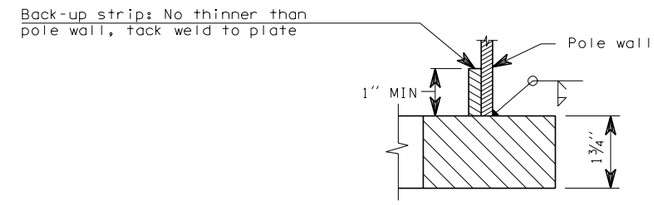

B SECTION

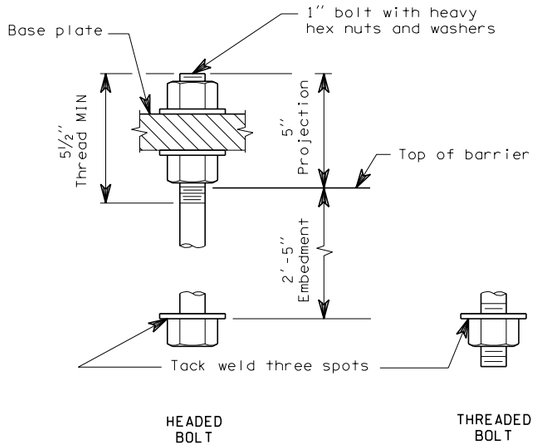

ANCHOR BOLT DETAIL

BAR LIST
All dimensions are out to out

MARK	LOCATION	QTY.	SIZE	a	b	c	LENGTH
M1	Footing-Dowel	28	4	1'-9"	2'-3½"	4"	4'-3"
M2	Footing	18	4		Straight		4'-8"
M3	Footing	9	4		Straight		8'-8"
M4	Concrete Barrier	4	4	1'-6"	5'-3"		12'-0"
M5	Concrete Barrier	4	4		Straight		12'-0"
M6	Concrete Barrier	20	4	3" to 9"	2'-7"		5'-3" to 5'-9"

BENDING DIAGRAM

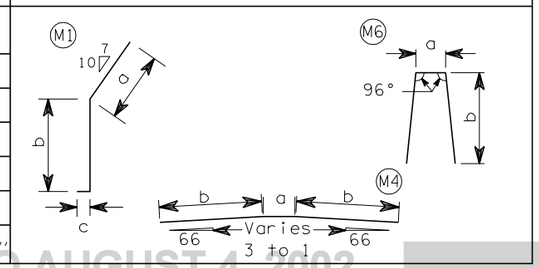

EXPIRES JANUARY 17, 1999

CONCRETE BARRIER LIGHT STANDARD SECTION STANDARD PLAN C-8b

SHEET 2 OF 2 SHEETS

NOTE: THIS PLAN IS NOT A LEGAL ENGINEERING DOCUMENT BUT AN ELECTRONIC DUPLICATE. THE ORIGINAL, SIGNED BY THE ENGINEER AND APPROVED FOR PUBLICATION, IS KEPT ON FILE AT THE WASHINGTON STATE DEPARTMENT OF TRANSPORTATION. A COPY MAY BE OBTAINED UPON REQUEST.

APPROVED FOR PUBLICATION

Clifford E. Mansfield — 7/17/98
DEPUTY STATE DESIGN ENGINEER — DATE

WASHINGTON STATE DEPARTMENT OF TRANSPORTATION
OLYMPIA, WASHINGTON

EFFECTIVE: JANUARY 7, 2002 TO AUGUST 4, 2002
EFFECTIVE: JANUARY 7, 2002 TO AUGUST 4, 2002
EFFECTIVE: JANUARY 7, 2002 TO AUGUST 4, 2002
EFFECTIVE: JANUARY 7, 2002 TO AUGUST 4, 2002

EFFECTIVE: JANUARY 7, 2002 TO AUGUST 4, 2002

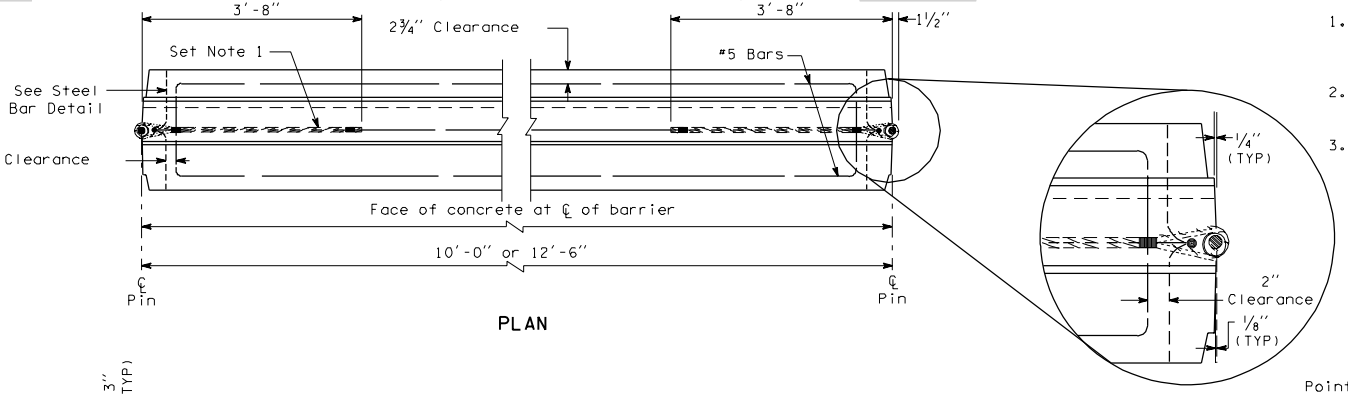

PLAN

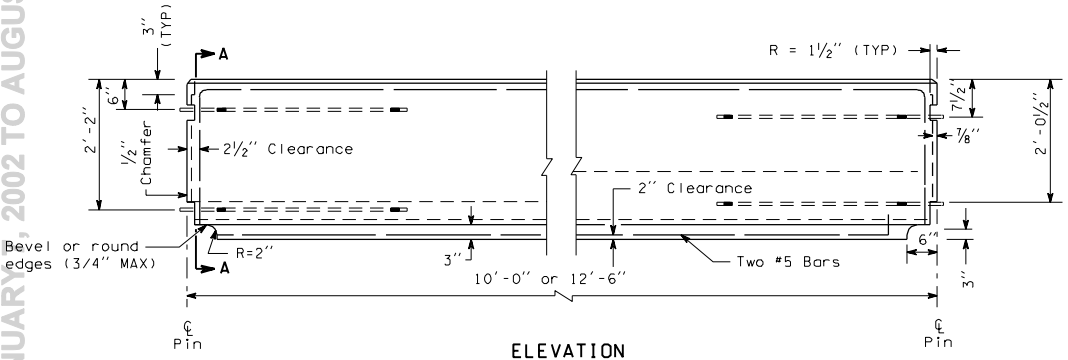

ELEVATION

NOTE

1. For details on loops, connecting pin, reinforcing steel, and terminal unit see Standard Plan Concrete Barrier Type 2.
2. See plans for surface treatment on back face face of barrier.
3. At the juncture between the Concrete Barrier Type 5 and the Bridge Barrier, cover the exposed foot of the Type 5 Barrier with an earth berm.

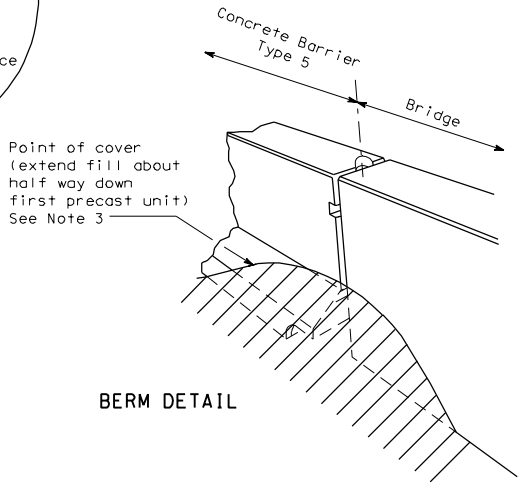

BERM DETAIL

CONCRETE BARRIER TYPE 5

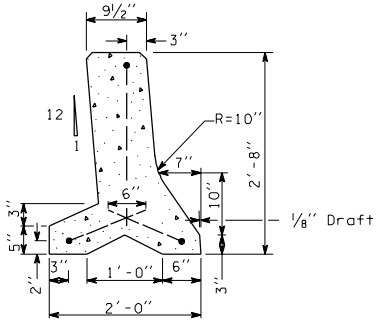

SECTION A-A

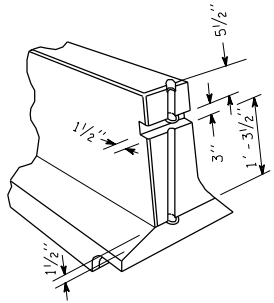

PERSPECTIVE VIEW

C-8c 1 of 1

05-30-97

EFFECTIVE: JANUARY 7, 2002 TO AUGUST 4, 2002

EFFECTIVE: JANUARY 7, 2002 TO AUGUST 4, 2002

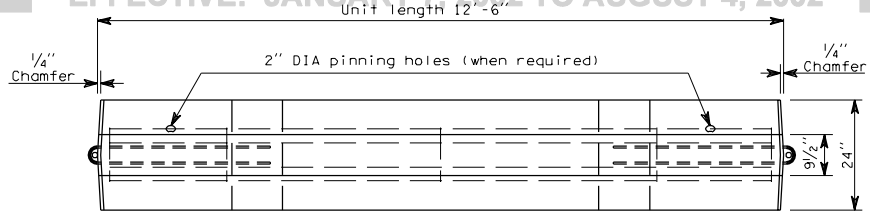

PLAN

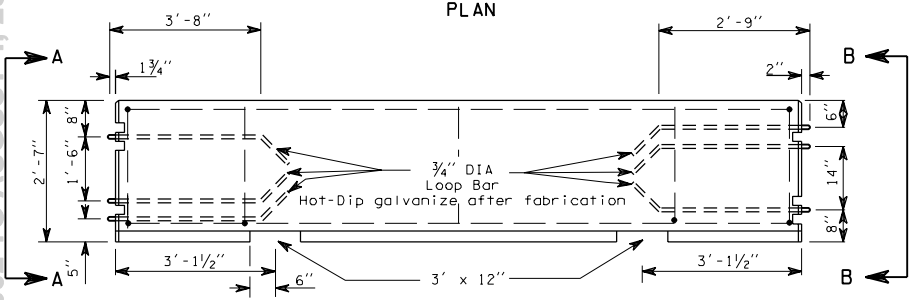

ELEVATION

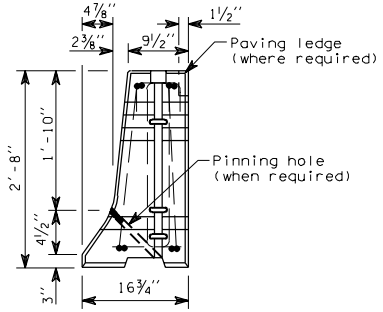

NARROW BASE

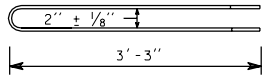

TOP VIEW

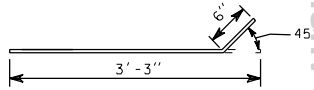

SIDE VIEW

ALTERNATE LOOP BAR
3/4" DIA (A36)

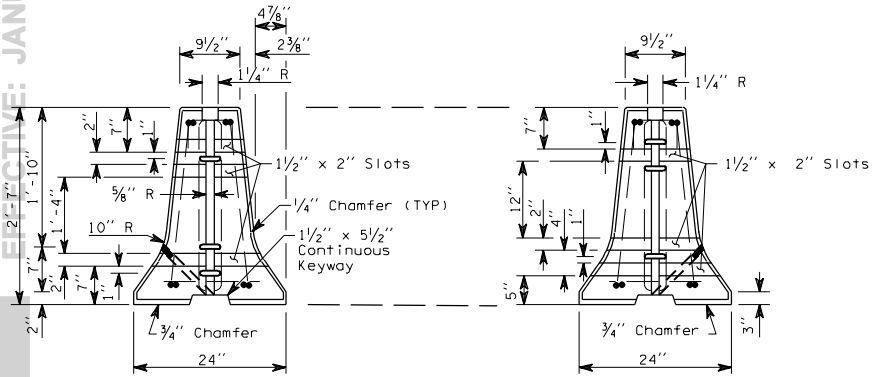

SECTION A-A

SECTION B-B

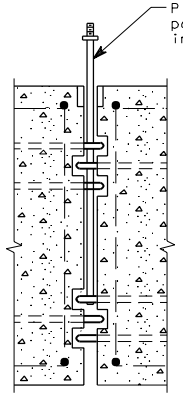

SECTION C-C

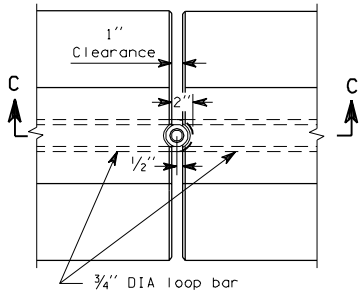

PLAN

ALTERNATIVE TEMPORARY
CONCRETE BARRIER

C-8d 1 of 1

07-25-97

EFFECTIVE: JANUARY 7, 2002 TO AUGUST 4, 2002

EFFECTIVE: JANUARY 7, 2002 TO AUGUST 4, 2002

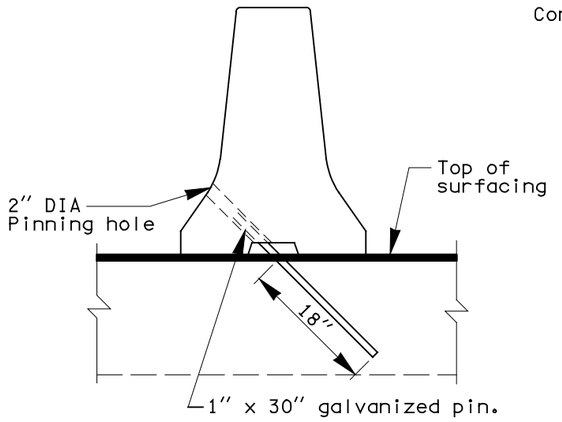

TYPE 3 ANCHOR

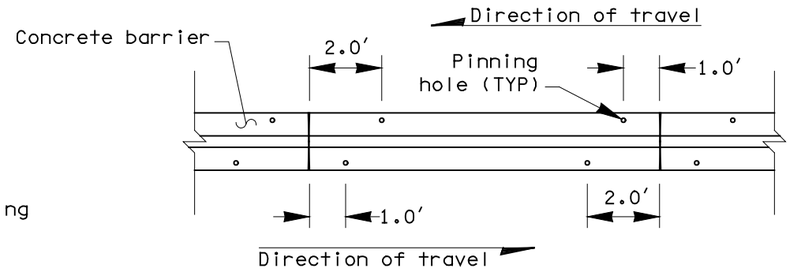

PLAN - TYPE 3 ANCHOR LOCATIONS

Shown for two-way traffic, four anchors required.
For one-way traffic, install two anchors on traffic side of barrier.

NOTES

1. After removing temporary barrier from structures, clean and fill deck bolt holes with a 2:1 sand/cement grout, by volume.
2. Shims may be required to fit the bracket to the median barrier and roadway surface.
3. Location of anchors is to be adjusted to miss the main reinforcing in the deck when drilling holes.
4. For Type 1 Anchor Assembly provide two assemblies for each section of concrete median barrier on the roadway surface, located approximately 2'-6" from barrier ends.
5. For Type 2 Anchor Assembly provide three assemblies for each section of concrete median barrier on the roadway surface, located approximately 2'-6" from barrier ends and at center of barrier.

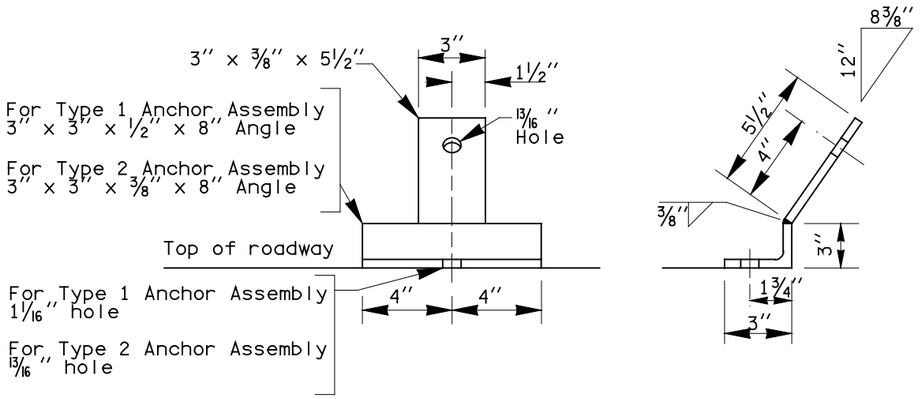

ANCHOR ASSEMBLY (TYPE 1 AND 2)

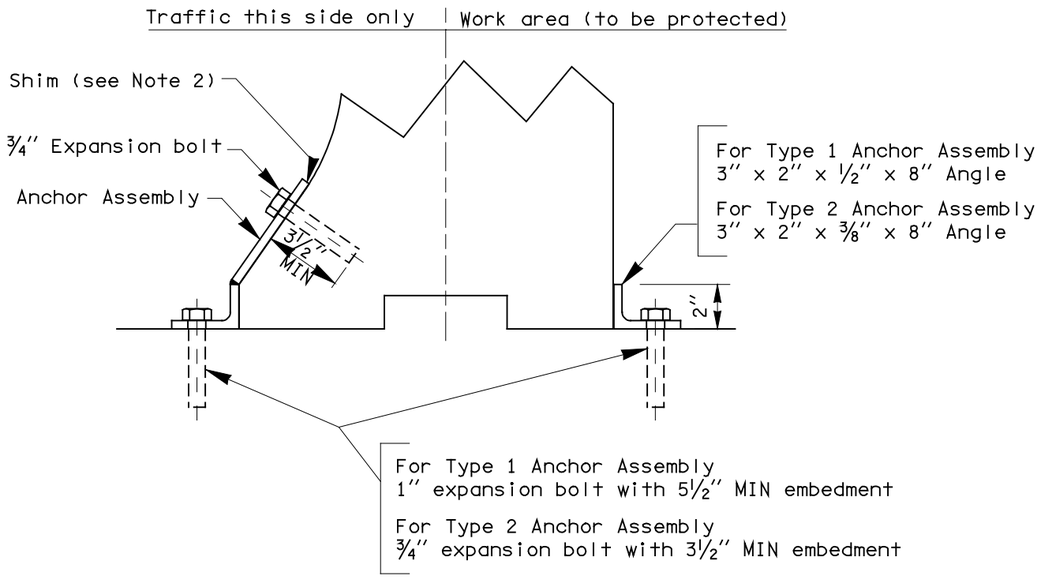

TYPE 1 AND TYPE 2 ANCHORS SINGLE FACE CONCRETE BARRIER

CLIFFORD E. MANSFIELD
STATE OF WASHINGTON
15224
REGISTERED
PROFESSIONAL ENGINEER

EXPIRES MAY 3, 2000

CONCRETE BARRIER ANCHORS STANDARD PLAN C-8e

NOTE: THIS PLAN IS NOT A LEGAL ENGINEERING DOCUMENT BUT AN ELECTRONIC DUPLICATE. THE ORIGINAL, SIGNED BY THE ENGINEER AND APPROVED FOR PUBLICATION, IS KEPT ON FILE AT THE WASHINGTON STATE DEPARTMENT OF TRANSPORTATION. A COPY MAY BE OBTAINED UPON REQUEST.

DATE	REVISION	BY
3/99	Notes 4 & 5 corrected	RBA

APPROVED FOR PUBLICATION

Clifford E. Mansfield — *04/02/99*

DEPUTY STATE DESIGN ENGINEER — DATE

WASHINGTON STATE DEPARTMENT OF TRANSPORTATION
OLYMPIA, WASHINGTON

EFFECTIVE: JANUARY 7, 2002 TO AUGUST 4, 2002

EFFECTIVE: JANUARY 7, 2002 TO AUGUST 4, 2002
EFFECTIVE: JANUARY 7, 2002 TO AUGUST 4, 2002

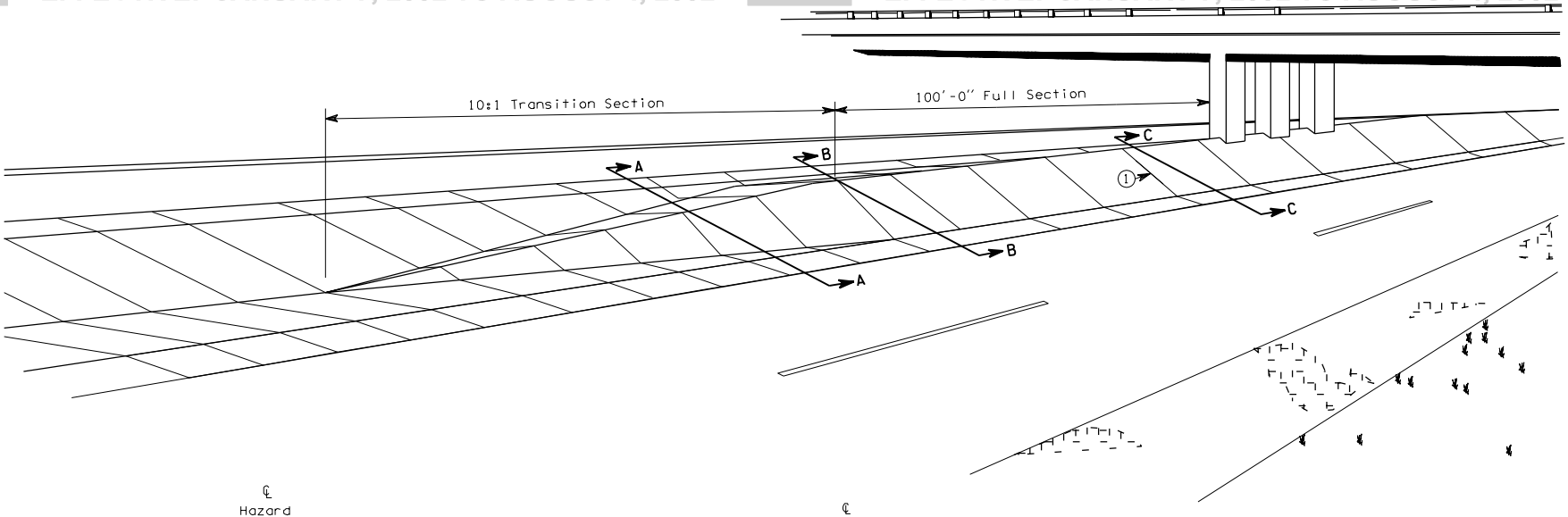

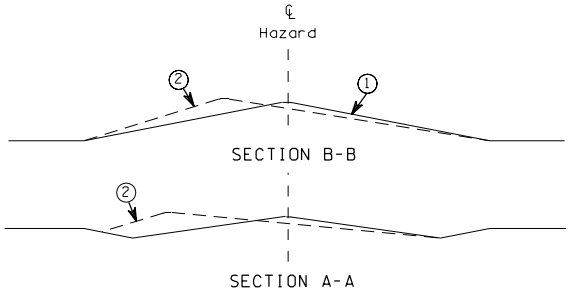

TRANSITION SECTION

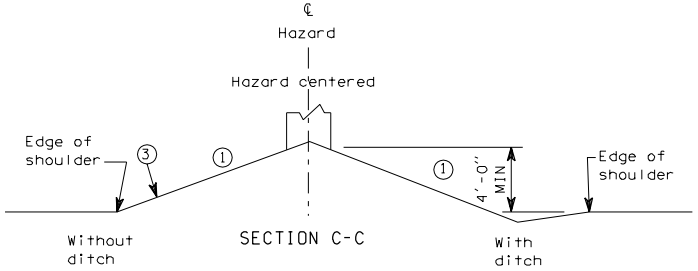

FULL SECTION

REDIRECTIONAL LAND FORM

1. Slope varies to suit conditions
   Not steeper than 2:1
   Not steeper than 3:1 for mowing
2. Berm transition offset optional for approach end
3. 10'-0" Minimum radius rounding when conditions permit

EFFECTIVE: JANUARY 7, 2002 TO AUGUST 4, 2002
EFFECTIVE: JANUARY 7, 2002 TO AUGUST 4, 2002

EFFECTIVE: JANUARY 7, 2002 TO AUGUST 4, 2002

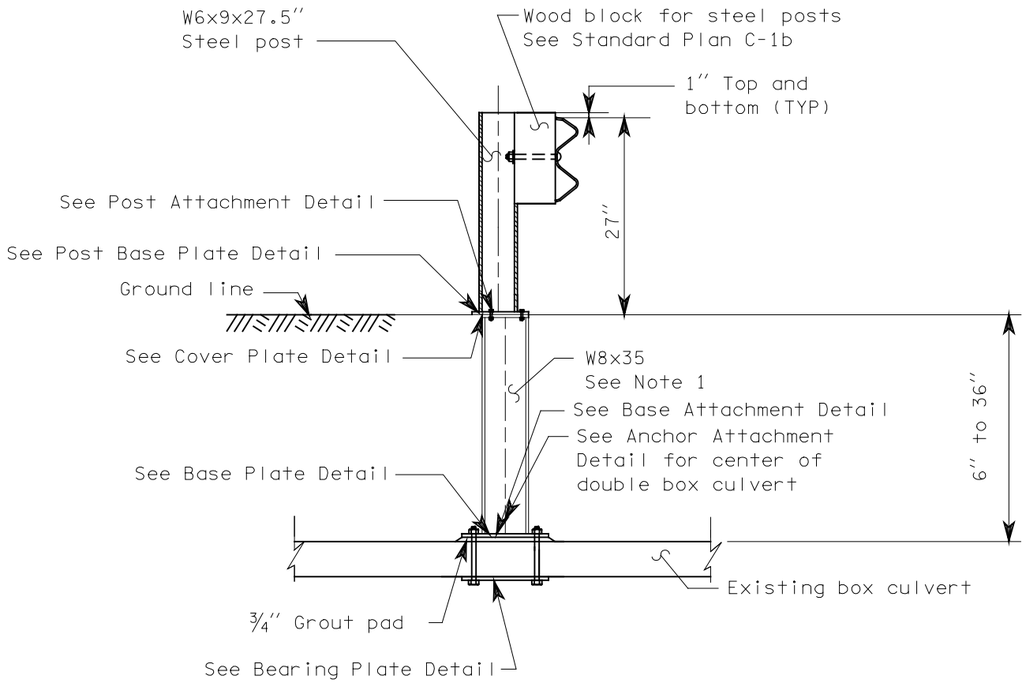

BOX CULVERT GUARDRAIL STEEL POST TYPE 1

(6″ to 36″ ground cover)

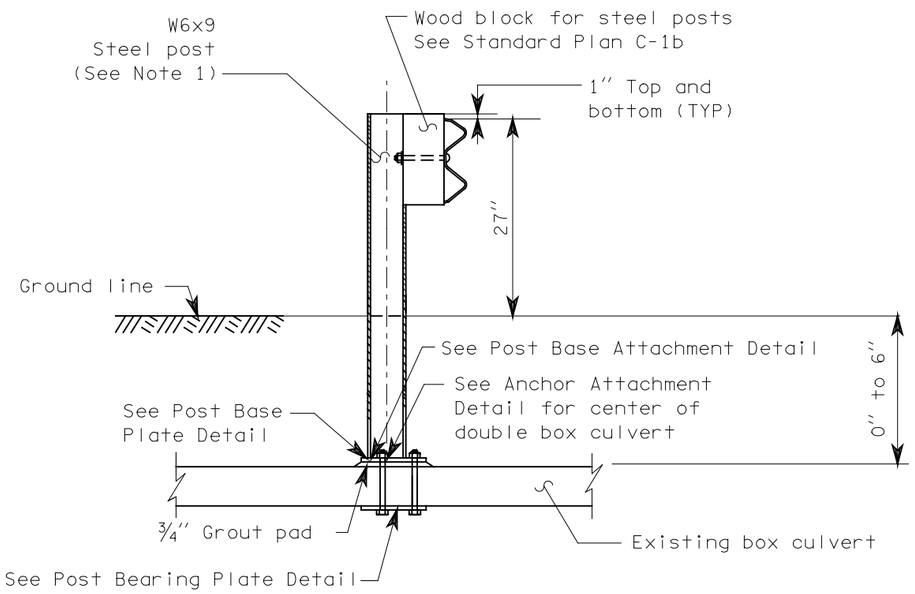

BOX CULVERT GUARDRAIL STEEL POST TYPE 2

(0″ to 6″ Ground cover)

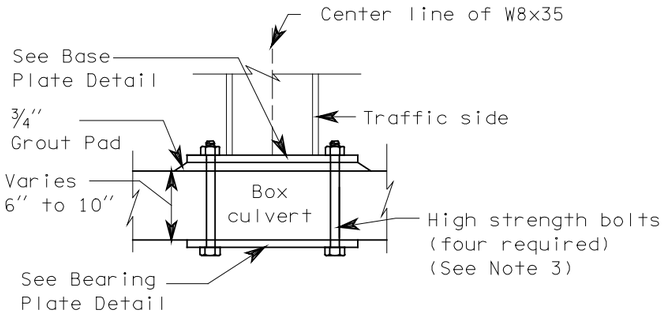

BASE ATTACHMENT DETAIL

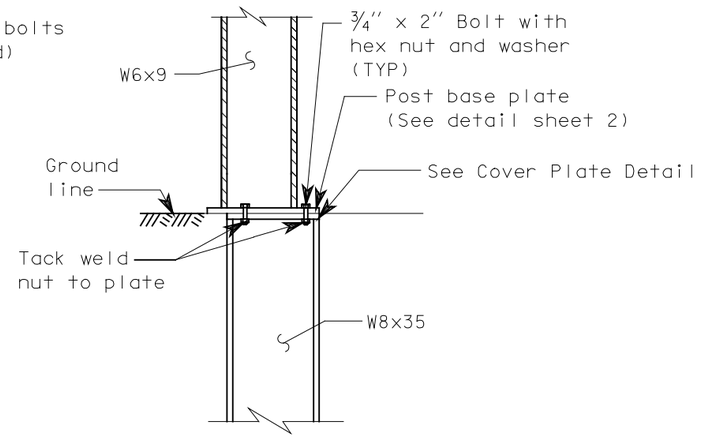

POST ATTACHMENT DETAIL

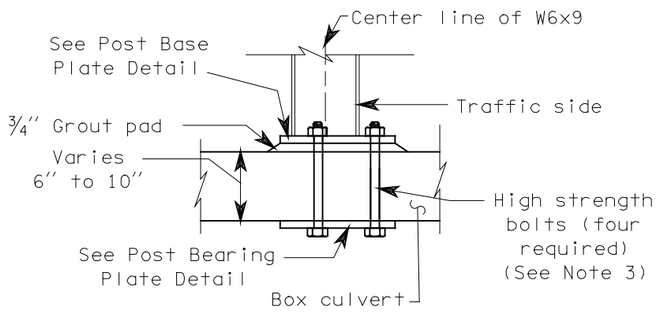

POST BASE ATTACHMENT DETAIL

CLIFFORD E. MANSFIELD
STATE OF WASHINGTON
15224
REGISTERED
PROFESSIONAL ENGINEER

EXPIRES MAY 3, 2000

BOX CULVERT GUARDRAIL STEEL POST STANDARD PLAN C-10

SHEET 1 OF 2 SHEETS

NOTE: THIS PLAN IS NOT A LEGAL ENGINEERING DOCUMENT BUT AN ELECTRONIC DUPLICATE. THE ORIGINAL, SIGNED BY THE ENGINEER AND APPROVED FOR PUBLICATION, IS KEPT ON FILE AT THE WASHINGTON STATE DEPARTMENT OF TRANSPORTATION. A COPY MAY BE OBTAINED UPON REQUEST.

APPROVED FOR PUBLICATION

Clifford E. Mansfield *07/31/98*

DEPUTY STATE DESIGN ENGINEER — DATE

WASHINGTON STATE DEPARTMENT OF TRANSPORTATION
OLYMPIA, WASHINGTON

DATE	REVISION	BY
6/98	Added wood block for steel posts.	RBA

EFFECTIVE: JANUARY 7, 2002 TO AUGUST 4, 2002

EFFECTIVE: JANUARY 7, 2002 TO AUGUST 4, 2002

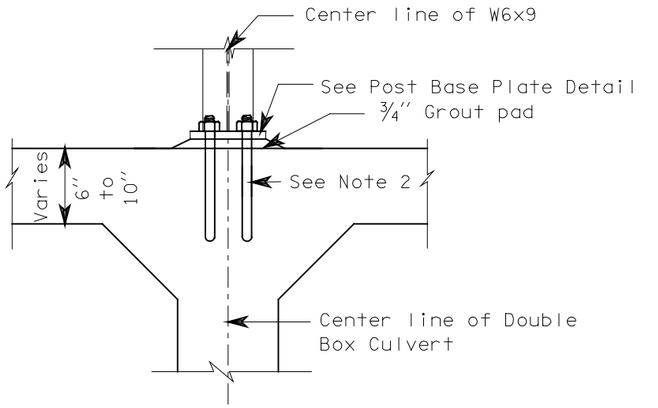

POST ANCHOR ATTACHMENT DETAIL
(See Note 4)

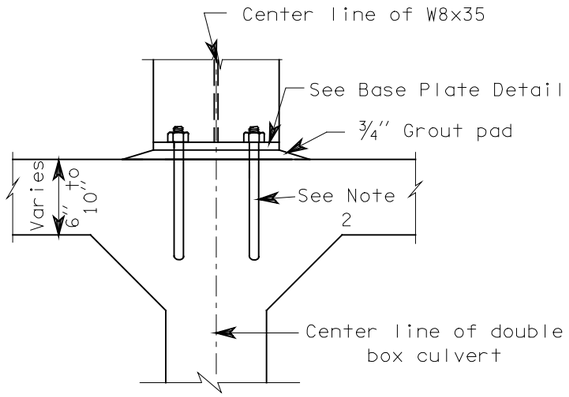

ANCHOR ATTACHMENT DETAIL
(See Note 4)

NOTES

1. Length of W8x35 and W6x9 shall be determined by measurement from top of ground to top of grout pad. This distance shall be verified by the contractor.
2. Attach guardrail post to box culvert with ¾" high strength bolts with resin bonded anchors.
3. Drill 1¼" diameter hole in concrete slab for ⅞" high strength bolts. Length of bolt is determined by top slab of box culvert thickness which shall be verified by the contractor.
4. For details of post attachment to double box culvert see Standard Plan "Guardrail Placement," Case 15.

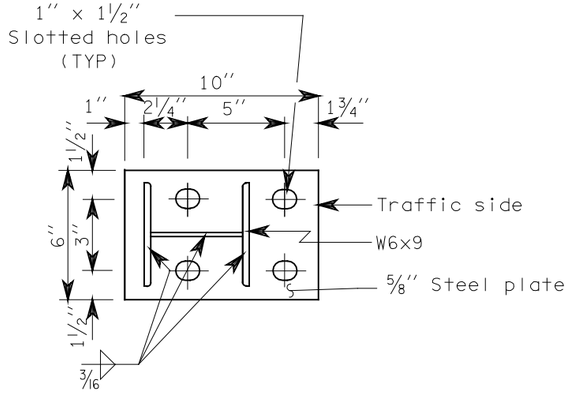

POST BASE PLATE DETAIL

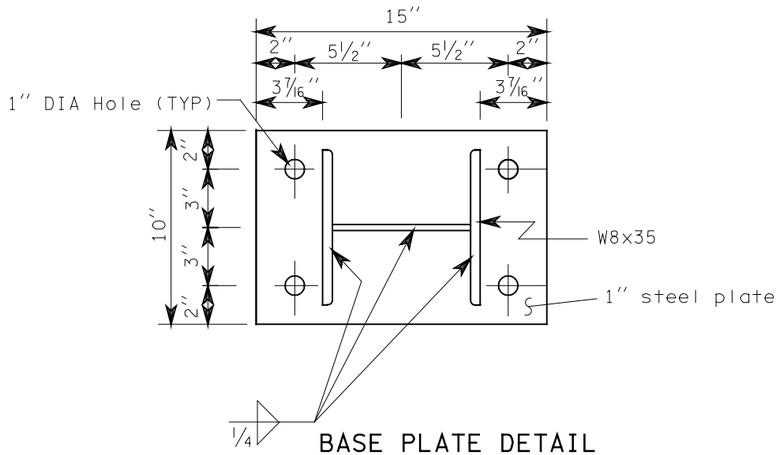

BASE PLATE DETAIL

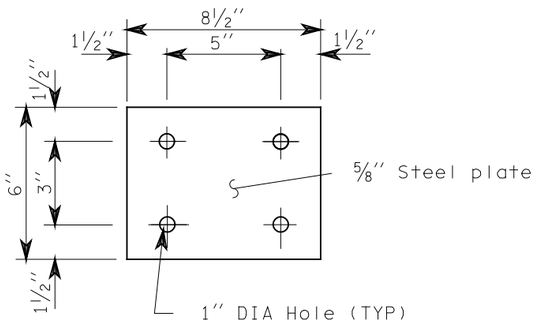

POST BEARING PLATE DETAIL

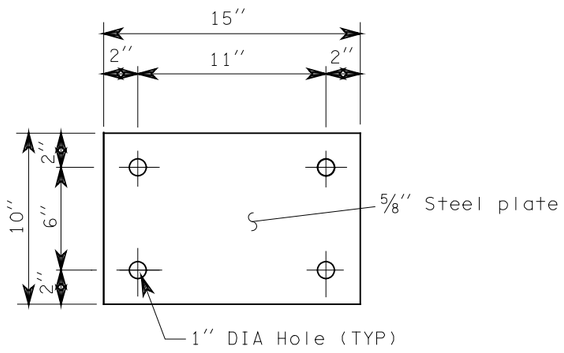

BEARING PLATE DETAIL

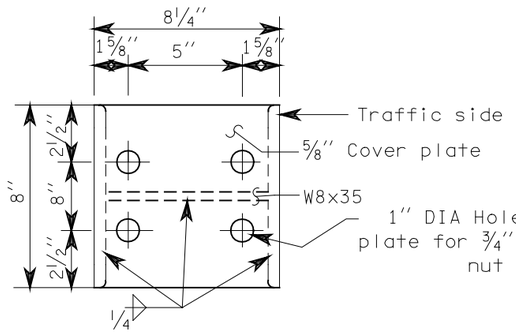

COVER PLATE DETAIL

CLIFFORD E. MANSFIELD
STATE OF WASHINGTON
15224
REGISTERED
PROFESSIONAL ENGINEER

EXPIRES MAY 3, 2000

BOX CULVERT GUARDRAIL STEEL POST
STANDARD PLAN C-10

SHEET 2 OF 2 SHEETS

NOTE: THIS PLAN IS NOT A LEGAL ENGINEERING DOCUMENT BUT AN ELECTRONIC DUPLICATE. THE ORIGINAL, SIGNED BY THE ENGINEER AND APPROVED FOR PUBLICATION, IS KEPT ON FILE AT THE WASHINGTON STATE DEPARTMENT OF TRANSPORTATION. A COPY MAY BE OBTAINED UPON REQUEST.

APPROVED FOR PUBLICATION

Clifford E. Mansfield — *07/31/98*

DEPUTY STATE DESIGN ENGINEER — DATE

WASHINGTON STATE DEPARTMENT OF TRANSPORTATION
OLYMPIA, WASHINGTON

EFFECTIVE: JANUARY 7, 2002 TO AUGUST 4, 2002

EFFECTIVE: JANUARY 7, 2002 TO AUGUST 4, 2002

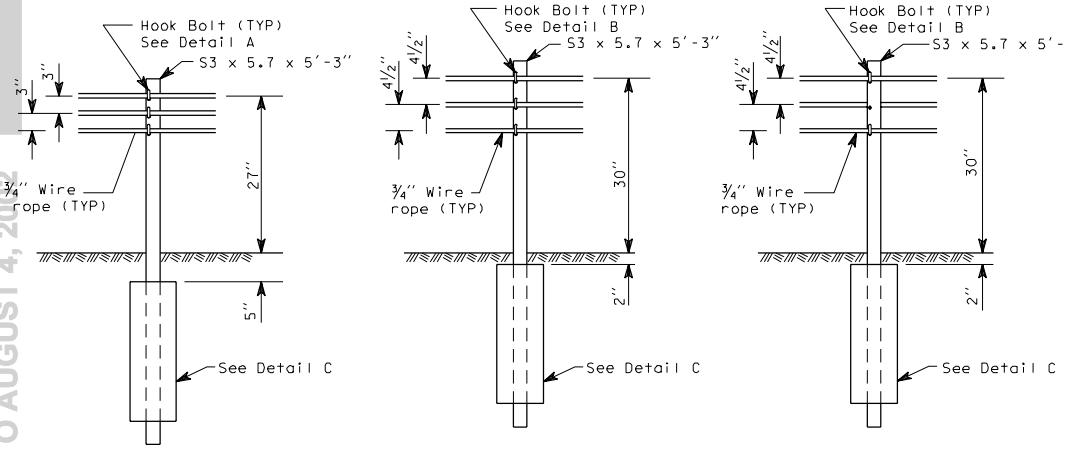

TYPE 1 TYPE 2 TYPE 3

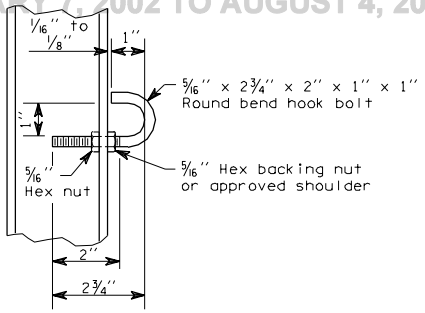

HOOK BOLT

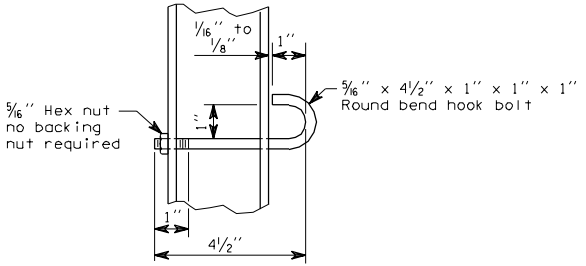

ALTERNATE HOOK BOLT

CABLE BARRIER

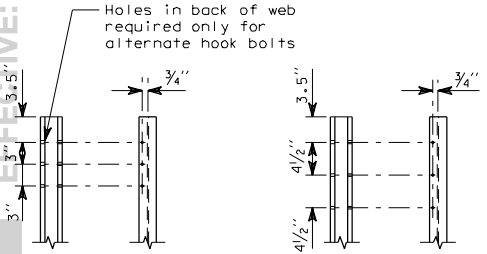

DETAIL A DETAIL B

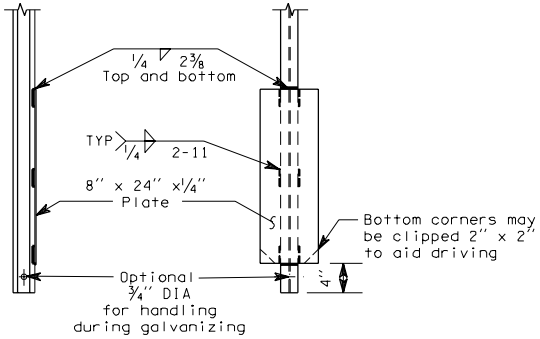

DETAIL C

C-11 1 of 1

05-30-97

EFFECTIVE: JANUARY 7, 2002 TO AUGUST 4, 2002

EFFECTIVE: JANUARY 7, 2002 TO AUGUST 4, 2002

NOTES

1. When installed in front of slopes steeper than 6:1 distance between posts and slope break point shall be 12″ Min.
2. Where barrier is parallel to the edge of the travelled way, every sixth post shall have a reflector. Reflectors shall be white when installed on the right side of traffic, and yellow when installed on the left side of traffic.

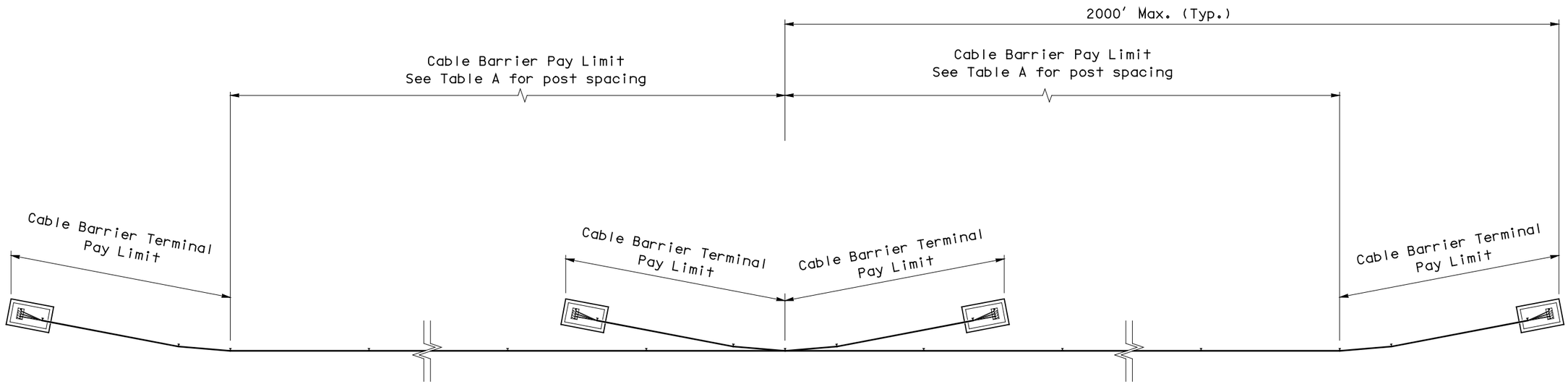

(Measure along face of cable guide rail)

PLAN

TABLE A	
Curve Radius	Post Spacing
700′ or more	16′
699′ to 220′	12′
219′ to 110′	6′
Less Than 110′	Use Not Recommended

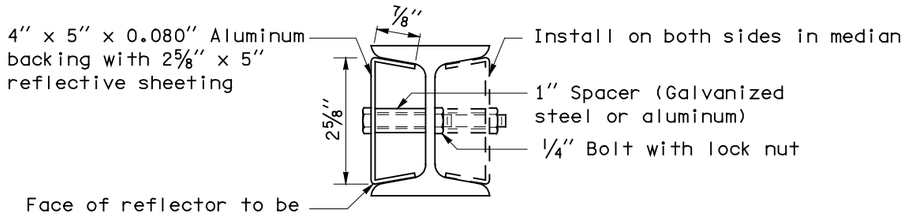

REFLECTOR

(See Note 2)

CLIFFORD E. MANSFIELD
STATE OF WASHINGTON
15224
REGISTERED
PROFESSIONAL ENGINEER

EXPIRES MAY 3, 2000

CABLE BARRIER PLACEMENT STANDARD PLAN C-11a

NOTE: THIS PLAN IS NOT A LEGAL ENGINEERING DOCUMENT BUT AN ELECTRONIC DUPLICATE. THE ORIGINAL, SIGNED BY THE ENGINEER AND APPROVED FOR PUBLICATION, IS KEPT ON FILE AT THE WASHINGTON STATE DEPARTMENT OF TRANSPORTATION. A COPY MAY BE OBTAINED UPON REQUEST.

DATE	REVISION	BY
1/99	Noted maximum length on Plan View	RG

APPROVED FOR PUBLICATION

Brian Ziegler — *2/19/99*

[redacted] STATE DESIGN ENGINEER — DATE

WASHINGTON STATE DEPARTMENT OF TRANSPORTATION
OLYMPIA, WASHINGTON

EFFECTIVE: JANUARY 7, 2002 TO AUGUST 4, 2002

EFFECTIVE: JANUARY 7, 2002 TO AUGUST 4, 2002

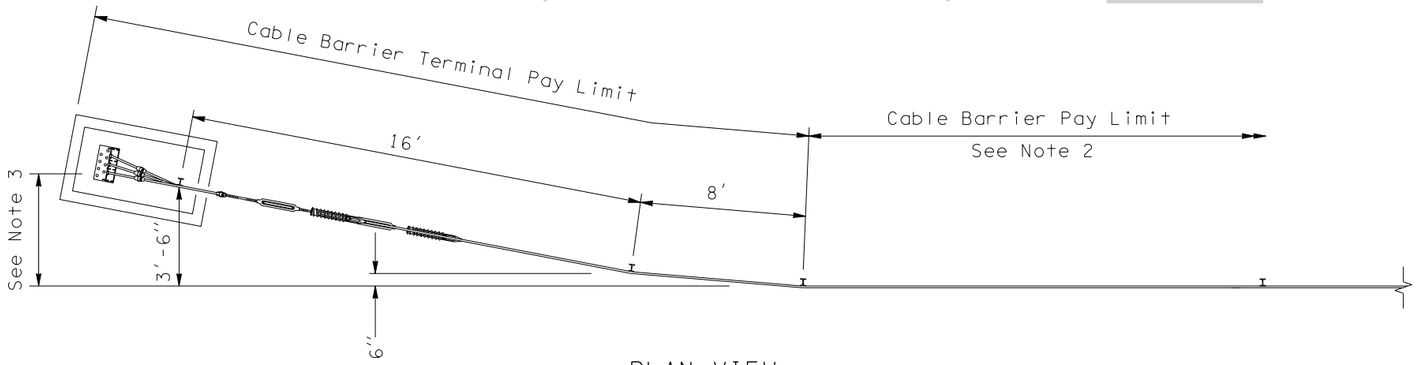

PLAN VIEW

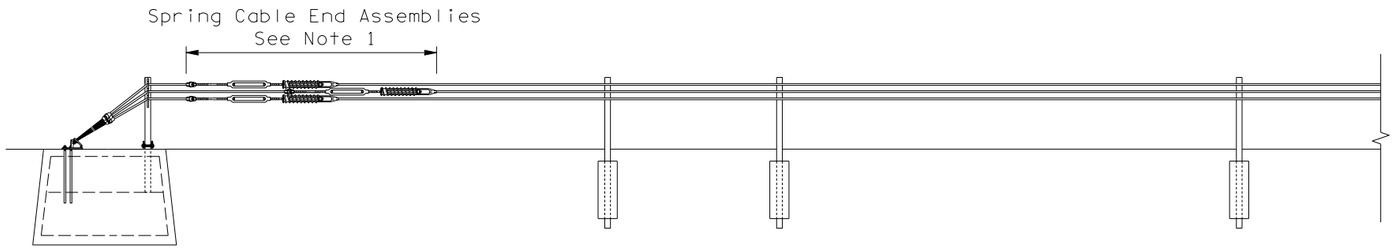

ELEVATION

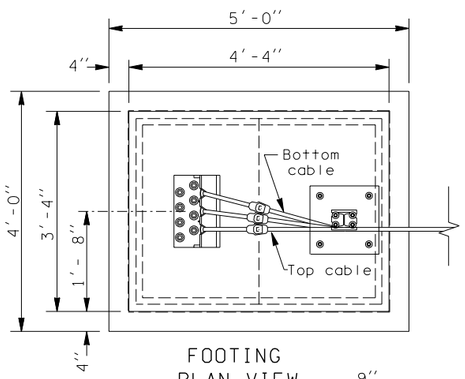

FOOTING
PLAN VIEW

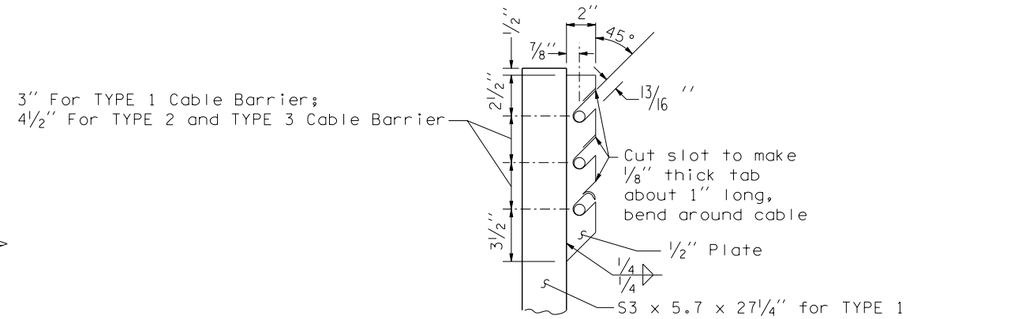

BRACKET DETAIL
(VIEW IS ORIENTED 90° FROM POST SLIP BASE VIEW SHOWN BELOW)

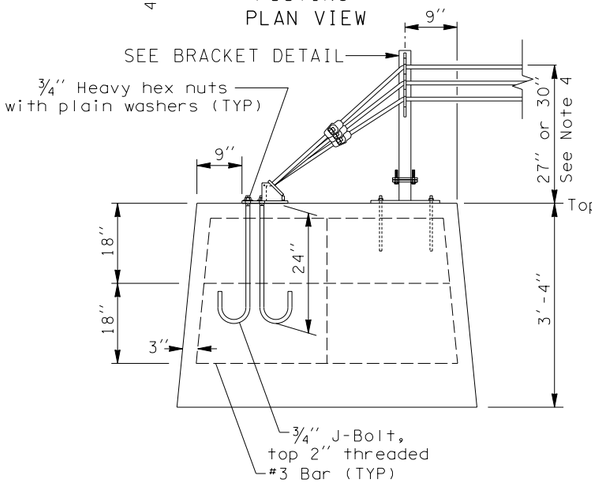

FOOTING ELEVATION

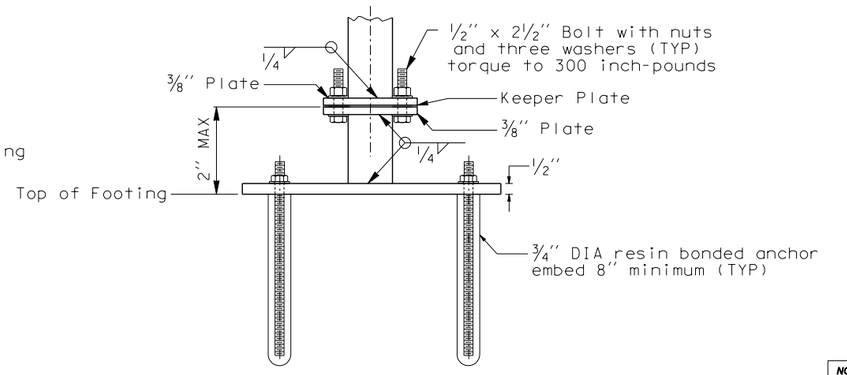

POST SLIP BASE
ELEVATION

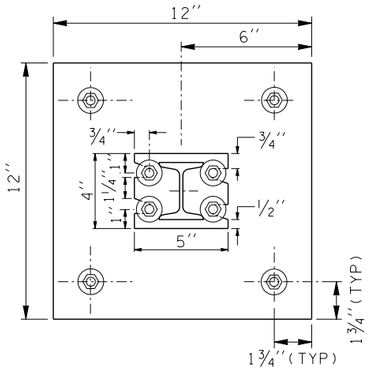

POST SLIP BASE
PLAN VIEW

NOTES

1. Stagger Spring Cable End assemblies for clearance between units. Installation of cable end assemblies shall be as follows:

   LENGTH OF CABLE RUNS:

   Up to 500′ - Use the Spring Cable End Assembly on one end, and turnbuckle only on the other end of each cable.

   Over 500′ to 2000′ - Use the Spring Cable End Assembly on each end of each cable.

2. See Standard Plan C-11a for post spacing.

3. Distance from tangent of barrier run to notch for top cable on breakaway anchor angle shall be 4′.

4. The distance from the top of the footing to top of the highest cable is:

   27″ for TYPE 1 Cable Barrier,
   30″ for TYPE 2 and TYPE 3 Cable Barrier.

5. Where the cable is connected to a cable socket with a wedge type connector, one wire of the wire rope shall be crimped over the base of the wedge to hold it firmly in place.

HAROLD J. PETERFESO
STATE OF WASHINGTON
21861
REGISTERED
PROFESSIONAL ENGINEER

EXPIRES MAY 16, 2003

CABLE BARRIER TERMINAL

STANDARD PLAN C-11b

SHEET 1 OF 2 SHEETS

NOTE: THIS PLAN IS NOT A LEGAL ENGINEERING DOCUMENT BUT AN ELECTRONIC DUPLICATE. THE ORIGINAL, SIGNED BY THE ENGINEER AND APPROVED FOR PUBLICATION, IS KEPT ON FILE AT THE WASHINGTON STATE DEPARTMENT OF TRANSPORTATION. A COPY MAY BE OBTAINED UPON REQUEST.

APPROVED FOR PUBLICATION

Harold J. Peterfeso — STATE DESIGN ENGINEER — *09-28-01* — DATE

Washington State Department of Transportation

DATE	REVISION	BY
9/01	REVISED POST CONNECTION TO FOOTING	RG

EFFECTIVE: JANUARY 7, 2002 TO AUGUST 4, 2002

EFFECTIVE: JANUARY 7, 2002 TO AUGUST 4, 2002

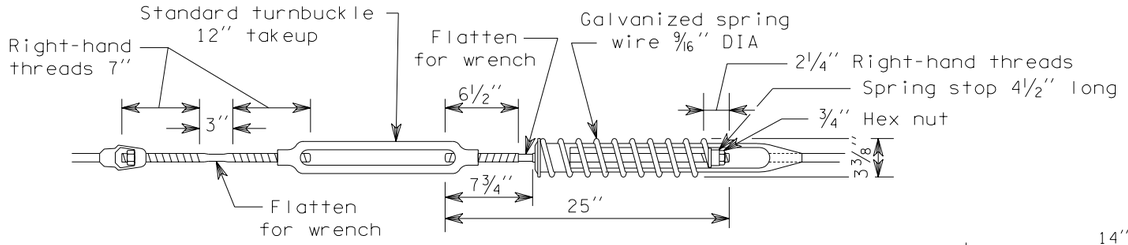

SPRING CABLE END ASSEMBLY

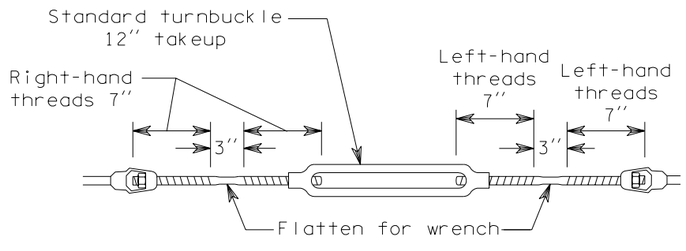

TURNBUCKLE ASSEMBLY

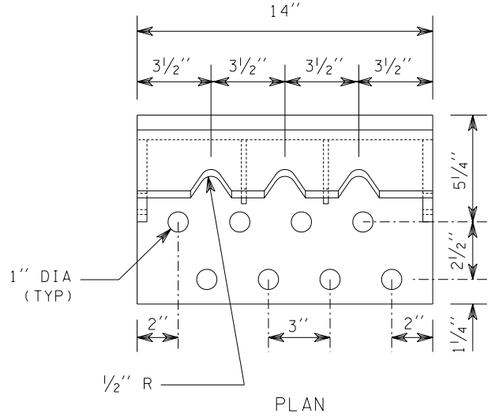

PLAN

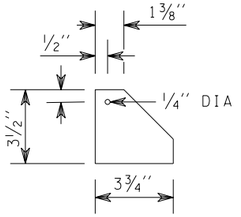

END GUSSET
½'' Plate

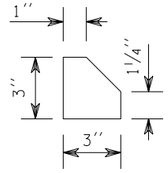

INSIDE GUSSET
¼'' Plate

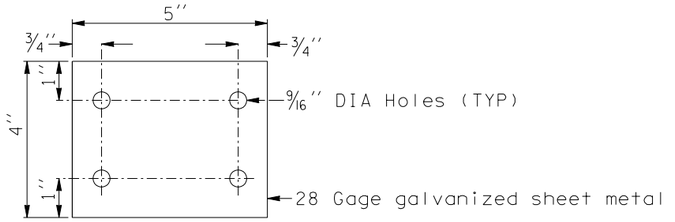

KEEPER PLATE DETAIL

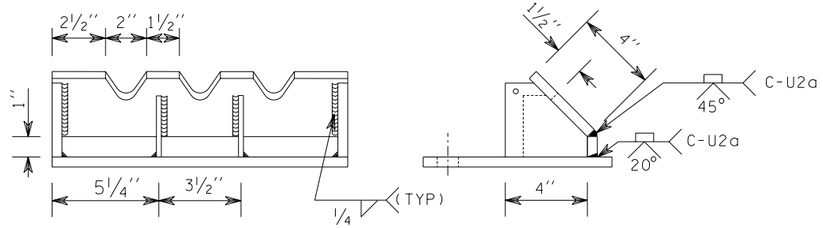

ELEVATION

SIDE VIEW

BREAKAWAY ANCHOR ANGLE

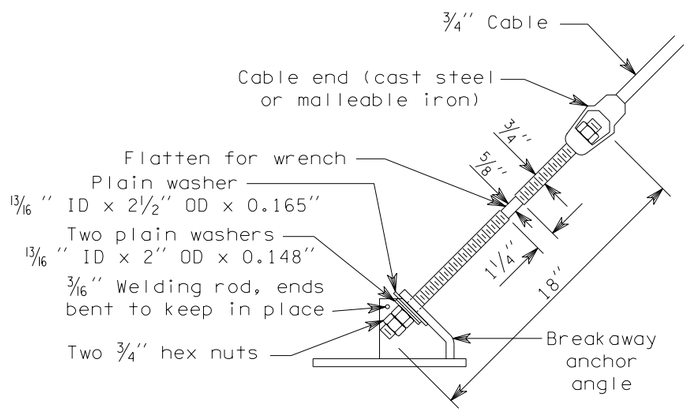

CABLE END ASSEMBLY TO
BREAKAWAY ANCHOR ANGLE DETAIL

Brass keeper rod must be installed
prior to tensioning cable

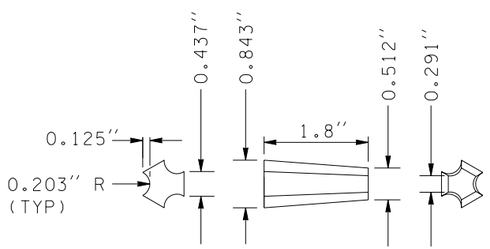

CABLE WEDGE

Use with all cable fittings

HAROLD J. PETERFESO
STATE OF WASHINGTON
21861
REGISTERED
PROFESSIONAL ENGINEER

EXPIRES MAY 16, 2003

CABLE BARRIER TERMINAL

STANDARD PLAN C-11b

SHEET 2 OF 2 SHEETS

NOTE: THIS PLAN IS NOT A LEGAL ENGINEERING DOCUMENT BUT AN ELECTRONIC DUPLICATE. THE ORIGINAL, SIGNED BY THE ENGINEER AND APPROVED FOR PUBLICATION, IS KEPT ON FILE AT THE WASHINGTON STATE DEPARTMENT OF TRANSPORTATION. A COPY MAY BE OBTAINED UPON REQUEST.

APPROVED FOR PUBLICATION

Harold J. Peterfeso — STATE DESIGN ENGINEER — *09-28-01* DATE

Washington State Department of Transportation

DATE	REVISION	BY
9/01	ADDED KEEPER PLATE DETAIL	RG

EFFECTIVE: JANUARY 7, 2002 TO AUGUST 4, 2002

EFFECTIVE: JANUARY 7, 2002 TO AUGUST 4, 2002

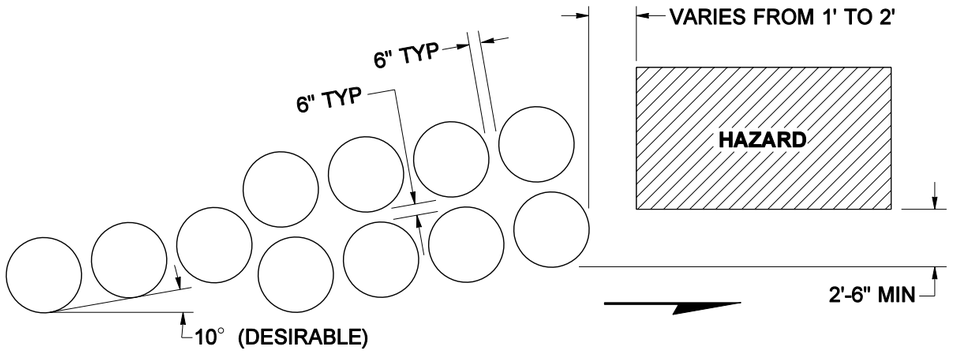

ROADSIDE INSTALLATION DETAIL

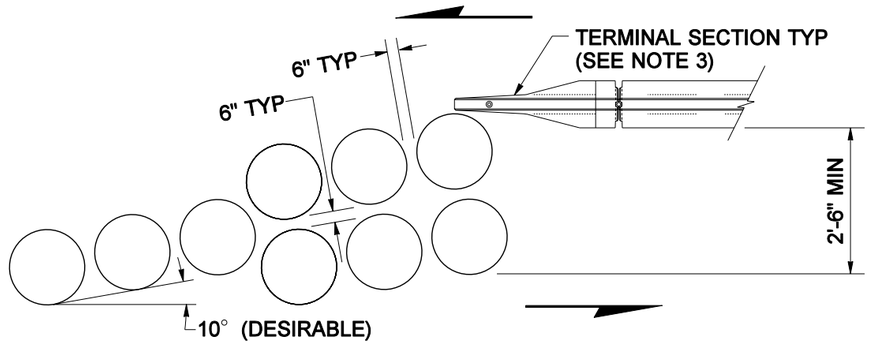

MEDIAN INSTALLATION DETAIL

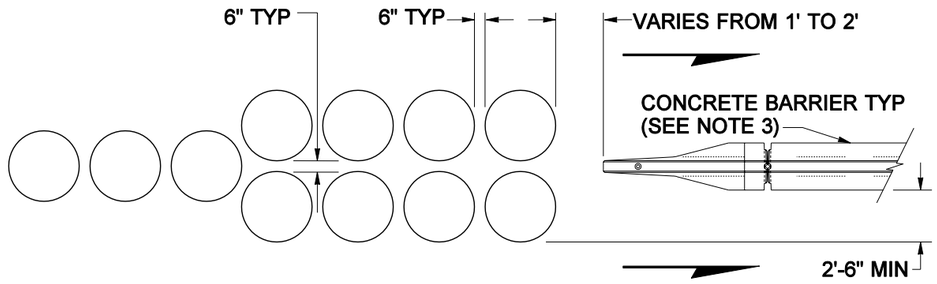

GORE INSTALLATION DETAIL

INSTALLATION DETAILS

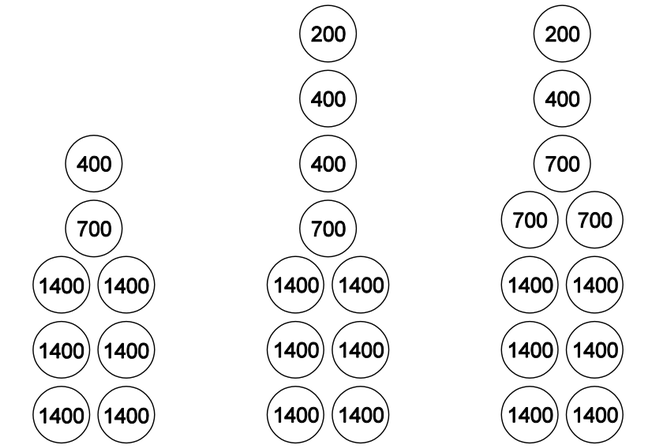

TYPE 1
POSTED SPEED
40 MPH OR LESS

TYPE 2
POSTED SPEED
45 MPH

TYPE 3
POSTED SPEED
50 MPH

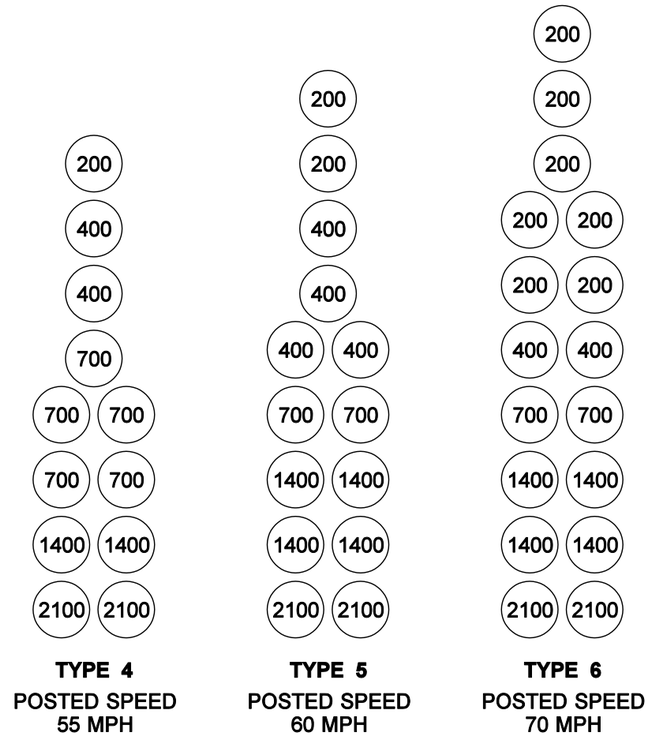

TYPE 4
POSTED SPEED
55 MPH

TYPE 5
POSTED SPEED
60 MPH

TYPE 6
POSTED SPEED
70 MPH

ATTENUATOR CONFIGURATIONS

NOTES

1. An Energite III System, fabricated by Energy Absorption Systems , Inc., a Fitch System as fabricated by Roadway Safety Service, Inc., or a Traffix Sand Attenuator as fabricated by Traffix Devices, Inc. shall be installed in accordance with the manufacturer's recommendations.
2. For temporary installations, the inertial barriers may be placed on wood pallets that are 4" or less in height.
3. For Terminal Section or Concrete Barrier details see Standard Plan C-8.

EXPIRES MAY 3, 2002

IMPACT ATTENUATOR INERTIAL BARRIER CONFIGURATIONS
STANDARD PLAN C-12

APPROVED FOR PUBLICATION

Clifford E. Mansfield — STATE DESIGN ENGINEER — *07-27-01* — DATE

Washington State Department of Transportation

NOTE: THIS PLAN IS NOT A LEGAL ENGINEERING DOCUMENT BUT AN ELECTRONIC DUPLICATE. THE ORIGINAL, SIGNED BY THE ENGINEER AND APPROVED FOR PUBLICATION, IS KEPT ON FILE AT THE WASHINGTON STATE DEPARTMENT OF TRANSPORTATION. A COPY MAY BE OBTAINED UPON REQUEST.

DATE	REVISION	BY
7/01	CORRECTED GORE INSTALLATION DETAIL	MAS

EFFECTIVE: JANUARY 7, 2002 TO AUGUST 4, 2002

EFFECTIVE: JANUARY 7, 2002 TO AUGUST 4, 2002
EFFECTIVE: JANUARY 7, 2002 TO AUGUST 4, 2002

THOMAS SHEA

PLAN VIEW

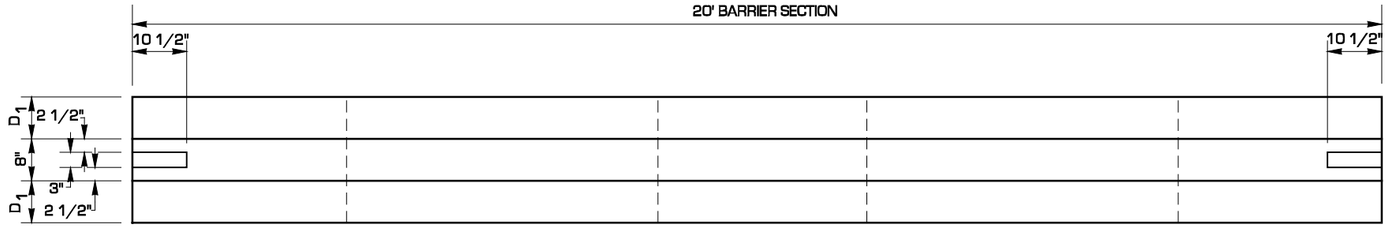

ELEVATION VIEW

42" HIGH BARRIER SHOWN

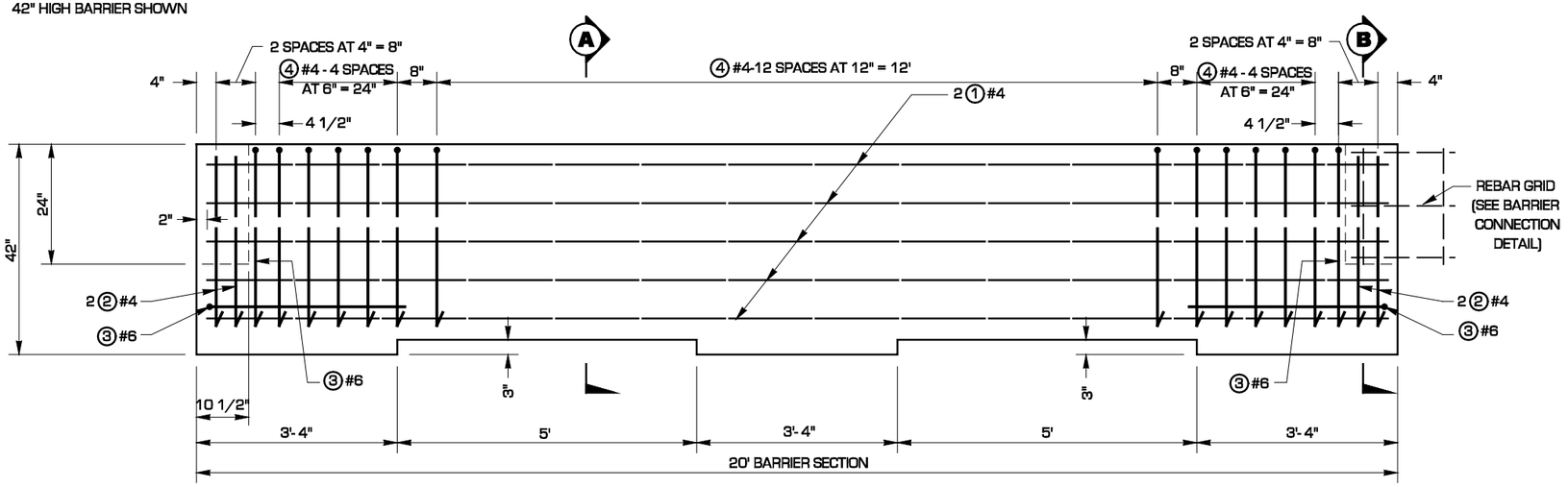

NOTES

1. PERMANENT BARRIER SHALL BE PLACED INTO THE PAVEMENT A MINIMUM OF 3". NO EMBEDMENT REQUIRED FOR TEMPORARY BARRIER.
2. USE 42" BARRIER FOR GRADE SEPARATIONS UP TO 5".
   USE 48" BARRIER FOR GRADE SEPARATIONS UP TO 7".
   USE 54" BARRIER FOR GRADE SEPARATIONS UP TO 10".
3. USE ON A HORIZONTAL CURVE WITH RADII LESS THAN 2000' REQUIRES A MODIFIED END DESIGN.

SECTIONS

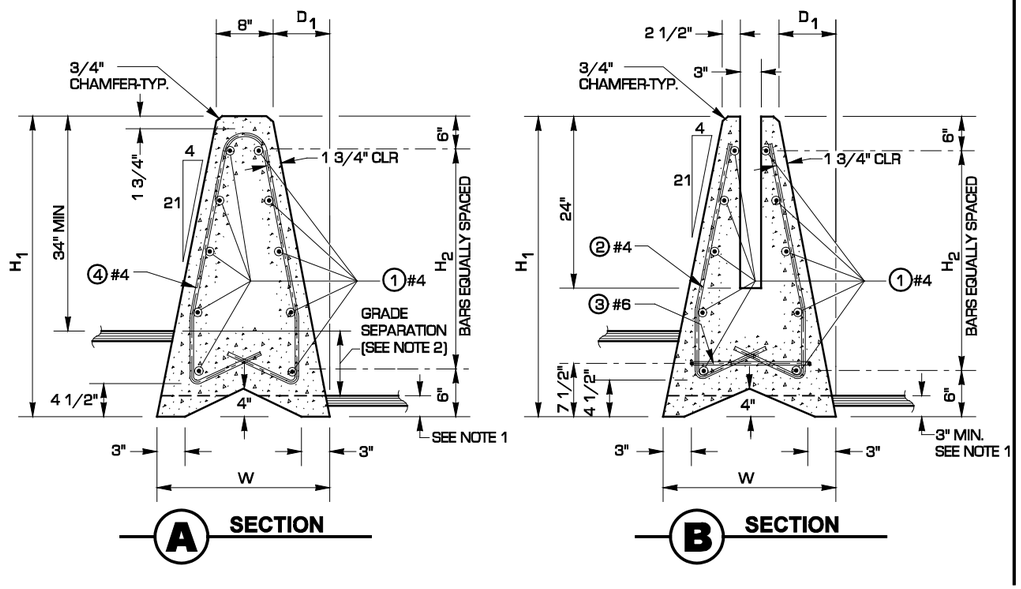

BARRIER CONNECTION DETAIL

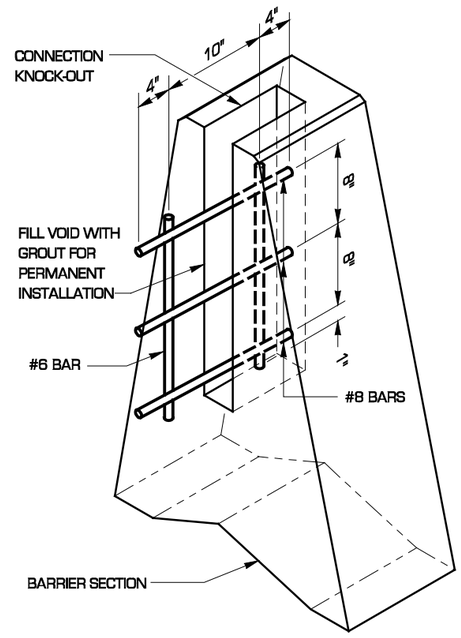

CLIFFORD E. MANSFIELD
STATE OF WASHINGTON
15224
REGISTERED
PROFESSIONAL ENGINEER

EXPIRES MAY 3, 2000

SINGLE SLOPE BARRIER PRE-CAST TYPE

STANDARD PLAN C-13

SHEET 1 OF 2 SHEETS

NOTE: THIS PLAN IS NOT A LEGAL ENGINEERING DOCUMENT BUT AN ELECTRONIC DUPLICATE. THE ORIGINAL, SIGNED BY THE ENGINEER AND APPROVED FOR PUBLICATION, IS KEPT ON FILE AT THE WASHINGTON STATE DEPARTMENT OF TRANSPORTATION. A COPY MAY BE OBTAINED UPON REQUEST.

APPROVED FOR PUBLICATION

Clifford E. Mansfield — *04-16-99*

DEPUTY STATE DESIGN ENGINEER — DATE

WASHINGTON STATE DEPARTMENT OF TRANSPORTATION
OLYMPIA, WASHINGTON

EFFECTIVE: JANUARY 7, 2002 TO AUGUST 4, 2002
EFFECTIVE: JANUARY 7, 2002 TO AUGUST 4, 2002

EFFECTIVE: JANUARY 7, 2002 TO AUGUST 4, 2002

BAR LIST

BENDING DIAGRAM

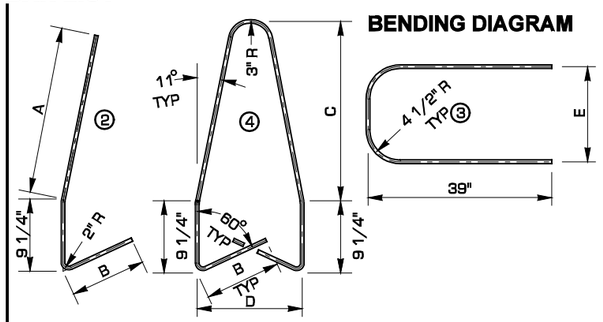

REINFORCING STEEL FOR ONE 20' LONG SECTION

H_1	MARK	SIZE	No.	LENGTH	A	B	C	D	E
42"	1	#4	10	19'-8"	-	-	-	-	-
	2	#4	8	41.3"	24"	10"	-	-	-
	3	#6	2	90.1"	-	-	-	-	16.1"
	4	#4	25	67"	-	10"	26.8"	15"	-
	H1	-	-	42"	-	-	-	-	-
	H2	-	-	30"	-	-	-	-	-
	W	-	-	24"	-	-	-	-	-
	D1	-	-	8"	-	-	-	-	-
48"	1	#4	12	19'-8"	-	-	-	-	-
	2	#4	8	50.4"	31.1"	12"	-	-	-
	3	#6	2	93.7"	-	-	-	-	17.7"
	4	#4	25	104"	-	12"	33.5"	17"	-
	H1	-	-	48"	-	-	-	-	-
	H2	-	-	36"	-	-	-	-	-
	W	-	-	26"	-	-	-	-	-
	D1	-	-	9.1"	-	-	-	-	-
54"	1	#4	14	19'-8"	-	-	-	-	-
	2	#4	8	57.9"	37.6"	13"	-	-	-
	3	#6	2	97.3"	-	-	-	-	21.1"
	4	#4	25	119"	-	13"	40"	20.3":	-
	H1	-	-	54"	-	-	-	-	-
	H2	-	-	42"	-	-	-	-	-
	W	-	-	28.6"	-	-	-	-	-
	D1	-	-	10.3"	-	-	-	-	-

BARRIER TRANSITION DETAIL

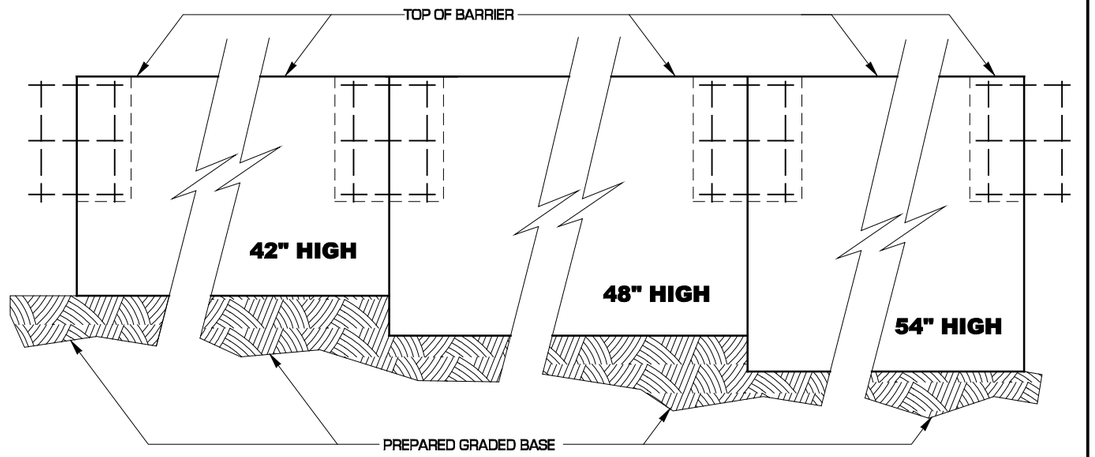

CLIFFORD E. MANSFIELD
STATE OF WASHINGTON
15224
REGISTERED
PROFESSIONAL ENGINEER

EXPIRES MAY 3, 2000

SINGLE SLOPE BARRIER PRE-CAST TYPE

STANDARD PLAN C-13

SHEET 2 OF 2 SHEETS

NOTE: THIS PLAN IS NOT A LEGAL ENGINEERING DOCUMENT BUT AN ELECTRONIC DUPLICATE. THE ORIGINAL, SIGNED BY THE ENGINEER AND APPROVED FOR PUBLICATION, IS KEPT ON FILE AT THE WASHINGTON STATE DEPARTMENT OF TRANSPORTATION. A COPY MAY BE OBTAINED UPON REQUEST.

APPROVED FOR PUBLICATION

Clifford E. Mansfield — *04-16-99*

DEPUTY STATE DESIGN ENGINEER — DATE

WASHINGTON STATE DEPARTMENT OF TRANSPORTATION
OLYMPIA, WASHINGTON

EFFECTIVE: JANUARY 7, 2002 TO AUGUST 4, 2002

EFFECTIVE: JANUARY 7, 2002 TO AUGUST 4, 2002

THOMAS SHEA

PLAN VIEW

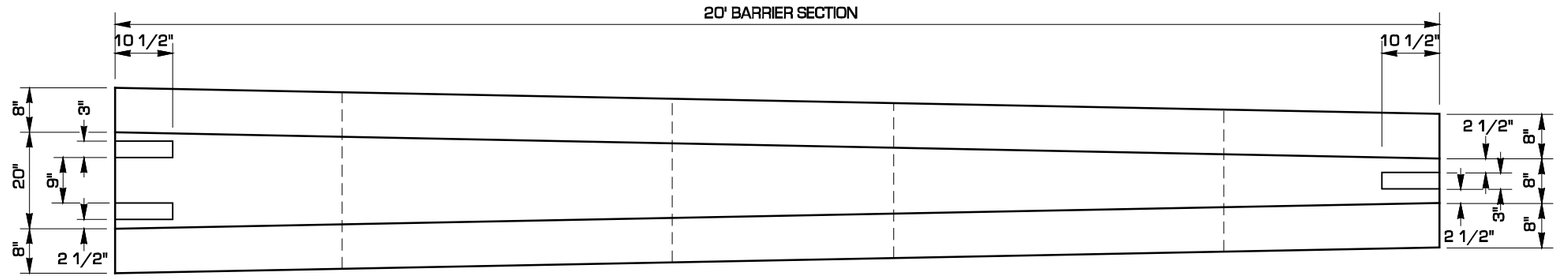

ELEVATION VIEW

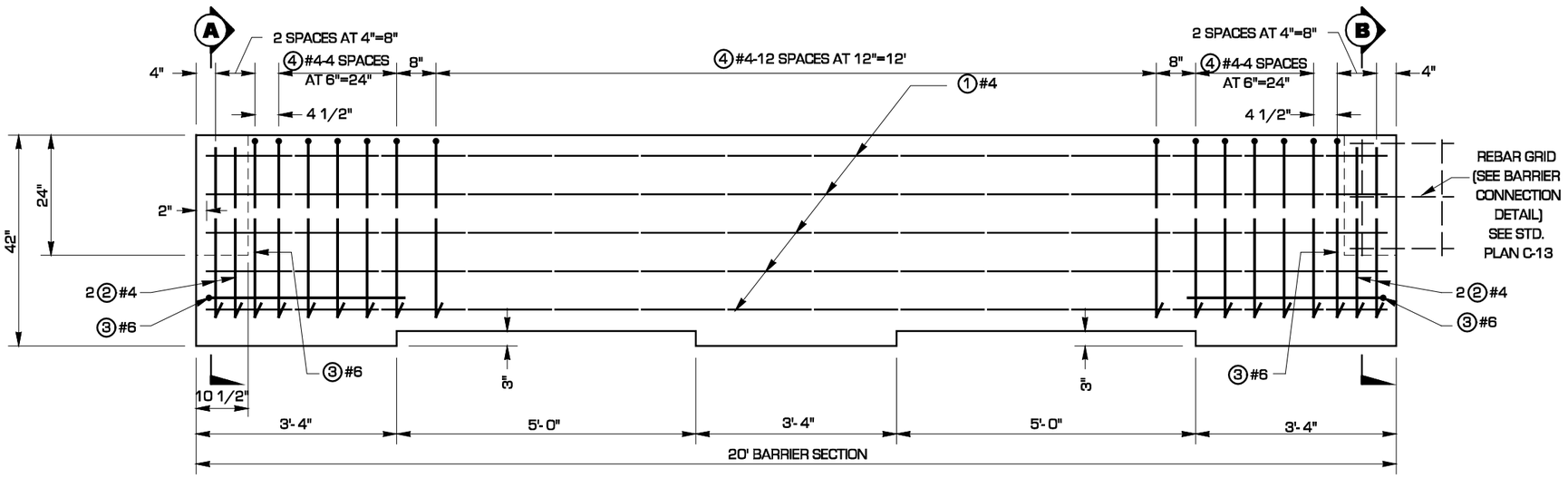

SECTIONS

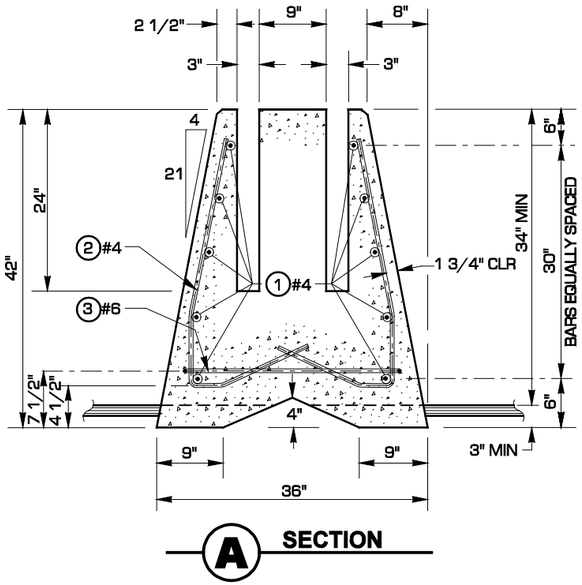

A SECTION

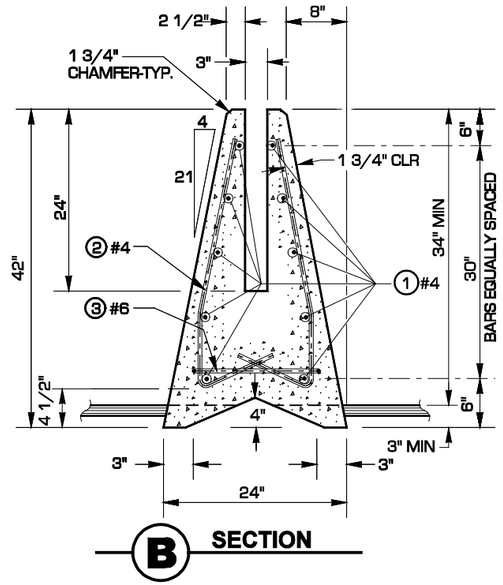

B SECTION

BAR LIST

BENDING DIAGRAM

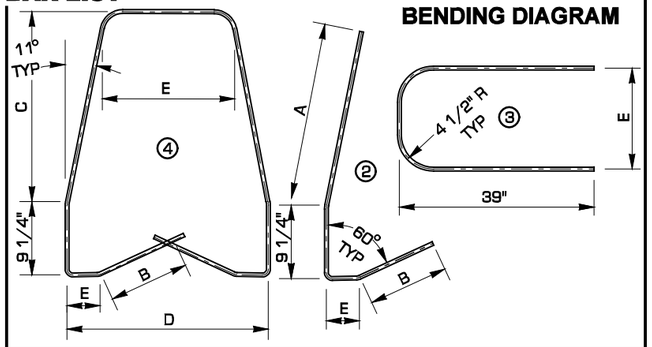

MARK	SIZE	No.	LENGTH	A	B	C	D	E
1	#4	10	19'-8" STR.	-	-	-	-	-
2	#4	8	VARIES	24"	VARIES	-	-	VARIES
3	#6	2	VARIES	-	-	-	-	VARIES
4	#4	25	VARIES	-	VARIES	26.8"	VARIES	VARIES

CLIFFORD E. MANSFIELD
STATE OF WASHINGTON
15224
REGISTERED
PROFESSIONAL ENGINEER

EXPIRES MAY 3, 2000

SINGLE SLOPE BARRIER PRE-CAST TYPE TRANSITION SECTION

STANDARD PLAN C-13a

NOTE: THIS PLAN IS NOT A LEGAL ENGINEERING DOCUMENT BUT AN ELECTRONIC DUPLICATE. THE ORIGINAL, SIGNED BY THE ENGINEER AND APPROVED FOR PUBLICATION, IS KEPT ON FILE AT THE WASHINGTON STATE DEPARTMENT OF TRANSPORTATION. A COPY MAY BE OBTAINED UPON REQUEST.

APPROVED FOR PUBLICATION

Clifford E. Mansfield — *04-16-99*

DEPUTY STATE DESIGN ENGINEER — DATE

WASHINGTON STATE DEPARTMENT OF TRANSPORTATION
OLYMPIA, WASHINGTON

EFFECTIVE: JANUARY 7, 2002 TO AUGUST 4, 2002

EFFECTIVE: JANUARY 7, 2002 TO AUGUST 4, 2002

THOMAS SHEA

PLAN VIEW

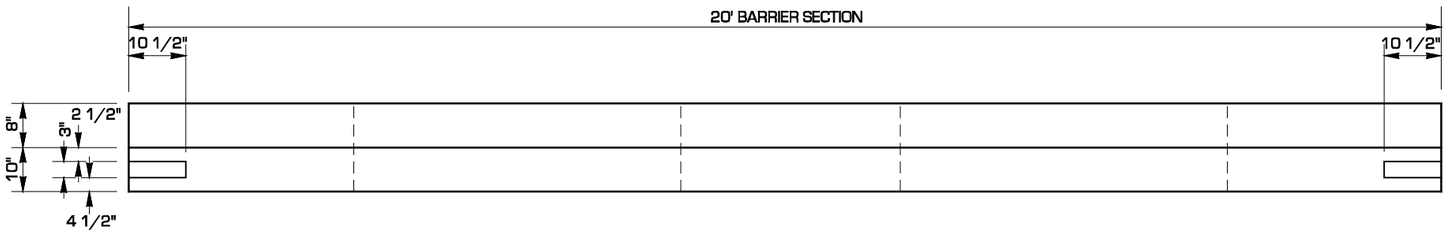

ELEVATION VIEW

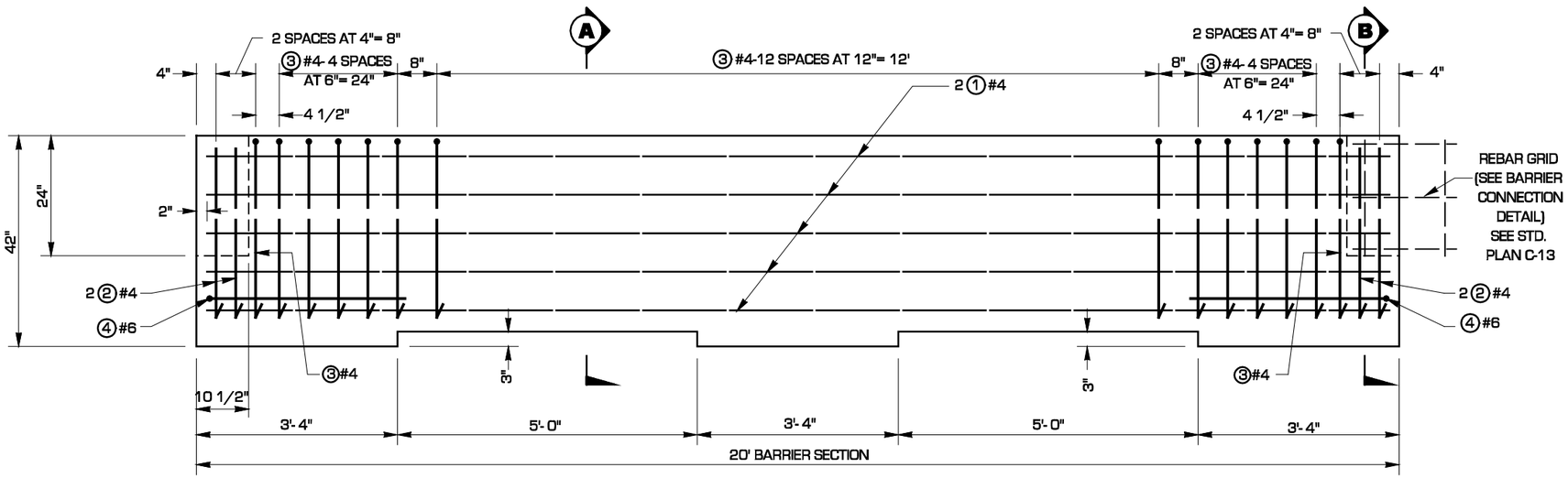

SECTIONS

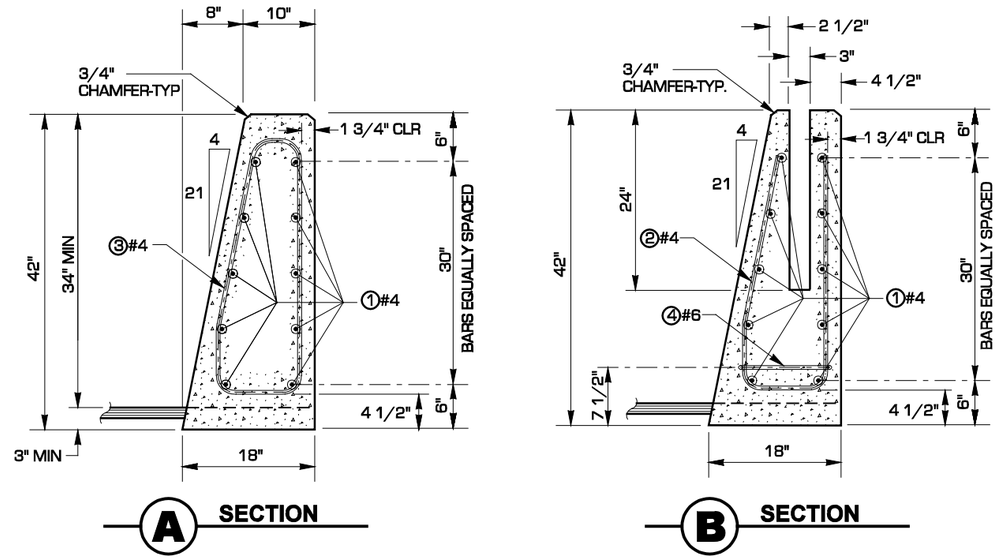

BAR LIST

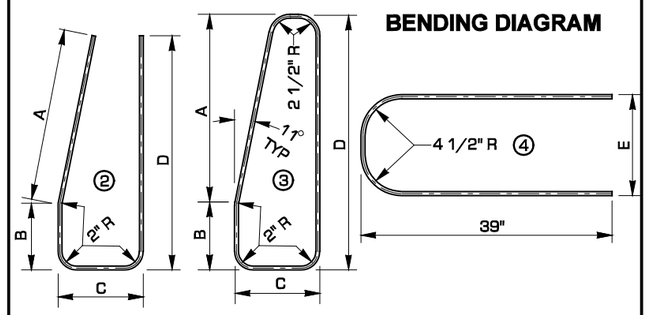

	MARK	SIZE	No.	LENGTH	A	B	C	D	E
42"	1	#4	10	19'-8" str.	-	-	-	-	-
	2	#4	8	70.5"	22.8"	8"	9.5"	30"	-
	3	#4	25	78.7	26.6"	8"	9.5"	32"	-
	4	#6	2	84.3"	-	-	-	-	9.5"

CLIFFORD E. MANSFIELD
STATE OF WASHINGTON
15224
REGISTERED
PROFESSIONAL ENGINEER

EXPIRES MAY 3, 2000

SINGLE SLOPE BARRIER PRE-CAST TYPE SINGLE SIDED SECTION STANDARD PLAN C-13b

NOTE: THIS PLAN IS NOT A LEGAL ENGINEERING DOCUMENT BUT AN ELECTRONIC DUPLICATE. THE ORIGINAL, SIGNED BY THE ENGINEER AND APPROVED FOR PUBLICATION, IS KEPT ON FILE AT THE WASHINGTON STATE DEPARTMENT OF TRANSPORTATION. A COPY MAY BE OBTAINED UPON REQUEST.

APPROVED FOR PUBLICATION

Clifford E. Mansfield — *04-16-99*

DEPUTY STATE DESIGN ENGINEER — DATE

WASHINGTON STATE DEPARTMENT OF TRANSPORTATION
OLYMPIA, WASHINGTON

EFFECTIVE: JANUARY 7, 2002 TO AUGUST 4, 2002

EFFECTIVE: JANUARY 7, 2002 TO AUGUST 4, 2002

DIMENSIONS (ft)				FOOTING REINFORCEMENT										STEM REINFORCEMENT			
				BAR E		BAR F			BAR K					BAR G (size #4)	MATERIAL QUANTITY		
H (ft)	B	C_V	D		h	SIZE	SPAC.	LENGTH	SIZE	SPAC.	LENGTH	h	b	LENGTH	CONCRETE CY/LF	STEEL LBS/LF	H (ft)
5	5′-6″	2′-0″	1′-0″	3′-4″	2′-9″	#4	9″	3′-6″	#5	9″	7′-2″	4′-7″	3′-0″	3′-10″	0.36	26.3	5
6	5′-6″	2′-0″	1′-0″	3′-4″	2′-9″	#4	9″	3′-5″	#5	9″	8′-3″	5′-7″	3′-1″	4′-10″	0.41	29.5	6
7	5′-9″	2′-3″	1′-0″	3′-4″	2′-9″	#4	9″	3′-4″	#5	9″	9′-7″	6′-7″	3′-5″	5′-10″	0.47	31.8	7
8	5′-9″	2′-3″	1′-0″	3′-4″	2′-9″	#4	9″	3′-3″	#5	9″	10′-8″	7′-7″	3′-6″	6′-10″	0.53	35.0	8
9	6′-0″	2′-3″	1′-0″	3′-4″	2′-9″	#4	9″	3′-1″	#5	9″	12′-0″	8′-7″	3′-8″	7′-10″	0.60	38.5	9
10	6′-3″	2′-3″	1′-0″	3′-4″	2′-9″	#4	9″	3′-6″	#5	9″	12′-11″	9′-7″	3′-9″	8′-10″	0.67	40.6	10
11	6′-6″	2′-3″	1′-0″	3′-4″	2′-9″	#4	9″	3′-8″	#5	9″	14′-0″	10′-7″	3′-10″	9′-10″	0.75	44.7	11
12	7′-0″	2′-6″	1′-0″	3′-4″	2′-9″	#4	9″	3′-10″	#5	8″	14′-4″	11′-7″	4′-2″	10′-10″	0.84	49.6	12
13	7′-6″	2′-6″	1′-0″	3′-4″	2′-9″	#5	10″	4′-7″	#5	7″	15′-5″	12′-7″	4′-3″	11′-10″	0.93	57.5	13
14	7′-9″	2′-6″	1′-0″	3′-4″	2′-9″	#5	9″	4′-8″	#5	7″	17′-7″	13′-7″	4′-4″	12′-10″	1.02	63.9	14
15	8′-3″	2′-6″	1′-0″	3′-4″	2′-9″	#5	7″	4′-10″	#5	6″	17′-9″	14′-7″	4′-6″	13′-10″	1.12	73.4	15
16	8′-9″	2′-9″	1′-3″	3′-8″	3′-0″	#6	10″	5′-6″	#5	6″	20′-1″	15′-7″	4′-10″	14′-7″	1.29	80.0	16
17	9′-3″	3′-0″	1′-6″	3′-8″	3′-0″	#6	10″	5′-8″	#5	6″	21′-5″	16′-7″	5′-2″	15′-7″	1.46	84.8	17
18	9′-9″	3′-3″	1′-6″	3′-11″	3′-3″	#6	9″	5′-10″	#6	7″	22′-7″	17′-7″	5′-5″	16′-4″	1.58	100.9	18
19	10′-0″	3′-6″	1′-9″	3′-11″	3′-3″	#6	9″	6′-3″	#6	6″	24′-0″	18′-7″	5′-10″	17′-4″	1.77	118.1	19
20	10′-9″	3′-6″	1′-9″	4′-2″	3′-6″	#6	8″	6′-5″	#6	6″	25′-2″	19′-7″	6′-0″	18′-1″	1.91	124.0	20
21	11′-3″	3′-9″	2′-0″	4′-5″	3′-9″	#6	8″	6′-10″	#7	1′-2″	17′-8″	11′-11″	6′-4″	18′-10″	2.12	133.8	21
22	11′-9″	4′-0″	2′-0″	4′-5″	3′-9″	#6	7″	7′-0″	#7	1′-1″	18′-5″	12′-4″	6′-8″	19′-10″	2.26	148.5	22
23	12′-3″	4′-3″	2′-3″	4′-8″	4′-0″	#6	7″	7′-2″	#7	1′-0″	19′-2″	12′-10″	7′-0″	20′-7″	2.49	161.3	23
24	12′-9″	4′-3″	2′-3″	4′-8″	4′-0″	#6	6″	7′-7″	#8	1′-2″	20′-7″	14′-2″	7′-1″	21′-8″	2.64	188.5	24
25	13′-3″	4′-6″	2′-6″	4′-11″	4′-3″	#6	6″	7′-9″	#8	1′-1″	21′-7″	14′-9″	7′-6″	22′-5″	2.89	205.0	25
26	13′-9″	4′-9″	2′-6″	4′-11″	4′-3″	#6	6″	7′-11″	#8	1′-0″	22′-2″	15′-1″	7′-11″	23′-4″	3.06	224.8	26
27	14′-3″	5′-0″	2′-9″	5′-2″	4′-6″	#6	6″	8′-1″	#9	1′-2″	24′-2″	16′-9″	8′-2″	24′-1″	3.33	253.9	27
28	14′-9″	5′-3″	3′-0″	5′-5″	4′-9″	#6	6″	8′-3″	#9	1′-1″	25′-0″	17′-3″	8′-6″	24′-10″	3.61	275.9	28
29	15′-3″	5′-6″	3′-3″	5′-8″	5′-0″	#6	6″	8′-5″	#9	1′-0″	25′-3″	17′-9″	8′-11″	25′-7″	3.90	299.0	29
30	16′-0″	5′-9″	3′-3″	5′-8″	5′-0″	#7	7″	9′-8″	#9	11″	26′-8″	18′-2″	9′-3″	26′-7″	4.12	340.3	30
31	16′-6″	6′-0″	3′-6″	5′-11″	5′-3″	#7	7″	9′-10″	#9	11″	27′-6″	18′-8″	9′-7″	27′-4″	4.43	352.3	31
32	17′-0″	6′-3″	3′-9″	6′-2″	5′-6″	#7	7″	10′-0″	#9	10″	28′-5″	19′-3″	9′-11″	28′-1″	4.76	390.0	32
33	17′-6″	6′-6″	4′-0″	6′-4″	5′-9″	#7	6″	10′-2″	#9	10″	29′-2″	19′-9″	10′-2″	29′-0″	5.09	406.4	33
34	18′-0″	6′-9″	4′-3″	6′-8″	6′-0″	#7	6″	10′-4″	#9	10″	30′-2″	20′-3″	10′-8″	29′-9″	5.44	417.8	34
35	18′-6″	7′-0″	4′-6″	6′-11″	6′-3″	#7	6″	10′-6″	#10	11″	32′-4″	22′-2″	11′-0″	30′-3″	5.79	491.0	35

* If traffic barrier is used, add 0.100 CY of Concrete Class 4000 for Barrier Alternate 1. Add 1.123 CY of Concrete Class 4000 for Barrier Alternate 2 - L.F.

** Add 28 LBS of reinforcing steel for Barrier Alternate 1 or 19 LBS of reinforcing steel for Barrier Alternate 2 - per LF.

BAR M					BAR J			
SIZE	SPAC.	LENGTH	h	b	SIZE	SPAC.	LENGTH	
#7	1′-2″	10′-7″	4′-10″	6′-4″	#7	1′-2″	18′-11″	
#7	1′-1″	10′-11″	4′-10″	6′-8″	#7	1′-1″	19′-11″	
#7	1′-0″	11′-6″	5′-1″	7′-0″	#7	1′-0″	20′-8″	
#8	1′-2″	12′-6″	6′-1″	7′-1″	#8	1′-0″	21′-8″	
#8	1′-1″	13′-2″	6′-4″	7′-6″	#8	1′-1″	22′-5″	
#8	1′-0″	13′-6″	6′-4″	7′-10″	#8	1′-0″	23′-5″	
#9	1′-2″	15′-0″	7′-8″	8′-2″	#9	1′-2″	24′-2″	
#9	1′-1″	15′-7″	7′-11″	8′-6″	#9	1′-1″	24′-11″	
#9	1′-0″	15′-7″	8′-2″	8′-11″	#9	1′-0″	25′-9″	
#9	11″	16′-7″	8′-2″	9′-3″	#9	11″	26′-6″	
#9	11″	17′-2″	8′-5″	9′-7″	#9	11″	27′-6″	
#9	10″	17′-9″	8′-8″	9′-11″	#9	10″	28′-3″	
#9	10″	18′-3″	8′-11″	10′-2″	#9	10″	29′-0″	
#9	10″	19′-0″	9′-2″	10′-8″	#9	10″	29′-9″	
#10	11″	20′-10″	10′-9″	11′-0″	#10	11″	30′-6″	

NOTES

1. All concrete including traffic barrier shall be Class 4000 except as noted.
2. For backfill requirements, see Standard Plan "D-4".
3. When Wall Type 1-SW (saltwater) is specified, the concrete cover over steel in the front face and the total wall thickness shall be increased by 1".
4. When Wall Type 1-SW (saltwater) is specified, concrete in the table column "Material Quantity" shall be increased by 0.003 x H CY/LF.
5. If Bar W1 interferes with the retaining wall form, it shall be field bent only at the angle point. The bar shall not be twisted.
6. Toe height for traffic barrier may vary, 2" MIN to 6" MAX.
7. Height of traffic barrier may vary if required to provide a profile pleasing to the eye.
8. Concrete in the 24 foot wall sections shall be placed separately between expansion joints with a minimum 12 hour period between concrete placement.

Bar	MIN Splice
#4	2′-0″
#5	2′-0″
#6	2′-1″
#7	2′-11″
#8	3′-9″
#9	4′-9″
#10	6′-1″

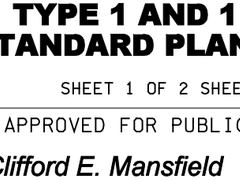

BAR E
At 1′-6″ centers

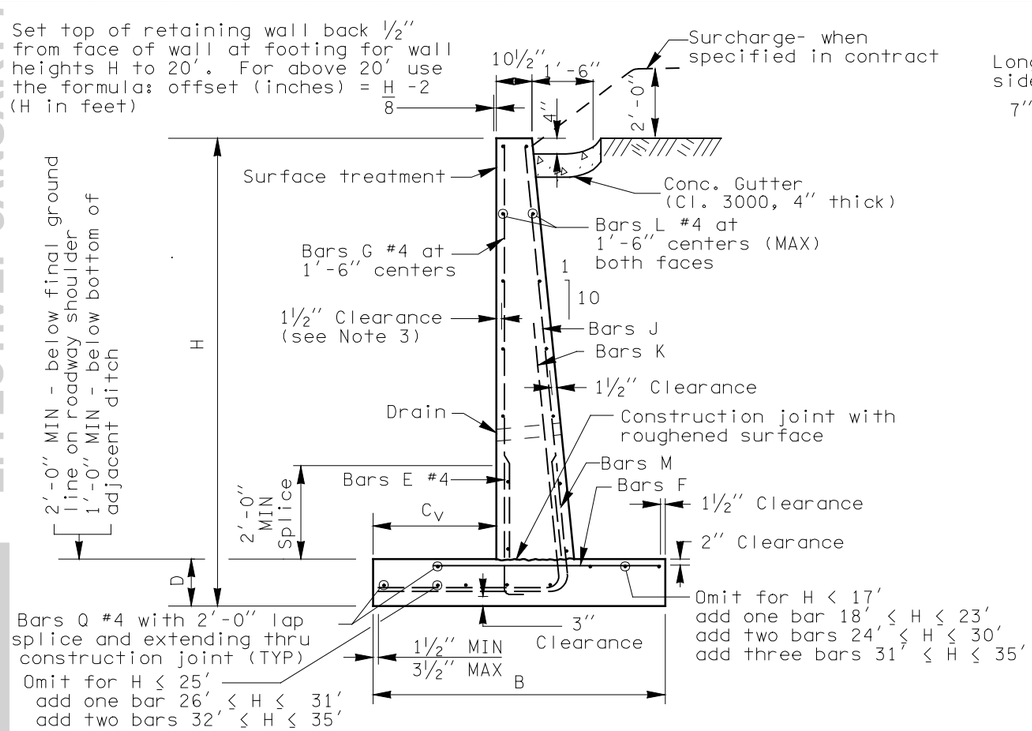

SECTION - VERTICAL FACE

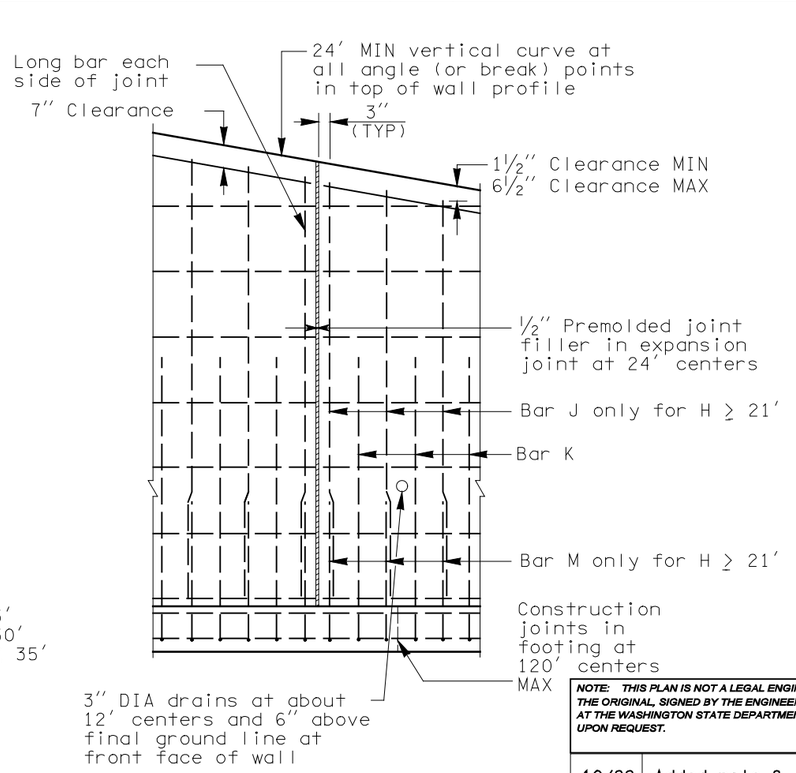

ELEVATION

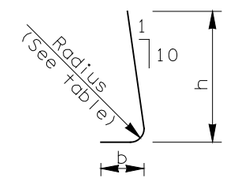

Bar	Radius
#5	9″
#6	11″
#7	1′-1″
#8	1′-3″
#9	1′-6″
#10	1′-8″

BARS K AND M

WALL DESIGN WITH VERTICAL FRONT FACE AND 2′ SURCHARGE OR TRAFFIC BARRIER

JEROME A. WEIGEL
STATE OF WASHINGTON
14742
REGISTERED
PROFESSIONAL ENGINEER

EXPIRES JUNE 29, 2000

REINFORCED CONCRETE RETAINING WALL TYPE 1 AND 1 SW STANDARD PLAN D-1a

SHEET 1 OF 2 SHEETS

NOTE: THIS PLAN IS NOT A LEGAL ENGINEERING DOCUMENT BUT AN ELECTRONIC DUPLICATE. THE ORIGINAL, SIGNED BY THE ENGINEER AND APPROVED FOR PUBLICATION, IS KEPT ON FILE AT THE WASHINGTON STATE DEPARTMENT OF TRANSPORTATION. A COPY MAY BE OBTAINED UPON REQUEST.

DATE	REVISION	BY
10/99	Added note 8.	TWS

APPROVED FOR PUBLICATION

Clifford E. Mansfield — *10/06/99*

DEPUTY STATE DESIGN ENGINEER — DATE

WASHINGTON STATE DEPARTMENT OF TRANSPORTATION
OLYMPIA, WASHINGTON

EFFECTIVE: JANUARY 7, 2002 TO AUGUST 4, 2002

EFFECTIVE: JANUARY 7, 2002 TO AUGUST 4, 2002

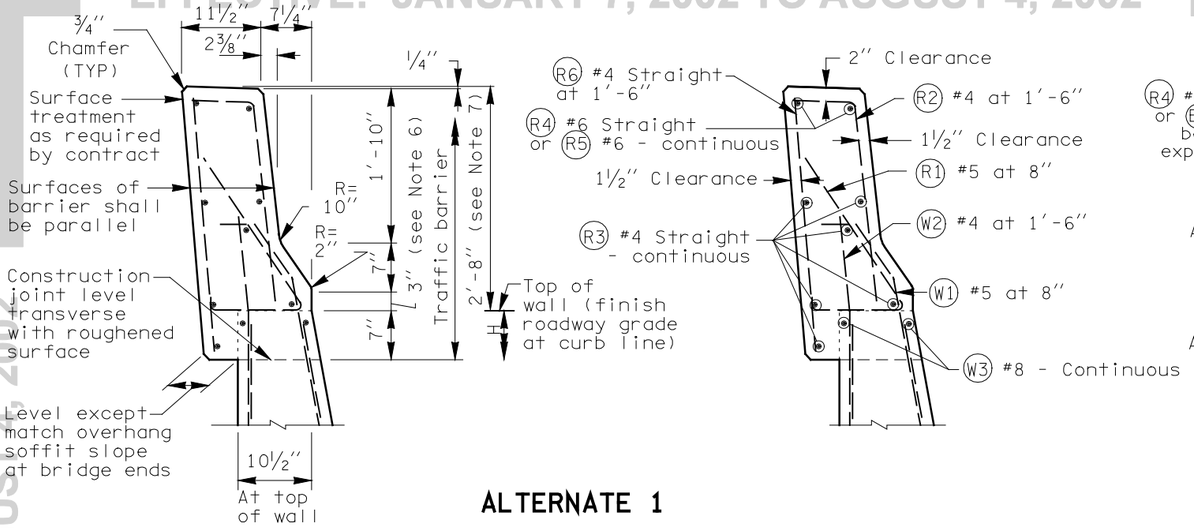

ALTERNATE 1

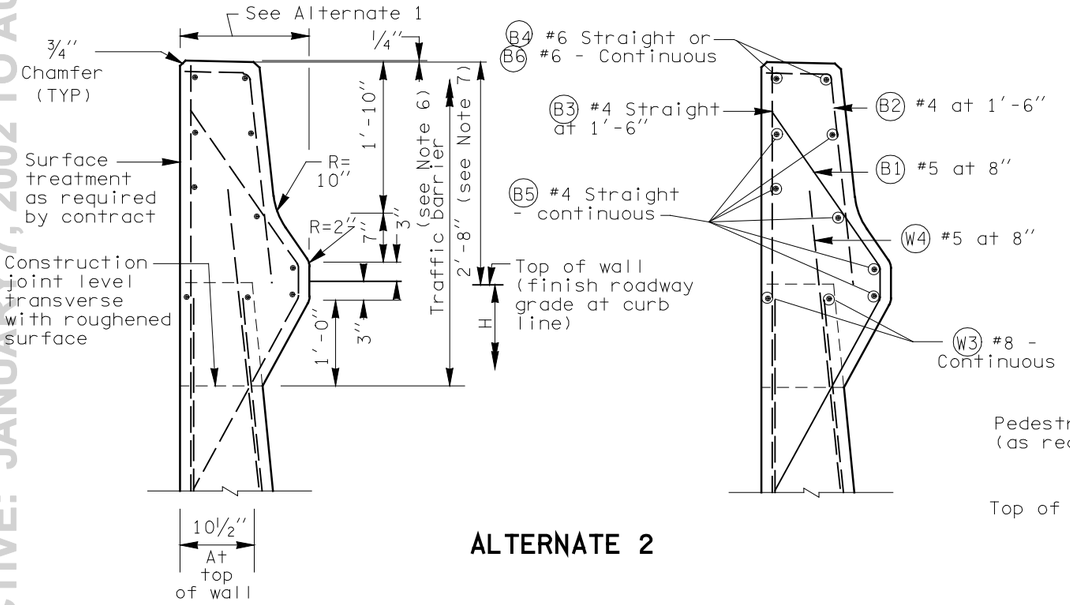

ALTERNATE 2

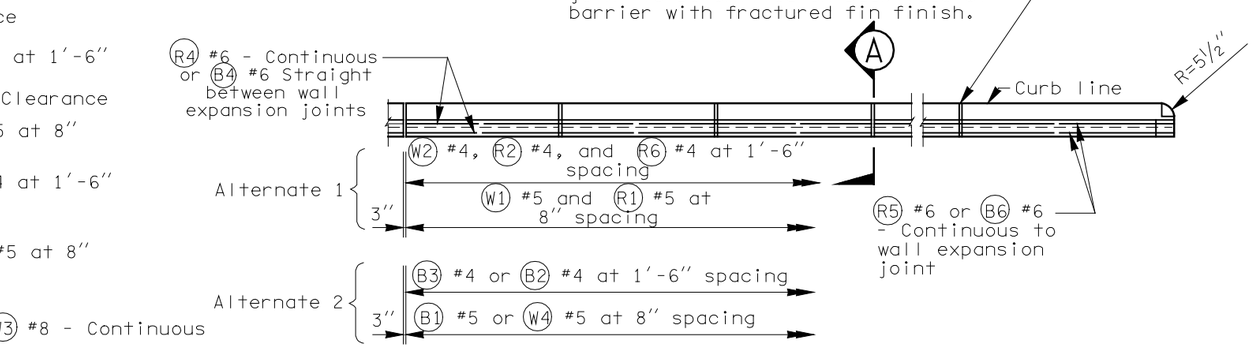

PLAN - TRAFFIC BARRIER

All chamfers 3/4"

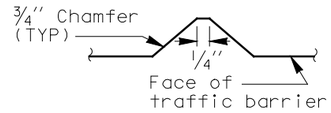

DUMMY JOINT SECTION

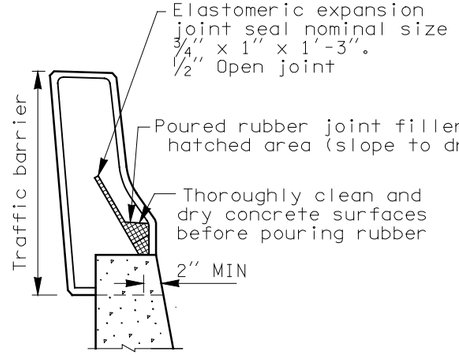

A SECTION

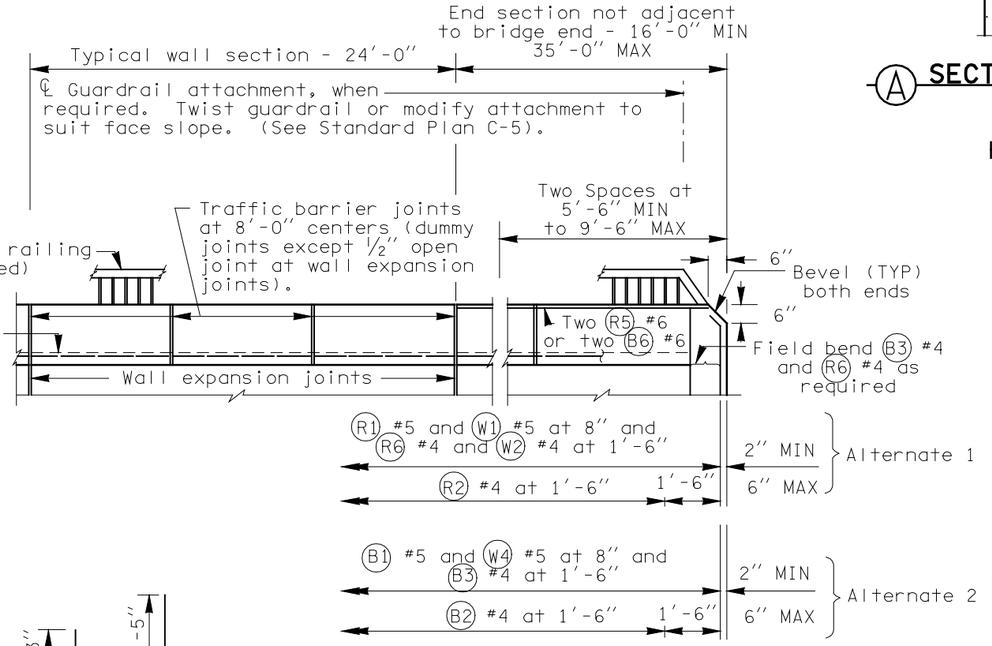

WALL ELEVATION

WALL DESIGN WITH VERTICAL FRONT FACE AND 2' SURCHARGE OR TRAFFIC BARRIER

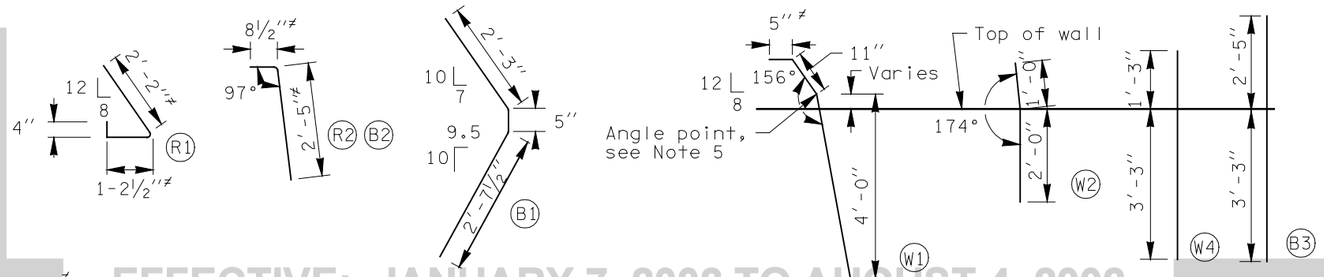

≠ Dimensions to point of intersection

JEROME A. WEIGEL
STATE OF WASHINGTON
14742
REGISTERED
PROFESSIONAL ENGINEER
EXPIRES JUNE 29, 2000

REINFORCED CONCRETE RETAINING WALL TYPE 1 AND 1 SW STANDARD PLAN D-1a

SHEET 2 OF 2 SHEETS

NOTE: THIS PLAN IS NOT A LEGAL ENGINEERING DOCUMENT BUT AN ELECTRONIC DUPLICATE. THE ORIGINAL, SIGNED BY THE ENGINEER AND APPROVED FOR PUBLICATION, IS KEPT ON FILE AT THE WASHINGTON STATE DEPARTMENT OF TRANSPORTATION. A COPY MAY BE OBTAINED UPON REQUEST.

DATE	REVISION	BY
10/99	New Approval date.	TWS

APPROVED FOR PUBLICATION

Clifford E. Mansfield — DEPUTY STATE DESIGN ENGINEER — *10/06/99* DATE

WASHINGTON STATE DEPARTMENT OF TRANSPORTATION
OLYMPIA, WASHINGTON

EFFECTIVE: JANUARY 7, 2002 TO AUGUST 4, 2002

EFFECTIVE: JANUARY 7, 2002 TO AUGUST 4, 2002

DIMENSIONS				E BAR (size #4)		FOOTING REINFORCEMENT								STEM REINFORCEMENT	MATERIAL QUANTITY		
						F BAR			K BAR					G BAR (size #4)			
H (ft)	B	C_V	D	LENGTH	h	SIZE	SPACING	LENGTH	SIZE	SPACING	LENGTH	h	b	LENGTH	CONCRETE (CY/LF)	STEEL (LBS/LF)	H (ft)
5	5′-6″	3′-0″	1′-0″	3′- 5″	2′- 9″	4	9″	3′-9″	5	9″	6′-10″	4′-7″	2′-7″	3′-10″	0.363	26.207	5
6	5′-6″	3′-0″	1′-0″	3′- 5″	2′- 9″	4	9″	3′-9″	5	9″	7′-10″	5′-7″	2′-7″	4′-10″	0.412	29.379	6
7	5′-9″	3′-3″	1′-0″	3′- 5″	2′- 9″	4	9″	3′-9″	5	9″	9′-1″	6′-7″	2′-10″	5′-10″	0.474	31.447	7
8	5′-9″	3′-3″	1′-0″	3′- 5″	2′- 9″	4	9″	3′-9″	5	9″	10′-1″	7′-7″	2′-10″	6′-10″	0.531	34.619	8
9	6′-0″	3′-6″	1′-0″	3′- 5″	2′- 9″	4	9″	3′-9″	5	9″	11′-4″	8′-7″	3′-1″	7′-11″	0.600	38.176	9
10	6′-3″	3′-6″	1′-0″	3′- 5″	2′- 9″	4	9″	4′-0″	5	9″	12′-4″	9′-7″	3′-1″	8′-11″	0.673	40.235	10
11	6′-6″	3′-6″	1′-0″	3′- 5″	2′- 9″	5	9″	4′-7″	5	9″	13′-4″	10′-7″	3′-1″	9′-11″	0.750	46.218	11
12	7′-0″	3′-9″	1′-0″	3′- 5″	2′- 9″	5	9″	4′-10″	5	9″	14′-7″	11′-7″	3′-4″	10′-11″	0.840	50.753	12
13	7′-6″	3′-9″	1′-0″	3′- 5″	2′- 9″	5	9″	5′-1″	5	9″	15′-10″	12′-7″	3′-4″	11′-11″	0.933	53.400	13
14	7′-9″	3′-9″	1′-0″	3′- 5″	2′- 9″	6	8″	6′-1″	5	8″	16′-7″	13′-7″	3′-4″	12′-11″	1.021	62.745	14
15	8′-0″	3′-9″	1′-0″	3′- 5″	2′- 9″	6	7″	6′-4″	5	7″	17′-7″	14′-7″	3′-4″	13′-11″	1.113	68.519	15
16	8′-6″	4′-0″	1′-3″	3′- 8″	3′- 0″	6	7″	6′-7″	6	8″	18′-9″	15′-7″	3′-7″	14′-8″	1.274	87.587	16
17	9′-0″	4′-3″	1′-3″	3′- 8″	3′- 0″	6	6″	6′-10″	6	8″	20′-0″	16′-7″	3′-10″	15′-8″	1.387	96.241	17
18	9′-6″	4′-6″	1′-6″	3′-10″	3′- 3″	6	6″	7′-1″	6	7″	21′-3″	17′-7″	4′-1″	16′-5″	1.567	107.056	18
19	10′-3″	5′-0″	1′-6″	3′-10″	3′- 3″	6	6″	7′-4″	6	6″	22′-9″	18′-7″	4′-7″	17′-5″	1.704	123.464	19
20	10′-6″	5′-0″	1′-9″	4′- 2″	3′- 6″	6	6″	7′-7″	6	6″	23′-9″	19′-7″	4′-7″	18′-2″	1.889	127.451	20
21	11′-3″	5′-6″	2′-0″	4′- 5″	3′- 9″	6	6″	7′-10″	7	1′-2″	13′-5″	8′-10″	5′-1″	18′-11″	2.118	131.930	21
22	11′-9″	5′-9″	2′-0″	4′- 5″	3′- 9″	7	7″	8′-11″	7	1′-0″	14′-1″	9′-3″	5′-4″	19′-11″	2.259	157.217	22
23	12′-3″	6′-0″	2′-3″	4′- 8″	4′- 0″	7	7″	9′-2″	7	1′-0″	14′-10″	9′-9″	5′-7″	20′-8″	2.491	163.792	23
24	12′-9″	6′-3″	2′-3″	4′- 8″	4′- 0″	7	6″	9′-5″	8	1′-2″	15′-5″	10′-2″	5′-10″	21′-8″	2.643	189.370	24
25	13′-3″	6′-6″	2′-6″	4′-11″	4′- 0″	7	6″	9′-8″	8	1′-1″	16′-2″	10′-8″	6′-1″	22′-5″	2.894	206.931	25
26	13′-9″	6′-9″	2′-6″	4′-11″	4′- 3″	7	6″	9′-11″	8	1′-0″	16′-10″	11′-1″	6′-4″	23′-5″	3.057	222.725	26
27	14′-3″	7′-0″	2′-9″	5′- 2″	4′- 6″	8	7″	11′-2″	9	1′-2″	17′-5″	11′-6″	6′-7″	24′-2″	3.326	254.763	27
28	14′-9″	7′-3″	3′-0″	5′- 5″	4′- 9″	8	7″	11′-5″	9	1′-1″	18′-9″	12′-0″	6′-10″	25′-0″	3.607	276.351	28
29	15′-3″	7′-6″	3′-3″	5′- 8″	5′- 0″	8	7″	11′-8″	9	1′-0″	19′-0″	12′-5″	7′-1″	25′-9″	3.898	300.338	29
30	16′-0″	8′-0″	3′-3″	5′- 8″	5′- 0″	8	6″	11′-11″	9	11″	19′-11″	13′-0″	7′-7″	26′-9″	4.118	340.248	30
31	16′-6″	8′-3″	3′-6″	5′-11″	5′- 3″	8	6″	12′-2″	9	11″	20′-2″	13′-6″	7′-10″	27′-6″	4.431	350.783	31
32	17′-0″	8′-6″	3′-9″	6′- 2″	5′- 6″	8	6″	12′-5″	9	10″	20′-11″	14′-0″	8′-1″	28′-3″	4.755	384.956	32
33	17′-6″	8′-9″	4′-0″	6′- 5″	5′- 9″	8	6″	12′-8″	9	10″	21′-8″	14′-7″	8′-4″	29′-0″	5.090	395.892	33
34	18′-0″	9′-0″	4′-3″	6′- 8″	6′- 0″	8	6″	12′-11″	9	10″	22′-6″	15′-1″	8′-7″	29′-9″	5.437	406.513	34
35	18′-6″	9′-3″	4′-6″	6′-11″	6′- 3″	8	6″	13′-2″	10	11″	23′-1″	15′-7″	8′-10″	30′-6″	5.794	467.610	35

* If traffic barrier is used, add 0.110 CY of concrete Class 4000 for Barrier Alternate 1. Add 0.152 CY of concrete Class 4000 for Barrier Alternate 2 - per LF.

** Add 16 LB/FT of reinforcing steel for Barrier Alternate 1 or 23 LB/FT of reinforcing steel for Barrier Alternate 2 - per LF.

M BAR					J BAR			
SIZE	SPACING	LENGTH	h	b	SIZE	SPACING	LENGTH	
7	1′-2″	9′-4″	4′-9″	5′-1″	7	1′-2″	18′-10″	
7	1′-0″	9′-7″	4′-9″	5′-4″	7	1′-0″	19′-10″	
7	1′-0″	10′-1″	5′-0″	5′-7″	7	1′-0″	20′-7″	
8	1′-2″	11′-3″	6′-0″	5′-10″	8	1′-2″	21′-7″	
8	1′-1″	11′-9″	6′-3″	6′-1″	8	1′-1″	22′-4″	
8	1′-0″	12′-0″	6′-3″	6′-4″	8	1′-0″	23′-4″	
9	1′-2″	13′-6″	7′-7″	6′-7″	9	1′-2″	24′-1″	
9	1′-1″	14′-0″	7′-10″	7′-10″	9	1′-1″	24′-10″	
9	1′-0″	14′-6″	8′-1″	7′-1″	9	1′-0″	25′-7″	
9	11″	15′-0″	8′-1″	7′-7″	9	11″	26′-7″	
9	11″	15′-6″	8′-4″	7′-10″	9	11″	27′-4″	
9	10″	16′-0″	8′-7″	8′-1″	9	10″	28′-1″	
9	10″	16′-6″	8′-10″	8′-4″	9	10″	28′-11″	
9	10″	17′-0″	9′-1″	8′-7″	9	10″	29′-7″	
9	10″	17′-0″	9′-1″	8′-7″	9	10″	29′-7″	
9	10″	18′-9″	10′-8″	8′-10″	10	11″	30′-4″	

NOTES

1. All concrete including traffic barrier shall be Class 4000 except as noted.
2. For backfill requirements, see Standard Plan "D-4".
3. When Type 2-SW (saltwater) is specified, the concrete cover over steel in the front face and the total wall thickness shall be increased by 1".
4. If concrete is "SW", the Material Quantity in the table shall be increased by 0.003 x H CY/LF.
5. If Bar W1 interferes with the retaining wall form, it shall be field bent only at the angle point. Twisting of the bar will not be permitted.
6. Toe height may vary 2" MIN to 6" MAX.
7. Height may vary if required to provide a profile pleasing to the eye.
8. Concrete in the 24 foot wall sections shall be placed separately between expansion joints with a minimum 12 hour period between concrete placement.

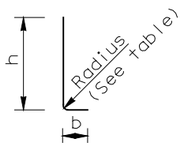

BARS K AND M

Bar	Radius R
#5	9"
#6	11"
#7	1′-1"
#8	1′-3"
#9	1′-6"
#10	1′-8"

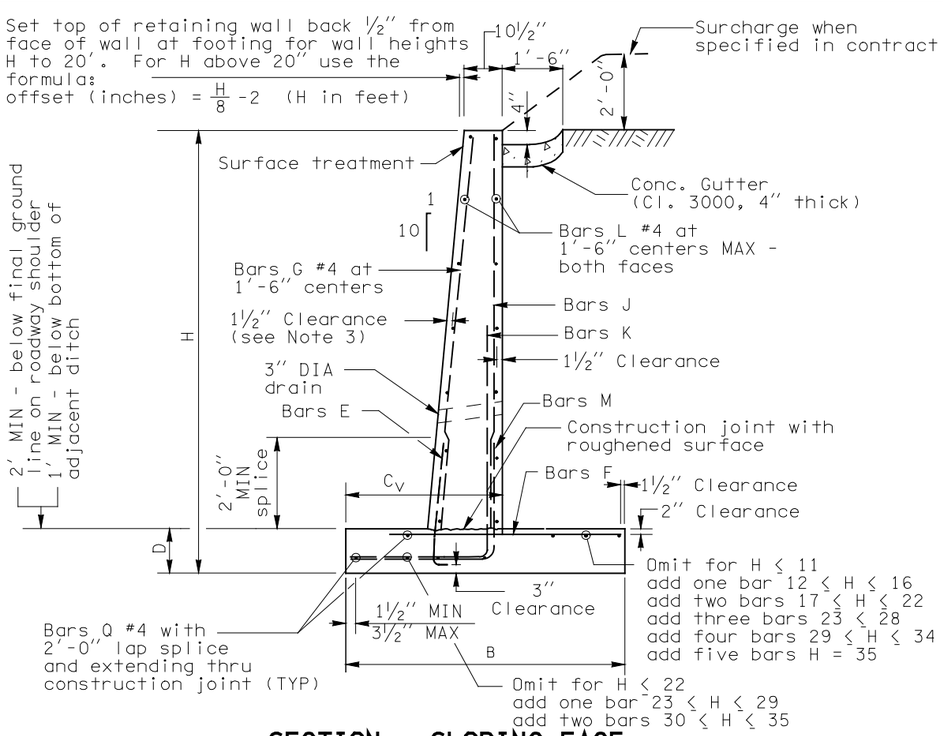

SECTION - SLOPING FACE

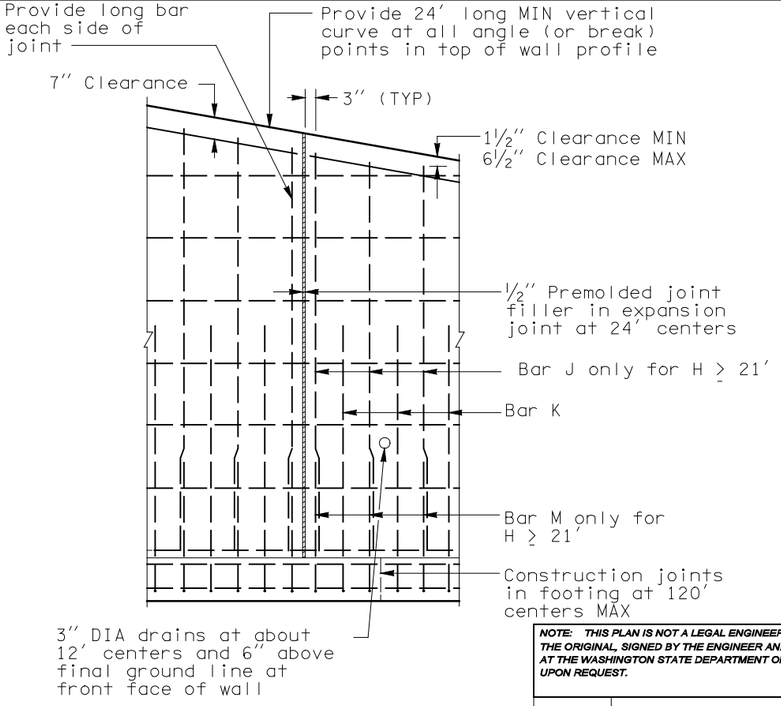

ELEVATION

Bar	MIN Splice
#4	2′-0"
#5	2′-0"
#6	2′-1"
#7	2′-11"
#8	3′-9"
#9	4′-9"
#10	6′-1"

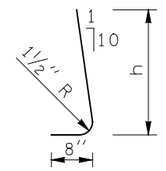

BAR E
@ 1′-6" centers

WALL DESIGN WITH SLOPING FRONT FACE AND 2′ SURCHARGE OR TRAFFIC BARRIER

JEROME A. WEIGEL
STATE OF WASHINGTON
14742
REGISTERED
PROFESSIONAL ENGINEER

EXPIRES JUNE 29, 2000

REINFORCED CONCRETE RETAINING WALL TYPE 2 AND 2 SW STANDARD PLAN D-1b

SHEET 1 OF 2 SHEETS

NOTE: THIS PLAN IS NOT A LEGAL ENGINEERING DOCUMENT BUT AN ELECTRONIC DUPLICATE. THE ORIGINAL, SIGNED BY THE ENGINEER AND APPROVED FOR PUBLICATION, IS KEPT ON FILE AT THE WASHINGTON STATE DEPARTMENT OF TRANSPORTATION. A COPY MAY BE OBTAINED UPON REQUEST.

DATE	REVISION	BY
10/99	Added note 8.	TWS

APPROVED FOR PUBLICATION

Clifford E. Mansfield — DEPUTY STATE DESIGN ENGINEER — *10/06/99* DATE

WASHINGTON STATE DEPARTMENT OF TRANSPORTATION
OLYMPIA, WASHINGTON

EFFECTIVE: JANUARY 7, 2002 TO AUGUST 4, 2002

EFFECTIVE: JANUARY 7, 2002 TO AUGUST 4, 2002

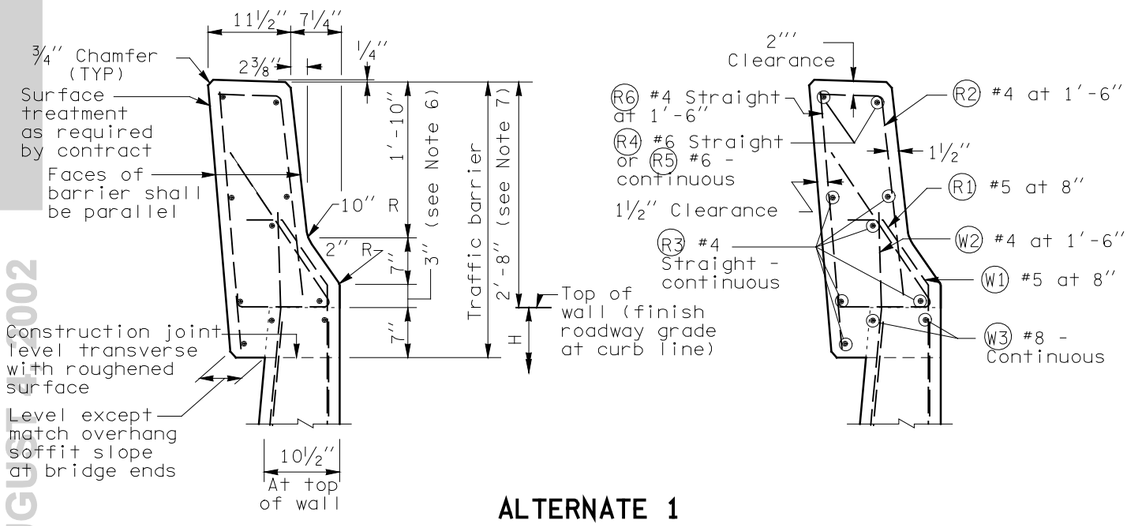

ALTERNATE 1

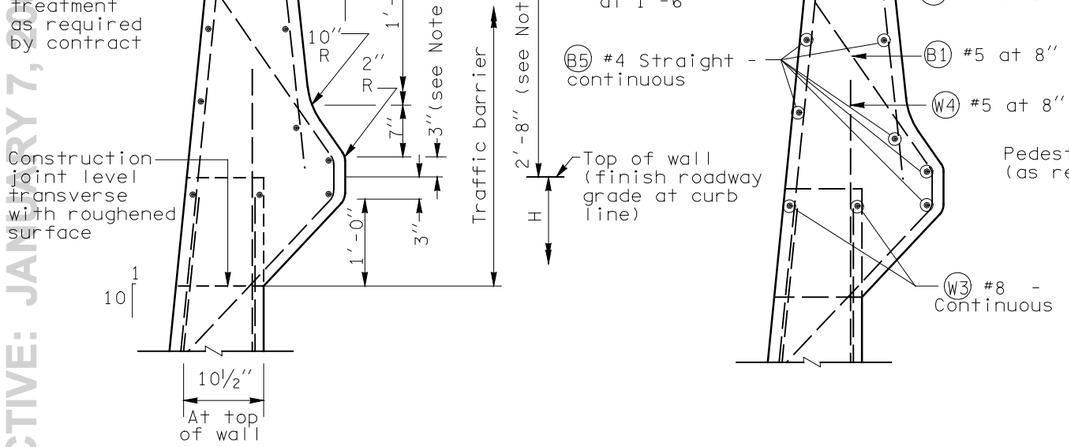

ALTERNATE 2

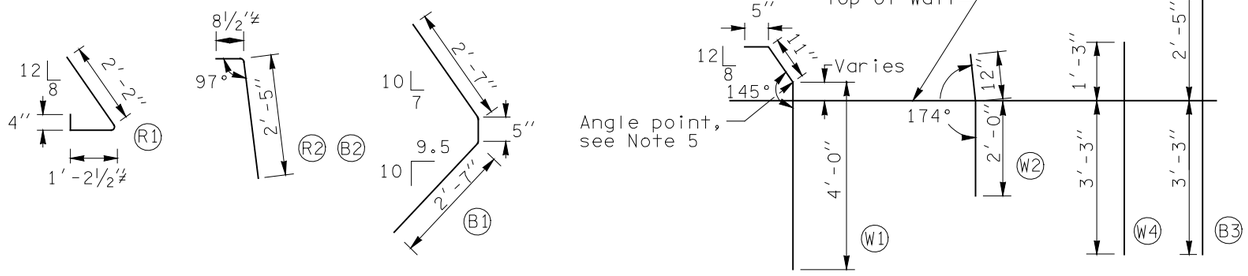

≠ Dimensions to points of intersection

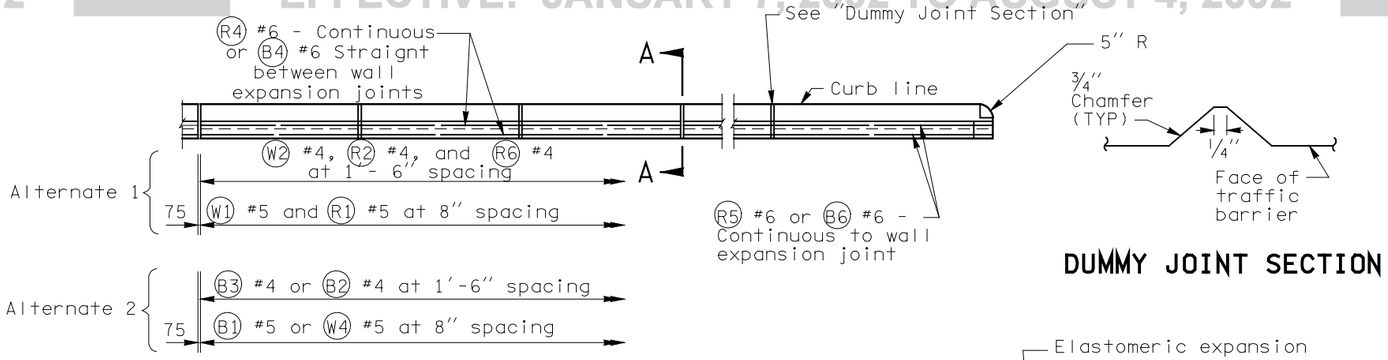

DUMMY JOINT SECTION

PLAN - TRAFFIC BARRIER

All chamfers ¾"

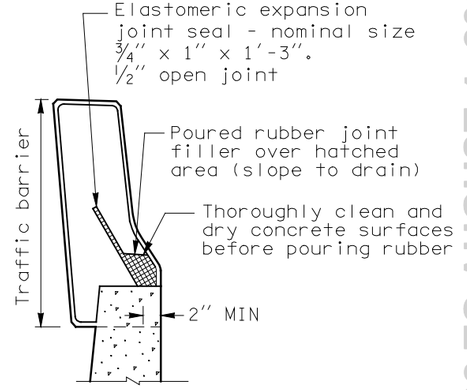

SECTION A-A

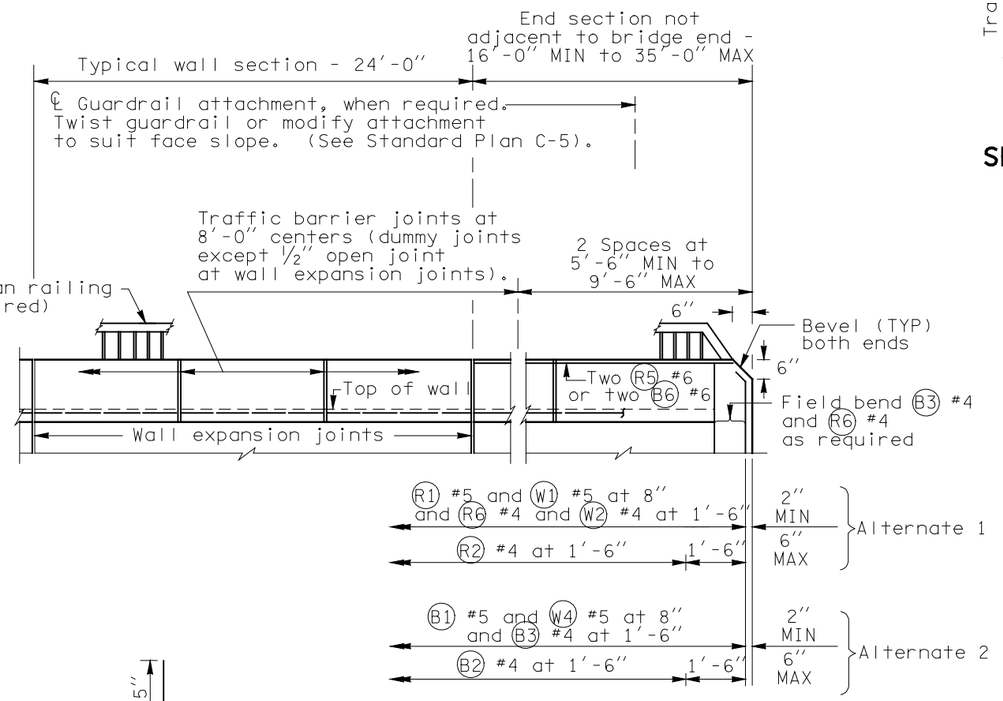

WALL ELEVATION

WALL DESIGN WITH SLOPING FRONT FACE AND 2' SURCHARGE OR TRAFFIC BARRIER

JEROME A. WEIGEL
STATE OF WASHINGTON
14742
REGISTERED
PROFESSIONAL ENGINEER

EXPIRES JUNE 29, 2000

REINFORCED CONCRETE RETAINING WALL TYPE 2 AND 2 SW STANDARD PLAN D-1b

SHEET 2 OF 2 SHEETS

NOTE: THIS PLAN IS NOT A LEGAL ENGINEERING DOCUMENT BUT AN ELECTRONIC DUPLICATE. THE ORIGINAL, SIGNED BY THE ENGINEER AND APPROVED FOR PUBLICATION, IS KEPT ON FILE AT THE WASHINGTON STATE DEPARTMENT OF TRANSPORTATION. A COPY MAY BE OBTAINED UPON REQUEST.

APPROVED FOR PUBLICATION

Clifford E. Mansfield — DEPUTY STATE DESIGN ENGINEER — *10/06/99* DATE

WASHINGTON STATE DEPARTMENT OF TRANSPORTATION
OLYMPIA, WASHINGTON

DATE	REVISION	BY
10/99	New approval date.	TWS

EFFECTIVE: JANUARY 7, 2002 TO AUGUST 4, 2002

EFFECTIVE: JANUARY 7, 2002 TO AUGUST 4, 2002

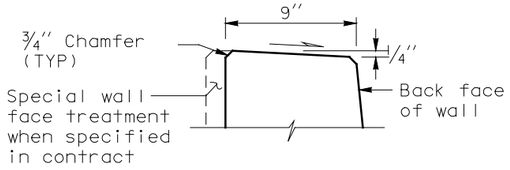

WALL TOP DETAIL

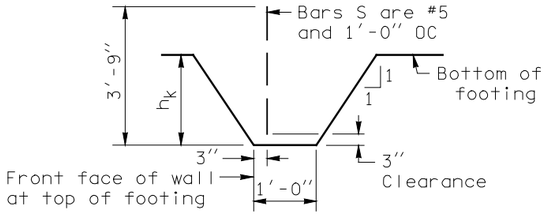

Not required on walls H = 5′ thru H = 12′

KEY DETAIL

NOTES

1. All concrete shall be Class 4000 except as noted.
2. For backfill requirements, see Standard Plan "D-4".
3. When Wall Type 3-SW (saltwater) is specified, the concrete cover over steel in the front face and the total wall thickness shall be increased by 1".
4. When Wall Type 3-SW (saltwater) is specified, concrete in the table column "Material Quantity" shall be increased by 0.003 x H CY/LF.
5. Concrete in the 24 foot wall sections shall be placed separately between expansion joints with a minimum 12 hour period between concrete placement.

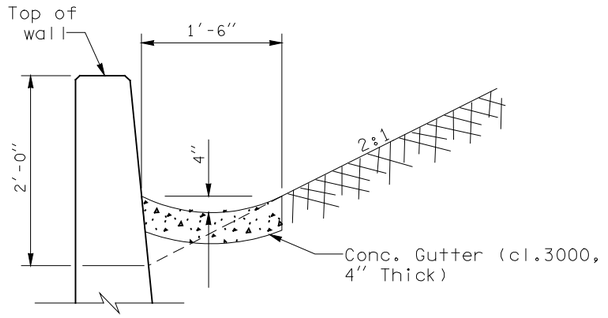

GUTTER DETAIL

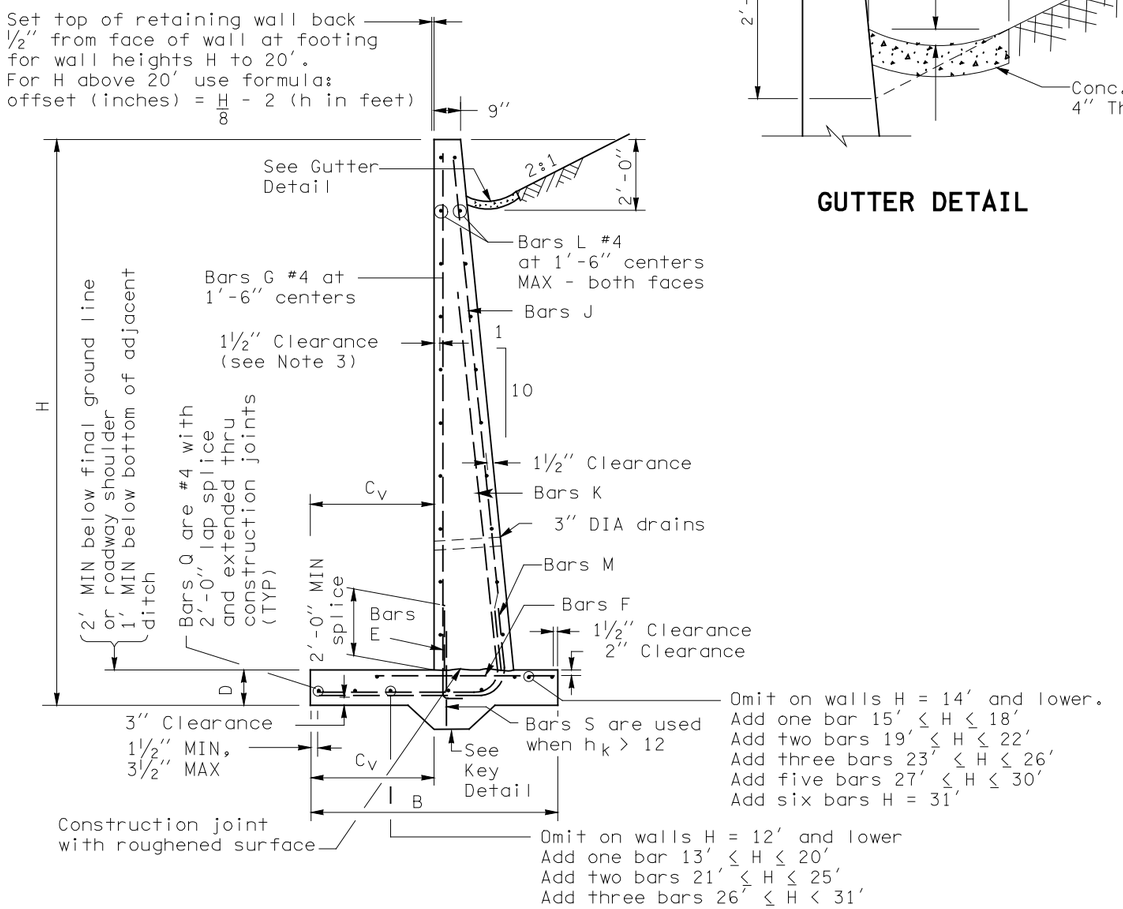

SECTION - VERTICAL FACE

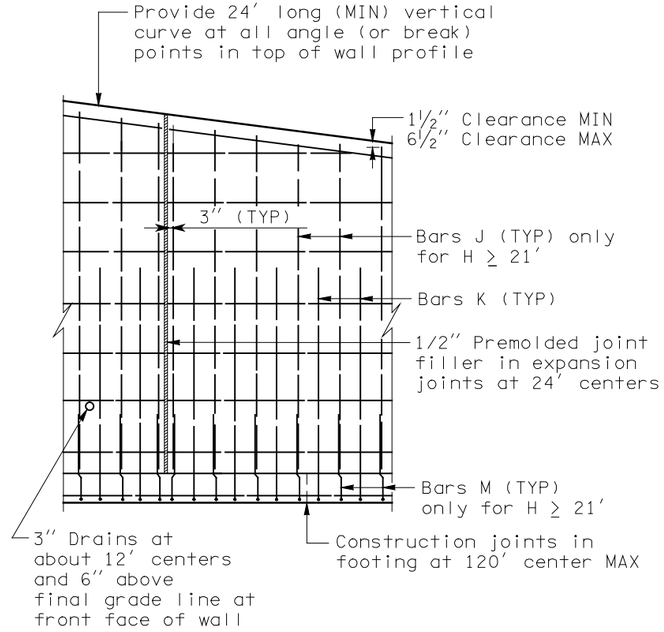

ELEVATION

WALL DESIGN WITH VERTICAL FRONT FACE AND 2:1 BACKSLOPE

JEROME A. WEIGEL
STATE OF WASHINGTON
14742
REGISTERED
PROFESSIONAL ENGINEER

EXPIRES JUNE 29, 2000

REINFORCED CONCRETE RETAINING WALL TYPE 3 AND 3 SW STANDARD PLAN D-1c

SHEET 1 OF 2 SHEETS

NOTE: THIS PLAN IS NOT A LEGAL ENGINEERING DOCUMENT BUT AN ELECTRONIC DUPLICATE. THE ORIGINAL, SIGNED BY THE ENGINEER AND APPROVED FOR PUBLICATION, IS KEPT ON FILE AT THE WASHINGTON STATE DEPARTMENT OF TRANSPORTATION. A COPY MAY BE OBTAINED UPON REQUEST.

APPROVED FOR PUBLICATION

Clifford E. Mansfield — DEPUTY STATE DESIGN ENGINEER — *10/06/99* DATE

WASHINGTON STATE DEPARTMENT OF TRANSPORTATION
OLYMPIA, WASHINGTON

DATE	REVISION	BY
10/99	Added note 5.	TWS

EFFECTIVE: JANUARY 7, 2002 TO AUGUST 4, 2002

EFFECTIVE: JANUARY 7, 2002 TO AUGUST 4, 2002

DIMENSIONS					FOOTING REINFORCEMENT															STEM REINFORCEMENT				MATERIAL QUANTITY		
					BAR E (size #4)		BAR F			BAR K					BAR M					BAR J			BAR G (size #4)			
H (ft)	P	C_V	b	h_k	LENGTH	h	SIZE	SPACING	LENGTH	SIZE	SPACING	LENGTH	h	b	SIZE	SPACING	LENGTH	h	b	SIZE	SPACING	LENGTH	LENGTH	CONCRETE (CY/LF)	STEEL (LBS/LF)	H (ft)
5	3′-0″	1′-3″	1′-0″	0	3′-5″	2′-9″	#4	1′-0″	2′-6″	#5	1′-0″	6′-6″	4′-7″	2′-4″	N/A	N/A	N/A	N/A	N/A	N/A	N/A	N/A	3′-10″	0.252	21.698	5
6	3′-6″	1′-6″	1′-0″	0	3′-5″	2′-9″	#4	1′-0″	2′-6″	#5	1′-0″	7′-10″	5′-7″	2′-8″	N/A	N/A	N/A	N/A	N/A	N/A	N/A	N/A	4′-10″	0.315	24.870	6
7	3′-9″	1′-9″	1′-0″	0	3′-5″	2′-9″	#4	1′-0″	2′-6″	#5	1′-0″	9′-2″	6′-7″	3′-0″	N/A	N/A	N/A	N/A	N/A	N/A	N/A	N/A	5′-10″	0.372	26.706	7
8	4′-3″	1′-9″	1′-0″	0	3′-5″	2′-9″	#4	1′-0″	2′-6″	#5	1′-0″	10′-2″	7′-7″	3′-0″	N/A	N/A	N/A	N/A	N/A	N/A	N/A	N/A	6′-10″	0.443	29.531	8
9	4′-9″	2′-0″	1′-0″	0	3′-5″	2′-9″	#4	1′-0″	2′-6″	#5	1′-0″	11′-6″	8′-7″	3′-4″	N/A	N/A	N/A	N/A	N/A	N/A	N/A	N/A	7′-10″	0.517	32.703	9
10	5′-3″	2′-3″	1′-0″	0	3′-5″	2′-9″	#4	1′-0″	2′-6″	#5	1′-0″	12′-11″	9′-7″	3′-9″	N/A	N/A	N/A	N/A	N/A	N/A	N/A	N/A	8′-10″	0.594	34.625	10
11	6′-0″	2′-9″	1′-0″	0	3′-5″	2′-9″	#4	10″	2′-8″	#5	10″	14′-6″	10′-7″	4′-4″	N/A	N/A	N/A	N/A	N/A	N/A	N/A	N/A	9′-10″	0.685	41.550	11
12	6′-6″	3′-0″	1′-0″	0	3′-5″	2′-9″	#4	8″	2′-10″	#5	8″	15′-4″	11′-7″	4′-8″	N/A	N/A	N/A	N/A	N/A	N/A	N/A	N/A	10′-10″	0.770	49.874	12
13	7′-0″	3′-3″	1′-0″	1′-0″	3′-5″	2′-9″	#5	10″	3′-4″	#5	7″	17′-2″	12′-7″	5′-0″	N/A	N/A	N/A	N/A	N/A	N/A	N/A	N/A	11′-10″	0.933	62.676	13
14	7′-9″	3′-6″	1′-0″	1′-0″	3′-5″	2′-9″	#5	7″	3′-8″	#6	7″	18′-7″	13′-7″	5′-4″	N/A	N/A	N/A	N/A	N/A	N/A	N/A	N/A	12′-10″	1.035	83.997	14
15	8′-6″	3′-9″	1′-0″	1′-0″	3′-6″	2′-9″	#5	6″	4′-1″	#6	6″	20′-0″	14′-7″	5′-9″	N/A	N/A	N/A	N/A	N/A	N/A	N/A	N/A	13′-10″	1.141	100.638	15
16	9′-3″	4′-0″	1′-3″	1′-0″	3′-8″	2′-9″	#6	6″	5′-0″	#6	6″	21′-4″	15′-7″	6′-1″	N/A	N/A	N/A	N/A	N/A	N/A	N/A	N/A	14′-10″	1.315	111.591	16
17	10′-0″	4′-3″	1′-3″	1′-0″	3′-8″	3′-0″	#6	6″	5′-5″	#6	5″	22′-8″	16′-7″	6′-5″	N/A	N/A	N/A	N/A	N/A	N/A	N/A	N/A	15′-7″	1.434	118.632	17
18	10′-6″	4′-3″	1′-6″	1′-0″	3′-8″	3′-0″	#6	5″	5′-10″	#6	5″	23′-8″	17′-7″	6′-6″	N/A	N/A	N/A	N/A	N/A	N/A	N/A	N/A	16′-7″	1.620	126.835	18
19	11′-3″	4′-6″	1′-6″	1′-6″	3′-11″	3′-3″	#7	6″	7′-1″	#6	6″	26′-0″	18′-7″	6′-10″	N/A	N/A	N/A	N/A	N/A	N/A	N/A	N/A	17′-4″	1.817	168.319	19
20	12′-0″	4′-6″	1′-9″	1′-6″	4′-2″	3′-6″	#7	5″	7′-9″	#7	5″	26′-2″	19′-7″	7′-0″	N/A	N/A	N/A	N/A	N/A	N/A	N/A	N/A	18′-1″	2.040	203.989	20
21	12′-6″	5′-0″	2′-0″	1′-6″	4′-5″	3′-9″	#8	8″	8′-8″	#7	11″	19′-11″	12′-11″	7′-7″	#8	11″	12′-9″	5′-9″	7′-7″	#8	11″	18′-11″	18′-11″	2.261	225.015	21
22	13′-6″	5′-3″	2′-3″	1′-6″	4′-8″	4′-0″	#8	7″	9′-1″	#8	11″	20′-9″	13′-5″	7′-11″	#8	11″	13′-4″	6′-1″	7′-11″	#8	11″	19′-8″	19′-7″	2.514	239.973	22
23	14′-0″	5′-6″	2′-3″	1′-6″	4′-8″	4′-0″	#8	6″	9′-6″	#8	10″	21′-6″	13′-10″	8′-3″	#8	10″	13′-8″	6′-1″	8′-3″	#8	10″	20′-8″	20′-7″	2.679	272.571	23
24	14′-9″	5′-9″	2′-6″	1′-6″	4′-11″	4′-3″	#8	6″	9′-11″	#8	9″	22′-4″	14′-4″	8′-8″	#8	9″	14′-4″	6′-4″	8′-8″	#8	9″	21′-5″	21′-4″	2.958	304.464	24
25	15′-6″	6′-0″	2′-9″	1′-6″	5′-2″	4′-6″	#8	6″	10′-4″	#8	10″	24′-4″	16′-0″	9′-0″	#9	10″	15′-10″	7′-8″	9′-0″	#9	10″	22′-2″	22′-1″	3.252	335.260	25
26	16′-3″	6′-3″	3′-0″	1′-6″	5′-5″	4′-9″	#8	5″	10′-9″	#9	9″	25′-2″	16′-6″	9′-4″	#9	9″	16′-5″	7′-11″	9′-4″	#9	9″	22′-11″	22′-10″	3.563	386.608	26
27	16′-9″	6′-6″	3′-3″	1′-6″	5′-8″	5′-0″	#8	5″	10′-11″	#9	8″	25′-11″	17′-0″	9′-8″	#9	8″	17′-0″	8′-2″	9′-8″	#9	8′	23′-8″	23′-7″	3.859	432.355	27
28	17′-6″	6′-9″	3′-6″	1′-6″	5′-11″	5′-3″	#8	5″	11′-5″	#9	8″	25′-10″	17′-7″	10′-0″	#9	8″	17′-7″	8′-5″	10′-0″	#9	8″	24′-6″	24′-4″	4.200	448.327	28
29	18′-3″	7′-0″	3′-9″	1′-6″	6′-2″	5′-6″	#8	5″	11′-10″	#9	9″	29′-0″	19′-5″	10′-4″	#10	9″	19′-5″	10′-0″	10′-4″	#10	9″	25′-3″	25′-1″	4.556	494.468	29
30	19′-0″	7′-3″	4′-0″	1′-6″	6′-5″	5′-9″	#9	6″	13′-4″	#10	8″	30′-0″	20′-0″	10′-9″	#10	8″	20′-1″	10′-3″	10′-9″	#10	8″	26′-0″	25′-10″	4.928	534.648	30
31	19′-6″	7′-6″	4′-3″	1′-6″	6′-8″	6′-0″	#9	5″	13′-6″	#10	8″	30′-10″	20′-6″	11′-1″	#10	8″	20′-8″	11′-1″	11′-1″	#10	8″	26′-9″	26′-7″	5.277	559.628	31

Bar	MIN Splice
#4	2′-0″
#5	2′-0″
#6	2′-1″
#7	2′-11″
#8	3′-9″
#9	4′-9″
#10	6′-1″

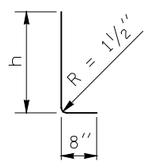

BAR E
at 1′-6″ centers

Bar	Radius
#5	9″
#6	11″
#7	1′-1″
#8	1′-3″
#9	1′-6″
#10	1′-8″

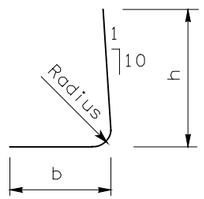

BARS K AND M

WALL DESIGN WITH VERTICAL
FRONT FACE AND 2:1 BACKSLOPE

JEROME A. WEIGEL
STATE OF WASHINGTON
14742
REGISTERED
PROFESSIONAL ENGINEER

EXPIRES JUNE 29, 2000

REINFORCED CONCRETE RETAINING WALL TYPE 3 AND 3 SW STANDARD PLAN D-1c

SHEET 2 OF 2 SHEETS

NOTE: THIS PLAN IS NOT A LEGAL ENGINEERING DOCUMENT BUT AN ELECTRONIC DUPLICATE. THE ORIGINAL, SIGNED BY THE ENGINEER AND APPROVED FOR PUBLICATION, IS KEPT ON FILE AT THE WASHINGTON STATE DEPARTMENT OF TRANSPORTATION. A COPY MAY BE OBTAINED UPON REQUEST.

DATE	REVISION	BY
10/99	New approval date.	TWS

APPROVED FOR PUBLICATION

Clifford E. Mansfield — *10/06/99*

DEPUTY STATE DESIGN ENGINEER — DATE

WASHINGTON STATE DEPARTMENT OF TRANSPORTATION
OLYMPIA, WASHINGTON

EFFECTIVE: JANUARY 7, 2002 TO AUGUST 4, 2002

EFFECTIVE: JANUARY 7, 2002 TO AUGUST 4, 2002

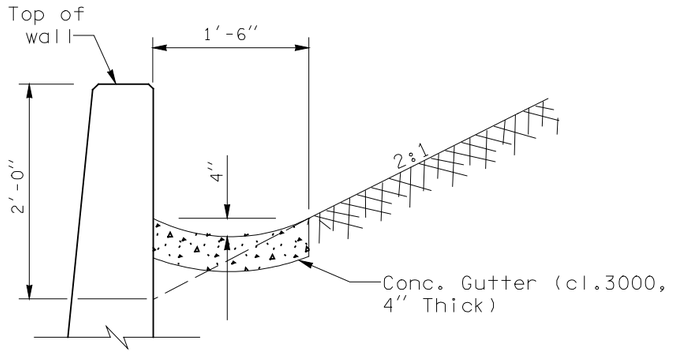

GUTTER DETAIL

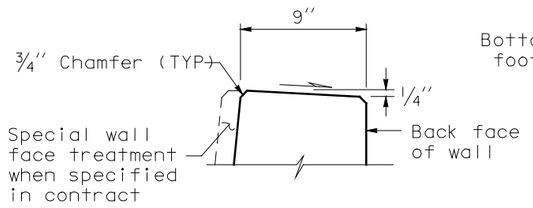

WALL TOP DETAIL

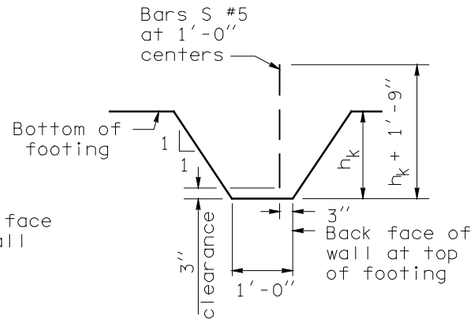

Not required on walls H = 5" thru H = 14'

KEY DETAIL

NOTES

1. All concrete shall be Class 4000 except as noted.
2. For backfill requirements, see Standard Plan "D-4".
3. When Wall Type 4-SW (saltwater) is specified, the concrete cover over steel in the front face and the total wall thickness shall be increased by 1".
4. When Wall Type 4-SW (saltwater) is specified, concrete in the table column "Material Quantity" shall be increased by 0.003 x H CY/LF.
5. Concrete in the 24 foot wall sections shall be placed separately between expansion joints with a minimum 12 hour period between concrete placement.

Bar	MIN Splice
#4	2'-0"
#5	2'-0"
#6	2'-1"
#7	2'-11"
#8	3'-9"
#9	4'-9"
#10	6'-1"

Bar	Radius
#5	9"
#6	11"
#7	1'-1"
#8	1'-3"
#9	1'-6"
#10	1'-8"

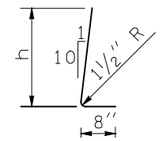

BAR E

At 1'-6" centers

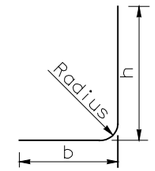

BARS K AND M

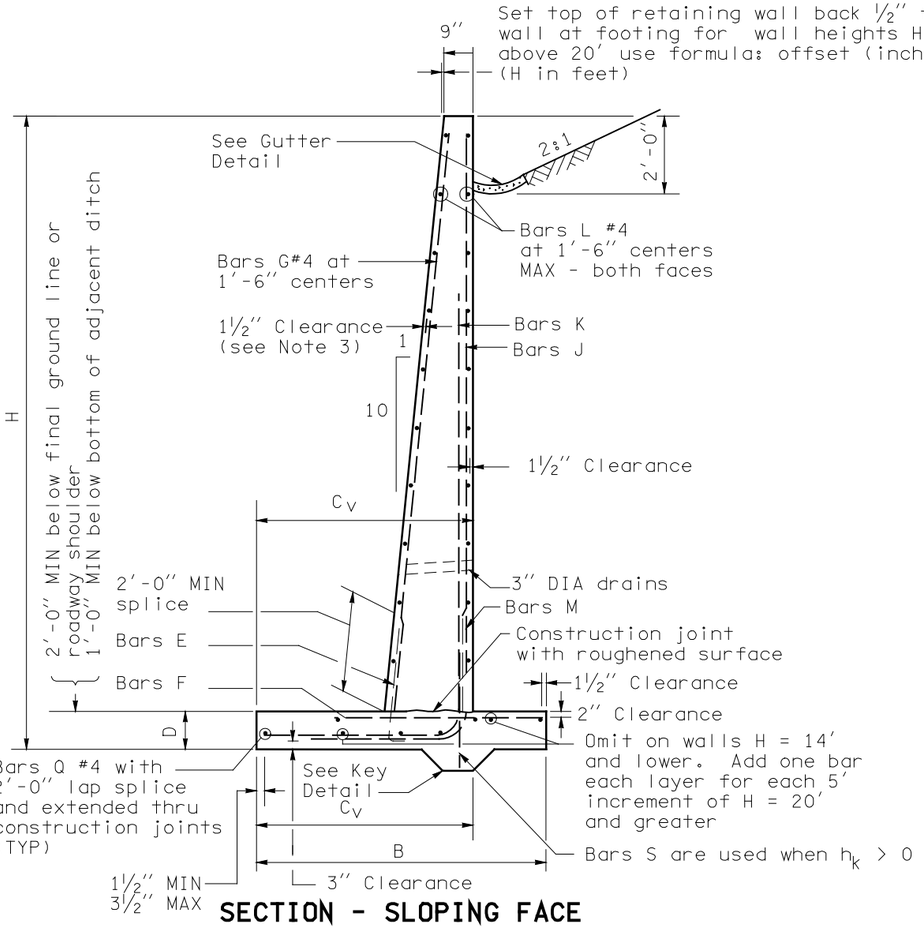

SECTION - SLOPING FACE

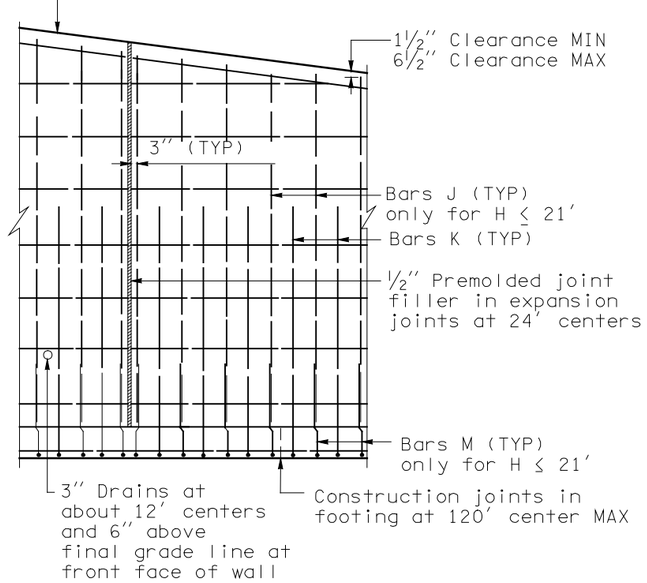

ELEVATION

WALL DESIGN WITH SLOPING FRONT FACE AND 2:1 BACKSLOPE

JEROME A. WEIGEL
STATE OF WASHINGTON
14742
REGISTERED
PROFESSIONAL ENGINEER

EXPIRES JUNE 29, 2000

REINFORCED CONCRETE RETAINING WALL TYPE 4 AND 4 SW STANDARD PLAN D-1d

SHEET 1 OF 2 SHEETS

NOTE: THIS PLAN IS NOT A LEGAL ENGINEERING DOCUMENT BUT AN ELECTRONIC DUPLICATE. THE ORIGINAL, SIGNED BY THE ENGINEER AND APPROVED FOR PUBLICATION, IS KEPT ON FILE AT THE WASHINGTON STATE DEPARTMENT OF TRANSPORTATION. A COPY MAY BE OBTAINED UPON REQUEST.

DATE	REVISION	BY
10/99	Added note 5.	TWS

APPROVED FOR PUBLICATION

Clifford E. Mansfield — DEPUTY STATE DESIGN ENGINEER — *10/06/99* DATE

WASHINGTON STATE DEPARTMENT OF TRANSPORTATION
OLYMPIA, WASHINGTON

EFFECTIVE: JANUARY 7, 2002 TO AUGUST 4, 2002

EFFECTIVE: JANUARY 7, 2002 TO AUGUST 4, 2002

DIMENSIONS					FOOTING REINFORCEMENT																STEM REINFORCEMENT				MATERIAL QUANTITY		
					BAR E (size #4)		BAR F				BAR K				BAR M						BAR J			BAR G (size #4)			
H (ft)	B	C_V	D	h_K	LENGTH	h	SIZE	SPACE	LENGTH	SIZE	SPACE	LENGTH	h	b	SIZE	SPACE	LENGTH	h	b	SIZE	SPACE	LENGTH	LENGTH	CONCRETE (CY/LF)	STEEL (LBS/LF)	H (ft)
5	2′-6″	1′-9″	1′-0″	0	3′-5″	2′-9″	#4	1′-0″	2′-0″	#5	1′-0″	5′-7″	4′-7″	1′-4″	N/A	N/A	N/A	N/A	N/A	N/A	N/A	N/A	3′-10″	0.233	19.072	5
6	2′-9″	1′-9″	1′-0″	0	3′-5″	2′-9″	#4	1′-0″	2′-3″	#5	1′-0″	6′-7″	5′-7″	1′-4″	N/A	N/A	N/A	N/A	N/A	N/A	N/A	N/A	4′-10″	0.287	22.063	6
7	3′-0″	2′-3″	1′-0″	0	3′-5″	2′-9″	#4	1′-0″	2′-3″	#5	1′-0″	8′-1″	6′-7″	1′-10″	N/A	N/A	N/A	N/A	N/A	N/A	N/A	N/A	5′-10″	0.344	23.906	7
8	3′-6″	2′-6″	1′-0″	0	3′-5″	2′-9″	#4	1′-0″	2′-3″	#5	1′-0″	9′-4″	7′-7″	2′-1″	N/A	N/A	N/A	N/A	N/A	N/A	N/A	N/A	6′-10″	0.415	27.158	8
9	4′-0″	3′-0″	1′-0″	0	3′-5″	2′-9″	#4	1′-0″	2′-3″	#5	1′-0″	10′-10″	8′-7″	2′-8″	N/A	N/A	N/A	N/A	N/A	N/A	N/A	N/A	7′-10″	0.489	30.504	9
10	4′-6″	3′-6″	1′-0″	0	3′-5″	2′-9″	#4	1′-0″	2′-3″	#5	1′-0″	12′-4″	9′-7″	3′-1″	N/A	N/A	N/A	N/A	N/A	N/A	N/A	N/A	8′-10″	0.567	33.182	10
11	5′-3″	3′-9″	1′-0″	0	3′-5″	2′-9″	#4	1′-0″	2′-9″	#5	1′-0″	13′-7″	10′-7″	3′-4″	N/A	N/A	N/A	N/A	N/A	N/A	N/A	N/A	9′-11″	0.657	38.638	11
12	6′-0″	4′-0″	1′-0″	0	3′-5″	2′-9″	#4	1′-0″	3′-3″	#5	10″	14′-10″	11′-7″	3′-8″	N/A	N/A	N/A	N/A	N/A	N/A	N/A	N/A	10′-11″	0.752	43.820	12
13	6′-6″	4′-6″	1′-0″	0	3′-5″	2′-9″	#4	10″	3′-3″	#5	9″	16′-4″	12′-7″	4′-1″	N/A	N/A	N/A	N/A	N/A	N/A	N/A	N/A	11′-11″	0.841	48.848	13
14	7′-3″	4′-9″	1′-3″	0	3′-8″	3′-0″	#4	9″	3′-9″	#5	7″	17′-7″	13′-7″	4′-4″	N/A	N/A	N/A	N/A	N/A	N/A	N/A	N/A	12′-8″	0.920	60.089	14
15	7′-6″	5′-0″	1′-3″	0	3′-8″	3′-0″	#4	8″	3′-9″	#6	8″	18′-10″	14′-7″	4′-8″	N/A	N/A	N/A	N/A	N/A	N/A	N/A	N/A	13′-8″	1.218	76.409	15
16	8′-3″	5′-3″	1′-3″	0	3′-8″	3′-0″	#5	8″	4′-7″	#6	7″	20′-0″	15′-7″	4′-10″	N/A	N/A	N/A	N/A	N/A	N/A	N/A	N/A	14′-8″	1.333	89.333	16
17	9′-0″	5′-6″	1′-3″	0	3′-8″	3′-0″	#5	8″	5′-1″	#6	6″	21′-3″	16′-7″	5′-1″	N/A	N/A	N/A	N/A	N/A	N/A	N/A	N/A	15′-8″	1.452	104.903	17
18	9′-9″	5′-6″	1′-3″	0	3′-8″	3′-0″	#6	6″	6′-4″	#6	5″	22′-3″	17′-7″	5′-1″	N/A	N/A	N/A	N/A	N/A	N/A	N/A	N/A	16′-8″	1.575	132.792	18
19	10′-6″	5′-9″	1′-6″	1′-6″	3′-11″	3′-3″	#6	5″	6′-10″	#7	6″	23′-5″	18′-7″	5′-4″	N/A	N/A	N/A	N/A	N/A	N/A	N/A	N/A	17′-5″	1.775	157.038	19
20	11′-3″	6′-0″	1′-9″	1′-6″	4′-2″	3′-6″	#6	5″	7′-4″	#7	5″	24′-9″	19′-7″	5′-8″	N/A	N/A	N/A	N/A	N/A	N/A	N/A	N/A	18′-2″	1.992	184.972	20
21	12′-0″	6′-3″	2′-0″	1′-6″	4′-4″	3′-9″	#6	5″	7′-10″	#8	11″	14′-1″	8′-10″	5′-10″	#8	11″	11′-1″	5′-10″	5′-10″	#8	11″	18′-10″	18′-11″	2.224	195.265	21
22	12′-6″	6′-6″	2′-0″	1′-6″	4′-4″	3′-9″	#7	5″	8′-11″	#8	10″	14′-9″	9′-3″	6′-2″	#8	10″	11′-4″	5′-10″	6′-1″	#8	10″	19′-10″	19′-11″	2.405	231.507	22
23	13′-0″	7′-0″	2′-0″	2′-0″	4′-4″	3′-9″	#7	5″	8′-11″	#8	10″	15′-8″	9′-7″	6′-8″	#8	10″	11′-11″	5′-10″	6′-8″	#8	10″	20′-10″	20′-11″	2.585	240.484	23
24	13′-9″	7′-3″	2′-3″	2′-0″	4′-8″	4′-0″	#7	5″	9′-5″	#8	9″	16′-4″	10′-1″	6′-10″	#8	9″	12′-4″	6′-1″	6′-10″	#8	9″	21′-7″	21′-8″	2.848	269.186	24
25	14′-3″	7′-6″	2′-3″	2′-6″	4′-8″	4′-0″	#8	5″	10′-8″	#9	10″	16′-11″	10′-6″	7′-1″	#9	10″	13′-7″	7′-2″	7′-1″	#9	10″	22′-7″	22′-8″	3.102	331.336	25
26	15′-0″	7′-9″	2′-3″	2′-6″	4′-8″	4′-0″	#8	5″	11′-2″	#9	9″	17′-6″	10′-10″	7′-4″	#9	9″	13′-10″	7′-2″	7′-4″	#9	9″	23′-7″	23′-8″	3.278	367.361	26
27	15′-6″	8′-3″	2′-6″	2′-6″	4′-11″	4′-3″	#8	5″	11′-2″	#9	8″	18′-7″	11′-5″	7′-10″	#9	8″	14′-5″	7′-5″	7′-10″	#9	8″	24′-4″	24′-5″	3.551	414.105	27
28	16′-0″	8′-9″	2′-6″	2′-6″	4′-11″	4′-3″	#9	5″	11′-2″	#9	8″	19′-5″	11′-9″	8′-4″	#9	8″	15′-1″	7′-5″	8′-4″	#9	10″	25′-4″	25′-6″	3.718	426.488	28
29	16′-9″	9′-0″	2′-9″	2′-6″	5′-2″	4′-6″	#9	5″	12′-9″	#10	9″	20′-3″	12′-4″	8′-8″	#10	9″	16′-11″	9′-0″	8′-8″	#10	9″	26′-1″	26′-3″	4.035	519.157	29
30	17′-6″	9′-3″	3′-0″	2′-6″	5′-5″	4′-9″	#9	5″	13′-3″	#10	8″	20′-11″	12′-10″	8′-10″	#10	8″	17′-4″	9′-3″	8′-10″	#10	8″	26′-10″	27′-0″	4.369	580.877	30
31	18′-0″	9′-6″	3′-0″	3′-0″	5′-5″	4′-9″	#9	5″	13′-6″	#10	8″	21′-7″	13′-3″	9′-1″	#10	8″	17′-7″	9′-3″	9′-1″	#10	8″	27′-10″	28′-0″	4.674	597.591	31
32	18′-9″	9′-9″	3′-3″	3′-6″	5′-8″	5′-0″	#9	5″	14′-0″	#10	8″	22′-2″	13′-9″	9′-4″	#10	8″	19′-5″	11′-0″	9′-4″	#10	8″	28′-7″	28′-9″	5.170	730.715	32
33	19′-3″	10′-0″	3′-6″	3′-6″	5′-11″	5′-3″	#10	5″	14′-3″	#10	8″	23′-0″	14′-3″	9′-8″	#10	8″	20′-0″	11′-3″	9′-8″	#10	8″	29′-4″	29′-6″	5.510	751.136	33

WALL DESIGN WITH SLOPING
FRONT FACE AND 2:1 BACKSLOPE

JEROME A. WEIGEL
STATE OF WASHINGTON
14742
REGISTERED
PROFESSIONAL ENGINEER

EXPIRES JUNE 29, 2000

REINFORCED CONCRETE RETAINING WALL TYPE 4 AND 4 SW STANDARD PLAN D-1d

SHEET 2 OF 2 SHEETS

NOTE: THIS PLAN IS NOT A LEGAL ENGINEERING DOCUMENT BUT AN ELECTRONIC DUPLICATE. THE ORIGINAL, SIGNED BY THE ENGINEER AND APPROVED FOR PUBLICATION, IS KEPT ON FILE AT THE WASHINGTON STATE DEPARTMENT OF TRANSPORTATION. A COPY MAY BE OBTAINED UPON REQUEST.

DATE	REVISION	BY
10/99	New approval date.	TWS

APPROVED FOR PUBLICATION

Clifford E. Mansfield — DEPUTY STATE DESIGN ENGINEER — *10/06/99* DATE

WASHINGTON STATE DEPARTMENT OF TRANSPORTATION
OLYMPIA, WASHINGTON

EFFECTIVE: JANUARY 7, 2002 TO AUGUST 4, 2002

EFFECTIVE: JANUARY 7, 2002 TO AUGUST 4, 2002

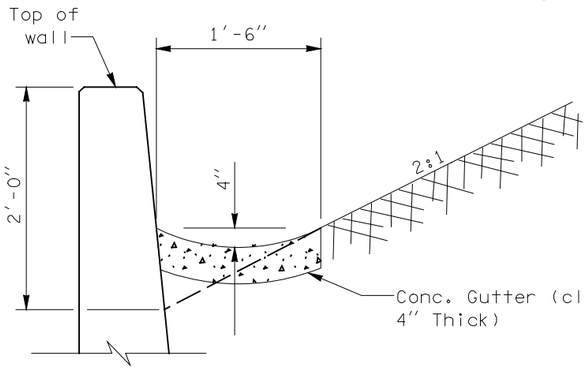

GUTTER DETAIL

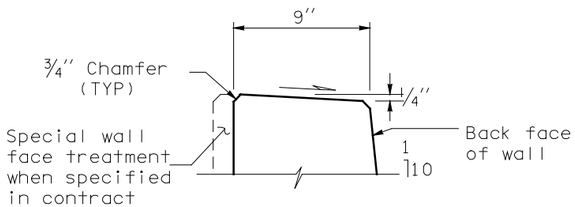

WALL TOP DETAIL

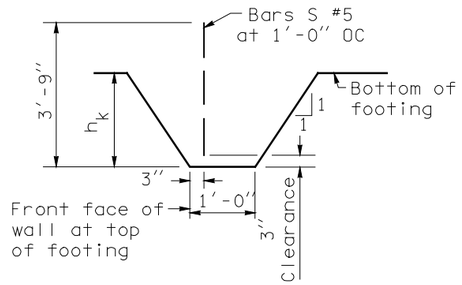

KEY DETAIL
Not required on walls H = 5' thru H = 25'

NOTES

1. All concrete shall be Class 4000 except as noted.
2. For backfill requirements, see Standard Plan "D-4".
3. When Wall Type 5-SW (saltwater) is specified, the concrete cover over steel in the front face and the total wall thickness shall be increased by 1".
4. When Wall Type 5-SW (saltwater) is specified, concrete in the table column "Material Quantity" shall be increased by 0.003 x H CY/LF.
5. Concrete in the 24 foot wall sections shall be placed separately between expansion joints with a minimum 12 hour period between concrete placement.

Bar	MIN Splice
#4	2'-0"
#5	2'-0"
#6	2'-1"
#7	2'-11"
#8	3'-9"
#9	4'-9"
#10	6'-1"

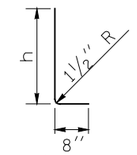

BAR E
At 1'-6" centers

Bar	Radius
#5	9"
#6	11"
#7	1'-1"
#8	1'-6"
#9	1'-8"
#10	2'-8"

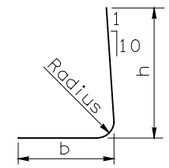

BARS K AND M

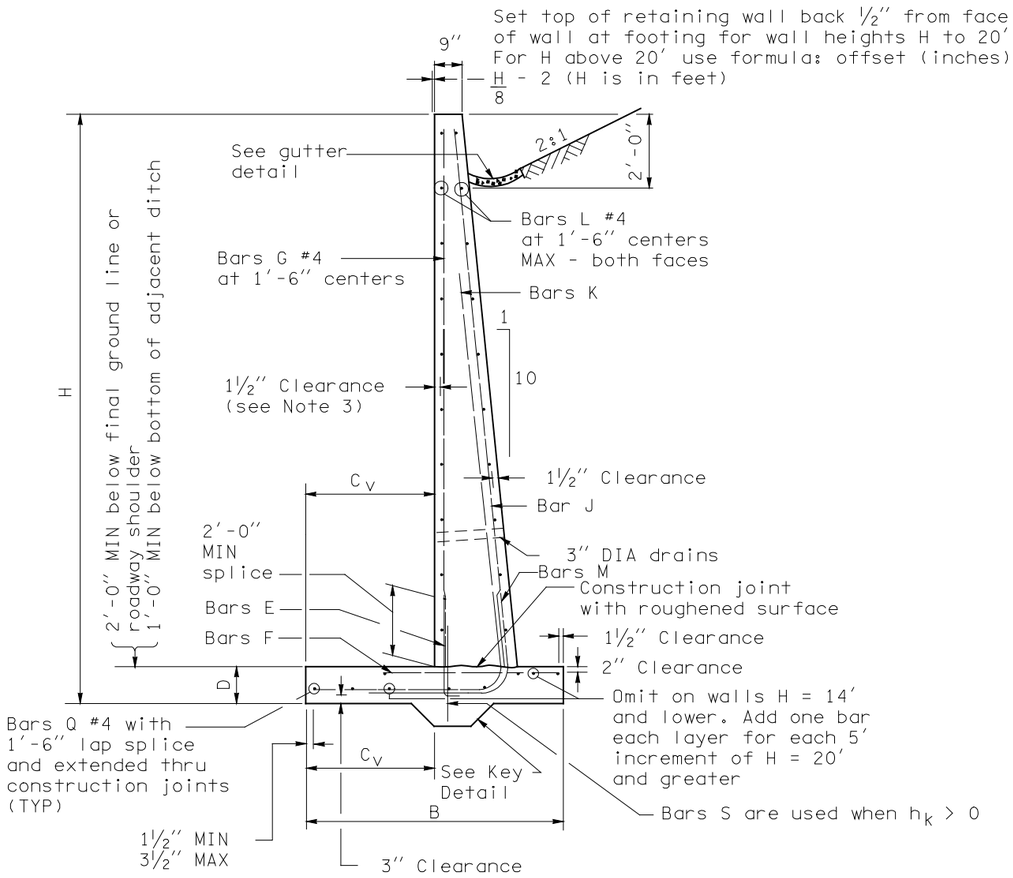

SECTION - VERTICAL FACE

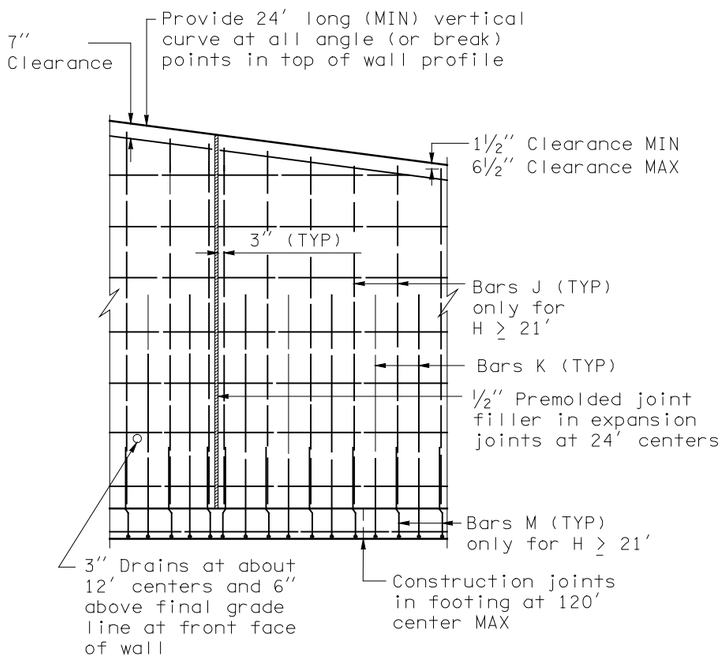

ELEVATION

WALL DESIGN WITH VERTICAL FRONT FACE AND 2:1 BACKSLOPE

JEROME A. WEIGEL
STATE OF WASHINGTON
14742
REGISTERED
PROFESSIONAL ENGINEER

EXPIRES JUNE 29, 2000

REINFORCED CONCRETE RETAINING WALL TYPE 5 AND 5 SW STANDARD PLAN D-1e

SHEET 1 OF 2 SHEETS

NOTE: THIS PLAN IS NOT A LEGAL ENGINEERING DOCUMENT BUT AN ELECTRONIC DUPLICATE. THE ORIGINAL, SIGNED BY THE ENGINEER AND APPROVED FOR PUBLICATION, IS KEPT ON FILE AT THE WASHINGTON STATE DEPARTMENT OF TRANSPORTATION. A COPY MAY BE OBTAINED UPON REQUEST.

DATE	REVISION	BY
10/99	Corrected Section - Vertical Face note and added note 5.	TWS

APPROVED FOR PUBLICATION

Clifford E. Mansfield — *10/06/99*

DEPUTY STATE DESIGN ENGINEER — DATE

WASHINGTON STATE DEPARTMENT OF TRANSPORTATION
OLYMPIA, WASHINGTON

EFFECTIVE: JANUARY 7, 2002 TO AUGUST 4, 2002

EFFECTIVE: JANUARY 7, 2002 TO AUGUST 4, 2002

DIMENSIONS					FOOTING REINFORCEMENT																STEM REINFORCEMENT				MATERIAL QUANTITY		
					BAR E (size #4)		BAR F				BAR K				BAR M						BAR J			BAR G (size #4)			
H (ft)	B	C_V	D	h_K	LENGTH	h	SIZE	SPAC.	LENGTH	SIZE	SPAC.	LENGTH	h	b	SIZE	SPAC.	LENGTH	h	b	SIZE	SPAC.	LENGTH	LENGTH	CONCRETE (CY/LF)	STEEL (lbs/LF)	H (ft)
5	3′-0″	1′-0″	1′-0″	0	3′-5″	2′-9″	4	1′-0″	2′-0″	5	1′-0″	6′-3″	4′-7″	2′-0″	N/A	N/A	N/A	N/A	N/A	N/A	N/A	N/A	3′-10″	0.252	21.017	5
6	3′-0″	1′-0″	1′-0″	0	3′-5″	2′-9″	4	1′-0″	2′-0″	5	1′-0″	7′-3″	5′-7″	2′-1″	N/A	N/A	N/A	N/A	N/A	N/A	N/A	N/A	4′-10″	0.296	23.928	6
7	3′-3″	1′-0″	1′-0″	0	3′-5″	2′-9″	4	1′-0″	2′-1″	5	1′-0″	8′-4″	6′-7″	2′-2″	N/A	N/A	N/A	N/A	N/A	N/A	N/A	N/A	5′-10″	0.354	25.554	7
8	3′-6″	1′-0″	1′-0″	0	3′-5″	2′-9″	4	1′-0″	2′-2″	5	1′-0″	9′-5″	7′-7″	2′-3″	N/A	N/A	N/A	N/A	N/A	N/A	N/A	N/A	6′-10″	0.415	28.526	8
9	4′-0″	1′- 3″	1′-0″	0	3′-5″	2′-9″	4	1′-0″	2′-4″	5	1′-0″	10′-10″	8′-7″	2′-8″	N/A	N/A	N/A	N/A	N/A	N/A	N/A	N/A	7′-10″	0.489	31.896	9
10	4′-6″	1′- 3″	1′-0″	0	3′-5″	2′-9″	4	10″	2′-9″	5	1′-0″	11′-11″	9′-7″	2′-9″	N/A	N/A	N/A	N/A	N/A	N/A	N/A	N/A	8′-10″	0.567	34.117	10
11	5′-0″	1′- 6″	1′-0″	0	3′-5″	2′-9″	5	1′-0″	3′-3″	5	1′-0″	13′-3″	10′-7″	3′-1″	N/A	N/A	N/A	N/A	N/A	N/A	N/A	N/A	9′-10″	0.648	38.474	11
12	5′-6″	1′- 6″	1′-0″	0	3′-5″	2′-9″	5	9″	3′-8″	5	11″	14′-4″	11′-7″	3′-2″	N/A	N/A	N/A	N/A	N/A	N/A	N/A	N/A	10′-10″	0.733	44.454	12
13	6′-3″	1′- 9″	1′-0″	0	3′-5″	2′-9″	5	7″	4′-1″	5	9″	15′-8″	12′-7″	3′-6″	N/A	N/A	N/A	N/A	N/A	N/A	N/A	N/A	11′-10″	0.831	58.247	13
14	6′-9″	1′- 9″	1′-0″	0	3′-5″	2′-9″	6	7″	4′-11″	5	7″	16′-10″	13′-7″	3′-8″	N/A	N/A	N/A	N/A	N/A	N/A	N/A	N/A	12′-10″	0.924	68.698	14
15	7′-6″	2′-0″	1′-3″	0	3′-8″	3′-0″	6	7″	5′-4″	5	6″	18′-3″	14′-7″	4′-0″	N/A	N/A	N/A	N/A	N/A	N/A	N/A	N/A	13′-5″	1.079	78.188	15
16	8′-3″	2′- 3″	1′-3″	0	3′-8″	3′-0″	6	5″	5′-9″	5	6″	19′-6″	15′-7″	4′-4″	N/A	N/A	N/A	N/A	N/A	N/A	N/A	N/A	14′-5″	1.195	89.572	16
17	8′-9″	2′- 3″	1′-6″	0	3′-11″	3′-3″	6	5″	6′-2″	5	5″	20′-8″	16′-7″	4′-5″	N/A	N/A	N/A	N/A	N/A	N/A	N/A	N/A	15′-4″	1.362	104.579	17
18	9′-3″	2′- 3″	1′-6″	0	3′-11″	3′-3″	7	6″	7′-5″	6	6″	21′-8″	17′-7″	4′-6″	N/A	N/A	N/A	N/A	N/A	N/A	N/A	N/A	16′-4″	1.490	126.468	18
19	9′-6″	2′- 6″	1′-9″	0	4′-2″	3′-6″	7	6″	7′-4″	6	5″	23′-0″	18′-7″	4′-10″	N/A	N/A	N/A	N/A	N/A	N/A	N/A	N/A	17′-1″	1.646	145.732	19
20	10′-0″	3′-0″	2′-0″	0	4′-5″	3′-9″	7	6″	7′-3″	6	5″	24′-8″	19′-7″	5′-6″	N/A	N/A	N/A	N/A	N/A	N/A	N/A	N/A	17′-10″	1.841	151.845	20
21	10′-6″	3′-6″	2′-0″	0	4′-5″	3′-9″	7	6″	7′-2″	7	1′-0″	17′-5″	11′-11″	6′-1″	7	1′-0″	10′-3″	4′-10″	6′-1″	7	1′-0″	18′-11″	18′-10″	1.974	166.668	21
22	11′-0″	3′-9″	2′-0″	0	4′-5″	3′-9″	7	6″	7′-4″	7	11″	18′-2″	12′-4″	6′-5″	7	11″	10′-7″	4′-10″	6′-5″	7	11″	19′-11″	19′-10″	2.111	188.243	22
23	11′-6″	3′-9″	2′-3″	0	4′-8″	4′-0″	7	6″	7′-9″	8	1′-0″	19′-9″	13′-11″	6′-6″	8	1′-0″	11′-11″	6′-1″	6′-6″	8	1′-0″	20′-8″	20′-7″	2.332	209.377	23
24	12′-3″	4′-0″	2′-3″	0	4′-8″	4′-0″	8	7″	9′-2″	8	11″	20′-6″	14′-4″	6′-10″	8	11″	12′-3″	6′ 1″	6′-8″	8	11″	21′-8″	21′-7″	2.501	240.204	24
25	12′-9″	4′-0″	2′-6″	0	4′-11″	4′-3″	8	6″	9′-7″	8	10″	21′-2″	14′-10″	7′-0″	8	10″	12′-6″	6′-4″	7′-0″	8	10″	22′-5″	22′-4″	2.743	282.675	25
26	13′-0″	4′-6″	2′-6″	2′-0″	4′-11″	4′-3″	8	6″	9′-3″	8	10″	22′-1″	15′-2″	7′-7″	8	10″	13′-1″	6′-4″	7′-7″	8	10″	23′-5″	23′-4″	3.101	295.370	26
27	13′-6″	4′-9″	2′-6″	2′-0″	4′-11″	4′-3″	8	6″	9′-5″	9	11″	23′-10″	16′-8″	7′-11″	9	11″	14′-6″	7′-5″	7′-11″	9	11″	24′-5″	24′-4″	3.264	332.292	27
28	14′-0″	5′-0″	2′-9″	2′-0″	5′-2″	4′-6″	8	6″	9′-7″	9	10″	24′-8″	17′-2″	8′-3″	9	10″	15′-1″	7′-8″	8′-3″	9	10″	25′-2″	25′-1″	3.530	365.742	28
29	14′-6″	5′- 6″	2′-9″	2′-0″	5′-2″	4′-6″	8	6″	9′-5″	9	10″	25′-8″	17′-7″	8′-10″	9	10″	15′-7″	7′-8″	8′-10″	9	10″	26′-2″	26′-1″	3.704	393.720	29
30	15′-0″	6′- 0″	2′-9″	2′-0″	5′-2″	4′-6″	8	6″	9′-4″	9	9″	26′-8″	17′-11″	9′-6″	9	9″	16′-3″	7′-8″	9′-6″	9	9″	27′-2″	27′-1″	3.882	440.386	30
31	15′-6″	6′- 3″	3′-0″	2′-0″	5′-5″	4′-9″	8	6″	9′-6″	10	10″	28′-9″	19′-9″	9′-10″	10	10″	18′-2″	9′-3″	9′-10″	10	10″	27′-11″	27′-11″	4.174	491.523	31
32	16′-0″	6′- 6″	3′-0″	2′-0″	5′-5″	4′-9″	8	6″	9′-8″	10	9″	29′-6″	20′-2″	10′-2″	10	9″	18′-6″	9′-3″	10′-2″	10	9″	28′-11″	28′-11″	4.363	549.081	32
33	16′-9″	6′- 9″	3′-3″	2′-0″	5′-8″	5′-0″	9	7″	11′-2″	10	9″	30′-4″	20′-8″	10′-6″	10	10″	19′-1″	9′-6″	10′-6″	10	9″	29′-8″	29′-5″	4.704	575.423	33
34	17′-3″	7′-3″	3′-6″	2′-0″	5′-11″	5′-3″	9	7″	11′-1″	10	9″	31′-5″	21′-3″	11′-1″	10	9″	19′-11″	9′-9″	11′-1″	10	9″	30′-5″	30′-4″	5.028	592.018	34
35	17′-9″	7′- 6″	3′-6″	2′-0″	5′-11″	5′-3″	9	7″	11′-3″	10	8″	32′-3″	21′-7″	11′-6″	10	8″	20′-4″	9′-9″	11′-6″	10	8″	31′-5″	31′-4″	5.236	666.586	35

WALL DESIGN WITH VERTICAL FRONT FACE AND 2:1 BACKSLOPE

JEROME A. WEIGEL
STATE OF WASHINGTON
14742
REGISTERED
PROFESSIONAL ENGINEER

EXPIRES JUNE 29, 2000

REINFORCED CONCRETE RETAINING WALL TYPE 5 AND 5 SW STANDARD PLAN D-1e

SHEET 2 OF 2 SHEETS

NOTE: THIS PLAN IS NOT A LEGAL ENGINEERING DOCUMENT BUT AN ELECTRONIC DUPLICATE. THE ORIGINAL, SIGNED BY THE ENGINEER AND APPROVED FOR PUBLICATION, IS KEPT ON FILE AT THE WASHINGTON STATE DEPARTMENT OF TRANSPORTATION. A COPY MAY BE OBTAINED UPON REQUEST.

DATE	REVISION	BY
10/99	New Approval Date	TWS

APPROVED FOR PUBLICATION

Clifford E. Mansfield — DEPUTY STATE DESIGN ENGINEER — *10/06/99* DATE

WASHINGTON STATE DEPARTMENT OF TRANSPORTATION
OLYMPIA, WASHINGTON

EFFECTIVE: JANUARY 7, 2002 TO AUGUST 4, 2002

EFFECTIVE: JANUARY 7, 2002 TO AUGUST 4, 2002

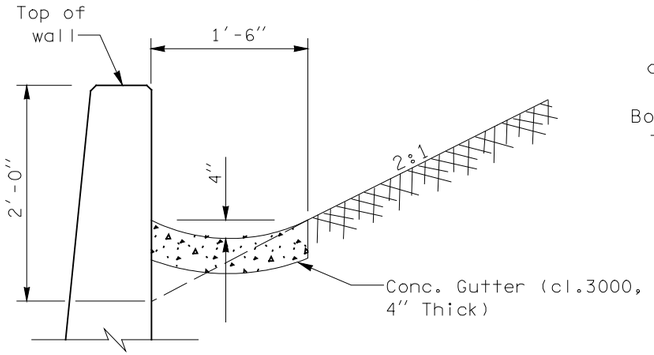

GUTTER DETAIL

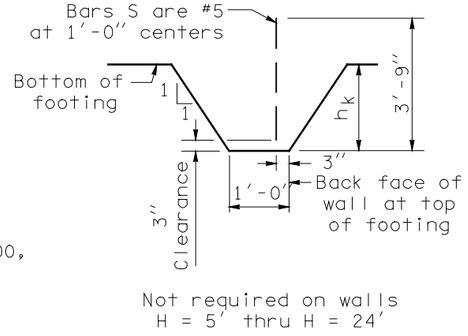

Not required on walls H = 5' thru H = 24'

KEY DETAIL

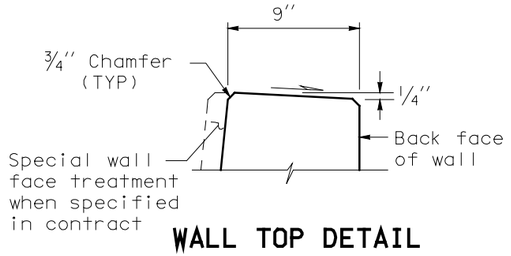

WALL TOP DETAIL

NOTES

1. All concrete shall be Class 4000 except as noted.
2. For backfill requirements, see Standard Plan "D-4".
3. When Wall Type 6-SW (saltwater) is specified, the concrete cover over steel in the front face and the total wall thickness shall be increased by 1".
4. When Wall Type 6-SW (saltwater) is specified, concrete in the table column "Material Quantity" shall be increased by 0.003 x H CY/LF.
5. Concrete in the 24 foot wall sections shall be placed separately between expansion joints with a minimum 12 hour period between concrete placement.

Bar	MIN Splice
#4	2' - 0"
#5	2' - 0"
#6	2' - 1"
#7	2' - 11"
#8	3' - 9"
#9	4' - 9"
#10	6' - 1"

Bar	Radius
#5	9"
#6	11"
#7	1' - 1"
#8	1' - 3"
#9	1' - 6"
#10	1' - 8"

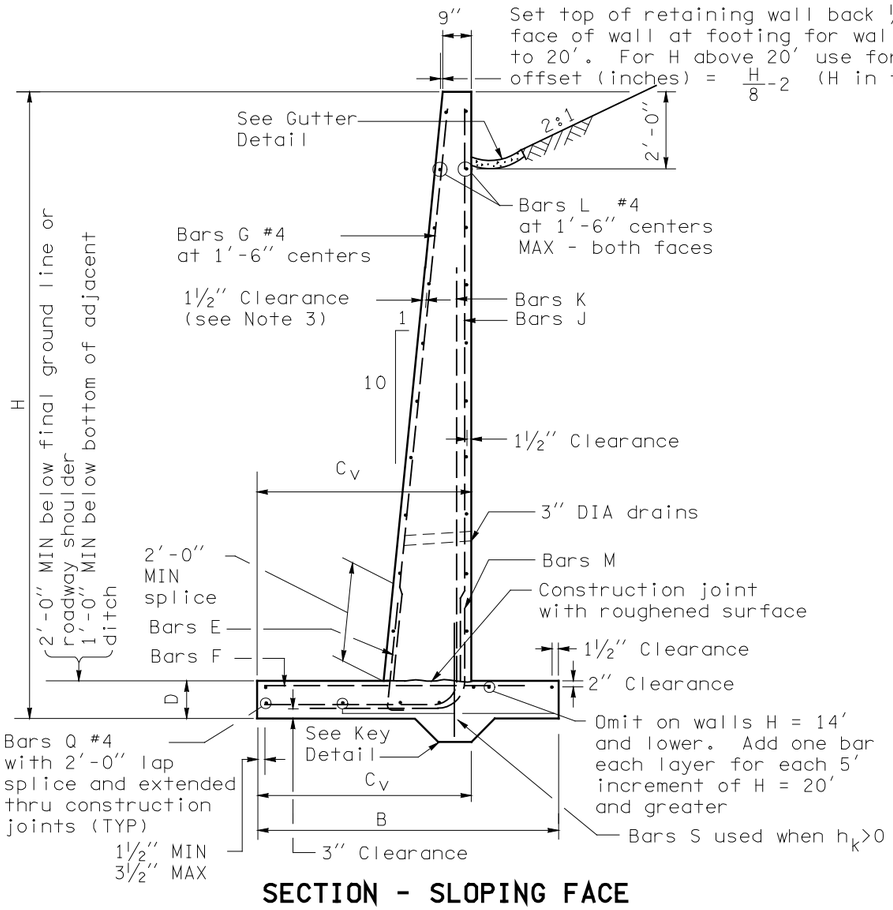

SECTION - SLOPING FACE

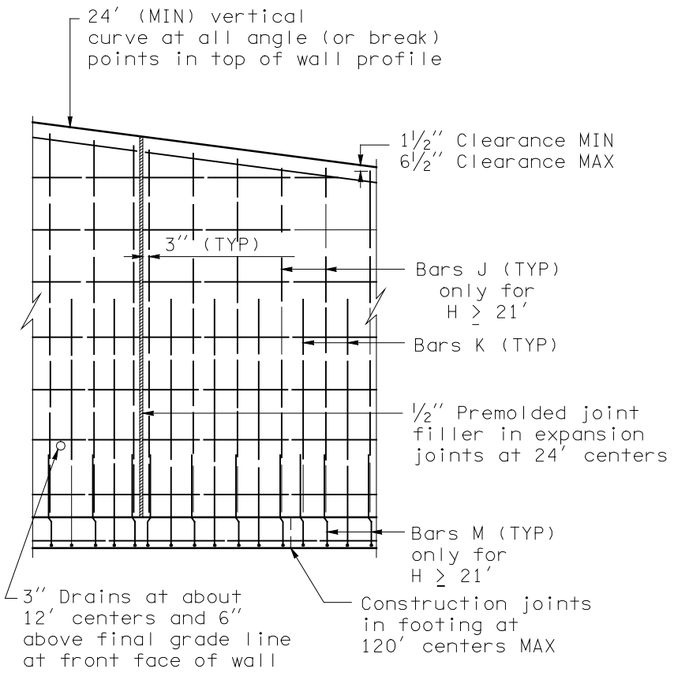

ELEVATION

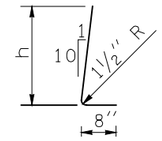

BAR E
At 1'-6" centers

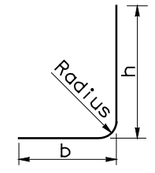

BARS K AND M

WALL DESIGN WITH SLOPING FRONT FACE AND 2:1 BACKSLOPE

JEROME A. WEIGEL
STATE OF WASHINGTON
14742
REGISTERED
PROFESSIONAL ENGINEER

EXPIRES JUNE 29, 2000

REINFORCED CONCRETE RETAINING WALL TYPE 6 AND 6 SW STANDARD PLAN D-1f

SHEET 1 OF 2 SHEETS

NOTE: THIS PLAN IS NOT A LEGAL ENGINEERING DOCUMENT BUT AN ELECTRONIC DUPLICATE. THE ORIGINAL, SIGNED BY THE ENGINEER AND APPROVED FOR PUBLICATION, IS KEPT ON FILE AT THE WASHINGTON STATE DEPARTMENT OF TRANSPORTATION. A COPY MAY BE OBTAINED UPON REQUEST.

DATE	REVISION	BY
10/99	Added note 5.	TWS

APPROVED FOR PUBLICATION

Clifford E. Mansfield — DEPUTY STATE DESIGN ENGINEER — *10/06/99* DATE

WASHINGTON STATE DEPARTMENT OF TRANSPORTATION
OLYMPIA, WASHINGTON

EFFECTIVE: JANUARY 7, 2002 TO AUGUST 4, 2002

EFFECTIVE: JANUARY 7, 2002 TO AUGUST 4, 2002

DIMENSIONS					FOOTING REINFORCEMENT															STEM REINFORCEMENT				MATERIAL QUANTITY		
					BAR E (size #4)		BAR F			BAR K					BAR M					BAR J			BAR G (size #4)			
H (ft)	B	C_V	D	h_k	LENGTH	h	SIZE	SPACING	LENGTH	SIZE	SPACING	LENGTH	h	b	SIZE	SPACING	LENGTH	h	b	SIZE	SPACING	LENGTH	LENGTH	CONCRETE (CY/LF)	STEEL (LBS/LF)	H (ft)
5	2′-6″	2′- 0″	1′-0″	0	3′- 5″	2′- 9″	#4	1′-0″	1′- 9″	#5	1′- 0″	5′-11″	4′- 7″	1′- 8″	N/A	N/A	N/A	N/A	N/A	N/A	N/A	N/A	3′-10″	0.233	19.253	5
6	2′-9″	2′- 0″	1′-0″	0	3′- 5″	2′- 9″	#4	1′-0″	2′- 0″	#5	1′- 0″	6′-11″	5′- 7″	1′- 8″	N/A	N/A	N/A	N/A	N/A	N/A	N/A	N/A	4′-10″	0.287	22.244	6
7	3′-0″	2′- 3″	1′-0″	0	3′- 5″	2′- 9″	#4	1′-0″	2′- 0″	#5	1′- 0″	8′- 1″	6′- 7″	1′-10″	N/A	N/A	N/A	N/A	N/A	N/A	N/A	N/A	5′-10″	0.349	23.906	7
8	3′-0″	2′- 3″	1′-0″	0	3′- 5″	2′- 9″	#4	1′-0″	2′- 0″	#5	1′- 0″	9′- 1″	7′- 7″	1′-10″	N/A	N/A	N/A	N/A	N/A	N/A	N/A	N/A	6′-10″	0.396	26.731	8
9	3′-6″	2′- 3″	1′-0″	0	3′- 5″	2′- 9″	#4	1′-0″	2′- 6″	#5	1′- 0″	10′- 1″	8′- 7″	1′-10″	N/A	N/A	N/A	N/A	N/A	N/A	N/A	N/A	7′-10″	0.470	29.889	9
10	3″-9″	2′- 9″	1′-0″	0	3′- 5″	2′- 9″	#4	1′-0″	2′- 3″	#5	1′- 0″	11′- 6″	9′- 7″	2′- 4″	N/A	N/A	N/A	N/A	N/A	N/A	N/A	N/A	8′-11″	0.539	31.682	10
11	4′-3″	3′- 0″	1′-0″	0	3′- 5″	2′- 9″	#4	1′-0″	2′- 6″	#5	1′- 0″	12′-11″	10′- 7″	2′- 8″	N/A	N/A	N/A	N/A	N/A	N/A	N/A	N/A	9′-11″	0.620	35.108	11
12	5′-0″	3′- 3″	1′-0″	0	3′- 5″	2′- 9″	#4	1′-0″	3′- 0″	#5	1′- 0″	14′- 1″	11′- 7″	2′-11″	N/A	N/A	N/A	N/A	N/A	N/A	N/A	N/A	10′-11″	0.715	39.108	12
13	5′-9″	3′- 6″	1′-0″	0	3′- 5″	2′- 9″	#4	9″	3′- 6″	#5	9″	15′- 4″	12′- 7″	3′- 1″	N/A	N/A	N/A	N/A	N/A	N/A	N/A	N/A	11′-11″	0.813	47.301	13
14	6′-3″	3′- 6″	1′-0″	0	3′- 5″	2′- 9″	#5	9″	4′- 4″	#5	9″	16′- 4″	13′- 7″	3′- 1″	N/A	N/A	N/A	N/A	N/A	N/A	N/A	N/A	12′-11″	0.906	53.382	14
15	7′-0″	3′- 9″	1′-0″	0	3′- 5″	2′- 9″	#6	8″	5′- 4″	#6	9″	17′- 6″	14′- 7″	3′- 4″	N/A	N/A	N/A	N/A	N/A	N/A	N/A	N/A	13′-11″	1.011	74.154	15
16	7′-6″	3′- 9″	1′-0″	0	3′- 5″	2′- 9″	#6	6″	5′-10″	#6	8″	18′- 6″	15′- 7″	3′- 4″	N/A	N/A	N/A	N/A	N/A	N/A	N/A	N/A	14′-11″	1.111	86.742	16
17	8′-0″	4′- 0″	1′-3″	0	3′- 8″	3′- 0″	#6	6″	6′- 1″	#6	7″	19′-10″	16′- 7″	3′- 8″	N/A	N/A	N/A	N/A	N/A	N/A	N/A	N/A	15′- 8″	1.267	99.328	17
18	8′-9″	4′- 3″	1′-3″	0	3′- 8″	3′- 0″	#6	5″	6′- 7″	#6	6″	21′- 0″	17′- 7″	3′-10″	N/A	N/A	N/A	N/A	N/A	N/A	N/A	N/A	16′- 8″	1.390	117.247	18
19	9′-0″	4′- 6″	1′-6″	0	3′-11″	3′- 3″	#7	7″	7′- 5″	#6	6″	22′- 3″	18′- 7″	4′- 1″	N/A	N/A	N/A	N/A	N/A	N/A	N/A	N/A	17′- 5″	1.553	125.039	19
20	9′-3″	4′- 9″	1′-6″	0	3′-11″	3′- 3″	#7	7″	7′- 5″	#7	7″	23′- 5″	19′- 7″	4′- 4″	N/A	N/A	N/A	N/A	N/A	N/A	N/A	N/A	18′- 5″	1.662	142.034	20
21	9′-9″	5′- 0″	1′-6″	0	3′-11″	3′- 3″	#7	6″	7′- 8″	#7	1′- 0″	12′- 8″	8′- 6″	4′- 8″	#7	1′- 0″	8′- 6″	4′- 4″	4′- 8″	#7	1′- 0″	19′- 4″	19′- 5″	1.788	149.230	21
22	10′-3″	5′- 3″	1′-9″	0	4′- 2″	3′- 6″	#7	6″	7′-11″	#7	11″	13′- 5″	9′- 1″	4′-10″	#7	11″	8′-11″	4′- 7″	4′-10″	#7	11″	20′- 1″	20′- 2″	1.986	160.101	22
23	10′-9″	5′- 6″	1′-9″	0	4′- 2″	3′- 6″	#7	6″	8′- 2″	#7	10″	14′- 0″	9′- 5″	5′- 1″	#7	1′-10″	9′- 2″	4′- 7″	5′- 1″	#7	10″	21′- 1″	21′- 2″	2.123	171.973	23
24	11′-3″	5′- 9″	2′-0″	0	4′- 5″	3′- 9″	#7	6″	8′- 5″	#7	10″	14′-10″	10′- 0″	5′- 4″	#7	1′-10″	9′- 8″	4′-10″	5′- 4″	#7	10″	21′-10″	21′-11″	2.341	181.868	24
25	11′-6″	6′- 3″	2′-0″	2′-0″	4′- 5″	3′- 9″	#7	6″	8′- 5″	#7	9″	15′- 8″	10′- 4″	5′-10″	#7	9″	10′- 2″	4′-10″	5′-10″	#7	9″	22′-10″	22′-11″	2.693	192.607	25
26	12′-0″	6′- 6″	2′-3″	2′-0″	4′- 8″	4′- 0″	#7	6″	8′- 5″	#7	9″	16′- 5″	10′-10″	6′- 1″	#7	9″	10′- 8″	5′- 1″	6′- 1″	#7	9″	23′- 7″	23′- 8″	2.927	202.605	26
27	12′-6″	7′- 0″	2′-3″	2′-0″	4′- 8″	4′- 0″	#7	6″	8′- 5″	#7	8″	17′- 5″	11′- 3″	6′- 8″	#7	8″	11′- 3″	5′- 1″	6′- 8″	#7	8″	24′- 7″	24′- 8″	3.086	213.332	27
28	13′-0″	7′- 3″	2′-6″	2′-0″	4′-11″	4′- 3″	#7	6″	8′- 8″	#8	9″	18′- 0″	11′- 9″	6′-10″	#8	9″	12′- 7″	6′- 4″	6′-10″	#8	9″	25′- 4″	25′- 6″	3.338	255.188	28
29	13′-6″	7′- 6″	2′-6″	2′-0″	4′-11″	4′- 3″	#8	6″	9′-11″	#8	8″	18′- 8″	12′- 2″	7′- 1″	#8	8″	12′-10″	6′- 4″	7′- 1″	#8	8″	26′- 4″	26′- 6″	3.509	299.649	29
30	14′-0″	8′- 0″	2′-9″	2′-0″	5′- 2″	4′- 6″	#8	6″	9′-11″	#8	8″	19′- 9″	12′- 8″	7′- 8″	#8	8″	13′- 8″	6′- 7″	7′- 8″	#8	8″	27′- 1″	27′- 3″	3.780	317.688	30
31	14′-6″	8′- 3″	2′-9″	2′-0″	5′- 2″	4′- 6″	#8	6″	10′- 2″	#8	8″	20′- 4″	13′- 1″	7′-10″	#8	8″	13′-10″	6′- 7″	7′-10″	#8	8″	28′- 1″	28′- 3″	3.962	326.716	31
32	15′-0″	8′- 6″	3′-0″	2′-0″	5′- 5″	4′- 9″	#8	6″	10′- 5″	#9	9″	21′- 0″	13′- 5″	8′- 1″	#9	9″	15′- 4″	7′-11″	8′- 1″	#9	9″	28′-11″	29′- 0″	4.252	393.547	32
33	15′-6″	8′- 9″	3′-0″	2′-0″	5′- 5″	4′- 9″	#8	6″	10′- 8″	#9	8″	21′- 8″	14′- 0″	8′- 4″	#9	8″	15′- 7″	7′-11″	8′- 4″	#9	8″	29′-11″	30′- 0″	4.444	424.671	33
34	16′-3″	9′- 3″	3′-3″	2′-0″	5′- 8″	5′- 0″	#8	6″	10′-11″	#9	8″	22′- 8″	14′- 6″	8′-10″	#9	8″	16′- 4″	8′- 2″	8′-10″	#9	8″	30′- 7″	30′- 9″	4.783	440.218	34
35	16′-9″	9′- 6″	3′-6″	2′-0″	5′-11″	5′- 3″	#8	5″	11′- 2″	#10	8″	23′- 4″	15′- 0″	9′- 1″	#10	8″	18′- 1″	9′- 9″	9′- 1″	#10	8″	31′- 4″	31′- 6″	5.106	544.207	35

WALL DESIGN WITH SLOPING
FRONT FACE AND 2:1 BACKSLOPE

JEROME A. WEIGEL
STATE OF WASHINGTON
14742
REGISTERED
PROFESSIONAL ENGINEER

EXPIRES JUNE 29, 2000

REINFORCED CONCRETE RETAINING WALL TYPE 6 AND 6 SW STANDARD PLAN D-1f

SHEET 2 OF 2 SHEETS

NOTE: THIS PLAN IS NOT A LEGAL ENGINEERING DOCUMENT BUT AN ELECTRONIC DUPLICATE. THE ORIGINAL, SIGNED BY THE ENGINEER AND APPROVED FOR PUBLICATION, IS KEPT ON FILE AT THE WASHINGTON STATE DEPARTMENT OF TRANSPORTATION. A COPY MAY BE OBTAINED UPON REQUEST.

DATE	REVISION	BY
10/99	New approval date.	TWS

APPROVED FOR PUBLICATION

Clifford E. Mansfield — *10/06/99*

DEPUTY STATE DESIGN ENGINEER — DATE

WASHINGTON STATE DEPARTMENT OF TRANSPORTATION
OLYMPIA, WASHINGTON

EFFECTIVE: JANUARY 7, 2002 TO AUGUST 4, 2002

EFFECTIVE: JANUARY 7, 2002 TO AUGUST 4, 2002

WALL HT H	TYPE 1A t	TYPE 1A DEPTH D1	TYPE 1A DEPTH D2	TYPE 1A BAR D	TYPE 1B t	TYPE 1B DEPTH D1	TYPE 1B DEPTH D2	TYPE 1B BAR D	TYPE 1C t	TYPE 1C DEPTH D1	TYPE 1C DEPTH D2	TYPE 1C BAR D	TYPE 1D t	TYPE 1D DEPTH D1	TYPE 1D DEPTH D2	TYPE 1D BAR D	WALL HT H
6'-0"	5"	3'-6"	3'-3"	#3 at 15"	5"	3'-9"	3'-6"	#3 at 15"	5"	3'-6"	3'-3"	#3 at 15"	5"	4'-0"	3'-6"	#3 at 15"	6'-0"
8'-0"	5"	3'-9"	3'-3"	#3 at 15"	5"	4'-0"	3'-9"	#3 at 12"	5"	3'-9"	3'-6"	#3 at 15"	5"	4'-3"	3'-9"	#3 at 10"	8'-0"
10'-0"	5"	4'-0"	3'-6"	#3 at 13"	5"	4'-6"	4'-0"	#4 at 15"	5"	4'-3"	3'-9"	#3 at 10"	5"	4'-6"	4'-0"	#4 at 12"	10'-0"
12'-0"	5"	4'-3"	3'-9"	#3 at 9"	5"	4'-9"	4'-3"	#4 at 10"	5"	4'-6"	4'-0"	#4 at 12"	5"	5'-0"	4'-6"	#4 at 10"	12'-0"
14'-0"	5"	4'-6"	4'-0"	#4 at 12'	5"	5'-0"	4'-6"	#4 at 9"	5"	4'-9"	4'-3"	#4 at 10"	5"	5'-3"	4'-9"	#5 at 11"	14'-0"
16'-0"	5"	4'-9"	4'-3"	#4 at 10'	5"	5'-3"	4'-9"	#5 at 11"	5"	5'-0"	4'-6"	#4 at 9"	5"	5'-9"	5'-0"	#5 at 8"	16'-0"
18'-0"	5"	5'-0"	4'-6"	#4 at 9"	5"	5'-6"	5'-0"	#5 at 8"	5"	5'-3"	4'-9"	#5 at 11"	5"	6'-0"	5'-3"	#6 at 9"	18'-0"
20'-0"	5"	5'-3"	4'-9"	#4 at 7"	5"	5'-9"	5'-3"	#5 at 7"	5"	5'-6"	5'-0"	#5 at 7"	6"	6'-3"	5'-6"	#6 at 9"	20'-0"
22'-0"	5"	5'-6"	5'-0"	#4 at 6"	6"	6'-0"	5'-6"	#5 at 6"	5"	5'-9"	5'-3"	#5 at 6"	6"	6'-6"	5'-9"	#6 at 7"	22'-0"
24'-0"	5"	5'-9"	5'-3"	#5 at 8"	6"	6'-3"	5'-9"	#6 at 7"	6"	6'-0"	5'-6"	#6 at 7"	7"	6'-9"	6'-0"	#6 at 6"	24'-0"

NOTES

1. Wall to be designated Noise Barrier Type 1A, 1B, 1C or 1D. The Contract specifies actual wall designations.
2. For intermediate wall heights, use the next higher H.
3. Panels shall have at least 3 feet of level ground on each side.
4. Construction joints in the footing shall be spaced at 120 feet maximum.
5. The Contract specifies actual foundation requirements D1 or D2.

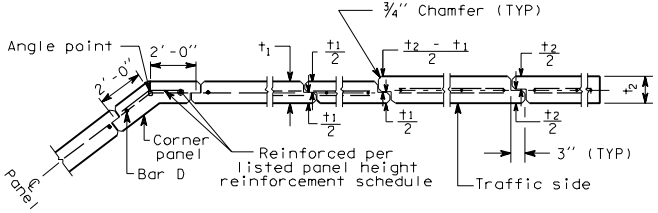

JOINT AND CORNER DETAIL

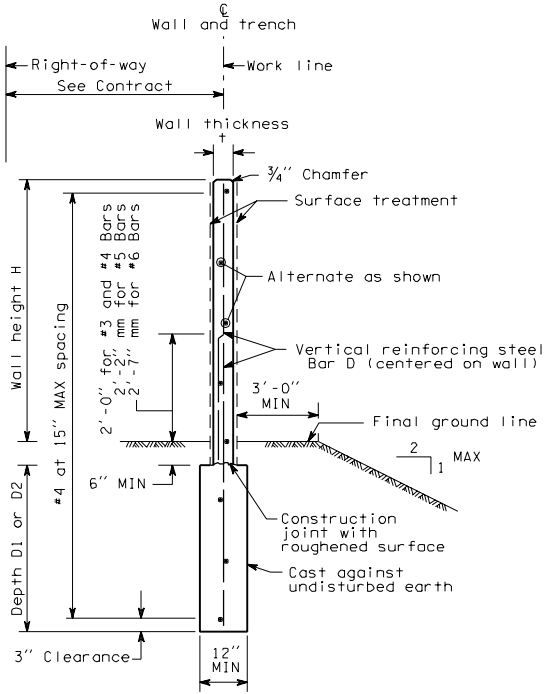

TYPICAL SECTION

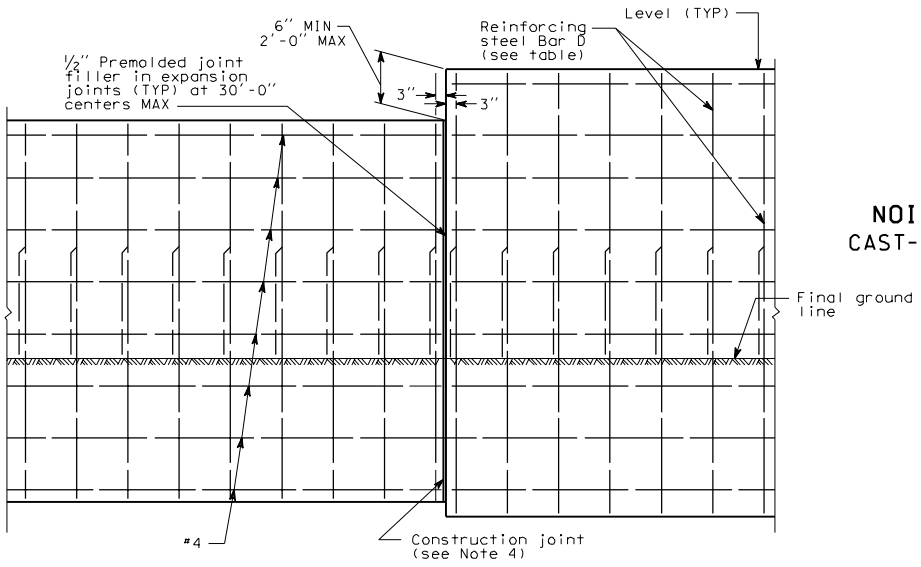

ELEVATION

NOISE BARRIER - TYPE 1
CAST-IN-PLACE CONCRETE WALL ON TRENCH FOOTING

EFFECTIVE: JANUARY 7, 2002 TO AUGUST 4, 2002

WALL HT H	TYPE 2A W	†	BARS A and F	BAR B	BARS D and E	TYPE 2B W	†	BARS A and F	BAR B	BARS D and E	TYPE 2C W	†	BARS A and F	BAR B	BARS D and E	TYPE 2D W	†	BARS A and F	BAR B	BARS D and E	WALL HT H
6′-0″	2′-0″	5″	3 - #4	#4 at 18″	#3 at 15″	2′-3″	5″	3 - #4	#4 at 18″	#3 at 12″	2′-0″	5″	3 - #4	#4 at 18″	#3 at 15″	2′-6″	5″	3 - #4	#4 at 18″	#3 at 11″	6′-0″
8′-0″	2′-3″	5″	3 - #4	#4 at 18″	#3 at 12″	2′-9″	5″	3 - #4	#4 at 18″	#4 at 15″	2′-6″	5″	3 - #4	#4 at 18″	#3 at 10″	3′-3″	5″	5 - #4	#4 at 18″	#4 at 12″	8′-0″
10′-0″	2′-6″	5″	3 - #4	#4 at 18″	#3 at 9″	3′-3″	5″	5 - #4	#4 at 18″	#4 at 10″	2′-9″	5″	3 - #4	#4 at 18″	#4 at 12″	3′-6″	5″	5 - #4	#4 at 18″	#4 at 10″	10′-0″
12′-0″	3′-0″	5″	3 - #4	#4 at 18″	#4 at 12″	3′-9″	5″	5 - #4	#4 at 18″	#4 at 10″	3′-3″	5″	3 - #4	#4 at 18″	#4 at 10″	4′-3″	5″	5 - #4	#4 at 18″	#5 at 12″	12′-0″
14′-0″	3′-3″	5″	3 - #4	#4 at 18″	#4 at 10″	4′-3″	5″	5 - #4	#4 at 18″	#5 at 11″	3′-9″	5″	3 - #4	#4 at 18″	#4 at 9″	4′-9″	5″	5 - #4	#4 at 18″	#5 at 8″	14′-0″
16′-0″	3′-9″	5″	5 - #4	#4 at 18″	#4 at 9″	4′-9″	5″	5 - #4	#4 at 18″	#6 at 12″	4′-3″	5″	5 - #4	#4 at 18″	#5 at 11″	5′-6″	5″	5 - #4	#4 at 18″	#6 at 9″	16′-0″
18′-0″	4′-0″	5″	5 - #4	#4 at 18″	#5 at 11″	5′-3″	5″	5 - #4	#4 at 18″	#6 at 9″	4′-6″	5″	5 - #4	#4 at 18″	#6 at 12″	6′-0″	6″	5 - #4	#4 at 18″	#6 at 9″	18′-0″
20′-0″	5′-0″	5″	5 - #4	#4 at 18″	#5 at 9″	6′-0″	6″	5 - #4	#4 at 18″	#6 at 9″	5′-3″	5″	5 - #4	#4 at 18″	#6 at 10″	6′-6″	6″	5 - #4	#4 at 12″	#6 at 7¼″	20′-0″
22′-0″	5′-6″	5″	5 - #4	#4 at 18″	#5 at 7″	6′-3″	6″	5 - #4	#4 at 12″	#6 at 8″	5′-9″	6″	5 - #4	#4 at 18″	#6 at 9″	7′-0″	7″	5 - #4	#4 at 11″	#6 at 7″	22′-0″
24′-0″	6′-0″	5″	5 - #4	#4 at 15″	#5 at 6″	6′-9″	7″	5 - #4	#4 at 11″	#6 at 8″	6′-3″	6″	5 - #4	#4 at 12″	#6 at 8″	7′-6″	7″	5 - #4	#4 at 9″	#6 at 6¼″	24′-0″

NOTES

1. Wall to be designated Noise Barrier Type 2A, 2B, 2C or 2D. The Contract specifies actual wall designations.
2. For intermediate wall heights not listed, use the next higher H.
3. Panels shall have at least 3 feet of level ground on each side.
4. Construction joints in the footing shall be spaced at 120 feet MAX.

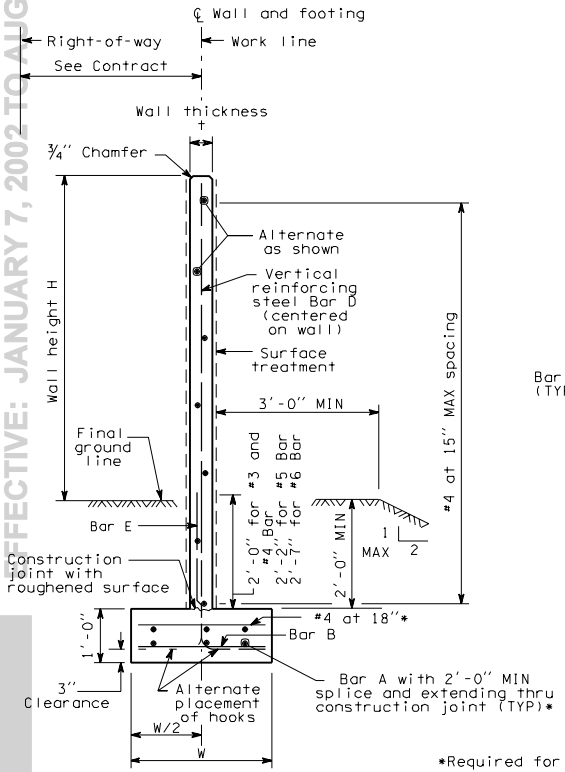

TYPICAL SECTION

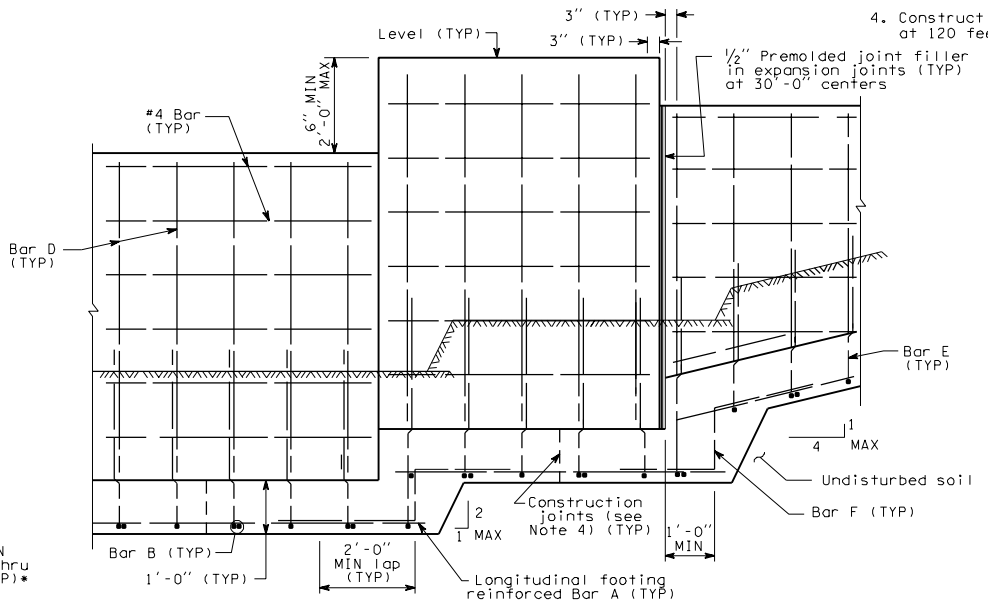

ELEVATION

*Required for walls 24′-0″ - Type 2C, wall height 22′-0″ and 24′-0″ - Type 2B and walls 20′-0″, 22′-0″ and 24′-0″ - Type 2D

NOISE BARRIER - TYPE 2

CAST-IN-PLACE CONCRETE WALL ON SPREAD FOOTING

D-2b
03-14-97

EFFECTIVE: JANUARY 7, 2002 TO AUGUST 4, 2002
EFFECTIVE: JANUARY 7, 2002 TO AUGUST 4, 2002

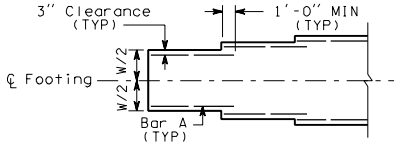

FOOTING WIDTH TRANSITION DETAIL

(For locations without footing step)
NOTE: Transverse bars not shown

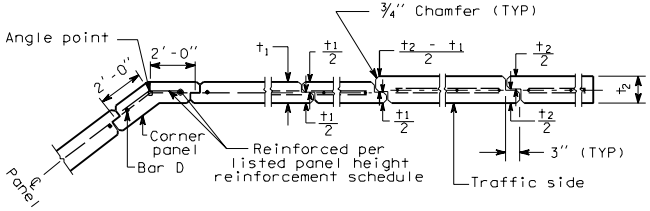

JOINT AND CORNER DETAIL

NOISE BARRIER - TYPE 2

CAST-IN-PLACE CONCRETE WALL
ON SPREAD FOOTING

D-2b
03-14-97

EFFECTIVE: JANUARY 7, 2002 TO AUGUST 4, 2002
EFFECTIVE: JANUARY 7, 2002 TO AUGUST 4, 2002

EFFECTIVE: JANUARY 7, 2002 TO AUGUST 4, 2002

WALL HT H	TYPE 3A W	†	BARS A and F	BAR B	BARS D and E	TYPE 3B W	†	BARS A and F	BAR B	BARS D and E	TYPE 3C W	†	BARS A and F	BAR B	BARS D and E	TYPE 3D W	†	BARS A and F	BAR B	BARS D and E	WALL HT H
6′-0″	2′-0″	5″	3 at #4	#4 at 18″	#3 at 15″	2′-3″	5″	3 at #4	#4 at 18″	#3 at 12″	2′-0″	5″	3 at #4	#4 at 18″	#3 at 15″	2′-6″	5″	3 at #4	#4 at 18″	#3 at 11″	6′-0″
8′-0″	2′-3″	5″	3 at #4	#4 at 18″	#3 at 12″	2′-9″	5″	3 at #4	#4 at 18″	#4 at 15″	2′-6″	5″	3 at #4	#4 at 18″	#3 at 10″	3′-3″	5″	5 at #4	#4 at 18″	#4 at 12″	8′-0″
10′-0″	2′-6″	5″	3 at #4	#4 at 18″	#3 at 9″	3′-3″	5″	5 at #4	#4 at 18″	#4 at 10″	2′-9″	5″	3 at #4	#4 at 18″	#4 at 12″	3′-6″	5″	5 at #4	#4 at 18″	#4 at 10″	10′-0″
12′-0″	3′-0″	5″	3 at #4	#4 at 18″	#4 at 12″	3′-9″	5″	5 at #4	#4 at 18″	#4 at 10″	3′-3″	5″	3 at #4	#4 at 18″	#4 at 10″	4′-3″	5″	5 at #4	#4 at 18″	#5 at 12″	12′-0″
14′-0″	3′-3″	5″	3 at #4	#4 at 18″	#4 at 10″	4′-3″	5″	5 at #4	#4 at 18″	#5 at 11″	3′-9″	5″	5 at #4	#4 at 18″	#4 at 9″	5′-3″	5″	5 at #4	#4 at 18″	#5 at 8″	14′-0″
16′-0″	3′-9″	5″	5 at #4	#4 at 18″	#4 at 9″	5′-3″	5″	5 at #4	#4 at 18″	#6 at 12″	4′-3″	5″	5 at #4	#4 at 18″	#5 at 11″	6′-3″	5″	5 at #4	#4 at 18″	#6 at 9″	16′-0″
18′-0″	4′-0″	5″	5 at #4	#4 at 18″	#5 at 11″	6′-0″	5″	5 at #4	#4 at 18″	#6 at 9″	5′-0″	5″	5 at #4	#4 at 18″	#6 at 12″	7′-0″	6″	5 at #4	#4 at 18″	#6 at 9″	18′-0″
20′-0″	5′-0″	5″	5 at #4	#4 at 18″	#6 at 12″	7′-0″	6″	5 at #4	#4 at 18″	#6 at 9″	5′-9″	5″	5 at #4	#4 at 18″	#6 at 9″	8′-0″	6″	6 at #4	#4 at 12″	#6 at 6″	20′-0″
22′-0″	5′-6″	5″	5 at #4	#4 at 18″	#6 at 9″	7′-9″	6″	6 at #4	#4 at 12″	#6 at 6″	6′-6″	6″	5 at #4	#4 at 18″	#6 at 9″	9′-0″	7″	7 at #4	#4 at 12″	#6 at 6″	22′-0″
24′-0″	6′-3″	5″	5 at #4	#4 at 18″	#6 at 9″	8′-6″	7″	6 at #4	#4 at 12″	#6 at 6″	7′-6″	6″	6 at #4	#4 at 12″	#6 at 6″	9′-9″	7″	7 at #4	#4 at 15″	#6 at 6″	24′-0″

NOTES

1. Wall to be designated Noise Barrier Type 3A, 3B, 3C or 3D. The Contract specifies actual wall designations.
2. For intermediate wall heights not listed, use the next higher H.
3. Panels shall have at least 3 feet of level ground on each side.
4. Construction joints in the footing shall be spaced at 120 feet MAX.

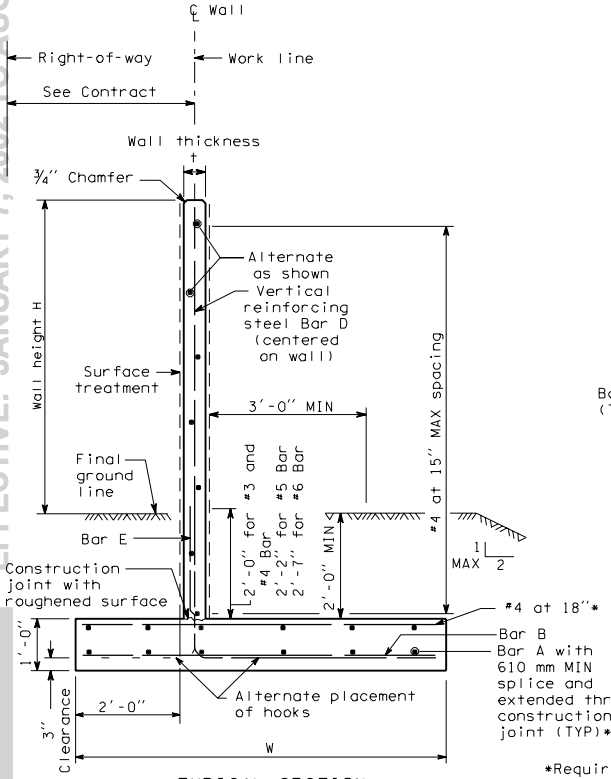

TYPICAL SECTION

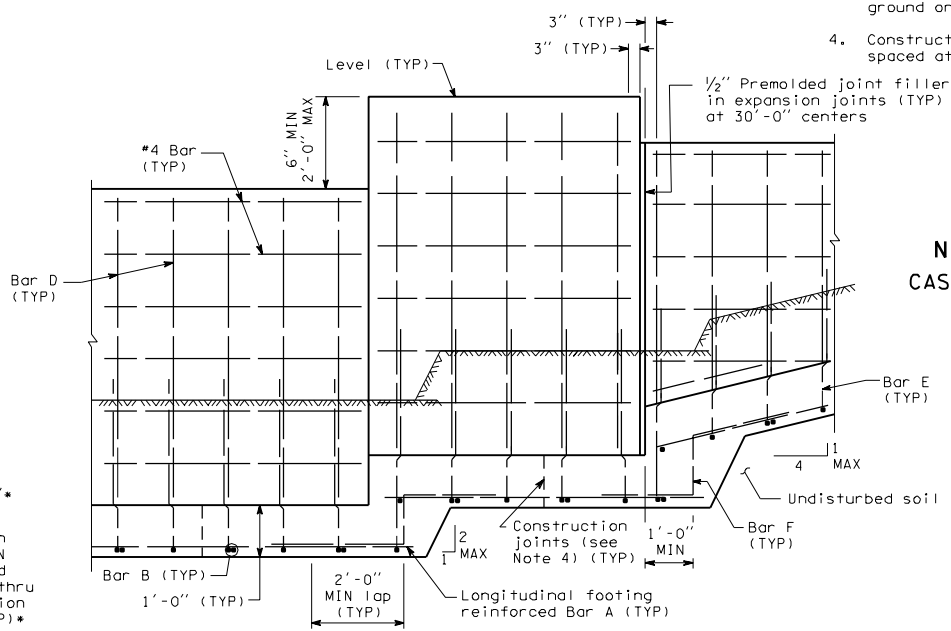

ELEVATION

*Required for walls 24′-0″ - Type 3C, wall height 22′-0″ and 24′-0″ - Type 3B, and walls 20′-0″, 22′-0″ and 24′-0″ - Type 3D

NOISE BARRIER - TYPE 3

CAST-IN-PLACE CONCRETE WALL ON SPREAD FOOTING (OFFSET FOOTING)

D-2c
03-14-97

EFFECTIVE: JANUARY 7, 2002 TO AUGUST 4, 2002
EFFECTIVE: JANUARY 7, 2002 TO AUGUST 4, 2002

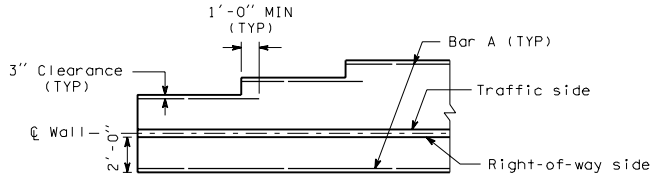

FOOTING WIDTH TRANSITION DETAIL
(For locations without footing step)

NOTE: Transverse bars not shown

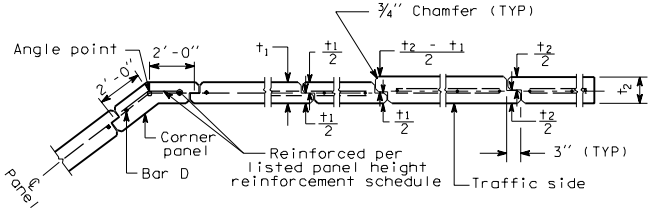

JOINT AND CORNER DETAIL

NOISE BARRIER - TYPE 3

CAST-IN-PLACE CONCRETE WALL
ON SPREAD FOOTING
(OFFSET FOOTING)

D-2c
03-14-97

EFFECTIVE: JANUARY 7, 2002 TO AUGUST 4, 2002
EFFECTIVE: JANUARY 7, 2002 TO AUGUST 4, 2002
EFFECTIVE: JANUARY 7, 2002 TO AUGUST 4, 2002
EFFECTIVE: JANUARY 7, 2002 TO AUGUST 4, 2002

EFFECTIVE: JANUARY 7, 2002 TO AUGUST 4, 2002

WALL HT H	TYPE 4A †	SHAFT DIA D	DEPTH D1	DEPTH D2	SHAFT REINF P BARS	BARS C and D
6'-0"	5"	12"	5'-3"	4'-9"	6 - #5	#3 at 15"
8'-0"	5"	12"	6'-0"	5'-3"	6 - #5	#3 at 15"
10'-0"	5"	12"	6'-9"	5'-9"	6 - #5	#3 at 13"
12'-0"	5"	12"	7'-3"	6'-3"	6 - #5	#3 at 9"
14'-0"	5"	12"	7'-9"	6'-9"	6 - #6	#4 at 12"
16'-0"	5"	12"	8'-6"	7'-3"	6 - #7	#4 at 10"
18'-0"	5"	12"	9'-0"	7'-9"	6 - #8	#4 at 9"
20'-0"	5"	12"	9'-3"	7'-9"	6 - #9	#4 at 7"
22'-0"	5"	14"	9'-3"	7'-9"	8 - #7	#4 at 6"
24'-0"	5"	14"	9'-9"	8'-3"	8 - #8	#5 at 8"

	TYPE 4B †	SHAFT DIA D	DEPTH D1	DEPTH D2	SHAFT REINF P BARS	BARS C and D
	5"	12"	6'-0"	5'-3"	6 - #5	#3 at 15"
	5"	12"	7'-0"	6'-0"	6 - #5	#3 at 12"
	5"	12"	7'-9"	6'-9"	6 - #6	#4 at 15"
	5"	12"	8'-6"	7'-3"	6 - #7	#4 at 10"
	5"	14"	8'-6"	7'-3"	8 - #7	#4 at 9"
	5"	16"	9'-3"	8'-0"	8 - #7	#5 at 11"
	5"	16"	9'-3"	8'-0"	6 - #8	#5 at 8"
	5"	16"	10'-0"	8'-6"	8 - #7	#5 at 7"
	6"	16"	10'-6"	9'-0"	8 - #8	#5 at 6"
	6"	16"	11'-3"	9'-6"	8 - #8	#6 at 7"

	TYPE 4C †	SHAFT DIA D	DEPTH D1	DEPTH D2	SHAFT REINF P BARS	BARS C and D
	5"	12"	5'-9"	5'-0"	6 - #5	#3 at 15"
	5"	12"	6'-6"	5'-6"	6 - #5	#3 at 15"
	5"	12"	7'-3"	6'-3"	6 - #5	#3 at 10"
	5"	12"	7'-9"	6'-9"	6 - #6	#4 at 12"
	5"	12"	8'-6"	7'-3"	6 - #7	#4 at 10"
	5"	14"	8'-6"	7'-3"	8 - #6	#4 at 9"
	5"	14"	9'-0"	7'-9"	8 - #7	#5 at 11"
	5"	14"	9'-9"	8'-3"	8 - #8	#5 at 8"
	5"	14"	10'-3"	8'-9"	8 - #9	#5 at 8"
	6"	16"	10'-3"	8'-9"	8 - #8	#6 at 7"

	TYPE 4D †	SHAFT DIA D	DEPTH D1	DEPTH D2	SHAFT REINF P BARS	BARS C and D	WALL HT H
	5"	12"	6'-6"	5'-9"	6 - #5	#3 at 15"	6'-0"
	5"	12"	7'-6"	6'-6"	6 - #6	#3 at 10"	8'-0"
	5"	12"	8'-3"	7'-0"	6 - #7	#4 at 12"	10'-0"
	5"	14"	8'-6"	7'-3"	8 - #7	#4 at 10"	12'-0"
	5"	14"	9'-3"	8'-0"	8 - #7	#5 at 11"	14'-0"
	5"	16"	9'-6"	8'-0"	8 - #8	#5 at 8"	16'-0"
	5"	16"	10'-0"	8'-6"	8 - #8	#6 at 9"	18'-0"
	6"	16"	10'-9"	9'-3"	8 - #9	#6 at 9"	20'-0"
	6"	16"	11'-6"	9'-9"	8 - #10	#6 at 7"	22'-0"
	7"	18"	11'-6"	9'-9"	8 - #10	#6 at 7"	24'-0"

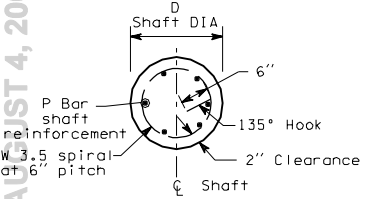

SECTION A-A

NOTES

1. Wall to be designated Noise Wall Type 4A, 4B, 4C or 4D. The Contract specifies actual wall designations.
2. For intermediate wall heights, see next higher H.
3. Panels shall have at least 3 feet of level ground on each side.
4. Construction joints in the footing shall be spaced at 120 feet maximum.
5. The Contract specifies actual foundation requirements D1 or D2.

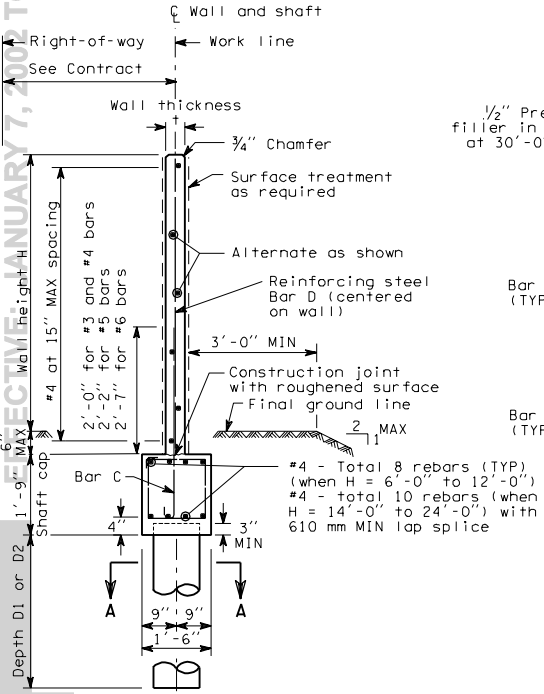

TYPICAL SECTION

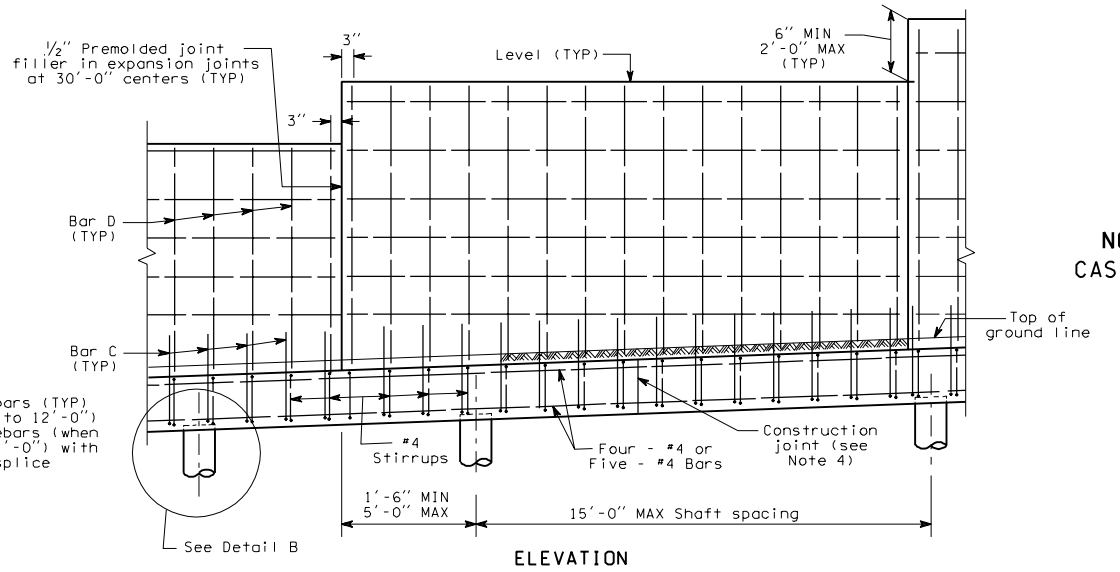

ELEVATION

NOISE BARRIER - TYPE 4
CAST-IN-PLACE CONCRETE WALL ON SHAFT FOUNDATION

D-2d
03-14-97

EFFECTIVE: JANUARY 7, 2002 TO AUGUST 4, 2002
EFFECTIVE: JANUARY 7, 2002 TO AUGUST 4, 2002

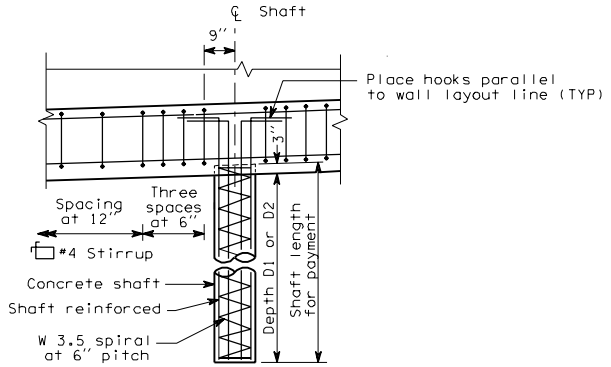

DETAIL B

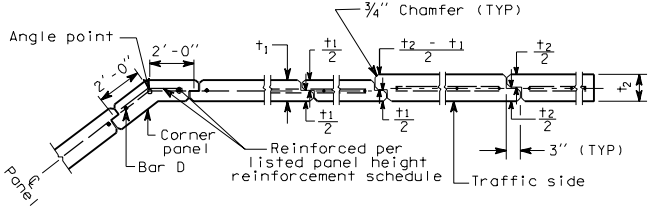

JOINT AND CORNER DETAIL

NOISE BARRIER - TYPE 4

CAST-IN-PLACE CONCRETE WALL
ON SHAFT FOUNDATION

D-2d
03-14-97

EFFECTIVE: JANUARY 7, 2002 TO AUGUST 4, 2002
EFFECTIVE: JANUARY 7, 2002 TO AUGUST 4, 2002
EFFECTIVE: JANUARY 7, 2002 TO AUGUST 4, 2002
EFFECTIVE: JANUARY 7, 2002 TO AUGUST 4, 2002

EFFECTIVE: JANUARY 7, 2002 TO AUGUST 4, 2002

WALL HT H	TYPE 5A BAR B and C	TYPE 5A BAR D and E	TYPE 5B BAR B and C	TYPE 5B BAR D and E	TYPE 5C BAR B and C	TYPE 5C BAR D and E	TYPE 5D BAR B and C	TYPE 5D BAR D and E	WALL HT H
6′-0″	#4 at 15″	#4 at 15″	#4 at 15″	#4 at 15″	#4 at 15″	#4 at 15″	#4 at 15″	#4 at 15″	6′-0″
8′-0″	#4 at 15″	#4 at 15″	#4 at 15″	#4 at 15″	#4 at 15″	#4 at 15″	#4 at 15″	#4 at 15″	8′-0″
10′-0″	#4 at 15″	#4 at 15″	#4 at 15″	#4 at 15″	#4 at 15″	#4 at 15″	#4 at 15″	#4 at 15″	10′-0″
12′-0″	#4 at 15″	#4 at 15″	#4 at 15″	#4 at 15″	#4 at 15″	#4 at 15″	#4 at 12″	#4 at 12″	12′-0″
14′-0″	#4 at 15″	#4 at 15″	#4 at 11″	#4 at 11″	#4 at 11″	#4 at 11″	#4 at 10″	#4 at 10″	14′-0″
16′-0″	#4 at 14″	#4 at 14″	#4 at 10″	#4 at 10″	#4 at 10″	#4 at 10″	#4 at 12″	#5 at 12″	16′-0″
18′-0″	#4 at 10″	#4 at 12″	#4 at 10″	#5 at 12″	#4 at 10″	#4 at 10″	#4 at 9″	#5 at 9″	18′-0″
20′-0″	#4 at 10″	#4 at 10″	#4 at 9″	#5 at 9″	#4 at 10″	#4 at 7½″	#4 at 9″	#5 at 6½″	20′-0″
22′-0″	#4 at 10″	#4 at 8″	#4 at 9″	#5 at 6½″	#4 at 10″	#4 at 6″	#4 at 9″	#5 at 6″	22′-0″
24′-0″	#4 at 10″	#4 at 6″	#4 at 9″	#5 at 6″	#4 at 10″	#4 at 4″	#4 at 9″	#5 at 5″	24′-0″

NOTES

1. Wall to be designated Noise Barrier Type 5A, 5B, 5C or 5D. The Contract specifies actual wall designations.
2. For intermediate wall heights, use the next higher H.
3. Panels shall have at least 3 feet MIN of level ground on each side.
4. Construction joints in the footing shall be spaced at 120 feet maximum.
5. The Contract specifies actual foundation requirements D1 or D2.

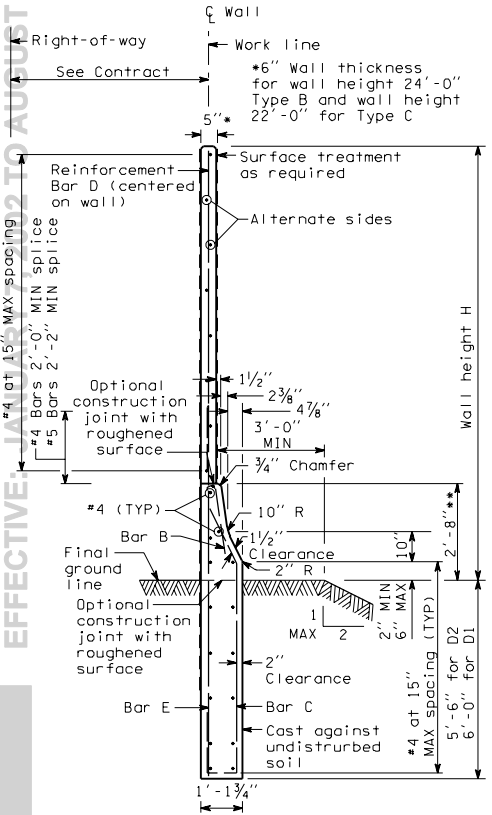

TYPICAL SECTION

**Height may vary if required to provide a smooth profile consistent with the roadway profile

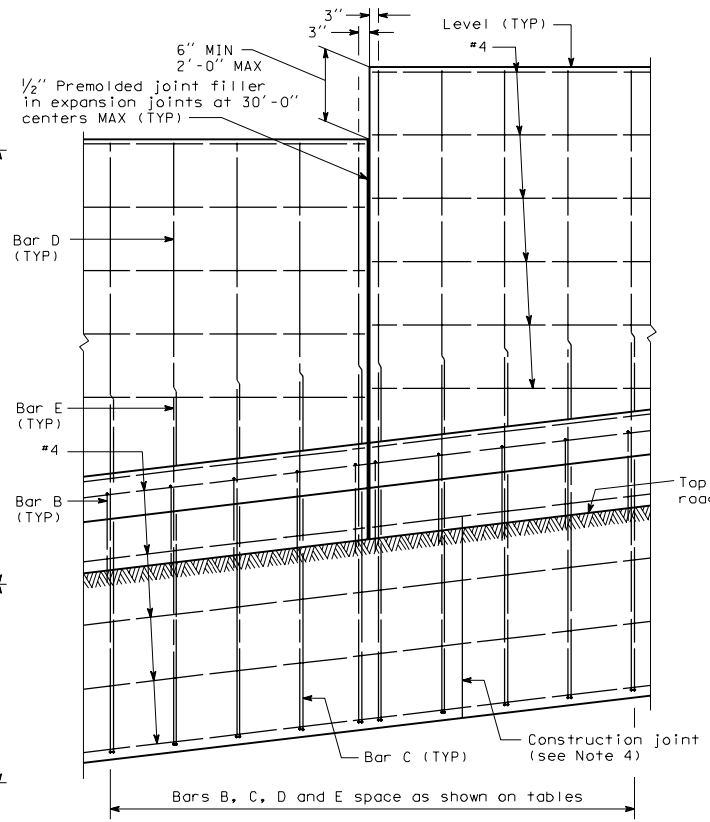

ELEVATION

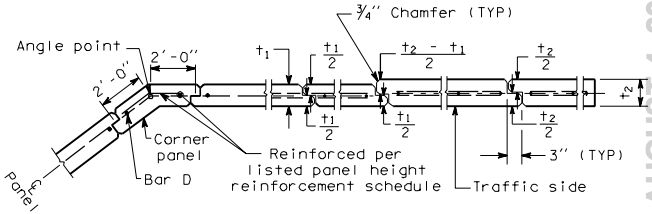

JOINT AND CORNER DETAIL

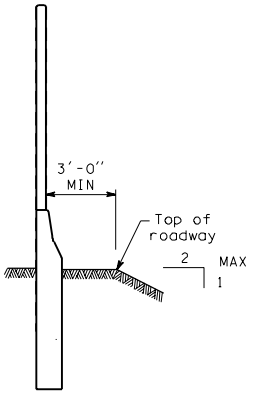

TRENCH FOOTING

NOISE BARRIER - TYPE 5
CAST-IN-PLACE WITH TRAFFIC BARRIER ON TRENCH FOOTINGS

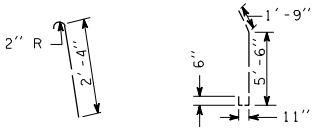

BAR B BAR C

D-2e 1 of 1

03-14-97

EFFECTIVE: JANUARY 7, 2002 TO AUGUST 4, 2002

EFFECTIVE: JANUARY 7, 2002 TO AUGUST 4, 2002

WALL HT H	TYPE 6A W	X	BAR B and C	BAR D and E	TYPE 6B W	X	BAR B and C	BAR D and E	TYPE 6C W	X	BAR B and C	BAR D and E	TYPE 6D W	X	BAR B and C	BAR D and E	WALL HT H
6′-0″	5′-6″	1″	#4 at 12″	#4 at 12″	5′-6″	1″	#4 at 12″	#4 at 12″	5′-6″	1″	#4 at 12″	#4 at 12″	5′-6″	1″	#4 at 12″	#4 at 12″	6′-0″
8′-0″	5′-3″	1″	#4 at 12″	#4 at 12″	5′-3″	1″	#4 at 12″	#4 at 12″	5′-3″	1″	#4 at 12″	#4 at 12″	5′-3″	1″	#4 at 12″	#4 at 12″	8′-0″
10′-0″	5′-3″	1″	#4 at 12″	#4 at 12″	5′-3″	1″	#4 at 12″	#4 at 12″	5′-3″	1″	#4 at 12″	#4 at 12″	5′-3″	1″	#4 at 12″	#4 at 12″	10′-0″
12′-0″	5′-0″	1″	#4 at 12″	#4 at 12″	5′-0″	1″	#4 at 12″	#4 at 12″	5′-0″	1″	#4 at 12″	#4 at 12″	5′-0″	1″	#4 at 12″	#4 at 12″	12′-0″
14′-0″	4′-9″	1″	#4 at 12″	#4 at 12″	5′-0″	1″	#4 at 11″	#4 at 11″	4′-9″	1″	#4 at 12″	#4 at 12″	5′-3″	10″	#4 at 10″	#4 at 10″	14′-0″
16′-0″	5′-0″	10″	#4 at 12″	#4 at 12″	5′-0″	10″	#4 at 10″	#4 at 10″	5′-0″	10″	#4 at 10″	#4 at 10″	5′-6″	1′-6″	#4 at 12″	#5 at 12″	16′-0″
18′-0″	5′-0″	10″	#4 at 10″	#4 at 10″	5′-3″	1′-6″	#4 at 12″	#5 at 12″	5′-0″	1′-0″	#4 at 10″	#4 at 10″	5′-9″	1′-9″	#4 at 9″	#5 at 9″	18′-0″

NOTES

1. Wall to be designated Noise Wall Type 6A, 6B, 6C and 6D. The Contract specifies actual wall designations.
2. For intermediate wall heights not listed, use the next higher H.
3. Panels shall have at least 3 feet of level ground on each side.
4. Construction joints in the footing shall be spaced at 120 feet MAX.

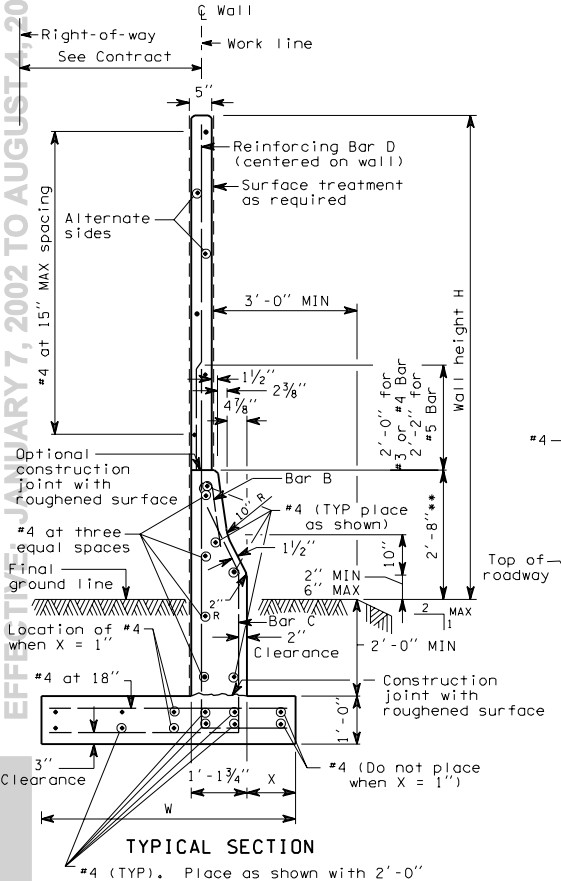

TYPICAL SECTION

#4 (TYP). Place as shown with 2′-0″ splice and extending thru construction joints

**Height may vary if required to provide a smooth profile constant with roadway profile

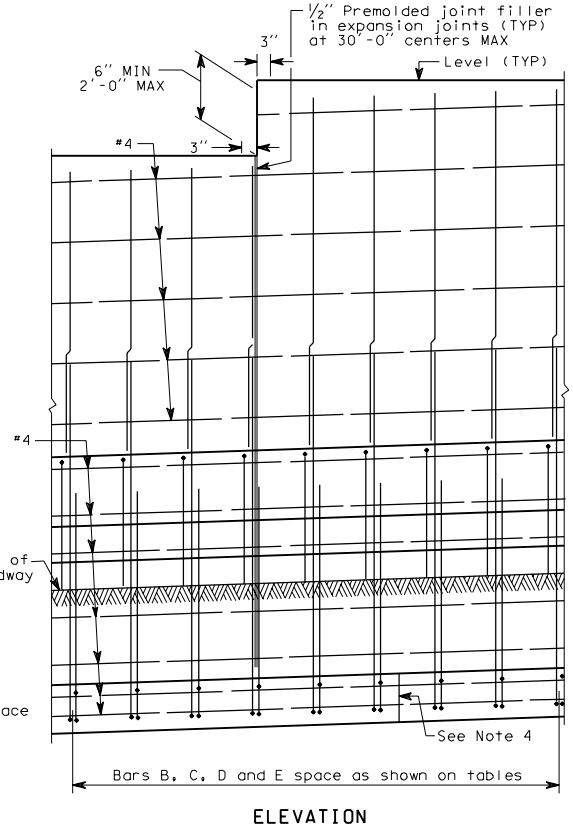

ELEVATION

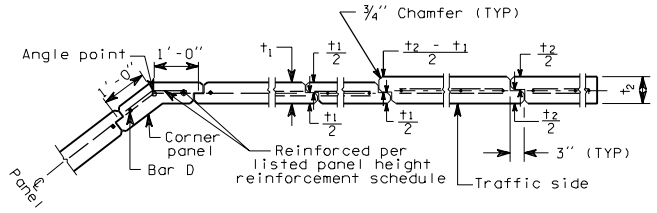

JOINT AND CORNER DETAIL

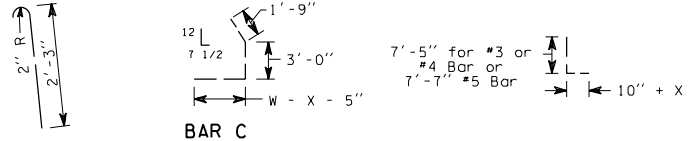

NOISE BARRIER - TYPE 6
CAST-IN-PLACE CONCRETE WALL WITH TRAFFIC BARRIER ON SPREAD FOOTING

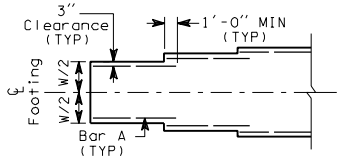

FOOTING WIDTH TRANSITION DETAIL

(For locations without footing step)

D-2f 1 of 1

03-14-97

EFFECTIVE: JANUARY 7, 2002 TO AUGUST 4, 2002

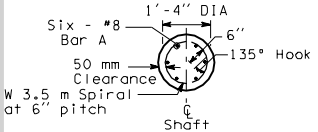

SECTION A-A

WALL HT H	TYPE 7A BARS B and C	TYPE 7B BARS B and C	TYPE 7C BARS B and C	TYPE 7D BARS B and C	WALL HT H
6'-0"	#4 at 15"	#4 at 15"	#4 at 15"	#4 at 15"	6'-0"
8'-0"	#4 at 15"	#4 at 15"	#4 at 15"	#4 at 15"	8'-0"
10'-0"	#4 at 15"	#4 at 15"	#4 at 15"	#4 at 15"	10'-0"
12'-0"	#4 at 15"	#4 at 15"	#4 at 15"	#4 at 12"	12'-0"
14'-0"	#4 at 15"	#4 at 11"	#4 at 14"	#4 at 10"	14'-0"
16'-0"	#4 at 14"	#4 at 10"	#4 at 10"	#5 at 12"	16'-0"
18'-0"	#4 at 12"	#5 at 12"	#4 at 10"	#5 at 9"	18'-0"

NOTES

1. Wall to be designated Noise Wall Type 7A, 7B, 7C or 7D. The Contract specifies actual wall designations.
2. For intermediate wall heights, use the next higher H.
3. Panels shall have at least 3 feet of level ground on each side.
4. Construction joints in the footing shall be spaced at 120 feet maximum.
5. The Contract specifies actual foundation requirements D1 or D2.

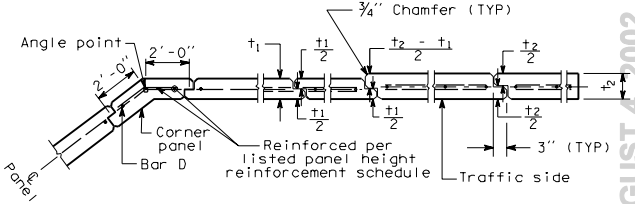

JOINT AND CORNER DETAIL

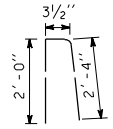

BAR B - #4

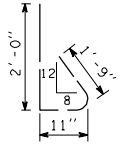

BAR C - #4

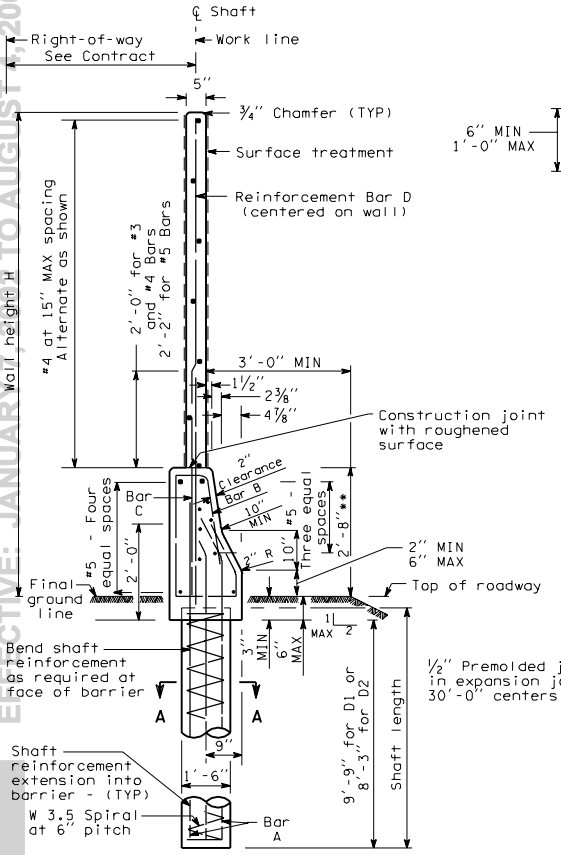

TYPICAL SECTION

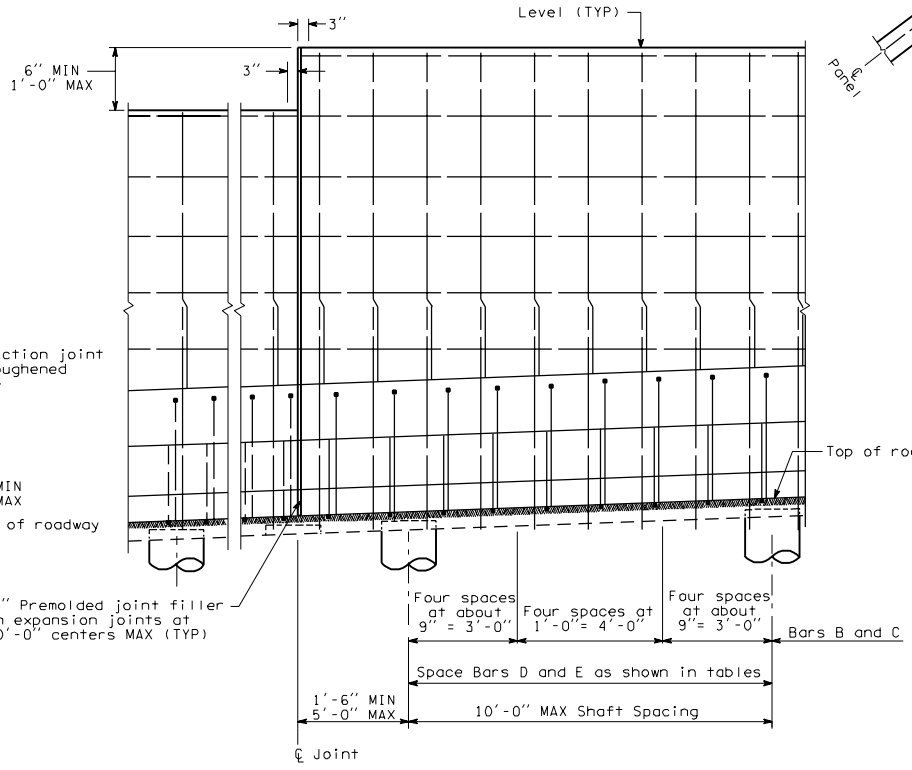

ELEVATION

** Height may vary if required to provide a smooth profile consistant with the roadway profile

NOISE BARRIER - TYPE 7

CAST-IN-PLACE CONCRETE WALL WITH TRAFFIC BARRIER ON SHAFT FOUNDATION

D-2g 1 of 1

03-14-97

EFFECTIVE: JANUARY 7, 2002 TO AUGUST 4, 2002

EFFECTIVE: JANUARY 7, 2002 TO AUGUST 4, 2002

WALL HT H	TYPE 8A WALL THICK T	TYPE 8A DEPTH D1	TYPE 8A DEPTH D2	TYPE 8A BAR D	TYPE 8B WALL THICK T	TYPE 8B DEPTH D1	TYPE 8B DEPTH D2	TYPE 8B BAR D	TYPE 8C WALL THICK T	TYPE 8C DEPTH D1	TYPE 8C DEPTH D2	TYPE 8C BAR D	TYPE 8D WALL THICK T	TYPE 8D DEPTH D1	TYPE 8D DEPTH D2	TYPE 8D BAR D	WALL HT H
6'-0"	5"	3'-6"	3'-3"	#3 at 15"	5"	3'-9"	3'-6"	#3 at 13½"	5"	3'-6"	3'-3"	#3 at 15"	5"	3'-9"	3'-6"	#3 at 11"	6'-0"
8'-0"	5"	3'-9"	3'-3"	#3 at 13"	5"	4'-0"	3'-9"	#3 at 8½"	5"	3'-9"	3'-6"	#3 at 11"	5"	4'-3"	3'-9"	#4 at 12"	8'-0"
10'-0"	5"	4'-0"	3'-6"	#3 at 8½"	5"	4'-3"	4'-0"	#4 at 10½"	5"	4'-0"	3'-9"	#3 at 12½"	5"	4'-6"	4'-0"	#4 at 11"	10'-0"
12'-0"	5"	4'-3"	3'-9"	#4 at 12"	5"	4'-9"	4'-3"	#4 at 10"	5"	4'-6"	4'-0"	#4 at 10½"	5"	5'-0"	4'-6"	#5 at 12"	12'-0"
14'-0"	5"	4'-6"	4'-0"	#4 at 10½"	5"	5'-0"	4'-6"	#5 at 11"	5"	4'-9"	4'-3"	#4 at 9½"	5"	5'-3"	4'-9"	#5 at 8¾"	14'-0"
16'-0"	5"	4'-9"	4'-3"	#5 at 14"	5"	5'-3"	4'-9"	#5 at 8½"	5"	5'-0"	4'-6"	#5 at 11"	5"	5'-9"	5'-0"	#6 at 9½"	16'-0"
18'-0"	5"	5'-0"	4'-6"	#5 at 11"	5"	5'-6"	5'-0"	#6 at 9½"	5"	5'-3"	4'-9"	#5 at 8½"	6"	6'-0"	5'-3"	#6 at 9"	18'-0"
20'-0"	5"	5'-3"	4'-9"	#5 at 6"	6"	5'-9"	5'-3"	#6 at 9½"	5"	5'-6"	5'-0"	#5 at 6"	6"	6'-3"	5'-6"	#6 at 7½"	20'-0"
22'-0"	5"	5'-6"	5'-0"	#5 at 7"	6"	6'-0"	5'-6"	#6 at 8"	6"	5'-9"	5'-3"	#5 at 8"	7"	6'-6"	5'-9"	#6 at 7"	22'-0"
24'-0"	5"	5'-9"	5'-3"	#6 at 8"	7"	6'-3"	5'-9"	#6 at 6½"	6"	6'-0"	5'-6"	#5 at 6"	7"	6'-9"	6'-0"	#6 at 6"	24'-0"

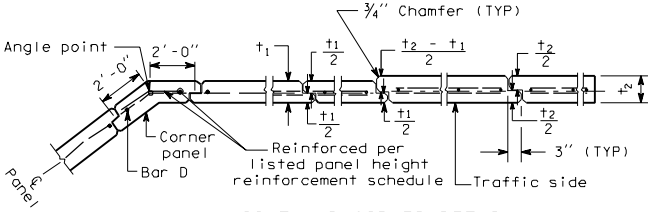

JOINT AND CORNER DETAIL

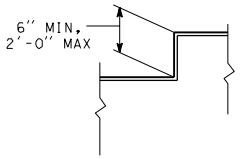

STEP IN PANEL TOP

NOTES

1. Wall to be designated Noise Wall Type 8A, 8B, 8C or 8D. The Contract specifies actual wall designations.
2. For intermediate wall heights, use the next higher H.
3. Panels shall have at least 3'-0" of level ground on each side.
4. Construction joints in the footing shall be spaced at 120 feet maximum.
5. All joints shall be in full contact and sealed.
6. The Contract specifies actual foundation requirements D1 or D2.

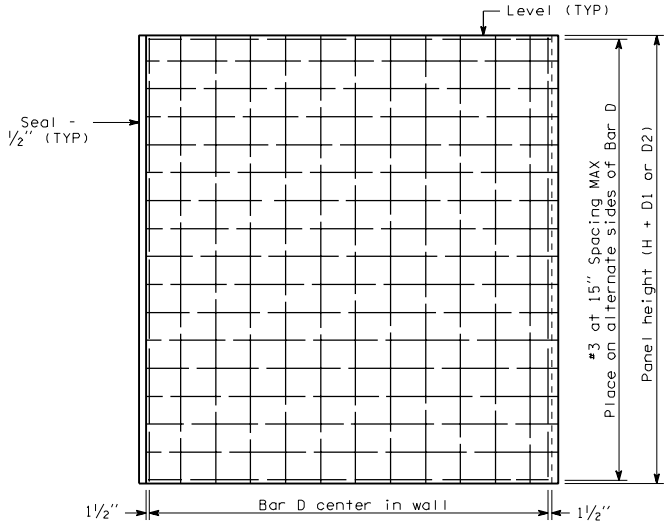

ELEVATION

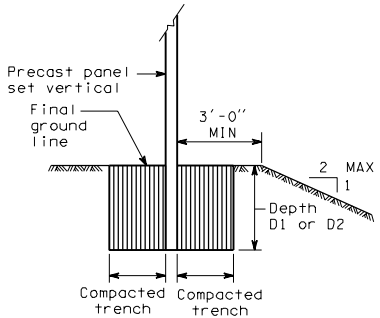

TRENCH FOOTING

There shall not be more than 1'-0" differential backfill height

NOISE BARRIER - TYPE 8

PRECAST CONCRETE WALL ON TRENCH FOOTING

EFFECTIVE: JANUARY 7, 2002 TO AUGUST 4, 2002

WALL HT H	TYPE 9A W	BARS A and F	†	BAR B	SPIRAL BAR G	BARS D and H	TYPE 9B W	BARS A and F	†	BAR B	SPIRAL BAR G	BARS D and H	TYPE 9C W	BARS A and F	†	BAR B	SPIRAL BAR G	BARS D and H	TYPE 9D W	BARS A and F	†	BAR B	SPIRAL BAR G	BARS D and H	WALL HT H
6'-0"	2'-0"	3 - #4	5"	#4 at 18"	W2.0 at 2"	#3 at 15"	2'-3"	3 - #4	5"	#4 at 18"	W2.0 at 2"	#3 at 12"	2'-0"	3 - #4	5"	#4 at 18"	W2.0 at 2"	#3 at 15"	2'-6"	3 - #4	5"	#4 at 18"	W2.0 at 2"	#3 at 11"	6'-0"
8'-0"	2'-3"	3 - #4	5"	#4 at 18"	W2.0 at 2"	#3 at 12"	2'-9"	3 - #4	5"	#4 at 18"	W3.0 at 2"	#4 at 15"	2'-6"	3 - #4	5"	#4 at 18"	W2.0 at 2"	#3 at 10"	3'-3"	5 - #4	5"	#4 at 18"	W3.0 at 2"	#4 at 12"	8'-0"
10'-0"	2'-6"	3 - #4	5"	#4 at 18"	W2.0 at 2"	#3 at 9"	3'-3"	5 - #4	5"	#4 at 18"	W3.0 at 2"	#4 at 10"	2'-9"	3 - #4	5"	#4 at 18"	W3.0 at 2"	#4 at 12"	3'-6"	5 - #4	5"	#4 at 18"	W3.0 at 2"	#4 at 10"	10'-0"
12'-0"	3'-0"	5 - #4	5"	#4 at 18"	W3.0 at 2"	#4 at 12"	3'-9"	5 - #4	5"	#4 at 18"	W3.0 at 2"	#4 at 10"	3'-3"	5 - #4	5"	#4 at 18"	W3.0 at 2"	#4 at 10"	4'-3"	5 - #4	5"	#4 at 18"	W3.0 at 1¾"	#5 at 12"	12'-0"
14'-0"	3'-3"	5 - #4	5"	#4 at 18"	W3.0 at 2"	#4 at 10"	4'-3"	5 - #4	5"	#4 at 18"	W3.0 at 1¾"	#5 at 11"	3'-9"	5 - #4	5"	#4 at 18"	W3.0 at 2"	#4 at 9"	4'-9"	5 - #4	5"	#4 at 18"	W3.0 at 1¾"	#5 at 8"	14'-0"
16'-0"	3'-9"	5 - #4	5"	#4 at 18"	W3.0 at 2"	#4 at 9"	4'-9"	5 - #4	5"	#4 at 18"	W4.0 at 2"	#6 at 12"	4'-3"	5 - #4	5"	#4 at 18"	W3.0 at 1¾"	#5 at 11"	5'-6"	5 - #4	5"	#4 at 18"	W4.0 at 2"	#6 at 9"	16'-0"
18'-0"	4'-0"	5 - #4	5"	#4 at 18"	W3.0 at 1¾"	#5 at 11"	5'-3"	5 - #4	5"	#4 at 18"	W4.0 at 2"	#6 at 9"	4'-6"	5 - #4	5"	#4 at 18"	W4.0 at 2"	#6 at 12"	6'-0"	5 - #4	6"	#4 at 18"	W4.0 at 2"	#6 at 9"	18'-0"
20'-0"	5'-0"	5 - #4	5"	#4 at 18"	W3.0 at 1½"	#5 at 9"	6'-0"	5 - #4	6"	#4 at 18"	W4.0 at 2"	#6 at 9"	5'-3"	5 - #4	5"	#4 at 18"	W4.0 at 2"	#6 at 10"	6'-6"	6 - #4	6"	#4 at 12"	W4.0 at 1¾"	#6 at 7"	20'-0"
22'-0"	5'-6"	5 - #4	5"	#4 at 18"	W3.0 at 1½"	#5 at 7"	6'-3"	5 - #4	6"	#4 at 12"	W4.0 at 1¾"	#6 at 8"	5'-9"	5 - #4	6"	#4 at 18"	W4.0 at 2"	#6 at 9"	7'-0"	6 - #4	7"	#4 at 12"	W4.0 at 1¾"	#6 at 7"	22'-0"
24'-0"	6'-0"	5 - #4	5"	#4 at 15"	W3.0 at 1½"	#5 at 6"	6'-9"	5 - #4	7"	#4 at 11"	W4.0 at 1¾"	#6 at 8"	6'-3"	5 - #4	6"	#4 at 12"	W4.0 at 1¾"	#6 at 8"	7'-6"	6 - #4	7"	#4 at 15"	W4.0 at 1½"	#6 at 6"	24'-0"

NOTES

1. Wall to be designated Noise Barrier Type 9A, 9B, 9C or 9D. The Contract specifies actual wall designation.
2. For intermediate wall heights, use the next higher H.
3. Panels shall have at least 3'-0" of level ground on each side.
4. Construction joints in the footing shall be spaced at 120 feet maximum.
5. All joints shall be in full contact and sealed.

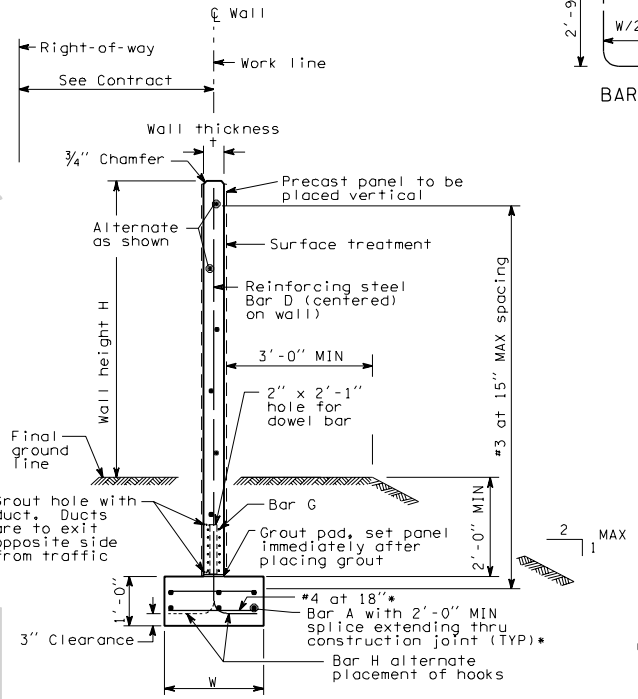

TYPICAL SECTION

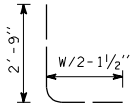

BAR H

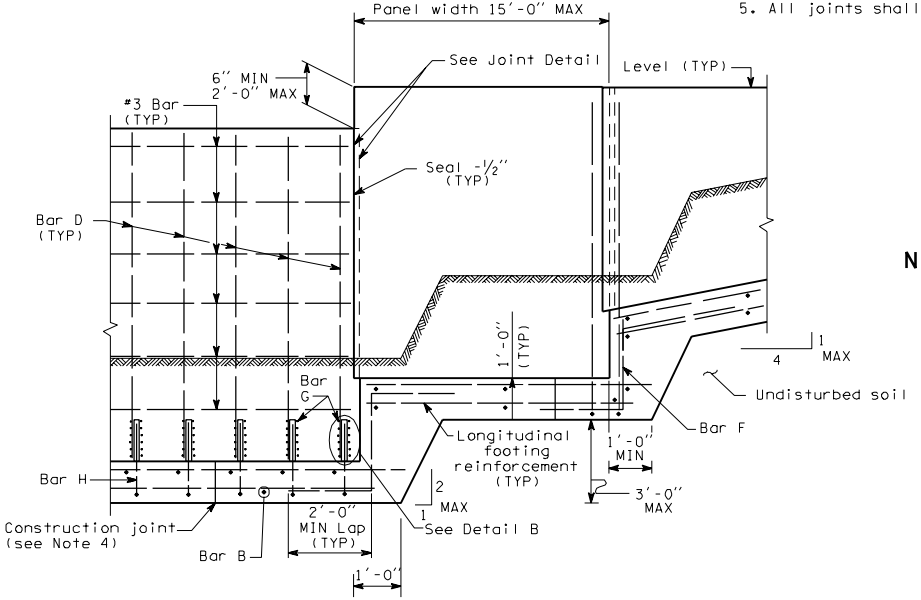

ELEVATION

NOISE BARRIER - TYPE 9

PRECAST CONCRETE WALL WITH SPREAD FOOTING

*Required for wall height 24'-0" - Type 9C, walls 22'-0" and 24'-0" - Type 9B and walls 20'-0", 22'-0" and 24'-0" - Type 9D.

D-2i
03-14-97

EFFECTIVE: JANUARY 7, 2002 TO AUGUST 4, 2002

EFFECTIVE: JANUARY 7, 2002 TO AUGUST 4, 2002

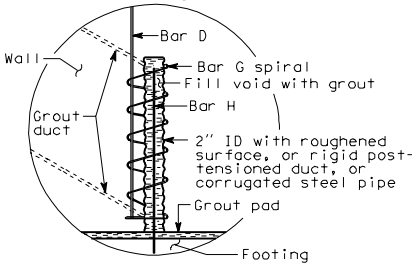

DETAIL B

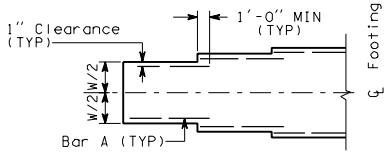

FOOTING WIDTH TRANSITION DETAIL

(For locations without footing step)

NOTE: Transverse bars not shown

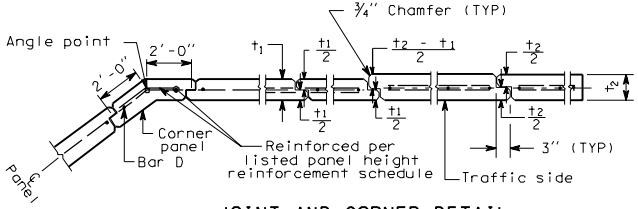

JOINT AND CORNER DETAIL

NOISE BARRIER - TYPE 9

PRECAST CONCRETE WALL WITH SPREAD FOOTING

D-2i

03-14-97

EFFECTIVE: JANUARY 7, 2002 TO AUGUST 4, 2002

WALL HT H	TYPE 10A W	BARS A and F	†	BAR B	SPIRAL BAR G	BARS D and H	TYPE 10B W	BARS A and F	†	BAR B	SPIRAL BAR G	BARS D and H	TYPE 10C W	BARS A and F	†	BAR B	SPIRAL BAR G	BARS D and H	TYPE 10D W	BARS A and F	†	BAR B	SPIRAL BAR G	BARS D and H	WALL HT H
6′-0″	2′-0″	3-#4	5″	#4 at 18″	W2.0 at 2″	#3 at 15″	2′-3″	3-#4	5″	#4 at 18″	W2.0 at 2″	#3 at 12″	2′-0″	3-#4	5″	#4 at 18″	W2.0 at 2″	#3 at 15″	2′-6″	3-#4	5″	#4 at 18″	W2.0 at 2″	#3 at 11″	6′-0″
8′-0″	2′-3″	3-#4	5″	#4 at 18″	W2.0 at 2″	#3 at 12″	2′-9″	3-#4	5″	#4 at 18″	W3.0 at 2″	#4 at 15″	2′-6″	3-#4	5″	#4 at 18″	W2.0 at 2″	#3 at 10″	3′-3″	5-#4	5″	#4 at 18″	W3.0 at 2″	#4 at 12″	8′-0″
10′-0″	2′-6″	3-#4	5″	#4 at 18″	W2.0 at 2″	#3 at 9″	3′-3″	5-#4	5″	#4 at 18″	W3.0 at 2″	#4 at 10″	2′-9″	3-#4	5″	#4 at 18″	W3.0 at 2″	#4 at 12″	3′-6″	5-#4	5″	#4 at 18″	W3.0 at 2″	#4 at 10″	10′-0″
12′-0″	3′-0″	5-#4	5″	#4 at 18″	W3.0 at 2″	#4 at 12″	3′-9″	5-#4	5″	#4 at 18″	W3.0 at 2″	#4 at 10″	3′-3″	5-#4	5″	#4 at 18″	W3.0 at 2″	#4 at 10″	4′-3″	5-#4	5″	#4 at 18″	W3.0 at 1¾″	#5 at 12″	12′-0″
14′-0″	3′-3″	5-#4	5″	#4 at 18″	W3.0 at 2″	#4 at 10″	4′-3″	5-#4	5″	#4 at 18″	W3.0 at 1¾″	#5 at 11″	3′-9″	5-#4	5″	#4 at 18″	W3.0 at 2″	#4 at 9″	5′-3″	5-#4	5″	#4 at 18″	W3.0 at 1¾″	#5 at 8″	14′-0″
16′-0″	3′-9″	5-#4	5″	#4 at 18″	W3.0 at 2″	#4 at 9″	5′-3″	5-#4	5″	#4 at 18″	W4.0 at 2″	#6 at 12″	4′-3″	5-#4	5″	#4 at 18″	W3.0 at 1¾″	#5 at 11″	6′-3″	5-#4	5″	#4 at 18″	W4.0 at 2″	#6 at 9″	16′-0″
18′-0″	4′-0″	5-#4	5″	#4 at 18″	W3.0 at 1¾″	#5 at 11″	6′-0″	5-#4	5″	#4 at 18″	W4.0 at 2″	#6 at 9″	5′-0″	5-#4	5″	#4 at 18″	W4.0 at 2″	#6 at 12″	7′-0″	5-#4	6″	#4 at 18″	W4.0 at 2″	#6 at 9″	18′-0″
20′-0″	5′-0″	5-#4	5″	#4 at 18″	W3.0 at 1½″	#5 at 9″	7′-0″	5-#4	6″	#4 at 18″	W4.0 at 2″	#6 at 9″	5′-9″	5-#4	5″	#4 at 18″	W4.0 at 2″	#6 at 10″	8′-0″	6-#4	6″	#4 at 12″	W4.0 at 1¾″	#6 at 7″	20′-0″
22′-0″	5′-6″	5-#4	5″	#4 at 18″	W3.0 at 1½″	#5 at 7″	7′-9″	5-#4	6″	#4 at 12″	W4.0 at 1¾″	#6 at 8″	6′-6″	5-#4	6″	#4 at 18″	W4.0 at 2″	#6 at 9″	9′-0″	6-#4	7″	#4 at 305	W4.0 at 1¾″	#6 at 7″	22′-0″
24′-0″	6′-3″	5-#4	5″	#4 at 15″	W3.0 at 1½″	#5 at 6″	8′-6″	5-#4	7″	#4 at 11″	W4.0 at 1¾″	#6 at 8″	7′-6″	5-#4	6″	#4 at 12″	W4.0 at 1¾″	#6 at 8″	9′-9″	6-#4	7″	#4 at 15″	W4.0 at 1¾″	#6 at 6″	24′-0″

NOTES

1. Wall to be designated Noise Barrier Type 10A, 10B, 10C or 10D. The Contract specifies actual wall designation.
2. For intermediate wall heights, use the next higher H.
3. Panels shall have at least 3′-0″ of level ground on each side.
4. Construction joints in the footing shall be spaced at 120 feet maximum.
5. All joints shall be in full contact and sealed.

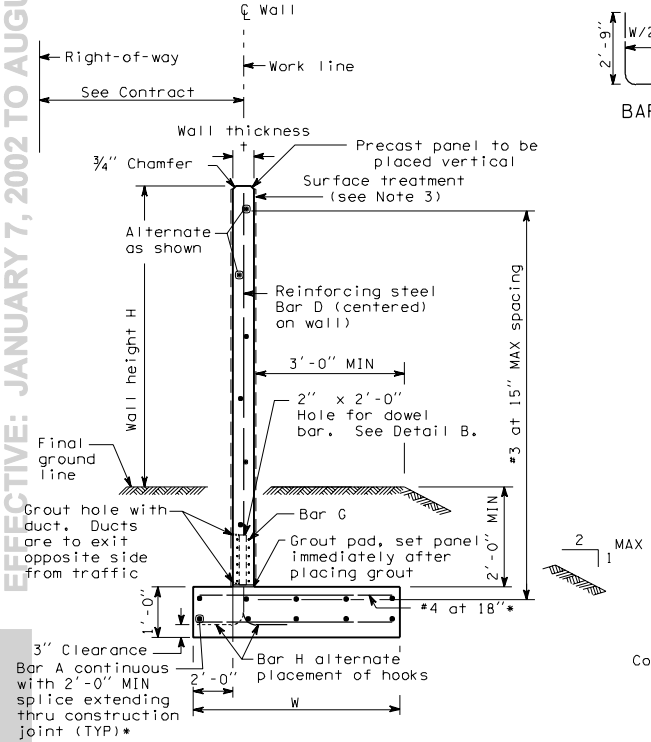

TYPICAL SECTION

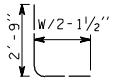

BAR H

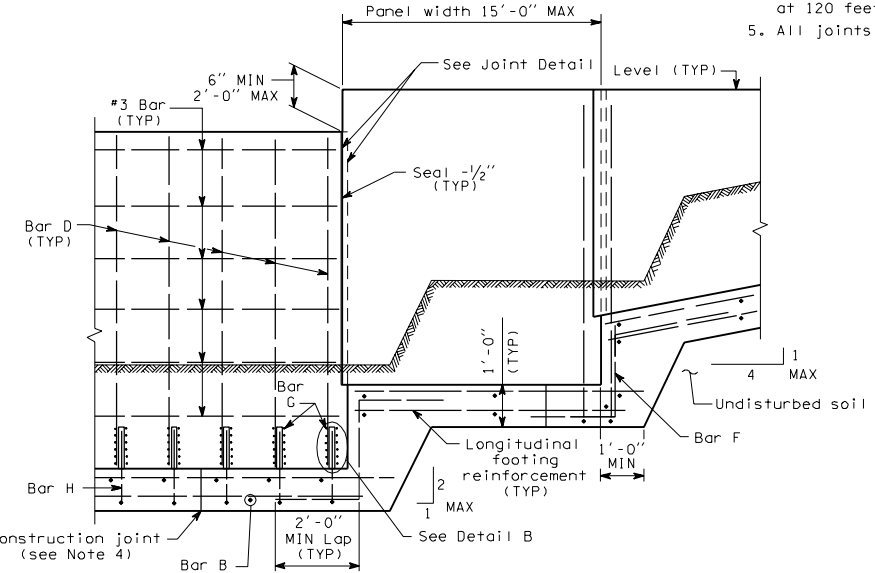

ELEVATION

NOISE BARRIER - TYPE 10

PRECAST CONCRETE WALL WITH OFFSET SPREAD FOOTING

*Required for wall height 24′-0″ - Type 10C, walls 22′-0″ - 24′-0″ - Type 10B and walls 20′-0″, 22′-0″, and 24′-0″ - Type 10D

D-2j
03-14-97

EFFECTIVE: JANUARY 7, 2002 TO AUGUST 4, 2002

EFFECTIVE: JANUARY 7, 2002 TO AUGUST 4, 2002

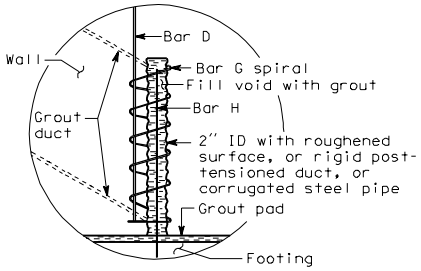

DETAIL B

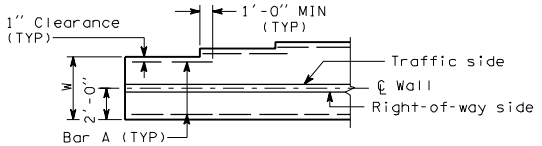

FOOTING WIDTH TRANSITION DETAIL

(For locations without footing step)

NOTE: Transverse bars not shown

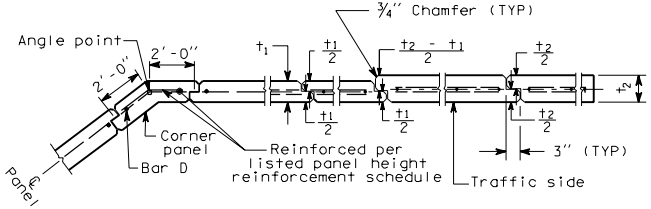

JOINT AND CORNER DETAIL

NOISE BARRIER - TYPE 10

PRECAST CONCRETE WALL WITH OFFSET SPREAD FOOTING

D-2j

03-14-97

EFFECTIVE: JANUARY 7, 2002 TO AUGUST 4, 2002

EFFECTIVE: JANUARY 7, 2002 TO AUGUST 4, 2002

WALL HT H	TYPE 11A DEPTH D1	DEPTH D2	BAR A	BAR B	Y (mm)	PLATE THICK. T	ANCHOR BOLT DIA
6'-0"	5'-0"	4'-6"	4-#3	4-#5	2'-0"	½"	1"
8'-0"	5'-6"	5'-0"	4-#3	4-#5	2'-0"	½"	1"
10'-0"	6'-3"	5'-3"	4-#3	4-#5	2'-0"	⅝"	1"
12'-0"	6'-9"	5'-9"	4-#3	4-#5	2'-0"	¾"	1"
14'-0"	7'-3"	6'-3"	4-#4	4-#5	2'-2"	¾"	1"
16'-0"	7'-9"	6'-9"	4-#4	4-#6	2'-7"	⅞"	1"
18'-0"	8'-6"	7'-0"	4-#5	4-#6	2'-7"	1"	1"
20'-0"	9'-0"	7'-6"	4-#5	4-#7	3'-3"	1¼"	1"
22'-0"	9'-6"	8'-0"	4-#6	4-#7	3'-3"	1⅜"	1"
24'-0"	10'-0"	8'-3"	4-#6	4-#8	4'-3"	1½"	1"

WALL HT H	TYPE 11B DEPTH D1	DEPTH D2	BAR A	BAR B	Y	PLATE THICK. T	ANCHOR BOLT DIA
6'-0"	5'-9"	5'-0"	4-#3	4-#5	2'-0"	½"	1"
8'-0"	6'-6"	5'-9"	4-#3	4-#5	2'-0"	⅝"	1"
10'-0"	7'-3"	6'-3"	4-#4	4-#5	2'-2"	¾"	1"
12'-0"	8'-0"	6'-9"	4-#4	4-#6	2'-7"	1"	1"
14'-0"	8'-9"	7'-6"	4-#5	4-#6	2'-7"	1⅛"	1"
16'-0"	9'-6"	8'-0"	4-#6	4-#7	3'-3"	1¼"	1"
18'-0"	10'-3"	8'-6"	4-#6	4-#8	4'-3"	1⅜"	1"
20'-0"	10'-9"	9'-0"	4-#7	4-#8	4'-3"	1⅜"	1"
22'-0"	11'-6"	9'-6"	4-#8	4-#9	5'-5"	1½"	1"
24'-0"	12'-0"	10'-0"	4-#8	4-#10	6'-10"	1⅝"	1"

WALL HT H	TYPE 11C DEPTH D1	DEPTH D2	BAR A	BAR B	Y	PLATE THICK. T	ANCHOR BOLT DIA
6'-0"	5'-3"	4'-9"	4-#3	4-#5	2'-0"	½"	1"
8'-0"	6'-0"	5'-3"	4-#3	4-#5	2'-0"	⅝"	1"
10'-0"	6'-9"	5'-9"	4-#3	4-#5	2'-0"	¾"	1"
12'-0"	7'-6"	6'-3"	4-#4	4-#5	2'-2"	1"	1"
14'-0"	8'-0"	6'-9"	4-#4	4-#6	2'-7"	1"	1"
16'-0"	8'-9"	7'-3"	4-#5	4-#6	2'-7"	1⅛"	1"
18'-0"	9'-3"	7'-9"	4-#6	4-#7	3'-3"	1⅛"	1"
20'-0"	10'-0"	8'-3"	4-#6	4-#8	4'-3"	1¼"	1"
22'-0"	10'-6"	8'-9"	4-#7	4-#8	4'-3"	1⅜"	1"
24'-0"	11'-3"	9'-3"	4-#7	4-#9	5'-5"	1½"	1"

WALL HT H	TYPE 11D DEPTH D1	DEPTH D2	BAR A	BAR B	Y	PLATE THICK. T	ANCHOR BOLT DIA
6'-0"	6'-3"	5'-3"	4-#3	4-#5	2'-0"	½"	1"
8'-0"	7'-0"	6'-0"	4-#3	4-#5	2'-0"	¾"	1"
10'-0"	8'-0"	6'-9"	4-#4	4-#5	2'-2"	⅞"	1"
12'-0"	8'-9"	7'-3"	4-#5	4-#6	2'-7"	1"	1"
14'-0"	9'-6"	8'-0"	4-#5	4-#7	3'-3"	1¼"	1"
16'-0"	10'-3"	8'-6"	4-#6	4-#8	4'-3"	1¼"	1"
18'-0"	11'-0"	9'-3"	4-#7	4-#8	4'-3"	1⅜"	1"
20'-0"	11'-9"	9'-9"	4-#8	4-#9	5'-5"	1½"	1⅛"
22'-0"	12'-6"	10'-3"	4-#8	4-#10	6'-10"	1⅝"	1¼"
24'-0"	13'-3"	11'-0"	4-#9	4-#11	8'-5"	1¾"	1¼"

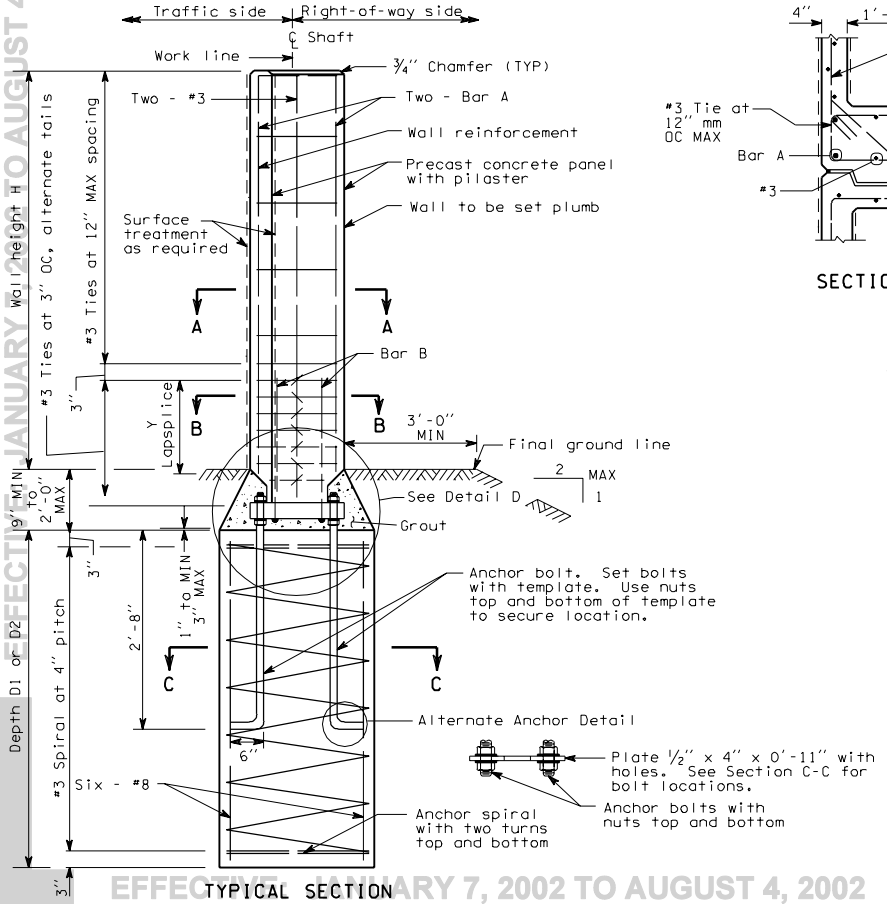

TYPICAL SECTION

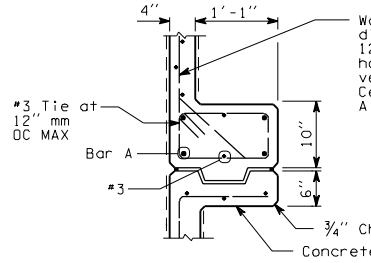

SECTION A-A

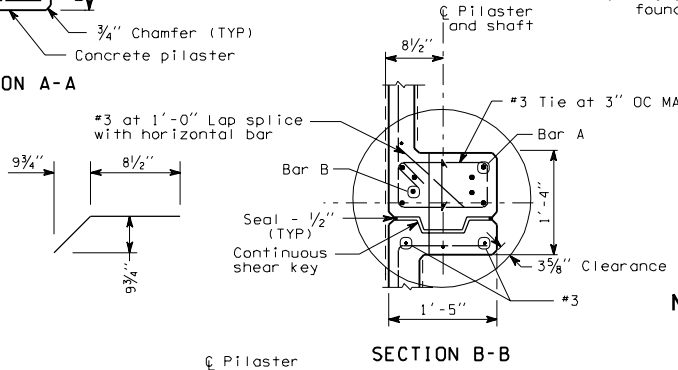

SECTION B-B

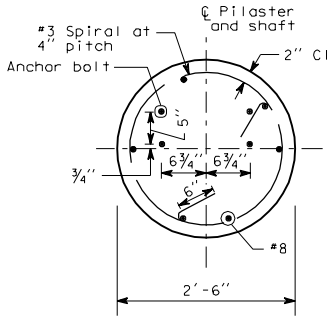

SECTION C-C

NOTES

1. Wall to be designated Noise Barrier Type 11A, 11B, 11C or 11D. The Contract specifies actual wall dimensions.
2. For intermediate wall heights, use the next higher H.
3. Panels shall have at least 3 feet of level ground on each side.
4. The Contract specifies actual foundation requirements D1 or D2.

NOISE BARRIER - TYPE 11
PRECAST CONCRETE WALL ON SHAFT FOUNDATION

D-2k
03-14-97

EFFECTIVE: JANUARY 7, 2002 TO AUGUST 4, 2002

D	#5	#6	#7	#8	#9	#10	#11
A	1 1/16"	1 1/4"	1 7/16"	1 5/8"	1 13/16"	2"	2 3/16"
H	7/16"	17/32"	5/8"	11/16"	3/4"	13/16"	7/8"
F	11/16"	13/16"	15/16"	1 1/32"	1 5/32"	1 9/32"	1 13/32"

BOLT DIA	HOLE DIA	SLOT G
5/8"	3/4"	———
3/4"	7/8"	———
7/8"	1"	———
1"	1 1/8"	1 1/8" × 1 1/2"
1 1/8"	1 1/4"	1 1/4" × 1 5/8"
1 1/4"	1 5/8"	1 3/8" × 1 3/4"
1 3/8"	1 1/2"	———

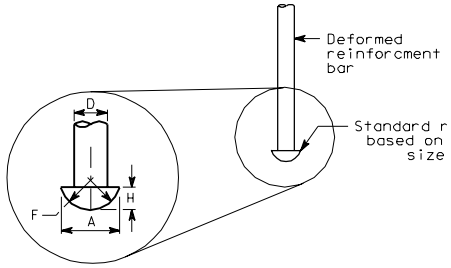

Button head shall bear firmly and uniform against base plate. Bar B shall be held secure during concrete placement to prevent gaps between button head and base plate.

BAR B

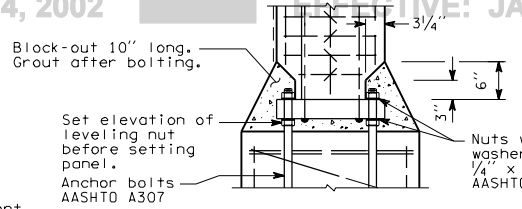

DETAIL D

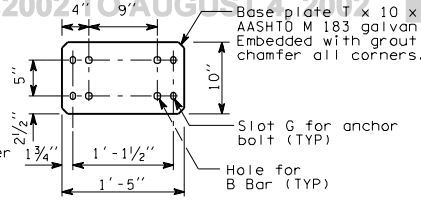

BASE PLATE DETAIL

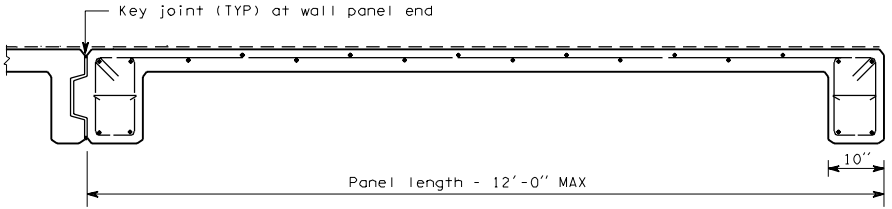

END PANEL

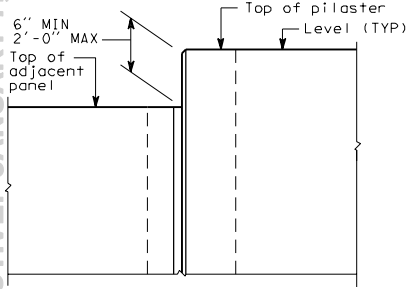

STEP DETAIL

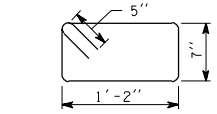

#3 Ties at 12" OC MAX

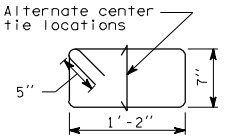

#3 Ties at 3" OC MAX

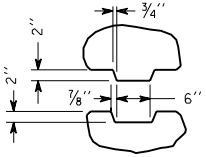

SHEAR-KEY

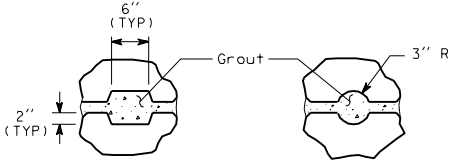

OPTIONAL SHEAR-KEY

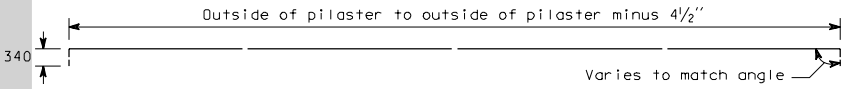

WALL REINFORCEMENT

NOISE BARRIER - TYPE 11
PRECAST CONCRETE WALL ON SHAFT FOUNDATION

D-2k
03-14-97

EFFECTIVE: JANUARY 7, 2002 TO AUGUST 4, 2002

ANGLE (Degree)	DIMENSION A (Inches)
30	4½"
40	5½"
50	6½"
60	7¼"
70	7¾"
80	8"
90	9¼"

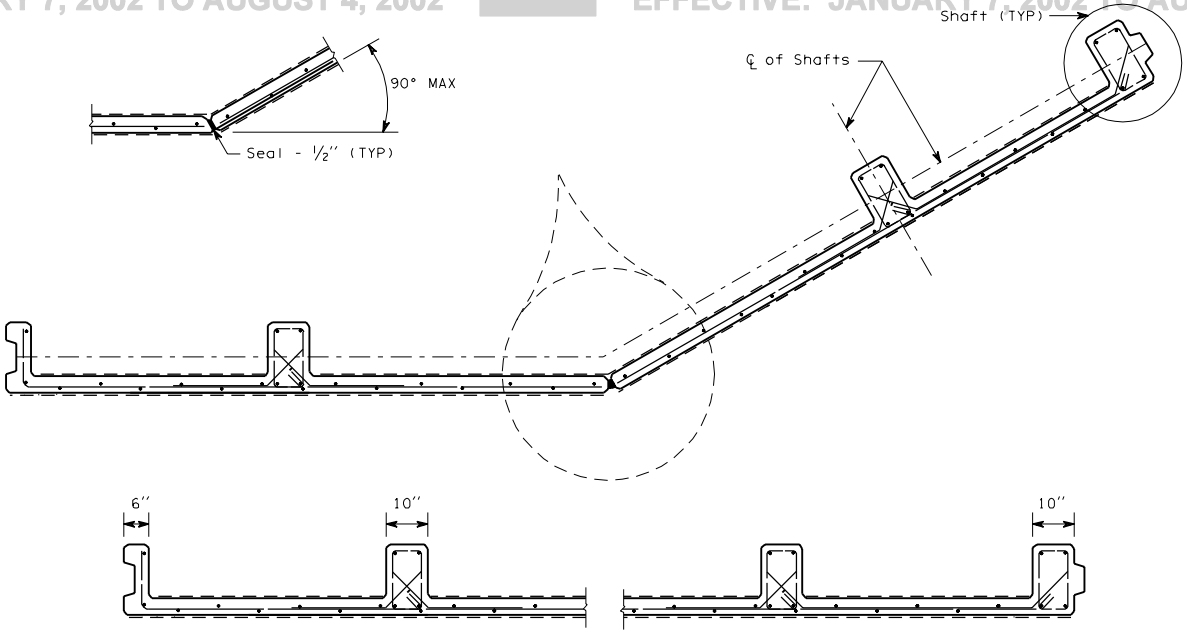

OPTIONAL ANGLE POINT

NOISE BARRIER - TYPE 11
PRECAST CONCRETE WALL ON SHAFT FOUNDATION

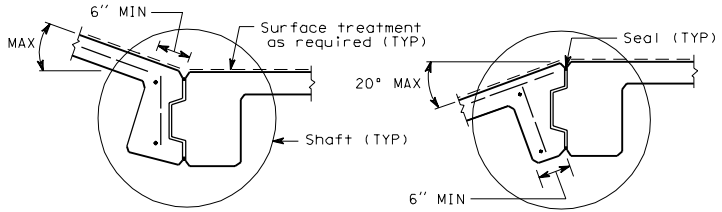

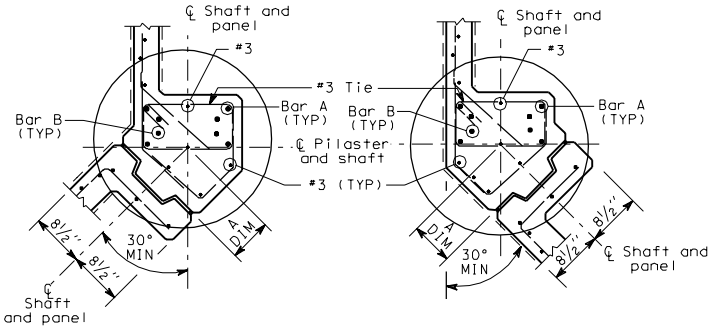

ANGLE POINT PLAN

D-2k
03-14-97

EFFECTIVE: JANUARY 7, 2002 TO AUGUST 4, 2002

WALL HT H	TYPE 12A		TYPE 12B		TYPE 12C		TYPE 12D		WALL HT
	BAR B	BAR D	BAR B	BAR D	BAR B	BAR D	BAR B	BAR D	
6'-0"	#6 at 12"	#4 at 15"	#6 at 12"	#4 at 15"	#6 at 12"	#4 at 15"	#6 at 12"	#4 at 15"	6'-0"
8'-0"	#6 at 12"	#4 at 15"	#6 at 12"	#4 at 15"	#6 at 12"	#4 at 15"	#6 at 12"	#4 at 15"	8'-0"
10'-0"	#6 at 12"	#4 at 15"	#6 at 12"	#4 at 15"	#6 at 12"	#4 at 15"	#6 at 12"	#4 at 15"	10'-0"
12'-0"	#6 at 12"	#4 at 15"	#6 at 12"	#4 at 15"	#6 at 12"	#4 at 15"	#6 at 12"	#4 at 12"	12'-0"
14'-0"	#6 at 12"	#4 at 15"	#6 at 12"	#4 at 11"	#6 at 12"	#4 at 11"	#6 at 12"	#4 at 10"	14'-0"
16'-0"	#6 at 12"	#4 at 10"	#6 at 12"	#4 at 10"	#6 at 12"	#4 at 10"	#6 at 12"	#5 at 12"	16'-0"
18'-0"	#6 at 12"	#4 at 10"	#6 at 12"	#4 at 10"	#6 at 12"	#5 at 12"	#6 at 9"	#5 at 9"	18'-0"

NOTES

1. Wall to be designated Noise Barrier Type 12A, 12B, 12C and 12D. The Contract specifies actual wall designation.
2. For intermediate wall heights, use the next higher H.
3. Compaction of trench height differential shall not exceed 1 foot.
4. Panels shall have at least 3 feet of level ground on each side.
5. Construction joints in the footing shall be spaced at 120 feet maximum.
6. All joints shall be in full contact and sealed.

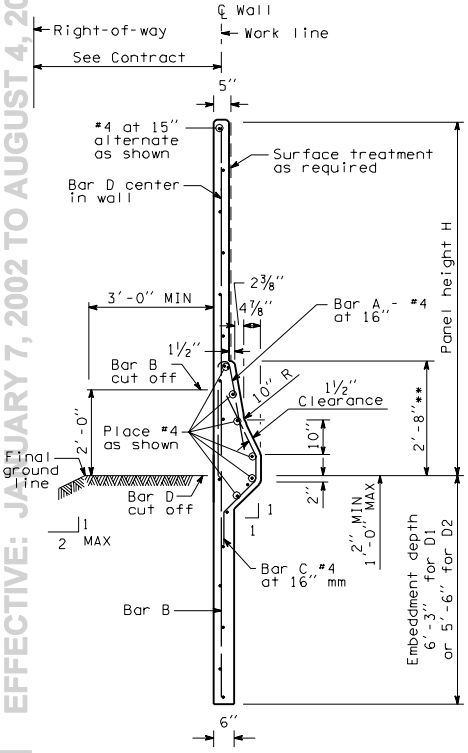

TYPICAL SECTION

**Height may vary if required to provide a smooth profile consistant with the roadway profile

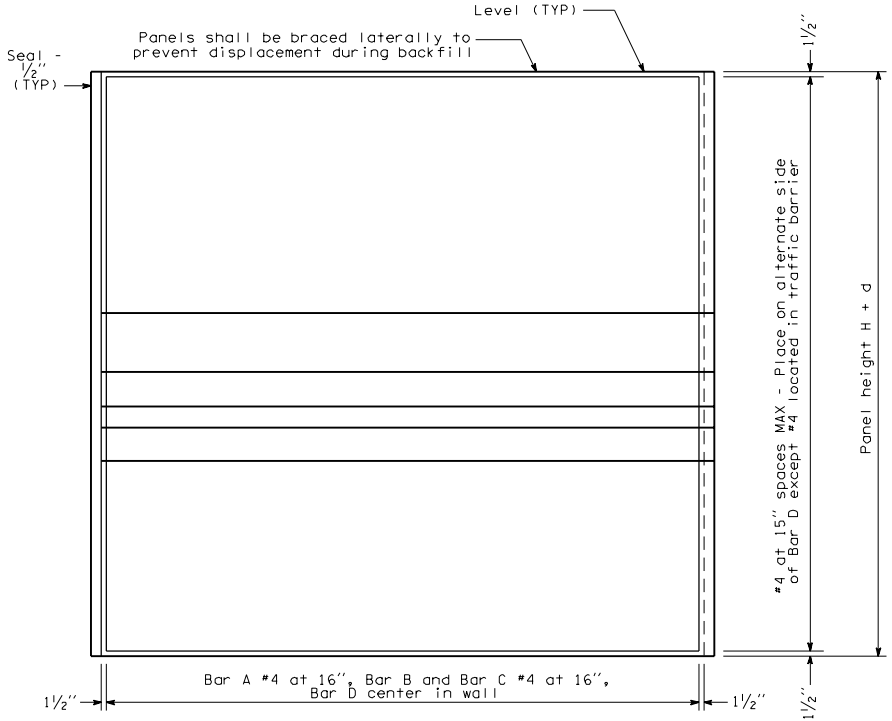

ELEVATION

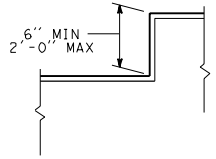

STEP IN PANEL TOP

NOISE BARRIER - TYPE 12

PRECAST CONCRETE WALL WITH TRAFFIC BARRIER ON TRENCH FOOTING

D-2I

03-14-97

EFFECTIVE: JANUARY 7, 2002 TO AUGUST 4, 2002

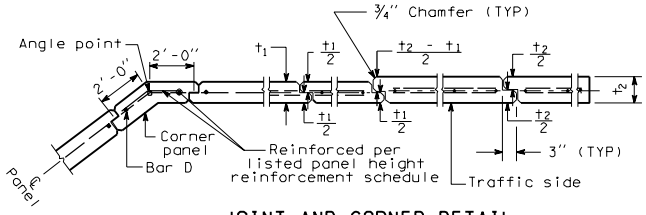

JOINT AND CORNER DETAIL

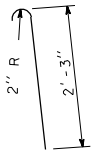

BAR A

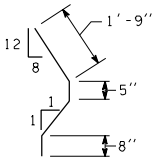

BAR C

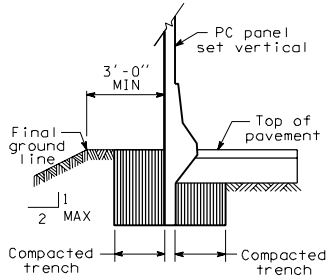

TRENCH FOOTING

See Note 3

NOISE BARRIER - TYPE 12

PRECAST CONCRETE WALL WITH TRAFFIC BARRIER ON TRENCH FOOTING

D-2I

03-14-97

EFFECTIVE: JANUARY 7, 2002 TO AUGUST 4, 2002

EFFECTIVE: JANUARY 7, 2002 TO AUGUST 4, 2002

WALL HT H	TYPE 13A W	X	BAR B and C	BAR E	BAR D	BAR J	TYPE 13B W	X	BAR B and C	BAR E (mm)	BAR D	BAR J	WALL HT H
6'-0"	5'-6"	1"	#4 at 15"	#4 at 15"	#3 at 15"	#5 at 15"	5'-6"	1"	#4 at 15"	#4 at 15"	#3 at 15"	#5 at 15"	6'-0"
8'-0"	5'-3"	1"	#4 at 15"	#4 at 15"	#3 at 15"	#5 at 15"	5'-3"	1"	#4 at 15"	#4 at 15"	#3 at 15"	#5 at 15"	8'-0"
10'-0"	5'-3"	1"	#4 at 15"	#4 at 15"	#3 at 15"	#5 at 15"	5'-3"	1"	#4 at 15"	#4 at 15"	#3 at 15"	#5 at 15"	10'-0"
12'-0"	5'-0"	1"	#4 at 15"	#4 at 15"	#3 at 15"	#5 at 15"	5'-0"	1"	#4 at 10"	#4 at 10"	#3 at 10"	#5 at 10"	12'-0"
14'-0"	4'-9"	1"	#4 at 11"	#4 at 11"	#3 at 11"	#5 at 11"	5'-0"	1"	#4 at 12"	#5 at 12"	#4 at 12"	#5 at 12"	14'-0"
16'-0"	5'-0"	10"	#4 at 12"	#5 at 12"	#4 at 12"	#5 at 12"	5'-0"	10"	#4 at 10"	#5 at 10"	#4 at 10"	#5 at 10"	16'-0"
18'-0"	5'-0"	10"	#4 at 10"	#5 at 10"	#4 at 10"	#5 at 10"	5'-3"	1'-6"	#4 at 12"	#5 at 12"	#5 at 12"	#5 at 12"	18'-0"

WALL HT H	TYPE 13C W	X	BAR B and C	BAR E	BAR D	BAR J	TYPE 13D W	X	BAR B and C	BAR E	BAR D	BAR J	WALL HT H
6'-0"	5'-6"	1"	#4 at 15"	#4 at 15"	#3 at 15"	#5 at 15"	5'-6"	1"	#4 at 15"	#4 at 15"	#3 at 15"	#5 at 15"	6'-0"
8'-0"	5'-3"	1"	#4 at 15"	#4 at 15"	#3 at 15"	#5 at 15"	5'-3"	1"	#4 at 15"	#4 at 15"	#3 at 15"	#5 at 15"	8'-0"
10'-0"	5'-3"	1"	#4 at 15"	#4 at 15"	#3 at 15"	#5 at 15"	5'-3"	1"	#4 at 12"	#4 at 12"	#3 at 12"	#5 at 12"	10'-0"
12'-0"	5'-0"	1"	#4 at 12"	#4 at 12"	#3 at 12"	#5 at 12"	5'-0"	1"	#4 at 12"	#5 at 12"	#4 at 12"	#5 at 12"	12'-0"
14'-0"	4'-9"	1"	#4 at 12"	#5 at 12"	#4 at 12"	#5 at 12"	5'-3"	10"	#4 at 10"	#5 at 10"	#4 at 10"	#5 at 10"	14'-0"
16'-0"	5'-0"	10"	#4 at 10"	#5 at 10"	#4 at 10"	#5 at 10"	5'-6"	1'-6"	#4 at 13"	#5 at 13"	#5 at 13"	#5 at 13"	16'-0"
18'-0"	5'-0"	1'-0"	#4 at 10"	#5 at 10"	#4 at 10"	#5 at 10"	5'-9"	1'-9"	#4 at 9"	#5 at 9"	#5 at 9"	#5 at 9"	18'-0"

NOTES

1. Wall to be designated Noise Wall Type 13A, 13B, 13C or 13D. The Contract specifies actual wall designations.
2. For intermediate wall heights, use the next higher H.
3. Panels shall have at least 3 feet of level ground on each side.
4. Construction joints in the footing shall be spaced at 120 feet maximum.
5. All joints shall be in full contact and sealed.
6. The Contract specifies actual foundation requirements D1 or D2.

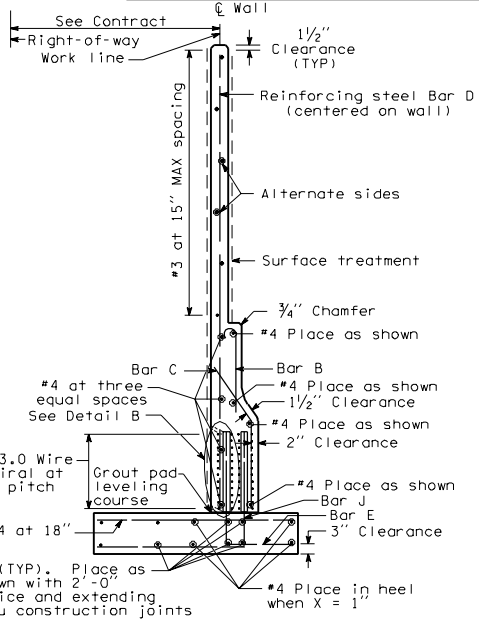

REINFORCEMENT SECTION

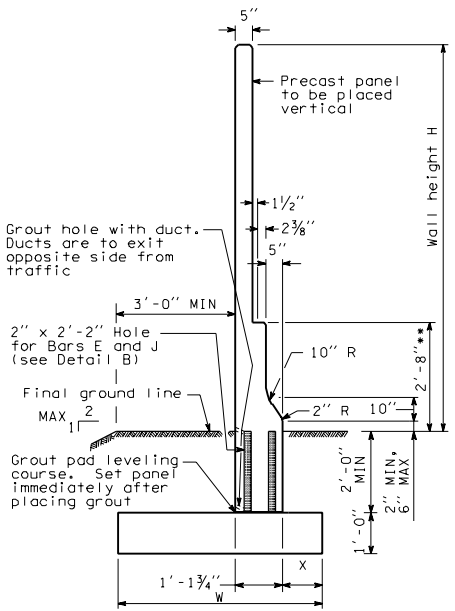

TYPICAL SECTION

**Height may vary if required to provide a smooth profile consistent with the roadway profile

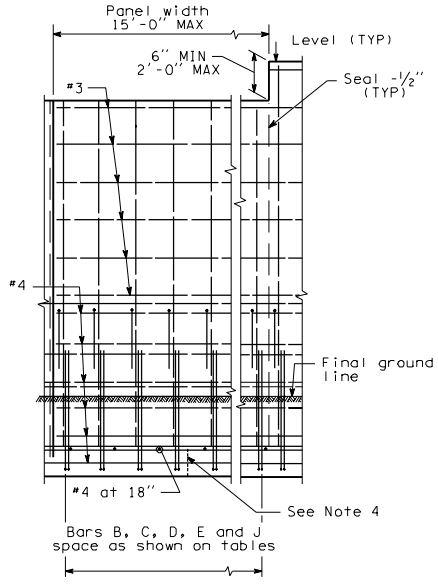

ELEVATION

NOISE BARRIER - TYPE 13

PRECAST CONCRETE WALL WITH TRAFFIC BARRIER ON SPREAD FOOTING

D-2m
03-14-97

EFFECTIVE: JANUARY 7, 2002 TO AUGUST 4, 2002
EFFECTIVE: JANUARY 7, 2002 TO AUGUST 4, 2002

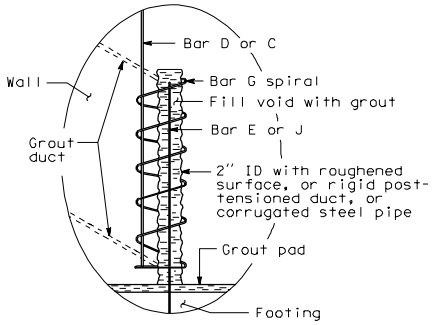

DETAIL B

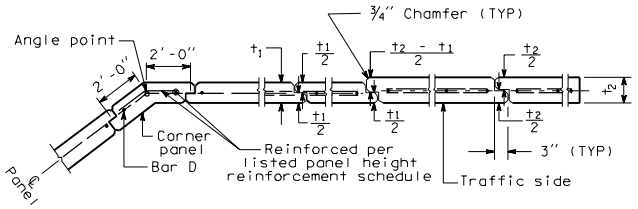

JOINT AND CORNER DETAIL

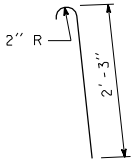

BAR B

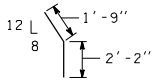

BAR C

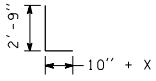

BAR E

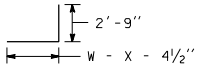

BAR J

NOISE BARRIER - TYPE 13

PRECAST CONCRETE WALL
WITH TRAFFIC BARRIER ON
SPREAD FOOTING

D-2m
03-14-97

EFFECTIVE: JANUARY 7, 2002 TO AUGUST 4, 2002
EFFECTIVE: JANUARY 7, 2002 TO AUGUST 4, 2002

EFFECTIVE: JANUARY 7, 2002 TO AUGUST 4, 2002

WALL HT H	TYPE 14A BAR A	TYPE 14B BAR A	TYPE 14C BAR A	TYPE 14D BAR A	WALL HT H
6′-0″	#4 at 15″	#4 at 15″	#4 at 15″	#4 at 15″	6′-0″
8′-0″	#4 at 15″	#4 at 15″	#4 at 15″	#4 at 15″	8′-0″
10′-0″	#4 at 15″	#4 at 15″	#4 at 15″	#4 at 15″	10′-0″
12′-0″	#4 at 15″	#4 at 15″	#4 at 15″	#4 at 12″	12′-0″
14′-0″	#4 at 15″	#4 at 11″	#4 at 15″	#4 at 10″	14′-0″
16′-0″	#4 at 10″	#4 at 10″	#4 at 10″	#5 at 12″	16′-0″
18′-0″	#4 at 10″	#5 at 12″	#4 at 10″	#5 at 12″	18′-0″

NOTES

1. Wall to be designated Noise Barrier Type 14A, 14B, 14C or 14D. The Contract specifies actual wall dimensions.
2. For intermediate wall heights, use the next higher H.
3. Construction joints in the footing wall shall be spaced at 120 feet maximum.
4. Panels shall have at least 3 feet level ground on each side.
5. All joints shall be in full contact and sealed.

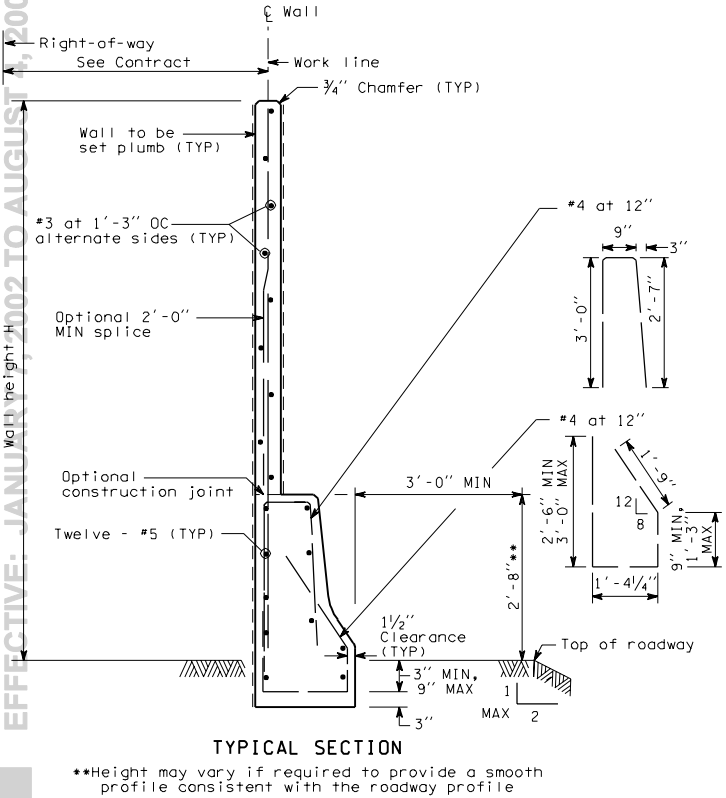

TYPICAL SECTION

**Height may vary if required to provide a smooth profile consistent with the roadway profile

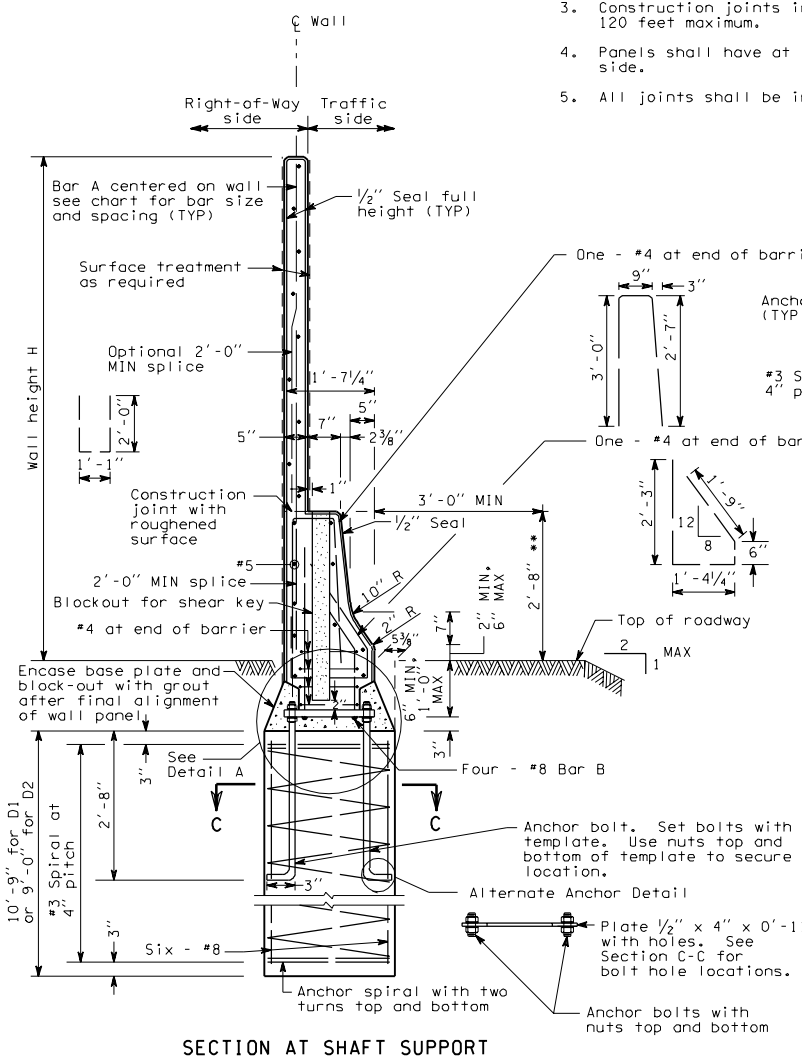

SECTION AT SHAFT SUPPORT

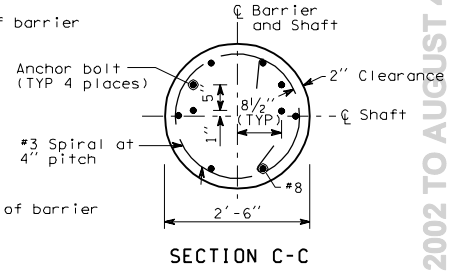

SECTION C-C

NOISE BARRIER - TYPE 14

PRECAST CONCRETE WALL WITH TRAFFIC BARRIER ON SHAFT FOUNDATION

D-2n
03-14-97

EFFECTIVE: JANUARY 7, 2002 TO AUGUST 4, 2002

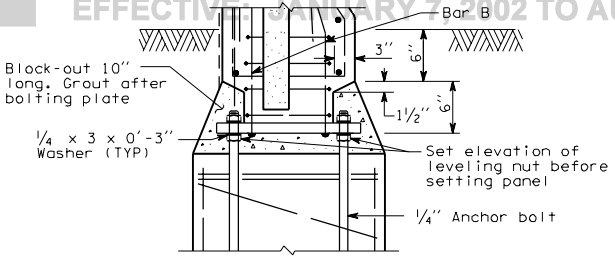

DETAIL A

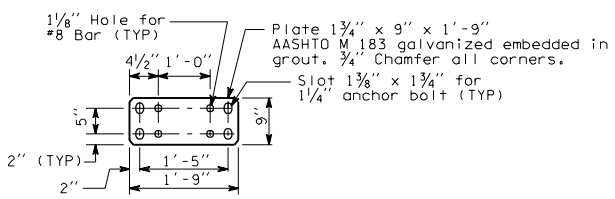

BASEPLATE DETAIL

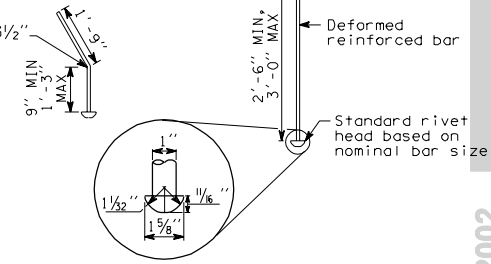

BAR B

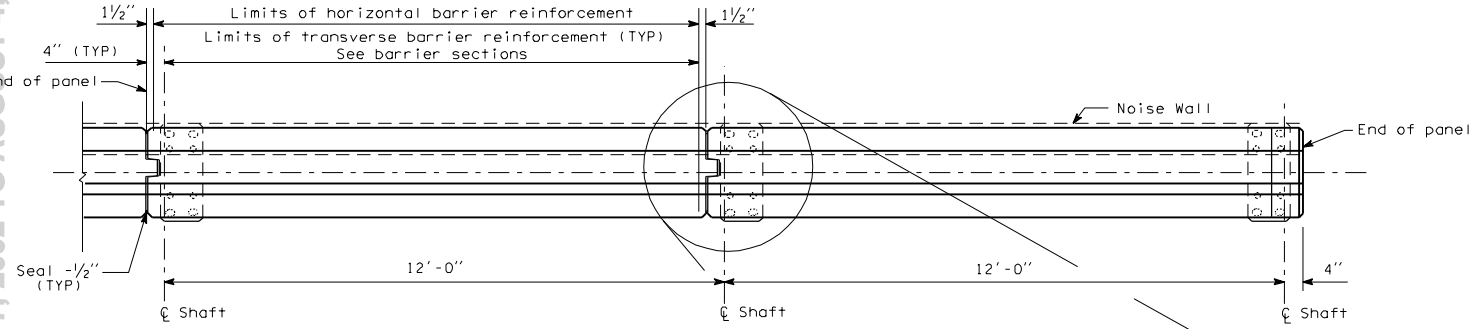

TYPICAL INTERMEDIATE AND END PANEL

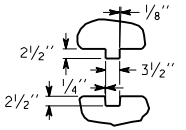

SHEAR-KEY

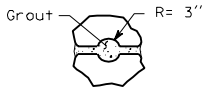

OPTIONAL SHEAR-KEY

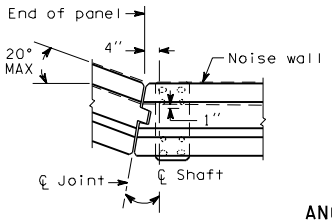

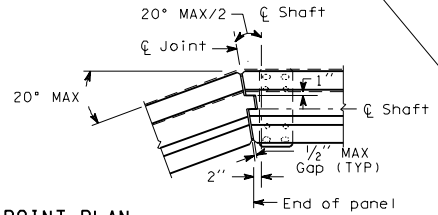

ANGLE POINT PLAN

Adjust reinforcement as necessary to accomodate angle point

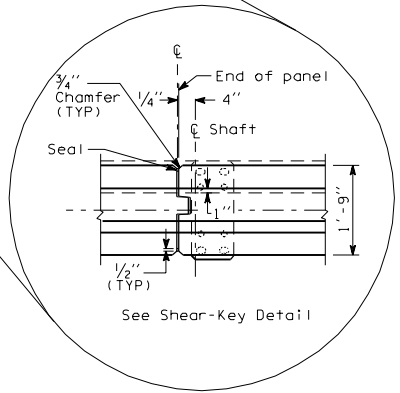

See Shear-Key Detail

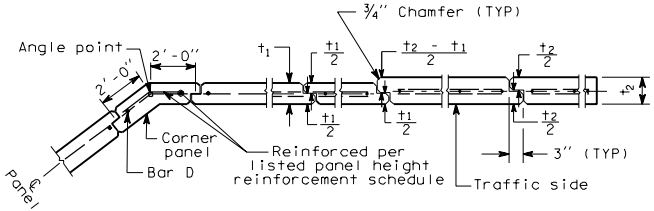

JOINT AND CORNER DETAIL

NOISE BARRIER - TYPE 14

PRECAST CONCRETE WALL WITH TRAFFIC BARRIER ON SHAFT FOUNDATION

D-2n

03-14-97

EFFECTIVE: JANUARY 7, 2002 TO AUGUST 4, 2002

EFFECTIVE: JANUARY 7, 2002 TO AUGUST 4, 2002

WALL HT H	TYPE 15A				TYPE 15B				TYPE 15C				TYPE 15D				WALL HT H
	DEPTH D1	DEPTH D2	GLULAM †	PLYWOOD †	DEPTH D1	DEPTH D2	GLULAM †	PLYWOOD †	DEPTH D1	DEPTH D2	GLULAM †	PLYWOOD †	DEPTH D1	DEPTH D2	GLULAM †	PLYWOOD †	
6′-0″	3′-3″	3′-0″	1″	1¼″	3′-9″	3′-6″	1¼″	1½″	3′-6″	3′-3″	1⅛″	1⅜″	4′-0″	3′-6″	1½″	1⅝″	6′-0″
8′-0″	3′-6″	3′-3″	1¼″	1⅜″	4′-0″	3′-9″	1⅝″	1⅞″	3′-9″	3′-6″	1⅜″	1⅝″	4′-3″	3′-9″	1⅞″	2⅛″	8′-0″
10′-0″	4′-0″	3′-6″	1½″	1⅝″	4′-6″	4′-0″	1⅞″	2¼″	4′-0″	3′-9″	1⅝″	2″	4′-6″	4′-0″	2¼″	2½″	10′-0″
12′-0″	4′-3″	3′-9″	1⅝″	2″	4′-9″	4′-3″	2¼″	2⅝″	4′-6″	4′-0″	2″	2¼″	4′-9″	4′-3″	2½″	3″	12′-0″
14′-0″	4′-6″	4′-0″	2″	2¼″	5′-0″	4′-6″	2½″	3″	4′-9″	4′-3″	2¼″	2⅝″	5′-3″	4′-9″	2⅞″	3⅜″	14′-0″
16′-0″	4′-9″	4′-0″	2¼″	2½″	5′-3″	4′-9″	2⅞″	3¼″	5′-0″	4′-6″	2½″	3″	5′-6″	5′-0″	3¼″	3¾″	16′-0″
18′-0″	5′-0″	4′-3″	2½″	2⅞″	5′-6″	5′-0″	3¼″	3⅝″	5′-3″	4′-9″	2⅞″	3¼″	6′-0″	5′-3″	3⅝″	4¼″	18′-0″

NOTES

1. Wall to be designated Noise Barrier Type 15A, 15B, 15C or 15D. The Contract specifies actual wall designations.
2. For intermediate wall heights not listed use the next higher H.
3. Panels shall have at least 3 feet of level ground on each side.
4. Plywood and Glulam panels and all lumber to be pressure preservative treated.
5. The Contract shall specify actual foundation requirements D1 or D2.

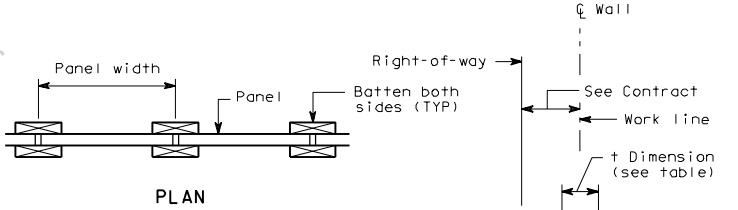

PLAN

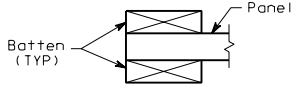

SECTION A-A

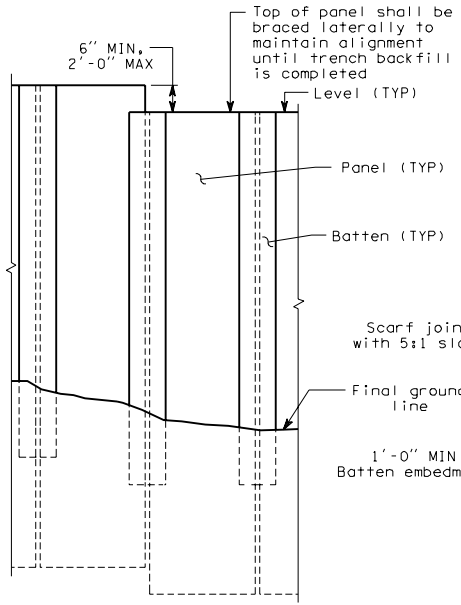

ELEVATION

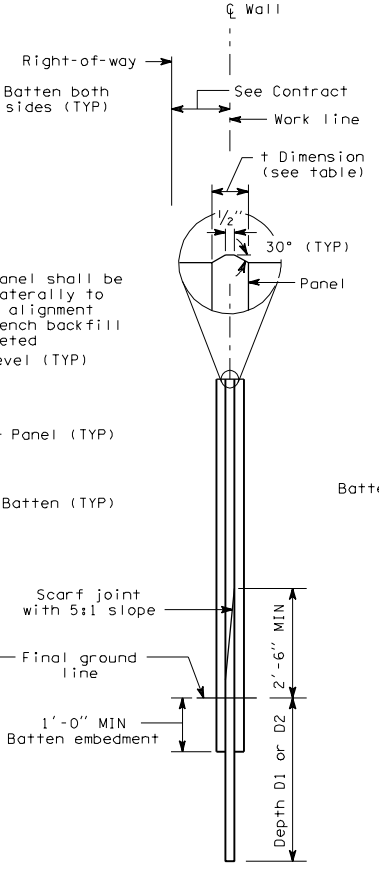

TYPICAL SECTION

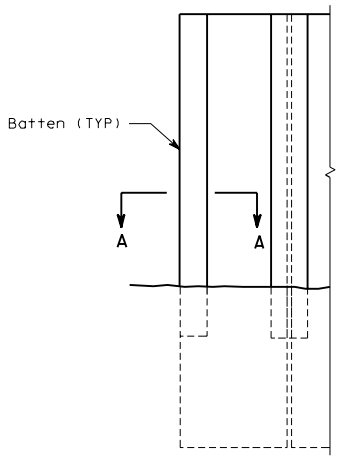

ELEVATION END DETAIL

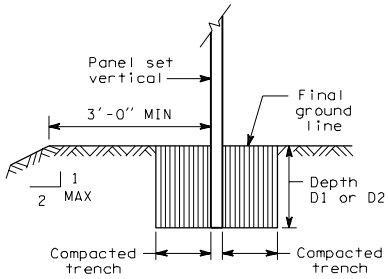

TRENCH FOOTING

NOISE BARRIER - TYPE 15

TIMBER PANEL WALL ON TRENCH FOOTING

D-20 1 of 1

03-14-97

EFFECTIVE: JANUARY 7, 2002 TO AUGUST 4, 2002

EFFECTIVE: JANUARY 7, 2002 TO AUGUST 4, 2002

WALL HT H	TYPE 16A CMU	DIM X	DEPTH D1	DEPTH D2	BAR C	BAR D	TYPE 16B CMU	DIM X	DEPTH D1	DEPTH D2	BAR C	BAR D	WALL HT H
6'-0"	8"	——	3'-3"	3'-0"	——	#6 at 48"	8"	——	3'-8"	3'-4"	——	#6 at 48"	6'-0"
8'-0"	8"	——	3'-6"	3'-4"	——	#6 at 48"	8"	——	4'-0"	3'-8"	——	#6 at 48"	8'-0"
10'-0"	8"	——	3'-10"	3'-6"	——	#6 at 48"	8"	——	4'-4"	3'-10"	——	#6 at 48"	10'-0"
12'-0"	8"	——	4'-7"	3'-8"	——	#6 at 48"	8"	——	4'-8"	4'-2"	——	#6 at 40"	12'-0"
14'-0"	8"	——	4'-4"	3'-10"	——	#6 at 32"	10"	4'-0"	4'-11"	4'-5"	#6 at 40"	#6 at 40"	14'-0"
16'-0"	8"	——	4'-7"	4'-1"	——	#6 at 24"	10"	4'-8"	5'-3"	4'-8"	#6 at 32"	#6 at 32"	16'-0"
18'-0"	10"	5'-4"	4'-10"	4'-3"	#6 at 48"	#6 at 48"	10"	5'-4"	5'-6"	4'-10"	#6 at 24"	#6 at 24"	18'-0"
20'-0"	10"	6'-0"	5'-3"	4'-9"	#6 at 32"	#6 at 32"	10"	6'-0"	4'-9"	5'-3"	#7 at 24"	#7 at 24"	20'-0"
22'-0"	10"	6'-8"	5'-6"	5'-0"	#6 at 24"	#6 at 24"	10"	8'-0"	6'-0"	5'-6"	#7 at 16"	#7 at 16"	22'-0"
24'-0"	10"	7'-4"	5'-9"	5'-3"	#6 at 18"	#6 at 18"	10"	10'-0"	6'-3"	5'-9"	#8 at 16"	#8 at 16"	24'-0"

WALL HT H	TYPE 16C CMU	DIM X	DEPTH D1	DEPTH D2	BAR C	BAR D	TYPE 16D CMU	DIM X	DEPTH D1	DEPTH D2	BAR C	BAR D	WALL HT H
6'-0"	8"	——	3'-6"	3'-3"	——	#6 at 48"	8"	——	3'-10"	3'-5"	——	#6 at 48"	6'-0"
8'-0"	8"	——	3'-9"	3'-5"	——	#6 at 48"	8"	——	4'-2"	3'-9"	——	#6 at 48"	8'-0"
10'-0"	8"	——	4'-7"	3'-8"	——	#6 at 48"	8"	——	4'-5"	4'-0"	——	#6 at 32"	0'-0"
12'-0"	8"	——	4'-4"	3'-11"	——	#6 at 32"	10"	4'-0"	4'-10"	4'-4"	#6 at 48"	#6 at 48"	12'-0"
14'-0"	8"	——	4'-8"	4'-2"	——	#6 at 24"	10"	4'-0"	5'-3"	4'-7"	#6 at 32"	#6 at 32"	14'-0"
16'-0"	10"	4'-0"	4'-11"	4'-5"	#6 at 40"	#6 at 40"	10"	4'-8"	5'-7"	4'-11"	#6 at 24"	#6 at 24"	6'-0"
18'-0"	10"	4'-8"	5'-3"	4'-8"	#6 at 32"	#6 at 32"	10"	5'-4"	5'-10"	5'-1"	#6 at 18"	#6 at 18"	8'-0"
20'-0"	10"	5'-4"	5'-6"	5'-0"	#6 at 24"	#6 at 24"	10"	7'-4"	6'-0"	5'-6"	#7 at 18"	#7 at 18"	20'-0"
22'-0"	10"	6'-0"	5'-9"	5'-3"	#6 at 16"	#6 at 16"	10"	9'-8"	6'-6"	5'-9"	#8 at 18"	#8 at 18"	22'-0"
24'-0"	10"	7'-8"	6'-0"	5'-6"	#7 at 16"	#7 at 16"	10"	12'-0"	6'-9"	6'-0"	#9 at 18"	#9 at 18"	24'-0"

NOTES

1. Wall to be designated Noise Barrier Type 16A, 16B, 16C or 16D. The Contract specifies actual wall designations.
2. For intermediate wall heights, use the next higher H.
3. All masonry shall be hollow unit and installed as running bond.
4. All masonry is to be specially inspected.
5. All Concrete Masonry Unit (CMU) cells that have vertical steel reinforcing bars or bond beam units shall be filled with grout.
6. Panels shall have at least 3 feet of level ground on each side.
7. Construction joints in the footing shall be spaced at 120 feet maximum.
8. See "Masonry Wall Finishes and Details" sheet for masonry block finishes, special shapes, sizes and layouts.

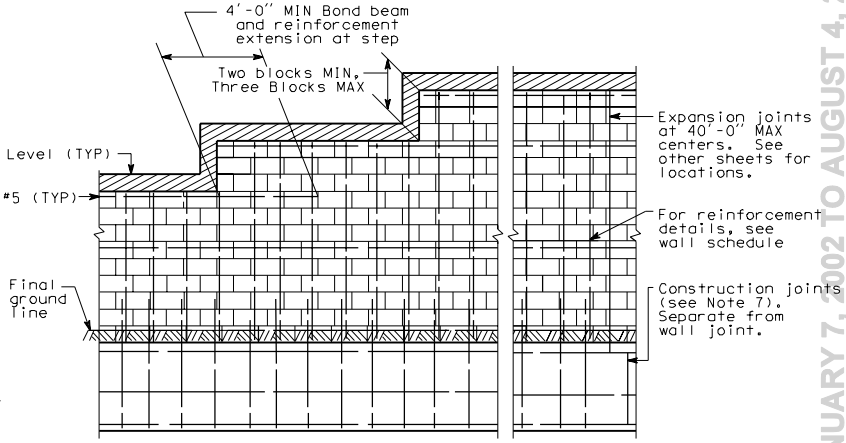

ELEVATION

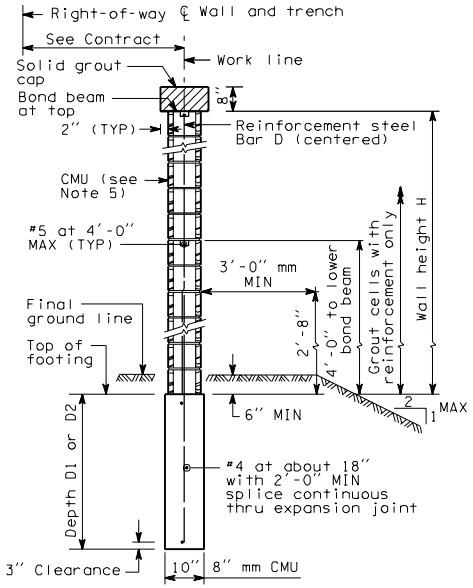

TYPICAL SECTION
8" CMU

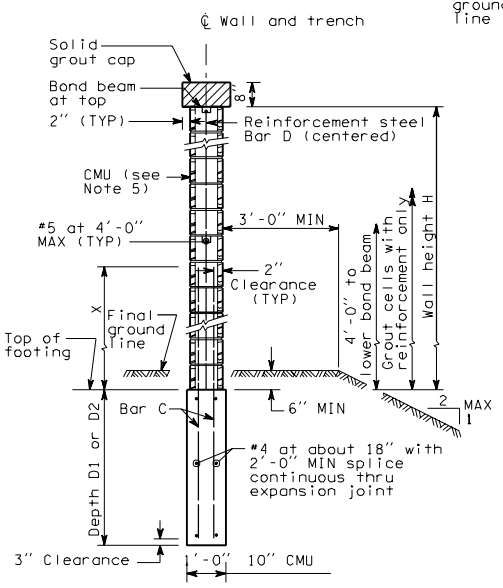

TYPICAL SECTION
10" CMU

NOISE BARRIER - TYPE 16

MASONRY WALL ON TRENCH FOOTING

D-2p
03-14-97

EFFECTIVE: JANUARY 7, 2002 TO AUGUST 4, 2002
EFFECTIVE: JANUARY 7, 2002 TO AUGUST 4, 2002

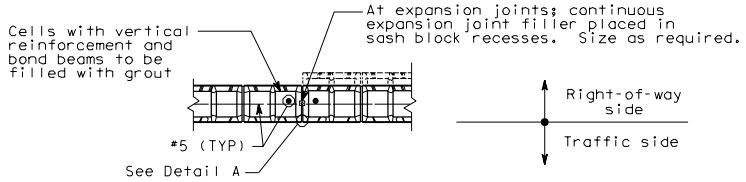

TYPICAL EXPANSION JOINT

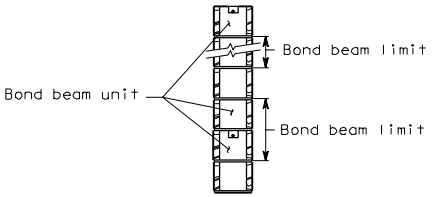

BOND BEAM DETAIL

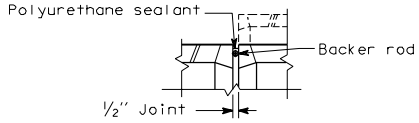

DETAIL A

Typical both sides of wall

NOISE BARRIER - TYPE 16

MASONRY WALL
ON TRENCH FOOTING

D-2p
03-14-97

EFFECTIVE: JANUARY 7, 2002 TO AUGUST 4, 2002
EFFECTIVE: JANUARY 7, 2002 TO AUGUST 4, 2002

EFFECTIVE: JANUARY 7, 2002 TO AUGUST 4, 2002

TYPE 17A

WALL HT H	CMU	X	W	BAR A	BAR C	BAR D	BAR E
6'-0"	8"	—	2'-0"	3-#4	—	#6 at 48"	#4 at 18"
8'-0"	8"	—	2'-3"	3-#4	—	#6 at 48"	#4 at 18"
10'-0"	8"	—	2'-6"	3-#4	—	#6 at 48"	#4 at 18"
12'-0"	8"	—	3'-0"	4-#4	—	#6 at 48"	#4 at 18"
14'-0"	8"	—	3'-3"	4-#4	—	#6 at 32"	#4 at 18"
16'-0"	10"	5'-4"	3'-9"	5-#4	—	#6 at 32"	#4 at 18"
18'-0"	10"	6'-0"	4'-0"	5-#4	#6 at 48"	#6 at 48"	#4 at 18"
20'-0"	10"	6'-8"	5'-0"	5-#4	#6 at 32"	#6 at 32"	#4 at 18"
22'-0"	10"	7'-4"	5'-6"	5-#4	#6 at 24"	#6 at 24"	#4 at 18"
24'-0"	10"	8'-0"	6'-0"	5-#4	#6 at 24"	#6 at 24"	#4 at 18"

TYPE 17B

CMU	X	W	BAR A	BAR C	BAR D	BAR E	WALL HT H
8"	—	2'-3"	3-#4	—	#6 at 48"	#4 at 18"	6'-0"
8"	—	2'-9"	4-#4	—	#6 at 48"	#4 at 18"	8'-0"
8"	—	3'-3"	4-#4	—	#6 at 48"	#4 at 18"	10'-0"
10"	4'-0"	3'-9"	4-#4	—	#6 at 40"	#4 at 18"	12'-0"
10"	4'-8"	4'-3"	5-#4	#6 at 1.015	#6 at 40"	#4 at 18"	14'-0"
10"	5'-4"	4'-9"	5-#4	#6 at 32"	#6 at 32"	#4 at 18"	16'-0"
10"	6'-0"	5'-3"	6-#4	#6 at 24"	#6 at 24"	#4 at 18"	18'-0"
10"	8'-0"	6'-0"	5-#4	#7 at 24"	#7 at 24"	#4 at 18"	20'-0"
10"	10'-0"	6'-3"	5-#4	#7 at 16"	#7 at 16"	#4 at 12"	22'-0"
10"	12'-0"	6'-9"	5-#4	#8 at 16"	#8 at 16"	#4 at 12"	24'-0"

TYPE 17C

WALL HT H	CMU	X	W	BAR A	BAR C	BAR D	BAR E
6'-0"	8"	—	2'-0"	3-#4	—	#6 at 48"	#4 at 18"
8'-0"	8"	—	2'-6"	3-#4	—	#6 at 48"	#4 at 18"
10'-0"	8"	—	2'-9"	3-#4	—	#6 at 48"	#4 at 18"
12'-0"	8"	—	3'-3"	3-#4	—	#6 at 40"	#4 at 18"
14'-0"	10"	4'-0"	3'-9"	5-#4	—	#6 at 16"	#4 at 18"
16'-0"	10"	4'-8"	4'-3"	5-#4	#6 at 40"	#6 at 40"	#4 at 18"
18'-0"	10"	5'-4"	4'-6"	5-#4	#6 at 32"	#6 at 32"	#4 at 18"
20'-0"	10"	6'-0"	5'-3"	5-#4	#6 at 24"	#6 at 16"	#4 at 18"
22'-0"	10"	7'-0"	5'-9"	5-#4	#6 at 16"	#6 at 16"	#4 at 18"
24'-0"	10"	8'-0"	6'-3"	5-#4	#7 at 16"	#7 at 16"	#4 at 12"

TYPE 17D

CMU	X	W	BAR A	BAR C	BAR D	BAR E	WALL HT H
8"	—	2'-6"	3-#4	—	#6 at 48"	#4 at 18"	6'-0"
8"	—	3'-3"	5-#4	—	#6 at 48"	#4 at 18"	8'-0"
10"	4'-0"	3'-6"	5-#4	—	#6 at 24"	#4 at 18"	10'-0"
10"	4'-0"	4'-3"	5-#4	#6 at 32"	#6 at 32"	#4 at 18"	12'-0"
10"	4'-8"	4'-9"	5-#4	#6 at 24"	#6 at 24"	#4 at 18"	14'-0"
10"	5'-4"	5'-6"	5-#4	#6 at 16"	#7 at 16"	#4 at 18"	16'-0"
10"	7'-4"	6'-0"	5-#4	#7 at 24"	#7 at 16"	#4 at 18"	18'-0"
10"	9'-8"	6'-6"	5-#4	#7 at 16"	#8 at 16"	#4 at 12"	20'-0"
10"	12'-0"	7'-0"	5-#4	#7 at 16"	#8 at 16"	#4 at 12"	22'-0"
10"	15'-0"	7'-6"	6-#4	#7 at 16"	#8 at 16"	#4 at 12"	24'-0"

NOTES

1. Wall to be designated Noise Barrier Type 17A, 17B, 17C or 17D. The Contract specifies actual wall designations.
2. For intermediate wall heights, use the next higher H.
3. All masonry shall be hollow unit and installed as running bond.
4. All masonry is to be specially inspected.
5. All Concrete Masonry Unit (CMU) cells that have vertical steel reinforcing bars or bond beam units shall be filled with grout.
6. Panels shall have at least 3 feet of level ground on each side.
7. Construction joints in the footing shall be spaced at 120 feet maximum.
8. See "Masonry Wall Finishes and Details" sheets for masonry block finishes, special shapes, sizes and layout.

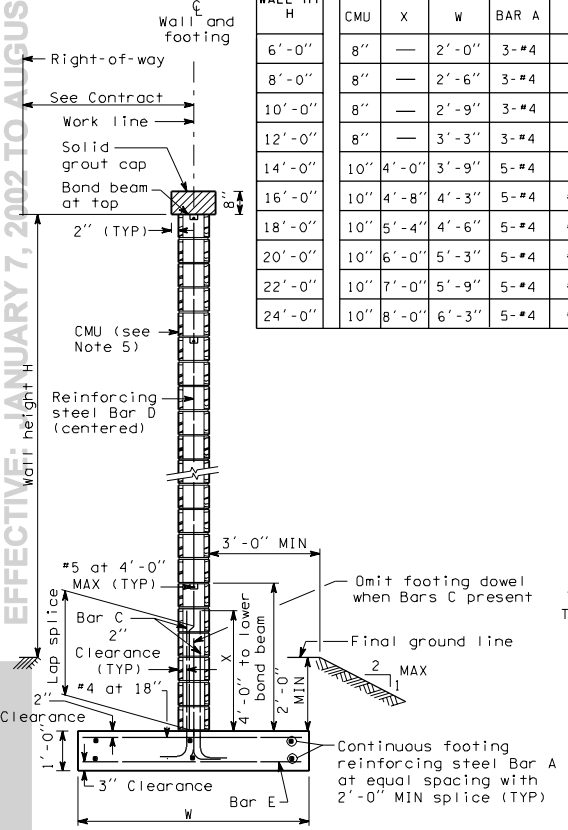

TYPICAL SECTION

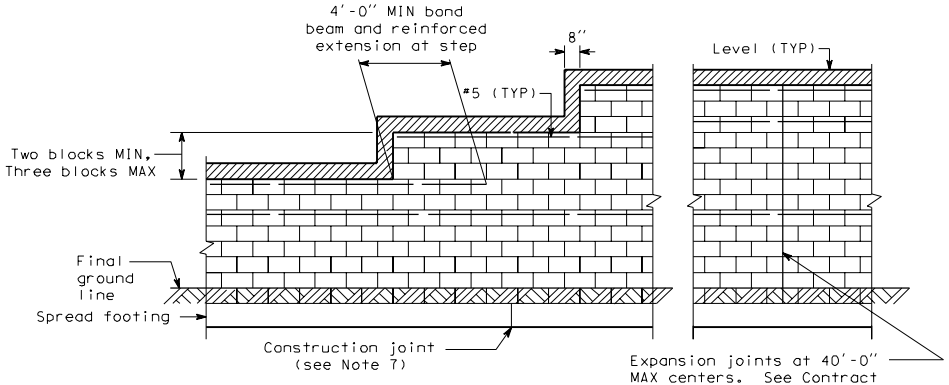

ELEVATION

NOISE BARRIER - TYPE 17
MASONRY WALL ON SPREAD FOOTING

D-2q
03-14-97

EFFECTIVE: JANUARY 7, 2002 TO AUGUST 4, 2002
EFFECTIVE: JANUARY 7, 2002 TO AUGUST 4, 2002

BAR SIZE	SPLICE LENGTH
#6	2'-8"
#7	3'-8"
#8	4'-10"

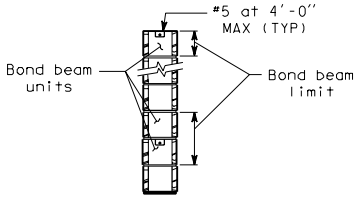

BOND BEAM DETAIL

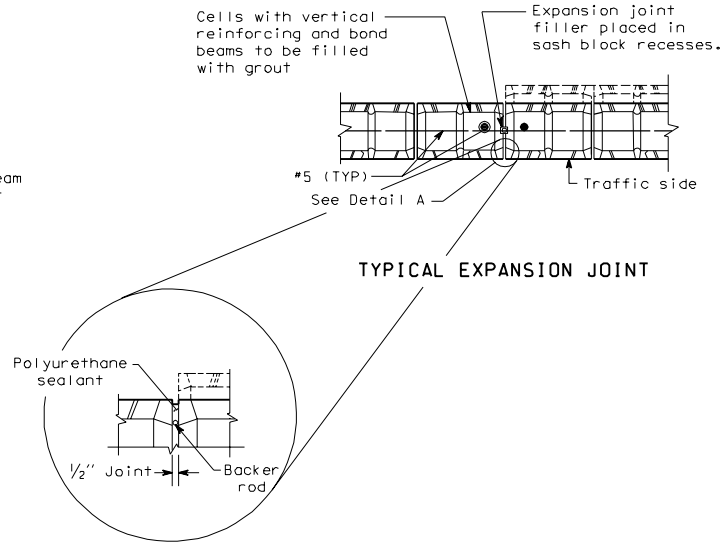

TYPICAL EXPANSION JOINT

DETAIL A

Typical both sides of wall

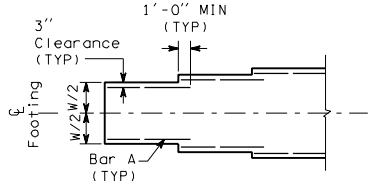

FOOTING WIDTH TRANSITION DETAIL

(For locations without footing step)

NOTE: Transverse bars not shown

NOISE BARRIER - TYPE 17

MASONRY WALL ON SPREAD FOOTING

D-2q

03-14-97

EFFECTIVE: JANUARY 7, 2002 TO AUGUST 4, 2002
EFFECTIVE: JANUARY 7, 2002 TO AUGUST 4, 2002

EFFECTIVE: JANUARY 7, 2002 TO AUGUST 4, 2002

WALL HT H	CMU	X	W	BAR A	BAR C	BAR D	BAR E
	TYPE 18A						
6′-0″	8″	—	2′-0″	3-#4	—	#6 at 48″	#4 at 18″
8′-0″	8″	—	2′-3″	3-#4	—	#6 at 48″	#4 at 18″
10′-0″	8″	—	2′-6″	3-#4	—	#6 at 48″	#4 at 18″
12′-0″	8″	—	3′-0″	4-#4	—	#6 at 48″	#4 at 18″
14′-0″	8″	—	3′-3″	4-#4	—	#6 at 36″	#4 at 18″
16′-0″	10″	5′-4″	3′-9″	5-#4	—	#6 at 16″	#4 at 18″
18′-0″	10″	6′-0″	4′-0″	5-#4	#6 at 48″	#6 at 48″	#4 at 18″
20′-0″	10″	6′-8″	5′-0″	5-#4	#6 at 32″	#6 at 32″	#4 at 18″
22′-0″	10″	7′-4″	5′-6″	5-#4	#6 at 24″	#6 at 24″	#4 at 18″
24′-0″	10″	8′-0″	6′-3″	5-#4	#6 at 16″	#6 at 16″	#4 at 18″

WALL HT H	CMU	X	W	BAR A	BAR C	BAR D	BAR E
	TYPE 18B						
8″	—	2′-3″	3-#4	—	#6 at 48″	#4 at 18″	6′-0″
8″	—	2′-9″	4-#4	—	#6 at 48″	#4 at 18″	8′-0″
8″	—	3′-3″	4-#4	—	#6 at 48″	#4 at 18″	10′-0″
10″	4′-0″	3′-9″	4-#4	—	#6 at 40″	#4 at 18″	12′-0″
10″	4′-8″	4′-3″	5-#4	#6 at 40″	#6 at 40″	#4 at 18″	14′-0″
10″	5′-4″	5′-3″	5-#4	#6 at 32″	#6 at 32″	#4 at 18″	16′-0″
10″	6′-0″	6′-0″	6-#4	#6 at 24″	#6 at 24″	#4 at 18″	18′-0″
10″	8′-0″	7′-0″	5-#4	#7 at 24″	#7 at 24″	#4 at 18″	20′-0″
10″	10′-0″	7′-9″	5-#4	#7 at 16″	#7 at 16″	#4 at 12″	22′-0″
10″	12′-0″	8′-6″	5-#4	#8 at 16″	#8 at 16″	#4 at 12″	24′-0″

WALL HT H	CMU	X	W	BAR A	BAR C	BAR D	BAR E
	TYPE 18C						
6′-0″	8″	—	2′-0″	3-#4	—	#6 at 48″	#4 at 18″
8′-0″	8″	—	2′-6″	3-#4	—	#6 at 48″	#4 at 18″
10′-0″	8″	—	2′-9″	3-#4	—	#6 at 48″	#4 at 18″
12′-0″	8″	—	3′-3″	3-#4	—	#6 at 40″	#4 at 18″
14′-0″	10″	4′-0″	3′-9″	5-#4	—	#6 at 16″	#4 at 18″
16′-0″	10″	4′-8″	4′-3″	5-#4	#6 at 40″	#6 at 40″	#4 at 18″
18′-0″	10″	5′-4″	5′-0″	5-#4	#6 at 32″	#6 at 32″	#4 at 18″
20′-0″	10″	6′-0″	5′-9″	5-#4	#6 at 24″	#6 at 24″	#4 at 18″
22′-0″	10″	7′-0″	6′-6″	5-#4	#6 at 16″	#6 at 16″	#4 at 18″
24′-0″	10″	8′-0″	7′-6″	5-#4	#7 at 16″	#7 at 16″	#4 at 12″

WALL HT H	CMU	X	W	BAR A	BAR C	BAR D	BAR E
	TYPE 18D						
8″	—	2′-6″	3-#4	—	#6 at 48″	#4 at 18″	6′-0″
8″	—	3′-3″	5-#4	—	#6 at 48″	#4 at 18″	8′-0″
10″	4′-0″	3′-6″	5-#4	—	#6 at 32″	#4 at 18″	10′-0″
10″	4′-0″	4′-3″	5-#4	#6 at 48″	#6 at 40″	#4 at 18″	12′-0″
10″	4′-8″	5′-3″	5-#4	#6 at 32″	#6 at 32″	#4 at 18″	14′-0″
10″	5′-4″	6′-3″	5-#4	#6 at 24″	#6 at 24″	#4 at 18″	16′-0″
10″	7′-4″	7′-0″	5-#4	#6 at 16″	#6 at 16″	#4 at 18″	18′-0″
10″	9′-8″	8′-0″	5-#4	#7 at 16″	#7 at 16″	#4 at 12″	20′-0″
10″	12′-0″	9′-0″	5-#4	#8 at 16″	#8 at 16″	#4 at 12″	22′-0″
10″	15′-0″	9′-9″	6-#4	#9 at 16″	#9 at 16″	#4 at 12″	24′-0″

NOTES

1. Wall to be designated Noise Barrier Type 18A, 18B, 18C or 18D. The Contract specifies actual wall designations.
2. For intermediate wall heights, use the next higher H.
3. All masonry shall be hollow unit and installed as running bond.
4. All masonry is to be specially inspected.
5. All Concrete Masonry Unit (CMU) cells that have vertical steel reinforcing bars or bond beam units shall be filled with grout.
6. Panels shall have at least 3 feet of level ground on each side.
7. Construction joints in the footing shall be spaced at 120 feet maximum.
8. See "Masonry Wall Finishes and Details" sheets for masonry block finishes, special shapes, sizes and layout.

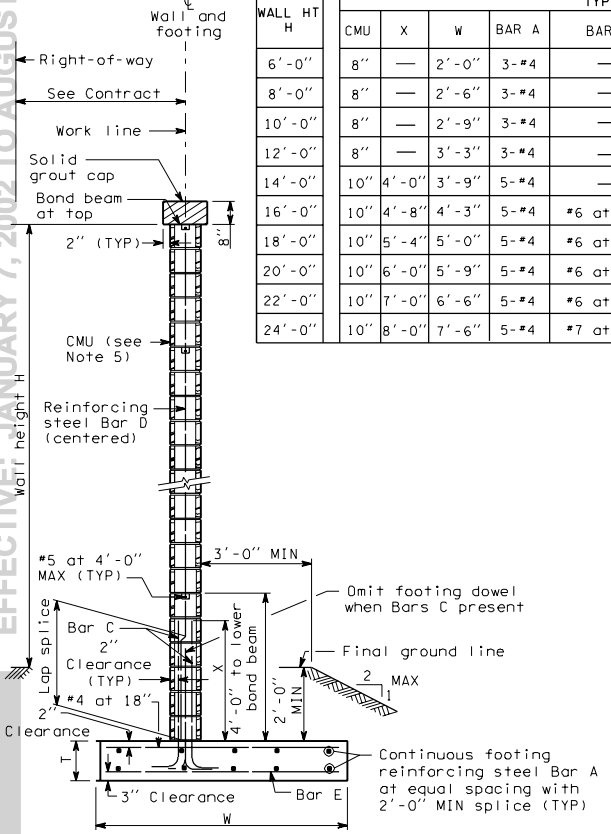

TYPICAL SECTION

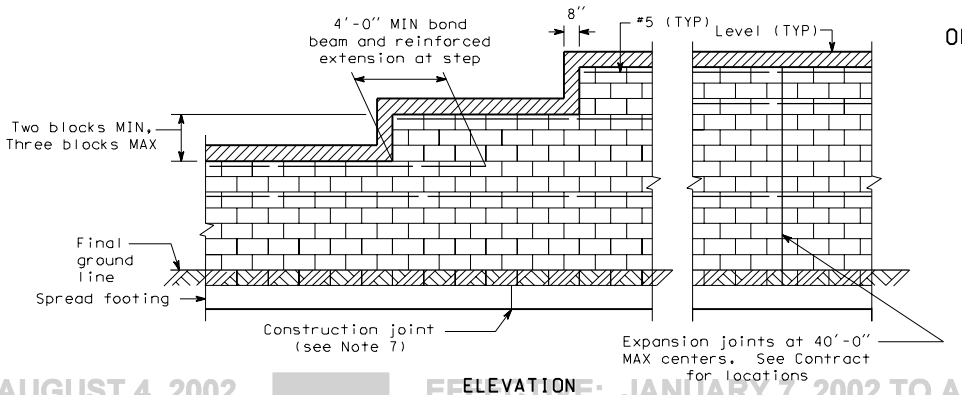

ELEVATION

NOISE BARRIER - TYPE 18
MASONRY WALL ON OFFSET SPREAD FOOTING

D-2r
03-14-97

EFFECTIVE: JANUARY 7, 2002 TO AUGUST 4, 2002

BAR SIZE	SPLICE LENGTH
#6	2'-8"
#7	3'-8"
#8	4'-10"

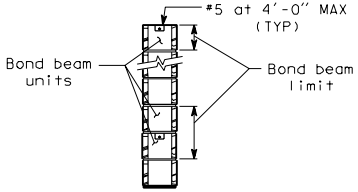

BOND BEAM DETAIL

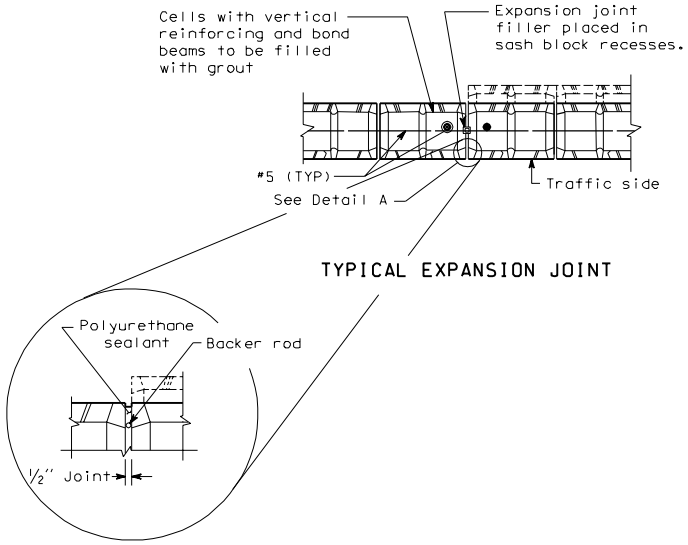

TYPICAL EXPANSION JOINT

DETAIL A
Typical both sides of wall

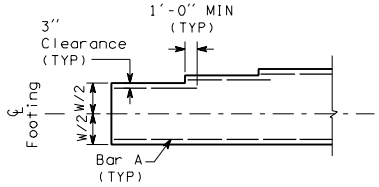

FOOTING WIDTH TRANSITION DETAIL
(For locations without footing step)
NOTE: Transverse bars not shown

NOISE BARRIER - TYPE 18
MASONRY WALL ON OFFSET SPREAD FOOTING

D-2r
03-14-97

EFFECTIVE: JANUARY 7, 2002 TO AUGUST 4, 2002

EFFECTIVE: JANUARY 7, 2002 TO AUGUST 4, 2002

WALL HT H	CMU	DIM X	BAR D	BAR C	DIA	P BARS	DEPTH D1	DEPTH D2	WALL HT H
	TYPE 19A								
6'-0"	8"	——	#6 at 48"	——	12"	6 - #5	5'-3"	4'-9"	6'-0"
8'-0"	8"	——	#6 at 48"	——	12"	6 - #5	6'-0"	5'-3"	8'-0"
10'-0"	8"	——	#6 at 48"	——	12"	6 - #5	6'-9"	5'-9"	10'-0"
12'-0"	8"	——	#6 at 48"	——	12"	6 - #5	7'-3"	6'-3"	12'-0"
14'-0"	8"	——	#6 at 32"	——	12"	6 - #6	7'-9"	6'-9"	14'-0"
16'-0"	10"	5'-4"	#6 at 32"	——	12"	6 - #7	8'-3"	7'-0"	16'-0"
18'-0"	10"	6'-0"	#6 at 48"	#6 at 48"	12"	6 - #8	8'-9"	7'-6"	18'-0"
20'-0"	10"	6'-8"	#6 at 32"	#6 at 32"	12"	6 - #9	9'-3"	7'-9"	20'-0"
22'-0"	10"	7'-4"	#6 at 24"	#6 at 24"	14"	8 - #7	9'-3"	7'-9"	22'-0"
24'-0"	10"	8'-0"	#6 at 24"	#6 at 24"	14"	8 - #8	9'-9"	8'-3"	24'-0"

WALL HT H	CMU	DIM X	BAR D	BAR C	DIA	P BARS	DEPTH D1	DEPTH D2	WALL HT H
	TYPE 19B								
8"	——	#6 at 48"	——	12"	6 - #5	6'-0"	5'-3"	6'-0"	
8"	——	#6 at 48"	——	12"	6 - #5	7'-0"	6'-0"	8'-0"	
8"	——	#6 at 48"	——	12"	6 - #6	7'-9"	6'-9"	10'-0"	
10"	4'-0"	#6 at 40"	——	12"	6 - #7	8'-6"	7'-3"	12'-0"	
10"	4'-8"	#6 at 32"	#6 at 32"	14"	8 - #7	8'-6"	7'-3"	14'-0"	
10"	5'-4"	#6 at 24"	#6 at 24"	14"	8 - #7	9'-3"	8'-0"	16'-0"	
10"	6'-0"	#6 at 16"	#6 at 16"	16"	6 - #8	9'-3"	8'-0"	18'-0"	
10"	8'-0"	#7 at 16"	#7 at 32"	16"	8 - #7	10'-0"	8'-6"	20'-0"	
10"	10'-0"	#7 at 16"	#7 at 24"	16"	8 - #8	10'-6"	9'-0"	22'-0"	
10"	12'-0"	#8 at 16"	#7 at 16"	16"	8 - #8	11'-3"	9'-6"	24'-0"	

WALL HT H	CMU	DIM X	BAR D	BAR C	DIA	P BARS	DEPTH D1	DEPTH D2	WALL HT H
	TYPE 19C								
6'-0"	8"	——	#6 at 48"	——	12"	6 - #5	5'-9"	5'-0"	
8'-0"	8"	——	#6 at 48"	——	12"	6 - #5	6'-6"	5'-6"	
10'-0"	8"	——	#6 at 48"	——	12"	6 - #5	7'-3"	6'-3"	
12'-0"	8"	——	#6 at 40"	——	12"	6 - #6	7'-9"	6'-9"	
14'-0"	10"	4'-0"	#6 at 40"	——	12"	6 - #7	8'-6"	7'-3"	
16'-0"	10"	4'-8"	#6 at 32"	#6 at 32"	14"	8 - #6	8'-6"	7'-3"	
18'-0"	10"	5'-4"	#6 at 24"	#6 at 24"	14"	8 - #7	9'-0"	7'-9"	
20'-0"	10"	6'-0"	#6 at 24"	#6 at 16"	14"	8 - #8	9'-9"	8'-3"	
22'-0"	10"	7'-8"	#6 at 16"	#6 at 16"	14"	8 - #9	10'-3"	8'-9"	
24'-0"	10"	8'-0"	#6 at 16"	#6 at 16"	16"	8 - #8	10'-3"	8'-9"	

WALL HT H	CMU	DIM X	BAR D	BAR C	DIA	P BARS	DEPTH D1	DEPTH D2	WALL HT H
	TYPE 19D								
8"	——	#6 at 48"	——	12"	6 - #5	6'-6"	5'-9"	6'-0"	
8"	——	#6 at 48"	——	12"	6 - #6	7'-6"	6'-6"	8'-0"	
10"	4'-0"	#6 at 24"	——	12"	6 - #7	8'-3"	7'-0"	10'-0"	
10"	4'-0"	#6 at 32"	#6 at 32"	14"	8 - #7	8'-6"	7'-3"	12'-0"	
10"	4'-8"	#6 at 24"	#6 at 24"	14"	8 - #7	9'-3"	8'-0"	14'-0"	
10"	5'-4"	#6 at 16"	#6 at 16"	16"	6 - #8	9'-6"	8'-0"	16'-0"	
10"	7'-4"	#7 at 16"	#7 at 24"	16"	8 - #8	10'-0"	8'-6"	18'-0"	
10"	9'-8"	#8 at 16"	#7 at 16"	16"	8 - #9	10'-9"	9'-3"	20'-0"	
10"	12'-0"	#8 at 16"	#7 at 16"	16"	8 - #10	11'-6"	9'-9"	22'-0"	
10"	15'-0"	#8 at 16"	#7 at 16"	18"	8 - #10	11'-6"	9'-9"	24'-0"	

NOTES

1. Wall to be designated "Noise Barrier Type 19A, 19B, 19C, or 19D. The Contract specifies actual wall designations.
2. For intermediate wall heights, use the next higher H.
3. All masonry shall be hollow unit and installed as running bond.
4. All masonry is to be specially inspected.
5. All Concrete Masonry Unit (CMU) cells the have vertical steel reinforcing bars or bond beam units shall be filled with grout.
6. Panels shall have at least 3 feet of level ground on each side.
7. Construction joints in the footing shall be spaced 120 feet maximum.
8. See "Masonry Wall Finishes and Details" sheet for masonry block finishes, special shapes, sizes and layouts.

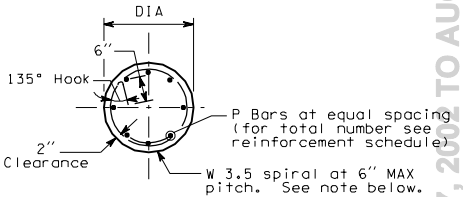

SECTION A-A

NOTE:
Spiral reinforcement shall be lapped 17" MIN. A 135° hook that is hooked around a longitudinal bar shall be used to terminate the ends of the spiral reinforcement at lapped splices and at the top and bottom of shaft

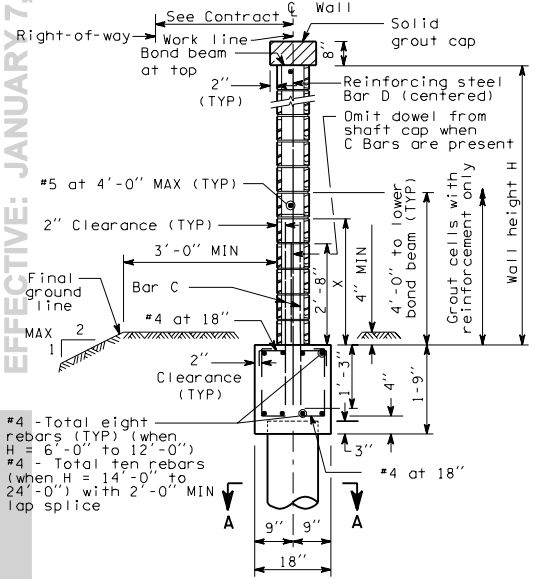

TYPICAL SECTION

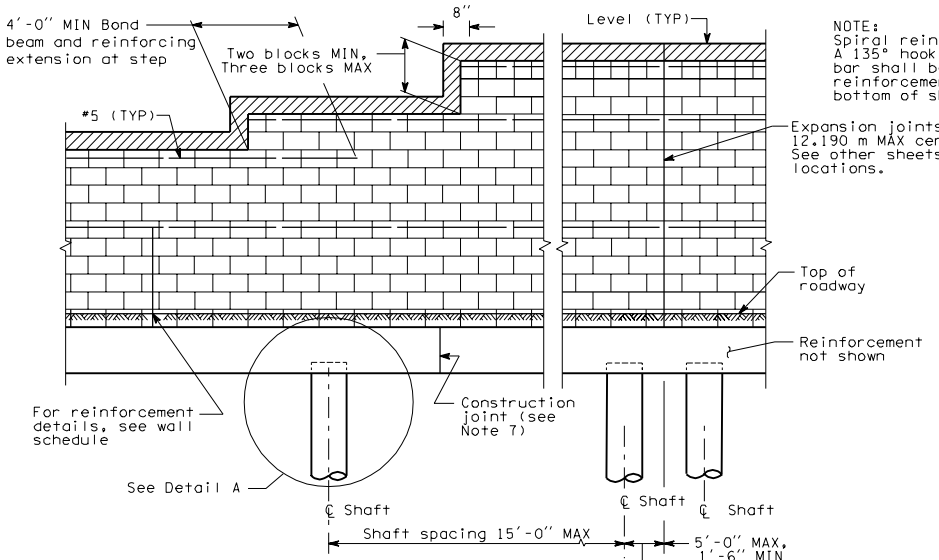

ELEVATION

NOISE BARRIER - TYPE 19

MASONRY WALL ON SHAFT WITH GRADE BEAM FOUNDATION

D-2s
03-14-97

EFFECTIVE: JANUARY 7, 2002 TO AUGUST 4, 2002

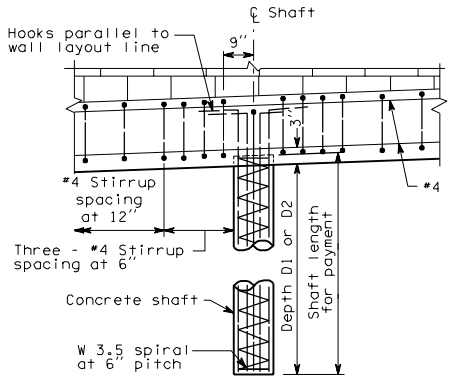

DETAIL A

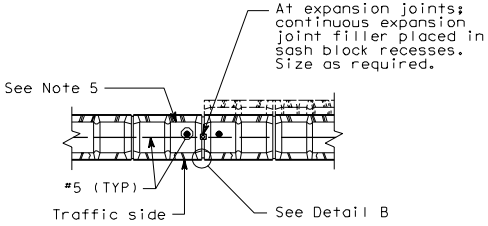

TYPICAL EXPANSION JOINT

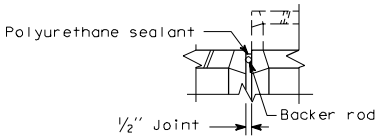

DETAIL B

Typical both sides of wall

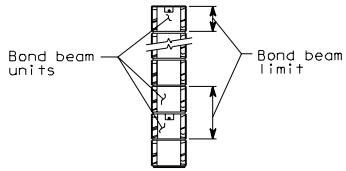

BOND BEAM DETAIL

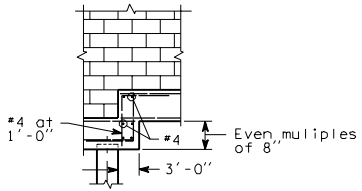

STEP DETAIL

NOISE BARRIER - TYPE 19

MASONRY WALL ON SHAFT WITH GRADE BEAM FOUNDATION

D-2s

03-14-97

EFFECTIVE: JANUARY 7, 2002 TO AUGUST 4, 2002

EFFECTIVE: JANUARY 7, 2002 TO AUGUST 4, 2002

WALL HT H	TYPE 20A DEPTH D1	DEPTH D2	BAR A	BAR B	BAR C	PILASTER SPACING L	TYPE 20B DEPTH D1	DEPTH D2	BAR A	BAR B	BAR C	PILASTER SPACING L	TYPE 20C DEPTH D1	DEPTH D2	BAR A	BAR B	BAR C	PILASTER SPACING L	TYPE 20D DEPTH D1	DEPTH D2	BAR A	BAR B	BAR C	PILASTER SPACING L	WALL HT H
6'-0"	5'-6"	5'-0"	6-#6	4-#4	#5 at 32"	16'-0"	6'-6"	5'-9"	6-#6	4-#4	#5 at 32"	16'-0"	6'-3"	5'-3"	6-#6	4-#4	#6 at 32"	16'-0"	7'-0"	6'-0"	6-#6	4-#4	#6 at 32"	16'-0"	6'-0"
8'-0"	6'-6"	5'-6"	6-#6	4-#4	#5 at 32"	16'-0"	7'-6"	6'-6"	6-#6	4-#4	#5 at 32"	16'-0"	7'-0"	6'-0"	6-#6	4-#4	#6 at 32"	16'-0"	8'-3"	7'-0"	6-#6	4-#5	#6 at 32"	16'-0"	8'-0"
10'-0"	7'-0"	6'-0"	6-#6	4-#4	#5 at 32"	16'-0"	8'-6"	7'-0"	6-#6	4-#5	#5 at 32"	16'-0"	7'-9"	6'-6"	6-#6	4-#5	#6 at 32"	16'-0"	9'-3"	7'-9"	6-#6	4-#6	#6 at 32"	16'-0"	10'-0"
12'-0"	7'-9"	6'-6"	6-#6	4-#5	#5 at 32"	16'-0"	9'-3"	7'-9"	6-#6	4-#6	#5 at 32"	16'-0"	8'-6"	7'-3"	6-#6	4-#5	#6 at 32"	16'-0"	10'-3"	8'-6"	6-#6	4-#7	#6 at 32"	16'-0"	12'-0"
14'-0"	8'-3"	7'-0"	6-#6	4-#5	#5 at 32"	16'-0"	10'-0"	8'-6"	6-#6	4-#7	#5 at 32"	16'-0"	9'-3"	7'-9"	6-#6	4-#6	#6 at 32"	16'-0"	11'-0"	9'-3"	6-#6	6-#8	#6 at 32"	16'-0"	14'-0"
16'-0"	9'-0"	7'-6"	6-#6	4-#6	#5 at 32"	16'-0"	11'-0"	9'-0"	6-#6	6-#8	#5 at 32"	16'-0"	10'-0"	8'-3"	6-#6	4-#7	#6 at 32"	16'-0"	12'-0"	9'-9"	6-#6	6-#9	#6 at 32"	16'-0"	16'-0"
18'-0"	9'-6"	8'-0"	6-#6	4-#7	#5 at 32"	16'-0"	11'-9"	9'-9"	6-#6	6-#9	#5 at 32"	16'-0"	10'-9"	9'-0"	6-#6	6-#7	#6 at 32"	16'-0"	12'-9"	10'-6"	6-#7	6-#10	#6 at 32"	16'-0"	18'-0"
20'-0"	10'-3"	8'-6"	6-#6	6-#7	#5 at 32"	16'-0"	12'-6"	10'-3"	6-#7	6-#10	#5 at 32"	16'-0"	11'-3"	9'-6"	6-#6	6-#8	#6 at 32"	16'-0"	13'-0"	10'-6"	6-#7	6-#10	#6 at 32"	14'-0"	20'-0"
22'-0"	10'-9"	9'-0"	6-#6	6-#8	#5 at 32"	16'-0"	12'-6"	10'-3"	6-#7	6-#10	#5 at 32"	16'-0"	12'-0"	10'-0"	6-#7	6-#9	#6 at 32"	16'-0"	13'-0"	10'-6"	6-#8	6-#10	#6 at 32"	12'-0"	22'-0"
24'-0"	11'-3"	9'-6"	6-#6	6-#9	#5 at 32"	16'-0"	12'-6"	10'-3"	6-#7	6-#10	#5 at 32"	12'-0"	12'-9"	10'-6"	6-#7	6-#10	#6 at 32"	16'-0"	13'-6"	11'-3"	6-#8	6-#10	#6 at 32"	12'-0"	24'-0"

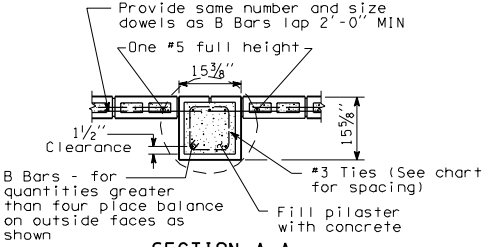

SECTION A-A

TIE SPACING	
BAR A SIZE	SPACING
#4	6" OC
#5	6" OC
#6	5" OC
#7, #8, #9, #10	4" OC

NOTES

1. Wall to be designated Noise Barrier Type 20A, 20B, 20C or 20D. The Contract specifies actual wall designations.
2. For intermediate wall heights, use the next higher H.
3. All masonry shall be a hollow unit and installed as running bond.
4. All masonry is to be specially inspected.
5. All Concrete Masonry Unit (CMU) cells that have vertical steel reinforcing bars or bond beam units shall be filled with grout.
6. Panels shall have at least 3 feet of level ground on each side.
7. Construction joints in the footing shall be spaced at 120 feet maximum.
8. The Contract shall specify actual foundation requirements D1 or D2.
9. See "Masonry Wall Finishes and Details" sheet for masonry block finishes, special shapes, sizes and layouts.

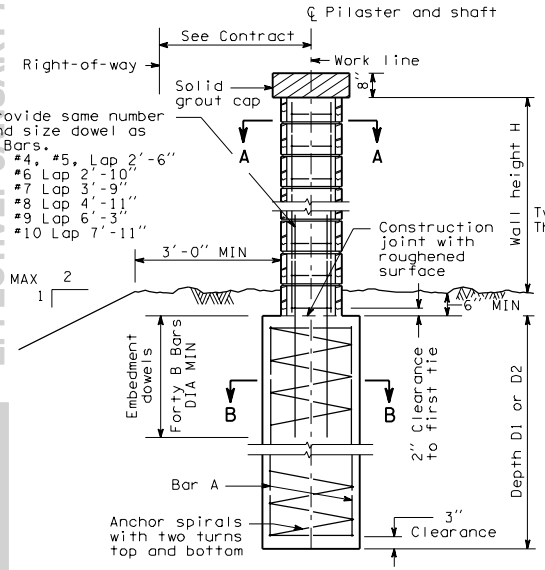

TYPICAL PILASTER AND PILE

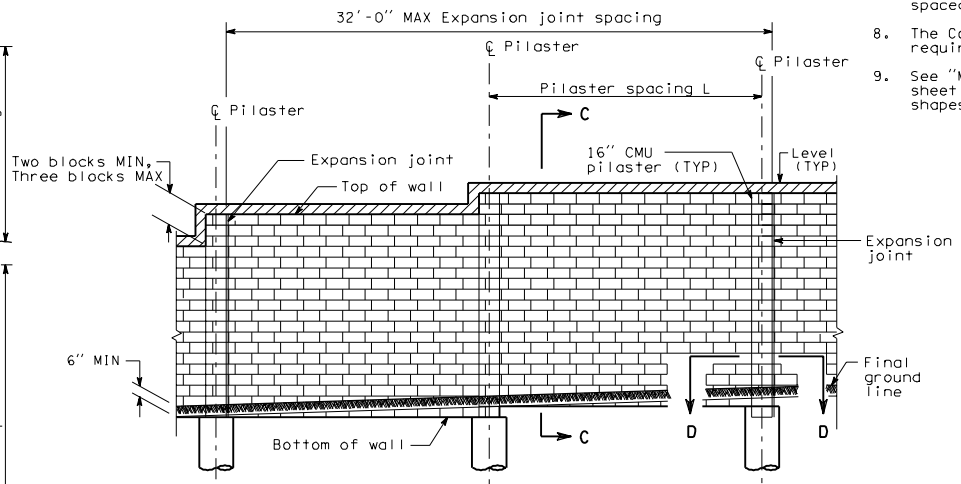

ELEVATION

NOISE BARRIER - TYPE 20
MASONRY WALL ON SHAFT FOUNDATION

D-2t
03-14-97

EFFECTIVE: JANUARY 7, 2002 TO AUGUST 4, 2002

EFFECTIVE: JANUARY 7, 2002 TO AUGUST 4, 2002

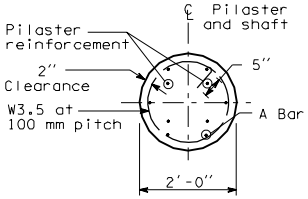

SECTION B-B

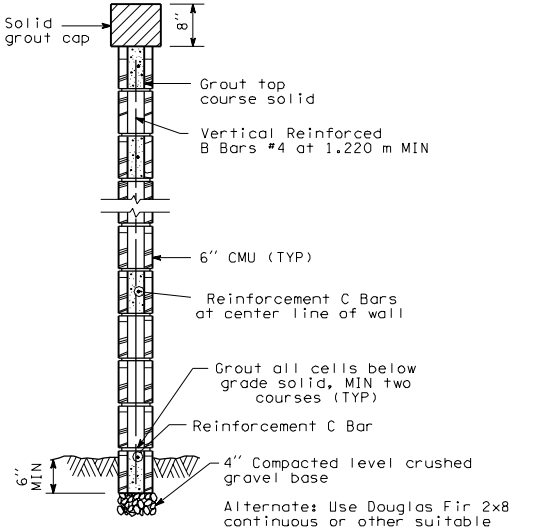

SECTION C-C

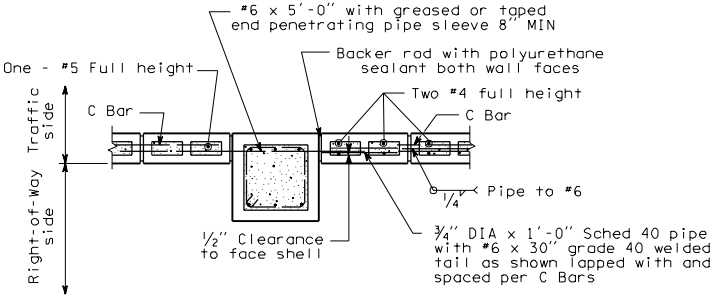

SECTION D-D
Typical Expansion Joint

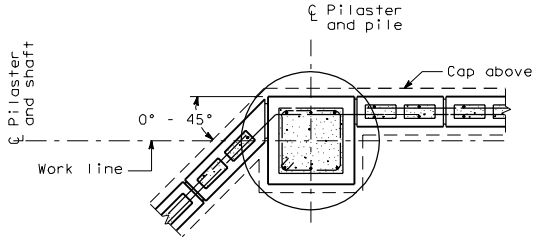

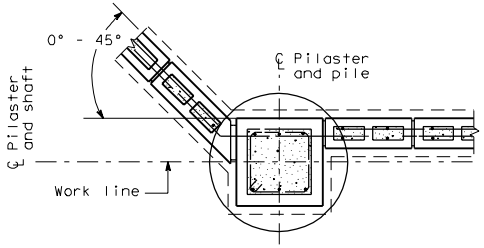

ANGLE POINT PLAN

NOISE BARRIER - TYPE 20
MASONRY WALL ON SHAFT FOUNDATION

D-2t
03-14-97

EFFECTIVE: JANUARY 7, 2002 TO AUGUST 4, 2002

EFFECTIVE: JANUARY 7, 2002 TO AUGUST 4, 2002

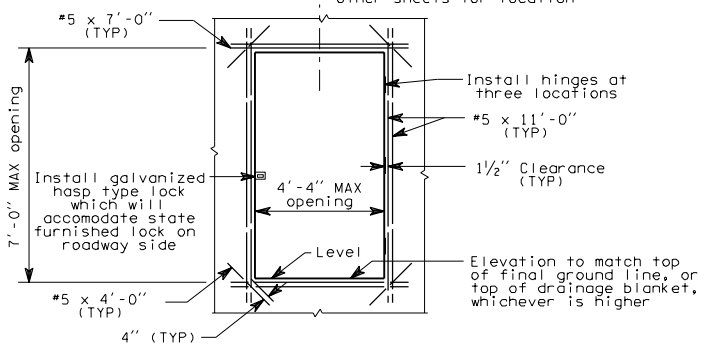

ELEVATION

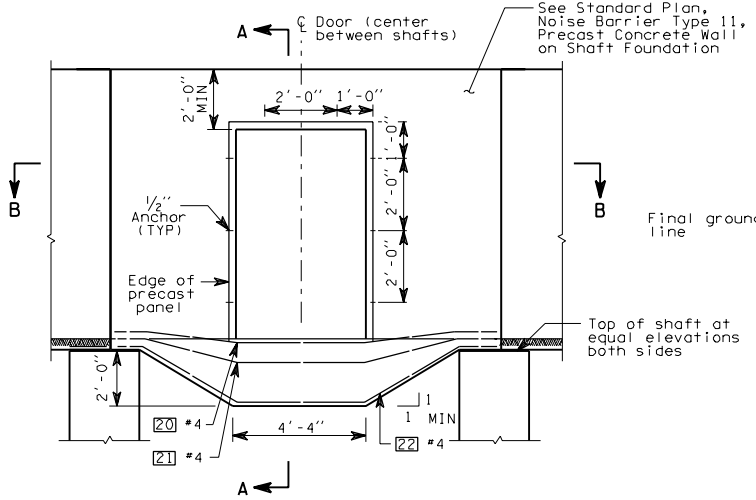

BOTTOM OF WALL DETAIL

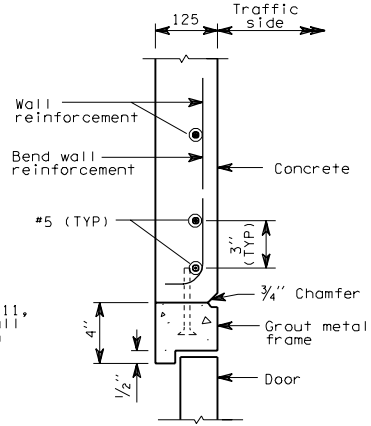

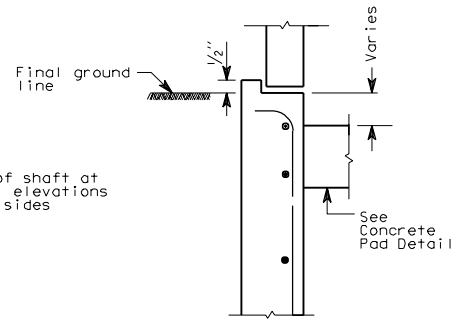

SECTION A-A

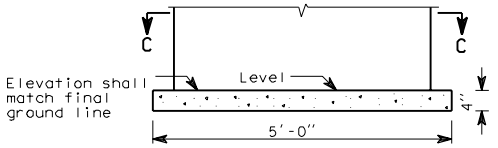

CONCRETE PAD

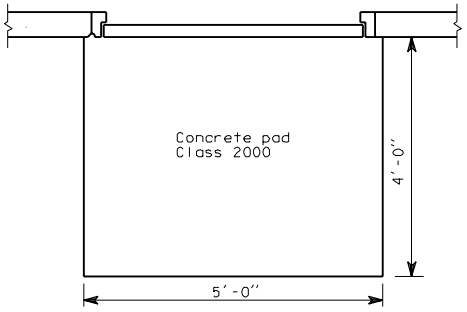

VIEW C

ACCESS DOOR - TYPE 1

PRECAST CONCRETE WALL ON SHAFT FOUNDATION

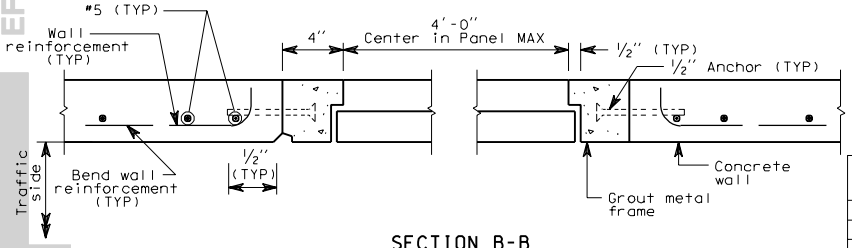

SECTION B-B

MK NUMBER	BAR SIZE	BEND TYPE	NUMBER PER DOOR	X	Y	Z	H	J	TOTAL LENGTH
20	4	91	1	1'-1"	2'-11"	4'-3"	8"	1'-5"	11'-5"
21	4	91	1	11"	3'-1"	4'-3"	1'-4"	1'-4"	11'-10"
22	4	91	1	10"	3'-2"	4'-3"	2'-0"	1'-3"	12'-1"

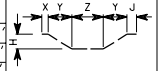

EFFECTIVE: JANUARY 7, 2002 TO AUGUST 4, 2002

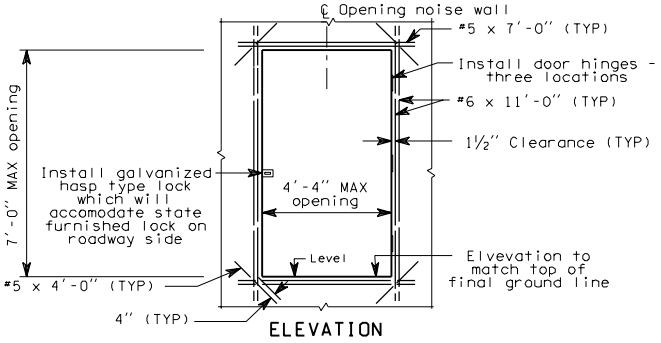

ELEVATION

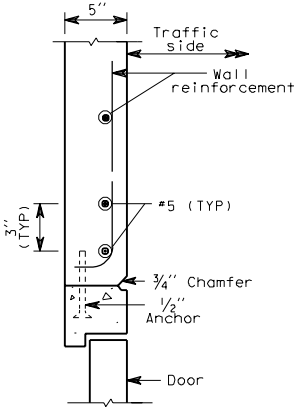

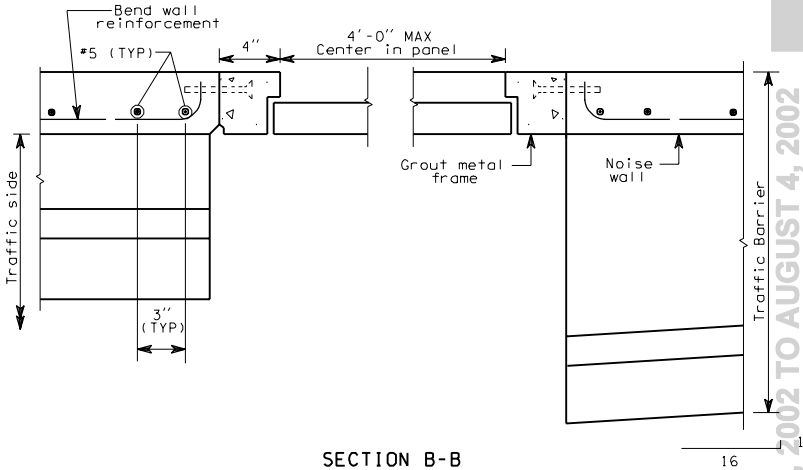

SECTION B-B

16

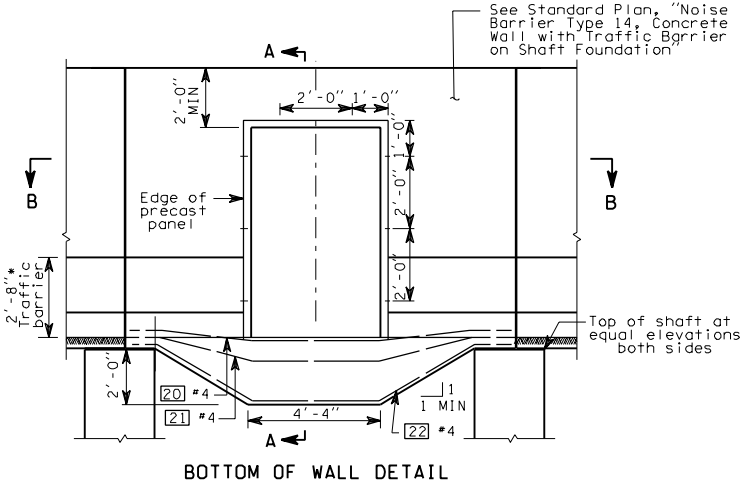

BOTTOM OF WALL DETAIL

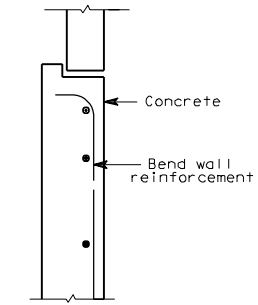

SECTION A-A

ACCESS DOOR - TYPE 2

PRECAST CONCRETE WALL WITH TRAFFIC BARRIER ON SHAFT FOUNDATION

MK NUMBER	BAR SIZE	BEND TYPE	NUMBER PER DOOR	X	Y	Z	H	J	TOTAL LENGTH
20	4	91	1	1'-1"	2'-11"	4'-3"	8"	1'-5"	11'-5"
21	4	91	1	11"	3'-1"	4'-3"	1'-4"	1'-4"	11'-10"
22	4	91	1	10"	3'-2"	4'-3"	2'-0"	1'-3"	12'-1"

D-2v 1 of 1

03-07-97

EFFECTIVE: JANUARY 7, 2002 TO AUGUST 4, 2002

EFFECTIVE: JANUARY 7, 2002 TO AUGUST 4, 2002

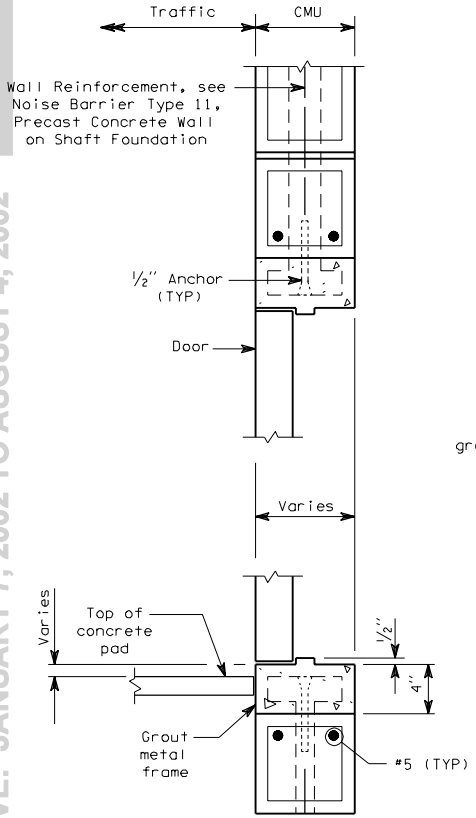

SECTION A-A

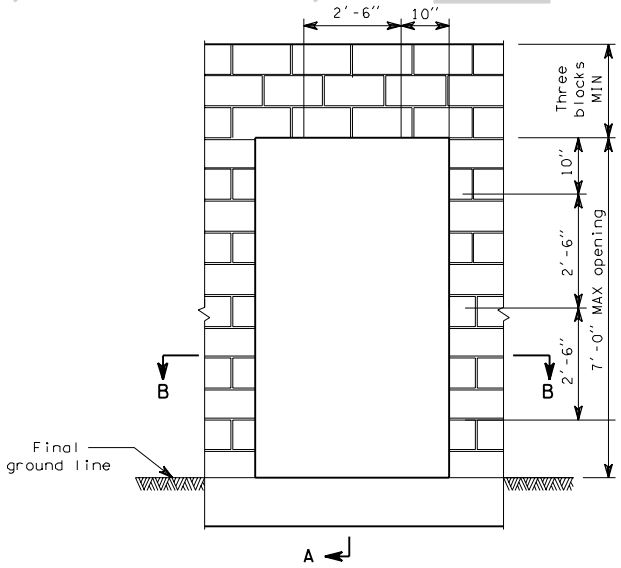

ELEVATION

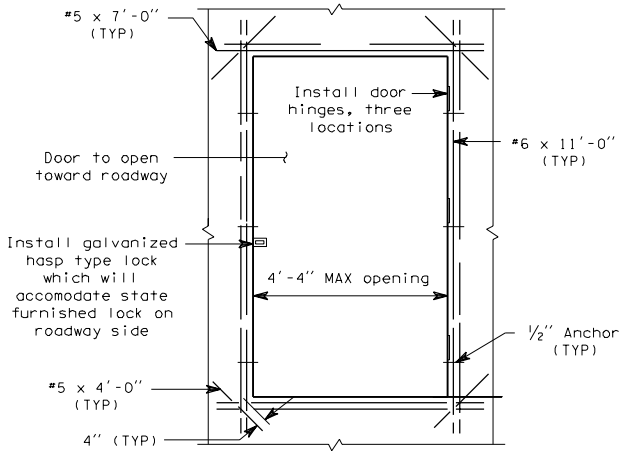

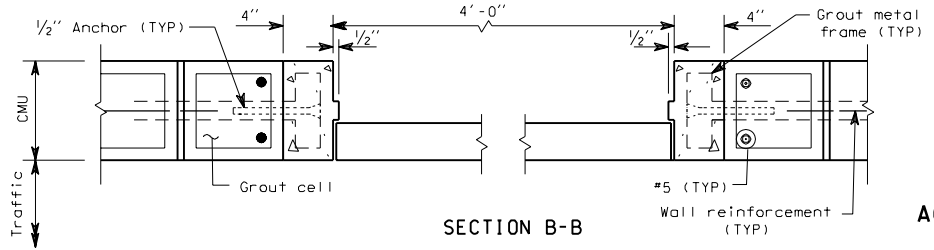

SECTION B-B

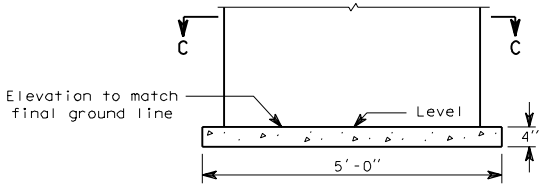

CONCRETE PAD

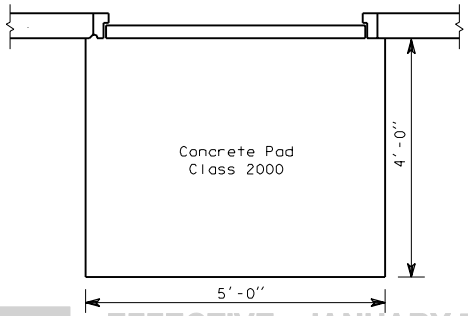

VIEW C

ACCESS DOOR - TYPE 3
MASONRY WALL ON SHAFT FOUNDATION

EFFECTIVE: JANUARY 7, 2002 TO AUGUST 4, 2002

EFFECTIVE: JANUARY 7, 2002 TO AUGUST 4, 2002

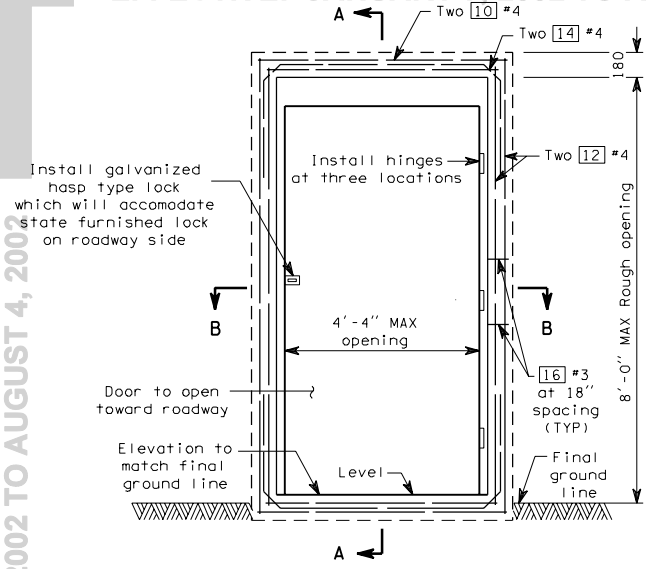

ELEVATION

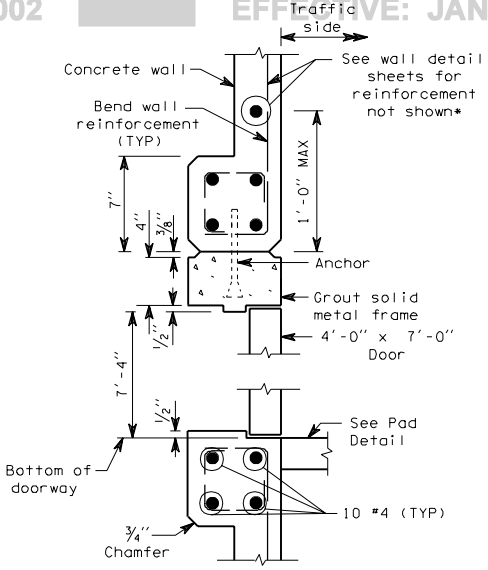

SECTION A-A

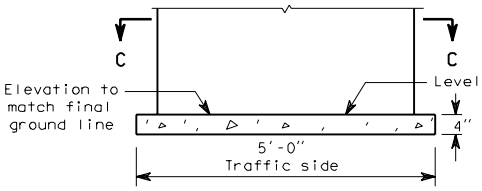

CONCRETE PAD

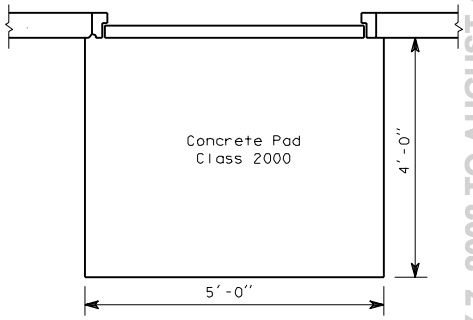

VIEW C

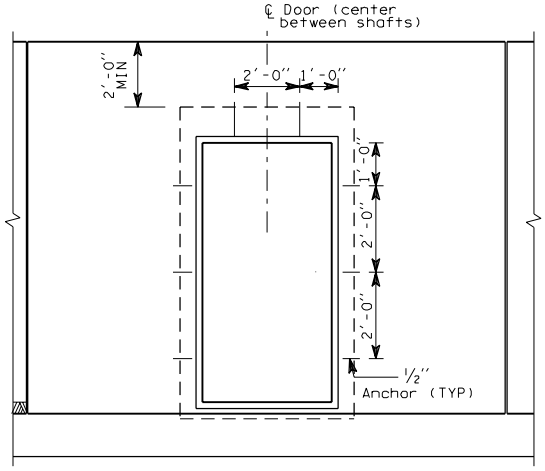

BOTTOM OF WALL DETAIL

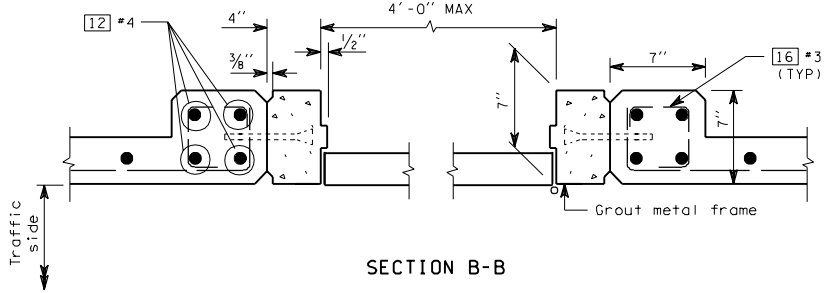

SECTION B-B

ACCESS DOOR - TYPE 4
CAST-IN-PLACE CONCRETE WALL

MK Number	Bar Size	Bend Type	Number Per Door	X	Y	Total Length
10	4	50	8	4'-0"	4'-0"	4-0"
12	4	50	8	8'-2"	8'-2"	8'-2"
14	4	90	8	5 3/4"	4'-8"	4'-8"
16	5	92	16	4 1/2	1'-0"	1'-0"

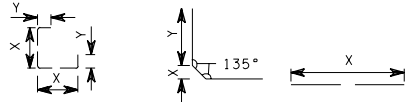

D-2x 1 of 1
03-07-97

EFFECTIVE: JANUARY 7, 2002 TO AUGUST 4, 2002

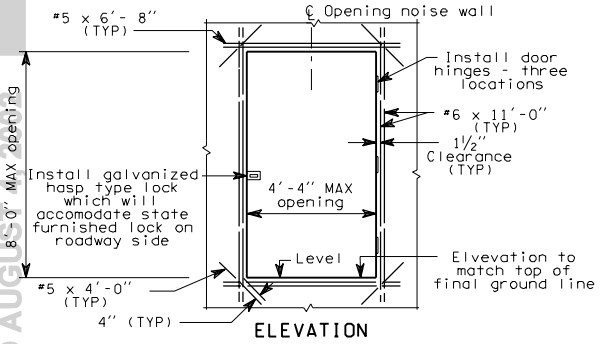

ELEVATION

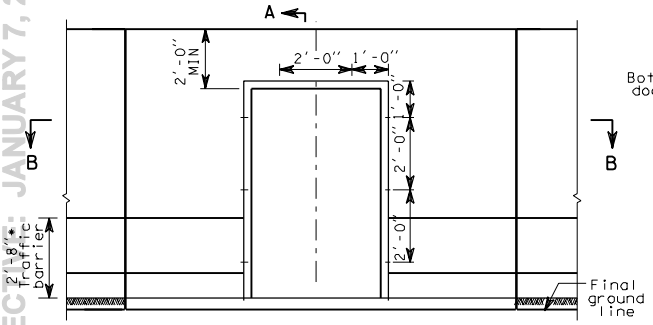

BOTTOM OF WALL DETAIL

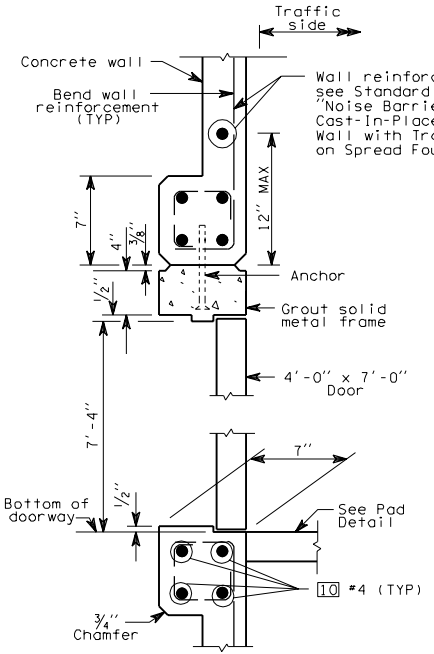

SECTION A-A

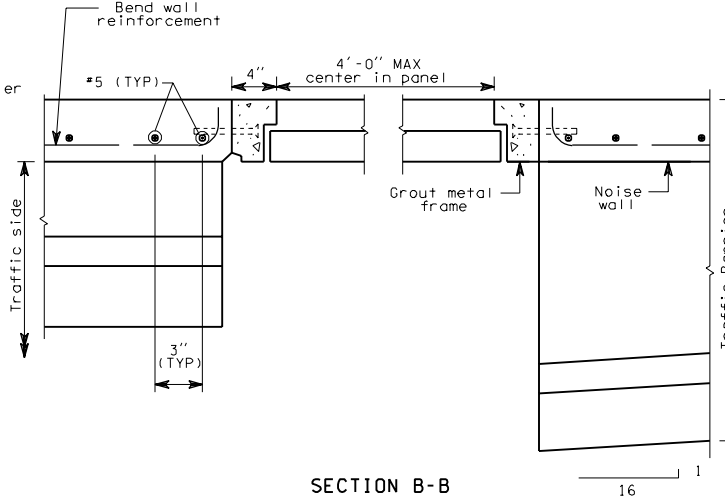

SECTION B-B

ACCESS DOOR - TYPE 5
CAST-IN-PLACE WALL WITH TRAFFIC BARRIER

*Height may vary if required to provide a smooth profile consistant with the roadway profile

MK NUMBER	BAR SIZE	BEND TYPE	NUMBER PER DOOR	X	Y	TOTAL LENGTH
10	4	50	8	4'-0"	4'-0"	4'-0"
12	4	50	8	8'-2"	8'-2"	8'-2"
14	4	90	8	5¾"	2'-0"	4'-8"
16	5	92	16	4½"	1½"	1'-0"

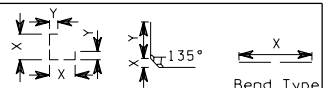

D-2y 1 of 1
03-07-97

EFFECTIVE: JANUARY 7, 2002 TO AUGUST 4, 2002

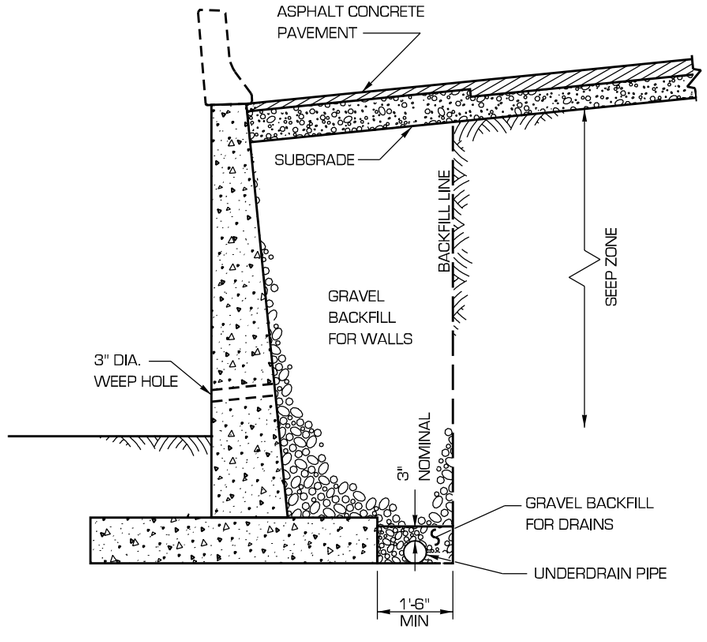

CONDITION A

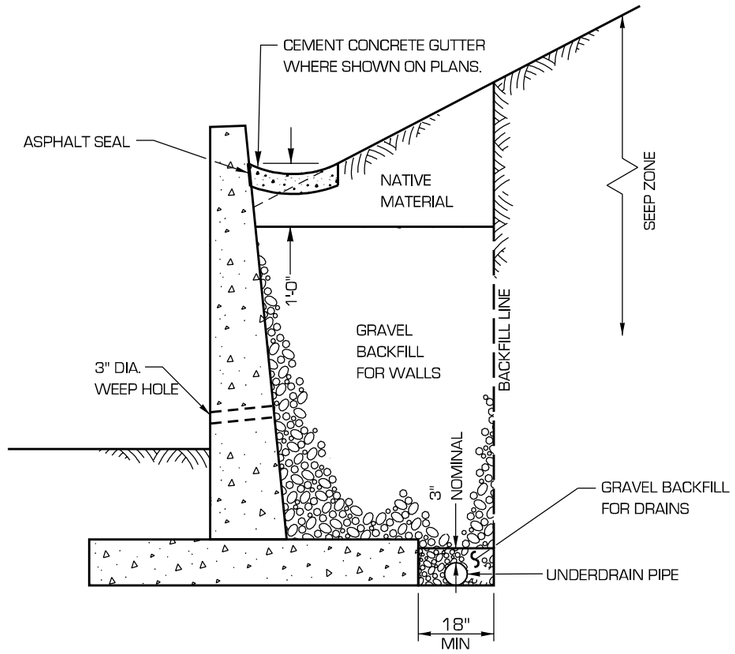

CONDITION B

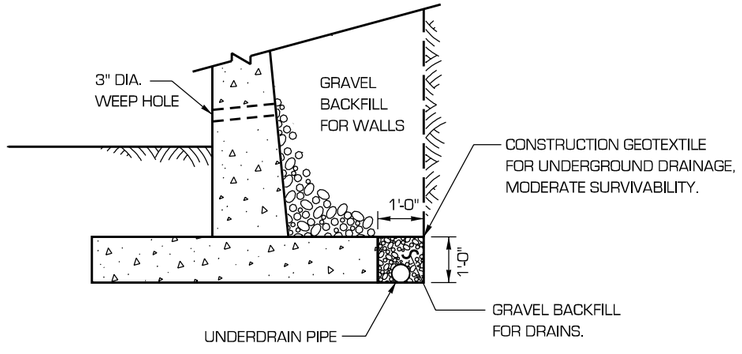

CONDITION A OR CONDITION B WITH GEOTEXTILE

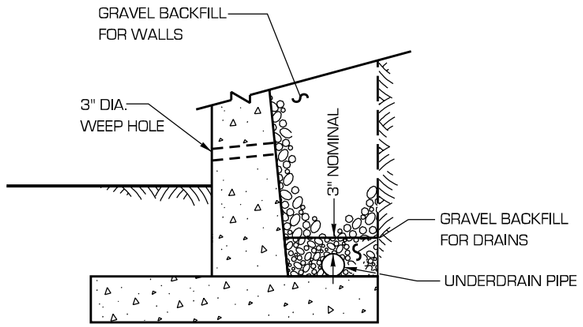

ALTERNATE DETAIL

TYPICAL FOR CONSTRUCTION WITH SHORING.

NOTES

1. SEE CONTRACT FOR BACKFILL LIMITS AND GEOTEXTILE CLASS.

M. MYINT LWIN
STATE OF WASHINGTON
10536
REGISTERED
PROFESSIONAL ENGINEER

EXPIRES JANUARY 17, 1999

BACKFILL AND DRAINAGE FOR RETAINING WALLS

STANDARD PLAN D-4

NOTE: THIS PLAN IS NOT A LEGAL ENGINEERING DOCUMENT BUT AN ELECTRONIC DUPLICATE. THE ORIGINAL, SIGNED BY THE ENGINEER AND APPROVED FOR PUBLICATION, IS KEPT ON FILE AT THE WASHINGTON STATE DEPARTMENT OF TRANSPORTATION. A COPY MAY BE OBTAINED UPON REQUEST.

DATE	REVISION	BY
10/98	REMOVED GURADRAIL, CURB & METAL CRIB WALLS.	MT

APPROVED FOR PUBLICATION

Clifford E. Mansfield — *12/11/98*

DEPUTY STATE DESIGN ENGINEER — DATE

WASHINGTON STATE DEPARTMENT OF TRANSPORTATION
OLYMPIA, WASHINGTON

EFFECTIVE: JANUARY 7, 2002 TO AUGUST 4, 2002

EFFECTIVE: JANUARY 7, 2002 TO AUGUST 4, 2002

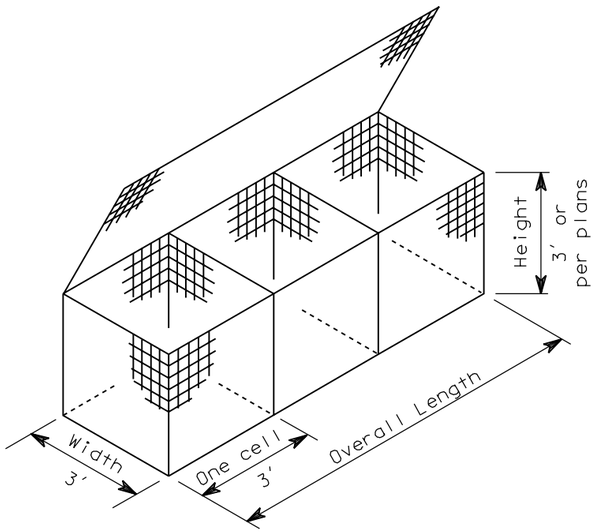

Unit A - 2 cell gabion = 6′
Unit B - 3 cell gabion = 9′
Unit C - 4 cell gabion = 12′

TYPICAL GABION

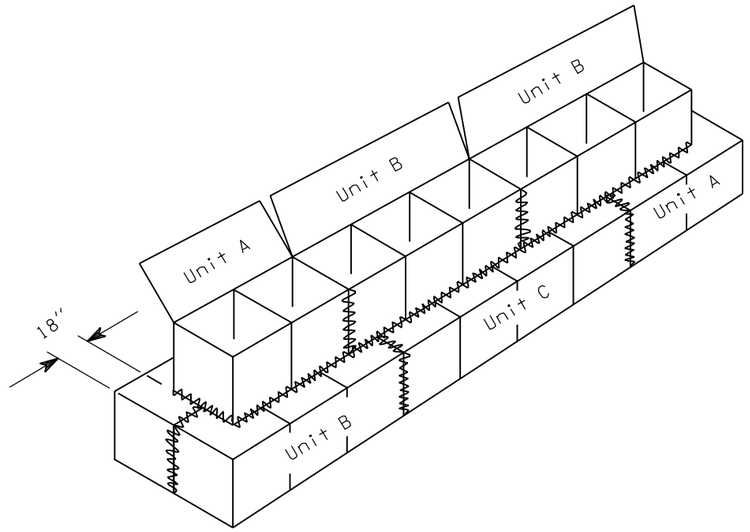

FASTENING ADJACENT BASKETS

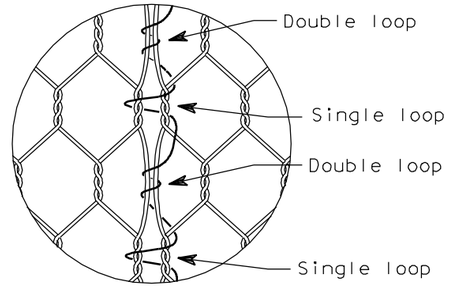

LACING DETAIL

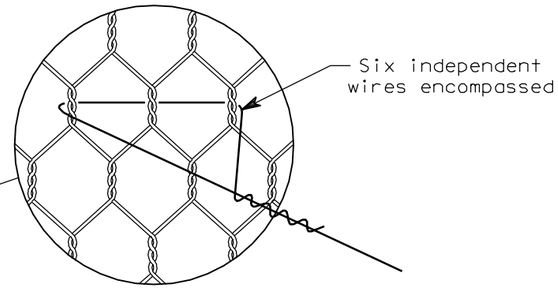

TWISTED FABRIC

WELDED FABRIC

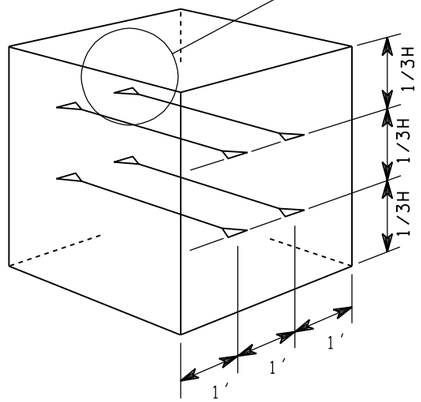

CROSS CONNECTING WIRE
PLACMENT, INTERIOR CELLS
OF FRONT GABIONS

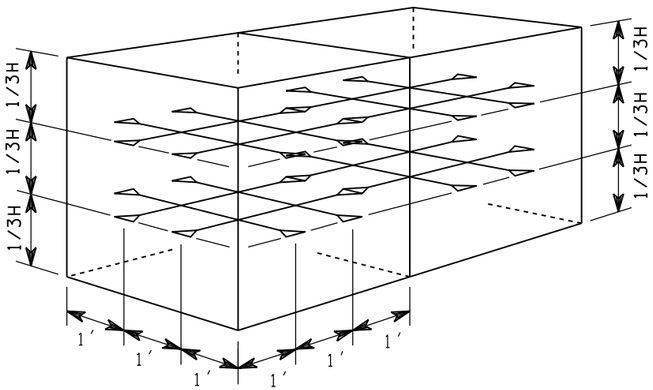

CROSS-CONNECTING WIRE
PLACEMENT, END CELLS

TONY M. ALLEN
STATE OF WASHINGTON
25339
REGISTERED
PROFESSIONAL ENGINEER

EXPIRES JULY 1, 1999

GABIONS
STANDARD PLAN D-6

NOTE: THIS PLAN IS NOT A LEGAL ENGINEERING DOCUMENT BUT AN ELECTRONIC DUPLICATE. THE ORIGINAL, SIGNED BY THE ENGINEER AND APPROVED FOR PUBLICATION, IS KEPT ON FILE AT THE WASHINGTON STATE DEPARTMENT OF TRANSPORTATION. A COPY MAY BE OBTAINED UPON REQUEST.

APPROVED FOR PUBLICATION

Clifford E. Mansfield — *6/19/98*

DEPUTY STATE DESIGN ENGINEER — DATE

WASHINGTON STATE DEPARTMENT OF TRANSPORTATION
OLYMPIA, WASHINGTON

EFFECTIVE: JANUARY 7, 2002 TO AUGUST 4, 2002

EFFECTIVE: JANUARY 7, 2002 TO AUGUST 4, 2002

NOTE:
1. The Contractor may provide two twin base wire rope clips at 3″ O.C. in lieu of three u-bolt type wire rope clips as shown.

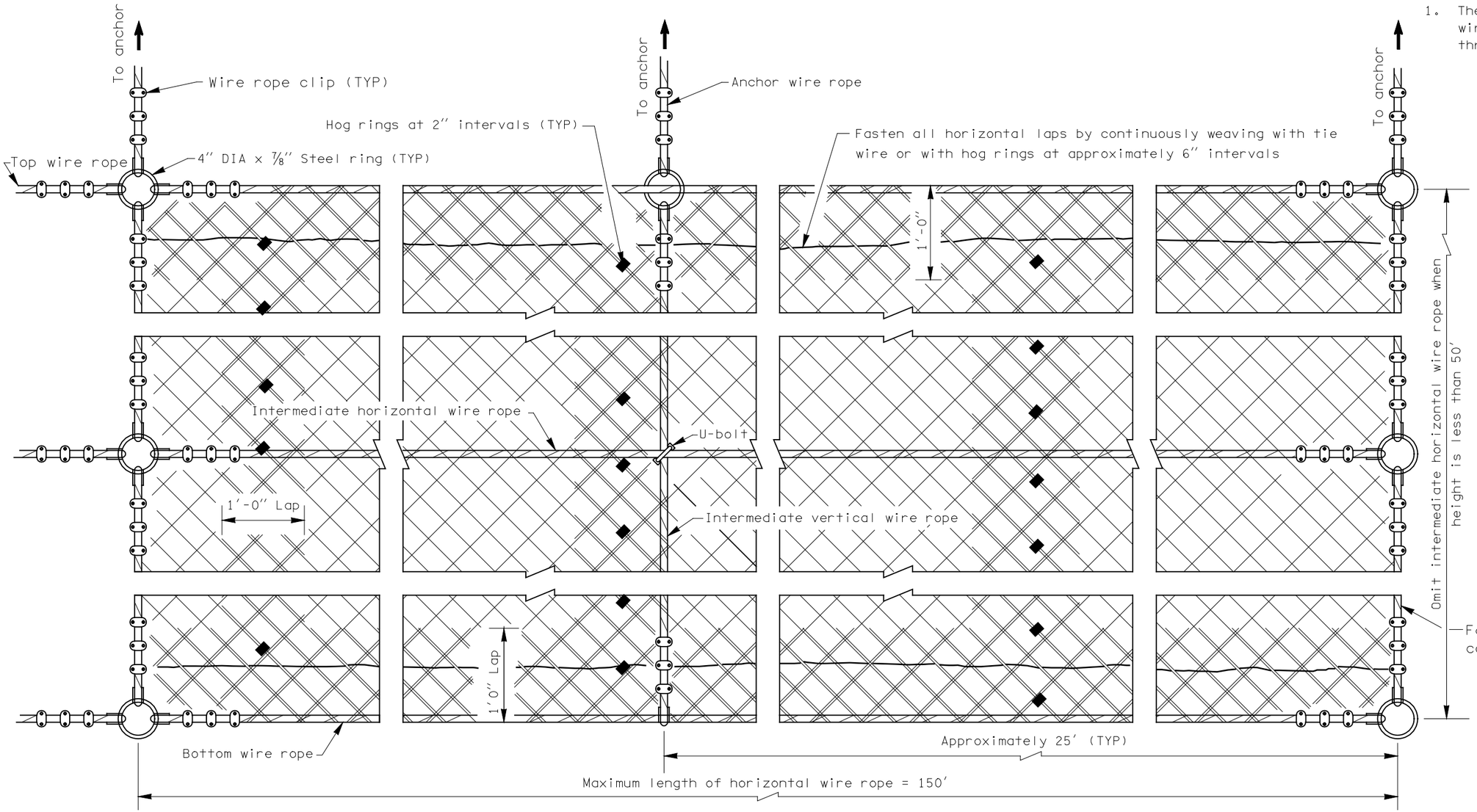

ASSEMBLY DETAILS

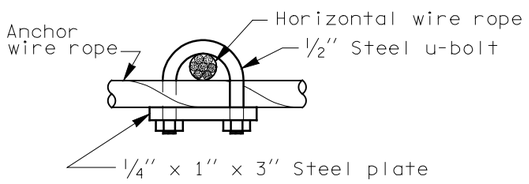

U-BOLT

Use to clamp intermediate horizontal wire ropes to vertical wire ropes

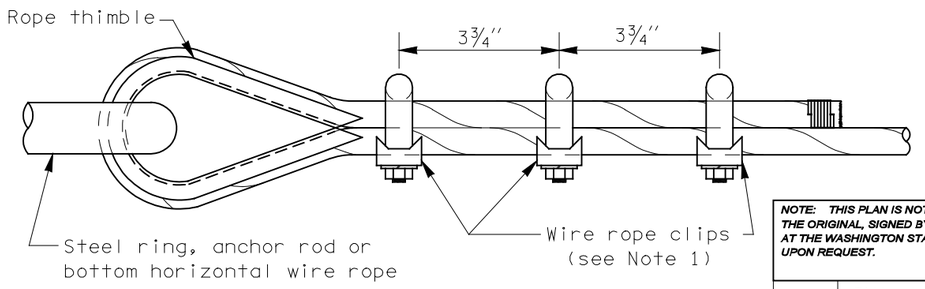

WIRE ROPE CONNECTION

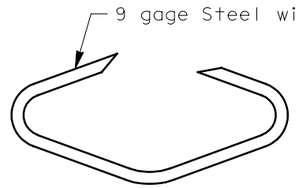

HOG RING

Use for lap connections of netting

TONY M. ALLEN
STATE OF WASHINGTON
25339
REGISTERED
PROFESSIONAL ENGINEER

EXPIRES JULY 1, 2001

WIRE MESH SLOPE PROTECTION

STANDARD PLAN D-7

NOTE: THIS PLAN IS NOT A LEGAL ENGINEERING DOCUMENT BUT AN ELECTRONIC DUPLICATE. THE ORIGINAL, SIGNED BY THE ENGINEER AND APPROVED FOR PUBLICATION, IS KEPT ON FILE AT THE WASHINGTON STATE DEPARTMENT OF TRANSPORTATION. A COPY MAY BE OBTAINED UPON REQUEST.

DATE	REVISION	BY
9/99	Title changed; cable references changed to wire rope.	JR

APPROVED FOR PUBLICATION

Clifford E. Mansfield *10/06/99*

DEPUTY STATE DESIGN ENGINEER — DATE

WASHINGTON STATE DEPARTMENT OF TRANSPORTATION
OLYMPIA, WASHINGTON

EFFECTIVE: JANUARY 7, 2002 TO AUGUST 4, 2002

EFFECTIVE: JANUARY 7, 2002 TO AUGUST 4, 2002

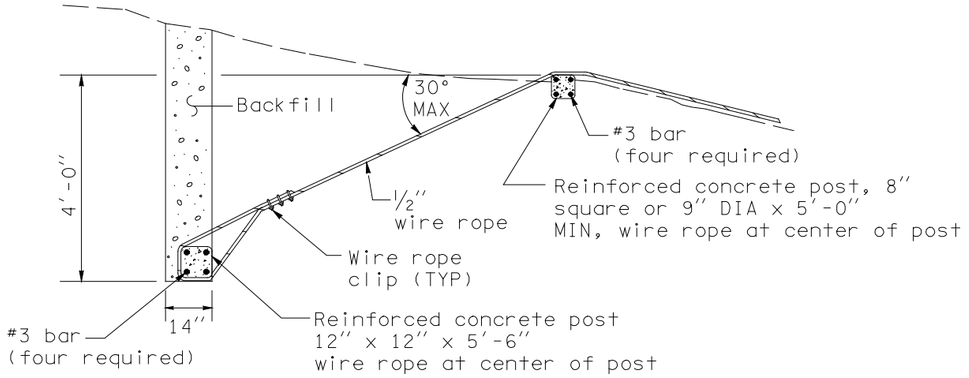

TYPE 1 ANCHOR
(FOR USE IN EARTH)

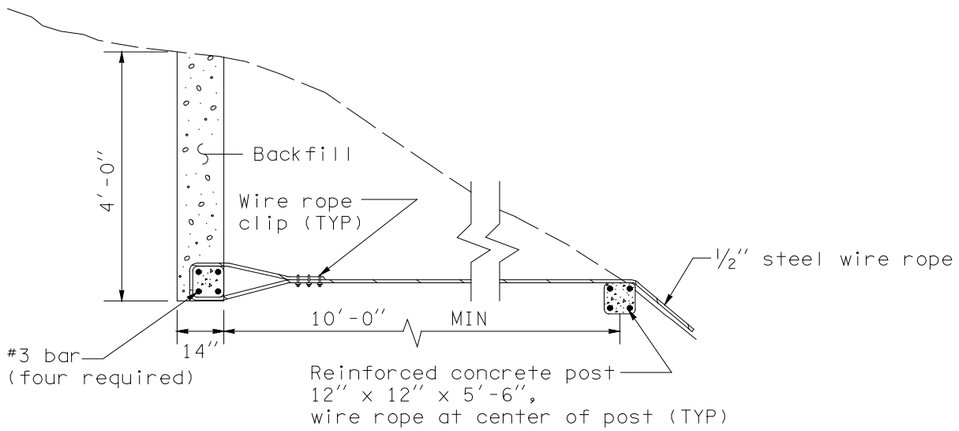

TYPE 2 ANCHOR
(FOR USE IN COMBINED EARTH AND ROCK)

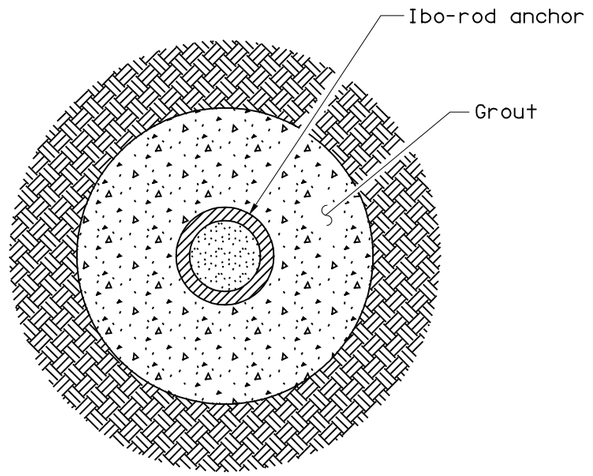

SECTION A-A

NOTE:

1. Two twin base wire rope clips at 3″ centers may be substituted for three u-bolted wire rope clips shown.

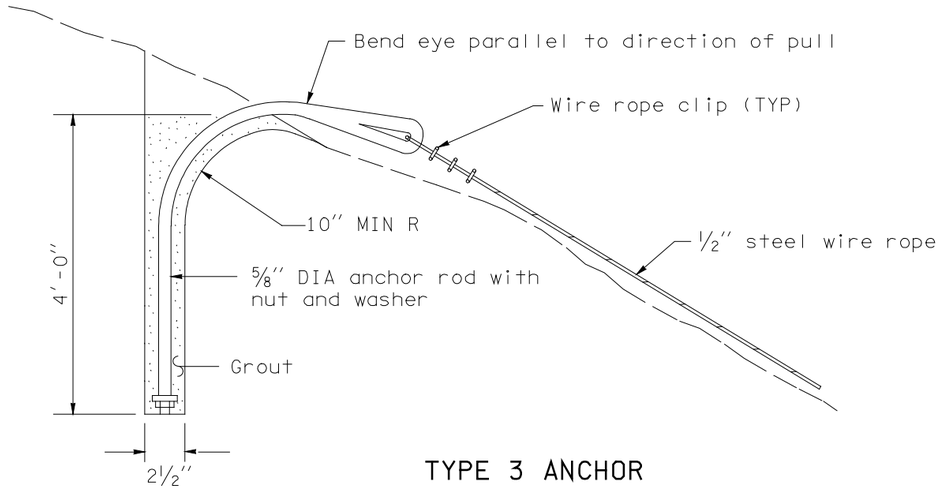

TYPE 3 ANCHOR
(FOR USE IN SOLID ROCK)

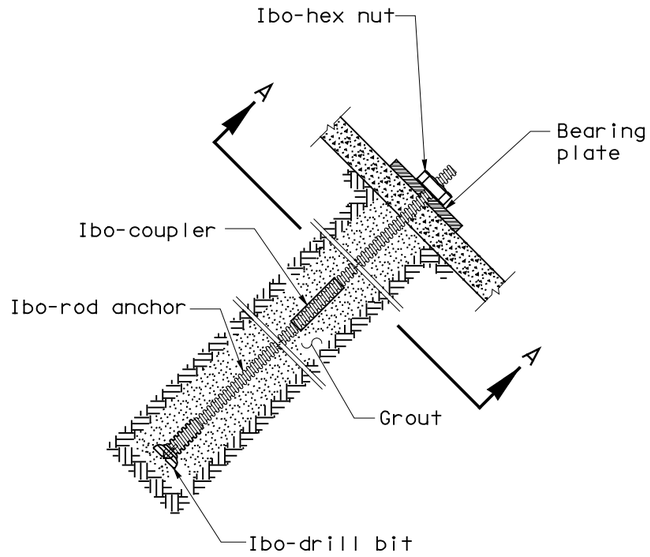

TYPE 4 ANCHOR
(FOR USE IN SOLID ROCK)

TONY M. ALLEN
STATE OF WASHINGTON
25339
REGISTERED
PROFESSIONAL ENGINEER

EXPIRES JULY 1, 2001

WIRE MESH SLOPE PROTECTION

STANDARD PLAN D-7a

NOTE: THIS PLAN IS NOT A LEGAL ENGINEERING DOCUMENT BUT AN ELECTRONIC DUPLICATE. THE ORIGINAL, SIGNED BY THE ENGINEER AND APPROVED FOR PUBLICATION, IS KEPT ON FILE AT THE WASHINGTON STATE DEPARTMENT OF TRANSPORTATION. A COPY MAY BE OBTAINED UPON REQUEST.

DATE	REVISION	BY
9/99	Title changed; cable references changed to wire rope.	JR

APPROVED FOR PUBLICATION

Clifford E. Mansfield *10/06/99*

DEPUTY STATE DESIGN ENGINEER — DATE

WASHINGTON STATE DEPARTMENT OF TRANSPORTATION
OLYMPIA, WASHINGTON

EFFECTIVE: JANUARY 7, 2002 TO AUGUST 4, 2002

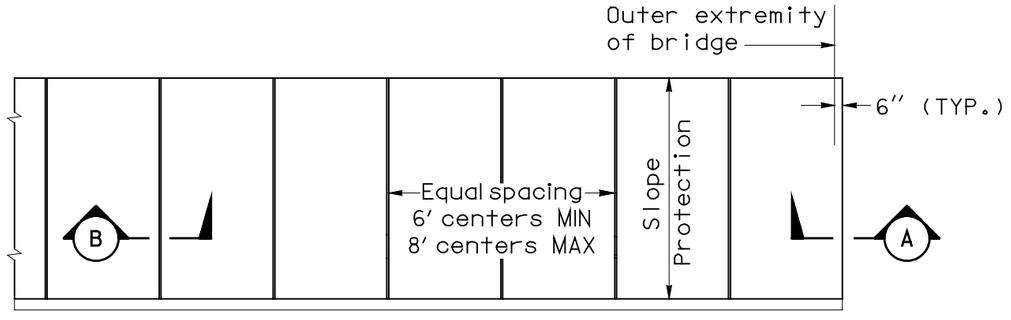

ELEVATION
CONCRETE SLOPE PROTECTION
(Pneumatically placed or poured in place cement concrete shown)

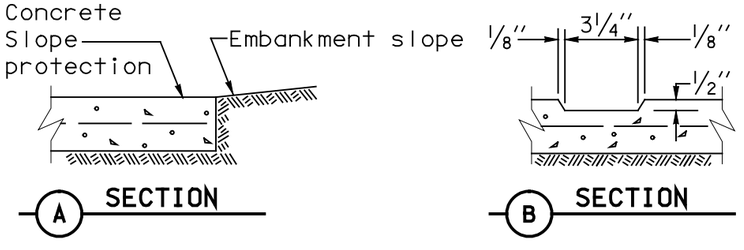

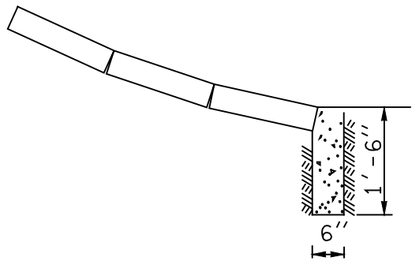

TYPE 1 SLOPE PROTECTION FILL SECTION DETAIL
(Semi-open concrete masonry units shown)

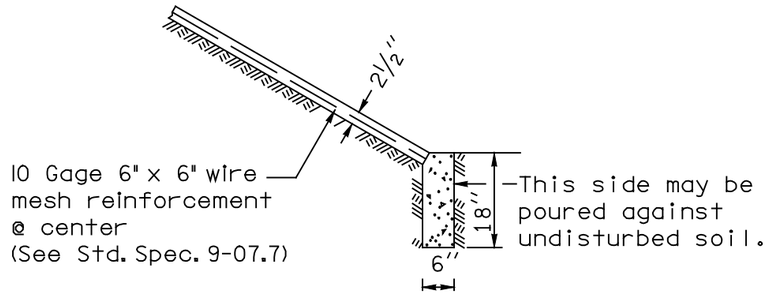

TYPE 2 SLOPE PROTECTION CUT SECTION DETAIL
(Pneumatically placed or poured in place cement concrete shown)

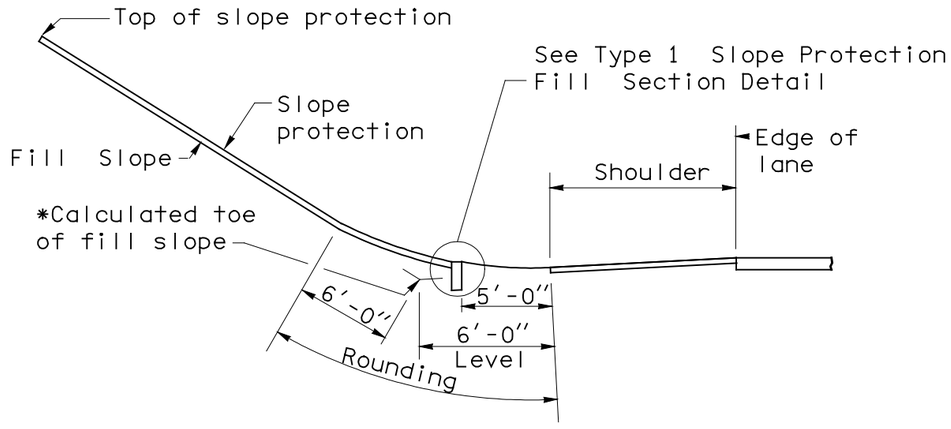

SIDE ELEVATION
(For fill section on lower roadway)

*Fill slope shall be rounded to allow placement of concrete slope protection.

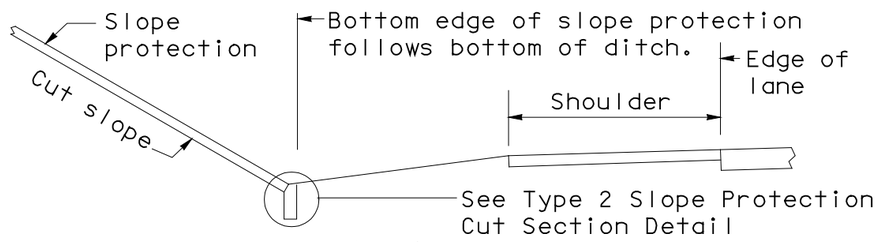

SIDE ELEVATION
(For cut section on lower roadway)

4029
REGISTERED ARCHITECT
ALEXANDER YOUNG
STATE OF WASHINGTON
Principal Architect

CONCRETE SLOPE PROTECTION STANDARD PLAN D-9

SHEET 1 OF 2 SHEETS

NOTE: THIS PLAN IS NOT A LEGAL ENGINEERING DOCUMENT BUT AN ELECTRONIC DUPLICATE. THE ORIGINAL, SIGNED BY THE ENGINEER AND APPROVED FOR PUBLICATION, IS KEPT ON FILE AT THE WASHINGTON STATE DEPARTMENT OF TRANSPORTATION. A COPY MAY BE OBTAINED UPON REQUEST.

APPROVED FOR PUBLICATION
Clifford E. Mansfield — DEPUTY STATE DESIGN ENGINEER
12/11/98 — DATE
WASHINGTON STATE DEPARTMENT OF TRANSPORTATION
OLYMPIA, WASHINGTON

EFFECTIVE: JANUARY 7, 2002 TO AUGUST 4, 2002

EFFECTIVE: JANUARY 7, 2002 TO AUGUST 4, 2002

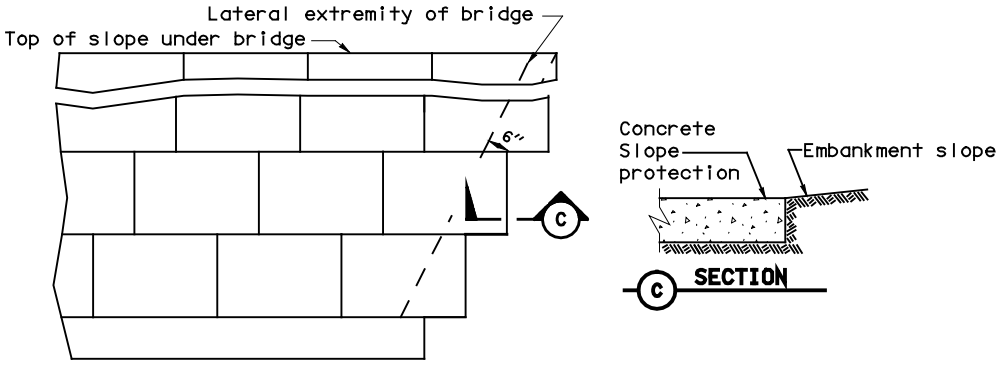

SKEWED BRIDGE PLAN

(Semi-open concrete masonry units shown)

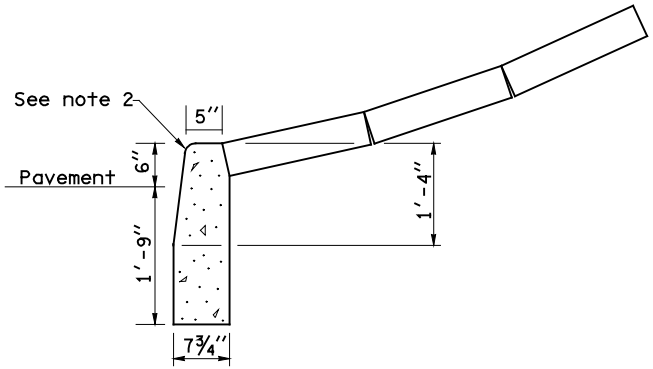

TYPE 3 SLOPE PROTECTION CURB DETAIL (Elevation)

(Semi-open concrete masonry units shown)

NOTES

1. The design and shape of the semi-open concrete masonry unit shown is only one example of the products that may be used.

2. The Type 3 Slope Protection Curb Detail shall be used only when the lower roadway cross section requires a curb.

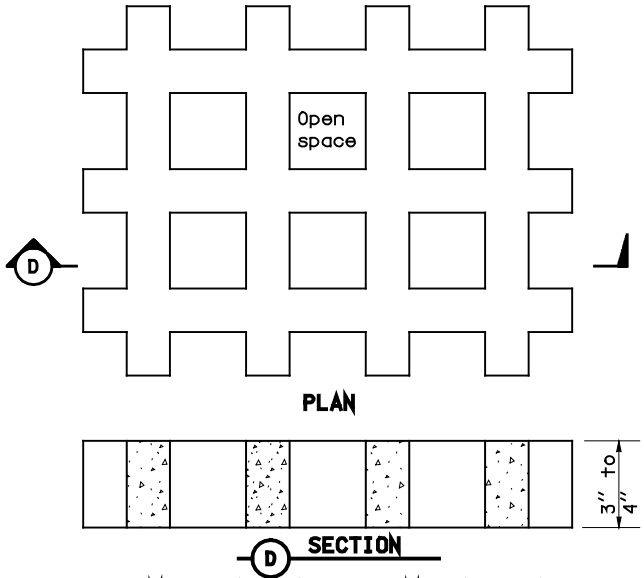

SEMI-OPEN CONCRETE MASONRY UNITS

(See note 1 & 2)

4029
REGISTERED
ARCHITECT
ALEXANDER YOUNG
STATE OF WASHINGTON

Principal Architect

CONCRETE SLOPE PROTECTION STANDARD PLAN D-9

SHEET 2 OF 2 SHEETS

NOTE: THIS PLAN IS NOT A LEGAL ENGINEERING DOCUMENT BUT AN ELECTRONIC DUPLICATE. THE ORIGINAL, SIGNED BY THE ENGINEER AND APPROVED FOR PUBLICATION, IS KEPT ON FILE AT THE WASHINGTON STATE DEPARTMENT OF TRANSPORTATION. A COPY MAY BE OBTAINED UPON REQUEST.

APPROVED FOR PUBLICATION

Clifford E. Mansfield — *12/11/98*

DEPUTY STATE DESIGN ENGINEER — DATE

WASHINGTON STATE DEPARTMENT OF TRANSPORTATION
OLYMPIA, WASHINGTON

EFFECTIVE: JANUARY 7, 2002 TO AUGUST 4, 2002

EFFECTIVE: JANUARY 7, 2002 TO AUGUST 4, 2002

NOTE
Spacing between the numeral "1" and any other numeral is 1". Spacing between all other numerals is ¾".

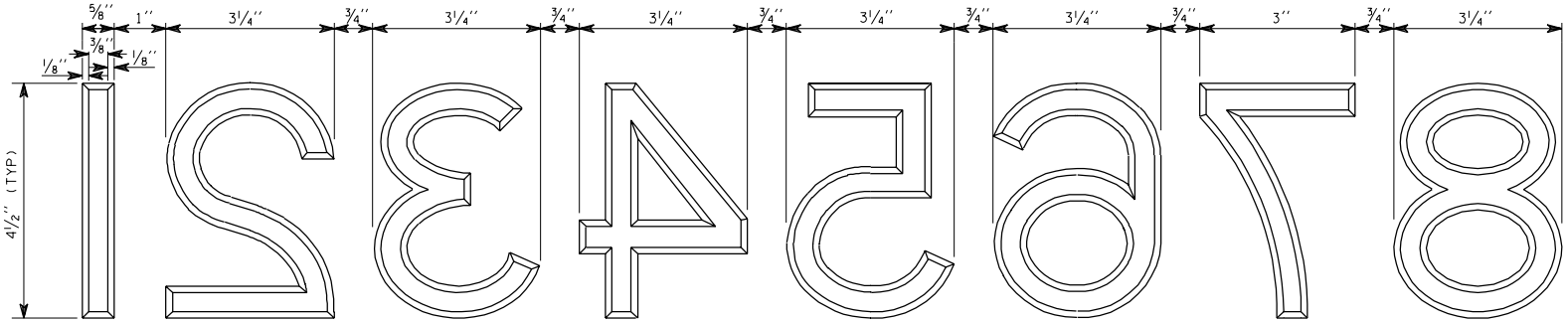

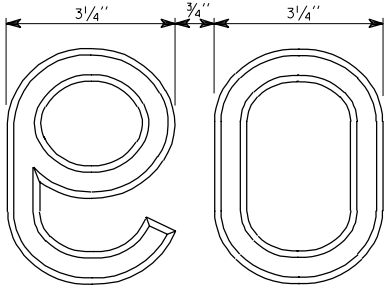

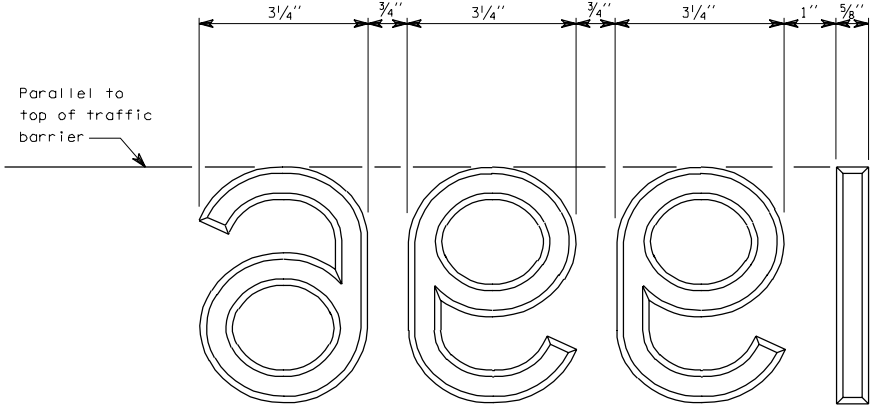

TYPICAL DATE

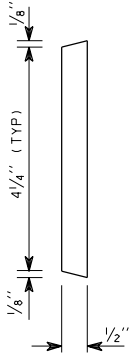

END VIEW

DATE NUMERALS

E-1 1 of 1
07-25-97

EFFECTIVE: JANUARY 7, 2002 TO AUGUST 4, 2002

EFFECTIVE: JANUARY 7, 2002 TO AUGUST 4, 2002

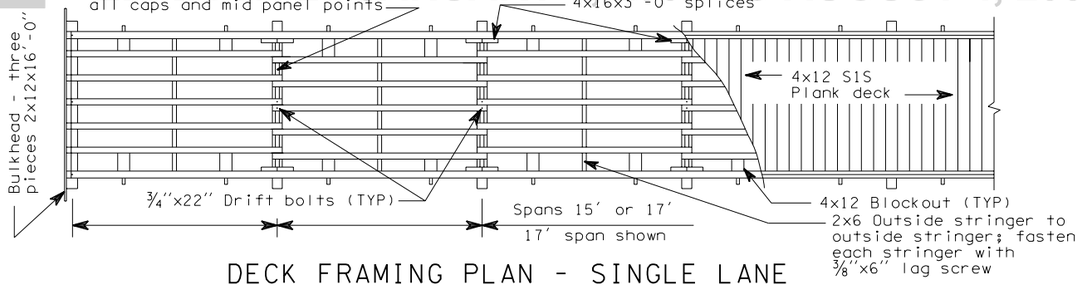

DECK FRAMING PLAN - SINGLE LANE

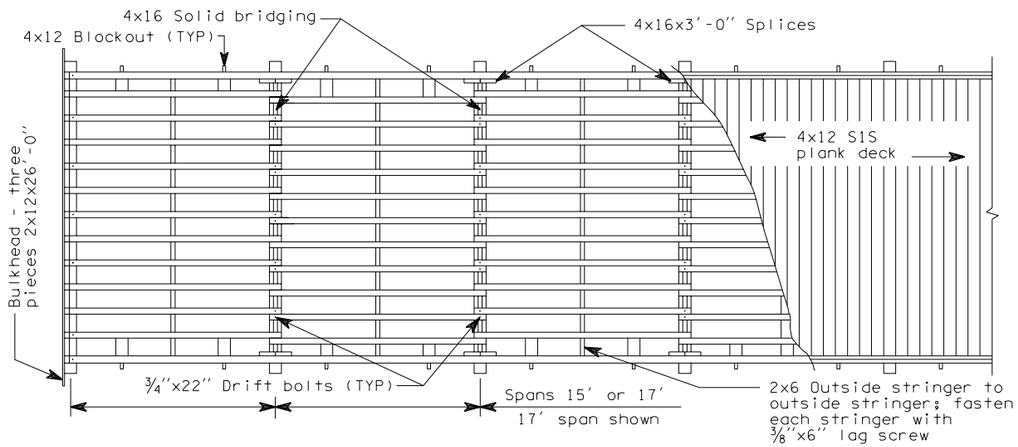

DECK FRAMING PLAN - TWO LANE

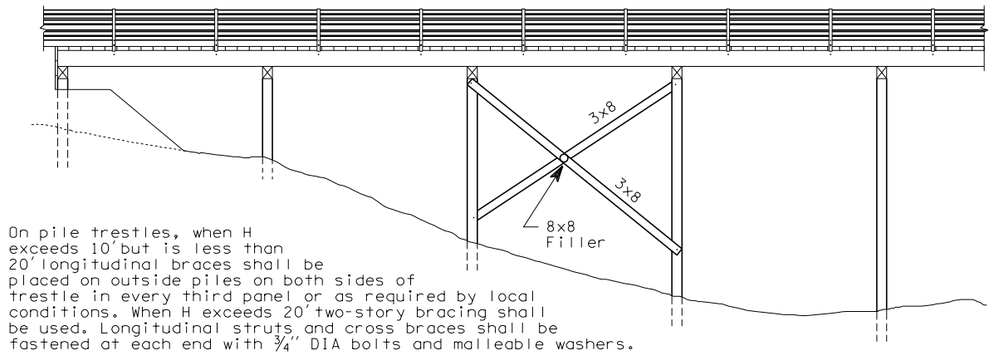

On pile trestles, when H exceeds 10' but is less than 20' longitudinal braces shall be placed on outside piles on both sides of trestle in every third panel or as required by local conditions. When H exceeds 20' two-story bracing shall be used. Longitudinal struts and cross braces shall be fastened at each end with 3/4" DIA bolts and malleable washers.

ELEVATION - PILE TRESTLE

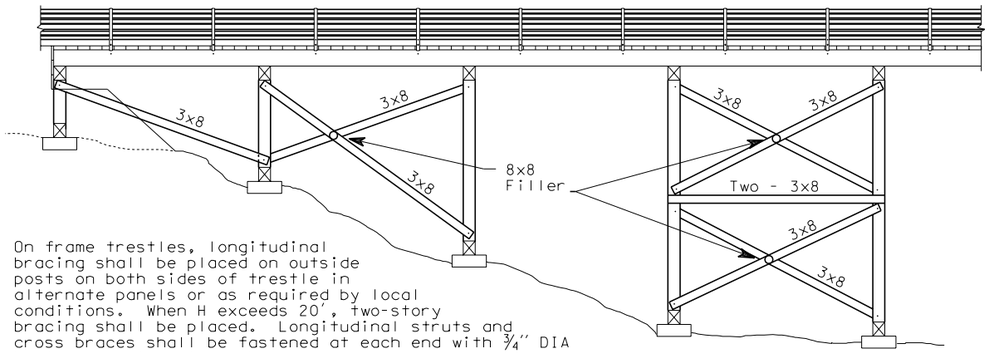

On frame trestles, longitudinal bracing shall be placed on outside posts on both sides of trestle in alternate panels or as required by local conditions. When H exceeds 20', two-story bracing shall be placed. Longitudinal struts and cross braces shall be fastened at each end with 3/4" DIA bolts and malleable washers.

ELEVATION - FRAME TRESTLE

EFFECTIVE: JANUARY 7, 2002 TO AUGUST 4, 2002

EFFECTIVE: JANUARY 7, 2002 TO AUGUST 4, 2002

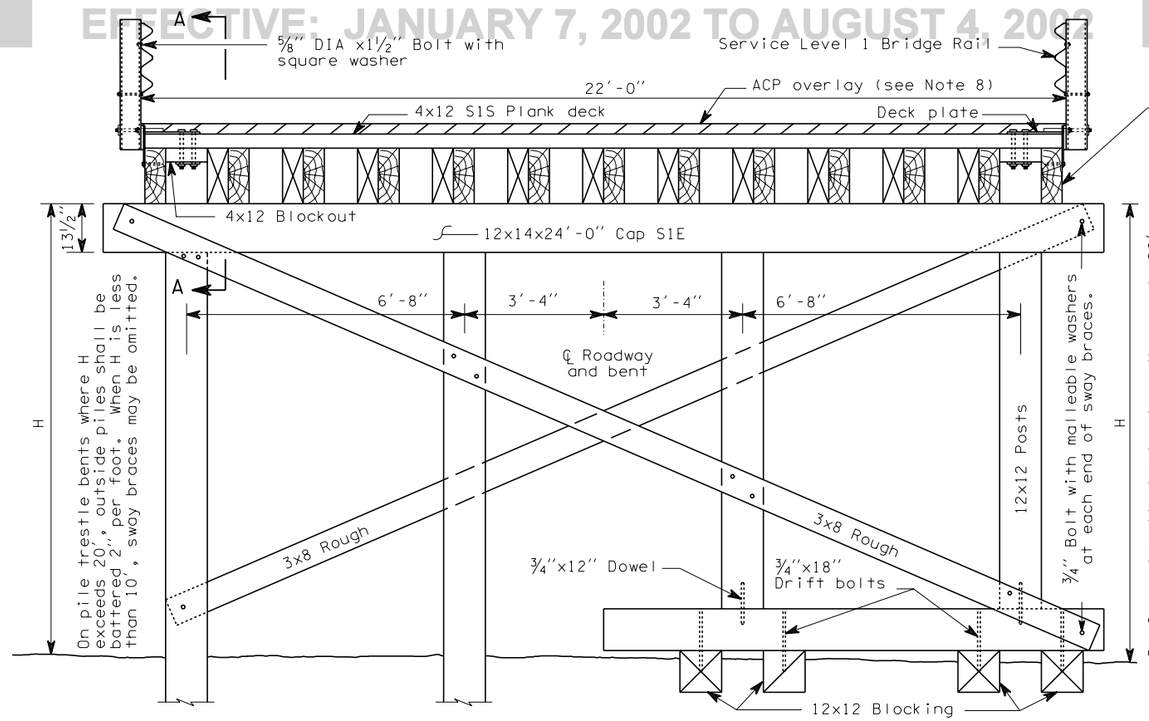

HALF SECTION-PILE BENT HALF SECTION-FRAME BENT

TYPICAL SECTION-TWO LANE BRIDGE

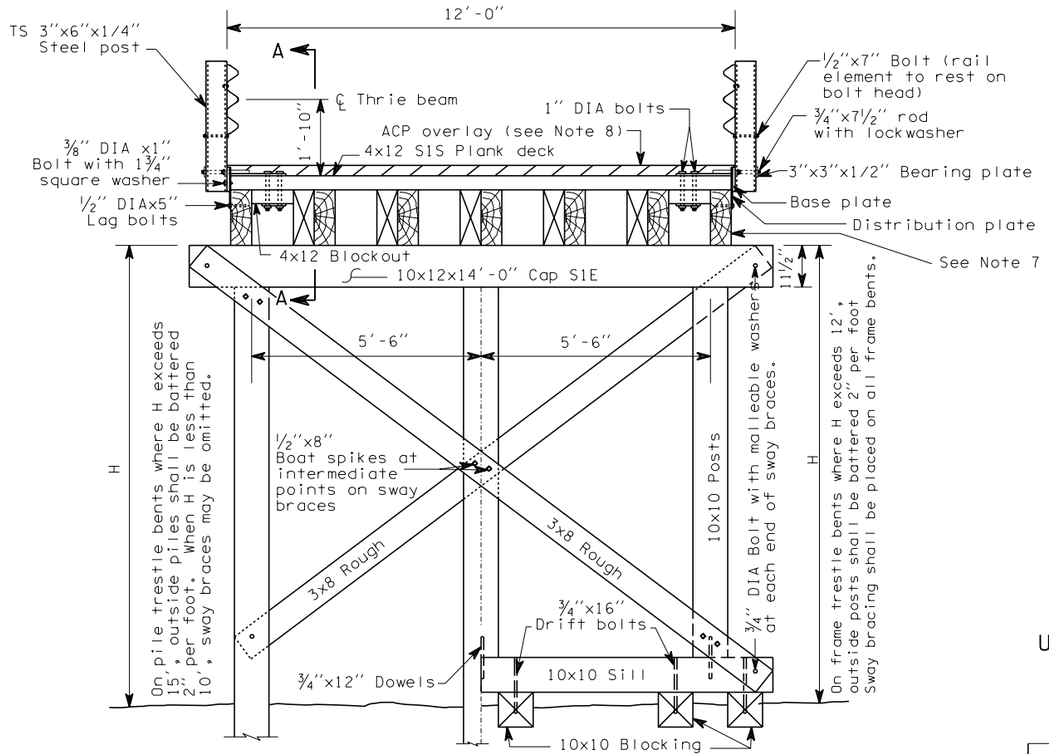

HALF SECTION-PILE BENT HALF SECTION-FRAME BENT

TYPICAL SECTION
SINGLE LANE BRIDGE

M. MYINT LWIN
STATE OF WASHINGTON
10536
REGISTERED
PROFESSIONAL ENGINEER

EXPIRES JANUARY 17, 1999

PILE OR FRAME DETOUR BRIDGE WITH ASPHALT OVERLAY

USE ONLY FOR TEMPORARY BRIDGES

STANDARD PLAN E-2

SHEET 1 OF 2 SHEETS

APPROVED FOR PUBLICATION

Brian Ziegler — STATE DESIGN ENGINEER — *5/29/98* — DATE

WASHINGTON STATE DEPARTMENT OF TRANSPORTATION
OLYMPIA, WASHINGTON

NOTE: THIS PLAN IS NOT A LEGAL ENGINEERING DOCUMENT BUT AN ELECTRONIC DUPLICATE. THE ORIGINAL, SIGNED BY THE ENGINEER AND APPROVED FOR PUBLICATION, IS KEPT ON FILE AT THE WASHINGTON STATE DEPARTMENT OF TRANSPORTATION. A COPY MAY BE OBTAINED UPON REQUEST.

EFFECTIVE: JANUARY 7, 2002 TO AUGUST 4, 2002

EFFECTIVE: JANUARY 7, 2002 TO AUGUST 4, 2002

EFFECTIVE: JANUARY 7, 2002 TO AUGUST 4, 2002

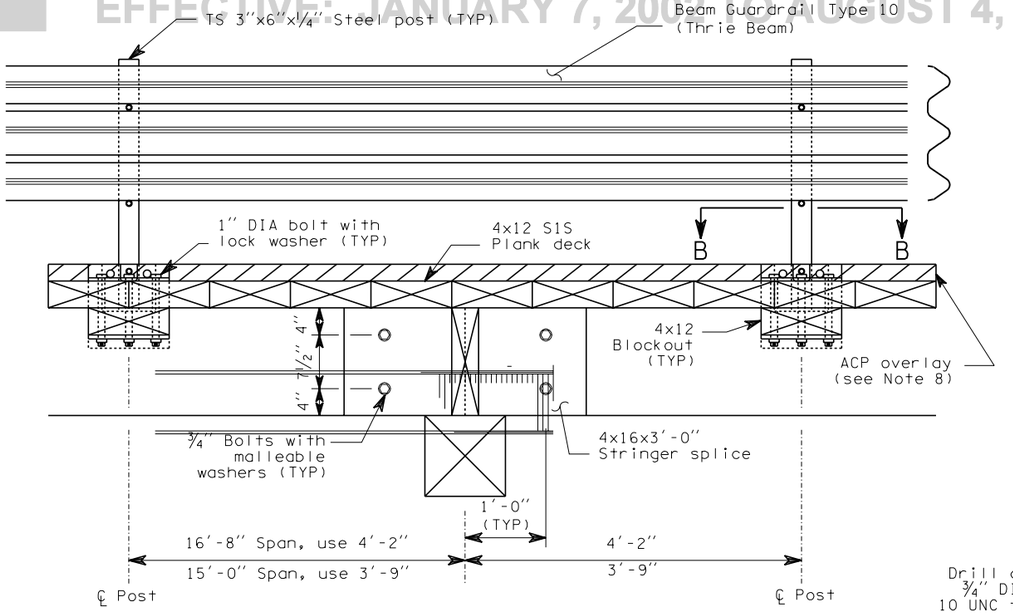

SECTION A-A

NOTES

1. Dimensions and notations for superstructure are typical for both single lane and two lane bridges.
2. All timber and lumber shall be #2 or better and untreated Douglas fir-larch.
3. All piling shall be untreated Douglas fir and shall be driven to develop a minimum load bearing capacity of 15 tons.
4. Blocking for frame bents shall be proportioned to carry a minimum load of 15 tons per post.
5. All hardware shall be black, ungalvanized.
6. Each deck plank shall be nailed to each stringer with two 7" spikes, number 1 or larger.
7. On 17'spans, stringers shall be 6x16 S1E. On 15' spans, stringers shall be 5x16 S1E. Two-lane bridges shall use thirteen lines of stringers, one-lane bridges shall use seven lines of stringers.
8. Overlay thickness must be sufficient to cover bolts.

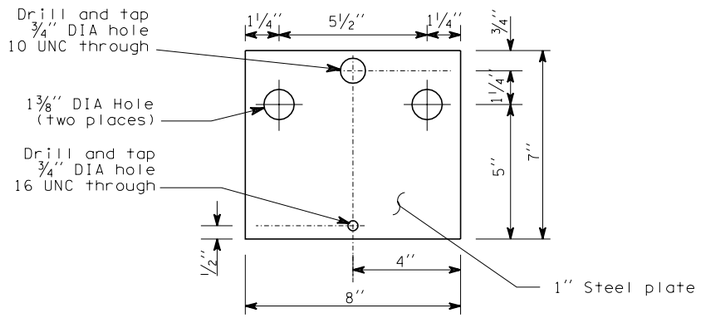

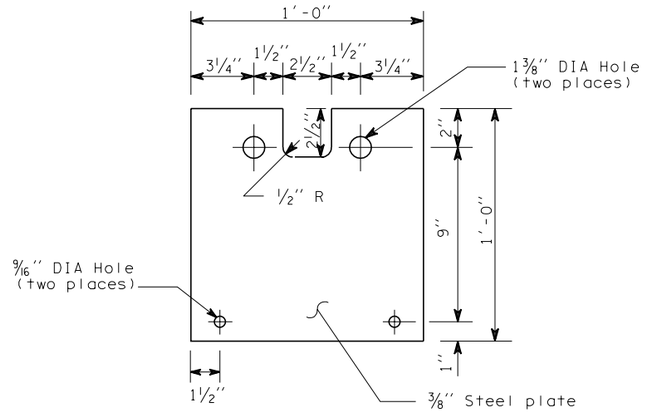

DISTRIBUTION PLATE DETAIL

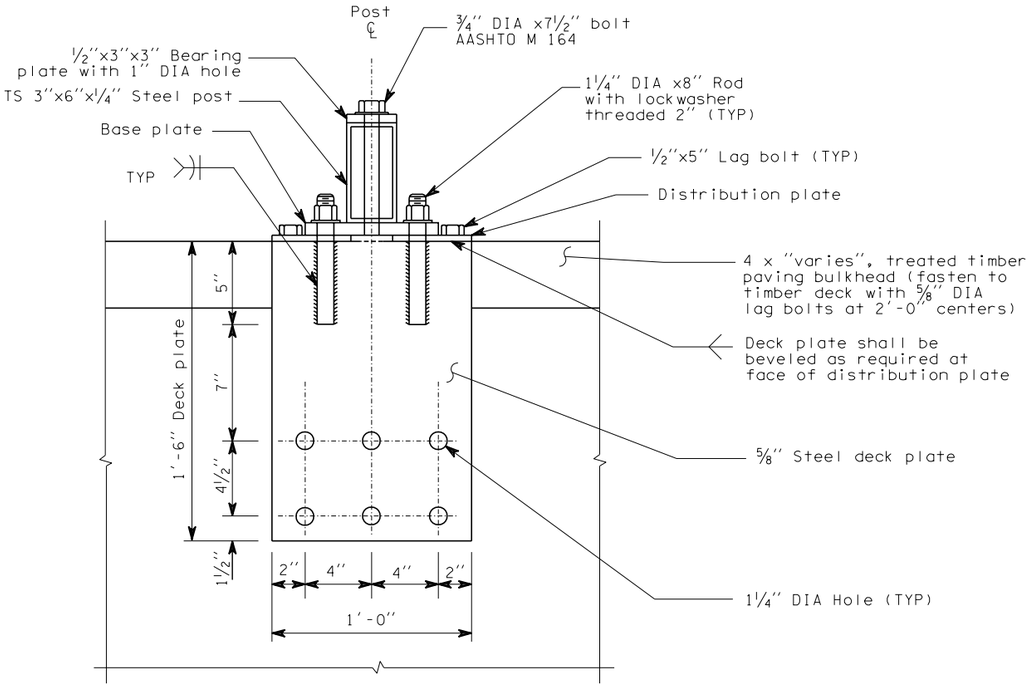

SECTION B-B

BASE PLATE DETAIL

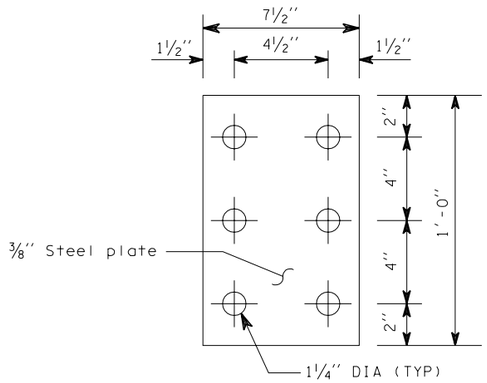

BACKING PLATE DETAIL

M. MYINT LWIN
STATE OF WASHINGTON
10536
REGISTERED
PROFESSIONAL ENGINEER

EXPIRES JANUARY 17, 1999

PILE OR FRAME DETOUR BRIDGE WITH ASPHALT OVERLAY

USE ONLY FOR TEMPORARY BRIDGES

STANDARD PLAN E-2

SHEET 2 OF 2 SHEETS

NOTE: THIS PLAN IS NOT A LEGAL ENGINEERING DOCUMENT BUT AN ELECTRONIC DUPLICATE. THE ORIGINAL, SIGNED BY THE ENGINEER AND APPROVED FOR PUBLICATION, IS KEPT ON FILE AT THE WASHINGTON STATE DEPARTMENT OF TRANSPORTATION. A COPY MAY BE OBTAINED UPON REQUEST.

APPROVED FOR PUBLICATION

Brian Ziegler — STATE DESIGN ENGINEER

5/29/98 — DATE

WASHINGTON STATE DEPARTMENT OF TRANSPORTATION
OLYMPIA, WASHINGTON

EFFECTIVE: JANUARY 7, 2002 TO AUGUST 4, 2002

EFFECTIVE: JANUARY 7, 2002 TO AUGUST 4, 2002

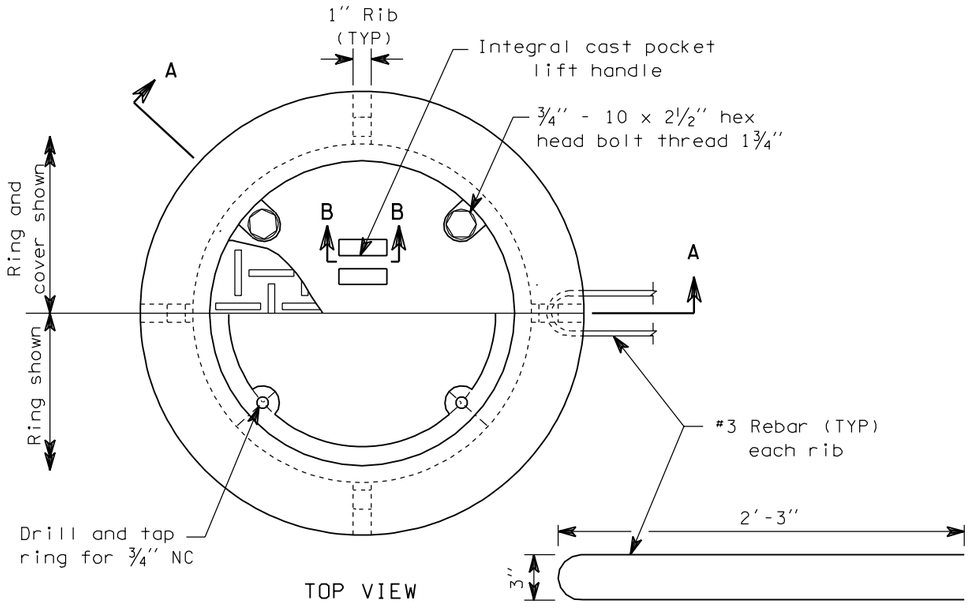

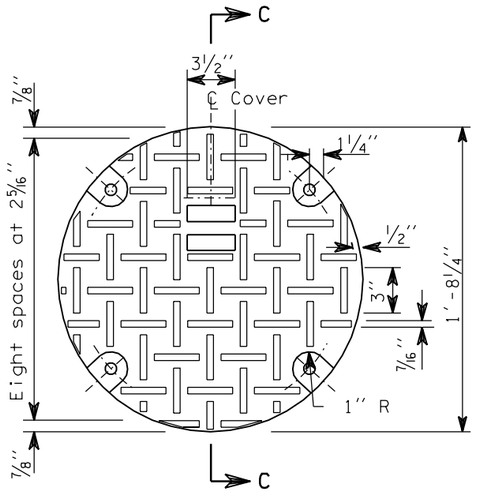

RING AND COVER

NOTE
Approximate weights: Ring 173 lbs
Cover 123 lbs
Total 296 lbs

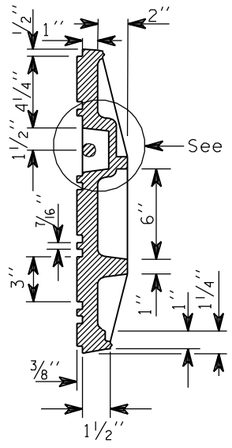

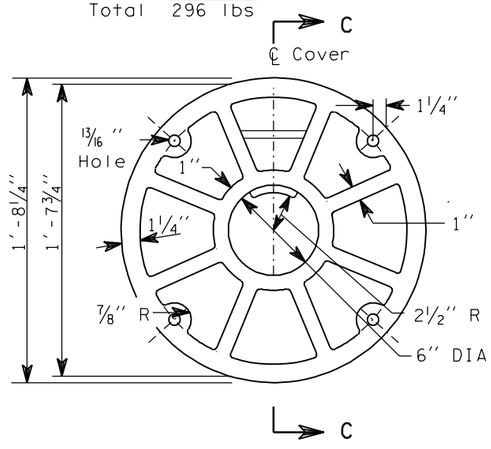

MANHOLE COVER

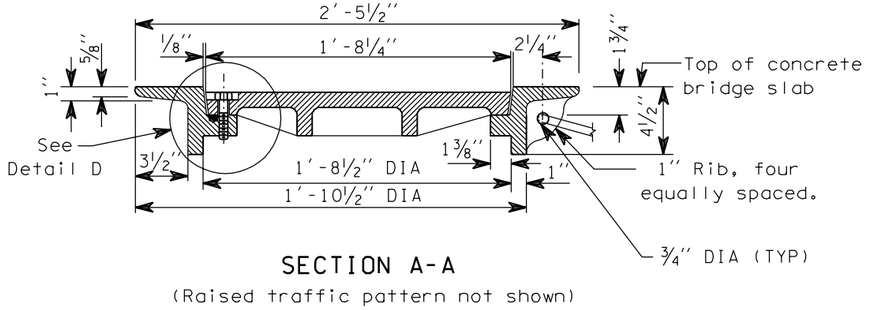

SECTION A-A
(Raised traffic pattern not shown)

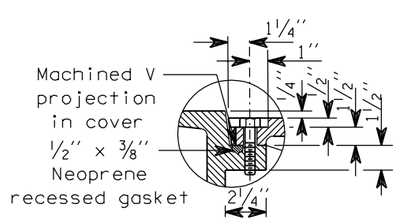

DETAIL D

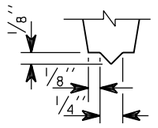

V PROJECTION
DETAIL

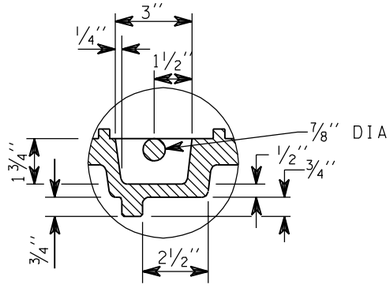

DETAIL E
(Turned 90°)

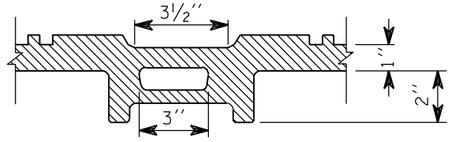

SECTION B-B

M. MYINT LWIN
STATE OF WASHINGTON
10536
REGISTERED
PROFESSIONAL ENGINEER

EXPIRES JANUARY 17, 1999

MANHOLE RING AND COVER FOR BRIDGES
STANDARD PLAN E-5

NOTE: THIS PLAN IS NOT A LEGAL ENGINEERING DOCUMENT BUT AN ELECTRONIC DUPLICATE. THE ORIGINAL, SIGNED BY THE ENGINEER AND APPROVED FOR PUBLICATION, IS KEPT ON FILE AT THE WASHINGTON STATE DEPARTMENT OF TRANSPORTATION. A COPY MAY BE OBTAINED UPON REQUEST.

APPROVED FOR PUBLICATION

Brian Ziegler — STATE DESIGN ENGINEER

5/29/98 — DATE

WASHINGTON STATE DEPARTMENT OF TRANSPORTATION
OLYMPIA, WASHINGTON

EFFECTIVE: JANUARY 7, 2002 TO AUGUST 4, 2002

EFFECTIVE: JANUARY 7, 2002 TO AUGUST 4, 2002

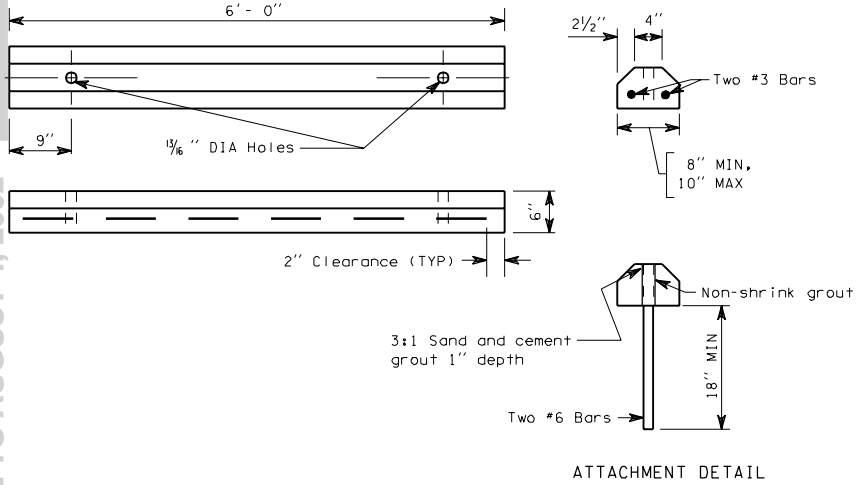

ATTACHMENT DETAIL

PRECAST CEMENT CONCRETE BUMPER CURB

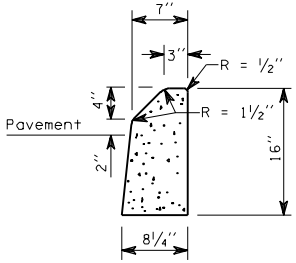

SINGLE FACED MOUNTABLE
CEMENT CONCRETE CURB

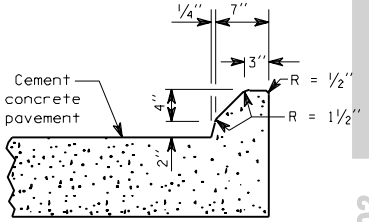

MOUNTABLE INTEGRAL
CEMENT CONCRETE CURB

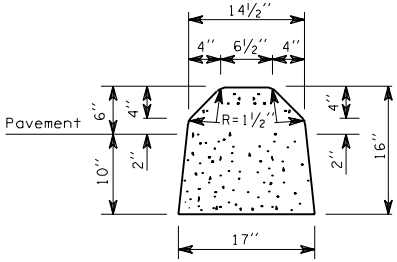

DOUBLE FACED MOUNTABLE
CEMENT CONCRETE CURB

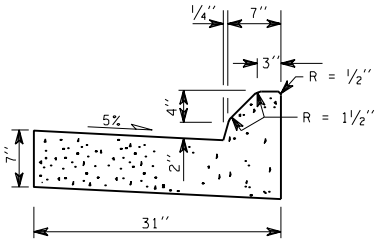

MOUNTABLE CEMENT CONCRETE
CURB AND GUTTER

CEMENT CONCRETE
CURBS AND GUTTERS

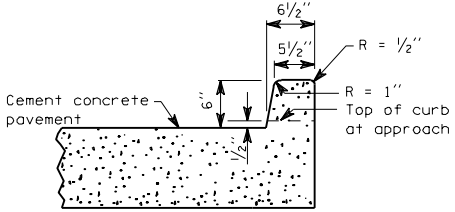

INTEGRAL CEMENT CONCRETE
BARRIER CURB

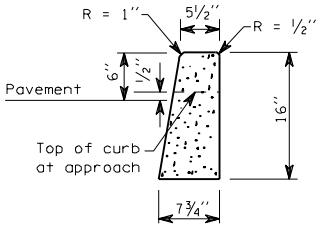

CEMENT CONCRETE
BARRIER CURB

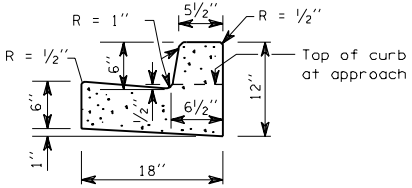

CEMENT CONCRETE BARRIER
CURB AND GUTTER

EFFECTIVE: JANUARY 7, 2002 TO AUGUST 4, 2002

Note: Scuppers to be provided at intervals as required by the Engineer.

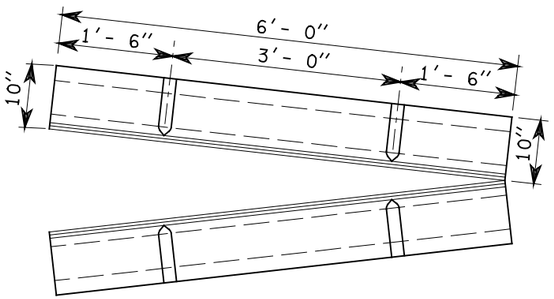

TYPE A CURB STRAIGHT SECTION

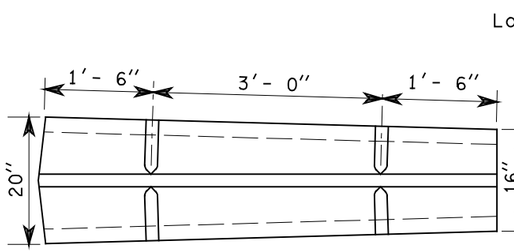

TYPE A CONNECTING DIVIDER NO. 2

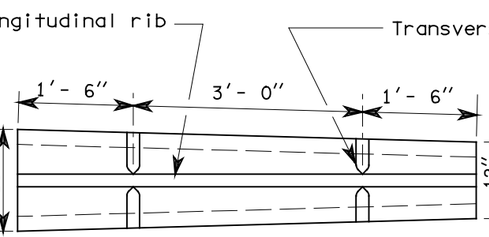

TYPE A CONNECTING DIVIDER NO. 1

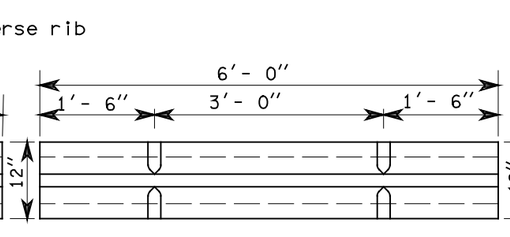

TYPE C CURB

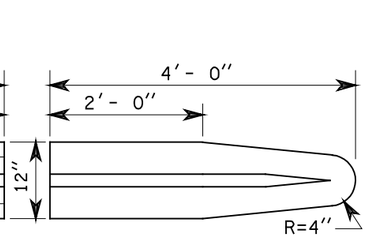

TYPE C NOSING

PLAN VIEW

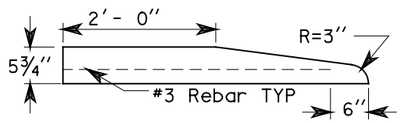

TYPE A AND C NOSING ELEVATION

The main body of the curb and the longitudinal rib shall form a uniform transition from a Type C section to a Type A (back to back) section.

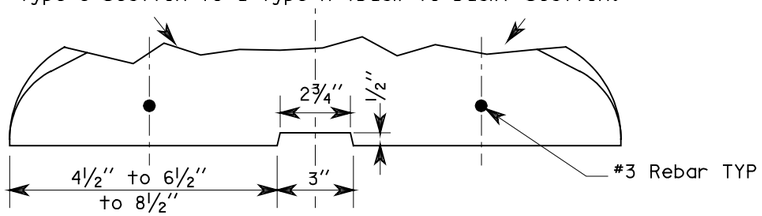

TYPE A CONNECTING DIVIDER SECTION

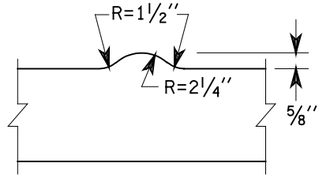

LONGITUDINAL SECTION THROUGH TRANSVERSE RIB

TYPE A NOSING

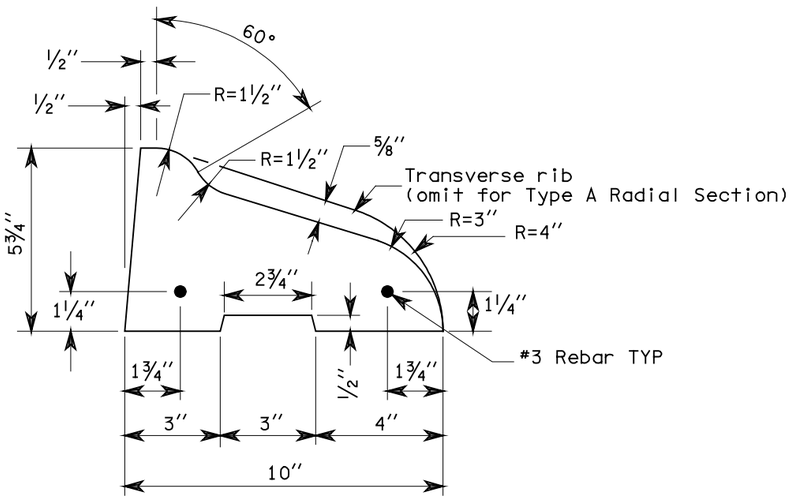

TYPE A CURB SECTION

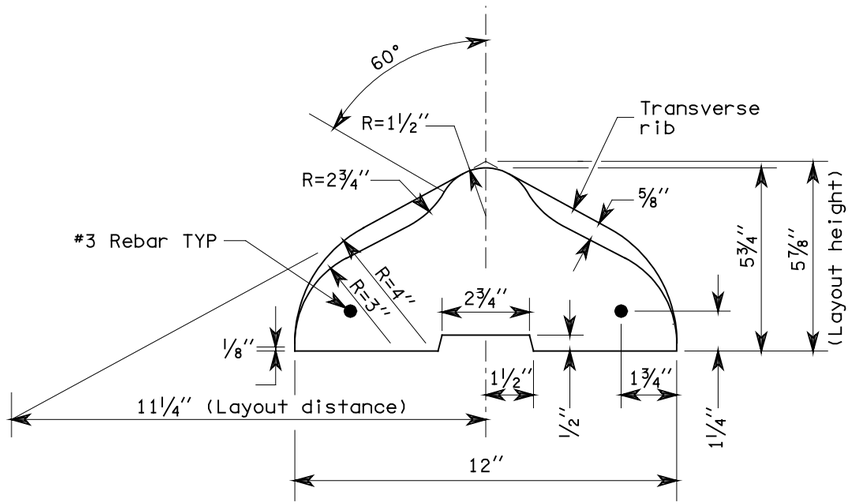

TYPE C CURB SECTION

CLIFFORD E. MANSFIELD
STATE OF WASHINGTON
15224
REGISTERED
PROFESSIONAL ENGINEER

EXPIRES MAY 3, 2000

PRECAST TRAFFIC CURB
STANDARD PLAN F-2

NOTE: THIS PLAN IS NOT A LEGAL ENGINEERING DOCUMENT BUT AN ELECTRONIC DUPLICATE. THE ORIGINAL, SIGNED BY THE ENGINEER AND APPROVED FOR PUBLICATION, IS KEPT ON FILE AT THE WASHINGTON STATE DEPARTMENT OF TRANSPORTATION. A COPY MAY BE OBTAINED UPON REQUEST.

DATE	REVISION	BY
8-99	Deleted table & radial section identified rebar	TWS

APPROVED FOR PUBLICATION

Clifford E. Mansfield — DEPUTY STATE DESIGN ENGINEER — *08/27/99* DATE

WASHINGTON STATE DEPARTMENT OF TRANSPORTATION
OLYMPIA, WASHINGTON

EFFECTIVE: JANUARY 7, 2002 TO AUGUST 4, 2002

EFFECTIVE: JANUARY 7, 2002 TO AUGUST 4, 2002
EFFECTIVE: JANUARY 7, 2002 TO AUGUST 4, 2002

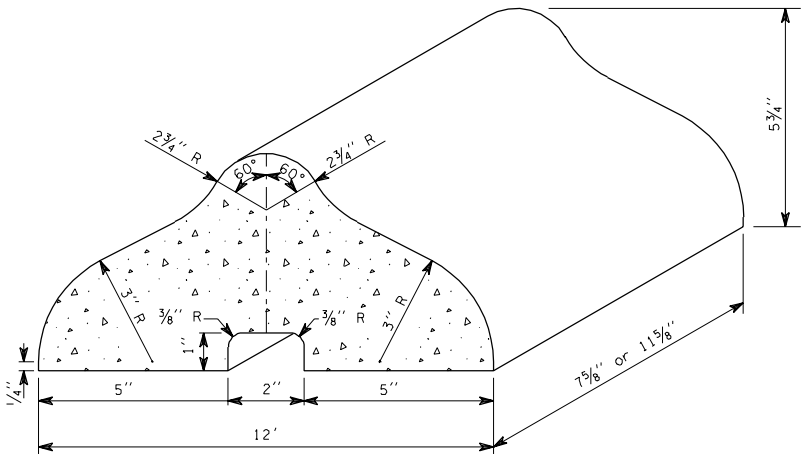

TYPE C BLOCK

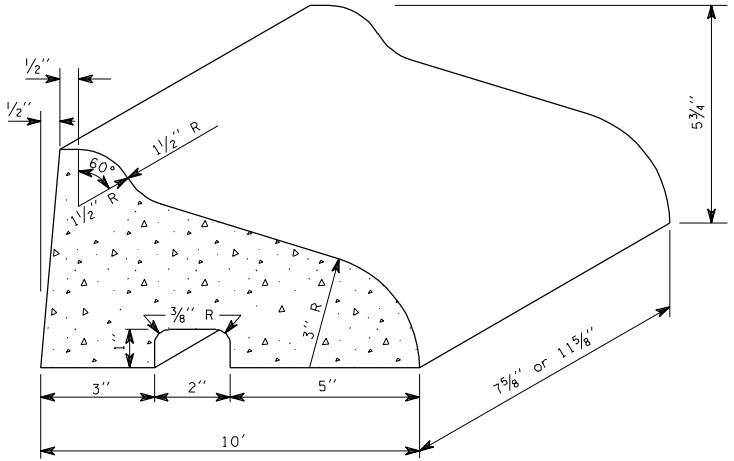

TYPE A BLOCK

BLOCK TRAFFIC CURB

EFFECTIVE: JANUARY 7, 2002 TO AUGUST 4, 2002
EFFECTIVE: JANUARY 7, 2002 TO AUGUST 4, 2002
EFFECTIVE: JANUARY 7, 2002 TO AUGUST 4, 2002
EFFECTIVE: JANUARY 7, 2002 TO AUGUST 4, 2002

EFFECTIVE: JANUARY 7, 2002 TO AUGUST 4, 2002
EFFECTIVE: JANUARY 7, 2002 TO AUGUST 4, 2002

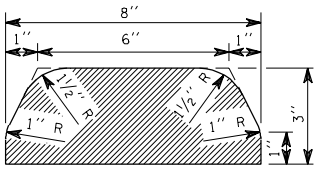

TYPE 1
(ASPHALT)

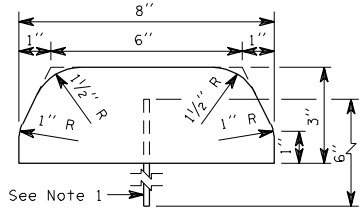

TYPE 4
(CEMENT CONCRETE)

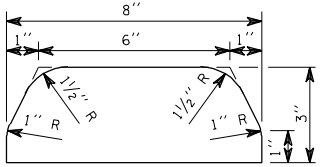

TYPE 4a
(CEMENT CONCRETE)
See Note 2

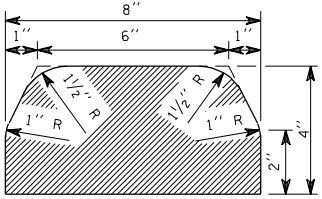

TYPE 2
(ASPHALT)

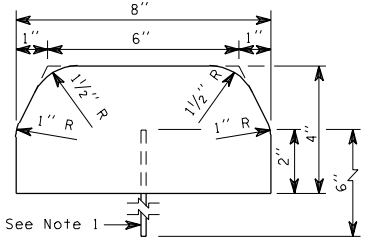

TYPE 5
(CEMENT CONCRETE)

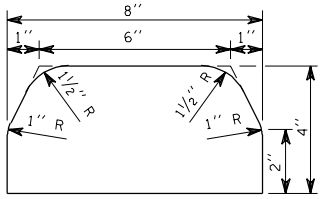

TYPE 5a
(CEMENT CONCRETE)
See Note 2

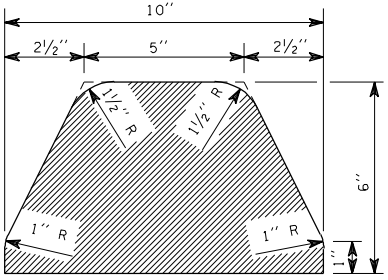

TYPE 3
(ASPHALT)

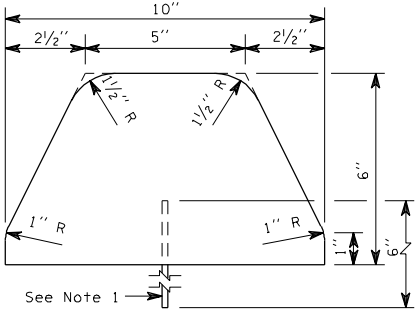

TYPE 6
(CEMENT CONCRETE)

EXTRUDED CURB

F-2b
03-14-97

EFFECTIVE: JANUARY 7, 2002 TO AUGUST 4, 2002
EFFECTIVE: JANUARY 7, 2002 TO AUGUST 4, 2002
EFFECTIVE: JANUARY 7, 2002 TO AUGUST 4, 2002
EFFECTIVE: JANUARY 7, 2002 TO AUGUST 4, 2002

EFFECTIVE: JANUARY 7, 2002 TO AUGUST 4, 2002

NOTES

1. See Standard Specifications for anchoring methods.
2. Type 4a and Type 5a curbs do not require steel tie bars or adhesive for anchoring.

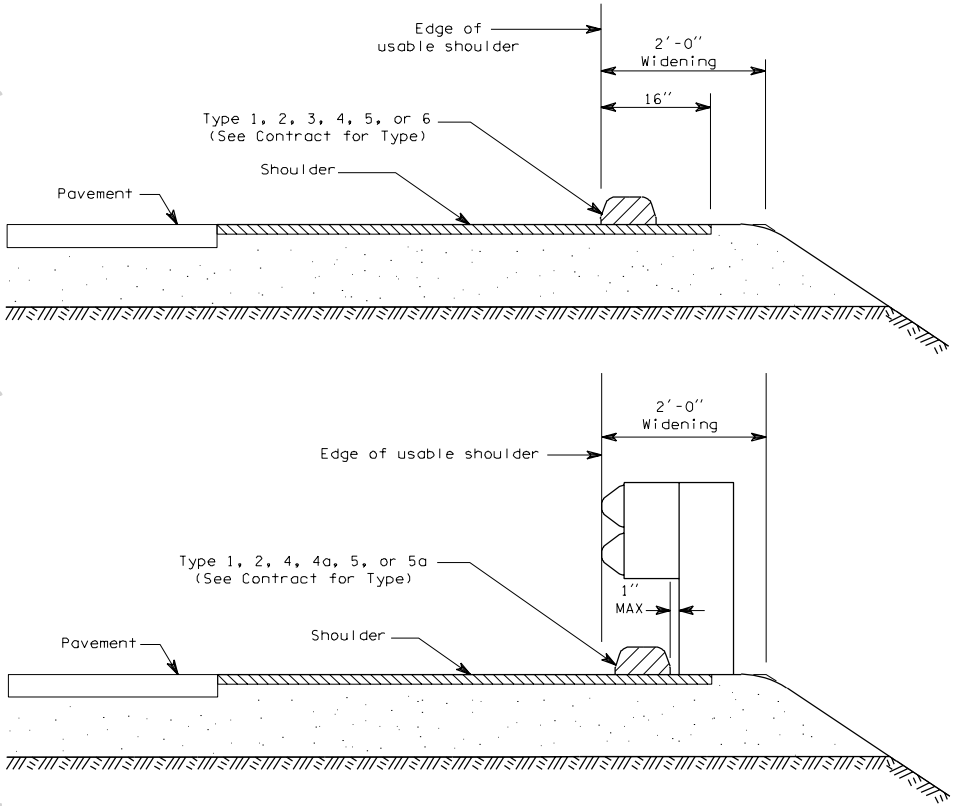

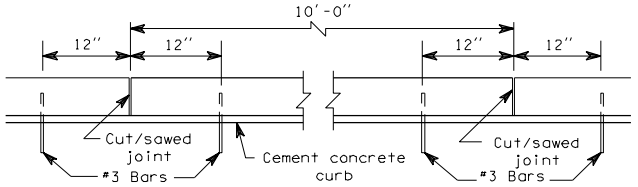

SPACING OF ANCHOR BARS

EXTRUDED CURB

F-2b
03-14-97

EFFECTIVE: JANUARY 7, 2002 TO AUGUST 4, 2002

EFFECTIVE: JANUARY 7, 2002 TO AUGUST 4, 2002

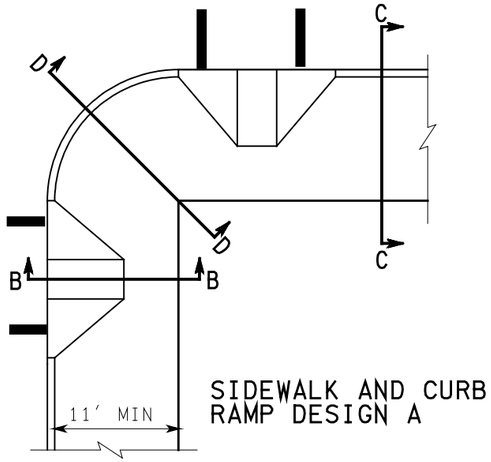

SIDEWALK AND CURB RAMP DESIGN A

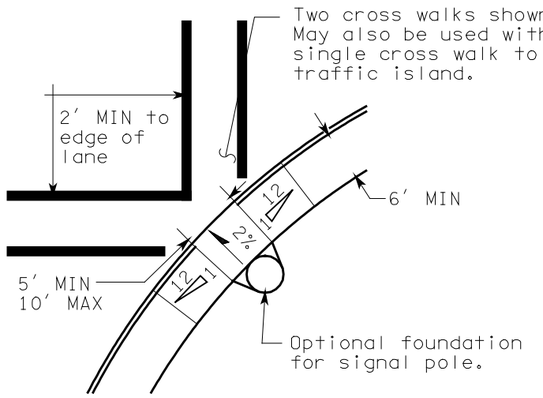

SIDEWALK AND CURB RAMP DESIGN D
For use with large radius (35′ MIN) intersections

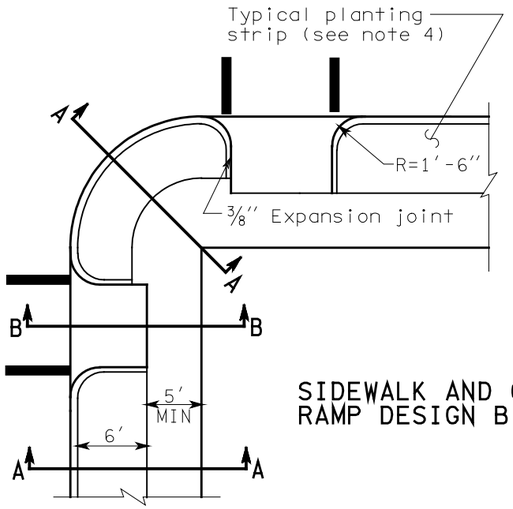

SIDEWALK AND CURB RAMP DESIGN B

NOTE: Curb Ramp Designs A and B are the preferred designs. Use Curb Ramp Design C only when neither design A nor B will work. Use Curb Ramp Design D only with large radius intersections (greater than 35′).

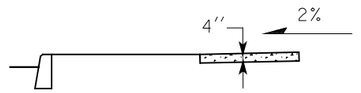

SECTION A-A

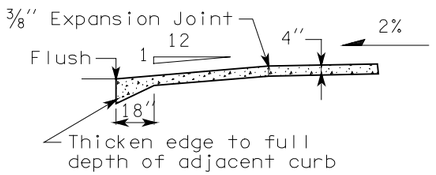

SECTION B-B

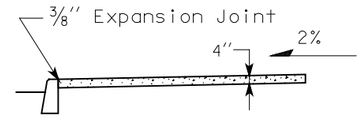

SECTION C-C

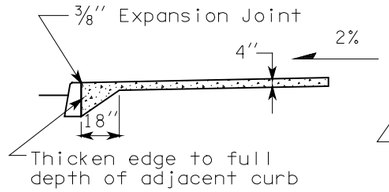

SECTION D-D

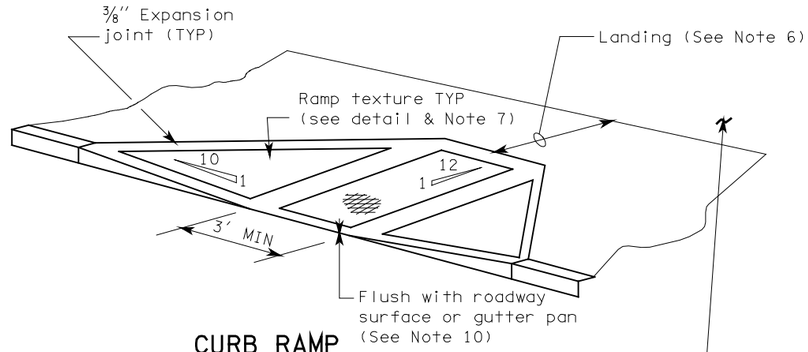

CURB RAMP

NOTE: Grade area behind sidewalk to transition to existing ground.

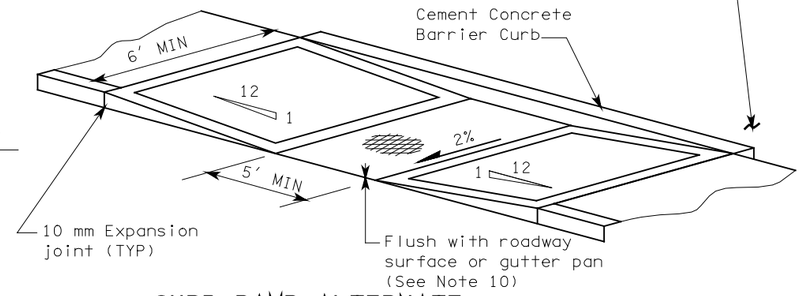

CURB RAMP ALTERNATE

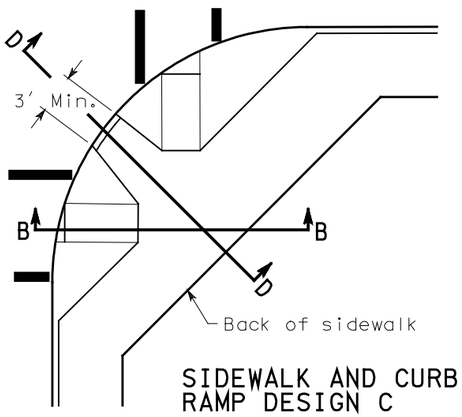

SIDEWALK AND CURB RAMP DESIGN C

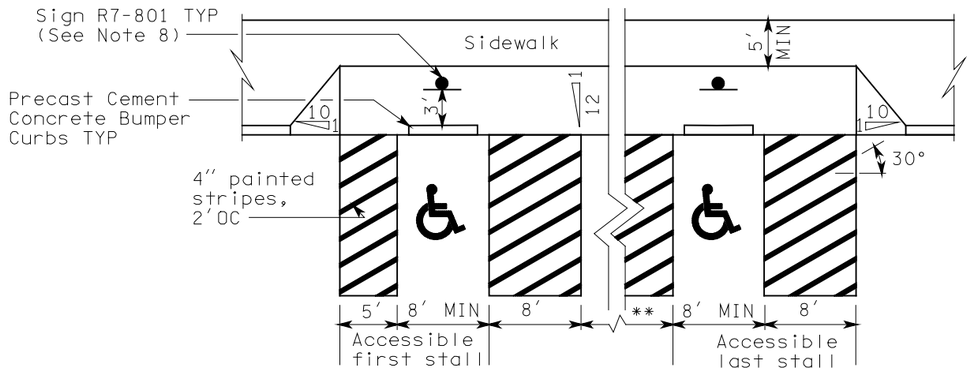

ACCESSIBLE PARKING SHOWN WITH CONTINUOUS CURB RAMP

** X spaces at 16′-0″ (see contract plans)

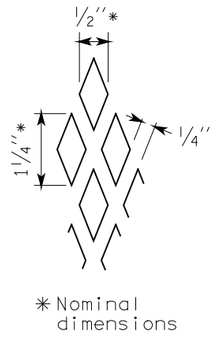

* Nominal dimensions

RAMP TEXTURE DETAIL

CLIFFORD E. MANSFIELD
STATE OF WASHINGTON
15224
REGISTERED
PROFESSIONAL ENGINEER

EXPIRES MAY 3, 2000

CEMENT CONCRETE SIDEWALK AND APPROACH DETAILS

STANDARD PLAN F-3

SHEET 1 OF 2 SHEETS

NOTE: THIS PLAN IS NOT A LEGAL ENGINEERING DOCUMENT BUT AN ELECTRONIC DUPLICATE. THE ORIGINAL, SIGNED BY THE ENGINEER AND APPROVED FOR PUBLICATION, IS KEPT ON FILE AT THE WASHINGTON STATE DEPARTMENT OF TRANSPORTATION. A COPY MAY BE OBTAINED UPON REQUEST.

APPROVED FOR PUBLICATION

Clifford E. Mansfield 2/09/00

DEPUTY STATE DESIGN ENGINEER — DATE

WASHINGTON STATE DEPARTMENT OF TRANSPORTATION
OLYMPIA, WASHINGTON

DATE	REVISION	BY
2/00	MODIFIED "CURB RAMP" AND "CURB RAMP ALTERNATE" DETAILS.	TWS

EFFECTIVE: JANUARY 7, 2002 TO AUGUST 4, 2002

EFFECTIVE: JANUARY 7, 2002 TO AUGUST 4, 2002

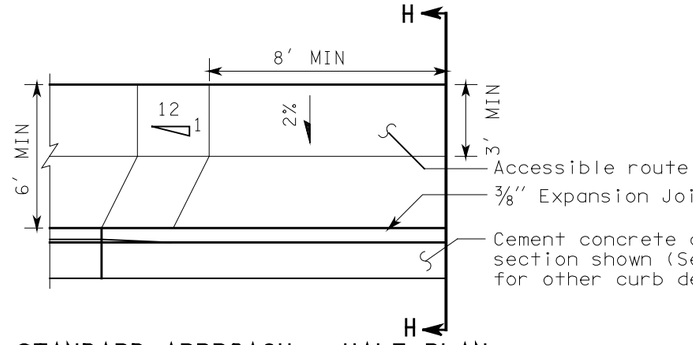

STANDARD APPROACH - HALF PLAN

STANDARD APPROACH - HALF ELEVATION

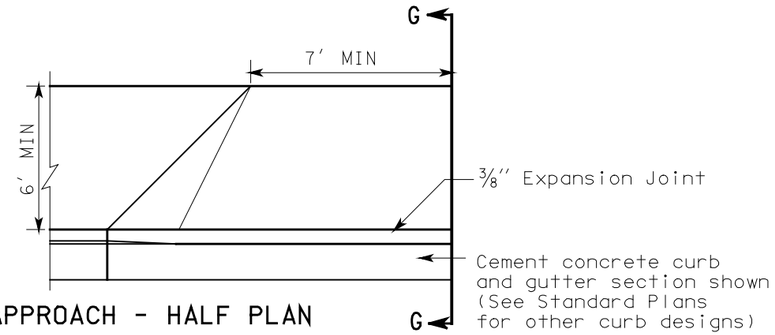

OPTIONAL APPROACH - HALF PLAN

OPTIONAL APPROACH - HALF ELEVATION

Note: Use Optional Approach only when a sidewalk is used at the back of the approach and the sidewalk is set back a minimum of 6 feet from curb.

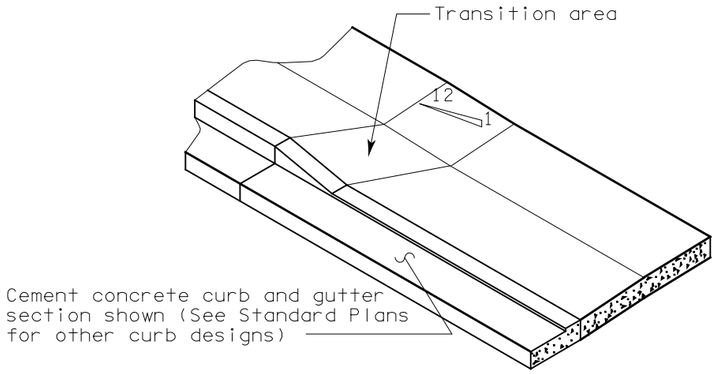

STANDARD APPROACH - HALF ISOMETRIC

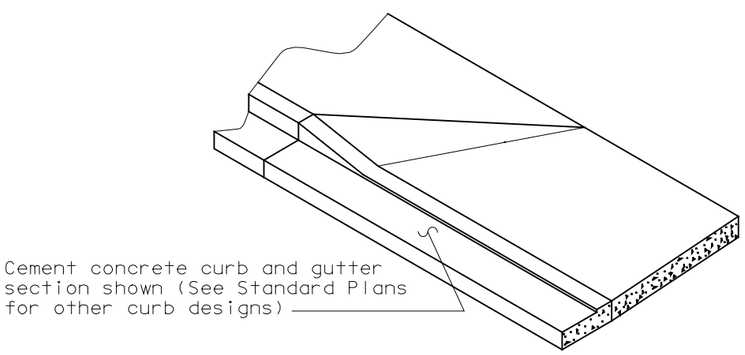

OPTIONAL APPROACH - HALF ISOMETRIC

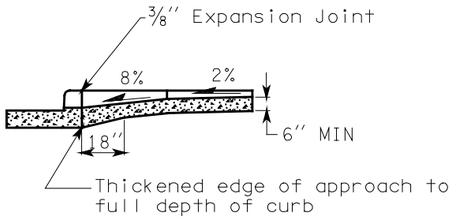

SECTION H-H

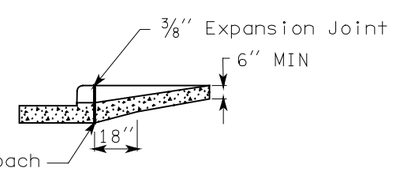

SECTION G-G

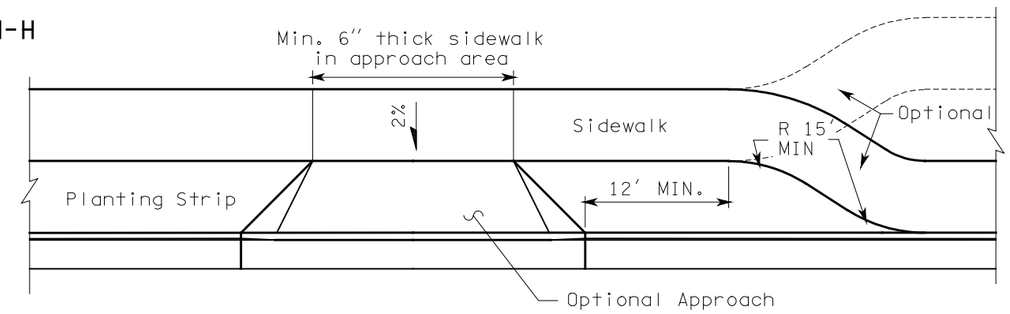

APPROACH PLAN

NOTES

1. A minimum 3′ wide accessible route shall be maintained in all pedestrian accessible areas.
2. Contraction joints shall be placed along sidewalks at 15′ maximum spacing. All joints shall be cleaned and edged.
3. Inlets shall be located so that runoff does not flow past curb ramps.
4. This area may also incorporate the following;
   Decorative paving,
   Open graded paving,
   Raised or leveled planters,
   Benches or seating areas.
5. Curb ramps shall be poured as a separate unit from the sidewalk, isolated by expansion joint material on all sides except at end of ramp next to the roadway.
6. Minimum landing width is 4′ for new construction. For alterations, the minimum is 3′. See Contract Plans.
7. Ramp texturing is to be done with an expanded metal grate placed and removed from wet concrete to leave a diamond pattern as shown. The long axis of the diamond pattern shall be perpendicular to the curb. Grooves shall be 1/8″ deep and 1/4″ wide.
8. See Contract Plans for mounting height of Sign R7-801.
9. Cement concrete approaches shall be constructed of air-entrained concrete Class 3000 and may be poured integral with curb.
10. When a flush condition is not feasible, the change in elevation between surfaces shall not exceed 1/2″. The edge of the higher surface, up to 1/4″ in height, may be vertical. The edge of the higher surface, up to 1/2″ in height, shall be beveled with a slope no steeper that 2:1.

CLIFFORD E. MANSFIELD
STATE OF WASHINGTON
15224
REGISTERED
PROFESSIONAL ENGINEER

EXPIRES MAY 3, 2000

CEMENT CONCRETE SIDEWALK AND APPROACH DETAILS

STANDARD PLAN F-3

SHEET 2 OF 2 SHEETS

NOTE: THIS PLAN IS NOT A LEGAL ENGINEERING DOCUMENT BUT AN ELECTRONIC DUPLICATE THE ORIGINAL, SIGNED BY THE ENGINEER AND APPROVED FOR PUBLICATION, IS KEPT ON FILE AT THE WASHINGTON STATE DEPARTMENT OF TRANSPORTATION. A COPY MAY BE OBTAINED UPON REQUEST.

APPROVED FOR PUBLICATION

Clifford E. Mansfield *02-09-00*

DEPUTY STATE DESIGN ENGINEER — DATE

WASHINGTON STATE DEPARTMENT OF TRANSPORTATION
OLYMPIA, WASHINGTON

DATE	REVISION	BY
2/00	REVISED NOTES 6 & 8. ADDED NOTE 10.	TWS

EFFECTIVE: JANUARY 7, 2002 TO AUGUST 4, 2002

EFFECTIVE: JANUARY 7, 2002 TO AUGUST 4, 2002

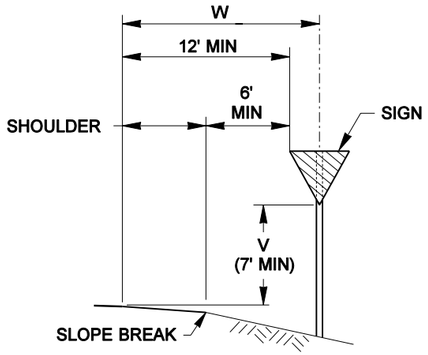

SIGN INSTALLATION IN FILL SECTION

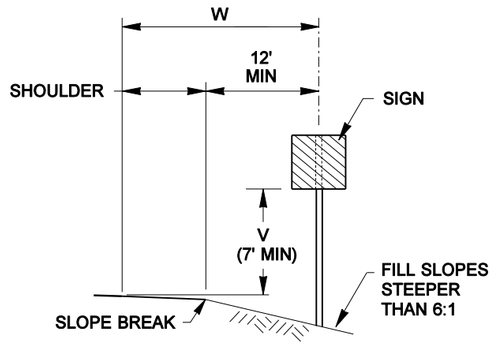

SIGN INSTALLATION ON STEEP FILL SLOPES

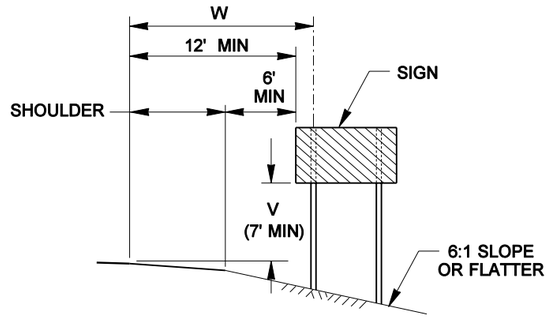

MULTIPLE SIGN POST INSTALLATION IN FILL SECTION

NOTES

1. Refer to the Sign Specification Sheet of the contract for the 'V' and 'W' distances

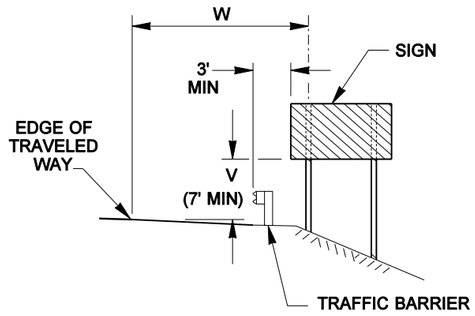

SIGN INSTALLATION BEHIND TRAFFIC BARRIER

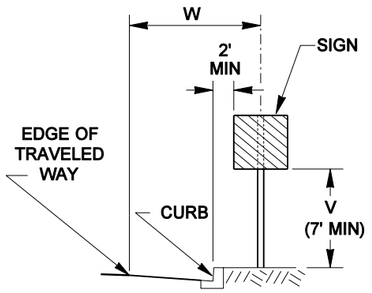

SIGN INSTALLATION IN CURB SECTION

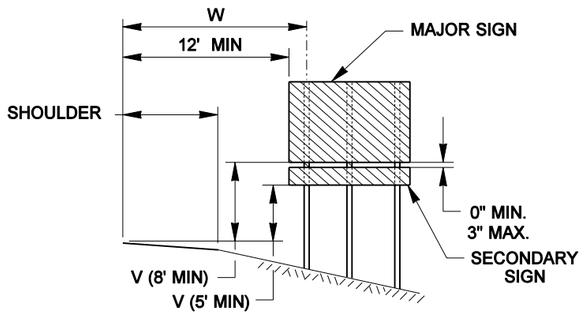

GUIDE OR DIRECTIONAL SIGN WITH SECONDARY SIGN INSTALLATION ON EXPRESSWAYS AND FREEWAYS

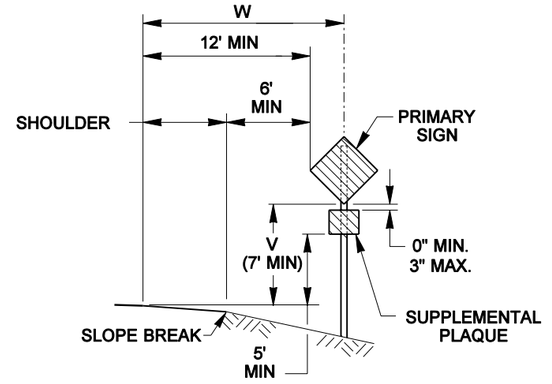

SIGN WITH SUPPLEMENTAL PLAQUE INSTALLATION IN FILL SECTION

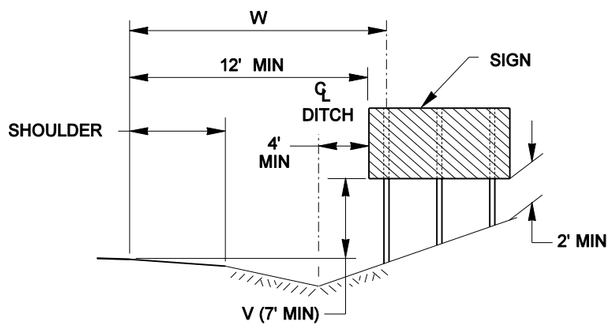

MULTIPLE SIGN POST INSTALLATION IN DITCH SECTION

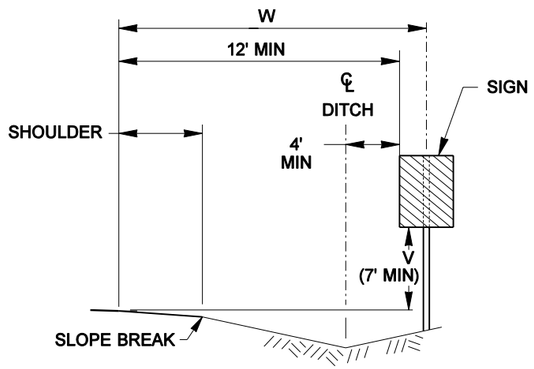

SIGN INSTALLATION IN DITCH SECTION

EXPIRES OCTOBER 26, 2002

GROUND MOUNTED SIGN PLACEMENT

STANDARD PLAN G-1

NOTE: THIS PLAN IS NOT A LEGAL ENGINEERING DOCUMENT BUT AN ELECTRONIC DUPLICATE. THE ORIGINAL, SIGNED BY THE ENGINEER AND APPROVED FOR PUBLICATION, IS KEPT ON FILE AT THE WASHINGTON STATE DEPARTMENT OF TRANSPORTATION. A COPY MAY BE OBTAINED UPON REQUEST.

APPROVED FOR PUBLICATION

Harold J. Peterfeso — STATE DESIGN ENGINEER

09-12-01 — DATE

Washington State Department of Transportation

EFFECTIVE: JANUARY 7, 2002 TO AUGUST 4, 2002

EFFECTIVE: JANUARY 7, 2002 TO AUGUST 4, 2002

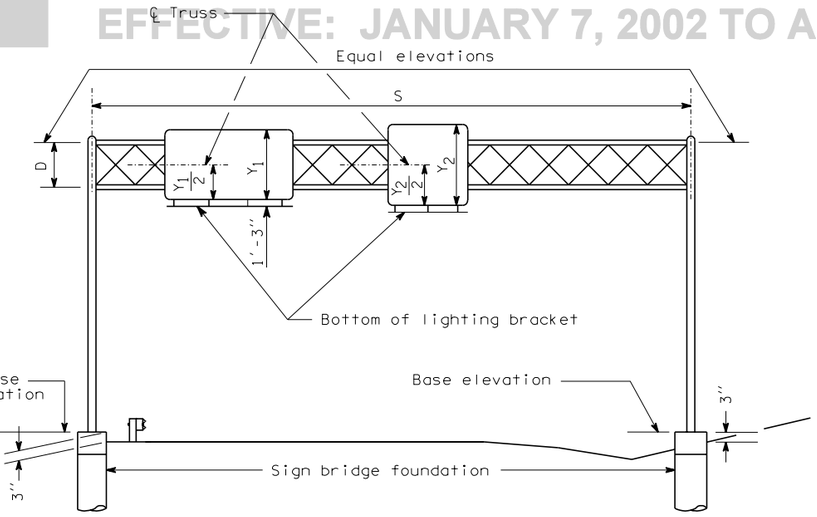

Y_1 = Height of shallowest sign on structure, D + 1′ MIN

Y_2 = Height of any sign with height greater than Y_1

SIGN BRIDGE LAYOUT

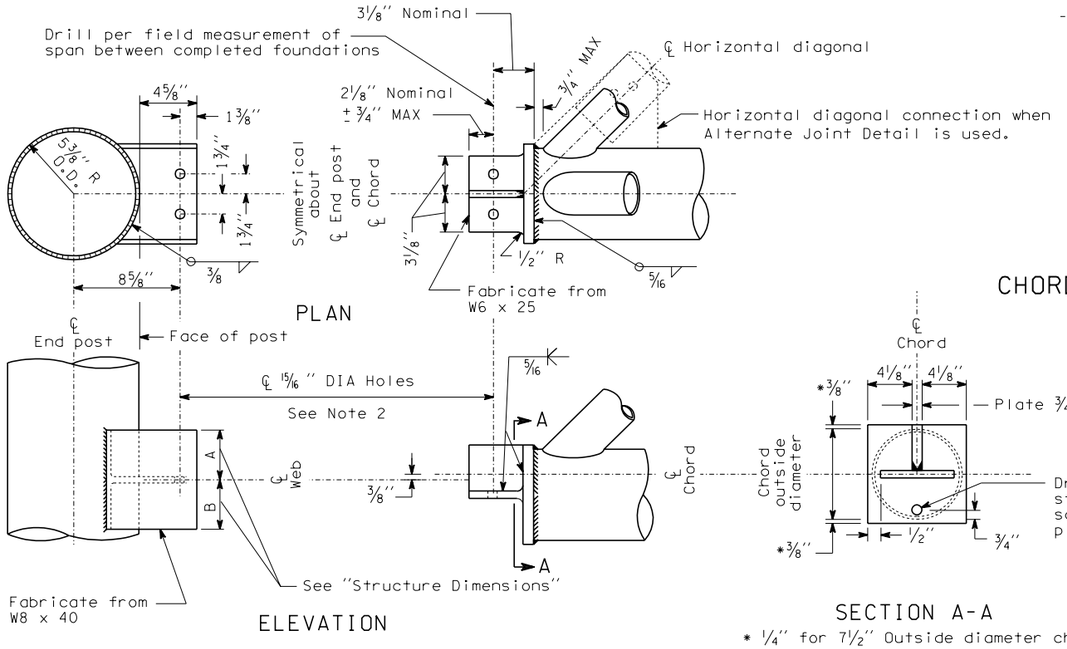

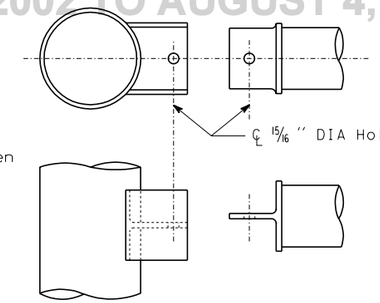

CHORD TO END POST CONNECTION TYPE Q

Where no diagonals connect
See Note 3

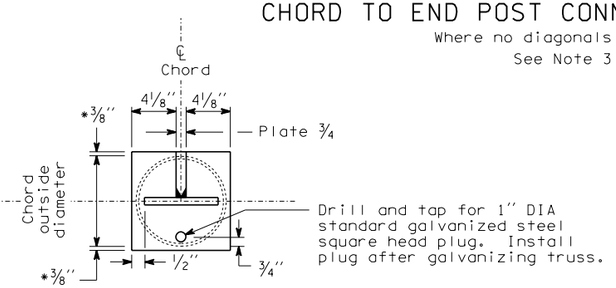

SECTION A-A

* ¼" for 7½" Outside diameter chord

CHORD TO END POST CONNECTION TYPE R

Where diagonals connect

SPAN LENGTH S	DIMENSION D	TOP AND BOT CHORDS	DIAGONALS	END TRUSS POSTS	END TRUSS STRUTS AND DIAGONALS	TOTAL SIGN AREA (MAX)	A	B
60′ or less	4′-0″	3″ x .216″	1¼″ x .140″	10″ x .250″	2½″ x .203″	384 sq ft	2⅜″	1⅝″
61′ to 90′	5′-0″	4″ x .237″	2″ x .154″	10″ x .250″	2½″ x .203″	624 sq ft	2⅞″	2⅛″
91′ to 120′	6′-0″	5″ x .258″	2″ x .154″	10″ x .307″	3″ x .216″	864 sq ft	3⅜″	2⅝″
121′ to 150′	7′-0″	6″ x .280″	2½″ x .203″	10″ x .365″	3½″ x .226	1104 sq ft	4 1/16″	3¼″

All members are pipe. Values shown are nominal pipe size and wall thickness.

STRUCTURE DIMENSIONS

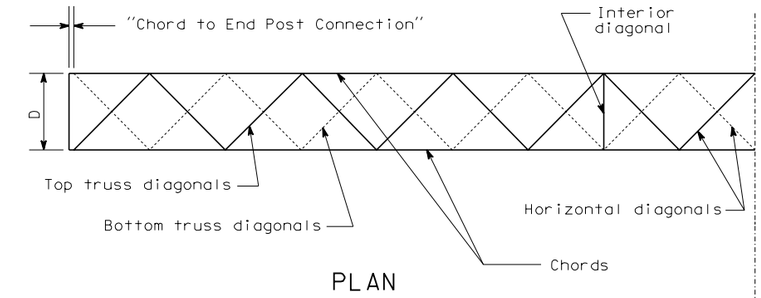

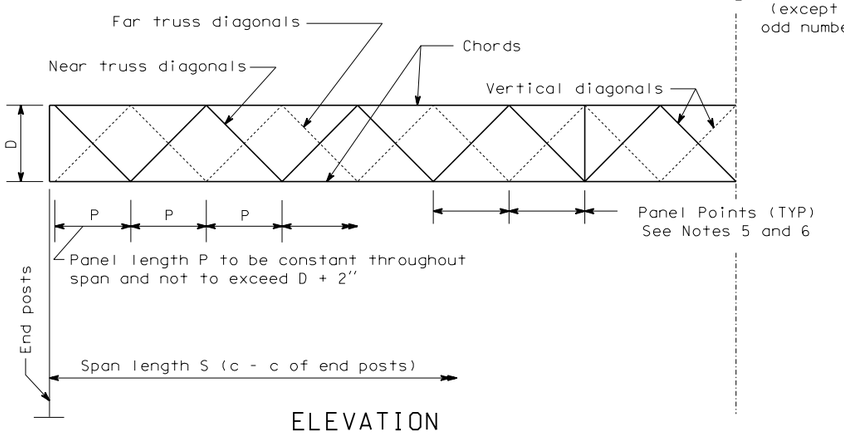

℄ Symmetrical about ℄ span (except framing with odd number of panels).

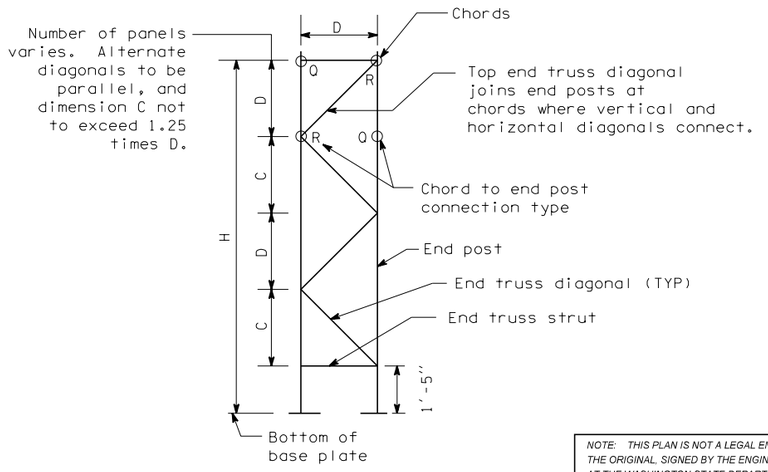

END VIEW

M. MYINT LWIN
STATE OF WASHINGTON
10536
REGISTERED
PROFESSIONAL ENGINEER

EXPIRES JANUARY 17, 1999

SIGN BRIDGE STANDARD PLAN G-2

SHEET 1 OF 3 SHEETS

NOTE: THIS PLAN IS NOT A LEGAL ENGINEERING DOCUMENT BUT AN ELECTRONIC DUPLICATE. THE ORIGINAL, SIGNED BY THE ENGINEER AND APPROVED FOR PUBLICATION, IS KEPT ON FILE AT THE WASHINGTON STATE DEPARTMENT OF TRANSPORTATION. A COPY MAY BE OBTAINED UPON REQUEST.

DATE	REVISION	BY
5/98	Redrawn on CADD, revised for steel materials only.	GEM

APPROVED FOR PUBLICATION

Clifford E. Mansfield 7/2/98

for STATE DESIGN ENGINEER — DATE

WASHINGTON STATE DEPARTMENT OF TRANSPORTATION
OLYMPIA, WASHINGTON

EFFECTIVE: JANUARY 7, 2002 TO AUGUST 4, 2002

EFFECTIVE: JANUARY 7, 2002 TO AUGUST 4, 2002

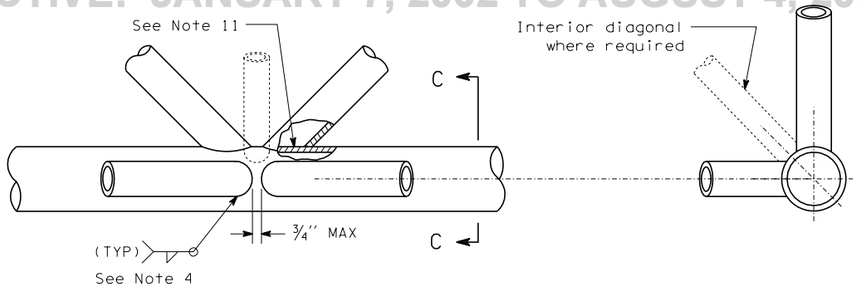

PLAN

SECTION C-C

TYPICAL JOINT DETAIL

Chord shown - End Post Similar

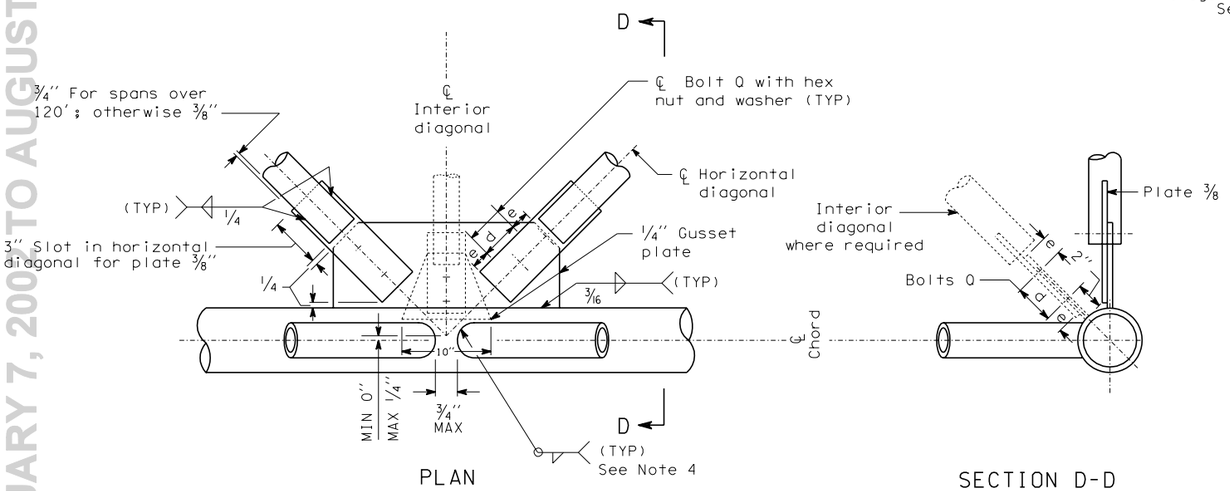

PLAN

SECTION D-D

ALTERNATE JOINT DETAIL

Not for connections between vertical diagonals and chords.

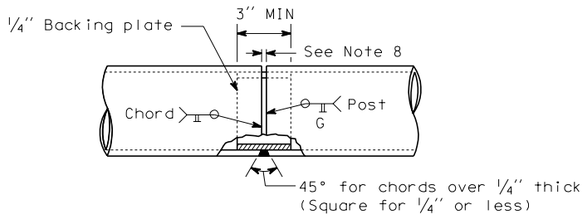

END POST OR CHORD SHOP SPLICE

See Note 9

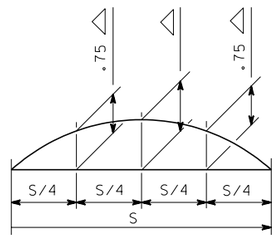

For span lengths not listed, interpolate values of △.

Fabricate truss with chords curved to provide camber. Do not camber by using shims between chord at splices.

DEAD LOAD CAMBER

SPAN LENGTH S(ft)	△ - (in)
40'	1/2
50'	3/4
60'	7/8
61'	7/8
70'	1
80'	1 1/4
90'	1 1/2
91'	1 3/8
100'	1 5/8
110'	2
120'	2 3/8
121'	2 1/8
130'	2 1/2
140'	2 7/8
150'	3 3/8

EFFECTIVE: JANUARY 7, 2002 TO AUGUST 4, 2002

SPAN LENGTH	F	T	K
60' or less	6"	3/4"	1/2"
61' to 90'	7"	7/8"	5/8"
91' to 120'	8 1/2"	1"	3/4"
121' to 150'	9 1/2"	1 1/4"	7/8"

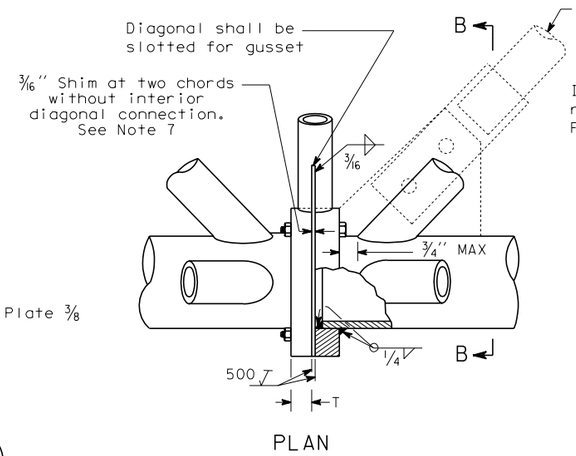

PLAN

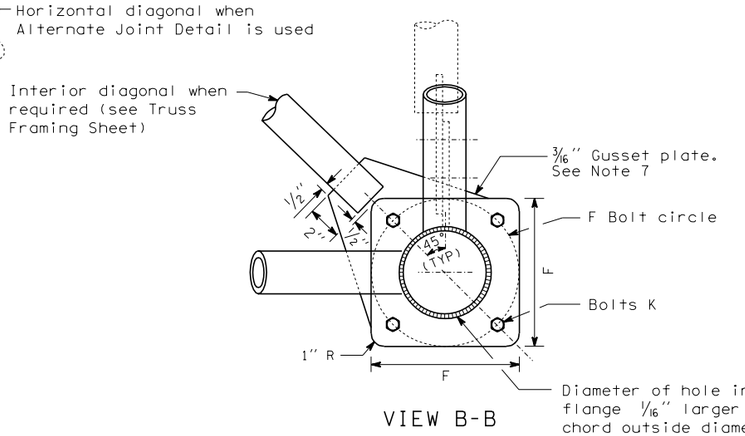

VIEW B-B

CHORD FIELD SPLICE

SPAN LENGTH	ALTERNATE JOINT DETAIL DATA		
	e	d	BOLT Q DIAMETER
60' or less	1 1/4"	2 1/2"	3/4"
61' to 90'	1 1/2"	3"	7/8"
91' to 120'	1 1/2"	3"	7/8"
121' to 150'	1 3/4"	3 1/2"	1"

M. MYINT LWIN
STATE OF WASHINGTON
10536
REGISTERED
PROFESSIONAL ENGINEER

EXPIRES JANUARY 17, 1999

SIGN BRIDGE STANDARD PLAN G-2

SHEET 2 OF 3 SHEETS

NOTE: THIS PLAN IS NOT A LEGAL ENGINEERING DOCUMENT BUT AN ELECTRONIC DUPLICATE. THE ORIGINAL, SIGNED BY THE ENGINEER AND APPROVED FOR PUBLICATION, IS KEPT ON FILE AT THE WASHINGTON STATE DEPARTMENT OF TRANSPORTATION. A COPY MAY BE OBTAINED UPON REQUEST.

DATE	REVISION	BY
5/98	Redrawn on CADD, revised for steel materials only.	GEM

APPROVED FOR PUBLICATION

Clifford E. Mansfield 7/2/98

for STATE DESIGN ENGINEER — DATE

WASHINGTON STATE DEPARTMENT OF TRANSPORTATION
OLYMPIA, WASHINGTON

EFFECTIVE: JANUARY 7, 2002 TO AUGUST 4, 2002

EFFECTIVE: JANUARY 7, 2002 TO AUGUST 4, 2002

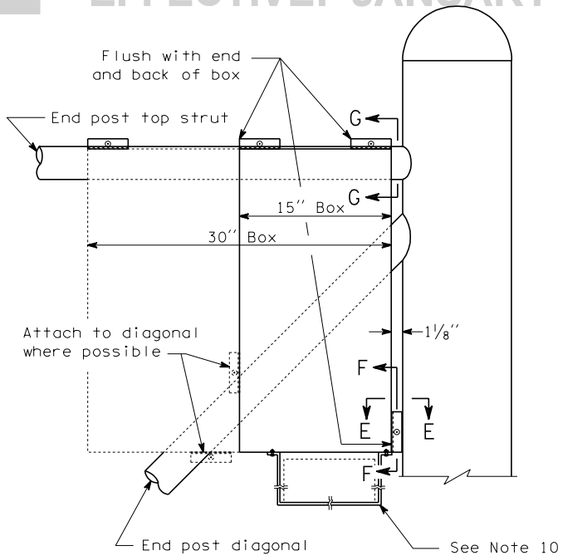

BALLAST BOX INSTALLATION

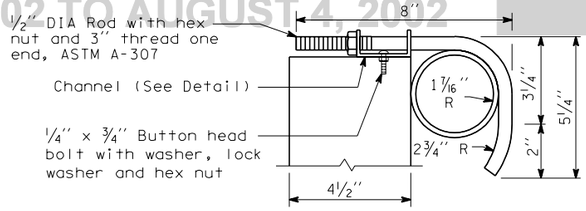

SECTION G-G

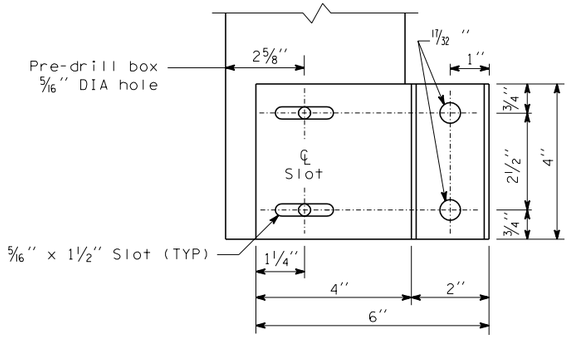

SECTION F-F

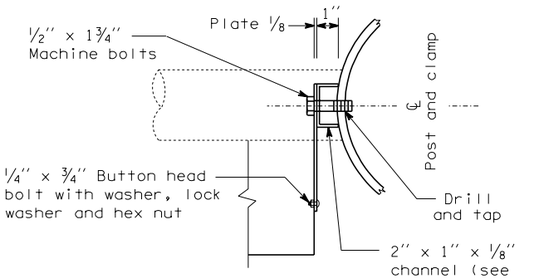

SECTION E-E

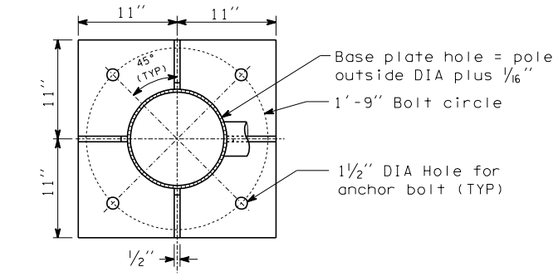

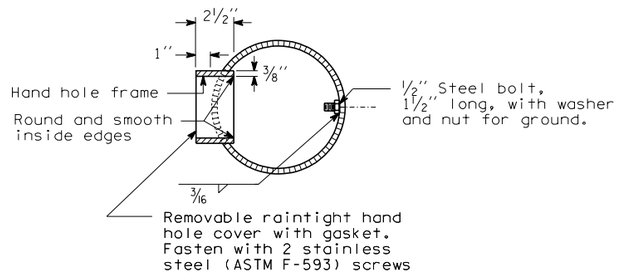

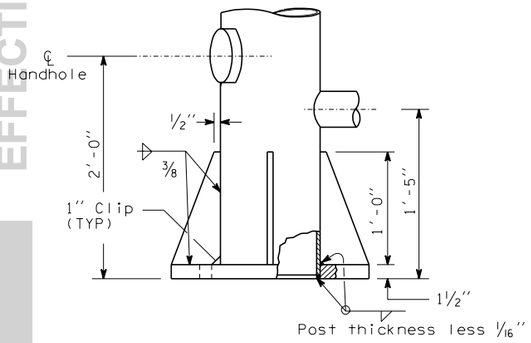

END POST BASE WITH HANDHOLE LOCATION

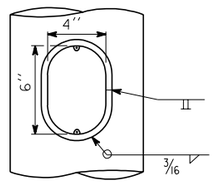

HANDHOLE DETAIL

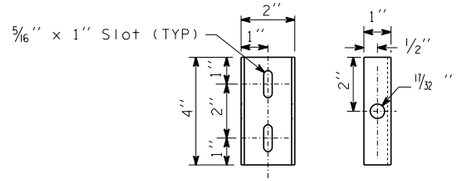

CHANNEL DETAIL

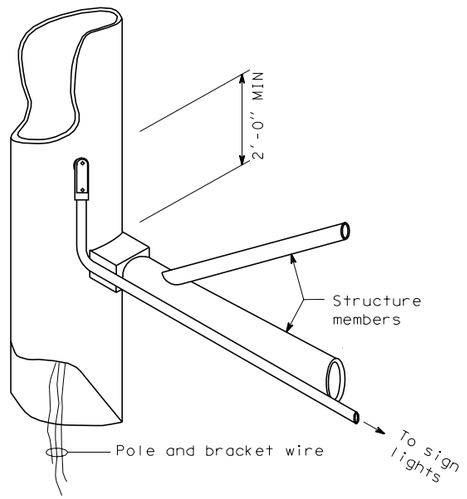

CONDUIT PLACEMENT

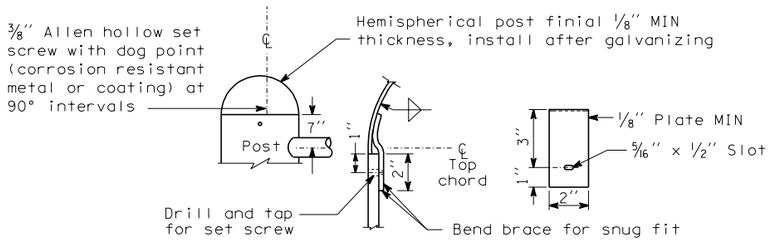

FINIAL DETAIL

NOTES

1. Horizontal and vertical clearance requirments shall be as shown in Contract Plans.
2. Assemble with 7/8'' Diameter bolts. Install bolts with head upward. Exclude bolt threading from grip.
3. Details not shown are same as Chord to End Post Connection Type R, omitting the 3/4'' plate stiffener on the tee member.
4. Ends of diagonals shall be cut to fit neatly against chord or post. Fillet weld size to be diagonal tube or pipe thickness plus 1/16''.
5. Horizontal diagonals must join chords where vertical diagonals connect (panel points).
6. Interior diagonals shall be placed at panel points, 40' maximum spacing. Locate symmetrically about centerline of span if possible. An interior diagonal is not required at span ends.
7. Omit gussets or shims where interior diagonals are not required at chord field splice.
8. Dimension shall equal chord thickness or 1/4'', whichever is less.
9. No post splices permitted in lower third of height, nor closer than 3'-0'' to bottom of chord. No chord shop splices permitted in middle third of span. Maximum of one splice in each end post.
10. If transformer is required, support by bracket attached to bottom of ballast box.
11. Drill hole in chord at each diagonal and strut. Diameter shall be 1'' for spans over 60'. For spans 60' or less, diameter shall be 3/4''.

M. MYINT LWIN
STATE OF WASHINGTON
10536
REGISTERED
PROFESSIONAL ENGINEER

EXPIRES JANUARY 17, 1999

SIGN BRIDGE STANDARD PLAN G-2

SHEET 3 OF 3 SHEETS

NOTE: THIS PLAN IS NOT A LEGAL ENGINEERING DOCUMENT BUT AN ELECTRONIC DUPLICATE. THE ORIGINAL, SIGNED BY THE ENGINEER AND APPROVED FOR PUBLICATION, IS KEPT ON FILE AT THE WASHINGTON STATE DEPARTMENT OF TRANSPORTATION. A COPY MAY BE OBTAINED UPON REQUEST.

DATE	REVISION	BY
5/98	Redrawn on CADD, revised for steel materials only	GEM

APPROVED FOR PUBLICATION

Clifford E. Mansfield for STATE DESIGN ENGINEER — 7/2/98 DATE

WASHINGTON STATE DEPARTMENT OF TRANSPORTATION
OLYMPIA, WASHINGTON

EFFECTIVE: JANUARY 7, 2002 TO AUGUST 4, 2002

EFFECTIVE: JANUARY 7, 2002 TO AUGUST 4, 2002

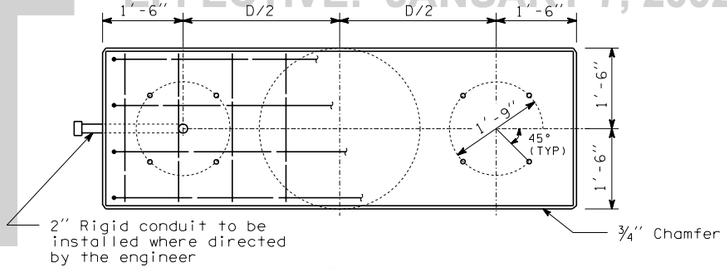

PLAN

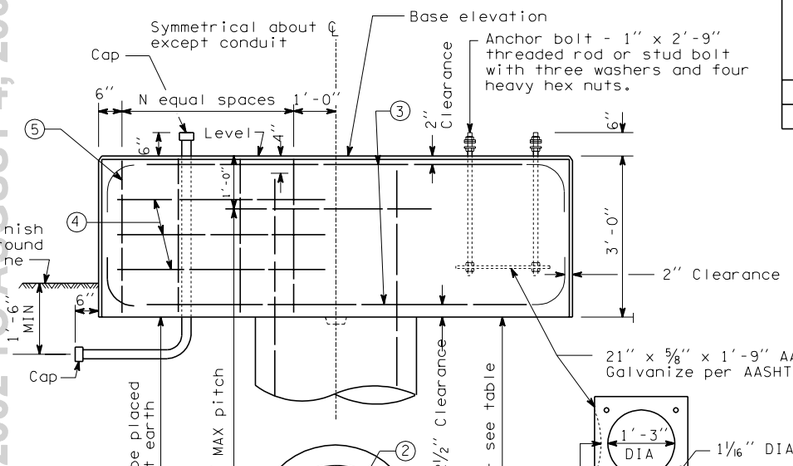

ELEVATION

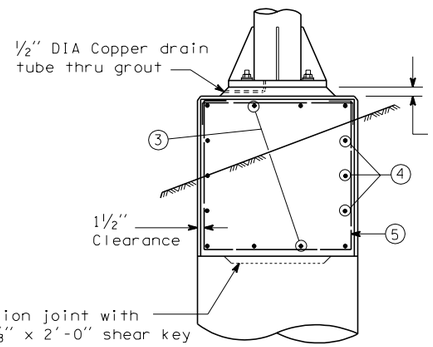

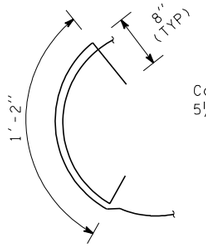

BAR ② #4 LAP SPLICE DETAIL

FOUNDATION - TYPE 1

BAR LIST

Number of bars listed is for one foundation only. Dimensions are out to out.

Foundation Type	Mark	Location	Span Length 60' or less No	Size	61' to 90' No	Size	91' to 120' No	Size	120' to 150' No	Size	Bending Diagram
1	1	Shaft - vertical	11	9	14	11	18	11	23	11	Str
	2	Shaft - spiral	*	4	*	4	*	4	*	4	
	3	Cap-Top and bottom	8	6	8	7	10	8	12	8	
	4	Cap - sides	6	4	6	4	6	4	6	4	Str
	5	Cap - hoops	6	4	8	4	14	4	22	4	
2 and 3	6	Cap - top	4	6	4	7	5	8	6	8	
	7	Cap - sides	14	4	16	4	18	4	18	4	Str
	8	Cap - hoops	6	4	8	4	14	4	22	4	
	9	Cap - bottom	8	6	8	7	10	8	12	8	
	10	Fnd wall vertical	30	6	42	6	42	7	50	7	Str
	11	Fnd wall ties	8	5	8	5	8	5	8	5	
	12	Fnd wall horizontal	4	5	4	5	4	5	4	5	Str
2	13	Fnd wall horizontal	8	5	8	5	10	5	12	5	
3	13	Fnd wall horizontal	10	5	12	5	14	5	16	5	

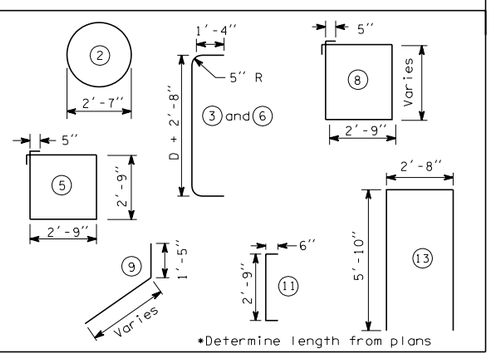

NOTES

1. See contract plans for type of foundation to be used.
2. Use Class 4000 Concrete through-out.

Foundation Type	Span Length: Length	60' or less	61' to 90'	91' to 120'	121' to 150'
All	D	4'-0"	5'-0"	6'-0"	7'-0"
	N	2	3	6	10
1	Z	11'-6"	13'-6"	15'-0"	16'-6"
2	Z	5'-6"	6'-6"	7'-6"	8'-6"
3	Z	7'-0"	8'-6"	10'-0"	11'-6"

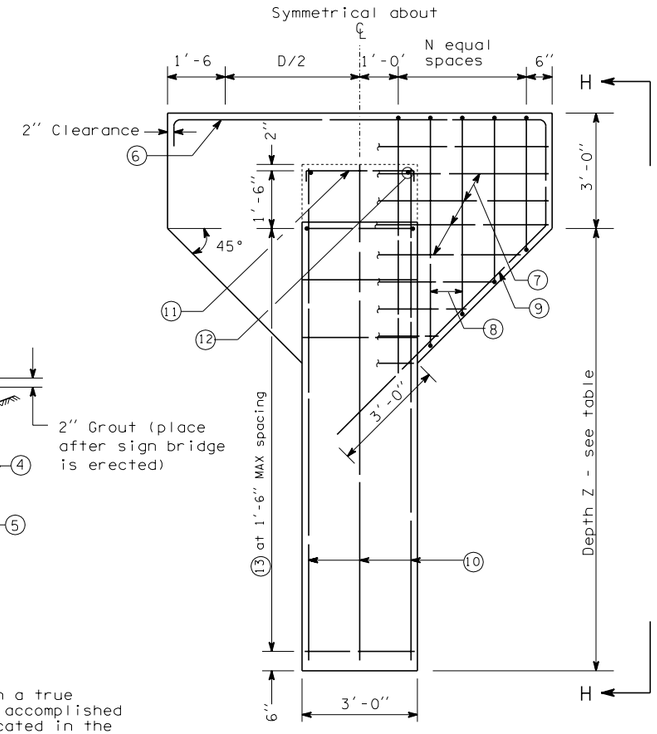

ELEVATION

Note:
End posts shall be erected on a true vertical. Plumbing shall be accomplished by adjustment of the nuts located in the base. After plumbing, tighten upper nut on anchor bolt 1/3 turn from snug tight.

Note:
Conduit and anchor bolts same as Type 1

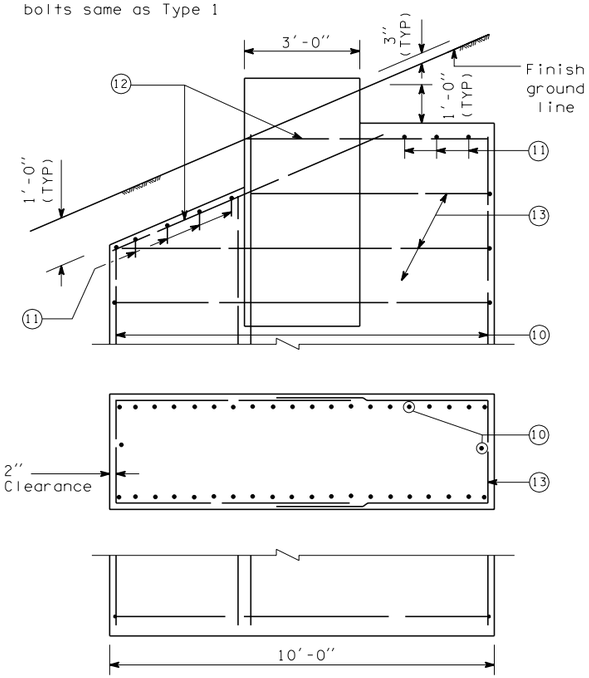

VIEW H-H

FOUNDATION - TYPES 2 AND 3

M. MYINT LWIN
STATE OF WASHINGTON
10536
REGISTERED
PROFESSIONAL ENGINEER

EXPIRES JANUARY 17, 1999

SIGN BRIDGE FOUNDATIONS

STANDARD PLAN G-2a

NOTE: THIS PLAN IS NOT A LEGAL ENGINEERING DOCUMENT BUT AN ELECTRONIC DUPLICATE. THE ORIGINAL, SIGNED BY THE ENGINEER AND APPROVED FOR PUBLICATION, IS KEPT ON FILE AT THE WASHINGTON STATE DEPARTMENT OF TRANSPORTATION. A COPY MAY BE OBTAINED UPON REQUEST.

DATE	REVISION	BY
5/98	Redrawn on CADD, revised for steel materials only.	GEM

APPROVED FOR PUBLICATION

Clifford E. Mansfield for STATE DESIGN ENGINEER — 7/2/98 DATE

WASHINGTON STATE DEPARTMENT OF TRANSPORTATION
OLYMPIA, WASHINGTON

SIGN BRIDGE FOUNDATIONS

EFFECTIVE: JANUARY 7, 2002 TO AUGUST 4, 2002

EFFECTIVE: JANUARY 7, 2002 TO AUGUST 4, 2002

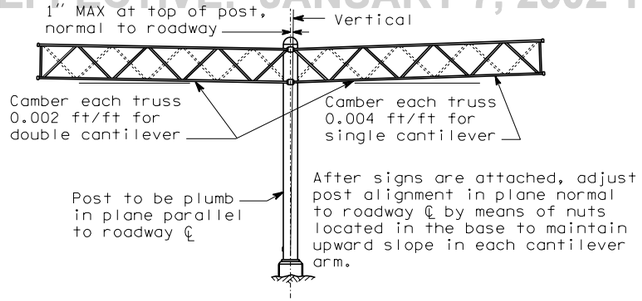

CAMBER

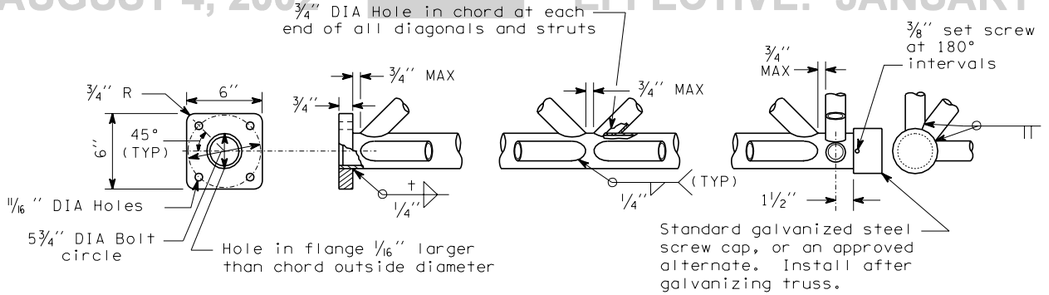

TYPICAL TRUSS DETAILS

Ends of diagonals shall be cut to fit neatly against chords.

t = chord wall thickness

NOTES

1. Vertical and horizontal clearance requirements shall be as shown on the contract plans.
2. No post splices permitted in lower third of height, nor closer than 3'-0" to bottom chord. No chord shop splices permitted in first two-thirds of the span. Only one splice permitted in post. For post or chord shop splice details, see Standard Plan "Sign Bridge".
3. All bolt holes shall be drilled, and the diameter shall be 1/16" larger than the nominal bolt diameter except as noted.

MATERIAL SPECIFICATIONS	
Pipe (Chords, Diagonals, Struts and Posts)	AASHTO M183 or ASTM A-53 Grade B, Type E or S, or A-500 Grade B
Plates and Shapes	AASHTO M183
Bolts, Nuts and Washers	AASHTO M164

CHORD SELECTION		
Sign Area (X times Y) $(ft)^2$	Chord Size	
	NOM DIA	Wall
50 or less	2"	.154"
50+ to 100	2"	.218"
100+ to 150	2½"	.203"
150+ to 200	3"	.216"

POST SELECTION		
Total Sign Area* Σ(X times Y) $(ft)^2$	Post Size	
	OD	Wall
50 or less	16"	.500"
50+ to 100	16"	.500"
100+ to 150	18"	.438"
150+ to 200	18"	.500"
200+ to 250	20"	.500"
250+ to 300	24"	.375"
300+ to 350	24"	.438"
350+ to 400	24"	.500"

*Sum of sign areas for double cantilever

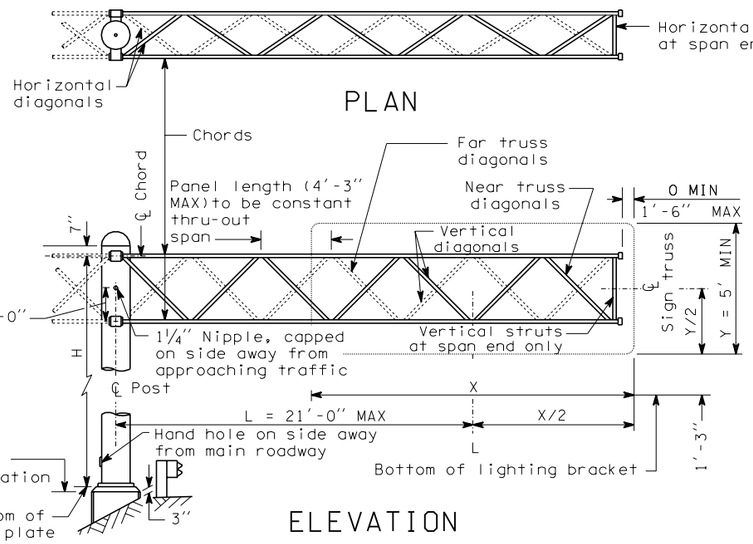

PLAN

ELEVATION

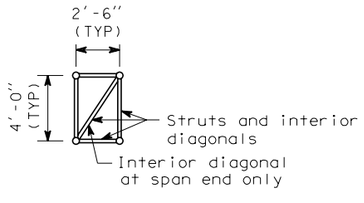

END VIEW

All diagonals and struts shall be 1¼" pipe (0.140" wall)

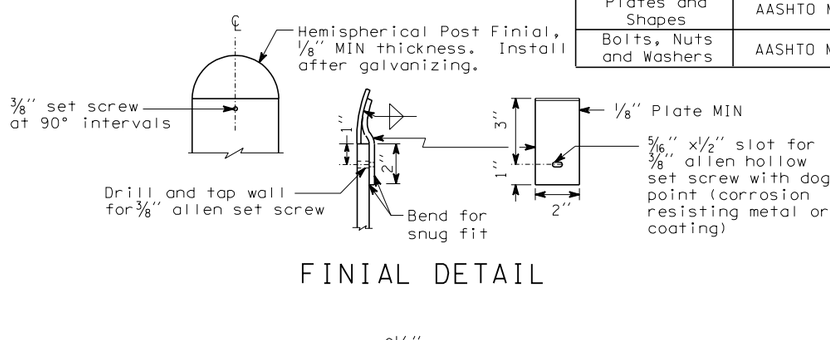

FINIAL DETAIL

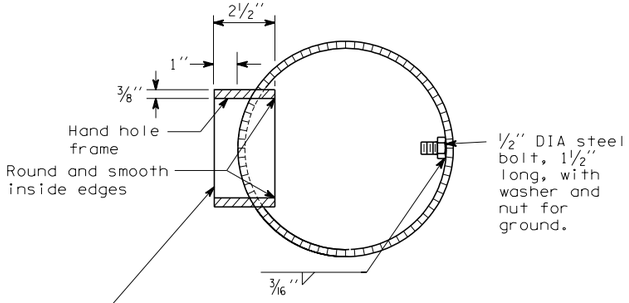

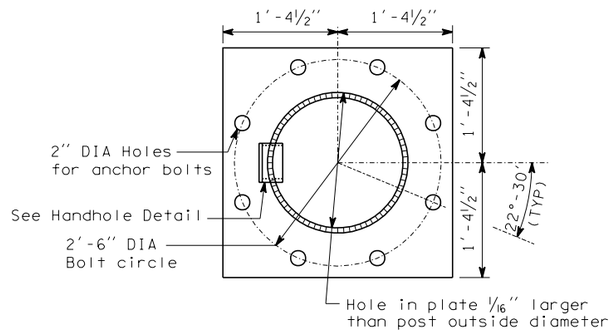

POST BASE DETAIL

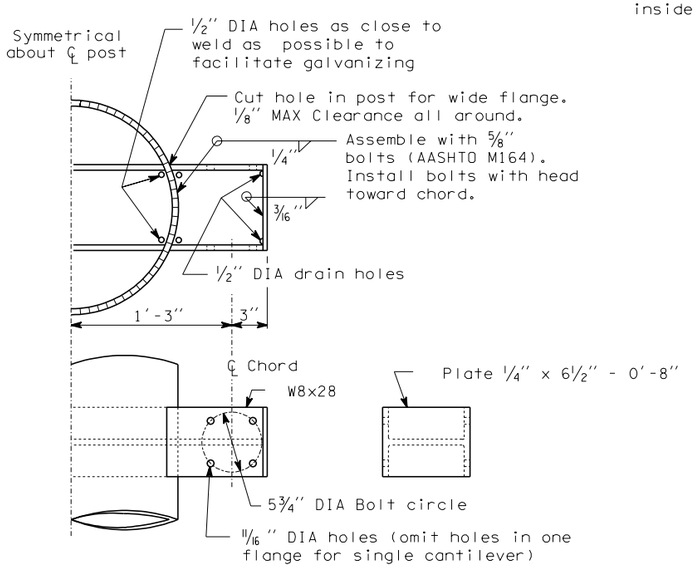

CHORD TO POST CONNECTION

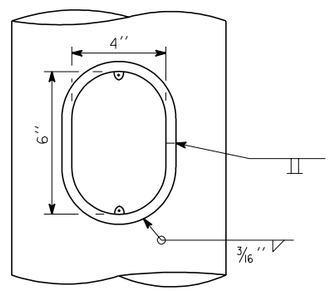

HANDHOLE DETAIL

M. MYINT LWIN
STATE OF WASHINGTON
10536
REGISTERED
PROFESSIONAL ENGINEER

EXPIRES JANUARY 17, 1999

CANTILEVER SIGN STRUCTURES STANDARD PLAN G-3

NOTE: THIS PLAN IS NOT A LEGAL ENGINEERING DOCUMENT BUT AN ELECTRONIC DUPLICATE. THE ORIGINAL, SIGNED BY THE ENGINEER AND APPROVED FOR PUBLICATION, IS KEPT ON FILE AT THE WASHINGTON STATE DEPARTMENT OF TRANSPORTATION. A COPY MAY BE OBTAINED UPON REQUEST.

DATE	REVISION	BY
5/98	Redrawn on CADD, revised for steel materials only	GEM

APPROVED FOR PUBLICATION

Clifford E. Mansfield — DEPUTY STATE DESIGN ENGINEER — 7/2/98 DATE

WASHINGTON STATE DEPARTMENT OF TRANSPORTATION
OLYMPIA, WASHINGTON

EFFECTIVE: JANUARY 7, 2002 TO AUGUST 4, 2002

EFFECTIVE: JANUARY 7, 2002 TO AUGUST 4, 2002

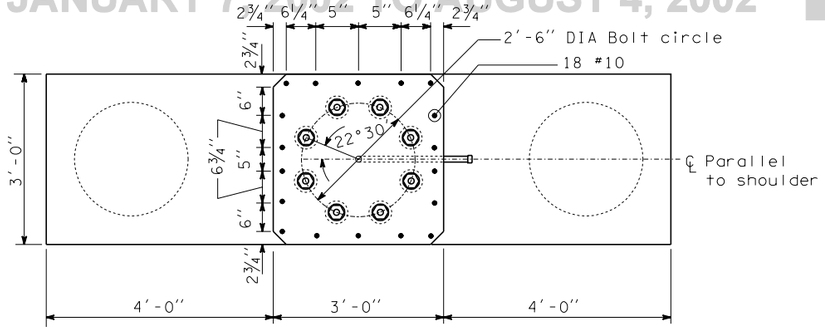

PLAN

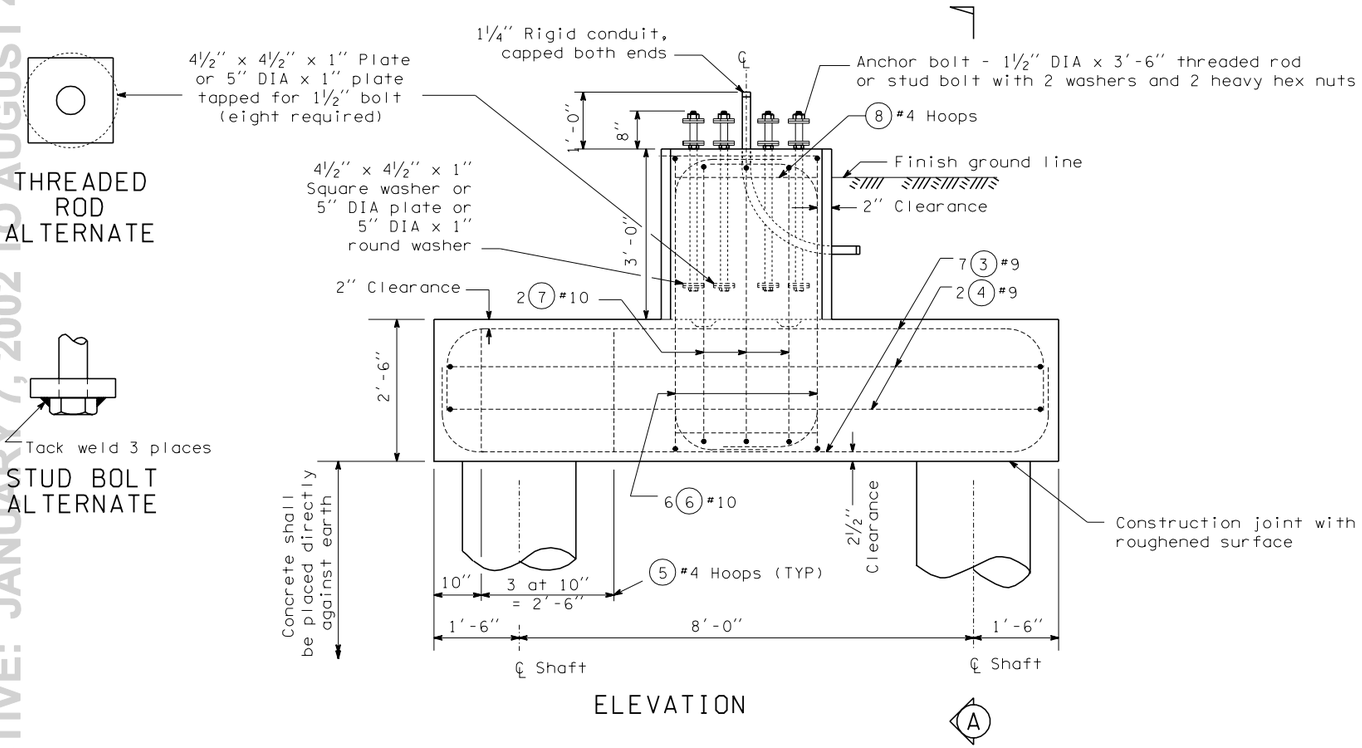

ELEVATION

EFFECTIVE: JANUARY 7, 2002 TO AUGUST 4, 2002

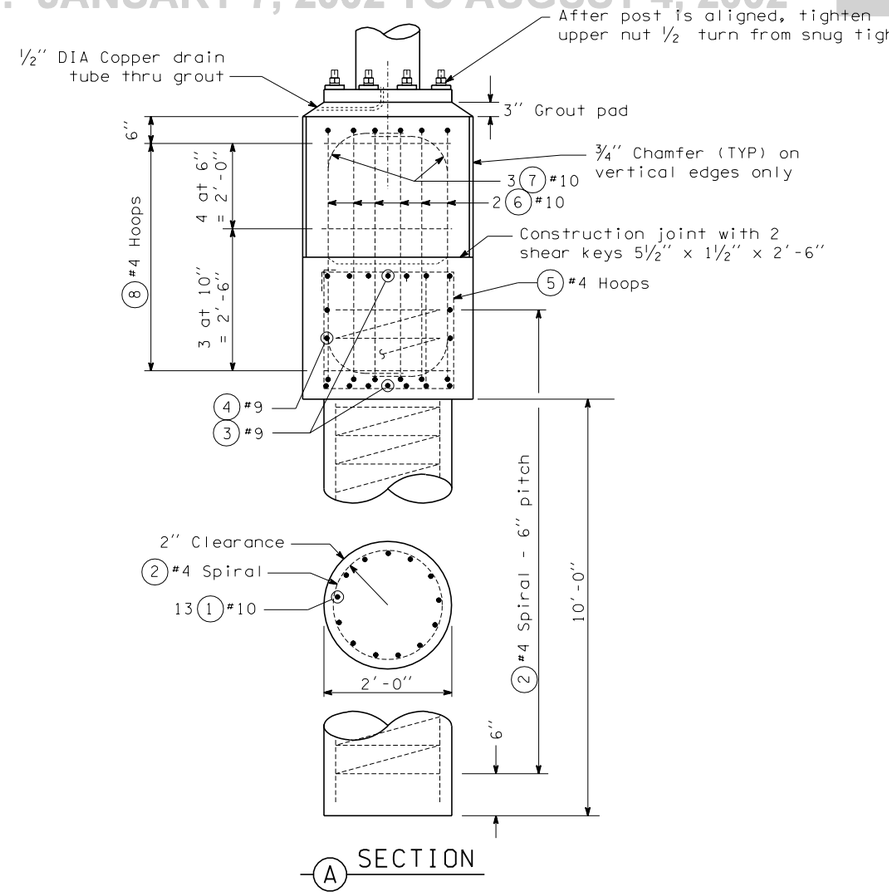

A SECTION

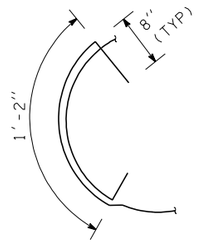

BAR (2) #4 LAP SPLICE DETAIL

EXPIRES JANUARY 17, 1999

BAR LIST - TYPE 1

All dimensions are out to out

MARK	LOCATION	NO	SIZE	LENGTH	BENDING DIAGRAM
1	Shaft - vertical	26	10	12'-2"	Str
2	Shaft - spiral	2	4	117'-2"	
3	Cap beam - horitzontal	14	9	13'-1"	
4	Cap beam - sides	4	9	12'-10"	
5	Cap beam hoop	8	4	10'-7"	
6	Pedestal - vertical	12	10	7'-11"	
7	Pedestal - vertical	6	10	7'-8"	
8	Pedestal - hoop	7	4	11'-8"	

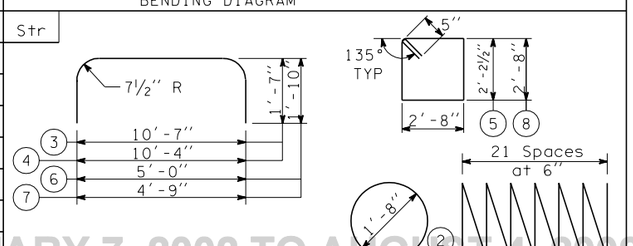

CANTILEVER SIGN STRUCTURE FOUNDATIONS
STANDARD PLAN G-3a

SHEET 1 OF 2 SHEETS

FOUNDATION TYPE 1

NOTE: THIS PLAN IS NOT A LEGAL ENGINEERING DOCUMENT BUT AN ELECTRONIC DUPLICATE. THE ORIGINAL, SIGNED BY THE ENGINEER AND APPROVED FOR PUBLICATION, IS KEPT ON FILE AT THE WASHINGTON STATE DEPARTMENT OF TRANSPORTATION. A COPY MAY BE OBTAINED UPON REQUEST.

APPROVED FOR PUBLICATION

Clifford E. Mansfield for STATE DESIGN ENGINEER — 7/2/98 DATE

DATE	REVISION	BY
5/98	Redrawn on CADD, revised for steel materials only	GEM

WASHINGTON STATE DEPARTMENT OF TRANSPORTATION
OLYMPIA, WASHINGTON

EFFECTIVE: JANUARY 7, 2002 TO AUGUST 4, 2002

EFFECTIVE: JANUARY 7, 2002 TO AUGUST 4, 2002

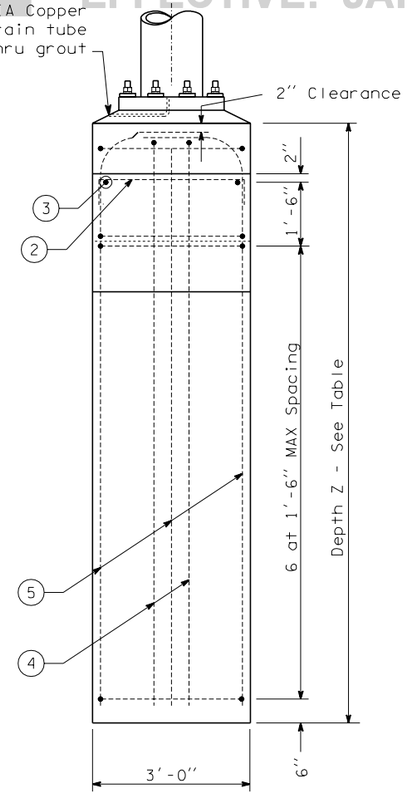

C SECTION

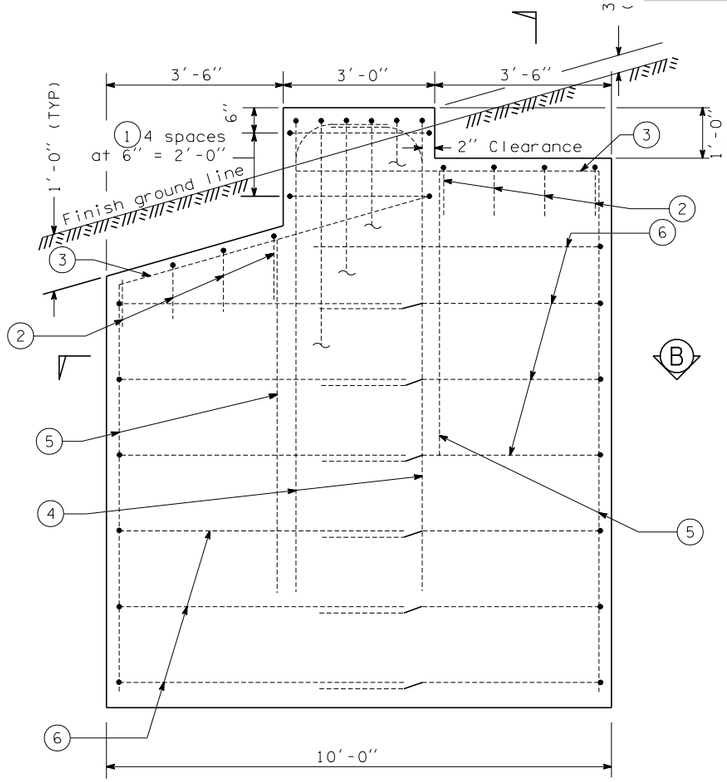

ELEVATION

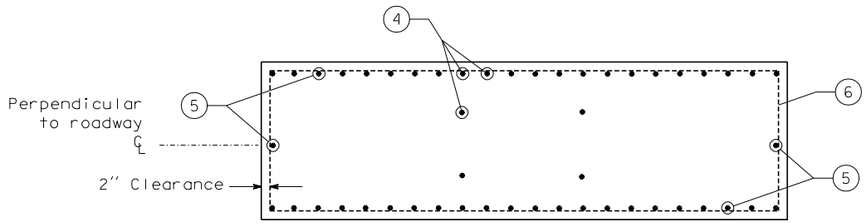

B SECTION

BAR LIST - TYPES 2 AND 3

All dimensions are out to out

FOUNDATION TYPE	MARK	LOCATION	TOTAL SIGN AREA				
			200 sf or less		200 sf+ -400 sf		
			NO	SIZE	NO	SIZE	
2 and 3	1	Pedestal hoop	5	4	5	4	
	2	Foundation wall ties	8	5	8	5	
	3	Foundation wall horizontal	4	5	4	5	Str
	4	Foundation wall vertical	12	10	16	10	
	5	Foundation wall vertical	22	6	34	6	Str
2	6	Foundation wall horizontal	10	5	12	5	
3	6	Foundation wall horizontal	12	5	14	5	

BENDING DIAGRAM

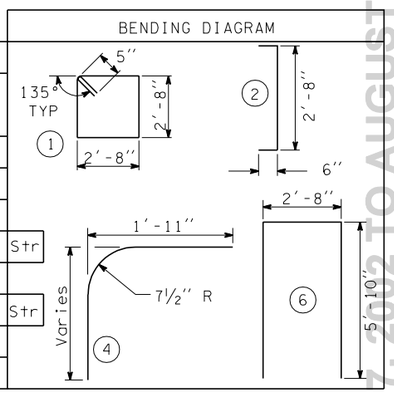

VALUES OF Z

Foundation Type	Total Sign Area		Soil Type
	200 sf or less	200 sf+ -400 sf	
2	8'-0''	10'-0''	Average
3	10'-0''	12'-6''	Poor

M. MYINT LWIN
STATE OF WASHINGTON
10536
REGISTERED
PROFESSIONAL ENGINEER

EXPIRES JANUARY 17, 1999

CANTILEVER SIGN STRUCTURE FOUNDATIONS STANDARD PLAN G-3a

SHEET 2 OF 2 SHEETS

FOUNDATION TYPE 2 AND 3

NOTE: THIS PLAN IS NOT A LEGAL ENGINEERING DOCUMENT BUT AN ELECTRONIC DUPLICATE. THE ORIGINAL, SIGNED BY THE ENGINEER AND APPROVED FOR PUBLICATION, IS KEPT ON FILE AT THE WASHINGTON STATE DEPARTMENT OF TRANSPORTATION. A COPY MAY BE OBTAINED UPON REQUEST.

DATE	REVISION	BY
5/98	Redrawn on CADD, revised for steel materials only	GEM

APPROVED FOR PUBLICATION

Clifford E. Mansfield — *for* STATE DESIGN ENGINEER — *7/2/98* DATE

WASHINGTON STATE DEPARTMENT OF TRANSPORTATION
OLYMPIA, WASHINGTON

EFFECTIVE: JANUARY 7, 2002 TO AUGUST 4, 2002

EFFECTIVE: JANUARY 7, 2002 TO AUGUST 4, 2002

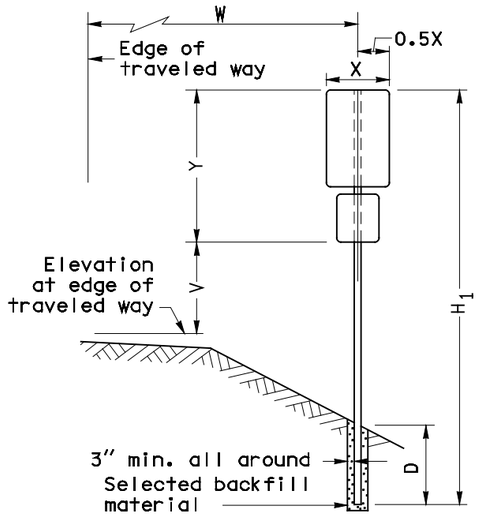

SINGLE POST SIGNS
(See Note 2)

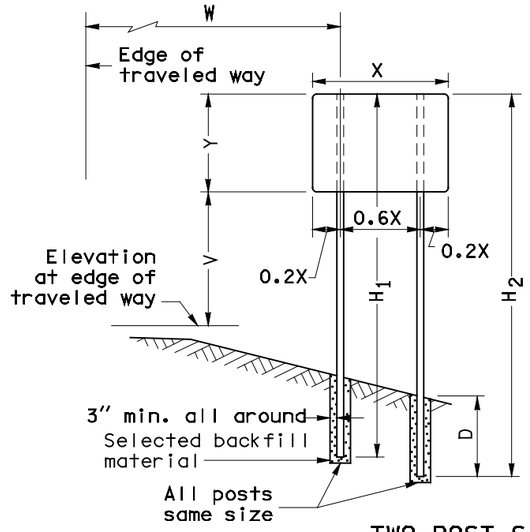

TWO POST SIGNS
(See Note 2)

POST INSTALLATION TABLE		
POST SIZE	D	NOTCH DEPTH & HOLE DIA
4 x 4	3'-0"	-
4 x 6	4'-0"	1 ½"
6 x 6	4'-0"	2"
6 x 8	4'-0"	3"
6 x 10	5'-0"	-
8 x 10	5'-0"	-
8 x 12	6'-0"	-

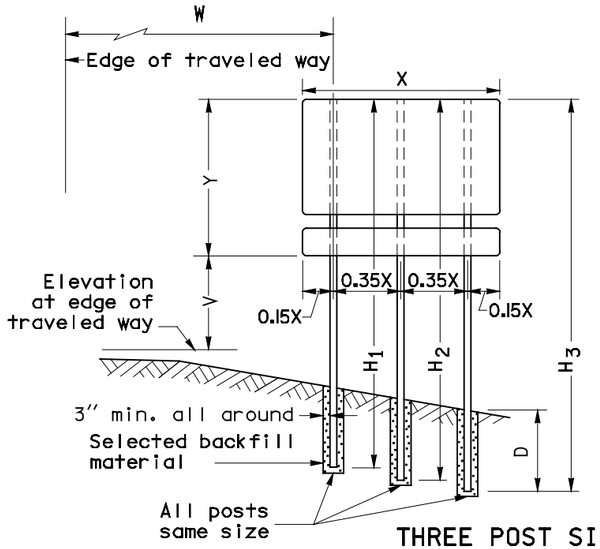

THREE POST SIGNS

NOTES

1. See "Sign Specifications" sheet of Contract Plans for H, V, W, X, & Y values.
2. For signs placed in ditch condition see Back Slope Detail.
3. Use two ⅜" X 3" lag screws to hold the sign post into the foundation sleeve.

LEGEND

H_1, H_2, H_3, H_4 = Length of post.
V = Elevation difference from edge of lane to bottom of sign.
W = Distance from edge of traveled way to center of nearest post.
X = Horizontal measurement of sign.
Y = Vertical measurement of sign(s).
D = Post embedment.

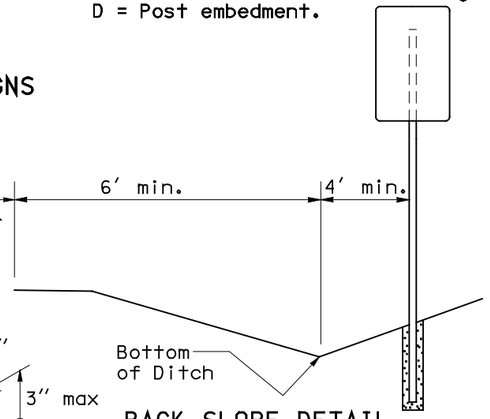

BACK SLOPE DETAIL

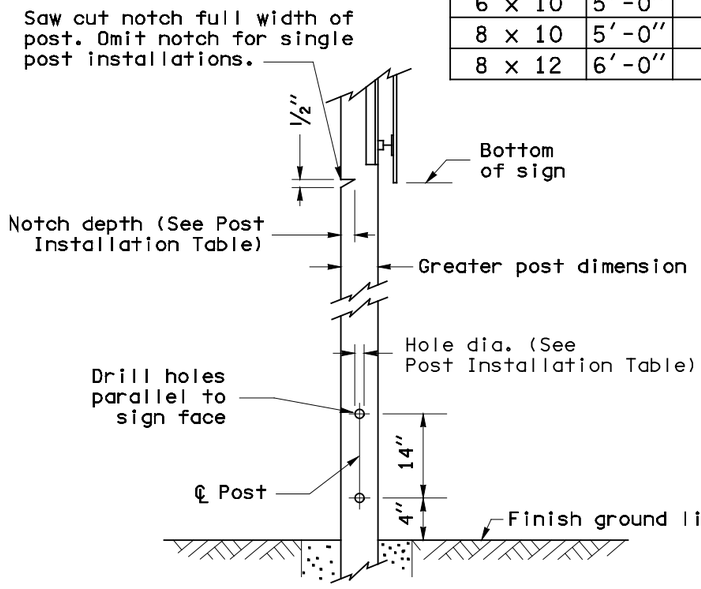

POST DETAIL

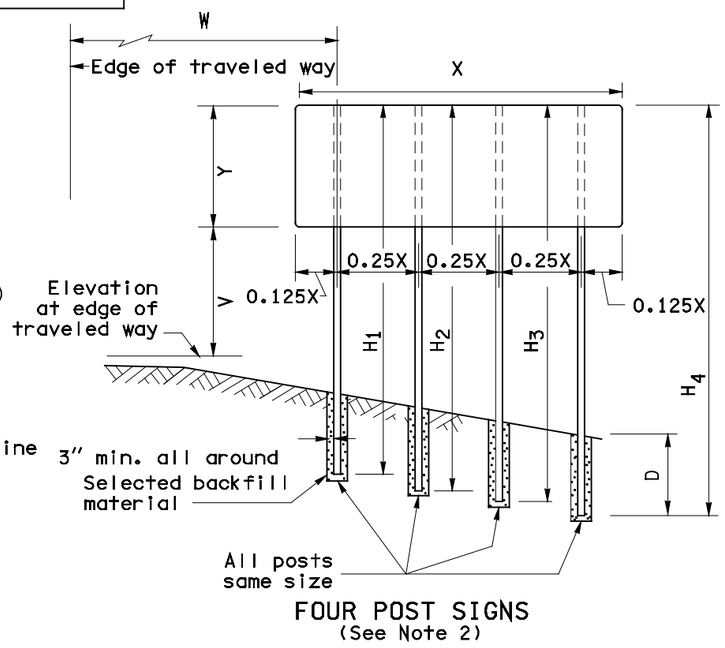

FOUR POST SIGNS
(See Note 2)

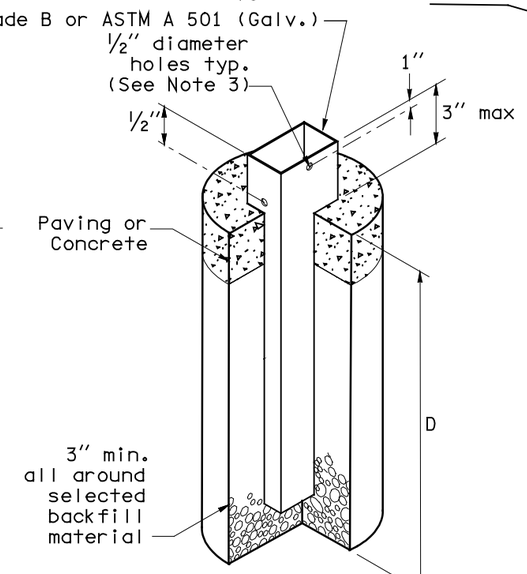

FOUNDATION SLEEVE
(To be used when placing post in a paved concrete area)

JEROME A. WEIGEL
STATE OF WASHINGTON
14742
REGISTERED PROFESSIONAL ENGINEER

EXPIRES JUNE 29, 2000

ROADSIDE SIGN STRUCTURES ON TIMBER POSTS STANDARD PLAN G-4a

NOTE: THIS PLAN IS NOT A LEGAL ENGINEERING DOCUMENT BUT AN ELECTRONIC DUPLICATE. THE ORIGINAL, SIGNED BY THE ENGINEER AND APPROVED FOR PUBLICATION, IS KEPT ON FILE AT THE WASHINGTON STATE DEPARTMENT OF TRANSPORTATION. A COPY MAY BE OBTAINED UPON REQUEST.

DATE	REVISION	BY
3/99	Added Foundation Sleeve detail	TWS

APPROVED FOR PUBLICATION

Clifford E. Mansfield — DEPUTY STATE DESIGN ENGINEER — *04-02-99* DATE

WASHINGTON STATE DEPARTMENT OF TRANSPORTATION
OLYMPIA, WASHINGTON

EFFECTIVE: JANUARY 7, 2002 TO AUGUST 4, 2002

EFFECTIVE: JANUARY 7, 2002 TO AUGUST 4, 2002

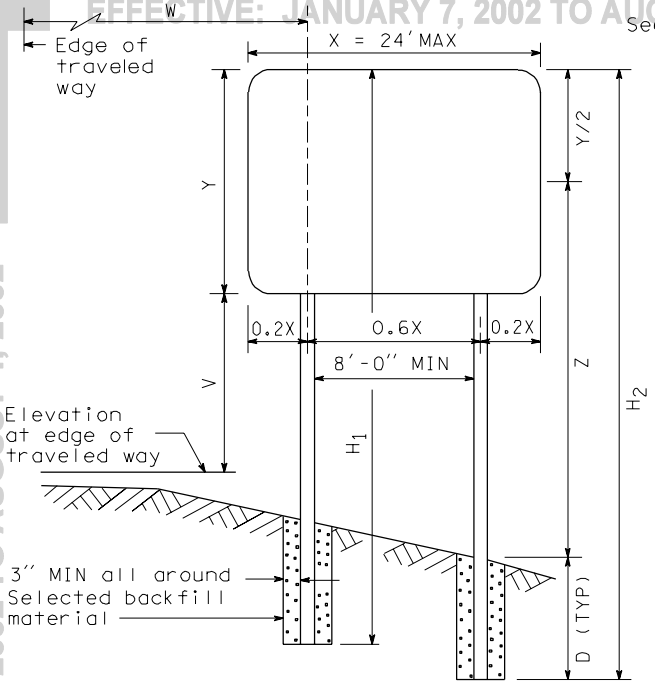

ELEVATION

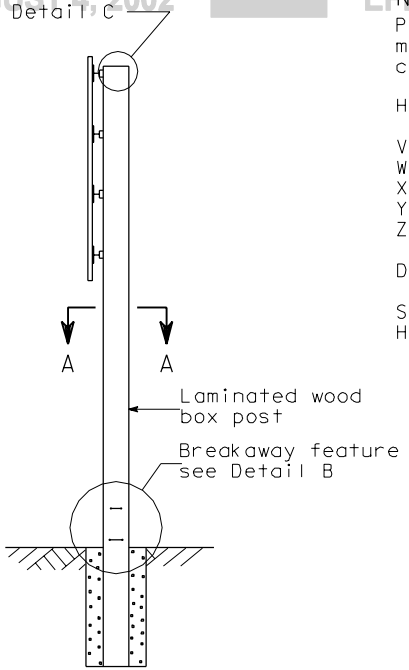

SIDE VIEW

NOTES

Post will be Micro-Lam® laminated veneer Type L or Type M post manufactured by Trus Joist or an equivalent that has been crash tested and approved by the FHWA.

H_1, H_2, H_3, H_4 = Length of post.

V = Elevation difference from edge of lane to bottom of sign.
W = Distance from edge of lane to center of nearest post.
X = Horizontal measurement of sign.
Y = Vertical measurement of sign (or signs).
Z = Height from ground to mid-height of sign (or signs) at longest post.
D = Post embedment.

See "Sign Specifications" sheet of Contract Plans for H, V, W, X, and Y values.

Height Z (FT)	Total Sign Area (Square Feet)					
	Up to 50	51 to 100	101 to 150	151 to 200	201 to 250	251 to 290
9 to 12	6	6	7	8	9	10
13 to 15	6	6	7.5	9	10	
16 to 18	7	7.5	9			
19 to 22	7	8	10			
23 to 26	7.5	8.5	Not Permitted			

LAMINATED POST EMBEDMENT DEPTH
DEPTH (D) IN FEET

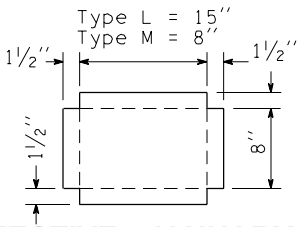

GALVANIZED METAL CAP

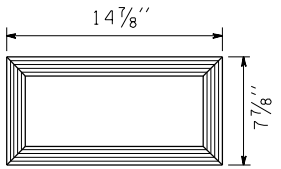

TYPE L POST

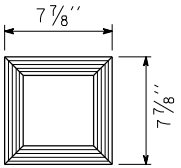

TYPE M POST

Traffic Direction

SECTION A-A

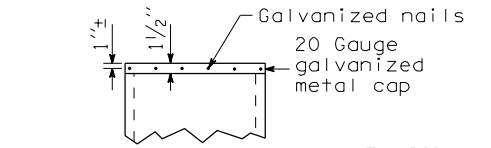

DETAIL C

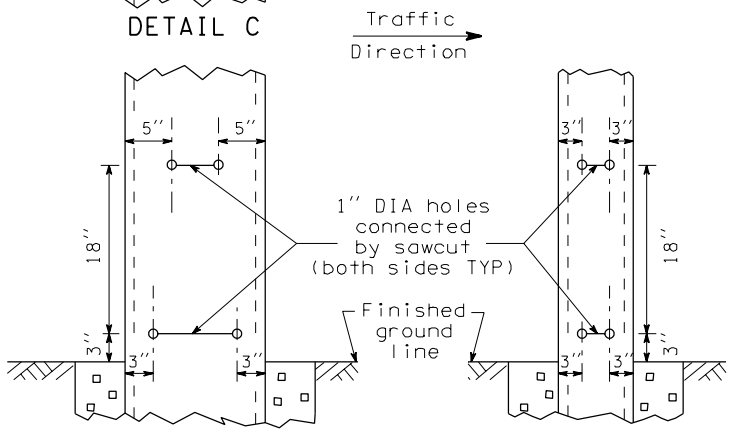

TYPE L POST

TYPE M POST

DETAIL B

ROADSIDE SIGNS ON LAMINATED WOOD BOX POSTS

EFFECTIVE: JANUARY 7, 2002 TO AUGUST 4, 2002

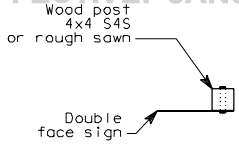

PLAN

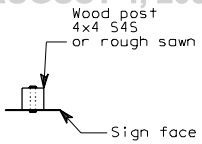

PLAN

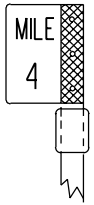

DOUBLE FACE FOR TWO LANE HIGHWAYS

ELEVATION

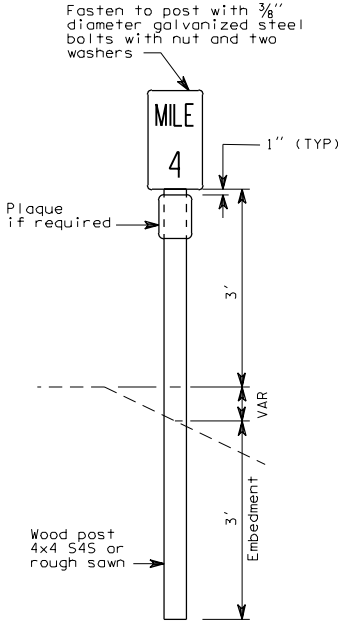

SINGLE FACE FOR MULTILANE HIGHWAYS

ELEVATION

NOTES

1. Mileposts of the type specified shall be placed as shown hereon. If conditions preclude placement at the correct location, the mileposts may be moved as much as 50' in either direction; mileposts that cannot be placed within this degree of accuracy shall be omitted entirely.
2. Mileage for mileposts shall commence at the south or west terminus of the highway route and progress in a north or east direction.
3. All Spur and Equation signs shall have "S" and "B" plaques.
4. Mileposts in cut sections shall be placed at back of ditch. Milepost markers may be placed up to 30' from the edge of the traveled way.
5. See "Washington State Sign Fabrication Manual" for the dimensions and colors of the Milepost/Plaque.

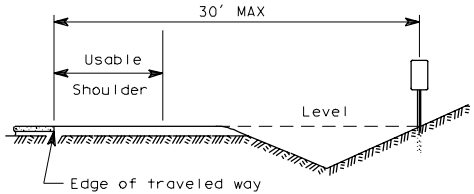

PLACEMENT OF MILEPOST AT CUT SECTION

MILEPOST

BACK EQUATION PLAQUE **B**

S SPUR ROUTE PLAQUE

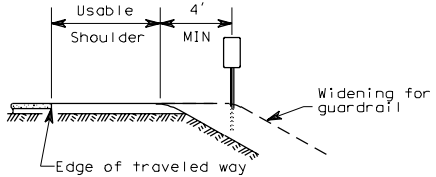

PLACEMENT OF MILEPOST AT FILL SECTION

EFFECTIVE: JANUARY 7, 2002 TO AUGUST 4, 2002

EFFECTIVE: JANUARY 7, 2002 TO AUGUST 4, 2002

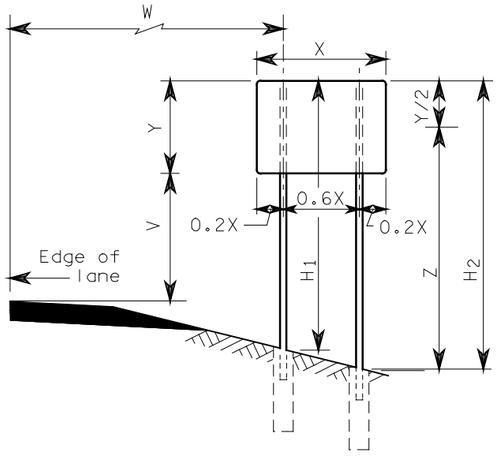

TWO POST SIGN INSTALLATION

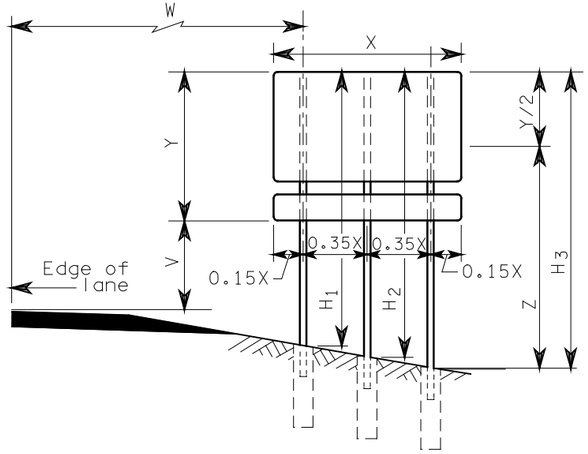

THREE POST SIGN INSTALLATION

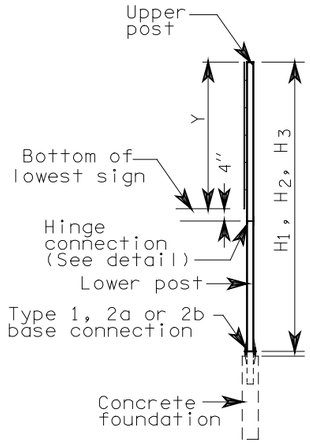

SIDE VIEW

SIGN INSTALLATION

DIMENSION TABLE FOR TYPE 1 BASES												
POST SIZE		BASE CONNECTION DATA								FOUNDATION DATA		
		BOLT		DIMENSIONS								
PRIMARY	ALTERNATE	SIZE	TORQUE	A	B	C	E	T_1	T_2	S	D	BARS
W10x26	W10x22	1"x3¾"	60 ft-lbs	6¾"	2¾"	1⅝"	1½"	1"	½"	2'-0"	7'-0"	8-#7
W8x21	W8x18	⅞"x3¾"	50 ft-lbs	6½"	2½"	1½"	1⅜"	1"	½"	2'-0"	6'-0"	8-#6
W6x16	W6x12	¾"x3"	45 ft-lbs	5⅝"	2¼"	1⅜"	1¼"	¾"	⅜"	1'-6"	5'-0"	8-#5
W6x12	W6x9	⅝"x2¾"	25 ft-lbs	5⅛"	2"	1¼"	1⅛"	¾"	⅜"	1'-6"	4'-0"	8-#5

Primary posts are AASHTO M 183
Alternate posts are AASHTO M 222 or AASHTO M 223, Grade 50

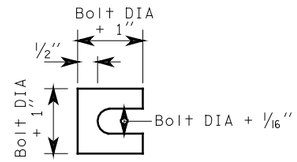

BRASS SHIM DETAIL

Furnish two .012" ± thick and two .032" ± thick shims per post

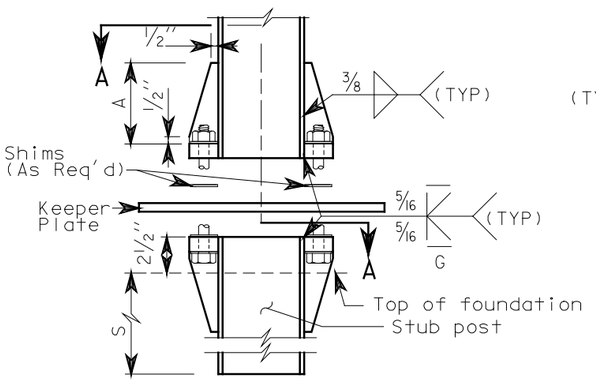

TYPE 1 BASE CONNECTION DETAIL

Three washers per bolt

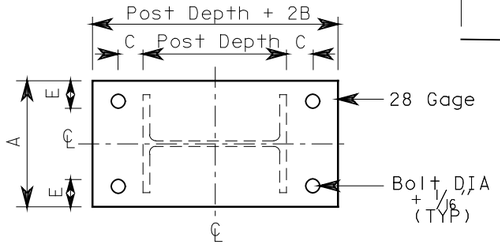

KEEPER PLATE

Galvanized Sheet Steel

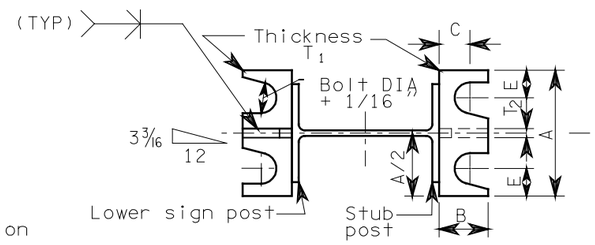

SECTION A-A

Section shown is for installations at right shoulder or in gore, Reverse plate slot bevels for installation at left shoulder. Slots are typical for top and bottom plates.

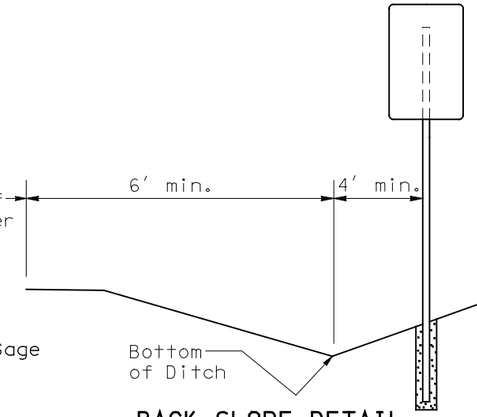

BACK SLOPE DETAIL

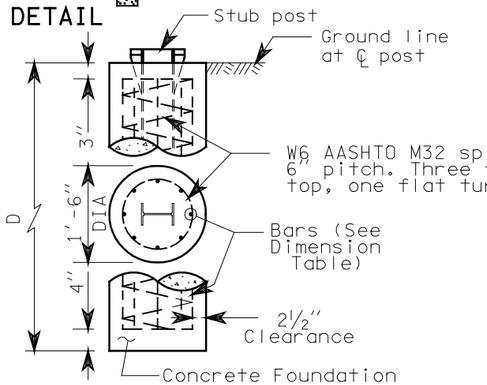

TYPE 1 BASE (Drilled shaft permitted) FOUNDATION DETAIL

NOTES

H_1, H_2, H_3 = Distance from top of stub post to top of post assembly.
V = Elevation difference from edge of lane to bottom of sign.
W = Distance from edge of lane to center of nearest post.
X = Horizontal measurement of sign.
Y = Vertical measurement of sign(s).
Z = Length of longest post assembly, minus ½ of the Y distance.
See "Sign Specifications" sheet of Contract Plans for H, V, W, X and Y values.

For material requirements, see Standard Specification 9-06.16.

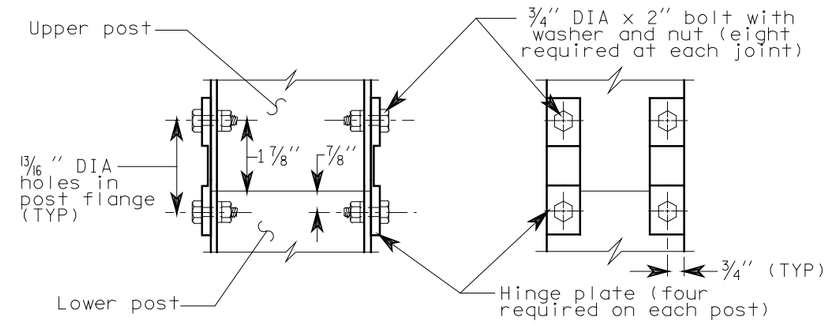

HINGE CONNECTION DETAIL

All multiple steel post signs

Hinge Connection Bolts shall be tightened ½ turn past snug tight.

Hinge plate shall be Type B-650 as manufactured by Transpo Industries, Inc., or an equal that has been crash tested and approved by FHWA.

JEROME A. WEIGEL
STATE OF WASHINGTON
14742
REGISTERED
PROFESSIONAL ENGINEER

EXPIRES JUNE 29, 2000

ROADSIDE SIGN STRUCTURES FOR MULTIPLE STEEL POST SIGNS STANDARD PLAN G-8a

SHEET 1 OF 3 SHEETS

NOTE: THIS PLAN IS NOT A LEGAL ENGINEERING DOCUMENT BUT AN ELECTRONIC DUPLICATE. THE ORIGINAL, SIGNED BY THE ENGINEER AND APPROVED FOR PUBLICATION, IS KEPT ON FILE AT THE WASHINGTON STATE DEPARTMENT OF TRANSPORTATION. A COPY MAY BE OBTAINED UPON REQUEST.

DATE	REVISION	BY
9-99	MODIFIED BACK SLOPE DETAIL	RG

APPROVED FOR PUBLICATION

Clifford E. Mansfield 10/06/99

DEPUTY STATE DESIGN ENGINEER — DATE

WASHINGTON STATE DEPARTMENT OF TRANSPORTATION
OLYMPIA, WASHINGTON

EFFECTIVE: JANUARY 7, 2002 TO AUGUST 4, 2002

EFFECTIVE: JANUARY 7, 2002 TO AUGUST 4, 2002

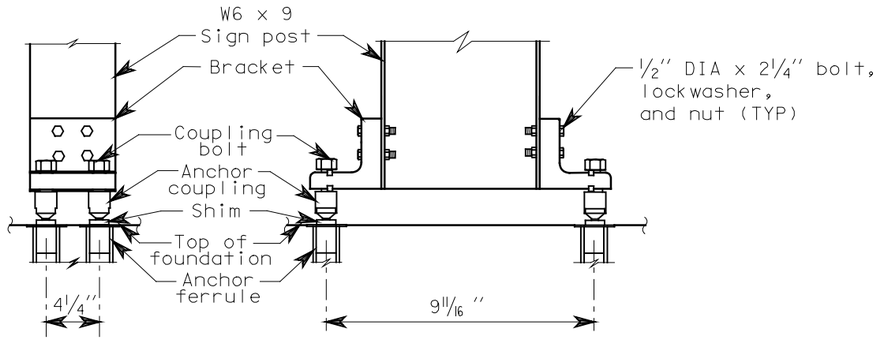

FRONT VIEW SIDE VIEW

TYPE 2A BASE CONNECTION DETAIL

Use only when sign area is less than 35 square feet per post.

BOSS ℄ OFFSET TABLE	
When Z > 8' ≤ 10'	0.0875"
When Z > 10' ≤ 14'	0.0625"
When Z > 14' ≤ 15'	0.0375"

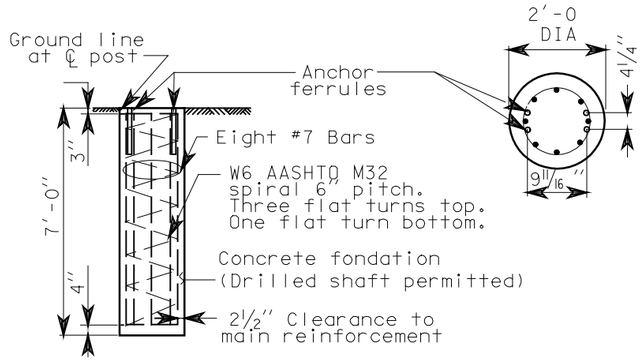

TYPE 2A FOUNDATION DETAIL

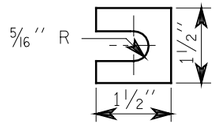

Shims shall be 14 gage or 18 gage

SHIM DETAIL - TYPE 2A

Use no more than two shims per anchor coupling.
Use no more than three shims for any two anchor couplings.

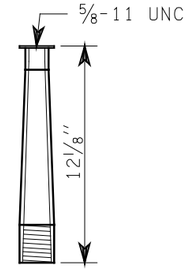

ANCHOR FERRULE DETAIL - TYPE 2A

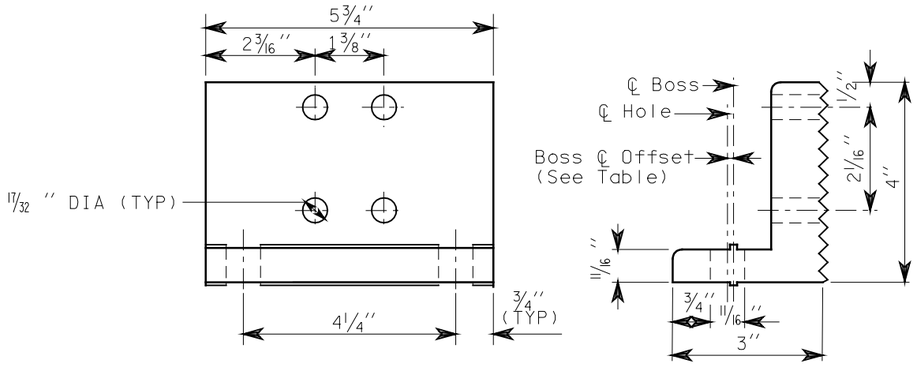

BRACKET DETAIL - TYPE 2A

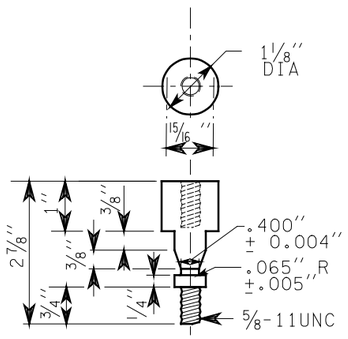

ANCHOR COUPLING DETAIL - TYPE 2A

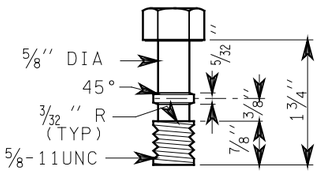

COUPLING BOLT DETAIL - TYPE 2A

JEROME A. WEIGEL
STATE OF WASHINGTON
14742
REGISTERED
PROFESSIONAL ENGINEER

EXPIRES JUNE 29, 2000

ROADSIDE SIGN STRUCTURES FOR MULTIPLE STEEL POST SIGNS STANDARD PLAN G-8a

SHEET 2 OF 3 SHEETS

NOTE: THIS PLAN IS NOT A LEGAL ENGINEERING DOCUMENT BUT AN ELECTRONIC DUPLICATE. THE ORIGINAL, SIGNED BY THE ENGINEER AND APPROVED FOR PUBLICATION, IS KEPT ON FILE AT THE WASHINGTON STATE DEPARTMENT OF TRANSPORTATION. A COPY MAY BE OBTAINED UPON REQUEST.

DATE	REVISION	BY
9-99	NEW APPROVAL DATE	RG

APPROVED FOR PUBLICATION

Clifford E. Mansfield 10/06/99

DEPUTY STATE DESIGN ENGINEER — DATE

WASHINGTON STATE DEPARTMENT OF TRANSPORTATION
OLYMPIA, WASHINGTON

EFFECTIVE: JANUARY 7, 2002 TO AUGUST 4, 2002

EFFECTIVE: JANUARY 7, 2002 TO AUGUST 4, 2002

DIMENSION TABLE FOR TYPE 2B BASES

Post Size	Anchor Ferrule Spacing		Keyway Offset K K Distances are ± 0.004″			Bracket Width BW	Hole DIA HD	Spacing S	Fastners		
	Length	Width	K = .200″	K = .150″	K = .100″				Fastner	Length	Size
W6x9	13 15/16″	3″	When Z > 7′ ≤ 9′	When Z > 9′ ≤ 12′	When Z > 12′ ≤ 25′	5 1/4″	17/32″	1 1/2″	Top bolt	2 1/2″	1/2″ DIA bolt with 1/2″ lockwasher
W6x12	14 1/16″								Middle bolt	2 3/4″	
W6x16	14 5/16″								Bottom bolt	3″	
W8x18	16 3/16″	3″	When Z > 8′ ≤ 10′	When Z > 10′ ≤ 14′	When Z > 14′ ≤ 25′				Cap screw	1 1/4″	
W8x21	16 5/16″					5 1/4″	17/32″	1 1/2″			
W10x22	18 3/16″	4″	When Z > 9′ ≤ 11′	When Z > 11′ ≤ 16′	When Z > 16′ ≤ 25′	6 1/2″	21/32″	2″	Top bolt	2 3/4″	5/8″ DIA bolt with 5/8″ lockwasher
W10x26	18 7/16″								Middle bolt	3″	
									Bottom bolt	3 1/4″	
									Cap screw	1 1/4″	

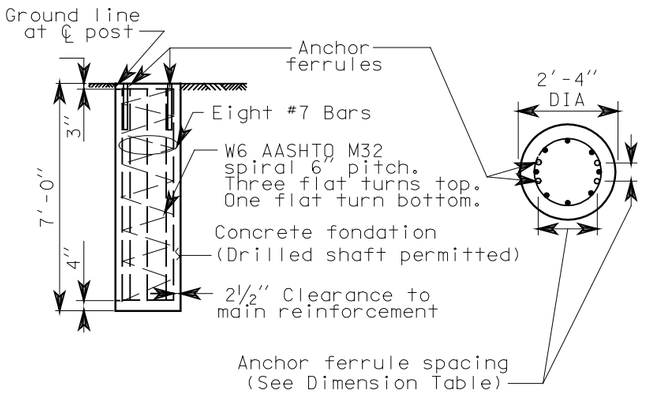

TYPE 2B FOUNDATION DETAIL

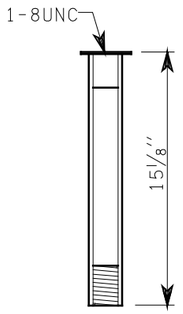

ANCHOR FERRULE DETAIL - TYPE 2B

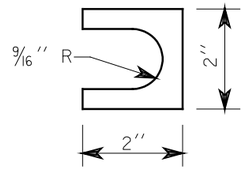

Shims shall be 14 gage or 18 gage

SHIM DETAIL - TYPE 2B

Use no more than two shims per anchor coupling.
Use no more than three shims for any two anchor couplings.

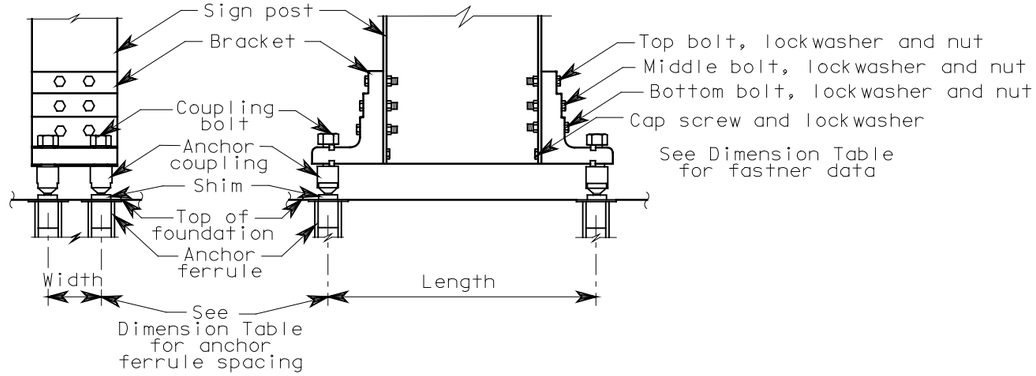

FRONT VIEW TYPE 2B SIDE VIEW
BASE CONNECTION DETAIL

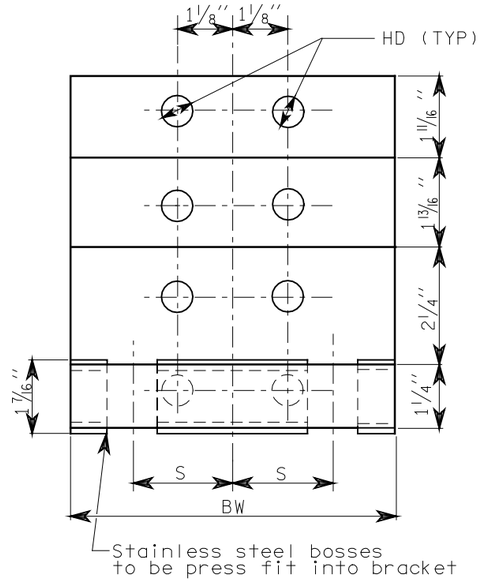

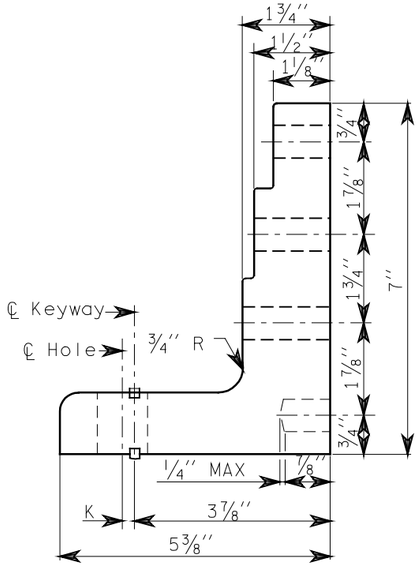

BRACKET DETAIL - TYPE 2B

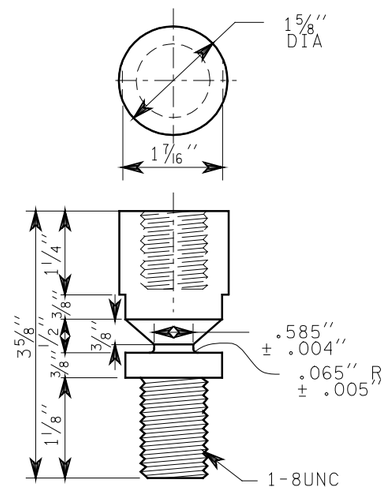

ANCHOR COUPLING DETAIL - TYPE 2B

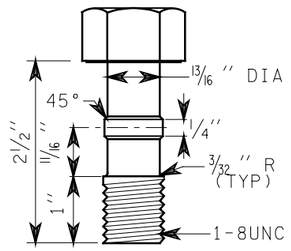

COUPLING BOLT DETAIL - TYPE 2B

JEROME A. WEIGEL
STATE OF WASHINGTON
14742
REGISTERED PROFESSIONAL ENGINEER

EXPIRES JUNE 29, 2000

ROADSIDE SIGN STRUCTURES FOR MULTIPLE STEEL POST SIGNS STANDARD PLAN G-8a

SHEET 3 OF 3 SHEETS

NOTE: THIS PLAN IS NOT A LEGAL ENGINEERING DOCUMENT BUT AN ELECTRONIC DUPLICATE. THE ORIGINAL, SIGNED BY THE ENGINEER AND APPROVED FOR PUBLICATION, IS KEPT ON FILE AT THE WASHINGTON STATE DEPARTMENT OF TRANSPORTATION. A COPY MAY BE OBTAINED UPON REQUEST.

APPROVED FOR PUBLICATION

Clifford E. Mansfield 10/06/99

DEPUTY STATE DESIGN ENGINEER — DATE

WASHINGTON STATE DEPARTMENT OF TRANSPORTATION
OLYMPIA, WASHINGTON

DATE	REVISION	BY
9-99	NEW APPROVAL DATE	RG

EFFECTIVE: JANUARY 7, 2002 TO AUGUST 4, 2002

EFFECTIVE: JANUARY 7, 2002 TO AUGUST 4, 2002

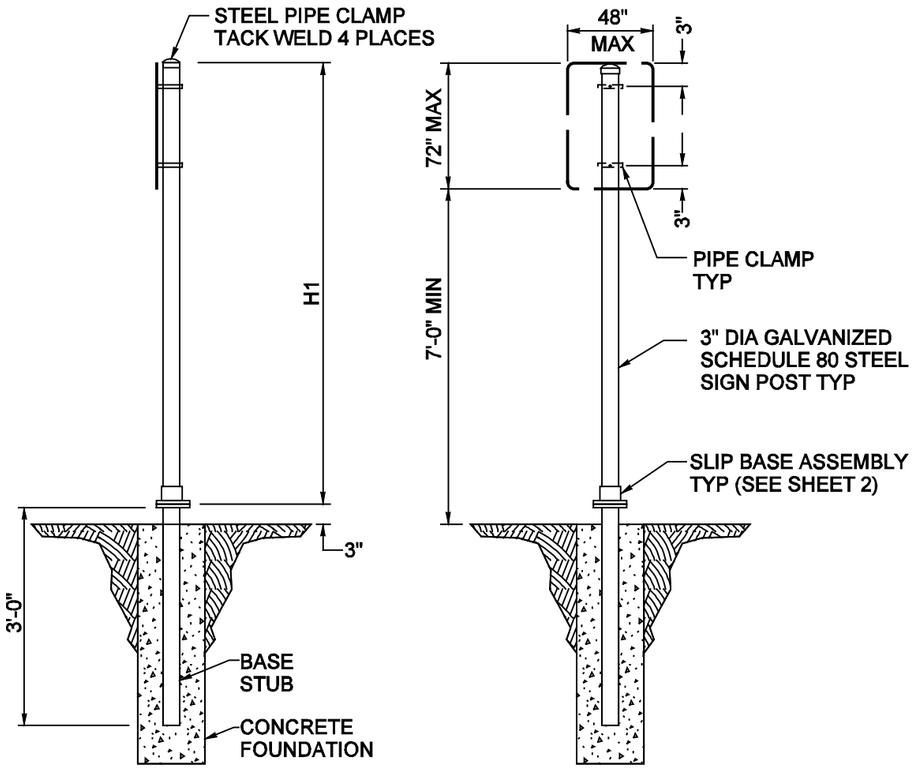

SIDE VIEW *FRONT VIEW*

SINGLE POST MOUNTING

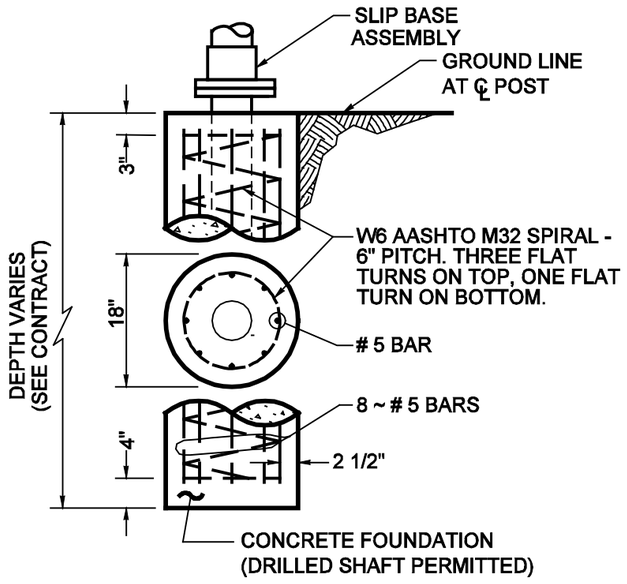

FOUNDATION DETAIL

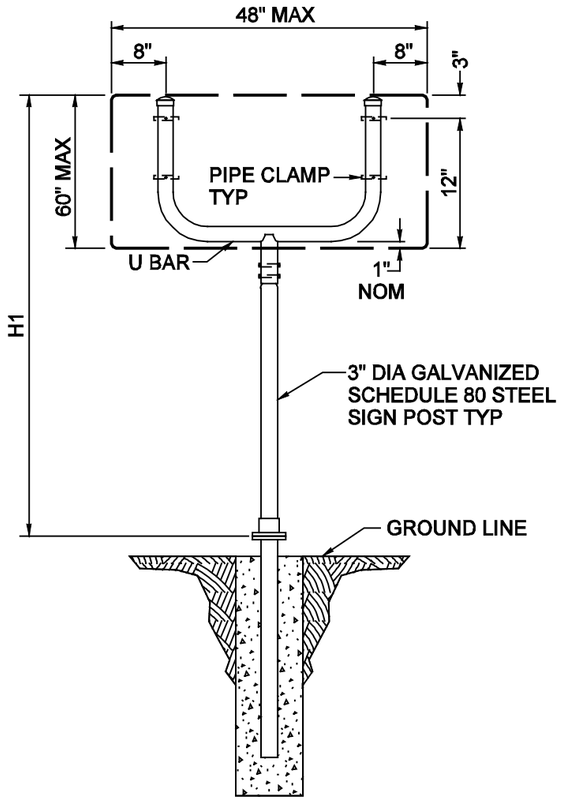

FRONT VIEW

U BAR MOUNTING

(SEE SHEET 3 FOR U BAR DETAILS)

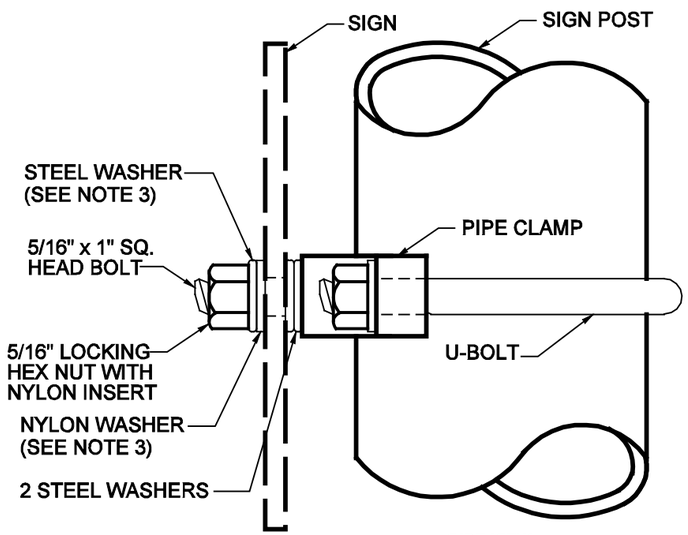

SIDE VIEW

SIGN ATTACHMENT DETAIL

(SEE SHEET 3 FOR "PIPE CLAMP" AND "U-BOLT" DETAILS)

FOR ALTERNATE ATTACHMENT TO ROUND POST
SEE STANDARD PLAN G-9b

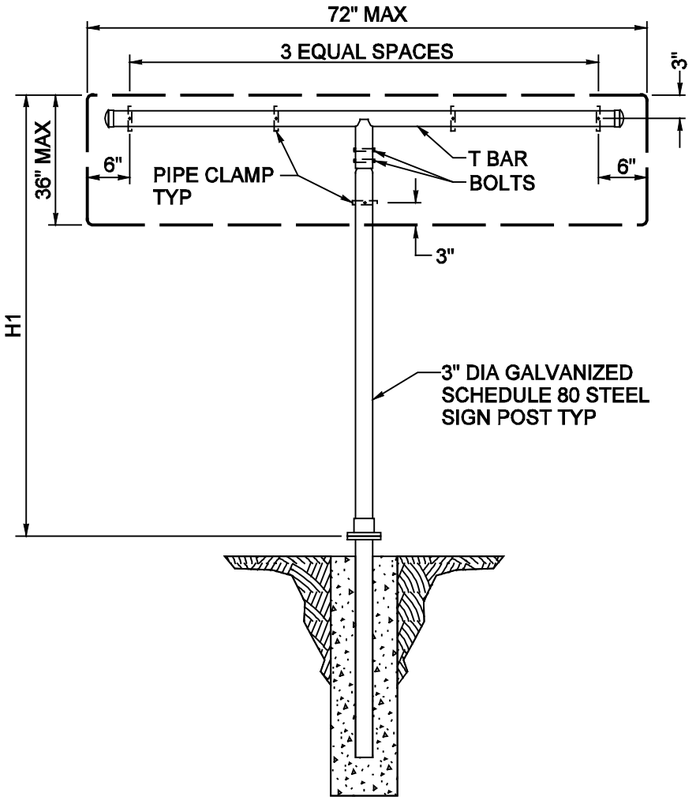

FRONT VIEW

T BAR MOUNTING

(SEE SHEET 3 FOR T BAR DETAILS)

JEROME A. WEAVER
STATE OF WASHINGTON
14742
REGISTERED
PROFESSIONAL ENGINEER

EXPIRES JUNE 29, 2000

SMALL STEEL SIGN SUPPORT STANDARD PLAN G-8b

SHEET 1 OF 3 SHEETS

NOTE: THIS PLAN IS NOT A LEGAL ENGINEERING DOCUMENT BUT AN ELECTRONIC DUPLICATE THE ORIGINAL, SIGNED BY THE ENGINEER AND APPROVED FOR PUBLICATION, IS KEPT ON FILE AT THE WASHINGTON STATE DEPARTMENT OF TRANSPORTATION. A COPY MAY BE OBTAINED UPON REQUEST.

APPROVED FOR PUBLICATION

Clifford E. Mansfield *05-05-00*

DEPUTY STATE DESIGN ENGINEER — DATE

WASHINGTON STATE DEPARTMENT OF TRANSPORTATION
OLYMPIA, WASHINGTON

EFFECTIVE: JANUARY 7, 2002 TO AUGUST 4, 2002

EFFECTIVE: JANUARY 7, 2002 TO AUGUST 4, 2002

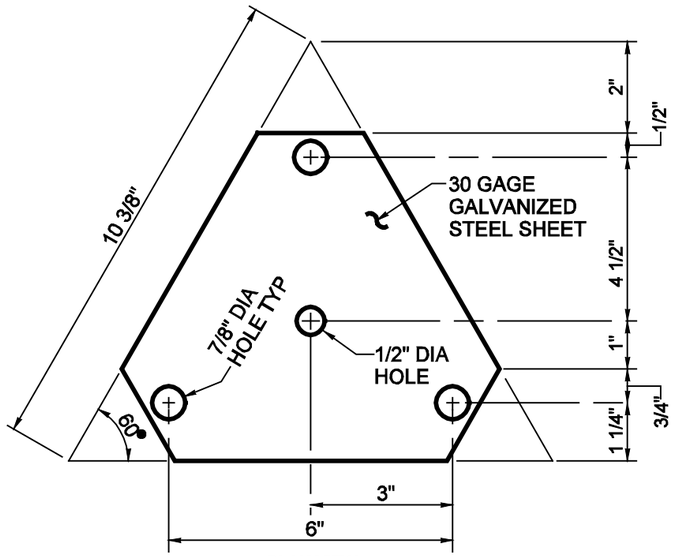

PLAN VIEW
KEEPER PLATE

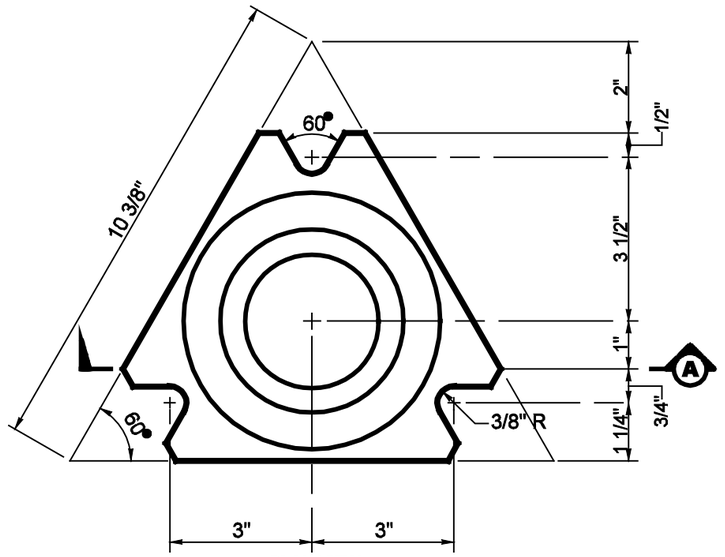

PLAN VIEW
UPPER SLIP BASE

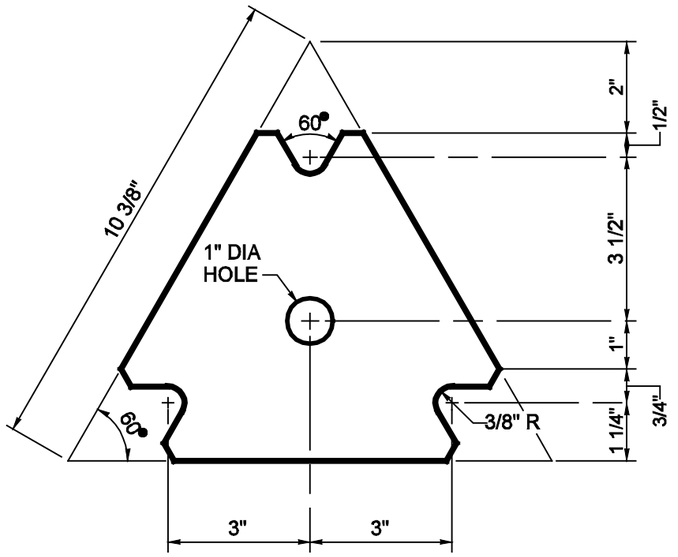

PLAN VIEW

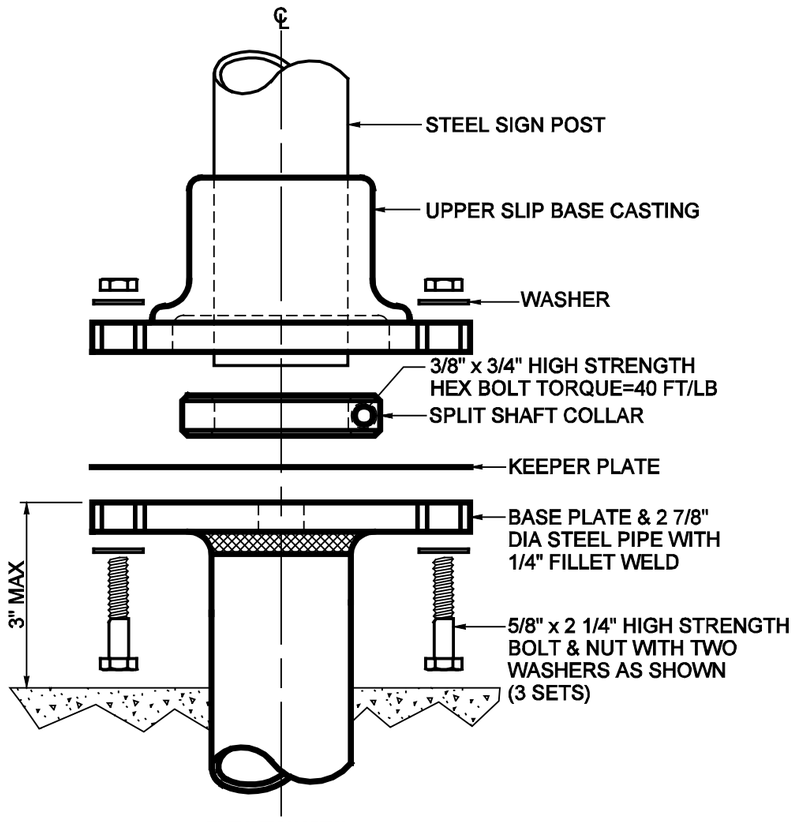

ELEVATION VIEW
SLIP BASE ASSEMBLY

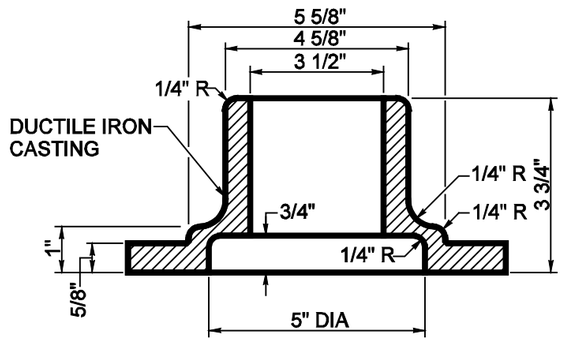

A **SECTION**

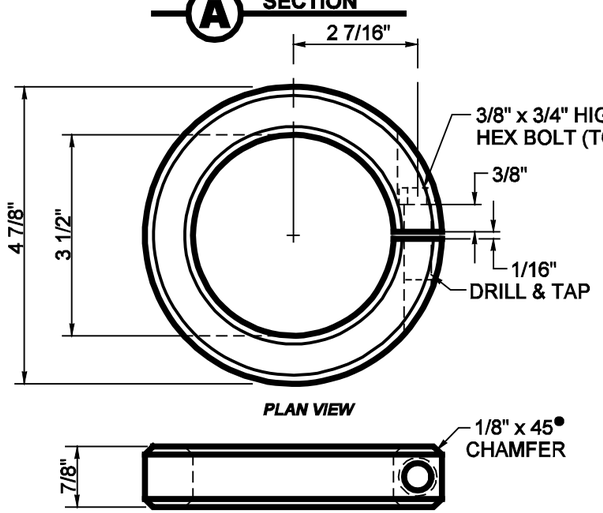

PLAN VIEW

ELEVATION VIEW
SPLIT SHAFT COLLAR

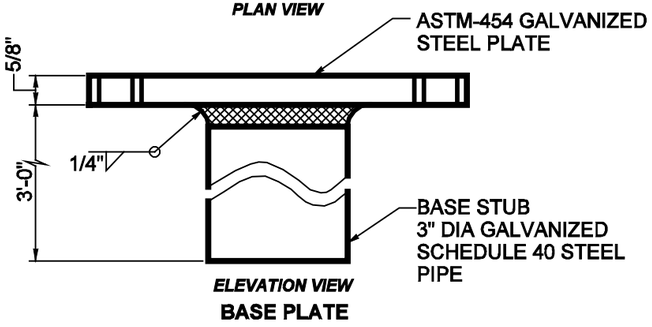

ELEVATION VIEW
BASE PLATE

EXPIRES JUNE 29, 2000

SMALL STEEL SIGN SUPPORT
STANDARD PLAN G-8b

SHEET 2 OF 3 SHEETS

NOTE: THIS PLAN IS NOT A LEGAL ENGINEERING DOCUMENT BUT AN ELECTRONIC DUPLICATE. THE ORIGINAL, SIGNED BY THE ENGINEER AND APPROVED FOR PUBLICATION, IS KEPT ON FILE AT THE WASHINGTON STATE DEPARTMENT OF TRANSPORTATION. A COPY MAY BE OBTAINED UPON REQUEST.

APPROVED FOR PUBLICATION

Clifford E. Mansfield — *05-05-00*

DEPUTY STATE DESIGN ENGINEER — DATE

WASHINGTON STATE DEPARTMENT OF TRANSPORTATION
OLYMPIA, WASHINGTON

EFFECTIVE: JANUARY 7, 2002 TO AUGUST 4, 2002

EFFECTIVE: JANUARY 7, 2002 TO AUGUST 4, 2002

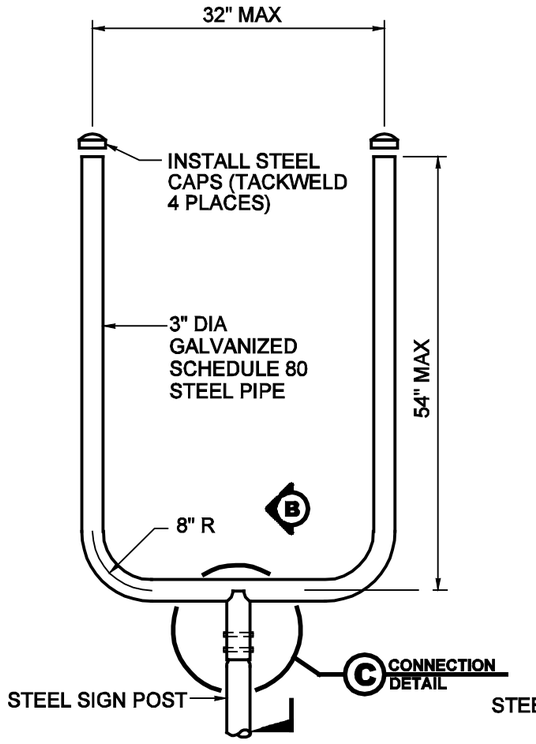

U BAR DETAIL

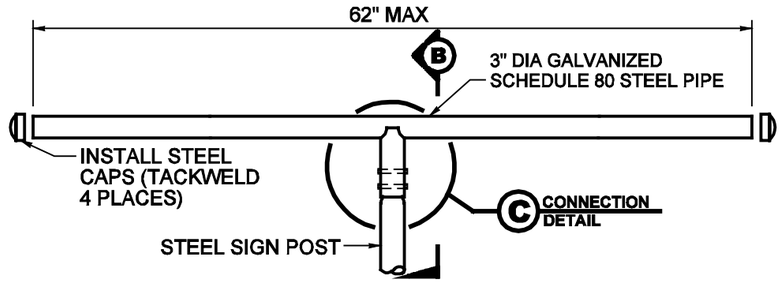

T BAR DETAIL

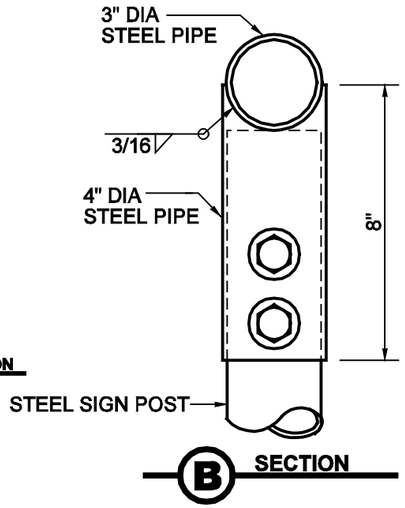

B SECTION

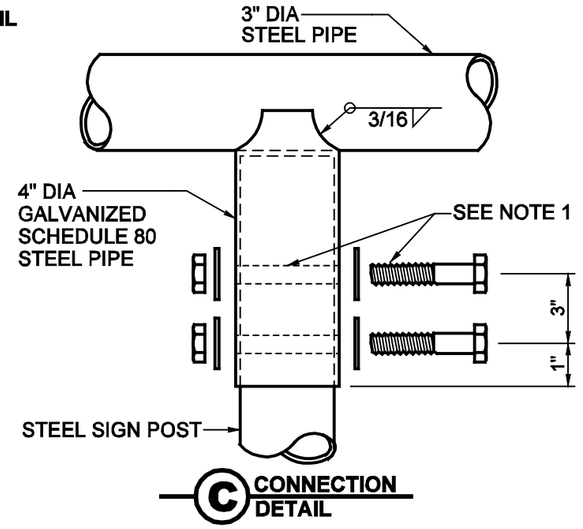

C CONNECTION DETAIL

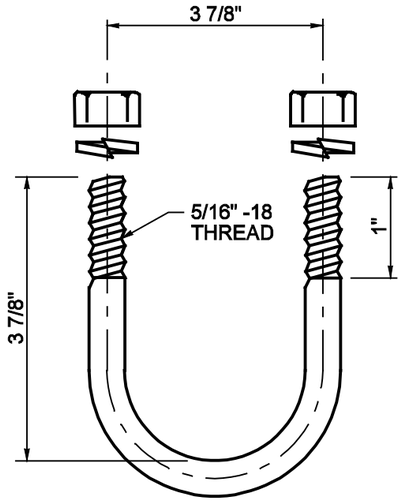

U-BOLT DETAIL

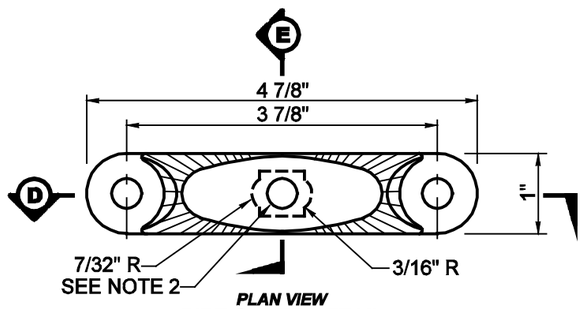

PLAN VIEW
PIPE CLAMP DETAIL

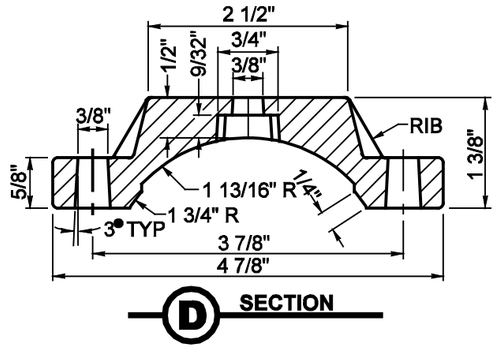

D SECTION

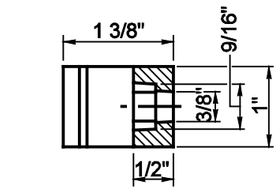

E SECTION

NOTES:

1. "T" & "U" bars mounted to post with 1/2" x 5 1/2" hex bolt, nut & washers; field drill 9/16" holes in sign post (2 sets).
2. Use a 5/16" x 1" square head bolt with full threads in slot. The bolt head must not turn in the slot.
3. Install the medium nylon washer against sign face to prevent scratching. Use the medium sized steel washer between the nylon washer and the 5/16" galvanized steel or aluminum self-locking hex head nut.
4. All U-Bolts shall be fabricated hot before galvanizing.

MATERIALS	
Steel Pipe	ASTM A500 Gr. C, Galv. AASHTO M111
Steel Keeper Plate	ASTM A525 G 90, Galv. AASHTO M111
Upper Slip Base	Ductile iron casting ASTM A536 Gr. 65-45-12, Galv. AASHTO M232
Base Plate	AASHTO M183 or M222, Galv. AASHTO M111
Split Shaft Collar	AASHTO M169 12L14, Zinc plating ASTM B-633 SC-2 with Type 1 clear coat
Pipe Clamp	Steel casting ASTM B26 or B108 or Alum. alloy A 444.0-T4 or 356.0-F
5/8" Dia. High Strength Bolts and Nuts	AASHTO M164 or ASTM A449, Galv. AASHTO M232
3/8" Dia. High Strength Bolts	ASTM A325 or A449, Galv. AASHTO M232
U-Bolts and Nuts	Stainless steel or ASTM A307, Galv. AASHTO M232

JEROME A. LEGG
STATE OF WASHINGTON
14742
REGISTERED
PROFESSIONAL ENGINEER

EXPIRES JUNE 29, 2000

SMALL STEEL SIGN SUPPORT STANDARD PLAN G-8b

SHEET 3 OF 3 SHEETS

NOTE: THIS PLAN IS NOT A LEGAL ENGINEERING DOCUMENT BUT AN ELECTRONIC DUPLICATE. THE ORIGINAL, SIGNED BY THE ENGINEER AND APPROVED FOR PUBLICATION, IS KEPT ON FILE AT THE WASHINGTON STATE DEPARTMENT OF TRANSPORTATION. A COPY MAY BE OBTAINED UPON REQUEST.

APPROVED FOR PUBLICATION

Clifford E. Mansfield — *05-05-00*

DEPUTY STATE DESIGN ENGINEER — DATE

WASHINGTON STATE DEPARTMENT OF TRANSPORTATION
OLYMPIA, WASHINGTON

EFFECTIVE: JANUARY 7, 2002 TO AUGUST 4, 2002

EFFECTIVE: JANUARY 7, 2002 TO AUGUST 4, 2002

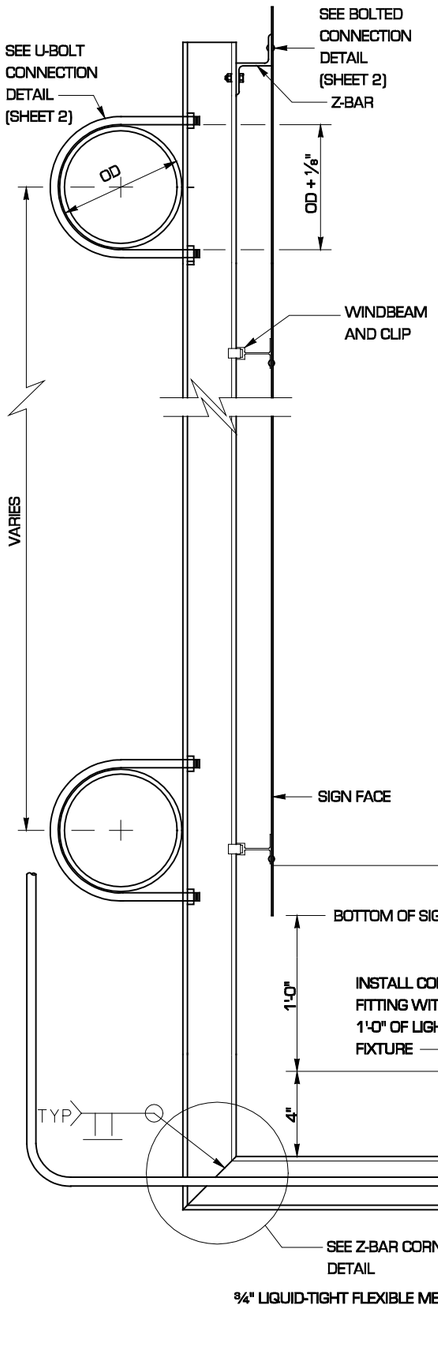

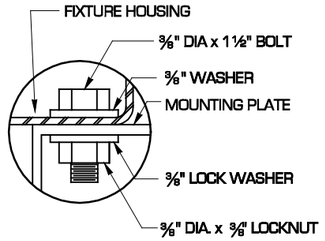

DETAIL A

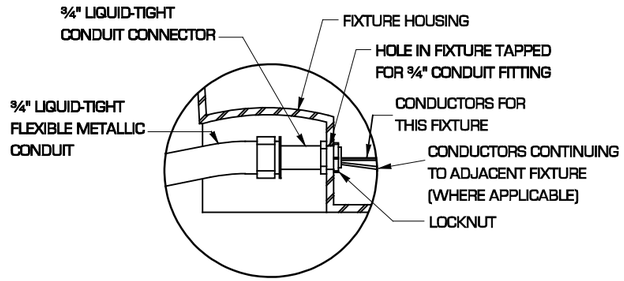

DETAIL B

SIGN LIGHTING LUMINAIRE MOUNTING DETAIL

SEE CONTRACT FOR SIGNS ON MONOTUBE SIGN STRUCTURES

IF THE SIGN STRUCTURE INCLUDES A MAINTENANCE WALKWAY, THE LUMINAIRE MOUNTING PLATE SHALL BE BOLTED TO THE WALKWAY GRATING.

NOTE: ALL NUTS, BOLTS, WASHERS AND OTHER HARDWARE SHALL BE STAINLESS STEEL, EXCEPT AS NOTED.

EFFECTIVE: JANUARY 7, 2002 TO AUGUST 4, 2002

EFFECTIVE: JANUARY 7, 2002 TO AUGUST 4, 2002

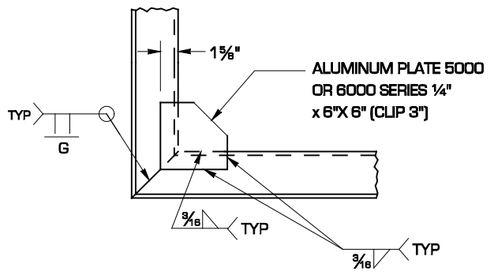

Z-BAR CORNER DETAIL

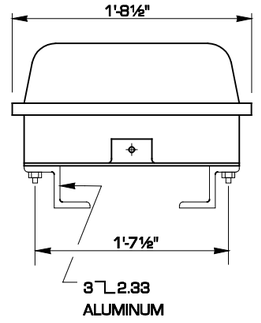

A SECTION Z-BAR

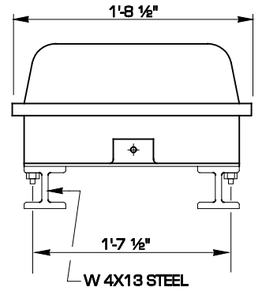

A SECTION W BEAM

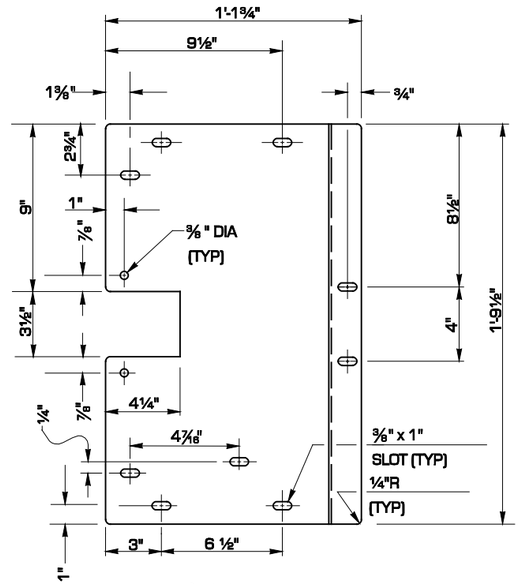

PLAN

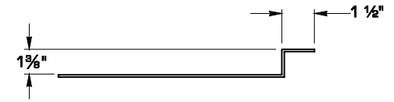

END VIEW

LUMINAIRE MOUNTING PLATE

ITEM AVAILABLE FROM FIXTURE MANUFACTURER, MATERIAL IS GALV. 10 GAGE STEEL PLATE

EXPIRES JUNE 29, 2000

OVERHEAD SIGN MOUNTING DETAILS STANDARD PLAN G-9a

SHEET 1 OF 2 SHEETS

NOTE: THIS PLAN IS NOT A LEGAL ENGINEERING DOCUMENT BUT AN ELECTRONIC DUPLICATE. THE ORIGINAL, SIGNED BY THE ENGINEER AND APPROVED FOR PUBLICATION, IS KEPT ON FILE AT THE WASHINGTON STATE DEPARTMENT OF TRANSPORTATION. A COPY MAY BE OBTAINED UPON REQUEST.

APPROVED FOR PUBLICATION

Clifford E. Mansfield — DEPUTY STATE DESIGN ENGINEER — *04-02-99* DATE

WASHINGTON STATE DEPARTMENT OF TRANSPORTATION
OLYMPIA, WASHINGTON

EFFECTIVE: JANUARY 7, 2002 TO AUGUST 4, 2002

EFFECTIVE: JANUARY 7, 2002 TO AUGUST 4, 2002

EFFECTIVE: JANUARY 7, 2002 TO AUGUST 4, 2002

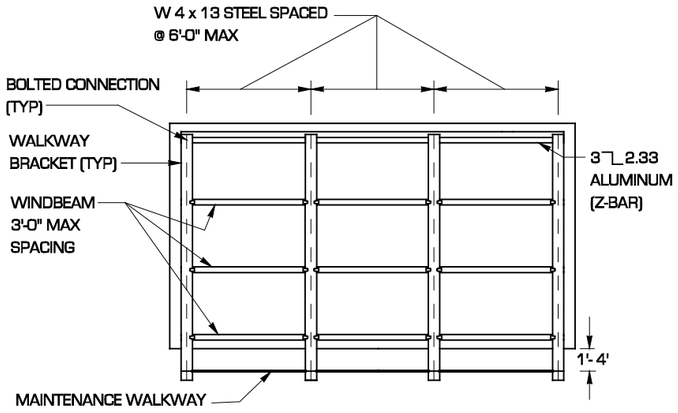

OVERHEAD SIGN WITH WALKWAY

SEE CONTRACT FOR SIGNS ON MONOTUBE SIGN STRUCTURES

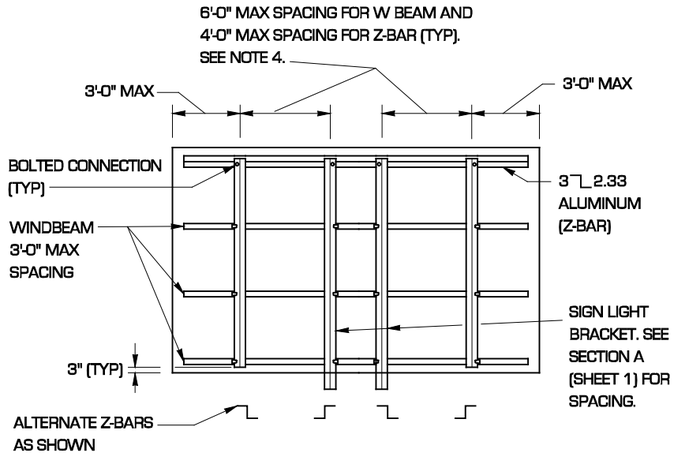

OVERHEAD SIGN WITHOUT WALKWAY

SEE CONTRACT FOR SIGNS ON MONOTUBE SIGN STRUCTURES

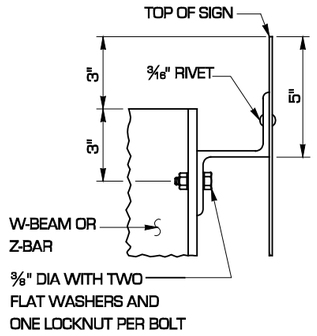

BOLTED CONNECTION DETAIL

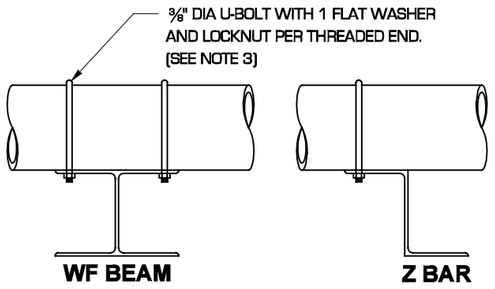

U-BOLT CONNECTION DETAIL

SEE NOTE 3

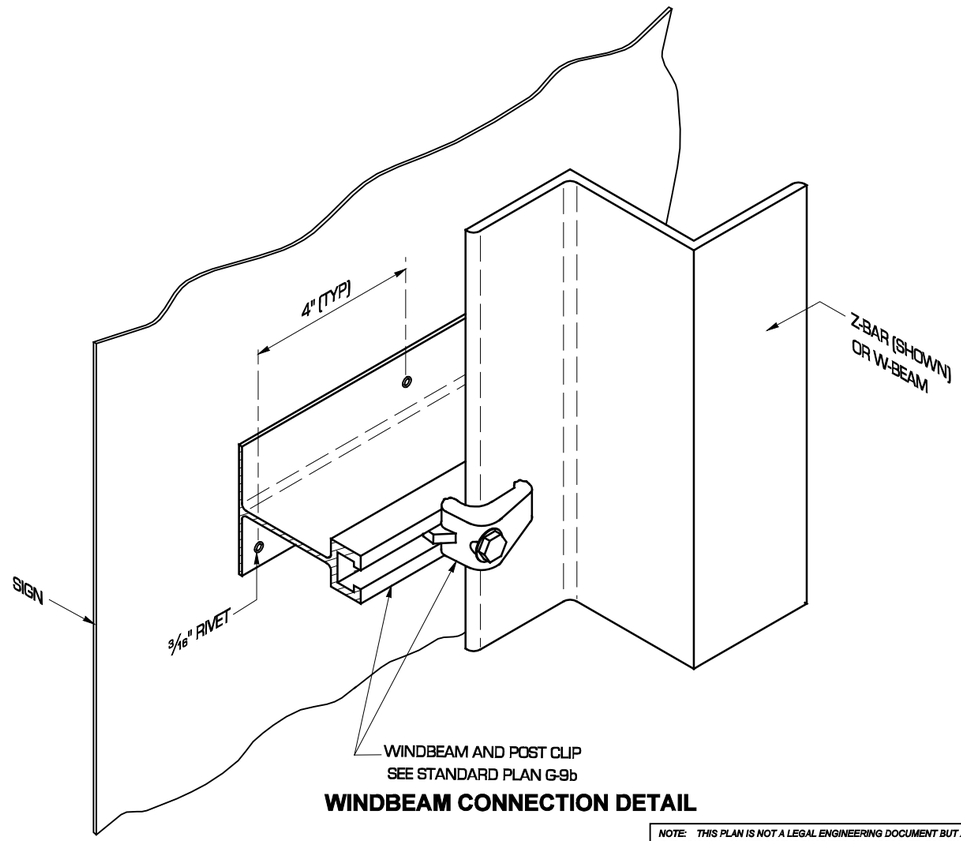

WINDBEAM CONNECTION DETAIL

NOTES

1. ATTACH SIGN TO Z-BAR OR WINDBEAM WITH 3/16" RIVETS AT 4" STAGGERED SPACING.
2. ON SIGNS WITH WALKWAYS, THE LUMINAIRE MAY BE ATTACHED DIRECTLY TO THE WALKWAY BRACKET IF THE SPACING FOR THE WALKWAY BRACKETS IS THE SAME AS THE SPACING FOR THE SIGN LIGHTING BRACKET.
3. U-BOLTS SHALL ATTACH ALL OVERHEAD SIGN ASSEMBLIES TO TUBULAR SIGN SUPPORTS. ATTACH AT EACH INTERSECTION OF VERTICAL MEMBER AND SIGN SUPPORT.
4. W 4X13 STEEL IS REQUIRED FOR SIGNS ON MONOTUBE SIGN STRUCTURES. W 4 X 13 STEEL OR 3⌐_2.33 ALUMINUM Z-BAR MAY BE USED FOR SIGNS ON OTHER STRUCTURES.

JEROME A. WEIGEL
STATE OF WASHINGTON
14742
REGISTERED
PROFESSIONAL ENGINEER

EXPIRES JUNE 29, 2000

OVERHEAD SIGN MOUNTING DETAILS STANDARD PLAN G-9a

NOTE: THIS PLAN IS NOT A LEGAL ENGINEERING DOCUMENT BUT AN ELECTRONIC DUPLICATE. THE ORIGINAL, SIGNED BY THE ENGINEER AND APPROVED FOR PUBLICATION, IS KEPT ON FILE AT THE WASHINGTON STATE DEPARTMENT OF TRANSPORTATION. A COPY MAY BE OBTAINED UPON REQUEST.

APPROVED FOR PUBLICATION

Clifford E. Mansfield — DEPUTY STATE DESIGN ENGINEER — *04-02-99* — DATE

WASHINGTON STATE DEPARTMENT OF TRANSPORTATION
OLYMPIA, WASHINGTON

EFFECTIVE: JANUARY 7, 2002 TO AUGUST 4, 2002

EFFECTIVE: JANUARY 7, 2002 TO AUGUST 4, 2002

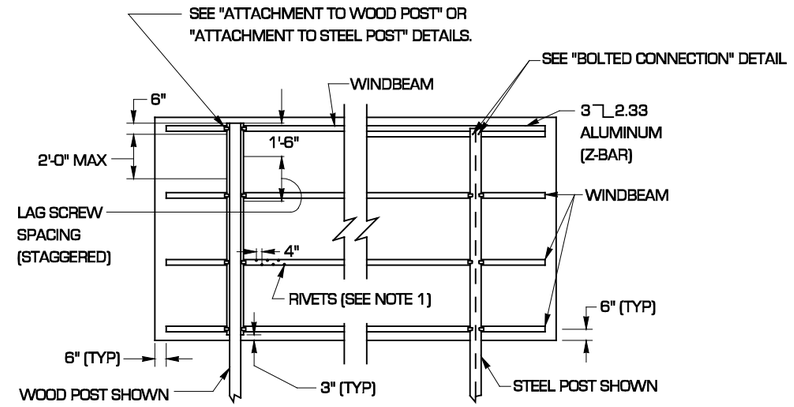

GROUND MOUNTED SIGNS

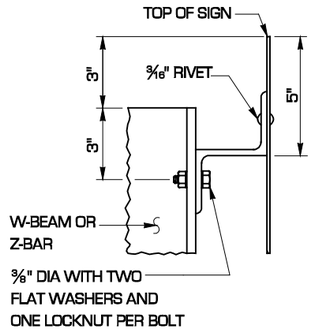

BOLTED CONNECTION DETAIL

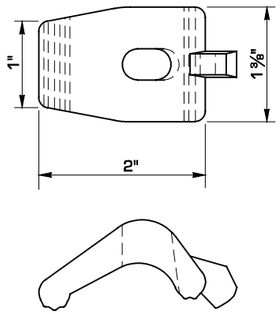

POST CLIP DETAIL

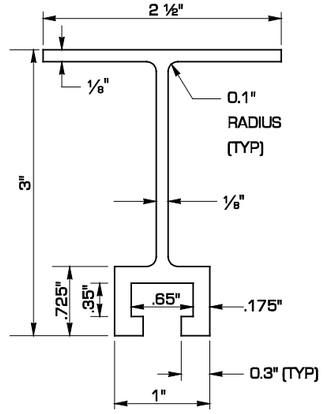

ALUMINUM WINDBEAM DETAIL

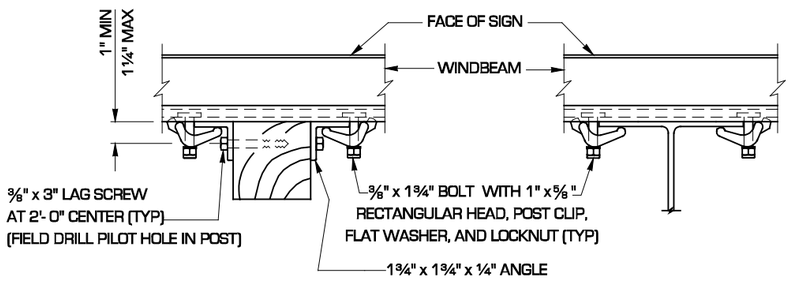

ATTACHMENT TO WOOD POST

ATTACHMENT TO STEEL POST

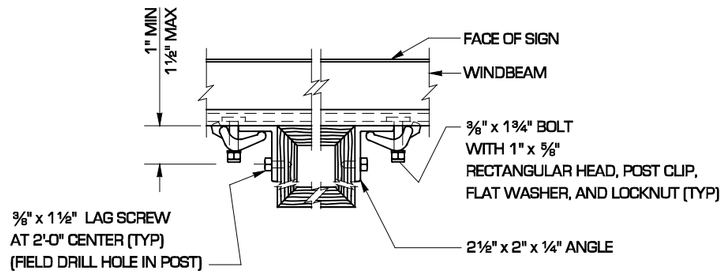

ATTACHMENT TO LAMINATED WOOD BOX POST

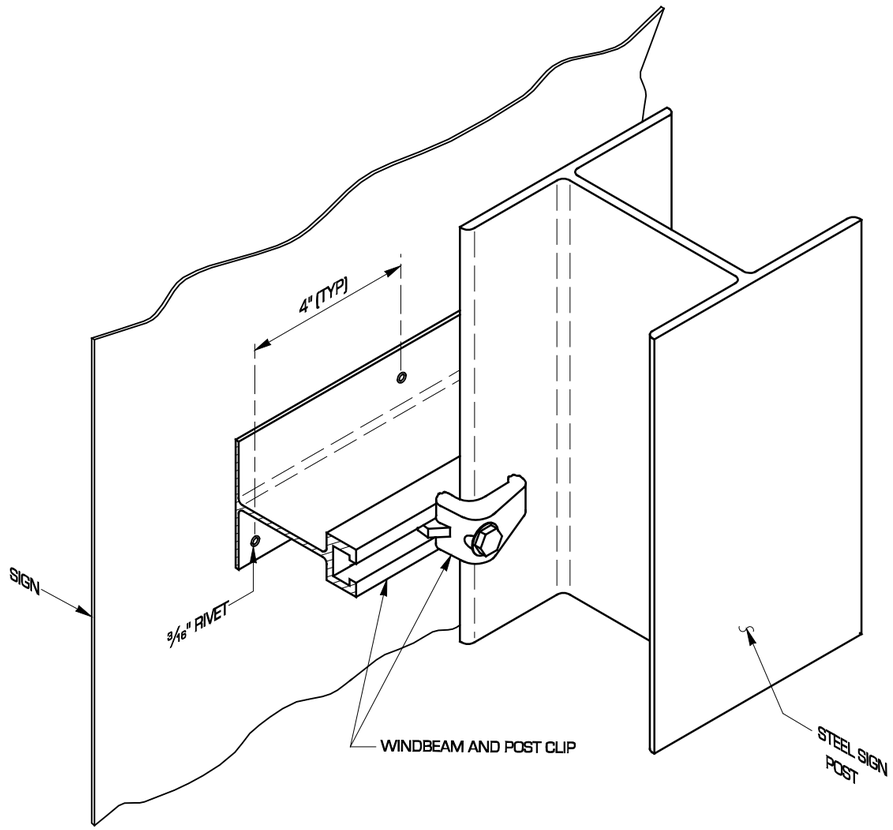

WINDBEAM CONNECTION DETAIL

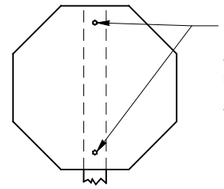

ATTACHMENT TO SINGLE TIMBER POST

JEROME A. WEIGEL
STATE OF WASHINGTON
14742
REGISTERED
PROFESSIONAL ENGINEER

EXPIRES JUNE 29, 2000

SIGN MOUNTING DETAILS STANDARD PLAN G-9b

SHEET 1 OF 3 SHEETS

NOTE: THIS PLAN IS NOT A LEGAL ENGINEERING DOCUMENT BUT AN ELECTRONIC DUPLICATE. THE ORIGINAL, SIGNED BY THE ENGINEER AND APPROVED FOR PUBLICATION, IS KEPT ON FILE AT THE WASHINGTON STATE DEPARTMENT OF TRANSPORTATION. A COPY MAY BE OBTAINED UPON REQUEST.

APPROVED FOR PUBLICATION

Clifford E. Mansfield — *04/02/99*

DEPUTY STATE DESIGN ENGINEER — DATE

WASHINGTON STATE DEPARTMENT OF TRANSPORTATION
OLYMPIA, WASHINGTON

EFFECTIVE: JANUARY 7, 2002 TO AUGUST 4, 2002

EFFECTIVE: JANUARY 7, 2002 TO AUGUST 4, 2002

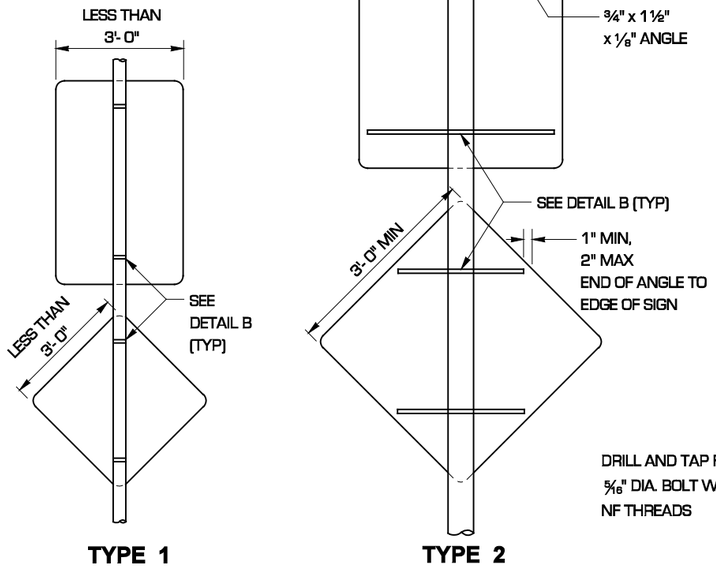

TYPE 1 **TYPE 2**

ATTACHMENT TO ROUND POST

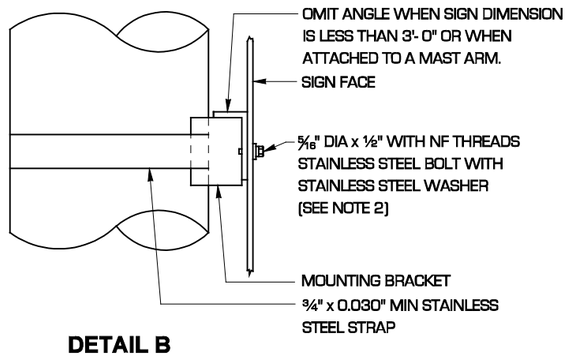

DETAIL B
FOR ALTERNATE 2
(SHOWN FOR VERTICAL POST)

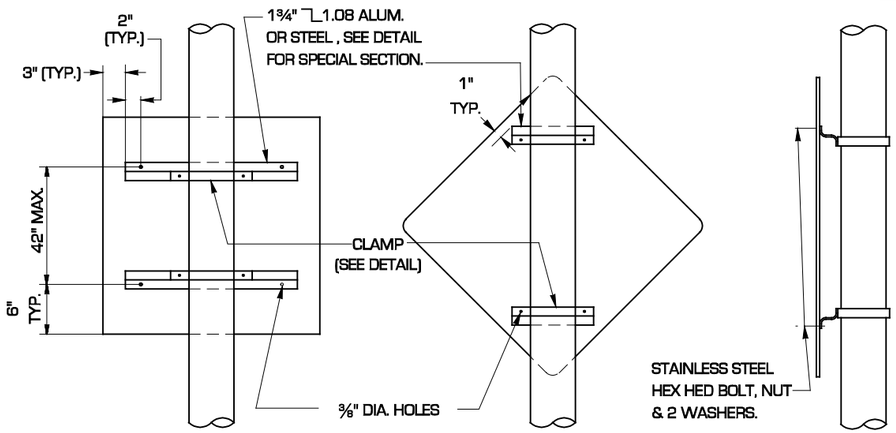

ALTERNATE 1 - ATTACHMENT TO ROUND POST

MATERIAL SPECIFICATIONS
PLATE-ASTM A 36
PIPE - ASTM A 53 GR. B
FINISH - GALV. PER ASTM A 123
AFTER FABRICATION

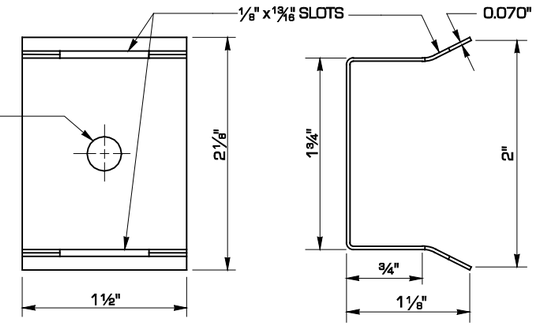

MOUNTING BRACKET DETAIL
FOR ALTERNATE 2

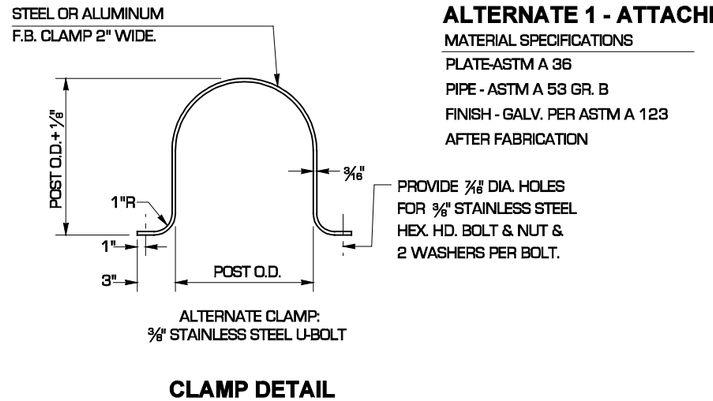

CLAMP DETAIL
FOR ALTERNATE 1

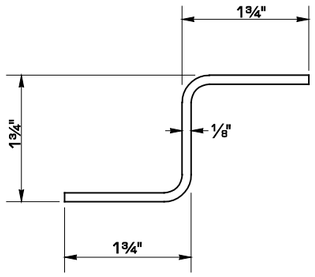

STEEL ⌐ SPECIAL SECTION
FOR ALTERNATE 1

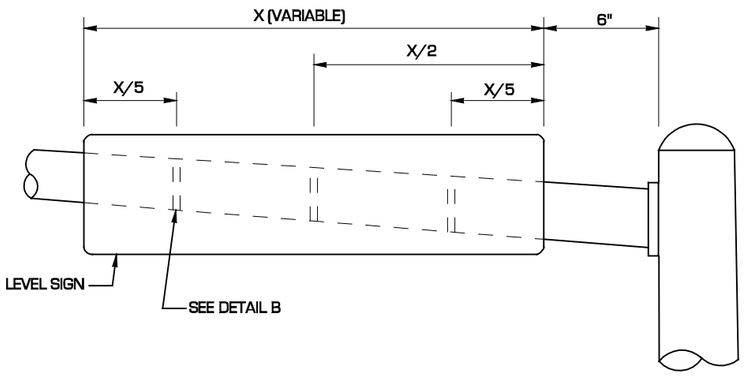

ATTACHMENT TO MAST ARM

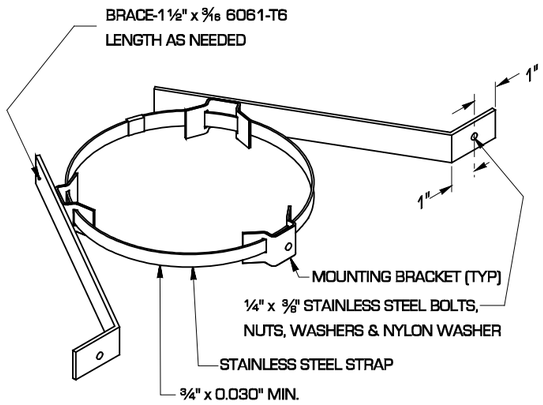

ALTERNATE 2 - ATTACHMENT TO ROUNDPOST

2 MOUNTING STRAPS MINIMUM PER SIGN.
42" MAX. SPACING BETWEEN MOUNTING
STRAPS.

JEROME A WEIGEL
STATE OF WASHINGTON
14742
REGISTERED
PROFESSIONAL ENGINEER

EXPIRES JUNE 29, 2000

SIGN MOUNTING DETAILS
STANDARD PLAN G-9b

SHEET 2 OF 3 SHEETS

NOTE: THIS PLAN IS NOT A LEGAL ENGINEERING DOCUMENT BUT AN ELECTRONIC DUPLICATE. THE ORIGINAL, SIGNED BY THE ENGINEER AND APPROVED FOR PUBLICATION, IS KEPT ON FILE AT THE WASHINGTON STATE DEPARTMENT OF TRANSPORTATION. A COPY MAY BE OBTAINED UPON REQUEST.

APPROVED FOR PUBLICATION

Clifford E. Mansfield *04/02/99*

DEPUTY STATE DESIGN ENGINEER — DATE

WASHINGTON STATE DEPARTMENT OF TRANSPORTATION
OLYMPIA, WASHINGTON

EFFECTIVE: JANUARY 7, 2002 TO AUGUST 4, 2002

EFFECTIVE: JANUARY 7, 2002 TO AUGUST 4, 2002

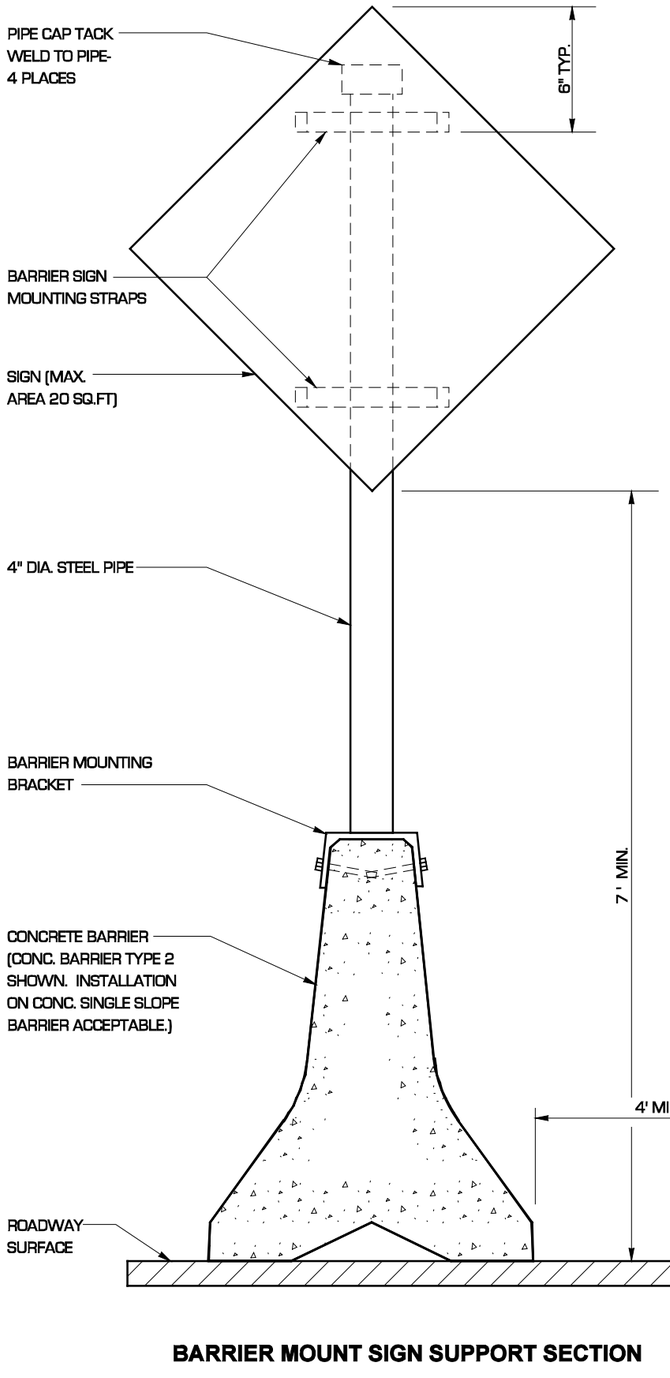

BARRIER MOUNT SIGN SUPPORT SECTION

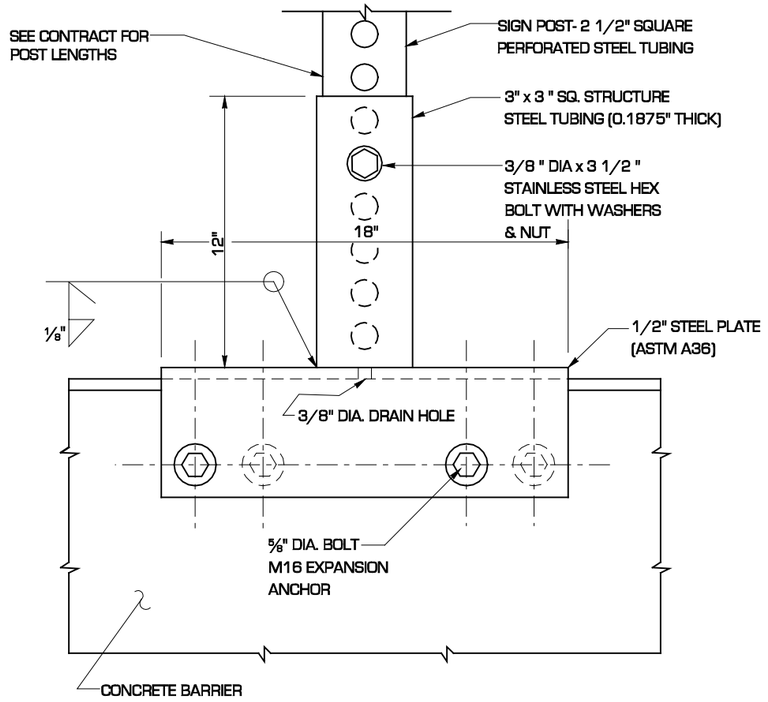

OPTIONAL "MANUFACTURED" BARRIER MOUNTING BRACKET SIDE VIEW

(FOR USE WITH SQUARE TUBING SIGN POSTS AND SIGNS WITH A MAXIMUM AREA OF 9 SQ.FT.)

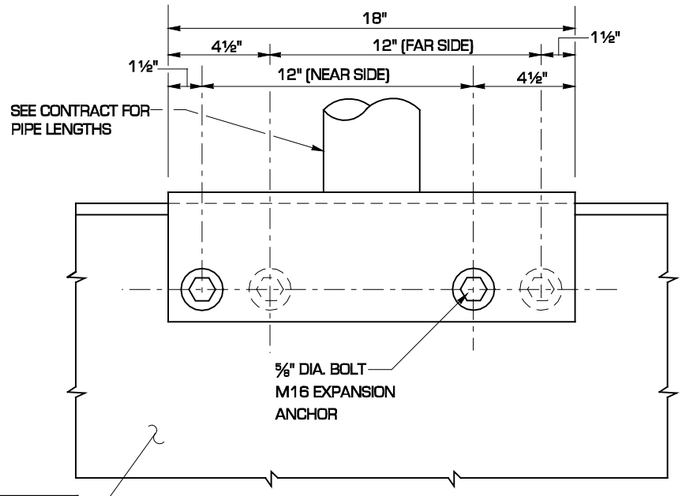

SIDE VIEW

(SEE NOTE 3)

A BENT PLATE MAY BE USED IN LIEU OF THE WELDED PLATES SHOWN

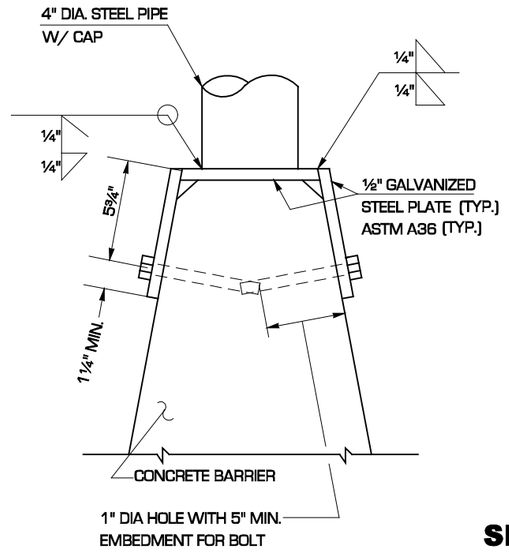

END VIEW

BARRIER MOUNTING BRACKET

NOTES

1. ATTACH SIGN TO Z-BAR OR WINDBEAM WITH 3/16" RIVETS AT 4" STAGGERED SPACING.
2. A NYLON WASHER SHALL BE PLACED BETWEEN THE SIGN FACE AND ANY OTHER WASHER REQUIRED ON SIGNS CONSTRUCTED OF TYPE III OR IV SHEETING.
3. BARRIER MOUNTING BRACKET IS DESIGNED FOR A MAXIMUM SIGN AREA OF 20 SQ FT WITH THE CENTER OF AREA NO HIGHER THAN 8' - 6" ABOVE THE BARRIER MOUNTING BRACKET.

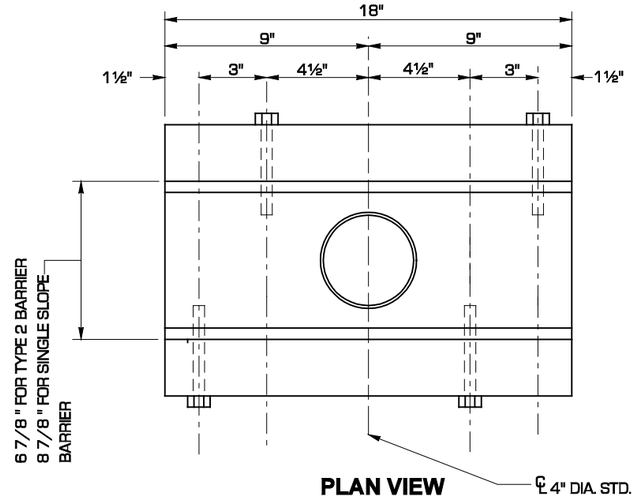

PLAN VIEW

JEROME A. WEIGEL
STATE OF WASHINGTON
14742
REGISTERED
PROFESSIONAL ENGINEER

EXPIRES JUNE 29, 2000

SIGN MOUNTING DETAILS STANDARD PLAN G-9b

SHEET 3 OF 3 SHEETS

NOTE: THIS PLAN IS NOT A LEGAL ENGINEERING DOCUMENT BUT AN ELECTRONIC DUPLICATE. THE ORIGINAL, SIGNED BY THE ENGINEER AND APPROVED FOR PUBLICATION, IS KEPT ON FILE AT THE WASHINGTON STATE DEPARTMENT OF TRANSPORTATION. A COPY MAY BE OBTAINED UPON REQUEST.

APPROVED FOR PUBLICATION

Clifford E. Mansfield — *04/02/99*

DEPUTY STATE DESIGN ENGINEER — DATE

WASHINGTON STATE DEPARTMENT OF TRANSPORTATION
OLYMPIA, WASHINGTON

EFFECTIVE: JANUARY 7, 2002 TO AUGUST 4, 2002

EFFECTIVE: JANUARY 7, 2002 TO AUGUST 4, 2002

GUIDE POST TYPES	
Type	Reflective Sheeting
W	White sheeting facing traffic
Y	Yellow sheeting facing traffic
WW	White sheeting both sides
YY	Yellow sheeting both sides
WR	White facing traffic, red on opposite side
YR	Yellow facing traffic, red on opposite side
G	Type WW with 3″ x ⅜″ green sheeting below each white sheet

NOTES

1. The contractor shall either:
   a: drive the flexible guide post in line with the guardrail posts, or
   b: install the shorter flexible guide post on the guardrail post.

2. Guardrail-mounted guide posts shall be fastened to the guardrail post with two 20d galvanized nails, or two 2″ x ⅜″ lag screws with washers, as near to the centerline of the post as possible. Also acceptable is any approved method submitted by the guide post manufacturer.

3. Guide posts shall be 2′ from the edge of shoulder unless otherwise specified.

4. Flexible tubular posts shall have a band of reflective sheeting near the tops of the post, at least 8″ wide, around the entire post.

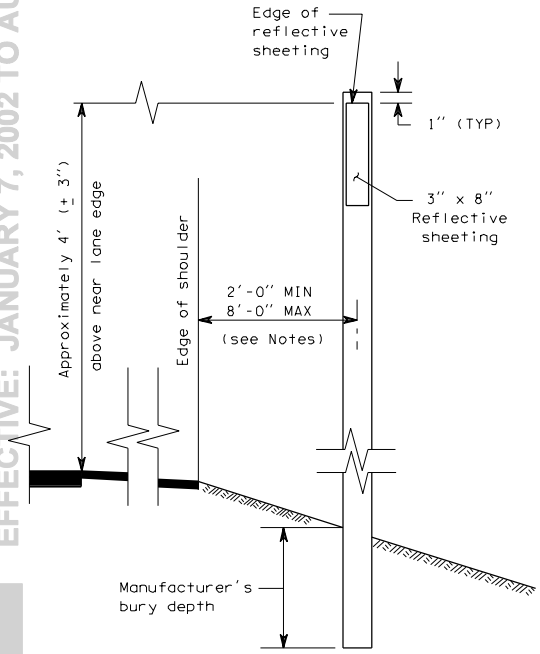

FLEXIBLE GUIDE POST
(GROUND MOUNT)

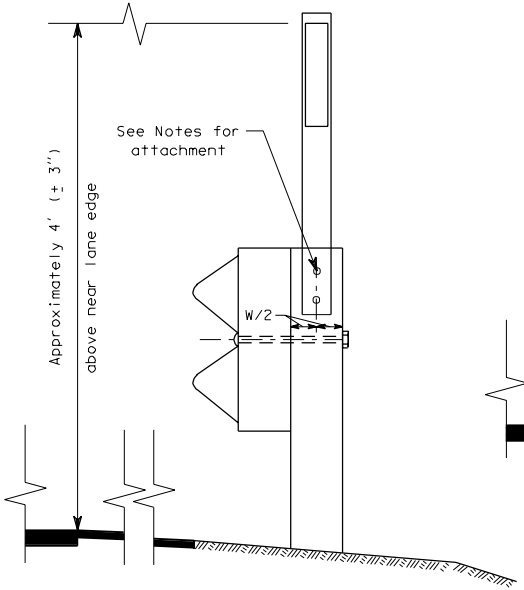

FLEXIBLE GUIDE POST
(GUARDRAIL)
(Use only with wood guardrail posts)

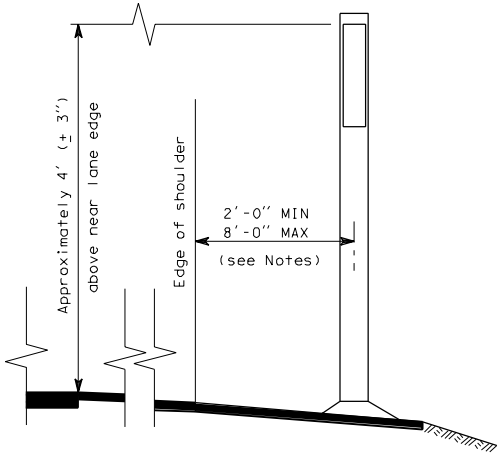

FLEXIBLE GUIDE POST
(SURFACE MOUNT)

GUIDE POSTS

H-1 1 of 1
07-18-97

EFFECTIVE: JANUARY 7, 2002 TO AUGUST 4, 2002

EFFECTIVE: JANUARY 7, 2002 TO AUGUST 4, 2002
EFFECTIVE: JANUARY 7, 2002 TO AUGUST 4, 2002

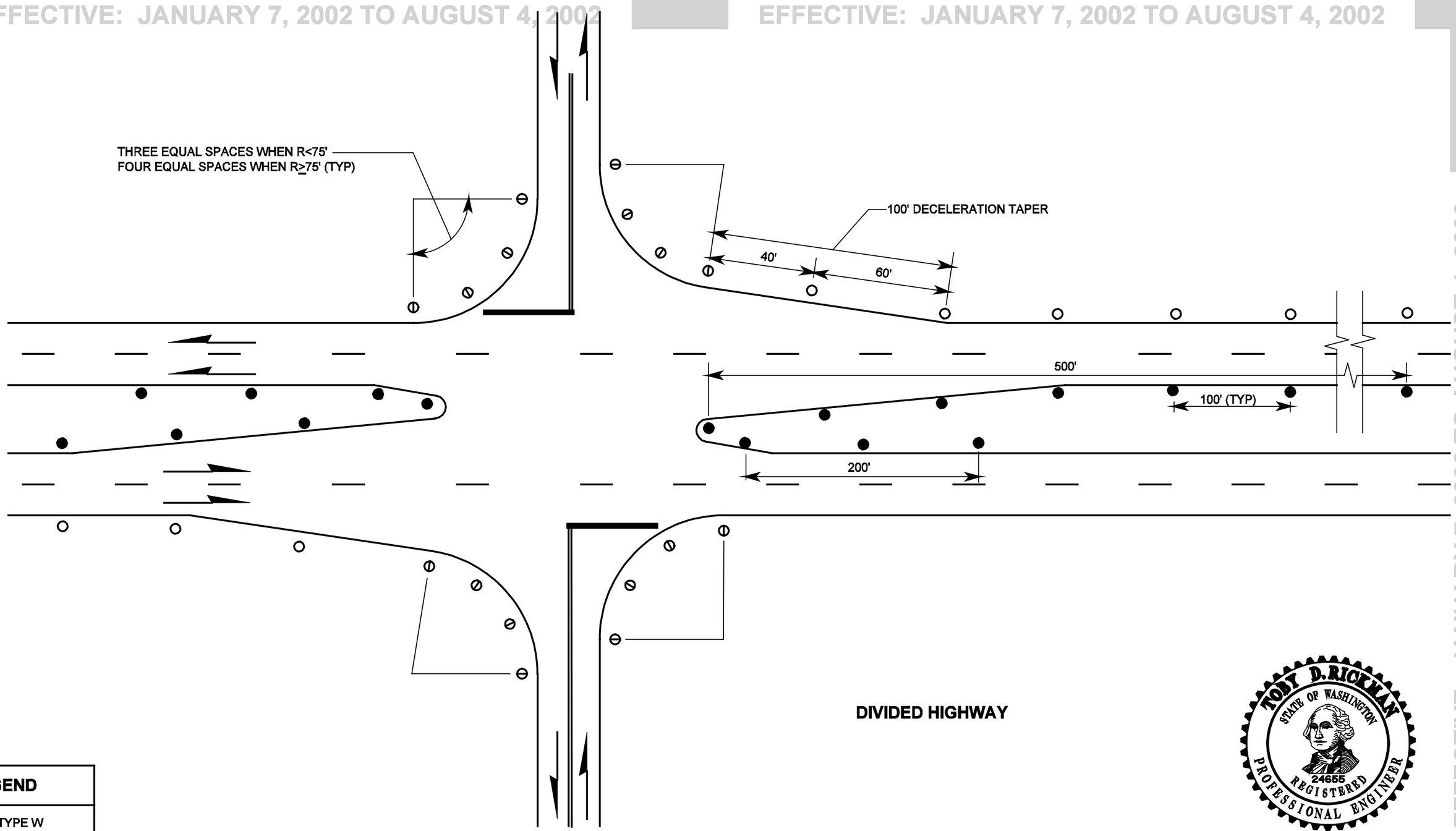

DIVIDED HIGHWAY

LEGEND
○ TYPE W
● TYPE Y
⦶ TYPE WW

SEE TABLE IN STANDARD PLAN H-1 FOR DEFINITION OF GUIDE POST TYPES

TOBY D. RICKMAN
STATE OF WASHINGTON
24655
REGISTERED
PROFESSIONAL ENGINEER

EXPIRES OCTOBER 26, 2000

GUIDE POST PLACEMENT GRADE INTERSECTION STANDARD PLAN H-1a

NOTE: THIS PLAN IS NOT A LEGAL ENGINEERING DOCUMENT BUT AN ELECTRONIC DUPLICATE. THE ORIGINAL, SIGNED BY THE ENGINEER AND APPROVED FOR PUBLICATION, IS KEPT ON FILE AT THE WASHINGTON STATE DEPARTMENT OF TRANSPORTATION. A COPY MAY BE OBTAINED UPON REQUEST.

APPROVED FOR PUBLICATION

Clifford E. Mansfield *4/14/00*

DEPUTY STATE DESIGN ENGINEER — DATE

WASHINGTON STATE DEPARTMENT OF TRANSPORTATION
OLYMPIA, WASHINGTON

DATE	REVISION	BY
3/00	DELETED "RED REFLECTIVE SHEETING".	TWS

EFFECTIVE: JANUARY 7, 2002 TO AUGUST 4, 2002
EFFECTIVE: JANUARY 7, 2002 TO AUGUST 4, 2002

EFFECTIVE: JANUARY 7, 2002 TO AUGUST 4, 2002
EFFECTIVE: JANUARY 7, 2002 TO AUGUST 4, 2002

LEGEND	
○	TYPE W
●	TYPE Y

SEE TABLE SHOWN ON STANDARD PLAN H-1 FOR DEFINITIONS OF GUIDE POST TYPES

NOTES:

1. SEE PLANS FOR GUIDE POST REQUIREMENTS BETWEEN INTERCHANGES.
2. GUIDE POSTS SHALL BE PLACED AT 100' ON RAMP TANGENTS AND TAPERS.
3. "S" DIMENSION SHOWN ON STANDARD PLAN H-1c OR 100', WHICHEVER IS SMALLER.
4. ONE HALF OF "S" DIMENSION SHOWN ON STANDARD PLAN H-1c OR 50', WHICHEVER IS SMALLER.
5. TWO SPACES AT 100'.
6. THREE EQUAL SPACES WHEN R < 75' ; FOUR EQUAL SPACES WHEN R > 75'.
7. TWO EQUAL SPACES.

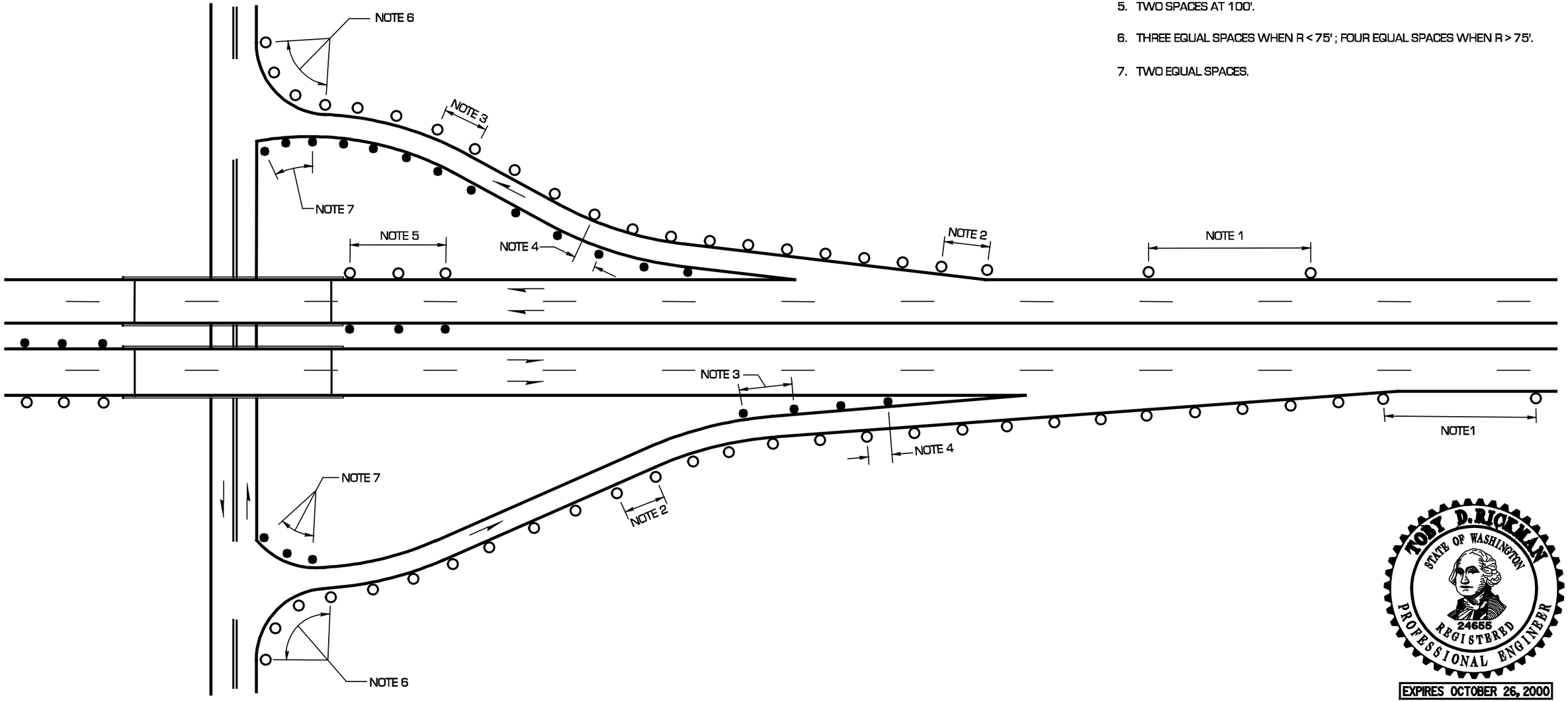

TOBY D. RICKMAN
STATE OF WASHINGTON
24655
REGISTERED
PROFESSIONAL ENGINEER

EXPIRES OCTOBER 26, 2000

GUIDE POST PLACEMENT FOR INTERCHANGES
STANDARD PLAN H-1b

NOTE: THIS PLAN IS NOT A LEGAL ENGINEERING DOCUMENT BUT AN ELECTRONIC DUPLICATE THE ORIGINAL, SIGNED BY THE ENGINEER AND APPROVED FOR PUBLICATION, IS KEPT ON FILE AT THE WASHINGTON STATE DEPARTMENT OF TRANSPORTATION. A COPY MAY BE OBTAINED UPON REQUEST.

DATE	REVISION	BY
4/00	DELETED "RED REFLECTIVE SHEETING" DESIGNATIONS ON GUIDE POSTS.	TWS

APPROVED FOR PUBLICATION

Clifford E. Mansfield 05/05/00

DEPUTY STATE DESIGN ENGINEER — DATE

WASHINGTON STATE DEPARTMENT OF TRANSPORTATION
OLYMPIA, WASHINGTON

EFFECTIVE: JANUARY 7, 2002 TO AUGUST 4, 2002
EFFECTIVE: JANUARY 7, 2002 TO AUGUST 4, 2002

EFFECTIVE: JANUARY 7, 2002 TO AUGUST 4, 2002

GUIDEPOST SPACING			
RADIUS	S	RADIUS	S
50′	30′	800′	130′
100′	40′	900′	130′
150′	50′	1000′	140′
200′	60′	1500′	170′
250′	70′	2000′	200′
300′	80′	2500′	220′
400′	90′	3000′	240′
500′	100′	3500′	260′
600′	110′	4000′	280′
700′	120′	4500′	300′

Spacing for radii not shown may be interpolated from table and rounded to nearest 10′. Spacing shall be 30′-0″ minimum and 300′ maximum.

NOTES

1. First guide post is positioned "S" distance from beginning of curvature.
2. If last guide post beyond the curve is ½ "S" or more, no additional posts are required.
3. If last guide post beyond the curve is less than one half "S", one additional post is required.

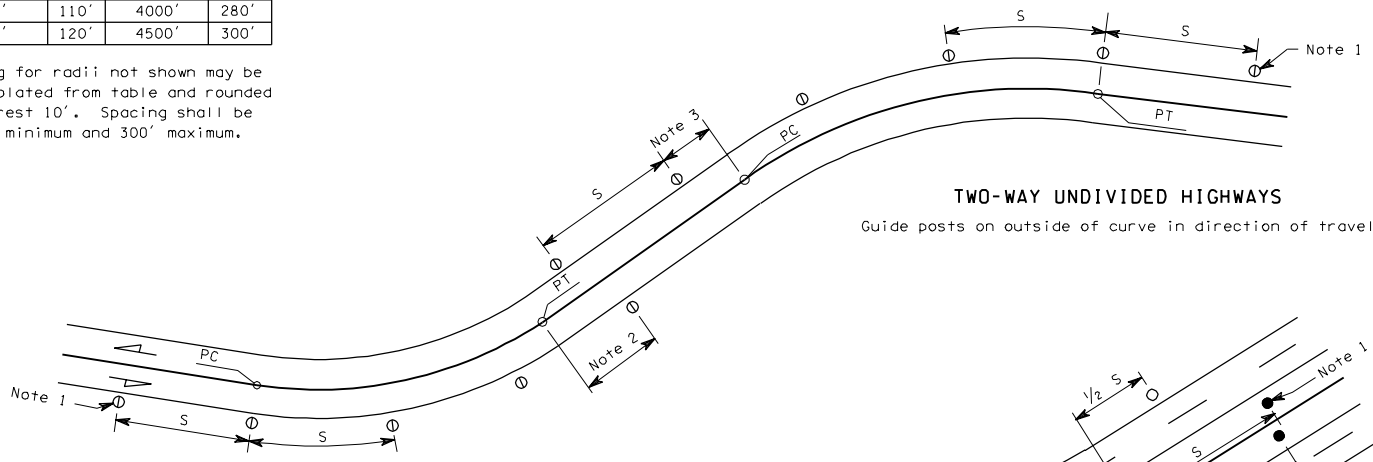

TWO-WAY UNDIVIDED HIGHWAYS

Guide posts on outside of curve in direction of travel

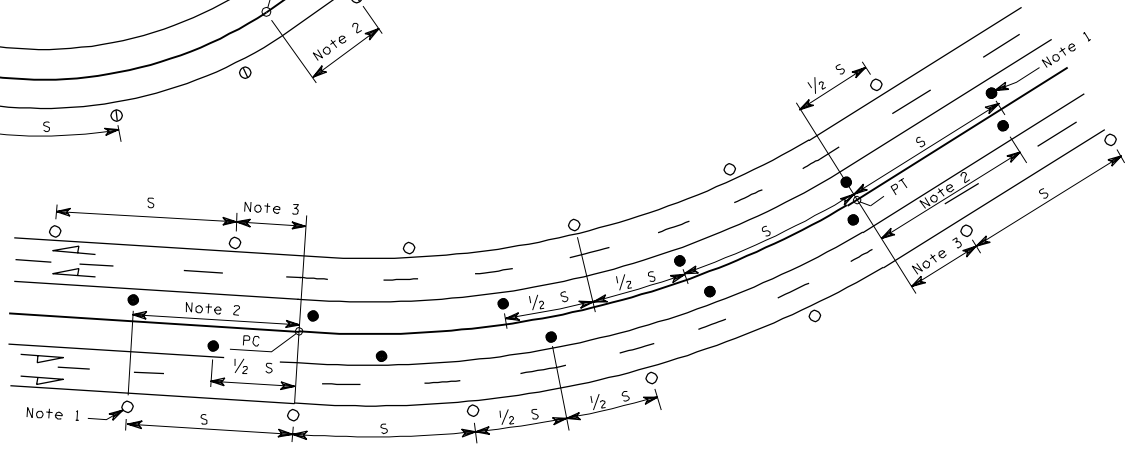

MULTI-LANE DIVIDED HIGHWAYS

Guide posts on inside and outside of curve for each direction of travel

GUIDE POST PLACEMENT FOR HORIZONTAL CURVES

LEGEND
○ Type W
● Type Y
⦶ Type WW

See table in Standard Plan GUIDE POSTS for definition of guide post types

EFFECTIVE: JANUARY 7, 2002 TO AUGUST 4, 2002

EFFECTIVE: JANUARY 7, 2002 TO AUGUST 4, 2002

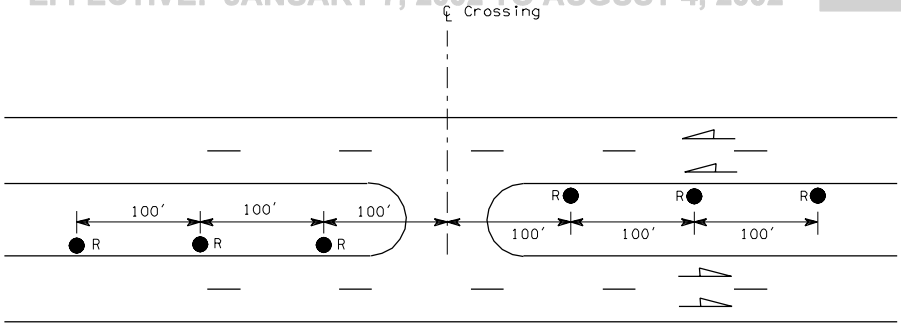

MEDIAN CROSSOVERS

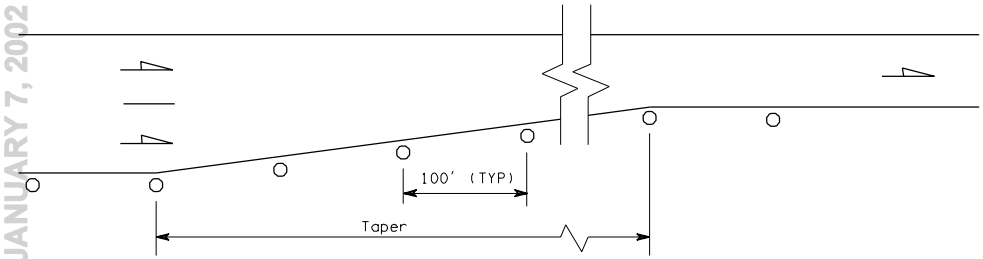

LANE REDUCTIONS

LEGEND
○ Type W
◐ Type WW
R ● Type YR
G ◐ Type G

See table in Standard Plan GUIDE POSTS for definition of guide post types.

"R" indicates the side of the guide posts with the red reflective sheeting.

"G" shows the side of the guide post where a 3" x 8" piece of green reflective sheeting shall be placed below the white sheeting.

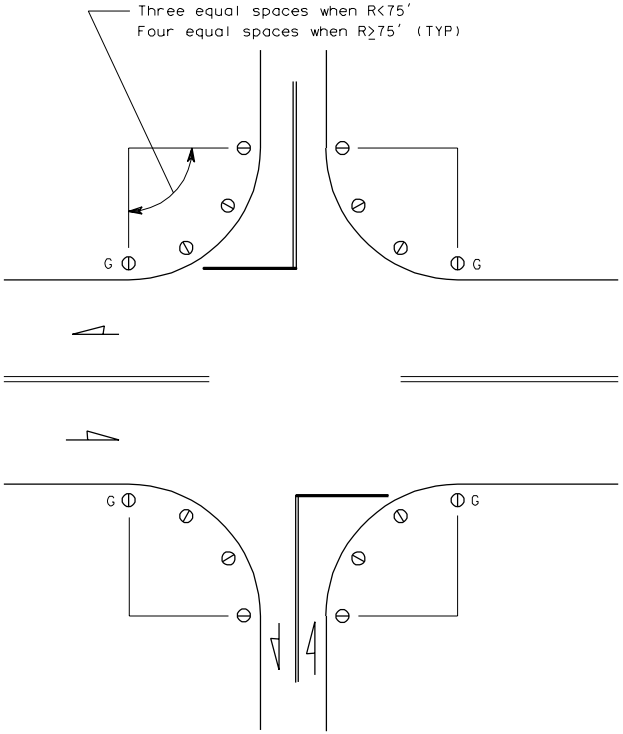

UNDIVIDED HIGHWAY

MISCELLANEOUS
GUIDE POST PLACEMENT

EFFECTIVE: JANUARY 7, 2002 TO AUGUST 4, 2002

EFFECTIVE: JANUARY 7, 2002 TO AUGUST 4, 2002
EFFECTIVE: JANUARY 7, 2002 TO AUGUST 4, 2002

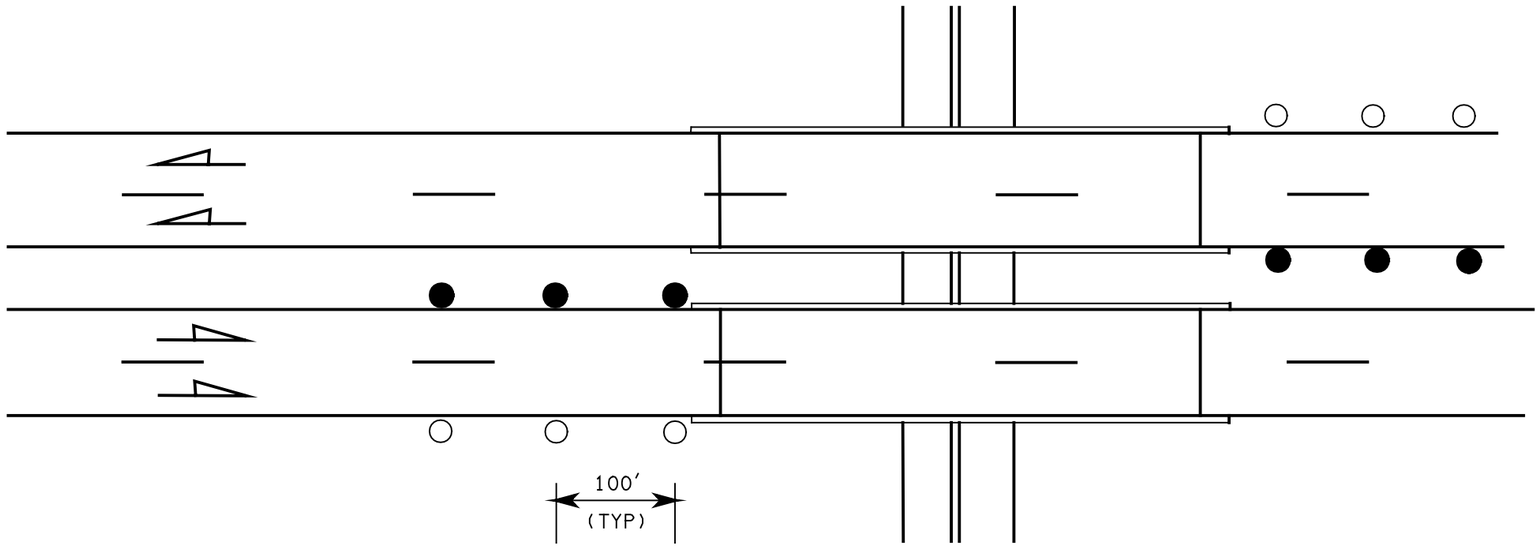

DIVIDED HIGHWAY

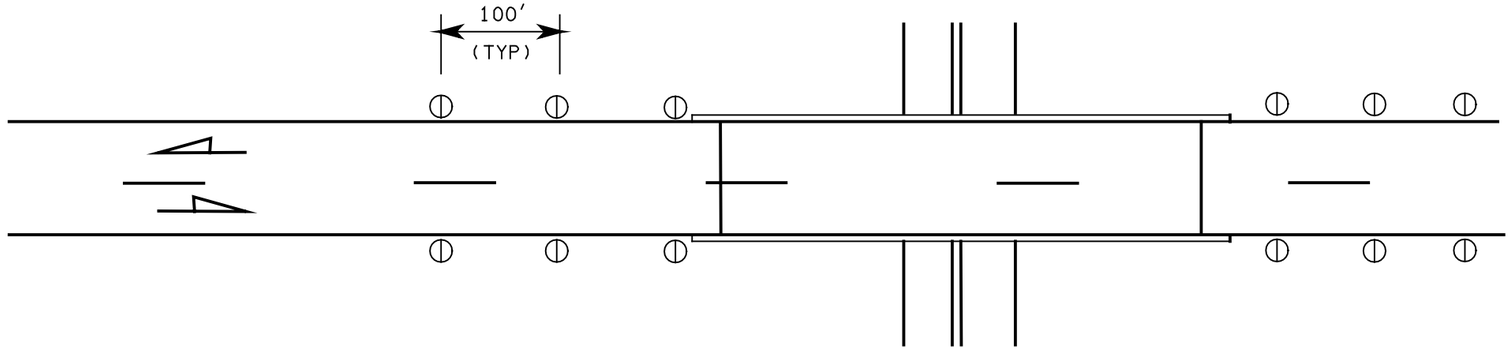

UNDIVIDED HIGHWAY

LEGEND	
○	Type W
●	Type Y
◫	Type WW

See table in Standard Plan H-1 for definition of guide post types

TOBY D. RICKMAN
STATE OF WASHINGTON
24655
REGISTERED
PROFESSIONAL ENGINEER

EXPIRES OCTOBER 26, 2000

GUIDE POST PLACEMENT FOR BRIDGES STANDARD PLAN H-1e

NOTE: THIS PLAN IS NOT A LEGAL ENGINEERING DOCUMENT BUT AN ELECTRONIC DUPLICATE THE ORIGINAL, SIGNED BY THE ENGINEER AND APPROVED FOR PUBLICATION, IS KEPT ON FILE AT THE WASHINGTON STATE DEPARTMENT OF TRANSPORTATION. A COPY MAY BE OBTAINED UPON REQUEST.

APPROVED FOR PUBLICATION

Clifford E. Mansfield 4/14/00

DEPUTY STATE DESIGN ENGINEER — DATE

WASHINGTON STATE DEPARTMENT OF TRANSPORTATION
OLYMPIA, WASHINGTON

DATE	REVISION	BY
3/00	NEW STAMP & APPROVAL DATE	TWS

EFFECTIVE: JANUARY 7, 2002 TO AUGUST 4, 2002
EFFECTIVE: JANUARY 7, 2002 TO AUGUST 4, 2002
EFFECTIVE: JANUARY 7, 2002 TO AUGUST 4, 2002

EFFECTIVE: JANUARY 7, 2002 TO AUGUST 4, 2002

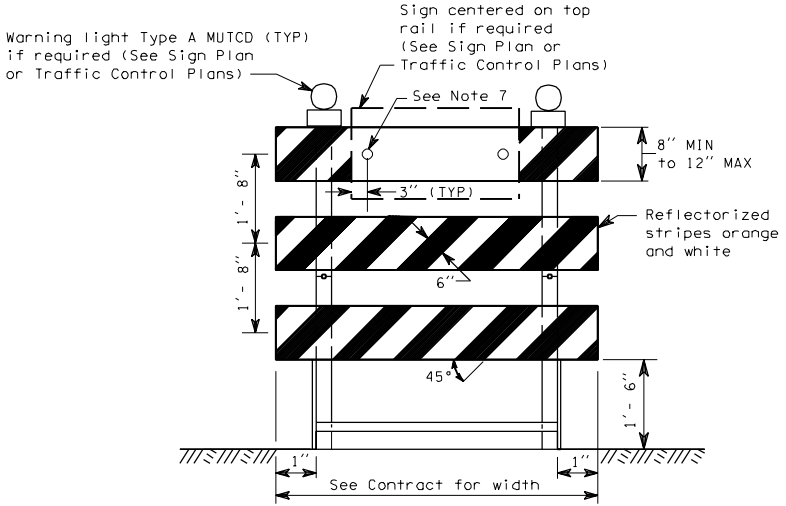

FRONT VIEW
("right" (R) barricade shown)

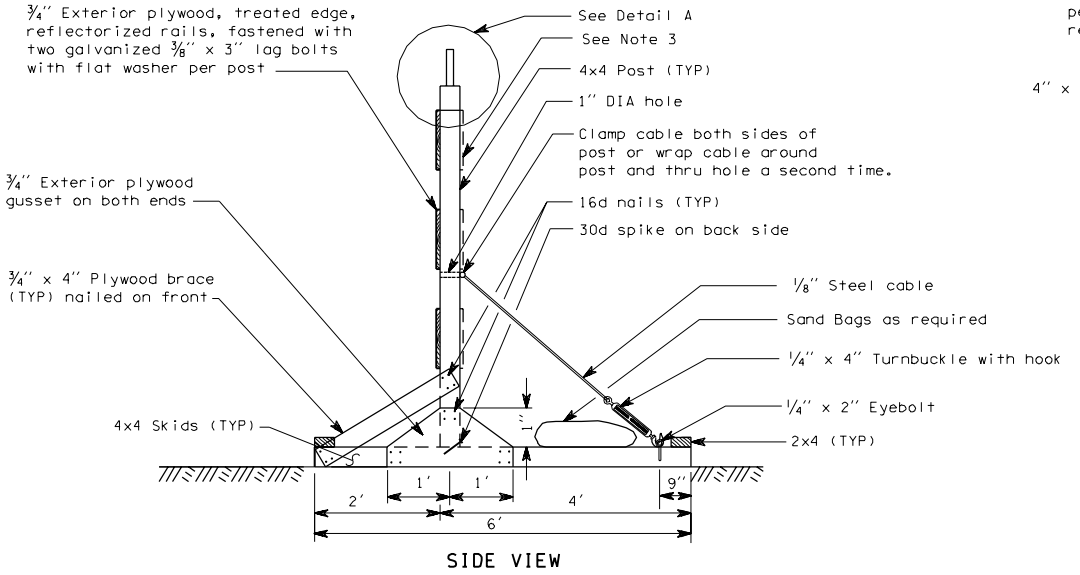

SIDE VIEW

NOTES

1. Barricades shall be installed in accordance with part VI of the MUTCD.
2. Sand bags shall not be stacked.
3. Rails shall be placed both front and back of barricade if required for two-way traffic. Rails shall be the same size.
4. Lumber shall be standard grade or better.
5. Right (R) barricades are placed to the right of traffic. Left (L) barricades are on the left of traffic.
6. Where a barricade extends entirely across a roadway, The stripes shall slope downward in the direction toward which traffic must turn in detouring. Where both right and left turns are allowed, the chevron striping shall slope downward in both directions from the center of the barricade.
7. If sign is required field drill two holes to accommodate ⅜" machine bolt, washer and nut. The sign shall be installed so that the center rail is not covered.

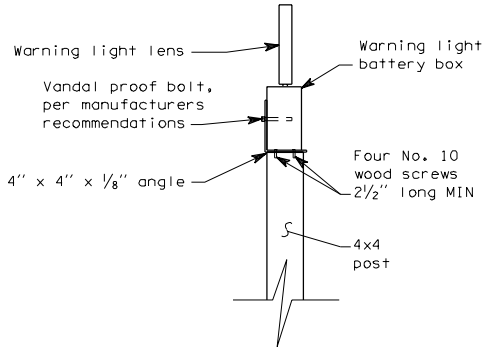

DETAIL A

TYPE III BARRICADE

EFFECTIVE: JANUARY 7, 2002 TO AUGUST 4, 2002

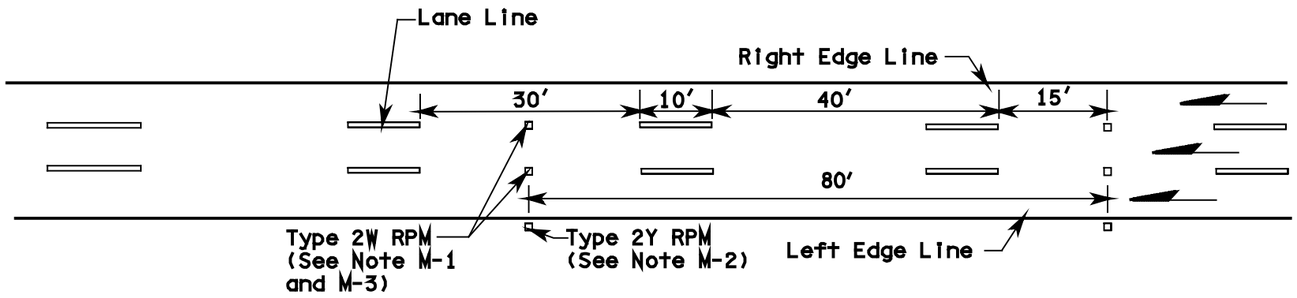

RPM POSITIONING GUIDE SPACING FOR MULTILANE ONE WAY TRAFFIC

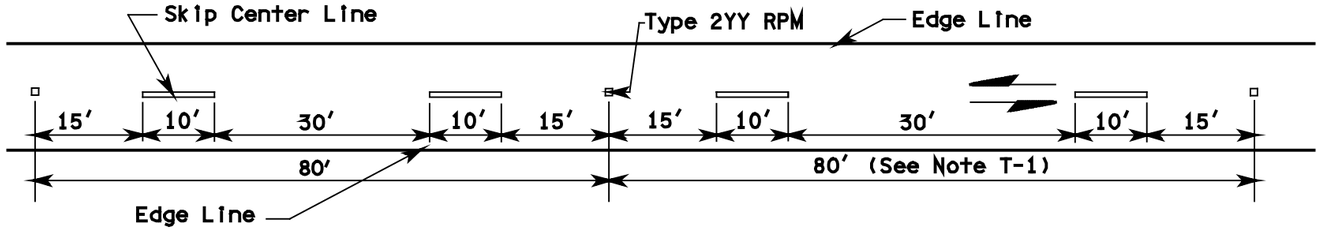

RPM POSITIONING GUIDE SPACING FOR TWO LANE TWO WAY TRAFFIC

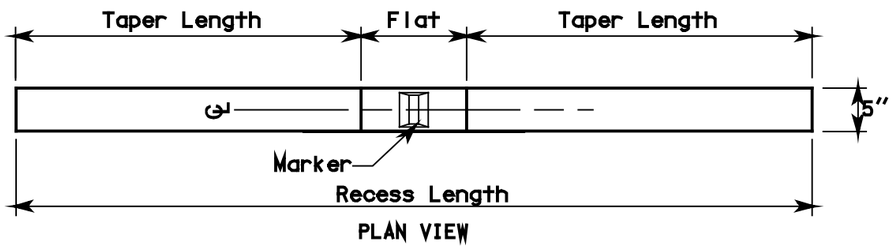

PLAN VIEW

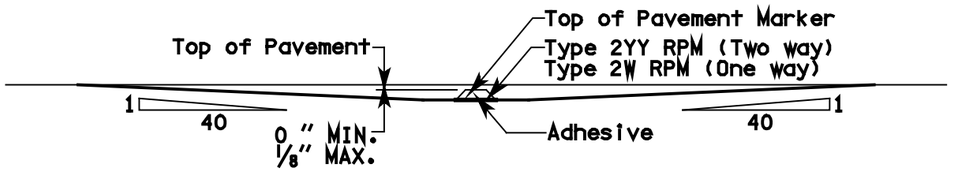

ELEVATION VIEW

RECESSED PAVEMENT MARKER DETAILS

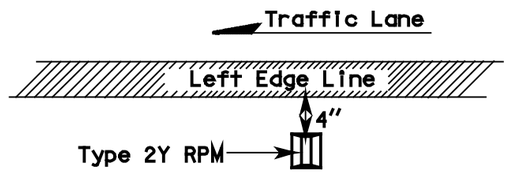

LEFT EDGE OF LANE PLACEMENT
(see Note M-2)

NOTES:

1. Recessed pavement markers, when specified, shall be installed at the locations shown for Type 2W RPM's on multilane one way roadways, and type 2YY RPM's on two lane two way roadways.

MULTILANE ONE WAY TRAFFIC

M-1. For lane lines, Type 2W RPM's shall be spaced at 80' intervals on tangents and horizontal curves with a radius of 5000' or more, and 40' intervals on horizontal curves having radii of less than 5000'.

M-2. When specified, Type 2Y RPM's shall be placed outside the left edge line. Placement is shown on "Left Edge of Lane Placement".

TWO LANE TWO WAY TRAFFIC

T-1. For center lines, Type 2YY RPM's shall be spaced at 80' intervals on tangents and horizontal curves with a radius of 5000' or more, and 40' intervals on horizontal curves having radii less than 5000' Type 2YY RPM's are to be centered between skip lines.

Type 2 RPM Raised Face Colors	
Type 2YY	yellow and yellow
Type 2W	white - one side only
Type 2Y	yellow - one side only
Type 1 RPM Colors	
Type 1W	white
Type 1Y	yellow

TOBY D. RICKMAN
STATE OF WASHINGTON
24655
REGISTERED
PROFESSIONAL ENGINEER

EXPIRES OCTOBER 26, 2000

RAISED PAVEMENT MARKING DETAILS STANDARD PLAN H-3

NOTE: THIS PLAN IS NOT A LEGAL ENGINEERING DOCUMENT BUT AN ELECTRONIC DUPLICATE THE ORIGINAL, SIGNED BY THE ENGINEER AND APPROVED FOR PUBLICATION, IS KEPT ON FILE AT THE WASHINGTON STATE DEPARTMENT OF TRANSPORTATION. A COPY MAY BE OBTAINED UPON REQUEST.

DATE	REVISION	BY
3/00	DELETED RED RPM's & MODIFIED "RECESSED PAVEMENT MARKER DETAILS".	TWS

APPROVED FOR PUBLICATION

Clifford E. Mansfield 4/14/00

DEPUTY STATE DESIGN ENGINEER — DATE

WASHINGTON STATE DEPARTMENT OF TRANSPORTATION
OLYMPIA, WASHINGTON

EFFECTIVE: JANUARY 7, 2002 TO AUGUST 4, 2002

EFFECTIVE: JANUARY 7, 2002 TO AUGUST 4, 2002

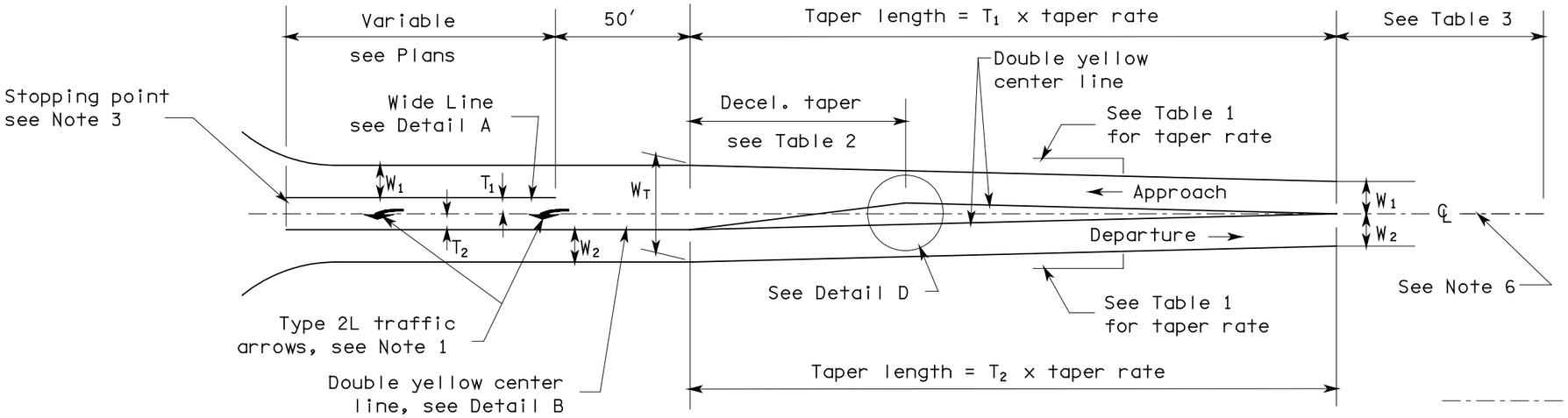

LEFT TURN LANE

NOTES:

1. First Type 2L arrow is installed 50' back of stop bar or crosswalk. Second arrow is located 100' back, or at left turn pocket.
2. "S" = 140' for posted speed < 50 MPH.
   "S" = 170' for posted speed ≥ 50 MPH.
3. Stopping point shall be marked with stop bar only when mainline movement is controlled by a stop sign or traffic signal.
4. Raised pavement markers shall be installed only when specified in the Contract Plans.
5. See Standard Plan H-3 for marker designation.
6. No Pass Line on approach side with skip center line on departure side unless Double Yellow Center Line is required in the contract.

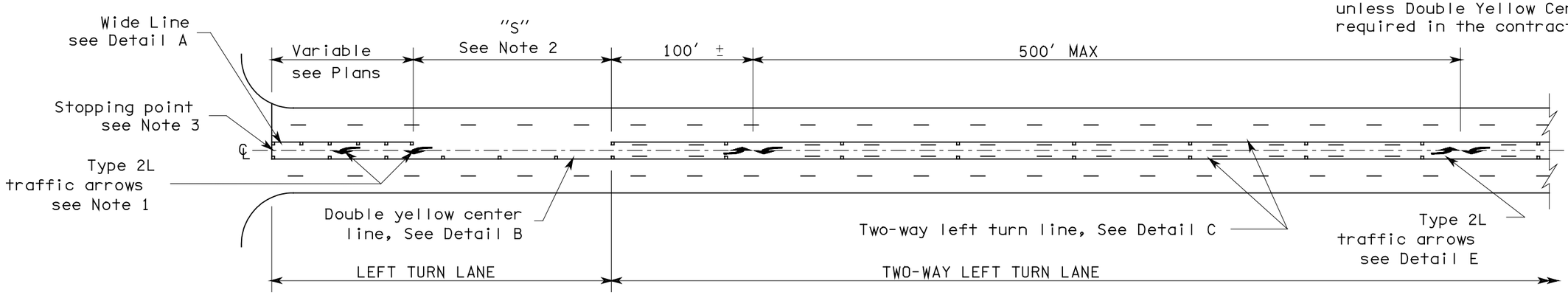

TWO-WAY LEFT TURN LANE

TABLE 1	
Posted Speed	Taper Rate
60 mph	60:1
55 mph	55:1
50 mph	50:1
45 mph	45:1
40 mph	40:1
35 mph	35:1
30 mph	30:1
25 mph	25:1

TABLE 2	
Posted Speed	Decel. Taper Length
60 mph	180'
55 mph	165'
50 mph	150'
45 mph	135'
40 mph	120'
35 mph	105'
30 mph	90'
25 mph	75'

TABLE 3	
Posted Speed	No pass length (Minimum)
60 mph	790'
55 mph	725'
50 mph	660'
45 mph	590'
40 mph	360'
35 mph	260'
30 mph	200'
25 mph	150'

W_1 = Approaching through lane

W_2 = Departing lane

T_1 = Width of left turn lane on approach side of ℄

T_2 = Width of left turn lane on departure side of ℄

W_T = Total width of channelization ($W_1 + W_2 + T_1 + T_2$)

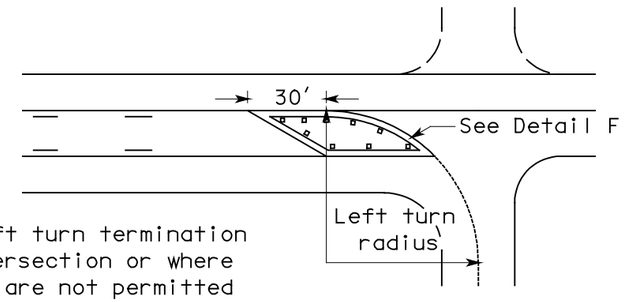

Two way left turn termination at tee intersection or where left turns are not permitted and two way left turn is not continued beyond intersection.

END TWO-WAY LEFT TURN LANE

TOBY D. RICKMAN
STATE OF WASHINGTON
24655
REGISTERED
PROFESSIONAL ENGINEER

EXPIRES OCTOBER 26, 2000

PAVEMENT MARKING DETAILS

STANDARD PLAN H-3a

SHEET 1 OF 2 SHEETS

NOTE: THIS PLAN IS NOT A LEGAL ENGINEERING DOCUMENT BUT AN ELECTRONIC DUPLICATE OF THE ORIGINAL, SIGNED BY THE ENGINEER AND APPROVED FOR PUBLICATION, IS KEPT ON FILE AT THE WASHINGTON STATE DEPARTMENT OF TRANSPORTATION. A COPY MAY BE OBTAINED UPON REQUEST.

APPROVED FOR PUBLICATION

Clifford E. Mansfield 6/23/00

DEPUTY STATE DESIGN ENGINEER — DATE

WASHINGTON STATE DEPARTMENT OF TRANSPORTATION
OLYMPIA, WASHINGTON

DATE	REVISION	BY
5/00	CHANGE "GORE STRIPE" TO "WIDE LINE". CHANGE WIDE TRAFFIC ARROWS TO NARROW TRAFFIC ARROWS. ADDED 60 mph TO TABLE 1, 2, AND 3. NOTE 6 ADDED.	TWS

EFFECTIVE: JANUARY 7, 2002 TO AUGUST 4, 2002

EFFECTIVE: JANUARY 7, 2002 TO AUGUST 4, 2002

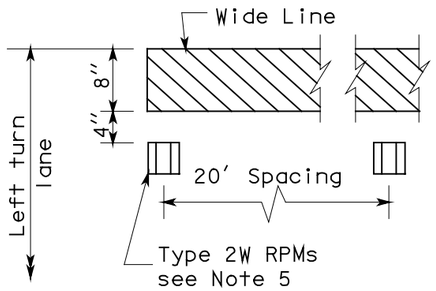

DETAIL A

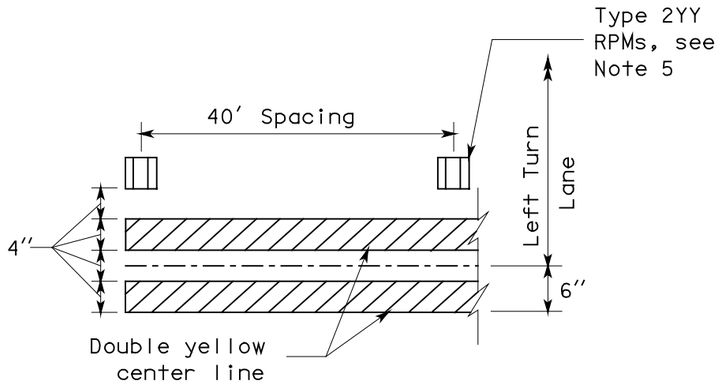

DETAIL B

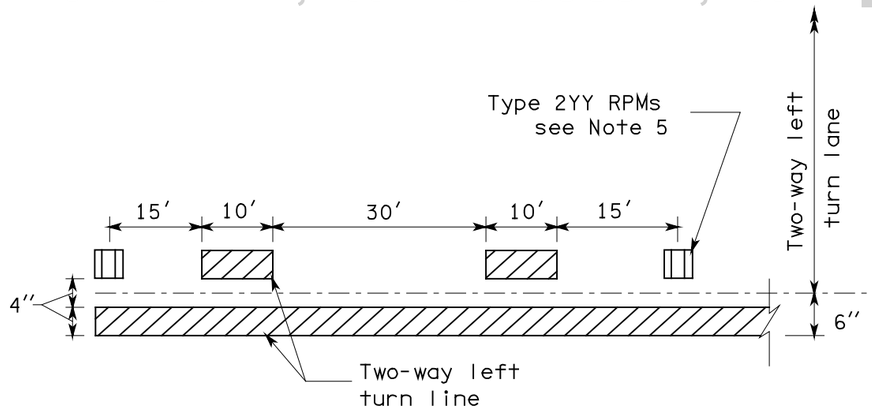

DETAIL C

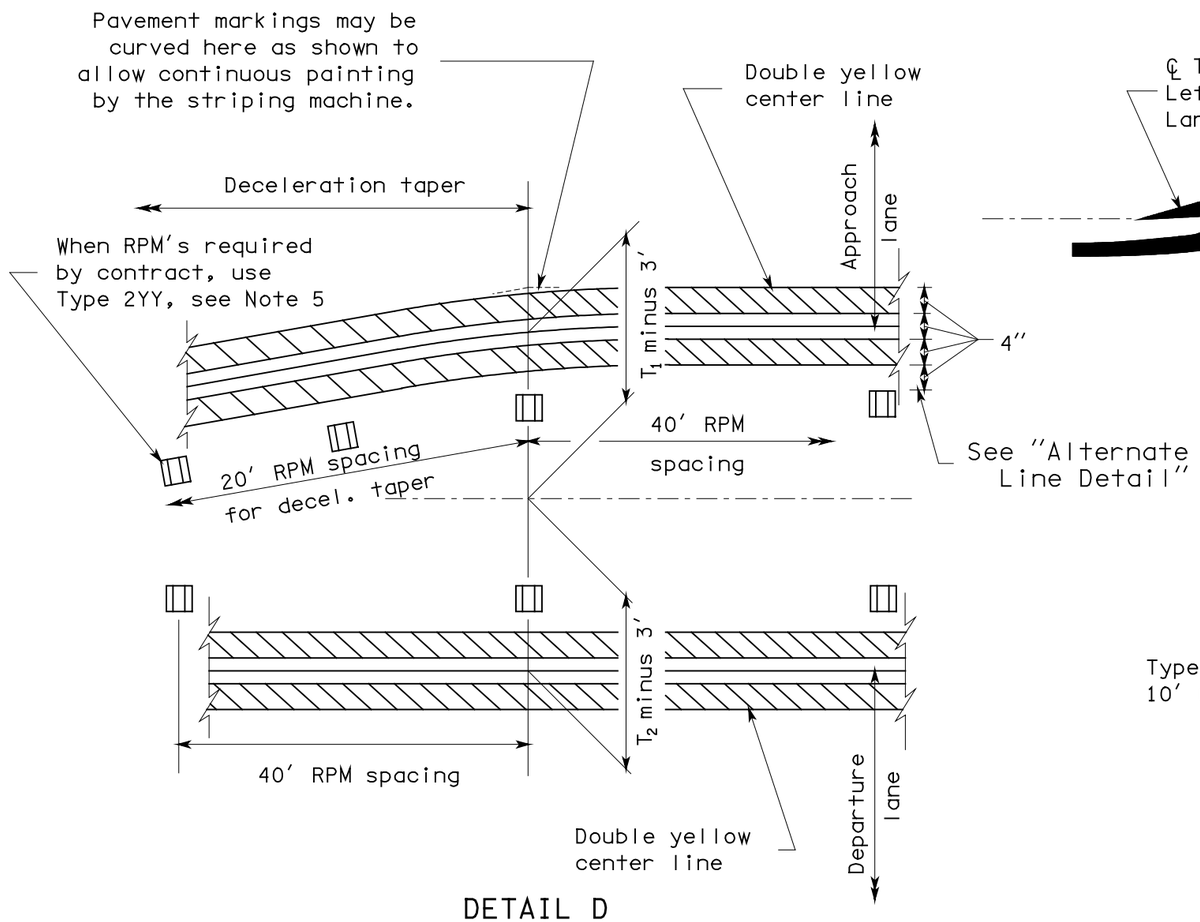

DETAIL D

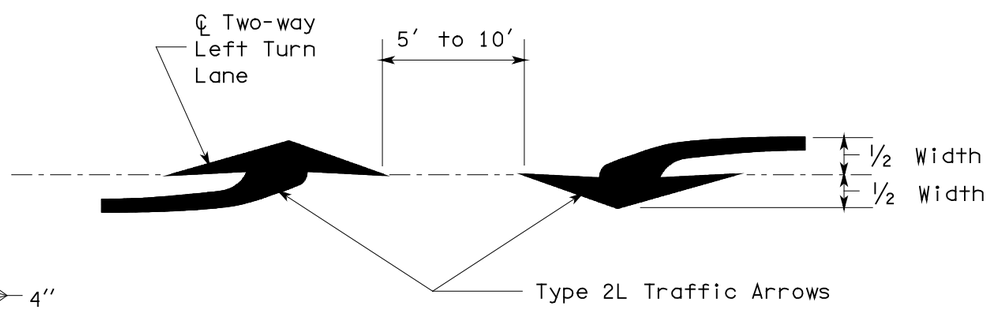

DETAIL E

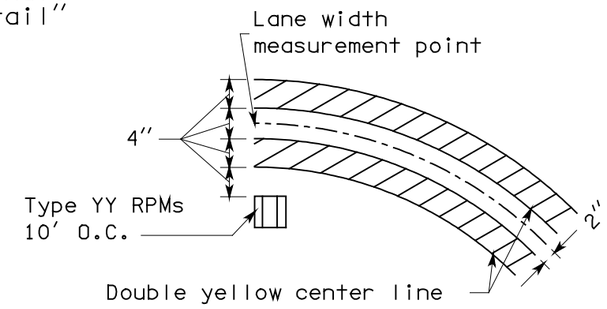

DETAIL F

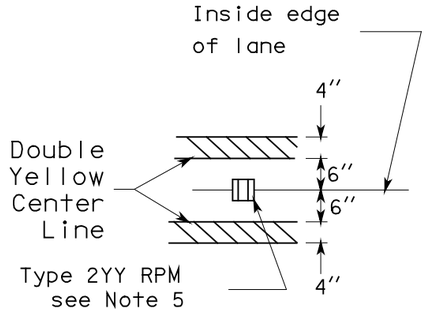

ALTERNATE LINE DETAIL

EXPIRES OCTOBER 26, 2000

PAVEMENT MARKING DETAILS

STANDARD PLAN H-3a

SHEET 2 OF 2 SHEETS

NOTE: THIS PLAN IS NOT A LEGAL ENGINEERING DOCUMENT BUT AN ELECTRONIC DUPLICATE. THE ORIGINAL, SIGNED BY THE ENGINEER AND APPROVED FOR PUBLICATION, IS KEPT ON FILE AT THE WASHINGTON STATE DEPARTMENT OF TRANSPORTATION. A COPY MAY BE OBTAINED UPON REQUEST.

APPROVED FOR PUBLICATION

Clifford E. Mansfield 6/23/00

DEPUTY STATE DESIGN ENGINEER — DATE

WASHINGTON STATE DEPARTMENT OF TRANSPORTATION
OLYMPIA, WASHINGTON

DATE	REVISION	BY
5/00	CHANGED "GORE STRIPE" TO "WIDE LINE". CHANGED WIDE TRAFFIC ARROWS TO NARROW TRAFFIC ARROWS.	TWS

EFFECTIVE: JANUARY 7, 2002 TO AUGUST 4, 2002

EFFECTIVE: JANUARY 7, 2002 TO AUGUST 4, 2002

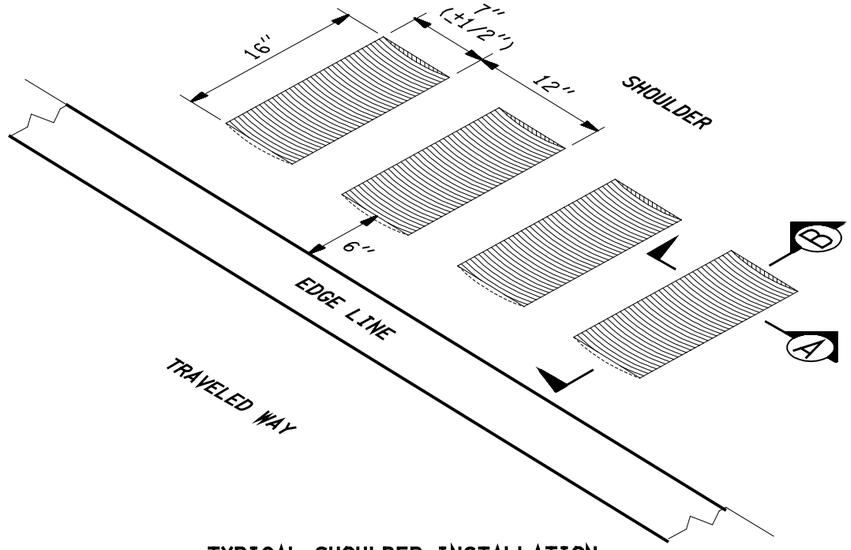

TYPICAL SHOULDER INSTALLATION

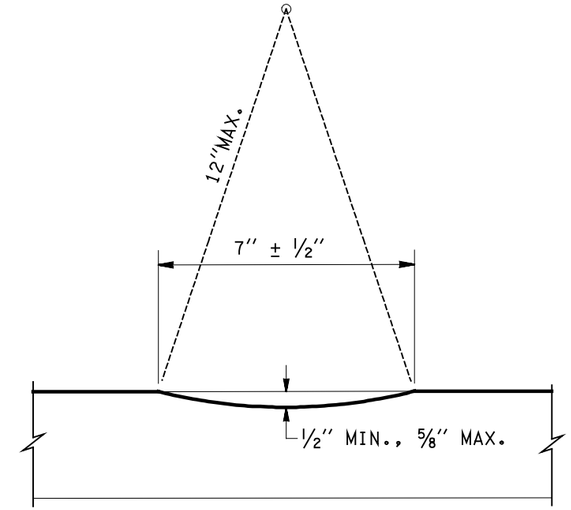

Ⓐ SECTION

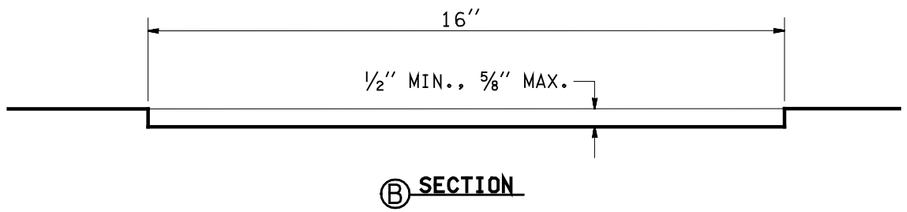

Ⓑ SECTION

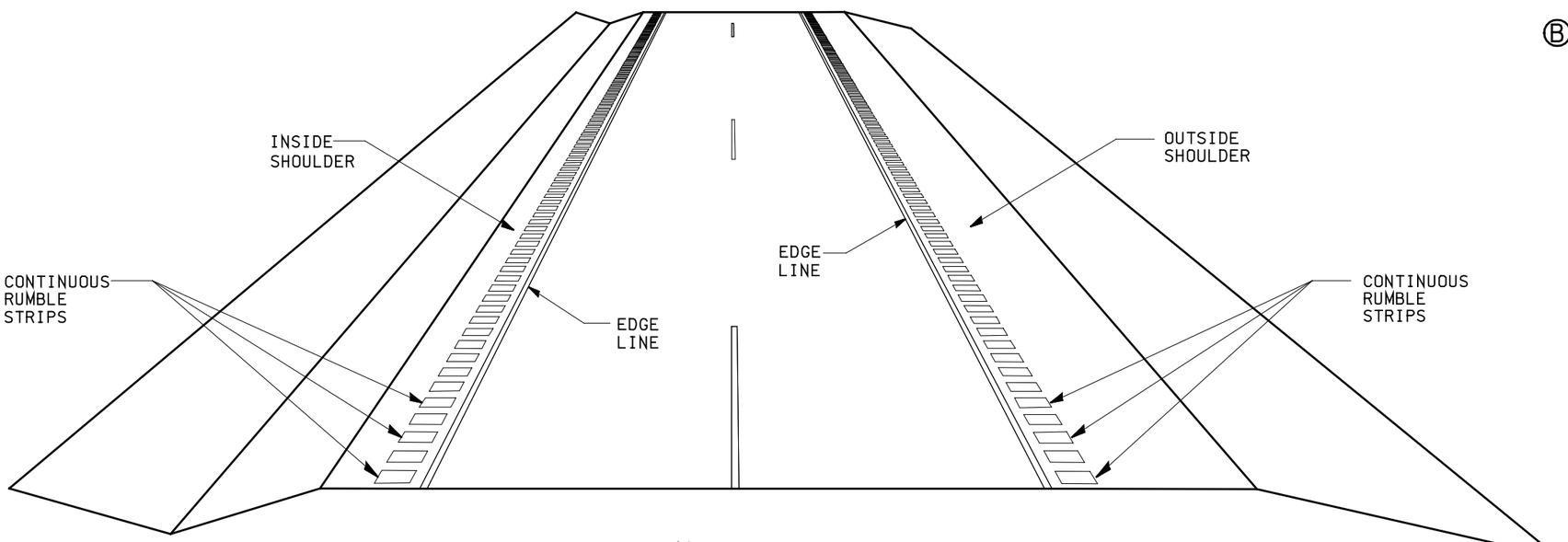

PERSPECTIVE VIEW (MULTI-LANE DIVIDED ROADWAY)

CLIFFORD E. MANSFIELD
STATE OF WASHINGTON
15224
REGISTERED
PROFESSIONAL ENGINEER

EXPIRES MAY 3, 2000

CONTINUOUS SHOULDER RUMBLE STRIPS
STANDARD PLAN H-4

SHEET 1 OF 3 SHEETS

NOTE: THIS PLAN IS NOT A LEGAL ENGINEERING DOCUMENT BUT AND ELECTRONIC DUPLICATE. THE ORIGINAL, SIGNED BY THE ENGINEER AND APPROVED FOR PUBLICATION, IS KEPT ON FILE AT THE WASHINGTON STATE DEPARTMENT OF TRANSPROTATION. A COPY MAY BE OBTAINED UPON REQUEST.

DATE	REVISION	BY
2/00	CHANGED "EDGE STRIPE" TO "EDGE LINE".	TWS

APPROVED FOR PUBLICATION

Clifford E. Mansfield — *2/18/00*

DEPUTY STATE DESIGN ENGINEER — DATE

WASHINGTON STATE DEPARTMENT OF TRANSPORTATION
OLYMPIA, WASHINGTON

EFFECTIVE: JANUARY 7, 2002 TO AUGUST 4, 2002

EFFECTIVE: JANUARY 7, 2002 TO AUGUST 4, 2002
EFFECTIVE: JANUARY 7, 2002 TO AUGUST 4, 2002

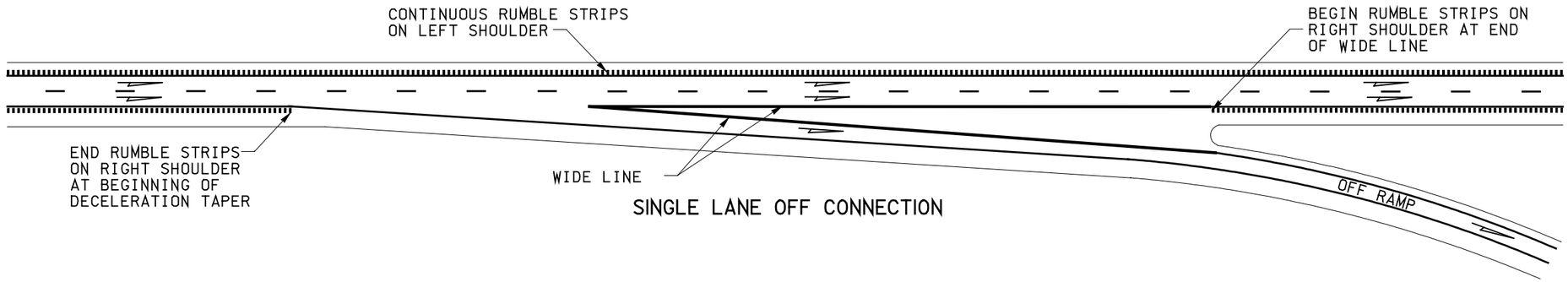

SINGLE LANE OFF CONNECTION

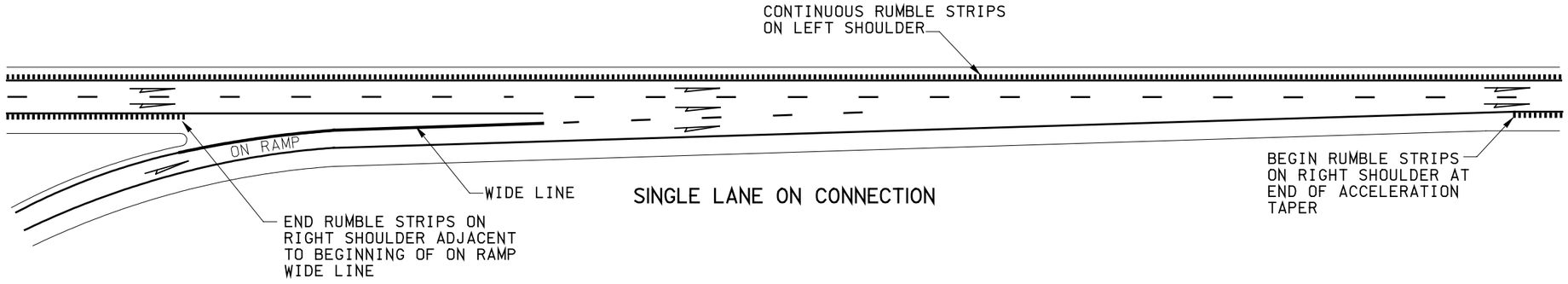

SINGLE LANE ON CONNECTION

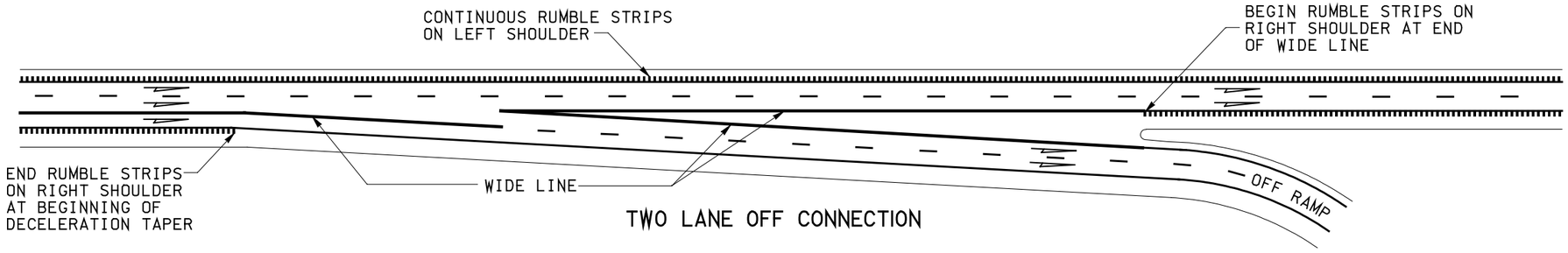

TWO LANE OFF CONNECTION

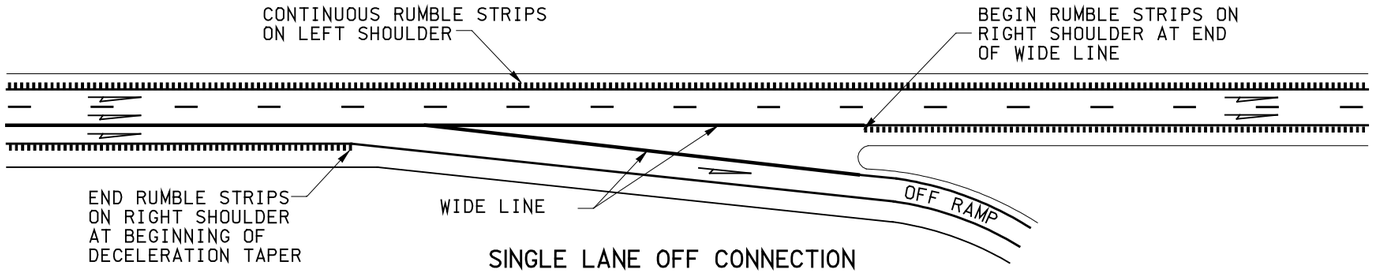

SINGLE LANE OFF CONNECTION
FOR ONE LANE REDUCTION

EXPIRES MAY 3, 2000

CONTINUOUS SHOULDER RUMBLE STRIPS
STANDARD PLAN H-4

NOTE: THIS PLAN IS NOT A LEGAL ENGINEERING DOCUMENT BUT AND ELECTRONIC DUPLICATE. THE ORIGINAL, SIGNED BY THE ENGINEER AND APPROVED FOR PUBLICATION, IS KEPT ON FILE AT THE WASHINGTON STATE DEPARTMENT OF TRANSPROTATION. A COPY MAY BE OBTAINED UPON REQUEST.

DATE	REVISION	BY
2/00	CHANGED "GORE STRIPE" TO "WIDE LINE".	TWS

APPROVED FOR PUBLICATION

Clifford E. Mansfield — DEPUTY STATE DESIGN ENGINEER — *2/18/00* DATE

WASHINGTON STATE DEPARTMENT OF TRANSPORTATION
OLYMPIA, WASHINGTON

EFFECTIVE: JANUARY 7, 2002 TO AUGUST 4, 2002
EFFECTIVE: JANUARY 7, 2002 TO AUGUST 4, 2002

EFFECTIVE: JANUARY 7, 2002 TO AUGUST 4, 2002

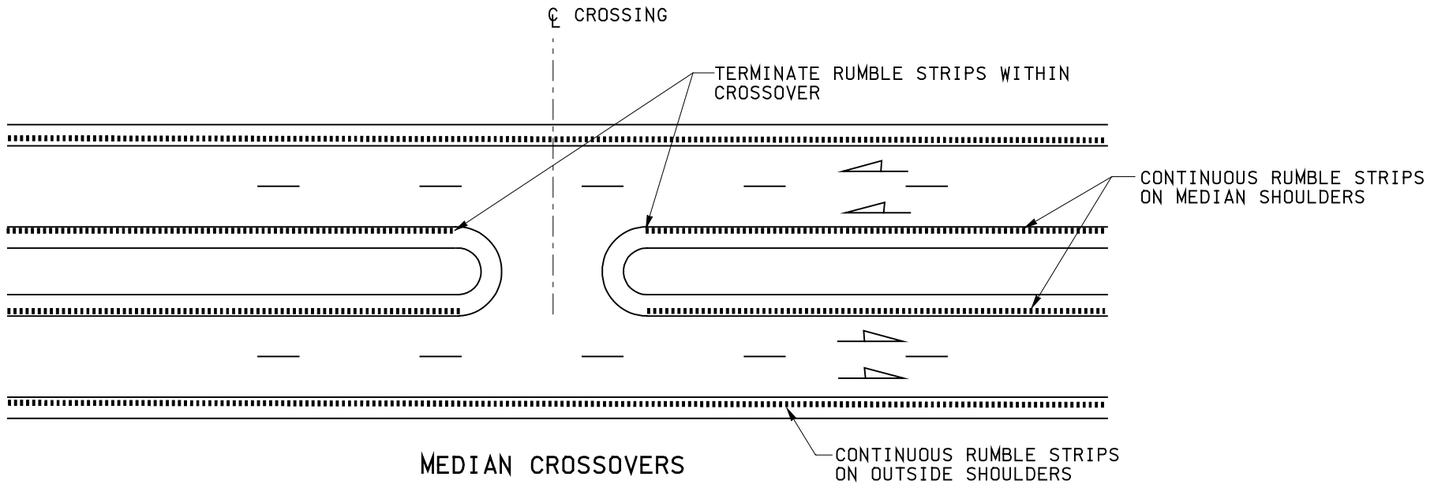

MEDIAN CROSSOVERS

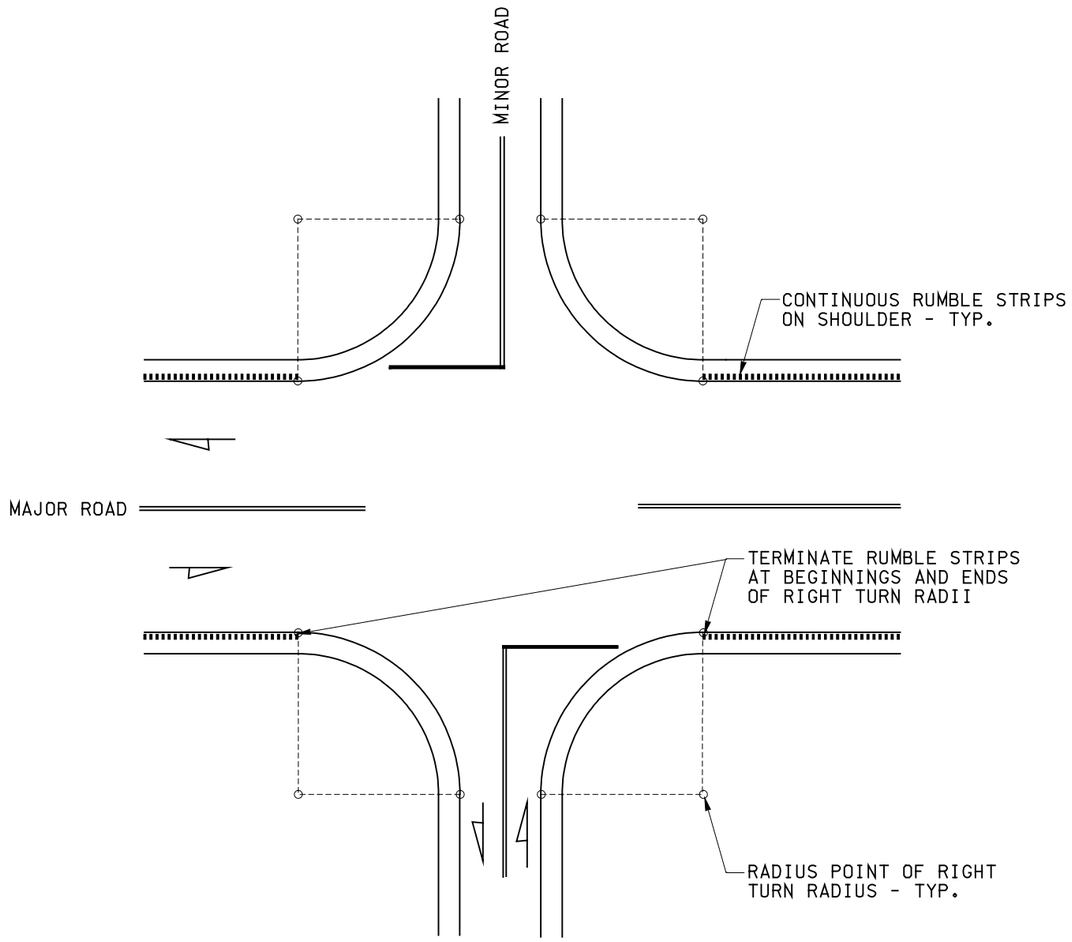

UNDIVIDED HIGHWAY

CLIFFORD E. MANSFIELD
STATE OF WASHINGTON
15224
REGISTERED
PROFESSIONAL ENGINEER

EXPIRES MAY 3, 2000

CONTINUOUS SHOULDER RUMBLE STRIPS
STANDARD PLAN H-4

NOTE: THIS PLAN IS NOT A LEGAL ENGINEERING DOCUMENT BUT AND ELECTRONIC DUPLICATE THE ORIGINAL, SIGNED BY THE ENGINEER AND APPROVED FOR PUBLICATION, IS KEPT ON FILE AT THE WASHINGTON STATE DEPARTMENT OF TRANSPROTATION. A COPY MAY BE OBTAINED UPON REQUEST.

DATE	REVISION	BY
2/00	NEW APPROVAL DATE.	TWS

APPROVED FOR PUBLICATION

Clifford E. Mansfield — *2/18/00*

DEPUTY STATE DESIGN ENGINEER — DATE

WASHINGTON STATE DEPARTMENT OF TRANSPORTATION
OLYMPIA, WASHINGTON

EFFECTIVE: JANUARY 7, 2002 TO AUGUST 4, 2002

EFFECTIVE: JANUARY 7, 2002 TO AUGUST 4, 2002

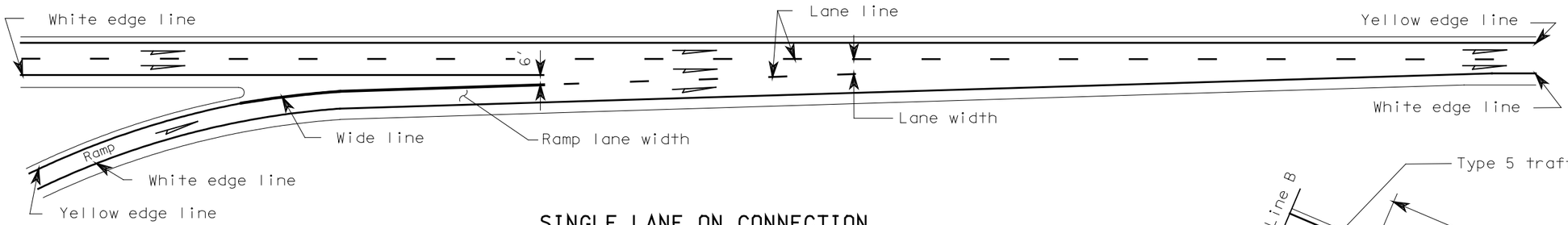

SINGLE LANE ON CONNECTION

NOTE:
Where shown on the plans or specified in special provisions, raised pavement markers shall be used to supplement or substitute for the painted pavement markings shown hereon.

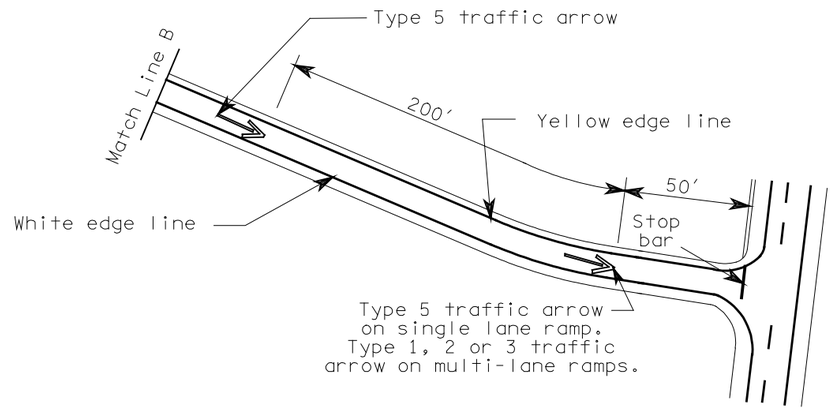

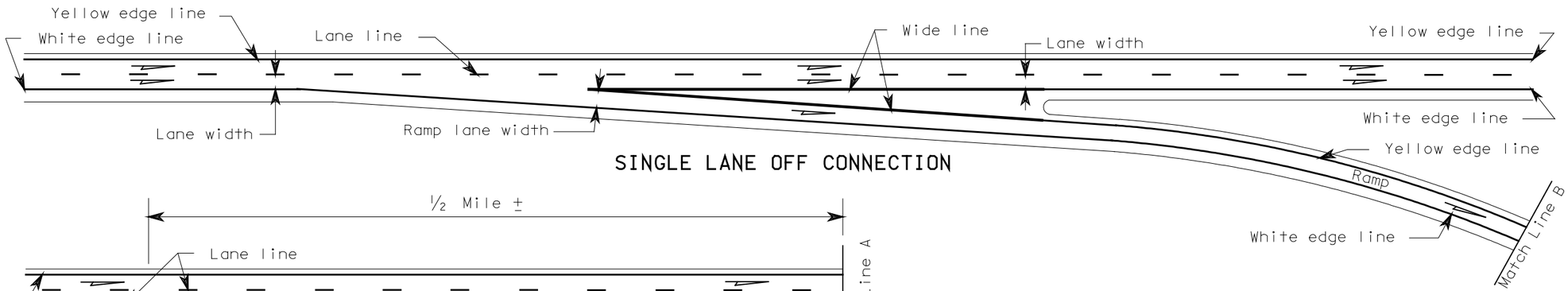

SINGLE LANE OFF CONNECTION

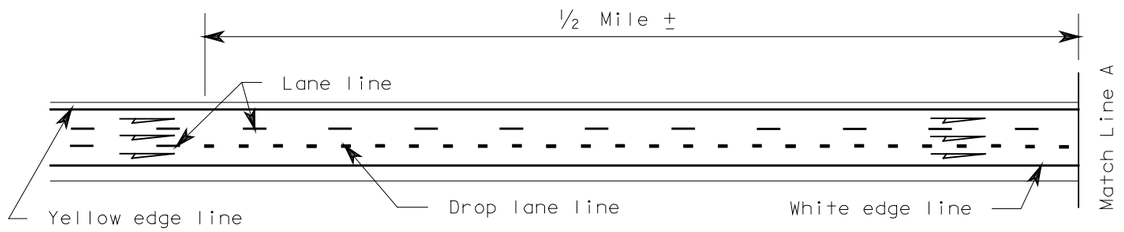

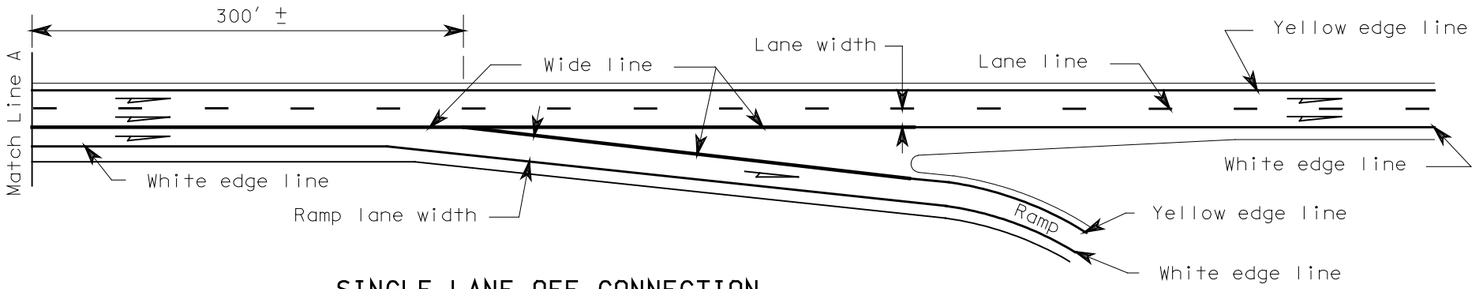

SINGLE LANE OFF CONNECTION FOR ONE LANE REDUCTION

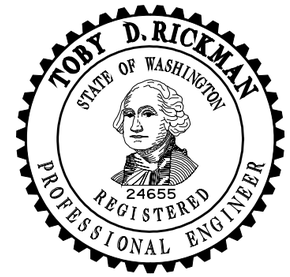

EXPIRES OCTOBER 26, 2000

PAVEMENT MARKING DETAILS
STANDARD PLAN H-5

NOTE: THIS PLAN IS NOT A LEGAL ENGINEERING DOCUMENT BUT AN ELECTRONIC DUPLICATE. THE ORIGINAL, SIGNED BY THE ENGINEER AND APPROVED FOR PUBLICATION, IS KEPT ON FILE AT THE WASHINGTON STATE DEPARTMENT OF TRANSPORTATION. A COPY MAY BE OBTAINED UPON REQUEST.

APPROVED FOR PUBLICATION

Clifford E. Mansfield 2/18/00

DEPUTY STATE DESIGN ENGINEER — DATE

WASHINGTON STATE DEPARTMENT OF TRANSPORTATION
OLYMPIA, WASHINGTON

DATE	REVISION	BY
2/00	CHANGED "GORE STRIPE" TO "WIDE LINE".	TWS

EFFECTIVE: JANUARY 7, 2002 TO AUGUST 4, 2002

EFFECTIVE: JANUARY 7, 2002 TO AUGUST 4, 2002

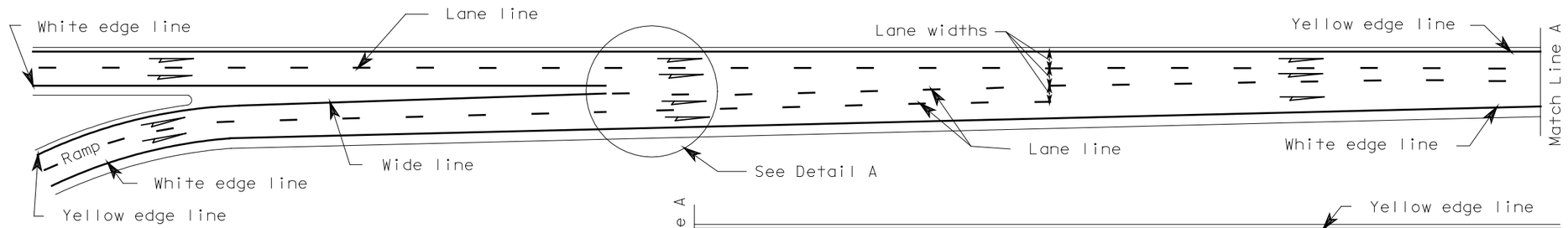

NOTES:

Where indicated on the plans or special provisions, raised pavement markers shall be used to supplement or substitute for painted pavement markings.

TWO LANE ON CONNECTION

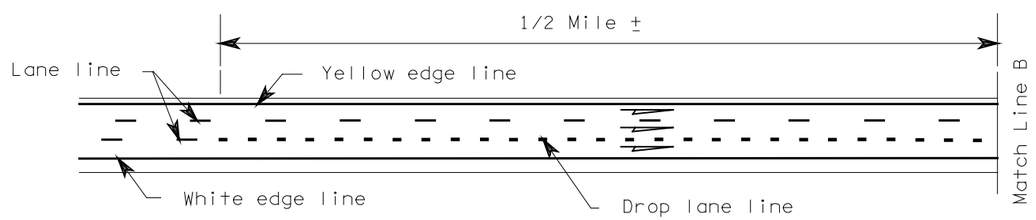

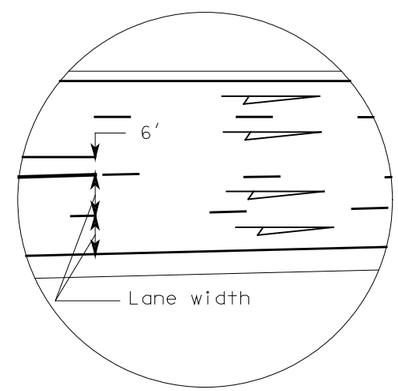

DETAIL A

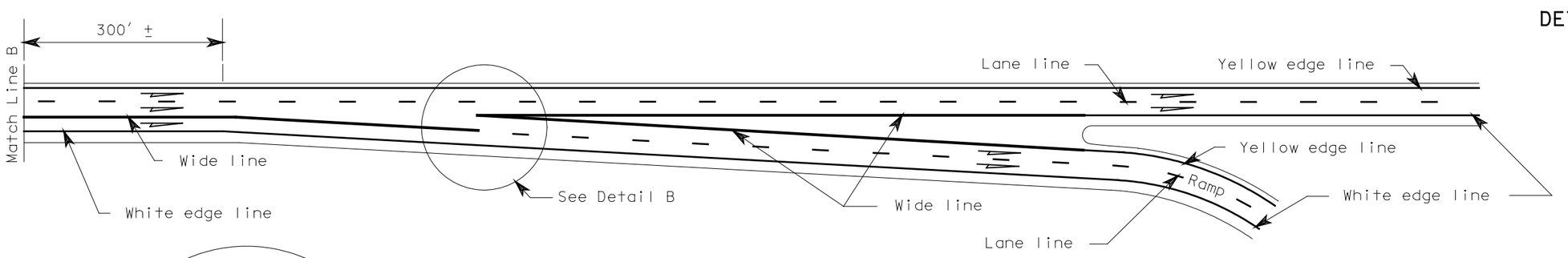

TWO LANE OFF CONNECTION

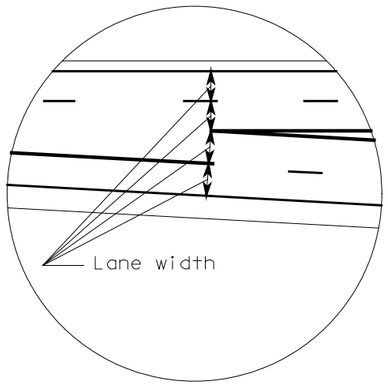

DETAIL B

TOBY D. RICKMAN
STATE OF WASHINGTON
24655
REGISTERED
PROFESSIONAL ENGINEER

EXPIRES OCTOBER 26, 2000

PAVEMENT MARKING DETAILS
STANDARD PLAN H-5a

NOTE: THIS PLAN IS NOT A LEGAL ENGINEERING DOCUMENT BUT AN ELECTRONIC DUPLICATE. THE ORIGINAL, SIGNED BY THE ENGINEER AND APPROVED FOR PUBLICATION, IS KEPT ON FILE AT THE WASHINGTON STATE DEPARTMENT OF TRANSPORTATION. A COPY MAY BE OBTAINED UPON REQUEST.		
2/00	CHANGED "GORE STRIPE" TO "WIDE LINE".	TWS
DATE	REVISION	BY

APPROVED FOR PUBLICATION

Clifford E. Mansfield 2/18/00

DEPUTY STATE DESIGN ENGINEER — DATE

WASHINGTON STATE DEPARTMENT OF TRANSPORTATION
OLYMPIA, WASHINGTON

EFFECTIVE: JANUARY 7, 2002 TO AUGUST 4, 2002

EFFECTIVE: JANUARY 7, 2002 TO AUGUST 4, 2002

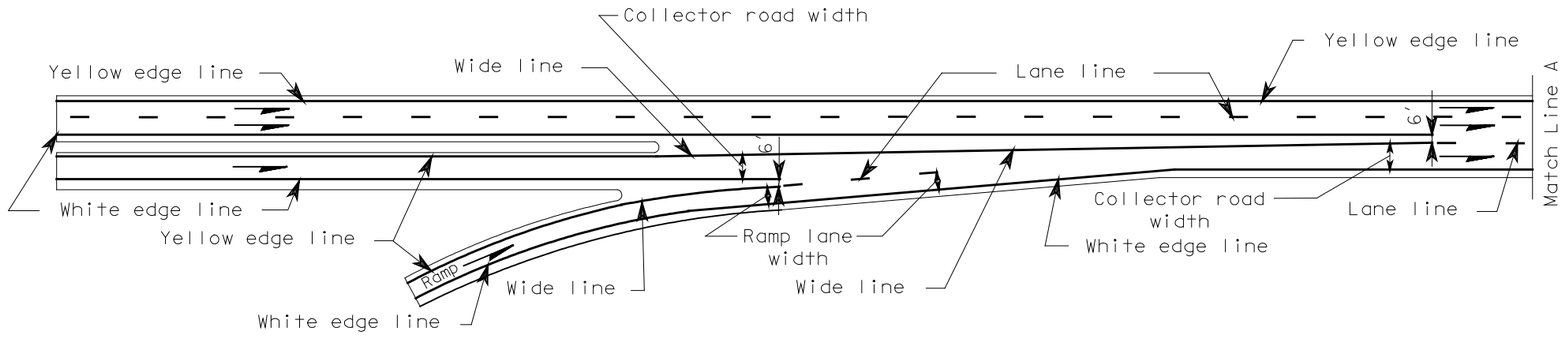

COLLECTOR ROAD ON CONNECTION

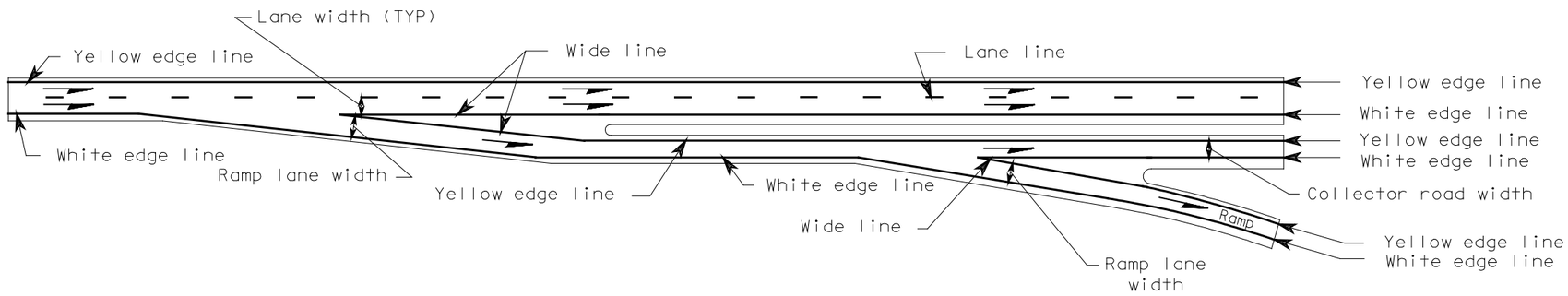

COLLECTOR ROAD OFF CONNECTION

NOTES

Where shown on the plans or specified in special provisions, lane markers shall be used in lieu of or supplementatry to the painted pavement markings shown hereon.

TOBY D. RICKMAN
STATE OF WASHINGTON
24655
REGISTERED
PROFESSIONAL ENGINEER

EXPIRES OCTOBER 26, 2000

PAVEMENT MARKING DETAILS
STANDARD PLAN H-5b

NOTE: THIS PLAN IS NOT A LEGAL ENGINEERING DOCUMENT BUT AN ELECTRONIC DUPLICATE. THE ORIGINAL, SIGNED BY THE ENGINEER AND APPROVED FOR PUBLICATION, IS KEPT ON FILE AT THE WASHINGTON STATE DEPARTMENT OF TRANSPORTATION. A COPY MAY BE OBTAINED UPON REQUEST.

DATE	REVISION	BY
2/00	CHANGED "GORE STRIPE" TO "WIDE LINE".	TWS

APPROVED FOR PUBLICATION

Clifford E. Mansfield 2/18/00

DEPUTY STATE DESIGN ENGINEER — DATE

WASHINGTON STATE DEPARTMENT OF TRANSPORTATION
OLYMPIA, WASHINGTON

EFFECTIVE: JANUARY 7, 2002 TO AUGUST 4, 2002

EFFECTIVE: JANUARY 7, 2002 TO AUGUST 4, 2002
EFFECTIVE: JANUARY 7, 2002 TO AUGUST 4, 2002

NOTE:

See contract for location and material requirements.

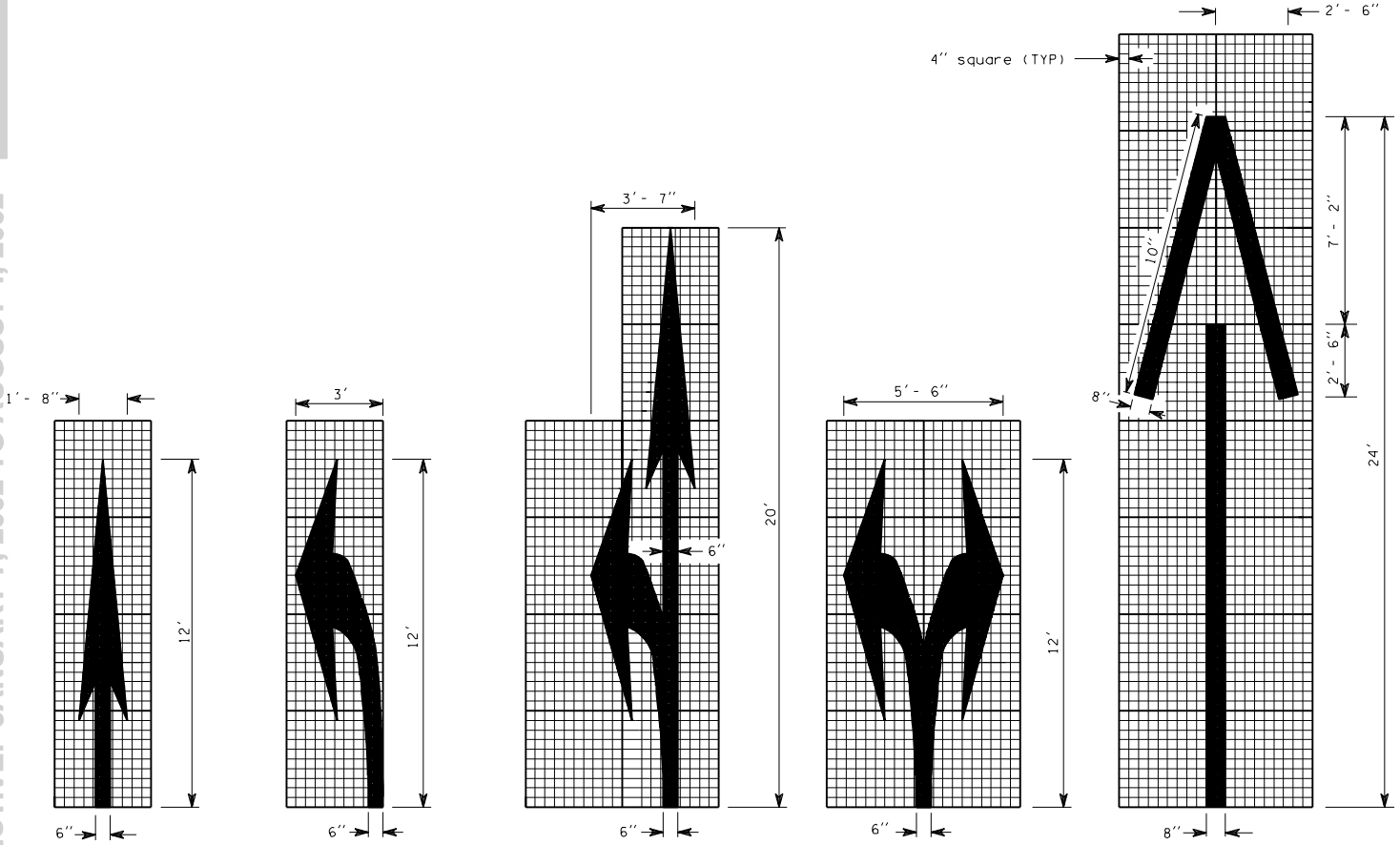

ARROW SYMBOLS

PAVEMENT MARKINGS

H-5c
08-01-97

EFFECTIVE: JANUARY 7, 2002 TO AUGUST 4, 2002
EFFECTIVE: JANUARY 7, 2002 TO AUGUST 4, 2002

EFFECTIVE: JANUARY 7, 2002 TO AUGUST 4, 2002

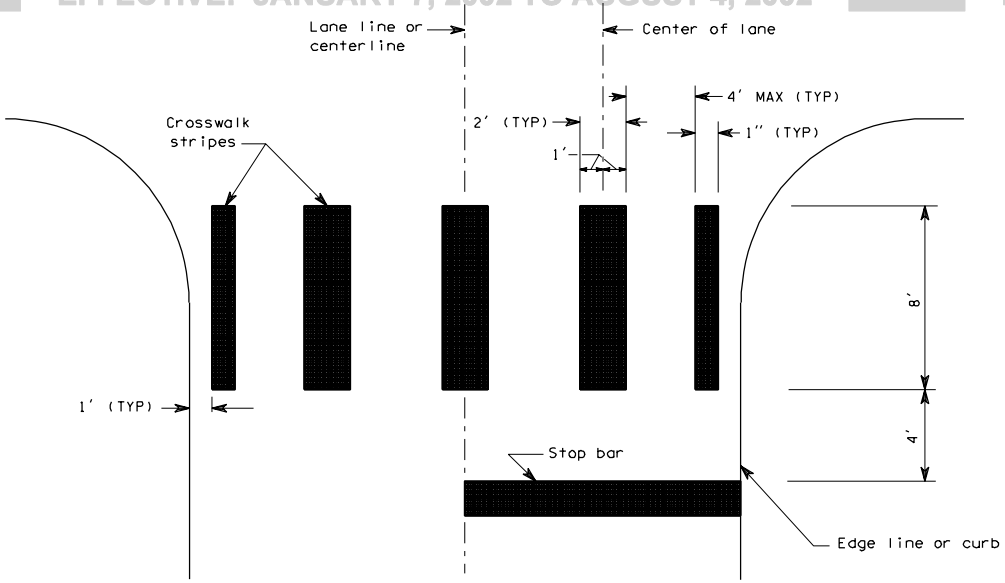

CROSSWALK STRIPE DETAILS

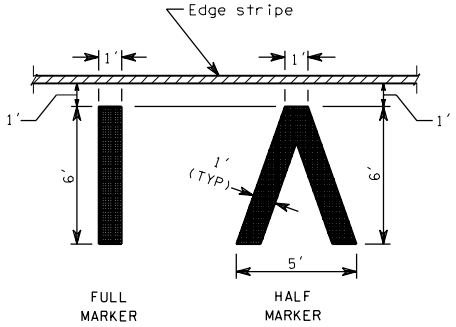

AERIAL SURVEILLANCE MARKINGS

PREFERENTIAL LANE SYMBOL TABLE				
TYPE	A	B	C	USE
1	12"	16'- 6"	4'- 8"	FREEWAYS & RAMPS
2	6"	12'	3'	ARTERIALS

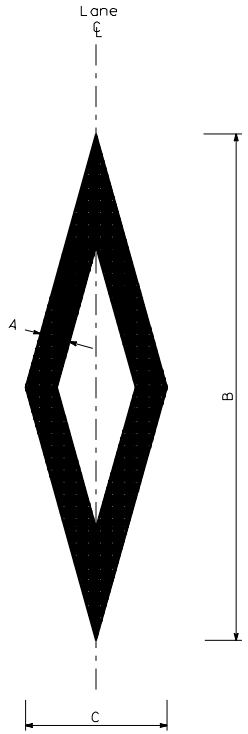

PREFERENTIAL LANE SYMBOL

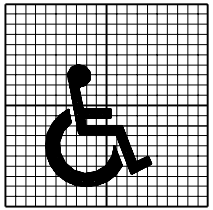

HANDICAPPED PARKING STALL SYMBOL

PAVEMENT MARKINGS

H-5c
08-01-97

EFFECTIVE: JANUARY 7, 2002 TO AUGUST 4, 2002
EFFECTIVE: JANUARY 7, 2002 TO AUGUST 4, 2002

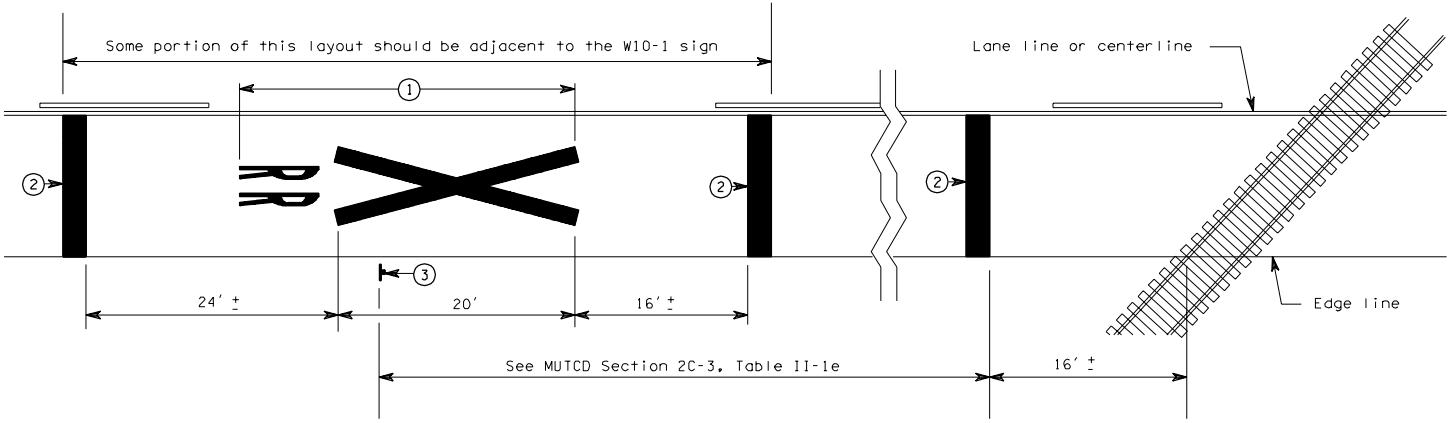

RAILROAD - HIGHWAY GRADE CROSSINGS
PAVEMENT MARKING PLACEMENT DETAIL

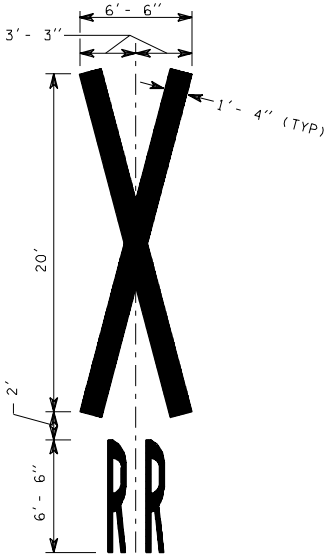

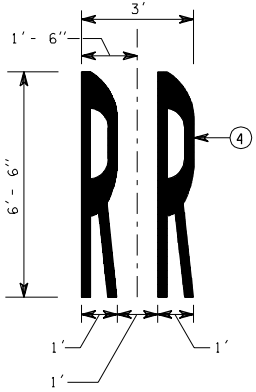

RR CROSSING SYMBOL DETAILS

KEY

1. RR CROSSING SYMBOL
2. 600 mm STOP BAR
3. W10-1 ADVANCE WARNING SIGN
4. SEE "STANDARD ALPHABETS FOR HIGHWAY SIGNS AND PAVEMENT MARKING, 1977 METRIC EDITION" FOR LETTER LAYOUT.

PAVEMENT MARKINGS

H-5c
08-01-97

EFFECTIVE: JANUARY 7, 2002 TO AUGUST 4, 2002
EFFECTIVE: JANUARY 7, 2002 TO AUGUST 4, 2002

EFFECTIVE: JANUARY 7, 2002 TO AUGUST 4, 2002

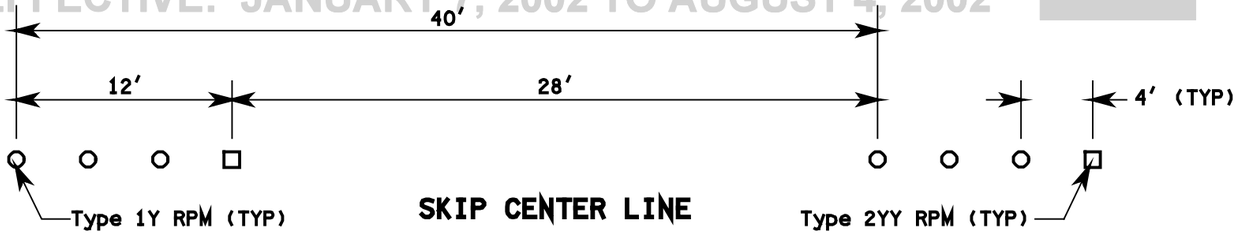

SKIP CENTER LINE

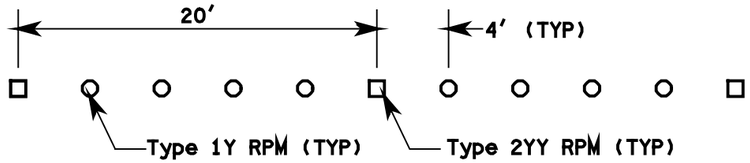

NO PASS LINE

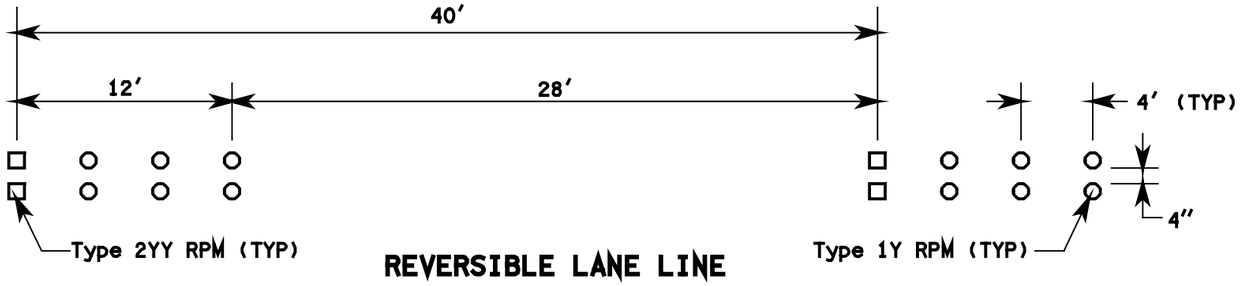

REVERSIBLE LANE LINE

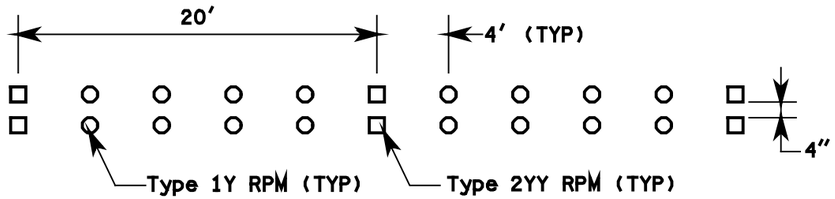

DOUBLE YELLOW CENTER LINE

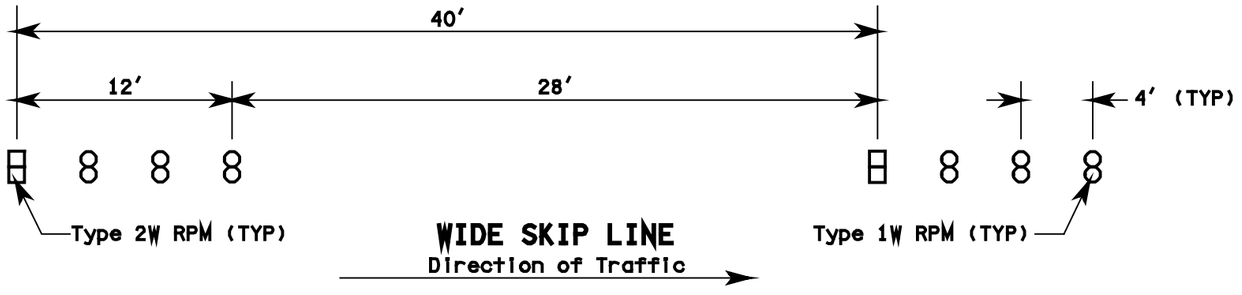

WIDE SKIP LINE

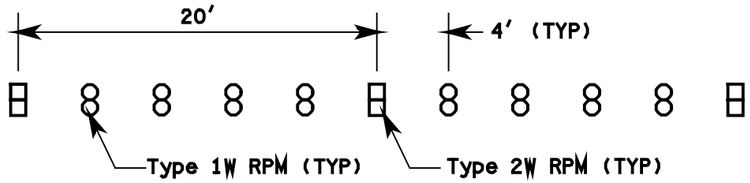

WIDE LINE

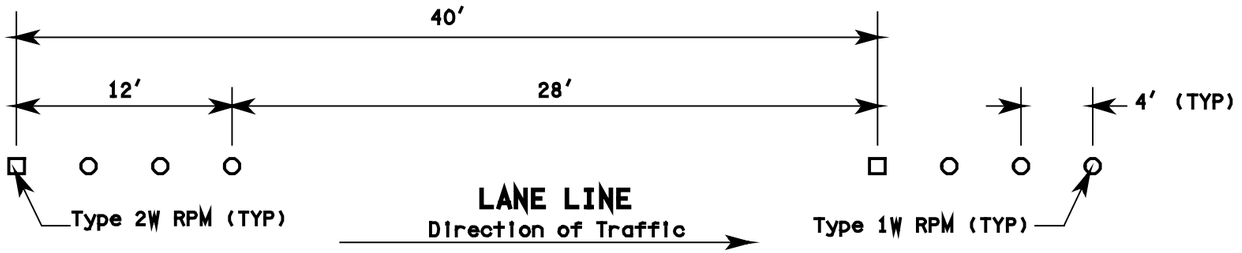

LANE LINE

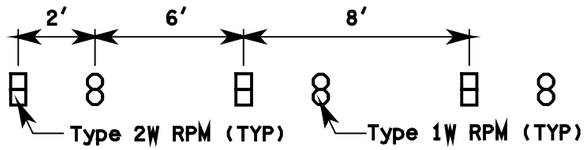

WIDE DOTTED LINE

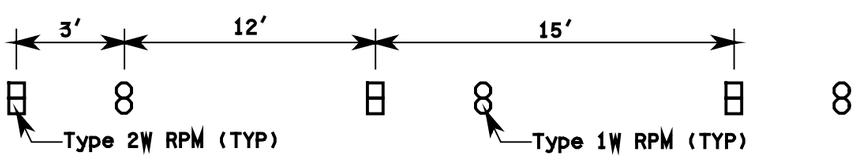

DROP LANE LINE

TOBY D. RICKMAN
STATE OF WASHINGTON
24655
REGISTERED
PROFESSIONAL ENGINEER

EXPIRES OCTOBER 26, 2000

RAISED PAVEMENT MARKER SUBSTITUTION PATTERNS STANDARD PLAN H-5d

SHEET 1 OF 2 SHEETS

NOTE: THIS PLAN IS NOT A LEGAL ENGINEERING DOCUMENT BUT AN ELECTRONIC DUPLICATE THE ORIGINAL, SIGNED BY THE ENGINEER AND APPROVED FOR PUBLICATION, IS KEPT ON FILE AT THE WASHINGTON STATE DEPARTMENT OF TRANSPORTATION. A COPY MAY BE OBTAINED UPON REQUEST.

APPROVED FOR PUBLICATION

Clifford E. Mansfield 4/14/00

DEPUTY STATE DESIGN ENGINEER — DATE

WASHINGTON STATE DEPARTMENT OF TRANSPORTATION
OLYMPIA, WASHINGTON

DATE	REVISION	BY
2/00	CHANGED "SORE STRIPE" TO "WIDE LINE". ADDED WIDE DOTTED LINE. CHANGED RPM PATTERN DBL YELLOW, WIDE, DROP, & NO PASS	TWS

EFFECTIVE: JANUARY 7, 2002 TO AUGUST 4, 2002

EFFECTIVE: JANUARY 7, 2002 TO AUGUST 4, 2002
EFFECTIVE: JANUARY 7, 2002 TO AUGUST 4, 2002

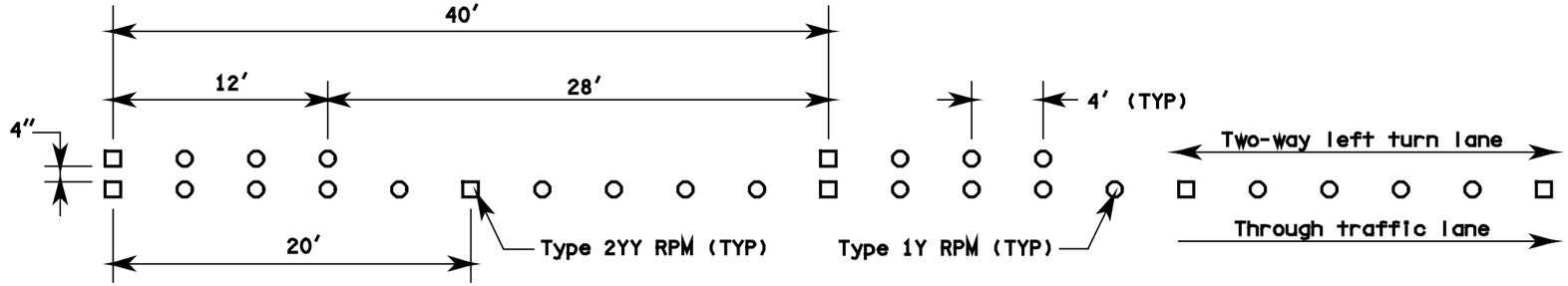

TWO WAY LEFT TURN LINE

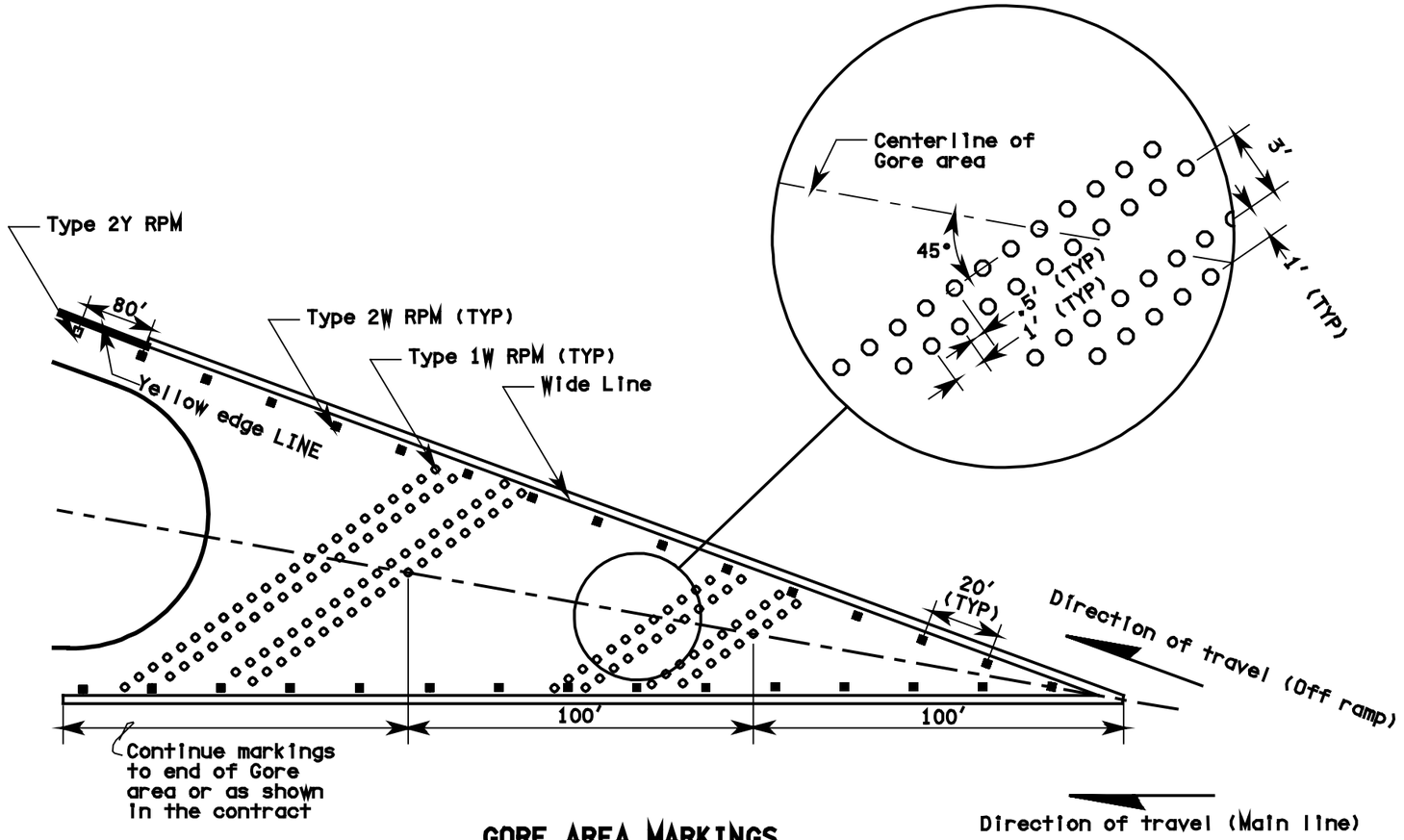

GORE AREA MARKINGS

TODY D. RICKMAN
STATE OF WASHINGTON
24655
REGISTERED
PROFESSIONAL ENGINEER

EXPIRES OCTOBER 26, 2000

RAISED PAVEMENT MARKER SUBSTITUTION PATTERNS STANDARD PLAN H-5d

SHEET 2 OF 2 SHEETS

NOTE: THIS PLAN IS NOT A LEGAL ENGINEERING DOCUMENT BUT AN ELECTRONIC DUPLICATE OF THE ORIGINAL, SIGNED BY THE ENGINEER AND APPROVED FOR PUBLICATION, IS KEPT ON FILE AT THE WASHINGTON STATE DEPARTMENT OF TRANSPORTATION. A COPY MAY BE OBTAINED UPON REQUEST.

APPROVED FOR PUBLICATION

Clifford E. Mansfield 4/14/00

DEPUTY STATE DESIGN ENGINEER — DATE

WASHINGTON STATE DEPARTMENT OF TRANSPORTATION
OLYMPIA, WASHINGTON

DATE	REVISION	BY
2/00	CHANGED "GORE STRIPE" TO "WIDE LINE". DELETED BARRIER STRIPE. DELETED RED RPM's.	TWS

EFFECTIVE: JANUARY 7, 2002 TO AUGUST 4, 2002
EFFECTIVE: JANUARY 7, 2002 TO AUGUST 4, 2002

EFFECTIVE: JANUARY 7, 2002 TO AUGUST 4, 2002

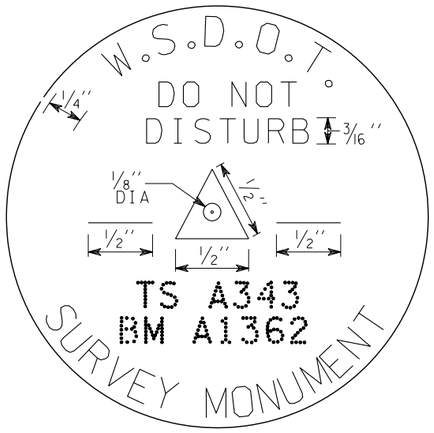

PLAN

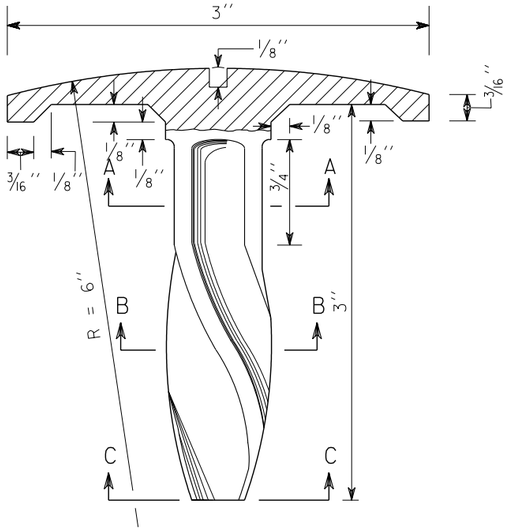

ELEVATION
BRASS DISC

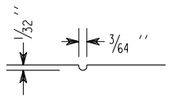

DETAIL OF GROOVE
FOR 3/16'' LETTERS

NOTE:
Dotted letters to be 3/16'' high and will be stamped by WSDOT Personnel. Only the assigned identification numbers are to appear on the brass disc.

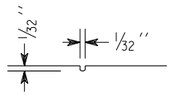

DETAIL OF GROOVE
FOR 3/16'' LETTERS

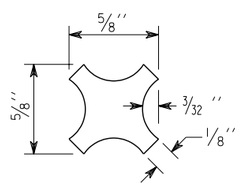

SECTION A-A

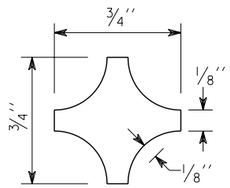

SECTION B-B

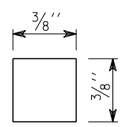

SECTION C-C

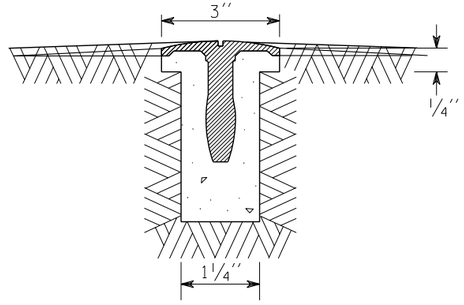

LEDGE ROCK OR CONCRETE
INSTALLATION

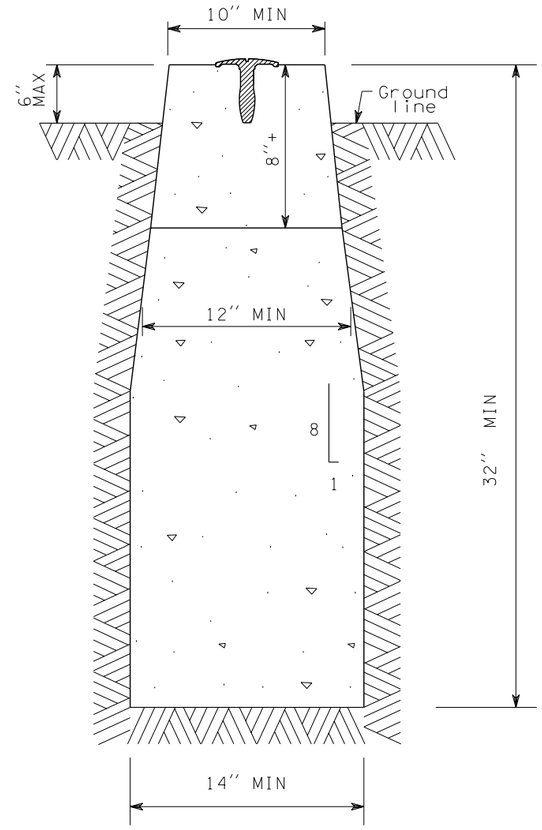

SECTION
GENERAL INSTALLATION

NOTE

1. The brass disc will be furnished by the state.
2. The hole shall be 32'' minimum in depth or 6'' below the deepest recorded frost line. All loose material shall be removed from the bottom of the hole so that the concrete is placed on firm undistrubed earth.
3. The top of the concrete shall be troweled smooth and the brass disc set in the center with top flush and level. When the concrete is set, cover the entire monument with moist earth and leave for three days.
4. Top of monument may be recessed or protruding depending on conditions.

EXPIRES MAY 3, 2002

SURVEY MONUMENT
STANDARD PLAN H-6

NOTE: THIS PLAN IS NOT A LEGAL ENGINEERING DOCUMENT BUT AN ELECTRONIC DUPLICATE. THE ORIGINAL, SIGNED BY THE ENGINEER AND APPROVED FOR PUBLICATION, IS KEPT ON FILE AT THE WASHINGTON STATE DEPARTMENT OF TRANSPORTATION. A COPY MAY BE OBTAINED UPON REQUEST.

APPROVED FOR PUBLICATION

Clifford E. Mansfield — *01-06-00*

DEPUTY STATE DESIGN ENGINEER — DATE

WASHINGTON STATE DEPARTMENT OF TRANSPORTATION
OLYMPIA, WASHINGTON

EFFECTIVE: JANUARY 7, 2002 TO AUGUST 4, 2002

EFFECTIVE: JANUARY 7, 2002 TO AUGUST 4, 2002

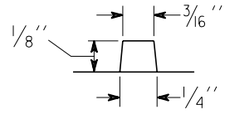

SECTION OF LETTER

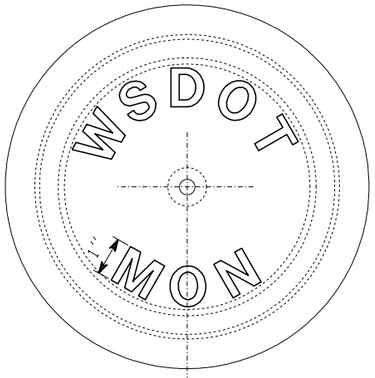

MONUMENT COVER

APPROXIMATE WEIGHTS	
Case	60 lbs
Cover	19 lbs
Total	79 lbs

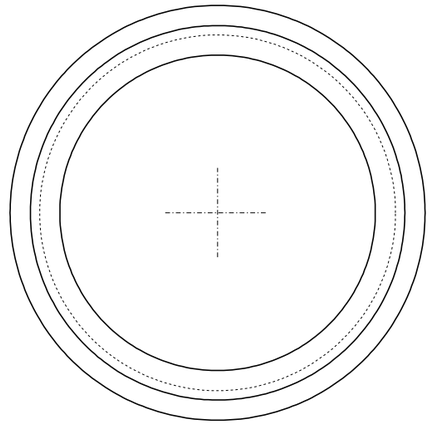

PLAN

RISER RING

RISER RING DIMENSIONS			
A (SIZE)	1 1/2''	2''	3''

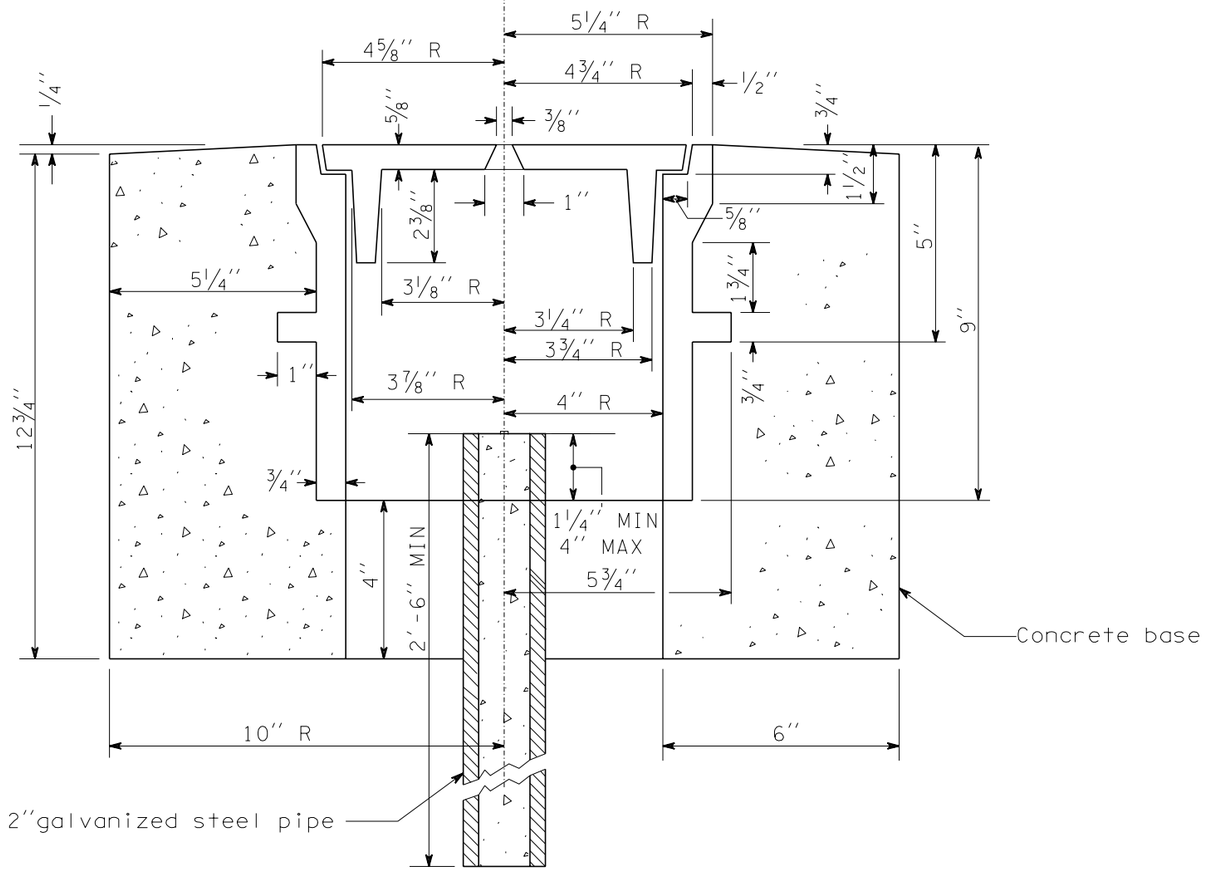

ASSEMBLY SECTION

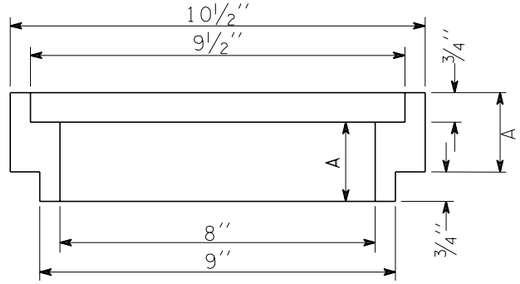

SECTION

RISER RING

CLIFFORD E. MANSFIELD
STATE OF WASHINGTON
15224
REGISTERED
PROFESSIONAL ENGINEER

EXPIRES MAY 3, 2000

MONUMENT CASE AND COVER

STANDARD PLAN H-7

NOTE: THIS PLAN IS NOT A LEGAL ENGINEERING DOCUMENT BUT AN ELECTRONIC DUPLICATE. THE ORIGINAL, SIGNED BY THE ENGINEER AND APPROVED FOR PUBLICATION, IS KEPT ON FILE AT THE WASHINGTON STATE DEPARTMENT OF TRANSPORTATION. A COPY MAY BE OBTAINED UPON REQUEST.

APPROVED FOR PUBLICATION

Clifford E. Mansfield — *8/10/98*

DEPUTY STATE DESIGN ENGINEER — DATE

WASHINGTON STATE DEPARTMENT OF TRANSPORTATION
OLYMPIA, WASHINGTON

EFFECTIVE: JANUARY 7, 2002 TO AUGUST 4, 2002

EFFECTIVE: JANUARY 7, 2002 TO AUGUST 4, 2002

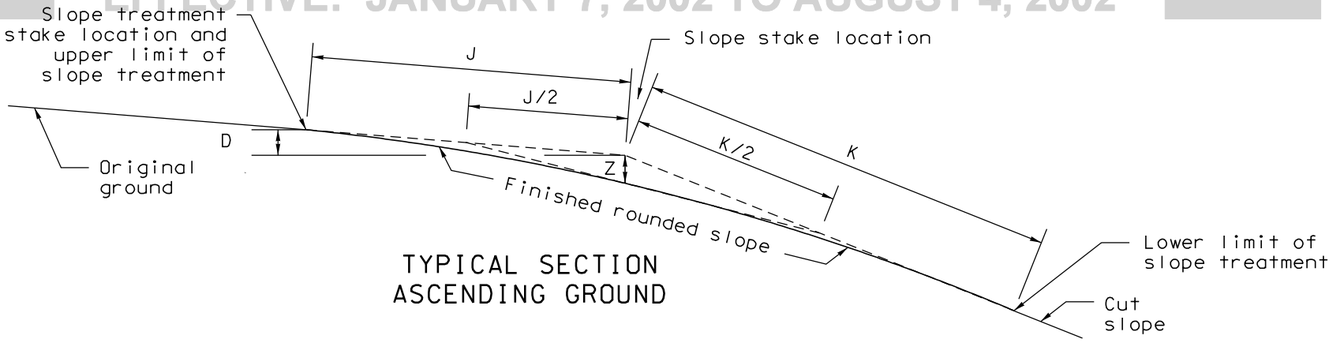

TYPICAL SECTION
ASCENDING GROUND

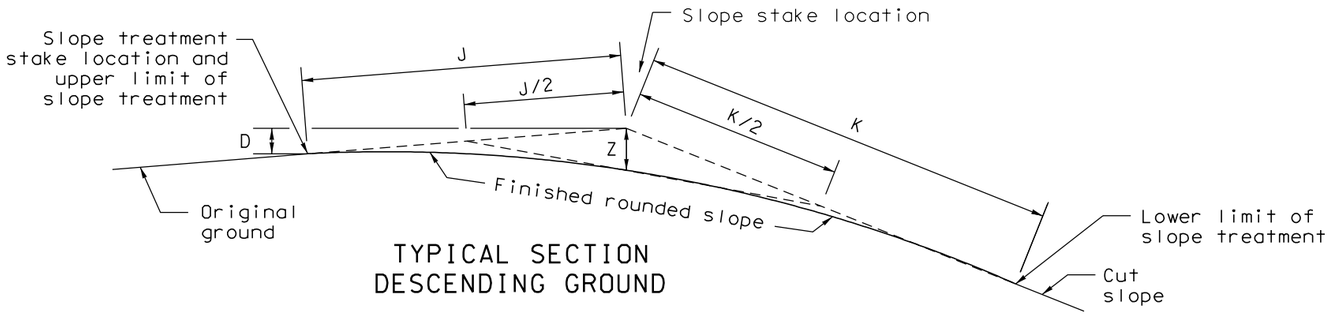

TYPICAL SECTION
DESCENDING GROUND

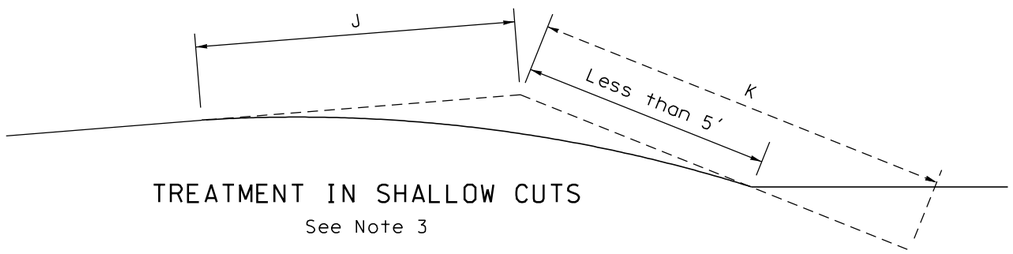

TREATMENT IN SHALLOW CUTS
See Note 3

VALUES OF Z (feet)
For Class A Slope Treatment

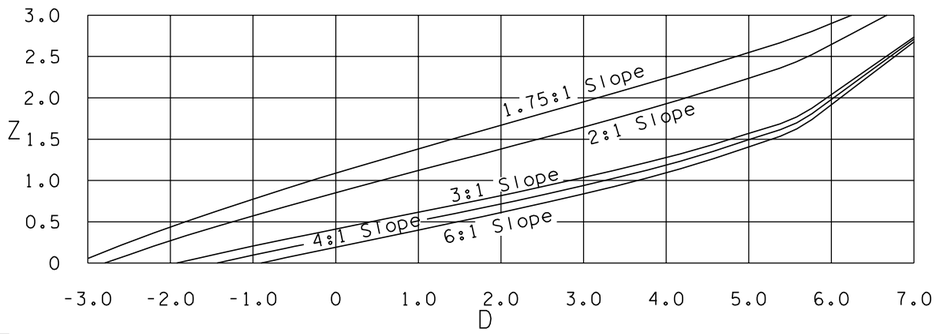

$$Z = \frac{\frac{K}{2}\sqrt{\left(\frac{J}{2}\right)^2 - \left(\frac{D}{2}\right)^2} \pm \left(\frac{DKS}{4}\right)}{\frac{KS}{2} + \left(\sqrt{1+S^2}\right)\left(\sqrt{\left(\frac{J}{2}\right)^2 - \left(\frac{D}{2}\right)^2}\right)}$$

In this equation the term ±DKS/4 is positive when the slope treatment stake is lower than the slope stake (descending ground); and negative when the slope treatment stake is higher than the slope stake (ascending ground).

NOTES

1. Slope treatment shall be constructed simultaneously with the roadway excavation. Ordinarily hand trimming will not be required if satisfactory results are obtained with mechanical equipment.
2. It is essential that the construction of cut and fill slopes and the application of slope treatment fit as naturally as possible into the existing landscape to provide an aesthetically and geometrically satisfactory completed roadway.
3. When the distance K is greater than the distance from the top of cut to the bottom of ditch, slope treatment shall begin at bottom of ditch.

LEGEND:

J Distance from slope stake to slope treatment stake, measured on natural ground slope.

K Distance from slope stake to lower limit of slope treatment, measured down face of cut slope.

H Difference in elevation between finished shoulder grade and slope stake.

D Difference in elevation between slope stake and slope treatment stake.

Z Depth of slope treatment at slope stake as determined by a straight line between the midpoints of J and K.

S Horizontal distance per foot cut for the slope under consideration. (For a 3:1 slope, S=3)

CUT SLOPE	Class A		Class B
	J	K	J and K
4:1	7′	5′	5′
3:1	7′	5′	5′
2:1	7′	9′	5′
1.75:1	7′	12′	5′

DENNIS C. JACKSON
STATE OF WASHINGTON
14061
REGISTERED
PROFESSIONAL ENGINEER

EXPIRES NOVEMBER 8, 1998

SLOPE TREATMENT

STANDARD PLAN H-8

NOTE: THIS PLAN IS NOT A LEGAL ENGINEERING DOCUMENT BUT AN ELECTRONIC DUPLICATE. THE ORIGINAL, SIGNED BY THE ENGINEER AND APPROVED FOR PUBLICATION, IS KEPT ON FILE AT THE WASHINGTON STATE DEPARTMENT OF TRANSPORTATION. A COPY MAY BE OBTAINED UPON REQUEST.

APPROVED FOR PUBLICATION

Clifford E. Mansfield — ***09/18/98***

DEPUTY STATE DESIGN ENGINEER — DATE

WASHINGTON STATE DEPARTMENT OF TRANSPORTATION
OLYMPIA, WASHINGTON

EFFECTIVE: JANUARY 7, 2002 TO AUGUST 4, 2002

EFFECTIVE: JANUARY 7, 2002 TO AUGUST 4, 2002

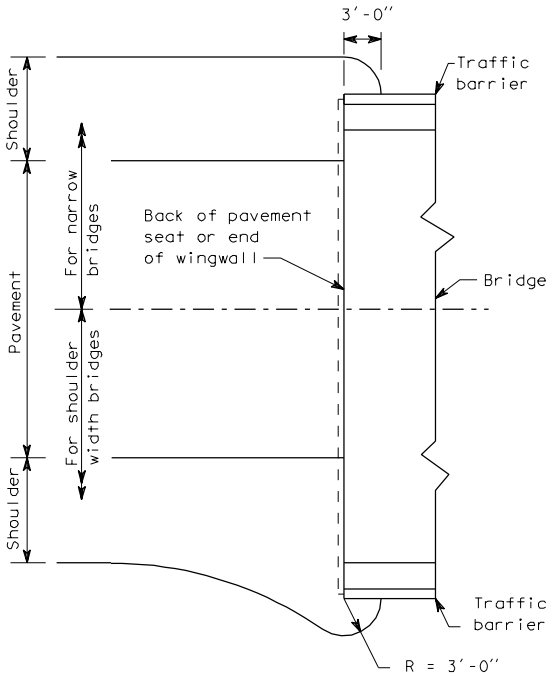

PLAN AT BRIDGE END

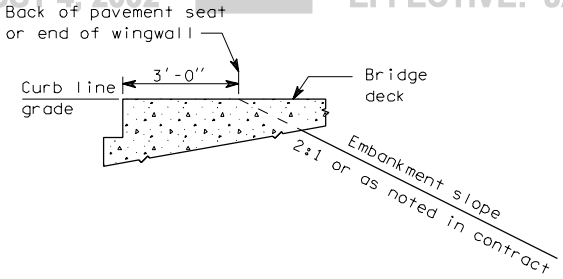

GENERAL SECTION AT BRIDGE END

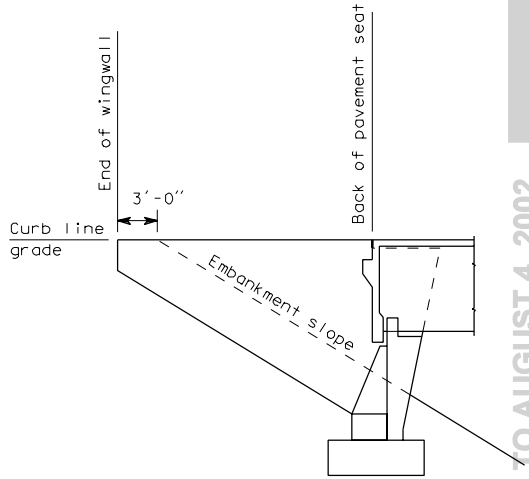

BRIDGE WITH WING WALLS

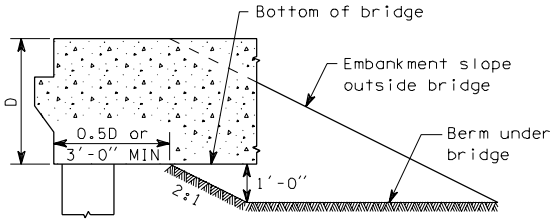

BRIDGE ON COLUMNS OR PILES

EMBANKMENT AT BRIDGE ENDS

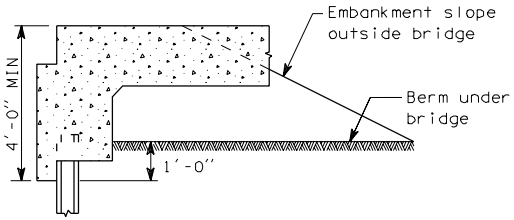

FLAT SLAB BRIDGE

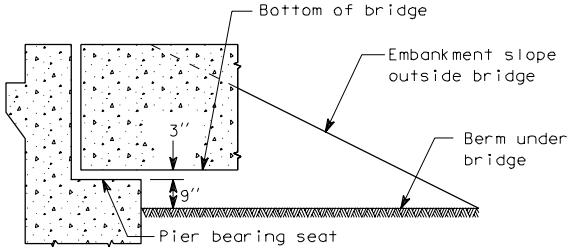

BRIDGE ON BEARINGS

EFFECTIVE: JANUARY 7, 2002 TO AUGUST 4, 2002

EFFECTIVE: JANUARY 7, 2002 TO AUGUST 4, 2002

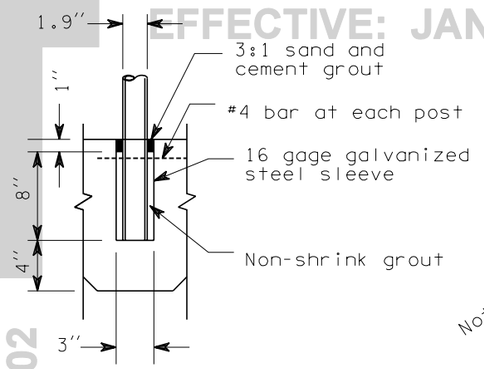

POST BASE DETAIL

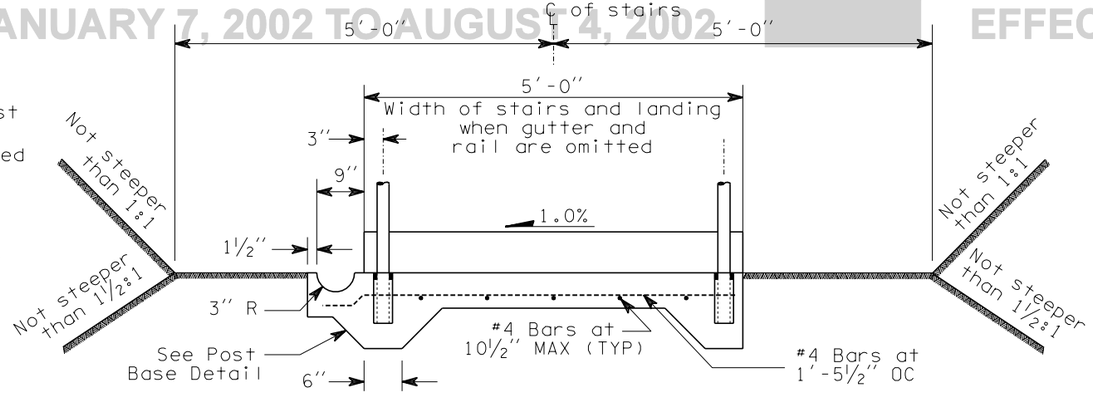

SLAB AND GRADING SECTION

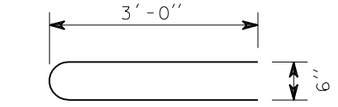

#4 BAR AT EACH POST

NOTES

1. Manufacturer shall submit shop drawings of pipe railing for review Design shall be in accordance with AASHTO specifications.
2. Aluminum pipe railing shall have no external surface welds.

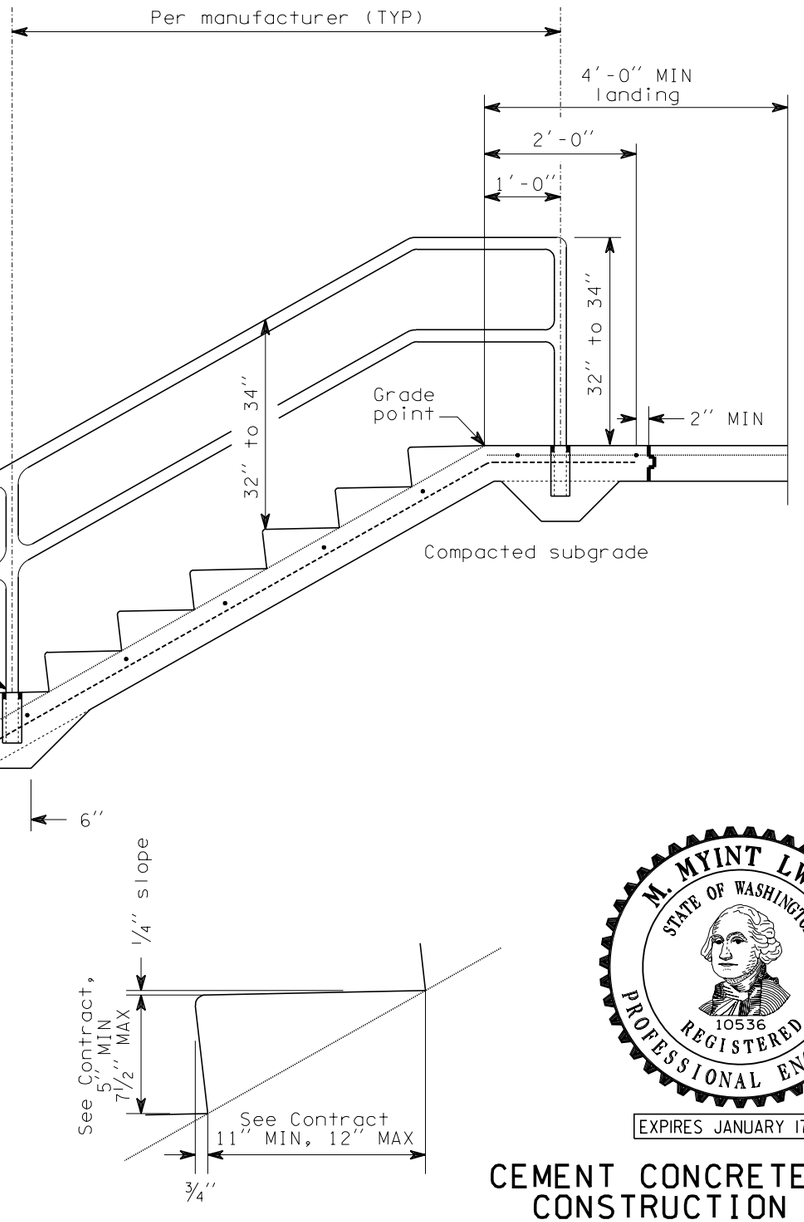

TREAD SHAPE DETAIL

M. MYINT LWIN
STATE OF WASHINGTON
10536
REGISTERED
PROFESSIONAL ENGINEER

EXPIRES JANUARY 17, 1999

CEMENT CONCRETE STAIRWAY CONSTRUCTION DETAILS STANDARD PLAN H-10

NOTE: THIS PLAN IS NOT A LEGAL ENGINEERING DOCUMENT BUT AN ELECTRONIC DUPLICATE. THE ORIGINAL, SIGNED BY THE ENGINEER AND APPROVED FOR PUBLICATION, IS KEPT ON FILE AT THE WASHINGTON STATE DEPARTMENT OF TRANSPORTATION. A COPY MAY BE OBTAINED UPON REQUEST.

APPROVED FOR PUBLICATION

Brian Ziegler — STATE DESIGN ENGINEER — *5/29/98* — DATE

WASHINGTON STATE DEPARTMENT OF TRANSPORTATION
OLYMPIA, WASHINGTON

EFFECTIVE: JANUARY 7, 2002 TO AUGUST 4, 2002

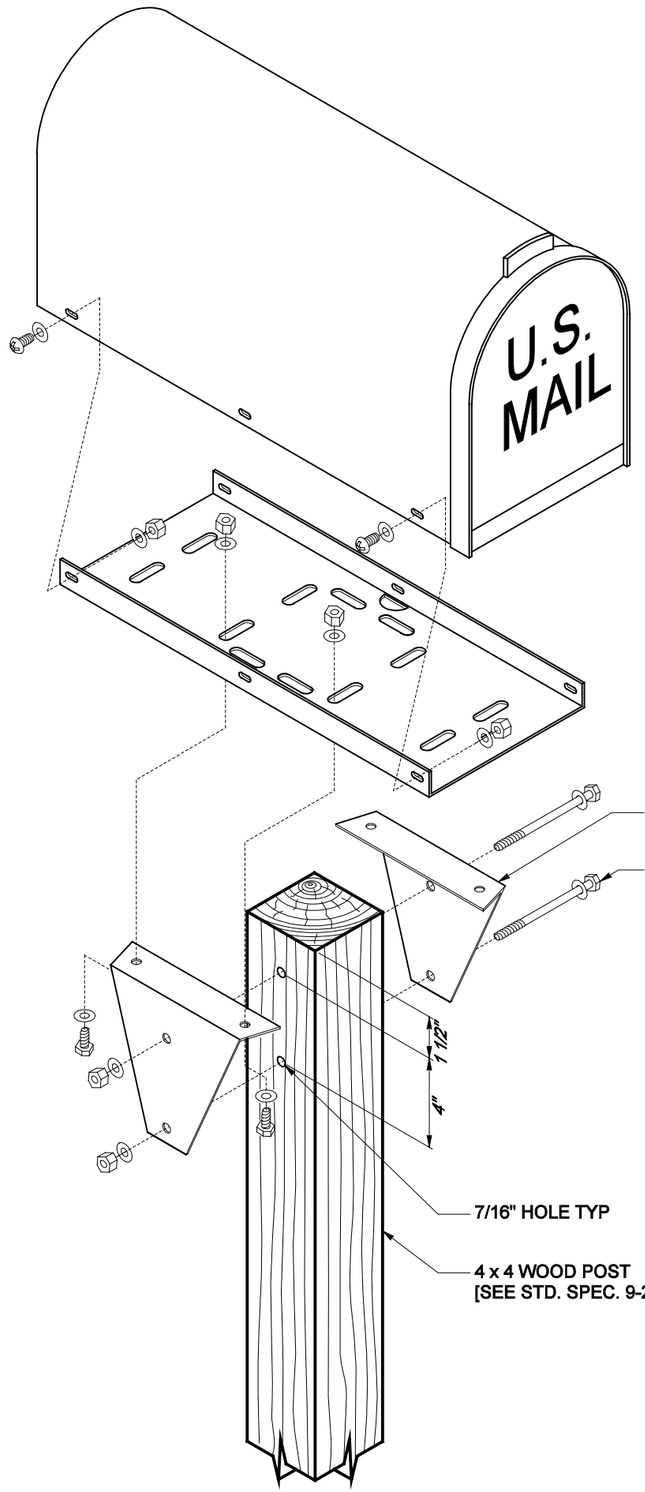

WOOD POST ASSEMBLY DETAIL
(SEE STEEL POST ASSEMBLY DETAIL FOR DETAILS NOT SHOWN)

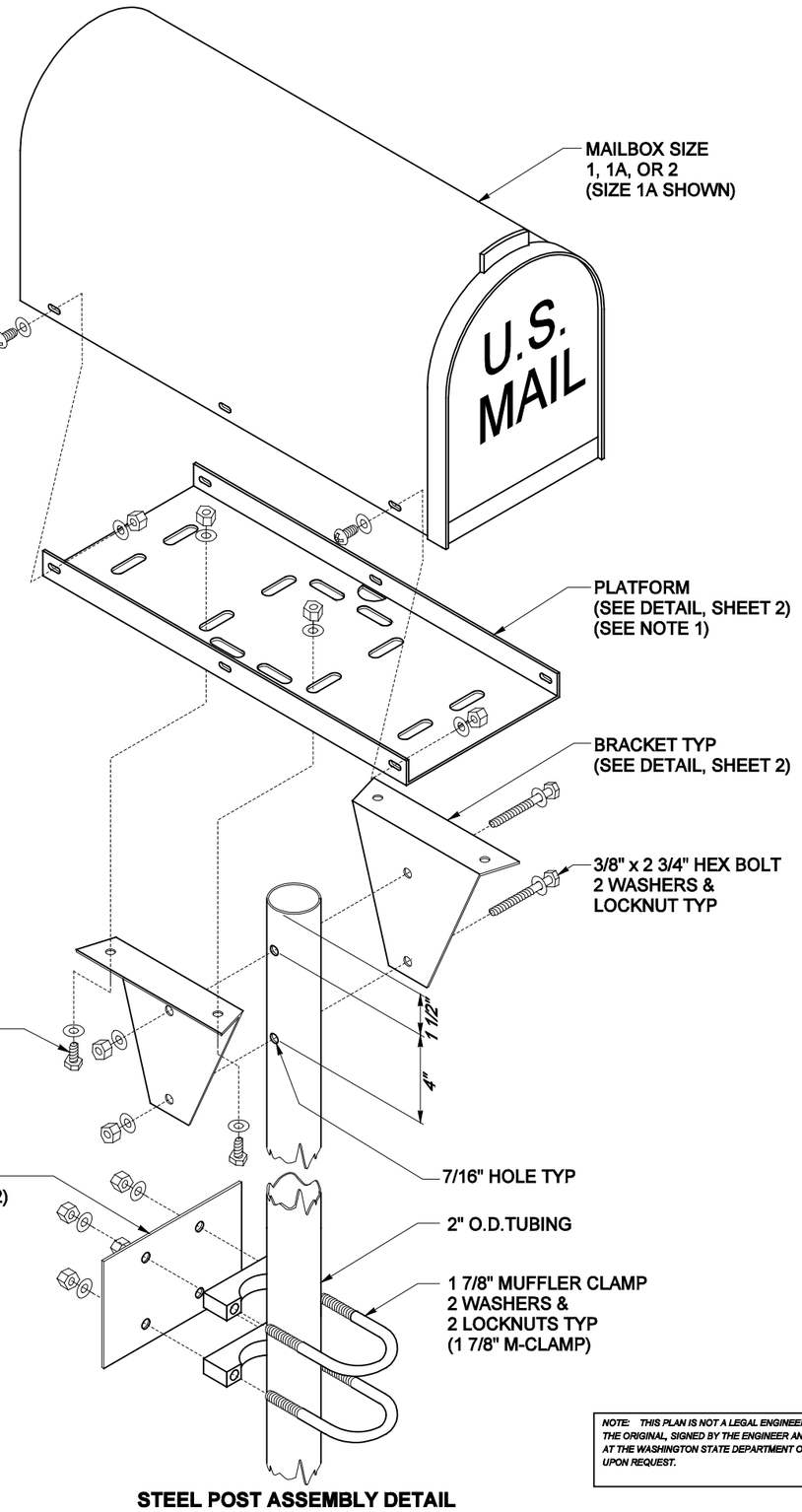

STEEL POST ASSEMBLY DETAIL

NOTES:

1. An alternate platform may be installed, provided that it is compatible with the bracket shown.
2. A Type 2 Support is required for installing multiple mailboxes on one support. No more than 5 mailboxes are allowed on a Type 2 support.
3. Attach a newspaper box to a steel post with two 1 7/8" Muffler Clamps spaced 4" apart. Field drill 7/16" holes in the newspaper box to fit. Use 2 1/2" x 1/4" lag bolts to attach newspaper boxes to wood posts. Newspaper boxes must not extend beyond the front of the mailbox when the mailbox door is closed.
4. Spacing of mailbox mounting holes varies among manufacturers. Attachment of the mailbox to the platform may require drilling additional holes through the mailbox to fit the platform.
5. Center the mailbox on the platform to ensure space for the mailbox door to open and to allow space for installing the fasteners.

MAILBOX & PLATFORM DIMENSIONS

SIZE	MAILBOX DIMENSIONS			PLATFORM DIMENSIONS		
	L	W	H	L	W	H
1	19"	6 1/2"	8 1/2"	17"	6 3/8"	1"
1A	21"	8"	10 1/2"	19"	7 7/8"	1"
2	24"	11 1/2"	13 1/2"	21"	11 3/8"	1"

STEEL POST FASTENERS

BOLT SIZE	QUANTITY	WASHERS	LOCKNUTS
3/8" DIA x 2 3/4"	2	4	2
3/8" DIA x 3/4"	4	8	4
1/4" DIA x 3/4"	4	8	4
1 7/8" M-CLAMP	2	4	4

WOOD POST FASTENERS

BOLT SIZE	QUANTITY	WASHERS	LOCKNUTS
3/8" DIA x 4-3/4"	2	4	2
3/8" DIA x 3/4"	4	8	4
1/4" DIA x 3/4"	4	8	4

CLIFFORD E. MANSFIELD
STATE OF WASHINGTON
15224
REGISTERED
PROFESSIONAL ENGINEER

EXPIRES MAY 3, 2002

MAILBOX INSTALLATION TYPE 1 & TYPE 2

STANDARD PLAN H-12

SHEET 1 OF 3 SHEETS

NOTE: THIS PLAN IS NOT A LEGAL ENGINEERING DOCUMENT BUT AN ELECTRONIC DUPLICATE. THE ORIGINAL, SIGNED BY THE ENGINEER AND APPROVED FOR PUBLICATION, IS KEPT ON FILE AT THE WASHINGTON STATE DEPARTMENT OF TRANSPORTATION. A COPY MAY BE OBTAINED UPON REQUEST.

APPROVED FOR PUBLICATION

Clifford E. Mansfield *06-23-00*

DEPUTY STATE DESIGN ENGINEER — DATE

WASHINGTON STATE DEPARTMENT OF TRANSPORTATION
OLYMPIA, WASHINGTON

EFFECTIVE: JANUARY 7, 2002 TO AUGUST 4, 2002

EFFECTIVE: JANUARY 7, 2002 TO AUGUST 4, 2002

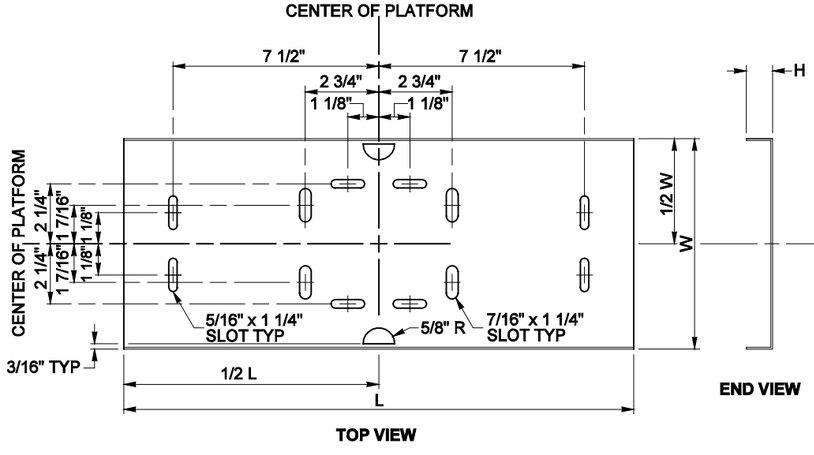

PLATFORM DETAIL

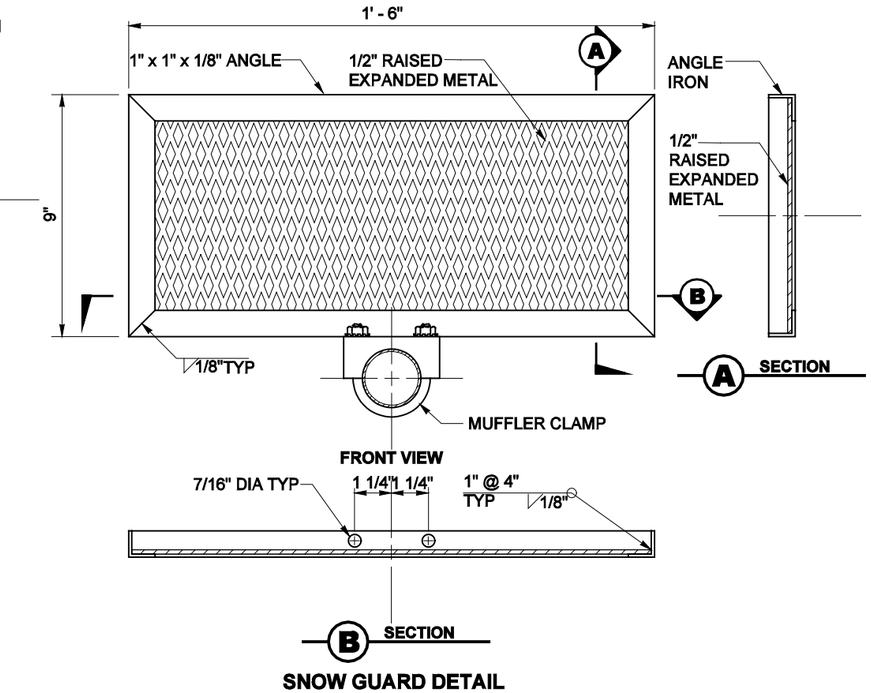

SNOW GUARD DETAIL

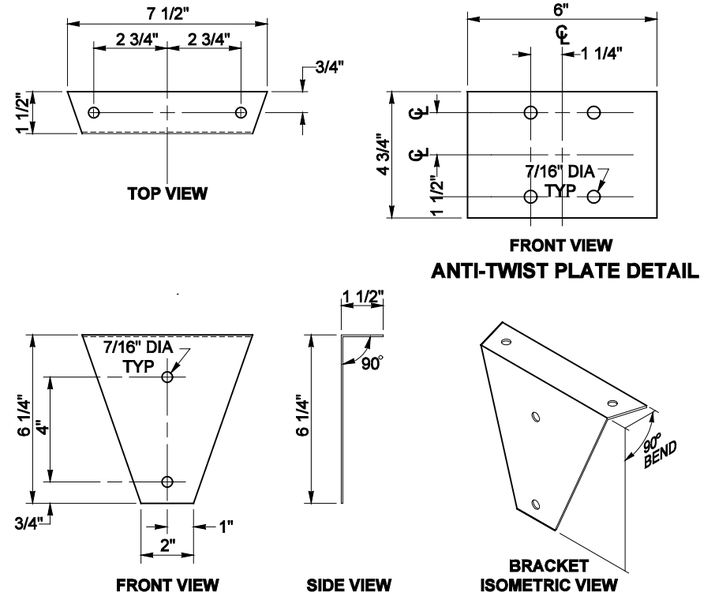

BRACKET DETAIL

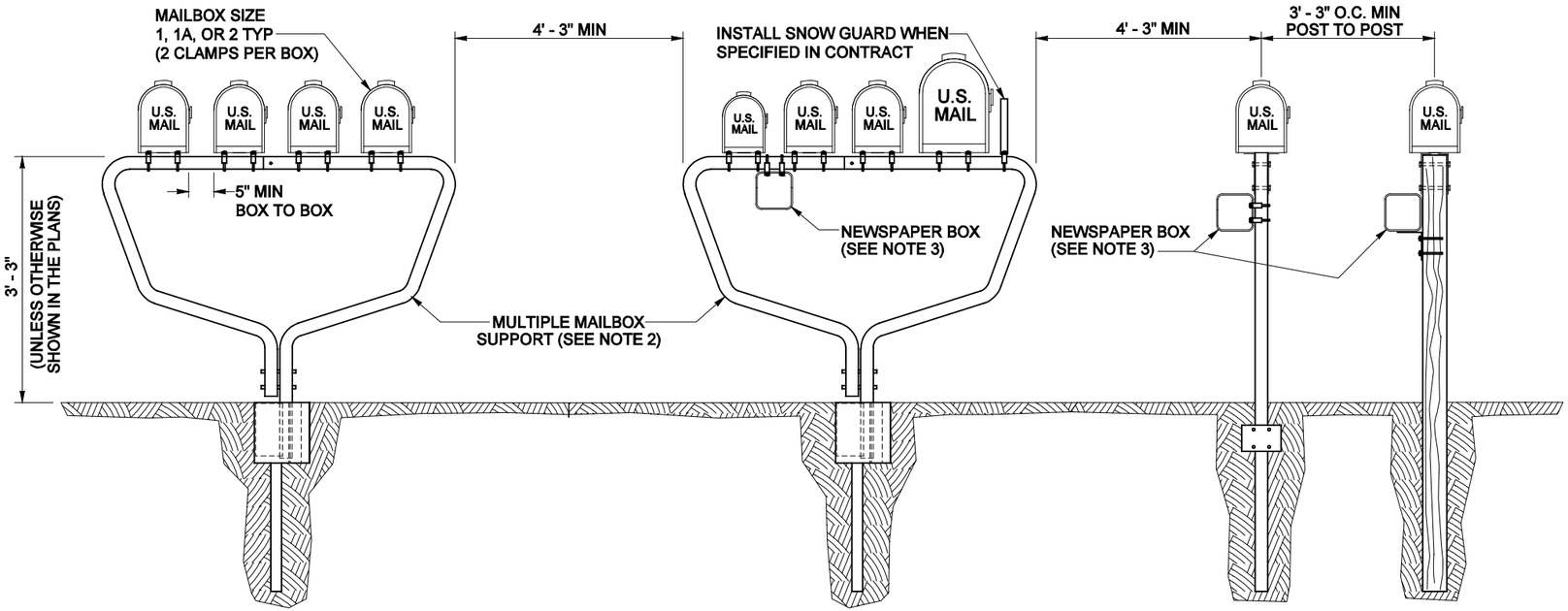

TYPE 2 SUPPORT
(PROPRIETARY DESIGN SHOWN)

TYPE 2 SUPPORT

MAILBOX PLACEMENT DETAIL

STEEL POST OPTION WOOD POST OPTION

TYPE 1 SUPPORT

CLIFFORD E. MANSFIELD
STATE OF WASHINGTON
15224
REGISTERED
PROFESSIONAL ENGINEER

EXPIRES MAY 3, 2002

MAILBOX INSTALLATION TYPE 1 & TYPE 2

STANDARD PLAN H-12

SHEET 2 OF 3 SHEETS

APPROVED FOR PUBLICATION

Clifford E. Mansfield 06-23-00

DEPUTY STATE DESIGN ENGINEER — DATE

WASHINGTON STATE DEPARTMENT OF TRANSPORTATION
OLYMPIA, WASHINGTON

NOTE: THIS PLAN IS NOT A LEGAL ENGINEERING DOCUMENT BUT AN ELECTRONIC DUPLICATE. THE ORIGINAL, SIGNED BY THE ENGINEER AND APPROVED FOR PUBLICATION, IS KEPT ON FILE AT THE WASHINGTON STATE DEPARTMENT OF TRANSPORTATION. A COPY MAY BE OBTAINED UPON REQUEST.

EFFECTIVE: JANUARY 7, 2002 TO AUGUST 4, 2002

EFFECTIVE: JANUARY 7, 2002 TO AUGUST 4, 2002

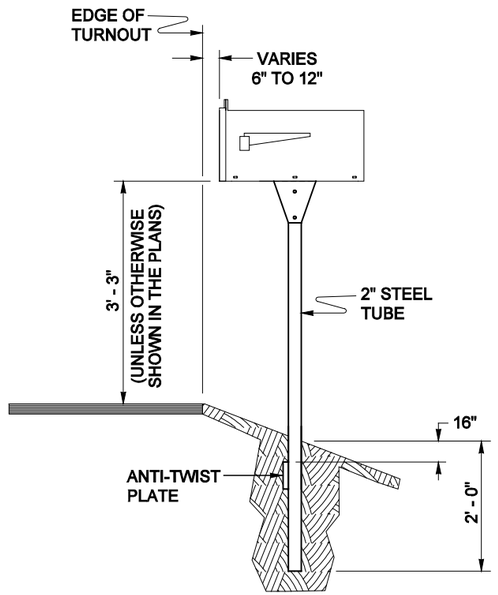

TYPE 1 (STEEL POST OPTION)

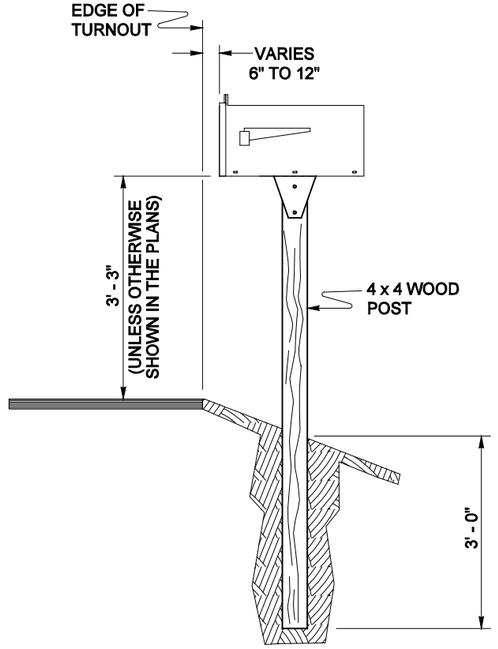

TYPE 1 (WOOD POST OPTION)

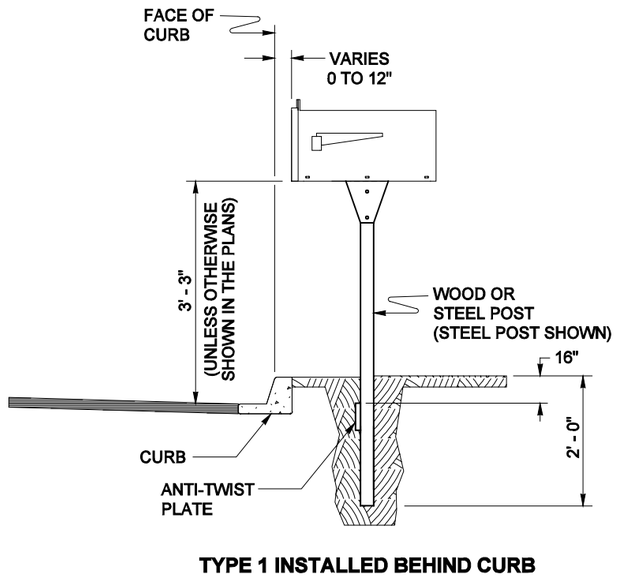

TYPE 1 INSTALLED BEHIND CURB

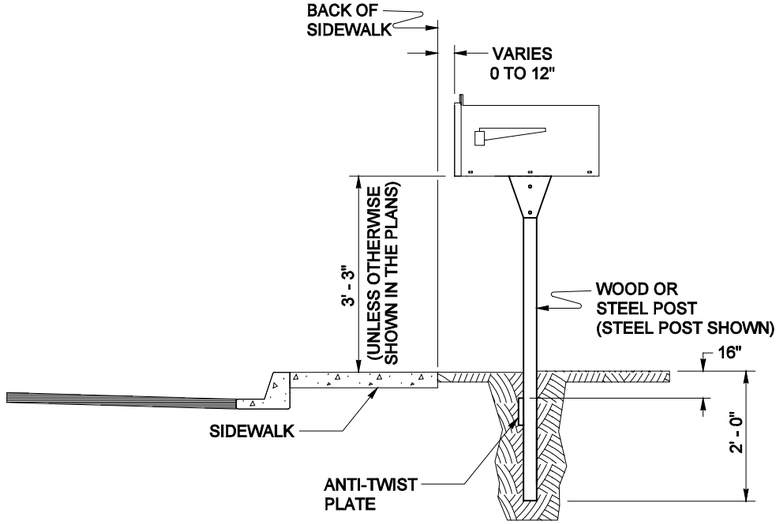

TYPE 1 INSTALLED BEHIND SIDEWALK

EXPIRES MAY 3, 2002

MAILBOX INSTALLATION TYPE 1 & TYPE 2

STANDARD PLAN H-12

SHEET 3 OF 3 SHEETS

NOTE: THIS PLAN IS NOT A LEGAL ENGINEERING DOCUMENT BUT AN ELECTRONIC DUPLICATE. THE ORIGINAL, SIGNED BY THE ENGINEER AND APPROVED FOR PUBLICATION, IS KEPT ON FILE AT THE WASHINGTON STATE DEPARTMENT OF TRANSPORTATION. A COPY MAY BE OBTAINED UPON REQUEST.

APPROVED FOR PUBLICATION

Clifford E. Mansfield *06-23-00*

DEPUTY STATE DESIGN ENGINEER — DATE

WASHINGTON STATE DEPARTMENT OF TRANSPORTATION
OLYMPIA, WASHINGTON

EFFECTIVE: JANUARY 7, 2002 TO AUGUST 4, 2002

EFFECTIVE: JANUARY 7, 2002 TO AUGUST 4, 2002

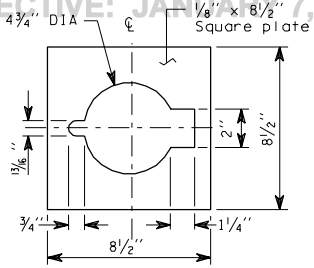

COVER PLATE

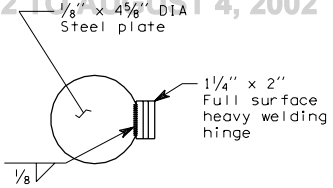

CAP AND HINGE

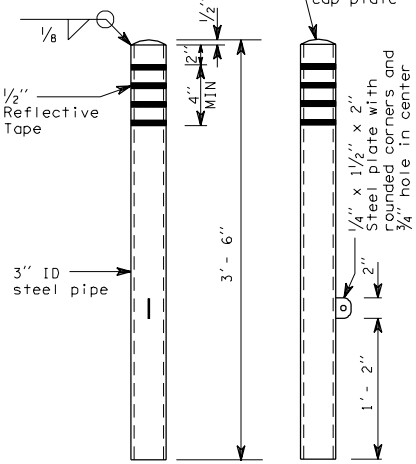

FRONT VIEW

SIDE VIEW

POST

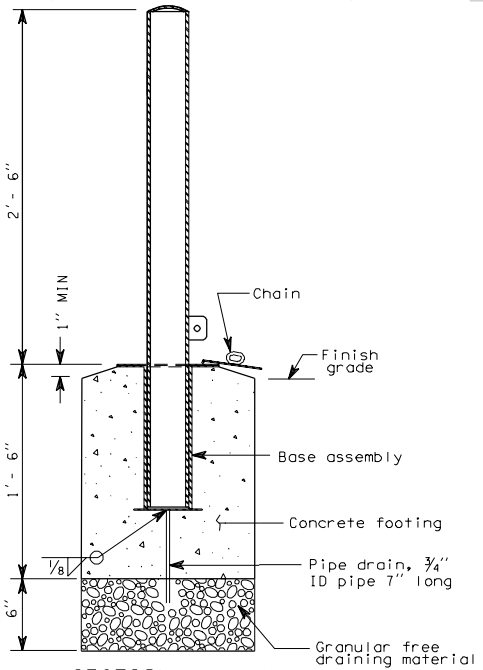

SECTION A - A

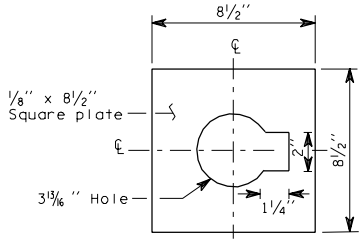

TOP PLATE

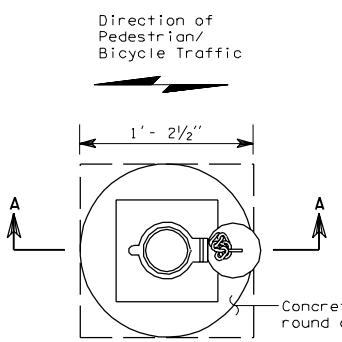

PLAN

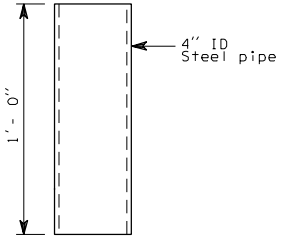

PIPE SLEEVE

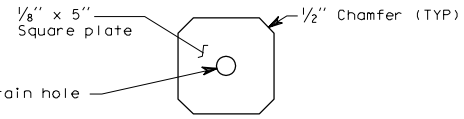

BASE PLATE

BASE ASSEMBLY

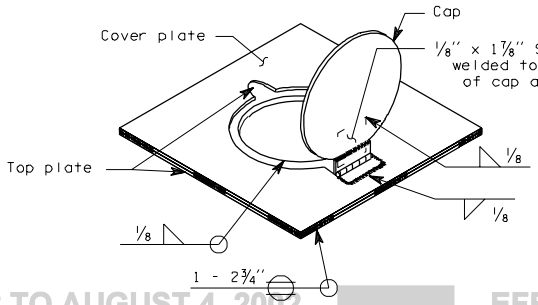

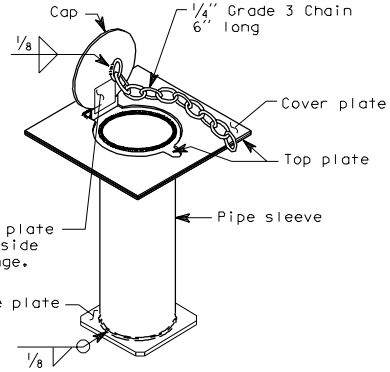

TYPE 1 BOLLARD

H-13 1 of 1

07-25-97

EFFECTIVE: JANUARY 7, 2002 TO AUGUST 4, 2002

EFFECTIVE: JANUARY 7, 2002 TO AUGUST 4, 2002
EFFECTIVE: JANUARY 7, 2002 TO AUGUST 4, 2002

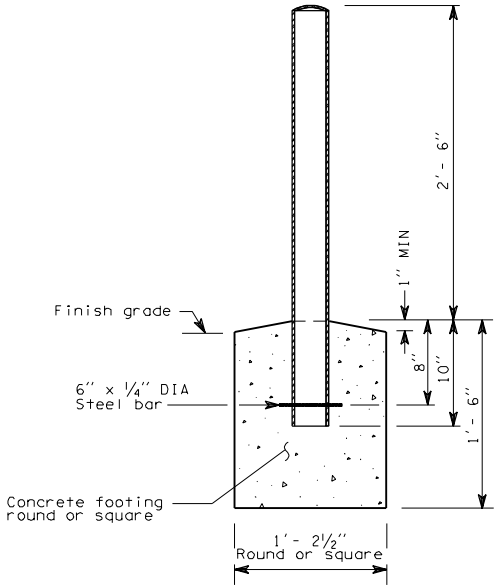

SECTION A-A

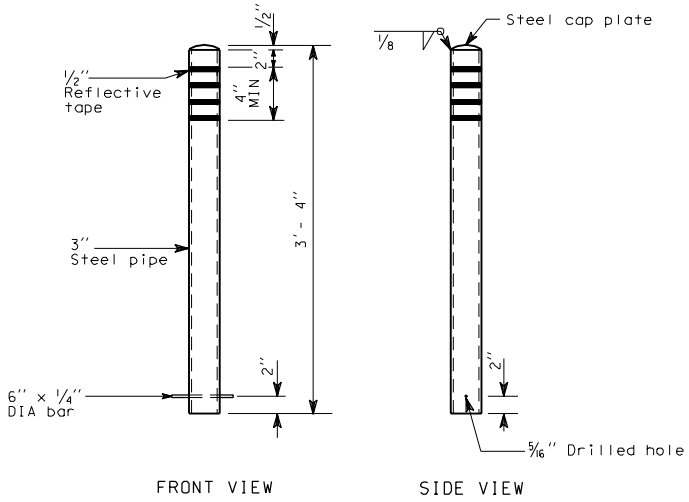

FRONT VIEW SIDE VIEW

POST

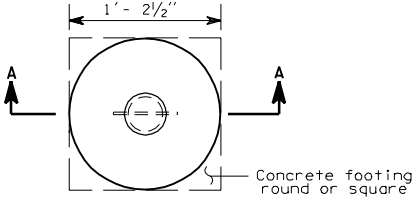

PLAN

TYPE 2 BOLLARD

H-13a 1 of 1

07-25-97

EFFECTIVE: JANUARY 7, 2002 TO AUGUST 4, 2002
EFFECTIVE: JANUARY 7, 2002 TO AUGUST 4, 2002

EFFECTIVE: JANUARY 7, 2002 TO AUGUST 4, 2002

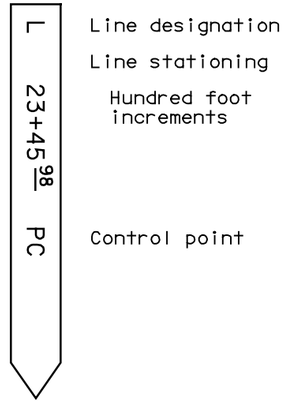

ALIGNMENT STAKE

Stake every 100 feet on tangents,
every 25 feet on curves

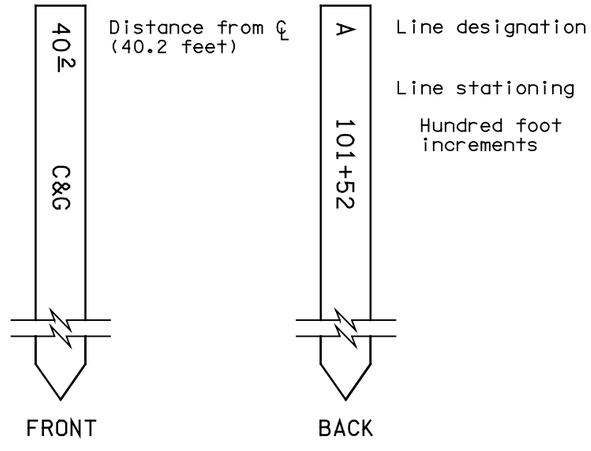

CLEARING/GRUBBING LATH

Stake at each full station,
100 feet on tangents,
every 25 feet on curves.
No hub necessary.

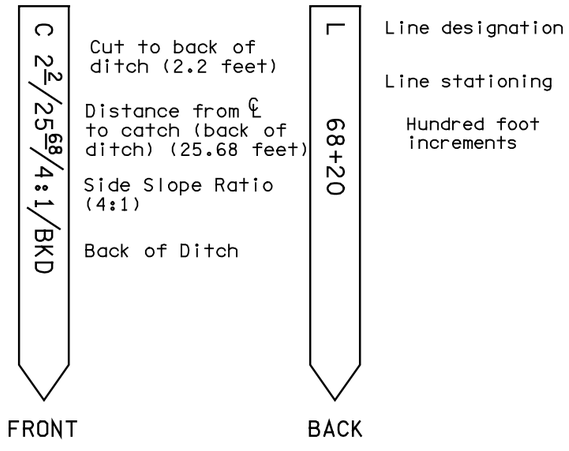

SLOPE STAKE

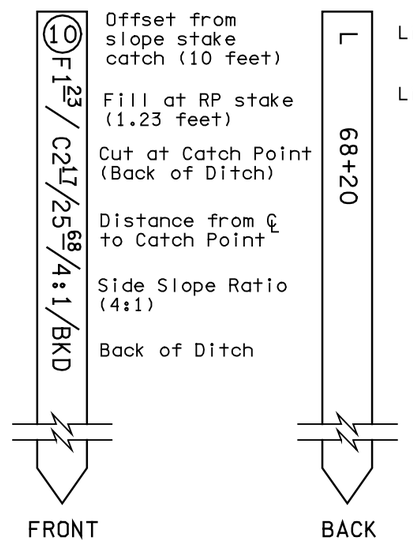

SLOPE LATH REFERENCES

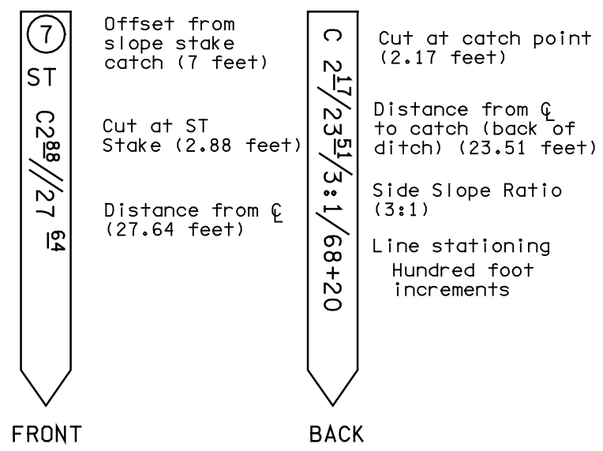

SLOPE TREATMENT (ST) STAKES FOR CUT SECTIONS

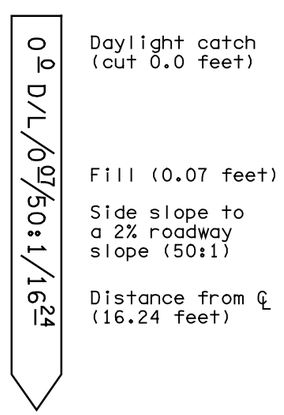

DAYLIGHT STAKE

CLIFFORD E. MANSFIELD
STATE OF WASHINGTON
15224
REGISTERED
PROFESSIONAL ENGINEER

EXPIRES MAY 3, 2000

SURVEY STAKES

STANDARD PLAN H-14

SHEET 1 OF 2 SHEETS

NOTE: THIS PLAN IS NOT A LEGAL ENGINEERING DOCUMENT BUT AN ELECTRONIC DUPLICATE. THE ORIGINAL, SIGNED BY THE ENGINEER AND APPROVED FOR PUBLICATION, IS KEPT ON FILE AT THE WASHINGTON STATE DEPARTMENT OF TRANSPORTATION. A COPY MAY BE OBTAINED UPON REQUEST.

APPROVED FOR PUBLICATION

Clifford E. Mansfield — *04/23/99*

DEPUTY STATE DESIGN ENGINEER — DATE

WASHINGTON STATE DEPARTMENT OF TRANSPORTATION
OLYMPIA, WASHINGTON

EFFECTIVE: JANUARY 7, 2002 TO AUGUST 4, 2002

EFFECTIVE: JANUARY 7, 2002 TO AUGUST 4, 2002

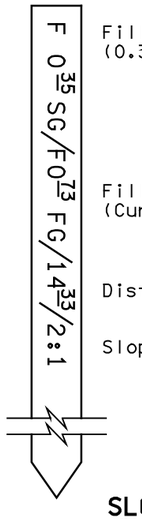

Fill to subgrade (0.35 feet)

Fill to Finish Grade (Curb Elevation) (0.73 feet)

Distance from ℄ (14.33 feet)

Slope ratio (2:1)

SLOPE STAKING CURB SECTION

Use lath instead of stake

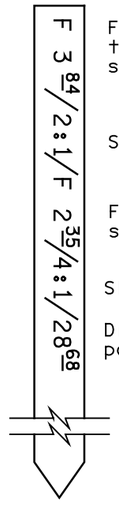

Fill from catch point to beginning of second slope (3.84 feet)

Slope ratio (2:1)

Fill to subgrade shoulder (2.25 feet)

Slope ratio (4:1)

Distance from ℄ to catch point (28.68 feet)

STAKING COMPOUND SLOPES

Use lath instead of stake

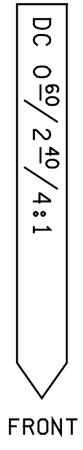

Ditch cut to bottom of ditch (0.60 feet)

Distance from catch point to bottom of ditch (2.40 feet)

Side slope ratio (4:1)

FRONT

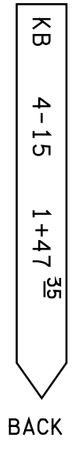

Structure note reference

Plan sheet number (4) Structure note number (15)

Ditch section alignment stationing

BACK

STAKES FOR DITCH CONSTRUCTION

Offset to center of base (10 feet)

Fill to top of concrete base (1.09 feet to top of foundation)

FRONT

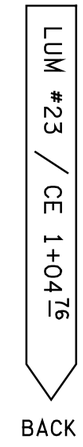

Luminaire number (23)

Line designation and stationing

Hundred foot increments

BACK

STAKING FOUNDATION FOR LUMINAIRES, SIGNALS OR SIGN STRUCTURES

Offset (10 feet)

Cut to flow line (1.261 feet)

FRONT

Structure note reference

Plan sheet number (6) Structure note number (3)

Drainage alignment stationing

25′ Increments

BACK

STAKES FOR DRAINAGE

Offset (3 feet)

Fill to top and back edge of curb (0.90 feet)

FRONT

Line designation

Line stationing

Hundred foot increments

BACK

STAKES FOR CURB/GUTTER

EXPIRES MAY 3, 2000

SURVEY STAKES

STANDARD PLAN H-14

SHEET 2 OF 2 SHEETS

NOTE: THIS PLAN IS NOT A LEGAL ENGINEERING DOCUMENT BUT AN ELECTRONIC DUPLICATE. THE ORIGINAL, SIGNED BY THE ENGINEER AND APPROVED FOR PUBLICATION, IS KEPT ON FILE AT THE WASHINGTON STATE DEPARTMENT OF TRANSPORTATION. A COPY MAY BE OBTAINED UPON REQUEST.

APPROVED FOR PUBLICATION

Clifford E. Mansfield — *04/23/99*

DEPUTY STATE DESIGN ENGINEER — DATE

WASHINGTON STATE DEPARTMENT OF TRANSPORTATION
OLYMPIA, WASHINGTON

EFFECTIVE: JANUARY 7, 2002 TO AUGUST 4, 2002

EFFECTIVE: JANUARY 7, 2002 TO AUGUST 4, 2002

APPROXIMATE QUANTITIES				
Tank Capacity	Length (X)	Concrete	Steel Reinf. Bars	Cast Iron Soil Pipe & Fitting
Gal.	Ft.	C.Y.	Lbs.	Lbs.
6000	6	23	3800	471
8000	8	28	4600	471
10000	10	32	5400	471
12000	12	37	6300	471
14000	14	42	7100	471

NOTES:
1. Approval of local health department is required before work is started.
2. Excavated material shall be disposed of as directed by the Engineer.
3. All work shall be left open until inspected and approved by the Health Officer and the Engineer.
4. All grades shall be checked and approved by the Engineer.
5. Water tight manhole covers shall be approved by the Engineer prior to installation.
6. Precast septic tanks are acceptable, subject to the approval of the Engineer. Materials shall meet or exceed those shown.
7. Plan dimensions may vary as site conditions and system design permit.
8. All concrete shall be Class 4000.
9. Reinforcing steel shall be Grade 300 or Grade 400.

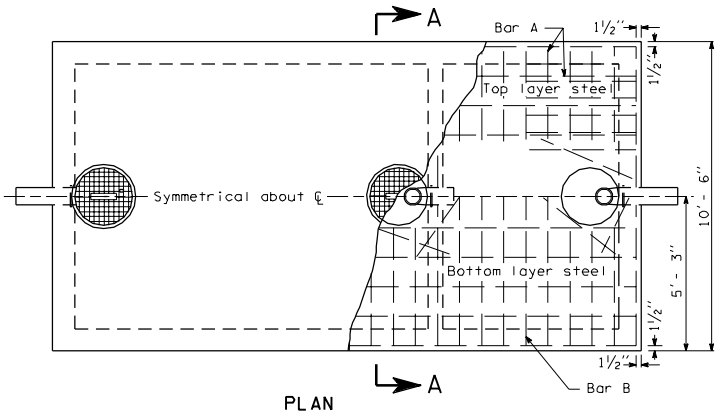

PLAN

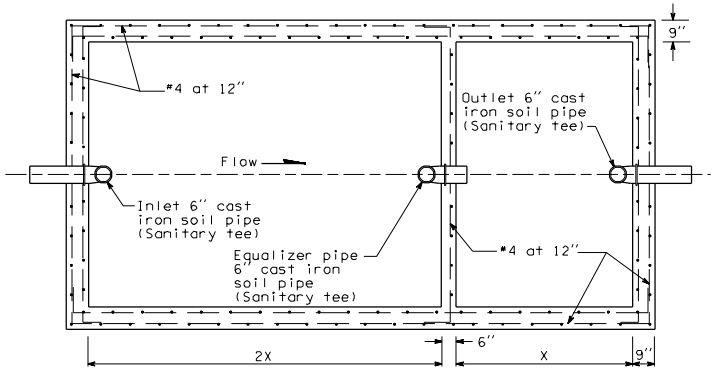

SECTION B-B

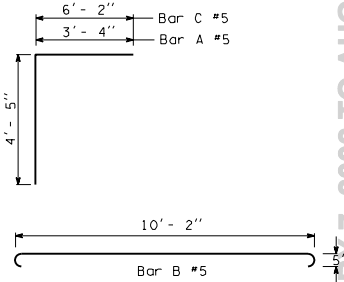

BAR DETAILS

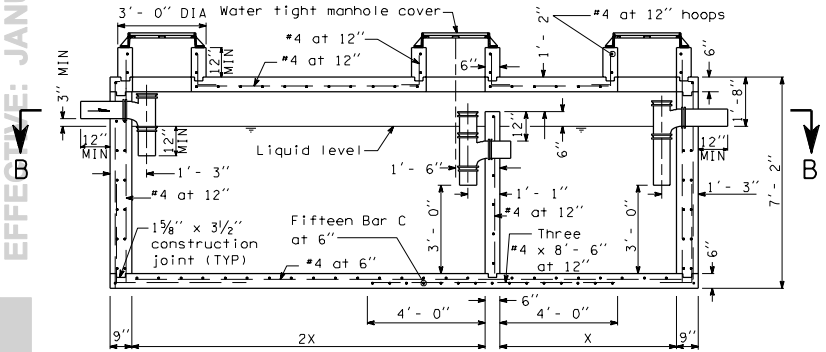

LONGITUDINAL SECTION

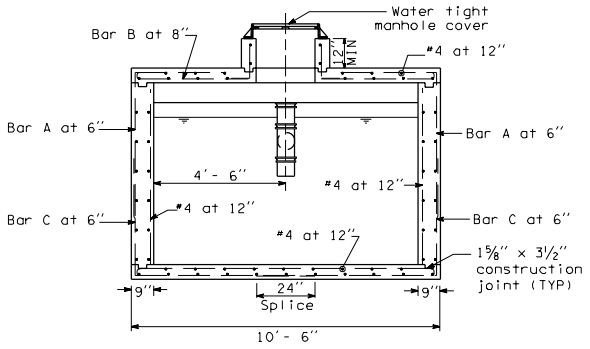

SECTION A-A

REST AREA SEPTIC TANK

I-1 1 of 1

07-18-97

EFFECTIVE: JANUARY 7, 2002 TO AUGUST 4, 2002

EFFECTIVE: JANUARY 7, 2002 TO AUGUST 4, 2002

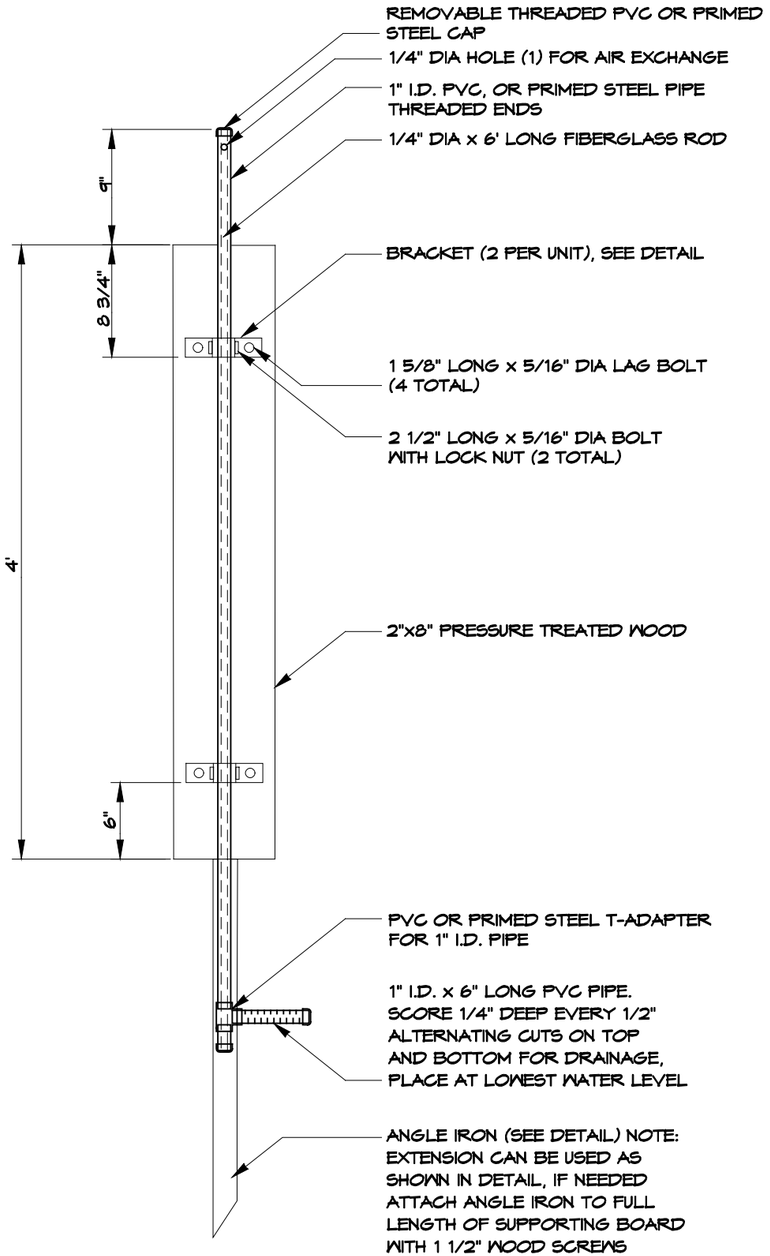

CREST GAGE
NOT TO SCALE

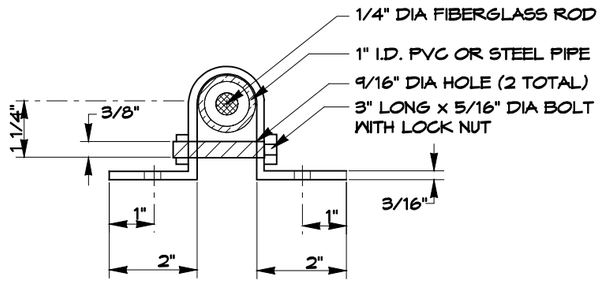

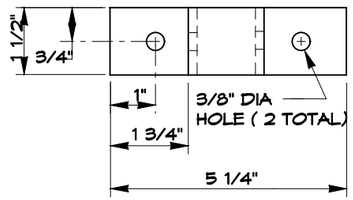

BRACKET (2 PER UNIT)
NOT TO SCALE

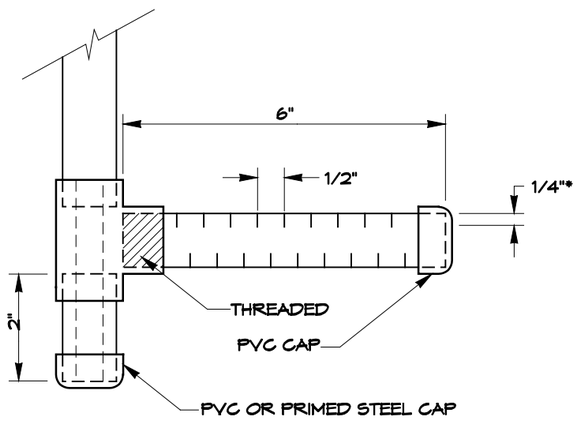

* REFERS TO DRAINAGE CUTS ON TOP AND BOTTOM OF PIPE

WATER INTAKE & CLEAN-OUT ASSEMBLY
NOT TO SCALE

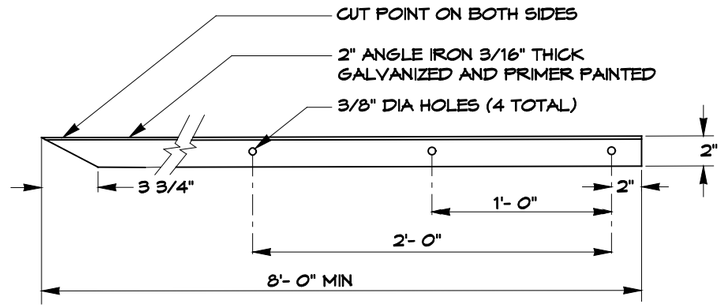

ANGLE IRON
NOT TO SCALE

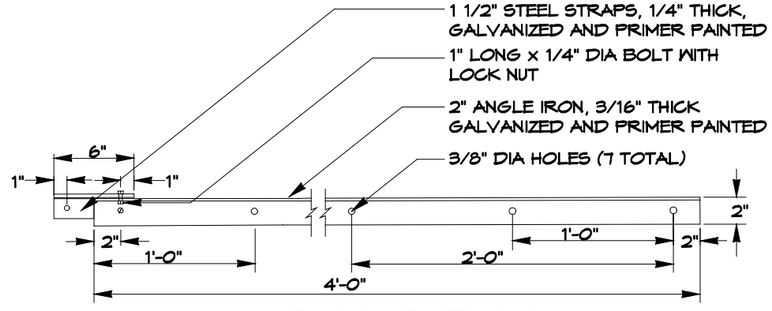

ANGLE IRON EXTENSION
NOT TO SCALE

NOTE: POUR IN APPROXIMATELY 1 TABLESPOON OF CORK DUST AT INSTALLATION AND AFTER EACH READING

NOTE: GAGE ASSEMBLY BACKING BOARD, PIPE, ROD, AND ANGLE IRON CAN BE EXTENDED AS NEEDED TO FIT SITE REQUIREMENTS.

STATE OF WASHINGTON
REGISTERED
LANDSCAPE ARCHITECT

MARK W. MAURER
CERTIFICATE NO. 000598

CREST GAGE

STANDARD PLAN I-2

NOTE: THIS PLAN IS NOT A LEGAL ENGINEERING DOCUMENT BUT AN ELECTRONIC DUPLICATE. THE ORIGINAL, SIGNED BY THE ENGINEER AND APPROVED FOR PUBLICATION, IS KEPT ON FILE AT THE WASHINGTON STATE DEPARTMENT OF TRANSPORTATION. A COPY MAY BE OBTAINED UPON REQUEST.

APPROVED FOR PUBLICATION

Clifford E. Mansfield — *04-23-99*

DEPUTY STATE DESIGN ENGINEER — DATE

WASHINGTON STATE DEPARTMENT OF TRANSPORTATION
OLYMPIA, WASHINGTON

EFFECTIVE: JANUARY 7, 2002 TO AUGUST 4, 2002

EFFECTIVE: JANUARY 7, 2002 TO AUGUST 4, 2002
EFFECTIVE: JANUARY 7, 2002 TO AUGUST 4, 2002

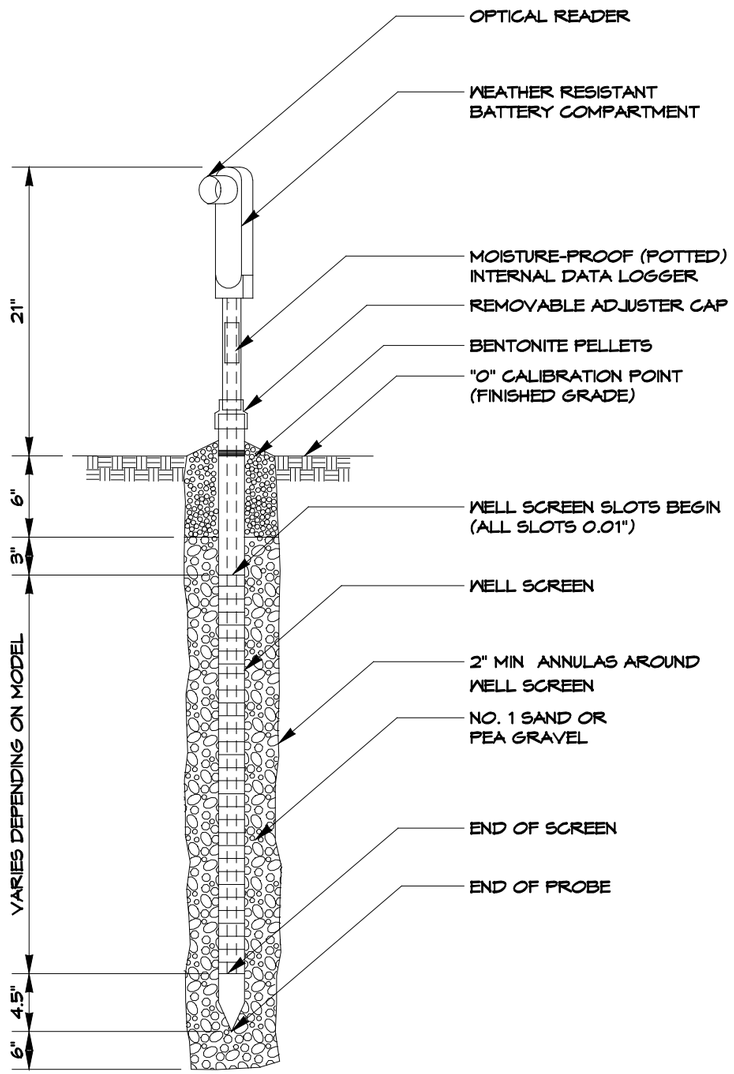

AUTOMATED GROUND WATER MONITORING WELL

NOT TO SCALE

STATE OF WASHINGTON
REGISTERED
LANDSCAPE ARCHITECT

MARK W. MAURER
CERTIFICATE NO. 000598

AUTOMATED GROUND WATER MONITORING WELL

STANDARD PLAN I-3

NOTE: THIS PLAN IS NOT A LEGAL ENGINEERING DOCUMENT BUT AN ELECTRONIC DUPLICATE. THE ORIGINAL, SIGNED BY THE ENGINEER AND APPROVED FOR PUBLICATION, IS KEPT ON FILE AT THE WASHINGTON STATE DEPARTMENT OF TRANSPORTATION. A COPY MAY BE OBTAINED UPON REQUEST.

APPROVED FOR PUBLICATION

Clifford E. Mansfield — *08-20-99*

DEPUTY STATE DESIGN ENGINEER — DATE

WASHINGTON STATE DEPARTMENT OF TRANSPORTATION
OLYMPIA, WASHINGTON

EFFECTIVE: JANUARY 7, 2002 TO AUGUST 4, 2002
EFFECTIVE: JANUARY 7, 2002 TO AUGUST 4, 2002

EFFECTIVE: JANUARY 7, 2002 TO AUGUST 4, 2002

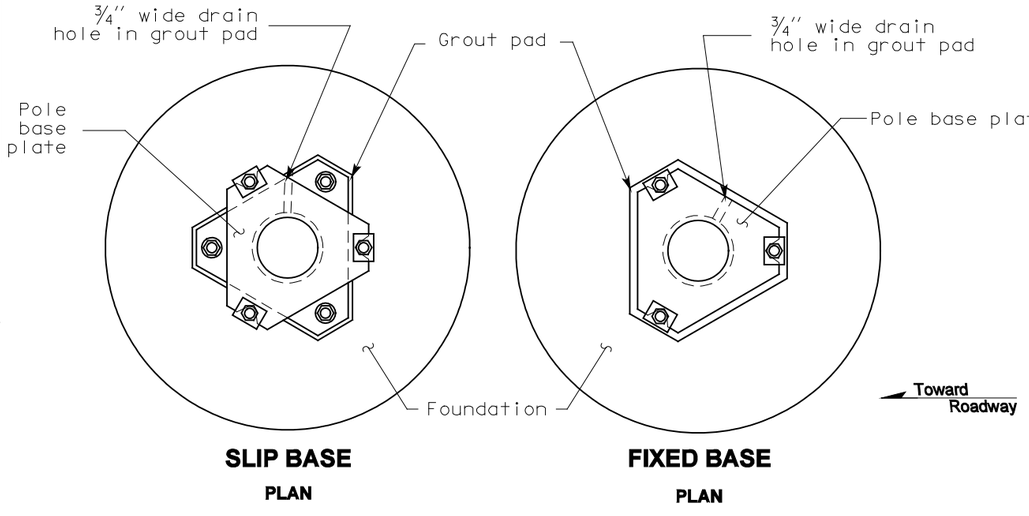

SLIP BASE
PLAN

FIXED BASE
PLAN

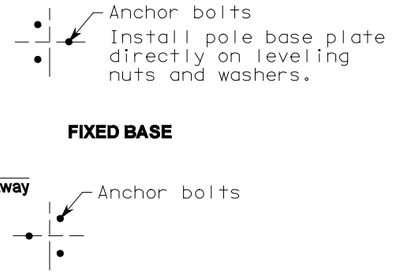

ANCHOR BOLT LAYOUT

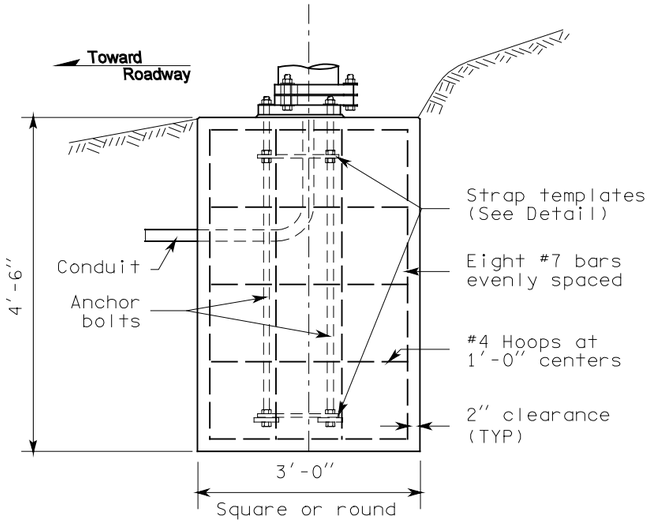

FOUNDATION DETAIL
(See Note 1)

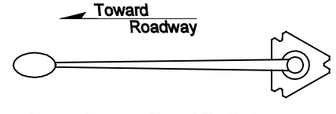

LIGHT STANDARD ORIENTATION

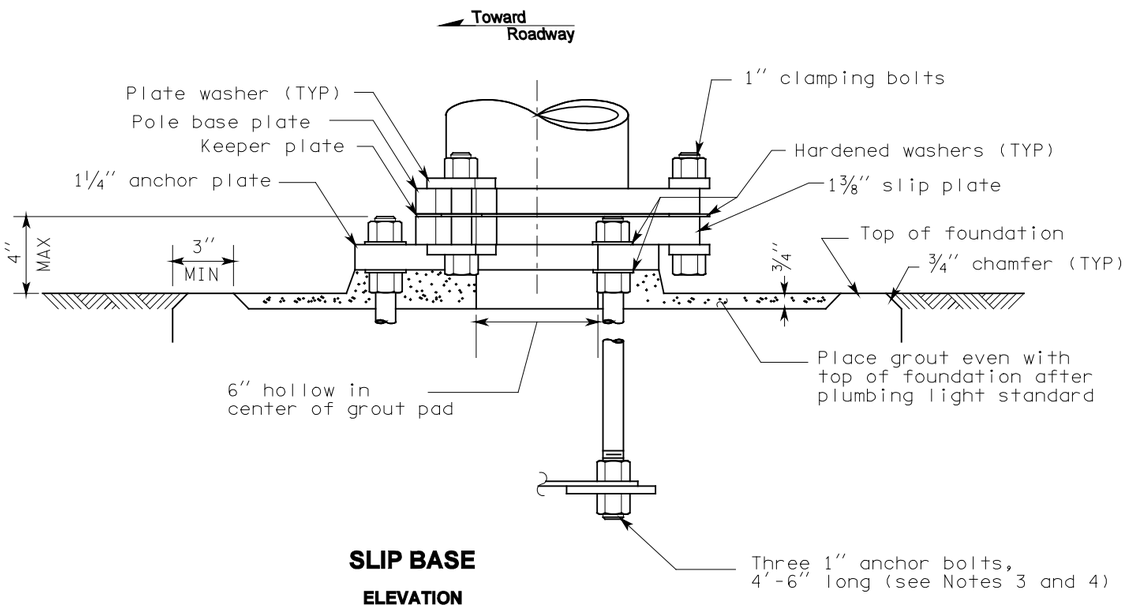

SLIP BASE
ELEVATION

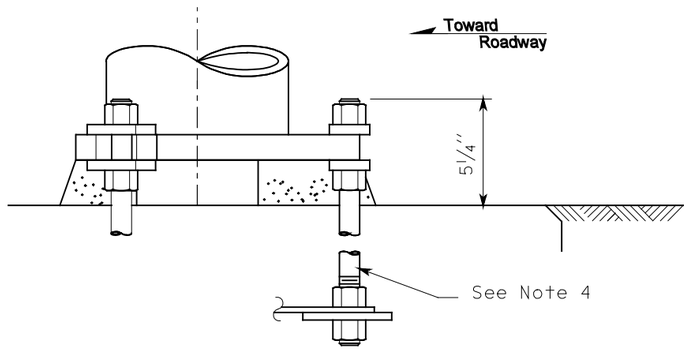

FIXED BASE
ELEVATION

Details similar to slip base except where noted

JEROME A. WEIGEL
STATE OF WASHINGTON
14742
REGISTERED
PROFESSIONAL ENGINEER

EXPIRES JUNE 29, 2000

STEEL LIGHT STANDARD BASE DETAILS

STANDARD PLAN J-1b

SHEET 1 OF 3 SHEETS

NOTE: THIS PLAN IS NOT A LEGAL ENGINEERING DOCUMENT BUT AN ELECTRONIC DUPLICATE. THE ORIGINAL, SIGNED BY THE ENGINEER AND APPROVED FOR PUBLICATION, IS KEPT ON FILE AT THE WASHINGTON STATE DEPARTMENT OF TRANSPORTATION. A COPY MAY BE OBTAINED UPON REQUEST.

DATE	REVISION	BY
10-99		TWS

APPROVED FOR PUBLICATION

Clifford E. Mansfield *10/08/99*

DEPUTY STATE DESIGN ENGINEER — DATE

WASHINGTON STATE DEPARTMENT OF TRANSPORTATION
OLYMPIA, WASHINGTON

EFFECTIVE: JANUARY 7, 2002 TO AUGUST 4, 2002

EFFECTIVE: JANUARY 7, 2002 TO AUGUST 4, 2002

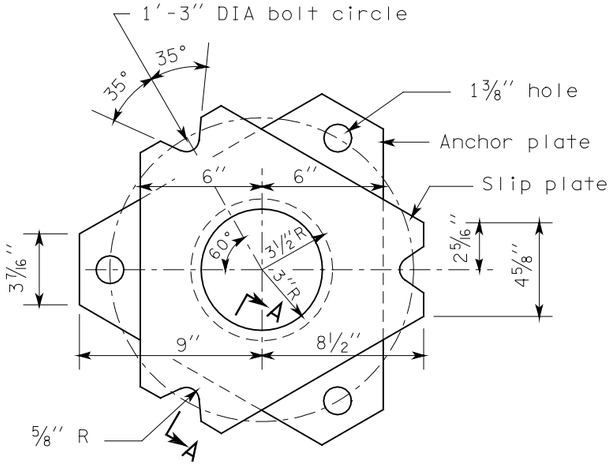

SLIP/ANCHOR PLATES DETAIL

Smooth finish top, bottom, and notched surfaces

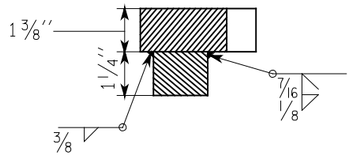

SECTION A-A

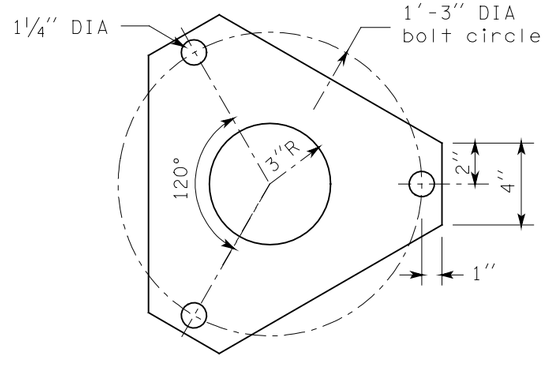

KEEPER PLATE

Place between pole base plate and slip plate on top of middle washers.

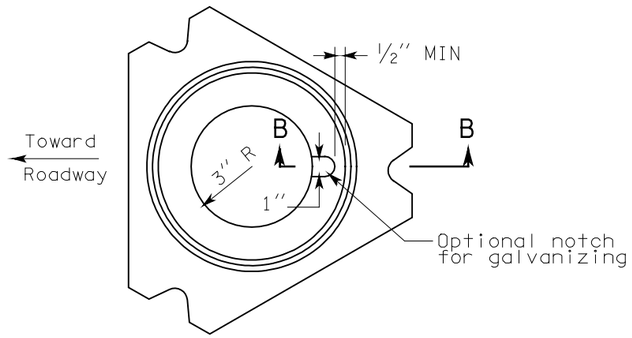

POLE BASE PLATE

Smooth finish top, bottom, and notched surfaces

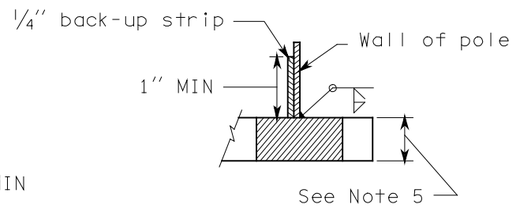

SECTION B-B

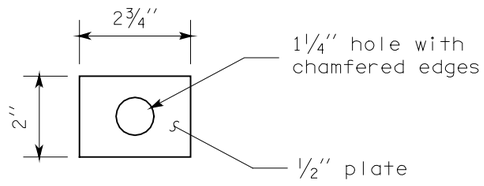

PLATE WASHER

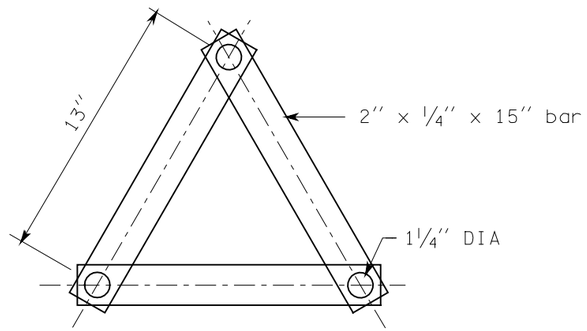

STRAP TEMPLATE ASSEMBLY DETAIL

Place over anchor bolts
(See Note 4)

EXPIRES JUNE 29, 2000

STEEL LIGHT STANDARD BASE DETAILS

STANDARD PLAN J-1b

NOTE: THIS PLAN IS NOT A LEGAL ENGINEERING DOCUMENT BUT AN ELECTRONIC DUPLICATE. THE ORIGINAL, SIGNED BY THE ENGINEER AND APPROVED FOR PUBLICATION, IS KEPT ON FILE AT THE WASHINGTON STATE DEPARTMENT OF TRANSPORTATION. A COPY MAY BE OBTAINED UPON REQUEST.

DATE	REVISION	BY
10-99	REVISED SECTION B-B.	TWS

APPROVED FOR PUBLICATION

Clifford E. Mansfield *10/08/99*

DEPUTY STATE DESIGN ENGINEER — DATE

WASHINGTON STATE DEPARTMENT OF TRANSPORTATION
OLYMPIA, WASHINGTON

EFFECTIVE: JANUARY 7, 2002 TO AUGUST 4, 2002

EFFECTIVE: JANUARY 7, 2002 TO AUGUST 4, 2002

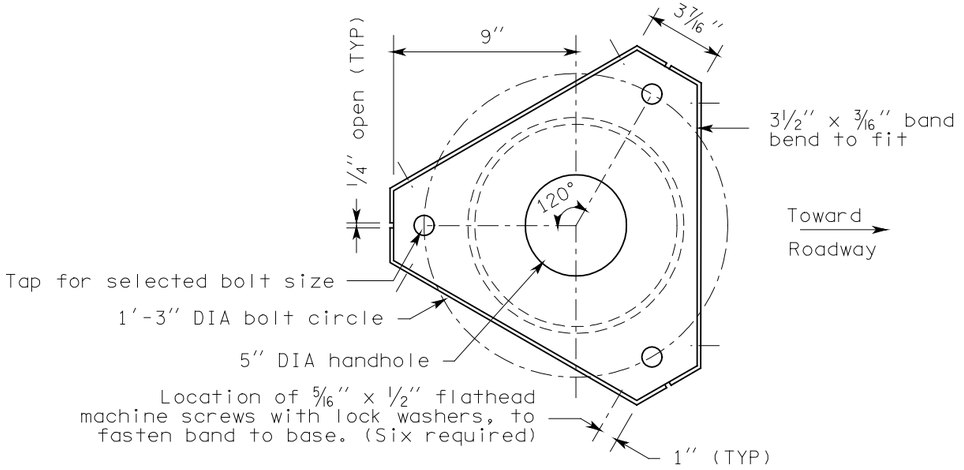

SECTION C-C

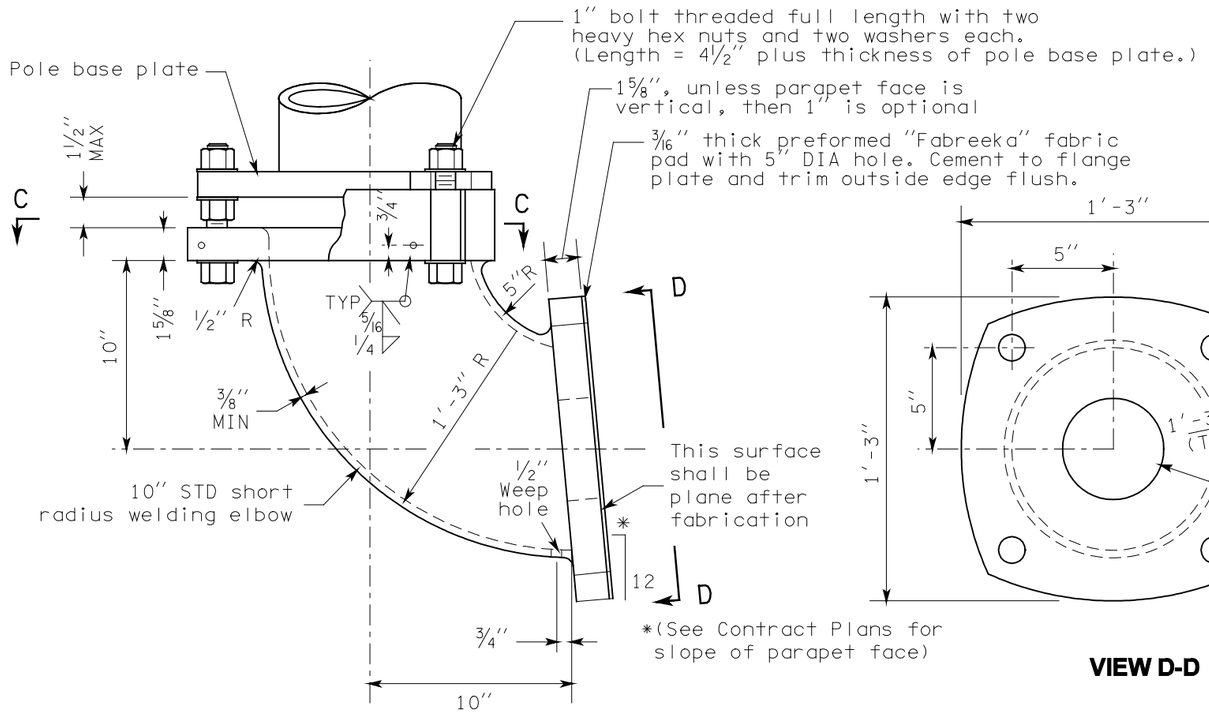

ELEVATION

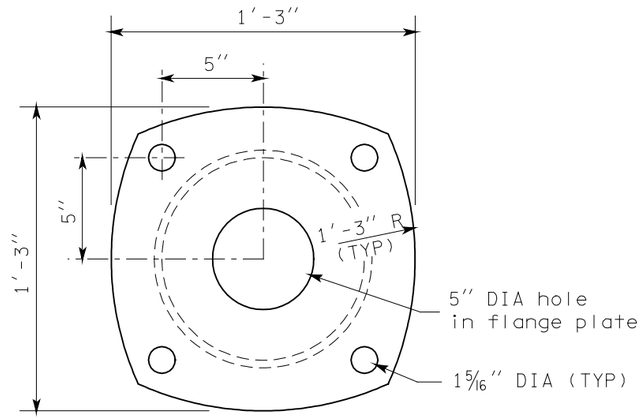

VIEW D-D

LIGHTING BRACKET DETAIL

For light standards with single arm 12′ or less and double arms 8′ or less mounted on bridges or retaining walls.

NOTES

1. See Standard Plan C-8b for base plate and foundation requirements when light standards are mounted on concrete barrier.
2. Round and smooth all edges along wire-way to protect conductors. See Standard Plan J-1e for wiring details.
3. The top of the anchor rod shall be both threaded and galvanized a minimum of 12″. The bottom of the anchor rod shall be threaded a minimum of 3″. Galvanizing shall be in accordance with AASHTO M111 after threading. Hooked anchor bolts are not allowed.
4. Strap templates shall be held in place by nuts 6″ from the top of the foundation, and at bottom of anchor bolts resting on 4″ x 3/8″ square washers.
5. Pole base plate for a slip base design shall be 1 1/4″ AASHTO M223 Gr. 345. Pole base plate for a fixed base design may be either 1 1/4″ AASHTO M223 Gr. 345 or 1 1/2″ AASHTO M183.
6. Installation of a 50′ pole with double mast arms on a slip base is not allowed.

JEROME A. WEIGEL
STATE OF WASHINGTON
14742
REGISTERED
PROFESSIONAL ENGINEER

EXPIRES JUNE 29, 2000

STEEL LIGHT STANDARD BASE DETAILS

STANDARD PLAN J-1b

NOTE: THIS PLAN IS NOT A LEGAL ENGINEERING DOCUMENT BUT AN ELECTRONIC DUPLICATE. THE ORIGINAL, SIGNED BY THE ENGINEER AND APPROVED FOR PUBLICATION, IS KEPT ON FILE AT THE WASHINGTON STATE DEPARTMENT OF TRANSPORTATION. A COPY MAY BE OBTAINED UPON REQUEST.

DATE	REVISION	BY
10-99	REVISED NOTES 1, 2 & 5; ADDED NOTE 6.	TWS

APPROVED FOR PUBLICATION

Clifford E. Mansfield *10/08/99*

DEPUTY STATE DESIGN ENGINEER — DATE

WASHINGTON STATE DEPARTMENT OF TRANSPORTATION
OLYMPIA, WASHINGTON

EFFECTIVE: JANUARY 7, 2002 TO AUGUST 4, 2002

EFFECTIVE: JANUARY 7, 2002 TO AUGUST 4, 2002

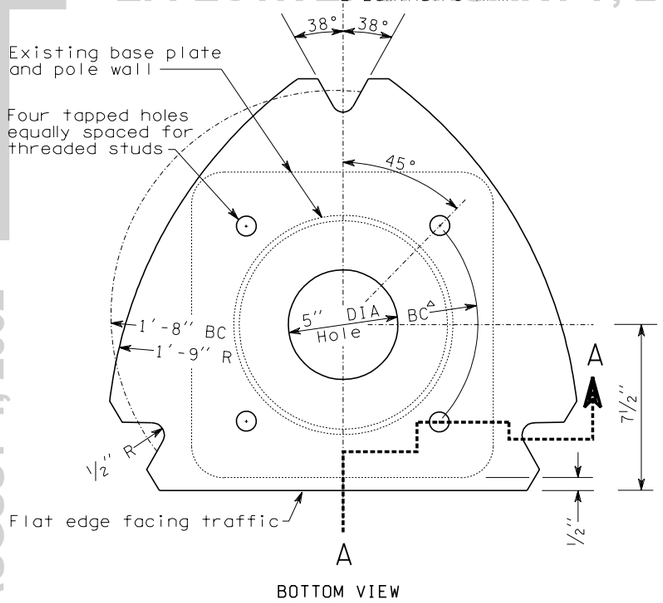

BOTTOM VIEW

PLAN - TOP SLIP PLATE

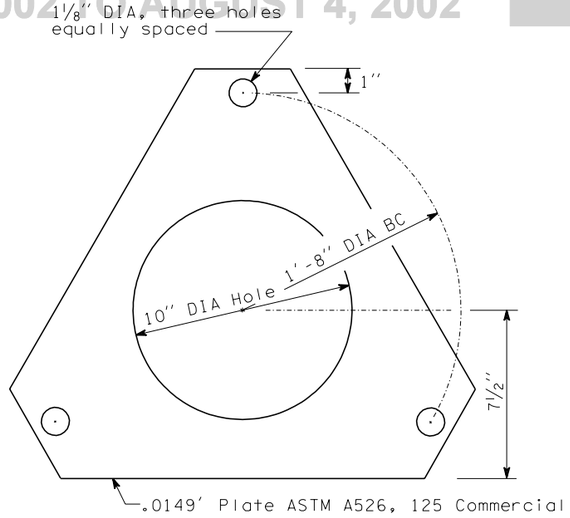

KEEPER PLATE

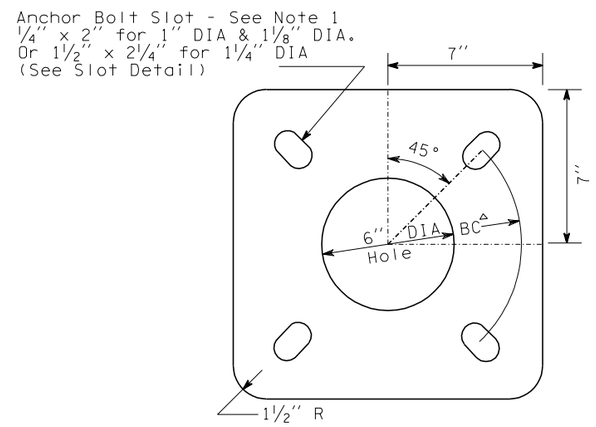

ANCHOR PLATE

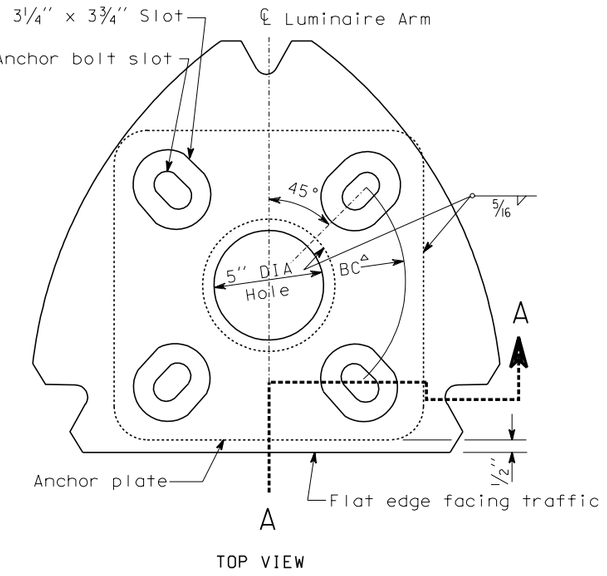

TOP VIEW

PLAN - BOTTOM SLIP PLATE

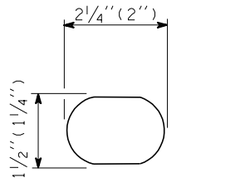

SLOT DETAIL

NOTE:
Plate shall conform to AASHTO M183 M (ASTM A36) except as noted.
Flat washer shall conform to AASHTO M164 M (ASTM A325).

EFFECTIVE: JANUARY 7, 2002 TO AUGUST 4, 2002

KEY

1. Clamping Bolts, ⅞" DIA hex head bolt & nut, three plate washers, 50 ft.-lbs. torque. (Three per slip base)
2. Threaded Slotted Stud, see SCHEDULE for DIA, hardened washer and heavy hex nut (four per base plate). Insert stud and center punch at bottom periphery to lock tapped stud in place prior to galvanizing.
3. Keeper Plate
4. Pole Wall (existing)
5. Base Plate (existing)
6. Top Slip Plate
7. Bottom Slip Plate
8. Anchor Plate
9. Grout (exist. w/drain)
10. New Grout Pad
11. Foundation (existing)
12. Hardened Washer
13. Anchor Bolt (existing), trim to clear slip plate by ⅛" MIN.
14. 5/16" Fillet Weld
15. Heavy Hex Nut (TYP)

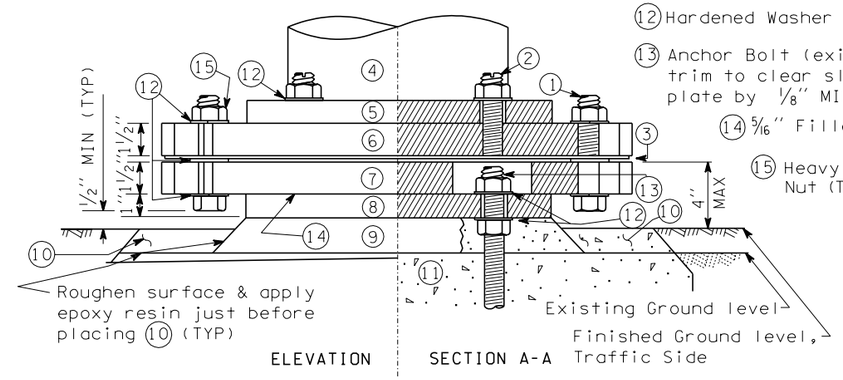

ELEVATION SECTION A-A

ASSEMBLY DETAILS

After bolting bottom slip plate assembly to foundation, fill slotted bolt holes with mastic.

Grade around foundation to ensure stub height does not exceed 4".

Removal of the frangible base from the existing base plate is required.

Misaligned anchor bolts must be removed and replaced.

SCHEDULE				
Adapter Type	Anchor Bolt*	BC^a (Bolt Circle)+	Existing Base Type	Luminaire Height ±
A-1	1"	11"	Welded Plate	30'
A-2	1"	1'-0¼"	Cast Aluminum	30'
A-3	1"	1'-0¾"	Steel Transformer	30'
A-4	1⅛"	1'-2⅛"	2-Pc. Alum. Clamp	40'
A-5	1¼"	1'-2⅛"	2-Pc. Alum. Clamp	40'

* Use matching diameter for threaded studs

\+ Contractor shall verify BC in field before ordering. If BC or anchor bolt sizes differ from those listed, contact Bridge and Structures Office.

± Plus or minus 2'-6"

M. MYINT LWIN
STATE OF WASHINGTON
10536
REGISTERED
PROFESSIONAL ENGINEER

EXPIRES JANUARY 17, 1999

SLIP BASE ADAPTOR FOR 4-BOLT LIGHT STANDARD BASE STANDARD PLAN J-1c

NOTE: THIS PLAN IS NOT A LEGAL ENGINEERING DOCUMENT BUT AN ELECTRONIC DUPLICATE. THE ORIGINAL, SIGNED BY THE ENGINEER AND APPROVED FOR PUBLICATION, IS KEPT ON FILE AT THE WASHINGTON STATE DEPARTMENT OF TRANSPORTATION. A COPY MAY BE OBTAINED UPON REQUEST.

APPROVED FOR PUBLICATION

Clifford E. Mansfield — DEPUTY STATE DESIGN ENGINEER — 4/24/98 DATE

WASHINGTON STATE DEPARTMENT OF TRANSPORTATION
OLYMPIA, WASHINGTON

EFFECTIVE: JANUARY 7, 2002 TO AUGUST 4, 2002

EFFECTIVE: JANUARY 7, 2002 TO AUGUST 4, 2002

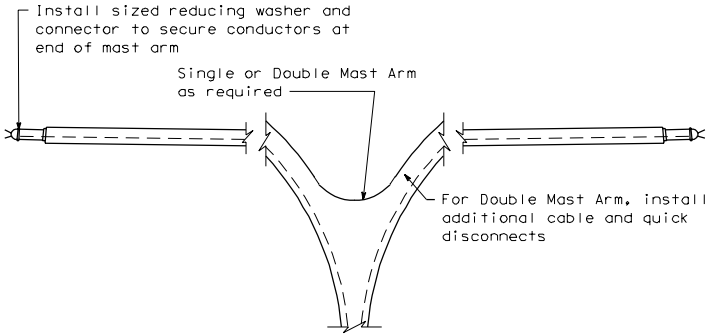

MAST ARM WIRING DETAIL

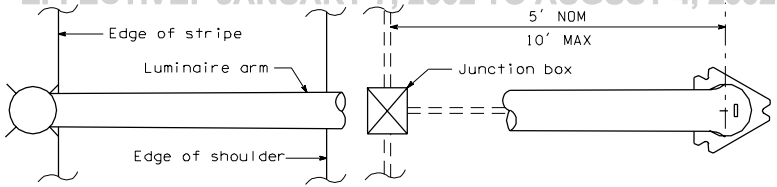

Alternate locations allowed provided junction box to base distance does not exceed 10'

TYPICAL JUNCTION BOX LOCATION

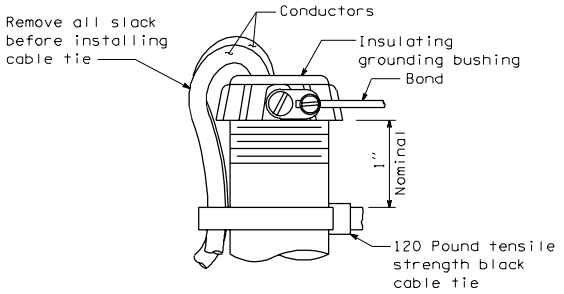

DETAIL A

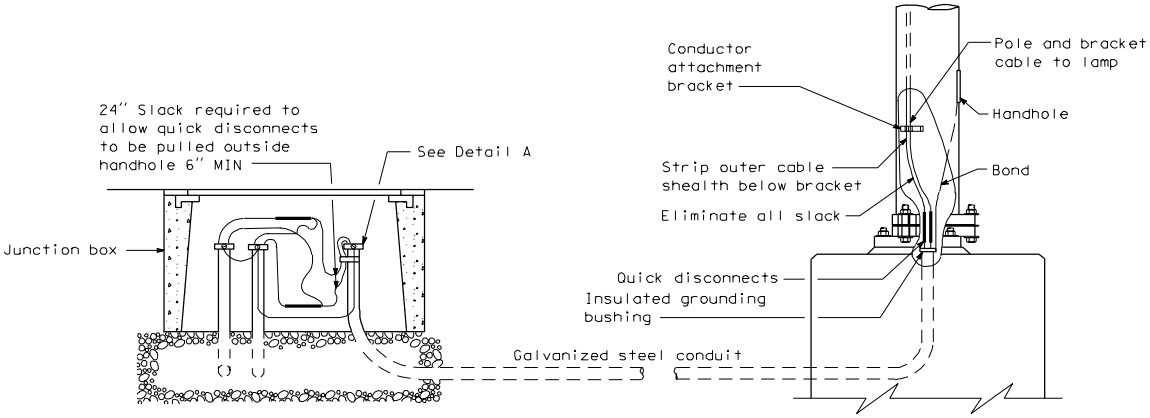

WIRING DETAIL LIGHT STANDARD SLIP BASE*

*Application for fixed base similar except no cable tie is required at junction box.

LIGHT STANDARDS WIRING DETAILS

J-1e 1 of 1

08-01-97

EFFECTIVE: JANUARY 7, 2002 TO AUGUST 4, 2002

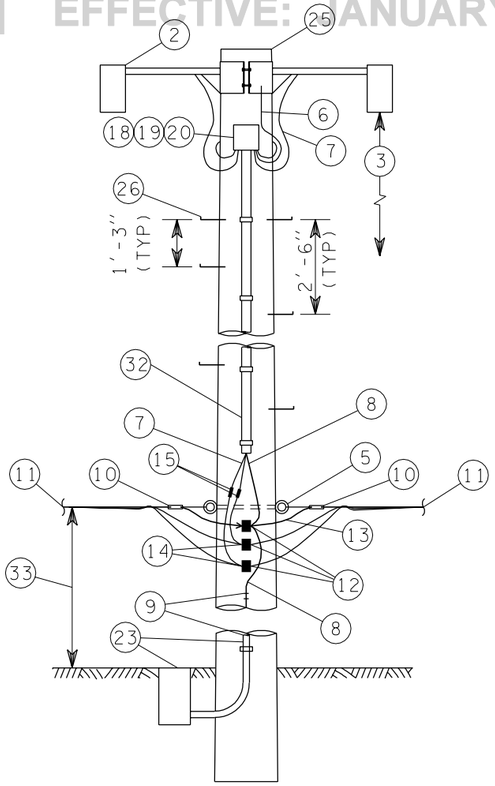

HIGH MAST TIMBER
LUMINAIRE SUPPORT

Shown for 480 VAC power feed.
Increase conductor and fuse size
as required for 240 VAC power feed.

KEY

(1) Galvanized steel mast arm - configuration varies with manufacturer
(2) Luminaire - see Contract for type and number
(3) Mounting height - roadway to luminaire elevation difference ± 2%, see Contract
(4) Mast arm length - see Contract
(5) 5⁄8″ galvanized thimble eyebolt (single or double) with washers and nuts or eyenut
(6) Bonding jumper
(7) Pole and bracket cable
(8) Equipment grounding conductor see Standard Plan J-9a.
(9) From ground line to 10′ above ground, enclose equipment grounding conductor in galvanized steel conduit, code sized. Above 10′ from ground, staple equipment grounding conductor to pole. Connect to supplemental ground per Standard Plan J-9a.
(10) Service wedge clamp
(11) ACSR triplex or fourplex conductors - see Contract
(12) Copper split bolt connector
(13) Messenger cable
(14) Insulating tape for waterproof connection
(15) Fused quick disconnect - use 30 amp fuses for high mast supports
(16) Weatherhead - size as required
(17) Steel conduit
(18) 8″ x 8″ x 4″ NEMA 3R junction box with raintight hubs and removable cover
(19) Grounding lug
(20) 12 pole terminal block
(21) Direct burial conductors or galvanized steel conduits with conductors - see Contract
(22) Grounding bushing
(23) Supplemental ground - see Standard Plan J-9a.
(24) Class 5 timber pole - length sufficient for mounting height and burial depth
(25) Class 2 timber pole - length sufficient for mounting height and burial depth.
(26) 5⁄8″ x 9″ step bolt
(27) 1⁄4″ x 10″ plate collar bent to fit pole diameter (8″ - 10″)
(28) 3⁄8″ x 4″ machine bolts (four required) with washers and nuts
(29) 1⁄2″ lag bolts (six required) - drill 9⁄16″ hole in plate
(30) 2″ pipe
(31) 3⁄4″ wire hole 2″ from gusset plate, smooth hole edges
(32) 1″ nonmetallic conduit with 3⁄4″ straps at code spacing
(33) Distance varies, 35′ MIN, 50′ MAX, depending on line clearance requirements

NOTES:
1. Timber luminaire supports are allowed only for temporary installations where breakaway or slip bases are not required.
2. When down guys are required, See Standard Plan J-7d.

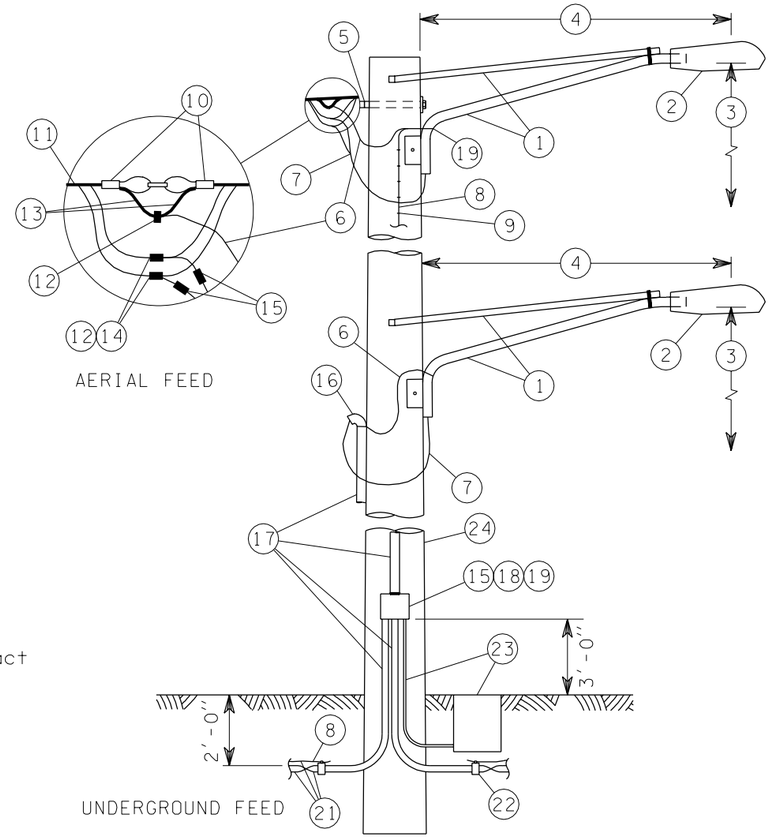

TIMBER LUMINAIRE SUPPORT

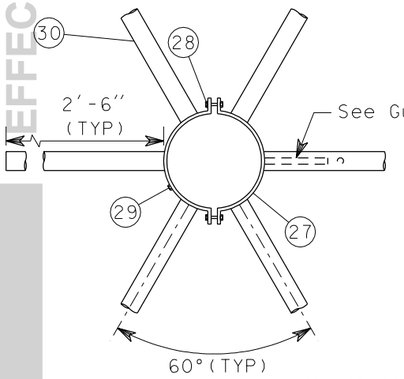

PLAN VIEW
LUMINAIRE SUPPORT BRACKET
GALVANIZE AFTER FABRICATION

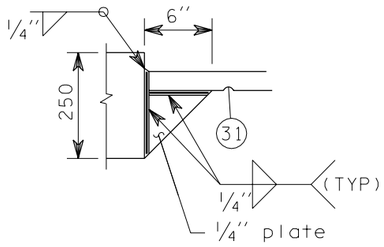

GUSSET DETAIL

PLAN VIEW
TYPICAL LUMINAIRE MOUNTING
CONFIGURATIONS

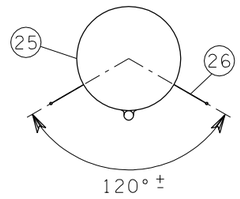

STEP BOLT PLACEMENT

EXPIRES OCTOBER 26, 2000

TIMBER LIGHT STANDARDS
STANDARD PLAN J-1f

NOTE: THIS PLAN IS NOT A LEGAL ENGINEERING DOCUMENT BUT AN ELECTRONIC DUPLICATE. THE ORIGINAL, SIGNED BY THE ENGINEER AND APPROVED FOR PUBLICATION, IS KEPT ON FILE AT THE WASHINGTON STATE DEPARTMENT OF TRANSPORTATION. A COPY MAY BE OBTAINED UPON REQUEST.

APPROVED FOR PUBLICATION

Clifford E. Mansfield *6/23/00*

DEPUTY STATE DESIGN ENGINEER — DATE

WASHINGTON STATE DEPARTMENT OF TRANSPORTATION
OLYMPIA, WASHINGTON

DATE	REVISION	BY
5/00	REPLACED PLAN TITLE REFERENCES WITH PLAN NUMBERS. CORRECTED KEY NOTE 5.	TWS

EFFECTIVE: JANUARY 7, 2002 TO AUGUST 4, 2002

EFFECTIVE: JANUARY 7, 2002 TO AUGUST 4, 2002

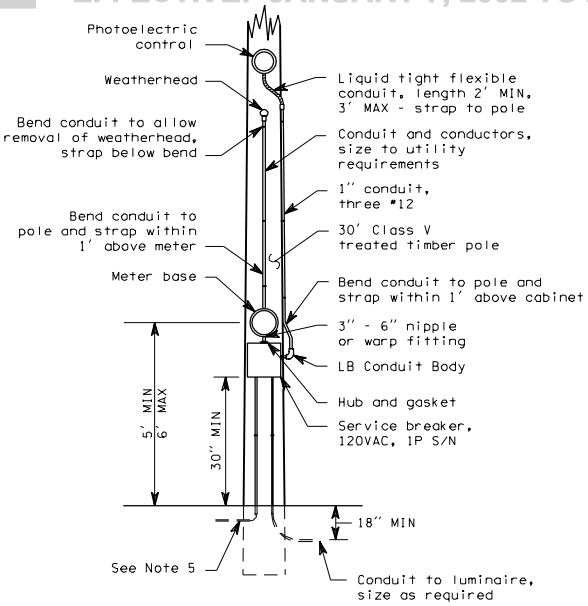

TYPE A SERVICE, 120 VOLT

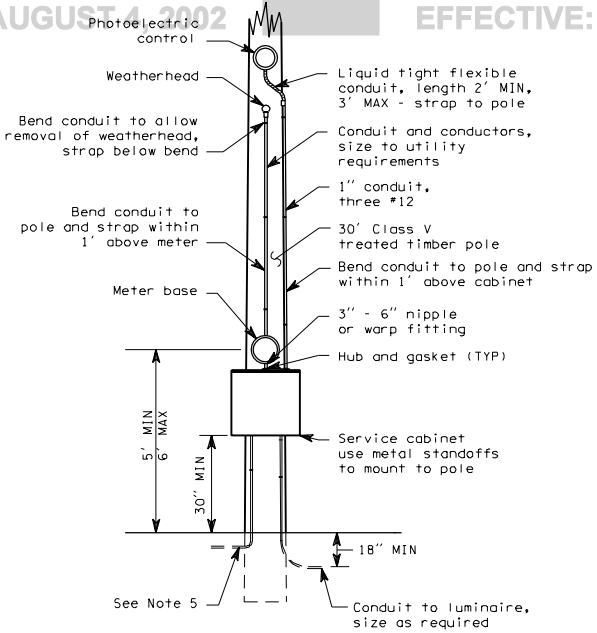

TYPE B SERVICE, 120/240 VOLT

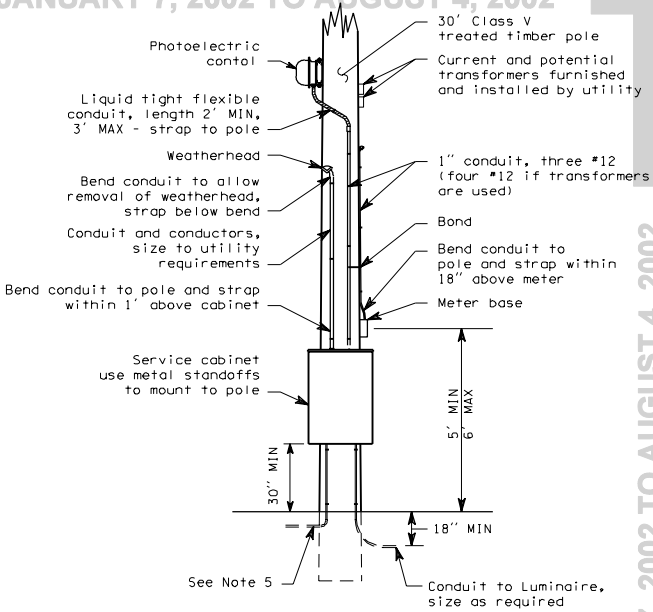

TYPE C SERVICE, 480 VOLT

TYPE A, B AND C SERVICE LIGHTING DETAILS

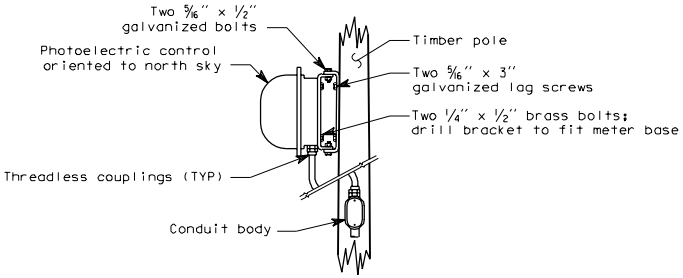

PHOTOELECTRIC CONTROL DETAILS

J-3

08-01-97

EFFECTIVE: JANUARY 7, 2002 TO AUGUST 4, 2002

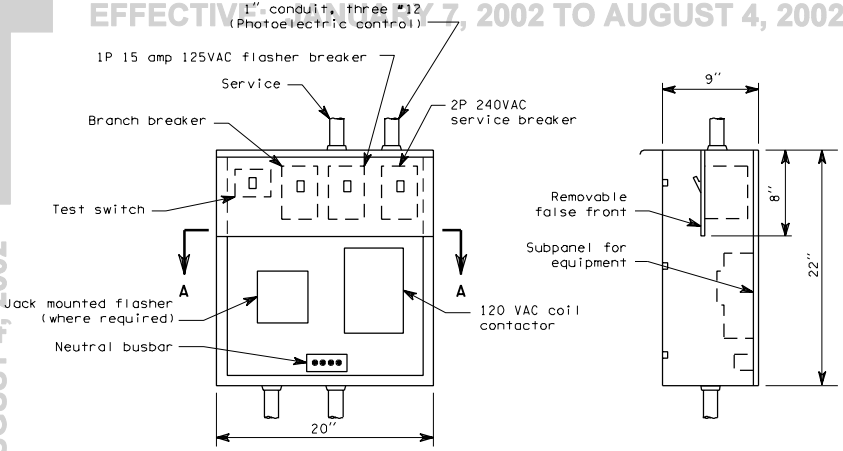

TYPE B SERVICE CABINET

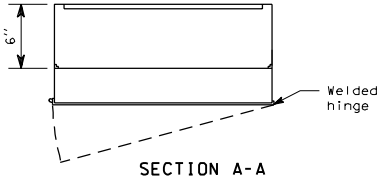

SECTION A-A

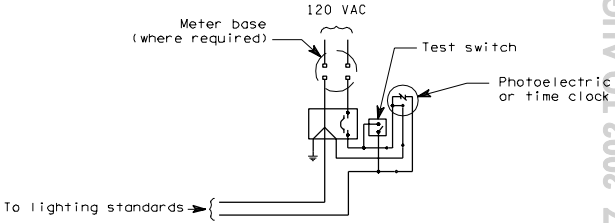

TYPE A WIRING DIAGRAM
120 VOLT

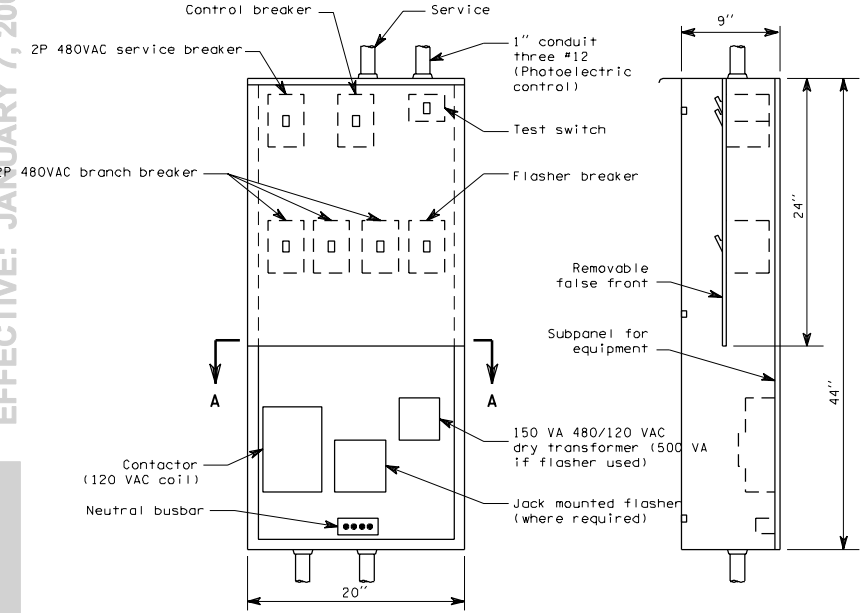

TYPE C SERVICE CABINET

NOTES:

1. Metering arrangements may vary with different serving utilities. The contractor shall verify the requirements of the utility prior to installing the service equipment.
2. All service pole conduit shall be secured to the pole with conduit strap at 5' centers.
3. All risers and service equipment shall be installed on side of pole that is away from traffic.
4. Where required by the serving utility, service breakers shall be installed above the meter socket in a separate raintight enclosure.
5. Bend and attach to pole within 1' of enclosure. See Standard Plan "Typical Grounding Details."
6. For Type B service wiring diagram, use Standard Plan "Modified Type B Service". For Type C service wiring diagram, use Standard Plan, "Type E Service."
7. See breaker schedule in contract for breaker and contactor sizes.

TYPE A, B AND C SERVICE LIGHTING DETAILS

J-3

08-01-97

EFFECTIVE: JANUARY 7, 2002 TO AUGUST 4, 2002

GENERAL NOTES

1. THE FOLLOWING EQUIPMENT WITHIN THE SERVICE ENCLOSURE SHALL HAVE AN APPROPRIATELY ENGRAVED PHENOLIC NAME PLATE ATTACHED WITH SCREWS OR RIVETS. KEY NUMBERS: 2, 3, 4, 5, 7, 8 AND 11.
2. METERING ARRANGEMENTS VARY WITH DIFFERENT SERVING UTILITIES. THE UTILITY MAY REQUIRE METER BASE MOUNTING IN THE ENCLOSURE, ON THE SIDE OR ON THE BACK OF THE ENCLOSURE. THE CONTRACTOR SHALL VERIFY THE SERVING UTILITY'S REQUIREMENTS PRIOR TO INSTALLING THE SERVICE EQUIPMENT.
3. A 1% TOLERANCE IS ALLOWED IN ALL DIMENSIONS.
4. DIMENSIONS SHOWN ARE NOMINAL AND SHALL BE ADJUSTED TO ACCOMODATE THE VARIOUS SIZES OF EQUIPMENT INSTALLED BY THE CONTRACTOR.
5. FOR DETAILS ON SERVICE GROUNDING SEE STD PLAN, "TYPICAL GROUNDING DETAILS".

KEY

1. METER BASE - 4 JAW WITH MANUAL BYPASS LEVER
2. MAIN BREAKER (SEE BREAKER SCHEDULE)
3. SIGNAL BREAKER (SEE BREAKER SCHEDULE)
4. CONTROL BREAKER (SP-15 AMP)
5. TEST SWITCH (SPST - 10 AMP - 125 VOLT - "T" RATED)
6. PHOTOELECTRIC CONTROL, STD. SPEC. 9 - 29.11(2)
7. BRANCH BREAKER (SEE BREAKER SCHEDULE)
8. CONTACTOR (SEE BREAKER SCHEDULE)
9. NEUTRAL BUSS
10. RECEPTACLE, GROUNDED (20 AMP)
11. RECEPTACLE BREAKER (GFI-SPST-20 AMP - 125 VOLT - " T " RATED)
12. POLISHED WIRE GLASS (6" x 6")
13. 8 mm DIAMETER DRAIN HOLE. DRILL BEFORE GALVANIZING.
14. MOUNTING HOLE. SEE SERVICE CABINET MOUNTING DETAIL.
15. PHOTOCELL ENCLOSURE - SEE PHOTOCELL ENCLOSURE MOUNTING DETAILS.
16. HINGED DEAD FRONT WITH 1/4 TURN FASTENERS.

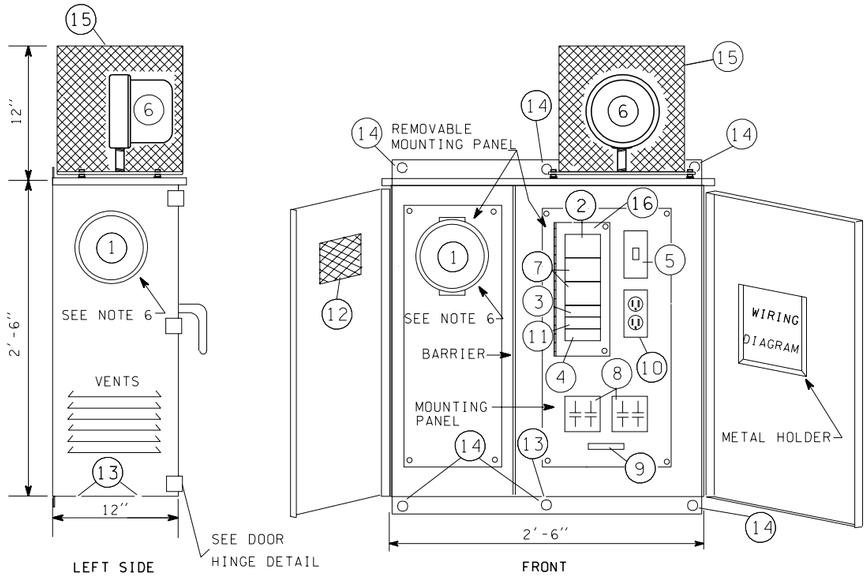

SERVICE CABINET DETAIL

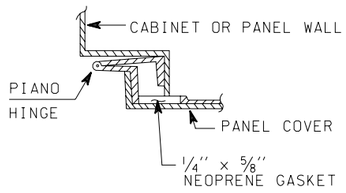

DOOR HINGE DETAIL

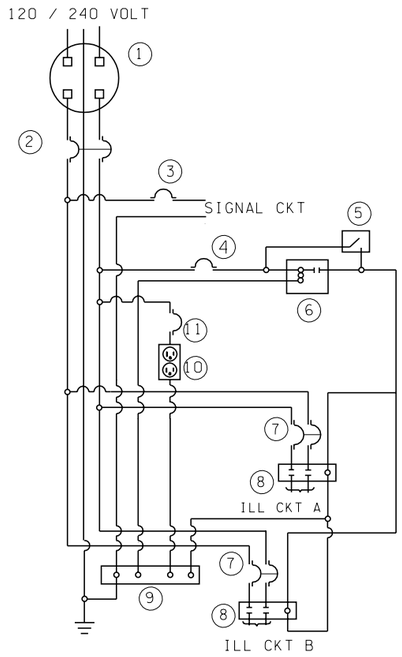

WIRING SCHEMATIC

DAVID K. PEACH
STATE OF WASHINGTON
00111089
REGISTERED
PROFESSIONAL ENGINEER

EXPIRES JUNE 4, 1999

MODIFIED TYPE B SERVICE

STANDARD PLAN J-3b

NOTE: THIS PLAN IS NOT A LEGAL ENGINEERING DOCUMENT BUT AN ELECTRONIC DUPLICATE. THE ORIGINAL, SIGNED BY THE ENGINEER AND APPROVED FOR PUBLICATION, IS KEPT ON FILE AT THE WASHINGTON STATE DEPARTMENT OF TRANSPORTATION. A COPY MAY BE OBTAINED UPON REQUEST.

APPROVED FOR PUBLICATION

Clifford E. Mansfield — DEPUTY STATE DESIGN ENGINEER

4/24/98 — DATE

WASHINGTON STATE DEPARTMENT OF TRANSPORTATION
OLYMPIA, WASHINGTON

EFFECTIVE: JANUARY 7, 2002 TO AUGUST 4, 2002

EFFECTIVE: JANUARY 7, 2002 TO AUGUST 4, 2002

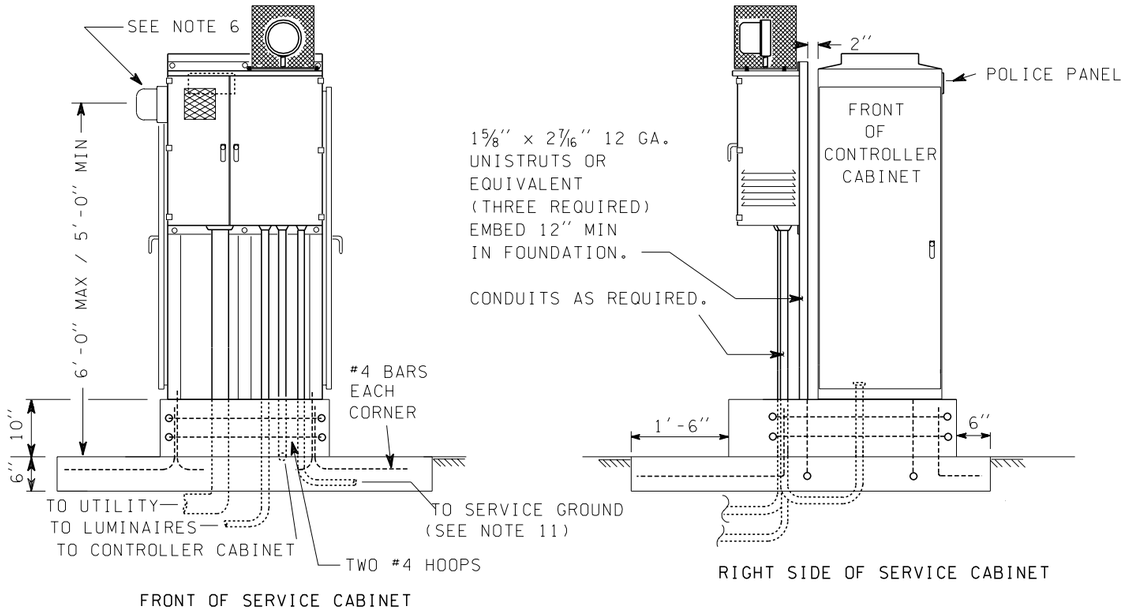

STRUT MOUNT

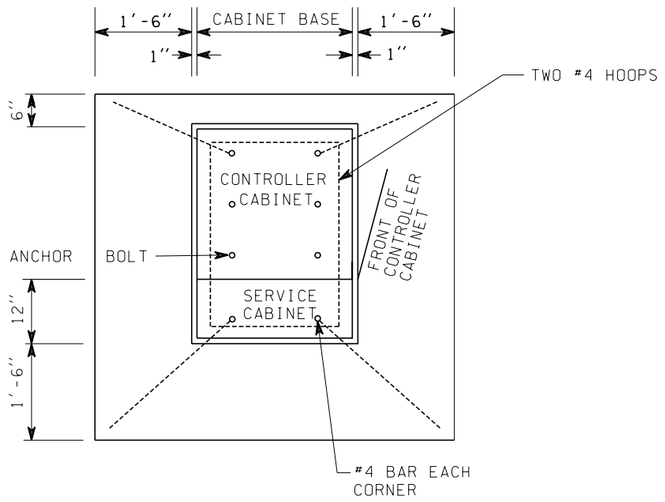

FOUNDATION DETAIL
PLAN

SEE STANDARD PLAN
"CABINET FOUNDATION DETAILS",
FOR DETAILS NOT SHOWN.

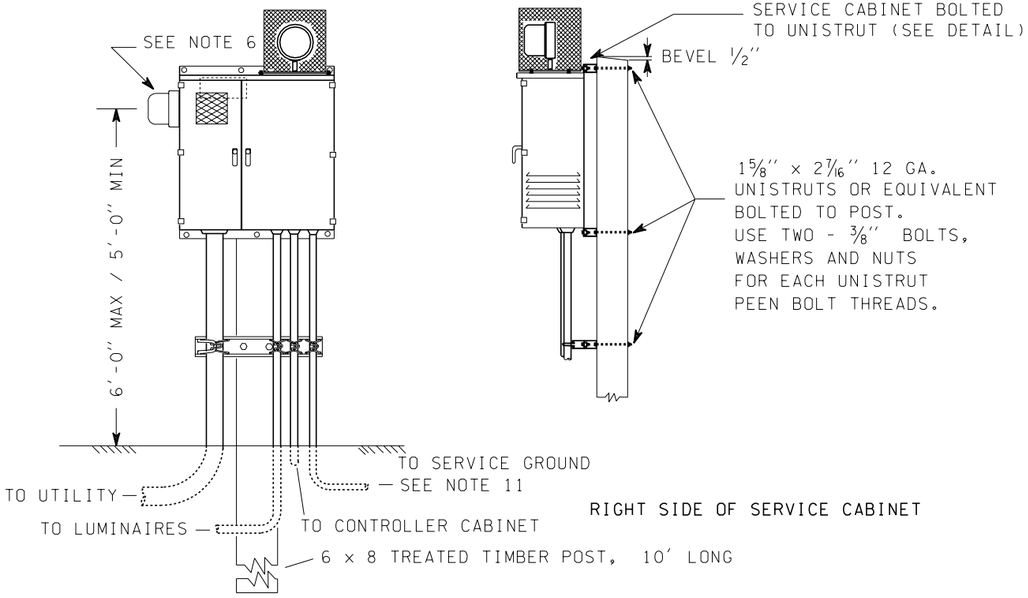

POST MOUNT

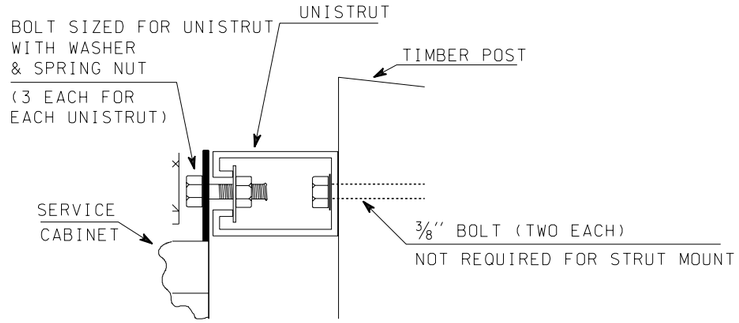

SERVICE CABINET
MOUNTING DETAIL

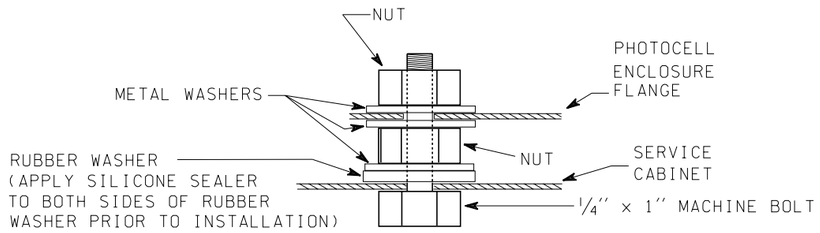

PHOTOCELL ENCLOSURE
MOUNTING DETAIL

DAVID K. PEACH
STATE OF WASHINGTON
00111089
REGISTERED
PROFESSIONAL ENGINEER

EXPIRES JUNE 4, 1999

MODIFIED TYPE B SERVICE

STANDARD PLAN J-3b

SHEET 2 OF 2 SHEETS

NOTE: THIS PLAN IS NOT A LEGAL ENGINEERING DOCUMENT BUT AN ELECTRONIC DUPLICATE. THE ORIGINAL, SIGNED BY THE ENGINEER AND APPROVED FOR PUBLICATION, IS KEPT ON FILE AT THE WASHINGTON STATE DEPARTMENT OF TRANSPORTATION. A COPY MAY BE OBTAINED UPON REQUEST.

APPROVED FOR PUBLICATION

Clifford E. Mansfield — 4/24/98

DEPUTY STATE DESIGN ENGINEER — DATE

WASHINGTON STATE DEPARTMENT OF TRANSPORTATION
OLYMPIA, WASHINGTON

EFFECTIVE: JANUARY 7, 2002 TO AUGUST 4, 2002

EFFECTIVE: JANUARY 7, 2002 TO AUGUST 4, 2002

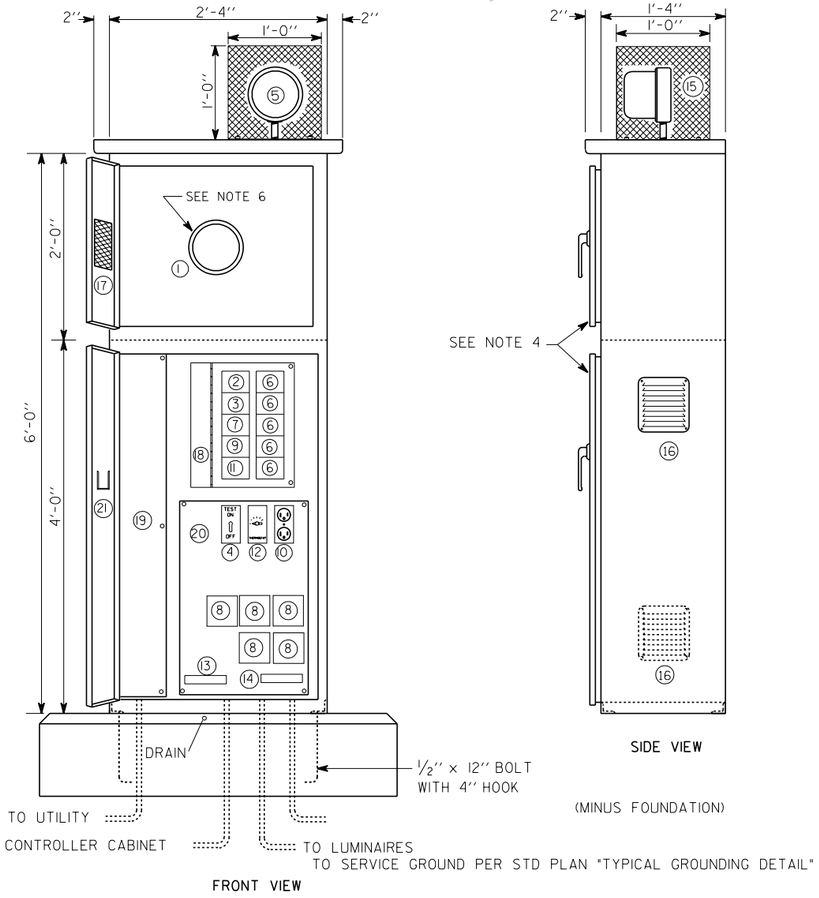

CABINET DETAIL

KEY

1. METER BASE PER SERVING UTILITY REQUIREMENTS. (WITH MANUAL BYPASS LEVER)
2. MAIN BREAKER (SEE BREAKER SCHEDULE)
3. PHOTOCELL BREAKER (SPST 15 AMP - 125 VOLT)
4. TEST SWITCH (SPST 10 AMP - 125 VOLT 'T' RATED)
5. PHOTO ELECTRIC CONTROL, STD. SPEC. 9 - 29.11(2)
6. BRANCH BREAKER (SEE BREAKER SCHEDULE)
7. SIGNAL BREAKER (SEE BREAKER SCHEDULE)
8. CONTACTOR (SEE BREAKER SCHEDULE)
9. RECEPTACLE BREAKER (20 AMP - 125 VOLT)
10. RECEPTACLE, GROUNDED (20 AMP - 120 VOLT)
11. HEATER BREAKER (SPST 15 AMP - 125 VOLT)
12. THERMOSTAT, 40°F CLOSURE - 3 DIFFERENTIAL
13. STRIP HEATER (100 WATT NOMINAL), WITH TERMINAL STRIP COVER
14. NEUTRAL BUSS, 10 LUG COPPER
15. PHOTOCELL ENCLOSURE - ENCLOSURE TO BE FABRICATED FROM 5/8'' EXPANDED STEEL MESH WITH WELDED SEAMS AND MOUNTING FLANGES. HOT DIP AFTER FABRICATION. SEE PHOTOCELL ENCLOSURE MOUNTING DETAIL, STANDARD PLAN J-3b.
16. SCREENED VENTS, 2 REQUIRED, 1EACH SIDE, LOUVERED PLATES.
17. HINGED FRONT FACING DOOR WITH 6''x 6'' MIN POLISHED WIRE GLASS WINDOW
18. HINGED DEAD FRONT WITH 1/4 TURN FASTENERS
19. 6'' x 6'' MIN UNDERGROUND FEED - SERVICE WIREWAY (LEFT REAR CORNER)
20. REMOVABLE EQUIPMENT MOUNTING PAN
21. METAL WIRING DIAGRAM HOLDER

GENERAL NOTES

1. SEE DIVISION 9, SERVICE CABINETS, IN THE STANDARD SPECIFICATIONS.
2. HINGES SHALL HAVE STAINLESS STEEL PINS.
3. CABINETS SHALL BE RATED NEMA 3R AND SHALL INCLUDE TWO RAIN TIGHT VENTS.
4. EACH DOOR SHALL BE PADLOCKABLE AND AND GASKETED. INSTALL BEST CX CONSTRUCTION CORE ON BOTTOM DOORS. SEE DOOR HINGE DETAIL, STANDARD PLAN J-3b.
5. THE FOLLOWING EQUIPMENT WITHIN THE SERVICE ENCLOSURE SHALL HAVE AN APPROPRIATELY ENGRAVED PHENOLIC NAME PLATE (ATTACHED WITH SCREWS OR RIVETS.) KEY NUMBERS 2, 3, 4, 6, 7, 8, 9 AND 11.
6. METERING ARRANGEMENTS VARY WITH DIFFERENT SERVING UTILITIES. THE UTILITY MAY REQUIRE METER BASE MOUNTING IN THE ENCLOSURE, ON THE SIDE OR ON THE BACK OF THE ENCLOSURE. THE CONTRACTOR SHALL VERIFY THE SERVING UTILITY'S REQUIREMENTS PRIOR TO INSTALLING THE SERVICE EQUIPMENT.
7. DIMENSIONS SHOWN ARE NOMINAL AND SHALL BE ADJUSTED TO ACCOMMODATE THE VARIOUS SIZES OF EQUIPMENT INSTALLED BY THE CONTRACTOR.
8. ALL BUSSWORK SHALL BE HIGH GRADE COPPER AND SHALL EQUAL OR EXCEED THE MAIN BREAKER RATING. ALL BREAKERS SHALL BOLT ONTO THE BUSSWORK. JUMPERING OF BREAKERS SHALL NOT BE ALLOWED.
9. THE PHOTOCELL UNIT SHALL BE CENTERED IN THE PHOTOCELL ENCLOSURE TO PERMIT 360 DEGREE ROTATTION OF THE PHOTOCELL WITHOUT REMOVAL OF THE PHOTOCELL UNIT OR THE PHOTOCELL ENCLOSURE.
10. ALL INTERNAL WIRE RUNS SHALL BE IDENTIFIED WITH "TO - FROM" CODED TAGS LABELLED WITH THE CODE LETTERS AND/OR. NUMBERS SHOWN ON THE SCHEDULES. APPROVED PVC WIRE MARKING SLEEVES SHALL SHALL BE USED.
11. THE PHOTOCELL CIRCUIT SHALL BE INSTALLED IN FLEX CONDUIT WITHIN THE METER COMPARTMENT.
12. ALL NUTS, BOLTS AND WASHERS USED FOR MOUNTING THE PHOTOCELL ENCLOSURE SHALL BE STAINLESS STEEL.
13. A 1% TOLERANCE IS ALLOWED ON ALL DIMENSIONS.

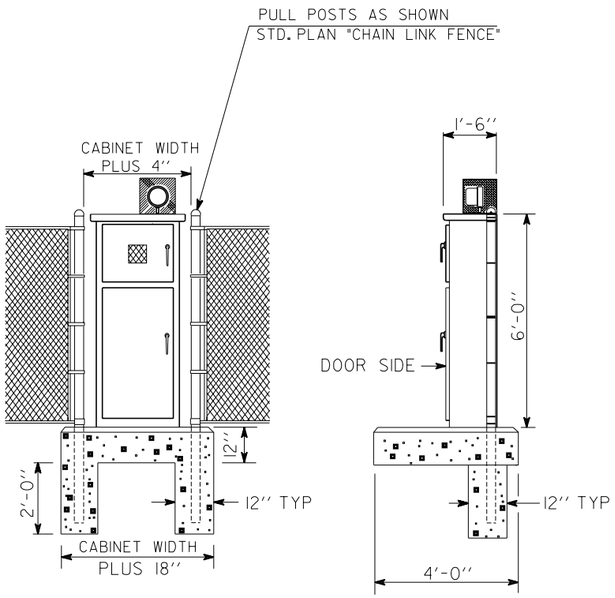

NOTE INSTALL FOUNDATION AS SLAB SECTION UNLESS IDENTIFIED FOR CONSTRUCTION IN FENCE LINE IN CONTRACT PLANS.

INSTALLATION DETAIL

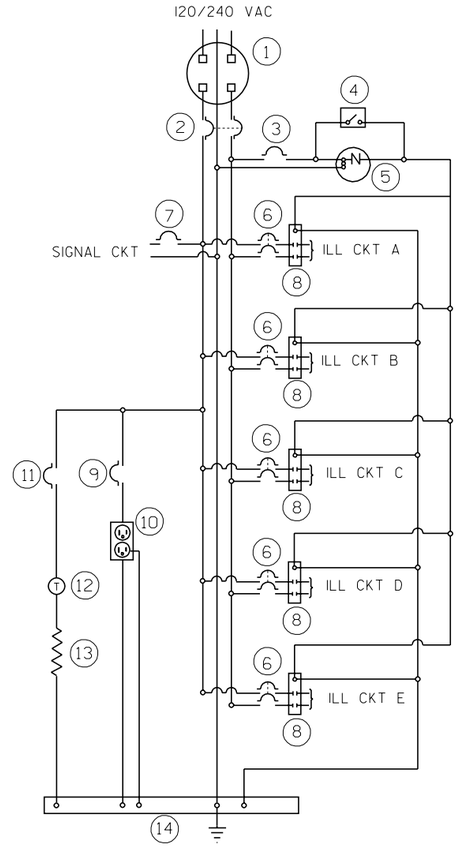

WIRING SCHEMATIC

DAVID K. PEACH
STATE OF WASHINGTON
00011089
REGISTERED
PROFESSIONAL ENGINEER

EXPIRES JUNE 4, 1999

TYPE D SERVICE

STANDARD PLAN J-3c

NOTE: THIS PLAN IS NOT A LEGAL ENGINEERING DOCUMENT BUT AN ELECTRONIC DUPLICATE OF THE ORIGINAL, SIGNED BY THE ENGINEER AND APPROVED FOR PUBLICATION, IS KEPT ON FILE AT THE WASHINGTON STATE DEPARTMENT OF TRANSPORTATION. A COPY MAY BE OBTAINED UPON REQUEST.

APPROVED FOR PUBLICATION

Clifford E. Mansfield **06/19/98**

DEPUTY STATE DESIGN ENGINEER — DATE

WASHINGTON STATE DEPARTMENT OF TRANSPORTATION
OLYMPIA, WASHINGTON

EFFECTIVE: JANUARY 7, 2002 TO AUGUST 4, 2002

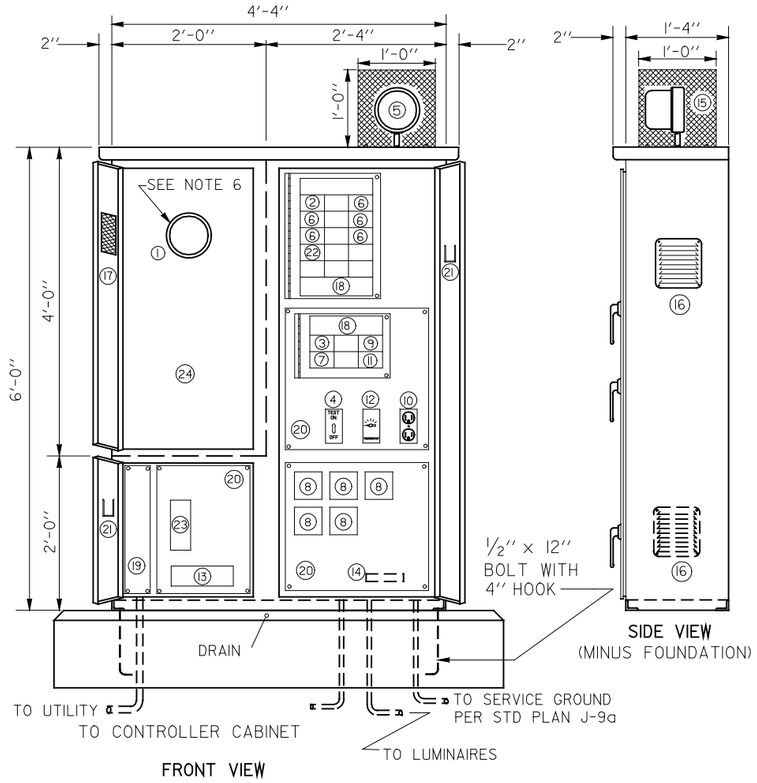

CABINET DETAIL

GENERAL NOTES

1. SEE DIVISION 9, SERVICE CABINETS, IN THE STANDARD SPECIFICATIONS.
2. HINGES SHALL HAVE STAINLESS STEEL PINS.
3. CABINETS SHALL BE RATED NEMA 3R AND SHALL INCLUDE TWO RAIN TIGHT VENTS.
4. EACH DOOR SHALL BE PADLOCKABLE AND GASKETED. INSTALL BEST CX CONSTRUCTION CORE ON BOTTOM LEFT AND RIGHT DOORS. SEE HINGE DETAIL, STANDARD PLAN J-3b.
5. THE FOLLOWING EQUIPMENT WITHIN THE SERVICE ENCLOSURE SHALL HAVE AN APPROPRIATELY ENGRAVED PHENOLIC NAME PLATE ATTACHED WITH SCREWS OR RIVETS. KEY NUMBERS 2, 3, 4, 6, 7, 8, 9, 11 AND 23.
6. METERING ARRANGEMENTS VARY WITH DIFFERENT SERVING UTILITIES. THE UTILITY MAY REQUIRE METER BASE MOUNTING IN THE ENCLOSURE, ON THE SIDE OR ON THE BACK OF THE ENCLOSURE. THE CONTRACTOR SHALL VERIFY THE SERVING UTILITY'S REQUIREMENTS PRIOR TO INSTALLING THE SERVICE EQUIPMENT.
7. DIMENSIONS SHOWN ARE NOMINAL AND SHALL BE ADJUSTED TO ACCOMMODATE THE VARIOUS SIZES OF EQUIPMENT INSTALLED BY THE CONTRACTOR.
8. ALL BUSSWORK SHALL BE HIGH GRADE COPPER AND SHALL EQUAL OR EXCEED THE MAIN BREAKER RATING. ALL BREAKERS SHALL BOLT ONTO THE BUSSWORK. JUMPERING OF BREAKERS SHALL NOT BE ALLOWED.
9. THE PHOTOCELL UNIT SHALL BE CENTERED IN THE PHOTOCELL ENCLOSURE TO PERMIT 360 DEGREE ROTATION OF THE PHOTOCELL WITHOUT REMOVAL OF THE PHOTOCELL UNIT OR THE PHOTOCELL ENCLOSURE.
10. ALL INTERNAL WIRE RUNS SHALL BE IDENTIFIED WITH "TO - FROM" CODED TAGS LABELLED WITH THE CODE LETTERS AND/OR NUMBERS SHOWN ON THE SCHEDULES. APPROVED PVC WIRE MARKING SLEEVES SHALL SHALL BE USED.
11. ALL BOLTS, NUTS AND WASHERS USED FOR MOUNTING THE PHOTOCELL ENCLOSURE SHALL BE STAINLESS STEEL.
12. ALL DIMENSIONS HAVE A 1% TOLERANCE.

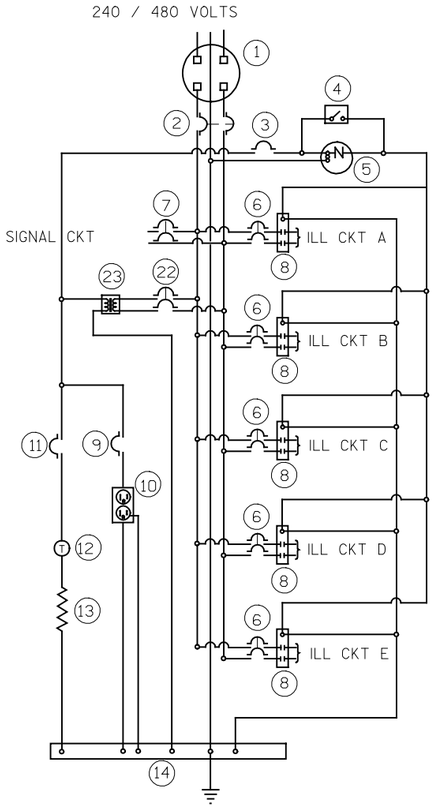

WIRING SCHEMATIC

KEY

(1) METER BASE PER SERVING UTILITY REQUIREMENTS. (WITH MANUAL BYPASS LEVER)
(2) MAIN BREAKER (SEE BREAKER SCHEDULE)
(3) PHOTOCELL BREAKER (SPST 15 AMP - 125 VOLT)
(4) TEST SWITCH (SPST 10 AMP - 125 VOLT 'T ' RATED)
(5) PHOTO ELECTRIC CONTROL, STD. SPEC. 9-29.11(2)
(6) BRANCH BREAKER (SEE BREAKER SCHEDULE)
(7) SIGNAL BREAKER (SEE BREAKER SCHEDULE)
(8) CONTACTOR (SEE BREAKER SCHEDULE)
(9) RECEPTACLE BREAKER (20 AMP - 125 VOLT)
(10) RECEPTACLE, GROUNDED (20 AMP - 120 VOLT)
(11) HEATER BREAKER (SPST 15 AMP - 125 VOLT)
(12) THERMOSTAT, 40°F CLOSURE - 3 DIFFERENTIAL
(13) STRIP HEATER (100 WATT NOMINAL), WITH TERMINAL STRIP COVER.
(14) NEUTRAL BUSS, 10 LUG COPPER
(15) PHOTOCELL ENCLOSURE - ENCLOSURE TO BE FABRICATED FROM 5/8" EXPANDED STEEL MESH WITH WELDED SEAMS AND MOUNTING FLANGES. HOT DIP AFTER FABRICATION. SEE PHOTOCELL ENCLOSURE MOUNTING DETAIL, STANDARD PLAN J-3b.
(16) SCREENED VENTS, 2 REQUIRED, 1EACH SIDE, LOUVERED PLATES.
(17) HINGED FRONT FACING DOOR WITH 6" x 6" MIN POLISHED WIRE GLASS WINDOW
(18) HINGED DEAD FRONT WITH 1/4 TURN FASTENERS
(19) 6" x 6" MIN UNDERGROUND FEED - SERVICE WIREWAY (LEFT REAR CORNER)
(20) REMOVABLE EQUIPMENT MOUNTING PAN
(21) METAL WIRING DIAGRAM HOLDER
(22) TRANSFORMER BREAKER, 15 AMP. DPST
(23) DRY TRANSFORMER (480/120 VOLT) 2 KVA COPPER BUSSED AND COPPER WOUND
(24) RESERVED FOR METER, CURRENT TRANSFORMER AND/OR DISCONNECT SWITCH AS REQUIRED BY THE UTILITY

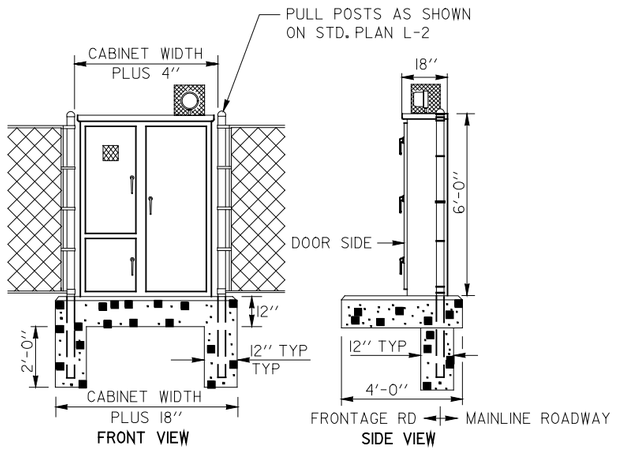

NOTE: INSTALL FOUNDATION AS SLAB SECTION UNLESS IDENTIFIED FOR CONSTRUCTION IN FENCE LINE IN CONTRACT PLANS.

INSTALLATION DETAIL

TOBY D. RICKMAN
STATE OF WASHINGTON
24655
REGISTERED
PROFESSIONAL ENGINEER

EXPIRES OCTOBER 26, 2000

TYPE E SERVICE

STANDARD PLAN J-3d

NOTE: THIS PLAN IS NOT A LEGAL ENGINEERING DOCUMENT BUT AN ELECTRONIC DUPLICATE. THE ORIGINAL, SIGNED BY THE ENGINEER AND APPROVED FOR PUBLICATION, IS KEPT ON FILE AT THE WASHINGTON STATE DEPARTMENT OF TRANSPORTATION. A COPY MAY BE OBTAINED UPON REQUEST.

DATE	REVISION	BY
3/99	Corrected drafting errors	RG

APPROVED FOR PUBLICATION

Clifford E. Mansfield — DEPUTY STATE DESIGN ENGINEER — *04/02/99* DATE

WASHINGTON STATE DEPARTMENT OF TRANSPORTATION
OLYMPIA, WASHINGTON

EFFECTIVE: JANUARY 7, 2002 TO AUGUST 4, 2002

EFFECTIVE: JANUARY 7, 2002 TO AUGUST 4, 2002

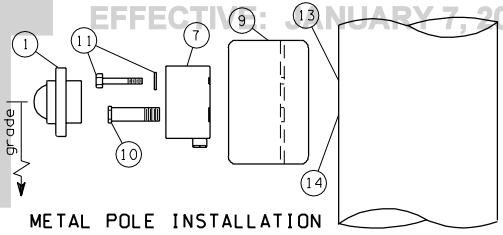

METAL POLE INSTALLATION
PPB-M
(Pedestrian PushButton - Metal Pole)

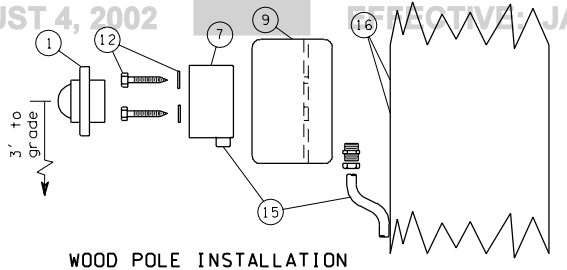

WOOD POLE INSTALLATION
PPB-W
(Pedestrian PushButton - Wood Pole)
(Bottom feed shown)

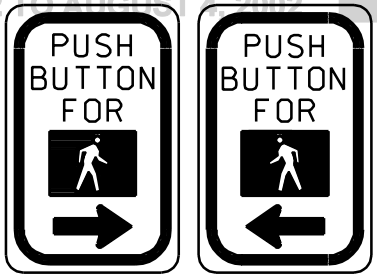

R10-4001 R10-4002

NOTE:
When "PPB-MR" or "PPB-WR" are specified in the contract, the arrow shall be installed in the opposite direction than as shown for "PPB-M" or "PPB-W"

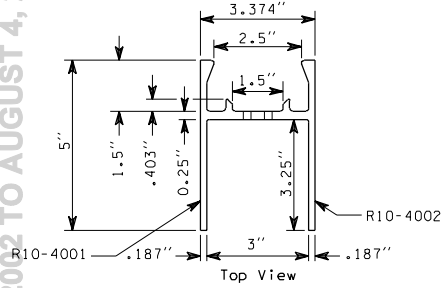

Top View

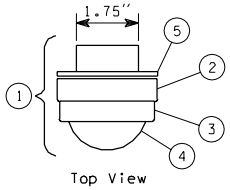

Top View

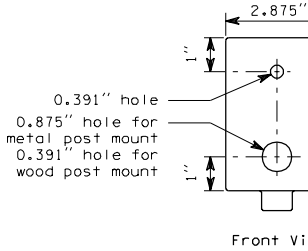

Front View Side View

CAST ALUMINUM CONDULET

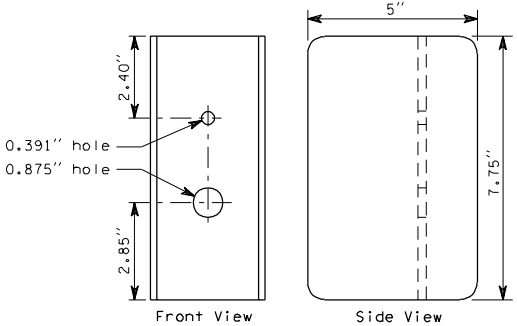

Front View Side View

ALUMINUM 'H' EXTRUSION

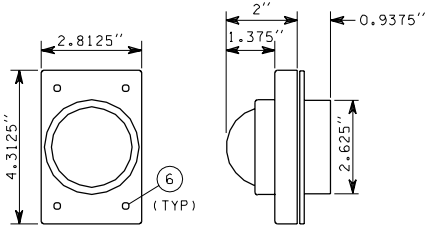

Front View Side View

PUSHBUTTON SWITCH ASSEMBLY

PEDESTRIAN PUSHBUTTON DETAILS

KEY

1. Pushbutton switch assembly
2. Cast metal housing
3. Protective collar
4. Pushbutton switch
5. Gasket
6. Stainless steel fastener
7. Cast aluminum condulet
8. Aluminum plug with 1/8" drilled weep hole. On timber pole installation, remove plug for wire entrance and drill weep hole in condulet.
9. Aluminum 'H' extrusion
10. Chase nipple - 7/8" hex head x 1/2" pipe thread x 2 1/2" long
11. 3/8" - 16 X 2 1/2" stainless steel bolt with washer
12. 5/8" X 4" lag bolt with washer
13. Drill and tap shaft for 3/8" bolt
14. Drill and tap shaft for 1/2" nipple
15. Conduit and fittings as required for timber pole installation; reverse condulet and conduit for top feed
16. Drill pilot hole for 3/8" lag bolt

EFFECTIVE: JANUARY 7, 2002 TO AUGUST 4, 2002

EFFECTIVE: JANUARY 7, 2002 TO AUGUST 4, 2002

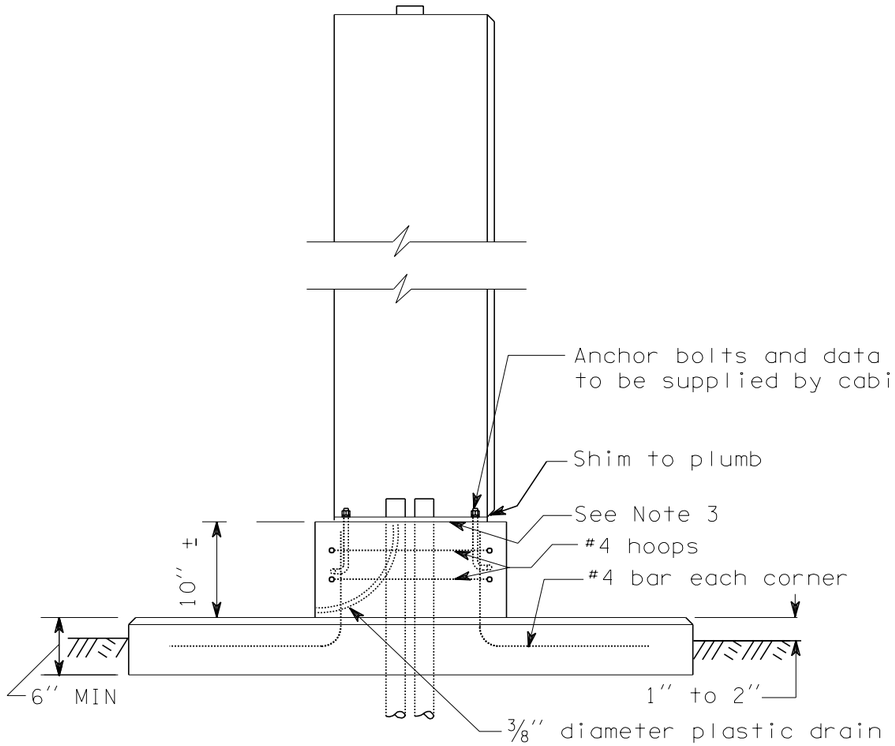

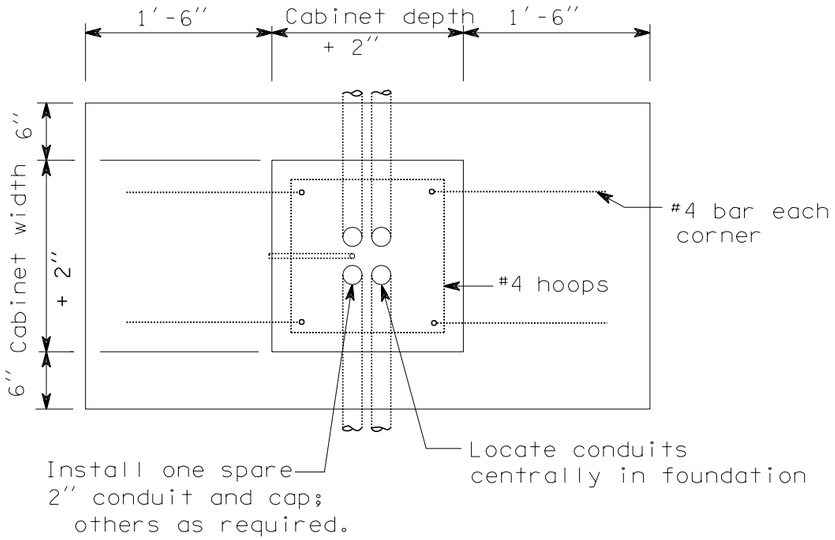

PAD MOUNT

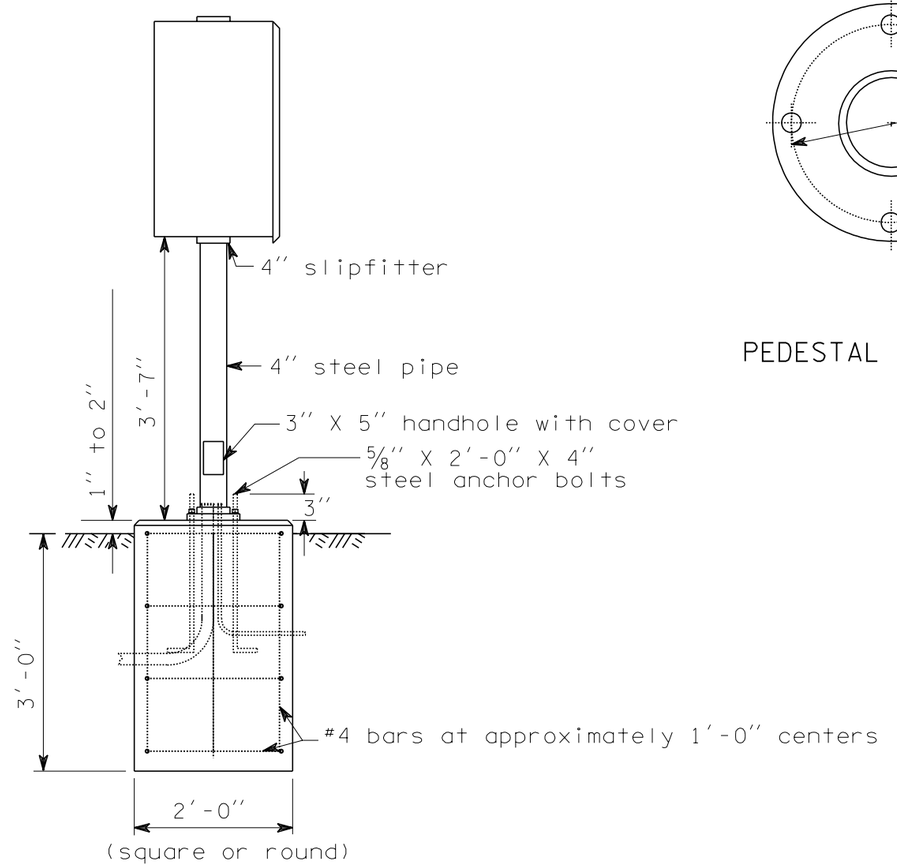

PEDESTAL MOUNT

NOTES

1. Where pad or pedestal mounts are located in a sidewalk, construct mount top flush with sidewalk grade, omitting chamfer where top and sidewalk abut.

2. Pad mount design is typical.

3. Place a silicone seal between the cabinet foundation and the cabinet for the pad mount design.

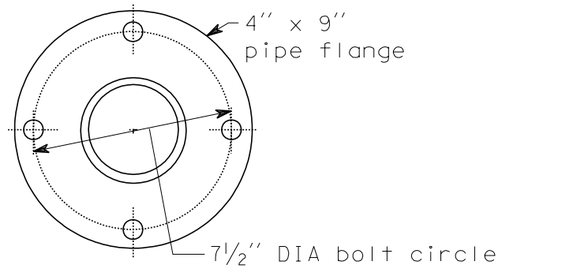

PEDESTAL BASE DETAILS

EXPIRES JUNE 4, 1999

CABINET FOUNDATION DETAILS

STANDARD PLAN J-6c

NOTE: THIS PLAN IS NOT A LEGAL ENGINEERING DOCUMENT BUT AN ELECTRONIC DUPLICATE. THE ORIGINAL, SIGNED BY THE ENGINEER AND APPROVED FOR PUBLICATION, IS KEPT ON FILE AT THE WASHINGTON STATE DEPARTMENT OF TRANSPORTATION. A COPY MAY BE OBTAINED UPON REQUEST.

APPROVED FOR PUBLICATION

Clifford E. Mansfield — 4/24/98

DEPUTY STATE DESIGN ENGINEER — DATE

WASHINGTON STATE DEPARTMENT OF TRANSPORTATION
OLYMPIA, WASHINGTON

EFFECTIVE: JANUARY 7, 2002 TO AUGUST 4, 2002

EFFECTIVE: JANUARY 7, 2002 TO AUGUST 4, 2002

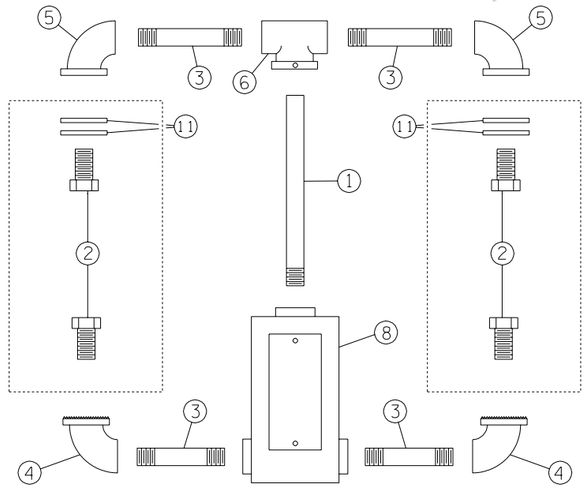

SIDE MOUNT
TYPE A - PED.
TYPE H - VEHICLE

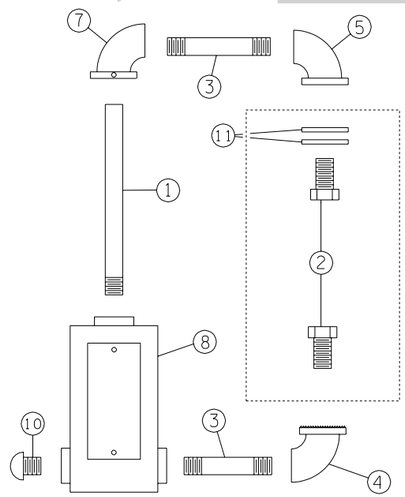

SIDE MOUNT
TYPE B - PED.
TYPE K - VEHICLE

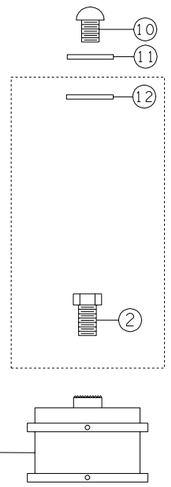

TOP MOUNT
TYPE D - PED.
OR VEHICLE

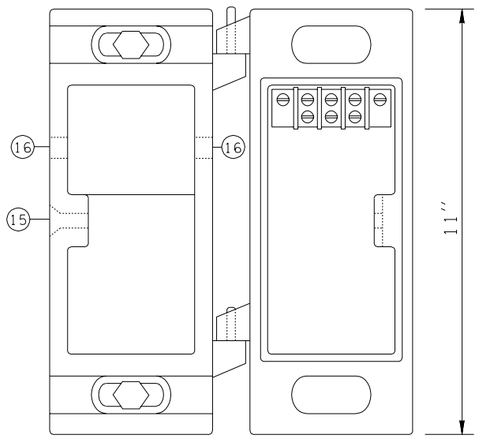

TYPE E MOUNTING DETAILS

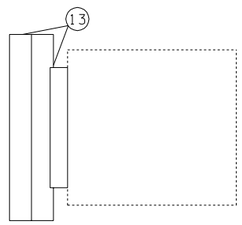

SIDE MOUNT
TYPE E
(NEON GRID OR SIMILAR SIZE
INCANDESCENT PEDESTRIAN HEAD)

KEY

1. CENTER PIPE
2. LOCKNIPPLE
3. NIPPLE
4. SERRATED ELBOW
5. SERRATED OR FLANGED ELBOW
6. REAMED TEE WITH SET SCREW
7. REAMED ELBOW WITH SET SCREW
8. BRONZE TERMINAL COMPARTMENT WITH:
   - GASKETED COVER
   - FASTENERS
   - WIRE LEADS
   - MOUNTING SADDLE FOR SIDE MOUNTS
   - ¼" DIA DRAIN HOLE
   - 12 POSITION TERMINAL STRIP
   - WIREWAY FOR SIDE MOUNTS
9. BRONZE COLLAR, 4¼" I.D. WITH SET SCREWS
10. ORNAMENT CAP
11. GASKET AND WASHER
12. CONDUIT LOCKNUT
13. TYPE E HINGE MOUNTING
14. FASTENER WITH SPACER
    -½" LAG SCREWS ON WOOD POLE
    -½" BOLTS TAPPED TO METAL POLE
15. FLATHEAD SOCKET BOLT
16. ½" INSERT HOLE FOR EXTERNAL WIRE ENTRANCE
    REQUIRED ON TIMBER POLE MOUNTINGS ONLY.

NOTES:

1. SEE CONTRACT FOR HEAD TYPE, MOUNTING HEIGHT AND ORIENTATION.
2. ALL NIPPLES, FITTINGS AND CENTER PIPES SHALL BE 1½" DIA NOMINAL TRADE SIZE (NEC).
3. INSTALL NEOPRENE GASKET OUTSIDE HEAD WHEN FLANGED ELBOWS ARE SUPPLIED.

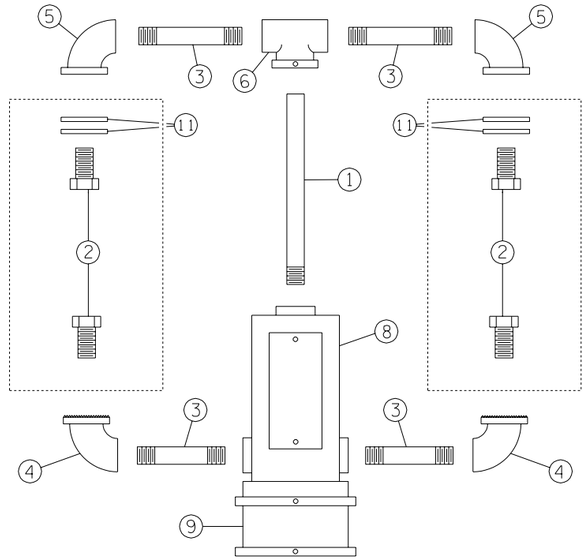

TOP MOUNT
TYPE C - PED.
TYPE F - VEHICLE

DAVID K. PEACH
STATE OF WASHINGTON
00110089
REGISTERED
PROFESSIONAL ENGINEER

EXPIRES JUNE 4, 1999

SIGNAL HEAD MOUNTING DETAILS POLE & POST TOP MOUNTINGS

STANDARD PLAN J-6f

NOTE: THIS PLAN IS NOT A LEGAL ENGINEERING DOCUMENT BUT AN ELECTRONIC DUPLICATE. THE ORIGINAL, SIGNED BY THE ENGINEER AND APPROVED FOR PUBLICATION, IS KEPT ON FILE AT THE WASHINGTON STATE DEPARTMENT OF TRANSPORTATION. A COPY MAY BE OBTAINED UPON REQUEST.

APPROVED FOR PUBLICATION

Clifford E. Mansfield — 4/24/98

DEPUTY STATE DESIGN ENGINEER — DATE

WASHINGTON STATE DEPARTMENT OF TRANSPORTATION
OLYMPIA, WASHINGTON

EFFECTIVE: JANUARY 7, 2002 TO AUGUST 4, 2002

EFFECTIVE: JANUARY 7, 2002 TO AUGUST 4, 2002

KEY:

1. End cap
2. Conduit locknut, 1½" DIA
3. Locknipple, 1½" DIA
4. Steel washer
5. Neoprene gasket
6. Bronze serrated ell fitting with:
   - ⅜" stainless steel through bolt and nuts
   - Three set screws at slipfitter connection
   - Three allen head stainless steel set screws at nipple connection
7. Serrated ring with pins
8. Hex locknut with:
   - Two allen head stainless steel set screws
   - Pin receptacles
9. Nipple, 1½" DIA
10. Hex locknut, 1½" DIA
11. Mounting assembly
12. Bronze elevator plumbizer with ⅜" stainless steel through bolt, washers, and two nuts
13. Aluminum arm with set screw
14. Slotted tube with closure strip
15. Tube clamp, 2½" ID, MIN
16. Female clamp assembly with:
    - Two set screws
    - ½" x 0.045" stainless steel bands
    - Screw buckles, 7/16" with swivels, nuts, and washers
    - Band clips with allen head stainless steel set screws
17. Bronze messenger hanger with:
    - ½" DIA J bolts
    - Cable lock bar
    - Rivet
    - Cotter key
18. Bronze female wire entrance with:
    - Bushing insert
    - Allen head stainless steel set screw
19. Bronze balance adjuster
20. Multi-head mounting assembly
21. Spider assembly
22. Serrated ring with no pins

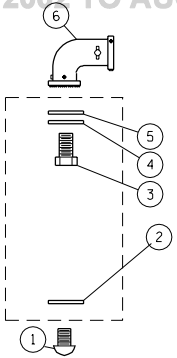

ARM MOUNT
TYPE L

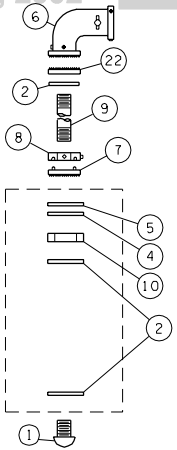

ARM MOUNT
TYPE LE
(TYPE L WITH
EXTENSION FITTINGS)

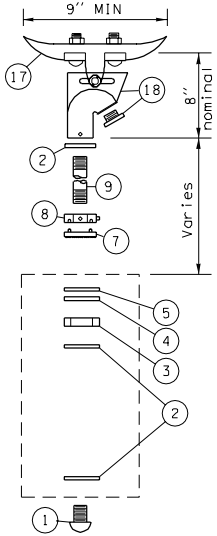

SPAN WIRE
TYPE P (1 HEAD)

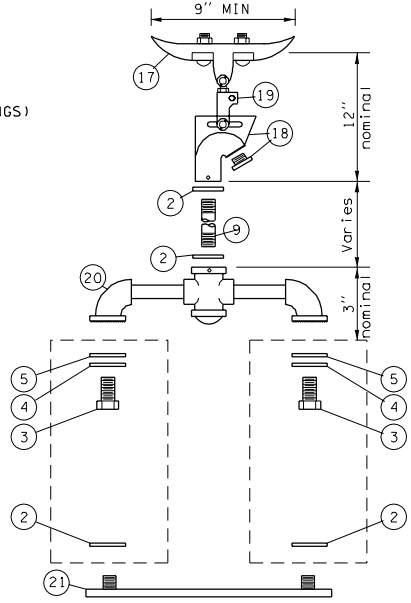

SPAN WIRE
TYPE O (2 HEADS)
TYPE R (3 HEADS)
TYPE S (4 HEADS)

NOTES:

1. Type M mounting shall have "O" ring groove and seal top and bottom at signal attachment.
2. Type M mounting for conventional heads shall have a 2" diameter opening at the signal attachment.
3. Type M mounting for optically programmed heads shall have a 3½" DIA opening at the signal attachment.
4. Type N mounting with optically programmed heads shall be installed with 14" nominal arms.
5. See Standard Plan "Miscellaneous Signal Details" for visor, tether wire, and backplate requirements.

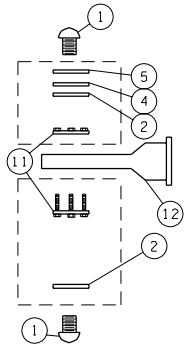

ARM MOUNT
TYPE M

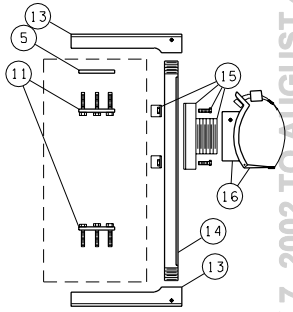

ARM MOUNT
TYPE N

SIGNAL HEAD MOUNTING DETAILS MAST ARM & SPAN WIRE MOUNTINGS

EFFECTIVE: JANUARY 7, 2002 TO AUGUST 4, 2002

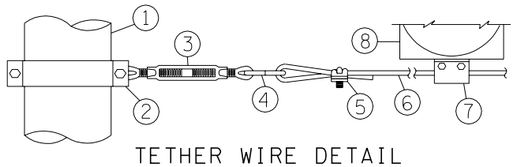

TETHER WIRE DETAIL

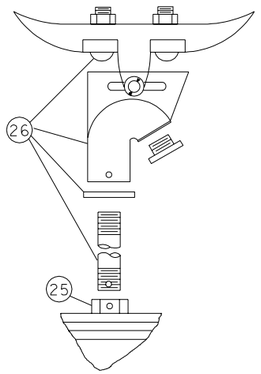

SPAN WIRE MOUNT

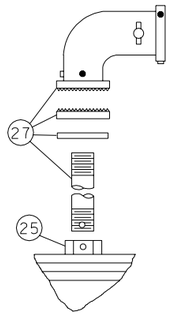

MAST ARM MOUNT

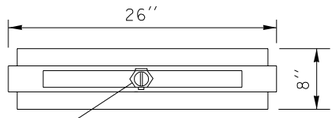

PLAN VIEW

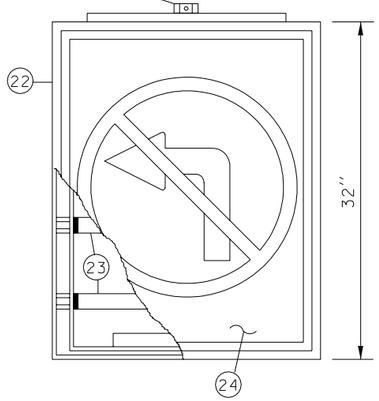

ELEVATION

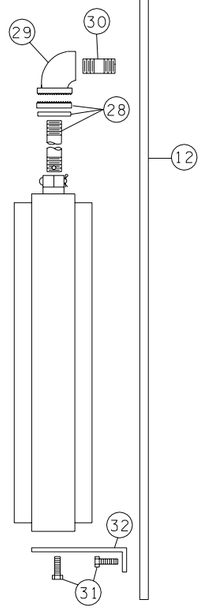

SIDE POLE MOUNT

INTERNALLY ILLUMINATED SIGN DETAILS

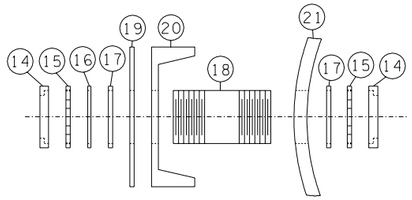

WIREWAY DETAIL

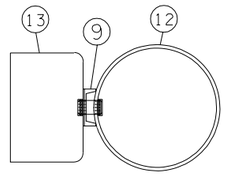

PLAN VIEW

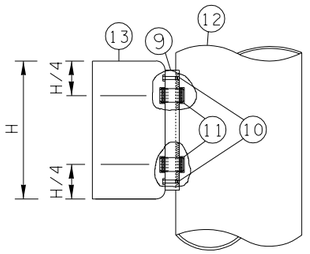

ELEVATION

CABINET MOUNTING DETAIL

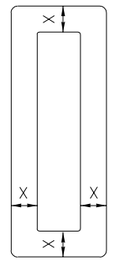

8" OR 12" SECTIONS

8" SECTION X = 8" ± ½"

12" SECTION X = 5½" ± ½"

BACKPLATE DETAIL

KEY:

1. METAL OR TIMBER POLE
2. 2" x ⅜" S.S. BAND WITH 2 EACH, ⅜-16NC x ¾" STAINLESS STEEL HEX HEAD BOLT, LOCK WASHERS AND NUTS
3. ⅝", EYE AND EYE, TURNBUCKLE
4. S HOOK, ⅜" MILD STEEL
5. ⅛" WIRE ROPE CLAMP (U BOLT TYPE)
6. ⅛" STAINLESS STEEL TETHER WIRE
7. WIRE CLAMP WITH LEAD WIRE WRAP
8. SIGNAL HEAD
9. 6 X 8.2 LB/FT CHANNEL
10. 2 EACH, ½-20 NF X 2½" HEX HEAD BOLT, LOCK WASHER (DRILL AND TAP POLE TO ACCEPT)
11. WIREWAY (SEE DETAIL THIS SHEET)
12. METAL POLE
13. CABINET
14. END BUSHING
15. CONDUIT LOCKNUT
16. STEEL WASHER
17. WEATHERPROOF SEAL
18. 2" DIA x 4" NIPPLE UNLESS OTHERWISE NOTED
19. CABINET WALL DRILLED ⅛" OVERSIZE OF NIPPLE
20. CHANNEL DRILLED ⅛" OVERSIZE OF NIPPLE
21. POLE DRILLED ⅛" OVERSIZE OF NIPPLE
22. 6063 EXTRUDED ALUMINUM FRAME
23. 4 EACH, F24T12/CW FLOURESCENT TUBES
24. TRANSLUCENT PLEXIGLASS SIGN FACE
25. 1½" CAST IRON HUB WITH ⅝" PIN AND COTTER KEY
26. SEE KEY 2,9,17, AND 18, STANDARD PLAN "SIGNAL HEAD MOUNTING DETAILS MAST ARM AND SPAN WIRE MOUNTINGS" .
27. SEE KEY 2,6,9 AND 22, STANDARD PLAN "SIGNAL HEAD MOUNTING DETAILS MAST ARM AND SPAN WIRE MOUNTINGS" .
28. SEE KEY 2,9 AND 22, STANDARD PLAN "SIGNAL HEAD MOUNTING DETAILS MAST ARM AND SPAN WIRE MOUNTINGS" .
29. SERRATED 1½" ELBOW
30. 1½" DIA NIPPLE (DRILL AND TAP POLE TO ACCEPT)
31. 2 EACH, ½-20NF x ¾" STAINLESS STEEL HEX HEAD BOLT AND LOCK WASHERS (DRILL AND TAP POLE TO ACCEPT
32. MOUNTING BRACKET

NOTES:

1. BACKPLATES SHALL BE INSTALLED WITH 6 STAINLESS STEEL SCREWS AND WASHERS.

DAVID K. PEACH
STATE OF WASHINGTON
00110089
REGISTERED
PROFESSIONAL ENGINEER

EXPIRES JUNE 4, 1999

MISCELLANEOUS SIGNAL DETAILS

STANDARD PLAN J-6h

NOTE: THIS PLAN IS NOT A LEGAL ENGINEERING DOCUMENT BUT AN ELECTRONIC DUPLICATE THE ORIGINAL, SIGNED BY THE ENGINEER AND APPROVED FOR PUBLICATION, IS KEPT ON FILE AT THE WASHINGTON STATE DEPARTMENT OF TRANSPORTATION. A COPY MAY BE OBTAINED UPON REQUEST.

APPROVED FOR PUBLICATION

Clifford E. Mansfield — *4/24/98*

DEPUTY STATE DESIGN ENGINEER — DATE

WASHINGTON STATE DEPARTMENT OF TRANSPORTATION
OLYMPIA, WASHINGTON

EFFECTIVE: JANUARY 7, 2002 TO AUGUST 4, 2002

EFFECTIVE: JANUARY 7, 2002 TO AUGUST 4, 2002

TYPE PPB, PS, & I STANDARD DETAILS

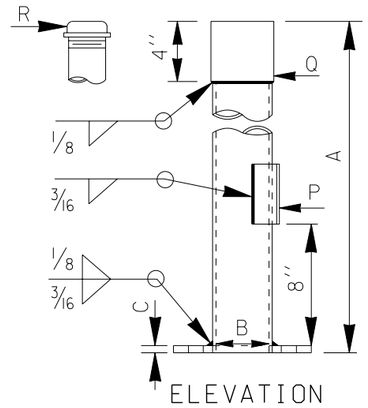

ELEVATION

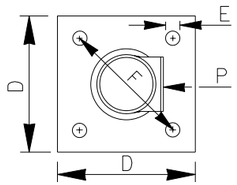

PLAN

ANCHOR BOLT, NUT, & WASHER SIZES		
MARK	STANDARD	DIMENSIONS
S	TYPE PPB	4 - ½'' DIA x 12'' x 2''
S	TYPE PS & I	4 - ¾'' DIA x 30'' x 4''
S	TYPE FB & RM	3 - ¾'' DIA x 30'' x 4''

SIGNAL STANDARD TYPE DESIGNATIONS

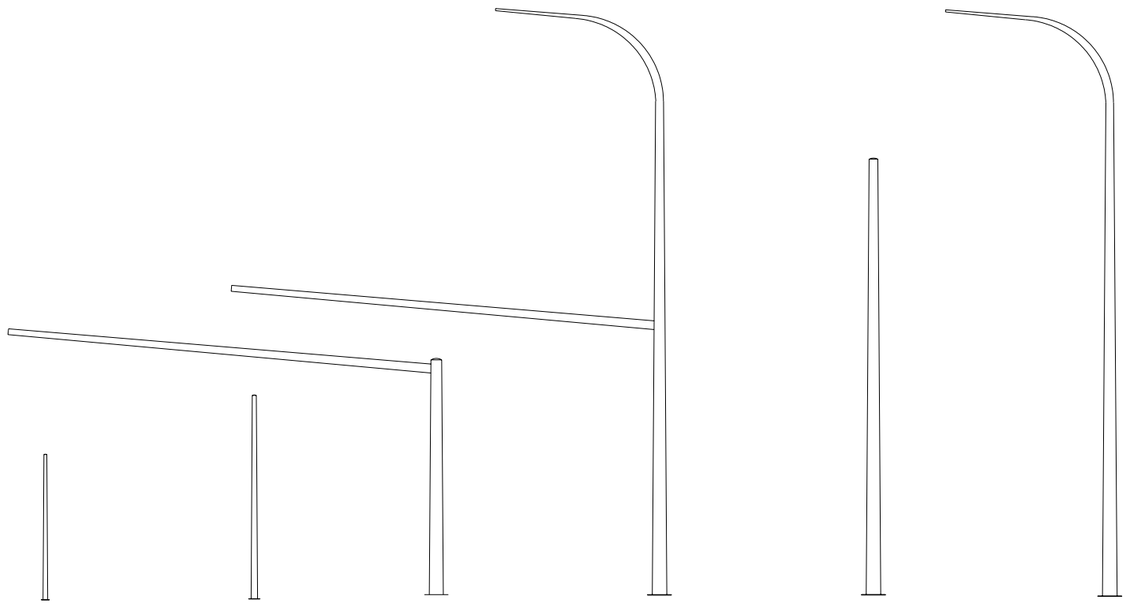

TYPE PPB PED. PUSH BUTTON POST

TYPE PS PED. HEAD STANDARD

TYPE I & RM VEHICLE HEAD AND RAMP METER STANDARD

TYPE FB FLASHING BEACON STANDARD

TYPE II MAST ARM STANDARD

TYPE III LIGHTING AND MAST ARM STANDARD

TYPE IV STRAIN POLE STANDARD

TYPE V LIGHTING AND STRAIN POLE STANDARD

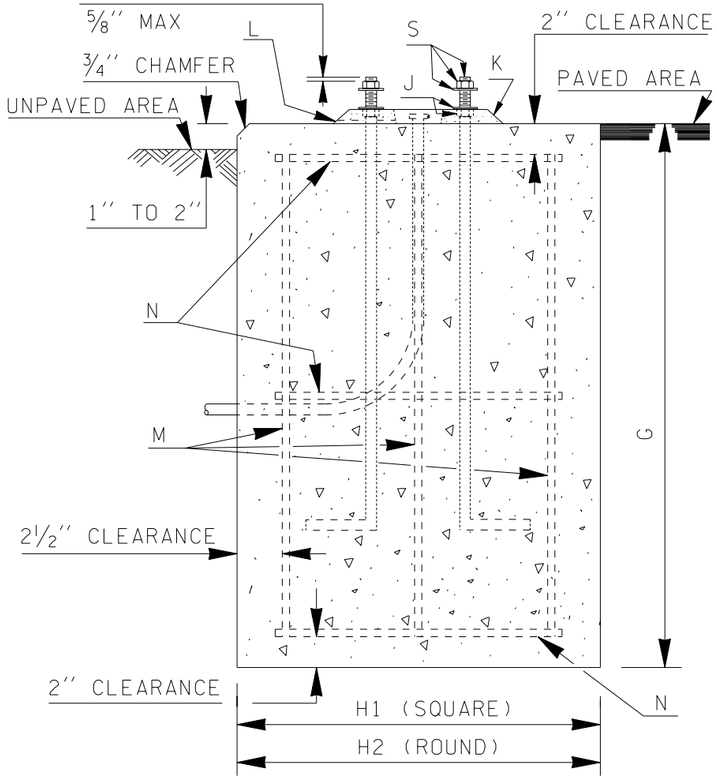

FOUNDATION DETAILS

TYPE PPB, PS, I, RM & FB STANDARD DIMENSION CHART						
MARK	ITEM	TYPE PPB	TYPE PS	TYPE I	TYPE RM	TYPE FB
A	HEIGHT	4''-6''	8'-0''	10'-0''	SEE SHEET 2	SEE SHEET 2
B	POLE BASE DIA	2½''	*	*	*	*
C	PLATE THICKNESS	½''	½''	½''	SEE SHEET 2	SEE SHEET 2
D	PLATE WIDTH	5''	9''	9''	SEE SHEET 2	SEE SHEET 2
E	HOLE DIA	⅝''	1''	1''	SEE SHEET 2	SEE SHEET 2
F	BOLT CIRCLE	4½''	8½''	8½''	SEE SHEET 2	SEE SHEET 2
G	FOUNDATION DEPTH	1'-6''	3'-0''	3'-0''	3'-0''	3'-0''
H1	FOUNDATION WIDTH	1'-6''	2'-0''	2'-0''	2'-0''	2'-0''
H2	FOUNDATION DIA	2'-0''	2'-3''	2'-3''	2'-3''	2'-3''
J	NUT & WASHER	Four ½''	¾''	¾''	¾''	¾''
K	GROUT PAD THICKNESS	NONE	**	**	SEE SHEET 2	SEE SHEET 2
L	PLASTIC DRAIN TUBE DIA	NONE	⅜''	⅜''	⅜''	⅜''
M	VERTICAL RE-BAR	NONE	Eight #4	Eight #4	Eight #4	Eight #4
N	HORIZ. RE-BAR HOOP	NONE	Three #4	Three #4	Three #4	Three #4
P	HANDHOLE SIZE	NONE	3½'' x 4''	3½'' x 4''	3½'' x 4''	3½'' x 4''
Q	SLIPFITTER DIA (I.D.)	NONE	4''	4''	4''	4''
R	CAP DIA	2½''	NONE	NONE	NONE	NONE

* TAPERED ROUND OR OCTAGONAL SHAFT, 11 GAGE, 4'' OD AT SLIPFITTER WELD. TAPER = 0.14 INCHES/FT.

** LEVELING NUT HEIGHT 1'' MAXIMUM.
LEVELING NUTS NOT REQUIRED FOR TYPE PPB STANDARD

TOBY D. RICKMAN
STATE OF WASHINGTON
24655
REGISTERED
PROFESSIONAL ENGINEER

EXPIRES OCTOBER 26, 2002

SIGNAL STANDARD TYPE DESIGNATIONS AND TYPE PPB, PS, I, RM, & FB DETAILS

STANDARD PLAN J-7a

SHEET 1 OF 2 SHEETS

NOTE: THIS PLAN IS NOT A LEGAL ENGINEERING DOCUMENT BUT AN ELECTRONIC DUPLICATE. THE ORIGINAL, SIGNED BY THE ENGINEER AND APPROVED FOR PUBLICATION, IS KEPT ON FILE AT THE WASHINGTON STATE DEPARTMENT OF TRANSPORTATION. A COPY MAY BE OBTAINED UPON REQUEST.

APPROVED FOR PUBLICATION

Harold J. Peterfeso — STATE DESIGN ENGINEER — *09-12-01* DATE

Washington State Department of Transportation

DATE	REVISION	BY
7/01	WELDING SYMBOL SIZES	MHG

EFFECTIVE: JANUARY 7, 2002 TO AUGUST 4, 2002

EFFECTIVE: JANUARY 7, 2002 TO AUGUST 4, 2002

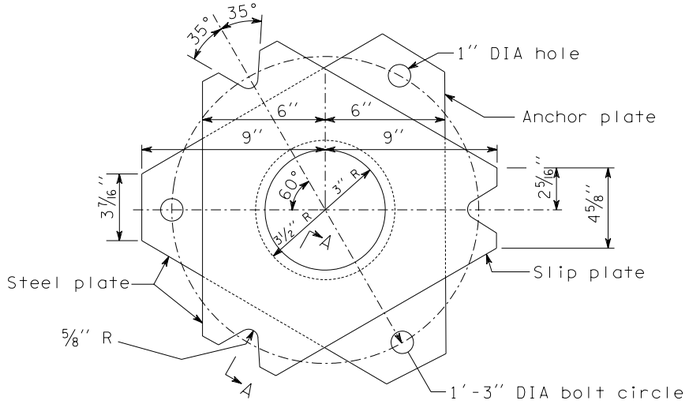

SLIP/ANCHOR PLATES DETAIL

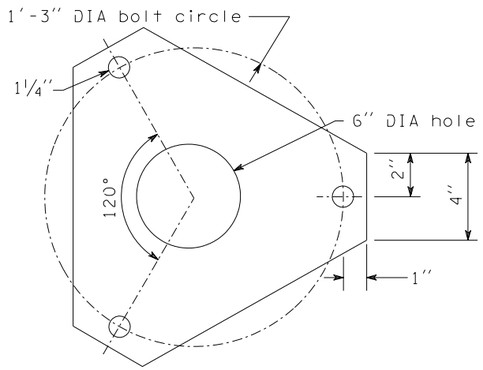

KEEPER PLATE

Place between pole base plate and slip plate on top of middle washers.

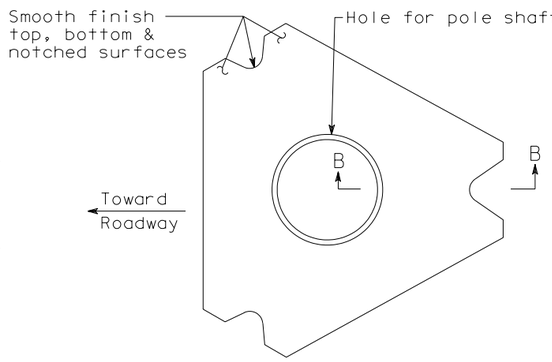

BASE PLATE

See Slip Anchor Plate Detail for dimensions not shown. Match Slip Plate dimensions.

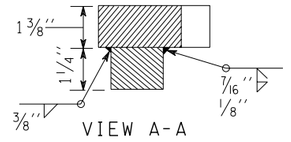

VIEW A-A

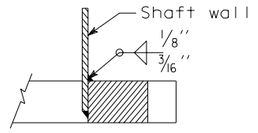

VIEW B-B

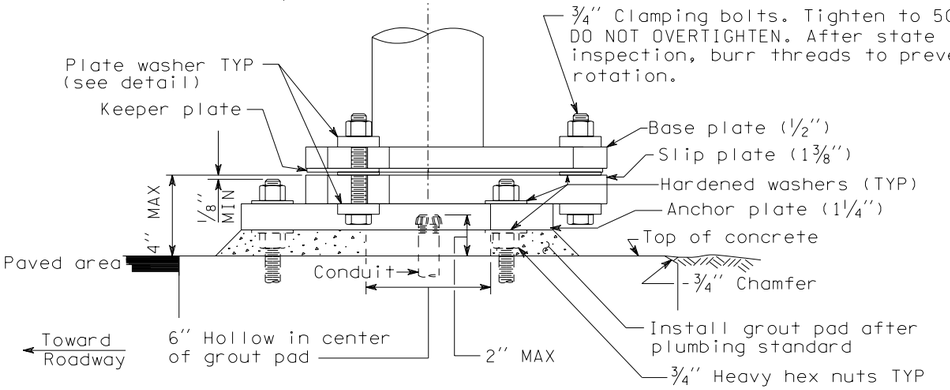

FLASHING BEACON AND RAMP METER BASE ELEVATION

See "FOUNDATION DETAIL" for other requirements.

ANCHOR BOLT LAYOUT

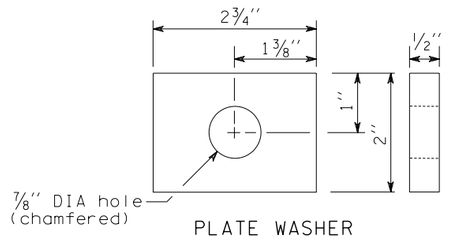

PLATE WASHER

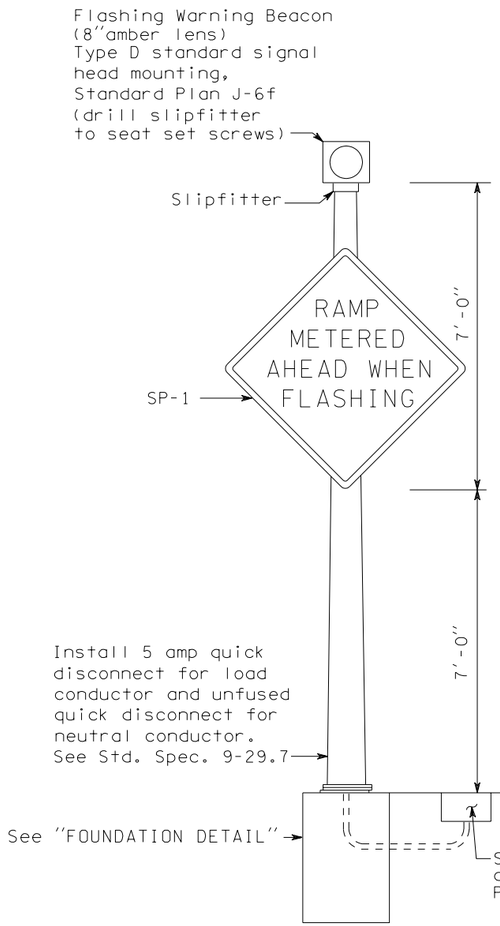

FLASHING BEACON DETAIL

Shaft, slipfitter, welds and handhole are the same as shown for Type 1 Standards, except shaft length is 14'.

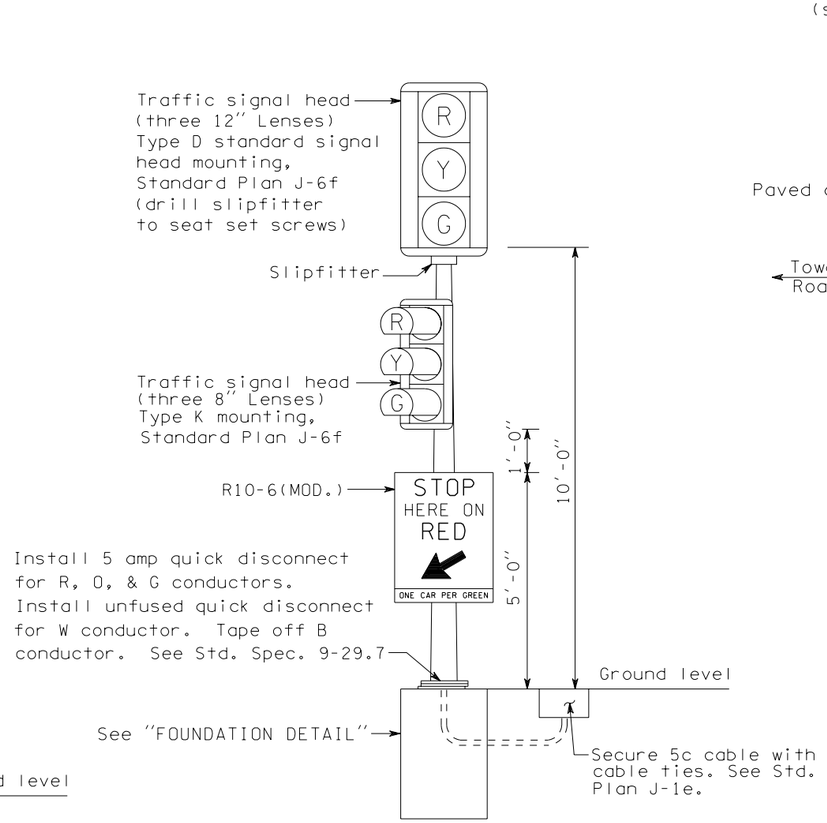

RAMP METER DETAIL

Shaft, slipfitter, welds and handhole are the same as shown for Type 1 Standards.

EXPIRES OCTOBER 26, 2002

SIGNAL STANDARD TYPE DESIGNATIONS AND TYPE PPB, PS, I, RM, & FB DETAILS

STANDARD PLAN J-7a

SHEET 2 OF 2 SHEETS

NOTE: THIS PLAN IS NOT A LEGAL ENGINEERING DOCUMENT BUT AN ELECTRONIC DUPLICATE. THE ORIGINAL, SIGNED BY THE ENGINEER AND APPROVED FOR PUBLICATION, IS KEPT ON FILE AT THE WASHINGTON STATE DEPARTMENT OF TRANSPORTATION. A COPY MAY BE OBTAINED UPON REQUEST.

APPROVED FOR PUBLICATION

Harold J. Peterfeso — STATE DESIGN ENGINEER — *09-12-01* DATE

Washington State Department of Transportation

DATE	REVISION	BY
7/01	CORRECTED - FLASHING BEACON DETAIL	MHG

EFFECTIVE: JANUARY 7, 2002 TO AUGUST 4, 2002

EFFECTIVE: JANUARY 7, 2002 TO AUGUST 4, 2002

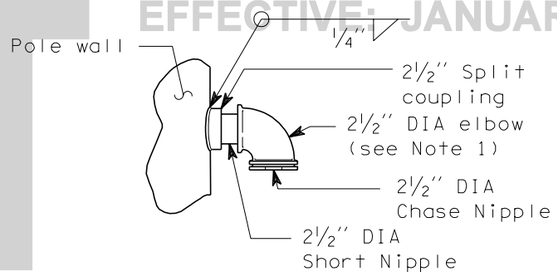

WIREWAY DETAIL

STRAIN POLE DIMENSION CHART

KEY	ITEM	POLE CLASS (Resultant Horizontal Tension) 1900 LB	2700 LB	3700 LB	4800 LB	5600 LB	6300 LB	7200 LB
	Pole gauge	3	3	3	1/0	1/0	1/0	1/0
A	Base plate width	15"	15"	17"	18"	18"	20"	20"
B	Anchor bolt circle diameter	16"	16"	19"	20"	20"	22"	22"
C	Pole base diameter	10"	12"	14"	14"	15"	16"	17"
D	Base plate thickness	1¾"	1¾"	1¾"	2"	2"	2"	2"
E	Anchor bolt size	1"x36"	1¼"x60"	1⅜"x60"	1½"x60"	1½"x60"	1¾"x66"	1¾"x66"
F	Anchor plate size	1"x3"x3"	1"x4"x4"	1"x4"x4"	1"x5"x5"	1"x5"x5"	1"x6"x6"	1"x6"x6"
G	Vertical steel number and size	Eight #5	Eight #6	Eight #7	Eight #7	Eight #8	Eight #8	Eight #9

NOTES

1. 2½" diameter weatherhead may be substituted for the elbow and nipple assembly.
2. Pole shaft shall have 0.14"/ft taper.
3. See Standard Plan J-7d for details.
4. Handholes may be 6" x 4" oval or rectangle.

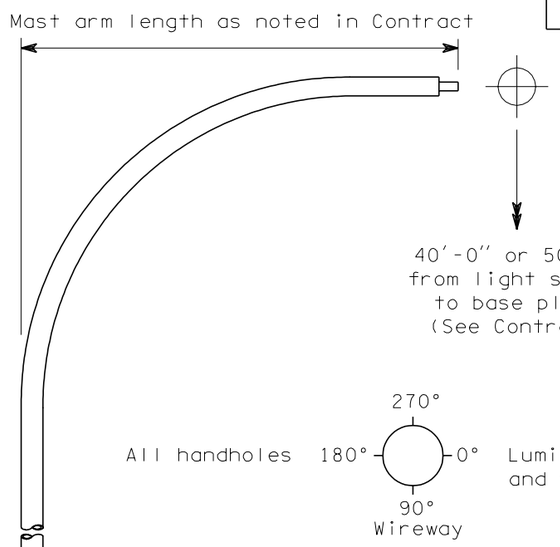

ATTACHMENT POINT ANGLES

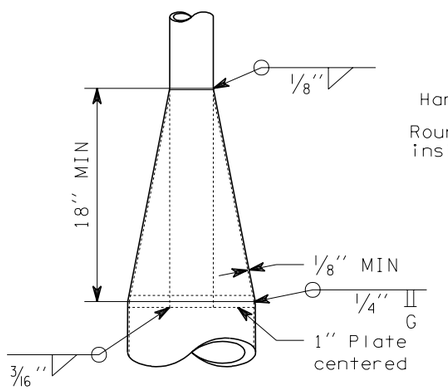

CONE SECTION DETAIL

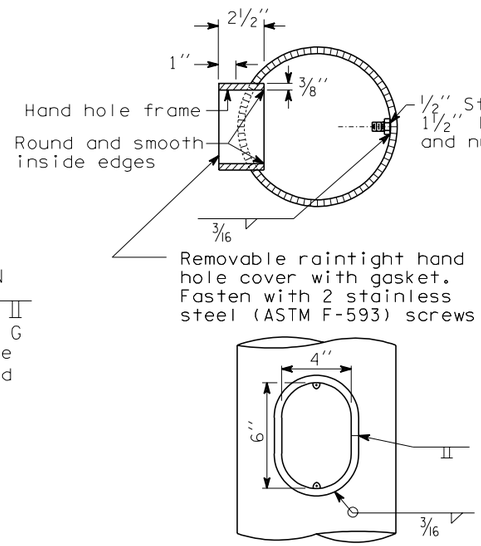

HANDHOLE DETAIL
See Note 4

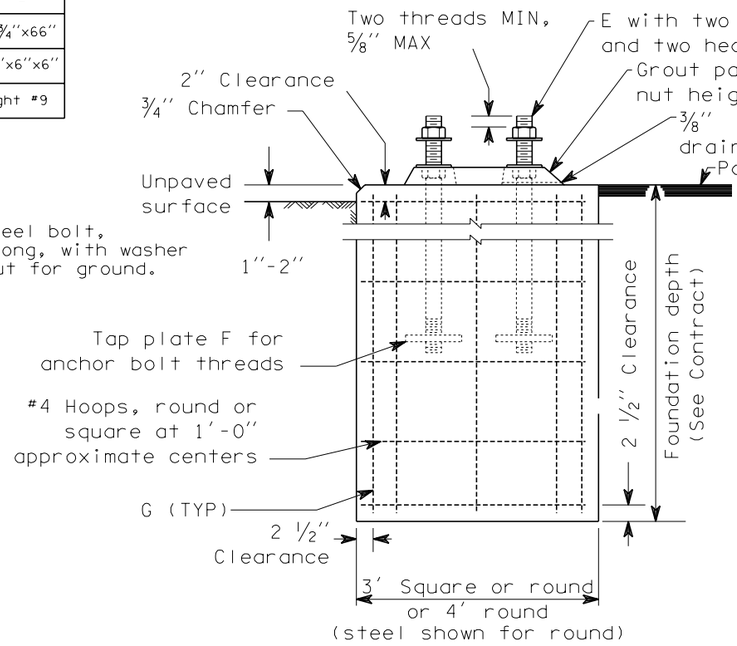

FOUNDATION DETAIL

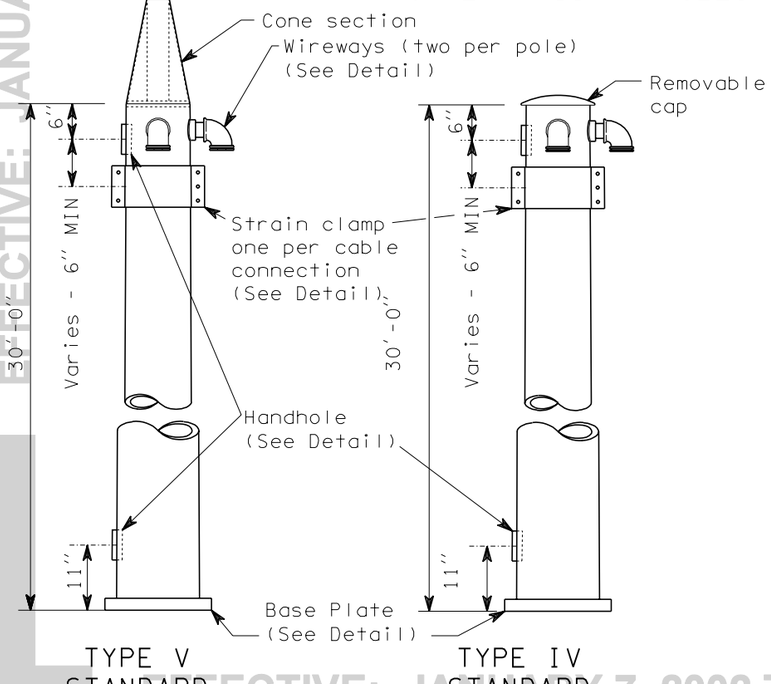

TYPE V STANDARD

TYPE IV STANDARD

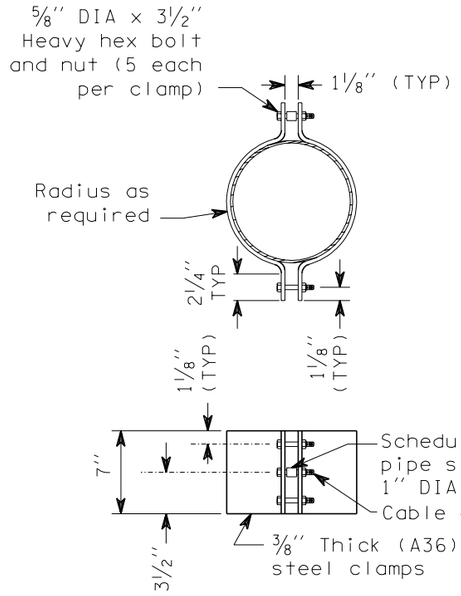

STRAIN CLAMP DETAIL

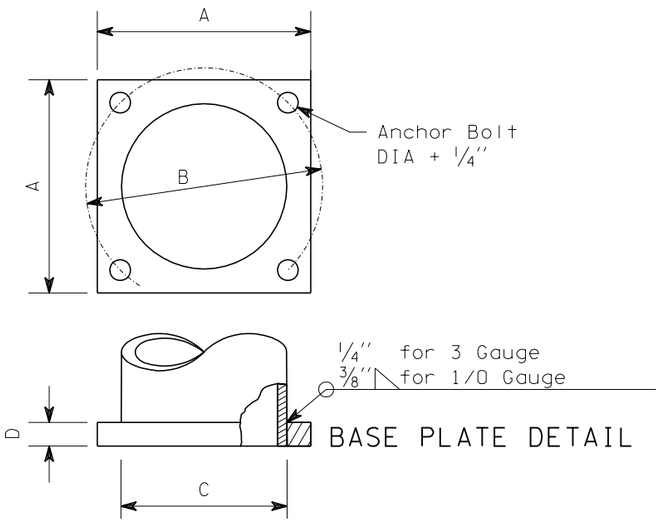

BASE PLATE DETAIL

M. MYINT LWIN
STATE OF WASHINGTON
10536
REGISTERED
PROFESSIONAL ENGINEER

EXPIRES JANUARY 17, 1999

STRAIN POLE STANDARDS TYPE IV AND V

STANDARD PLAN J-7c

NOTE: THIS PLAN IS NOT A LEGAL ENGINEERING DOCUMENT BUT AN ELECTRONIC DUPLICATE. THE ORIGINAL, SIGNED BY THE ENGINEER AND APPROVED FOR PUBLICATION, IS KEPT ON FILE AT THE WASHINGTON STATE DEPARTMENT OF TRANSPORTATION. A COPY MAY BE OBTAINED UPON REQUEST.

APPROVED FOR PUBLICATION

Clifford E. Mansfield — 6/19/98

for STATE DESIGN ENGINEER — DATE

WASHINGTON STATE DEPARTMENT OF TRANSPORTATION
OLYMPIA, WASHINGTON

EFFECTIVE: JANUARY 7, 2002 TO AUGUST 4, 2002

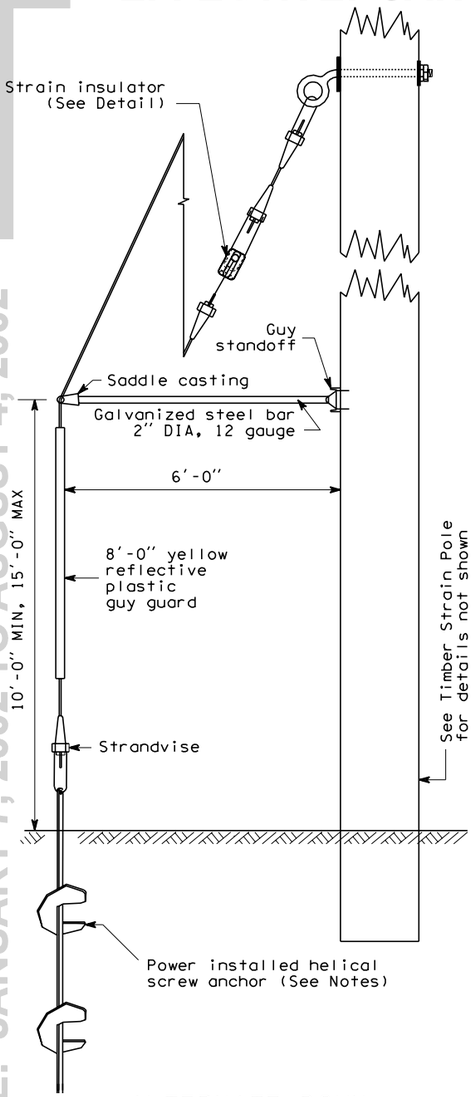

ALTERNATE DOWN GUY DETAIL

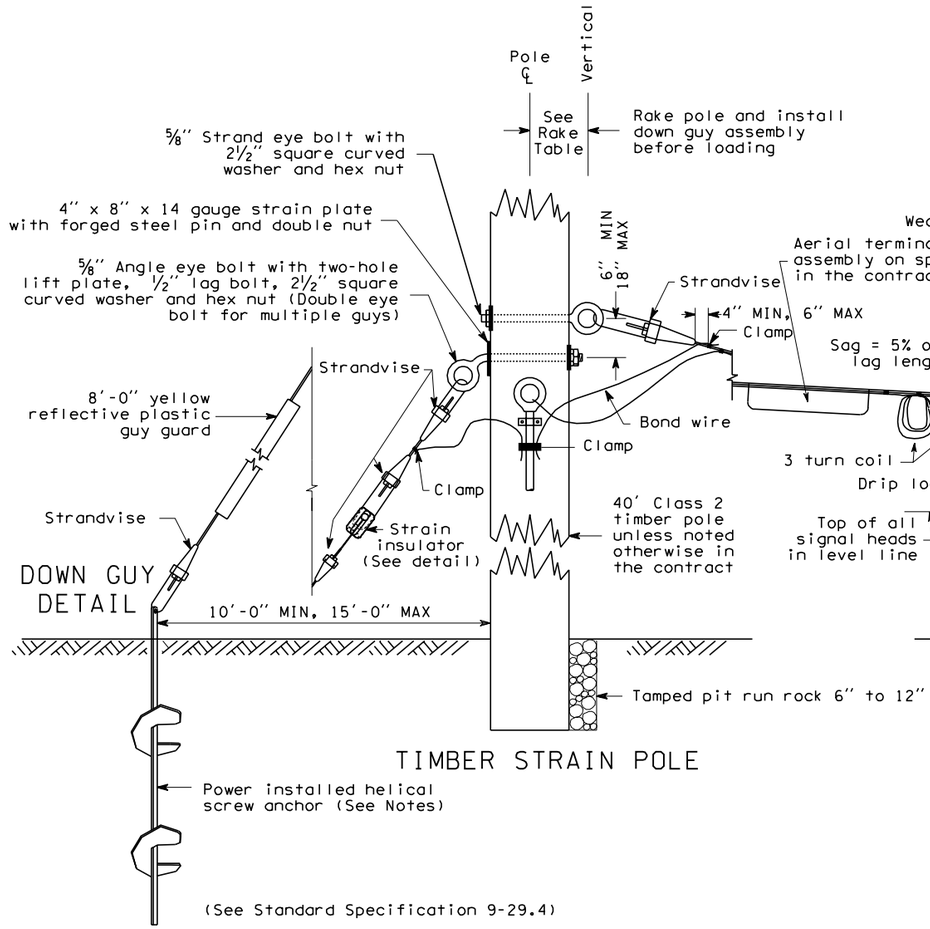

DOWN GUY DETAIL

TIMBER STRAIN POLE

ANCHOR ASSEMBLY

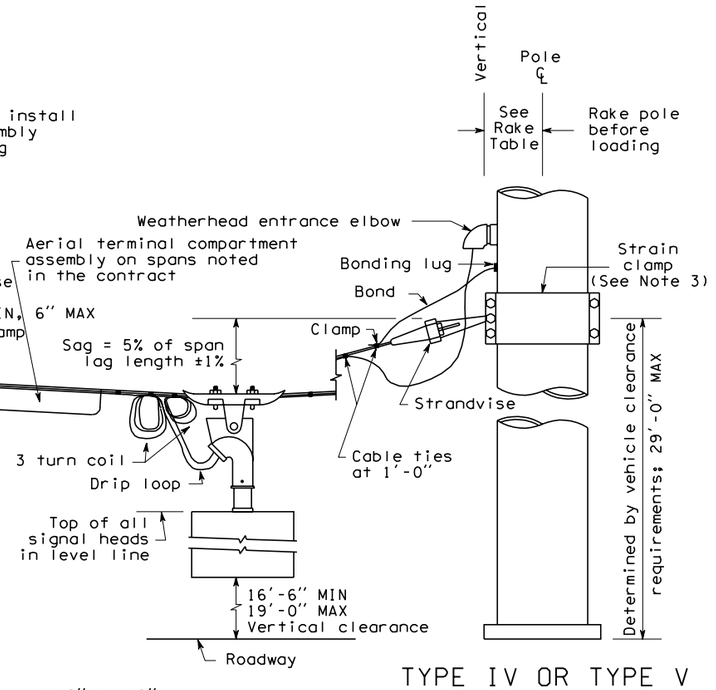

TYPE IV OR TYPE V
STRAIN POLE STANDARD

NOTES

1. An eight-way expanding anchor may be used as an acceptable alternate to power installed helical screw anchor.
2. If anchor hole diameter is greater than nominal diameter of folded anchors, a 5' cover of 6" to 12" size rock shall be tamped in to replace the disturbed soil immediately above the anchor.
3. See "Strain Clamp Detail" on Standard Plan "Strain Pole Standards: Type IV and Type V".

RAKE TABLE	
POLE CLASS	RAKE
1900#	7"
2700#	6"
3700#	5"
4800#	5"
5400#	4"
4300#	4"
7200#	4"
TIMBER	6"

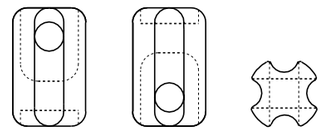

STRAIN INSULATOR DETAIL

DAVID K. PEACH
STATE OF WASHINGTON
00110089
REGISTERED
PROFESSIONAL ENGINEER

EXPIRES JUNE 4, 1999

SPAN WIRE INSTALLATION

STANDARD PLAN J-7d

NOTE: THIS PLAN IS NOT A LEGAL ENGINEERING DOCUMENT BUT AN ELECTRONIC DUPLICATE. THE ORIGINAL, SIGNED BY THE ENGINEER AND APPROVED FOR PUBLICATION, IS KEPT ON FILE AT THE WASHINGTON STATE DEPARTMENT OF TRANSPORTATION. A COPY MAY BE OBTAINED UPON REQUEST.

DATE	REVISION	BY	APPR'D
4/98	Delete bury depth of pole.	ABN	WDB

APPROVED FOR PUBLICATION

Clifford E. Mansfield — DEPUTY STATE DESIGN ENGINEER — 4/24/98 DATE

WASHINGTON STATE DEPARTMENT OF TRANSPORTATION
OLYMPIA, WASHINGTON

EFFECTIVE: JANUARY 7, 2002 TO AUGUST 4, 2002

EFFECTIVE: JANUARY 7, 2002 TO AUGUST 4, 2002

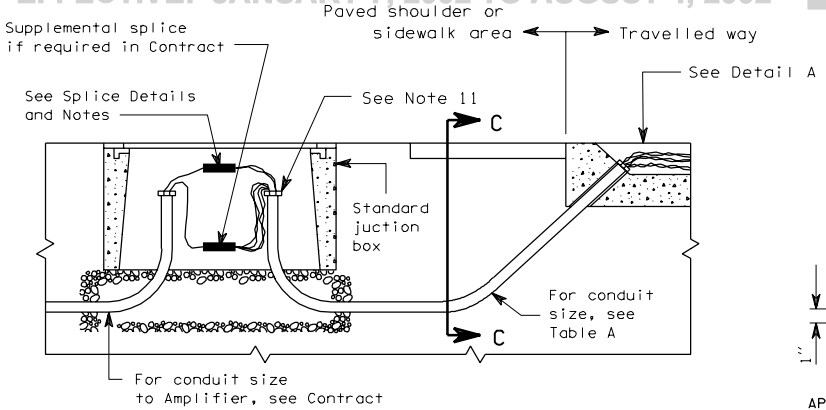

TYPICAL CONDUIT PLACEMENT FOR LOOP LEAD-IN WIRES

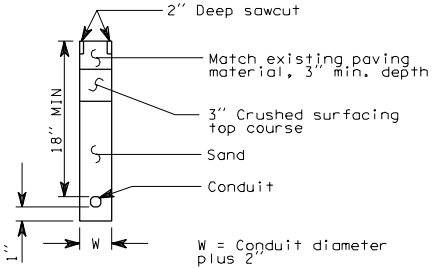

APPLICABLE FOR OFF-ROAD PAVED AREAS ONLY

SECTION C-C

Loop lead pairs	1-2	3	4-5	6-8	9-12
Conduit size (MIN)	1"	1¼"	1½"	2"	3"

TABLE A

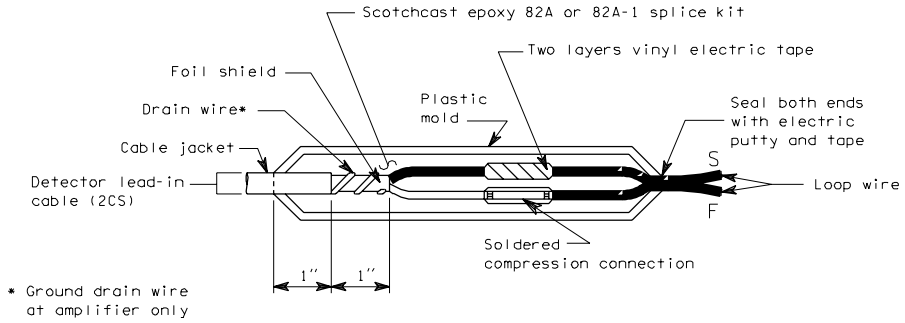

SPLICE DETAIL

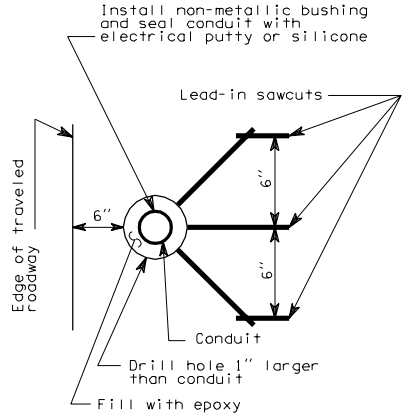

LEAD - IN SAWCUTS AND CONDUIT PLACEMENT DETAIL

DETAIL A

INDUCTION LOOP DETAILS

J-8a
08-01-97

EFFECTIVE: JANUARY 7, 2002 TO AUGUST 4, 2002

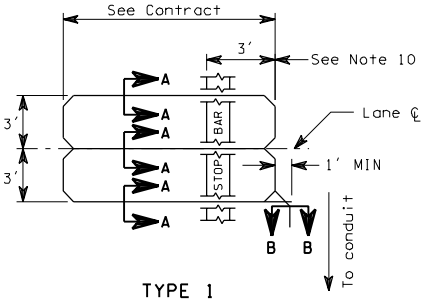

TYPE 1

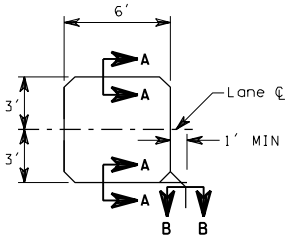

TYPE 2

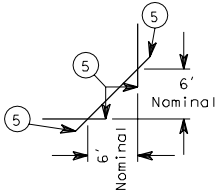

TYPICAL CORNER SAWCUT

LOOP SAWCUT DETAILS

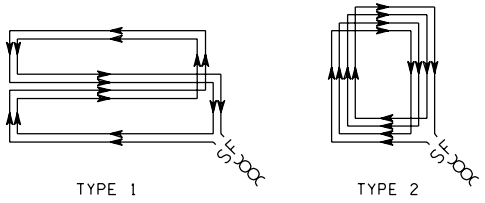

TYPE 1 TYPE 2

LOOP WINDING DETAILS

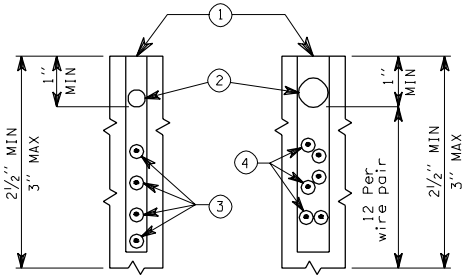

SECTION A-A SECTION B-B

1. Sealant
2. Twisted polypropylene rope (Sized for snug fit)
3. Loop wire - number varies (See Loop Winding Details)
4. Lead-in wires: One pair for each loop served, three pairs maximum per sawcut (See installation notes)
5. Extend sawcut sufficient length to provide full sawcut depth around corners

LOOP INSTALLATION NOTES

1. Install junction box and lead-in conduit.
2. Saw loop slots and lead-in slots.
3. Lay out loop wire begining at junction box, allowing 5' minimum slack.
4. Install wire in loop slot. See Loop Winding Detail.
5. Return to junction box and identify leads with plan detector number and "S" for start and "F" for finish.
6. Twist each pair of lead-in wires two turns per foot from loop to junction box and install in lead-in slot and conduit. Reverse direction of twist for each successive pair installed.
7. Construct supplemental splice containing any series or parallel loop connections required in plans. Supplemental splices are subject to the same requirements shown for the loop lead and shielded cable splice.
8. Splice loop leads or supplemental splice leads to shielded cable as noted.
9. Complete installation and test loop circuits or combination loop circuits.
10. Front of loop should be measured from back of stop bar, or back of crosswalk where no stop bar is installed.
11. Seal ends of conduit.

INDUCTION LOOP DETAILS

J-8a

08-01-97

EFFECTIVE: JANUARY 7, 2002 TO AUGUST 4, 2002

EFFECTIVE: JANUARY 7, 2002 TO AUGUST 4, 2002

COMBINATION GALVANIZED STEEL CONDUIT (GSC) AND NON-METALLIC CONDUIT (NMC) APPLICATION

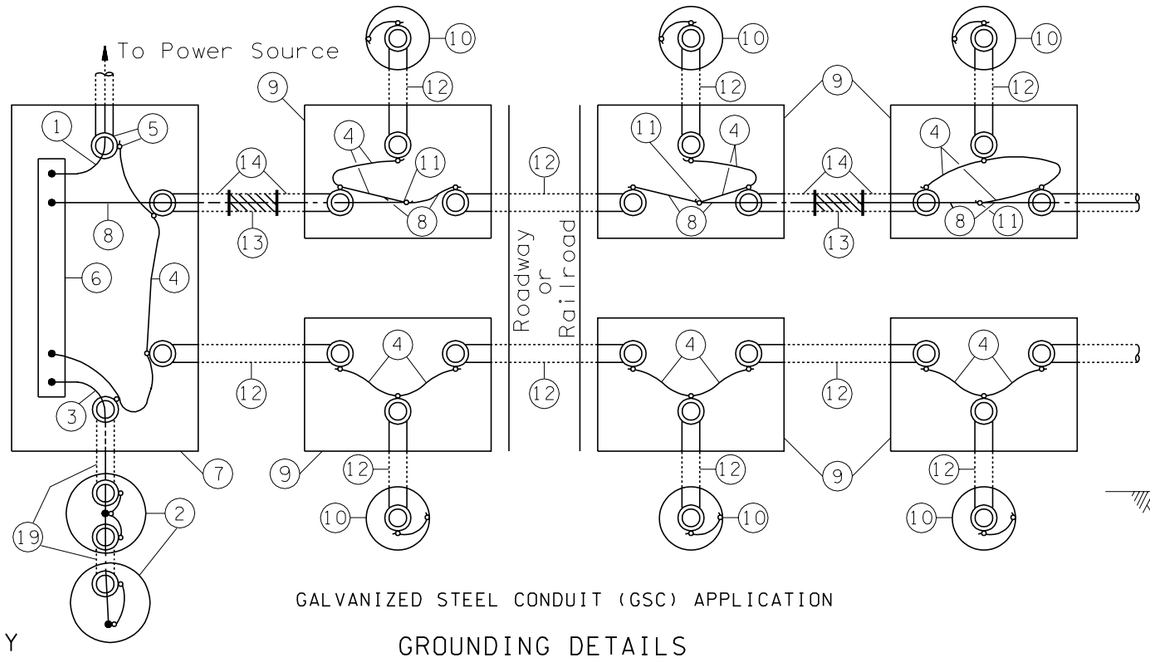

GALVANIZED STEEL CONDUIT (GSC) APPLICATION

GROUNDING DETAILS

KEY

1. Service Neutral
2. Service Ground
3. Grounding Electrode Conductor
4. Bonding Jumper
5. Grounding Bushing (typ. all conduit terminations)
6. Service Neutral Bus (Copper)
7. Service Enclosure
8. Equipment Grounding Conductor
9. Junction Box
10. Electrical Load Support (luminaire pole)
11. Copper Split Bolt Clamp
12. Galvanized Steel Conduit (GSC)
13. Non-metallic Conduit (NMC)
14. Option A - 10′ GSC with Field Bend
    - Approved Adapter Fitting
    - Grounding Bushing

    Option B - 10′ GSC
    - GS Factory Elbows
    - Approved Adapter Fitting
    - GS Coupling
    - Grounding Bushing
15. Ground Rod
16. Edge of Foundation, Pole or Service Support
17. Clamp
18. Junction Box or 8″ Drain Tile with Approved Cover
19. Code Sized GSC
20. To Service Neutral Bus
21. To Grounding Terminal or Connection to Equipment Grounding System

NOTES

1. If parallel circuits of different sizes are contained in one conduit, the size of the grounding conductor shall be determined on the basis of the largest conductor. Only one grounding conductor is required for each conduit regardless of the number of circuits contained.
2. Service ground per serving utility requirement. If the utility uses aluminum service conductors, an approved Al-Cu pressure type ground connector shall be used to secure the service neutral to the copper neutral bar in the service enclosure. Except for the above, all grounding conductors shall be copper.
3. Equipment grounding conductors and grounding electrode conductors shall be sized in accordance with the National Electric Code (No. 8 minimum) .

SUPPLEMENTAL GROUND

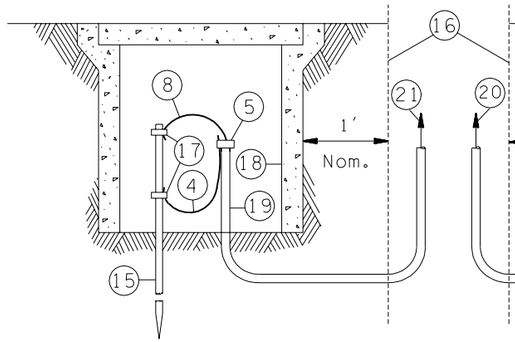

Required to supplement equipment grounding for luminaire standards with direct burial, aerial feeds, or where required in plans.

SERVICE GROUND

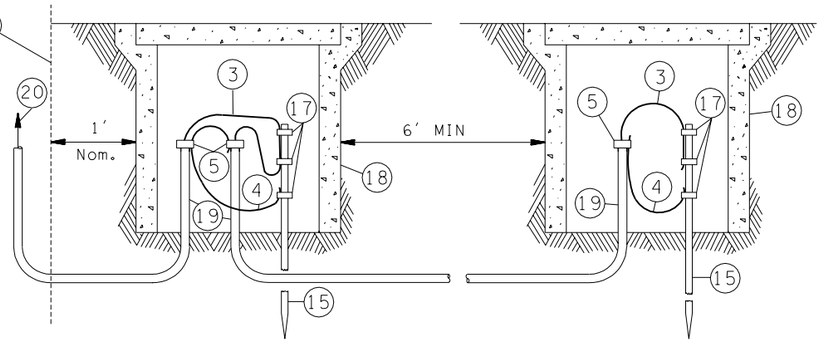

Required at all services and separately derived systems.

GROUND ROD DETAILS

DAVID K. PEACH
STATE OF WASHINGTON
00111089
REGISTERED
PROFESSIONAL ENGINEER

EXPIRES JUNE 4, 1999

TYPICAL GROUNDING DETAILS

STANDARD PLAN J-9a

NOTE: THIS PLAN IS NOT A LEGAL ENGINEERING DOCUMENT BUT AN ELECTRONIC DUPLICATE THE ORIGINAL, SIGNED BY THE ENGINEER AND APPROVED FOR PUBLICATION, IS KEPT ON FILE AT THE WASHINGTON STATE DEPARTMENT OF TRANSPORTATION. A COPY MAY BE OBTAINED UPON REQUEST.

DATE	REVISION	BY	APPR'D
	Note 3, change "connectors" to "conductors".	ABN	

APPROVED FOR PUBLICATION

Clifford E. Mansfield — DEPUTY STATE DESIGN ENGINEER — *4/24/98* DATE

WASHINGTON STATE DEPARTMENT OF TRANSPORTATION
OLYMPIA, WASHINGTON

EFFECTIVE: JANUARY 7, 2002 TO AUGUST 4, 2002

EFFECTIVE: JANUARY 7, 2002 TO AUGUST 4, 2002
EFFECTIVE: JANUARY 7, 2002 TO AUGUST 4, 2002

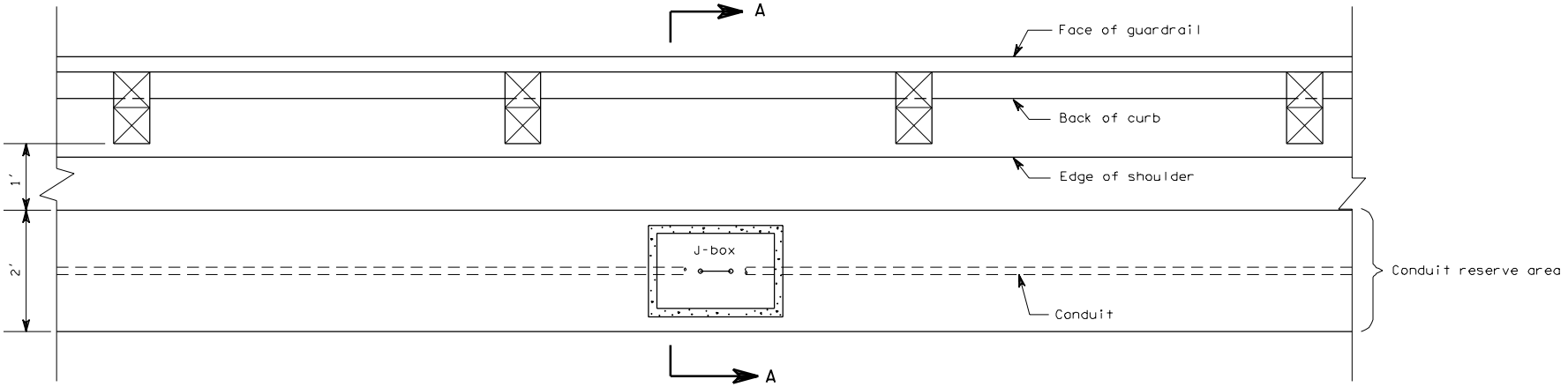

PLAN

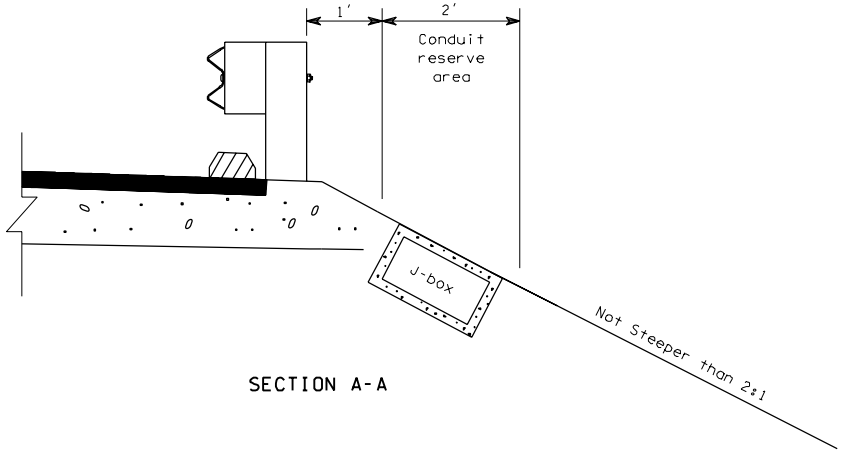

SECTION A-A

ELECTRICAL CONDUIT PLACEMENT

EFFECTIVE: JANUARY 7, 2002 TO AUGUST 4, 2002
EFFECTIVE: JANUARY 7, 2002 TO AUGUST 4, 2002

EFFECTIVE: JANUARY 7, 2002 TO AUGUST 4, 2002

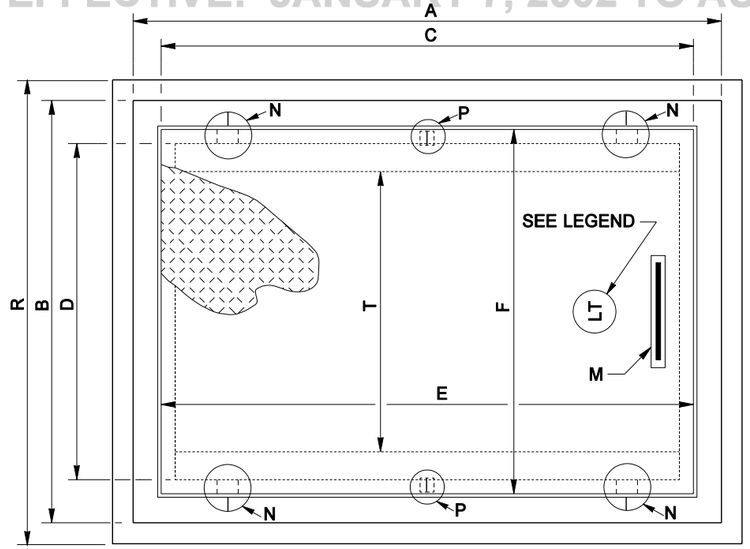

PLAN

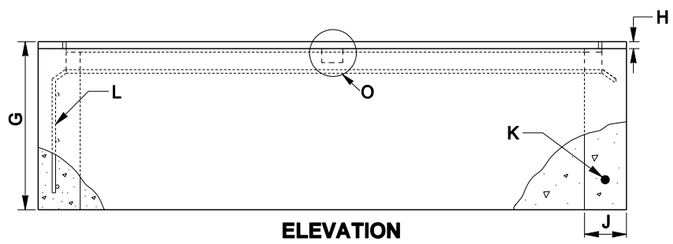

ELEVATION

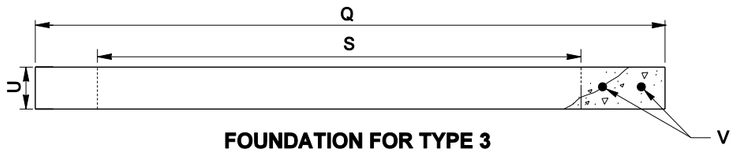

FOUNDATION FOR TYPE 3 JUNCTION BOX

JUNCTION BOX DIMENSION TABLE

MARK	ITEM	BOX TYPE		
		TYPE 1	TYPE 2	TYPE 3
A	OUTSIDE LENGTH OF JUNCTION BOX	22"	33"	42"
B	OUTSIDE WIDTH OF JUNCTION BOX	17"	22 1/2"	30"
C	INSIDE LENGTH OF JUNCTION BOX	18"-19"	28"	36"
D	INSIDE WIDTH OF JUNCTION BOX	13"-14"	17"	24"
E	LID LENGTH	18"	26 1/2"	38"
F	LID WIDTH	13"	17"	26"
G	DEPTH OF JUNCTION BOX	12"	12"	12"
H	LID AND FRAME DEPTH	5/16"	5/16"	1/2"
J	MINIMUM WALL THICKNESS	1 1/2"	1 1/2"	3"
K	WELDED WIRE HOOP - SIZE NUMBER (SEE NOTE 6)	W 2.9 (6 GAGE)	W 2.9 (6 GAGE)	W 5 (3 GAGE)
L	WELDED WIRE FABRIC - SIZE (SEE NOTE 6)	4 X 4 W 2.9 X W 2.9 (6 GAGE)		
M	HANDLE	N/A	N/A	SEE DETAIL
N	FRAME SLOT MARK	N/A	N/A	SEE DETAIL
O	HOOK	SEE DETAIL	SEE DETAIL	SEE DETAIL
P	LID HOOD MARK	N/A	N/A	SEE DETAIL
Q	OUTSIDE LENGTH OF FOUNDATION	N/A	N/A	48"
R	OUTSIDE WIDTH OF FOUNDATION	N/A	N/A	36"
S	INSIDE LENGTH OF FOUNDATION	N/A	N/A	36"
T	INSIDE WIDTH OF FOUNDATION	N/A	N/A	20"
U	MINIMUM FOUNDATION DEPTH	N/A	N/A	3"
V	WELDED WIRE HOOP -SIZE NUMBER	N/A	N/A	W 5 (3 GAGE)
	CAPACITY - CONDUIT DIAMETERS	6"	12"	24"
	NOTE: A 1% TOLERANCE IS ALLOWED			

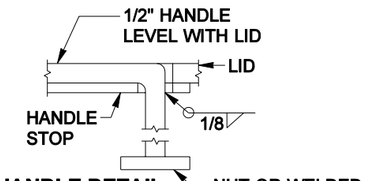

HANDLE DETAIL (MARK M)

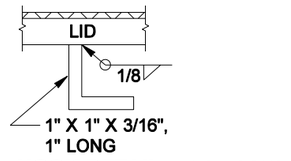

HOOK DETAIL (MARK O) (TWO HOOKS PER LID)

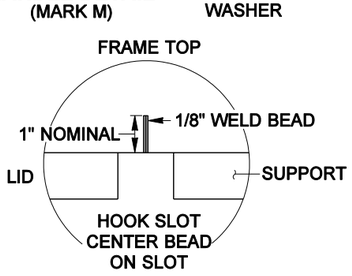

FRAME SLOT MARK (MARK N)

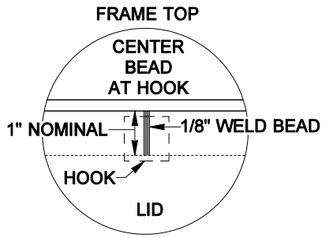

LID HOOD MARK DETAIL (MARK P)

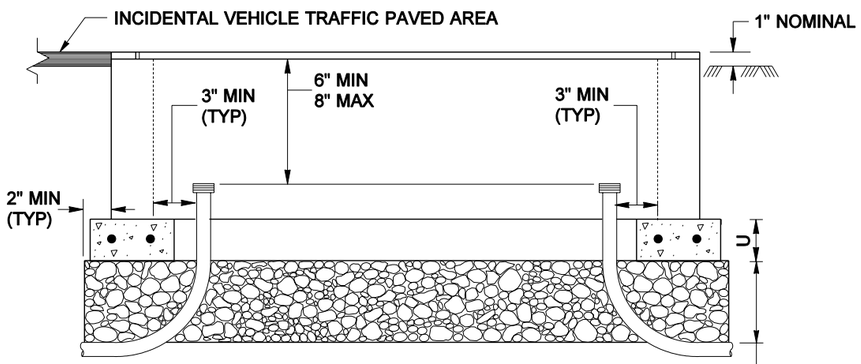

TYPE 3 JUNCTION BOX INSTALLATION DETAIL

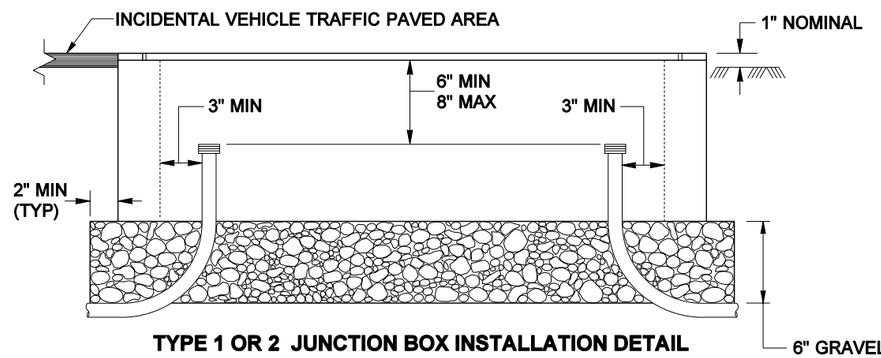

TYPE 1 OR 2 JUNCTION BOX INSTALLATION DETAIL

NOTES:

1. All box dimensions are nominal. Exact configurations vary among different manufacturers.
2. The noted lid thicknesses are overall minimums. The diamond pattern for Type 1 or 2 boxes shall be 28% minimum of overall thickness. The diamond pattern for Type 3 boxes shall have a minimum thickness of 3/32 ".
3. Lid support members shall be 3/16 " min. thick steel C, L or T shape welded to the frame.
4. When specified in the Contract, Type 2 and Type 3 boxes shall be provided with 12" deep extension boxes.
5. A 1/4" NC x 3/4" Stainless Steel Ground Stud with S.S. Nut shall be welded to the bottom of the lid.
6. See the Standard Specifications for alternate use of reinforcement.

LEGEND

1" LT 1" — LIGHTING SYSTEM	1" COMM 1" — COMMUNICATION SYSTEM
1" TS 1" — TRAFFIC SIGNAL SYSTEM	1" TEL 1" — TELEPHONE SYSTEM
1" ITS 1" — INTELLIGENT TRANSPORTATION SYSTEM	

FORM LETTERS WITH 1/8" WELD BEAD.

ALL DIMENSIONS ARE NOMINAL

TOBY D. RICKMAN — STATE OF WASHINGTON — 24655 — REGISTERED PROFESSIONAL ENGINEER

EXPIRES OCTOBER 26, 2002

STANDARD JUNCTION BOX

STANDARD PLAN J-11a

NOTE: THIS PLAN IS NOT A LEGAL ENGINEERING DOCUMENT BUT AN ELECTRONIC DUPLICATE. THE ORIGINAL, SIGNED BY THE ENGINEER AND APPROVED FOR PUBLICATION, IS KEPT ON FILE AT THE WASHINGTON STATE DEPARTMENT OF TRANSPORTATION. A COPY MAY BE OBTAINED UPON REQUEST.

APPROVED FOR PUBLICATION

Harold J. Peterfeso — STATE DESIGN ENGINEER — *09-12-01* — DATE

Washington State Department of Transportation

EFFECTIVE: JANUARY 7, 2002 TO AUGUST 4, 2002

EFFECTIVE: JANUARY 7, 2002 TO AUGUST 4, 2002

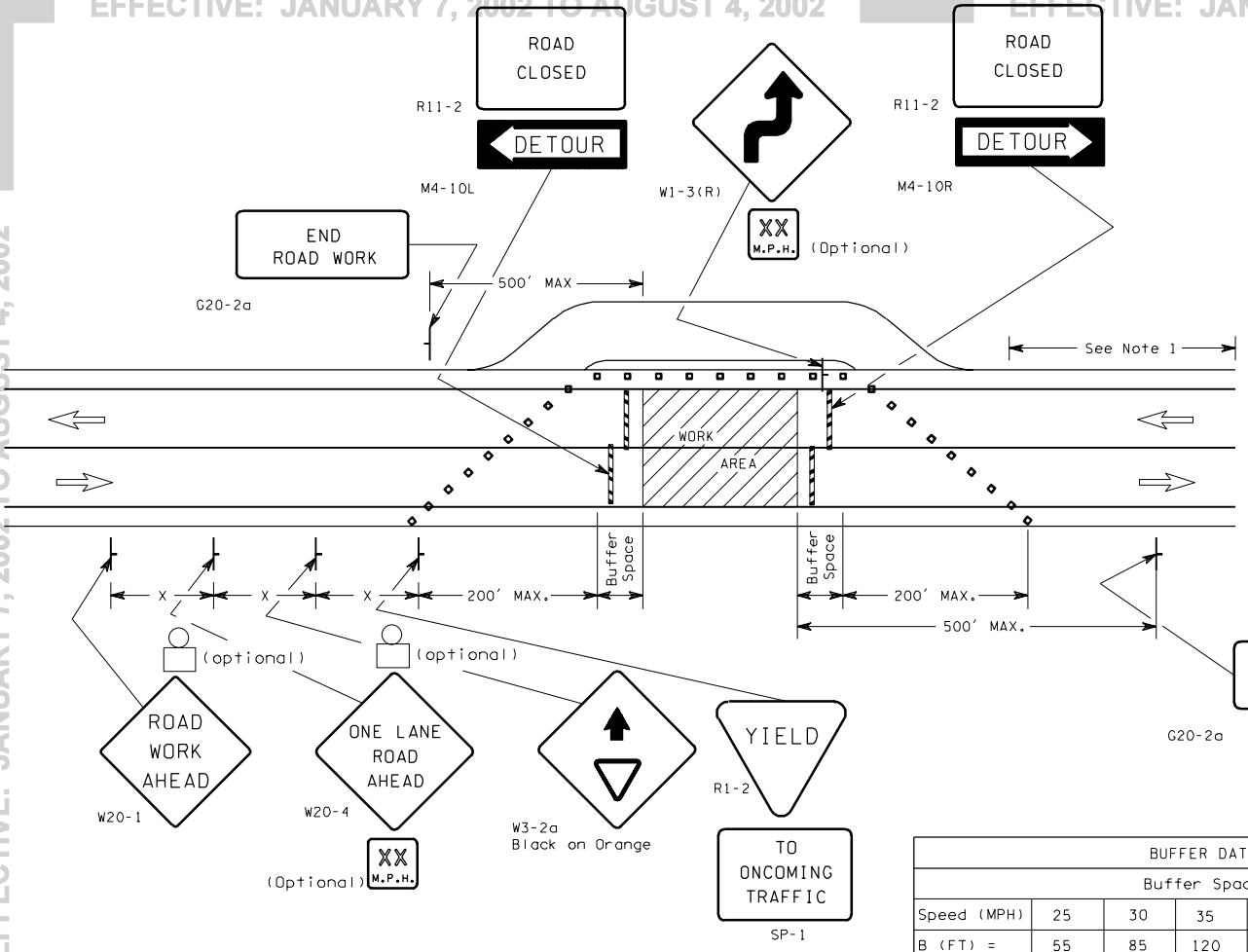

NOTES

1. Sign sequence is the same for both directions of travel, adjusted for direction of roadway curves.
2. Steady burning warning lights (Type C, MUTCD) may be used to mark channelizing devices at night as needed
3. Either reverse cone taper or sign G20-2a may be used to show end of work area.
4. Other curve or turn warning signs may be substituted for sign W1-3l and W1-3r to depict roadway alignment as appropriate.

CHANNELIZING DEVICE SPACING (FT)		
MPH	Taper	Tangent
35/50	30	60
25/30	20	40

SIGN SPACING TABLE	
Speed	X
45/50 MPH	500'±
35/40 MPH	350'±
25/30 MPH	200'±

FOR LOCAL AGENCY USE

TRAFFIC CONTROL PLAN

BUFFER DATA						
Buffer Space						
Speed (MPH)	25	30	35	40	45	50
B (FT) =	55	85	120	170	220	280
Buffer Vehicle Roll Ahead Distance						
4 Yard Dump Truck 24,000 LBS				Stationary Operation		
R (FT) =				100		

LEGEND

- Channelizing Devices
- Type III Barricade
- Type A Flashing Warning Light

Typical application for road closure on low volume roadway, (under 400 ADT) where drivers in both directions are able to see approaching traffic through and beyond the work site.

EFFECTIVE: JANUARY 7, 2002 TO AUGUST 4, 2002

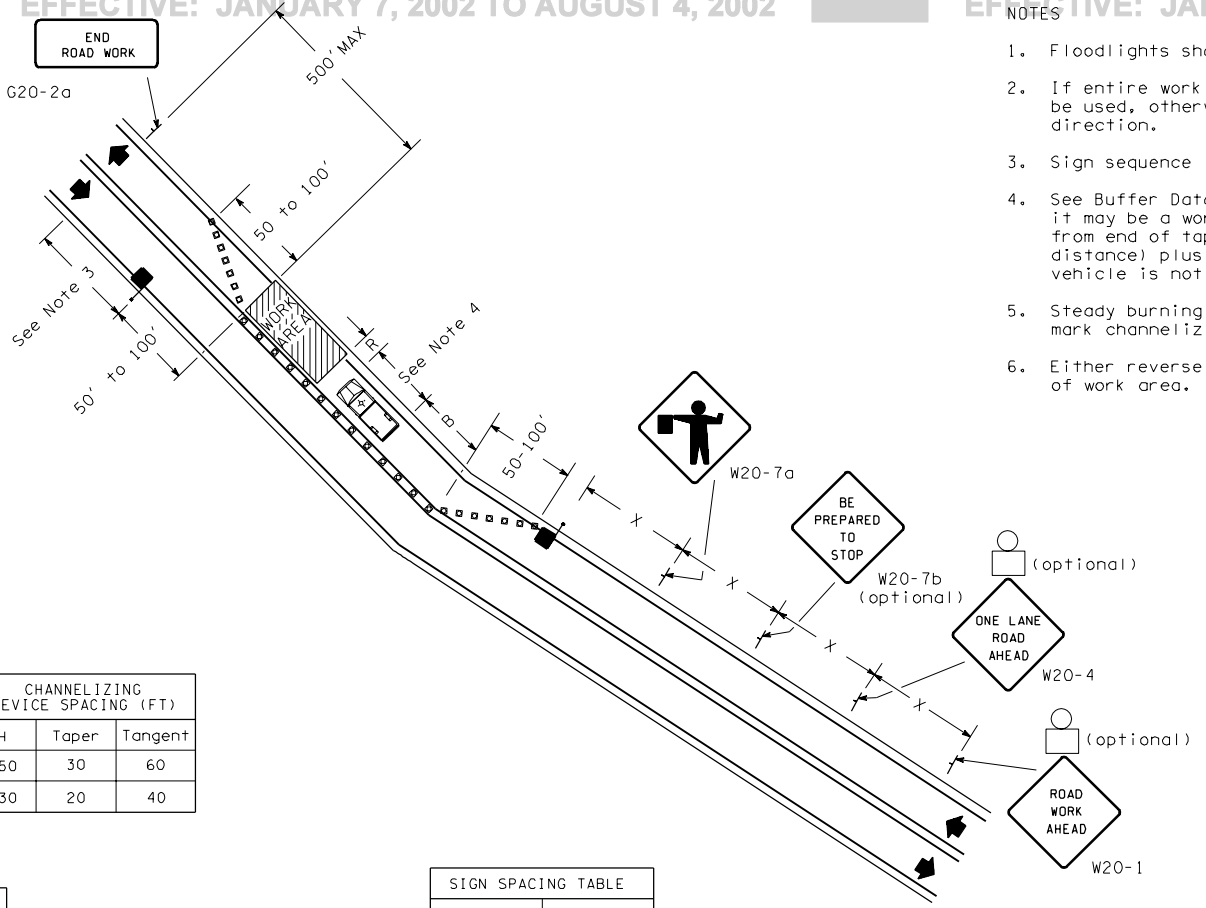

NOTES

1. Floodlights shall be provided to mark flagger stations at night.
2. If entire work area is visible from one station, one flagger may be used, otherwise two flaggers and signing will be required each direction.
3. Sign sequence is the same for both directions of travel.
4. See Buffer Data Table. Use of buffer vehicle is recommended, it may be a work vehicle. If buffer vehicle is used, minimum from end of taper to work area shall be total of "R" (roll ahead distance) plus length of vehicle, plus "B" (buffer space). If buffer vehicle is not used, minimum distance shall be "B".
5. Steady burning warning lights (Type C, MUTCD) should be used to mark channelizing devices at night as needed.
6. Either reverse cone taper or sign G20-2a may be used to show end of work area.

FOR LOCAL AGENCY USE

TRAFFIC CONTROL PLAN

CHANNELIZING DEVICE SPACING (FT)		
MPH	Taper	Tangent
35/50	30	60
25/30	20	40

LEGEND

- Channelizing Devices
- Flagger
- Type A Flashing Warning Light

SIGN SPACING TABLE	
Speed	X
45/50 MPH	500'±
35/40 MPH	350'±
25/30 MPH	200'±

BUFFER DATA						
Buffer Space						
Speed (MPH)	25	30	35	40	45	50
B (FT) =	55	85	120	170	220	280
Buffer Vehicle Roll Ahead Distance						
4 Yard Dump Truck 24,000 LBS			Stationary Operation			
R (FT) =			100			

Typical application of traffic control devices on a two-lane highway where one lane is closed and flagging is provided.

EFFECTIVE: JANUARY 7, 2002 TO AUGUST 4, 2002

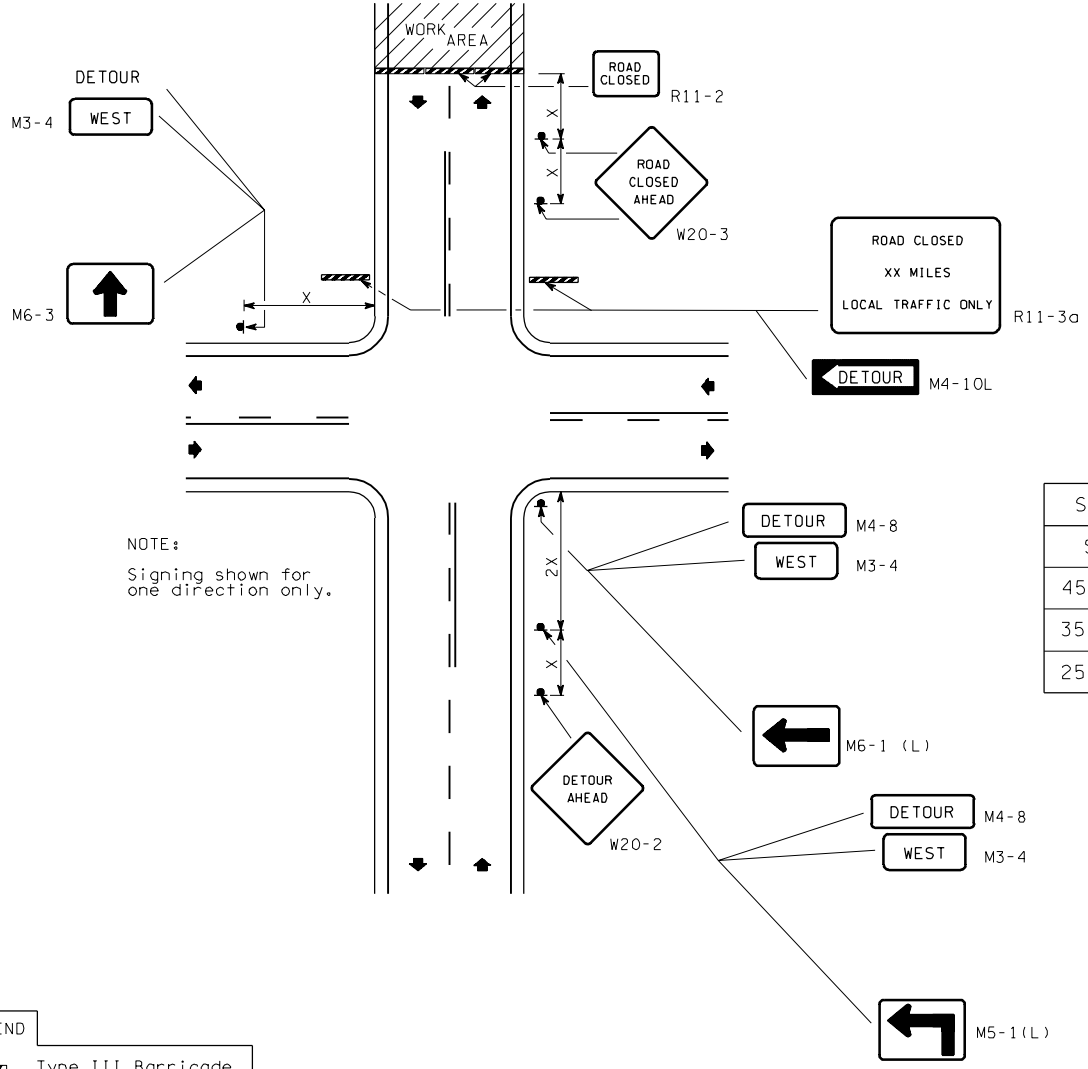

NOTES

1. Regulatory traffic control devices to be modified as needed for the duration of the detour.
2. Flashing warning lights (Type A, MUTCD) shall be used to mark barricades at night as needed.
3. Detour trailblazers shall be installed as necessary throughout detour route.

SIGN SPACING TABLE	
Speed	X
45/50 MPH	500′±
35/40 MPH	350′±
25/30 MPH	200′±

FOR LOCAL AGENCY USE

TRAFFIC CONTROL PLAN

LEGEND

Type III Barricade

Typical application - Roadway closed beyond detour point

K-3 1 of 1

03-07-97

EFFECTIVE: JANUARY 7, 2002 TO AUGUST 4, 2002

EFFECTIVE: JANUARY 7, 2002 TO AUGUST 4, 2002

CHANNELIZING DEVICE SPACING (FT)		
MPH	Taper	Tangent
35/50	30	60
25/30	20	40

MINIMUM TAPER LENGTH = L IN FEET						
Lane Width (feet)	Posted Speed (MPH)					
	25	30	35	40	45	50
10	105	150	205	270	450	500
11	115	165	225	295	495	550
12	125	180	245	320	540	600

SIGN SPACING TABLE	
Speed	X
45/50 MPH	500'±
35/40 MPH	350'±
25/30 MPH	200'±

LEGEND

- Channelizing Devices
- Obliterated Markings (see notes)
- Sequential Arrow Sign

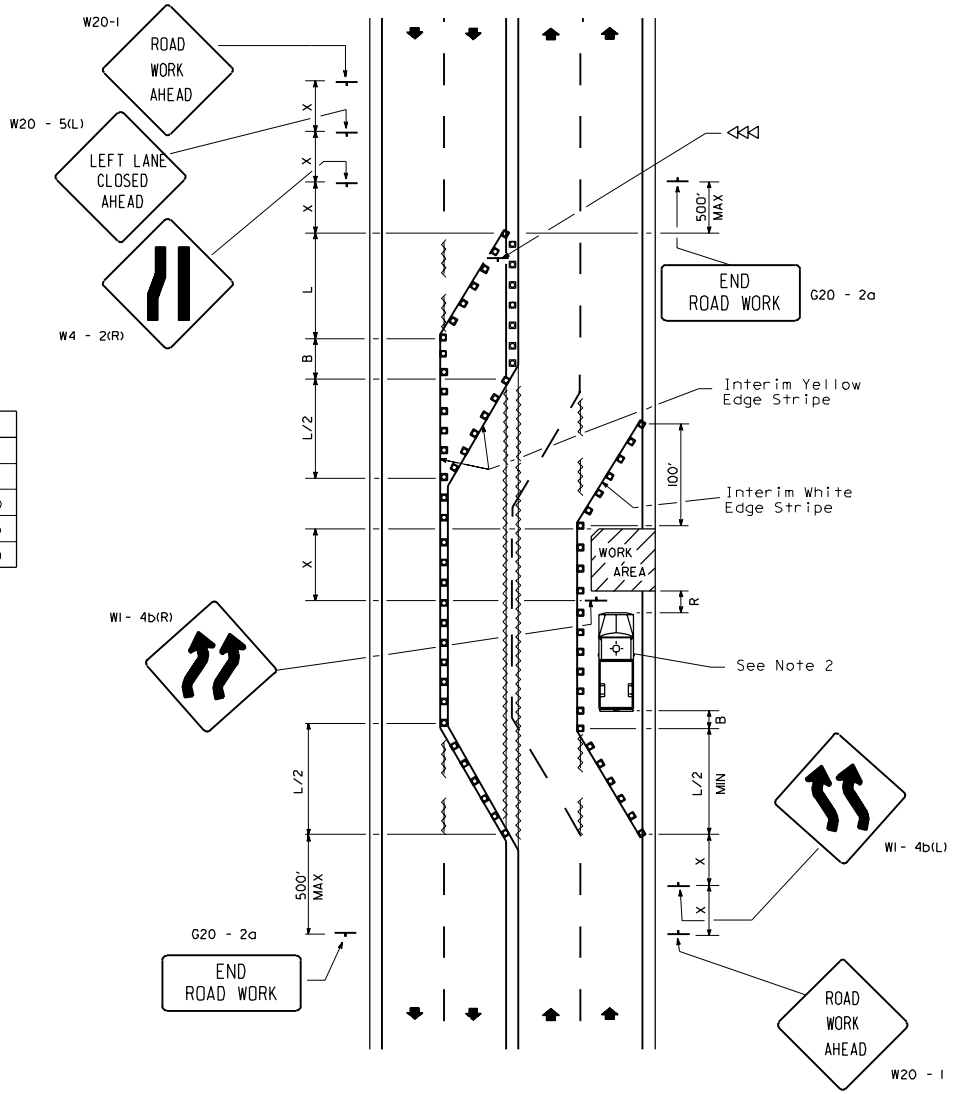

Notes

1. For long-term projects, conflicting pavement markings no longer applicable shall be removed or obliterated as soon as practicable. Temporary markings shall be used as necessary.
2. See Buffer Data Table. Use of buffer vehicle is recommended. It may be a work vehicle. If Buffer Vehicle is used, minimum distance from end of taper to work area shall be a total of "R" (roll ahead distance) plus length of vehicle, plus "B" (buffer space). If buffer vehicle is not used, minimum distance shall be "B".
3. This application may be used during peak traffic periods. Lane distribution may be reversed (signing changed accordingly) when when peak traffic flow changes direction.
4. Other curve or turn warning signs may be substituted for sign W1-4b(L) and W1-4b(R) to depict roadway alignment as appropriate.

BUFFER DATA						
Buffer Space						
Speed (MPH)	25	30	35	40	45	50
B (FT) =	55	85	120	170	220	280
Buffer Vehicle Roll Ahead Distance						
4 Yard Dump Truck 24,000 LBS				Stationary Operation		
R (FT) =				100		

FOR LOCAL AGENCY USE

TRAFFIC CONTROL PLAN

Typical application of traffic control devices where directional traffic volumes are uneven.

EFFECTIVE: JANUARY 7, 2002 TO AUGUST 4, 2002

EFFECTIVE: JANUARY 7, 2002 TO AUGUST 4, 2002

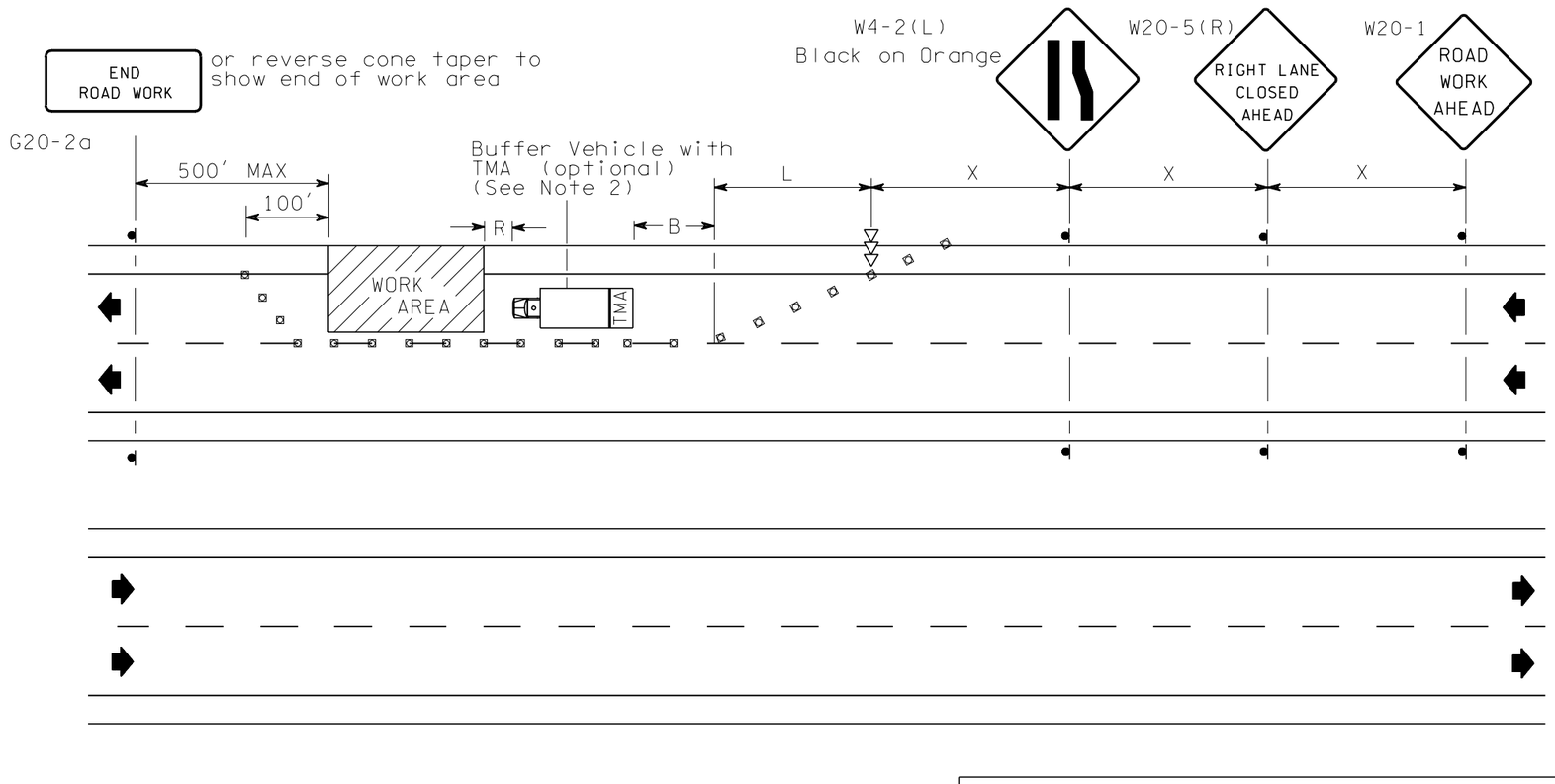

NOTES

1. Flashing warning lights and/or flags shall be used to call attention to early warning signs when specified in contract.

2. See Buffer Data Table. Use of buffer vehicle is recommended. It may be a work vehicle. If buffer vehicle is used, minimum from end of taper to work area shall be total of "R" (roll ahead distance) plus length of vehicle, plus "B" (buffer space). If buffer vehicle is not used, minimum distance shall be "B".

CHANNELIZING DEVICE SPACING (FT)		
MPH	Taper	Tangent
35/50	30	60
25/30	20	40

SIGN SPACING TABLE	
Speed	X
45/50 MPH	500'±
35/40 MPH	350'±
25/30 MPH	200'±

BUFFER DATA						
Buffer Space						
Speed (MPH)	25	30	35	40	45	50
B (FT) =	55	85	120	170	220	280
Buffer Vehicle Roll Ahead Distance						
4 Yard Dump Truck 24,000 LBS				Stationary Operation		
R (FT) =				100		

MINIMUM TAPER LENGTH = L IN FEET						
Lane Width (feet)	Posted Speed (MPH)					
	25	30	35	40	45	50
10	105	150	205	270	450	500
11	115	165	225	295	495	550
12	125	180	245	320	540	600

LEGEND

▫ ▫ ▫ Channelizing Devices

◁◁◁ Sequential Arrow Sign

Typical application - daytime operation of short duration on a four-lane divided roadway where one lane is closed.

FOR LOCAL AGENCY USE

TRAFFIC CONTROL PLAN

DAVID K. PEACH
STATE OF WASHINGTON
00011089
REGISTERED
PROFESSIONAL ENGINEER
EXPIRES JUNE 4, 1997

STANDARD PLAN K-7

NOTE: THIS PLAN IS NOT A LEGAL ENGINEERING DOCUMENT BUT AN ELECTRONIC DUPLICATE. THE ORIGINAL, SIGNED BY THE ENGINEER AND APPROVED FOR PUBLICATION, IS KEPT ON FILE AT THE WASHINGTON STATE DEPARTMENT OF TRANSPORTATION. A COPY MAY BE OBTAINED UPON REQUEST.

APPROVED FOR PUBLICATION

Clifford E. Mansfield — *3/07/97*

STATE DESIGN ENGINEER — DATE

WASHINGTON STATE DEPARTMENT OF TRANSPORTATION
OLYMPIA, WASHINGTON

EFFECTIVE: JANUARY 7, 2002 TO AUGUST 4, 2002

EFFECTIVE: JANUARY 7, 2002 TO AUGUST 4, 2002

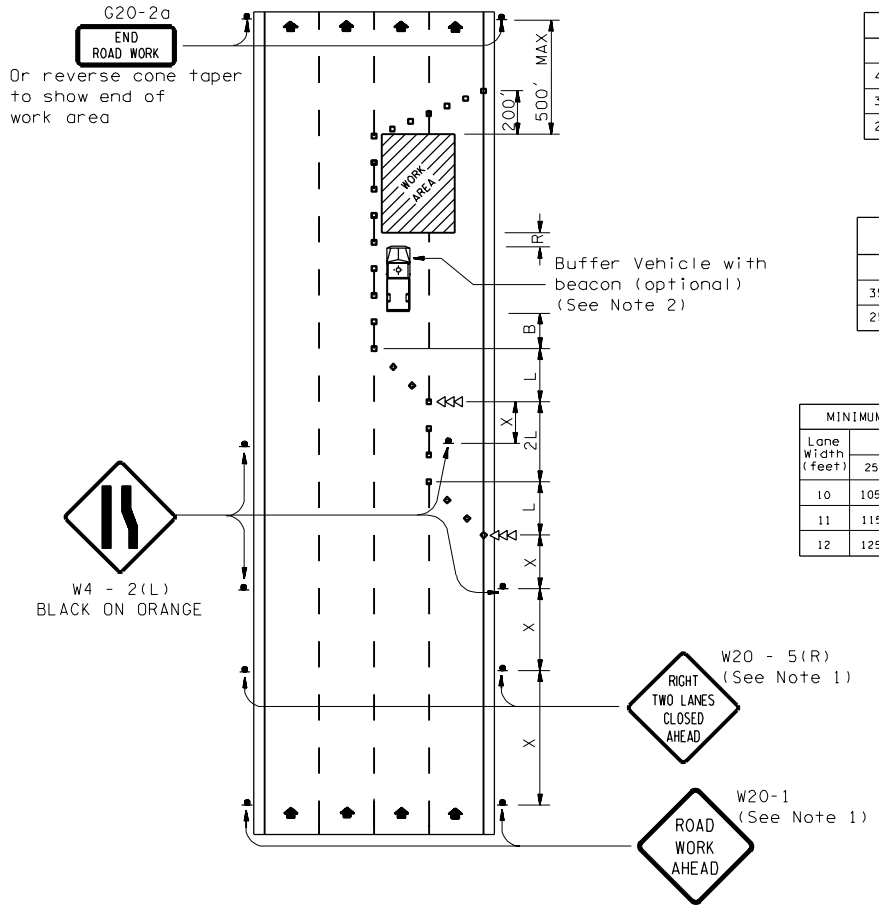

SIGN SPACING TABLE	
Speed	X
45/50 MPH	500'±
35/40 MPH	350'±
25/30 MPH	200'±

CHANNELIZING DEVICE SPACING (FT)		
MPH	Taper	Tangent
35/50	30	60
25/30	20	40

MINIMUM TAPER LENGTH = L IN FEET						
Lane Width (feet)	Posted Speed (MPH)					
	25	30	35	40	45	50
10	105	150	205	270	450	500
11	115	165	225	295	495	550
12	125	180	245	320	540	600

NOTES

1. Flashing warning lights and/or flags shall be used to call attention to early warning signs when specified in contract.
2. See Buffer Data Table. Use of buffer vehicle is recommended. It may be a work vehicle. If buffer vehicle is used, minimum distance from end of taper to work area shall be total of "R" (roll ahead distance) plus length of vehicle, plus "B" (buffer space). If buffer vehicle is not used, minimum distance shall be "B".

BUFFER DATA						
Buffer Space						
Speed (MPH)	25	30	35	40	45	50
B (FT) =	55	85	120	170	220	280
Buffer Vehicle Roll Ahead Distance						
4 Yard Dump Truck 24,000 LBS					Stationary Operation	
R (FT) =					100	

FOR LOCAL AGENCY USE

TRAFFIC CONTROL PLAN

LEGEND

Channelizing Devices

Sequential Arrow Sign

Typical Application - Closing two lanes of a multi-lane highway

EFFECTIVE: JANUARY 7, 2002 TO AUGUST 4, 2002

EFFECTIVE: JANUARY 7, 2002 TO AUGUST 4, 2002

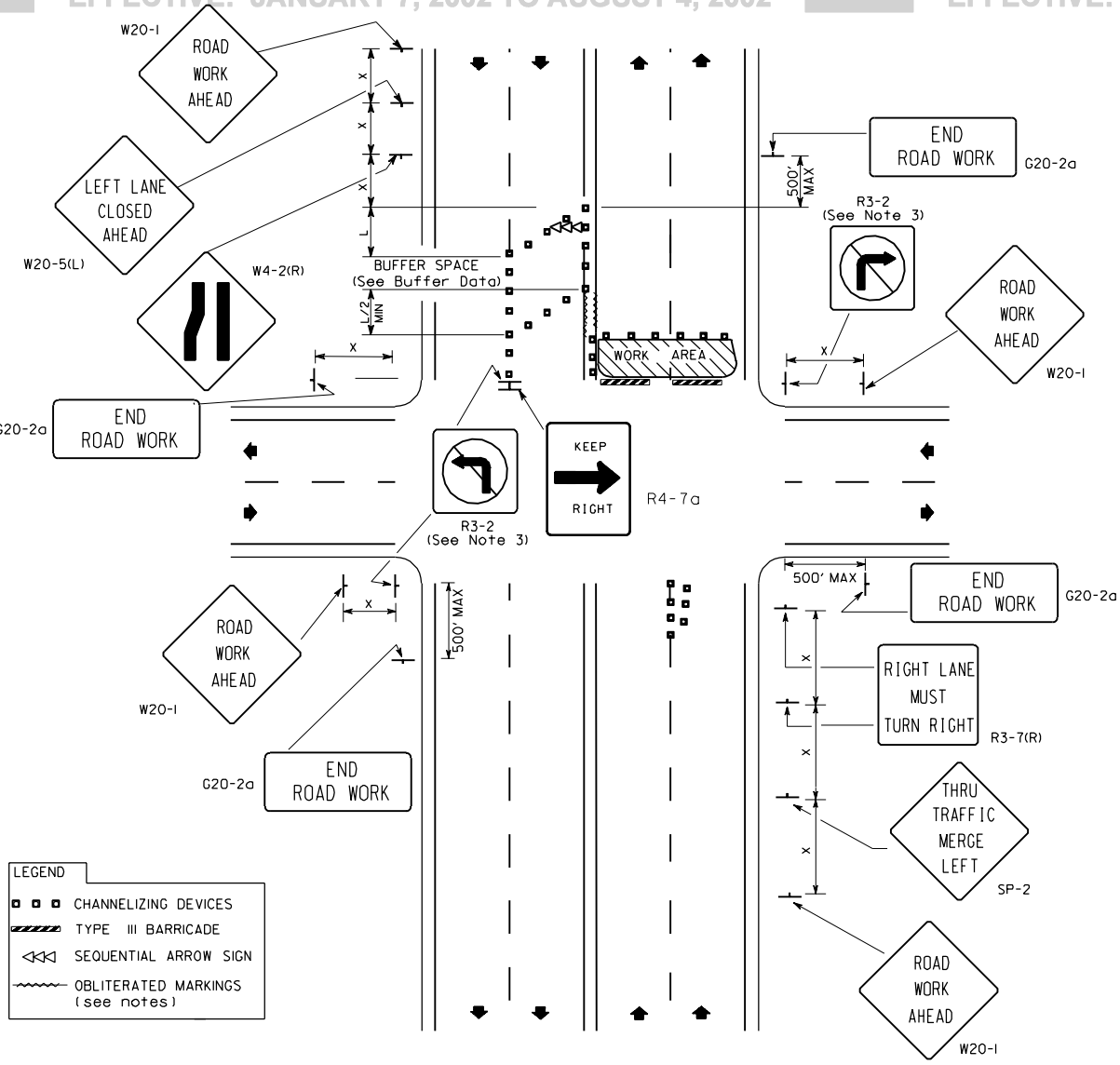

Typical application - Work area near an intersection, allowing right turns.

NOTES

1. Flashing warning lights (TYPE A, MUTCD) should be used to mark barricades at night, as needed.
2. Conflicting pavement markings and those no longer applicable shall be removed or obliterated.
3. Prohibit turns as necessary for traffic conditions.

BUFFER DATA						
Buffer Space						
Speed (MPH)	25	30	35	40	45	50
B (FT) =	55	85	120	170	220	280

MINIMUM TAPER LENGTH = L IN FEET						
Lane Width (feet)	Posted Speed (MPH)					
	25	30	35	40	45	50
10	105	150	205	270	450	500
11	115	165	225	295	495	550
12	125	180	245	320	540	600

CHANNELIZING DEVICE SPACING (FT)		
MPH	Taper	Tangent
35/50	30	60
25/30	20	40

SIGN SPACING TABLE	
Speed	X
45/50 MPH	500'±
35/40 MPH	350'±
25/30 MPH	200'±

FOR LOCAL AGENCY USE

TRAFFIC CONTROL PLAN

EFFECTIVE: JANUARY 7, 2002 TO AUGUST 4, 2002

EFFECTIVE: JANUARY 7, 2002 TO AUGUST 4, 2002

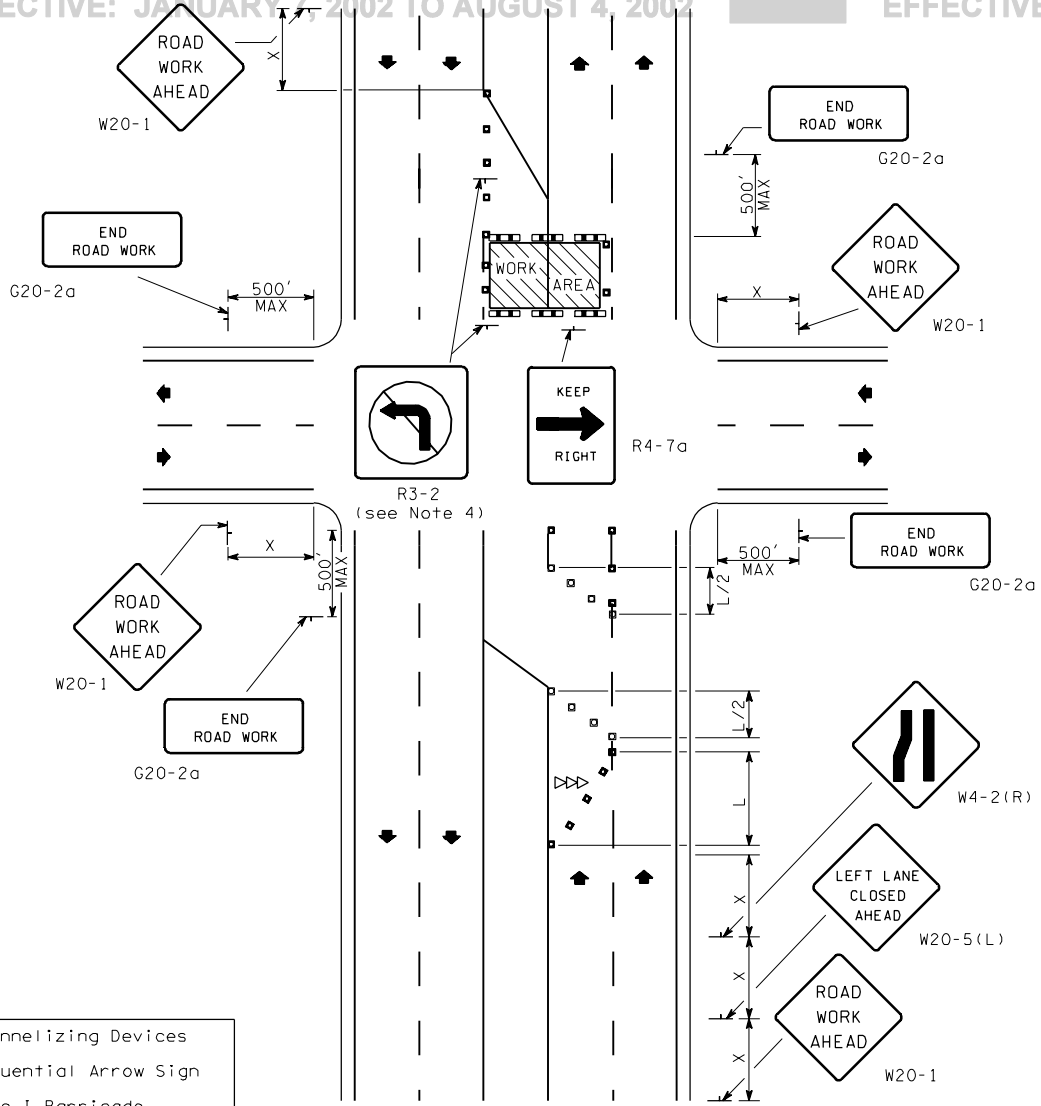

NOTES

1. Flashing warning lights (Type A, MUTCD) should be used to mark barricades at night as needed.
2. Steady burning warning lights (Type C, MUTCD) should be used to mark channelizing devices at night as needed.
3. Conflicting pavement markings and those no longer appicable shall be removed or obliterated.
4. Prohibit turns as necessary for traffic conditions.

MINIMUM TAPER LENGTH = L IN FEET						
Lane Width (feet)	Posted Speed (MPH)					
	25	30	35	40	45	50
10	105	150	205	270	450	500
11	115	165	225	295	495	550
12	125	180	245	320	540	600

SIGN SPACING TABLE	
Speed	X
45/50 MPH	500'±
35/40 MPH	350'±
25/30 MPH	200'±

FOR LOCAL AGENCY USE

TRAFFIC CONTROL PLAN

CHANNELIZING DEVICE SPACING (FT)		
MPH	Taper	Tangent
35/50	30	60
25/30	20	40

LEGEND

- Channelizing Devices
- Sequential Arrow Sign
- Type I Barricade

Typical application - Work area near an intersection providing access to left-turn lane.

K-11 1 of 1

03-07-97

EFFECTIVE: JANUARY 7, 2002 TO AUGUST 4, 2002

EFFECTIVE: JANUARY 7, 2002 TO AUGUST 4, 2002

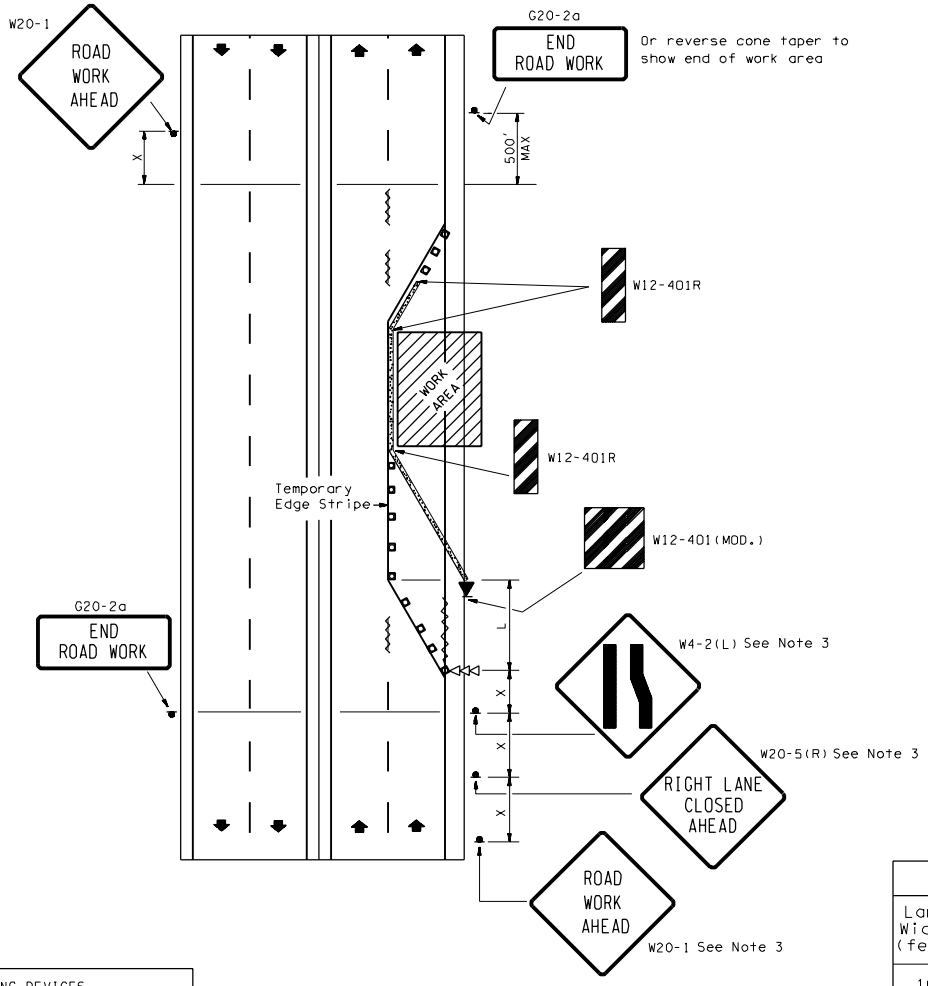

NOTES

1. Conflicting pavement markings and those no longer applicable shall be removed or obliterated.
2. Exposed ends of concrete barriers must be maintained outside the clear zone and adequately flared or fitted with impact attenuators.
   Flare formula:
   50 MPH --- 12:1
   45 MPH --- 11:1
   40 MPH --- 10:1
3. The advance warning sign series W20-1, W20-5(R) and W4-2(L) shall be repeated in median where sufficient width exists.
4. Steady burning warning lights (TYPE C, MUTCD) shall be used to mark channelizing devices at night.

CHANNELIZING DEVICE SPACING (FT)		
MPH	Taper	Tangent
35/50	30	60
25/30	20	40

SIGN SPACING TABLE	
Speed	X
45/50 MPH	500'±
35/40 MPH	350'±
25/30 MPH	200'±

FOR LOCAL AGENCY USE

TRAFFIC CONTROL PLAN

MINIMUM TAPER LENGTH = L IN FEET						
Lane Width (feet)	Posted Speed (MPH)					
	25	30	35	40	45	50
10	105	150	205	270	450	500
11	115	165	225	295	495	550
12	125	180	245	320	540	600

LEGEND

- CHANNELIZING DEVICES
- OBLITERATED MARKINGS (see notes)
- CONCRETE BARRIER
- SEQUENTIAL ARROW SIGN
- IMPACT ATTENUATORS (see notes)

Typical application - Portable barrier around a work area.

EFFECTIVE: JANUARY 7, 2002 TO AUGUST 4, 2002

EFFECTIVE: JANUARY 7, 2002 TO AUGUST 4, 2002

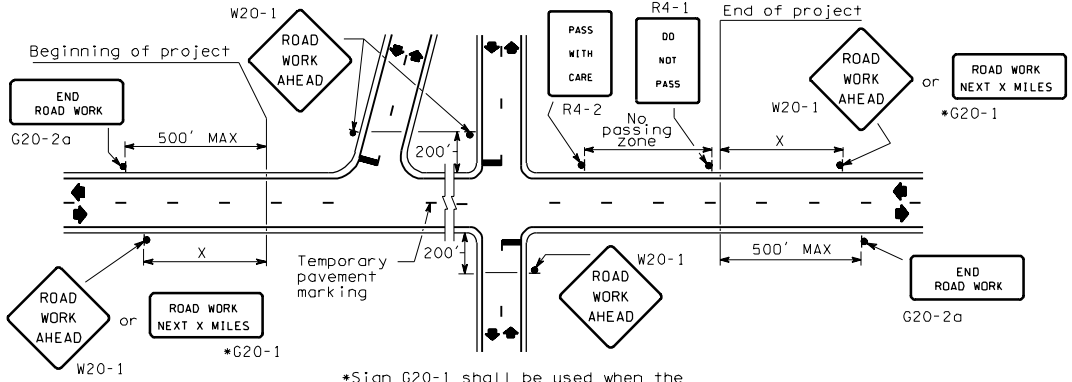

*Sign G20-1 shall be used when the work length exceeds 2 miles.

NON - WORKING HOURS

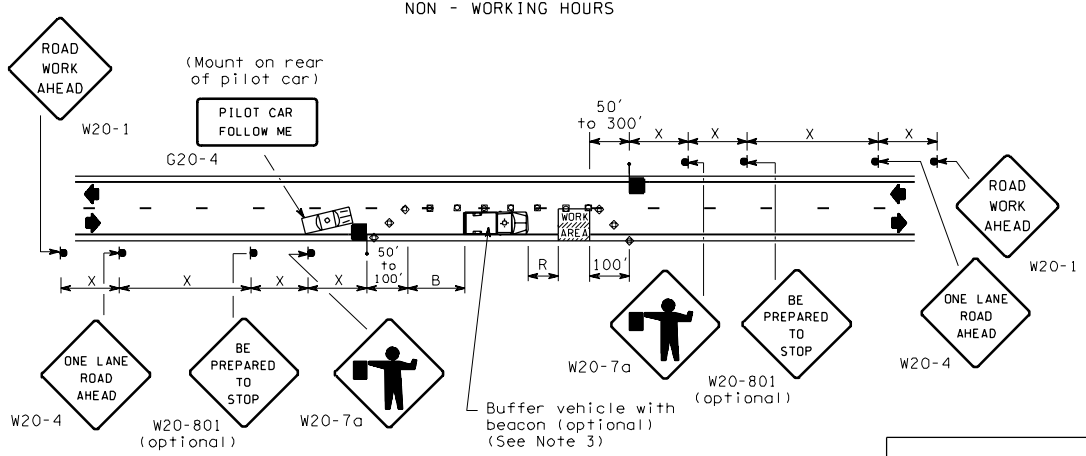

PILOT CAR CONTROLLED ONE WAY TRAFFIC

LEGEND

- Channelizing Devices
- Flagger

Typical application - Paving/Chip Seal operations on a two-lane roadway.

NOTES

1. Other warning signs, such as LOOSE GRAVEL, TRUCK CROSSING, BUMP, ABRUPT LANE EDGE, etc. may be used as necessary along with advisory speed signs. Advisory speeds are determined by the Engineer.
2. Floodlights shall be provided to mark flagger stations at night.
3. See Buffer Data Table. Use of buffer vehicle is recommended. It may be a work vehicle. If buffer vehicle is used, minimum distance from end of taper to work area shall be total of "R" (roll ahead distance) plus length of vehicle, plus "B" buffer space. If vehicle is not used, minimum distance shall be "B".

SIGN SPACING TABLE	
Speed	X
45/50 MPH	500'±
35/40 MPH	350'±
25/30 MPH	200'±

CHANNELIZING DEVICE SPACING (FT)		
MPH	Taper	Tangent
35/50	30	60
25/30	20	40

BUFFER DATA						
Buffer Space						
Speed (MPH)	25	30	35	40	45	50
B (FT) =	55	85	120	170	220	280
Buffer Vehicle Roll Ahead Distance						
4 Yard Dump Truck 24,000 LBS		Stationary Operation			Moving Operation	
R (FT) =		100			175	

FOR LOCAL AGENCY USE

TRAFFIC CONTROL PLAN

K-16 1 of 1

03-07-97

EFFECTIVE: JANUARY 7, 2002 TO AUGUST 4, 2002

EFFECTIVE: JANUARY 7, 2002 TO AUGUST 4, 2002

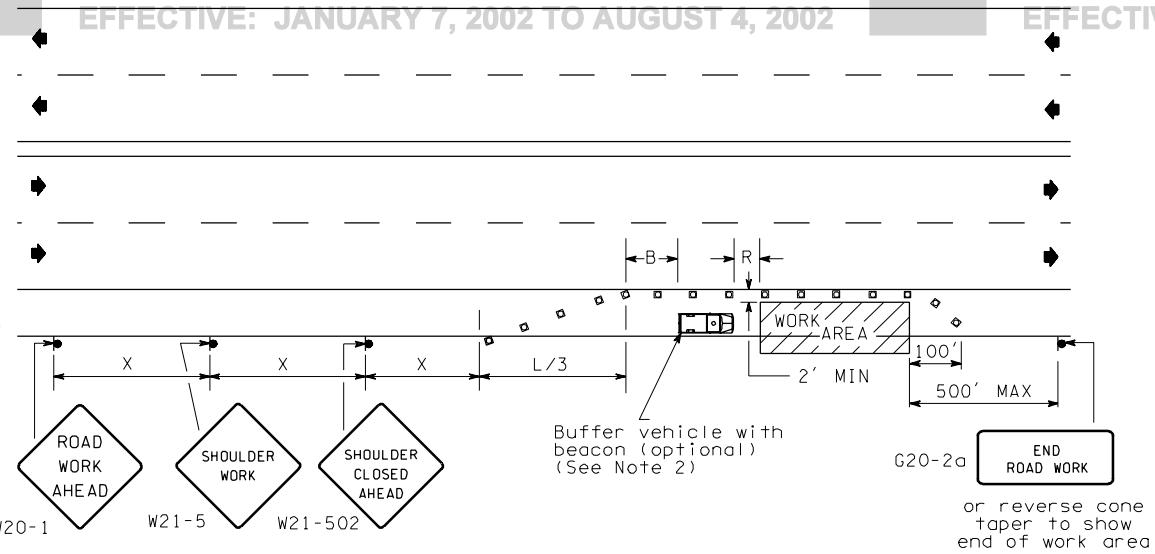

NOTES

1. No encroachment on travelled lane. If encroachment is necessary, lane must be closed.
2. See Buffer Data Table. Use of buffer vehicle is recommended, it may be a work vehicle. If buffer vehicle is used, minimum distance from end of taper to work area shall be total of "R" (roll ahead distance) plus length of vehicle, plus "B" (buffer space). If buffer vehicle is not used, minimum distance shall be "B".

BUFFER DATA						
Buffer Space						
Speed (MPH)	25	30	35	40	45	50
B (FT) =	55	85	120	170	220	280
Buffer Vehicle Roll Ahead Distance						
4 Yard Dump Truck 24,000 LBS	Stationary Operation		Moving Operation			
R (FT) =	100		175			

SIGN SPACING TABLE	
Speed	X
45/50 MPH	500'±
35/40 MPH	350'±
25/30 MPH	200'±

CHANNELIZING DEVICE SPACING (FT)		
MPH	Taper	Tangent
35/50	30	60
25/30	20	40

MINIMUM TAPER LENGTH = L IN FEET						
Lane Width (feet)	Posted Speed (MPH)					
	25	30	35	40	45	50
10	105	150	205	270	450	500
11	115	165	225	295	495	550
12	125	180	245	320	540	600

FOR LOCAL AGENCY USE

TRAFFIC CONTROL PLAN

LEGEND

▫▫▫ Channelizing Devices

Typical application - Shoulder work on four lane highway.

EFFECTIVE: JANUARY 7, 2002 TO AUGUST 4, 2002

EFFECTIVE: JANUARY 7, 2002 TO AUGUST 4, 2002

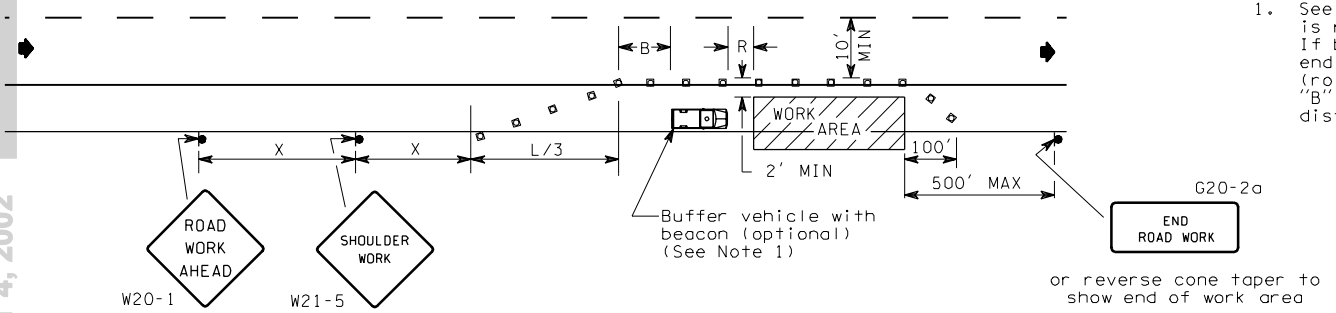

NOTES

1. See Buffer Data Table. Use of buffer vehicle is recommended. It may be a work vehicle. If buffer vehicle is used, minimum distance from end of taper to work area shall be total of "R" (roll ahead distance) plus length of vehicle, plus "B" buffer space. If vehicle is not used, minimum distance shall be "B".

CHANNELIZING DEVICE SPACING (FT)		
MPH	Taper	Tangent
35	30	60
25/30	20	40

MINIMUM TAPER LENGTH = L IN FEET			
Lane Width (feet)	Posted Speed (MPH)		
	25	30	35
10	105	150	205
11	115	165	225
12	125	180	245

FOR LOCAL AGENCY USE

SIGN SPACING TABLE	
Speed	X
35 MPH	350'±
25/30 MPH	200'±

BUFFER DATA			
Buffer Space			
Speed (MPH)	25	30	35
B (FT) =	55	85	120
Buffer Vehicle Roll Ahead Distance			
4 Yard Dump Truck 24,000 LBS		Stationary Operation	
R (FT) =		100	

TRAFFIC CONTROL PLAN

LEGEND

▫ ▫ ▫ Channelizing Devices

Typical application - shoulder work on urban street with minor encroachment on traveled lane.

K-18 1 of 1

03-07-97

EFFECTIVE: JANUARY 7, 2002 TO AUGUST 4, 2002

EFFECTIVE: JANUARY 7, 2002 TO AUGUST 4, 2002

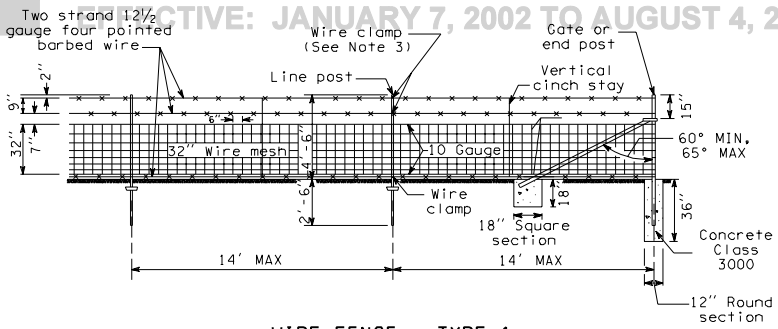

WIRE FENCE - TYPE 1

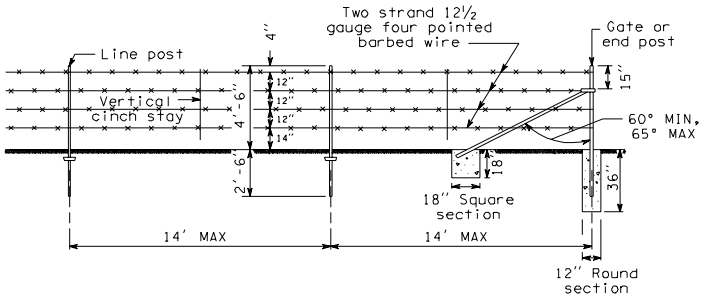

WIRE FENCE - TYPE 2

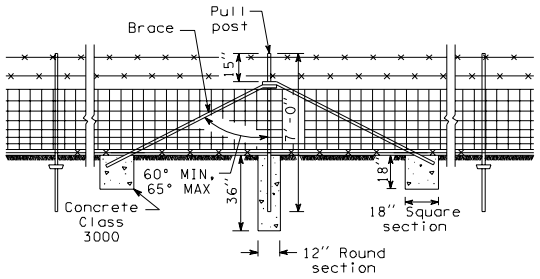

LINE BRACE
(Maximum spacing 1000 feet)

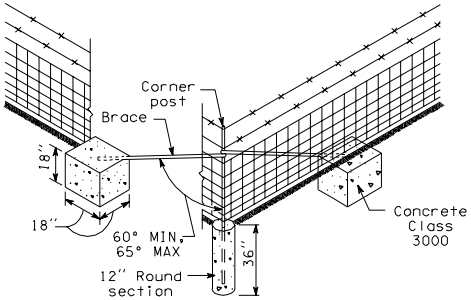

CORNER BRACE
(Angles 30° and over)

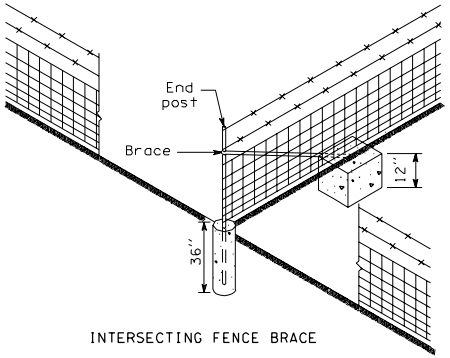

INTERSECTING FENCE BRACE

WIRE FENCE

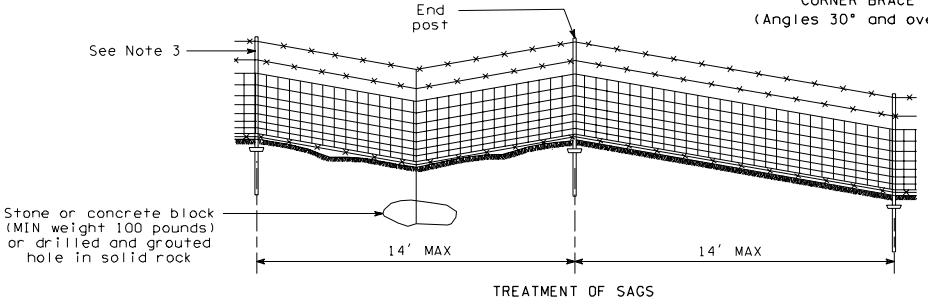

TREATMENT OF SAGS

STEEL POST DETAILS

Details for Type 2 Fence identical as shown for Type 1 Fence

L-1
07-18-97

EFFECTIVE: JANUARY 7, 2002 TO AUGUST 4, 2002

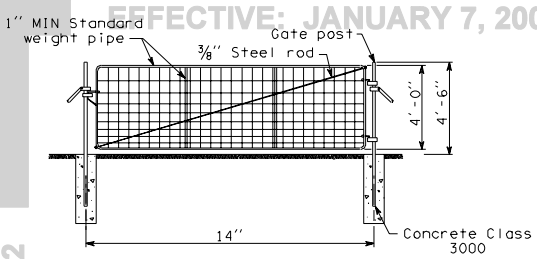

SINGLE WIRE GATE, 14' WIDE

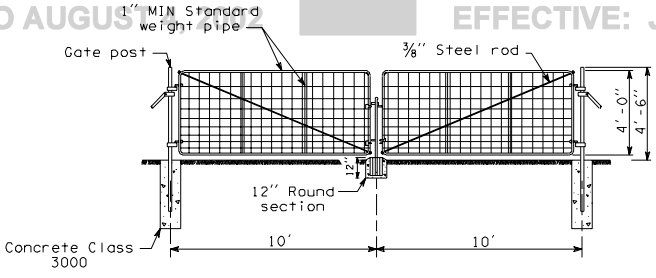

DOUBLE WIRE GATE, 20' WIDE

NOTES:

1. Details for Type 2 Fence, sme as Type 1.
2. Wood anchors shall be 2x4 lumber, 12'' long MIN, fastened with three 16d galvanized nails.
3. Four wire clamps per post required for mesh wire. Three additional clamps per post required in sag section.

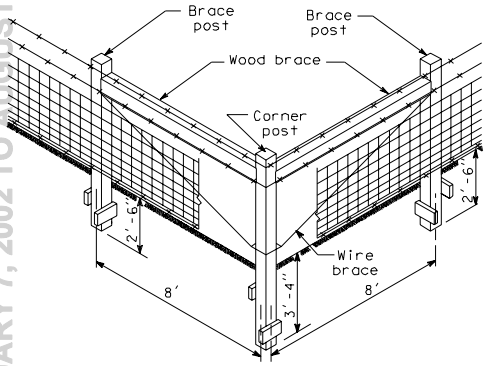

CORNER BRACE
(Angles 30° and over)

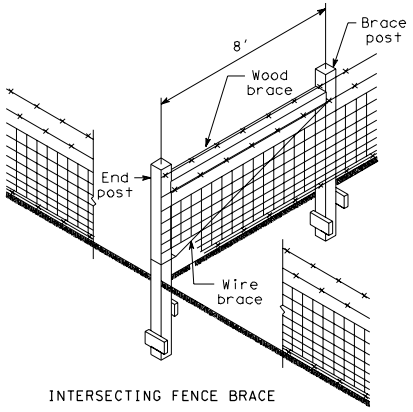

INTERSECTING FENCE BRACE

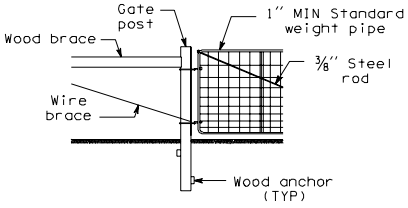

GATE POST

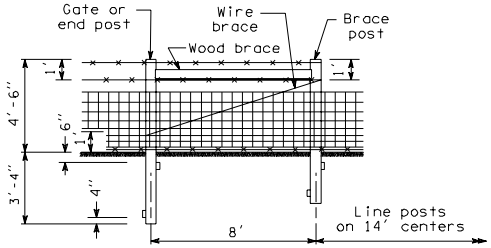

END BRACE

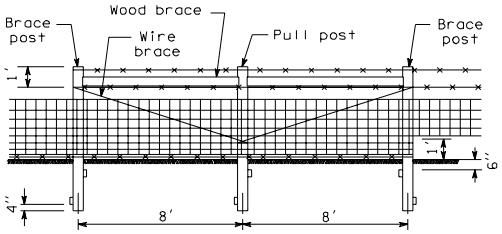

LINE BRACE
(Maximum spacing 1000 feet)

WIRE FENCE

WOOD POST DETAILS

L-1

07-18-97

EFFECTIVE: JANUARY 7, 2002 TO AUGUST 4, 2002

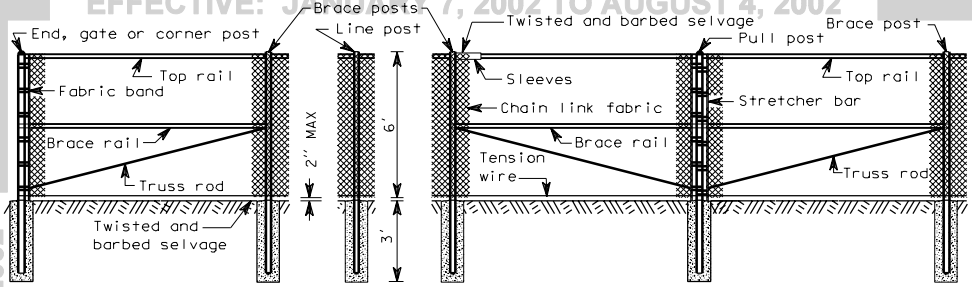

CHAIN LINK FENCE TYPE 1

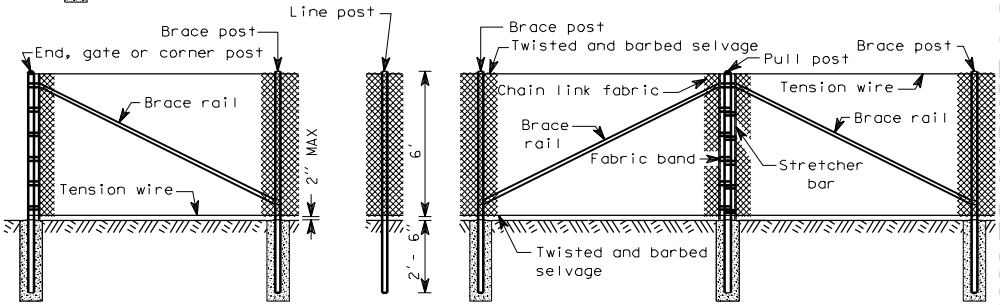

CHAIN LINK FENCE TYPE 3

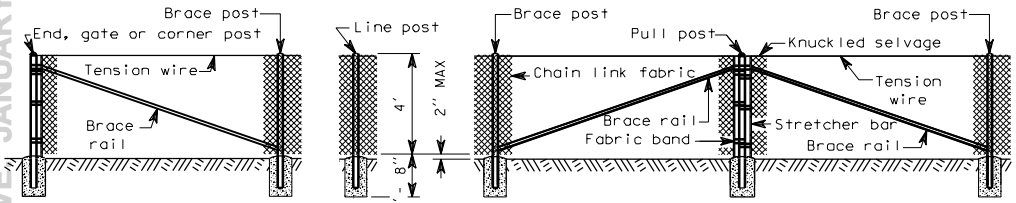

CHAIN LINK FENCE TYPE 4

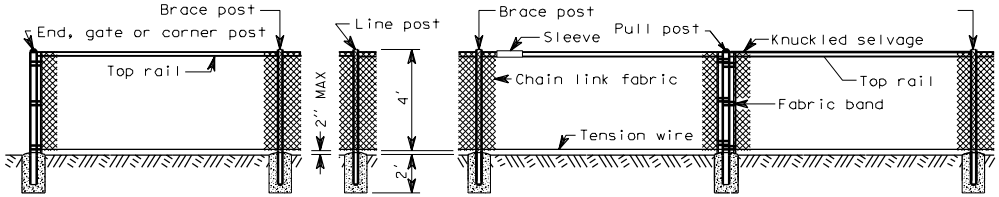

CHAIN LINK FENCE TYPE 6

CHAIN LINK FENCE

L-2

07-18-97

EFFECTIVE: JANUARY 7, 2002 TO AUGUST 4, 2002

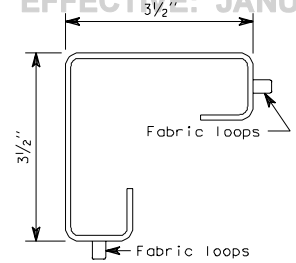

END, CORNER AND PULL POST

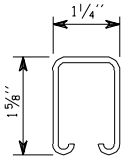

RAIL AND BRACE

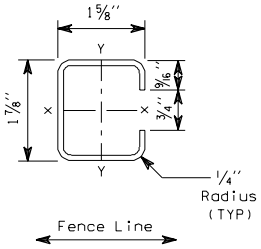

LINE POST

ROLL FORMED SECTIONS

NOTES:

All concrete post bases shall be 10" minimum diameter.

All posts shall be spaced at 10' maximum intervals unless otherwise directed by the Engineer.

Top or bottom tension wires shall be placed within the limits of the first full fabric weave.

Details are illustrative and shall not limit hardware design or post selection of any particular fence type.

TYPE	MEMBER																		ALL POSTS
	BRACE RAIL & TOP RAIL						LINE & BRACE POST						END, CORNER, & PULL POST				GATE POST		
	ROUND		H-COLUMN		ROLL FORMED		ROUND		H-COLUMN		ROLL FORMED		ROUND		ROLL FORMED		ROUND		
	I.D. Pipe (Inches)	Weight Per Foot (Pounds)	Size (Inches)	Weight Per Foot (Pounds)	Size (Inches)	Weight Per Foot (Pounds)	I.D. Pipe (Inches)	Weight Per Foot (Pounds)	Size (Inches)	Weight Per Foot (Pounds)	Size (Inches)	Weight Per Foot (Pounds)	I.D. Pipe (Inches)	Weight Per Foot (Pounds)	Size (Inches)	Weight Per Foot (Pounds)	I.D. Pipe (Inches)	Weight Per Foot (Pounds)	LENGTH
1	1¼	2.27	1¼ x 1⅝	1.35	1⅝ x 1¼	1.35	2	3.65	2¼	4.0	1⅝ x 1⅞	2.34	2½	5.79	3½ x 3½	5.14	3½	9.1	8'-8"
3	1¼	2.27	1¼ x 1⅝	1.35	1⅝ x 1¼	1.35	1½	2.72	1⅞	2.72	1⅝ x 1⅞	1.85	2	3.65	3½ x 3½	5.14	3½	9.1	8'-8"
4	1¼	2.27	1¼ x 1⅝	1.35	1⅝ x 1¼	1.35	1½	2.72	1⅞	2.72	1⅝ x 1⅞	1.85	2	3.65	3½ x 3½	5.14	3½	9.1	5'-6"
6	1¼	2.27	1¼ x 1⅝	1.35	1⅝ x 1¼	1.35	2	3.65	2¼	4.0	1⅝ x 1⅞	2.34	2½	5.79	3½ x 3½	5.14	3½	9.1	5'-6"

CHAIN LINK FENCE

L-2

07-18-97

EFFECTIVE: JANUARY 7, 2002 TO AUGUST 4, 2002

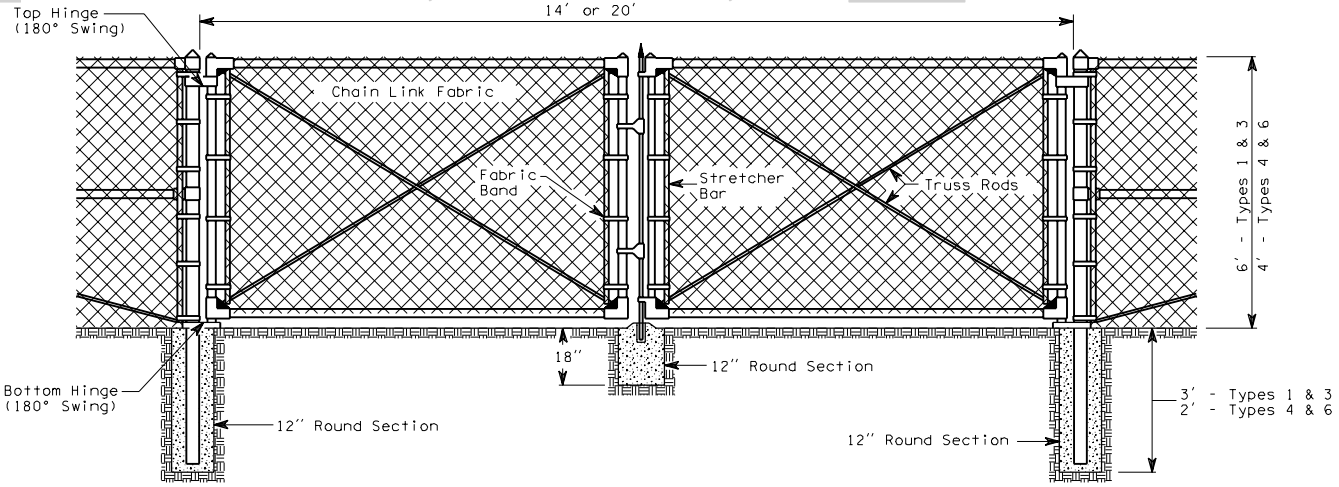

NOTES:

1. Fence fabric shall be secured to gate frames with knuckled selvage along top edge for Types 4 & 6 chain link fence installations.

2. Minimum post length:
   Types 1 & 3 8′- 8″
   Types 4 & 6 5′- 6″

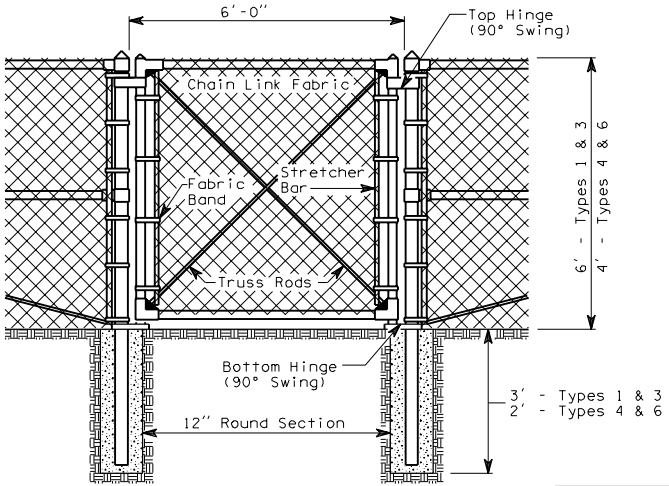

CHAIN LINK GATES

EFFECTIVE: JANUARY 7, 2002 TO AUGUST 4, 2002

EFFECTIVE: JANUARY 7, 2002 TO AUGUST 4, 2002

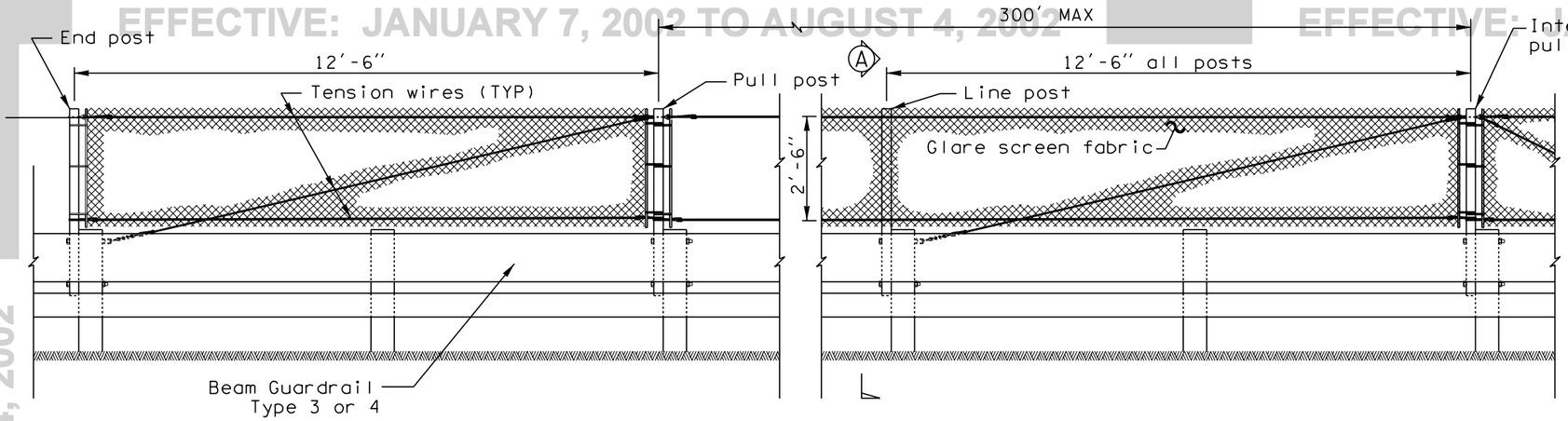

DESIGN A

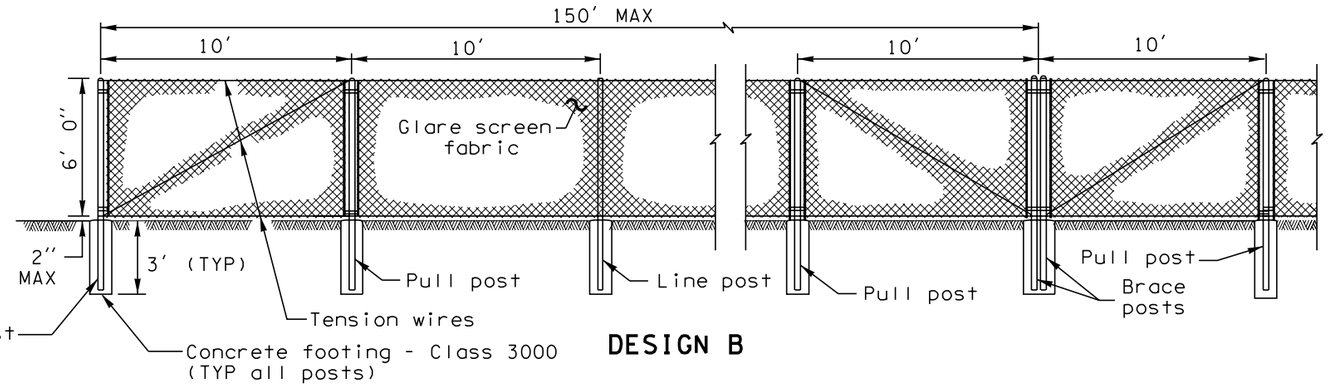

DESIGN B

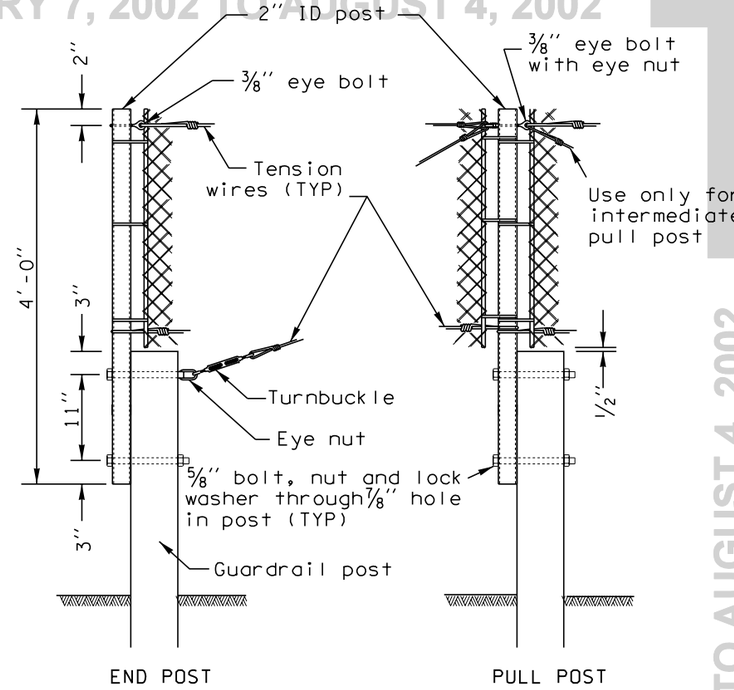

DESIGN A DETAILS

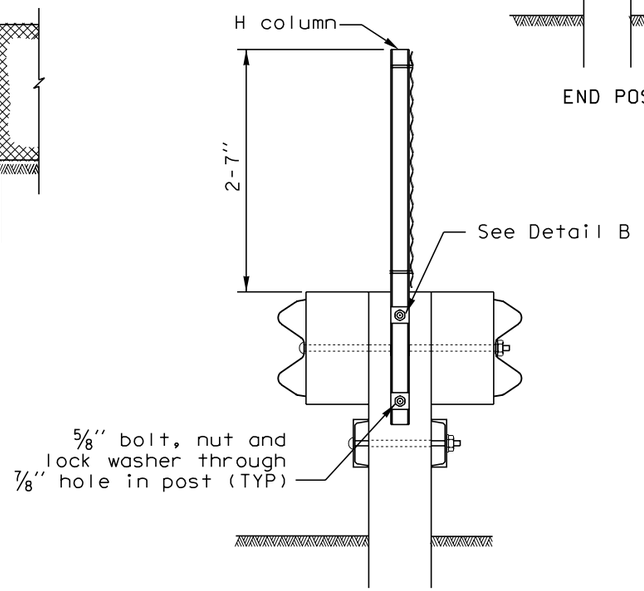

SECTION A

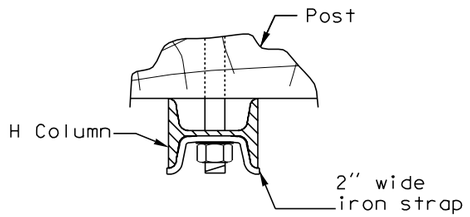

DETAIL B

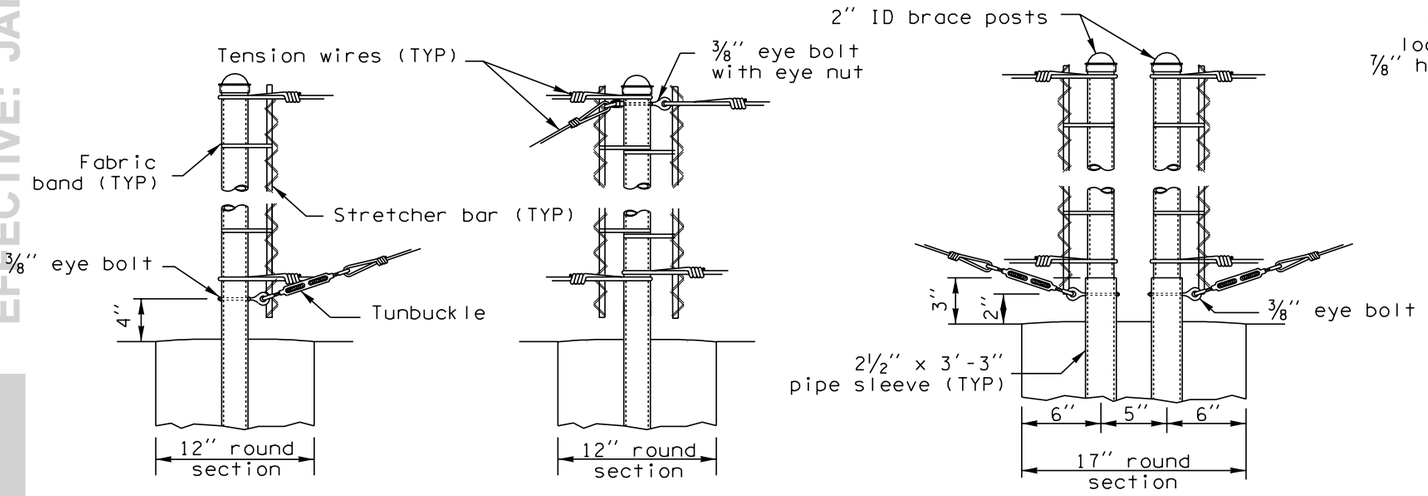

END POST PULL POST BRACE POST DETAILS

DESIGN B DETAILS

CLIFFORD E. MANSFIELD
STATE OF WASHINGTON
15224
REGISTERED
PROFESSIONAL ENGINEER

EXPIRES MAY 3, 2000

GLARE SCREEN TYPE 1

STANDARD PLAN L-5

NOTE: THIS PLAN IS NOT A LEGAL ENGINEERING DOCUMENT BUT AN ELECTRONIC DUPLICATE. THE ORIGINAL, SIGNED BY THE ENGINEER AND APPROVED FOR PUBLICATION, IS KEPT ON FILE AT THE WASHINGTON STATE DEPARTMENT OF TRANSPORTATION. A COPY MAY BE OBTAINED UPON REQUEST.

APPROVED FOR PUBLICATION

Clifford E. Mansfield — 7/31/98

DEPUTY STATE DESIGN ENGINEER — DATE

WASHINGTON STATE DEPARTMENT OF TRANSPORTATION
OLYMPIA, WASHINGTON

EFFECTIVE: JANUARY 7, 2002 TO AUGUST 4, 2002

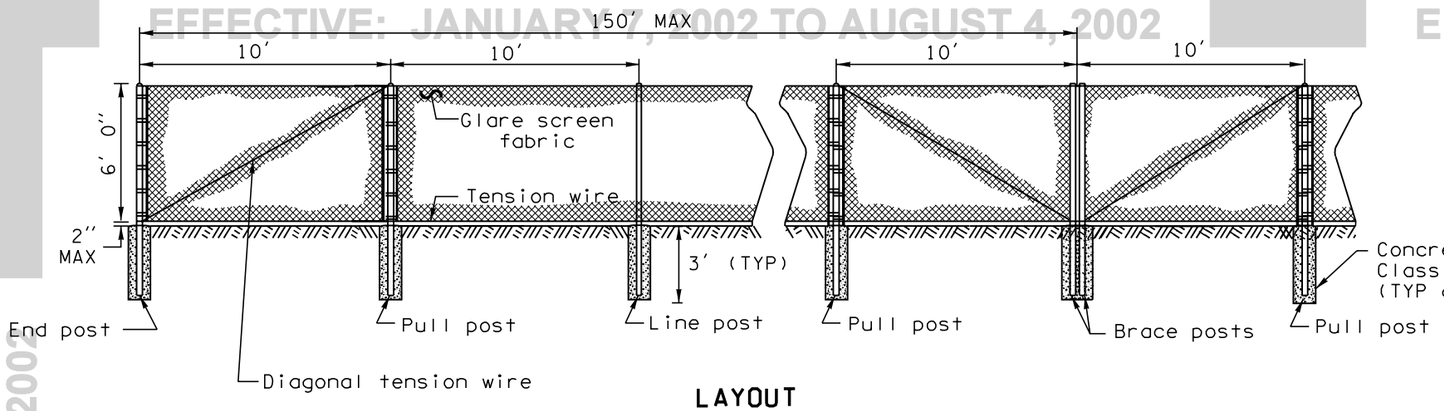

LAYOUT

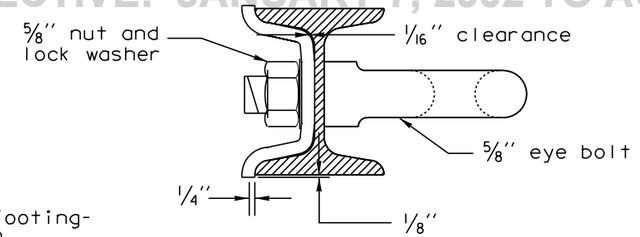

EYE BOLT ATTACHMENT TO H COLUMN POST

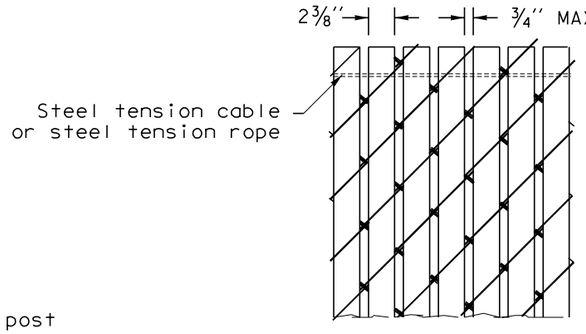

SLATS DETAIL

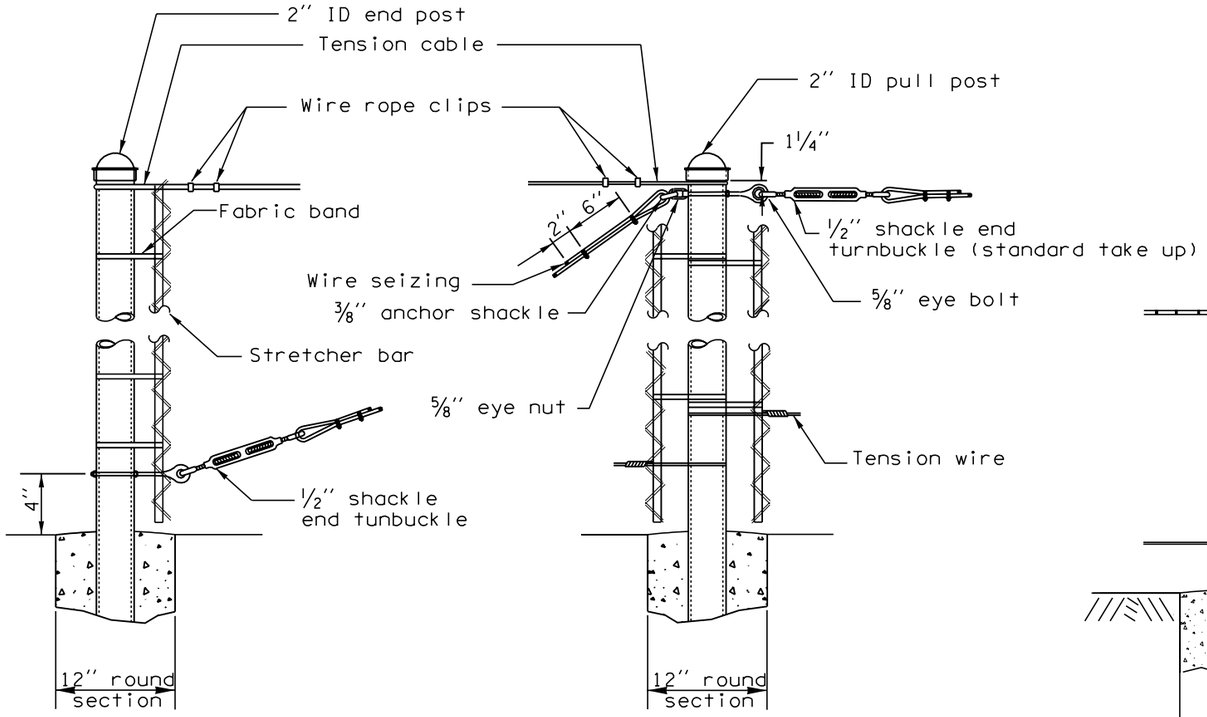

END POST

PULL POST

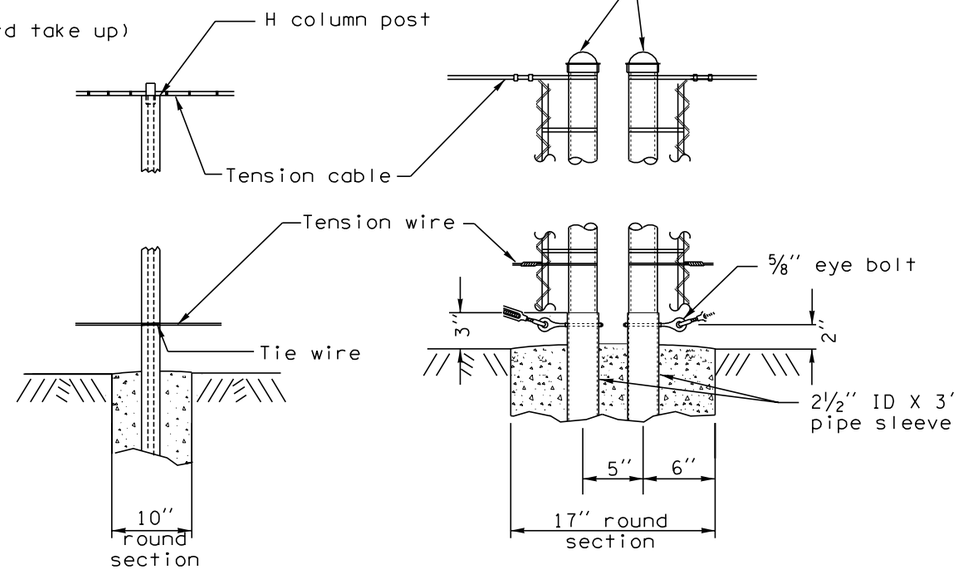

LINE POST

BRACE POST DETAILS

CLIFFORD E. MANSFIELD
STATE OF WASHINGTON
15224
REGISTERED
PROFESSIONAL ENGINEER

EXPIRES MAY 3, 2000

GLARE SCREEN TYPE 2

STANDARD PLAN L-5a

NOTE: THIS PLAN IS NOT A LEGAL ENGINEERING DOCUMENT BUT AN ELECTRONIC DUPLICATE. THE ORIGINAL, SIGNED BY THE ENGINEER AND APPROVED FOR PUBLICATION, IS KEPT ON FILE AT THE WASHINGTON STATE DEPARTMENT OF TRANSPORTATION. A COPY MAY BE OBTAINED UPON REQUEST.

APPROVED FOR PUBLICATION

Clifford E. Mansfield — 7/31/98

DEPUTY STATE DESIGN ENGINEER — DATE

WASHINGTON STATE DEPARTMENT OF TRANSPORTATION
OLYMPIA, WASHINGTON

EFFECTIVE: JANUARY 7, 2002 TO AUGUST 4, 2002

EFFECTIVE: JANUARY 7, 2002 TO AUGUST 4, 2002
EFFECTIVE: JANUARY 7, 2002 TO AUGUST 4, 2002

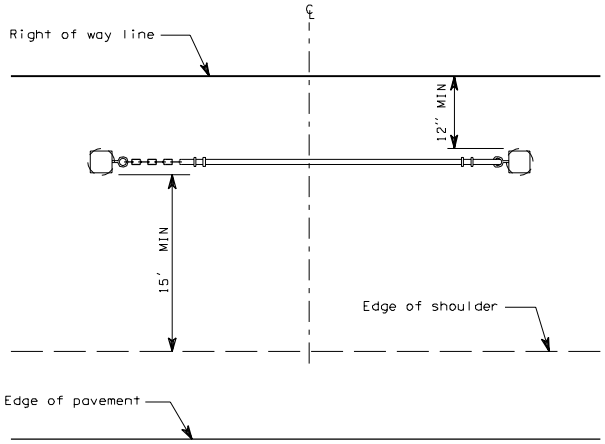

PLAN

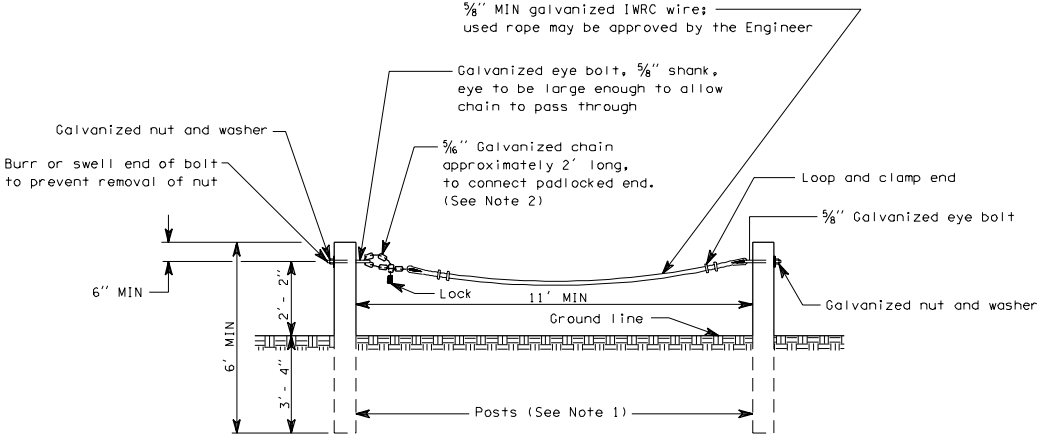

ELEVATION

NOTES

1. Posts shall be 6 x 8 wood or W6 x 9 steel. See Standard Plan "Beam Guardrail Posts and Blocks".

2. Padlocked end shall be determined by the Project Engineer. Lock shall not be provided.

ACCESS CONTROL GATE

EFFECTIVE: JANUARY 7, 2002 TO AUGUST 4, 2002
EFFECTIVE: JANUARY 7, 2002 TO AUGUST 4, 2002
EFFECTIVE: JANUARY 7, 2002 TO AUGUST 4, 2002
EFFECTIVE: JANUARY 7, 2002 TO AUGUST 4, 2002