DRAWN BY: LISA CYFORD

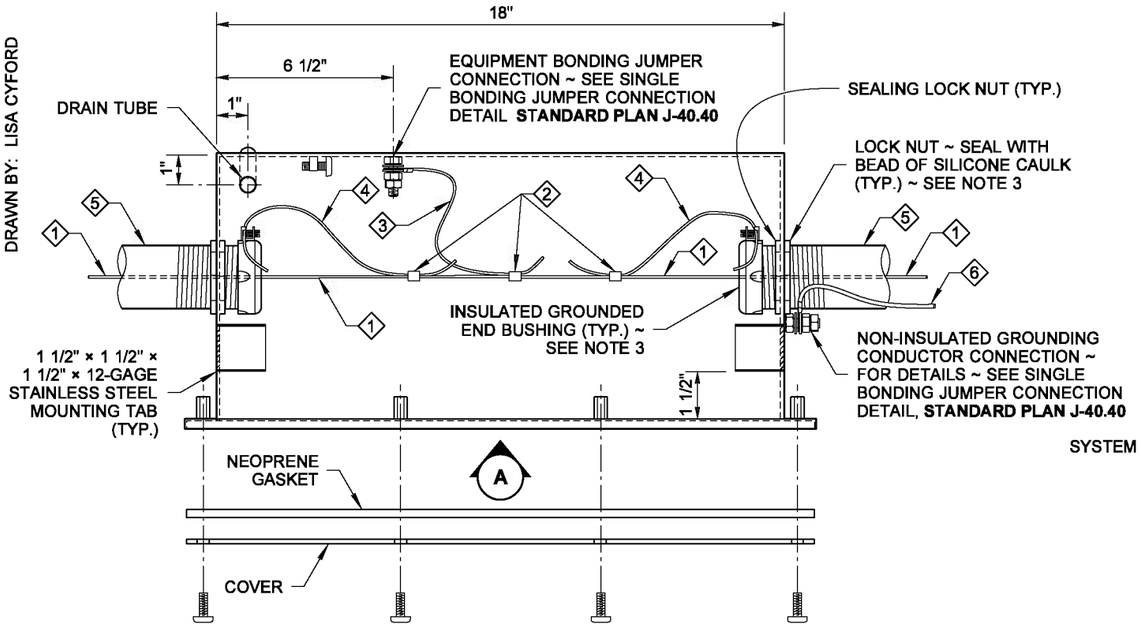

PLAN VIEW

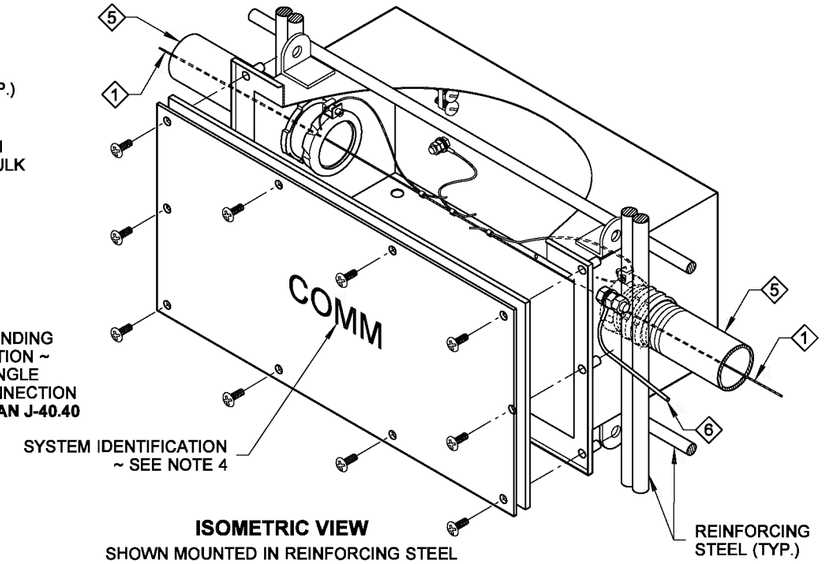

ISOMETRIC VIEW
SHOWN MOUNTED IN REINFORCING STEEL

1. Equipment Grounding Conductor
2. Copper Solderless Crimp Connector
3. Equipment Bonding Jumper
4. Equipment Bonding Jumper ~ Omit when PVC Conduit installed
5. See Contract for conduit size and number
6. # 8 AWG Stranded, Non-insulated Grounding Conductor ~ See Note 9

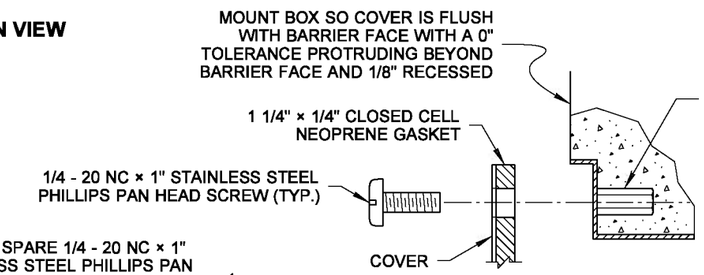

DETAIL C

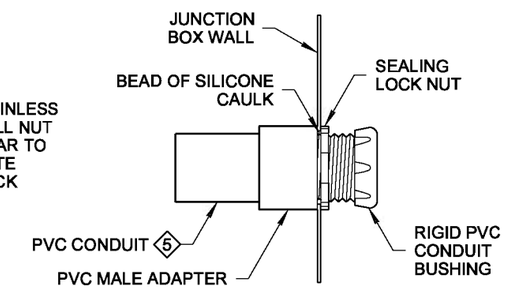

ALTERNATIVE PVC CONDUIT DETAIL

NOTES

1. Junction Box shall be constructed of 12-gage, Type 304 stainless with steel welded seam construction. Finish shall be # 2B for backbox and # 4 for the cover. Mounting Tabs shall be constructed of 12-gage, Type 304 stainless steel.
2. Holes for conduit(s) shall be field drilled or punched in the box ends. See **Section B**.
3. Fittings shall be UL listed and CSA-certified concrete tight on the outside of the Junction Box conduit connection. Use an insulated, grounded end bushing on the inside for GRS conduit. Use a sealing lock nut and a rigid PVC conduit bushing on the inside for PVC conduit.
4. The System Identification letters shall be 1/8" line thickness formed by engraving, stamping, or with a stainless steel weld bead. **See Standard Specification 9-29.2(4)** for details.
5. Liberally coat the threads of the cover fasteners with anti-seize compound during construction and before final closure.
6. Junction Box shall only be used in barriers with stationary-forms. If Slip-Form Traffic Barrier is required, use Conduit shown in the Alternative PVC Conduit detail.
7. Conduit Capacity = 8" (4" per end).
8. Conduits shall only enter Junction Box from ends as shown.
9. When converting RMC to PVC in Stationary-Form Barriers, route a # 8 Stranded, Non-Insulated Grounding Conductor along Conduit, secure Conductor to Conduit with clamp as shown on Conduit Deflection Fitting "B" detail, convert RMC to PVC in Stationary-Form Barrier (per **Standard Plan J-60.11**): omit Conductor when this detail is not used.

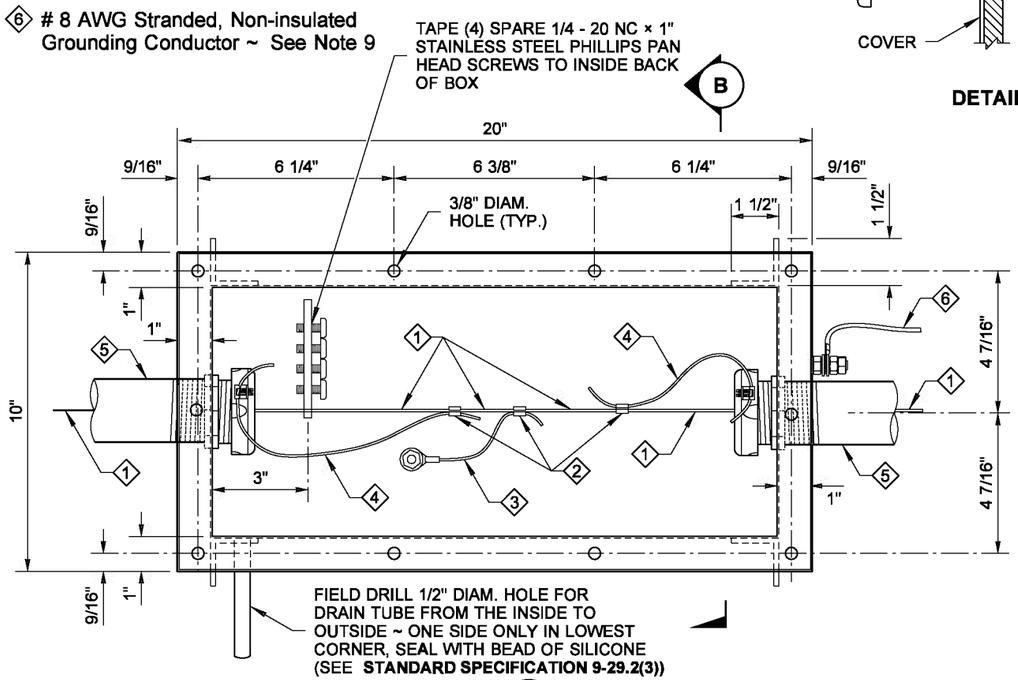

VIEW A

SYSTEM IDENTIFICATION DETAIL

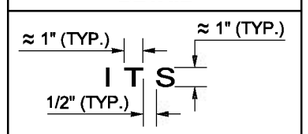

SEE NOTE 4

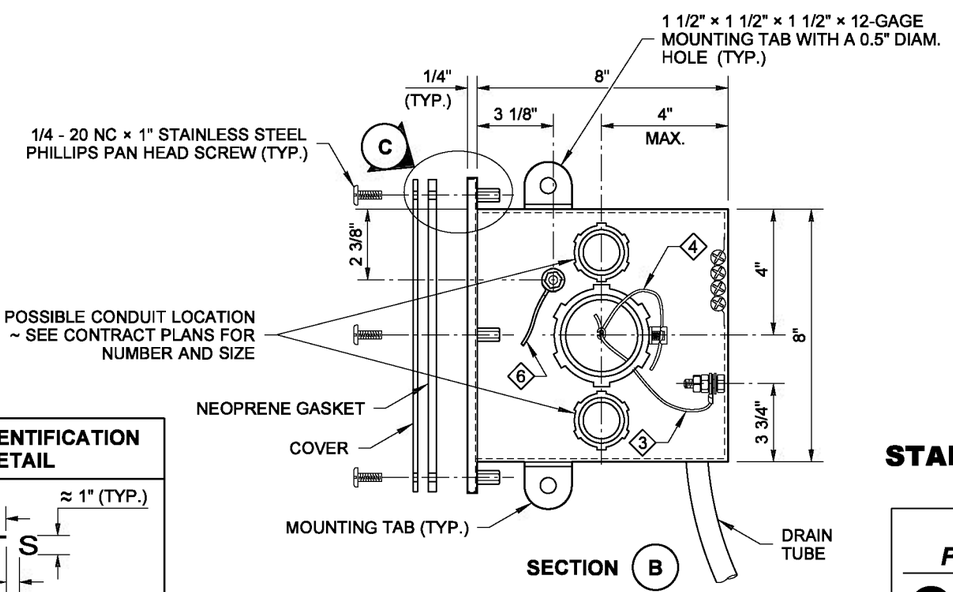

SECTION B

VERTICALLY CENTER AND MAINTAIN REQUIRED SPACING WHEN INSTALLING MULTIPLE CONDUITS

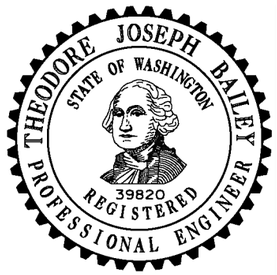

NOTE: THIS PLAN IS NOT A LEGAL ENGINEERING DOCUMENT BUT AN ELECTRONIC DUPLICATE. THE ORIGINAL, SIGNED BY THE ENGINEER AND APPROVED FOR PUBLICATION, IS KEPT ON FILE AT THE WASHINGTON STATE DEPARTMENT OF TRANSPORTATION. A COPY MAY BE OBTAINED UPON REQUEST.

NEMA 4X NON-ADJUSTABLE FLUSH-MOUNT JUNCTION BOX

STANDARD PLAN J-40.36-01

SHEET 1 OF 1 SHEET

APPROVED FOR PUBLICATION

Pasco Bakotich III — STATE DESIGN ENGINEER

5/20/13 — DATE

Washington State Department of Transportation