DRAWN BY: BILL BERENS

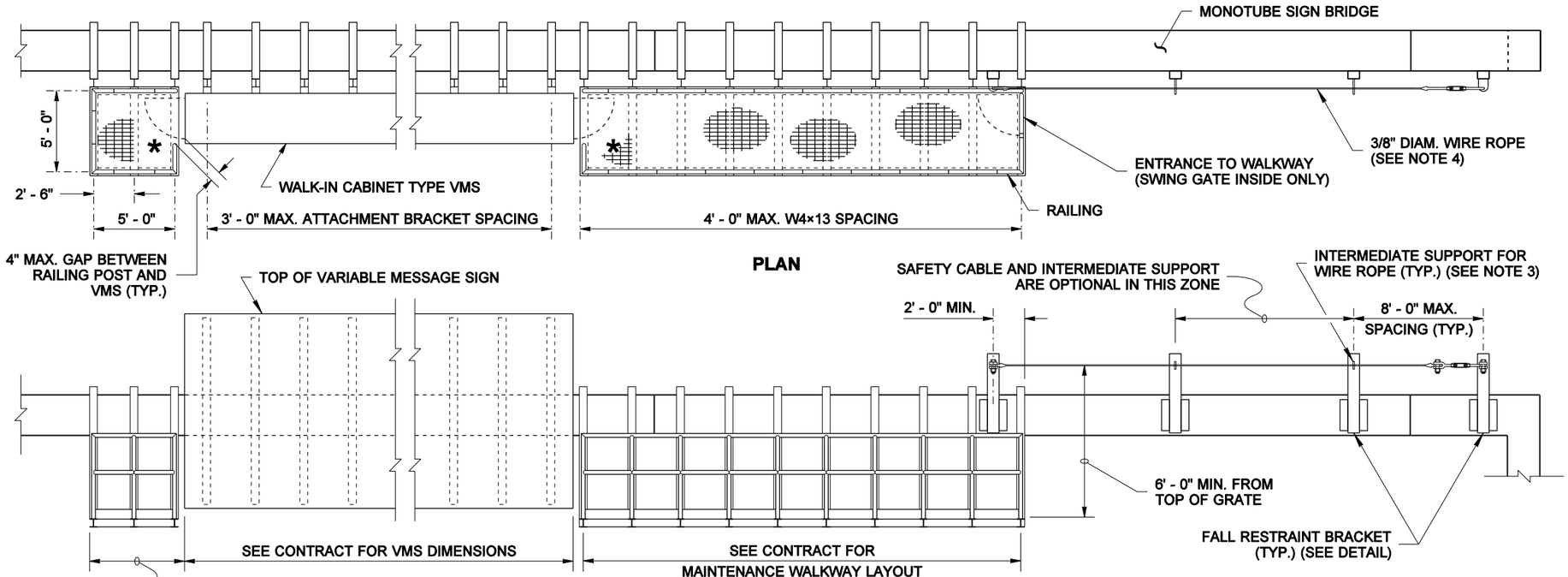

MAINTENANCE WALKWAY INSTALLED ON MONOTUBE SIGN BRIDGE

(WALKWAYS MAY BE USED WITH OTHER LAYOUTS THAN THAT SHOWN ABOVE)

MATERIAL SPECIFICATIONS	
PIPE	ASTM A 36 OR ASTM A 53 GRADE B, TYPE E OR S, OR ASTM A 500 GRADE B
PLATES AND SHAPES	ASTM A 36
STRUCTURAL TUBING	ASTM A 500 GRADE B
GALVANIZING FOR PIPE PLATES AND SHAPES	AASHTO M 111
HIGH STRENGTH BOLTS, NUTS, & WASHERS; INCL. MOUNTING BEAM BOLTS	STD SPEC. 9-06.5(3)
ALL OTHER BOLTS	STD SPEC. 9-06.5(1)
FASTENER GALVANIZING	AASHTO M 232
STEEL GRATING	ASTM A 36
WIRE ROPE	ASTM A 603 W/ CLASS A WEIGHT ZINC COATED WIRES THROUGHOUT (1)

(1) ALLOWABLE ALTERNATE MATERIAL: FEDERAL STANDARD RR-W-410F TYPE 6 CLASS 3 GALVANIZED.

NOTES

1. NOT INTENDED FOR USE IN FRONT OF STATIC SIGNS.
2. FOR MAINTENANCE WALKWAY, RAILING, GRATING, AND TOE PLATE DETAILS, **SEE STANDARD PLAN G-95.10.**
3. USE TWO LANYARDS THROUGH INTERMEDIATE WIRE ROPE SUPPORT.
4. 3/8" DIAM. WIRE ROPE WITH 14 KIPS MIN. BREAKING STRENGTH. THE WIRE ROPE SHALL BE INSTALLED WITH 450 LBS. OF TENSION, AND WITH 6" OF TAKE UP ADJUSTMENT AVAILABLE IN THE TURNBUCKLE.
5. HANDRAIL FIT-UP WITH VMS DOOR OPENING IS THE RESPONSIBILITY OF THE CONTRACTOR.

* = SEE NOTE 5

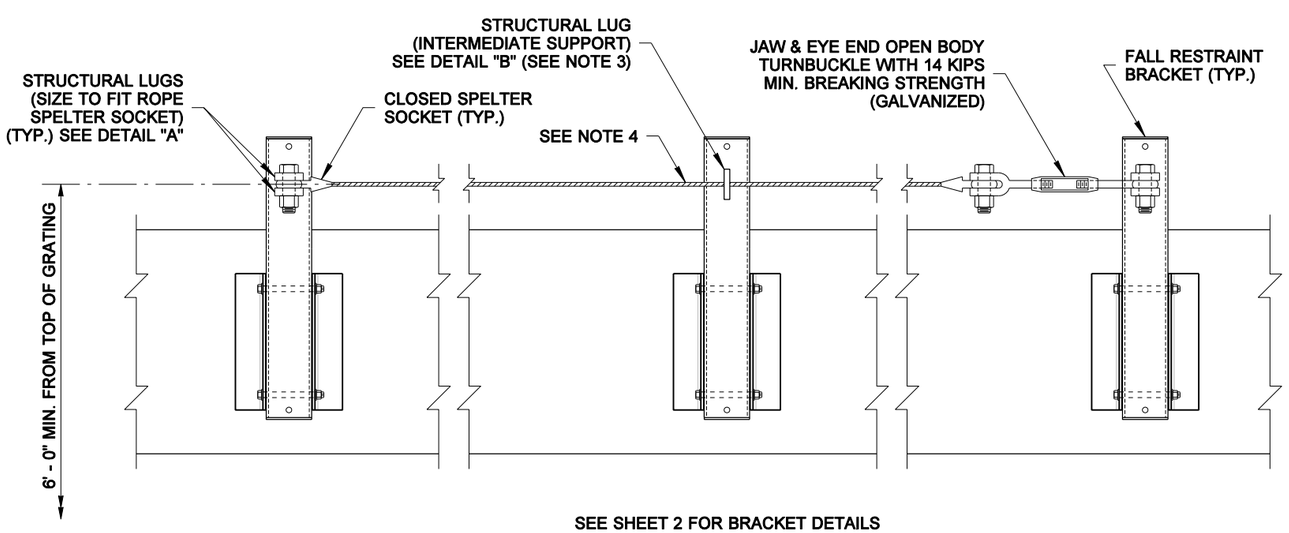

SEE SHEET 2 FOR BRACKET DETAILS

FALL RESTRAINT

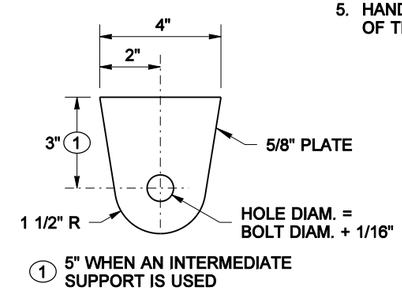

DETAIL "A"

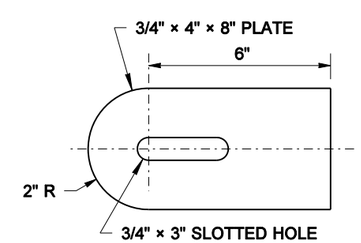

DETAIL "B"

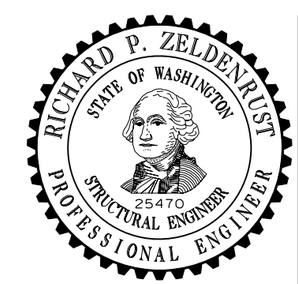

NOTE: THIS PLAN IS NOT A LEGAL ENGINEERING DOCUMENT BUT AN ELECTRONIC DUPLICATE. THE ORIGINAL, SIGNED BY THE ENGINEER AND APPROVED FOR PUBLICATION, IS KEPT ON FILE AT THE WASHINGTON STATE DEPARTMENT OF TRANSPORTATION. A COPY MAY BE OBTAINED UPON REQUEST.

MAINTENANCE WALKWAY MOUNTING FOR MONOTUBE SIGN BRIDGE

STANDARD PLAN G-95.20-02

SHEET 1 OF 3 SHEETS

APPROVED FOR PUBLICATION

Pasco Bakotich III — STATE DESIGN ENGINEER

06-02-11 — DATE

Washington State Department of Transportation

DRAWN BY: BILL BERENS

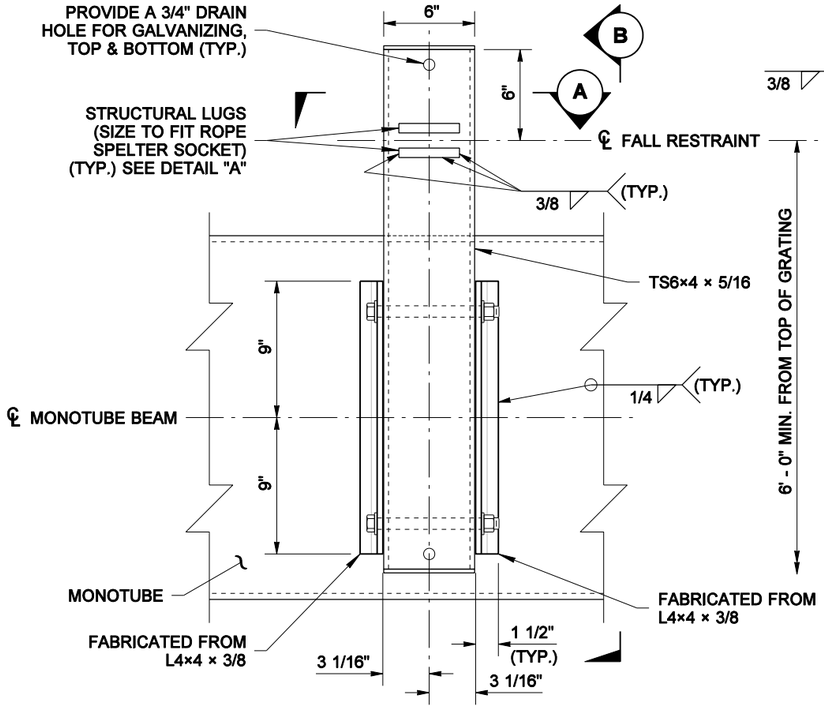

ELEVATION VIEW

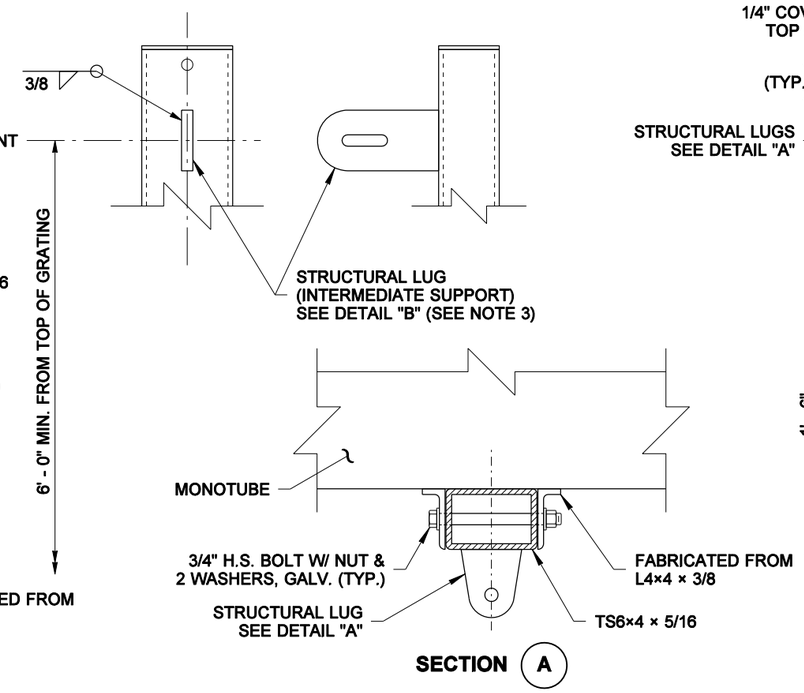

SECTION A

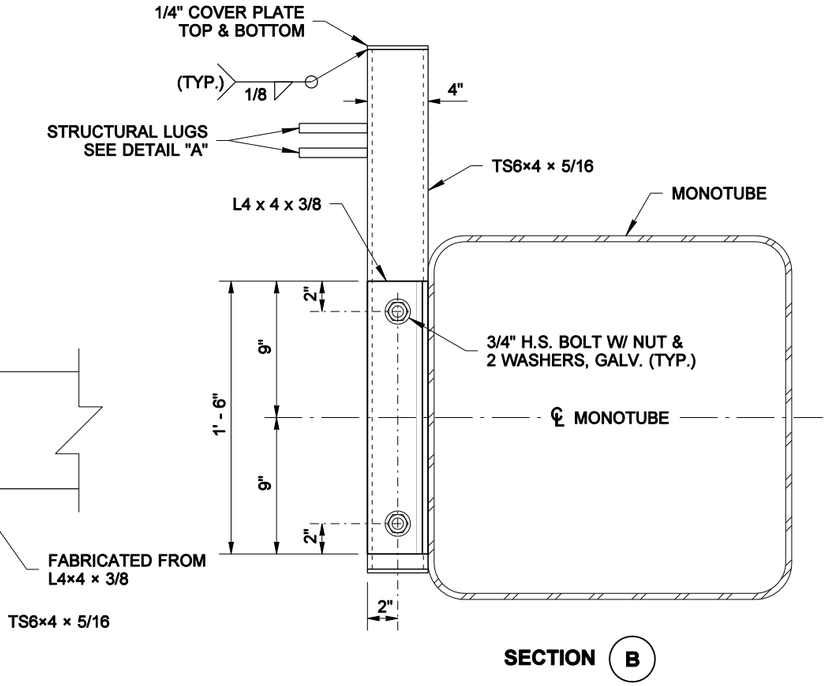

SECTION B

FALL RESTRAINT BRACKET INSTALLATION ON NEW MONOTUBE SIGN BRIDGE

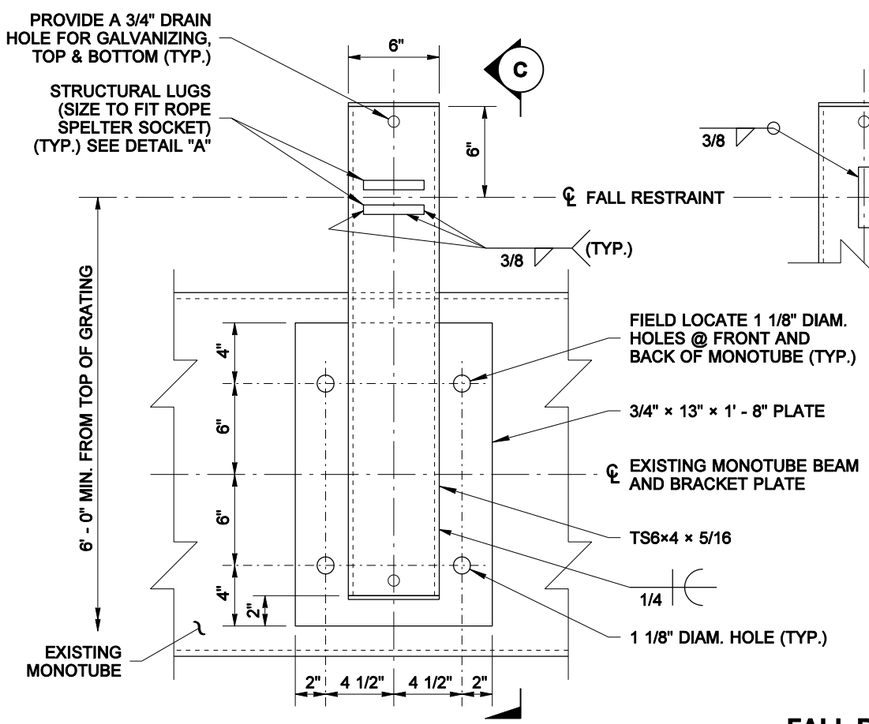

ELEVATION VIEW

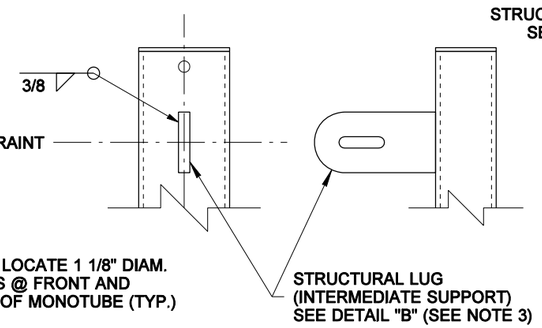

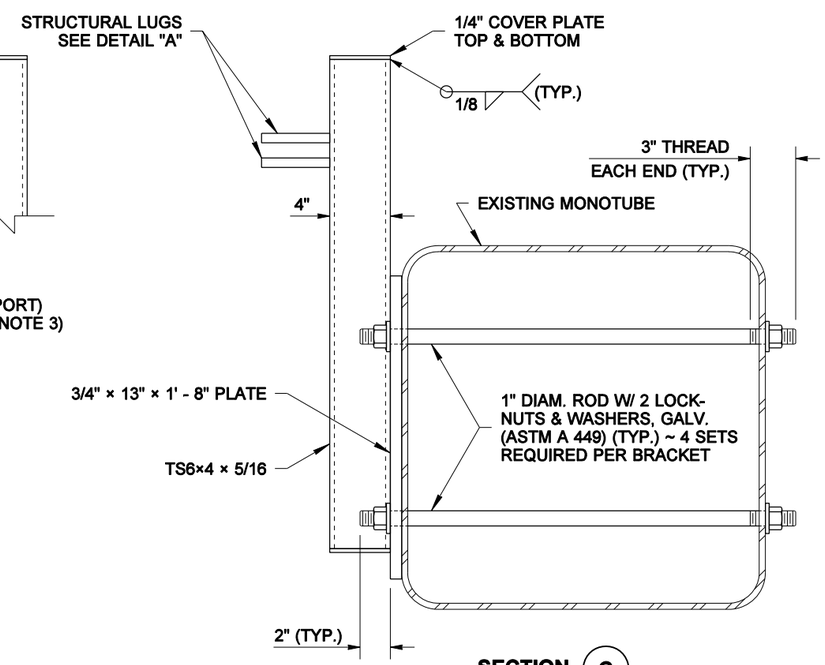

SECTION C

FALL RESTRAINT BRACKET INSTALLATION ON EXISTING MONOTUBE SIGN BRIDGE

NOTE: THIS PLAN IS NOT A LEGAL ENGINEERING DOCUMENT BUT AN ELECTRONIC DUPLICATE. THE ORIGINAL, SIGNED BY THE ENGINEER AND APPROVED FOR PUBLICATION, IS KEPT ON FILE AT THE WASHINGTON STATE DEPARTMENT OF TRANSPORTATION. A COPY MAY BE OBTAINED UPON REQUEST.

MAINTENANCE WALKWAY MOUNTING FOR MONOTUBE SIGN BRIDGE STANDARD PLAN G-95.20-02

SHEET 2 OF 3 SHEETS

APPROVED FOR PUBLICATION

Pasco Bakotich III — STATE DESIGN ENGINEER

06-02-11 — DATE

Washington State Department of Transportation

DRAWN BY: BILL BERENS

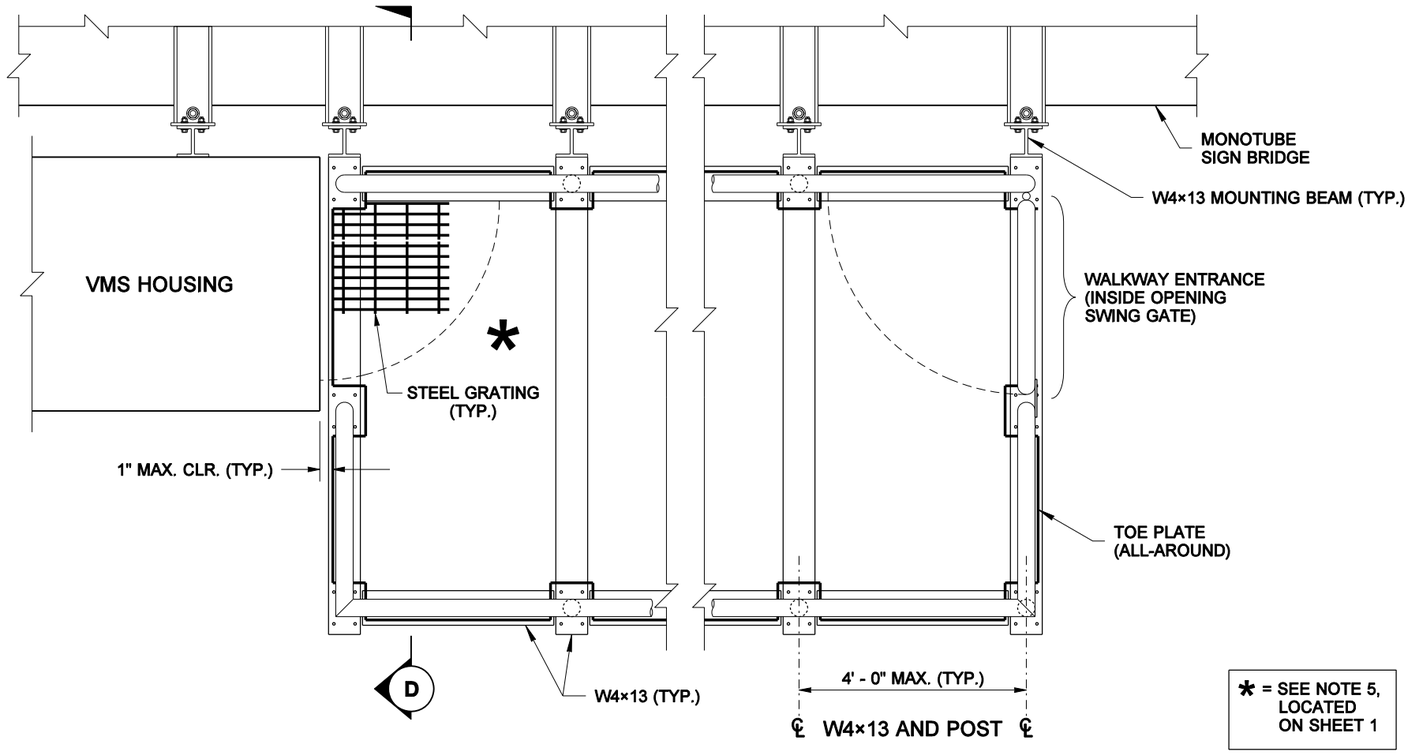

* = SEE NOTE 5, LOCATED ON SHEET 1

MAINTENANCE WALKWAY

PARTIAL PLAN

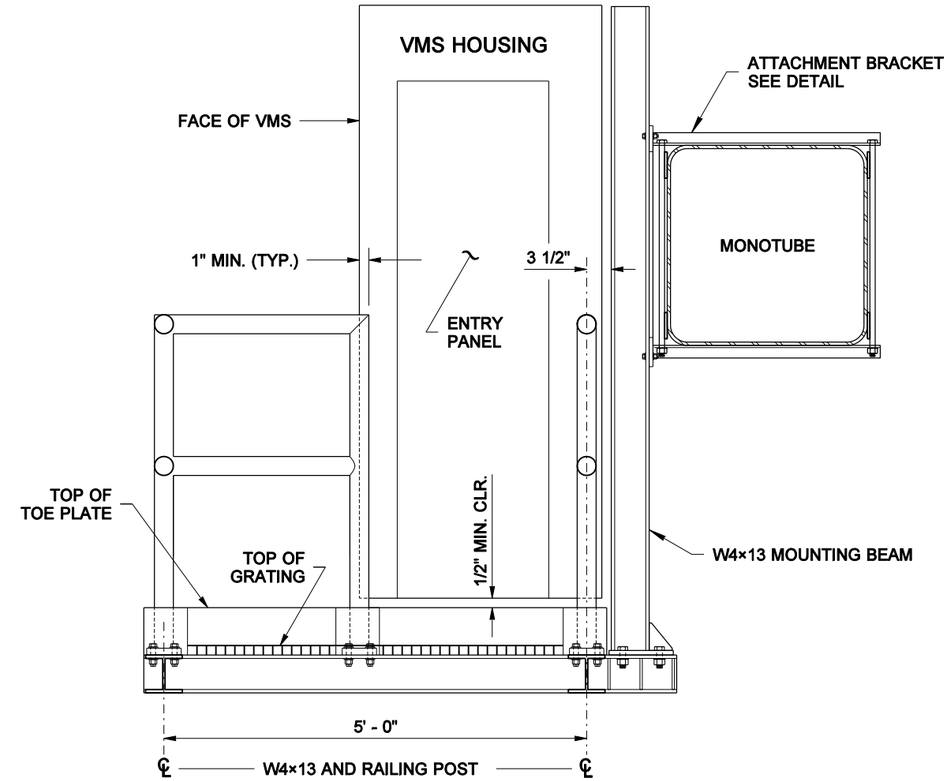

SECTION D

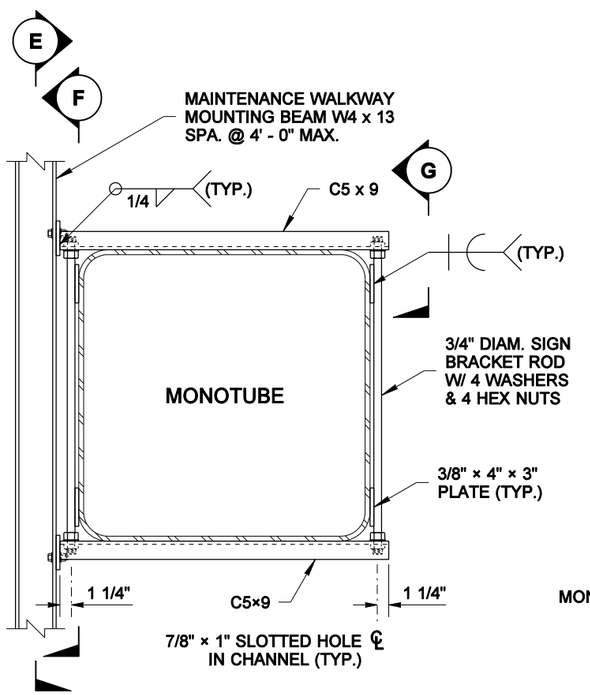

ATTACHMENT BRACKET DETAIL

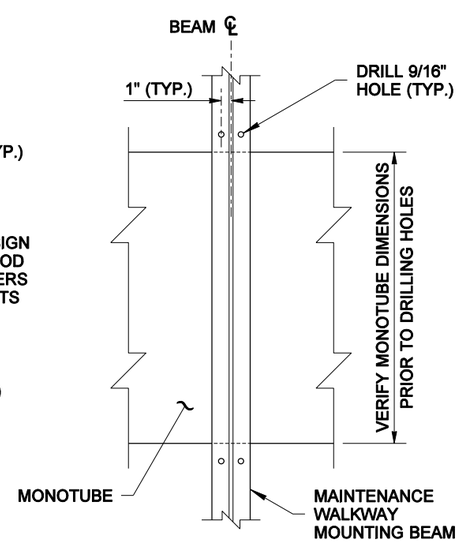

SECTION E

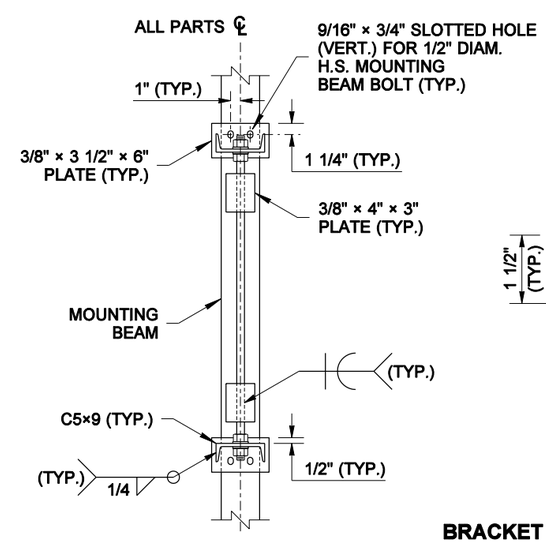

SECTION F

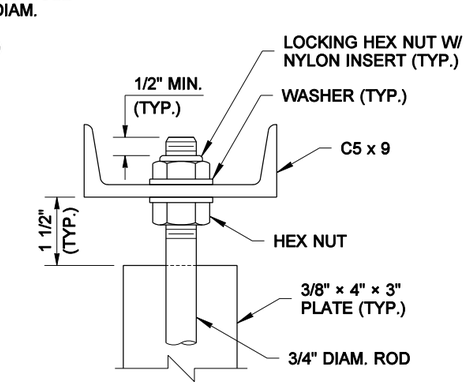

VIEW G

BRACKET NOTES

PAINT ENTIRE ATTACHMENT BRACKET TO MATCH EXISTING STRUCTURE EXCEPT FOR MOUNTING BEAM.

SIGN, LIGHT, BEAM LENGTHS, SIZE AND SPACING SHALL BE DETERMINED FROM THE CONTRACT PLANS OR WSDOT STANDARD PLANS.

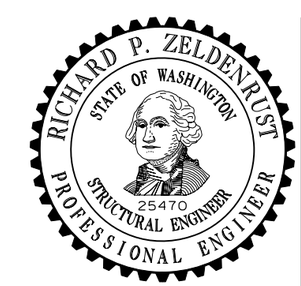

NOTE: THIS PLAN IS NOT A LEGAL ENGINEERING DOCUMENT BUT AN ELECTRONIC DUPLICATE. THE ORIGINAL, SIGNED BY THE ENGINEER AND APPROVED FOR PUBLICATION, IS KEPT ON FILE AT THE WASHINGTON STATE DEPARTMENT OF TRANSPORTATION. A COPY MAY BE OBTAINED UPON REQUEST.

MAINTENANCE WALKWAY MOUNTING FOR MONOTUBE SIGN BRIDGE STANDARD PLAN G-95.20-02

SHEET 3 OF 3 SHEETS

APPROVED FOR PUBLICATION

Pasco Bakotich III — STATE DESIGN ENGINEER

06-02-11 — DATE

Washington State Department of Transportation