DRAWN BY: FERN LIDDELL

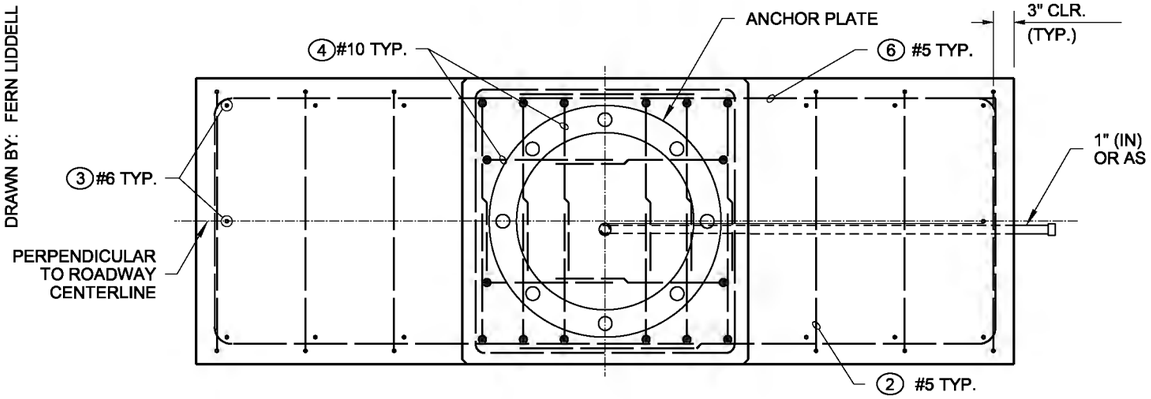

PLAN

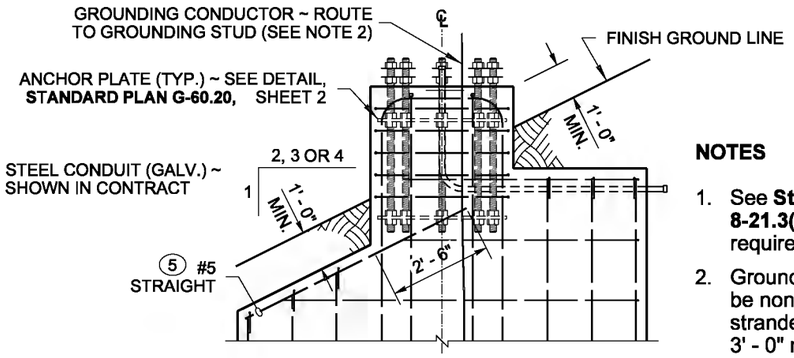

SIDE
ON SLOPED GRADE
(SHOWN AT REDUCED SCALE)

NOTES

1. See **Standard Specification 8-21.3(9)** for construction requirements.
2. Grounding Conductor shall be non-insulated #4 AWG stranded copper. Provide 3' - 0" min. slack.

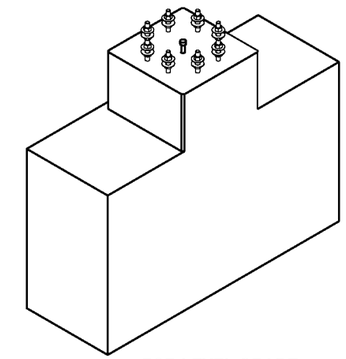

FOR LEVEL GRADE

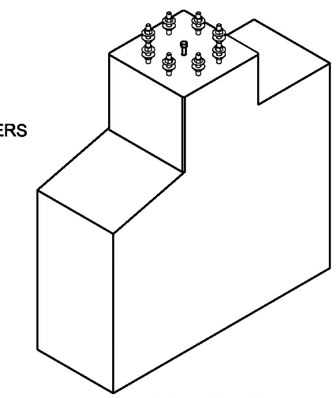

FOR SLOPED GRADE

ISOMETRIC

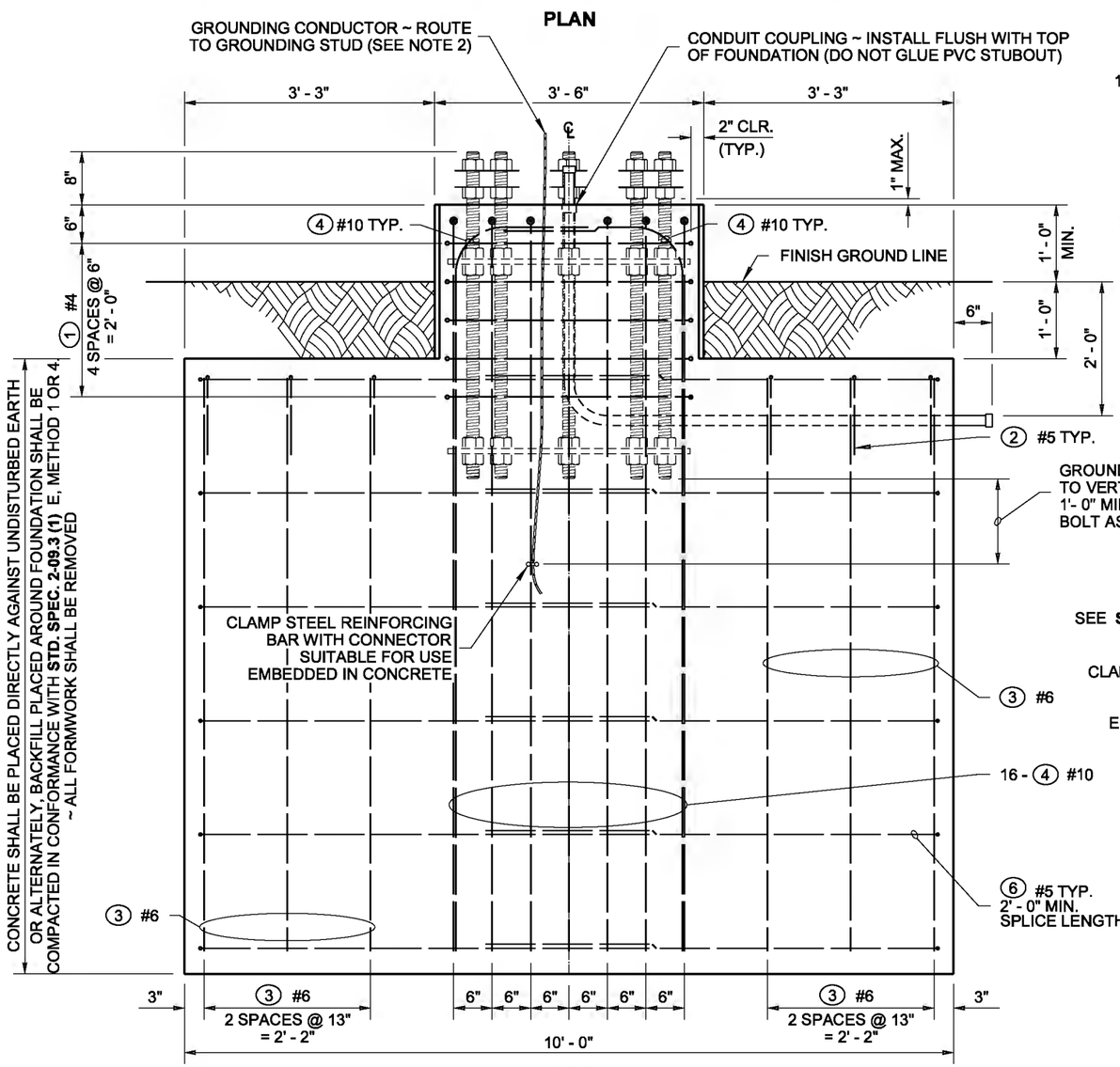

SIDE

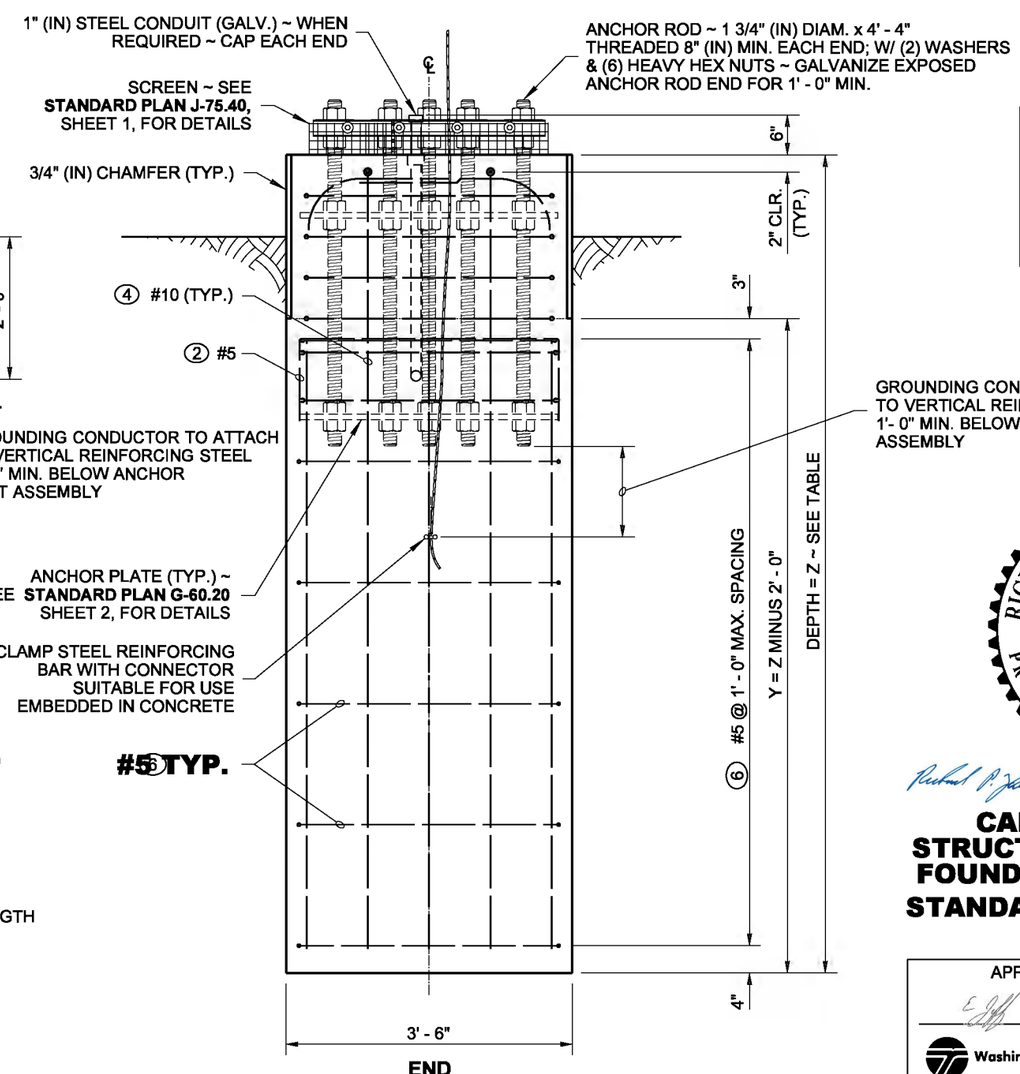

END

Zeldenrust, Richard
2015.06.11 14:09:53 -07'00'

CANTILEVER SIGN STRUCTURE (TRUSS-TYPE) FOUNDATION TYPES 2 & 3

STANDARD PLAN G-60.30-02

SHEET 1 OF 2 SHEETS

APPROVED FOR PUBLICATION
Carpenter, Jeff
Jun 18 2015 7:52 AM
STATE DESIGN ENGINEER

Washington State Department of Transportation

DRAWN BY: FERN LIDDELL

BAR LIST ~ TYPES 2 AND 3

MARK	LOCATION	TOTAL SIGN AREA			
		200 SF OR LESS		+200 SF -400 SF	
		QTY.	SIZE	QTY.	SIZE
1	PEDESTAL HOOP	5	#4	5	#4
2	FOUNDATION WALL TIES	6	#5	6	#5
3	FOUNDATION VERTICALS	14	#6	14	#6
4	PEDESTAL VERTICALS	16	#10	16	#10
5	FOUNDATION WALL HORIZONTALS AT SLOPE	2	#5	2	#5
6	FOUNDATION WALL HORIZONTALS	VARIES SEE PLANS	#5	VARIES SEE PLANS	#5

BENDING DIAGRAM

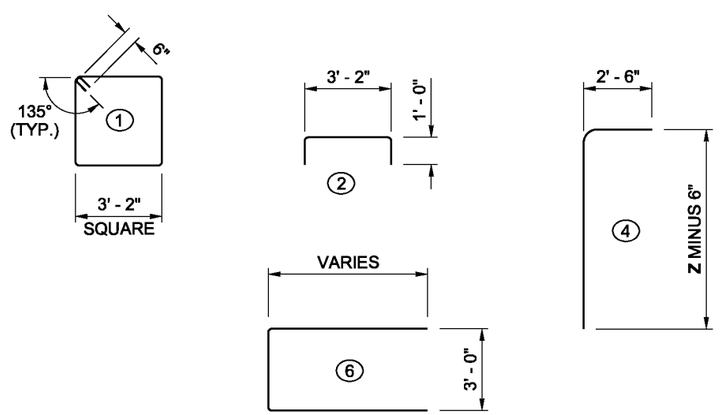

VALUES OF Z

FOUNDATION TYPE	TOTAL SIGN AREA		ALLOWABLE LATERAL BEARING PRESSURE (PSF)
	200 SF OR LESS	200 SF ~ 400 SF	
	Z	Z	
TYPE 2	9' - 0"	11' - 0"	2500 OR GREATER
TYPE 3	11' - 0"	13' - 6"	NOT LESS THAN 1500

MATERIAL SPECIFICATIONS

CONCRETE	CLASS 4000P
STEEL REINF. BAR	AASHTO M 31 GRADE 60
ANCHOR RODS	ASTM F 1554 GRADE 105
ANCHOR NUTS	ASTM A 563 GRADE DH
ANCHOR WASHERS	ASTM F436
ANCHORAGE GALVANIZING	AASHTO M 232
ANCHOR PLATE	ASTM A 36

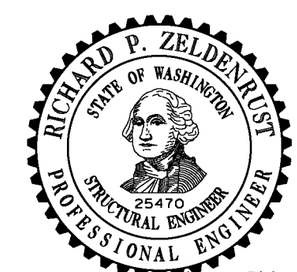

Zeldenrust, Richard
2015.06.11 14:10:17
-07'00'

CANTILEVER SIGN STRUCTURE (TRUSS-TYPE) FOUNDATION TYPES 2 & 3

STANDARD PLAN G-60.30-02

SHEET 2 OF 2 SHEETS

APPROVED FOR PUBLICATION
Carpenter, Jeff
Jun 18 2015 7:52 AM
STATE DESIGN ENGINEER
Washington State Department of Transportation