DRAWN BY: MARK SUJKA

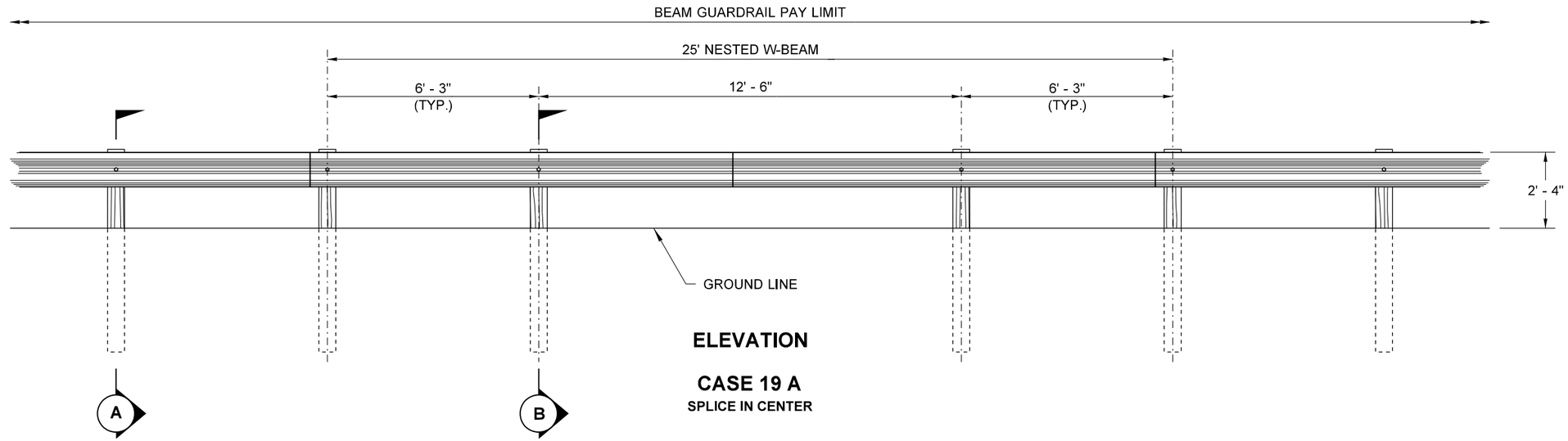

ELEVATION

CASE 19 A

SPLICE IN CENTER

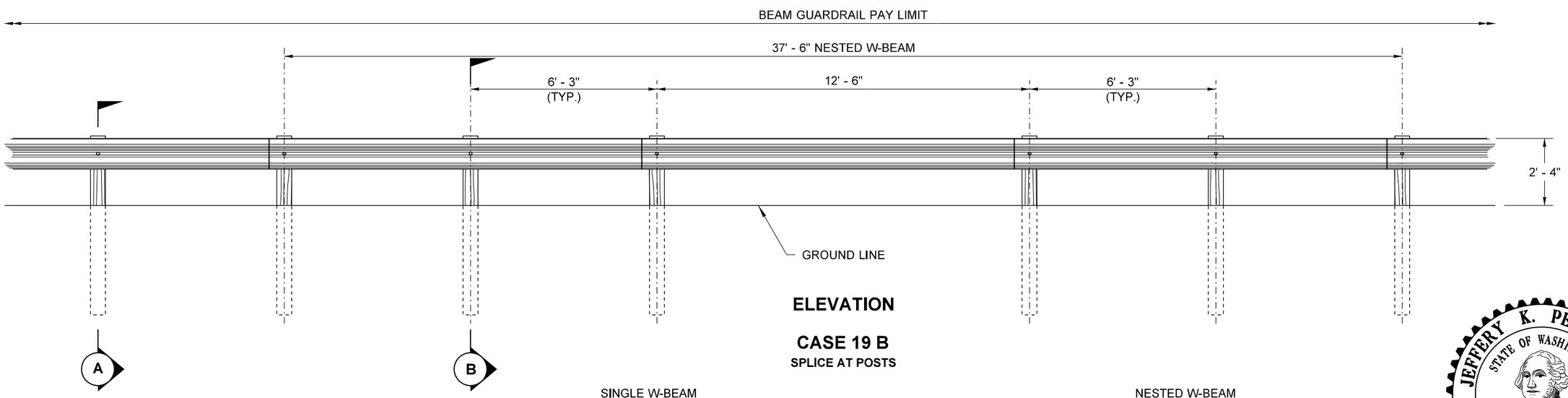

ELEVATION

CASE 19 B

SPLICE AT POSTS

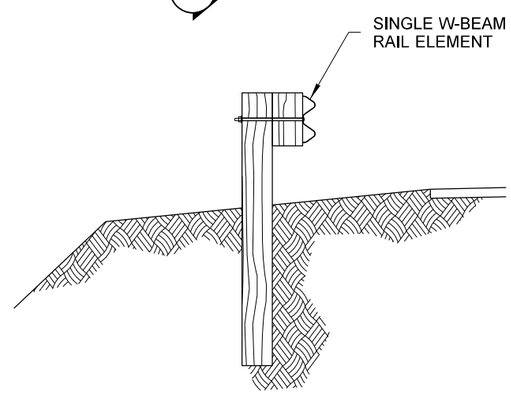

SECTION A

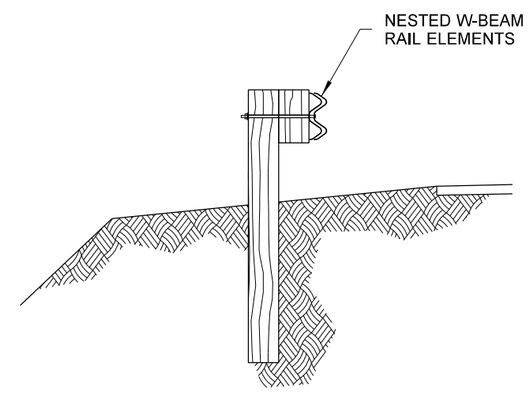

SECTION B

Petterson, Jeff (HQ Design)
Jun 24 2016 1:51 PM

GUARDRAIL PLACEMENT 12'-6" SPAN

STANDARD PLAN C-2k

SHEET 1 OF 1 SHEET

APPROVED FOR PUBLICATION

Carpenter, Jeff
Jul 12 2016 11:55 AM

STATE DESIGN ENGINEER

Washington State Department of Transportation