DRAWN BY: ADAM COCHRAN

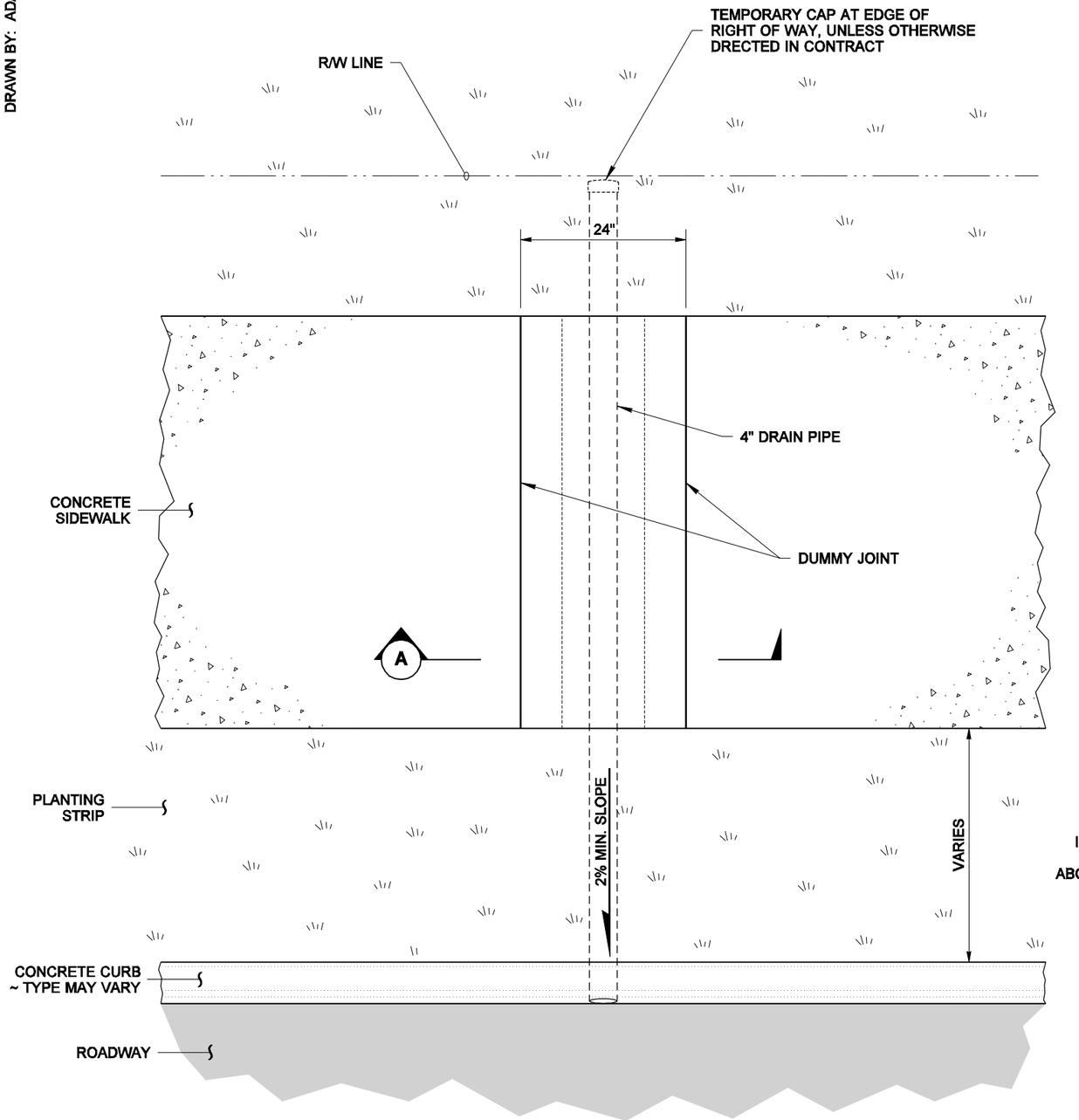

(REINFORCEMENT NOT SHOWN)

PLAN

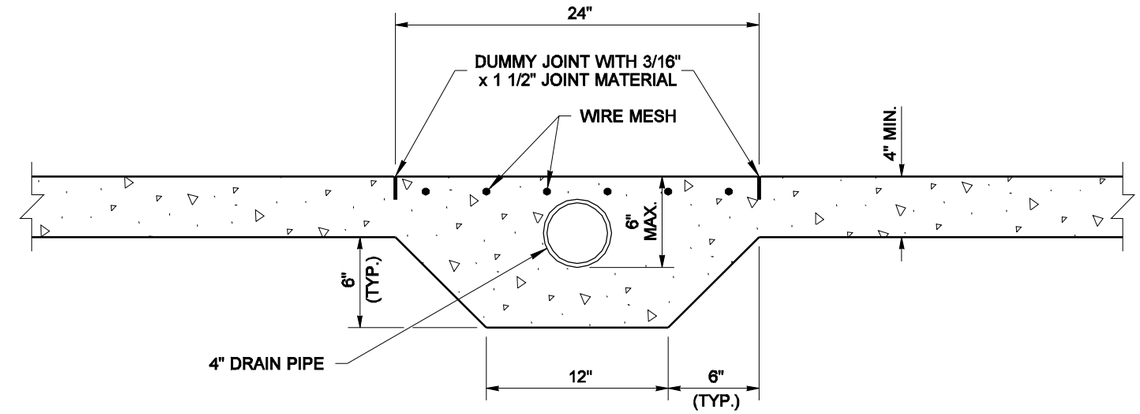

SECTION A

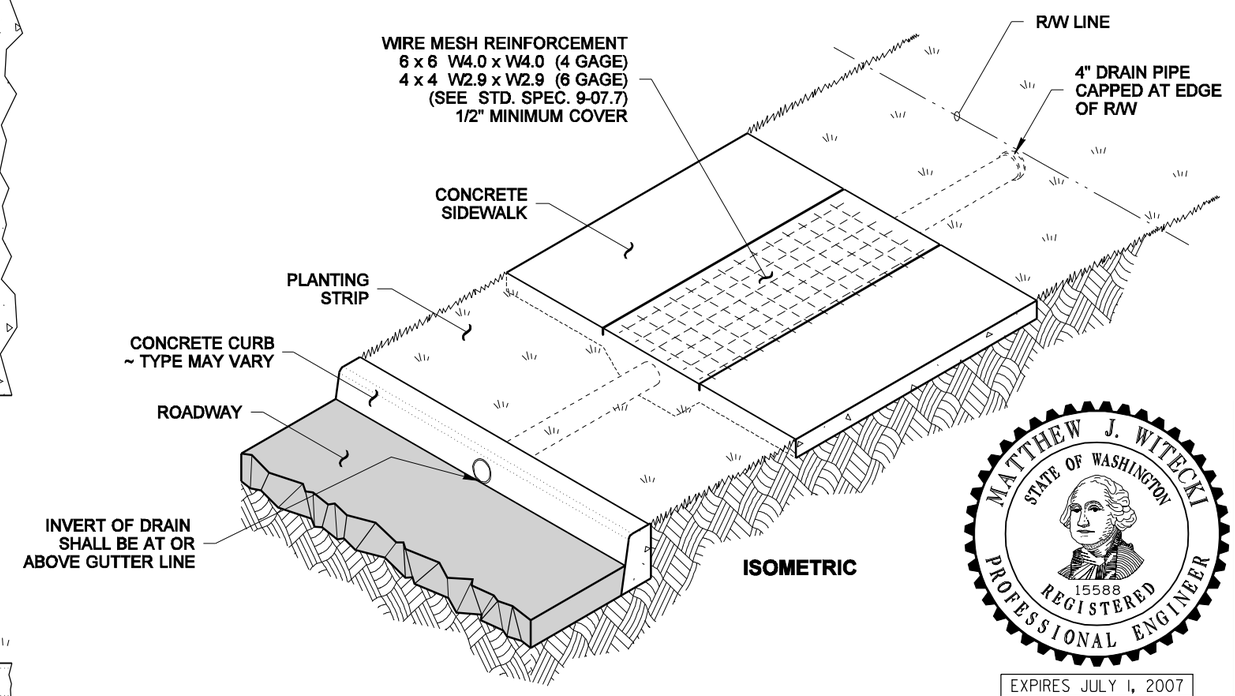

ISOMETRIC

EXPIRES JULY 1, 2007

NOTE: THIS PLAN IS NOT A LEGAL ENGINEERING DOCUMENT BUT AN ELECTRONIC DUPLICATE. THE ORIGINAL, SIGNED BY THE ENGINEER AND APPROVED FOR PUBLICATION, IS KEPT ON FILE AT THE WASHINGTON STATE DEPARTMENT OF TRANSPORTATION. A COPY MAY BE OBTAINED UPON REQUEST.

RESIDENTIAL STORM DRAIN, UNDER SIDEWALK

STANDARD PLAN B-82.20-00

SHEET 1 OF 1 SHEET

APPROVED FOR PUBLICATION

Harold J. Peterfeso — STATE DESIGN ENGINEER

06-01-06 — DATE

Washington State Department of Transportation