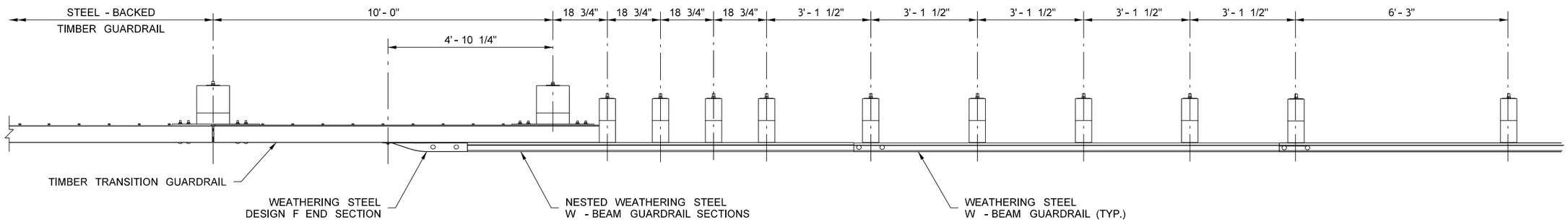

PLAN

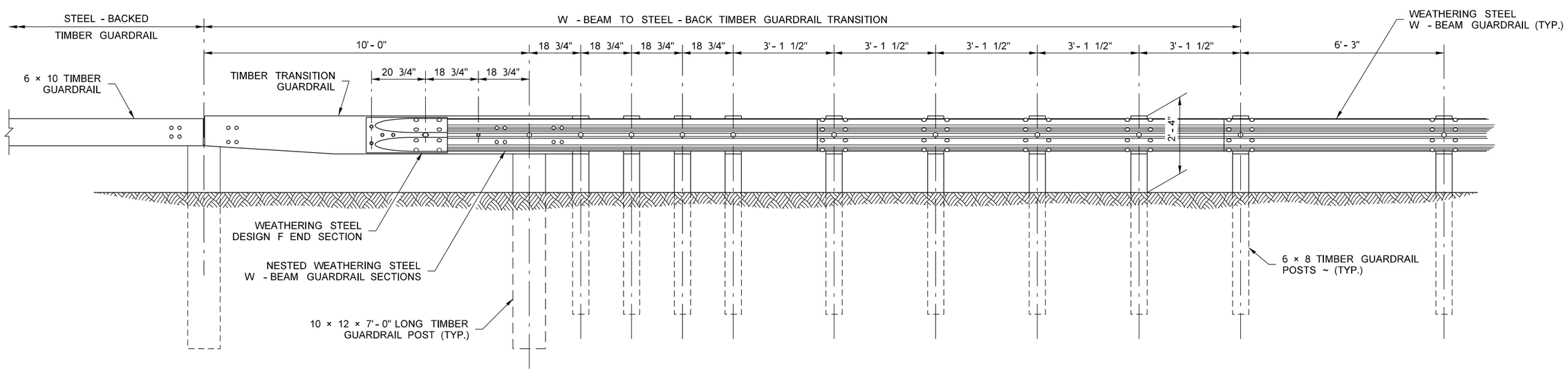

ELEVATION

FILE NAME	S:\Design R P& S\4-Standards\2-Plan Sheet Library\01-Published PSL\(TB) Traffic Barrier\(TB-28)\PS_TB-28_e.dgn								Plot 1
TIME	3:00:23 PM				REGION NO. / STATE	FED.AID PROJ.NO.		Washington State Department of Transportation	PLAN REF NO TB–28
DATE	7/5/2016				WASH				
PLOTTED BY	liddelf				JOB NUMBER				SHEET 1 OF 2 SHEETS
DESIGNED BY									
ENTERED BY									
CHECKED BY					CONTRACT NO.	LOCATION NO.			W–BEAM TO TIMBER GUARDRAIL TRANSITION
PROJ. ENGR.									
REGIONAL ADM.		REVISION	DATE	BY			P.E. STAMP BOX DATE	P.E. STAMP BOX DATE	

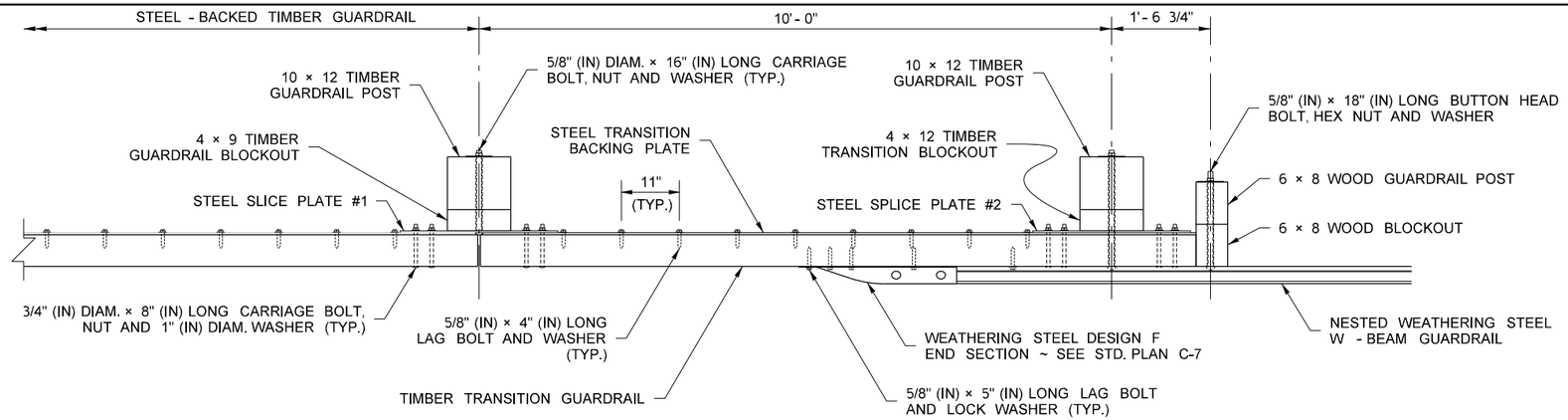

PLAN VIEW

(TIMBER AND W - BEAM GUARDRAIL CONNECTION DETAIL)

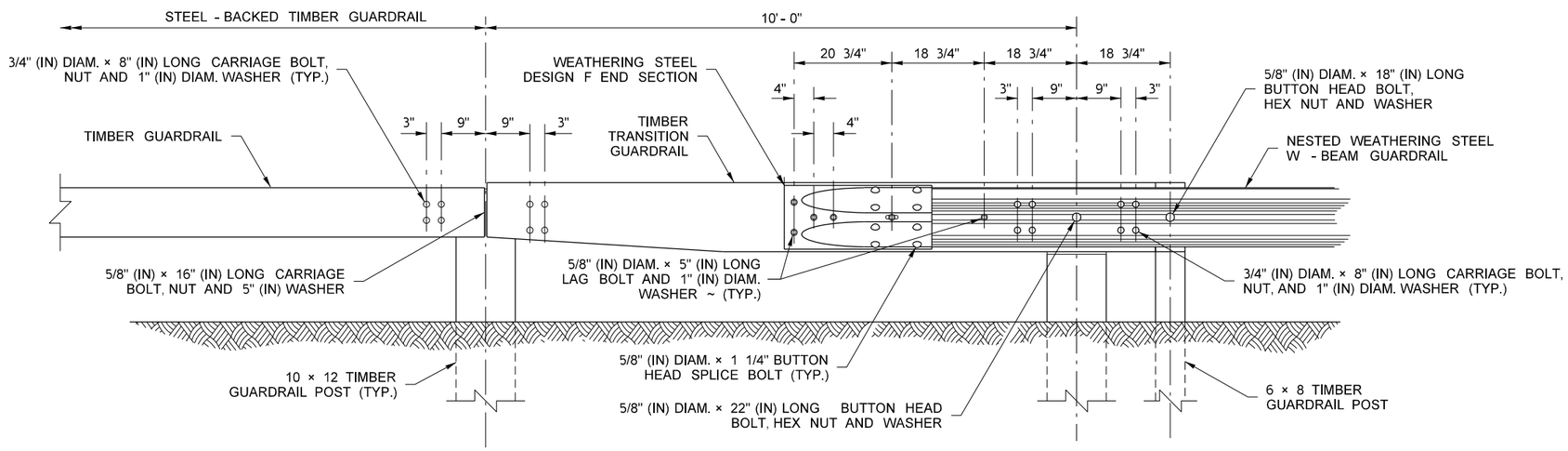

ELEVATION VIEW

(TIMBER AND W - BEAM GUARDRAIL CONNECTION DETAIL)

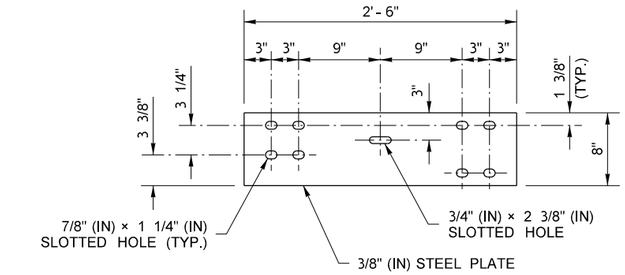

STEEL SPLICE PLATE #1

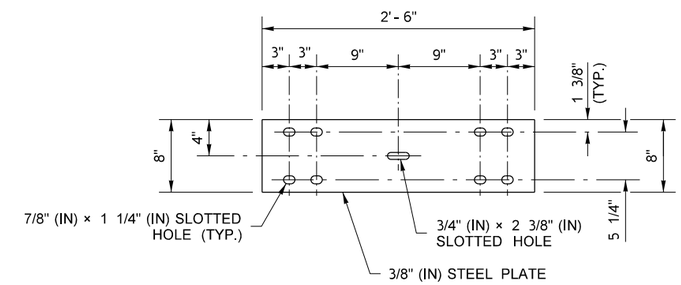

STEEL SPLICE PLATE #2

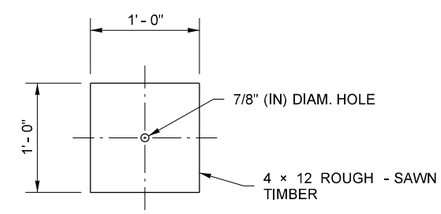

TIMBER TRANSITION BLOCKOUT

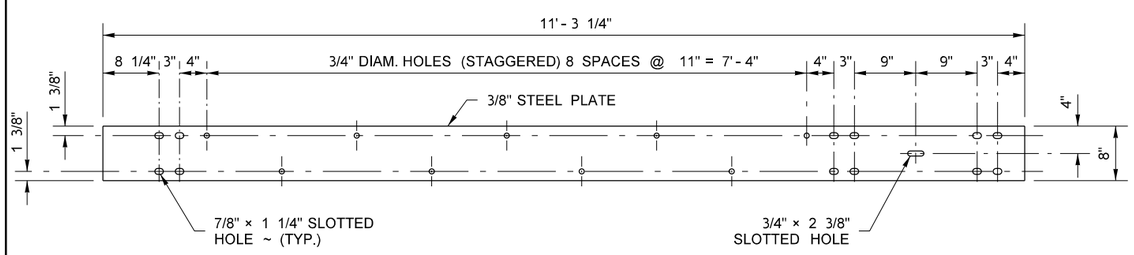

STEEL TRANSITION BACKING PLATE

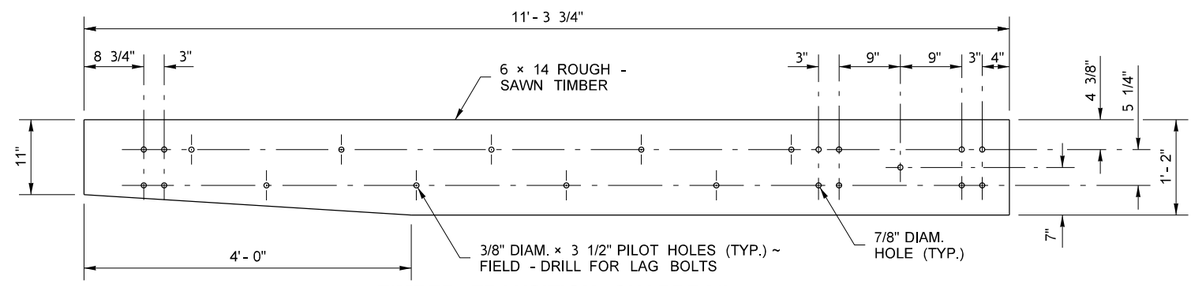

TIMBER TRANSITION GUARDRAIL

FILE NAME	S:\Design R P& S\4-Standards\2-Plan Sheet Library\01-Published PSL\(TB) Traffic Barrier\(TB-28)\PS_TB-28_e.dgn			REGION NO.	STATE	FED.AID PROJ.NO.	Plot 2
TIME	3:03:58 PM			10	WASH		TB–28
DATE	7/5/2016			JOB NUMBER			
PLOTTED BY	liddelf						SHEET 2 OF 2 SHEETS
DESIGNED BY							
ENTERED BY							
CHECKED BY				CONTRACT NO.		LOCATION NO.	
PROJ. ENGR.							
REGIONAL ADM.		REVISION	DATE	BY			

P.E. STAMP BOX DATE

P.E. STAMP BOX DATE

Washington State Department of Transportation

W–BEAM TO TIMBER GUARDRAIL TRANSITON