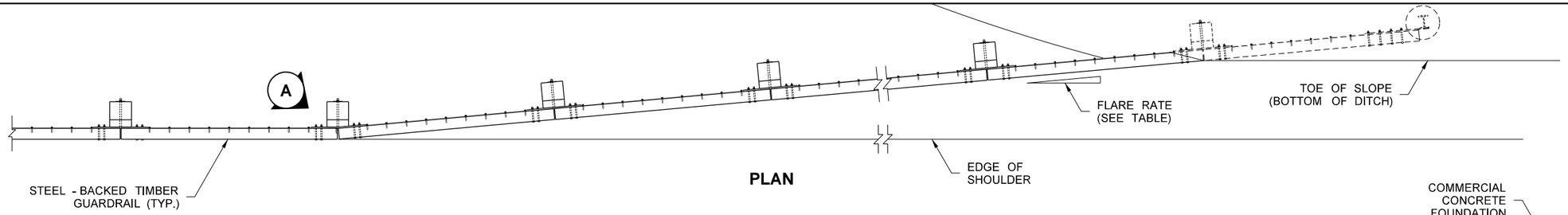

PLAN

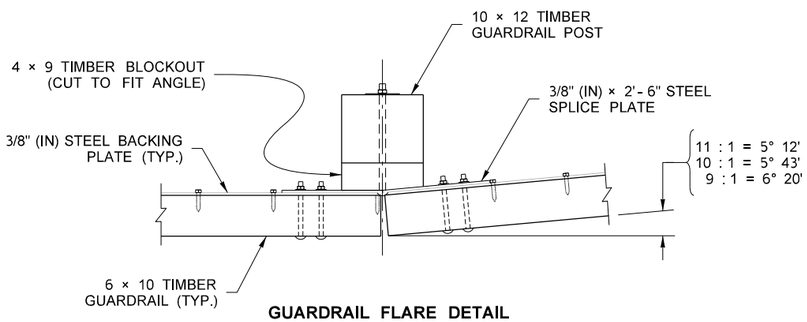

GUARDRAIL FLARE DETAIL

DETAIL (A)

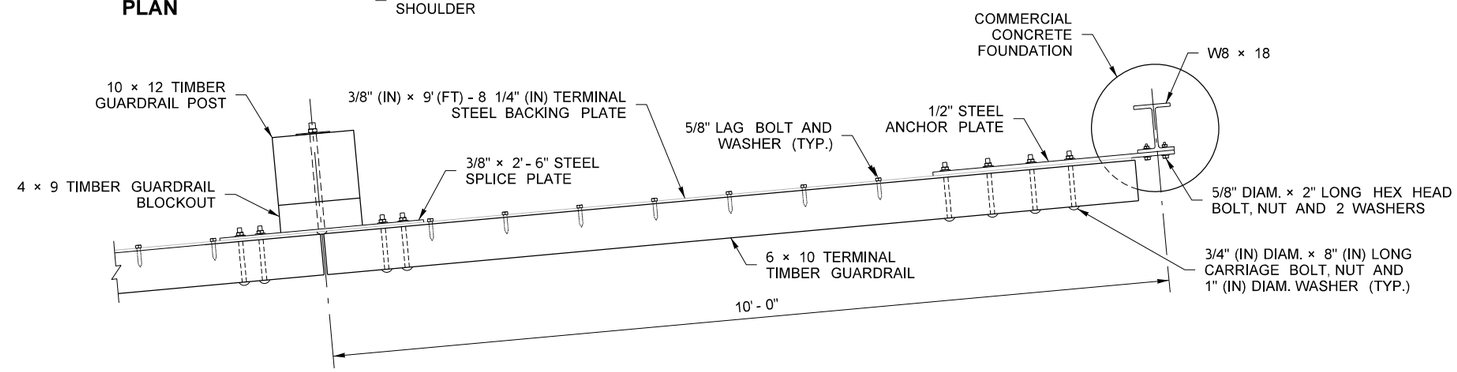

PLAN VIEW

TIMBER GUARDRAIL ANCHOR

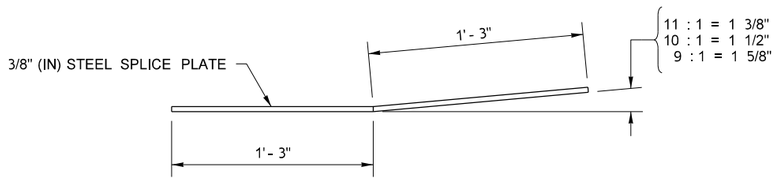

PLAN VIEW

SPLICE PLATE

FLARE RATE TABLE	
RATE	POSTED SPEED (MPH)
11 : 1	50
10 : 1	45
9 : 1	40 OR LESS

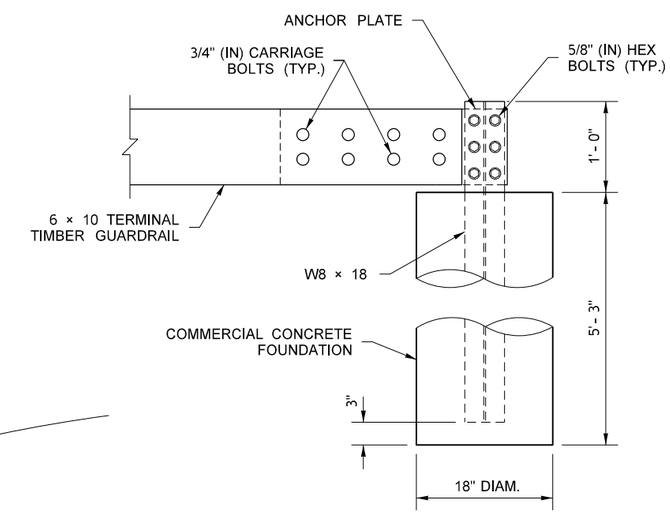

FOUNDATION CONNECTION DETAIL

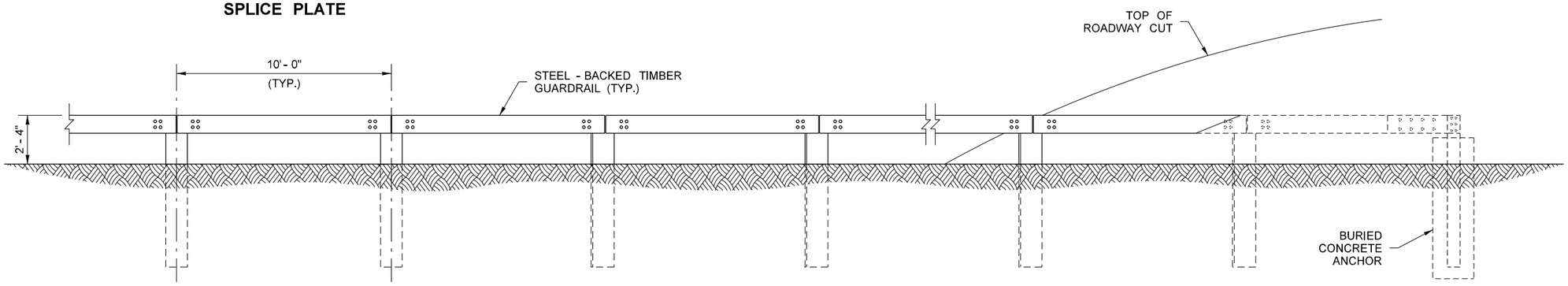

ELEVATION

FILE NAME	S:\Design R P& S\4-Standards\2-Plan Sheet Library\01-Published PSL\(TB) Traffic Barrier\(TB-26)\PS_TB-26_e.dgn
TIME	2:17:51 PM
DATE	7/5/2016
PLOTTED BY	lddelf
DESIGNED BY	
ENTERED BY	
CHECKED BY	
PROJ. ENGR.	
REGIONAL ADM.	

REVISION	DATE	BY

REGION NO.	STATE	FED.AID PROJ.NO.
	WASH	
JOB NUMBER		
CONTRACT NO.		LOCATION NO.

P.E. STAMP BOX DATE

P.E. STAMP BOX DATE

Washington State
Department of Transportation

STEEL - BACKED TIMBER GUARDRAIL BURIED ANCHOR

Plot 1

PLAN REF NO

TB–26

SHEET 1 OF 2 SHEETS

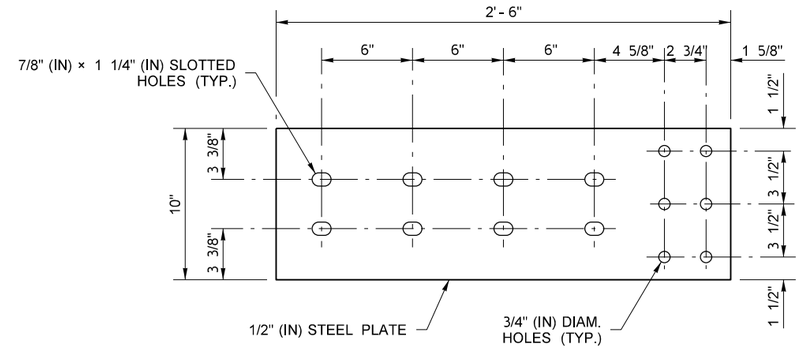

ANCHOR PLATE

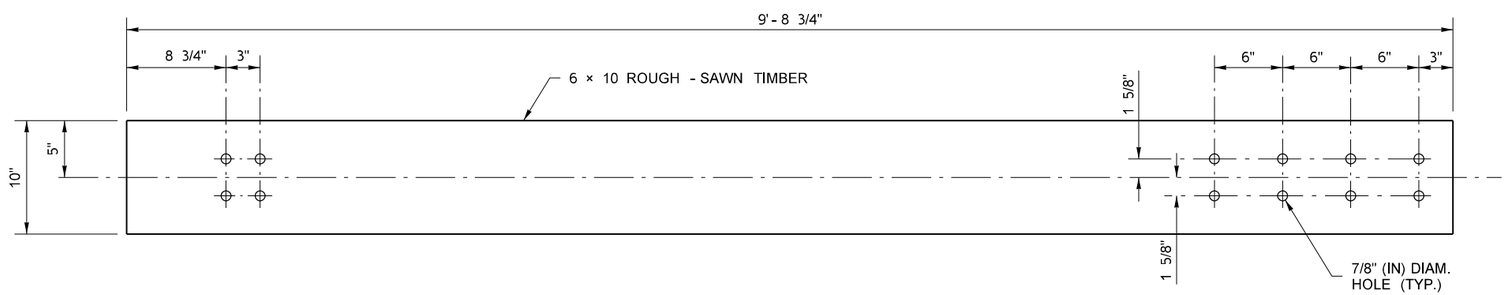

TERMINAL TIMBER GUARDRAIL

(FIELD - DRILL 3/8" (IN) DIAM. PILOT HOLES FOR 5/8" (IN) LAG BOLTS ~ TO PREVENT SPLITTING)

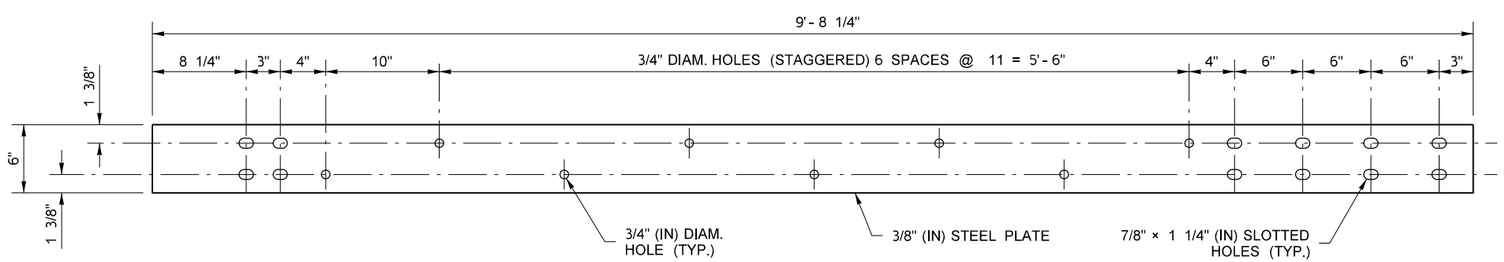

TERMINAL STEEL BACKING PLATE

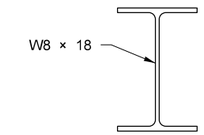

PLAN VIEW

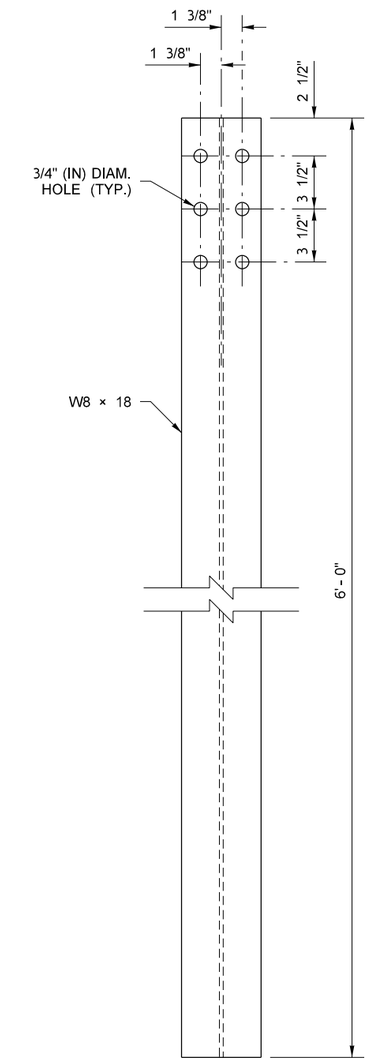

ELEVATION VIEW

STEEL POST ANCHOR

FILE NAME	S:\Design R P& S\4-Standards\2-Plan Sheet Library\01-Published PSL\(TB) Traffic Barrier\(TB-26)\PS_TB-26_e.dgn						
TIME	2:27:57 PM						
DATE	7/5/2016						
PLOTTED BY	liddelf						
DESIGNED BY							
ENTERED BY							
CHECKED BY							
PROJ. ENGR.							
REGIONAL ADM.		REVISION	DATE	BY			

REGION NO.	STATE	FED.AID PROJ.NO.
	WASH	
JOB NUMBER		
CONTRACT NO.		LOCATION NO.

P.E. STAMP BOX — DATE

P.E. STAMP BOX — DATE

Washington State Department of Transportation

STEEL - BACKED TIMBER GUARDRAIL BURIED ANCHOR

Plot 2

PLAN REF NO **TB–26**

SHEET 2 OF 2 SHEETS