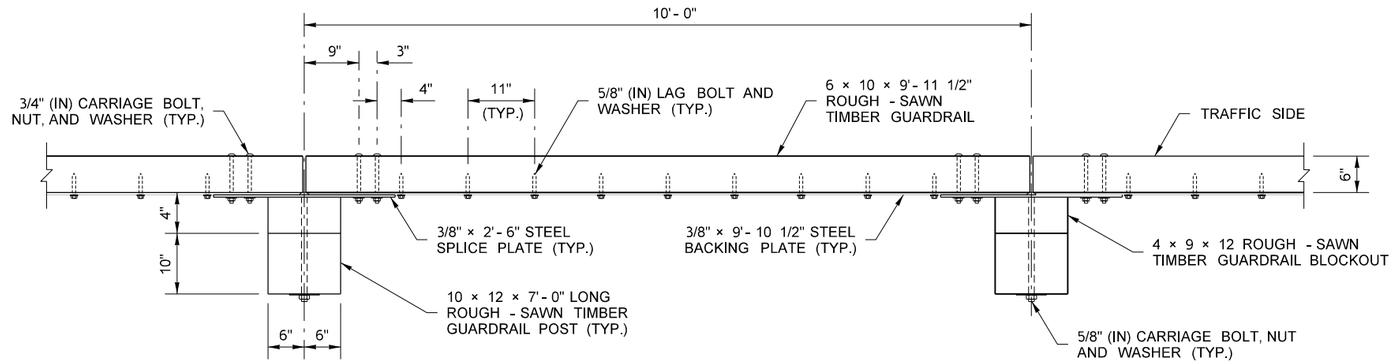

PLAN

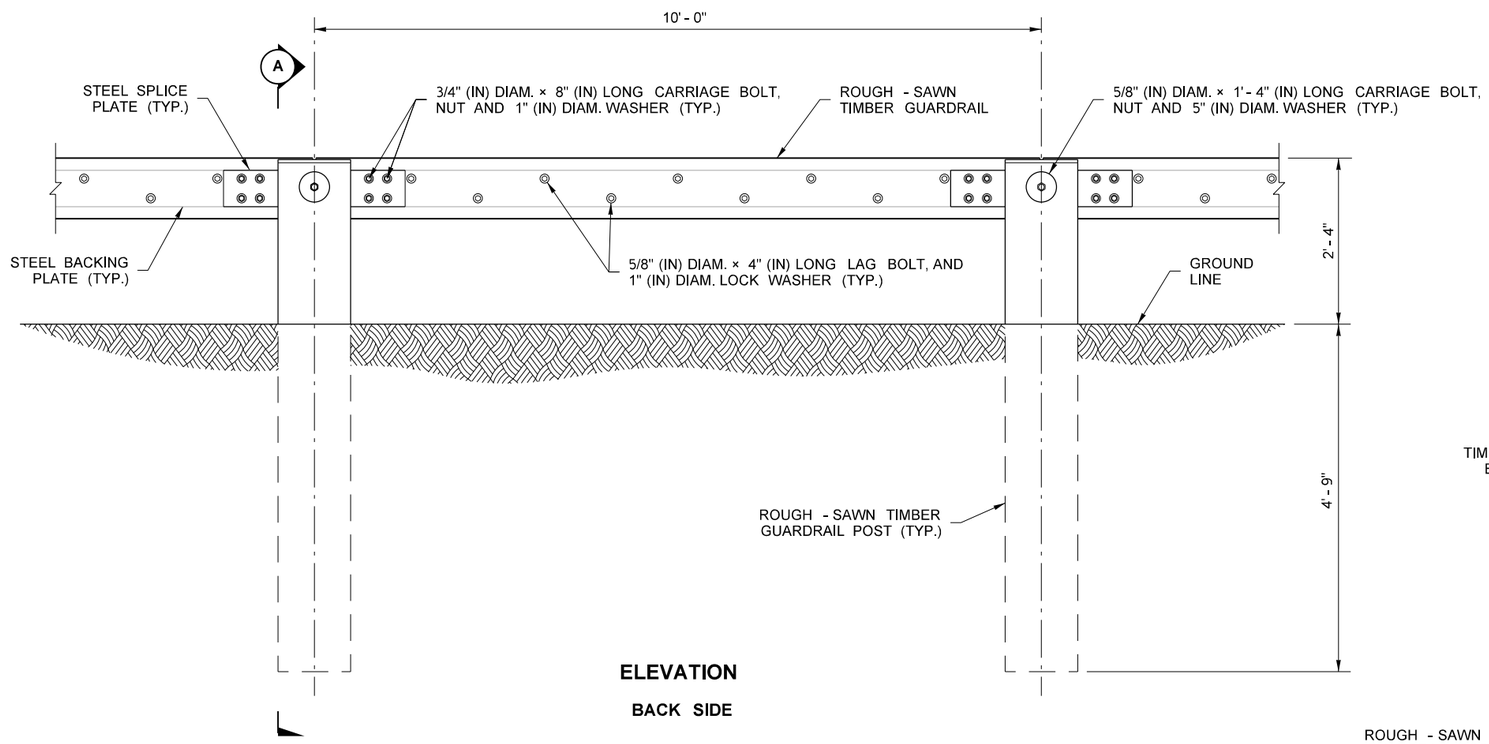

ELEVATION

BACK SIDE

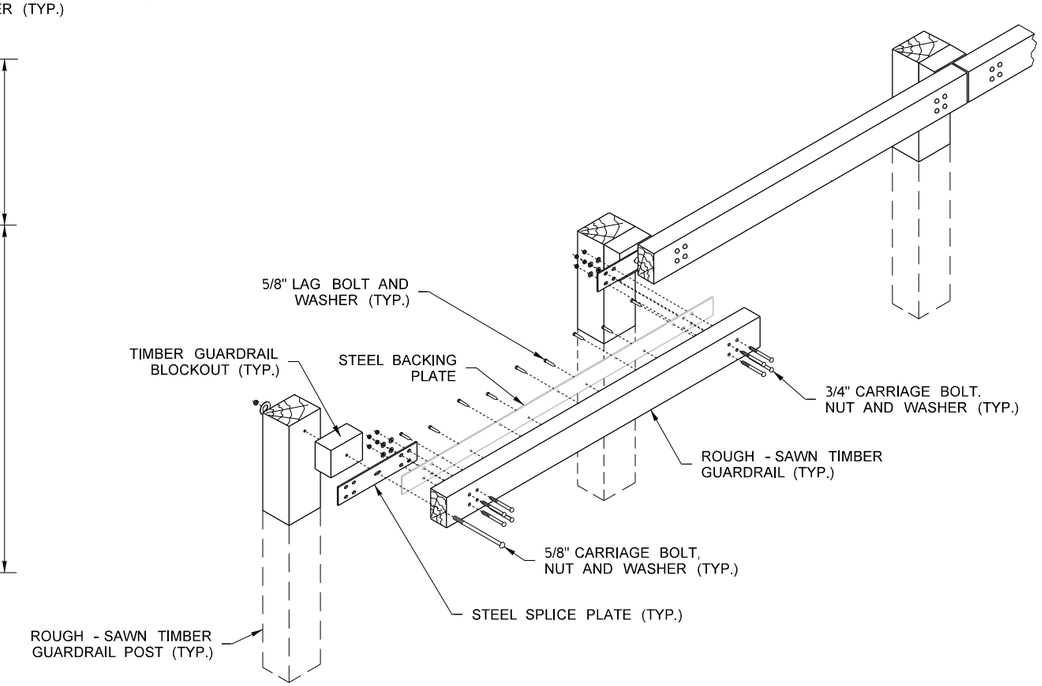

ISOMETRIC

FILE NAME	S:\Design R P& S\4-Standards\2-Plan Sheet Library\01-Published PSL\(TB) Traffic Barrier\(TB-25)\PS_TB-25_e.dgn					
TIME	8:24:58 AM					
DATE	6/22/2016					
PLOTTED BY	liddelf					
DESIGNED BY						
ENTERED BY						
CHECKED BY						
PROJ. ENGR.						
REGIONAL ADM.		REVISION	DATE	BY		

REGION NO.	STATE	FED.AID PROJ.NO.
	WASH	
JOB NUMBER		
CONTRACT NO.		LOCATION NO.

P.E. STAMP BOX DATE

P.E. STAMP BOX DATE

Washington State Department of Transportation

STEEL BACKED TIMBER GUARDRAIL

Plot 1

PLAN REF NO

TB–25

SHEET 1 OF 2 SHEETS

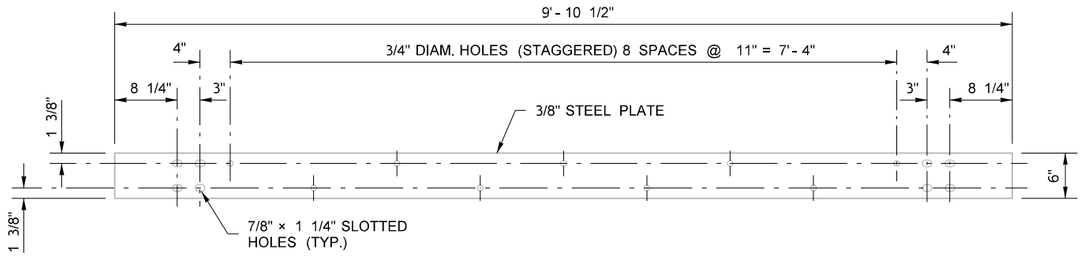

STEEL BACKING PLATE

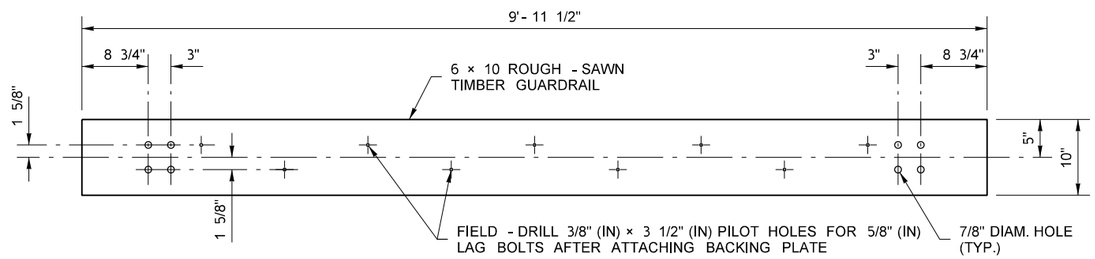

TIMBER GUARDRAIL

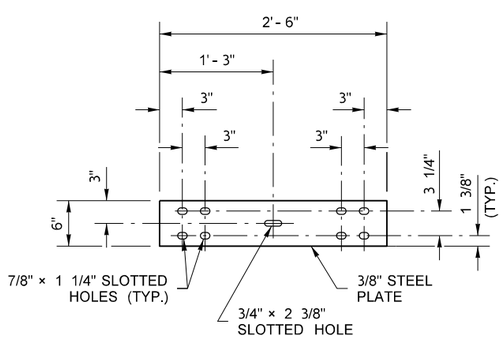

STEEL SPLICE PLATE

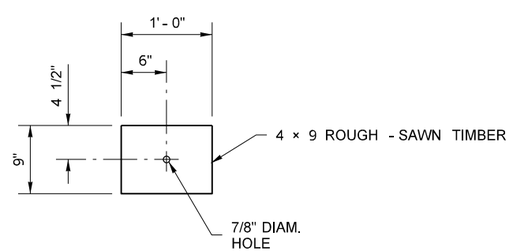

TIMBER GUARDRAIL BLOCKOUT

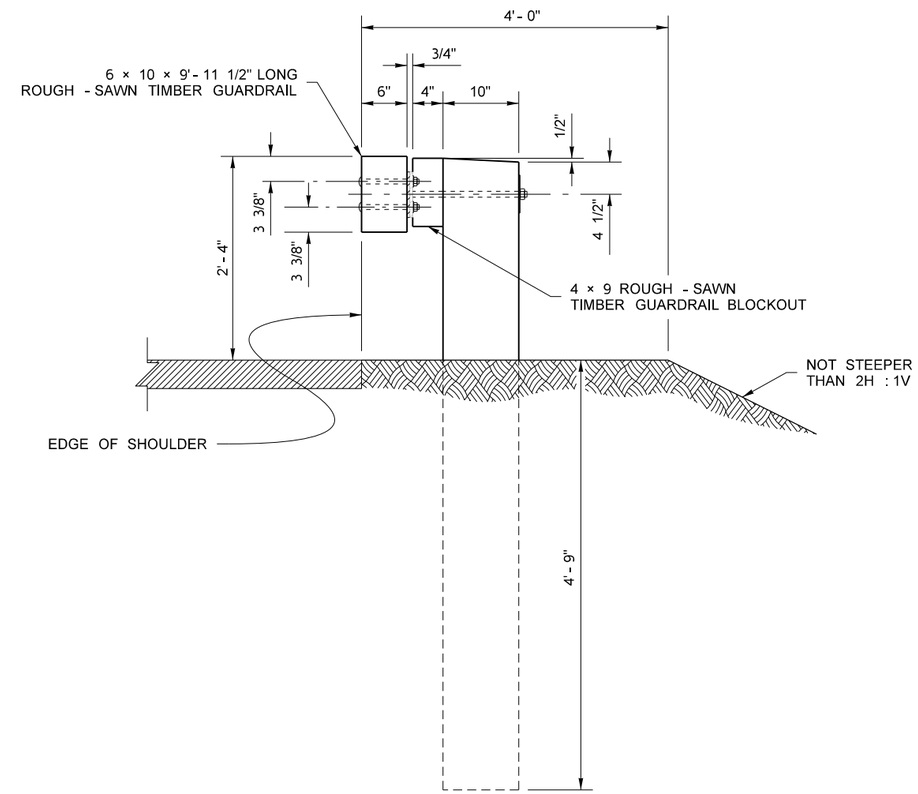

SECTION A

FILE NAME	S:\Design R P& S\4-Standards\2-Plan Sheet Library\01-Published PSL\(TB) Traffic Barrier\(TB-25)\PS_TB-25_e.dgn					
TIME	1:35:18 PM					
DATE	7/5/2016					
PLOTTED BY	lddelf					
DESIGNED BY						
ENTERED BY						
CHECKED BY						
PROJ. ENGR.						
REGIONAL ADM.		REVISION	DATE	BY		

REGION NO.	STATE	FED.AID PROJ.NO.
	WASH	
JOB NUMBER		
CONTRACT NO.		LOCATION NO.

P.E. STAMP BOX DATE

P.E. STAMP BOX DATE

Washington State
Department of Transportation

STEEL BACKED TIMBER GUARDRAIL

Plot 2

PLAN REF NO
TB–25

SHEET 2 OF 2 SHEETS