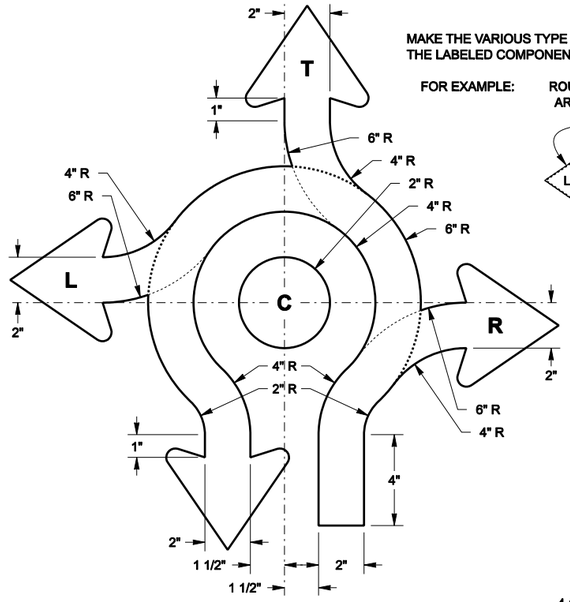

MAKE THE VARIOUS TYPE 1 ARROWS BY USING THE LABELED COMPONENTS RESPECTIVELY.

FOR EXAMPLE: ROUNDABOUT SIGN ARROW TYPE 1LC

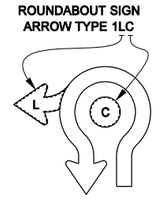

TYPE 1 COMPONENTS

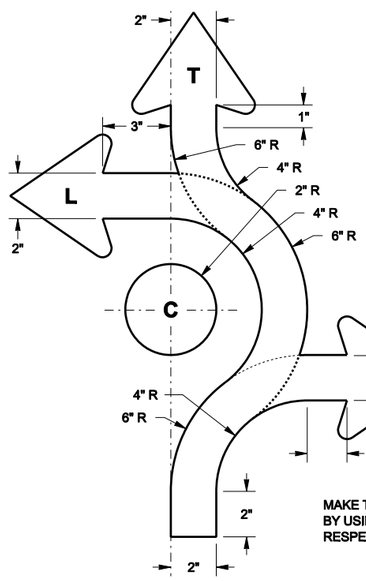

TYPE 2 COMPONENTS

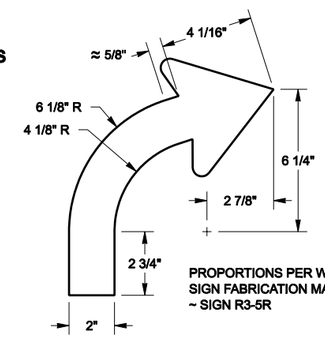

PROPORTIONS PER WSDOT SIGN FABRICATION MANUAL ~ SIGN R3-5R

RIGHT TURN ARROW
(FOR ROUNDABOUT SIGNS)

MAKE THE VARIOUS TYPE 2 ARROWS BY USING THE LABELED COMPONENTS RESPECTIVELY.

FOR EXAMPLE: ROUNDABOUT SIGN ARROW TYPE 2TR

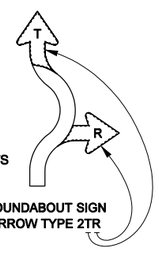

ROUNDABOUT SIGN ARROW DETAILS

ALL ARROWHEADS ARE PER WSDOT SIGN FABRICATION MANUAL ~ APPENDIX B-5

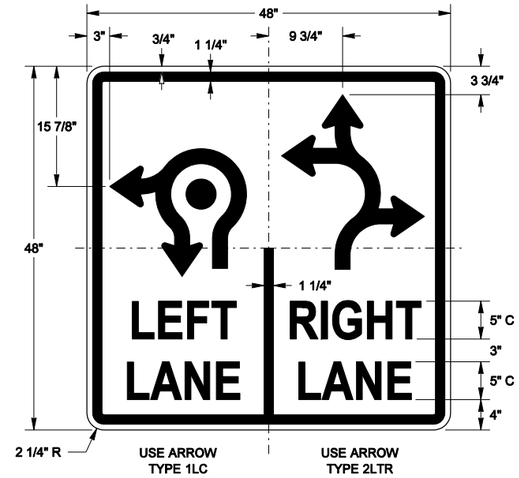

SIGN R3-8 MOD(1)

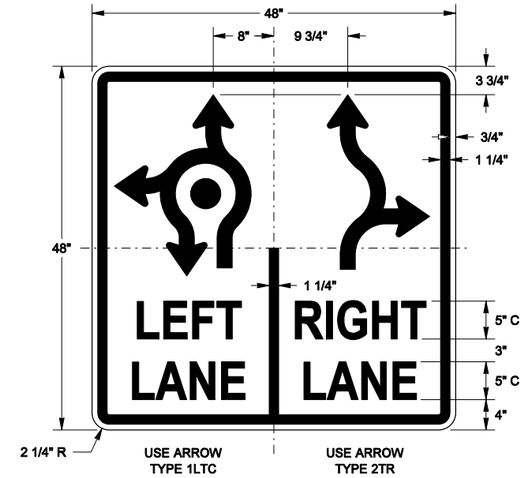

SIGN R3-8 MOD(2)

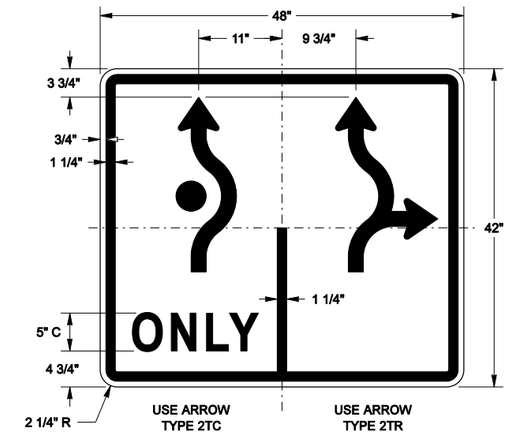

SIGN R3-8 MOD(3)

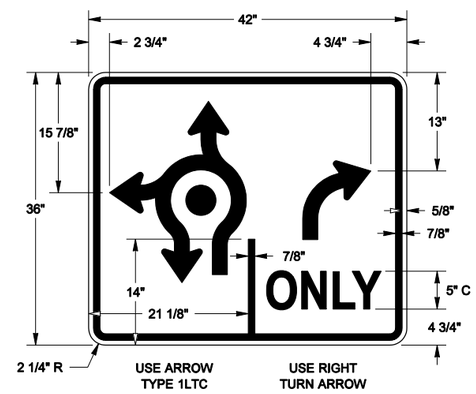

SIGN R3-8 MOD(4)

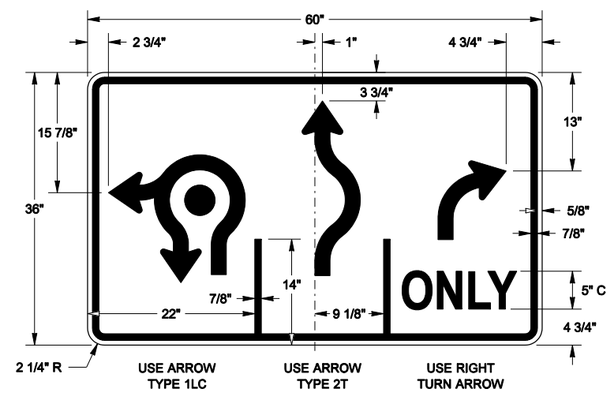

SIGN R3-8 MOD(5)

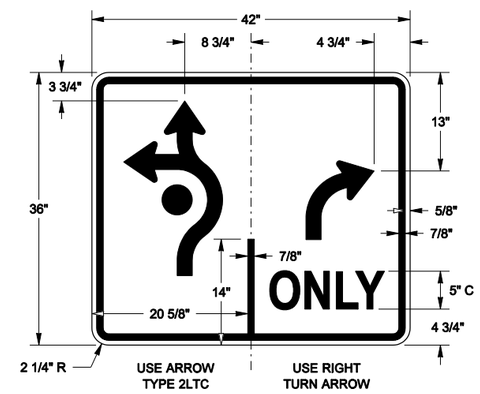

SIGN R3-8 MOD(6)

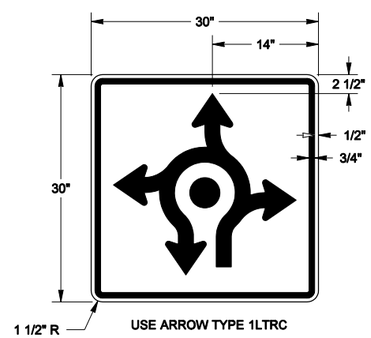

SIGN R3-8 MOD(7)

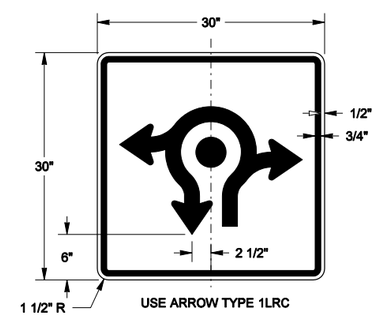

SIGN R3-8 MOD(8)

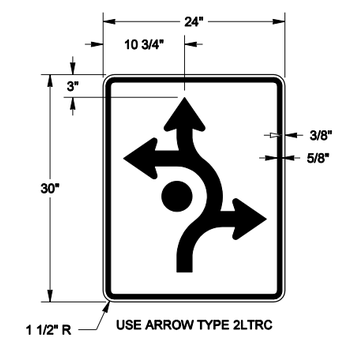

SIGN R3-8 MOD(9)

ROUNDABOUT SIGNS

FILE NAME	I:\PSL\PM-3\PM-3.dgn						PLOT2
TIME	3:00:31 PM			REGION NO. 10	STATE WASH	FED.AID PROJ.NO.	
DATE	3/15/2006						
PLOTTED BY	sujkam			JOB NUMBER			
DESIGNED BY	M. Sujka						
ENTERED BY	M. Sujka						SHEET
CHECKED BY				CONTRACT NO.	LOCATION NO.		OF
PROJ. ENGR.							SHEETS
REGIONAL ADM.		REVISION	DATE	BY			

P.E. STAMP BOX DATE

P.E. STAMP BOX DATE

Washington State Department of Transportation