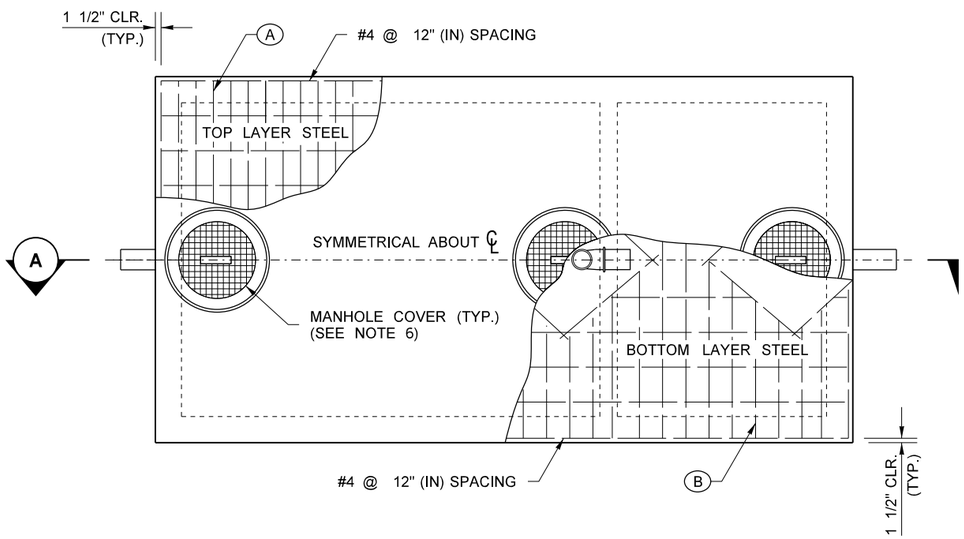

TOP VIEW

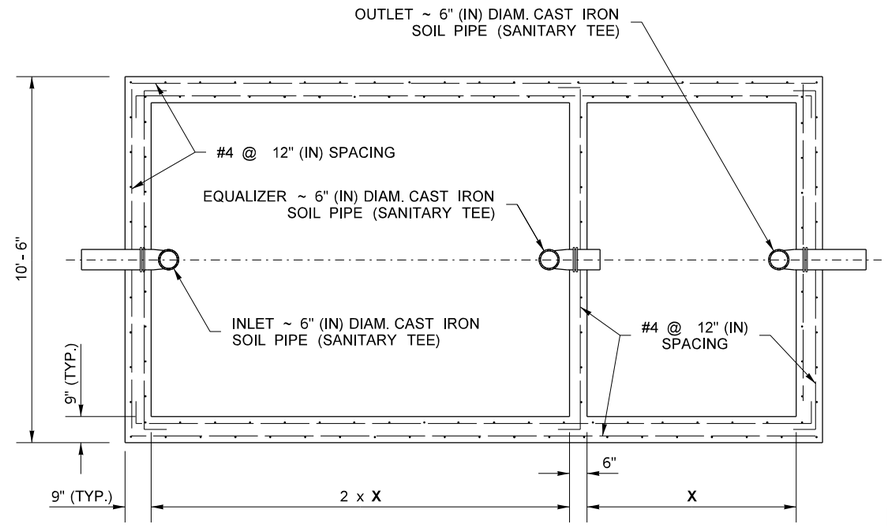

SECTION B

NOTES

1. WORK SHALL START UPON APPROVAL OF THE LOCAL HEALTH DEPARTMENT.
2. ALL WORK SHALL BE LEFT OPEN UNTIL INSPECTED AND APPROVED BY THE HEALTH OFFICER AND THE ENGINEER.
3. PRECAST SEPTIC TANKS ARE ACCEPTABLE, SUBJECT TO THE APPROVAL OF THE ENGINEER.
4. EXCAVATED MATERIAL SHALL BE DISPOSED OF AS DIRECTED BY THE ENGINEER.
5. ALL GRADES SHALL BE CHECKED AND APPROVED BY THE ENGINEER.
6. MANHOLE COVER SHALL BE WATERTIGHT AND APPROVED BY THE ENGINEER PRIOR TO INSTALLATION.
7. DIMENSIONS MAY VARY AS SITE CONDITIONS AND SYSTEM DESIGN PERMITS.
8. ALL CONCRETE SHALL BE CLASS 4000.
9. REINFORCING STEEL SHALL BE GRADE 300 OR GRADE 400.

APPROXIMATE QUANTITIES

TANK CAPACITY	X	CONC.	STEEL REINF. BARS	CAST IRON SOIL PIPE & FITTING
GAL.	FT.	C.Y.	LBS.	LBS.
6000	6	23	3800	471
8000	8	28	4600	471
10000	10	32	5400	471
12000	12	37	6300	471
14000	14	42	7100	471

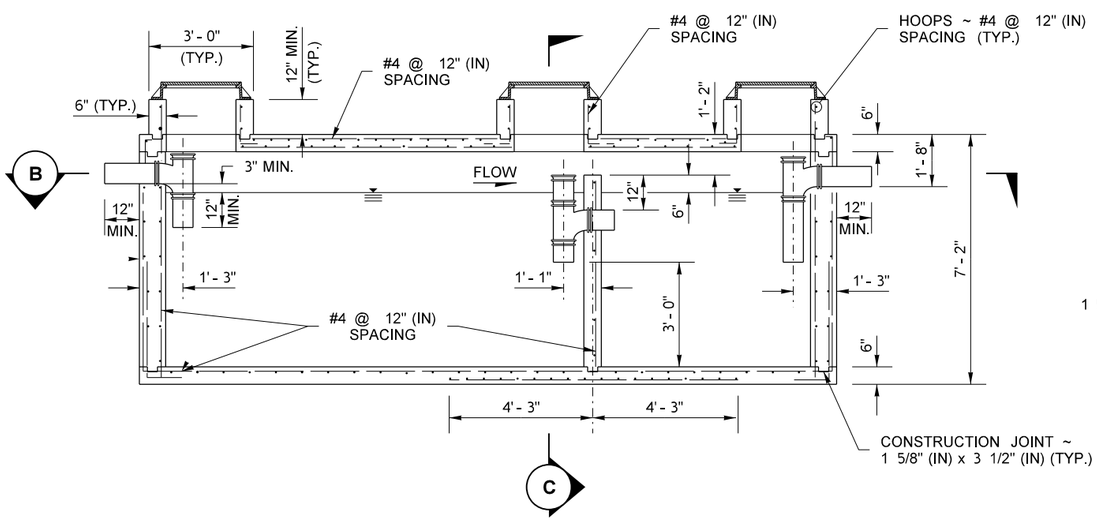

SECTION A

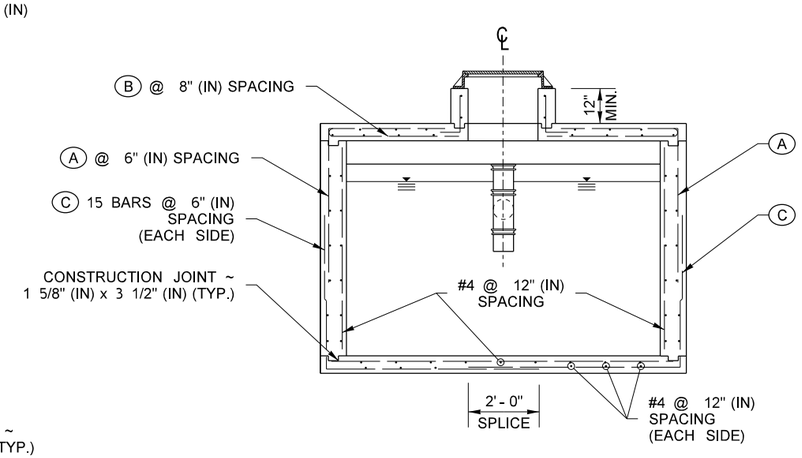

SECTION C

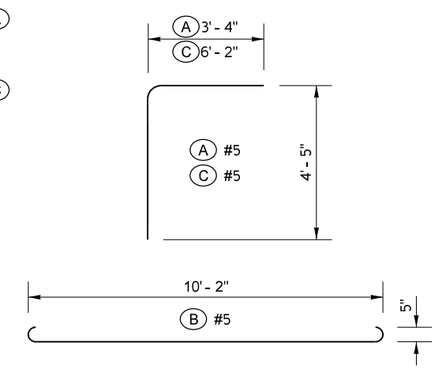

REINFORCING STEEL BENDING DIAGRAM
(ALL DIMENSIONS ARE OUT TO OUT)

FILE NAME	S:\Design R P& S\4-Standards\2-Plan Sheet Library\01-Published PSL\(RD) Roadside and Site Development\(RD-13) Rest Area Septic Tank\RD-13.dgn			
TIME	2:28:09 PM			
DATE	10/2/2014			
PLOTTED BY	FletcCo			
DESIGNED BY				
ENTERED BY				
CHECKED BY				
PROJ. ENGR.				
REGIONAL ADM.		REVISION	DATE	BY

REGION NO. | STATE: WASH | FED.AID PROJ.NO.
JOB NUMBER
CONTRACT NO. | LOCATION NO.

P.E. STAMP BOX — DATE

P.E. STAMP BOX — DATE

Washington State Department of Transportation

REST AREA SEPTIC TANK

Plot 1
PLAN REF NO RD-13
SHEET 1 OF 1 SHEETS