REPAIR PROCEDURE - BOLT HOLE SIZE 1/2" (IN) DIAMETER OR LESS ~ PIPE TRADE SIZE 1/2" (IN) OR LESS

FOR UNC OR UNF THREADS:

- APPLY SILICONE CAULK TO THREADS OF SS BOLT WITH SHANK.
- TIGHTEN SS BOLT UNTIL SHANK IS TIGHT AGAINST STANDARD.
- CUT OFF SS BOLT EVEN WITH STANDARD.
- FILE SS BOLT TO MATCH CONTOUR OF STANDARD.
- TREAT SS BOLT AND SURROUNDING POLE WITH GALVANIZING REPAIR PAINT MEETING THE REQUIREMENT OF **STANDARD SPECIFICATION 9-08.1(2)**.
- APPLY TWO COATS. PAINT SHALL BE DRY BEFORE APPLYING SECOND COAT.

FOR NATIONAL PIPE THREADS:

- APPLY SILICONE CAULK TO THREADS OF HOT-DIPPED GALVANIZED HEX SOCKET PIPE PLUG.
- TIGHTEN PLUG UNTIL FLUSH WITH STANDARD.
- FILE PLUG TO MATCH CONTOUR OF STANDARD.
- FILL HEX SOCKET WITH PAINTABLE SILICONE CAULK.
- TREAT PLUG AND SURROUNDING POLE WITH GALVANIZING REPAIR PAINT MEETING THE REQUIREMENT OF **STANDARD SPECIFICATION 9-08.1(2)**.
- APPLY TWO COATS. PAINT SHALL BE DRY BEFORE APPLYING SECOND COAT.

REPAIR PROCEDURE - MAXIMUM HOLE SIZE 3" (IN) DIAMETER OR LESS

- SUBMITTAL PER **STANDARD SPECIFICATION 6-03.3(25)**.
- MAXIMUM HOLE SIZE 3" (IN) OR LESS IN DIAMETER.
- 1/8" (IN) STEEL PLATE - TYPE ASTM A - 36 ELECTRODE TYPE XX-70.
- THE PLATE SHALL BE 1/2" (IN) LARGER THAN THE DIAMETER OF THE HOLE TO BE REPAIRED (1/4" (IN) OVERLAP ALL SIDES).
- TACK WELD PLATE TO POLE.
- SHAPE PLATE TO MATCH TAPER AND CURVE OF POLE.
- 1/8" (IN) FILLET WELD ALL AROUND.
- CHAMFER (GRIND) EDGE OF PLATE SMOOTH. REMOVE ALL BURRS AND SHARP EDGES.
- TREAT PATCH PLATE AND SURROUNDING POLE WITH GALVANIZING REPAIR PAINT MEETING THE REQUIREMENT OF **STANDARD SPECIFICATION 9-08.1(2)**.
- APPLY TWO COATS. PAINT SHALL BE DRY PRIOR TO APPLYING SECOND COAT.

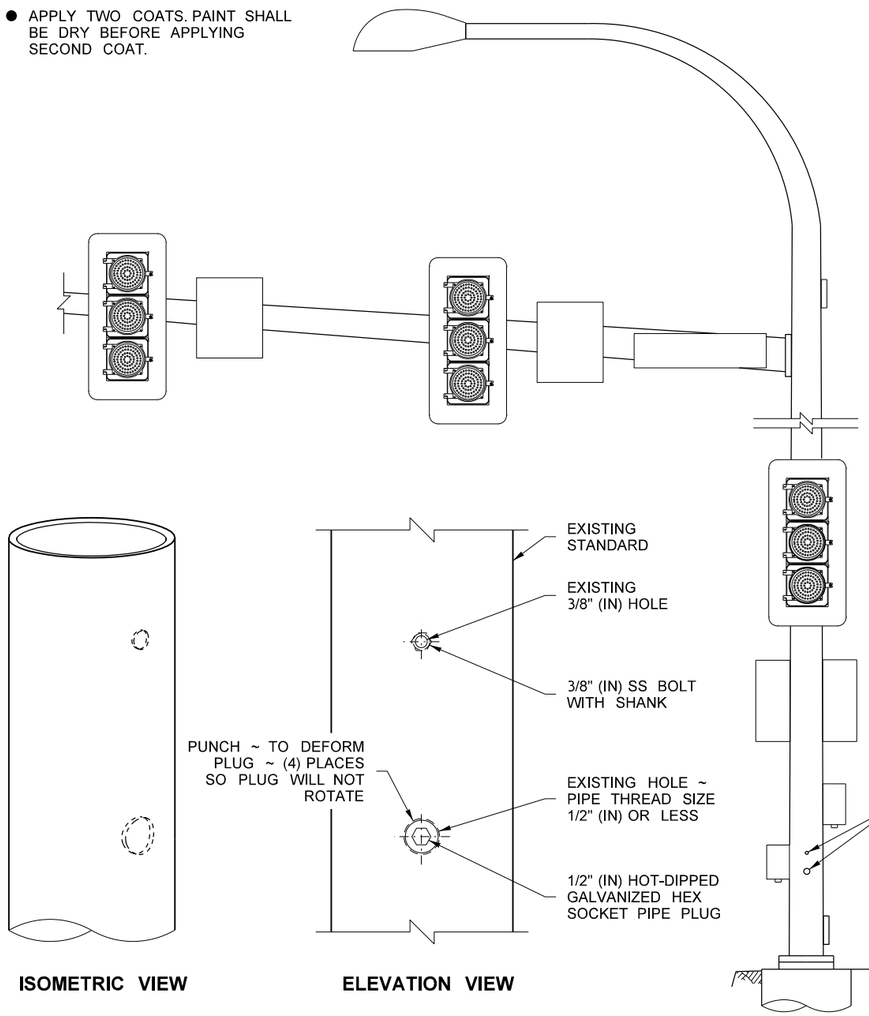

HOLE REPAIR DETAIL

EXAMPLE OF REPAIR FROM PPB LOCATION ~ 1/2" (IN) DIAMETER AND 3/8" (IN) DIAMETER HOLES SHOWN

ELEVATION

(TYPE III SIGNAL STANDARD SHOWN)

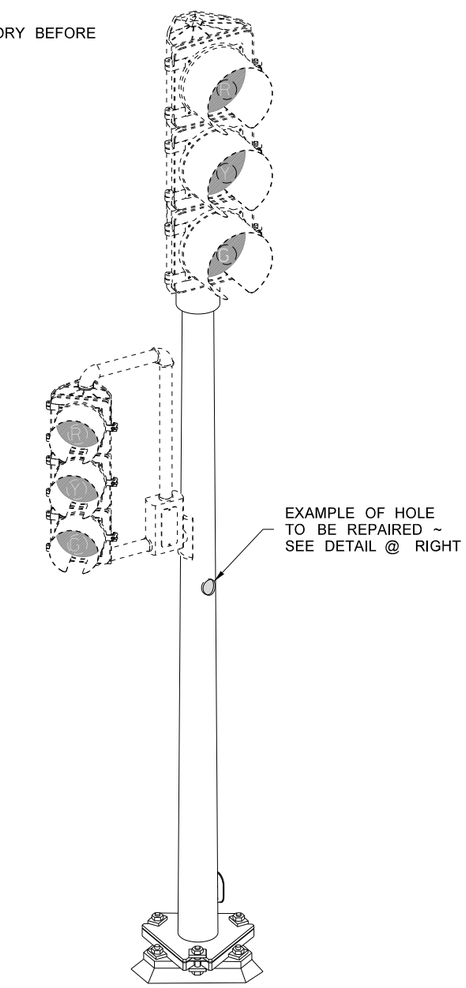

PERSPECTIVE VIEW

(RAMP METER SIGNAL STANDARD WITH SLIP BASE SHOWN)

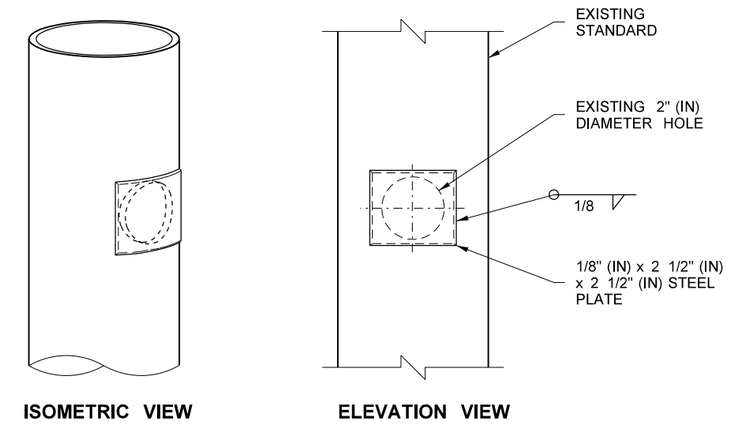

HOLE REPAIR DETAIL

EXAMPLE WITH 2" (IN) DIAMETER HOLE SHOWN

FILE NAME	S:\Design R P& S\4-Standards\2-Plan Sheet Library\01-Published PSL\(IS) Illumination, Signals, and ITS\(IS-17) Traffic Standard Hand Hole Repair Procedures\IS-17.dgn								Plot 1
TIME	1:41:37 PM				REGION NO. / STATE	FED.AID PROJ.NO.		Washington State Department of Transportation	PLAN REF NO IS-17
DATE	10/6/2014				WASH				
PLOTTED BY	FletcCo				JOB NUMBER				SHEET 1 OF 1 SHEETS
DESIGNED BY									
ENTERED BY									
CHECKED BY					CONTRACT NO.	LOCATION NO.			TRAFFIC STANDARD HOLE REPAIR PROCEDURE
PROJ. ENGR.							DATE	DATE	
REGIONAL ADM.		REVISION	DATE	BY			P.E. STAMP BOX	P.E. STAMP BOX	