DRAWN BY: FERN LIDDELL

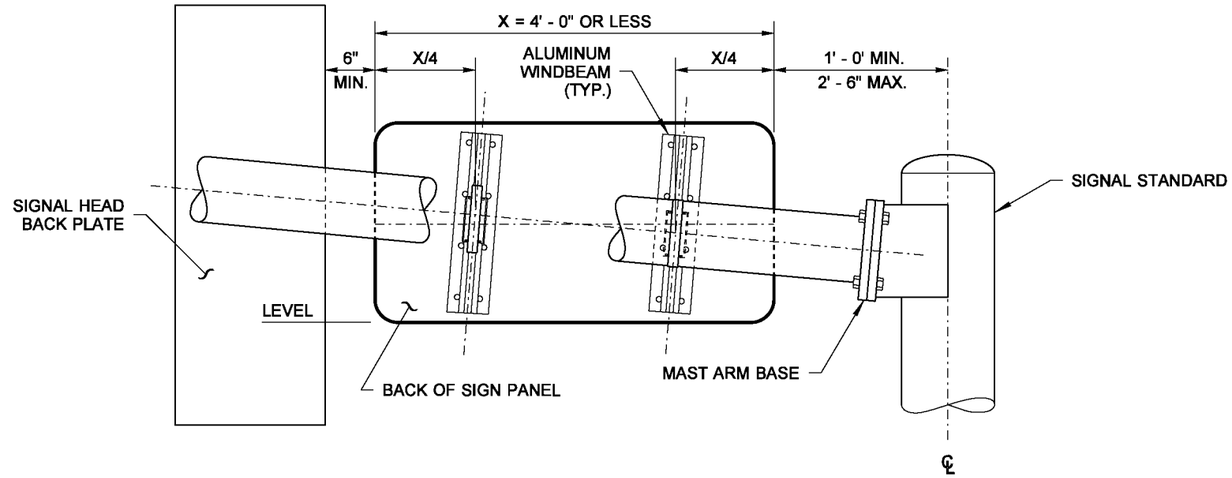


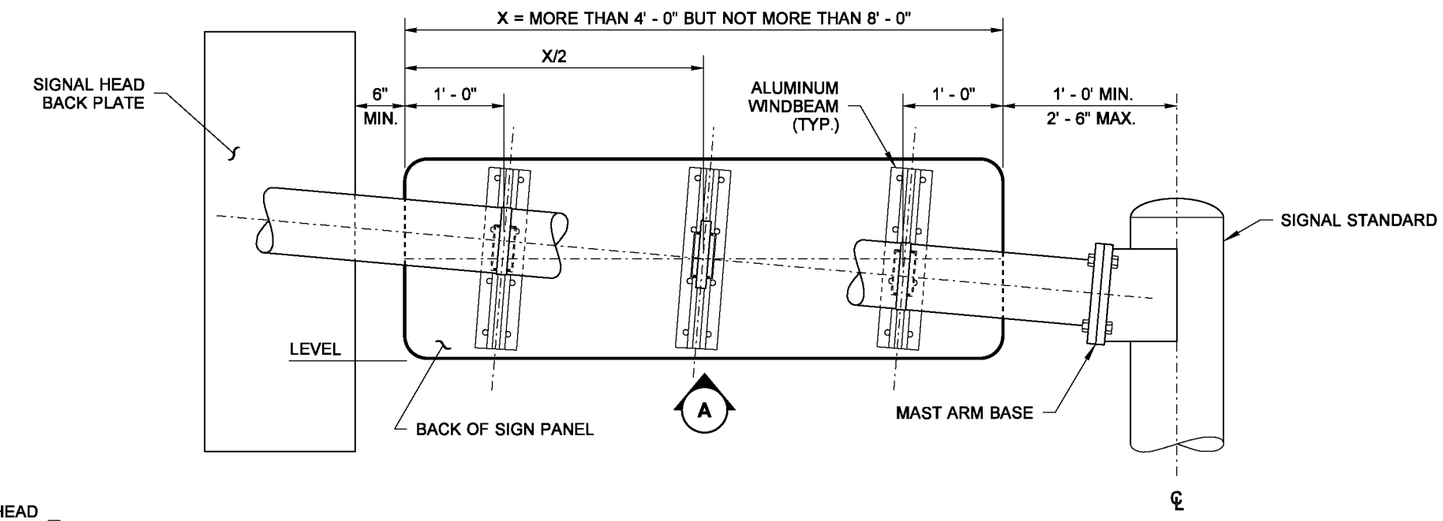


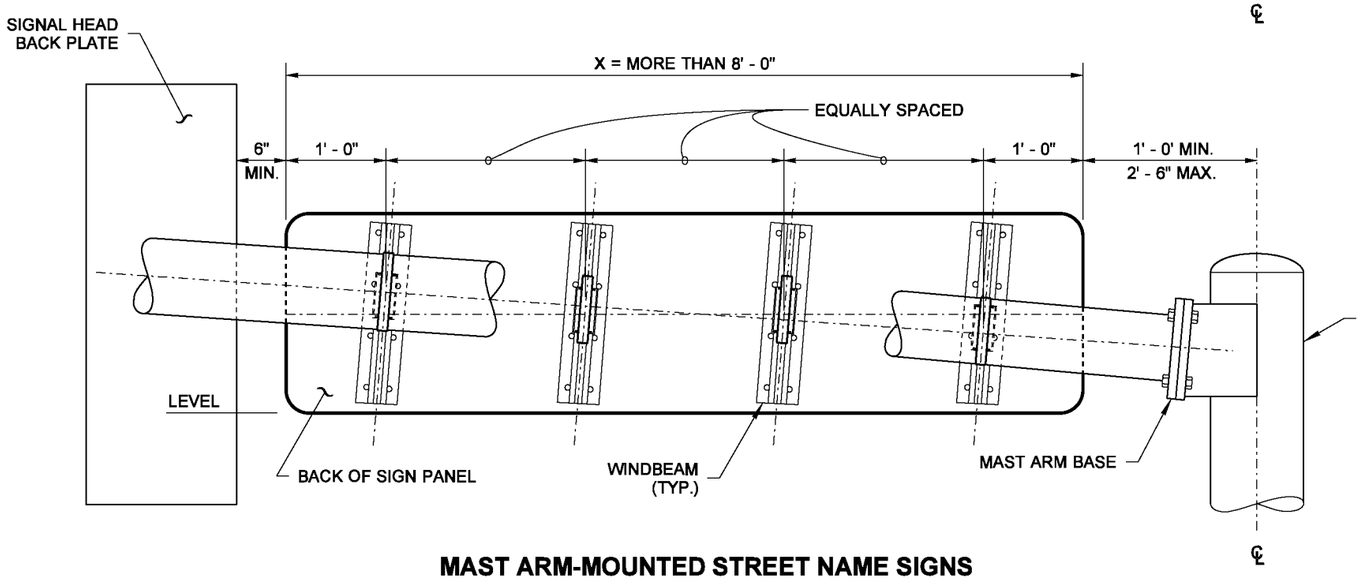


**MAST ARM-MOUNTED STREET NAME SIGNS**

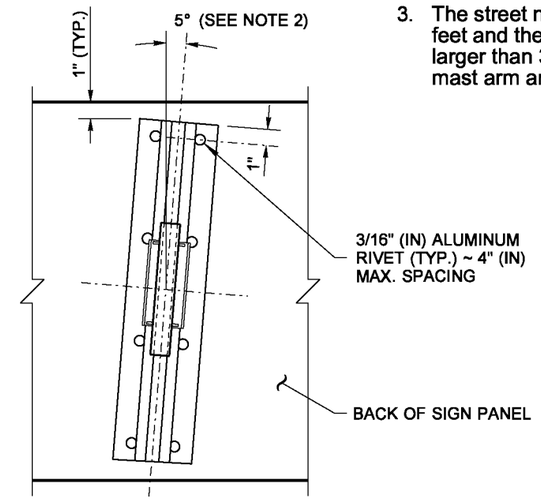


**DETAIL A**

TYPICAL FOR EACH CONNECTION

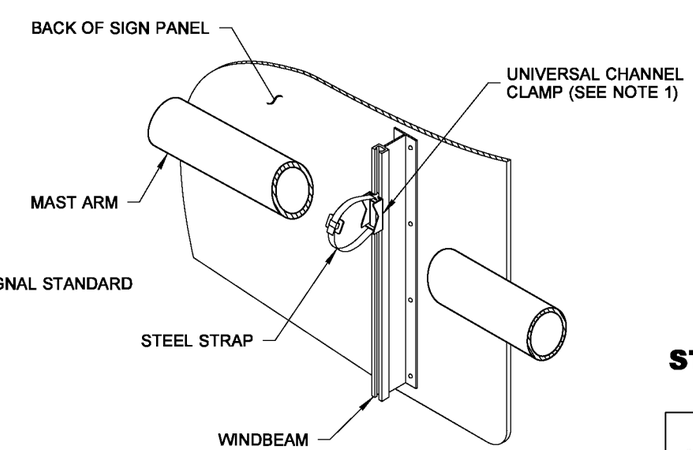


**TYPICAL MAST ARM INSTALLATION**

**NOTES**

1. Mounting brackets with steel straps shall be a stainless steel band and buckle system product or an approved equal. Mounting brackets shall be universal channel clamps; steel straps shall be 3/4" (in) wide and 0.030" (in) thick.
2. All signs installed on mast arms or standards (poles) require windbeams. All signs shall be installed with horizontal edges level. A skewed windbeam is required only when the sign is mounted within 12" (in) of the mast arm base (see Detail "A").
3. The street name sign shall be a maximum of 36 square feet and the sign height is a maximum of 3' (ft); signs larger than 36 square feet require a special design mast arm and signal pole.

JOHN C. NISBET
STATE OF WASHINGTON
29115
REGISTERED
PROFESSIONAL ENGINEER

Nisbet, John
Jun 12 2014 7:43 AM

# SIGN INSTALLATION ON SIGNAL AND LIGHT STANDARDS STANDARD PLAN G-30.10-03

SHEET 1 OF 2 SHEETS

APPROVED FOR PUBLICATION
Bakotich, Pasco
Jun 17 2014 9:41 AM
STATE DESIGN ENGINEER

Washington State Department of Transportation

DRAWN BY: FERN LIDDELL

| DIMENSIONS | |
|---|---|
| A | B |
| 3' - 0" | 9" |
| 4' - 0" | 1' - 0" |

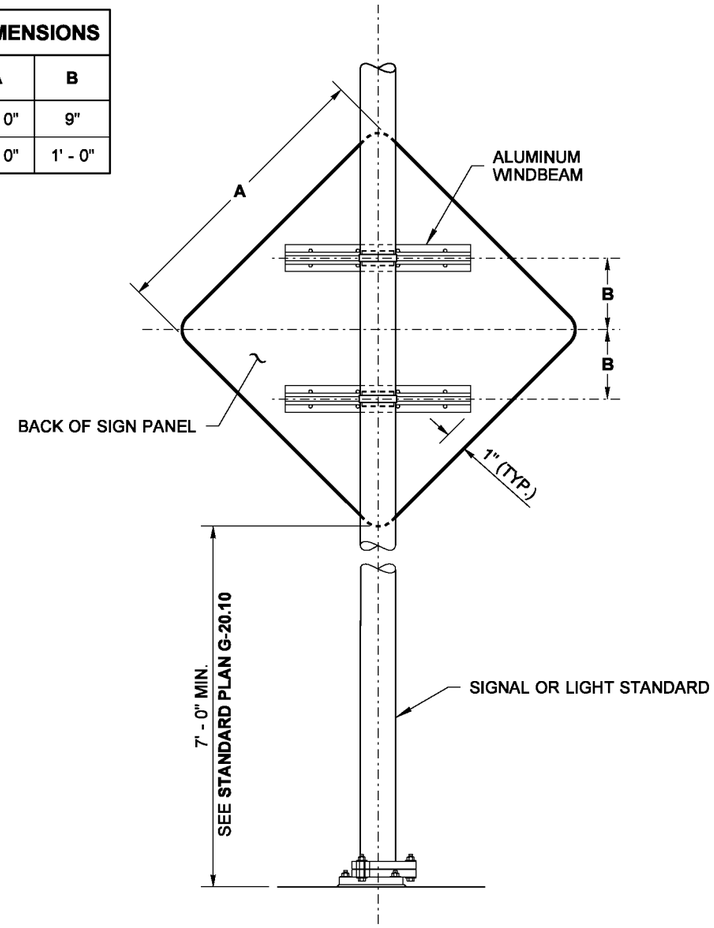


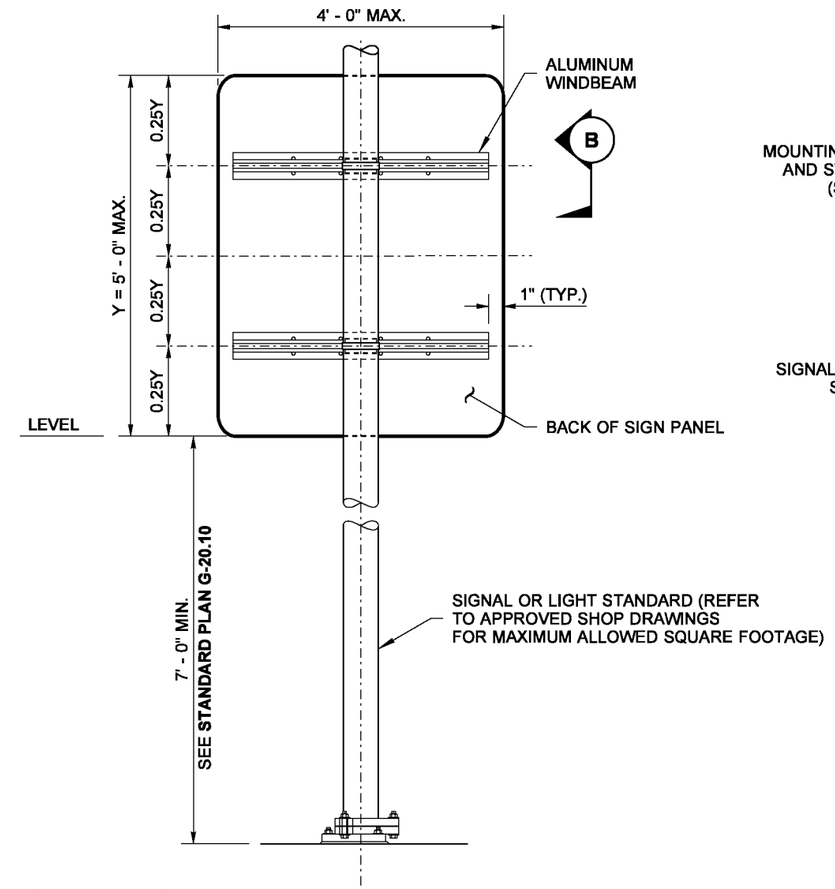


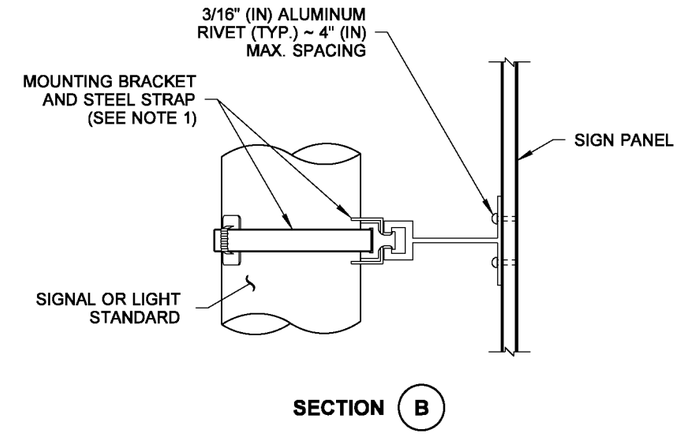


**SIGN INSTALLATION ON SIGNAL OR LIGHT STANDARD**

| DIMENSIONS | | | |
|---|---|---|---|
| X | Y | C | D |
| 3' - 0" | 2' - 6" | 1' - 0" | 6" |
| 3' - 0" | 3' - 0" | 1' - 0" | 6" |
| 4' - 0" | 2' - 6" | 1' - 3" | 9" |

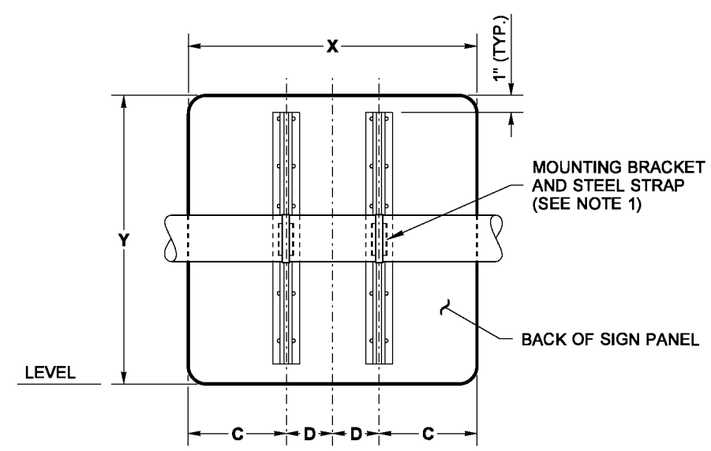


**MAST ARM-MOUNTED LANE USE SIGNS**

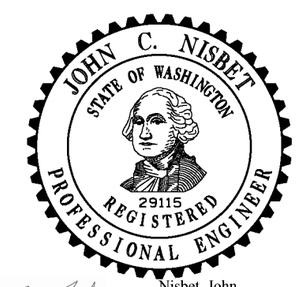


Nisbet, John
Jun 12 2014 7:43 AM

**SIGN INSTALLATION ON SIGNAL AND LIGHT STANDARDS STANDARD PLAN G-30.10-03**

SHEET 2 OF 2 SHEETS

APPROVED FOR PUBLICATION
Bakotich, Pasco
Jun 17 2014 9:41 AM
STATE DESIGN ENGINEER

Washington State Department of Transportation