DRAWN BY: BILL BERENS

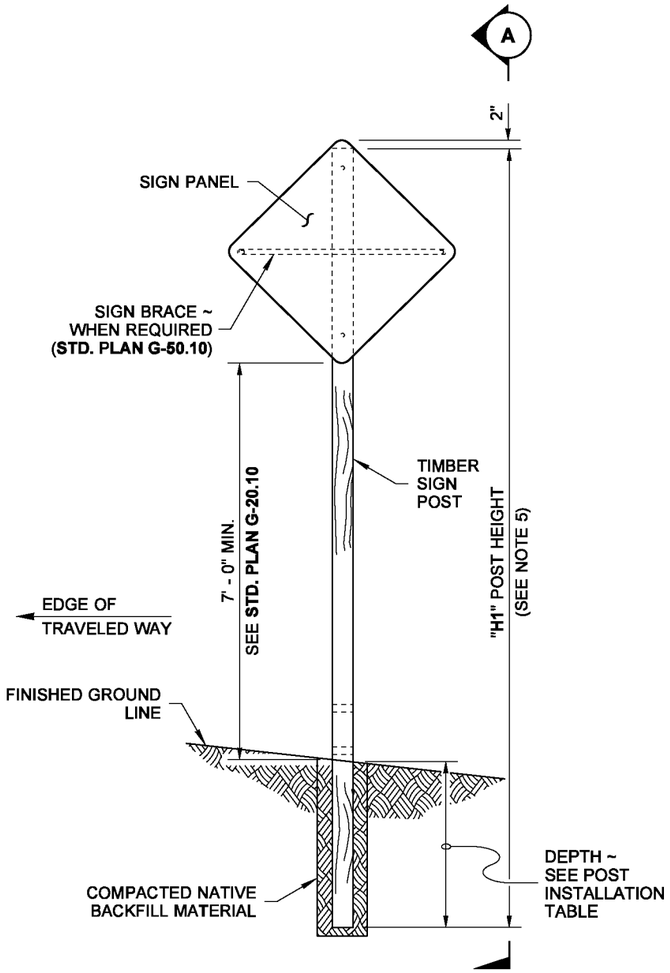

ELEVATION VIEW

SINGLE-POST INSTALLATION

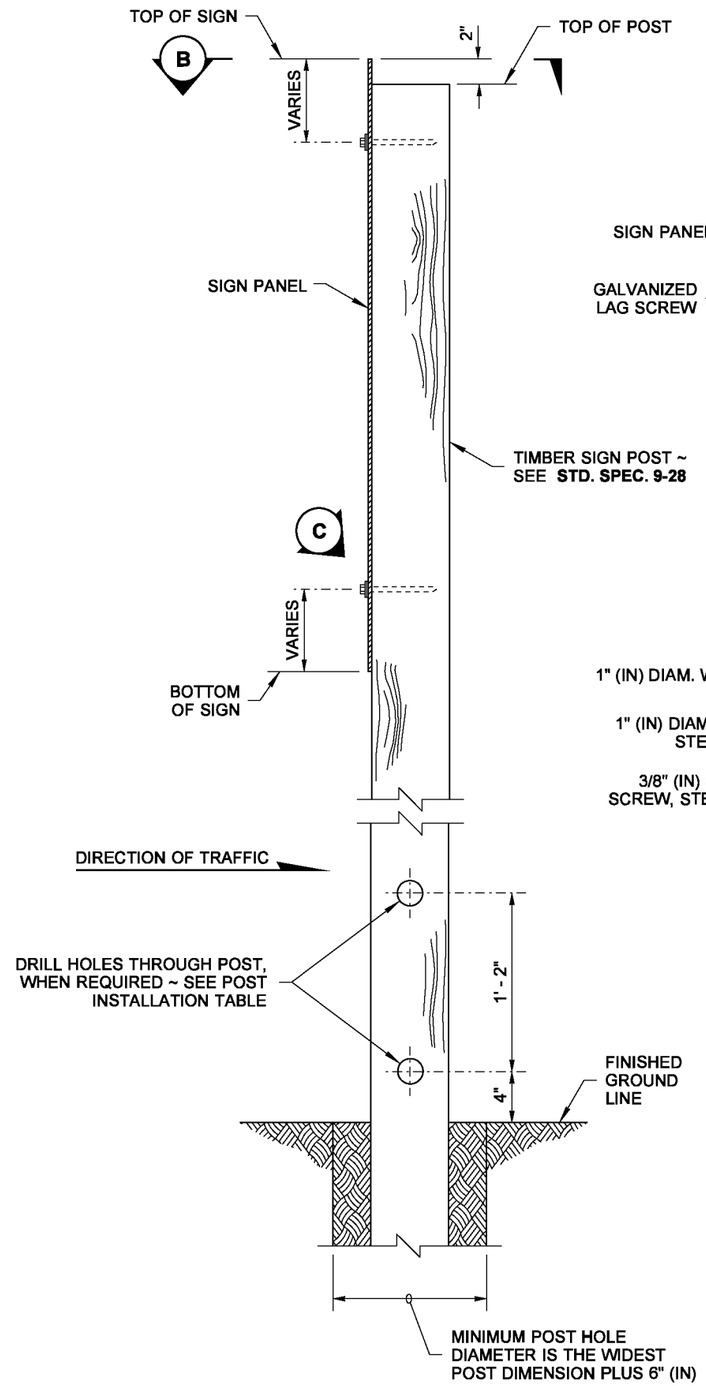

VIEW (A)

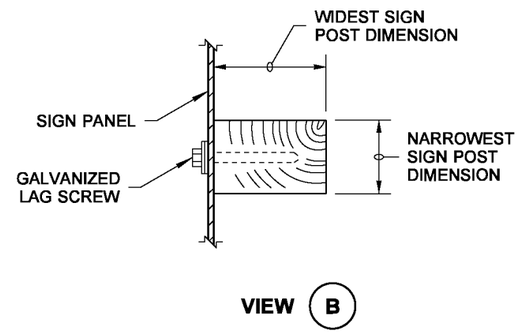

VIEW (B)

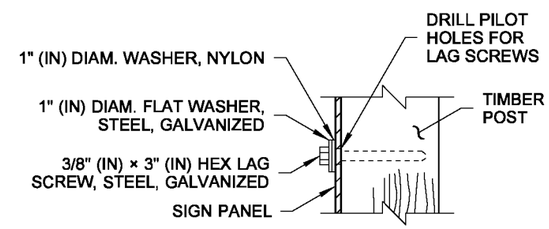

DETAIL (C)

NOTES

1. Notch is only required with multiple post installations.
2. 6×10, 8×10, and 6×12 Timber Sign Posts cannot be made breakaway and do not have holes or notches. These posts shall not be installed within the Design Clear Zone. They may be installed behind traffic barrier.
3. For "**X**", "**Y**", "**H1**", "**H2**", "**H3**", and "**H4**", refer to the Sign Specification Sheet in the Contract.
4. For 6×6 posts and larger, 7' (ft) minimum spacing is required between posts.
5. All materials shall meet the requirements of **Standard Specification 9-28**.

POST INSTALLATION TABLE

POST SIZE (NOM.)	DEPTH	HOLE DIAMETER	NOTCH DEPTH (SEE NOTE 1)
4×4	3' - 0"	NOT REQ'D	NOT REQ'D
4×6	4' - 0"	1 1/2"	1 1/2"
6×6	4' - 0"	2" SEE NOTES 3 & 4	2" SEE NOTES 3 & 4
6×8	5' - 0"	3" SEE NOTES 3 & 4	3" SEE NOTES 3 & 4
6×10	6' - 0"	SEE NOTE 2	SEE NOTE 2
8×10	6' - 0"	SEE NOTE 2	SEE NOTE 2
6×12	7' - 0"	SEE NOTE 2	SEE NOTE 2

Nisbet, John
Jun 11 2014 9:24 AM

TIMBER SIGN SUPPORT

STANDARD PLAN G-22.10-02

SHEET 1 OF 3 SHEETS

APPROVED FOR PUBLICATION
Bakotich, Pasco
Jun 17 2014 9:36 AM

STATE DESIGN ENGINEER

Washington State Department of Transportation

DRAWN BY: BILL BERENS

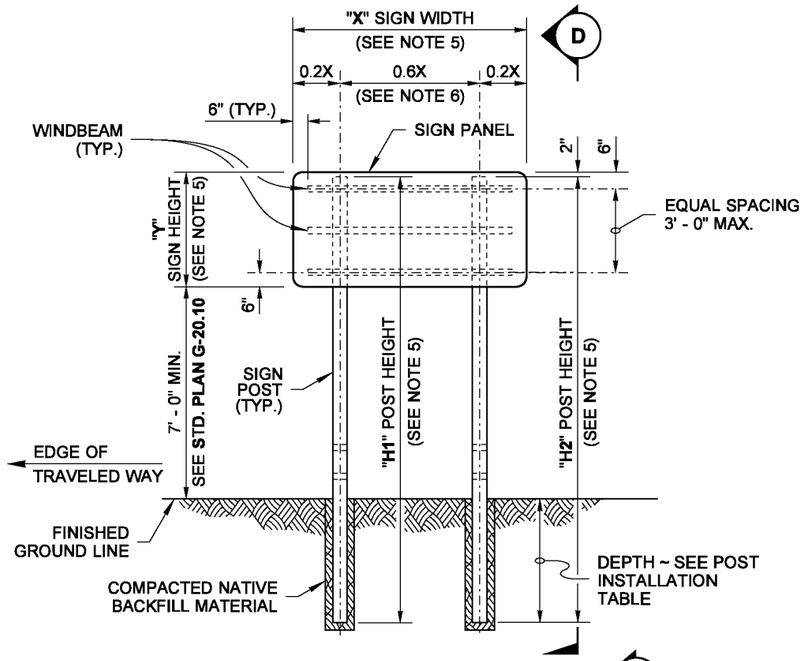

TWO-POST INSTALLATION

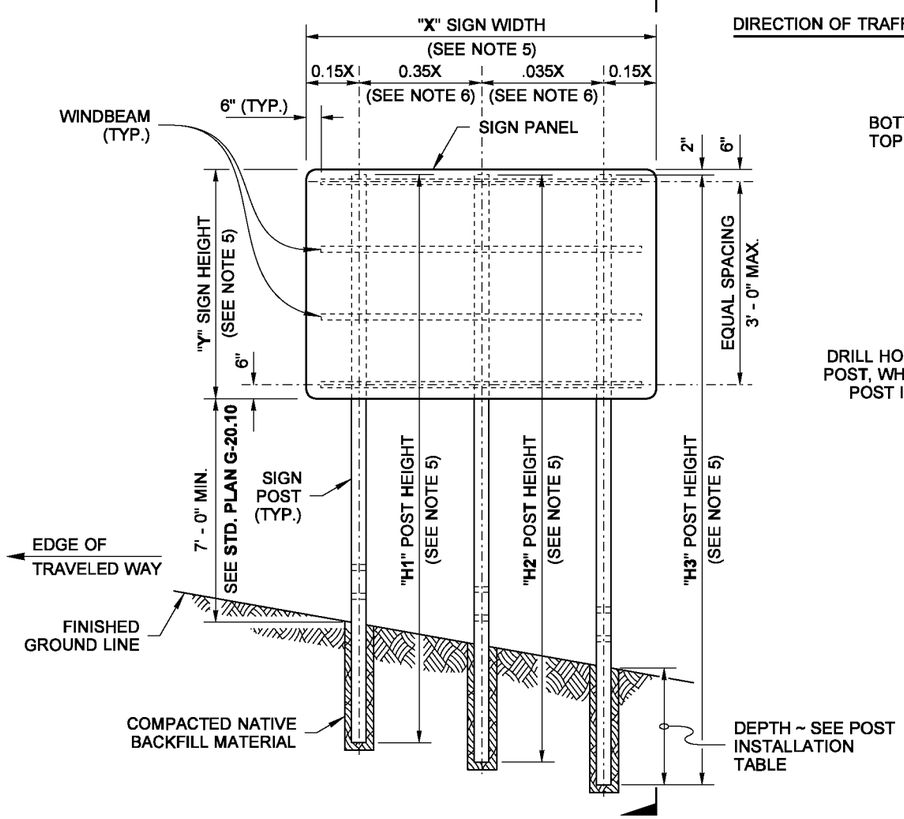

THREE-POST INSTALLATION

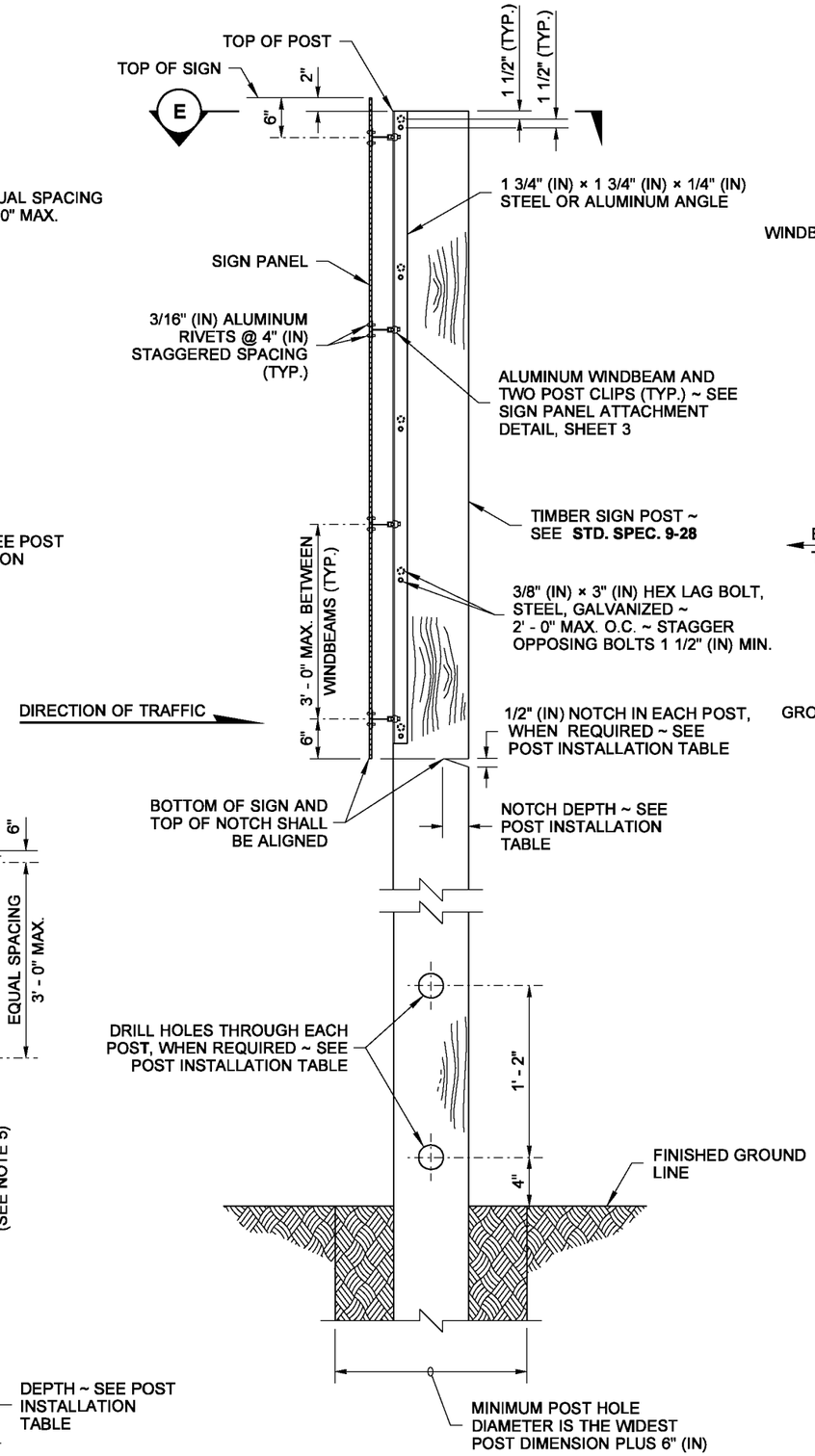

VIEW D

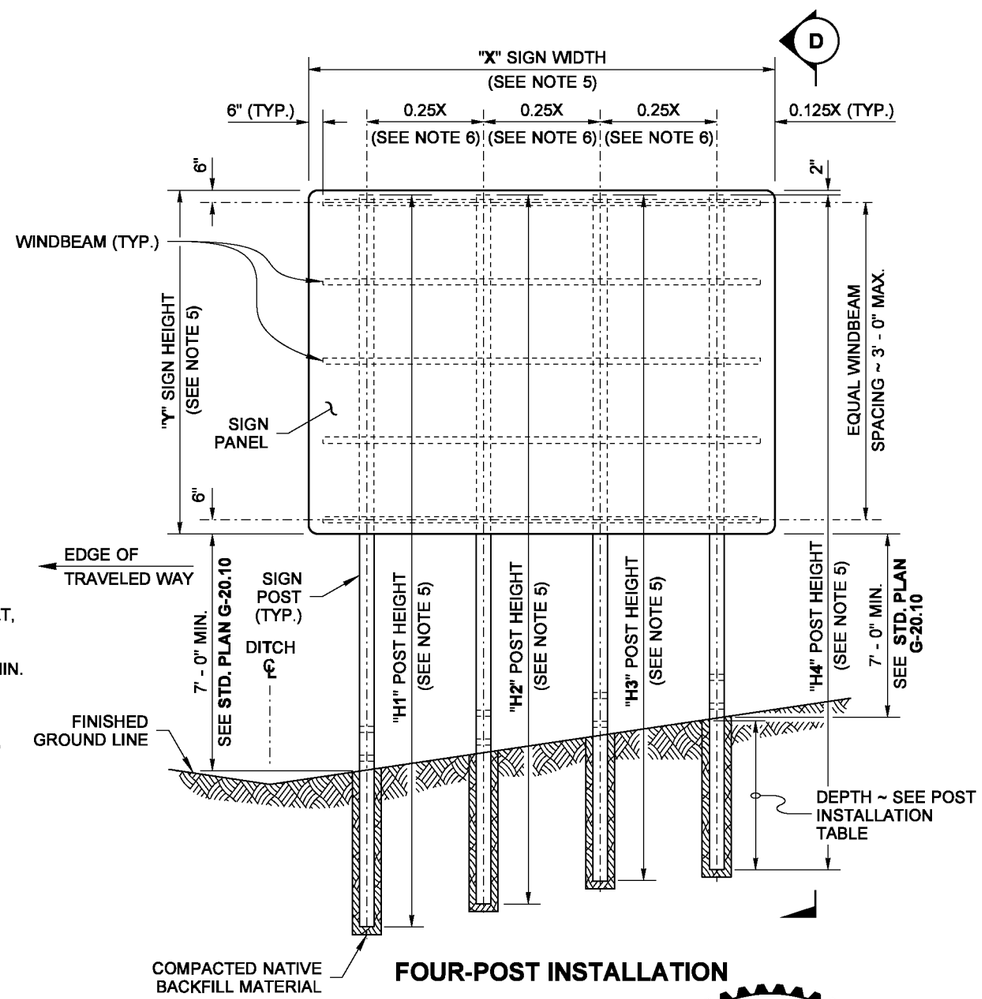

FOUR-POST INSTALLATION

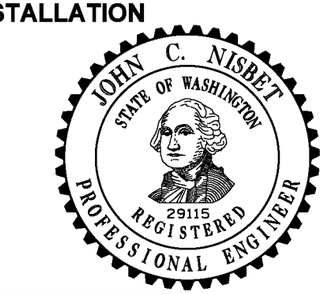

Nisbet, John
Jun 12 2014 7:38 AM

TIMBER SIGN SUPPORT

STANDARD PLAN G-22.10-02

SHEET 2 OF 3 SHEETS

APPROVED FOR PUBLICATION
Bakotich, Pasco
Jun 17 2014 9:36 AM
STATE DESIGN ENGINEER

Washington State Department of Transportation

DRAWN BY: BILL BERENS

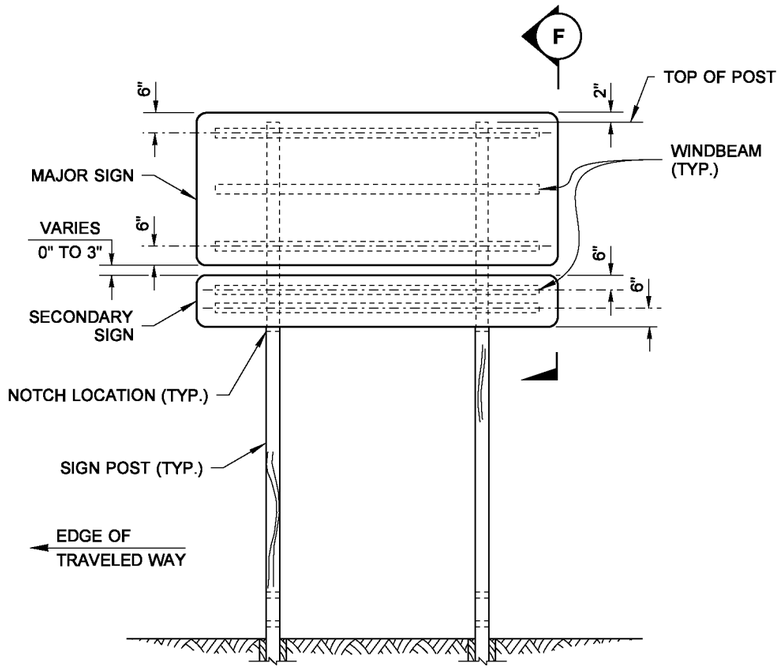

MAJOR AND SECONDARY SIGN INSTALLATION

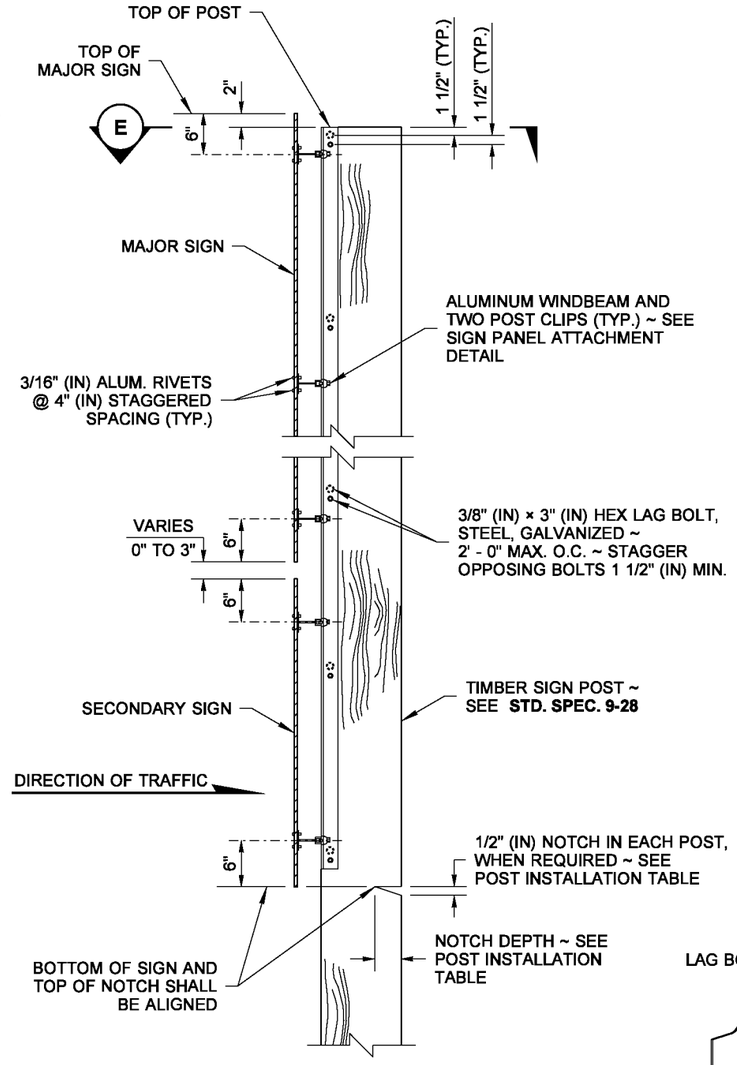

VIEW F

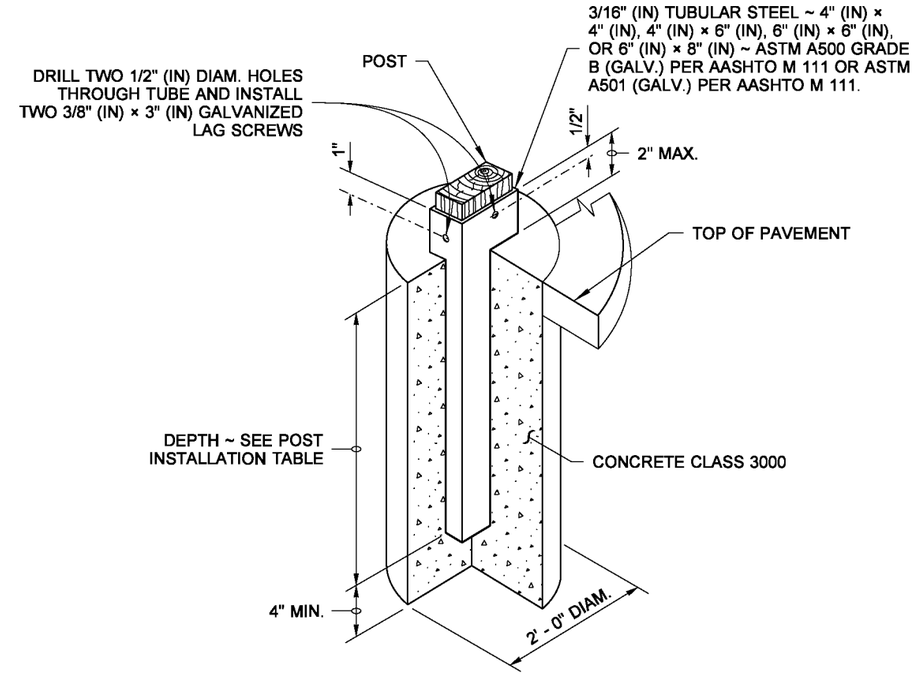

ISOMETRIC VIEW

CONCRETE FOUNDATION SLEEVE DETAIL

TO BE USED WHEN PLACING TIMBER POST IN A PAVED AREA

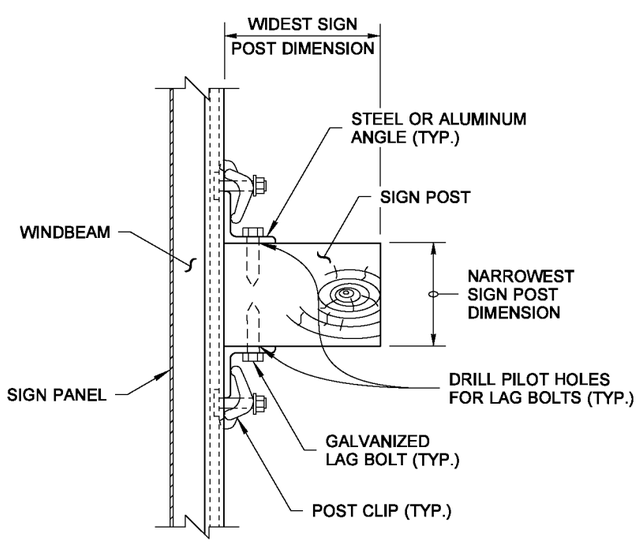

VIEW E

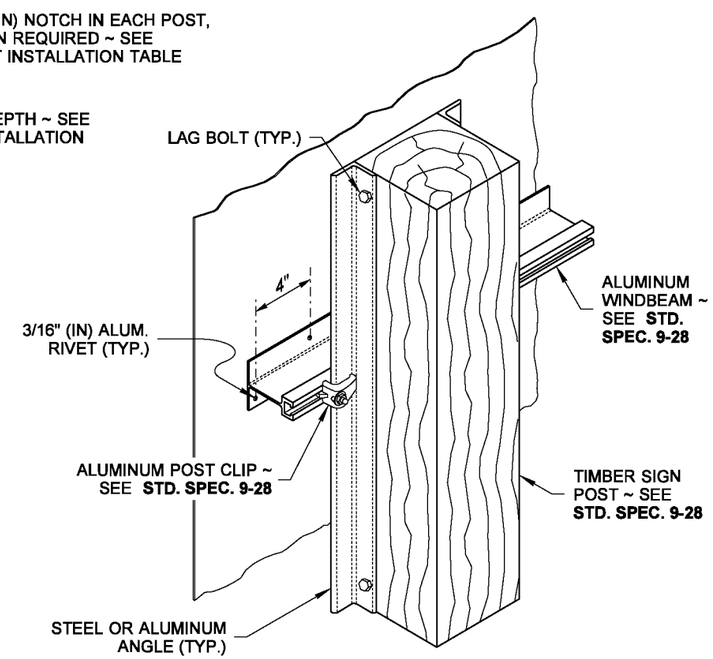

ISOMETRIC VIEW

SIGN PANEL ATTACHMENT DETAIL

JOHN C. NISBET
STATE OF WASHINGTON
29115
REGISTERED
PROFESSIONAL ENGINEER

Nisbet, John
Jun 12 2014 7:39 AM

TIMBER SIGN SUPPORT

STANDARD PLAN G-22.10-02

SHEET 3 OF 3 SHEETS

APPROVED FOR PUBLICATION

Bakotich, Pasco
Jun 17 2014 9:37 AM

STATE DESIGN ENGINEER

Washington State Department of Transportation