Washington State Department of Transportation

Publications Transmittal

Transmittal Number	Date
PT 16-048	August 1, 2016
Publication Title / Publication Number	
Standard Plans M 21-01 – August 1, 2016	
Originating Organization	
WSDOT Development Division, Standard Plans Unit	

Remarks and Instructions

The complete manual, can be accessed at
www.wsdot.wa.gov/publications/manuals/m21-01.htm.

Download the current electronic WSDOT *Standard Plans* and revision packages at:
http://www.wsdot.wa.gov/design/Standards

For updating printed manuals, page numbers indicating portions of the manual that are to be removed and replaced are shown below.

Instructions

- Replace Cover page with **new Cover page** provided.
- Remove **pages 3 ~ 13** from your current manual.
- Insert **pages 3 ~ 13**.
- Refer to the ***REMOVE & INSERT INSTRUCTIONS ~ Standard Plans Revision 8-1-2016***

Please contact **Bill Berens** at **360-705-7256** or mailto:berensb@wsdot.wa.gov with comments, questions, or suggestions for improvement to the manual.

To get the latest information, please sign up for email updates for individual publications at www.wsdot.wa.gov/publications/manuals/.

Washington State Department of Transportation
Development Division
PO Box 47329
Olympia, WA 98504-7329

John Donahue
Approved By

Signature

REMOVE AND INSERT INSTRUCTIONS - Standard Plans Revision 8-1-2016

REMOVE			*INSERT*			
Blank			Blank			
C-1	6/16/11	Sheet 1 of 2	C-1	7/12/16	Sheet 1 of 2	Revised
C-1	6/16/11	Sheet 2 of 2	C-1	7/12/16	Sheet 2 of 2	Revised
C-1a	7/14/15		C-1a	7/14/15		Reprinted
C-1b	7/14/15	Sheet 2 of 2	C-1b	7/14/15	Sheet 2 of 2	Reprinted
C-1c	5/30/97		C-1c	7/12/16		Revised
C-2j	6/12/98		C-2j	6/12/98		Reprinted
C-2k	7/27/01		C-2k	7/12/16		Revised
C-2n	7/27/01		C-2n	7/12/16		Revised
C-2o	7/13/01		C-2o	7/13/01		Reprinted
C-4b	6/8/06		C-4b	7/15/16		Revised
C-4e	10/23/14		C-4e	7/15/16		Revised
Blank			Blank			
C-6	5/30/97	Sheet 1 of 2	C-6	7/15/16	Sheet 1 of 2	Revised
C-6	5/30/97	Sheet 2 of 2	C-6	7/15/16	Sheet 2 of 2	Revised
C-6a	10/14/09		C-6a	10/14/09		Reprinted
C-6c	1/6/00		C-6c	7/15/16		Revised
C-6d	5/30/97		C-6d	7/15/16		Revised
C-6f	7/25/97		C-6f	7/15/16		Revised
C-7	6/16/11		C-7	6/16/11		Reprinted
C-8b	6/27/11	Sheet 1 of 2	C-8b	2/29/16	Sheet 1 of 2	Revised
C-8b	6/27/11	Sheet 2 of 2	C-8b	2/29/16	Sheet 2 of 2	Revised
Blank			Blank			
C-10	6/3/10	Sheet 1 of 2	C-10	7/15/16	Sheet 1 of 2	Revised
C-10	6/3/10	Sheet 2 of 2	C-10	7/15/16	Sheet 2 of 2	Revised
Blank			Blank			
C-22.14-03	6/11/14		C-22.14-04	7/15/16		Revised
C-22.16-05	7/14/15		C-22.16-05	7/14/15		Reprinted
C-22.40-04	10/23/14		C-22.40-05	7/15/16		Revised
C-22.41-01	10/23/14	Deleted	C-22.45-02	7/15/16		Revised
C-22.45-01	10/23/14					
Blank						
C-25.80-03	6/11/14		C-25.80-04	7/15/16		Revised
C-40.14-02	7/2/12		C-40.14-02	7/2/12		Reprinted
D-3.16-02	5/29/13		D-3.16-02	5/29/13		Reprinted
D-3.17-01	5/17/12		D-3.17-02	5/9/16		Revised
D-15.10-01	12/2/08	Sheet 2 of 2	D-15.10-01	12/2/08	Sheet 2 of 2	Reprinted
D-15.20-02	6/2/11	Sheet 1 of 2	D-15.20-03	5/9/16	Sheet 1 of 2	Revised
D-15.20-02	6/2/11	Sheet 2 of 2	D-15.20-03	6/1/16	Sheet 2 of 2	Revised
D-15.30-01	12/2/08	Sheet 1 of 2	D-15.30-01	12/2/08	Sheet 1 of 2	Reprinted
F-10.40-02	6/21/12		F-10.40-03	6/29/16		Revised
F-10.42-00	1/23/07		F-10.42-00	1/23/07		Reprinted
F-40.12-02	6/20/13		F-40.12-03	6/29/16		Revised
F-40.14-02	6/20/13		F-40.14-03	6/29/16		Revised
F-40.15-02	6/20/13		F-40.15-03	6/29/16		Revised
F-40.16-02	6/20/13		F-40.16-03	6/29/16		Revised
F-45.10-01	6/21/12		F-45.10-02	7/15/16		Revised
F-80.10-03	6/11/14	Sheet 1 of 2	F-80.10-04	7/15/16	Sheet 1 of 2	Revised
F-80.10-03	6/11/14	Sheet 2 of 2	F-80.10-04	7/18/16	Sheet 2 of 2	Revised
Blank			Blank			
G-24.30-01	2/7/12	Sheet 2 of 2	G-24.30-01	2/7/12	Sheet 2 of 2	Reprinted
G-24.40-05	6/23/15	Sheet 1 of 4	G-24.40-06	2/29/16	Sheet 1 of 4	Revised
G-24.40-05	6/23/15	Sheet 2 of 4	G-24.40-06	2/29/16	Sheet 2 of 4	Revised
G-24.40-05	6/23/15	Sheet 3 of 4	G-24.40-06	2/29/16	Sheet 3 of 4	Revised
G-24.40-05	6/23/15	Sheet 4 of 4	G-24.40-06	2/29/16	Sheet 4 of 4	Revised
G-24.50-03	6/17/14		G-24.50-03	6/17/14		Reprinted

REMOVE AND INSERT INSTRUCTIONS - Standard Plans Revision 8-1-2016

REMOVE			*INSERT*			
G-70.10-03	6/18/15	Sheet 4 of 4	G-70.10-03	6/18/15	Sheet 4 of 4	Reprinted
G-70.20-02	6/10/13		G-70.20-03	2/29/16		Revised
G-70.30-02	6/10/13		G-70.30-03	2/29/16		Revised
Blank			Blank			
G-90.10-01	5/11/11		G-90.10-02	4/28/16		Revised
G-90.20-03	7/10/15		G-90.11-00	4/28/16		New Plan
G-90.30-02	3/22/13		G-90.20-04	4/28/16		Revised
G-90.40-01	10/14/09		G-90.30-03	4/28/16		Revised
			G-90.40-02	4/28/16		Revised
			Blank			
I-60.20-01	6/10/13		I-60.20-01	6/10/13		Reprinted
I-80.10-01	8/11/09		I-80.10-02	7/15/16		Revised
J-10.18-00	6/3/15	Sheet 2 of 2	J-10.18-00	6/3/15	Sheet 2 of 2	Reprinted
J-10.20-00	6/3/15	Sheet 1 of 2	J-10.20-01	6/1/16	Sheet 1 of 5	Revised
J-10.20-00	6/3/15	Sheet 2 of 2	J-10.20-01	6/1/16	Sheet 2 of 5	Revised
J-10.21-00	6/3/15		J-10.20-01	6/1/16	Sheet 3 of 5	Revised
			J-10.20-01	6/1/16	Sheet 4 of 5	Revised
			J-10.20-01	6/1/16	Sheet 5 of 5	Revised
Blank			J-10.21-00	6/3/15		Reprinted
J-10.22-00	5/29/13	Sheet 1 of 2	J-10.22-00	5/29/13	Sheet 1 of 2	Reprinted
J-22.16-03	7/10/15		J-22.16-03	7/10/15		Reprinted
J-26.10-02	3/15/12		J-26.10-03	7/21/16		Revised
Blank			Blank			
J-27.10-00	3/15/12		J-27.10-01	7/21/16		Revised
J-28.43-00	6/11/14		J-28.43-00	6/11/14		Reprinted
J-28.45-02	6/11/14		J-28.45-03	7/21/16	Sheet 1 of 2	Revised
			J-28.45-03	7/21/16	Sheet 2 of 2	Revised
			Blank			
J-28.50-02	6/2/11		J-28.50-03	7/21/16		Revised
J-28.60-01	6/2/11		J-28.60-02	7/21/16		Revised
J-28.70-01	5/11/11		J-28.70-02	6/1/16		Revised
J-29.10-00	6/27/11		J-29.10-01	7/21/16		Revised
J-29.15-00	6/27/11	Sheet 1 of 2	J-29.15-01	7/21/16	Sheet 1 of 2	Revised
J-29.15-00	6/27/11	Sheet 2 of 2	J-29.15-01	7/21/16	Sheet 2 of 2	Revised
J-29.16-01	6/20/13		J-29.16-02	7/21/16		Revised
J-30.10-00	6/18/15	Sheet 1 of 2	J-30.10-00	6/18/15	Sheet 1 of 2	Reprinted
J-30.10-00	6/18/15	Sheet 2 of 2	J-30.10-00	6/18/15	Sheet 2 of 2	Reprinted
J-40.10-03	5/20/13	Sheet 1 of 2	Blank			
			J-40.05-00	7/21/16		New Plan
			J-40.10-04	4/28/16	Sheet 1 of 2	Revised
J-40.10-03	5/20/13	Sheet 2 of 2	J-40.10-04	4/28/16	Sheet 2 of 2	Revised
J-40.20-02	6/11/14	Sheet 1 of 2	J-40.20-03	4/28/16	Sheet 1 of 2	Revised
J-40.20-02	6/11/14	Sheet 2 of 2	J-40.20-03	4/28/16	Sheet 2 of 2	Revised
J-40.30-03	5/20/13	Sheet 1 of 2	J-40.30-04	4/28/16	Sheet 1 of 2	Revised
J-40.30-03	5/20/13	Sheet 2 of 2	J-40.30-04	4/28/16	Sheet 2 of 2	Revised
J-40.35-01	5/29/13	Sheet 1 of 3	J-40.35-01	5/29/13	Sheet 1 of 3	Reprinted
J-40.39-00	5/20/13		J-40.39-00	5/20/13		Reprinted
J-40.40-00	5/20/13		J-40.40-01	4/28/16		Revised
J-60.05-00	6/16/11	Sheet 1 of 4	J-60.05-01	7/21/16	Sheet 1 of 3	Revised
J-60.05-00	6/16/11	Sheet 2 of 4	J-60.05-01	7/21/16	Sheet 2 of 3	Revised
J-60.05-00	6/16/11	Sheet 3 of 4	J-60.05-01	7/21/16	Sheet 3 of 3	Revised
J-60.05-00	6/16/11	Sheet 4 of 4	J-60.11-00	5/20/13	Sheet 1 of 2	Reprinted
Blank						
J-60.11-00	5/20/13	Sheet 1 of 2				

REMOVE AND INSERT INSTRUCTIONS - Standard Plans Revision 8-1-2016

REMOVE			*INSERT*			
Blank			Blank			
J-75.40-01	6/11/14	Sheet 1 of 2	J-75.40-02	6/1/16	Sheet 1 of 2	Revised
J-75.40-01	6/11/14	Sheet 2 of 2	J-75.40-02	6/1/16	Sheet 2 of 2	Revised
J-75.41-00	6/11/14	Sheet 1 of 4	J-75.41-01	6/29/16	Sheet 1 of 4	Revised
J-75.41-00	6/11/14	Sheet 2 of 4	J-75.41-01	6/29/16	Sheet 2 of 4	Revised
J-75.41-00	6/11/14	Sheet 3 of 4	J-75.41-01	6/29/16	Sheet 3 of 4	Revised
J-75.41-00	6/11/14	Sheet 4 of 4	J-75.41-01	6/29/16	Sheet 4 of 4	Revised
J-75.45-01	6/11/14	Sheet 1 of 2	J-75.45-02	6/1/16	Sheet 1 of 2	Revised
J-75.45-01	6/11/14	Sheet 2 of 2	J-75.45-02	6/1/16	Sheet 2 of 2	Revised
J-90.10-01	6/27/11	Sheet 1 of 2	J-90.10-02	4/28/16	Sheet 1 of 2	Revised
J-90.10-01	6/27/11	Sheet 2 of 2	J-90.10-02	4/28/16	Sheet 2 of 2	Revised
J-90.20-01	6/27/11	Sheet 1 of 2	J-90.20-02	4/28/16	Sheet 1 of 2	Revised
J-90.20-01	6/27/11	Sheet 2 of 2	J-90.20-02	4/28/16	Sheet 2 of 2	Revised
J-90.21-00	6/30/14	Sheet 1 of 2	J-90.21-01	4/28/16	Sheet 1 of 2	Revised
J-90.21-00	6/30/14	Sheet 2 of 2	J-90.21-00	4/28/16	Sheet 2 of 2	Revised
Blank			Blank			
Blank			Blank			
K-70.20-00	2/15/07		K-70.20-01	6/1/16		Revised
K-80.10-00	2/21/07		K-80.10-01	6/1/16		Revised
K-80.20-00	12/20/06	Sheet 1 of 2	K-80.20-00	12/20/06	Sheet 1 of 2	Reprinted
Blank			Blank			
M-20.30-03	4/20/15	Sheet 1 of 2	M-20.30-04	2/29/16	Sheet 1 of 2	Revised
M-20.30-03	4/20/15	Sheet 2 of 2	M-20.30-04	2/29/16	Sheet 2 of 2	Revised
M-20.40-03	6/24/14	Sheet 1 of 2	M-20.40-03	6/24/14	Sheet 1 of 2	Reprinted

Washington State
Department of Transportation

Standard Plans

M 21-01

August 1, 2016

Engineering and Regional Operations
Development Division, Design Office

Americans with Disabilities Act (ADA) Information

Materials can be provided in alternative formats by calling the ADA Compliance Manager at 360-705-7097. Persons who are deaf or hard of hearing may contact that number via the Washington Relay Service at 7-1-1.

Title VI Notice to the Public

It is Washington State Department of Transportation (WSDOT) policy to ensure no person shall, on the grounds of race, color, national origin, or sex, as provided by Title VI of the Civil Rights Act of 1964, be excluded from participation in, be denied the benefits of, or be otherwise discriminated against under any of its federally funded programs and activities. Any person who believes his/her Title VI protection has been violated may file a complaint with WSDOT's Office of Equal Opportunity (OEO). For Title VI complaint forms and advice, please contact OEO's Title VI Coordinator at 360-705-7082 or 509-324-6018.

To get the latest information on WSDOT publications, sign up for individual email updates at www.wsdot.wa.gov/publications/manuals.

Washington State Department of Transportation
Engineering and Regional Operations
Development Division, Design Office
PO Box 47329
Olympia, WA 98504-7329

Email: designstandards@wsdot.wa.gov
www.wsdot.wa.gov/design/standards/plans.htm

Contents

Plan No.	Plan Title	Publication Approval Date	
Section A	**Roadway Construction**		
A-10.10-00	Survey Stakes	8/7/07	*2 Sheets*
A-10.20-00	Survey Monument Types 1 and 2	10/5/07	
A-10.30-00	Monument Case and Cover	10/5/07	
A-20.10-00	Slope Treatment	8/31/07	
A-30.10-00	Concrete Slope Protection	11/8/07	
A-30.30-01	Wire Mesh Slope Protection	6/16/11	
A-30.35-00	Slope Protection Anchors	10/12/07	
A-40.00-00	Dowel Bar Baskets	8/11/09	
A-40.10-03	Cement Concrete Pavement Joints	12/23/14	
A-40.15-00	PCC Pavement Isolation Joints	8/11/09	*2 Sheets*
A-40.20-03	Bridge Paving Joint Seals	12/23/14	
A-40.50-02	Bridge Approach Slab	12/23/14	*2 Sheets*
A-50.10-00	Embankment Widening at Bridge End with Wing Wall	11/17/08	*2 Sheets*
A-50.20-01	Embankment Widening at Bridge End with Curtain Wall	9/22/09	*2 Sheets*
A-50.30-00	Embankment Widening at Bridge End with "L" Shaped Abutment	11/17/08	*2 Sheets*
A-50.40-00	Embankment Widening at Bridge End with Sidewalk	11/17/08	
A-60.10-03	Cement Concrete Pavement Rehabilitation	12/23/14	*2 Sheets*
A-60.20-03	Dowel Bar Retrofit for Cement Concrete Pavement	12/23/14	*2 Sheets*
A-60.30-00	Bridge Deck Transition for HMA Overlay	11/8/07	
A-60.40-00	HMA Overlay Further Deck Preparation	8/31/07	
Section B	**Drainage Structures and Hydraulics**		
B-5.20-01	Catch Basin Type 1	6/16/11	
B-5.40-01	Catch Basin Type 1L	6/16/11	
B-5.60-01	Catch Basin Type 1P (for Parking Lot)	6/16/11	
B-10.20-01	Catch Basin Type 2	2/7/12	
B-10.40-00	Catch Basin Type 2 with Flow Restrictor	6/1/06	
B-10.60-00	Catch Basin Type 2 with Baffle Type Flow Restrictor	6/8/06	
B-15.20-01	Manhole Type 1	2/7/12	
B-15.40-01	Manhole Type 2	2/7/12	
B-15.60-01	Manhole Type 3	2/7/12	
B-20.20-02	Drywell Type 1 (for Swale)	3/16/12	
B-20.40-03	Drywell Type 2 (with Pipe Inlet)	3/16/12	
B-20.60-03	Drywell Type 3 (with At-Grade Inlet)	3/15/12	
B-25.20-01	Combination Inlet	3/15/12	
B-25.60-00	Concrete Inlet	6/1/06	
B-30.10-01	Rectangular Frame (Reversible)	4/26/12	
B-30.20-02	Rectangular Solid Metal Cover	4/26/12	
B-30.30-01	Rectangular Vaned Grate	4/26/12	
B-30.40-01	Rectangular Bi-Directional Vaned Grate	4/26/12	
B-30.50-01	Rectangular Herringbone Grate	4/26/12	
B-30.70-03	Circular Frame (Ring) and Cover	4/26/12	
B-30.80-00	Circular Grate	6/8/06	
B-30.90-01	Miscellaneous Details for Drainage Structures	9/20/07	
B-35.20-00	Grate Inlet Type 1 (Cast-In-Place)	6/8/06	
B-35.40-00	Grate Inlet Type 2	6/8/06	*2 Sheets*
B-40.20-00	Welded Grates for Grate Inlet	6/1/06	

Contents

Plan No.	Plan Title	Publication Approval Date
B-40.40-01	Frame and Dual Vaned Grates for Grate Inlet	6/16/10
B-45.20-00	Drop Inlet Type 1	6/1/06
B-45.40-00	Drop Inlet Type 2	6/1/06
B-50.20-00	Grates for Drop Inlet	6/1/06
B-55.20-00	Pipe Zone Bedding and Backfill	6/1/06
B-60.20-00	Connection Details for Dissimilar Culvert Pipe	6/8/06
B-60.40-00	Coupling Bands for Corrugated Metal Pipe	6/1/06
B-65.20-01	Animal Underpass	4/26/12
B-65.40-00	Equipment Underpass	6/1/06
B-70.20-00	Beveled End Sections (for Culverts 30" Diameter or Less)	6/1/06
B-70.60-00	Flared End Sections	6/1/06
B-75.20-01	Headwalls for Culvert Pipe and Underpass	6/10/08
B-75.50-01	Type 1 Safety Bars for Stepped Culvert Pipe or Pipe Arch	6/10/08
B-75.60-00	Type 2 Safety Bars for Culvert Pipe or Pipe Arch (On Cross Road)	6/8/06
B-80.20-00	Tapered End Section with Type 3 Safety Bars	6/8/06
B-80.40-00	Tapered End Section with Type 4 Safety Bars (On Cross Road)	6/1/06
B-82.20-00	Residential Storm Drain, Under Sidewalk	6/1/06
B-85.10-01	Vertical Connection (for Sanitary Sewer Use)	6/10/08
B-85.20-00	Side Sewer Connection (for Sanitary Sewer Use)	6/1/06
B-85.30-00	Standing Side Sewer Connection (for Sanitary Sewer Use)	6/1/06
B-85.40-00	8 Inch Sewer Clean-Out (for Sanitary Sewer Use)	6/8/06
B-85.50-01	Drop Connections (for Sanitary Sewer Use)	6/10/08
B-90.10-00	Hydrant Setting Types A and B	6/8/06
B-90.20-00	2 Inch Blowoff Assembly	6/8/06
B-90.30-00	Combination Air Release / Air Vacuum Valve Assembly	6/8/06
B-90.40-00	Concrete Thrust Block	6/8/06
B-90.50-00	Concrete Thrust Block for Convex Vertical Bends	6/8/06
B-95.20-01	Median Barrier Drainage Installation	2/3/09
B-95.40-00	Inlet Placement at Bridge End	6/8/06

Section C Traffic Barrier

C-1	Beam Guardrail Types 1 - 4 (W-Beam)	7/12/16	*2 Sheets*
C-1a	Beam Guardrail (Thrie Beam)	7/14/15	
C-1b	Beam Guardrail Posts and Blocks	7/14/15	*2 Sheets*
C-1c	Beam Guardrail	7/12/16	
C-1d	Thrie Beam Guardrail Reducer Section	10/31/03	
C-2	Guardrail Placement (Cases 1, 2 & 3)	1/6/00	
C-2a	Guardrail Placement (Cases 4, 5 & 6)	6/21/06	
C-2b	Guardrail Placement (Cases 7 & 8)	6/21/06	
C-2c	Guardrail Placement Median Bull Nose (Cases 9A, 9B & 9C)	6/21/06	
C-2d	Guardrail Placement (Cases 10A, 10B & 10C)	6/21/06	
C-2e	Guardrail Placement (Cases 11A, 11B & 11C)	6/21/06	
C-2f	Guardrail Placement Weak Post Intersection Design (8' - 6" Max. Radius) (Cases 12AC, 12AD, 12BC & 12BD)	3/14/97	

Contents

Plan No.	Plan Title	Publication Approval Date	
C-2g	Guardrail Placement Weak Post Intersection Design (35' Max. Radius) (Cases 13AC, 13AD, 13BC & 13BD)	7/27/01	
C-2h	Guardrail Placement (Case 14)	3/28/97	
C-2i	Guardrail Placement (Case 15)	3/28/97	
C-2j	Guardrail Placement (Cases 16, 17 & 18)	6/12/98	
C-2k	Guardrail Placement 12' - 6" Span (Cases 19A & 19B)	7/12/16	
C-2n	Guardrail Placement 18' - 9" Span (Case 20)	7/12/16	
C-2o	Guardrail Placement 25' Span (Case 21)	7/13/01	
C-2p	Guardrail Placement Strong Post Intersection Design (Cases 22AC, 22AD, 22BC & 22BD)	10/31/03	
C-3	Beam Guardrail Transition Sections (Types 1, 1A, & 1B)	7/2/12	
C-3a	Beam Guardrail Transition Sections (Types 2, 4, 5, & 6)	10/4/05	
C-3b	Beam Guardrail Transition Sections (Types 10 ~ 15)	6/27/11	*2 Sheets*
C-3c	Beam Guardrail Transition Sections (Types 16, 17, & 18)	6/27/11	
C-4b	Beam Guardrail Flared Terminal	7/15/16	
C-4e	Beam Guardrail Non-Flared Terminal	7/15/16	
C-4f	Beam Guardrail Bull Nose Terminal	7/2/12	*4 Sheets*
C-6	Beam Guardrail Anchor Type 1	7/15/16	*2 Sheets*
C-6a	Beam Guardrail Anchor Type 2	10/14/09	
C-6c	Beam Guardrail Anchor Type 4	7/15/16	
C-6d	Beam Guardrail Anchor Type 5	7/15/16	
C-6f	Beam Guardrail Anchor Type 7	7/15/16	
C-7	Beam Guardrail End Sections	6/16/11	
C-7a	Thrie Beam End Sections	6/16/11	
C-8	Concrete Barrier Type 2	2/10/09	*2 Sheets*
C-8a	Concrete Barrier Type 4 and Transition Section	7/25/97	
C-8b	Concrete Barrier Light Standard Section	2/29/16	2 Sheets
C-8e	Precast Concrete Barrier Anchor ~ Type 3 (Permanent)	2/21/07	
C-8f	Concrete Barrier Transition Type 2 to Bridge F-Shape	6/30/04	
C-10	Box Culvert Guardrail Steel Post	7/15/16	*2 Sheets*
C-16a	Traffic Barrier Shoulder Widening ~ for Shoulders 8.0' and Wider	6/3/10	
C-16b	Traffic Barrier Shoulder Widening ~ for Shoulders Less Than 8.0' Wide	6/3/10	
C-20.10-03	Beam Guardrail Type 31	7/14/15	
C-20.14-03	Beam Guardrail Type 31 Placement (Cases 1-31, 2-31 & 3-31)	6/11/14	
C-20.15-02	Beam Guardrail Type 31 Placement (Cases 4-31 & 5-31)	6/11/14	
C-20.18-02	Beam Guardrail Type 31 Placement (Cases 10A-31, 10B-31 & 10C-31)	6/11/14	
C-20.19-02	Beam Guardrail Type 31 Placement (Cases 11A-31, 11B-31 & 11C-31)	6/11/14	
C-20.40-05	Beam Guardrail Type 31 Placement 12' - 6", 18' - 9", or 25' - 0" Span	7/14/15	
C-20.41-01	Box Culvert Guardrail Steel Post ~ Type 31	7/14/15	
C-20.42-05	Guardrail Placement Strong Post ~ Type 31 Intersection Design	7/14/15	
C-20.45-01	Beam Guardrail Type 31 - DS (Double sided) (W-Beam)	7/2/12	

Contents

Plan No.	Plan Title	Publication Approval Date	
C-22.14-04	Beam Guardrail Type 1 ~ Buried Terminal Type 2	7/15/16	
C-22.16-05	Beam Guardrail Type 31 ~ Buried Terminal Type 2	7/14/15	
C-22.40-05	Beam Guardrail Type 31 Non-Flared Terminal (All Posted Speeds)	7/15/16	
C-22.45-02	Beam Guardrail Type 31 Non-Flared Terminal Steel Posts (Posted Speed - 40 MPH and Below)	7/15/16	
C-23.60-03	Beam Guardrail (Type 31) Anchor Type 10	6/11/14	
C-24.10-01	Guardrail Connection to Bridge Rail or Concrete Barrier	6/11/14	
C-25.18-05	Beam Guardrail (Type 31) Transition Section Type 20	7/14/15	
C-25.20-06	Beam Guardrail (Type 31) Transition Section Type 21	7/14/15	
C-25.22-05	Beam Guardrail (Type 31) Transition Section Type 22	7/14/15	
C-25.26-03	Beam Guardrail (Type 31) Transition Section Type 23	7/14/15	
C-25.80-04	Beam Guardrail Type 31 to Beam Guardrail Type 1 Adaptor	7/15/16	
C-40.14-02	Barrier Placement Cable to Thrie Beam Bull Nose Connection	7/2/12	
C-40.16-02	Barrier Placement ~ Cable to W-Beam Shielding for Redirectional Landform	7/2/12	
C-40.18-02	Barrier Placement ~ Cable Barrier Shielding for Redirectional Landform	7/2/12	
C-70.10-01	Single-Slope Concrete Barrier (Precast)	6/17/14	*3 Sheets*
C-75.10-01	Single-Slope Concrete Barrier (Precast)Transition Section	6/11/14	
C-75.20-01	Single-Slope Concrete Barrier (Precast) Vertical Back	6/11/14	
C-75.30-01	Single-Slope Concrete Barrier (Precast) Terminal	6/11/14	
C-80.10-01	Single-Slope Concrete Barrier (Cast-in-Place) Dual-Faced	6/11/14	*3 Sheets*
C-80.20-01	Single-Slope Concrete Barrier (Cast-in-Place) Terminal	6/11/14	
C-80.30-01	Single-Slope Concrete Barrier (Cast-in-Place) Transition Section	6/11/14	
C-80.40-01	Single-Slope Concrete Barrier (Cast-in-Place) Vertical Back	6/11/14	
C-80.50-00	Concrete Barrier Transition Type 2 to Single-Slope	4/18/12	
C-85.10-00	Single-Slope Concrete Barrier Placement (Split)	4/18/12	
C-85.11-00	Single-Slope Concrete Barrier Placement (Wrap)	4/18/12	
C-85.14-01	Single-Slope Concrete Barrier Light Standard Foundation	6/11/14	
C-85.15-01	Single-Slope Concrete Barrier (42") Light Standard Foundation	6/30/14	
C-85.16-01	Single-Slope Concrete Barrier Sign Bridge Foundation	6/17/14	*2 Sheets*
C-85.18-01	Single-Slope Concrete Barrier Transition for Monotube Sign Support	6/11/14	
C-85.20-01	Single-Slope Concrete Barrier Cantilever Sign Structure Foundation	6/11/14	*2 Sheets*
C-90.10-00	Impact Attenuator Inertial Barrier Configurations	7/3/08	

Plan No.	Plan Title	Publication Approval Date	
Section D	**Retaining, Noise Barrier, and Geosynthetic Walls**		
D-2.04-00	Noise Barrier Wall Type 2 (CIP Wall on Spread Footing)	11/10/05	*2 Sheets*
D-2.06-01	Noise Barrier Wall Type 3 (…on Offset Spread Footing)	1/6/09	*2 Sheets*
D-2.08-00	Noise Barrier Wall Type 4 (…on Shaft Foundation)	11/10/05	*2 Sheets*
D-2.14-00	Noise Barrier Wall Type 6 (…w/Traffic Barrier on Spread Footing)	11/10/05	
D-2.16-00	Noise Barrier Wall Type 6SS (…w/S. S. Traffic Barrier on Spread Footing)	11/10/05	
D-2.18-00	Noise Barrier Wall Type 7 (…w/Traffic Barrier on Shaft Foundation)	11/10/05	
D-2.20-00	Noise Barrier Wall Type 7SS (…w/S.S. Traffic Barrier on Shaft Foundation)	11/10/05	
D-2.32-00	Noise Barrier Wall Type 9 (Precast Wall on Spread Footing)	11/10/05	*2 Sheets*
D-2.34-01	Noise Barrier Wall Type 10 (…on Offset Spread Footing)	1/6/09	*2 Sheets*
D-2.36-03	Noise Barrier Wall Type 11 (...on Shaft Foundation)	6/11/14	*3 Sheets*
D-2.42-00	Noise Barrier Wall Type 13 (...w/Traffic Barrier on Spread Footing)	11/10/05	
D-2.44-00	Noise Barrier Wall Type 13SS (…w/S. S. Traffic Barrier on Spread Footing)	11/10/05	
D-2.46-01	Noise Barrier Wall Type 14 (…w/Traffic Barrier on Shaft Foundation) (Precast Conc. w/ Traffic Barrier on Shaft Foundation)	6/11/14	*3 Sheets*
D-2.48-00	Noise Barrier Wall Type 14SS (…w/S. S. Traffic Barrier on Shaft Foundation)(Precast Conc. w/ Single Slope Traffic Barrier on Shaft Fdn.)	11/10/05	*2 Sheets*
D-2.60-00	Noise Barrier Wall Type 16 (Masonry on Trench Footing)	11/10/05	*2 Sheets*
D-2-62-00	Noise Barrier Wall Type 17 (Masonry on Spread Footing)	11/10/05	*2 Sheets*
D-2.64-01	Noise Barrier Wall Type 18 (Masonry on Offset Spread Footing)	1/6/09	*2 Sheets*
D-2.66-00	Noise Barrier Wall Type 19 (…on Shaft w/Grade Beam Foundation)(Masonry on Shaft with Grade Beam Foundation)	11/10/05	*2 Sheets*
D-2.68-00	Noise Barrier Wall Type 20 (Masonry on Shaft Foundation)	11/10/05	*2 Sheets*
D-2.80-00	Noise Barrier Wall Access Door Type 1 (for CIP Wall on Offset Spread Footing)	11/10/05	
D-2.82-00	Noise Barrier Wall Access Door Type 2 (…w/Traffic Barrier)	11/10/05	*2 Sheets*
D-2.84-00	Noise Barrier Wall Access Door Type 3 (for Precast Wall on Shaft Foundation)	11/10/05	
D-2.86-00	Noise Barrier Wall Access Door Type 4 (…w/Traffic Barrier on Shaft Foundation)	11/10/05	*2 Sheets*
D-2.88-00	Noise Barrier Wall Access Door Type 5 (for Masonry Wall)	11/10/05	
D-2.92-00	Noise Barrier Wall Access Door & Frame	11/10/05	*2 Sheets*
D-3.09-00	Permanent Geosynthetic Wall	5/17/12	*4 Sheets*
D-3.10-01	Cast-In-Place Permanent Geosynthetic Wall Fascia and Facing	5/29/13	
D-3.11-03	Precast Permanent Geosynthetic Wall Fascia	6/11/14	*2 Sheets*
D-3.15-02	Permanent Geosynthetic Wall Single Slope Barrier	6/10/13	
D-3.16-02	Permanent Geosynthetic Wall F-Shape Barrier	5/29/13	
D-3.17-02	Permanent Geosynthetic Wall Expansion Joint Details	5/9/16	
D-4	Backfill and Drainage for Retaining Walls	12/11/98	

Contents

Plan No.	Plan Title	Publication Approval Date	
D-6	Gabions	6/19/98	
D-10.10-01	Reinforced Concrete Retaining Wall Type 1 and 1SW	12/2/08	*2 Sheets*
D-10.15-01	Reinforced Concrete Retaining Wall Type 2 and 2SW	12/2/08	*2 Sheets*
D-10.20-00	Reinforced Concrete Retaining Wall Type 3 and 3SW	7/8/08	*2 Sheets*
D-10.25-00	Reinforced Concrete Retaining Wall Type 4 and 4SW	7/8/08	*2 Sheets*
D-10.30-00	Reinforced Concrete Retaining Wall Type 5	7/8/08	*2 Sheets*
D-10.35-00	Reinforced Concrete Retaining Wall Type 6	7/8/08	*2 Sheets*
D-10.40-01	Reinforced Concrete Retaining Wall Type 7	12/2/08	*2 Sheets*
D-10.45-01	Reinforced Concrete Retaining Wall Type 8	12/2/08	*2 Sheets*
D-15.10-01	Traffic Barrier Details for Reinf. Conc. Retaining Walls	12/2/08	*2 Sheets*
D-15.20-03	Traffic Barrier Details for Reinf. Conc. Retaining Walls	5/9/16	*2 Sheets*
D-15.30-01	Traffic Barrier Details for Reinf. Conc. Retaining Walls	12/2/08	*2 Sheets*

Section E Bridges and Trestles

E-1	Date Numeral Placement on Bridge Traffic Barrier	2/21/07	
E-2	Pile or Frame Detour Bridge with Asphalt Overlay	5/29/98	*2 Sheets*
E-4	Precast Prestressed Concrete Piles	8/27/03	
E-4a	Precast Prestressed Concrete Piles Handling & Capping	8/27/03	

Section F Curbs, Sidewalks, and Driveways

F-10.12-03	Cement Concrete Curbs	6/11/14	
F-10.16-00	Cement Concrete Curb and Gutter Pan	12/20/06	
F-10.18-00	Roundabout Cement Concrete Curbs	6/27/11	
F-10.40-03	Extruded Curb Placement	6/29/16	
F-10.42-00	Extruded Curb	1/23/07	
F-10.62-02	Precast Sloped Mountable Curb	4/22/14	*2 Sheets*
F-10.64-03	Precast Dual Faced Sloped Mountable Curb	4/22/14	
F-30.10-03	Cement Concrete Sidewalk	6/11/14	
F-40.12-03	Parallel Curb Ramp	6/29/16	
F-40.14-03	Combination Curb Ramp	6/29/16	
F-40.15-03	Perpendicular Curb Ramp	6/29/16	
F-40.16-03	Single Direction Curb Ramp	6/29/16	
F-45.10-02	Detectable Warning Surface	7/15/16	
F-80.10-04	Cement Concrete Driveway Entrance Types 1, 2, 3, & 4	7/15/16	*2 Sheets*

Section G Signs and Sign Supports

G-10.10-00	Milepost	9/20/07	
G-20.10-02	Ground-Mounted Sign Placement	6/23/15	
G-22.10-03	Timber Sign Support	7/10/15	*3 Sheets*
G-24.10-00	Steel Sign Support Type AP Installation Details	11/8/07	
G-24.20-01	Steel Sign Support Type AS Installation Details	2/7/12	
G-24.30-01	Steel Sign Support Types PL, PL-T, & PL-U Inst. Det.	2/7/12	*2 Sheets*
G-24.40-06	Steel Sign Support Types SB-1, SB-2 & SB-3 Installation Details	2/29/16	*4 Sheets*
G-24.50-03	Steel Sign Support Types ST-1 - ST-4 Installation Details	6/17/14	
G-24.60-04	Steel Sign Support Types TP-A and TP-B Installation Details	6/23/15	*2 Sheets*

Plan No.	Plan Title	Publication Approval Date	
G-25.10-04	Steel Sign Support Foundation Details	6/10/13	
G-30.10-04	Sign Installation on Signal and Light Standards	6/23/15	*2 Sheets*
G-50.10-02	Sign Bracing	6/23/15	*2 Sheets*
G-60.10-03	Cantilever Sign Structure (Truss-Type)	6/18/15	*4 Sheets*
G-60.20-02	Cantilever Sign Structure (Truss-Type) Foundation Type 1	6/18/15	*2 Sheets*
G-60.30-02	Cantilever Sign Structure (Truss-Type) Fdn. Types 2 & 3	6/18/15	*2 Sheets*
G-70.10-03	Sign Bridge (Truss-Type)	6/18/15	*4 Sheets*
G-70.20-03	Sign Bridge (Truss-Type) Foundation Type1	2/29/16	
G-70.30-03	Sign Bridge (Truss-Type) Foundation Types 2 & 3	2/29/16	
G-90.10-02	Overhead Sign Bracing and Mounting	4/28/16	
G-90.11-00	Overhead Sign Lighting Bracing and Placement	4/28/16	
G-90.20-04	Overhead Sign Mounting (Monotube Structure)	4/28/16	
G-90.30-03	Overhead Sign Mounting (Truss Structure)	4/28/16	
G-90.40-02	Overhead Sign Lighting Details	4/28/16	
G-95.10-01	Maintenance Walkway for Sign Bridges	6/2/11	*3 Sheets*
G-95.20-02	Maintenance Walkway Mounting for Monotube Sign Bridge	6/2/11	*3 Sheets*
G-95.30-02	Maintenance Walkway Mounting for Truss-Type Sign Bridge	6/2/11	*2 Sheets*

Section H Roadside and Site Development

H-10.10-00	Tree and Shrub Planting Details	7/3/08	
H-10.15-00	Live Stake Installations	7/3/08	
H-30.10-00	Crest Gage	10/12/07	
H-32.10-00	Automated Ground Water Monitoring Well	9/20/07	
H-60.10-01	Bollard Type 1	7/3/08	
H-60.20-01	Bollard Type 2	7/3/08	
H-70.10-01	Mailbox Support Type 1	2/7/12	*2 Sheets*
H-70.20-01	Mailbox Support Type 2	2/16/12	*2 Sheets*
H-70.30-02	Mailbox Support Type 3	2/7/12	*2 Sheets*

Section I Site Preservation and Erosion Control

I-10.10-01	High Visibility Fence	8/11/09	
I-30.10-02	Silt Fence with Backup Support	3/22/13	
I-30.15-02	Silt Fence	3/22/13	
I-30.16-00	High Visibility Silt Fence with Backup Support	3/22/13	
I-30.17-00	High Visibility Silt Fence	3/22/13	
I-30.20-00	Erosion Control At Culvert Ends	9/20/07	
I-30.30-01	Wattle Installation On Slope	6/10/13	
I-30.40-01	Compost Sock	6/10/13	
I-30.60-00	Erosion Control Details Coir Log Placement	5/29/13	
I-40.10-00	Temporary Silt Fence for Inlet Protection In Unpaved Areas	9/20/07	
I-40.20-00	Storm Drain Inlet Protection	9/20/07	
I-50.20-01	Check Dams on Channels	6/10/13	
I-60.10-01	Biodegradable Erosion Control Blanket Placement for Slopes	6/10/13	
I-60.20-01	Biodegradable Erosion Control Blanket Placement for Ditches	6/10/13	
I-80.10-02	Miscellaneous Erosion Control Details	7/15/16	

Contents

Plan No.	Plan Title	Publication Approval Date	
Section J	**Illumination, Signals, and ITS**		
J-10	Electrical Conduit Placement	7/18/97	
J-10.10-03	Cabinet Orientation, Conduit Layout and Foundation Detail	6/3/15	*6 Sheets*
J-10.15-01	Cabinet Enclosure on Slope	6/11/14	
J-10.16-00	Service Cabinet Type A (0 - 60 Amp Type 120 Volt Single Phase)	6/3/15	*2 Sheets*
J-10.17-00	Service Cabinet Type B (0 - 60 Amp Type 120/240 Volt Single Phase)	6/3/15	*2 Sheets*
J-10.18-00	Service Cabinet Type C (0 - 60 Amp Type 240/480 Volt Single Phase)	6/3/15	*2 Sheets*
J-10.20-01	Service Cabinet Type B Modified (0 - 200 Amp Type 120/240 Single Phase)	6/1/16	*5 Sheets*
J-10.21-00	Service Cabinet Type D (0 - 200 Amp Type 120/240 Single Phase)	6/3/15	
J-10.22-00	Service Cabinet Type E (0 - 200 Amp Type 240/480 Single Phase)	5/29/13	*2 Sheets*
J-15.10-01	Timber Light Standard	6/11/14	
J-15.15-02	Span Wire Installation	7/10/15	
J-20.10-03	Accessible Pedestrian PushButton Post (PPB) and Foundation	6/30/14	
J-20.11-02	Accessible Pedestrian PushButton with Curb Base	6/30/14	*2 Sheets*
J-20.15-03	Accessible Breakaway Pedestrian PushButton (PPB) Post	6/30/14	
J-20.16-02	Pedestrian Signal Standard (Type PS) Details	6/30/14	
J-20.20-02	Pedestrian Signal Standard (Type PS) Electrical Details	5/20/13	
J-20.26-01	Accessible Pedestrian PushButton (PPB) Details	7/12/12	*2 Sheets*
J-21.10-04	Type PS, Type 1, RM & FB Signal Standard Foundation Details	6/30/14	*2 Sheets*
J-21.15-01	Type 1 Signal Standard Details	6/10/13	
J-21.16-01	Flashing Beacon Type 1 Signal Standard Details	6/10/13	
J-21.17-01	Flashing Beacon Type 1 Signal Standard Electrical Details	6/10/13	
J-21.20-01	Type 1 Signal Standard Electrical Details	6/10/13	
J-22.15-02	Ramp Meter Signal Standard Details	7/10/15	*3 Sheets*
J-22.16-03	Ramp Meter Signal Standard Electrical Details	7/10/15	
J-26.10-03	Traffic Signal Standard Foundation	7/21/16	
J-26.15-01	Signal Standard Foundation Placements	5/17/12	*3 Sheets*
J-26.20-00	Temporary Signal Standard Adaptor	6/11/14	*5 Sheets*
J-27.10-01	Type 4 and 5 Strain Pole Foundation	7/21/16	
J-27.15-00	Type 4 and 5 Strain Pole Standard	3/15/12	
J-28.10-01	Steel Light Standard	5/11/11	*2 Sheets*
J-28.22-01	Steel Light Standard Placement (Slip Base)	8/7/07	*2 Sheets*
J-28.24-01	Steel Light Standard Placement (Fixed Base)	6/3/15	
J-28.26-01	Steel Light Standard Placement Miscellaneous	12/2/08	
J-28.30-03	Steel Light Standard Foundation Types A & B	6/11/14	*2 Sheets*
J-28.40-02	Steel Light Standard Base Mounting	6/11/14	
J-28.42-01	Steel Light Standard Anchor/Slip Plate for Slip Base	6/11/14	
J-28.43-00	Slip Base Adaptor for 4-Bolt Light Standard Base	6/11/14	
J-28.45-03	Steel Light Standard Elbow Mounting on Bridge & Retaining Wall	7/21/16	*2 Sheets*
J-28.50-03	Steel Light Standard Pole Base and Hand Hole Details	7/21/16	
J-28.60-02	Steel Light Standard Barrier Mounted Base	7/21/16	

Plan No.	Plan Title	Publication Approval Date	
J-28.70-02	Steel Light Standard Wiring Details	6/1/16	
J-29.10-01	Type CCTV Traffic Signal Standard (Camera Pole) Foundation Details	7/21/16	
J-29.15-01	Type CCTV Traffic Signal Standard (Camera Pole)	7/21/16	*2 Sheets*
J-29.16-01	Type CCTV Traffic Signal Standard (Camera Pole) Elbow Details	7/21/16	
J-30.10-00	High Mast Luminaire Maintenance Pad	6/18/15	*2 sheets*
J-40.05-00	Existing Junction Box Retrofit Grounding Details	7/21/16	
J-40.10-04	Locking Lid Standard Duty Junction Box Types 1 & 2	4/28/16	*2 Sheets*
J-40.20-03	Heavy-Duty Junction Box Types 4, 5 & 6	4/28/16	*2 Sheets*
J-40.30-04	Locking Lid Standard Duty Junction Box Type 8	4/28/16	*2 Sheets*
J-40.35-01	Sign Post-Mounted Junction Box	5/29/13	*3 Sheets*
J-40.36-01	Nema 4X Non-Adjustable Junction Box	5/20/13	
J-40.37-01	Nema 3R Adjustable Flush-Mount Junction Box	5/20/13	*2 Sheets*
J-40.38-01	Top Entry Nema 4x Surface-Mount Junction Box	5/20/13	
J-40.39-00	Front Entry Nema 4X Surface-Mount Junction Box	5/20/13	
J-40.40-01	Nema 4X Junction Box in Sidewalk Located on Structure	4/28/16	
J-50.10-00	Type 1 Induction Loop	6/3/11	
J-50.11-00	Type 2 Induction Loop	6/3/11	*2 Sheets*
J-50.12-00	Type 3 Induction Loop	6/3/11	*3 Sheets*
J-50.15-00	Induction Loop Details	6/3/11	*3 Sheets*
J-50.16-01	Preformed Loop Installation Details for New Bridge Decks	3/22/13	*2 Sheets*
J-50.20-00	Permanent Traffic Recorder Installations	6/3/11	*3 Sheets*
J-50.25-00	Weigh-In Motion Site Installation Details	6/3/11	*2 Sheets*
J-50.30-00	Permanent Traffic Recorder & Weigh-In-Motion Details	6/3/11	*3 Sheets*
J-60.05-01	Typical Grounding Details	7/21/16	*3 Sheets*
J-60.11-00	Conduit Installation in Traffic Barrier on Retaining Wall	5/20/13	*2 Sheets*
J-60.12-00	Conduit Installation in Single-Slope Concrete Barrier (Dual Faced)	5/20/13	
J-60.13-00	Stainless Steel Channel	6/16/10	
J-60.14-00	Stainless Steel Channel Mounting Details on Column or Pole	6/16/10	
J-75.10-02	Signal Head Mounting Details ~ Pole and Post Top Mountings	7/10/15	
J-75.20-01	Signal Head Mounting Details ~ Mast Arm and Span Wire Mountings	7/10/15	*2 Sheets*
J-75.30-02	Miscellaneous Signal Details	7/10/15	
J-75.40-02	Overhead Sign Electrical Details (Monotube Structure)	6/1/16	*2 Sheets*
J-75.41-01	Signal Bridge Standard Electrical Details	6/29/16	*4 Sheets*
J-75.45-02	Overhead Sign Electrical Details (Truss Structure)	6/1/16	*2 Sheets*
J-90.10-02	Pull Box	4/28/16	*2 Sheets*
J-90.20-02	Cable Vault	4/28/16	*2 Sheets*
J-90.21-01	Small Cable Vault	4/28/16	*2 Sheets*

Section K Work Zone Traffic Control

K-70.20-01	Temporary Channelization	6/1/16	
K-80.10-01	Class A Construction Signing Installation	6/1/16	
K-80.20-00	Type 3 Barricade	12/20/06	*2 Sheets*
K-80.30-00	Alternative Temporary Conc. Barrier (F-Shape)	2/21/07	
K-80.35-00	Temporary Conc. Barrier Anchoring	2/21/07	
K-80.37-00	Temporary Conc. Barrier Anchoring ~ Narrow	2/21/07	

Contents

Plan No.	Plan Title	Publication Approval Date	
Section L	**Fence and Glare Screen**		
L-10.10-02	Wire Fence Types 1 & 2 and Wire Gates	6/21/12	*2 Sheets*
L-20.10-03	Chain Link Fence Types 3 and 4	7/14/15	*2 Sheets*
L-30.10-02	Chain Link Gate	6/11/14	*2 Sheets*
L-40.10-02	Glare Screen Type 1 Design A	6/21/12	*2 Sheets*
L-40.15-01	Glare Screen Type 1 Design B	6/16/11	
L-40.20-02	Glare Screen Type 2 (Chain Link with Slats)	6/21/12	
L-70.10-01	Access Control Gate	5/21/08	
L-70.20-01	Access Control Double Gate	5/21/08	
Section M	**Roadway Delineation**		
M-1.20-03	Ramp Channelization Single Lane	6/24/14	
M-1.40-02	Ramp Channelization Two Lane	6/3/11	
M-1.60-02	Ramp Channelization Collector-Distributor Road	6/3/11	
M-1.80-03	Ramp Channelization Parallel On & Weaving Section	6/3/11	
M-2.20-03	Off-Ramp Gore Area Marking Layouts	7/10/15	
M-2.21-00	On-Ramp Gore Area Marking Layouts	7/10/15	
M-3.10-03	Left Turn Channelization	6/3/11	
M-3.20-02	Left Turn Channelization Reduced Tapers	6/3/11	
M-3.30-03	Left Turn Channelization Tee Intersection and Back-To-Back Turn Lanes Back-to-back Turn Lanes	6/3/11	
M-3.40-03	Two-Way Left-Turn and Median Channelization	6/3/11	
M-3.50-02	Double Left-Turn Channelization	6/3/11	
M-5.10-02	Right-Turn Channelization	6/3/11	
M-7.50-01	High Occupancy Vehicle (HOV) Lane Symbol Layout	1/30/07	
M-9.50-02	Bicycle Lane Symbol Layout	6/24/14	
M-9.60-00	Shared - Use Path Markings	2/10/09	
M-11.10-01	Railroad Crossing Layout	1/30/07	
M-15.10-01	Crosswalk Layout	2/6/07	
M-17.10-02	Parking Space Layouts	7/3/08	
M-20.10-02	Longitudinal Marking Patterns	6/3/11	
M-20.20-02	Profiled and Embossed Plastic Lines	4/20/15	
M-20.30-04	Longitudinal Marking Supplement with Raised Pavement Markers Raised Pavement Markers (RPM's)	2/29/16	*2 Sheets*
M-20.40-03	Longitudinal Marking Supplement with RPM's ~ Turn Lanes	6/24/14	*2 Sheets*
M-20.50-02	Longitudinal Marking Substitution with RPM's	6/3/11	
M-24.20-02	Symbol Markings ~ Traffic Arrows for High Speed Roadways	4/20/15	*3 Sheets*
M-24.40-02	Symbol Markings ~ Traffic Arrows for Low Speed Roadways	4/20/15	*2 Sheets*
M-24.50-00	Roundabout Traffic Arrows	6/16/11	
M-24.60-04	Symbol Markings Miscellaneous	6/24/14	*2 Sheets*
M-40.10-03	Guide Posts and Barrier Delineators	6/24/14	
M-40.20-00	Guide Post Placement Interchanges	10/12/07	
M-40.30-00	Guide Post Placement Grade Intersections	9/20/07	
M-40.40-00	Guide Post Placement Horizontal Curves	9/20/07	
M-40.50-00	Guide Post Placement Bridges	9/20/07	
M-40.60-00	Guide Post Placement Miscellaneous	9/20/07	

Plan No.	Plan Title	Publication Approval Date	
M-60.10-01	Shoulder Rumble Strip Type 1 for Divided Highways	6/3/11	*4 Sheets*
M-60.20-02	Shoulder Rumble Strip, Types 2, 3, and 4, for Undivided Highways	6/27/11	*2 Sheets*
M-65.10-02	Centerline Rumble Strip	5/11/11	*2 Sheets*
M-80.10-01	Traffic Letter and Numeral Applications	6/3/11	*2 Sheets*
M-80.20-00	Traffic Letters and Numerals (High Speed Roadways)	6/10/08	
M-80.30-00	Traffic Letters and Numerals (Low Speed Roadways)	6/10/08	

This page left blank intentionally.

This page left blank intentionally.

DRAWN BY: FERN LIDDELL

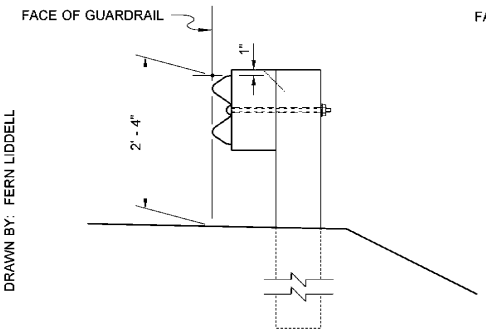

TYPE 1

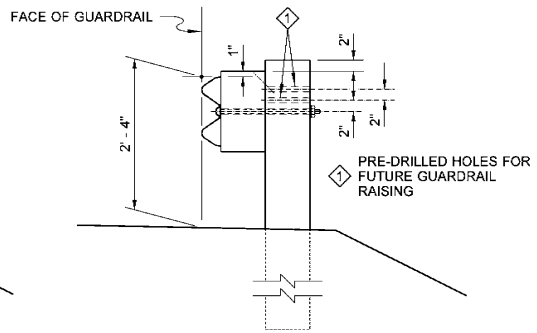

INITIAL INSTALLATION

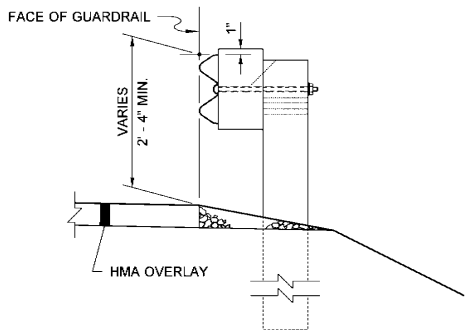

RAIL ELEMENT RAISED

TYPE 1 ALTERNATIVE

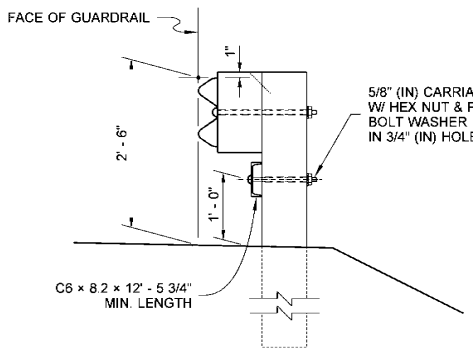

TYPE 2

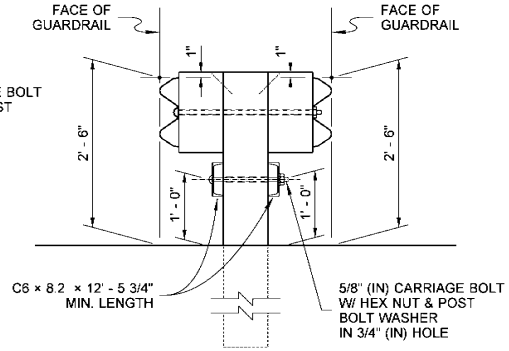

TYPE 3

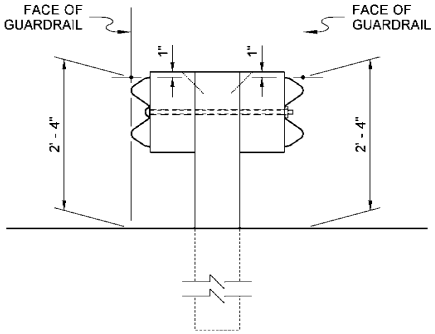

TYPE 4

NOTES

1. When required by the Contract, a Snow Load Post Washer shall be used on the backside of the post (in lieu of the 1 3/4" (in) Post Bolt Washer) and a Snow Load Rail Washer shall be placed on the face side of Beam Guardrail Types 1 and 2. Snow Load Rail Washers shall not be installed on terminals.
2. Rail Washers, also called "Snow Load Rail Washers", are not required on new installation, except as called for in Note 1. Unnecessary Rail washers need not be removed from existing installations, except those on posts 2 through 8 of a BCT installation shall be removed.
3. Beam Guardrail post spacing for Types 1 through 4 shall be 6' - 3" on centers.
4. Timber blocks shall be toe-nailed to the post with a 16d galvanized nail to prevent block rotation.
5. For post and block details, see **Standard Plan C-1b**.
6. When "Beam Guardrail Type - ___ Ft. Long Post" is specified in the Contract, the post length shall be stamped with numbers, 1 1/2" (in) min. high and 3/4" (in) wide at the location where the letter "H" is shown in the ASSEMBLY DETAIL. For wood post applications, the letter shall be stamped to a minimum depth of 1/4" (in). For steel post applications, the letter shall be legible after the post is galvanized. After post installation, it shall be the Contractor's responsibility to ensure the stamped numbers remain visible.
7. Existing posts shall not be raised. Replace posts as necessary to achieve required guardrail height.
8. Holes shall be located on approaching traffic side of web.

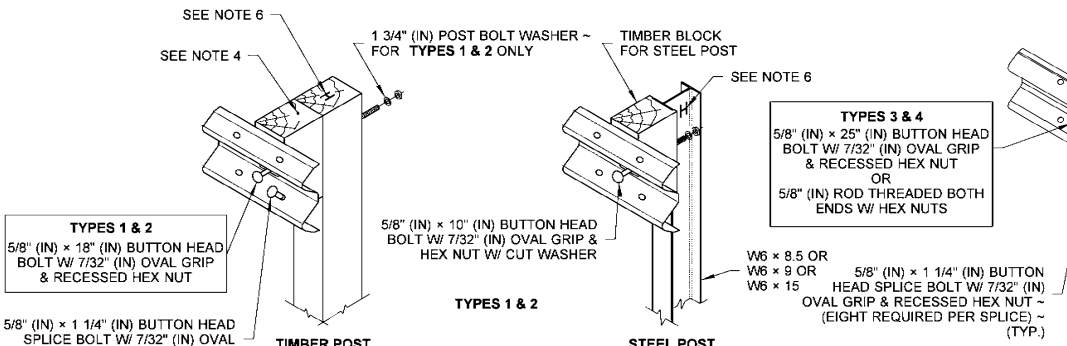

ASSEMBLY DETAIL
TYPE 1 AND 2

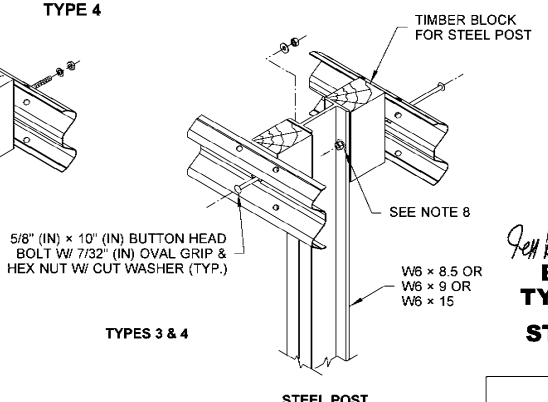

ASSEMBLY DETAIL
TYPE 3 AND 4

JEFFERY K. PETTERSON
STATE OF WASHINGTON
36937
REGISTERED
PROFESSIONAL ENGINEER

Petterson, Jeff (HQ Design)
Jun 30 2016 7:19 AM

BEAM GUARDRAIL TYPES 1 - 4 (W-BEAM)

STANDARD PLAN C-1

SHEET 1 OF 2 SHEETS

APPROVED FOR PUBLICATION
Carpenter, Jeff
Jul 12 2016 11:52 AM
STATE DESIGN ENGINEER
Washington State Department of Transportation

DRAWN BY: FERN LIDDELL

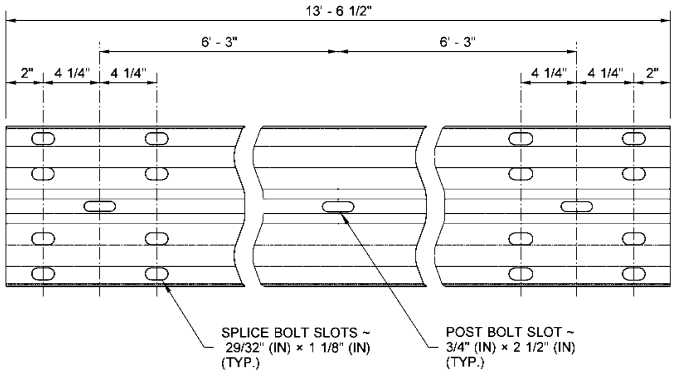

TYPICAL RAIL ELEMENT

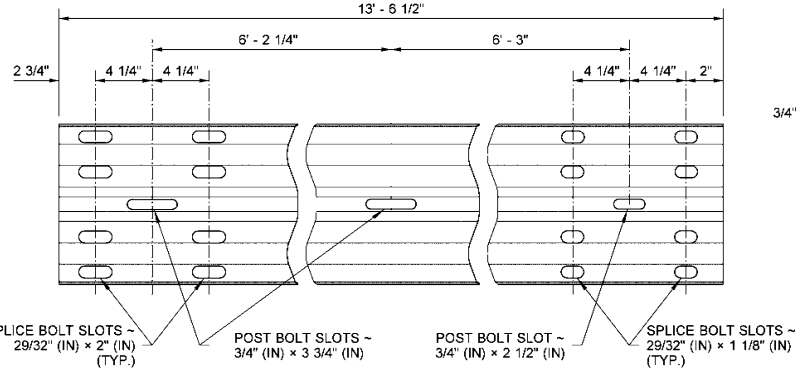

EXPANSION SECTION

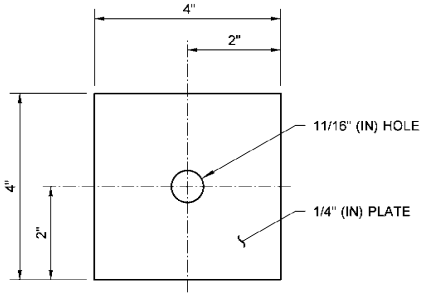

SNOW LOAD POST WASHER
SEE NOTE 1

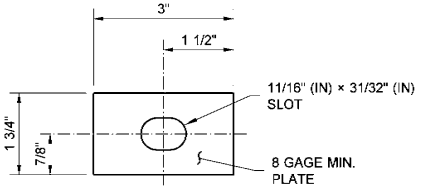

SNOW LOAD RAIL WASHER
SEE NOTES 1 & 2

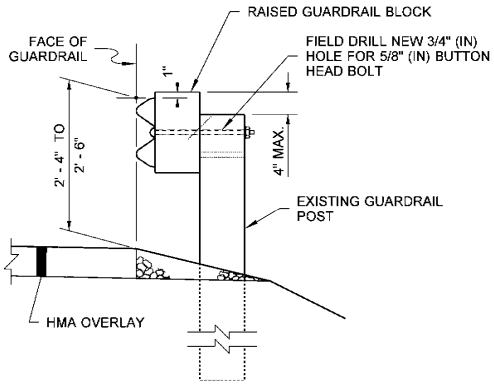

BEAM GUARDRAIL RAISING FOR HMA OVERLAYS

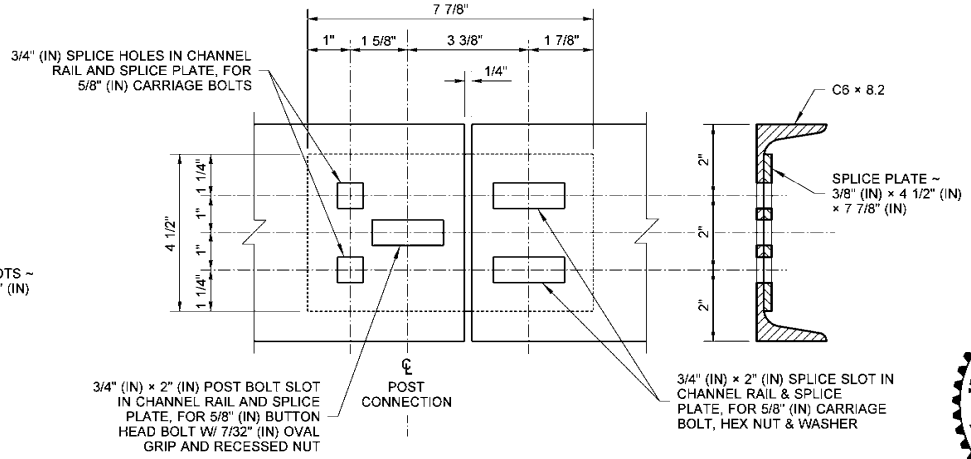

CHANNEL RAIL SPLICE

JEFFERY K. PETTERSON
STATE OF WASHINGTON
36937
REGISTERED
PROFESSIONAL ENGINEER

Jeff Petterson
Petterson, Jeff (HQ Design)
Jan 30 2016 7:20 AM

BEAM GUARDRAIL TYPES 1 - 4 (W-BEAM)

STANDARD PLAN C-1

SHEET 2 OF 2 SHEETS

APPROVED FOR PUBLICATION
Carpenter, Jeff
Jul 12 2016 11:53 AM
STATE DESIGN ENGINEER
Washington State Department of Transportation

DRAWN BY: FERN LIDDELL

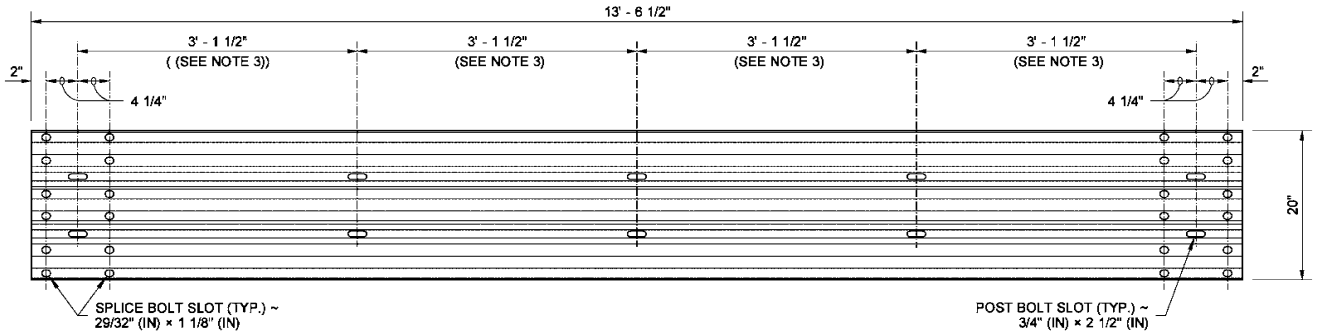

TYPICAL RAIL ELEMENT

NOTES

1. Type 10 post shall be 6 × 8 timber, OR either W6 × 9, or W6 × 8.5 steel. Type 11 post shall be 10 × 10 timber or W6 × 15. For additional details see **Standard Plan C-1b.**
2. Type 10 guardrail post spacing shall be 6' - 3" on center. Type 11 shall be a maximum of 3' - 1 1/2" on center.
3. Spacing may vary depending on application. See **Standard Specification Section 9-16.3(1)** for rail element requirements.

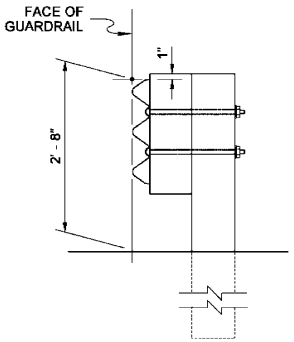

RAIL ASSEMBLY

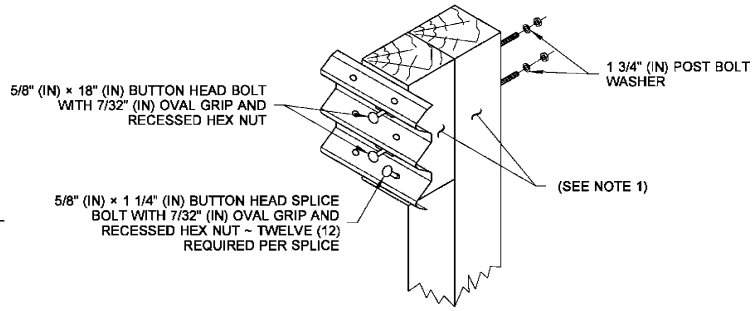

WOOD POST ASSEMBLY

TYPE 10

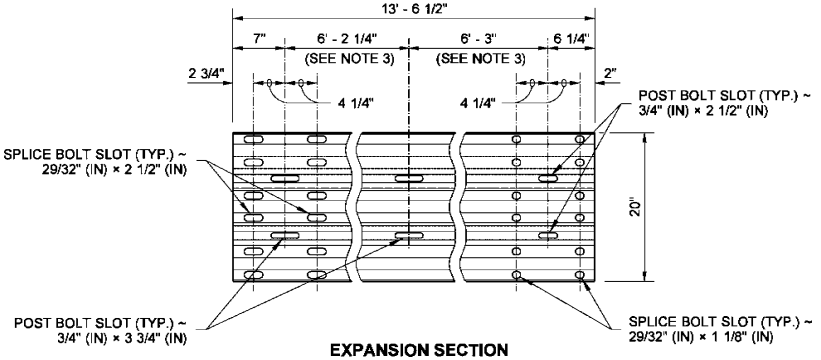

EXPANSION SECTION

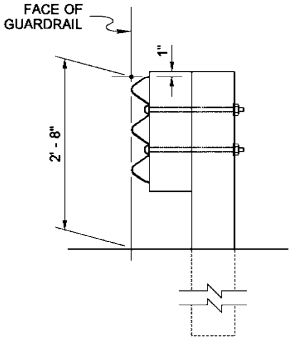

RAIL ASSEMBLY

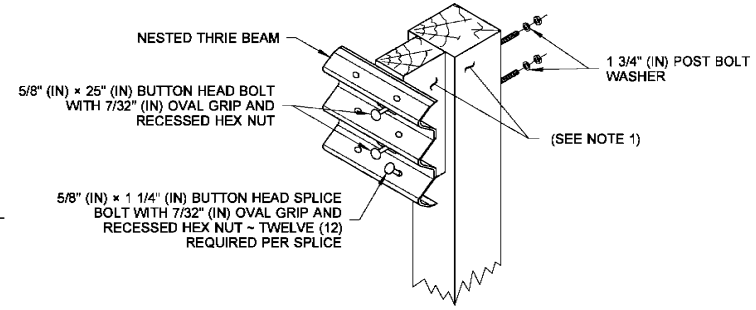

WOOD POST ASSEMBLY

TYPE 11

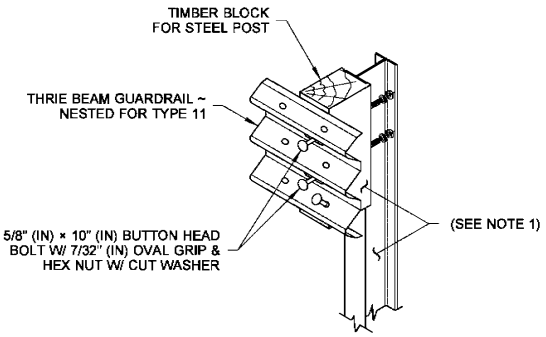

STEEL POST ASSEMBLY

TYPES 10 AND 11

EDWARD PATRICK BARRY
STATE OF WASHINGTON
34363
REGISTERED
PROFESSIONAL ENGINEER

Barry, Ed
Jul 14 2015 7:07 AM

BEAM GUARDRAIL (THRIE BEAM)

STANDARD PLAN C-1a

SHEET 1 OF 1 SHEET

APPROVED FOR PUBLICATION
Carpenter, Jeff
Jul 14 2015 11:30 AM
STATE DESIGN ENGINEER
Washington State Department of Transportation

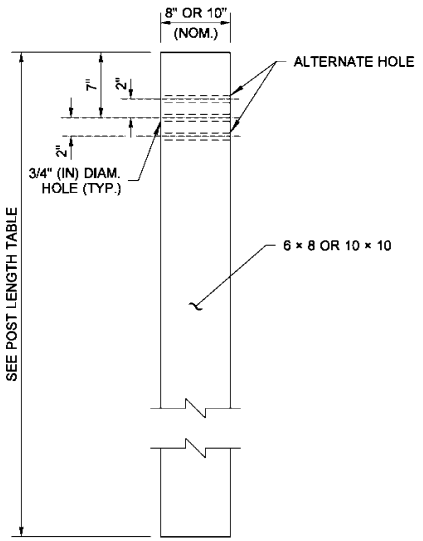

W-BEAM

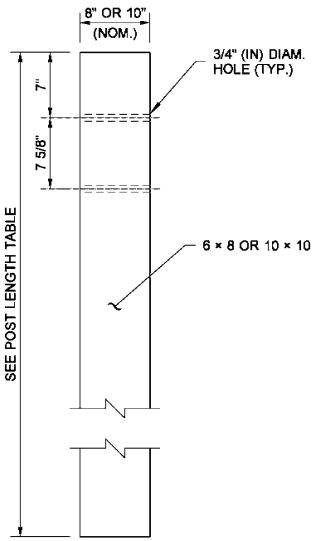

THRIE BEAM

WOOD POST

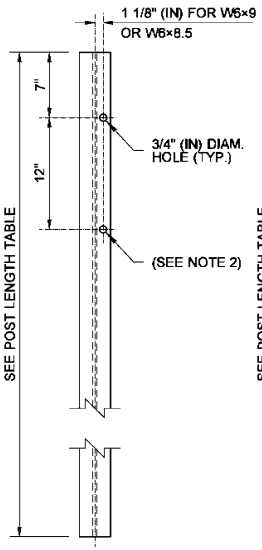

W-BEAM

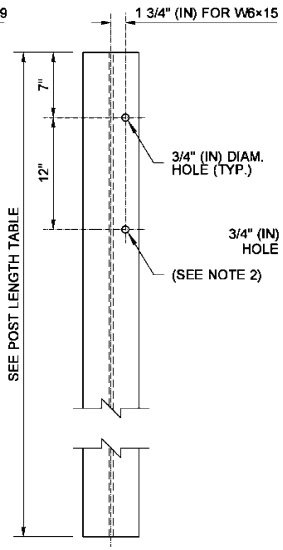

THRIE BEAM

STEEL POST
(SEE NOTES 3 AND 4)

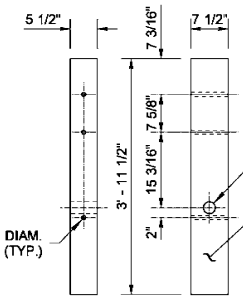

THRIE BEAM

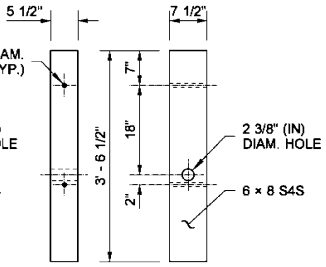

W-BEAM

WOOD BREAKAWAY POST

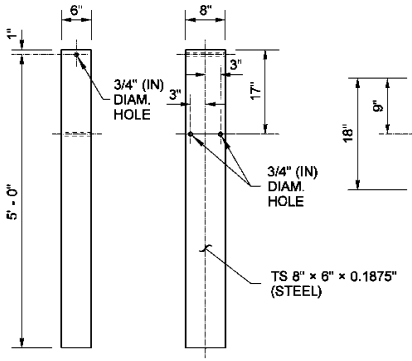

FOUNDATION TUBE

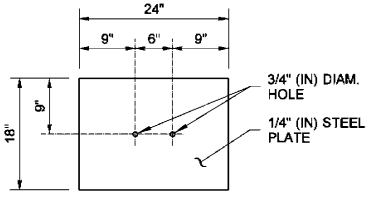

SOIL PLATE

POST LENGTH TABLE	
GUARDRAIL TYPE	LENGTH
1 through 4 & 31	6' - 0"
10 or 11	6' - 6"

DRAWN BY: FERN LIDDELL

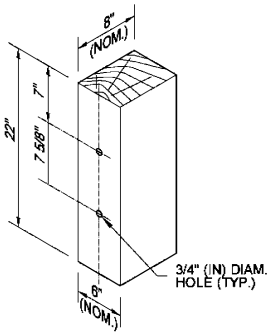

THRIE BEAM WOOD BLOCK FOR WOOD POST

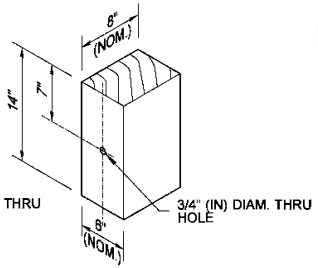

W-BEAM WOOD BLOCK FOR WOOD POST

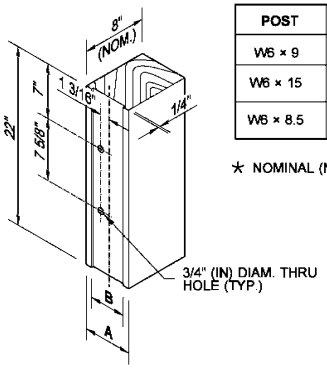

THRIE BEAM WOOD BLOCK FOR STEEL POST

POST	A	B
W6 × 9	6"★	4 1/4"
W6 × 15	8"★	6 1/4"
W6 × 8.5	8"★	6 1/4"

★ NOMINAL (NOM.)

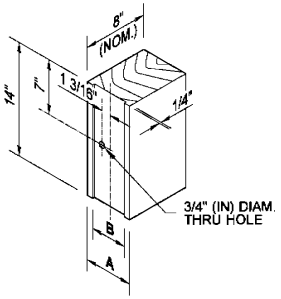

W-BEAM WOOD BLOCK FOR STEEL POST

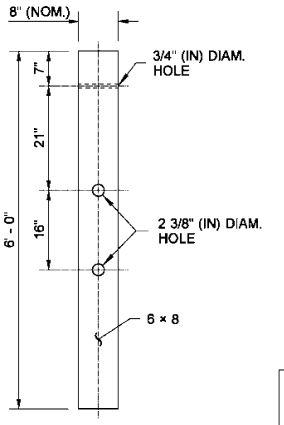

CONTROLLED RELEASING TERMINAL (CRT) POST

EDWARD PATRICK BARRY
STATE OF WASHINGTON
34363
REGISTERED
PROFESSIONAL ENGINEER

Barry, Ed
Jul 14 2015 7:12 AM

BEAM GUARDRAIL POSTS AND BLOCKS

STANDARD PLAN C-1b

SHEET 2 OF 2 SHEETS

APPROVED FOR PUBLICATION
Carpenter, Jeff
Jul 14 2015 11:29 AM
STATE DESIGN ENGINEER
Washington State Department of Transportation

DRAWN BY: FERN LIDDELL

NOTES

1. For post details see **Standard Plan C-1b.**

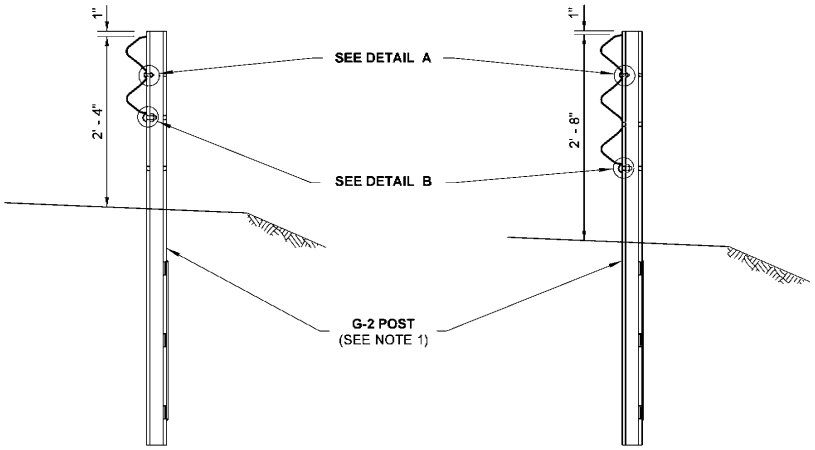

TYPE 20 **TYPE 21**

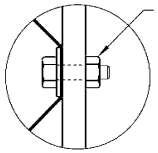

5/16" (IN) DIAM. x 1 1/2" (IN) HEX HEAD BOLT WITH HEX NUT AND 1 3/4" (IN) SQUARE x .135" (IN) WASHER

DETAIL A

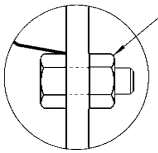

1/2" (IN) DIAM. x 1 1/2" (IN) HEX HEAD BOLT WITH HEX NUT GUARDRAIL RESTS ON TOP OF BOLT

DETAIL B

JEFFERY K. PETTERSON
STATE OF WASHINGTON
36937
REGISTERED
PROFESSIONAL ENGINEER

Petterson, Jeff (HQ Design)
Jun 30 2016 9:48 AM

BEAM GUARDRAIL

STANDARD PLAN C-1c

SHEET 1 OF 1 SHEET

APPROVED FOR PUBLICATION
Carpenter, Jeff
Jul 12 2016 11:54 AM
STATE DESIGN ENGINEER
Washington State Department of Transportation

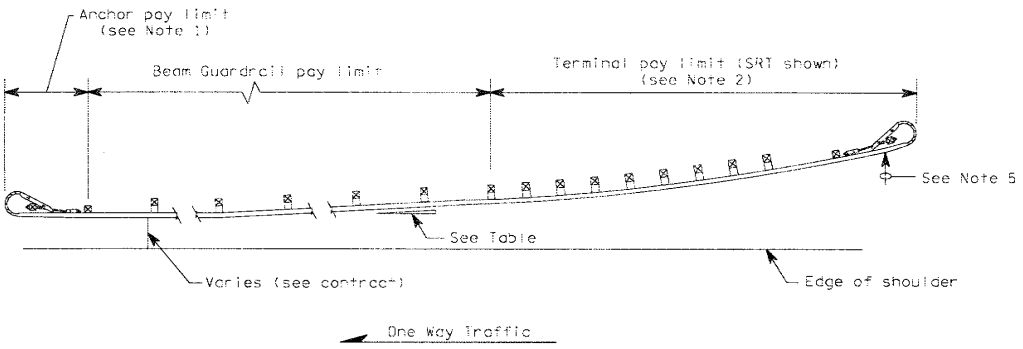

CASE 16

NOTES

1. Type 4 anchor required. For details, see applicable Standard Plan(s).
2. For terminal type and details, see contract and applicable Standard Plan(s).
3. Post spacing is 6'-3" except where noted.
4. For guardrail to bridge rail connection see applicable Standard Plan(s) or Contract.
5. The slope from the edge of the shoulder into the face of the guardrail should not be steeper than 10:1 when the guardrail is within 12'-0" from the edge of the shoulder. Beyond 12'-0", the slope shall not be steeper than 6:1.

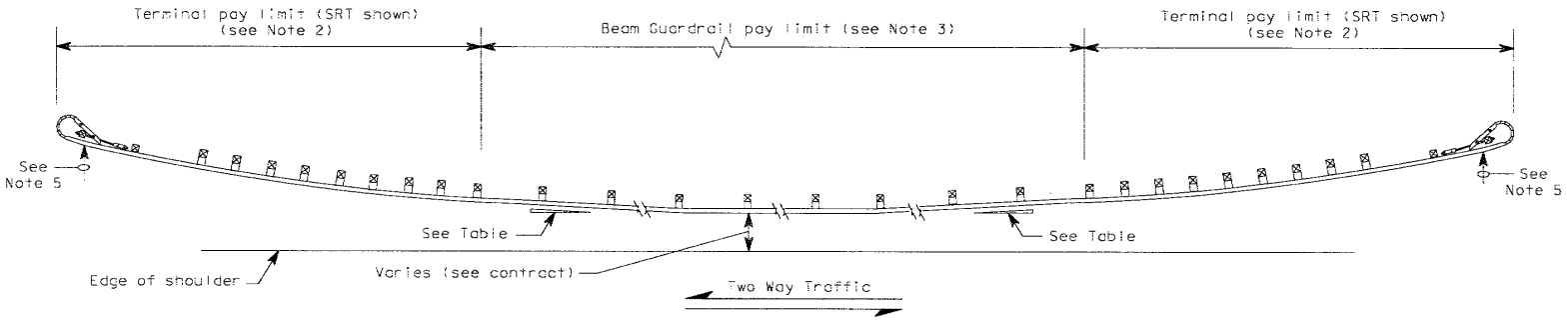

CASE 17

FLARE RATE TABLE	
Rate	Posted Speed (MPH)
15:1	70
14:1	60
12:1	55
11:1	50
10:1	45
9:1	40 or less

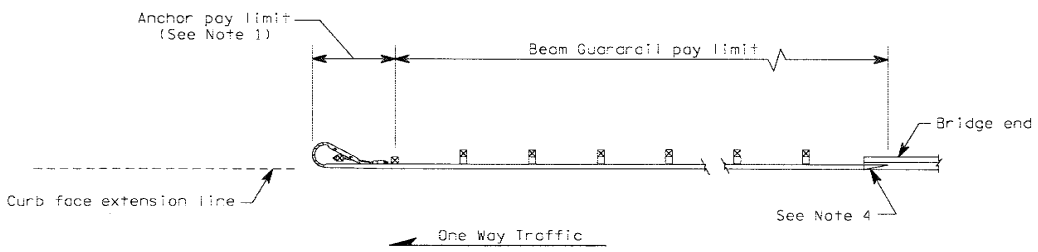

CASE 18

CLIFFORD E. MANSFIELD
STATE OF WASHINGTON
15224
REGISTERED
PROFESSIONAL ENGINEER
Clifford E Mansfield 6/12/98

EXPIRES MAY 3, 2000

GUARDRAIL PLACEMENT

STANDARD PLAN C-2j

APPROVED FOR PUBLICATION
Clifford E Mansfield 6/12/98
DEPUTY STATE DESIGN ENGINEER — DATE
WASHINGTON STATE DEPARTMENT OF TRANSPORTATION
OLYMPIA, WASHINGTON

DATE	REVISION	BY
5/98	Revise Flair Rate Table.	RBA

DRAWN BY: MARK SUJKA

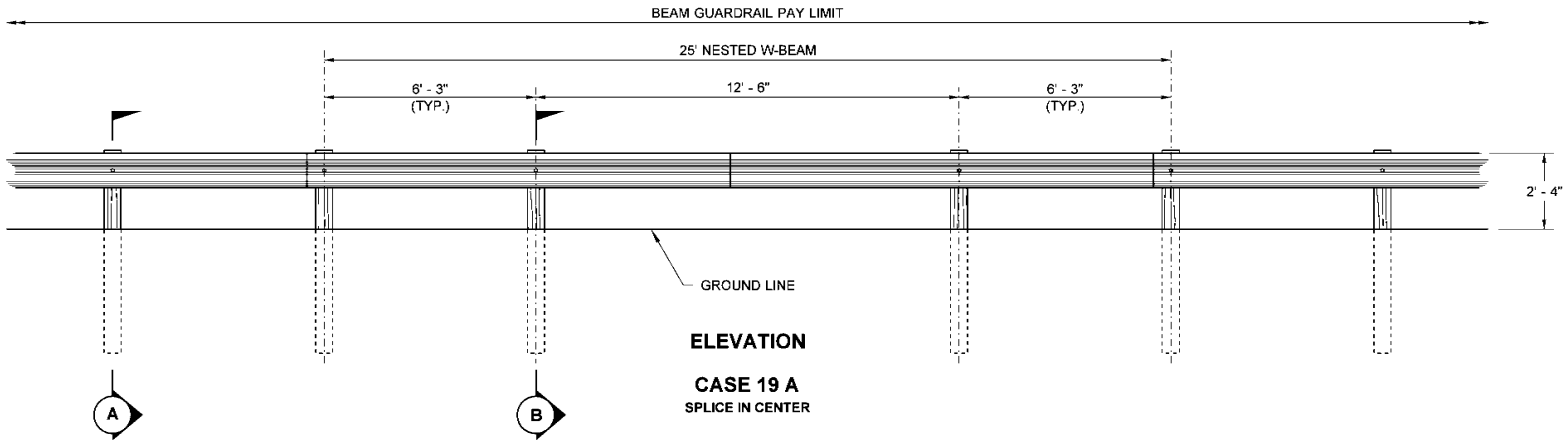

ELEVATION

CASE 19 A

SPLICE IN CENTER

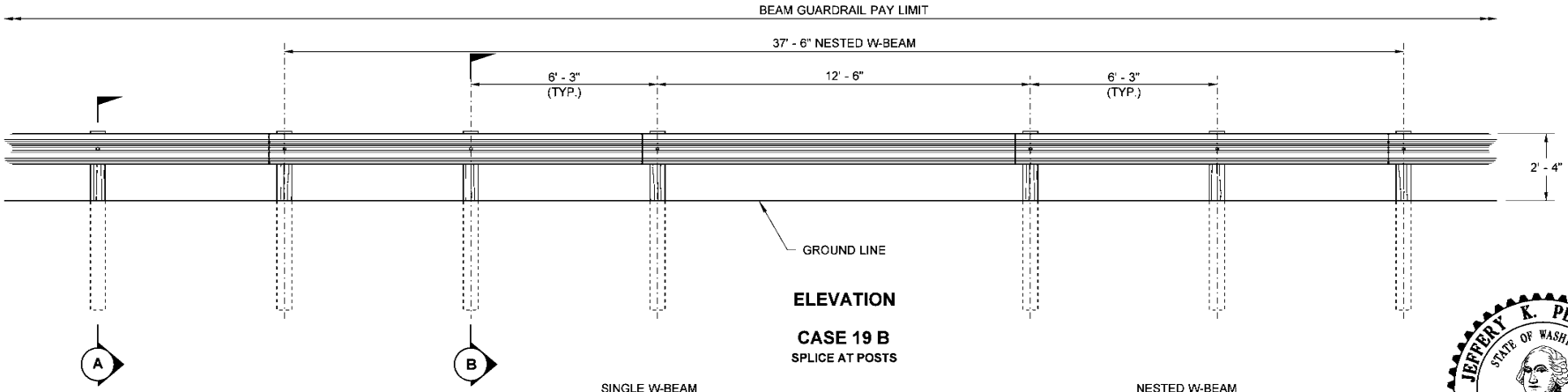

ELEVATION

CASE 19 B

SPLICE AT POSTS

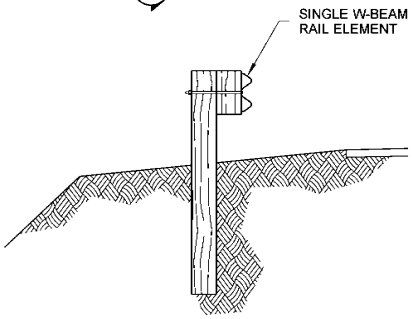

SECTION (A)

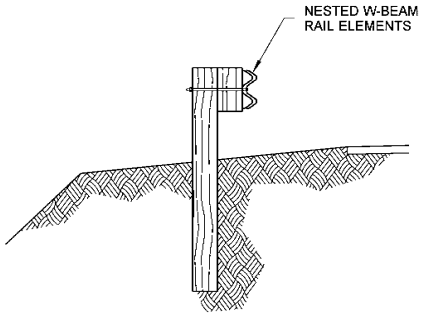

SECTION (B)

JEFFERY K. PETTERSON
STATE OF WASHINGTON
36937
REGISTERED
PROFESSIONAL ENGINEER

Petterson, Jeff (HQ Design)
Jun 24 2016 1:51 PM

GUARDRAIL PLACEMENT 12'-6" SPAN

STANDARD PLAN C-2k

SHEET 1 OF 1 SHEET

APPROVED FOR PUBLICATION
Carpenter, Jeff
Jul 12 2016 11:55 AM
STATE DESIGN ENGINEER
Washington State Department of Transportation

DRAWN BY: MARK SUJKA

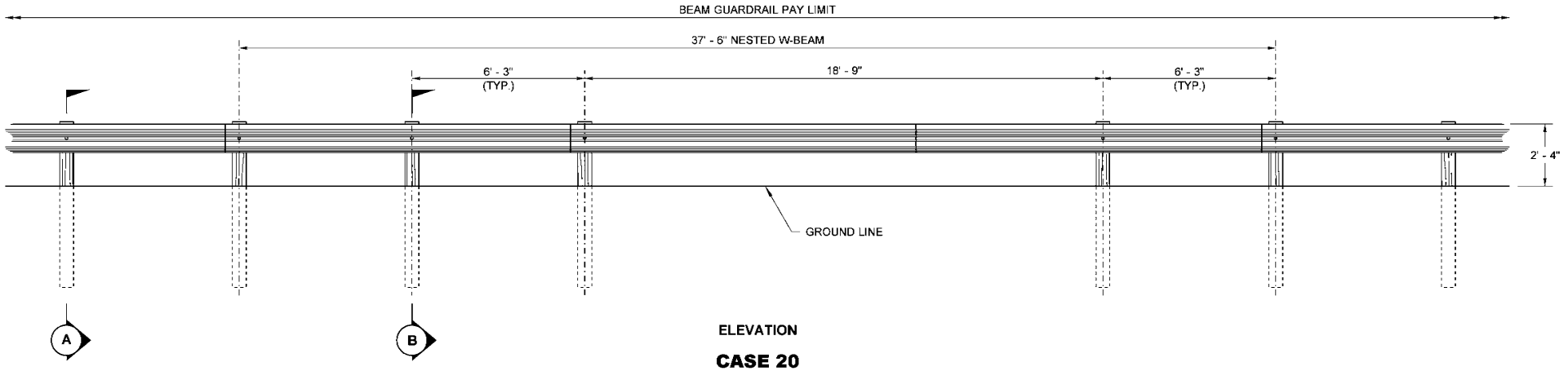

ELEVATION

CASE 20

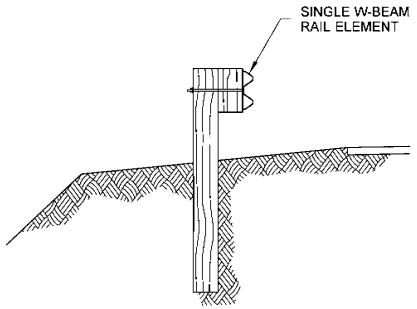

SECTION (A)

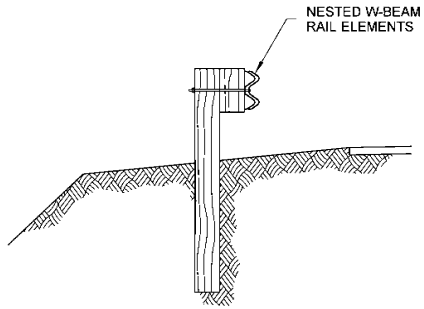

SECTION (B)

JEFFERY K. PETTERSON
STATE OF WASHINGTON
36937
REGISTERED
PROFESSIONAL ENGINEER

Petterson, Jeff (HQ Design)
Jun 29 2016 2:29 PM

GUARDRAIL PLACEMENT 18'-9" SPAN

STANDARD PLAN C-2n

SHEET 1 OF 1 SHEET

APPROVED FOR PUBLICATION

Carpenter, Jeff
Jul 12 2016 11:59 AM

STATE DESIGN ENGINEER

Washington State Department of Transportation

NOTES

1. See Standard Plan C-1b for additional details.
2. One-way traffic layouts are identical to the two-way layout with the exception that only the posts trailing the span need to be CRT's with double blocks.

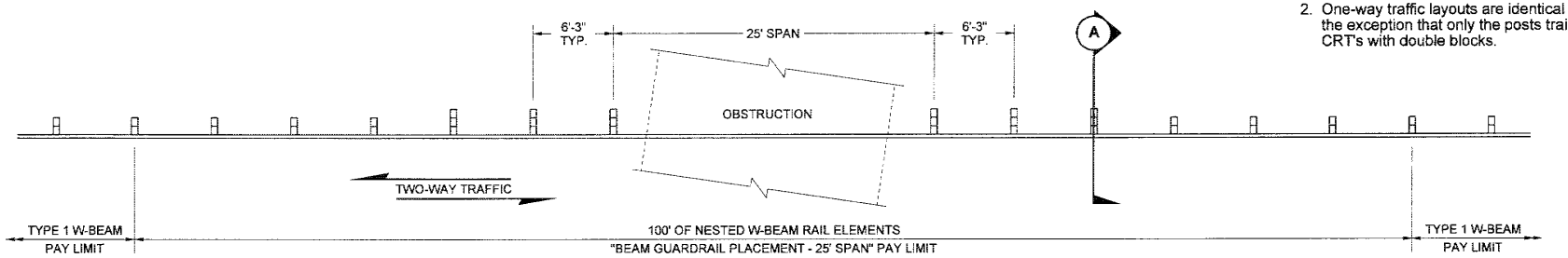

PLAN

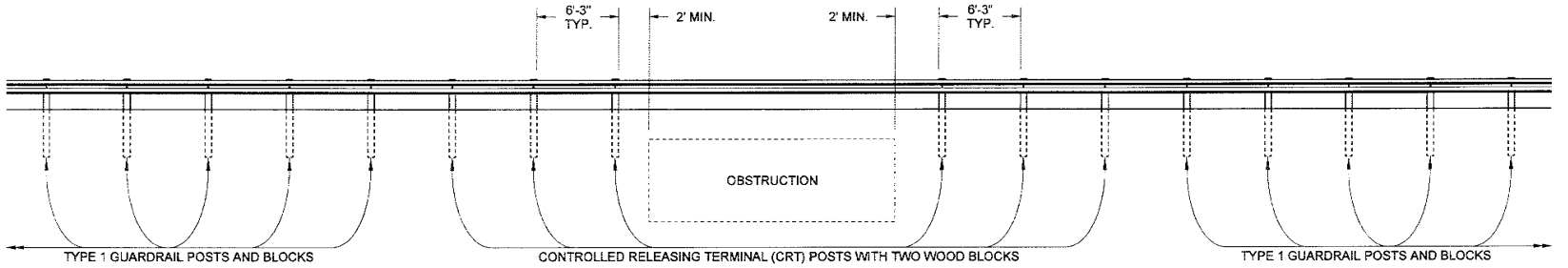

ELEVATION

CASE 21

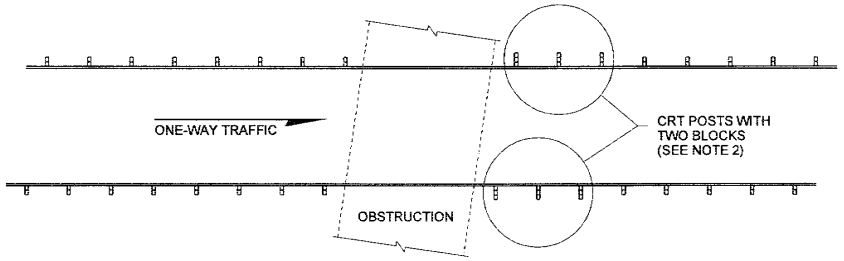

ONE-WAY TRAFFIC LAYOUT

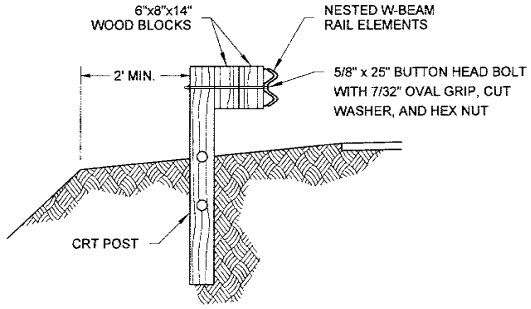

SECTION (A)

CLIFFORD E. MANSFIELD
STATE OF WASHINGTON
15224
REGISTERED
PROFESSIONAL ENGINEER
2/14/01

EXPIRES MAY 3, 2002

GUARDRAIL PLACEMENT
25' SPAN
STANDARD PLAN C-2o

APPROVED FOR PUBLICATION
STATE DESIGN ENGINEER — DATE 2/13/01
Washington State Department of Transportation

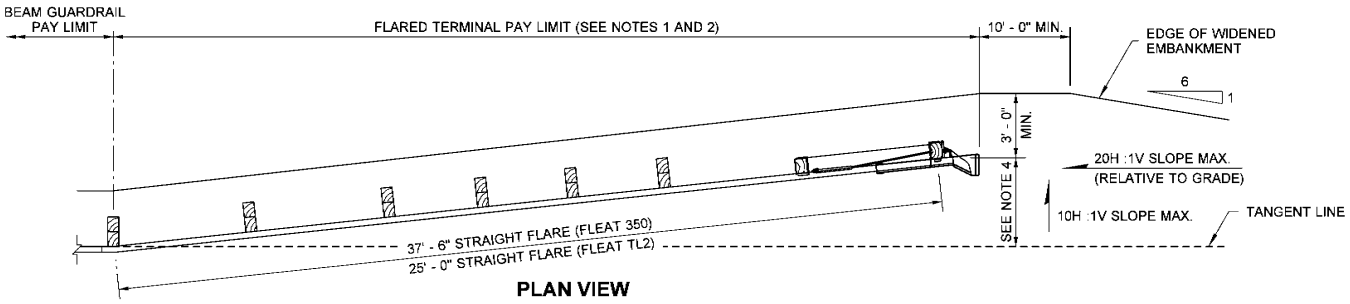

PLAN VIEW

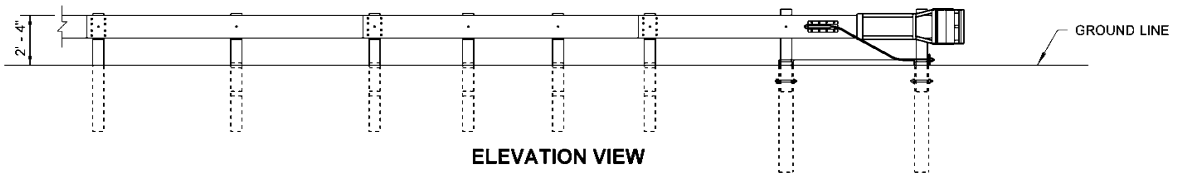

ELEVATION VIEW

FLEAT OPTION

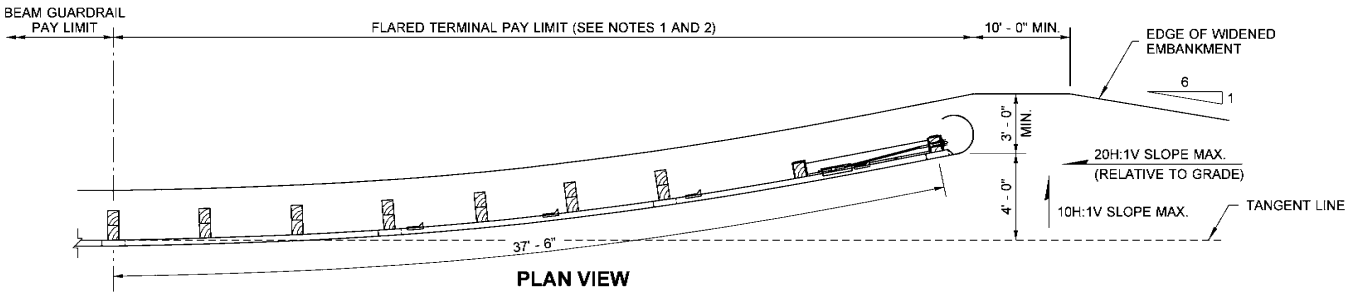

PLAN VIEW

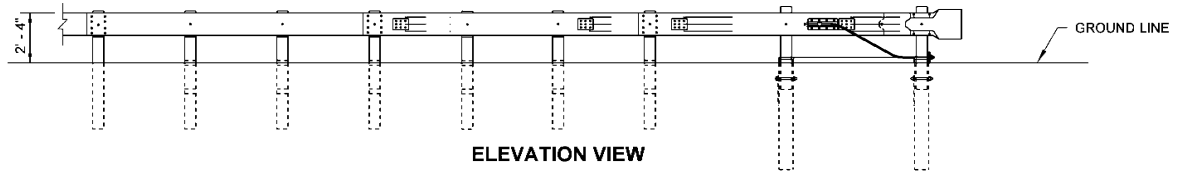

ELEVATION VIEW

SRT OPTION

NOTES

1. Unless otherwise indicated in the contract, the SRT - 350 (12.5, 8 Post) as manufactured by Trinity Industries, Inc., or a FLEAT 350 as manufactured by Road Systems Inc., shall be installed per manufacturer's recommendations. If specified in the Contract, the FLEAT TL2 as manufactured by Road Systems, Inc. shall be installed per manufacturer's recommendations.
2. Where terminal is placed on a curve, and post offsets would result in the rail encroaching onto the shoulder (e.g., the inside of a curve), the posts shall be installed so that the face of the rail is at the edge of the shoulder.
3. When snow load post washers and snow load rail washers are called for in the contract, the snow load rail washers must be omitted within the terminal limits.
4. Offset distances:

   FLEAT 350 ..... 4' - 0"

   FLEAT TL2 ..... 1' - 8" minimum

JEFFERY K. PETTERSON
STATE OF WASHINGTON
36937
REGISTERED
PROFESSIONAL ENGINEER

Petterson, Jeff (HQ Design)
Jun 29 2016 3:35 PM

BEAM GUARDRAIL FLARED TERMINAL

STANDARD PLAN C-4b

SHEET 1 OF 1 SHEET

APPROVED FOR PUBLICATION

Carpenter, Jeff
Jul 15 2016 2:21 PM

STATE DESIGN ENGINEER

Washington State Department of Transportation

DRAWN BY: FERN LIDDELL

NOTES

1. An SKT-350 as manufactured by Road Systems, Inc. shall be installed according to manufacturer's recommendations. When a TL2 terminal is specified in the Contract an SKT-TL2 as manufactured by Road Systems, Inc. shall be installed according to the manufacturer's recommendations.
2. A reflectorized object marker shall be installed according to manufacturer's recommendations.
3. When snow load post washers and snow load rail washers are required by the Contract, the snow load rail washers must not be installed within the terminal limits.
4. Terminal shall be installed at a taper, ensuring that end piece is entirely off the shoulder.
5. Length for SKT-350 is 50' (ft). Length for SKT-TL2 is 25' (ft).

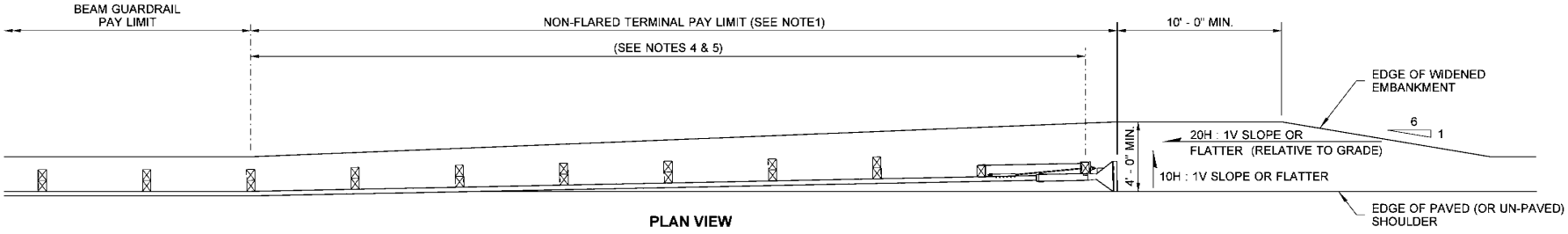

PLAN VIEW

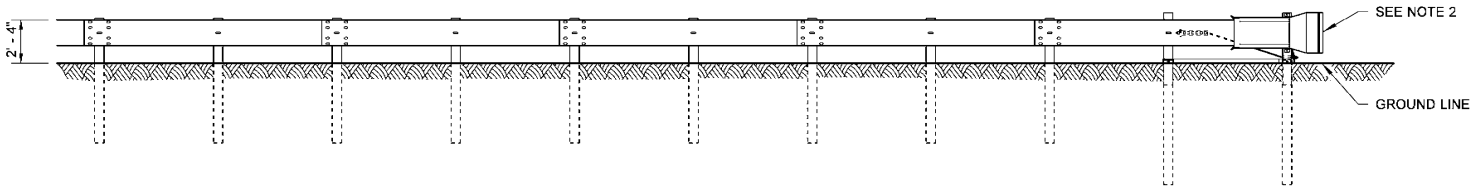

ELEVATION VIEW

JEFFERY K. PETTERSON
STATE OF WASHINGTON
36937
REGISTERED
PROFESSIONAL ENGINEER

Petterson, Jeff (HQ Design)
Jun 30 2016 7:01 AM

BEAM GUARDRAIL NON-FLARED TERMINAL

STANDARD PLAN C-4e

SHEET 1 OF 1 SHEET

APPROVED FOR PUBLICATION

Carpenter, Jeff
Jul 15 2016 2:21 PM

STATE DESIGN ENGINEER

Washington State Department of Transportation

This page left blank intentionally.

DRAWN BY: FERN LIDDELL

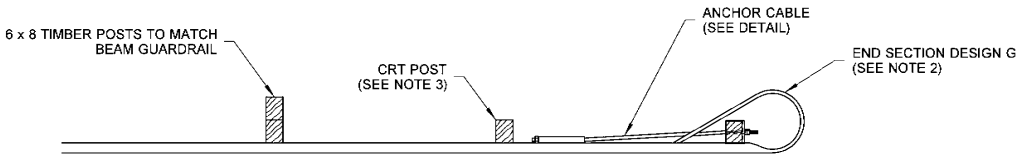

PLAN

NOTES

1. Anchor plate may be constructed from 1/4" (in) plates welded to equal strength and dimensions as shown.
2. For end section details see **Standard Plan C-7.**
3. For post details, see **Standard Plan C-1b.**
4. Eight 5/8" (in) x 1/2" (in) machine bolts with hex nut and washer. Place washer on face side of rail.
5. Outside nut shall be torqued against inside nut a minimum of 100 ft-lbs.
6. Toenail bearing plate with 10d nail at corners to prevent turning.
7. Anchor pay limit does not apply when anchor is included in a Beam Guardrail Terminal.

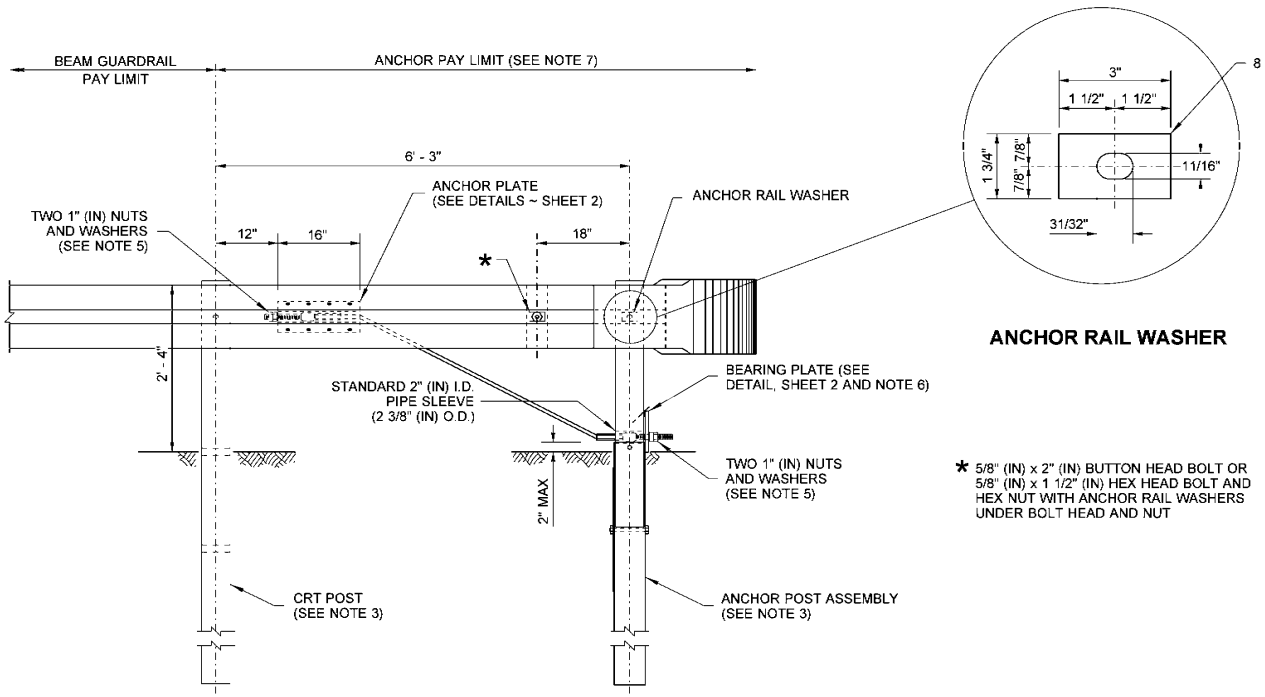

TYPE 1 ANCHOR

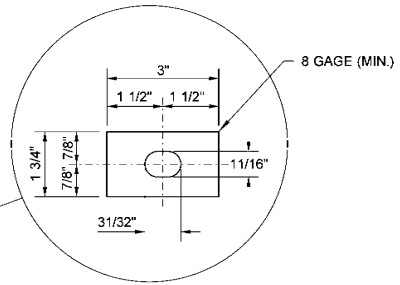

ANCHOR RAIL WASHER

* 5/8" (IN) x 2" (IN) BUTTON HEAD BOLT OR 5/8" (IN) x 1 1/2" (IN) HEX HEAD BOLT AND HEX NUT WITH ANCHOR RAIL WASHERS UNDER BOLT HEAD AND NUT

JEFFERY K. PETTERSON
STATE OF WASHINGTON
36937
REGISTERED
PROFESSIONAL ENGINEER

Petterson, Jeff (HQ Design)
Jun 30 2016 7:05 AM

BEAM GUARDRAIL TYPE 1

STANDARD PLAN C-6

SHEET 1 OF 2 SHEETS

APPROVED FOR PUBLICATION
Carpenter, Jeff
Jul 15 2016 2:22 PM
STATE DESIGN ENGINEER
Washington State Department of Transportation

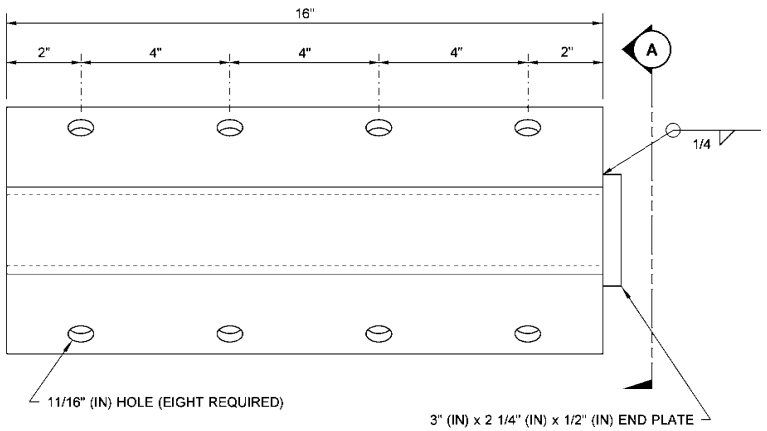

ELEVATION

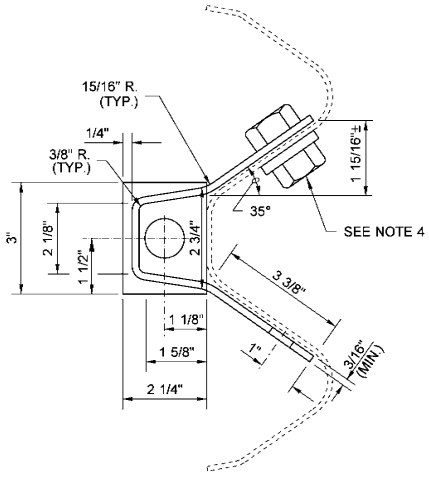

SECTION (A)

ANCHOR PLATE
(SEE NOTE 1)

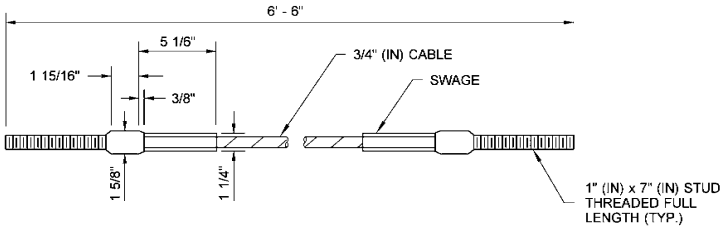

ANCHOR CABLE

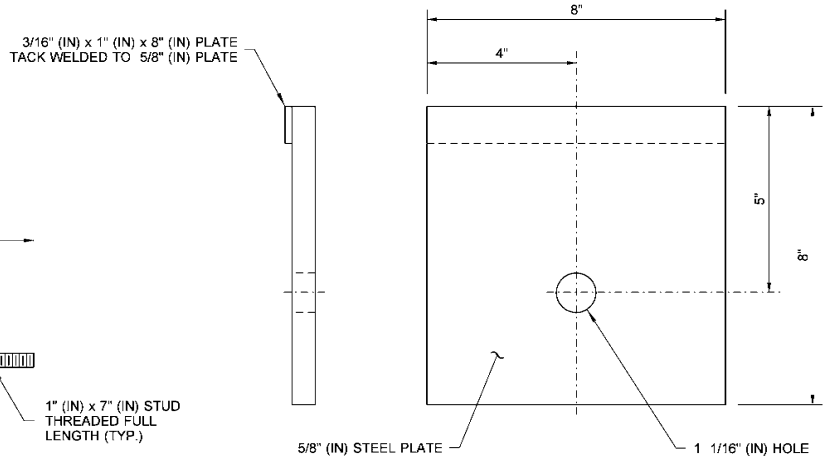

BEARING PLATE

JEFFERY K. PETTERSON
STATE OF WASHINGTON
36937
REGISTERED
PROFESSIONAL ENGINEER

Petterson, Jeff (HQ Design)
Jun 30 2016 7:04 AM

BEAM GUARDRAIL TYPE 1

STANDARD PLAN C-6

SHEET 2 OF 2 SHEETS

APPROVED FOR PUBLICATION
Carpenter, Jeff
Jul 15 2016 2:22 PM
STATE DESIGN ENGINEER
Washington State Department of Transportation

DRAWN BY: BILL BERENS

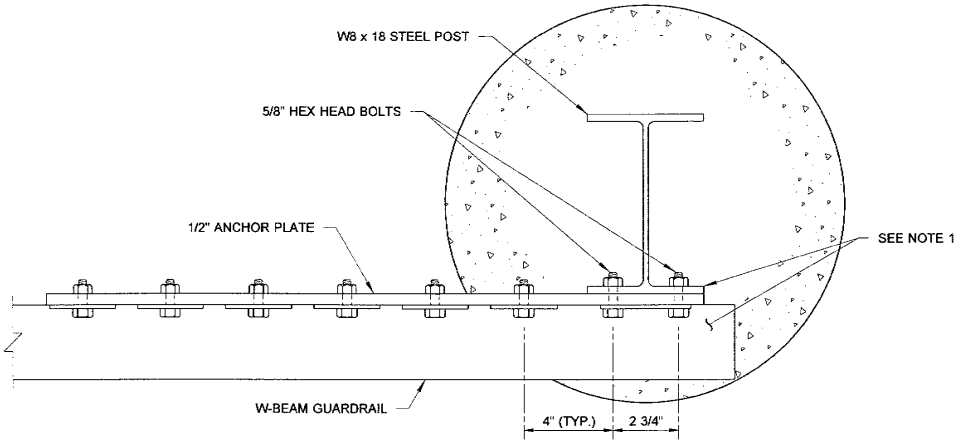

PLAN

NOTES

1. Rail section and W8 x 18 steel post shall be fabricated to receive 5/8" hex head bolts as shown.
2. All bolts shall be high strength 5/8" hex head bolts with anchor rail washers.

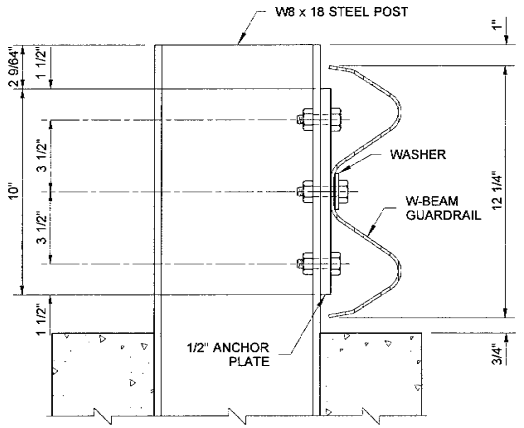

SECTION B

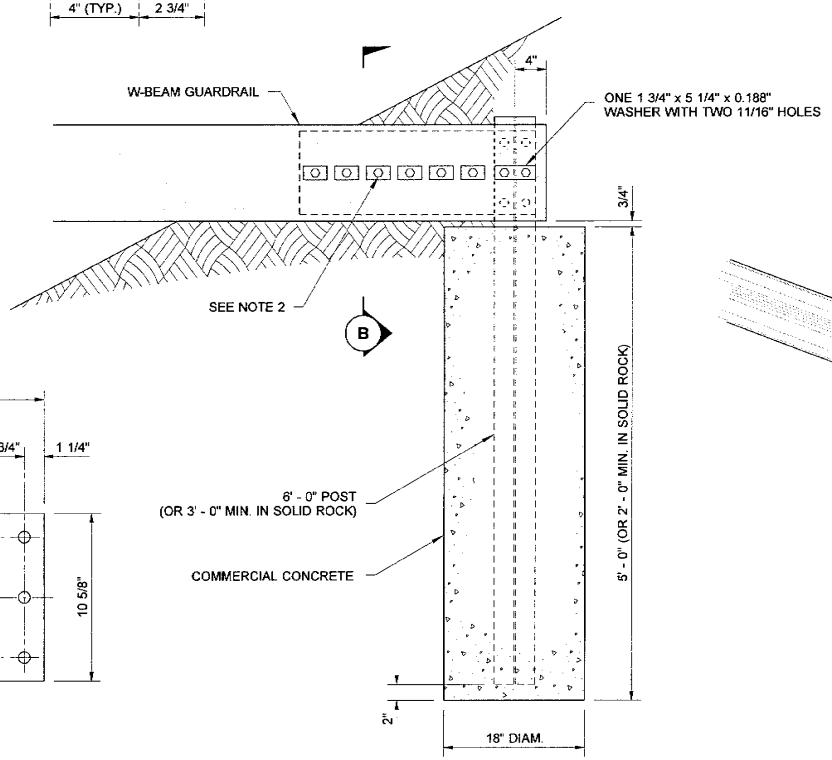

ELEVATION

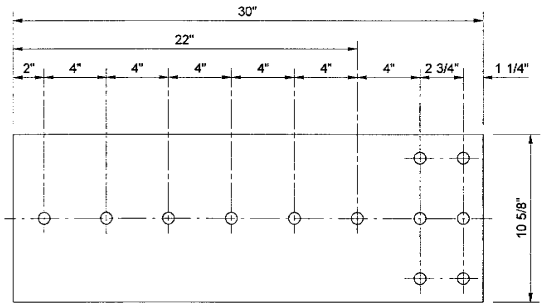

BACKING PLATE

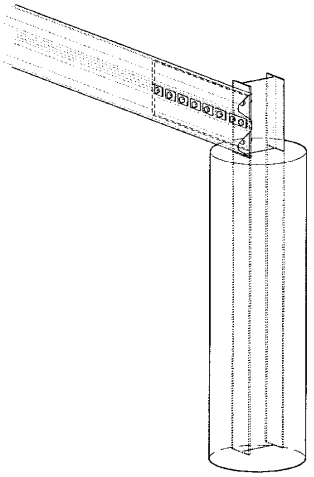

ISOMETRIC

10-5-09

BEAM GUARDRAIL ANCHOR TYPE 2

STANDARD PLAN C-6a

SHEET 1 OF 1 SHEET

APPROVED FOR PUBLICATION

STATE DESIGN ENGINEER 10/14/09 DATE

Washington State Department of Transportation

DRAWN BY: FERN LIDDELL

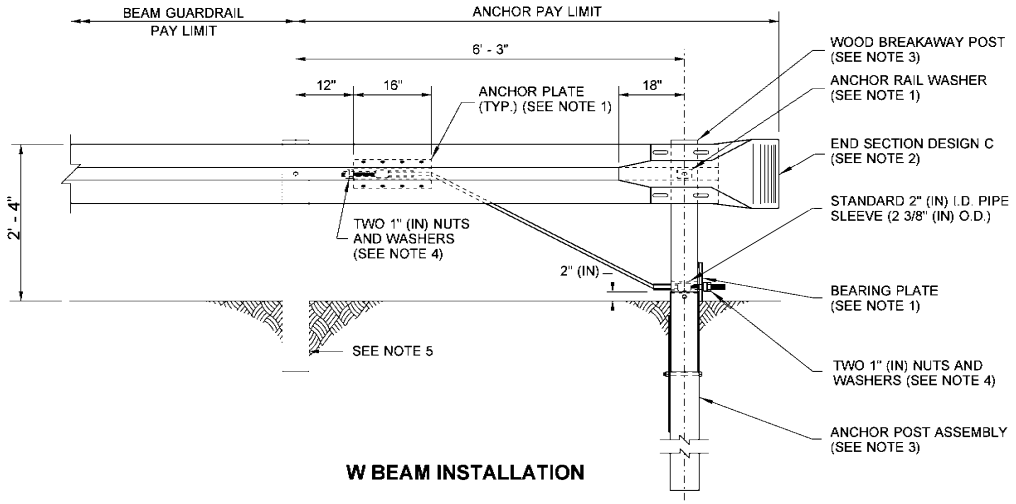

W BEAM INSTALLATION

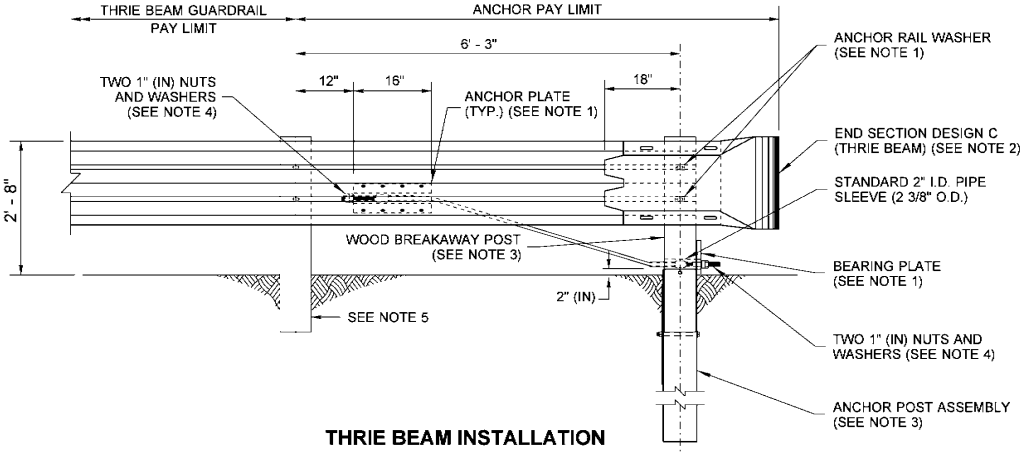

THRIE BEAM INSTALLATION

NOTES

1. For anchor details, see **Standard Plan C-6.**
2. For end section details see **Standard Plan C-7 or C-7a.**
3. For post details, see **Standard Plan C-1b.**
4. Outside nut shall be torqued against inside nut a minimum of 100 ft.-lbs.
5. Post and block shall match beam guardrail posts.

JEFFERY K. PETTERSON
STATE OF WASHINGTON
36937
REGISTERED
PROFESSIONAL ENGINEER

Petterson, Jeff (HQ Design)
Jan 30 2016 7:08 AM

BEAM GUARDRAIL ANCHOR TYPE 4

STANDARD PLAN C-6c

SHEET 1 OF 1 SHEET

APPROVED FOR PUBLICATION
Carpenter, Jeff
Jul 15 2016 2:22 PM
STATE DESIGN ENGINEER
Washington State Department of Transportation

DRAWN BY: FERN LIDDELL

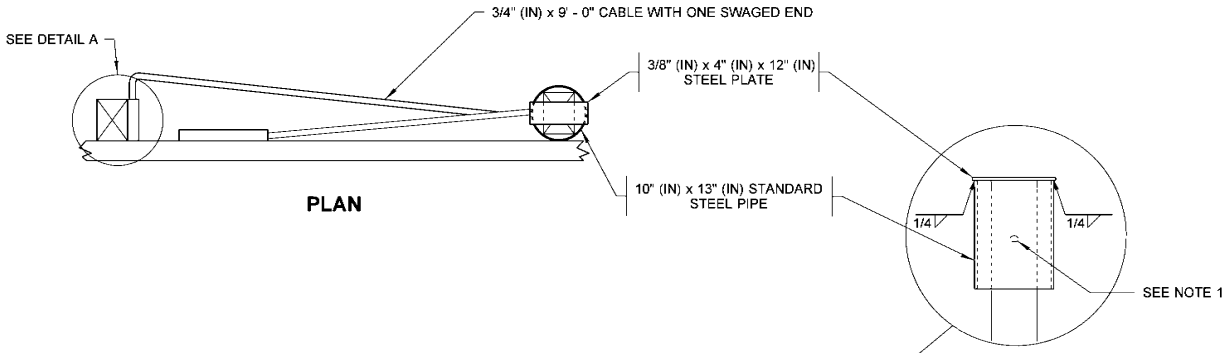

PLAN

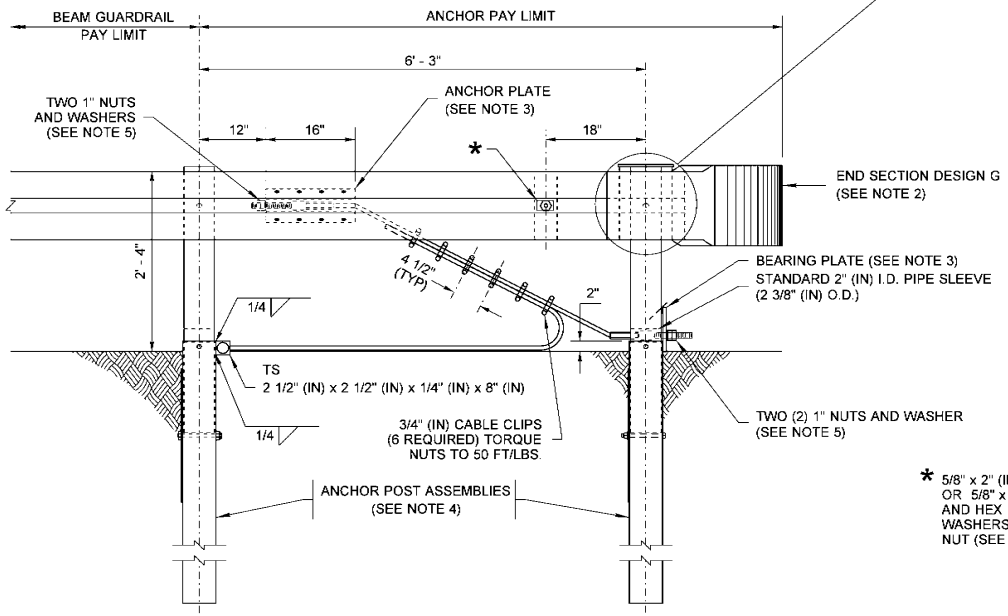

* 5/8" x 2" (IN) BUTTON HEAD BOLT OR 5/8" x 1 1/2" (IN) HEX HEAD BOLT AND HEX NUT WITH ANCHOR RAIL WASHERS UNDER BOLT HEAD AND NUT (SEE NOTE 3)

TYPE 5 ANCHOR

NOTES

1. Attach W-beam to steel pipe with 5/8" (in) x 1 1/4" (in) button head bolt with no washer. No connection to the post is required.
2. For end section details see **Standard Plan C-7.**
3. For anchor details see **Standard Plan C-6**.
4. For post details see **Standard Plan C-1b.**
5. Outside nut shall be torqued against inside nut a minimum of 100 ft/lbs.

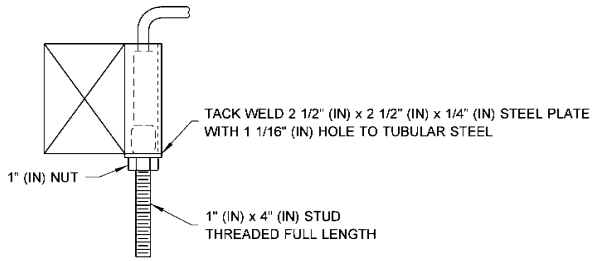

DETAIL A

JEFFERY K. PETTERSON
STATE OF WASHINGTON
36937
REGISTERED
PROFESSIONAL ENGINEER

Jeff Petterson
Petterson, Jeff (HQ Design)
Jun 30 2016 7:11 AM

BEAM GUARDRAIL TYPE 5

STANDARD PLAN C-6d

SHEET 1 OF 1 SHEET

APPROVED FOR PUBLICATION
Carpenter, Jeff
Jul 15 2016 2:23 PM
STATE DESIGN ENGINEER
Washington State Department of Transportation

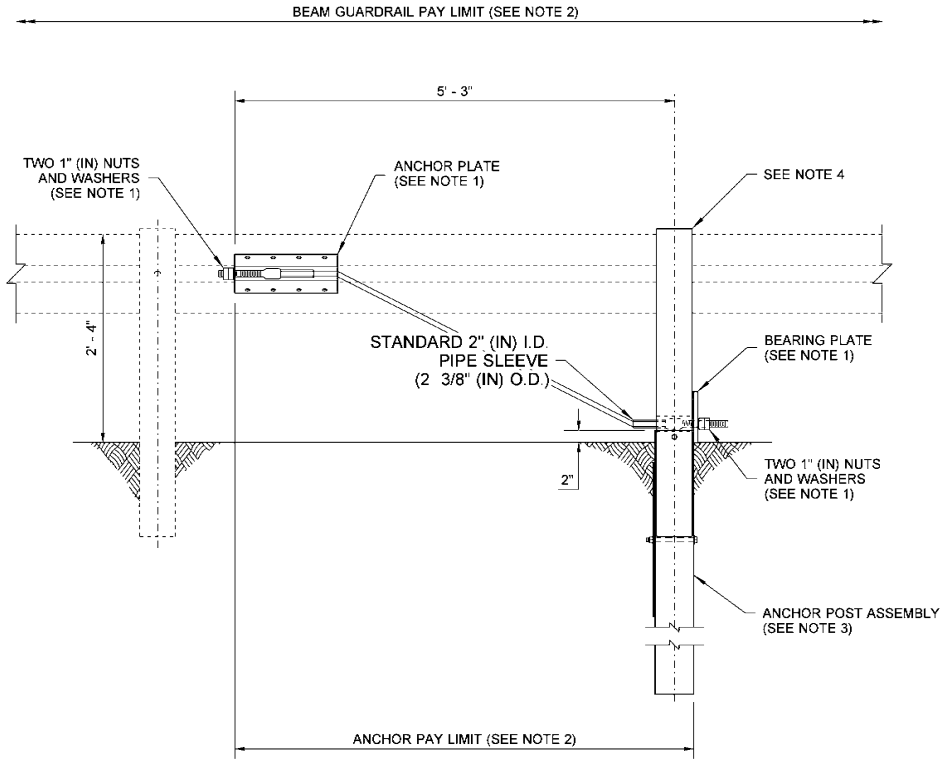

TYPE 7 ANCHOR

NOTES

1. For anchor details, see **Standard Plan C-6.**
2. The rail element is to be included in the "Beam Guardrail" pay item. The "Anchor" pay item includes the anchor post, anchor plate, anchor cable, bearing plate, nuts and washers.
3. For post details, see **Standard Plan C-1b.**
4. Post material shall match beam guardrail posts on rest of guardrail run.

JEFFERY K. PETTERSON
STATE OF WASHINGTON
36937
REGISTERED
PROFESSIONAL ENGINEER

Petterson, Jeff (HQ Design)
Jun 30 2016 7:12 AM

BEAM GUARDRAIL ANCHOR TYPE 7

STANDARD PLAN C-6f

SHEET 1 OF 1 SHEET

APPROVED FOR PUBLICATION
Carpenter, Jeff
Jul 15 2016 2:23 PM
STATE DESIGN ENGINEER
Washington State Department of Transportation

DRAWN BY: FERN LIDDELL

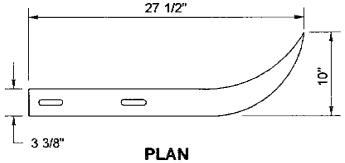

PLAN

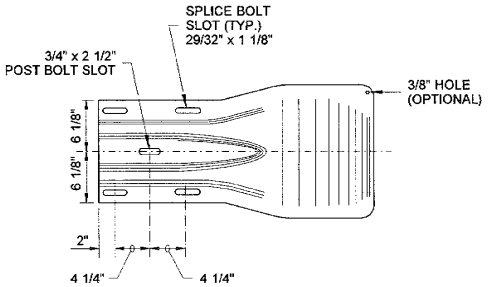

ELEVATION

DESIGN A

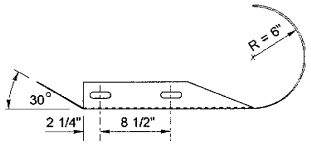

PLAN

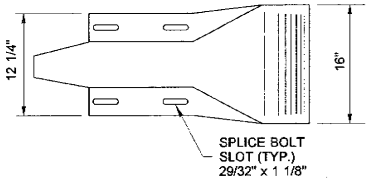

ELEVATION

DESIGN C

NOTES

1. End Section Design G shall be used except where noted on the plans or contract.
2. Attach guardrail to bridge rail or concrete barrier with 7/8" diameter bolts (five minimum) **Standard Spec. 9-06.5(4),** with thin slab ferrule inserts or resin bonded anchors. See the Contract Plans.
3. A single piece having similar dimensional shape to Design G and mating with the W-beam guardrail is an alternate.
4. In cases where Design "F" end section is lapped on the outside of the guardrail, a galvanized 1" ID, 2" OD, 0.134" thick, narrow Type A Plain Washer or a anchor rail washer shall be placed under the splice bolt heads.

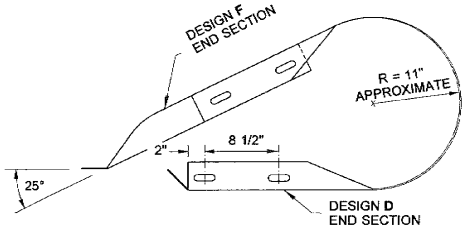

PLAN

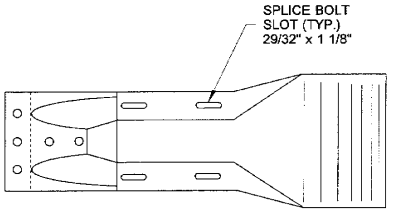

ELEVATION

DESIGN G

(SEE NOTE 3)

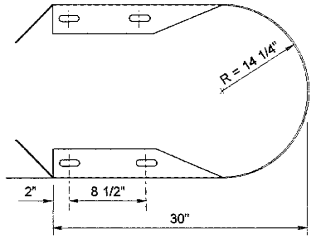

PLAN

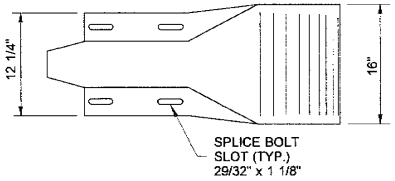

ELEVATION

DESIGN D

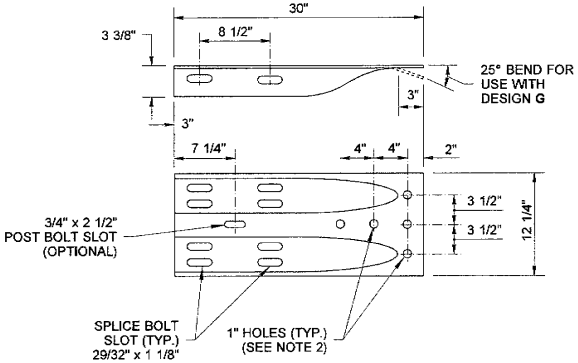

ELEVATION

DESIGN F

(SEE NOTE 4)

6-8-2011

BEAM GUARDRAIL END SECTIONS

STANDARD PLAN C-7

SHEET 1 OF 1 SHEET

APPROVED FOR PUBLICATION

STATE DESIGN ENGINEER — DATE 6/16/11

Washington State Department of Transportation

DRAWN BY: COLBY FLETCHER

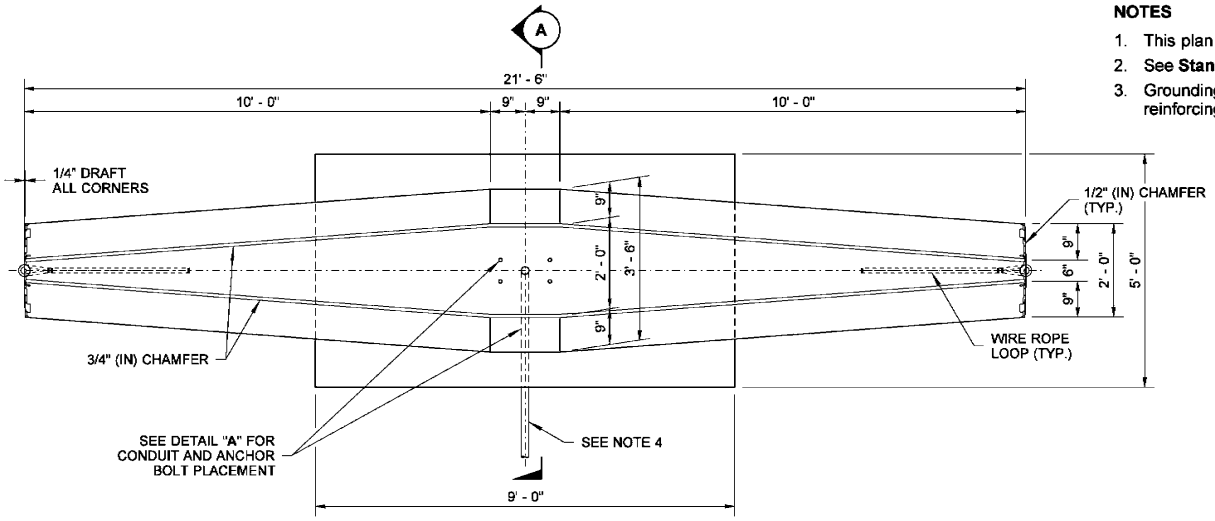

PLAN

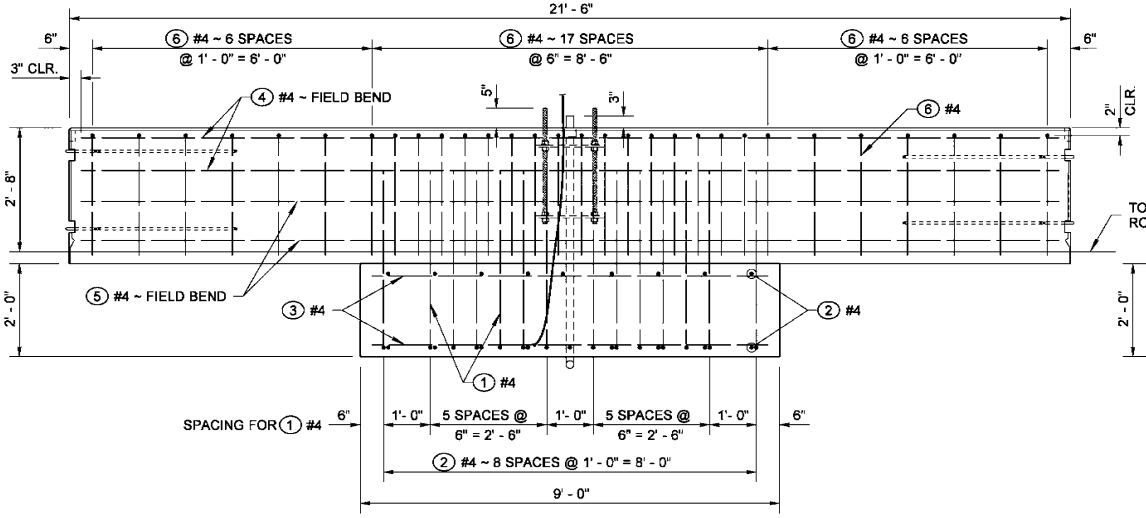

ELEVATION

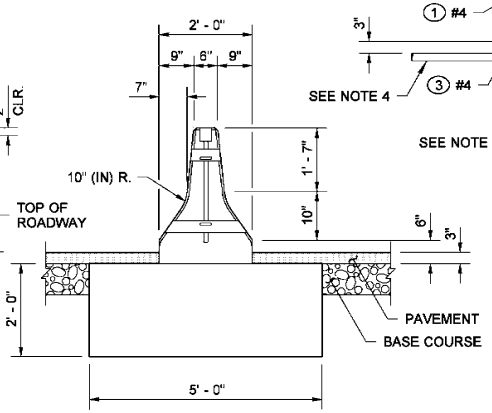

END

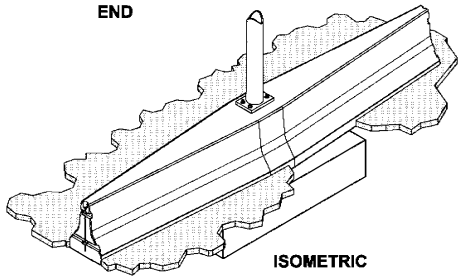

ISOMETRIC

NOTES

1. This plan shall be used for 40' (ft) and 50' (ft) Light Standards with 16' (ft) max. length double mast arms.
2. See **Standard Plan C-8** for details on barrier ends, Wire Rope Loops, and Connecting Pins.
3. Grounding Conductor shall be non-insulated #4 AWG stranded copper; provide 3' - 0" min. slack. Clamp to steel reinforcing bar with connnector suitable for use embedded in concrete.
4. See the Contract Plans for conduit size and placement.
5. Concrete shall be Class 4000.
6. Install conduit couplings on all conduits. Place coupling tops flush with top of concrete. If PVC conduits are specified, the conduit stub and end bell bushing shall not be glued to the coupling.

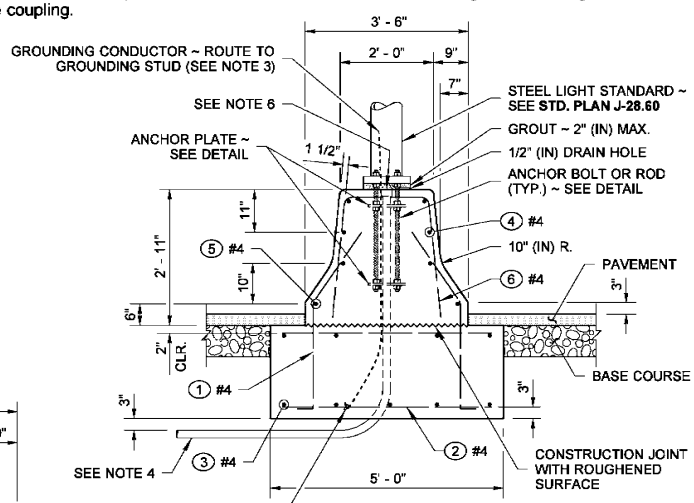

SECTION (A)

RICHARD P. ZELDENRUST
STATE OF WASHINGTON
25470
STRUCTURAL ENGINEER
PROFESSIONAL ENGINEER

Zeldenrust, Richard
Feb 2 2016 11:51 AM

CONCRETE BARRIER LIGHT STANDARD SECTION

STANDARD PLAN C-8b

SHEET 1 OF 2 SHEETS

APPROVED FOR PUBLICATION
Carpenter, Jeff
Feb 29 2016 12:30 PM
STATE DESIGN ENGINEER

Washington State Department of Transportation

DRAWN BY: COLBY FLETCHER

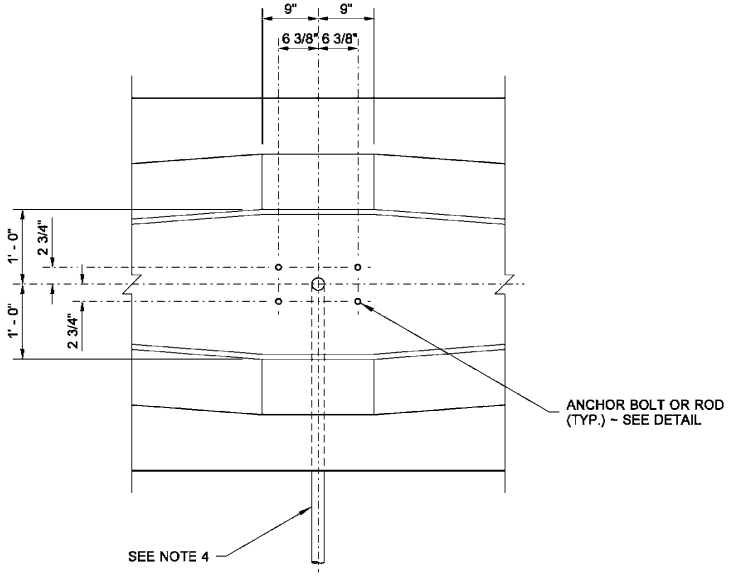

DETAIL "A"

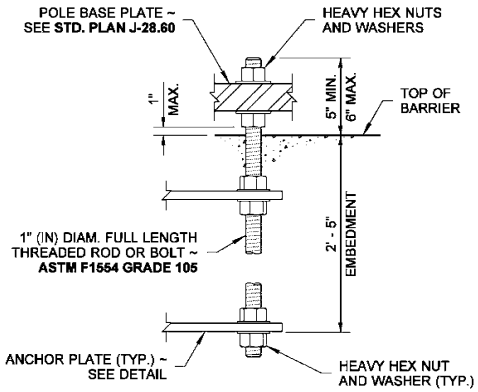

THREADED ROD OR BOLT

ANCHOR BOLT DETAIL

ALL NUTS, BOLTS, WASHERS, AND RODS SHALL BE FULLY GALVANIZED IN ACCORDANCE WITH **ASTM F2329**

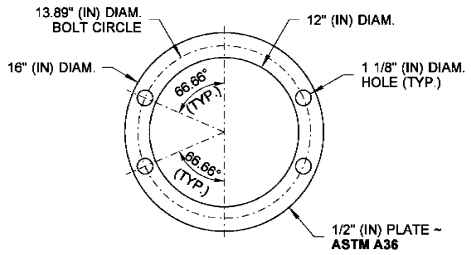

ANCHOR PLATE

BAR LIST					BENDING DIAGRAM
MARK	LOCATION	QTY.	SIZE	LENGTH	(ALL DIMENSIONS ARE OUT TO OUT)
①	FOOTING - DOWEL	28	#4	4' - 3"	
②	FOOTING	18		4' - 8"	
③	FOOTING	9		8' - 8"	
④	BARRIER	4		21' - 0"	
⑤	BARRIER	4		21' - 0"	
⑥	BARRIER	30		5' - 3" TO 6' - 9"	

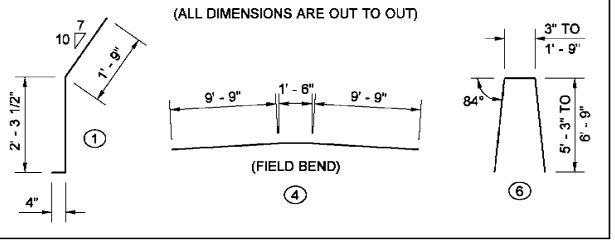

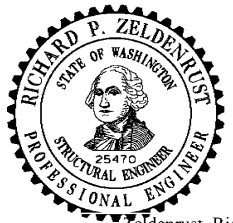

Zeldenrust, Richard
Feb 2 2016 4:20 PM

CONCRETE BARRIER LIGHT STANDARD SECTION

STANDARD PLAN C-8b

SHEET 2 OF 2 SHEETS

APPROVED FOR PUBLICATION
Carpenter, Jeff
Feb 29 2016 12:31 PM
STATE DESIGN ENGINEER
Washington State Department of Transportation

This page left blank intentionally.

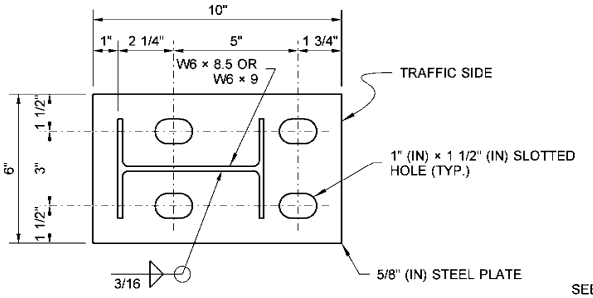

POST BASE PLATE DETAIL

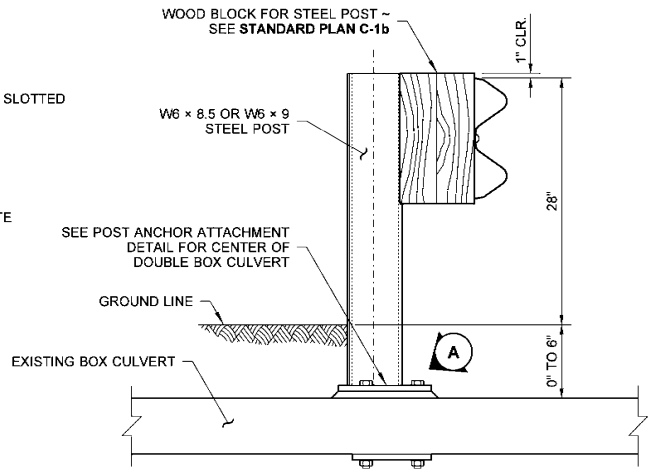

BOX CULVERT GUARDRAIL STEEL POST TYPE 2

(0" (IN) TO 6" (IN) GROUND COVER)

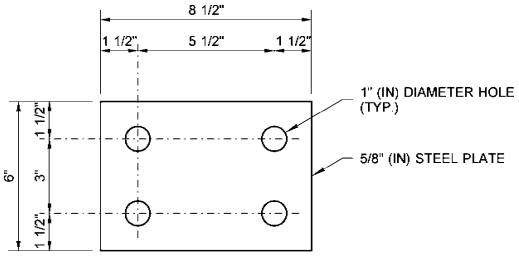

POST BEARING PLATE DETAIL

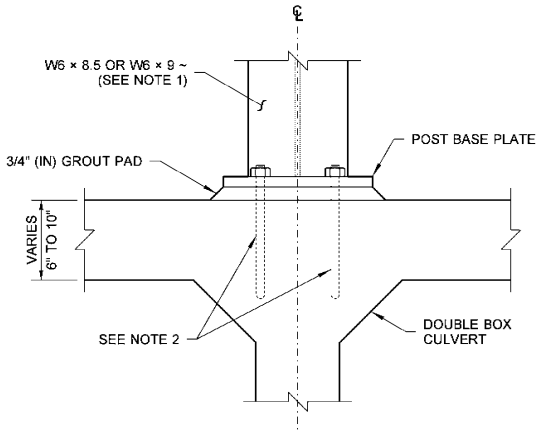

POST ANCHOR ATTACHMENT DETAIL

(SEE NOTE 4)

NOTES

1. Length of W8 × 35, W6 × 8.5 or W6 × 9 shall be determined by measurement from ground line to top of grout pad. This distance shall be verified by the Contractor.
2. Attach Guardrail Post to Box Culvert with 3/4" (in) diameter high-strength bolts with resin-bonded anchors.
3. Drill 1 1/4" (in) diameter hole in concrete slab for 7/8" (in) diameter high-strength bolt. Length of bolt is determined by top slab of Box Culvert thickness, which shall be verified by the Contractor.
4. For details of post attachment to Double Box Culvert, see **Standard Plan C-2i**.

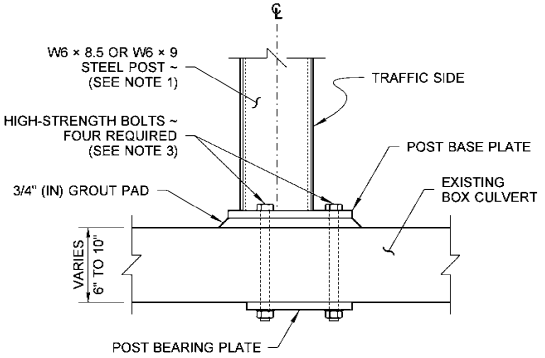

DETAIL (A)

POST BASE ATTACHMENT

DRAWN BY: COLBY FLETCHER

JEFFERY K. PETTERSON
STATE OF WASHINGTON
36937
REGISTERED
PROFESSIONAL ENGINEER

Petterson, Jeff (HQ Design)
Jun 30 2016 7:13 AM

BOX CULVERT GUARDRAIL STEEL POST

STANDARD PLAN C-10

SHEET 1 OF 2 SHEETS

APPROVED FOR PUBLICATION
Carpenter, Jeff
Jul 15 2016 2:23 PM
STATE DESIGN ENGINEER

Washington State Department of Transportation

DRAWN BY: COLBY FLETCHER

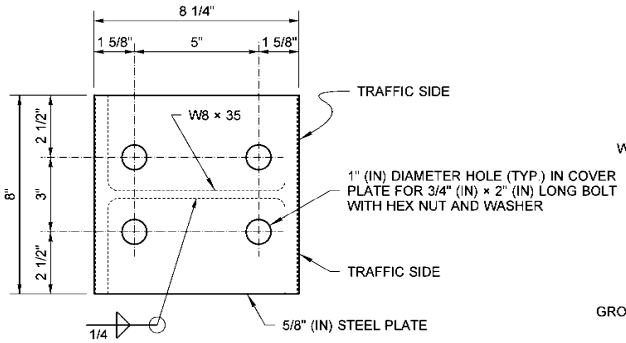

COVER PLATE DETAIL

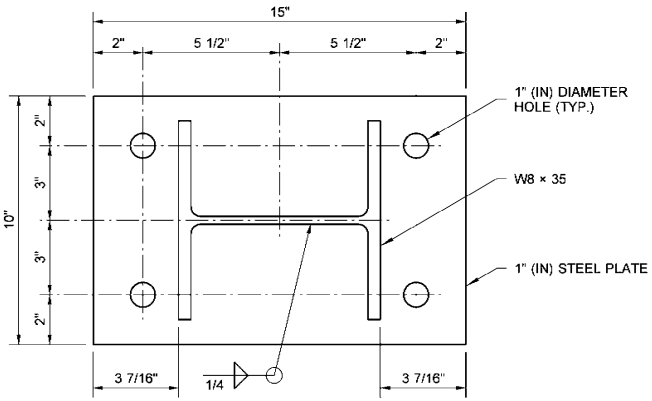

BASE PLATE DETAIL

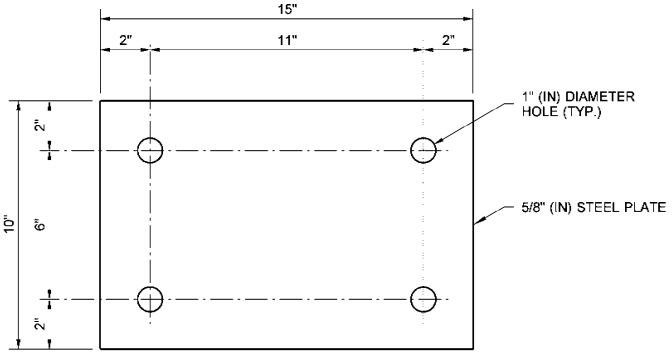

BEARING PLATE DETAIL

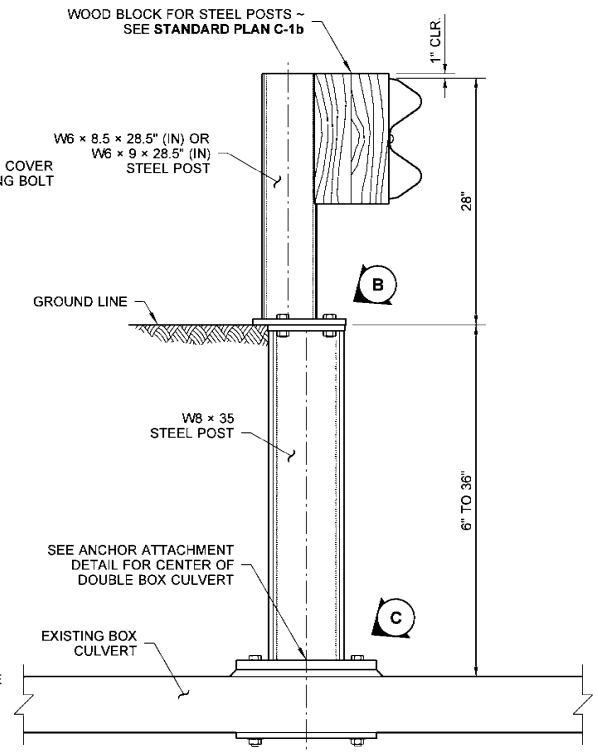

BOX CULVERT GUARDRAIL STEEL POST TYPE 1

(6" (IN) TO 36" (IN) GROUND COVER)

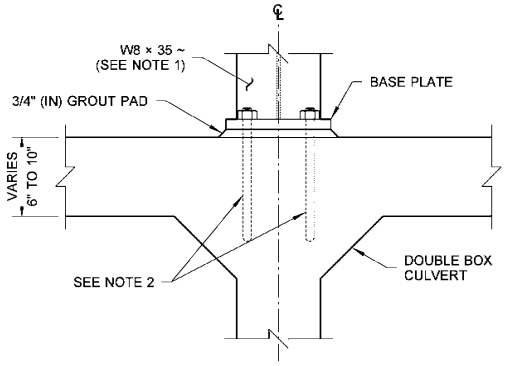

ANCHOR ATTACHMENT DETAIL

(SEE NOTE 4)

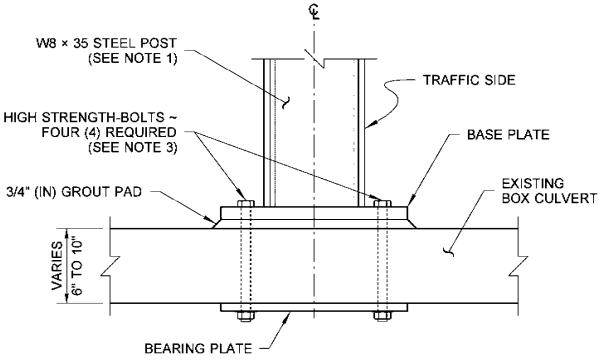

DETAIL C

POST ATTACHMENT

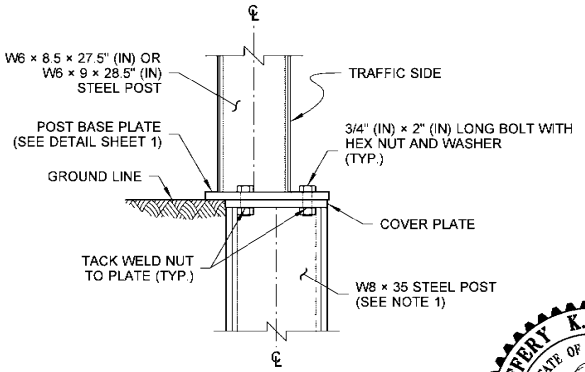

DETAIL B

BASE ATTACHMENT

JEFFERY K. PETTERSON
STATE OF WASHINGTON
36937
REGISTERED
PROFESSIONAL ENGINEER

Petterson, Jeff (HQ Design)
Jun 30 2016 7:13 AM

BOX CULVERT GUARDRAIL STEEL POST

STANDARD PLAN C-10

SHEET 2 OF 2 SHEETS

APPROVED FOR PUBLICATION

Carpenter, Jeff
Jul 15 2016 2:24 PM

STATE DESIGN ENGINEER

Washington State Department of Transportation

This page left blank intentionally.

DRAWN BY: FERN LIDDELL

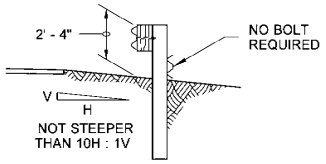

SECTION (A)

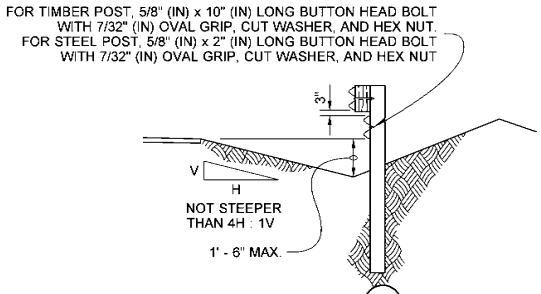

SECTION (B)

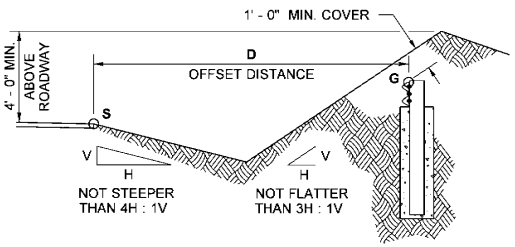

SECTION (C)
(SEE NOTE 3)

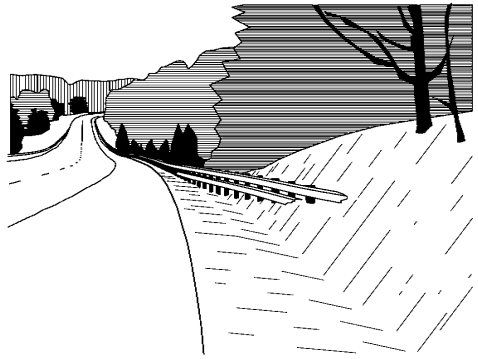

PERSPECTIVE

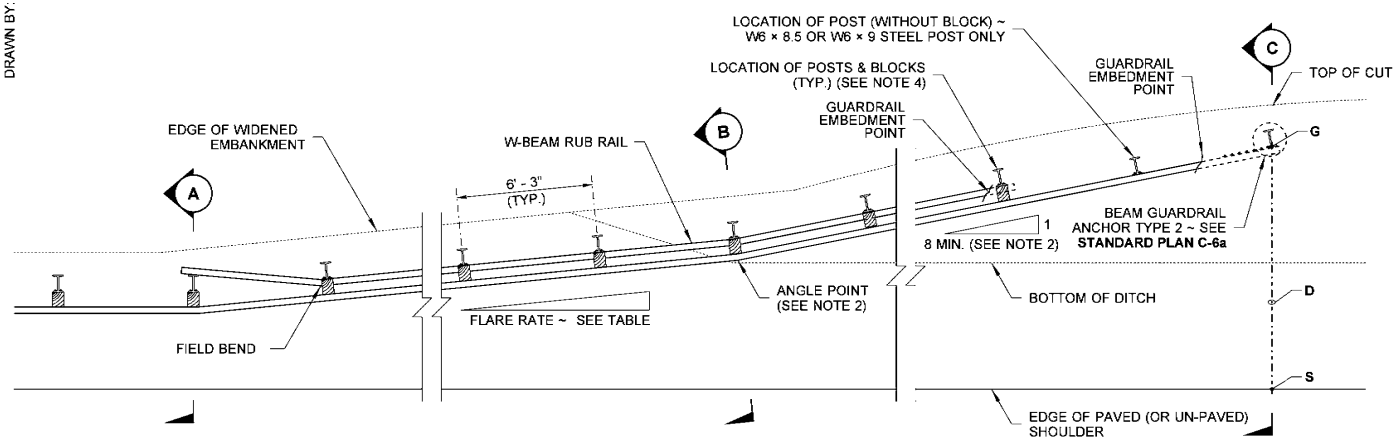

PLAN

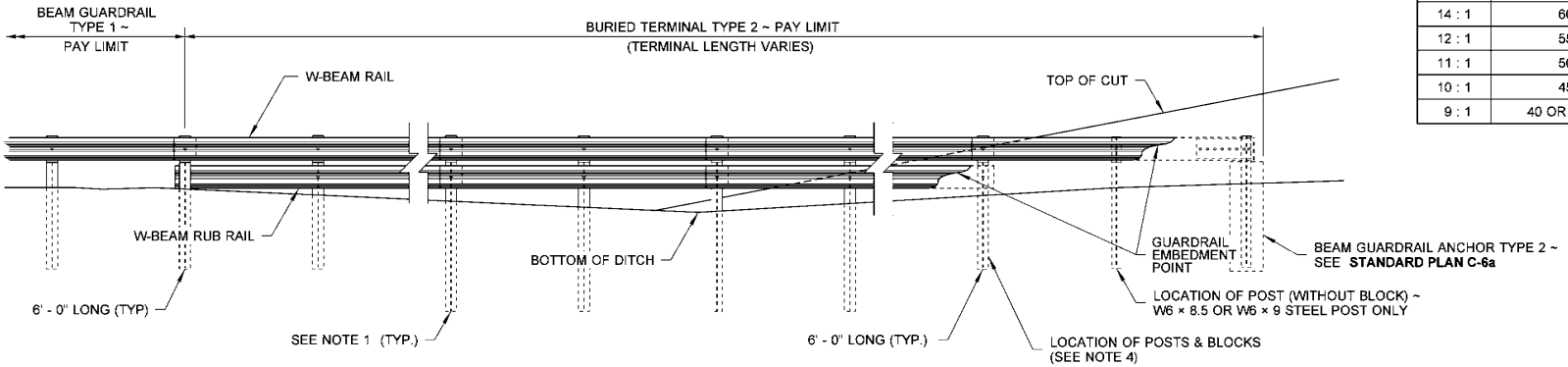

ELEVATION
(PROFILE ALONG RAIL)

NOTES

1. Posts installed on shoulder slopes steeper than 10 : 1 shall be 8' (ft) long.
2. The flare rate of the guardrail may be increased after crossing the ditch bottom to shorten the length of the terminal.
3. Determine the height of the W-Beam at the Anchor (**G**) by first calculating the perpendicular offset distance (**D**) from the edge of shoulder (**S**) to the Anchor (on station). Multiply that distance by 0.1, then subtract the product from the elevation of the same point (**S**) on the edge of shoulder used to obtain the offset distance (at the same station). Add Beam Guardrail design height (28" (in)) to that remainder for a sum that equals the elevation of the top of the W-Beam at the Anchor.

   Refer to SECTION "C":

   $$\text{Elevation}_{G} = (\text{Elevation}_{S} - D \times (0.1)) + 28$$

4. Timber or steel post. Steel post shown.

FLARE RATE TABLE	
RATE (FT)	**POSTED SPEED** (MPH)
15 : 1	70
14 : 1	60
12 : 1	55
11 : 1	50
10 : 1	45
9 : 1	40 OR LESS

JEFFERY K. PETTERSON
STATE OF WASHINGTON
36937
REGISTERED
PROFESSIONAL ENGINEER

Petterson, Jeff (HQ Design)
Jun 30 2016 7:16 AM

BEAM GUARDRAIL TYPE 1
BURIED TERMINAL TYPE 2

STANDARD PLAN C-22.14-04

SHEET 1 OF 1 SHEET

APPROVED FOR PUBLICATION
Carpenter, Jeff
Jul 15 2016 2:24 PM
STATE DESIGN ENGINEER
Washington State Department of Transportation

DRAWN BY: FERN LIDDELL

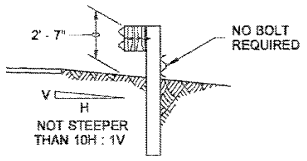

SECTION (A)

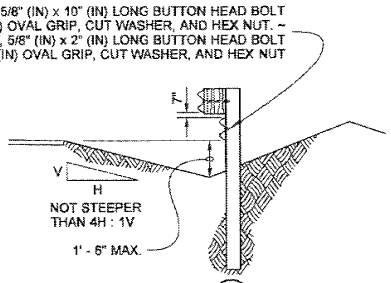

SECTION (B)

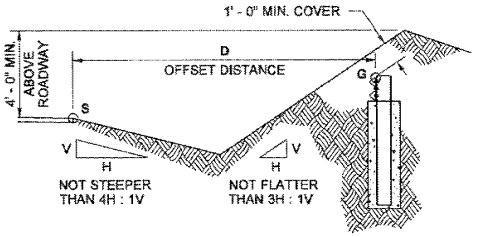

SECTION (C)
(SEE NOTE 3)

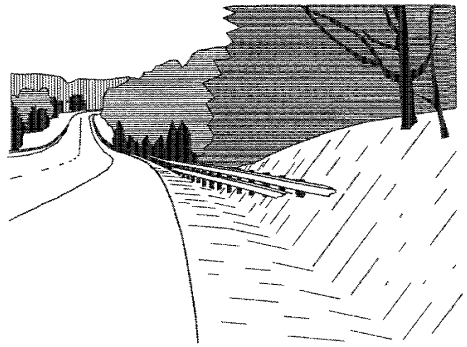

PERSPECTIVE

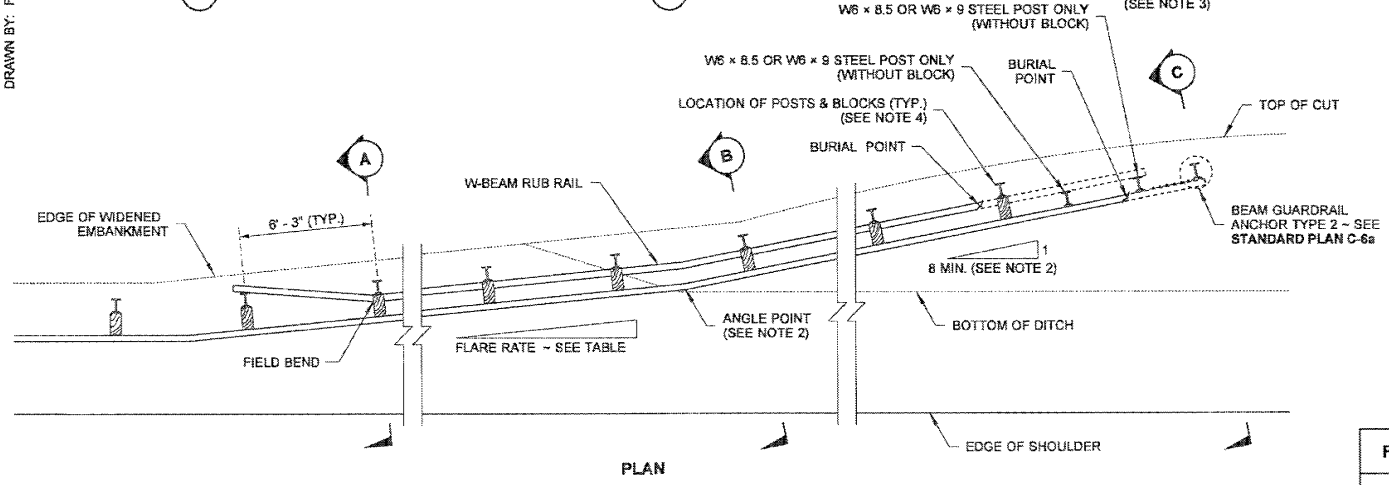

PLAN

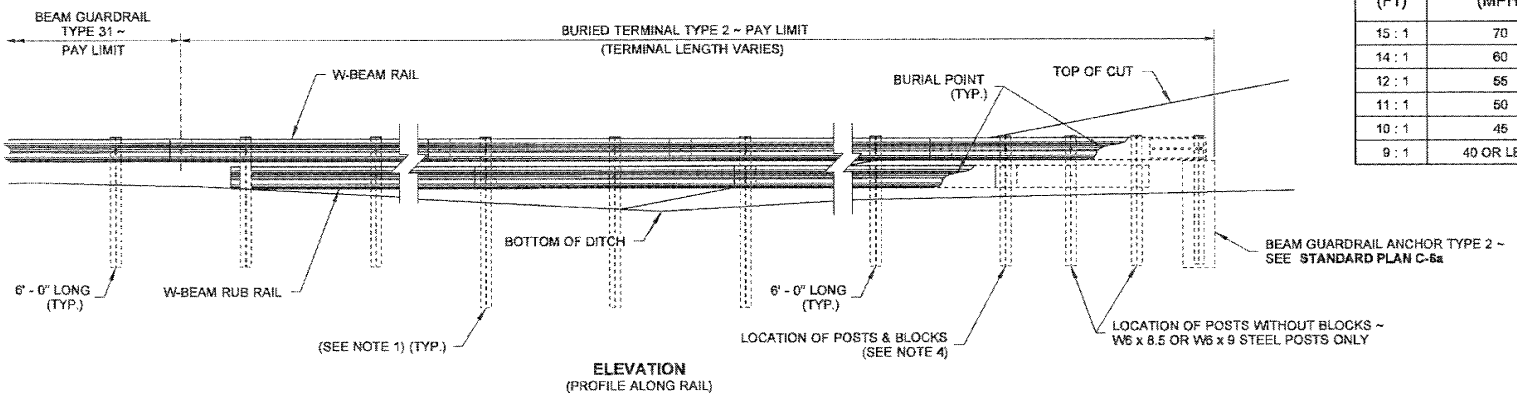

ELEVATION
(PROFILE ALONG RAIL)

NOTES

1. Posts installed on shoulder slopes steeper than 10H : 1V shall be 8' (ft) long.
2. The flare rate of the guardrail may be increased after crossing the ditch bottom to shorten the length of the terminal.
3. Determine the height of the W-Beam at the Anchor (**G**) by first calculating the perpendicular offset distance (**D**) from the edge of shoulder (**S**) to the Anchor (on station). Multiply that distance by 0.1, then subtract the product from the elevation of the same point (**S**) on the edge of shoulder used to obtain the offset distance (at the same station). Add Beam Guardrail design height (31" (in)) to that remainder for a sum that equals the elevation of the top of the W-Beam at the Anchor.

   Refer to SECTION "C":

   $$\text{Elevation}_{G} = (\text{Elevation}_{S} - D(0.1)) + 31$$

4. Timber or steel post. Steel post shown.

FLARE RATE TABLE	
RATE (FT)	POSTED SPEED (MPH)
15 : 1	70
14 : 1	60
12 : 1	55
11 : 1	50
10 : 1	45
9 : 1	40 OR LESS

EDWARD PATRICK BARRY
STATE OF WASHINGTON
34363
REGISTERED
PROFESSIONAL ENGINEER

Barry, Ed
Jul 14 2015 7:54 AM

BEAM GUARDRAIL TYPE 31 ~ BURIED TERMINAL TYPE 2

STANDARD PLAN C-22.16-05

SHEET 1 OF 1 SHEET

APPROVED FOR PUBLICATION
Carpenter, Jeff
Jul 14 2015 11:27 AM
STATE DESIGN ENGINEER

Washington State Department of Transportation

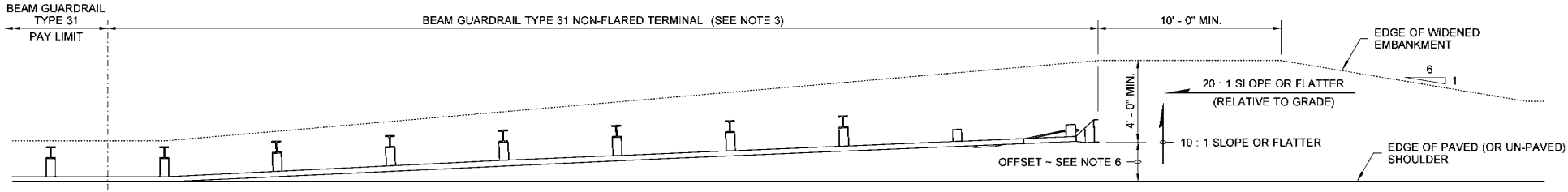

PLAN VIEW
SKT-SP-MGS (TL-3) SHOWN

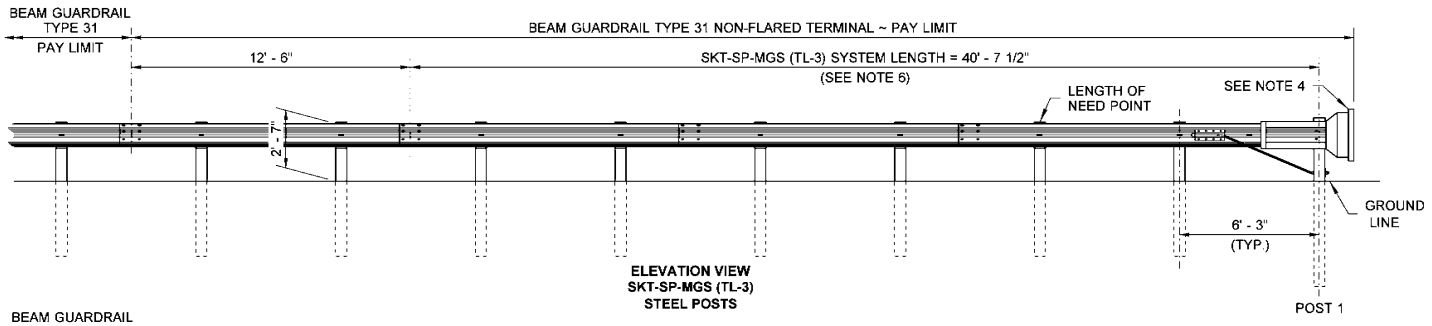

ELEVATION VIEW
SKT-SP-MGS (TL-3)
STEEL POSTS

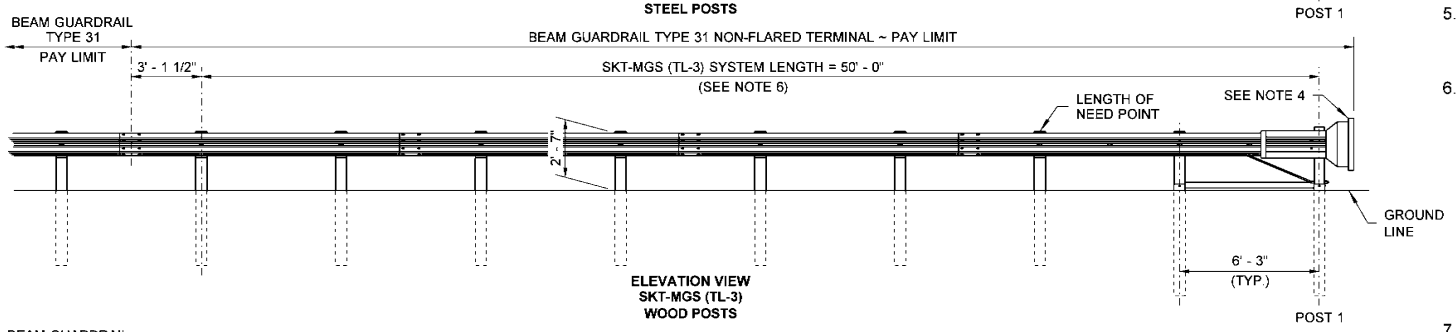

ELEVATION VIEW
SKT-MGS (TL-3)
WOOD POSTS

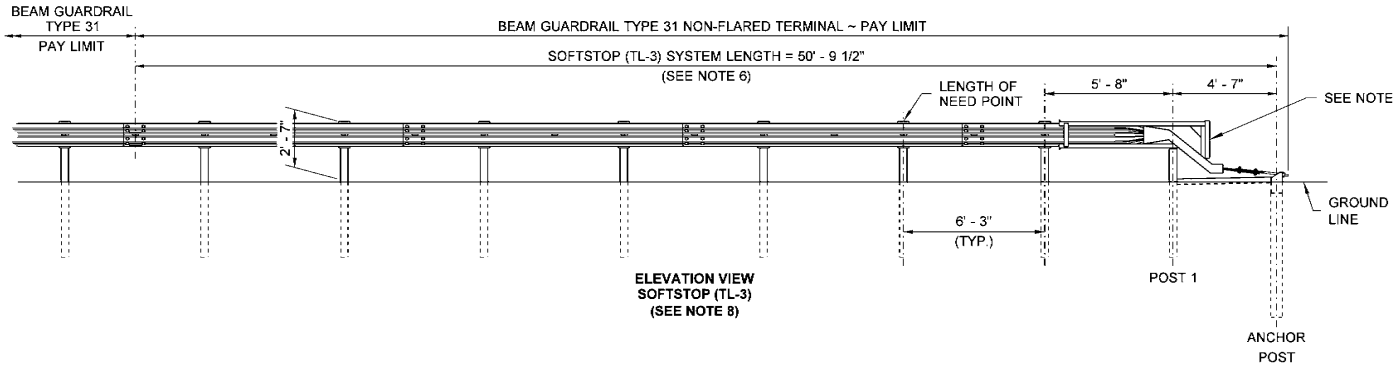

ELEVATION VIEW
SOFTSTOP (TL-3)
(SEE NOTE 8)

NOTES

1. The Implementation of the Manual for Assessment of Safety Hardware (MASH) criteria may result in the acceptance of guardrail terminal systems currently not shown on this plan, or the elimination of guardrail terminals that are on this plan. Non-Flared terminals shall be selected from the WSDOT Qualified Products List (QPL) or approved through the WSDOT Request for Approval of Materials (RAM) process.
2. This terminal is FHWA eligible at Test Level Three (TL-3) and may be used for all posted speeds.
3. An SKT-MGS (TL-3) or an SKT-SP-MGS (TL-3) as manufactured by Road Systems, Inc. or SOFTSTOP (TL-3) as manufactured by Trinity Highway Products, LLC shall be installed according to manufacturer's recommendations.
4. A reflectorized object marker shall be installed according to manufacturer's recommendations.
5. When snow load post washers and snow load rail washers are required by the Contract, the snow load rail washers shall not be installed within the terminal limits.
6. Terminal shall be installed at a widening, ensuring the end piece is entirely off the shoulder. While this terminal does not require an offset at the end, a flare is recommended. For the SKT-MGS (TL-3) and the SKT-SP-MGS (TL-3), a maximum flare of 25 :1 or flatter over the length of the terminal is allowed with a maximum offset of 24" (in) over 50' (ft).

   For the SOFTSTOP (TL-3) a maximum flare of 25.4 : 1 or flatter is allowed over the system length of 50' - 9 1/2" with a maximum offset of 24" (in) at the anchor post.
7. For terminal details, see WSDOT approved manufacturer's drawings.
8. The SOFTSTOP terminal is supplied with steel posts only. It can be used with guardrail runs composed of steel or wood guardrail posts.

JEFFERY K. PETTERSON
STATE OF WASHINGTON
36937
REGISTERED
PROFESSIONAL ENGINEER

Petterson, Jeff (HQ Design)
Jul 13 2016 8:06 AM

BEAM GUARDRAIL TYPE 31 NON-FLARED TERMINAL (ALL POSTED SPEEDS) STANDARD PLAN C-22.40-05

SHEET 1 OF 1 SHEET

APPROVED FOR PUBLICATION
Carpenter, Jeff
Jul 15 2016 2:25 PM
STATE DESIGN ENGINEER
Washington State Department of Transportation

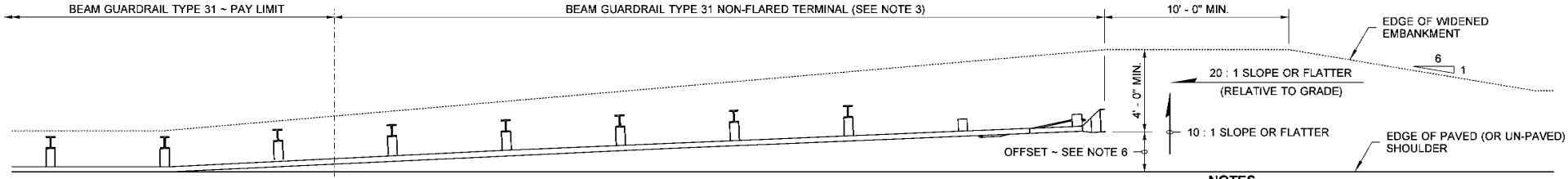

PLAN VIEW
(SKT-SP-MGS (TL-2) SHOWN)

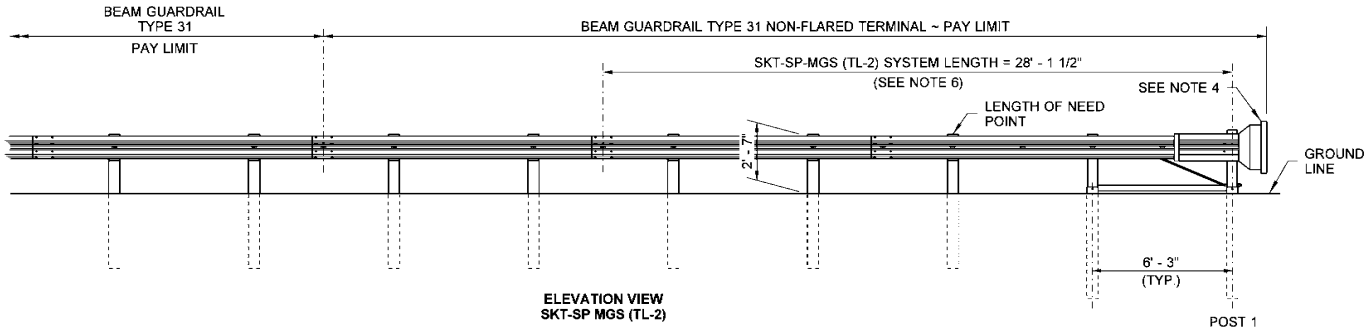

ELEVATION VIEW
SKT-SP MGS (TL-2)

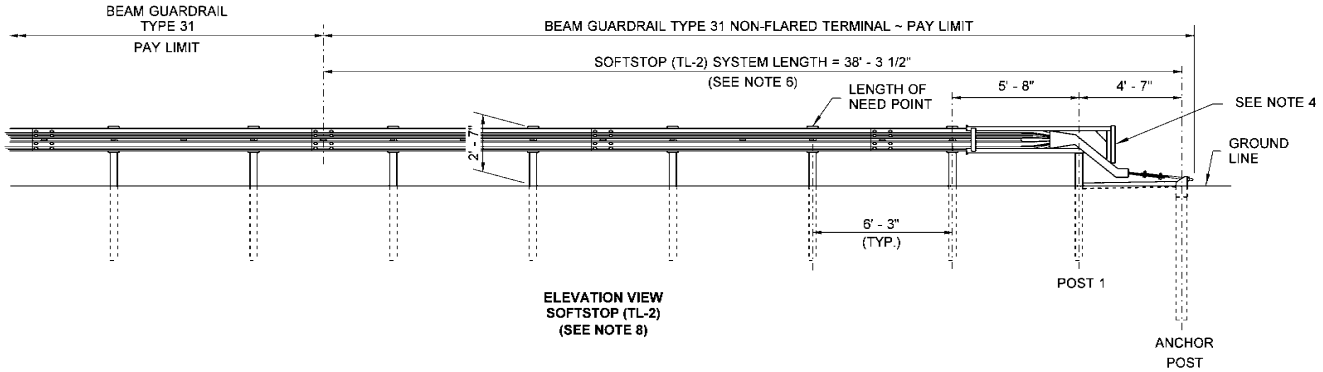

ELEVATION VIEW
SOFTSTOP (TL-2)
(SEE NOTE 8)

NOTES

1. The Implementation of the Manual for Assessment of Safety Hardware (MASH) criteria may result in the acceptance of guardrail terminal systems currently not shown on this plan, or the elimination of guardrail terminals that are on this plan. Non-Flared terminals shall be selected from the WSDOT Qualified Products List (QPL) or approved through the WSDOT Request for Approval of Materials (RAM) process.
2. This terminal is FHWA eligible at Test Level Two (TL-2) and may be used in applications with posted speeds of 45 mph or less.
3. An SKT-SP-MGS (TL-2) as manufactured by Road Systems, Inc. or SOFTSTOP (TL-2) as manufactured by Trinity Highway Products, LLC shall be installed according to manufacturer's recommendations.
4. A reflectorized object marker shall be installed according to manufacturer's recommendations.
5. When snow load post washers and snow load rail washers are required by the Contract, the snow load rail washers shall not be installed within the terminal limits.
6. Terminal shall be installed at a widening, ensuring the end piece is entirely off the shoulder. While this terminal does not require an offset at the end, a flare is recommended. For the SKT-SP-MGS (TL-2), a maximum flare of 25 : 1 or flatter over the length of the terminal is allowed with a maximum offset of 24" (in) over 50' (ft).

   For the SOFTSTOP (TL-2) a maximum flare of 38.29 : 1 or flatter is allowed over the system length of 38' - 3 1/2" with a maximum offset of 12" (in) at the anchor post.
7. For terminal details, see WSDOT approved manufacturer's drawings.
8. The SOFTSTOP terminal is supplied with steel posts only. It can be used with guardrail runs composed of steel or wood guardrail posts.

JEFFERY K. PETTERSON
STATE OF WASHINGTON
36937
REGISTERED
PROFESSIONAL ENGINEER

Jeff Pettersen (HQ Design)
Jul 13 2016 8:23 AM

BEAM GUARDRAIL TYPE 31 NON-FLARED TERMINAL (POSTED SPEED 45 MPH AND BELOW)

STANDARD PLAN C-22.45-02

SHEET 1 OF 1 SHEET

APPROVED FOR PUBLICATION
Carpenter, Jeff
Jul 15 2016 2:25 PM
STATE DESIGN ENGINEER
Washington State Department of Transportation

NOTES

1. Refer to **Standard Plans C-1** and **C-1b** for component details for Beam Guardrail Type 1 (not shown on this plan).
2. Refer to **Standard Plan C-20.10** for component details for Beam Guardrail Type 31 (not shown on this plan).
3. Accomodating the wider blockout (12" (in) width) used with Type 31 guardrail will require widening the embankment by 4" (in) or narrowing the shoulder by 4" (in).
4. Wood blocks shown. Blocks of alternate material may be used. See **Standard Specification 9-16.3(2).**
5. All posts for any standard barrier run shall be of the same type: timber or steel.

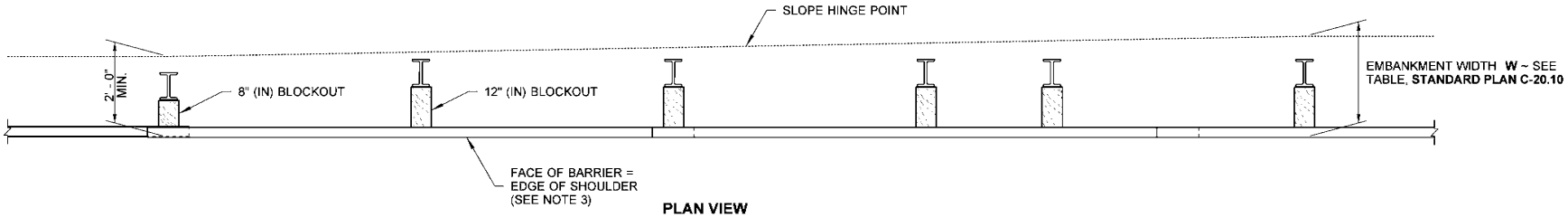

PLAN VIEW

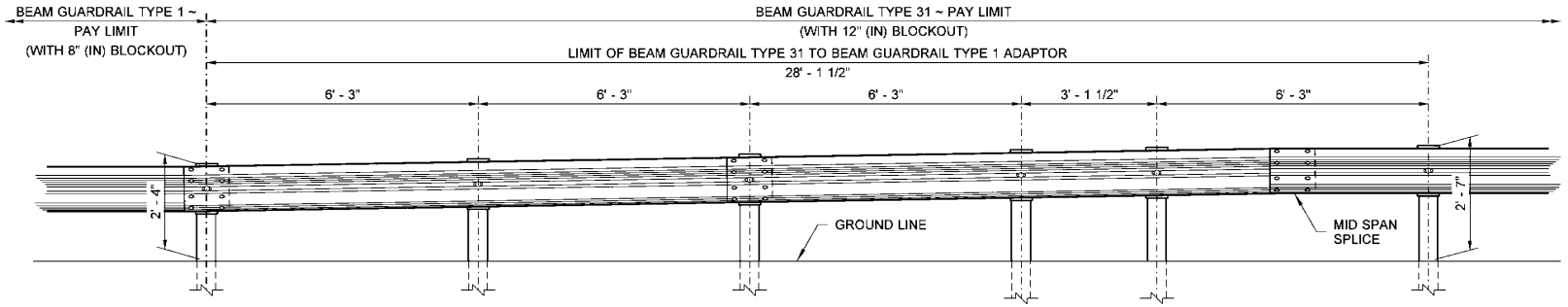

ELEVATION VIEW ~ PROFILE TAPER

JEFFERY K. PETTERSON
STATE OF WASHINGTON
36937
REGISTERED
PROFESSIONAL ENGINEER

Petterson, Jeff (HQ Design)
Jun 30 2016 7:16 AM

BEAM GUARDRAIL TYPE 31 TO BEAM GUARDRAIL TYPE 1 ADAPTOR

STANDARD PLAN C-25.80-04

SHEET 1 OF 1 SHEET

APPROVED FOR PUBLICATION

Carpenter, Jeff
Jul 15 2016 2:26 PM

STATE DESIGN ENGINEER

Washington State Department of Transportation

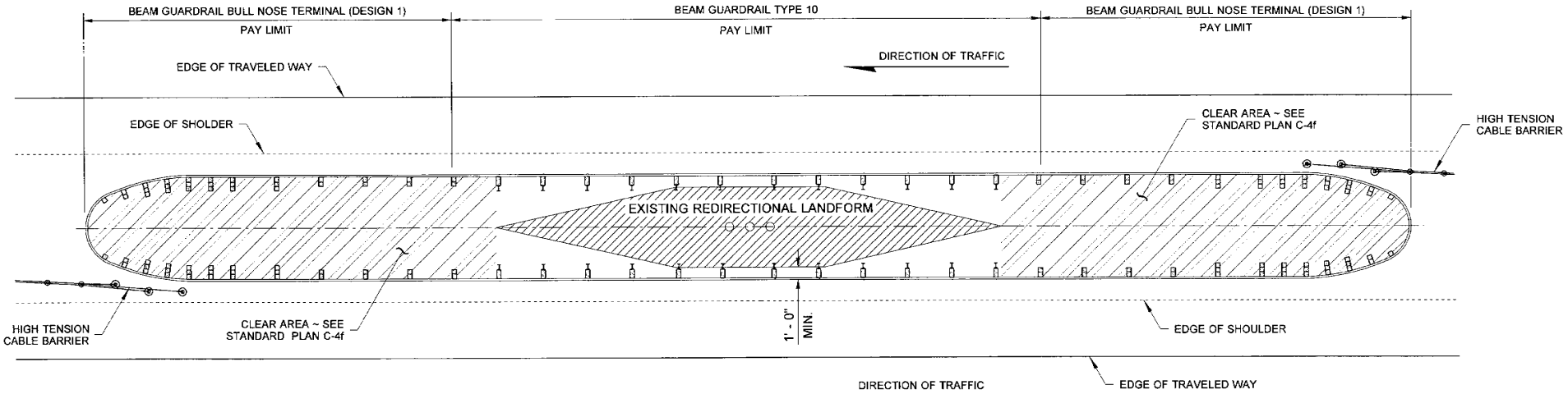

PLAN VIEW

CASE 9A

DRAWN BY: FERN LIDDELL

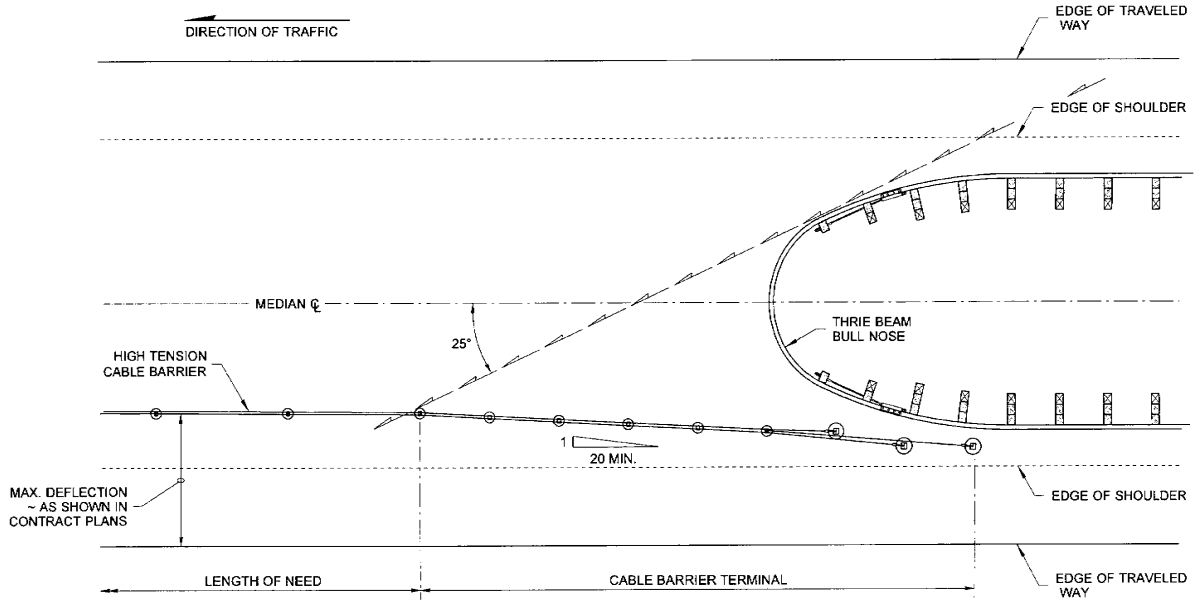

PLACEMENT DETAIL

LEGEND

Design Layout Line

EDWARD PATRICK BARRY
STATE OF WASHINGTON
14363
REGISTERED PROFESSIONAL ENGINEER

7-2-2012

BARRIER PLACEMENT CABLE TO THRIE BEAM BULL NOSE CONNECTION STANDARD PLAN C-40.14-02

SHEET 1 OF 1 SHEET

APPROVED FOR PUBLICATION

STATE DESIGN ENGINEER — DATE 7/2/12

Washington State Department of Transportation

DRAWN BY: BILL BERENS

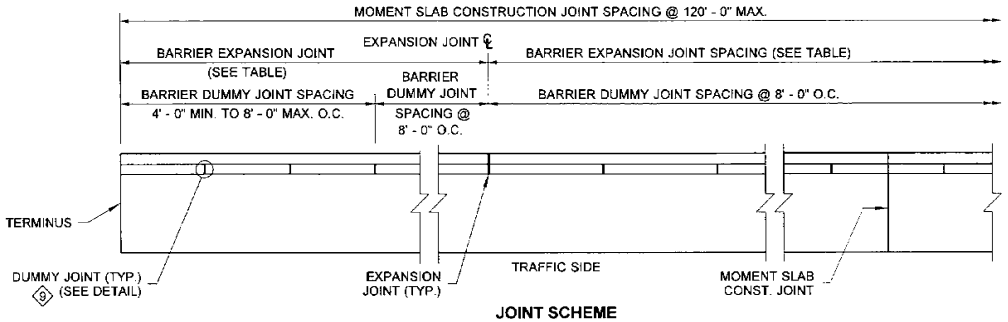

JOINT SCHEME
PLAN VIEW

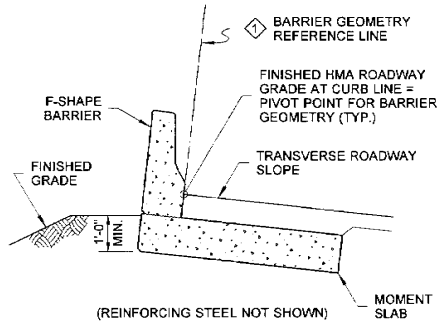

TYPICAL SECTION
SHOWN AT GRADE

KEY NOTES

① THE BARRIER GEOMETRY REFERENCE LINE (B.G.R.L.) IS PERPENDICULAR TO THE TRANSVERSE ROADWAY SLOPE (T.R.S.). FOR SUPERELEVATED TRANSVERSE ROADWAY SLOPES, THE B.G.R.L. ON THE LOW SIDE OF THE ROADWAY SHALL BE PERPENDICULAR TO THE T.R.S. UP TO A MAXIMUM OF 8% SUPERELEVATION; THE B.G.R.L. ON THE HIGH SIDE SHALL ALWAYS BE PERPENDICULAR TO THE T.R.S..

② JUNCTION BOX (MOUNT BOX SO COVER IS FLUSH WITH THE BARRIER FACE WITH A 0" TOLERANCE PROTRUDING BEYOND THE BARRIER FACE AND 1/8" RECESSED). USE NEMA 4X JUNCTION BOX WITH STATIONARY-FORMS ~ SEE **STANDARD PLAN J-40.36**. USE NEMA 3R JUNCTION BOX WITH SLIP-FORMS ~ SEE **STANDARD PLAN J-40.37**.

③ 1 1/2" MIN. CONCRETE COVER ~ INCREASE THE COVER AS REQUIRED TO ACCOMMODATE ARCHITECTURAL FEATURES AND FINISH.

④ CONSTRUCTION JOINT WITH ROUGHENED SURFACE.

⑤ THE NOTCH, DETAILED BY THESE DIMENSIONS AND SPECIFICATIONS, IS REQUIRED ONLY IF THE BARRIER IS ON WALL FACING.

⑥ RUSTICATION ~ SEE RUSTICATION DETAIL

⑦ FOR STRUCTURAL DETAILS BELOW THE MATCH LINE, SEE **STANDARD PLANS D-3.09, D-3.10 OR D-3.11.**

⑧ 1/2" EXPANSION JOINT WITH PREMOLDED JOINT FILLER.

⑨ INSTALL BARRIER DUMMY JOINTS ON TRAFFIC SIDE ONLY WHEN ARCHITECTURAL FEATURES ARE SPECIFIED.

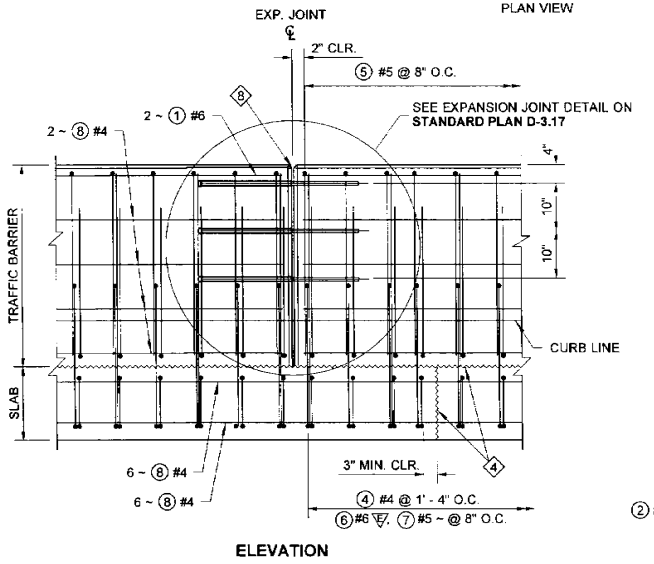

ELEVATION

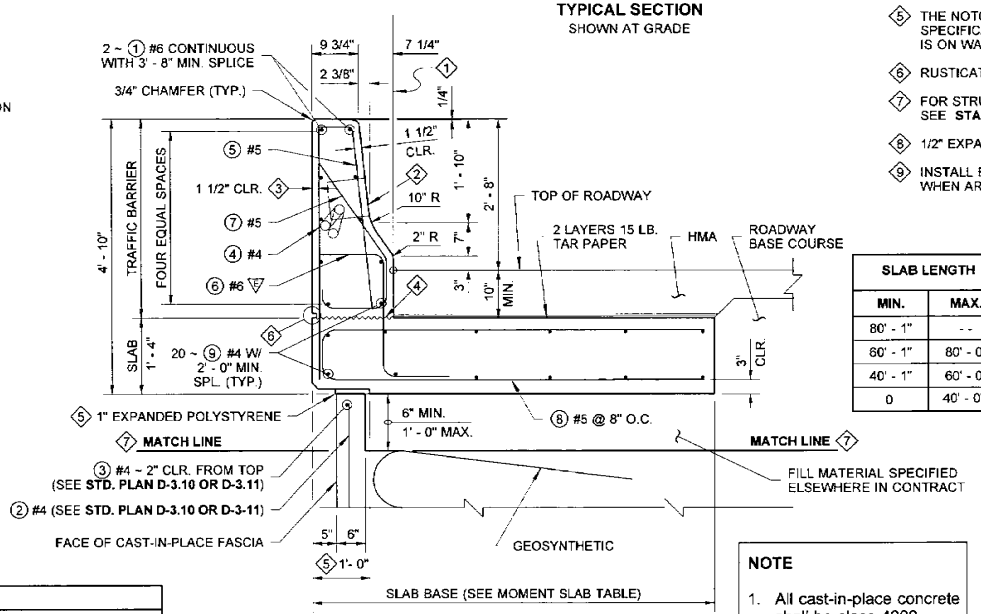

TYPICAL SECTION
SHOWN ON WALL

SLAB LENGTH		SLAB BASE		BARRIER EXPANSION JOINT SPACING	
MIN.	MAX.	ON WALL	AT GRADE	MIN.	MAX.
80' - 1"	- -	7' - 0"	5' - 0"	80' - 0"	120' - 0"
60' - 1"	80' - 0"	8' - 0"	6' - 0"	60' - 0"	80' - 0"
40' - 1"	60' - 0"	9' - 0"	7' - 0"	40' - 0"	60' - 0"
0	40' - 0"	CONTACT BRIDGE OFFICE			

NOTE

1. All cast-in-place concrete shall be class 4000.

REINFORCING STEEL BENDING DIAGRAM

ALL REINFORCING BARS SHOWN ON THIS PLAN SHALL BE AASHTO M 31 UNLESS OTHERWISE NOTED.

ALL DIMENSIONS ARE OUT TO OUT

▽ = EPOXY COATED

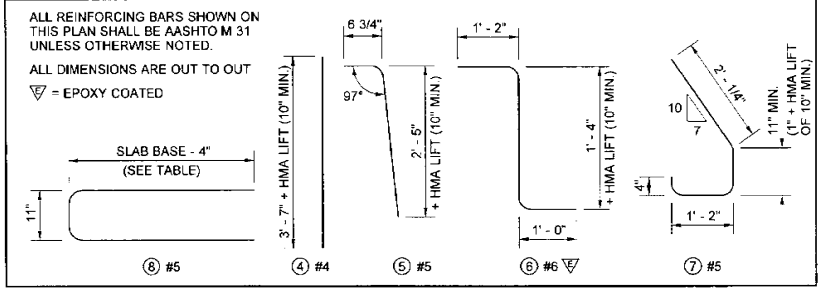

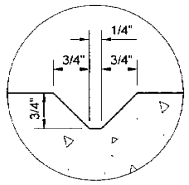

DUMMY JOINT DETAIL

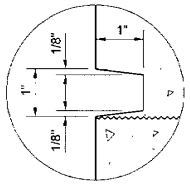

RUSTICATION DETAIL

BIJAN KHALEGHI
STATE OF WASHINGTON
27695
STRUCTURAL ENGINEER
PROFESSIONAL ENGINEER
5/16/13

PERMANENT GEOSYNTHETIC WALL F - SHAPE BARRIER STANDARD PLAN D-3.16-02

SHEET 1 OF 1 SHEET

APPROVED FOR PUBLICATION

STATE DESIGN ENGINEER — DATE 5/20/13

Washington State Department of Transportation

DRAWN BY: FERN LIDDELL

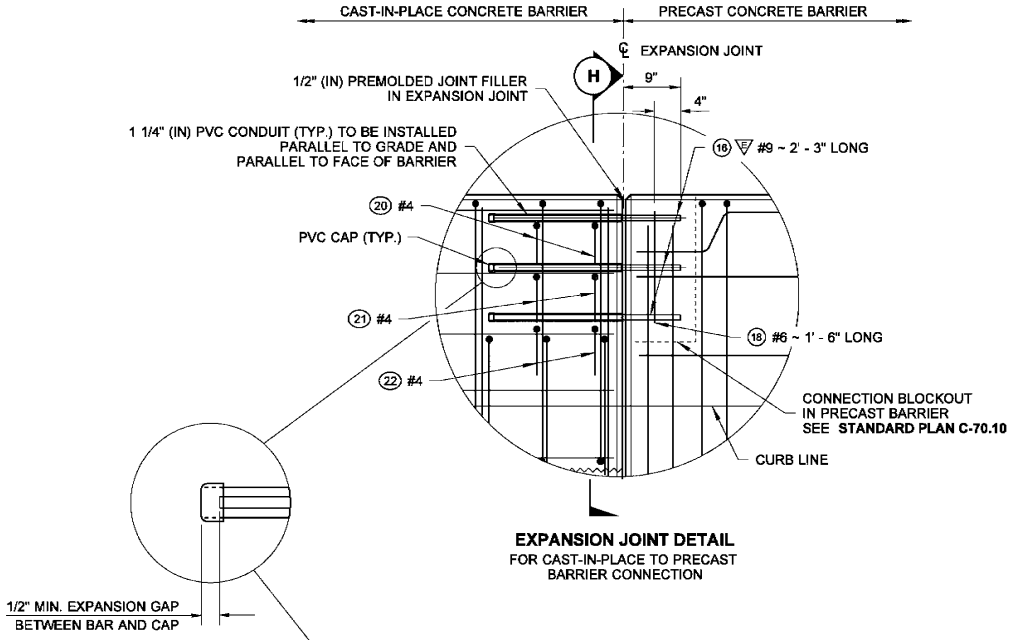

EXPANSION JOINT DETAIL
FOR CAST-IN-PLACE TO PRECAST BARRIER CONNECTION

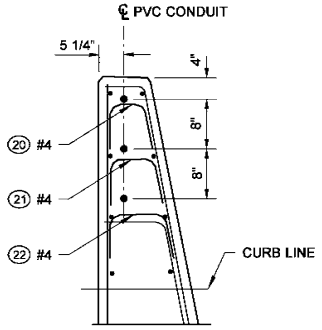

SECTION H

FOR DETAILS NOT SHOWN ~ SEE TYPICAL SECTION
STANDARD PLAN D-3.15 OR D-3.16

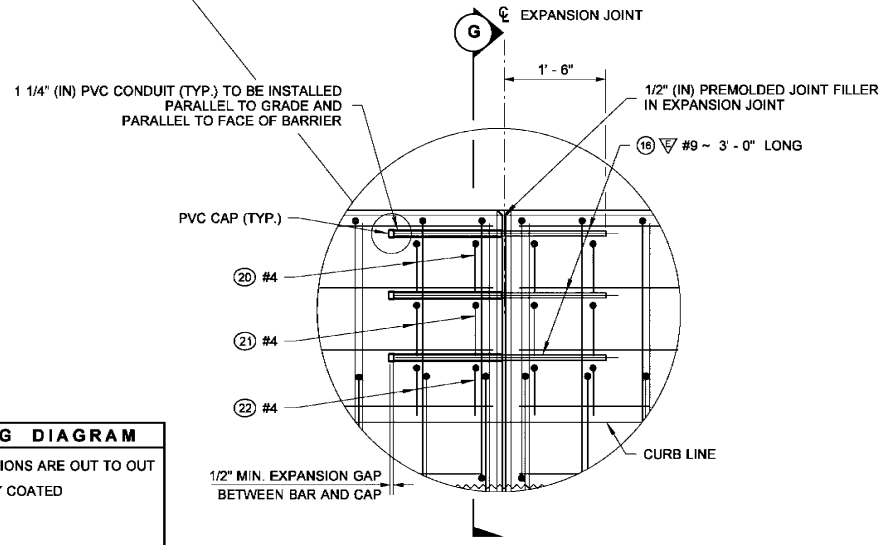

EXPANSION JOINT DETAIL

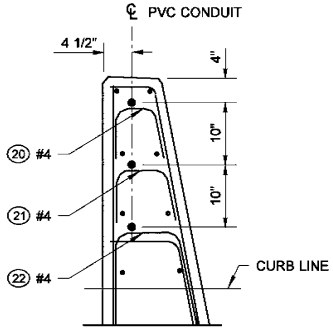

SECTION G

FOR DETAILS NOT SHOWN ~ SEE TYPICAL SECTION
STANDARD PLAN D-3.15 OR D-3.16

NOTE

1. Ensure that no concrete enters the PVC conduit during concrete placement.

REINFORCING STEEL BENDING DIAGRAM

ALL REINFORCING BARS SHOWN ON THIS PLAN SHALL BE AASHTO M 31 UNLESS OTHERWISE NOTED.

ALL DIMENSIONS ARE OUT TO OUT

▽ = EPOXY COATED

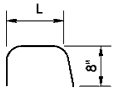

20 #4 L = 7"
21 #4 L = 8 7/8"
22 #4 L = 10 3/4"

BIJAN KHALEGHI
STATE OF WASHINGTON
27695
STRUCTURAL ENGINEER
PROFESSIONAL ENGINEER

Bijan Khaleghi
Khaleghi, Bijan
Apr 28 2016 2:25 PM

PERMANENT GEOSYNTHETIC WALL EXPANSION JOINT DETAILS

STANDARD PLAN D-3.17-02

SHEET 1 OF 1 SHEET

APPROVED FOR PUBLICATION

Carpenter, Jeff
Carpenter, Jeff
May 9 2016 12:04 PM

STATE DESIGN ENGINEER DATE

Washington State Department of Transportation

DRAWN BY: BILL BERENS

REINFORCING STEEL BENDING DIAGRAM

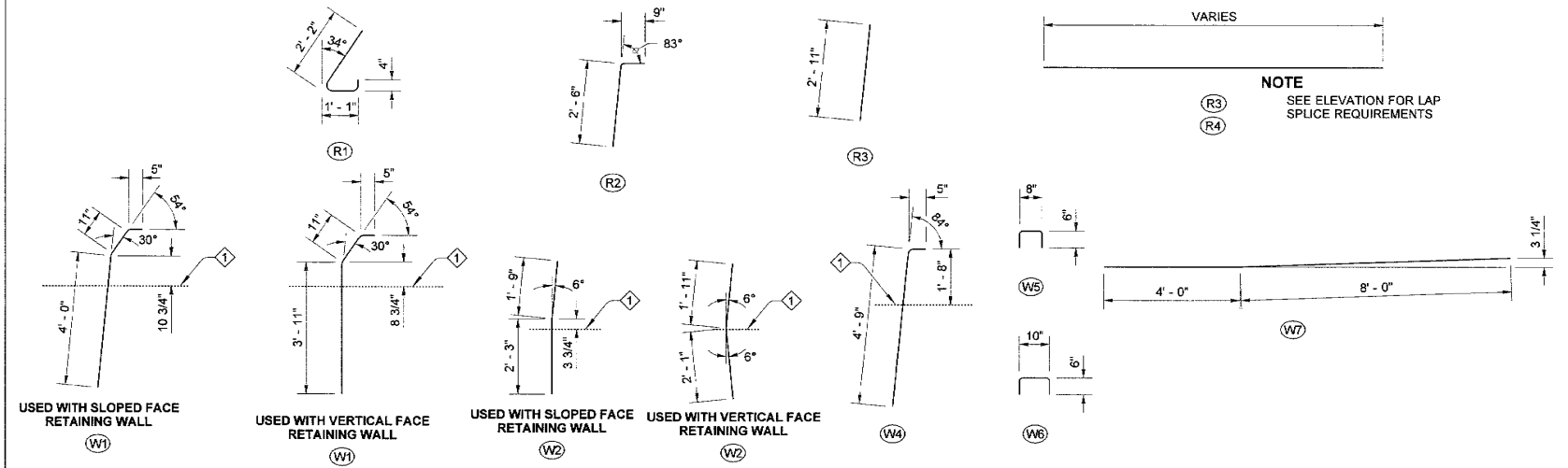

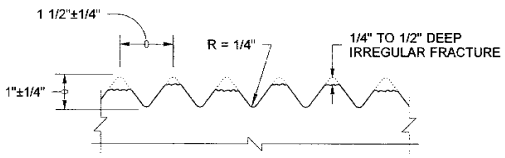

PLAN VIEW

FRACTURED FIN FINISH DETAIL

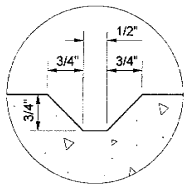

DUMMY JOINT DETAIL

BIJAN KHALEGHI
STATE OF WASHINGTON
27695
STRUCTURAL ENGINEER
PROFESSIONAL ENGINEER
11/25/08

TRAFFIC BARRIER DETAILS FOR REINFORCED CONCRETE RETAINING WALLS

STANDARD PLAN D-15.10-01

SHEET 2 OF 2 SHEETS

APPROVED FOR PUBLICATION

STATE DESIGN ENGINEER — DATE 12/2/08

Washington State Department of Transportation

DRAWN BY: FERN LIDDELL

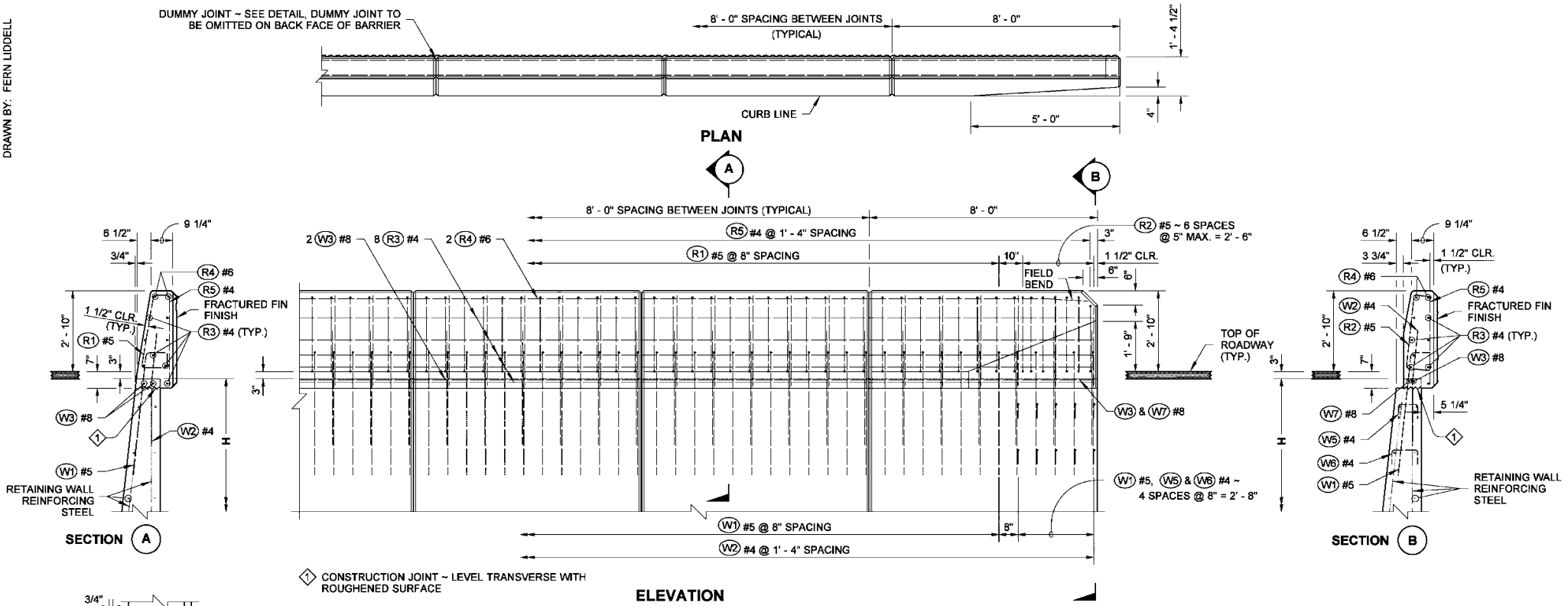

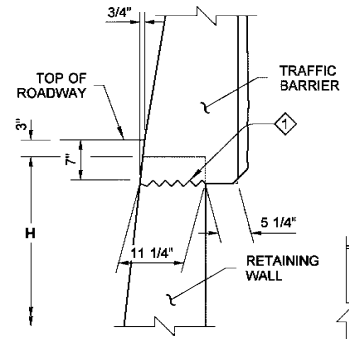

DETAIL

2 ATTACH GUARDRAIL TO CONCRETE TRAFFIC BARRIER WITH 7/8" (IN) DIAM. HIGH STRENGTH BOLTS **(STANDARD SPECIFICATION 9-06.5(4))** WITH THIN SLAB FERRULE INSERTS OR RESIN BONDED ANCHORS. SEE THE CONTRACT PLANS.

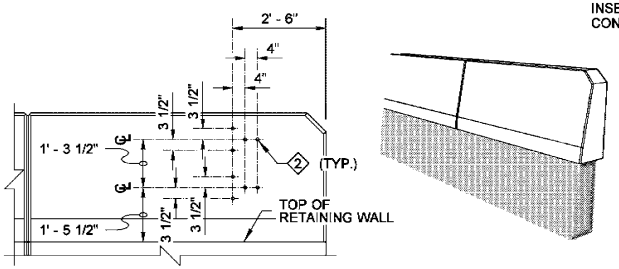

ELEVATION PERSPECTIVE VIEW

BEAM GUARDRAIL TRANSITION TYPE 20 CONNECTION

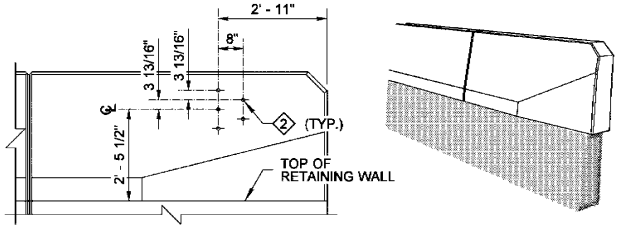

ELEVATION PERSPECTIVE VIEW

BEAM GUARDRAIL TRANSITION TYPE 21 CONNECTION

SINGLE SLOPE TRAFFIC BARRIER ON RETAINING WALL

BIJAN KHALEGHI STATE OF WASHINGTON 27695 STRUCTURAL ENGINEER PROFESSIONAL ENGINEER

Bijan Khaleghi Khaleghi, Bijan Apr 28 2016 2:24 PM

TRAFFIC BARRIER DETAILS FOR REINFORCED CONCRETE RETAINING WALLS

STANDARD PLAN D-15.20-03

SHEET 1 OF 2 SHEETS

APPROVED FOR PUBLICATION
Carpenter, Jeff
Carpenter, Jeff May 9 2016 12:05 PM
STATE DESIGN ENGINEER
Washington State Department of Transportation

DRAWN BY: FERN LIDDELL

REINFORCING STEEL BENDING DIAGRAM

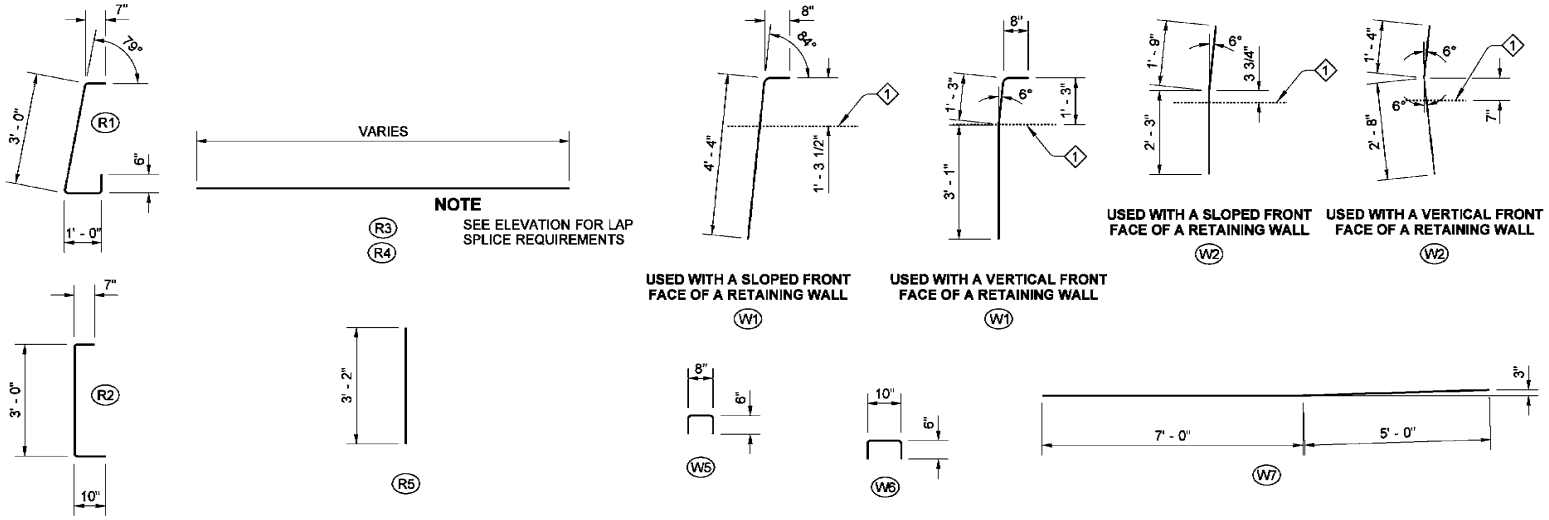

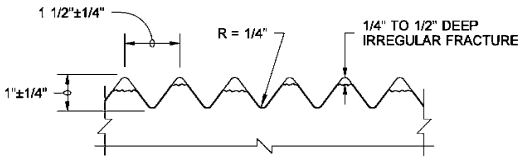

PLAN VIEW

FRACTURED FIN FINISH DETAIL

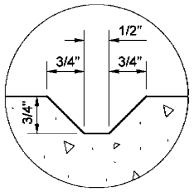

DUMMY JOINT DETAIL

BIJAN KHALEGHI
STATE OF WASHINGTON
27695
STRUCTURAL ENGINEER
PROFESSIONAL ENGINEER

Bijan Khaleghi
Khaleghi, Bijan
May 19 2016 11:28 AM

TRAFFIC BARRIER DETAILS FOR REINFORCED CONCRETE RETAINING WALLS

STANDARD PLAN D-15.20-03

SHEET 2 OF 2 SHEETS

APPROVED FOR PUBLICATION

Carpenter, Jeff
Jun 1 2016 3:48 PM

STATE DESIGN ENGINEER

Washington State Department of Transportation

DRAWN BY: BILL BERENS

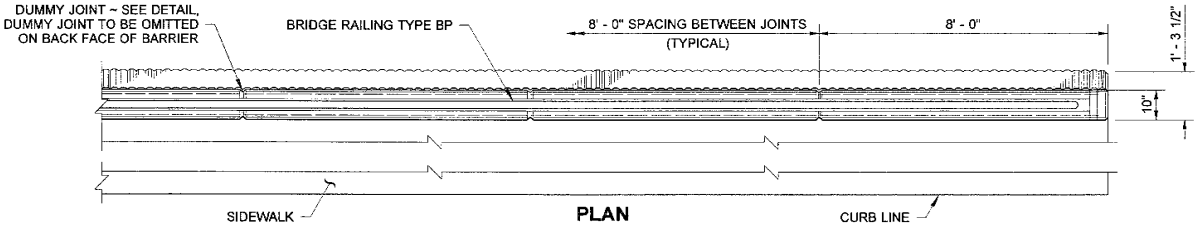

PLAN

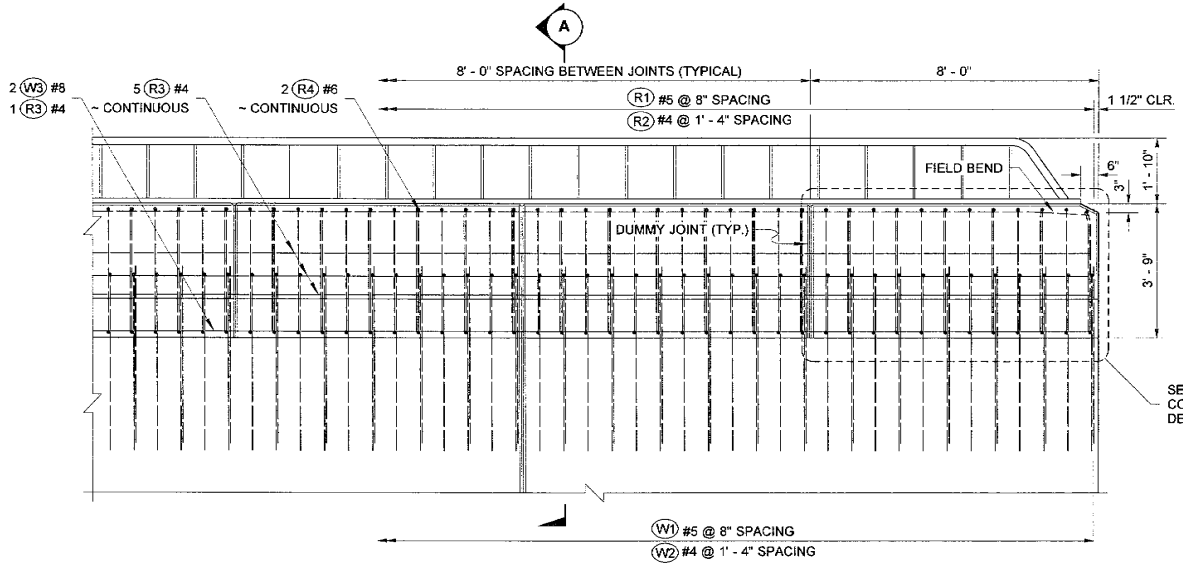

ELEVATION

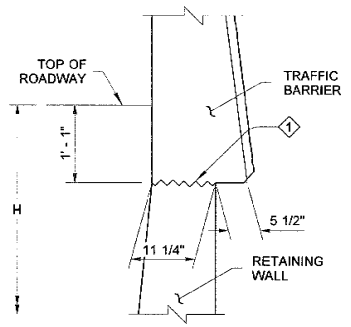

DETAIL

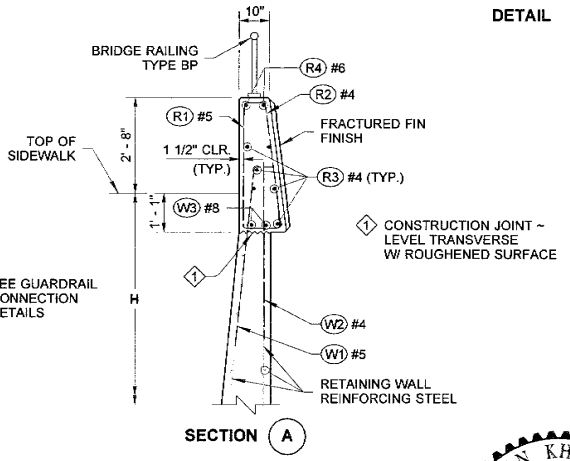

SECTION A

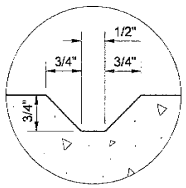

DUMMY JOINT DETAIL

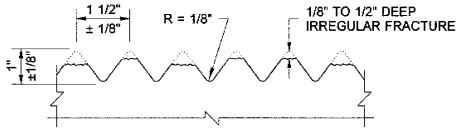

PLAN VIEW

FRACTURED FIN FINISH DETAIL

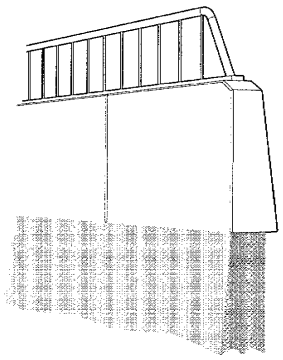

OBLIQUE VIEW

TRAFFIC BARRIER DETAILS FOR REINFORCED CONCRETE RETAINING WALLS STANDARD PLAN D-15.30-01

SHEET 1 OF 2 SHEETS

APPROVED FOR PUBLICATION

STATE DESIGN ENGINEER — DATE 12/2/08

Washington State Department of Transportation

DRAWN BY: FERN LIDDELL

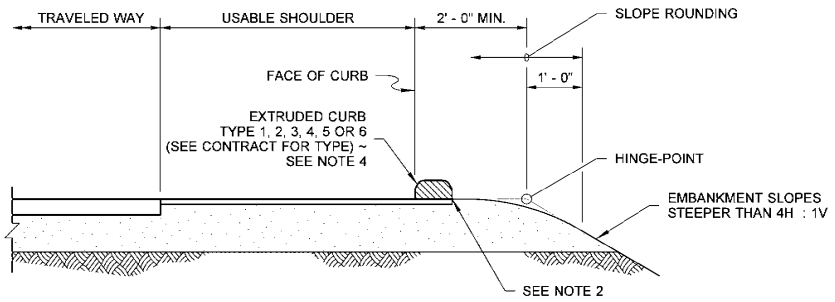

EXTRUDED CURB WITH SLOPE ROUNDING

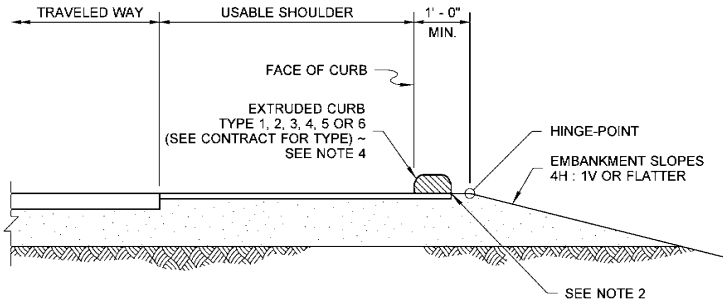

EXTRUDED CURB WITHOUT SLOPE ROUNDING

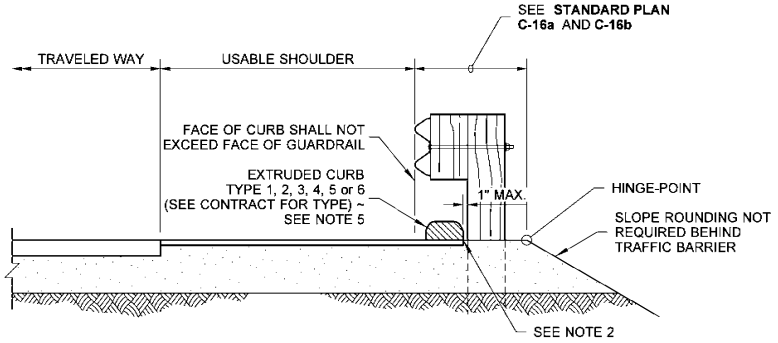

EXTRUDED CURB AT BEAM GUARDRAIL

NOTES

1. The installation of curb in areas with existing guardrail could require the removal and resetting of the guardrail or its components.
2. Extend shoulder pavement to provide a base for the extruded curb.
3. See Contract for exception to distances shown.
4. Type 3 and 6 curbs are not used on roadways with a posted speed greater than 40 mph.
5. Type 3 and 6 are not used under beam guardrail on roadways with a posted speed greater than 50 mph.
6. For extruded curb placement at Beam Guardrail Type 31, See **Standard Plan C-20.10.**
7. For extruded curb details, See **Standard Plan F-10.42.**

R. SCOTT ZELLER
STATE OF WASHINGTON
28680
REGISTERED
PROFESSIONAL ENGINEER

Zeller, Scott
Jun 24 2016 7:18 AM

EXTRUDED CURB PLACEMENT

STANDARD PLAN F-10.40-03

SHEET 1 OF 1 SHEET

APPROVED FOR PUBLICATION
Carpenter, Jeff
Jun 29 2016 2:27 PM
STATE DESIGN ENGINEER
Washington State Department of Transportation

DRAWN BY: BILL BERENS

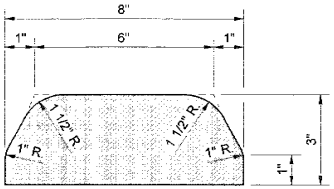

TYPE 1
(HOT MIX ASPHALT)

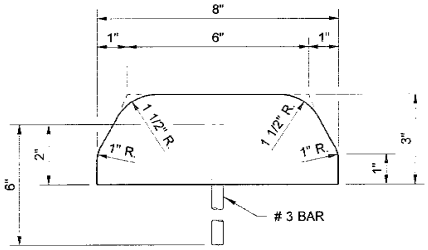

TYPE 4
(CEMENT CONCRETE)

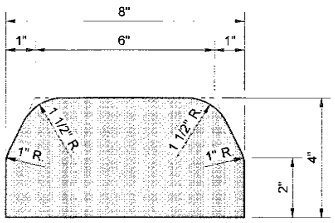

TYPE 2
(HOT MIX ASPHALT)

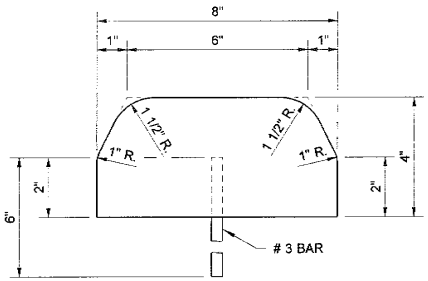

TYPE 5
(CEMENT CONCRETE)

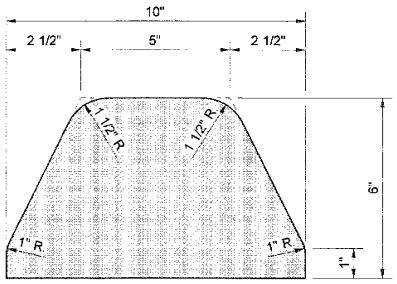

TYPE 3
(HOT MIX ASPHALT)

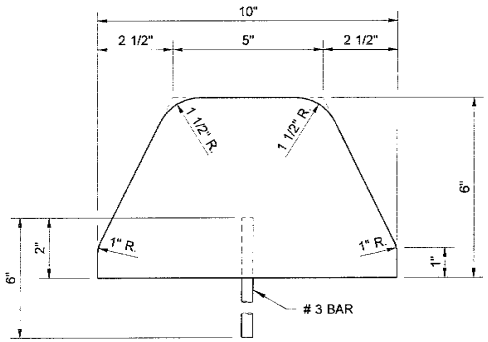

TYPE 6
(CEMENT CONCRETE)

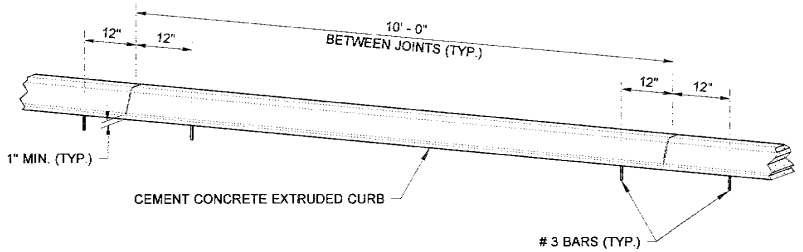

SPACING OF ANCHOR BARS
(FOR TYPES 4, 5, AND 6)

NOTE

JOINTS MAY BE FORMED DURING INSTALLATION USING A RIGID DIVIDER OR SAWCUT AFTER CONCRETE CURES TO MINIMUM STRENGTH.

KEN LEROY SMITH
STATE OF WASHINGTON
31805
REGISTERED
PROFESSIONAL ENGINEER

EXPIRES AUGUST 26, 2007

EXTRUDED CURB

STANDARD PLAN F-10.42-00

SHEET 1 OF 1 SHEET

APPROVED FOR PUBLICATION

STATE DESIGN ENGINEER — DATE 01/23/07

Washington State Department of Transportation

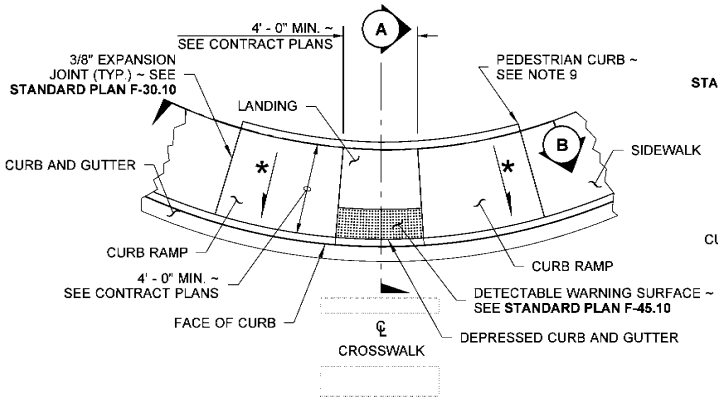

PLAN VIEW
TYPE PARALLEL A

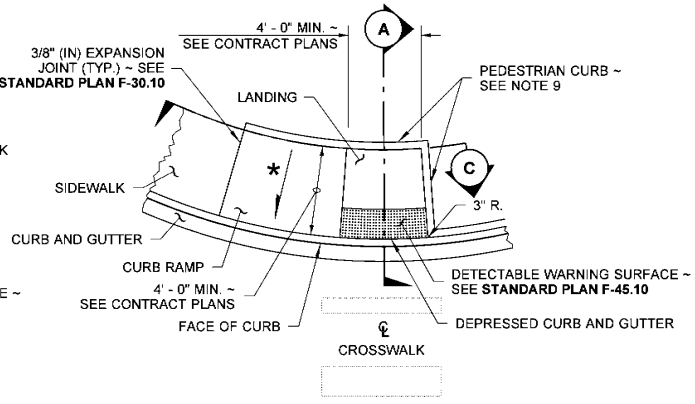

PLAN VIEW
TYPE PARALLEL B

DRAWN BY: FERN LIDDELL

① CONTRACTION JOINT (TYP.) ~ SEE **STANDARD PLAN F-30.1** FOR CURB RAMP LENGTHS GREATER THAN 8' - 0"PROVIDE CONTRACTION JOINT EQUALLY SPACED 4' - 0" MIN. OC.

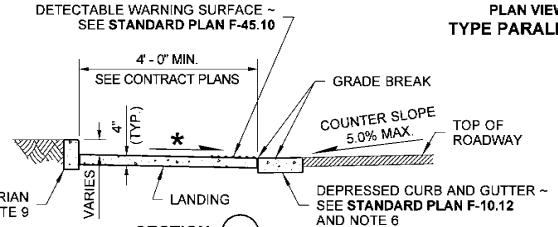

SECTION (A)

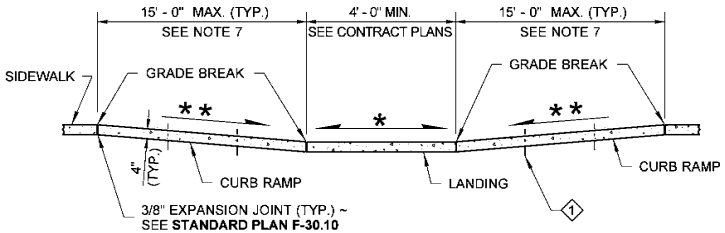

SECTION (B)

(ALONG INSIDE RADIUS AT BACK OF WALKWAY)

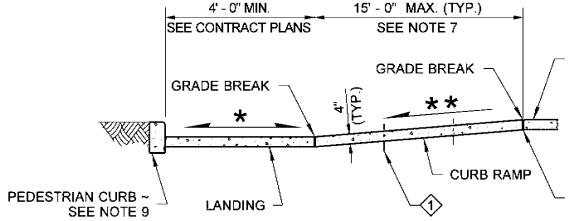

SECTION (C)

(ALONG INSIDE RADIUS AT BACK OF WALKWAY)

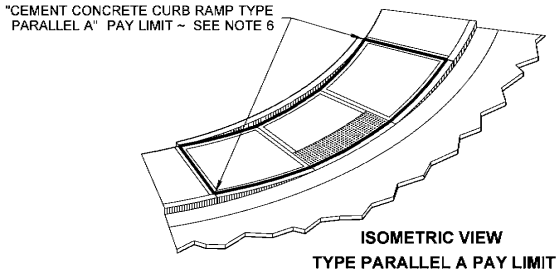

ISOMETRIC VIEW
TYPE PARALLEL A PAY LIMIT

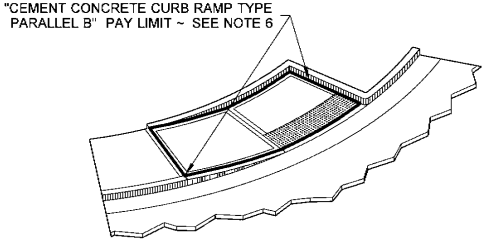

ISOMETRIC VIEW
TYPE PARALLEL B PAY LIMIT

NOTES

1. At marked crosswalks, the connection between the landing and the roadway must be contained within the width of the crosswalk markings.
2. Where "GRADE BREAK" is called out, the entire length of the grade break between the two adjacent surface planes shall be flush.
3. Do not place Gratings, Junction Boxes, Access Covers, or other appurtenances on any part of the Curb Ramp or Landing, or in the Depressed Curb and Gutter where the Landing connects to the roadway.
4. See Contract Plans for the curb design specified. See **Standard Plan F-10.12** for Curb, Curb and Gutter, Depressed Curb and Gutter, and Pedestrian Curb details.
5. See **Standard Plan F-30.10** for Cement Concrete Sidewalk Details. See Contract Plans for width and placement of sidewalk.
6. The Bid Item "Cement Concrete Curb Ramp Type __" does not include the adjacent Curb, Curb and Gutter, Depressed Curb and Gutter, Pedestrian Curb, or Sidewalks.
7. The Curb Ramp length is not required to exceed 15 feet (unless otherwise shown in the Contract Plans). When applying the 15-foot max. length, the running slope of the curb ramp is allowed to exceed 8.3%. Use a single constant slope from bottom of ramp to top of ramp to match into the sidewalk over a horizontal distance of 15 feet. Do not include abutting landing(s) in the15-foot max. measurement. When a ramp is constructed on a radius, the 15-foot max. length is measured on the inside radius along the back of the walkway.
8. Curb Ramps and Landings shall receive a broom finish. See **Standard Specifications 8-14.**
9. Pedestrian Curb may be omitted if the ground surface at the back of the Curb Ramp and/or Landing will be at the same elevation as the Curb Ramp or Landing and there will be no material to retain.

LEGEND

◢	SLOPE IN EITHER DIRECTION
*	1.5% OR FLATTER RECOMMENDED FOR DESIGN/FORMWORK (2% MAX.)
**	7.5% OR FLATTER RECOMMENDED FOR DESIGN/ FORMWORK (8.3% MAX.) ~ SEE NOTE 7

R. SCOTT ZELLER
STATE OF WASHINGTON
28680
REGISTERED
PROFESSIONAL ENGINEER

Zeller, Scott
Jun 24 2016 7:19 AM

PARALLEL CURB RAMP

STANDARD PLAN F-40.12-03

SHEET 1 OF 1 SHEET

APPROVED FOR PUBLICATION
Carpenter, Jeff
Jun 29 2016 2:27 PM
STATE DESIGN ENGINEER
Washington State Department of Transportation

DRAWN BY: FERN LIDDELL

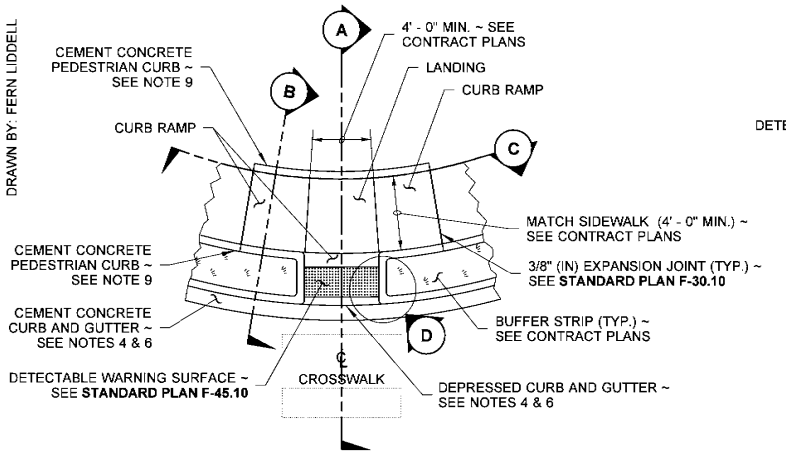

PLAN VIEW

TYPE COMBINATION

WITH BUFFER

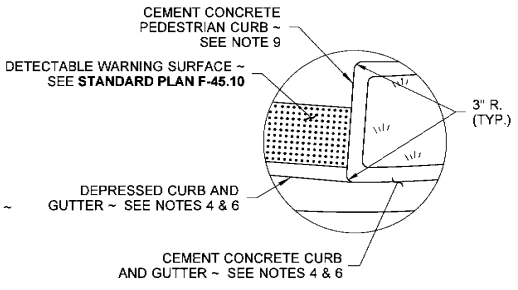

DETAIL (D)

CURB RADIUS DETAIL

NOTES

1. At marked crosswalks, the connection between the curb ramp and the roadway must be contained within the width of the crosswalk markings.
2. Where "GRADE BREAK" is called out, the entire length of the grade break between the two adjacent surface planes shall be flush.
3. Do not place Gratings, Junction Boxes, Access Covers, or other appurtenances on any part of the Curb Ramp or Landing, or in the Depressed Curb and Gutter where the landing connects to the roadway.
4. See Contract Plans for the curb design specified. See **Standard Plan F-10.12** for Curb, Curb and Gutter, Depressed Curb, Gutter and Pedestrian Curb details.
5. See **Standard Plan F-30.10** for Cement Concrete Sidewalk Details. See Contract Plans for width and placement of sidewalk.
6. The Bid Item "Cement Concrete Curb Ramp Type __" does not include the adjacent Curb, Curb and Gutter, Depressed Curb and Gutter, Pedestrian Curb, or Sidewalks.
7. The Curb Ramp length is not required to exceed 15 feet (unless otherwise shown in the Contract Plans). When applying the 15-foot max. length, the running slope of the curb ramp is allowed to exceed 8.3%. Use a single constant slope from bottom of ramp to top of ramp to match into the sidewalk over a horizontal distance of 15 feet. Do not included the abutting landing in the 15-foot max. measurement. When a ramp is constructed on a radius, the 15-foot max. length is measured on the inside radius along the back of the walkway.
8. Curb Ramps and Landings shall receive a broom finish. See **Standard Specifications 8-14.**
9. Pedestrian Curb may be omitted if the ground surface at the back of the Curb Ramp and/or Landing will be at the same elevation as the Curb Ramp or Landing and there will not be material to retain.

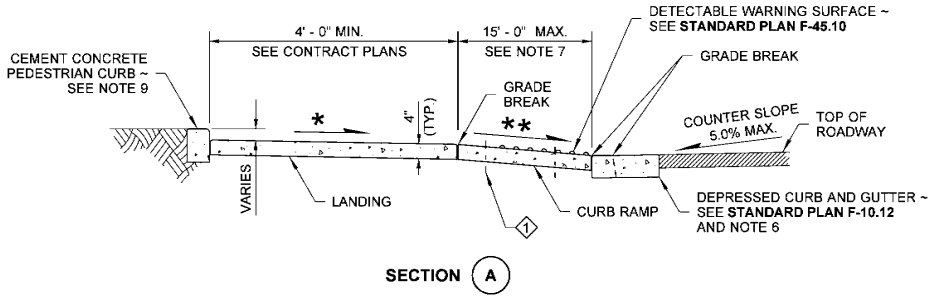

SECTION (A)

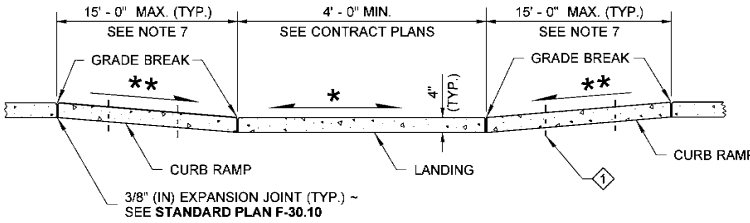

SECTION (C)

(ALONG INSIDE RADIUS AT BACK OF WALKWAY)

LEGEND

SLOPE IN EITHER DIRECTION

* 1.5 OR FLATTER RECOMMENDED FOR DESIGN/FORMWORK (2% MAX.)

** 7.5% OR FLATTER RECOMMENDED FOR DESIGN/FORMWORK (8.3% MAX.)

1 CONTRACTION JOINT (TYP.) ~ SEE **STANDARD PLAN F-30.10** FOR CURB RAMP LENGTHS GREATER THAN 8' - 0" PROVIDE CONTRACTION JOINT EQUALLY SPACED 4' - 0" MIN. OC.

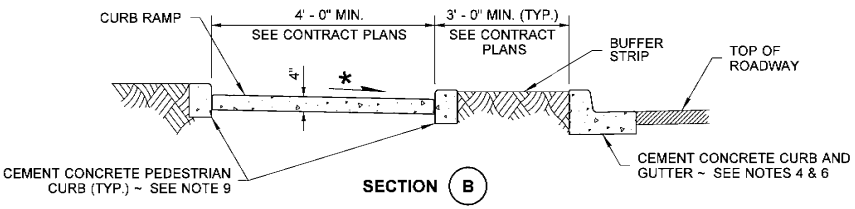

SECTION (B)

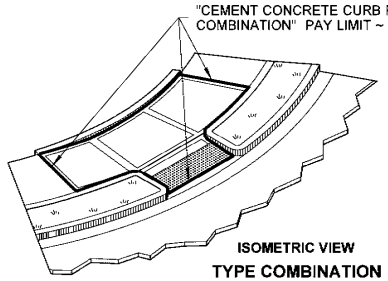

ISOMETRIC VIEW

TYPE COMBINATION PAY LIMIT

R. SCOTT ZELLER
STATE OF WASHINGTON
28680
REGISTERED
PROFESSIONAL ENGINEER

Zeller, Scott
Jun 24 2016 7:20 AM

COMBINATION CURB RAMP

STANDARD PLAN F-40.14-03

SHEET 1 OF 1 SHEET

APPROVED FOR PUBLICATION
Carpenter, Jeff
Jun 29 2016 2:28 PM
STATE DESIGN ENGINEER
Washington State Department of Transportation

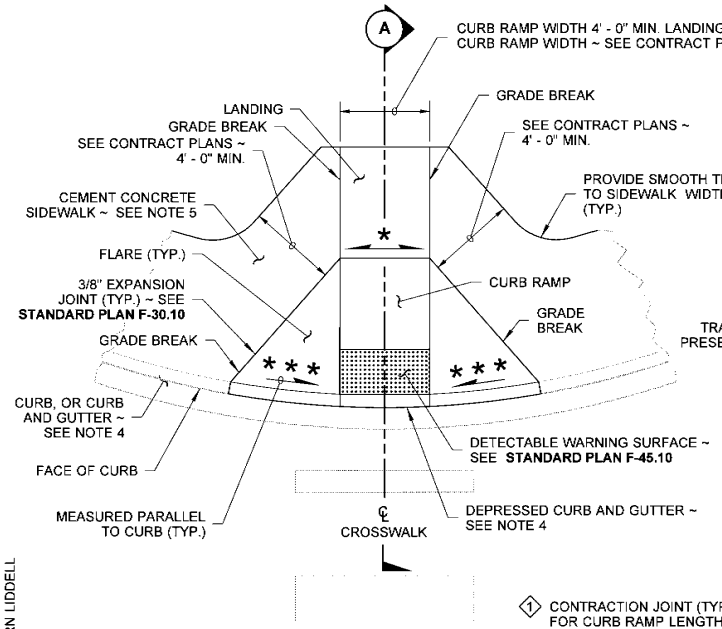

PLAN VIEW
TYPE PERPENDICULAR A

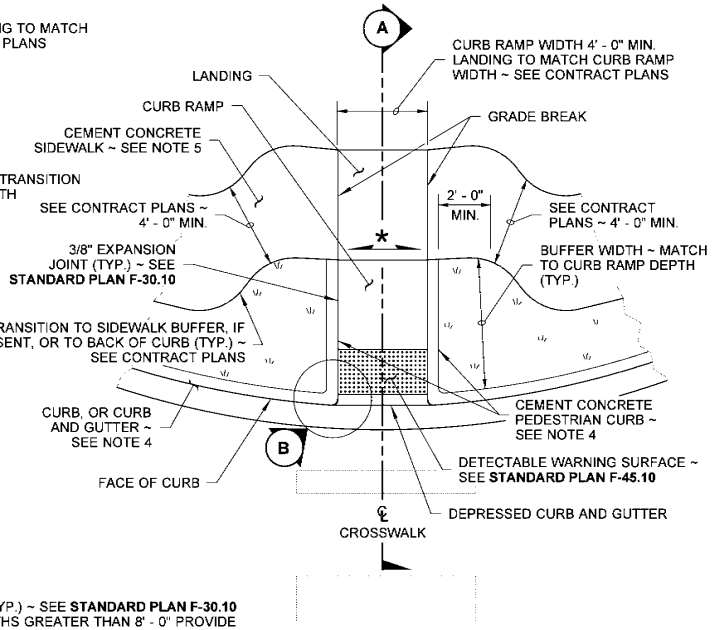

PLAN VIEW
TYPE PERPENDICULAR B
(SHOWN WITH BUFFER)

① CONTRACTION JOINT (TYP.) ~ SEE **STANDARD PLAN F-30.10** FOR CURB RAMP LENGTHS GREATER THAN 8' - 0" PROVIDE CONTRACTION JOINT EQUALLY SPACED 4' - 0" MIN. OC.

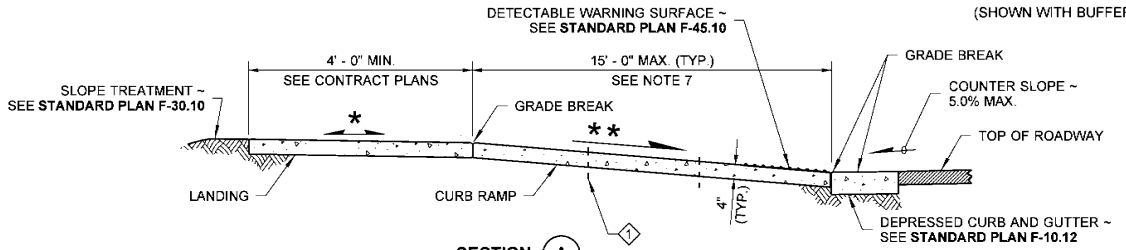

SECTION (A)

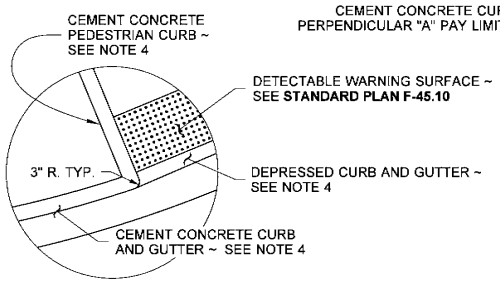

CURB RADIUS DETAIL (B)

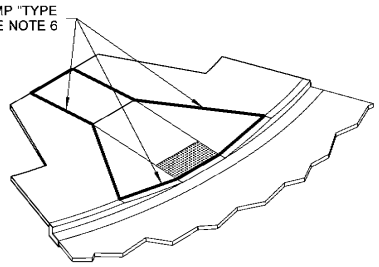

ISOMETRIC VIEW
TYPE PERPENDICULAR A PAY LIMIT

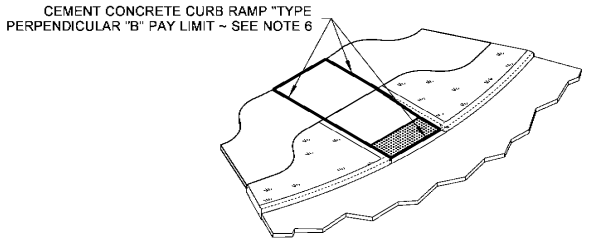

ISOMETRIC VIEW
TYPE PERPENDICULAR B PAY LIMIT

NOTES

1. At marked crosswalks, the connection between the curb ramp and the roadway must be contained within the width of the crosswalk markings.
2. Where "GRADE BREAK" is called out, the entire length of the grade break between the two adjacent surface planes shall be flush.
3. Do not place Gratings, Junction Boxes, Access Covers, or other appurtenances on any part of the Curb Ramp or Landing, or in front of the Curb Ramp where it connects to the roadway.
4. See Contract Plans for the curb design specified. See **Standard Plan F-10.12** for Curb, Curb and Gutter, Depressed Curb and Gutter, and Pedestrian Curb details.
5. See **Standard Plan F-30.10** for Cement Concrete Sidewalk Details. See Contract Plans for width and placement of sidewalk.
6. The Bid Item "Cement Concrete Curb Ramp Type __" does not include the adjacent Curb, Curb and Gutter, Depressed Curb and Gutter, Pedestrian Curb, or Sidewalks.
7. The Curb Ramp length is not required to exceed 15 feet (unless shown otherwise in the Contract Plans). When applying the 15-foot max. length, the running slope of the Curb Ramp is allowed to exceed 8.3%. Use a single constant slope from bottom of ramp to top of ramp to match into the landing over a horizontal distance of 15 feet. Do not include the abutting landing in the 15-foot max. measurement.
8. Curb Ramps and Landings shall receive a broom finish. See **Standard Specifications 8-14.**
9. Pedestrian Curb may be omitted if the ground surface at the back of the Curb Ramp and/or Landing will be at the same elevation as the Curb Ramp or Landing and there will not be material to retain.

LEGEND

———	SLOPE IN EITHER DIRECTION
*	1.5 OR FLATTER RECOMMENDED FOR DESIGN/FORMWORK (2% MAX.)
**	7.5% OR FLATTER RECOMMENDED FOR DESIGN/FORMWORK (8.3% MAX.)
***	9.5% OR FLATTER RECOMMENDED FOR DESIGN/FORMWORK (10% MAX.)

DRAWN BY: FERN LIDDELL

R. SCOTT ZELLER
STATE OF WASHINGTON
28680
REGISTERED
PROFESSIONAL ENGINEER

Zeller, Scott
Jun 24 2016 7:20 AM

PERPENDICULAR CURB RAMP

STANDARD PLAN F-40.15-03

SHEET 1 OF 1 SHEET

APPROVED FOR PUBLICATION
Carpenter, Jeff
Jun 29 2016 2:28 PM
STATE DESIGN ENGINEER
Washington State Department of Transportation

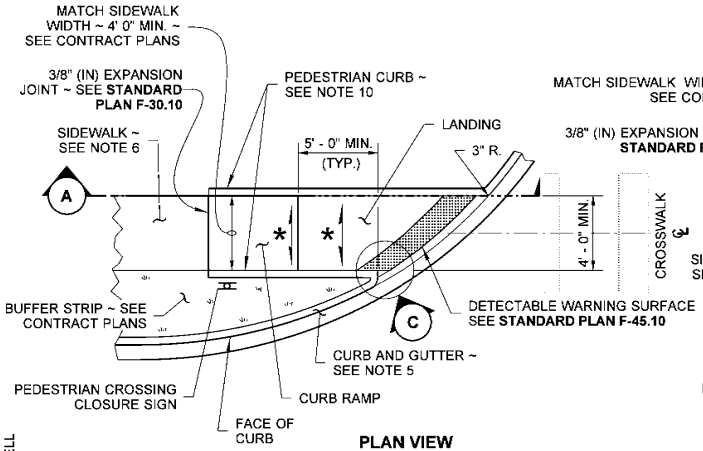

PLAN VIEW
TYPE SINGLE DIRECTION A

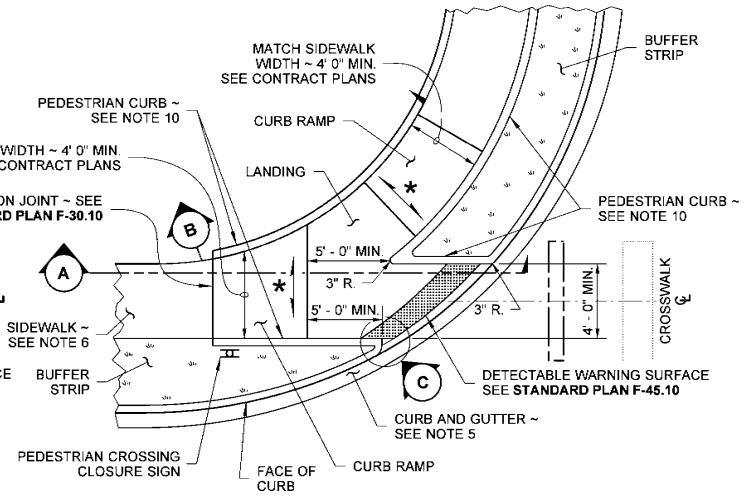

PLAN VIEW
TYPE SINGLE DIRECTION B

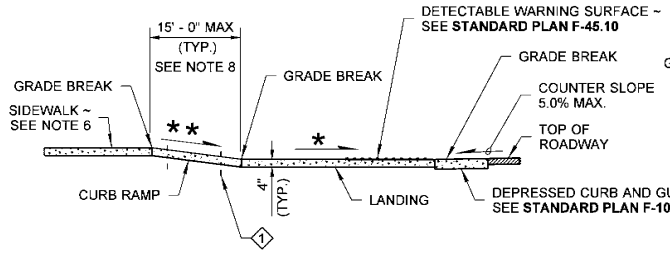

SECTION (A)

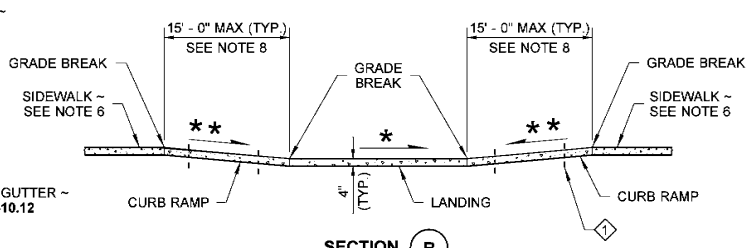

SECTION (B)

(1) CONTRACTION JOINT (TYP.) ~ SEE **STANDARD PLAN F-30.10** FOR CURB RAMP LENGTHS GREATER THAN 8' - 0" PROVIDE CONTRACTION JOINT EQUALLY SPACED 4' - 0" MIN. OC.

(ALONG INSIDE RADIUS AT BACK OF WALKWAY)

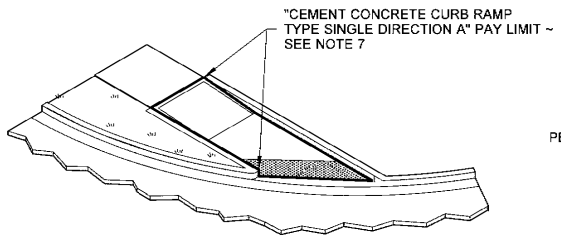

ISOMETRIC VIEW
TYPE SINGLE DIRECTION A
PAY LIMIT

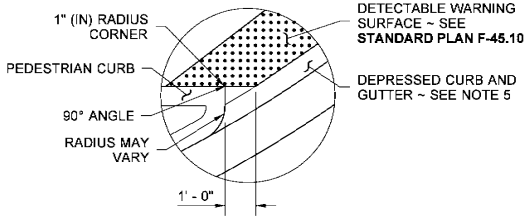

DETAIL (C)

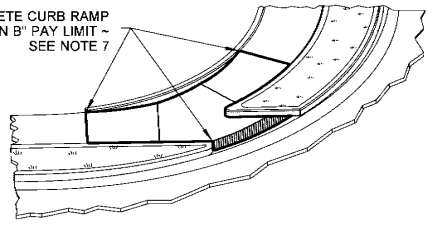

ISOMETRIC VIEW
TYPE SINGLE DIRECTION B
PAY LIMIT

DRAWN BY: FERN LIDDELL

NOTES

1. This plan is to be used where pedestrian crossing in one direction is not permitted.
2. At marked crosswalks, the connection between the Landing and the roadway must be contained within the width of the crosswalk markings.
3. Where "GRADE BREAK" is called out, the entire length of the grade break between the two adjacent surface planes shall be flush.
4. Do not place Gratings, Junction Boxes, Access Covers, or other appurtenances on any part of the Curb Ramp or Landing or in the Depressed Curb and Gutter where the Landing connects to the roadway.
5. See Contract Plans for the curb design specified. See **Standard Plan F-10.12** for Curb, Curb and Gutter, Depressed Curb, Gutter and Pedestrian Curb details.
6. See **Standard Plan F-30.10** for Cement Concrete Sidewalk Details. See Contract Plans for width and placement of sidewalk.
7. The Bid Item "Cement Concrete Curb Ramp Type __" does not include the adjacent Curb, Curb and Gutter, Depressed Curb and Gutter, Pedestrian Curb, or Sidewalks.
8. The Curb Ramp length is not required to exceed 15 feet (unless shown otherwise in the Contract Plans). When applying the 15-foot max. length (measured from back of sidewalk) the running slope of the curb ramp is allowed to exceed 8.3%. Use a single constant slope from bottom of ramp to top of ramp to match into the sidewalk over a horizontal distance of 15 feet.
9. Curb Ramps and Landings shall receive a broom finish. See **Standard Specifications 8-14.**
10. Pedestrian Curb may be omitted if the ground surface at the back of the Curb Ramp and/or Landing will be at the same elevation as the Curb Ramp or Landing and there will not be material to retain.

LEGEND

⟷	SLOPE IN EITHER DIRECTION
*	1.5 OR FLATTER RECOMMENDED FOR DESIGN/FORMWORK (2% MAX.)
**	7.5% OR FLATTER RECOMMENDED FOR DESIGN/FORMWORK (8.3% MAX.) SEE NOTE 7

R. SCOTT ZELLER
STATE OF WASHINGTON
28680
REGISTERED
PROFESSIONAL ENGINEER

Zeller, Scott
Jun 24 2016 7:21 AM

SINGLE DIRECTION CURB RAMP

STANDARD PLAN F-40.16-03

SHEET 1 OF 1 SHEET

APPROVED FOR PUBLICATION
Carpenter, Jeff
Jun 29 2016 2:39 PM
STATE DESIGN ENGINEER
Washington State Department of Transportation

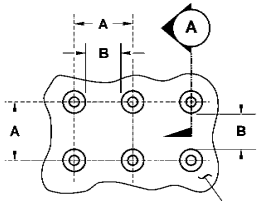

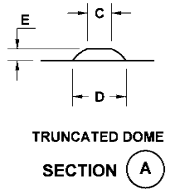

	MIN.	MAX.
A	1.60"	2.40"
B	0.65"	—
C	0.45"	0.90"
D	0.9"	1.40"
E	0.2"	0.2"

TRUNCATED DOME DETAILS

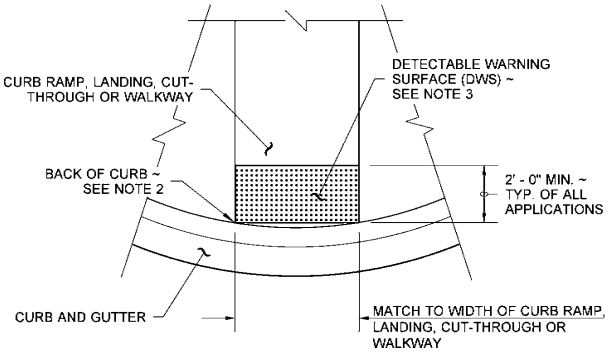

DETECTABLE WARNING SURFACE DETAIL

NOTES

1. The Detectable Warning Surface (DWS) shall extend the full width of the curb ramp, landing, or other roadway entrance as applicable. Exception: If the Manufacturer of the DWS requires a concrete border around the DWS, a variance of up to 2 inches on each side of the DWS is permitted.
2. The Detectable Warning Surface (DWS) shall be placed at the back of curb, with the two leading corners of the DWS panel placed adjacent to the back of the curb, and with no more than a 2 inch gap between the DWS and the back of the curb measured at the center of the DWS panel. Exception: If the Manufacturer of the selected DWS requires a concrete border around the DWS, a variance of up to 2 inches from the back of the curb is permitted (measured at the leading corners of the DWS panel).
3. The rows of truncated domes shall be aligned to be perpendicular to the grade break at the back of curb.
4. The rows of truncated domes shall be aligned to be parallel to the direction of travel.
5. If curb and gutter are not present, such as a shared-use path connection, the Detectable Warning Surface shall be placed at the pavement edge.
6. See **Standard Plans** for sidewalk and curb ramp details.
7. If a curb ramp is required, the location of the Detectable Warning Surface must be at the bottom of the ramp and within the required distance from the rail.
8. When the grade break between the curb ramp and the landing is less than or equal to 5 ft. from the back of curb at all points, place the Detectable Warning Surface on the bottom of the curb ramp directly above the grade break.

DRAWN BY: FERN LIDDELL

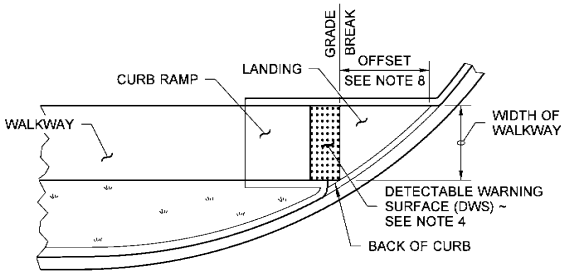

SINGLE DIRECTION CURB RAMP
(GRADE BREAK BETWEEN CURB AND LANDING ≤ 5 FT. FROM BACK OF CURB)
(SEE NOTE 6)

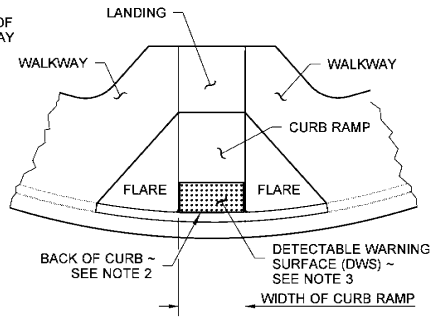

PERPENDICULAR CURB RAMP
(SEE NOTE 6)

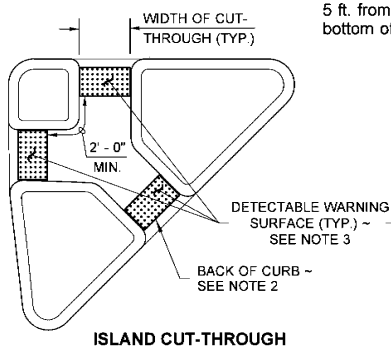

ISLAND CUT-THROUGH

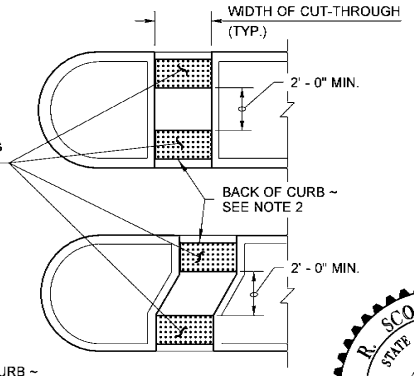

MEDIAN CUT-THROUGH

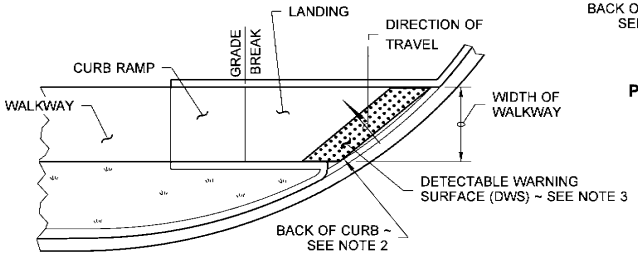

SINGLE DIRECTION CURB RAMP
(GRADE BREAK BETWEEN CURB AND LANDING > 5 FT. FROM BACK OF CURB)
(SEE NOTE 6)

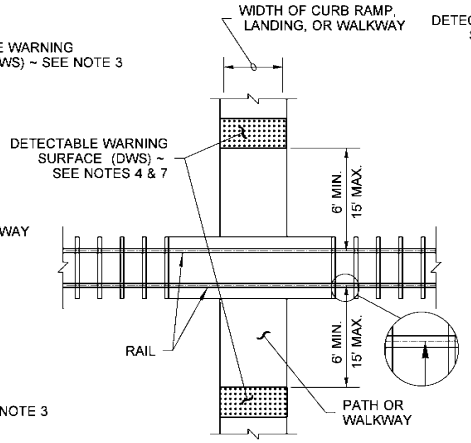

PEDESTRIAN RAILROAD CROSSING

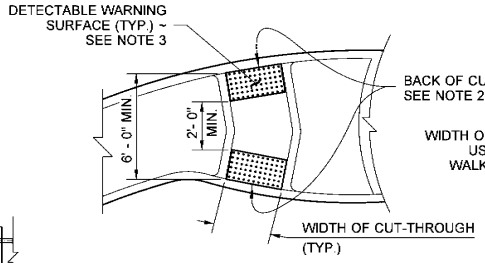

ROUNDABOUT SPLITTER ISLAND

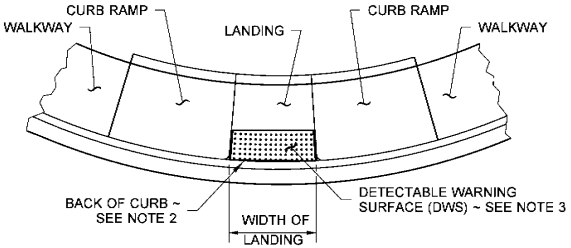

PARALLEL CURB RAMP
(SEE NOTE 6)

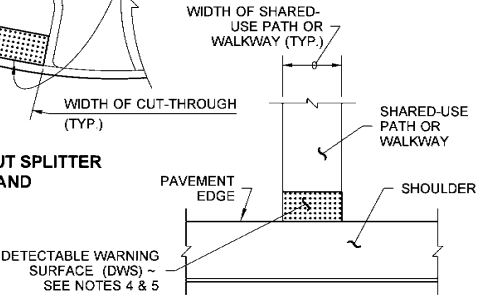

SHARED-USE PATH CONNECTION

PLACEMENT GUIDELINES

R. SCOTT ZELLER
STATE OF WASHINGTON
28680
REGISTERED
PROFESSIONAL ENGINEER

Zeller, Scott
Jul 12 2016 4:25 PM

DETECTABLE WARNING SURFACE

STANDARD PLAN F-45.10-02

SHEET 1 OF 1 SHEET

APPROVED FOR PUBLICATION
Carpenter, Jeff
Jul 15 2016 2:26 PM
STATE DESIGN ENGINEER
Washington State Department of Transportation

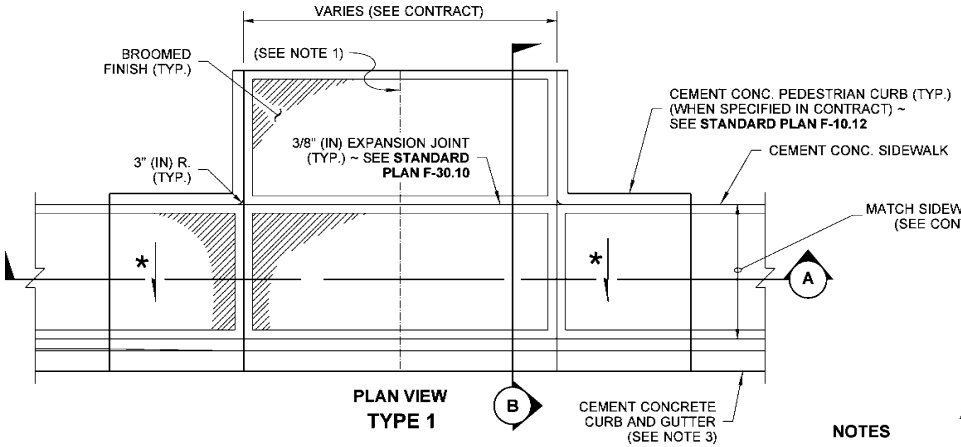

PLAN VIEW
TYPE 1

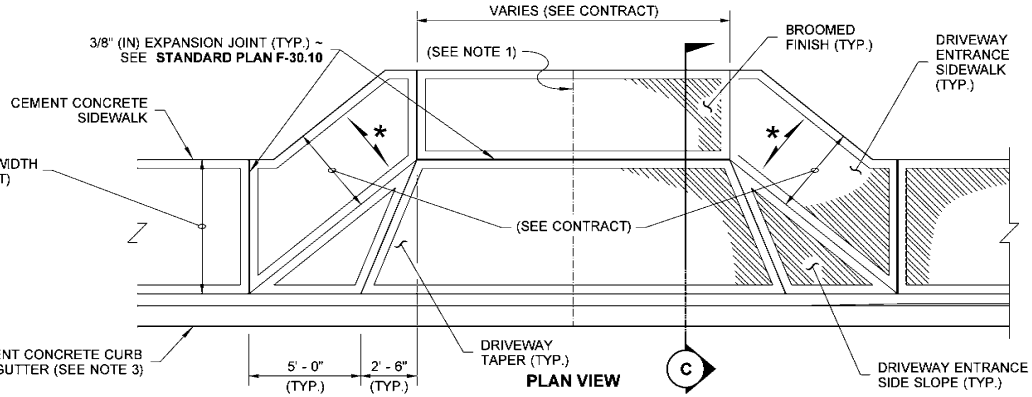

PLAN VIEW
TYPE 2

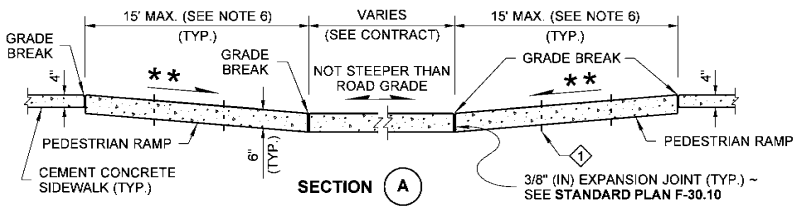

SECTION (A)

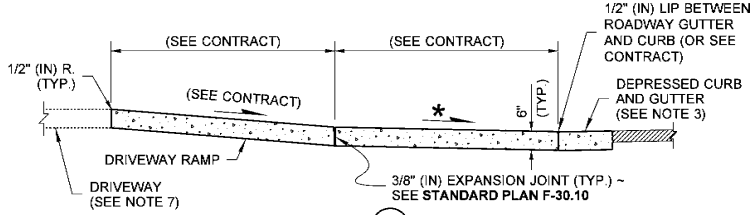

SECTION (B)

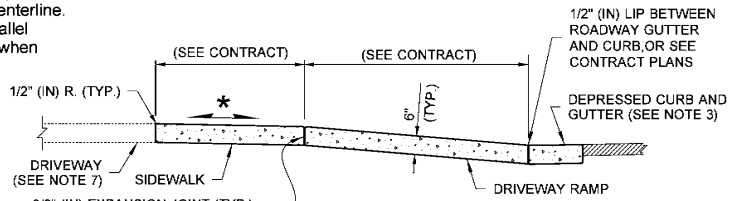

SECTION (C)

NOTES

1. When the driveway width exceeds 15' (ft), construct a full depth expansion joint with 3/8" (in) joint filler along the driveway centerline. See **Standard Plan F-30.10.** Construct expansion joints parallel with the centerline as required at 15' (ft) maximum spacing when driveway widths exceed 30' (ft).
2. See **Standard Plan F-30.10** for sidewalk details.
3. Curb and Gutter shown; see the Contract Plans for the curb design specified. See **Standard Plan F-10.12** for Curb Details.
4. Avoid placing drainage structures, junction boxes or other obstructions in front of driveway entrances.
5. Where "GRADE BREAK" is called out, the entire length of the line between the two adjacent surface planes shall be flush.
6. The Pedestrian Ramp length is not required to exceed15 feet (unless otherwise shown in the Contract Plans). When applying the 15-foot max. length (measured from back of sidewalk) the running slope of the pedestrian ramp is allowed to exceed 8.3%. Use a single constant slope from bottom of ramp to top of ramp to match into the sidewalk over a horizontal distance of 15 feet.
7. Beyond limits shown. Pay item does not include driveway. See Contract Plans.

LEGEND

- SLOPE IN EITHER DIRECTION
- * 1.5% OR FLATTER RECOMMENDED FOR DESIGN/FORMWORK (2% MAX.)
- ** 7.5% OR FLATTER RECOMMENDED FOR DESIGN/FORMWORK (8.3% MAX.) (SEE NOTE 6)

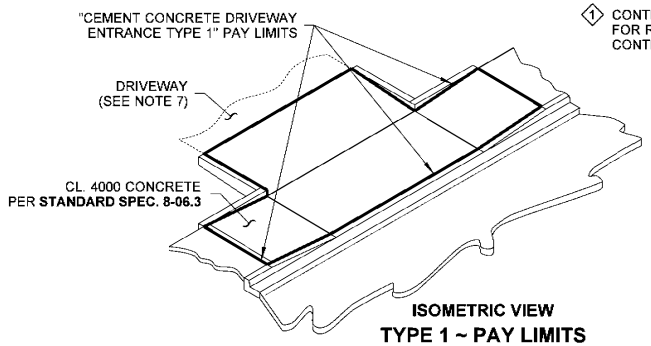

ISOMETRIC VIEW
TYPE 1 ~ PAY LIMITS

1 CONTRACTION JOINT (TYP.) ~ SEE **STANDARD PLAN F-30.10** FOR RAMP LENGTHS GREATER THAN 8' - 0" PROVIDE CONTRACTION JOINT EQUALLY SPACED 4' - 0" MIN. OC.

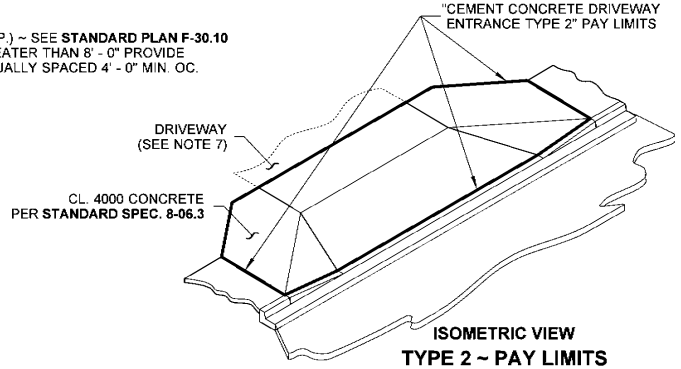

ISOMETRIC VIEW
TYPE 2 ~ PAY LIMITS

DRAWN BY: FERN LIDDELL

R. SCOTT ZELLER — STATE OF WASHINGTON — 28680 — REGISTERED PROFESSIONAL ENGINEER

Zeller, Scott
Jul 12 2016 4:26 PM

CEMENT CONCRETE DRIVEWAY ENTRANCE TYPES 1, 2, 3, & 4

STANDARD PLAN F-80.10-04

SHEET 1 OF 2 SHEETS

APPROVED FOR PUBLICATION
Carpenter, Jeff
Jul 15 2016 2:27 PM
STATE DESIGN ENGINEER
Washington State Department of Transportation

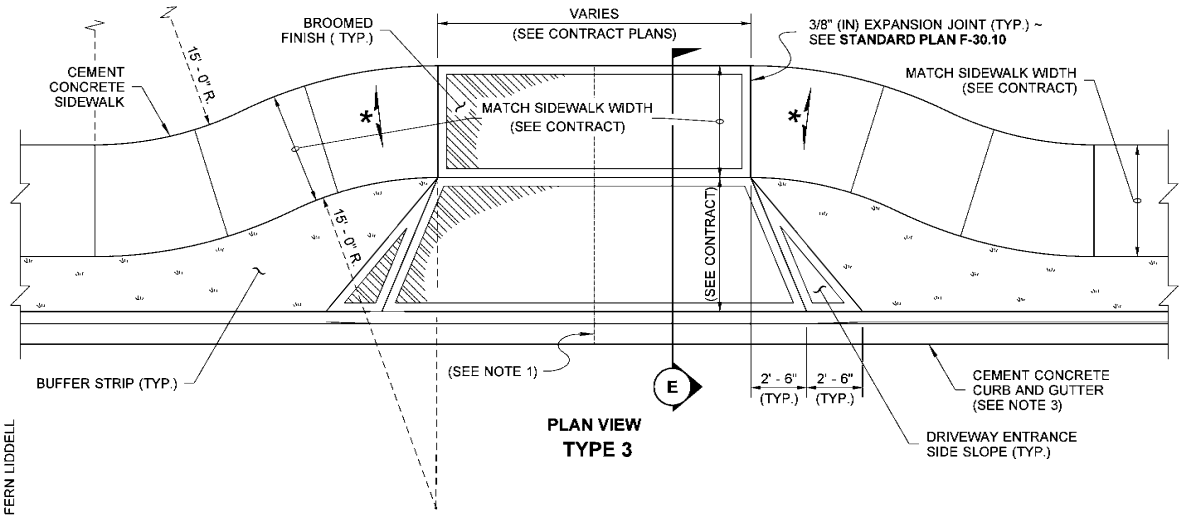

PLAN VIEW
TYPE 3

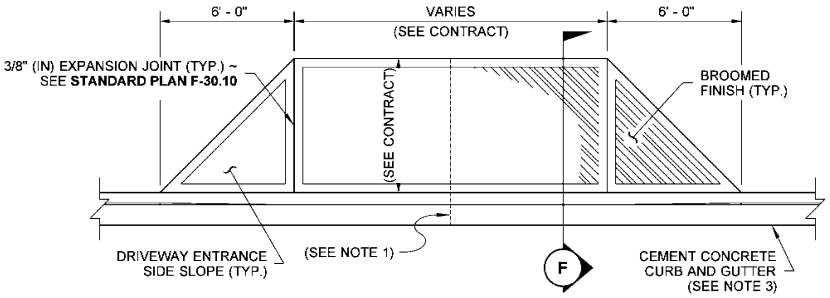

PLAN VIEW
TYPE 4*

* THIS ENTRANCE TYPE SHALL NOT BE USED ALONG A PEDESTRIAN ROUTE

DRAWN BY: FERN LIDDELL

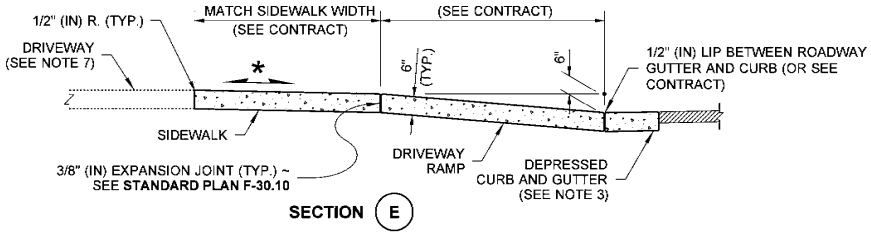

SECTION (E)

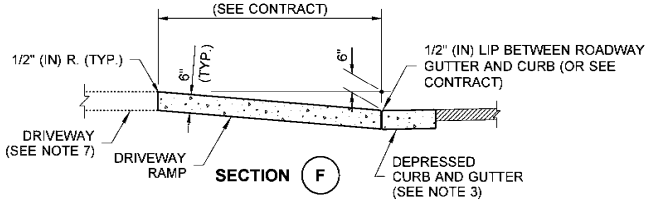

SECTION (F)

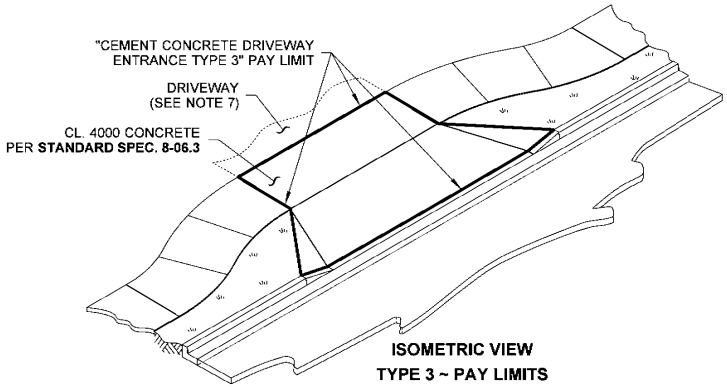

ISOMETRIC VIEW
TYPE 3 ~ PAY LIMITS

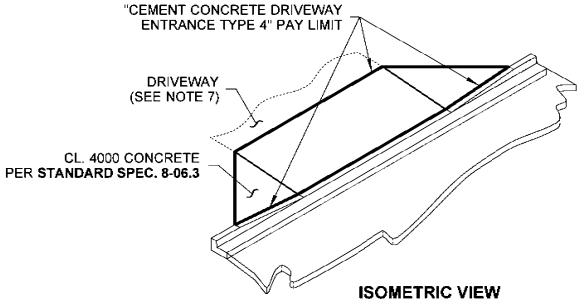

ISOMETRIC VIEW
TYPE 4 ~ PAY LIMITS

R. SCOTT ZELLER
STATE OF WASHINGTON
28680
REGISTERED
PROFESSIONAL ENGINEER

Zeller, Scott
Jul 18 2016 7:07 AM

CEMENT CONCRETE DRIVEWAY ENTRANCE TYPES 1, 2, 3, & 4

STANDARD PLAN F-80.10-04

SHEET 2 OF 2 SHEETS

APPROVED FOR PUBLICATION
Carpenter, Jeff
Carpenter, Jeff
Jul 18 2016 12:22 PM
STATE DESIGN ENGINEER
Washington State Department of Transportation

This page left blank intentionally.

DRAWN BY: LISA CYFORD

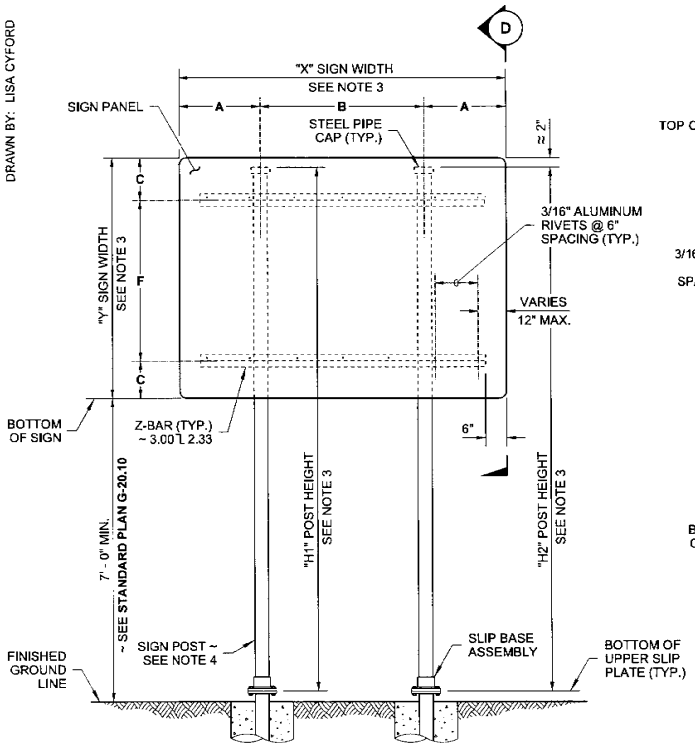

ELEVATION
TYPE PL SIGN SUPPORT
DUAL POST INSTALLATION

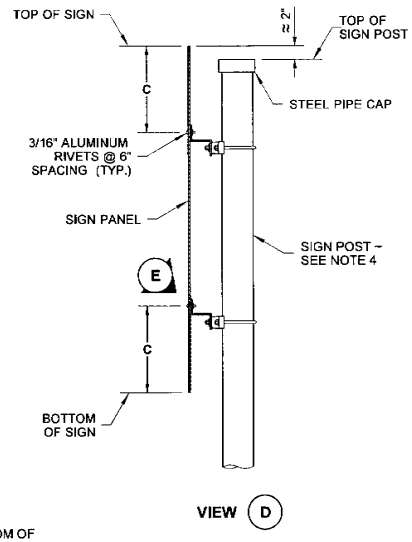

VIEW (D)

	"X" SIGN WIDTH		
	6' - 0"	8' - 0"	10' - 0"
A	1' - 0"	2' - 0"	3' - 0"
B	3' - 0"	4' - 0"	4' - 0"

	"Y" SIGN HEIGHT		
	6' - 0"	8' - 0"	10' - 0"
C	1' - 0"	2' - 0"	3' - 0"
F	4' - 0"	4' - 0"	4' - 0"

A, B, C, & F, MAY BE INTERPOLATED FOR INTERMEDIATE SIGN SIZES

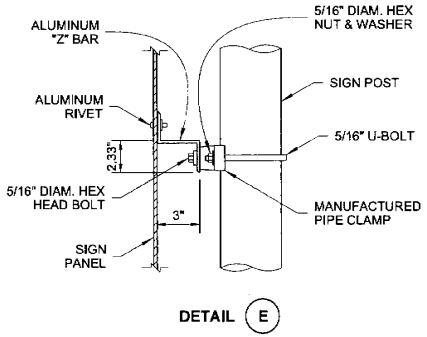

DETAIL (E)

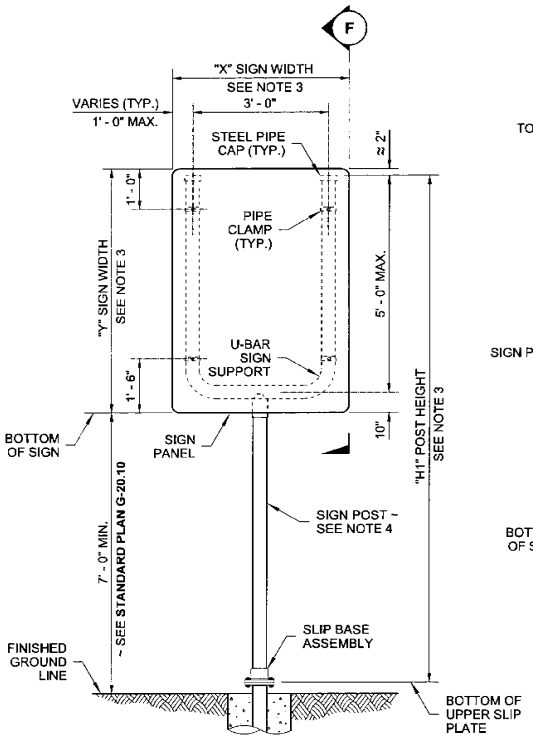

ELEVATION
TYPE PL-U SIGN SUPPORT

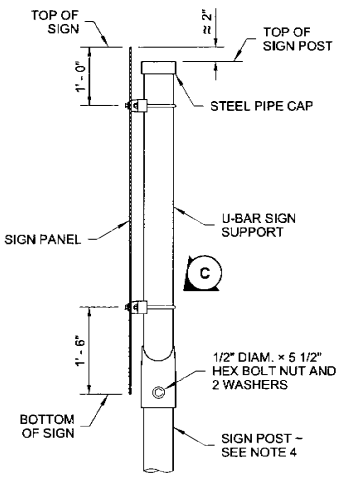

VIEW (F)

JOHN C. NISBET
STATE OF WASHINGTON
29115
REGISTERED
PROFESSIONAL ENGINEER

STEEL SIGN SUPPORT TYPES PL, PL-T, & PL-U INSTALLATIONS DETAILS STANDARD PLAN G-24.30-01

SHEET 2 OF 2 SHEETS

APPROVED FOR PUBLICATION
STATE DESIGN ENGINEER — DATE 2/7/12
Washington State Department of Transportation

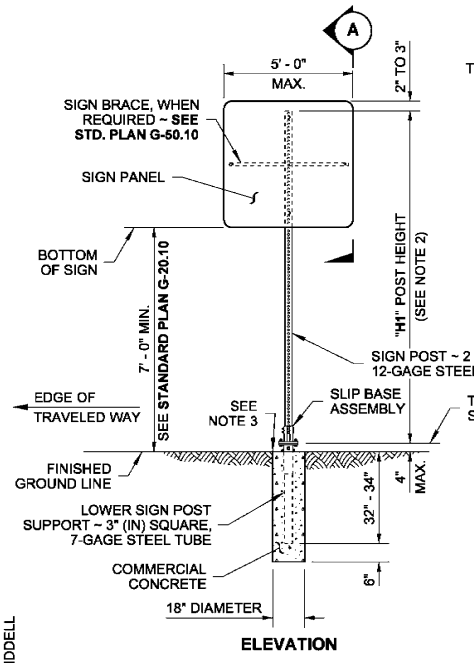

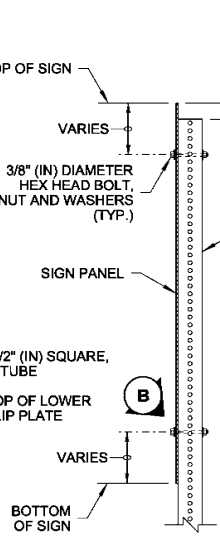

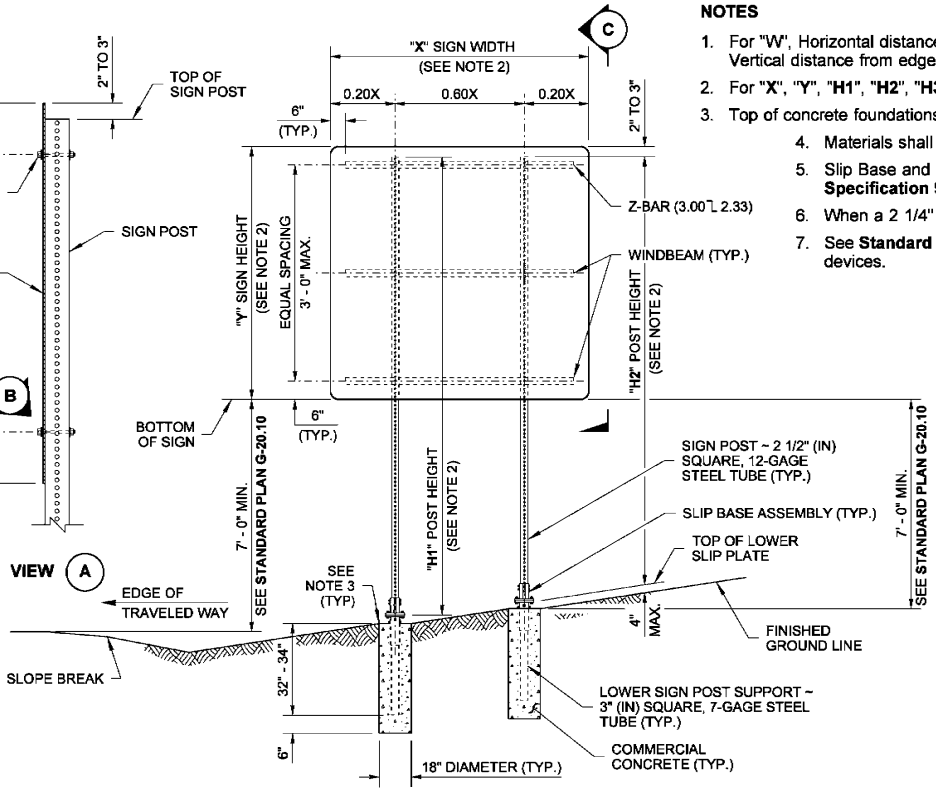

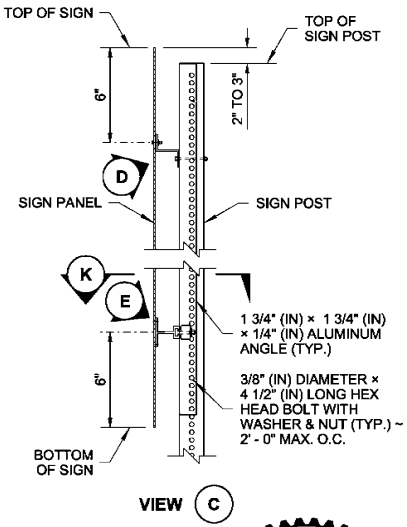

NOTES

1. For "**W**", Horizontal distance from edge of traveled way to center of nearest post, and "**V**", Vertical distance from edge of traveled way to bottom of sign, see **Standard Plan G-20.10**.
2. For "**X**", "**Y**", "**H1**", "**H2**", "**H3**", and "**H4**", refer to the Sign Specification Sheet in the Contract.
3. Top of concrete foundations shall be smooth, dense and uniform to finished groundline.
4. Materials shall meet the requirements of **Standard Specification 9-28**.
5. Slip Base and all other materials shall meet the requirements of **Standard Specification 9-06**.
6. When a 2 1/4" (in) insert is used, the insert shall be a minimum of 7 feet.
7. See **Standard Plan J-40.35** and Contract Plans for installations with electrical devices.

DRAWN BY: FERN LIDDELL

WINDLOAD FOR SQUARE TUBE POSTS AT 90 MPH				
POSTS		**MAXIMUM XYZ**		
		1-POST	2-POST	3-POST
2 1/2" PSST	12-GAGE	**172**	**344 ⋆**	**516 ⋆**
2 1/2" PSST with 2 1/4" insert	12-GAGE	**309 ⋆**	**618 ⋆**	**927 ⋆**
(SEE NOTE 6)				
⋆ SLIP BASE REQUIRED (UNLESS BEHIND BARRIER)				

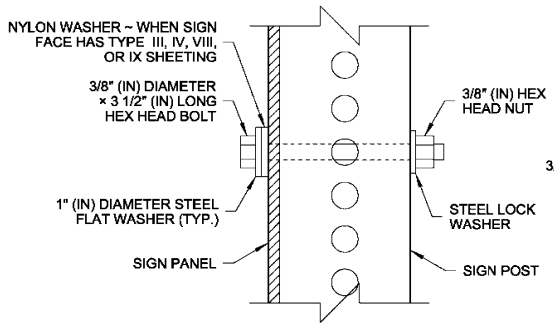

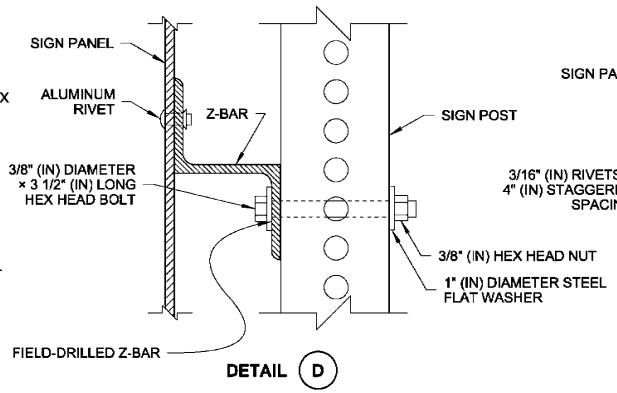

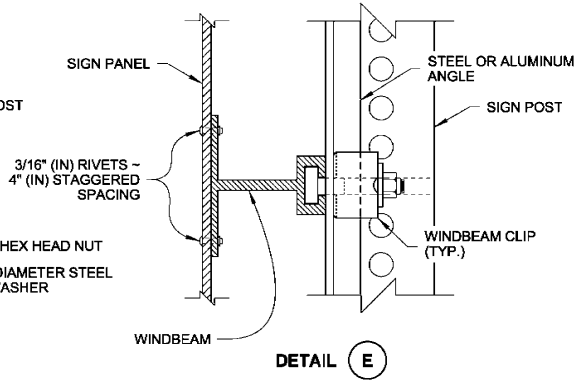

STEEL SIGN SUPPORT TYPES SB-1, SB-2 & SB-3 ~ 8" (IN)

JOHN C. NISBET
STATE OF WASHINGTON
29115
REGISTERED
PROFESSIONAL ENGINEER

Nisbet, John
Feb 29 2016 9:17 AM

STEEL SIGN SUPPORT TYPES SB-1, SB-2 & SB-3 INSTALLATION DETAILS STANDARD PLAN G-24.40-06

SHEET 1 OF 4 SHEETS

APPROVED FOR PUBLICATION
Carpenter, Jeff
Feb 29 2016 12:32 PM
STATE DESIGN ENGINEER
Washington State Department of Transportation

DRAWN BY: FERN LIDDELL

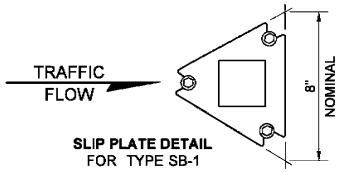

SLIP PLATE DETAIL
FOR TYPE SB-1

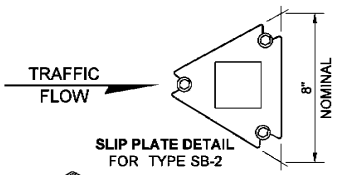

SLIP PLATE DETAIL
FOR TYPE SB-2

ASSEMBLY NOTES

1. Dimensions for the parts used to assemble the base connections are intentionally not shown. Base connections are patented, manufactured products that are in compliance with NCHRP 350 crash test criteria. The base connection details are shown on this plan only to illustrate how the parts are assembled.
2. Do not tighten any single Slip Plate Bolt to the recommended torque before pretightening the other bolts. Progressively tighten the three Slip Plate Bolts in 10 ft-lb increments, alternately, to a final torque of 40 ft-lbs on each.
3. Slip Base assembly and all other materails shall meet the requirements of **Standard Specifications 9-06** and **9-28**.

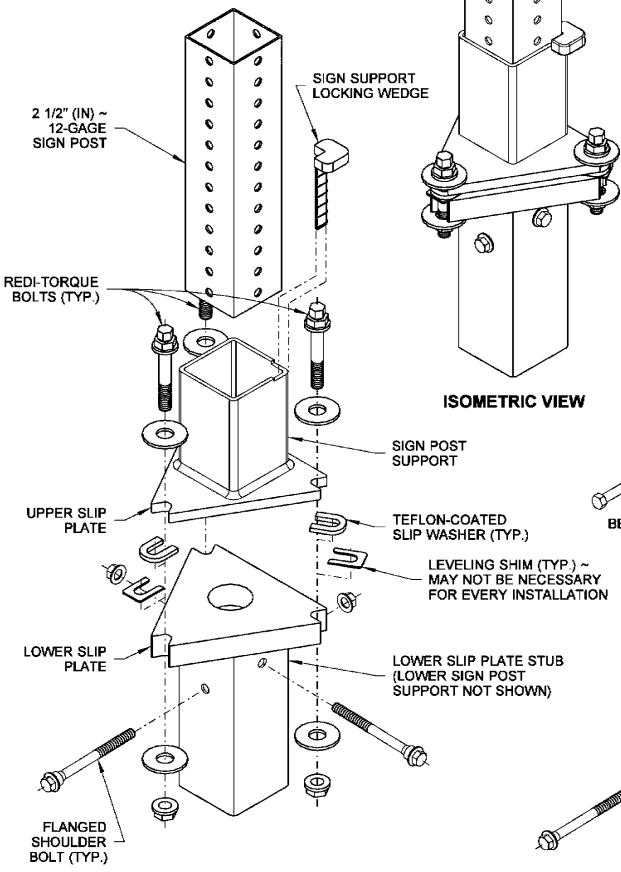

EXPLODED VIEW

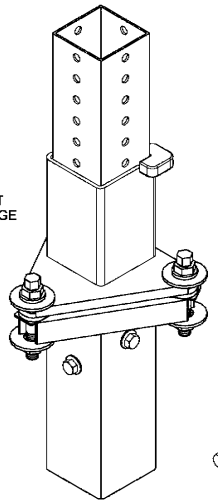

ISOMETRIC VIEW

TYPE SB-1
SLIP BASE ASSEMBLY

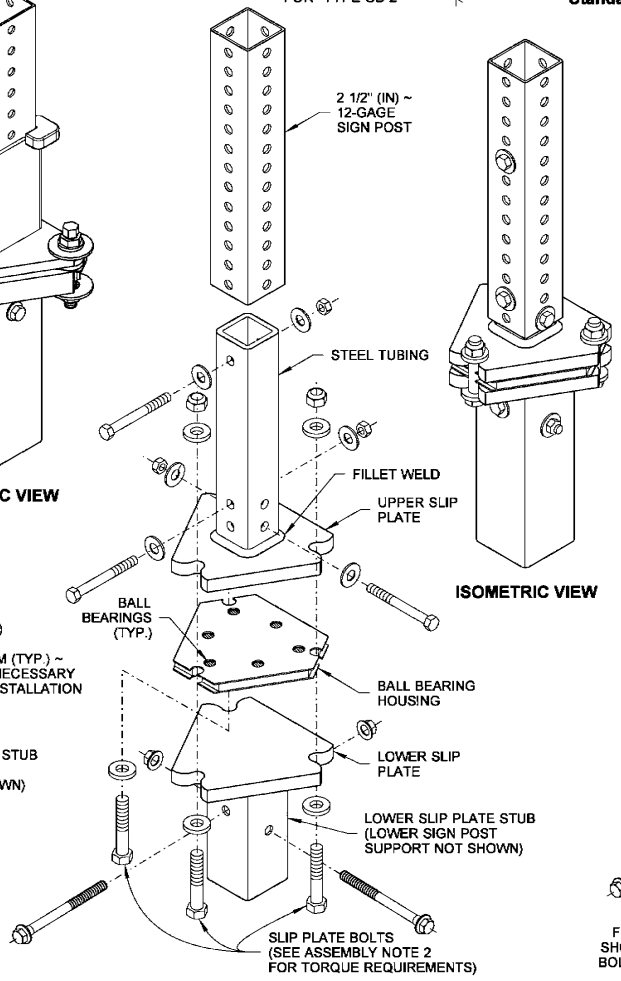

EXPLODED VIEW

ISOMETRIC VIEW

TYPE SB-2
SLIP BASE ASSEMBLY

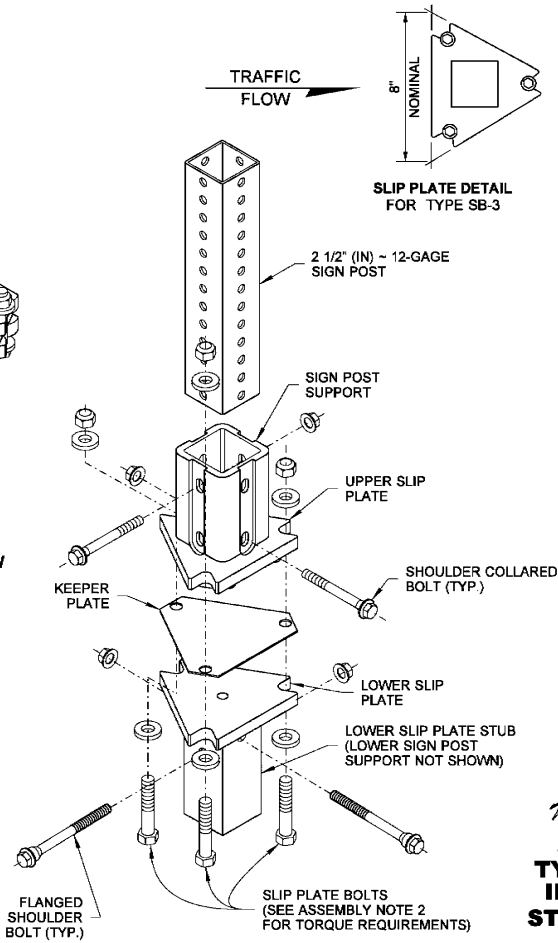

EXPLODED VIEW

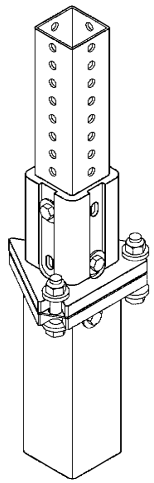

ISOMETRIC VIEW

TYPE SB-3
SLIP BASE ASSEMBLY

JOHN C. NISBET
STATE OF WASHINGTON
29115
REGISTERED
PROFESSIONAL ENGINEER

Nisbet, John
Feb 29 2016 9:18 AM

STEEL SIGN SUPPORT TYPES SB-1, SB-2 & SB-3 INSTALLATION DETAILS STANDARD PLAN G-24.40-06

SHEET 2 OF 4 SHEETS

APPROVED FOR PUBLICATION
Carpenter, Jeff
Feb 29 2016 12:34 PM
STATE DESIGN ENGINEER
Washington State Department of Transportation

STEEL SIGN SUPPORT TYPES SB-1, SB-2 & SB-3 ~ 8" (IN)

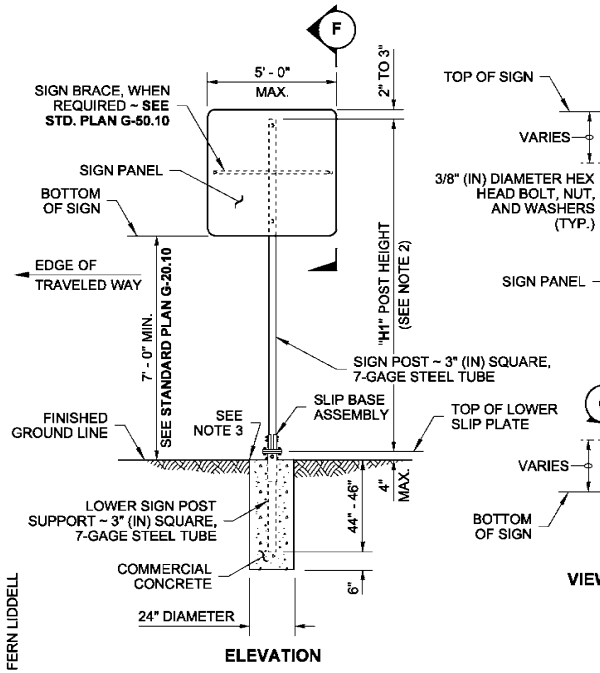

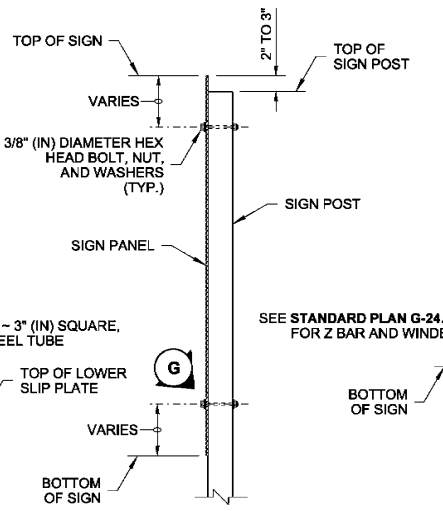

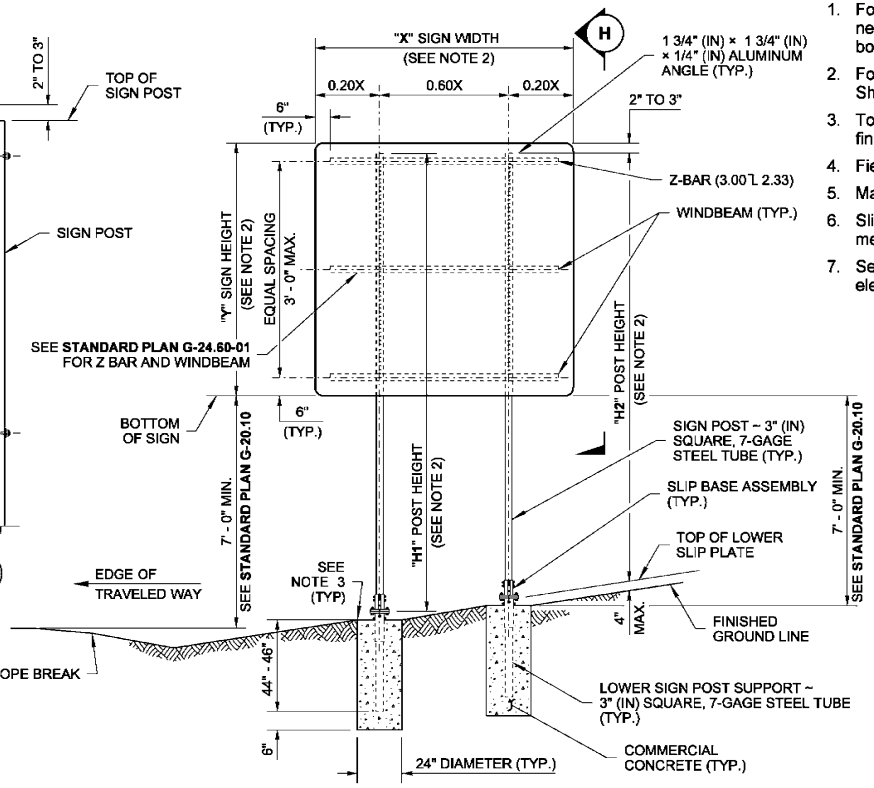

ELEVATION
DUAL-POST INSTALLATION

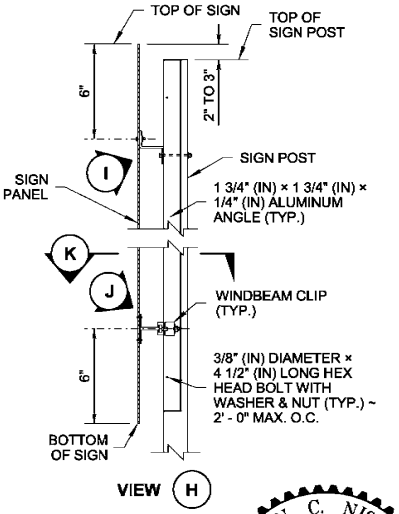

NOTES

1. For "**W**", Horizontal distance from edge of traveled way to center of nearest post, and "**V**", Vertical distance from edge of traveled way to bottom of sign, see **Standard Plan G-20.10**.
2. For "**X**", "**Y**", "**H1**", "**H2**", "**H3**", and "**H4**", refer to the Sign Specification Sheet in the Contract.
3. Top of concrete foundation shall be smooth, dense, and uniform to finished ground line.
4. Field drill posts to accept angle and cold galvanized holes.
5. Materials shall meet the requirements of **Standard Specification 9-28**.
6. Slip Base assembly and all other materials shall meet the requirements of **Standard Specifications 9-06** and **9-28**.
7. See **Standard Plan J-40.35** and Contract Plans for installations with electrical devices.

WINDLOAD FOR SQUARE TUBE POSTS AT 90 MPH			
POSTS	MAXIMUM XYZ		
	1-POST	2-POST	3-POST
* 3" SOLID POST 7-GAGE	**471**	**942**	**1413**
* SLIP BASE REQUIRED (UNLESS BEHIND BARRIER)			
(MAXIMUM 3 SLIP BASES ALLOWED IN 7' SPAN)			

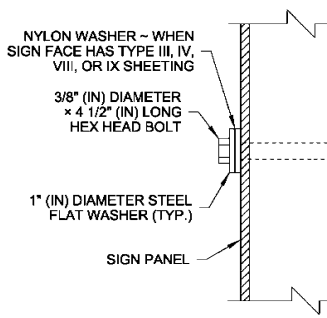

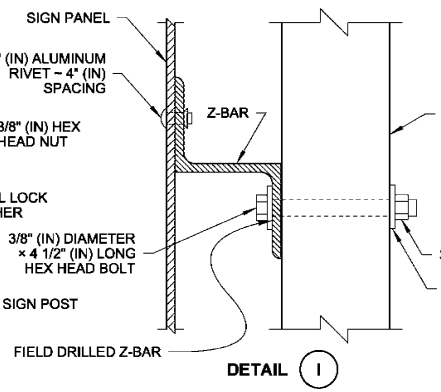

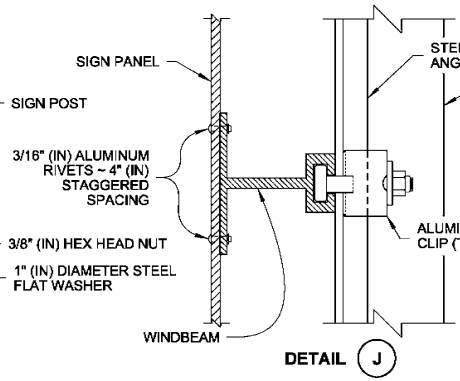

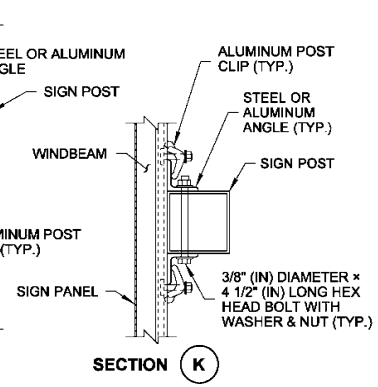

STEEL SIGN SUPPORT TYPES SB-1, SB-2 & SB-3 ~ 10" (IN)

DRAWN BY: FERN LIDDELL

JOHN C. NISBET
STATE OF WASHINGTON
29115
REGISTERED
PROFESSIONAL ENGINEER

Nisbet, John
Feb 29 2016 9:19 AM

STEEL SIGN SUPPORT TYPES SB-1, SB-2 & SB-3 INSTALLATION DETAILS STANDARD PLAN G-24.40-06

SHEET 3 OF 4 SHEETS

APPROVED FOR PUBLICATION
Carpenter, Jeff
Feb 29 2016 12:35 PM
STATE DESIGN ENGINEER
Washington State Department of Transportation

DRAWN BY: FERN LIDDELL

ASSEMBLY NOTES

1. Dimensions for the parts used to assemble the base connections are intentionally not shown. Base connections are patented, manufactured products that are in compliance with NCHRP 350 crash test criteria. The base connection details are shown on this plan only to illustrate how the parts are assembled.
2. Do not tighten any single Slip Plate Bolt to the recommended torque before pretightening the other bolts. Progressively tighten the three Slip Plate Bolts in 10 ft-lb increments, alternately, to a final torque of 40 ft-lbs on each.
3. Use only Slip Base manufacturer supplied hardware that meets the requirements of **Standard Specifications 9-06** and **9-28.**

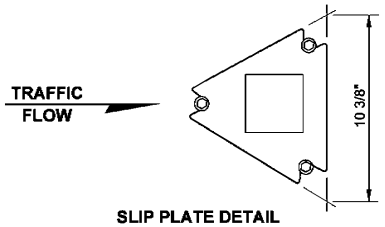

SLIP PLATE DETAIL
FOR TYPE SB-1

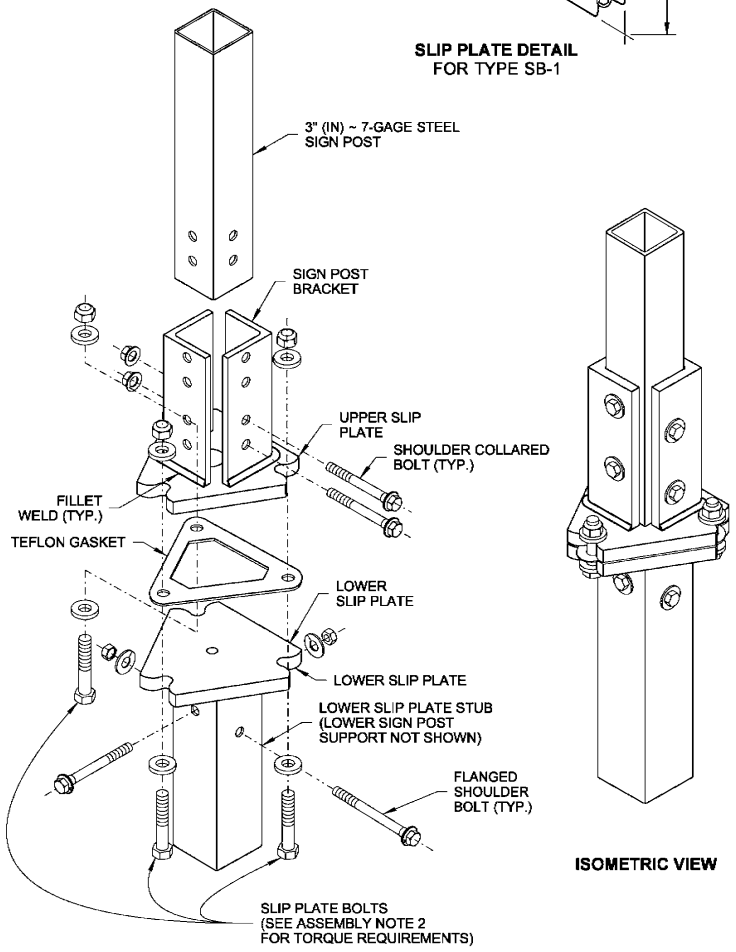

EXPLODED VIEW

ISOMETRIC VIEW

TYPE SB-1
SLIP BASE ASSEMBLY

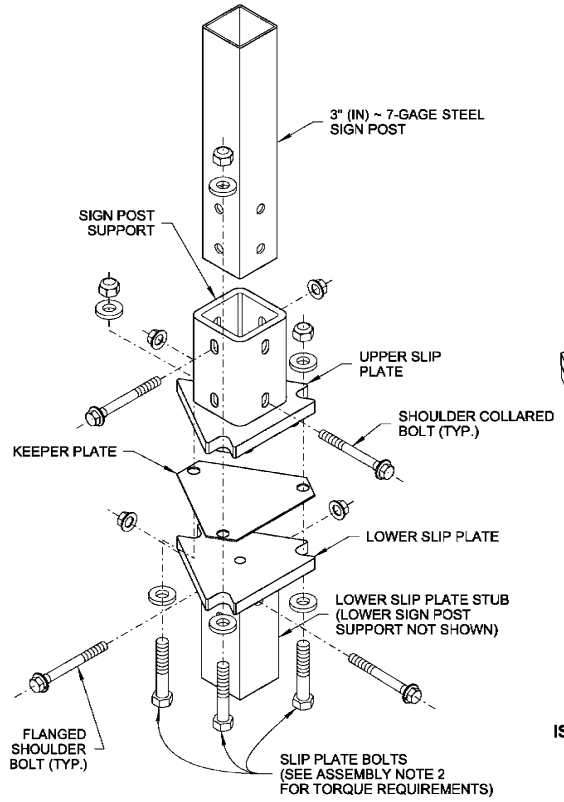

EXPLODED VIEW

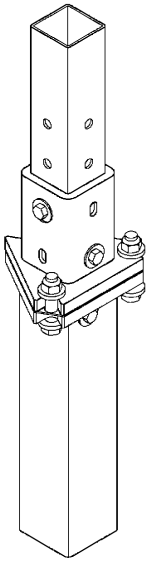

ISOMETRIC VIEW

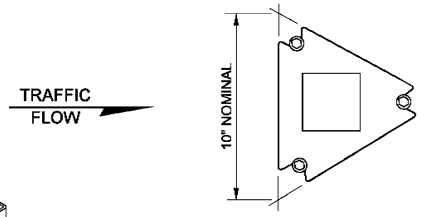

SLIP PLATE DETAIL
FOR TYPE SB-3

TYPE SB-3
SLIP BASE ASSEMBLY

STEEL SIGN SUPPORT TYPES SB-1 & SB-3 ~ 10" (IN)

JOHN C. NISBET
STATE OF WASHINGTON
29115
REGISTERED
PROFESSIONAL ENGINEER

Nisbet, John
Feb 29 2016 9:19 AM

STEEL SIGN SUPPORT
TYPES SB-1, SB-2 & SB-3
INSTALLATION DETAILS
STANDARD PLAN G-24.40-06

SHEET 4 OF 4 SHEETS

APPROVED FOR PUBLICATION
Carpenter, Jeff
Feb 29 2016 12:35 PM
STATE DESIGN ENGINEER
Washington State Department of Transportation

DRAWN BY: FERN LIDDELL

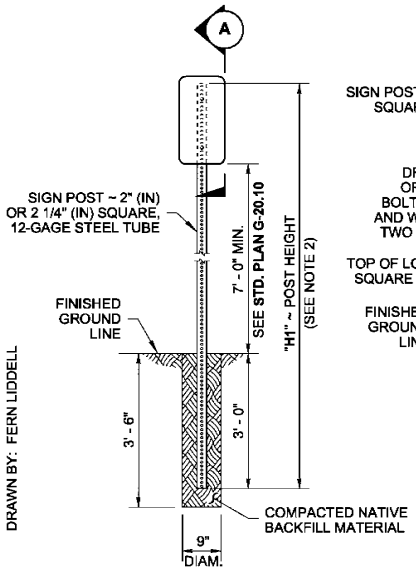

ELEVATION

TYPE ST-1 SIGN SUPPORT

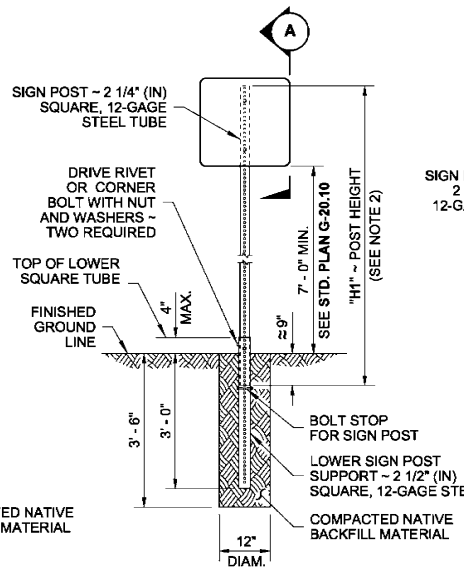

ELEVATION

TYPE ST-2 SIGN SUPPORT

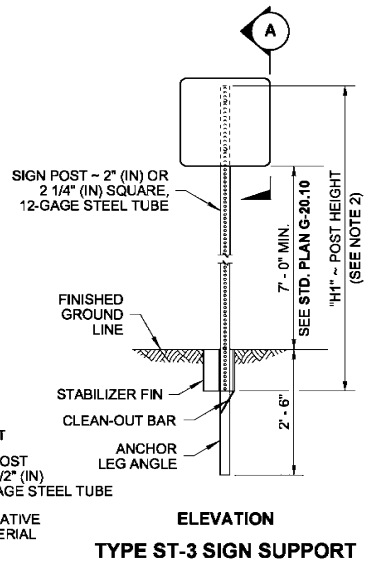

ELEVATION

TYPE ST-3 SIGN SUPPORT

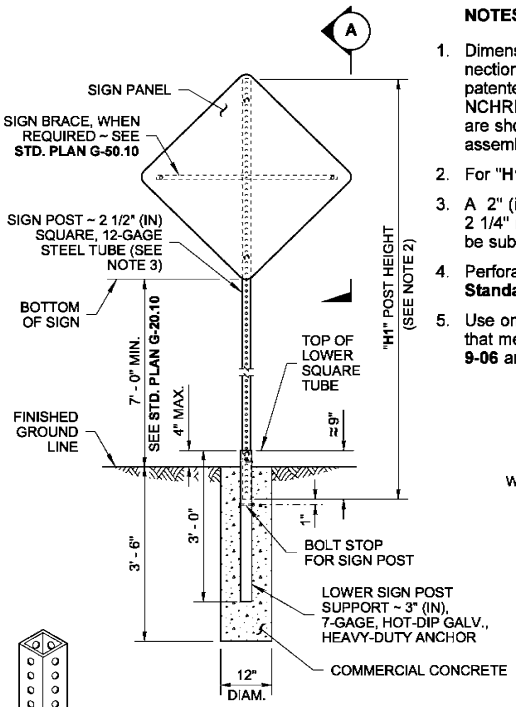

ELEVATION

TYPE ST-4 SIGN SUPPORT

NOTES

1. Dimensions for the parts used to assemble the base connections are intentionally not shown. Base connections are patented, manufactured products that are in compliance with NCHRP 350 crash test criteria. The base connection details are shown on this plan only to illustrate how the parts are assembled.
2. For "**H1**", refer to the Sign Specification Sheet in the Contract.
3. A 2" (in) post with a 2 1/4" (in) PSST anchor or a 2 1/4" (in) post with a 2 1/2" (in) PSST anchor may be substituted. See Contract Plans.
4. Perforated square steel post shall meet the requirements of **Standard Specification 9-06**.
5. Use only base connection manufacturer supplied hardware that meets the requirements of **Standard Specifications 9-06** and **9-28**.

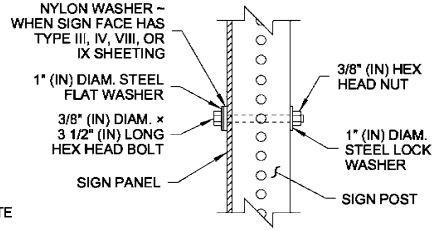

DETAIL B

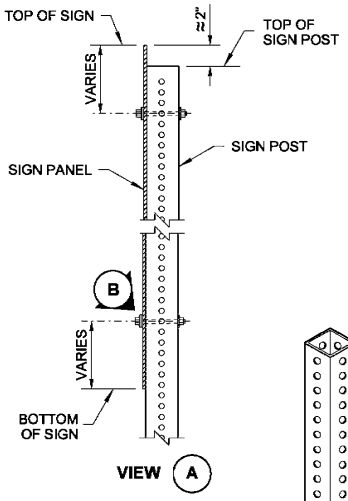

VIEW A

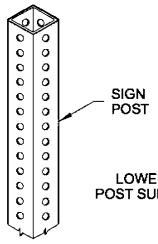

TYPE ST-1

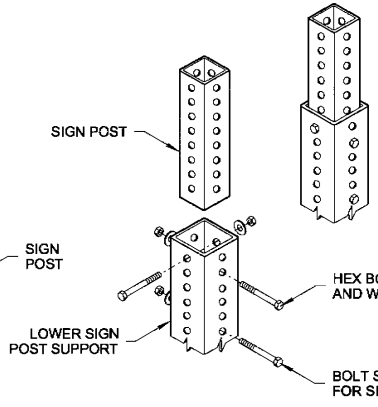

TYPE ST-2

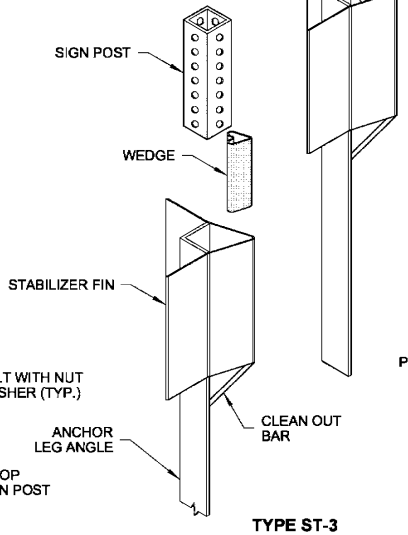

TYPE ST-3

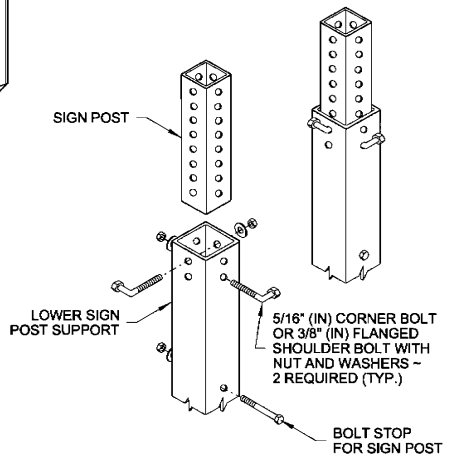

TYPE ST-4

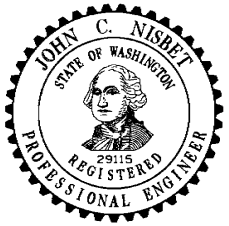

Nisbet, John
Jun 12 2014 7:41 AM

STEEL SIGN SUPPORT TYPES ST-1 - ST-4 INSTALLATION DETAILS

STANDARD PLAN G-24.50-03

SHEET 1 OF 1 SHEET

APPROVED FOR PUBLICATION

Bakotich, Pasco
Jun 17 2014 9:39 AM

STATE DESIGN ENGINEER

Washington State Department of Transportation

DRAWN BY: FERN LIDDELL

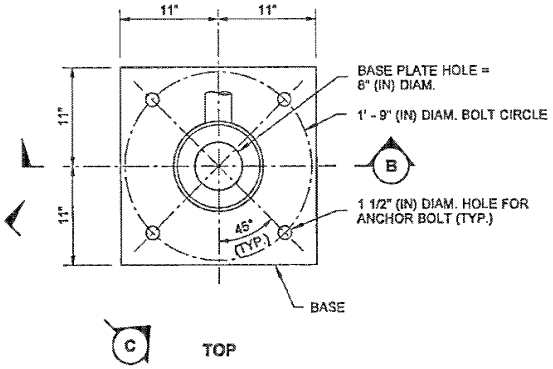

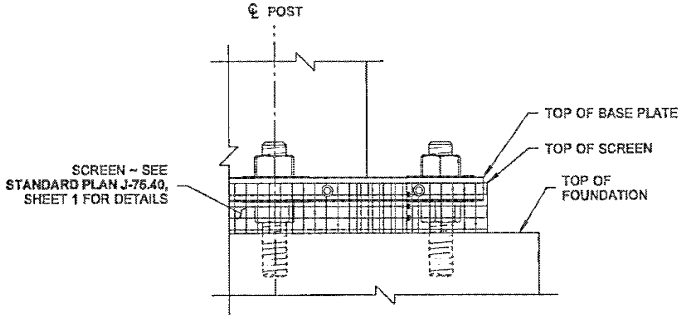

SCREEN DETAIL

CONDUIT OMITTED FOR CLARITY ~ FOR ELECTRICAL REQUIREMENTS
SEE **STANDARD PLAN J-75.45**

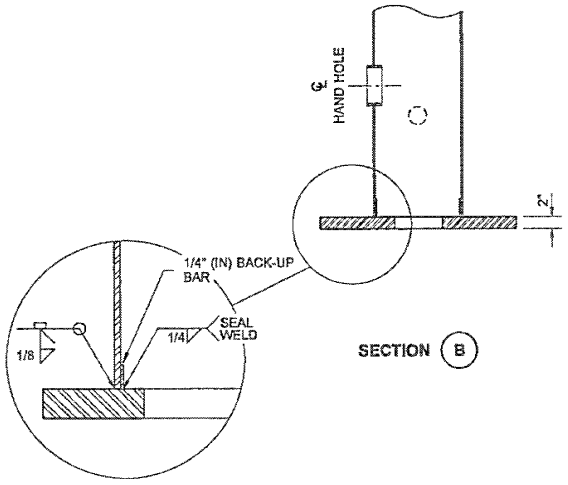

BASE WELD DETAIL

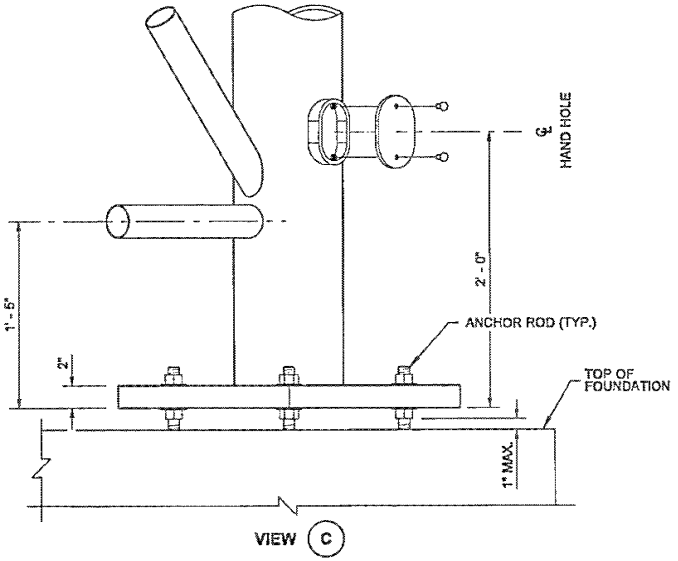

POST BASE DETAILS

CONDUIT OMITTED FOR CLARITY ~ FOR ELECTRICAL REQUIREMENTS
SEE **STANDARD PLAN J-75.45**

RICHARD P. ZELDENRUST
STATE OF WASHINGTON
25470
STRUCTURAL ENGINEER
PROFESSIONAL ENGINEER

Zeldenrust, Richard
2015.06.11 14:11:56 -07'00'

SIGN BRIDGE (TRUSS-TYPE)

STANDARD PLAN G-70.10-03

SHEET 4 OF 4 SHEETS

APPROVED FOR PUBLICATION
Carpenter, Jeff
Jun 18 2015 7:53 AM
STATE DESIGN ENGINEER
Washington State Department of Transportation

DRAWN BY: COLBY FLETCHER

MATERIAL SPECIFICATIONS	
SHAFT CONCRETE	CLASS 4000P ①
ALL OTHER CONCRETE	CLASS 4000
STEEL REINF. BAR	AASHTO M 31 GRADE 60
ANCHOR RODS	ASTM F 1554 GRADE 105
ANCHOR NUTS	AASHTO M 291
ANCHOR WASHERS	AASHTO M 293
ANCHORAGE GALVANIZING	AASHTO M 232
ANCHOR PLATE	ASTM A 36

① CASE THE EXCAVATION AND PLACE USING TREMIE METHOD WHEN WATER IS PRESENT

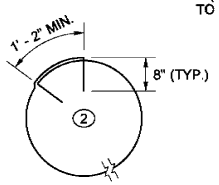

LAP SPLICE DETAIL

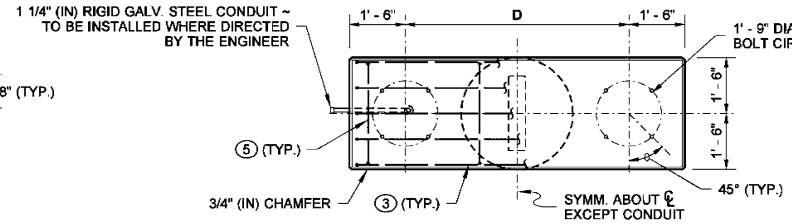

TOP

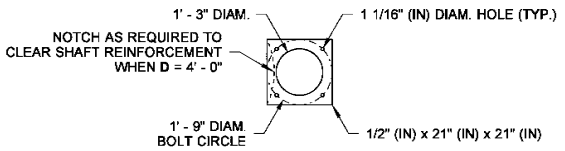

ANCHOR PLATE DETAIL

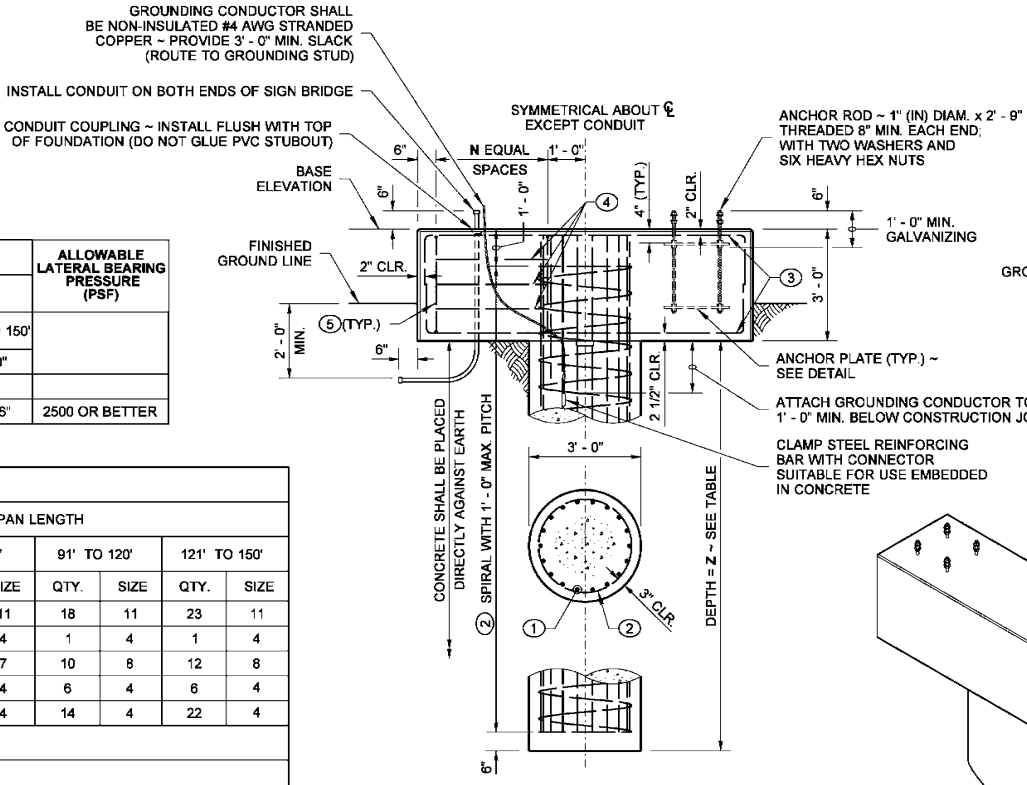

ELEVATION

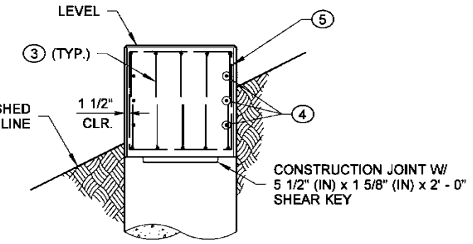

END

TABLE					ALLOWABLE LATERAL BEARING PRESSURE (PSF)
VARIABLES	SPAN LENGTH				
	60' OR LESS	61' TO 90'	91' TO 120'	121' TO 150'	
DIMENSION ~ D	4' - 0"	5' - 0"	6' - 0"	7' - 0"	
BAR SPACES ~ N	2	3	6	10	
SHAFT DEPTH ~ Z	11' - 6"	13' - 6"	15' - 0"	16' - 6"	2500 OR BETTER

BAR LIST									
MARK	LOCATION	SPAN LENGTH							
		60' OR LESS		61' TO 90'		91' TO 120'		121' TO 150'	
		QTY.	SIZE	QTY.	SIZE	QTY.	SIZE	QTY.	SIZE
①	SHAFT - VERTICAL	11	9	14	11	18	11	23	11
②	SHAFT - SPIRAL	1	4	1	4	1	4	1	4
③	CAP - TOP AND BOTTOM	8	6	8	7	10	8	12	8
④	CAP - SIDES	6	4	6	4	6	4	6	4
⑤	CAP - HOOPS	6	4	8	4	14	4	22	4

BENDING DIAGRAM

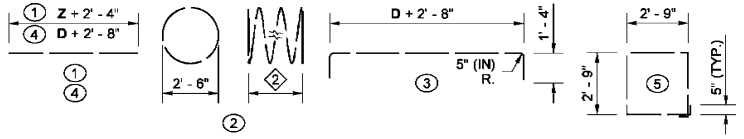

(ALL DIMENSIONS ARE OUT TO OUT)
2" (IN) RADIUS, UNLESS OTHERWISE NOTED

② DETERMINE LENGTH FROM PLANS

FOUNDATION TYPE 1

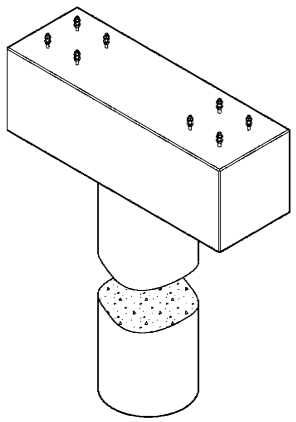

ISOMETRIC

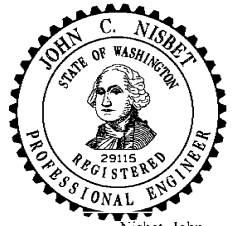

Nisbet, John
Feb 29 2016 9:23 AM

SIGN BRIDGE (TRUSS-TYPE) FOUNDATION TYPE 1

STANDARD PLAN G-70.20-03

SHEET 1 OF 1 SHEET

APPROVED FOR PUBLICATION
Carpenter, Jeff
Feb 29 2016 12:37 PM
STATE DESIGN ENGINEER
Washington State Department of Transportation

DRAWN BY: COLBY FLETCHER

MATERIAL SPECIFICATIONS	
CONCRETE	CLASS 4000P
STEEL REINF. BAR	AASHTO M 31 GRADE 60
ANCHOR RODS	ASTM F 1554 GRADE 105
ANCHOR NUTS	AASHTO M 291
ANCHOR WASHERS	AASHTO M 293
ANCHORAGE GALVANIZING	AASHTO M 232
ANCHOR PLATE	ASTM A 36

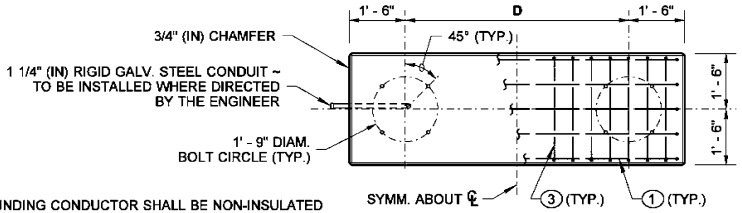

TOP

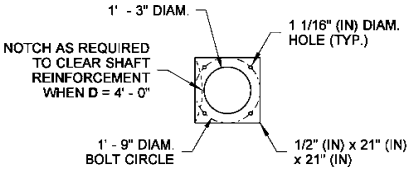

ANCHOR PLATE DETAIL

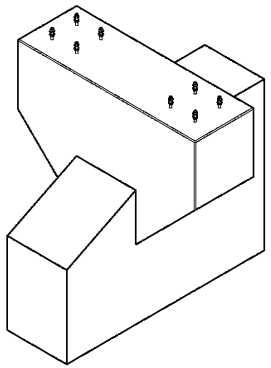

ISOMETRIC

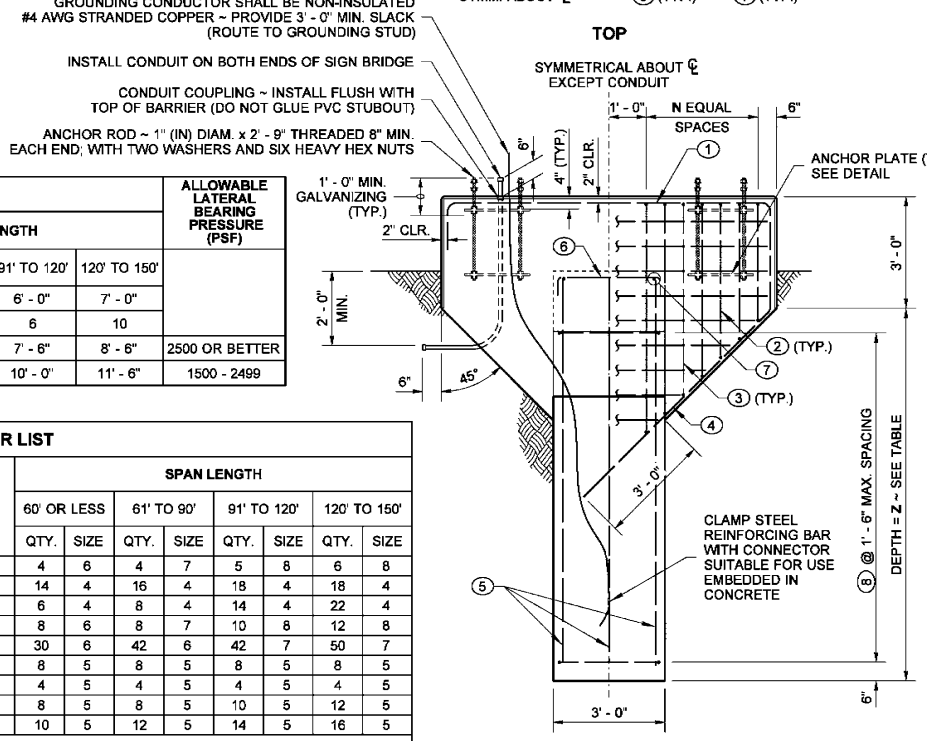

END

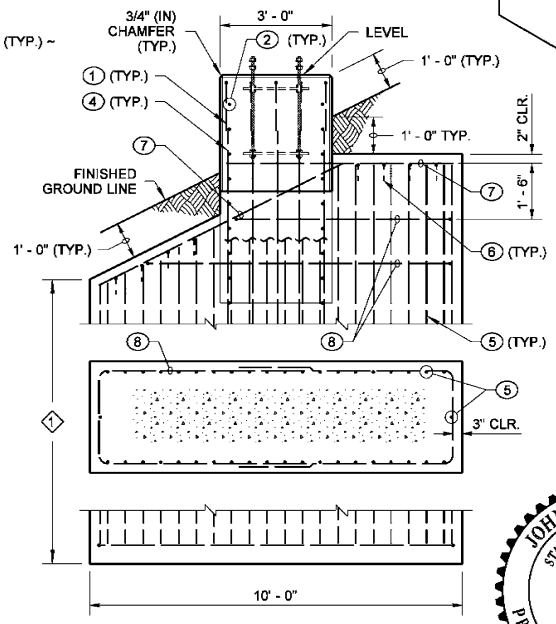

SIDE

TABLE						ALLOWABLE LATERAL BEARING PRESSURE (PSF)
VARIABLES		SPAN LENGTH				
		60' OR LESS	61' TO 90'	91' TO 120'	120' TO 150'	
DIMENSION ~ D		4' - 0"	5' - 0"	6' - 0"	7' - 0"	
BAR SPACES ~ N		2	3	6	10	
SHAFT DEPTH ~ Z	TYPE 2	5' - 6"	6' - 6"	7' - 6"	8' - 6"	2500 OR BETTER
	TYPE 3	7' - 0"	8' - 6"	10' - 0"	11' - 6"	1500 - 2499

BAR LIST										
FOUNDATION TYPE	MARK	LOCATION	SPAN LENGTH							
			60' OR LESS		61' TO 90'		91' TO 120'		120' TO 150'	
			QTY.	SIZE	QTY.	SIZE	QTY.	SIZE	QTY.	SIZE
2 AND 3	1	CAP - TOP	4	6	4	7	5	8	6	8
	2	CAP - SIDES	14	4	16	4	18	4	18	4
	3	CAP - HOOPS	6	4	8	4	14	4	22	4
	4	CAP - BOTTOM	8	6	8	7	10	8	12	8
	5	FND. WALL - VERTICAL	30	6	42	6	42	7	50	7
	6	FND. WALL - TIES	8	5	8	5	8	5	8	5
	7	FND. WALL - HORIZONTAL	4	5	4	5	4	5	4	5
2	8	FND. WALL - HORIZONTAL	8	5	8	5	10	5	12	5
3	8	FND. WALL - HORIZONTAL	10	5	12	5	14	5	16	5

BENDING DIAGRAM

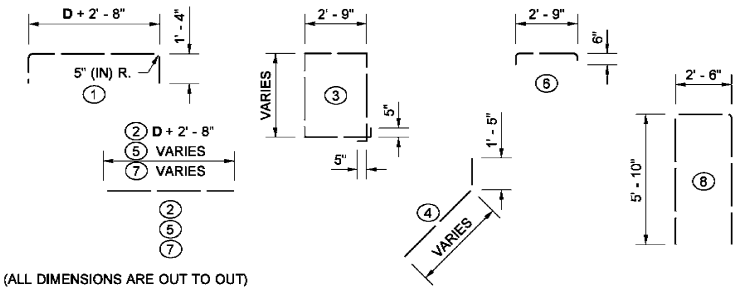

(ALL DIMENSIONS ARE OUT TO OUT)
2" (IN) RADIUS, UNLESS OTHERWISE NOTED

1 Concrete below finished ground line shall be placed directly against undisturbed earth, or alternately, backfill placed around foundation shall be compacted in conformance with **Standard Specification 2-09.3(1)e**, method 1 or 4. All formwork shall be removed.

FOUNDATION TYPES 2 & 3

JOHN C. NISBET
STATE OF WASHINGTON
29115
REGISTERED
PROFESSIONAL ENGINEER

Nisbet, John
Feb 29 2016 9:26 AM

SIGN BRIDGE (TRUSS-TYPE) FOUNDATION TYPE 2 & 3

STANDARD PLAN G-70.30-03

SHEET 1 OF 1 SHEET

APPROVED FOR PUBLICATION
Carpenter, Jeff
Feb 29 2016 12:38 PM
STATE DESIGN ENGINEER

Washington State Department of Transportation

This page left blank intentionally.

DRAWN BY: BILL BERENS

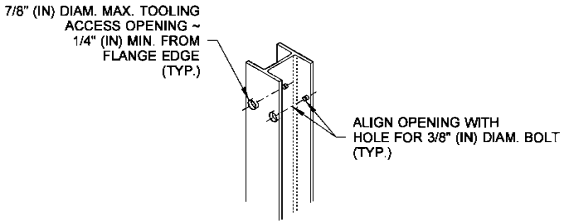

PARTIAL VERTICAL BRACE @ Z-BAR CONNECTION

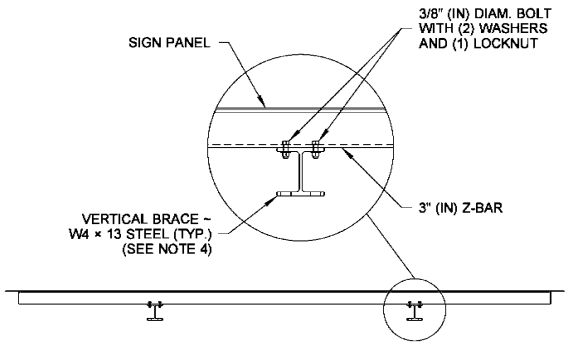

TOP

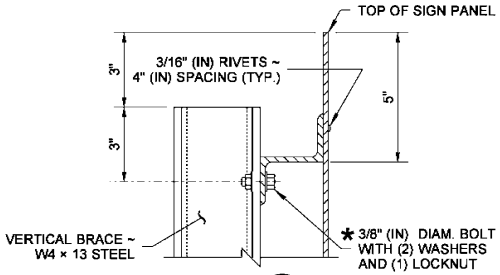

SECTION (A)

*ATTACH ON BOTH SIDES OF WIDE FLANGE STEEL POST

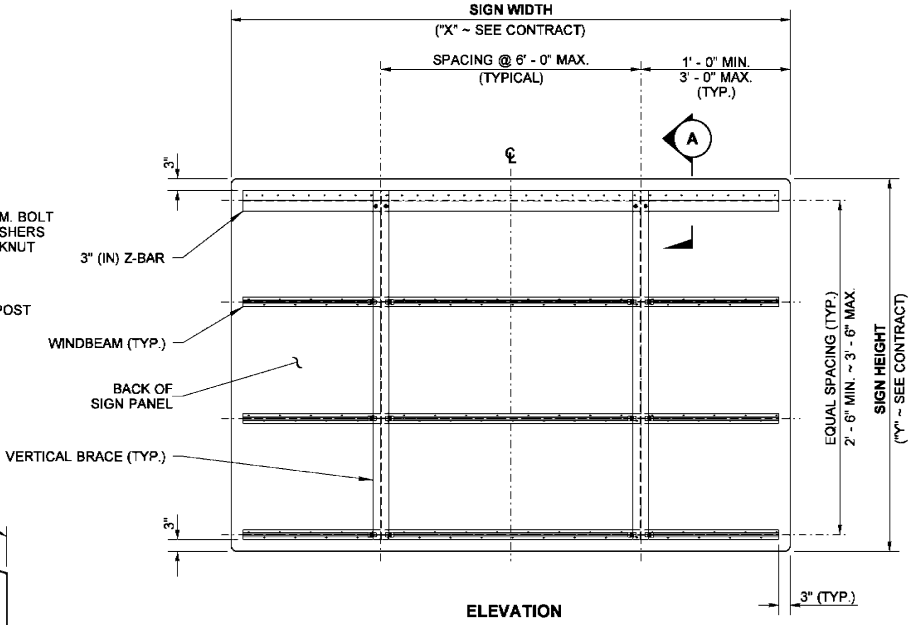

ELEVATION

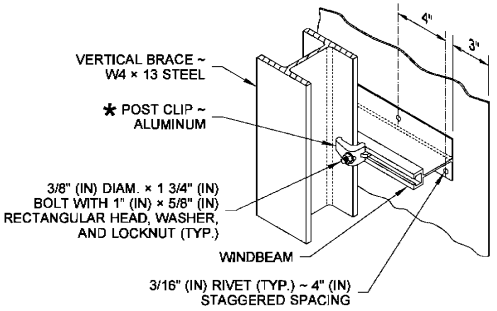

WINDBEAM CONNECTION DETAIL

* ATTACH ON BOTH SIDES OF WIDE FLANGE STEEL POST

ASSEMBLY NOTES

All parts shall be plumb and square.

Bring all parts into full contact with each other.

Fasteners and associated hardware shall be in a snug tight condition when assembled.

Bolted parts shall fit solidly together.

NOTES

1. Windbeam and 3" (IN) Z-Bar are aluminum. All nuts, bolts, washers, and other hardware shall be stainless steel per **Standard Specification Section 9-28.11,** except as noted. Galvanize all non-stainless steel parts.
2. See **Standard Plan G-90.20** (Monotube), or **G-90.30** (Truss) for additional Overhead Sign Mounting details.
3. For VMS mounting, the Contractor may substitute W6 × 12 steel or W8 × 13 steel sections for the Vertical Brace W4 × 13 steel.

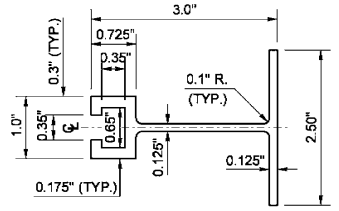

WINDBEAM DETAIL

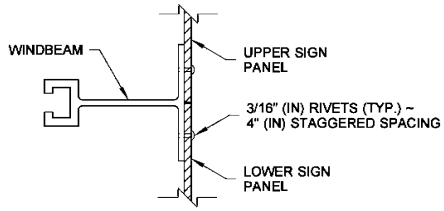

HORIZONTAL SIGN PANEL SPLICE

Zeldenrust, Richard
Apr 21 2016 1:05 PM

OVERHEAD SIGN BRACING AND MOUNTING

STANDARD PLAN G-90.10-02

SHEET 1 OF 1 SHEET

APPROVED FOR PUBLICATION
Carpenter, Jeff
Apr 28 2016 3:08 PM
STATE DESIGN ENGINEER
Washington State Department of Transportation

DRAWN BY: BILL BERENS

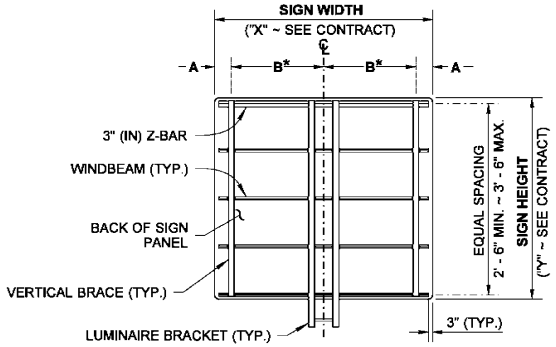

ONE SIGN LIGHTING LUMINAIRE
BRACE PLACEMENT

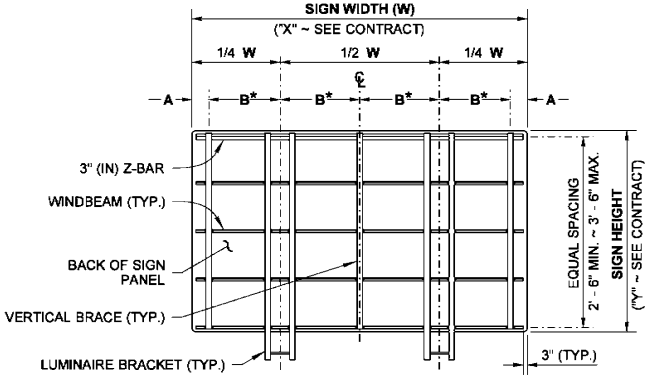

TWO SIGN LIGHTING LUMINAIRES
BRACE PLACEMENT

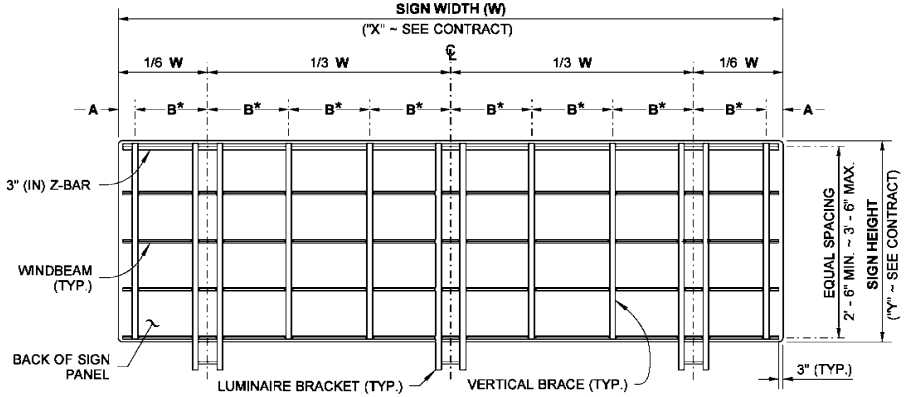

THREE SIGN LIGHTING LUMINAIRES
BRACE PLACEMENT

VERTICAL BRACE SPACING WITH SIGN LIGHTING		
SIGN WIDTH	**A**	**B***
ONE SIGN LIGHTING LUMINAIRE		
8' - 0"	6"	3' - 6"
10' - 0"	6"	4' - 6"
12' - 0"	6"	5' - 6"
14' - 0"	1' - 0"	6' - 0"
16' - 0"	2' - 0"	6' - 0"
TWO SIGN LIGHTING LUMINAIRES		
18' - 0"	6"	4' - 3"
20' - 0"	6"	4' - 9"
22' - 0"	6"	5' - 3"
24' - 0"	6"	5' - 9"
26' - 0"	6"	6' - 3"
28' - 0"	6"	6' - 9"
30' - 0"	1' - 0"	7' - 0"
32' - 0"	2' - 0"	7' - 0"
THREE SIGN LIGHTING LUMINAIRES		
34' - 0"	6"	4' - 1 1/2"
36' - 0"	6"	4' - 4 1/2"

* IF " B" EXCEEDS THE SPACING LISTED ON THE VERTICAL BRACE SPACING TABLE, ADD AN ADDITIONAL VERTICAL BRACE

NOTES

1. Install Sign Lighting Luminaires (and Brackets) only when required in the Contract.
2. All nuts, bolts, washers, and other hardware shall be stainless steel per **Standard Specification Section 9-28.11**, except as noted. Galvanize all non-stainless steel parts.
3. See **Standard Plan G-90.20** (Monotube), or **G-90.30** (Truss) for additional Overhead Sign Lighting details.

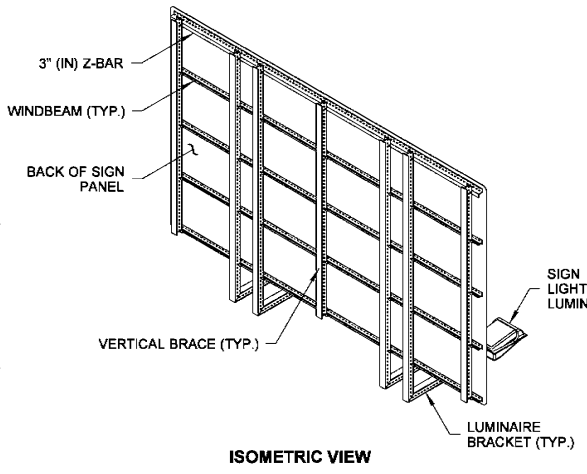

ISOMETRIC VIEW

RICHARD P. ZELDENRUST
STATE OF WASHINGTON
25470
STRUCTURAL ENGINEER
PROFESSIONAL ENGINEER

Zeldenrust, Richard
Apr 21 2016 1:09 PM

OVERHEAD SIGN LIGHTING BRACING

STANDARD PLAN G-90.11-00

SHEET 1 OF 1 SHEET

APPROVED FOR PUBLICATION
Carpenter, Jeff
Apr 28 2016 3:10 PM
STATE DESIGN ENGINEER
Washington State Department of Transportation

DRAWN BY: BILL BERENS

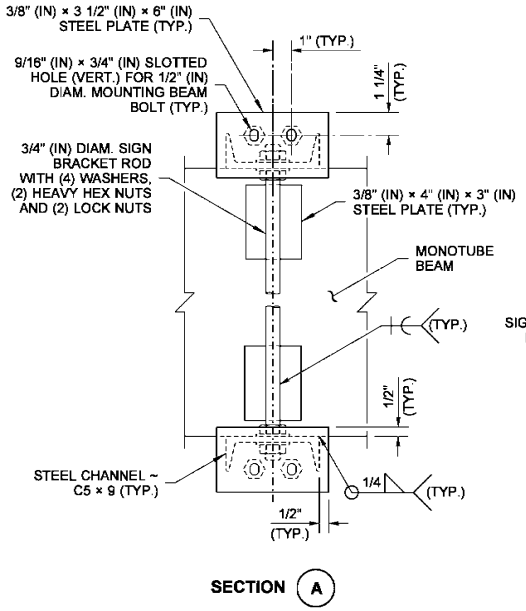

SECTION (A)

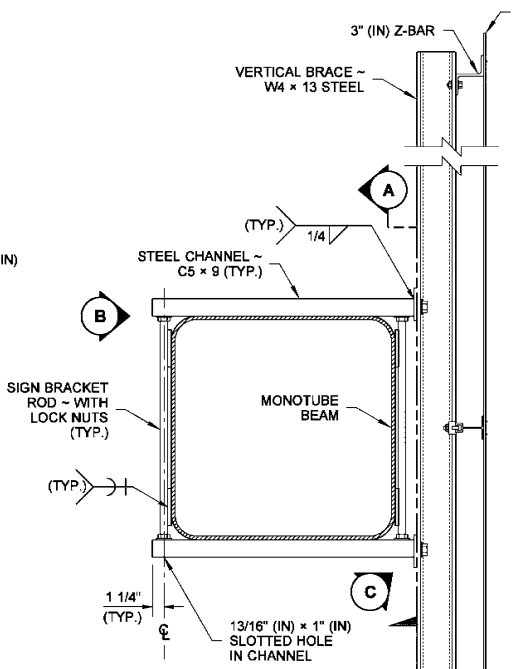

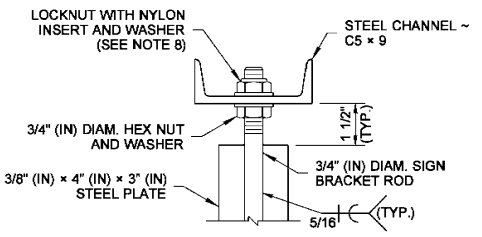

VIEW (B)

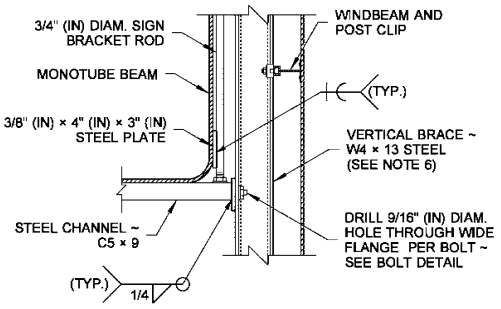

DETAIL (C)

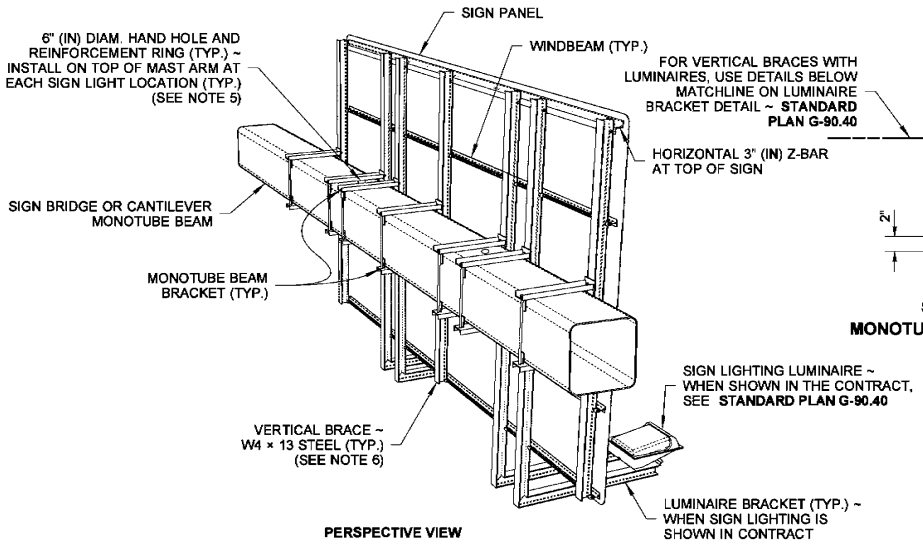

PERSPECTIVE VIEW
MONOTUBE STRUCTURE

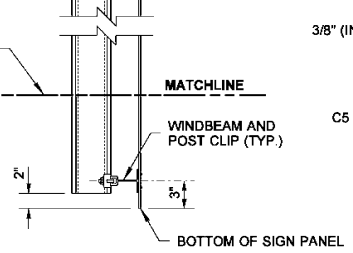

SIDE VIEW
MONOTUBE CONNECTION

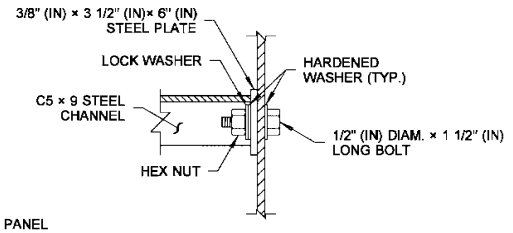

BOLT DETAIL

NOTES

1. Refer to Contract Plans for Monotube Beam Bracket element sizes, dimensions, and weld symbols.
2. See **Standard Plan G-90.10** for Sign Bracing and Mounting details. For Sign Bridge Structure parts, see **Standard Specification Section 9-28.14(2)**.
3. Galvanize all non-stainless steel parts. See **Standard Specification Section 9-28.14(2)** for requirements.
4. See **Standard Plan G-90.40** for Sign Lighting details.
5. Hand holes shall be installed at the time of fabrication. Only additional conduits for lighting accommodations to previously non-illuminated structures may be installed in field as long as the proper repairs are made to the structure. For details notshown, see **Standard Plan J-75.40**.
6. For VMS mounting, the Contractor may substitute W6 × 12 steel or W8 × 13 steel sections for the Vertical Brace W4 × 13 steel.
7. 3' - 0" max. Vertical Brace and Monotube Beam Bracket spacing for walk-in cabinet Type VMS installation.
8. All locknuts shall conform to **Standard Specification Section 9-28.11** as supplemented in the Special Provisions.
9. For all sign lighting bracing details not shown, see **Standard Plan G-90.11**.

RICHARD P. ZELDENRUST
STATE OF WASHINGTON
25470
STRUCTURAL ENGINEER
PROFESSIONAL ENGINEER

Zeldenrust, Richard
Apr 21 2016 1:40 PM

OVERHEAD SIGN MOUNTING (MONOTUBE STRUCTURE)

STANDARD PLAN G-90.20-04

SHEET 1 OF 1 SHEET

APPROVED FOR PUBLICATION
Carpenter, Jeff
Apr 28 2016 3:10 PM
STATE DESIGN ENGINEER
Washington State Department of Transportation

DRAWN BY: BILL BERENS

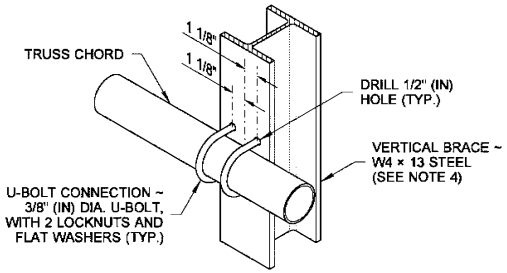

DETAIL (B)

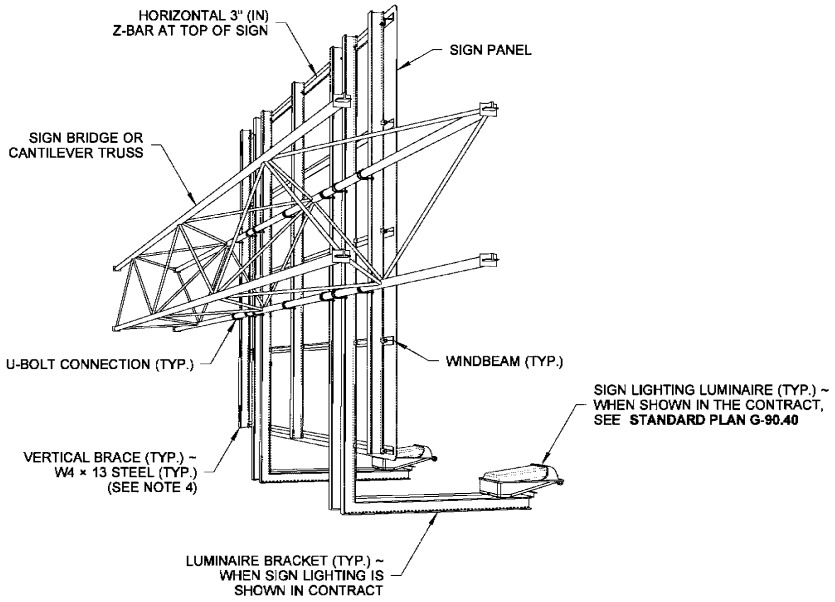

PERSPECTIVE VIEW
TRUSS STRUCTURE

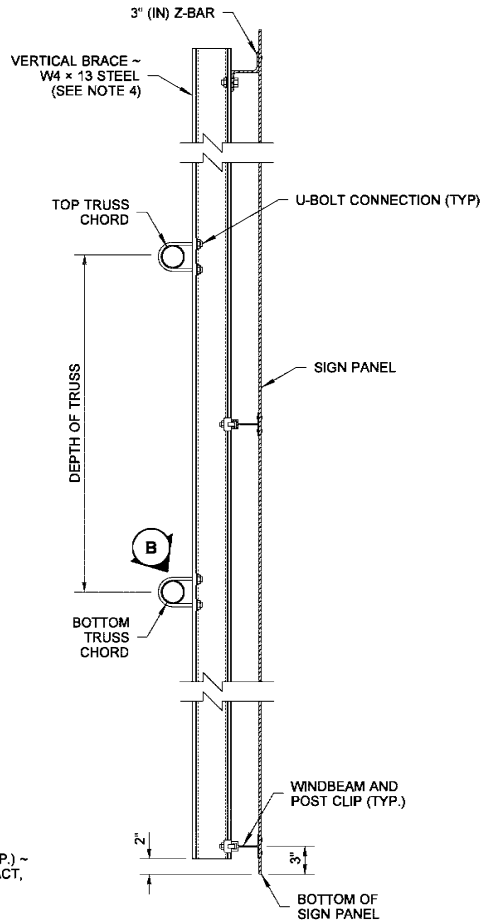

SIDE VIEW
TRUSS CONNECTION

NOTES

1. U-Bolts, Washers and Nuts shall be stainless steel, except as noted.
2. See **Standard Plan G-90.10** for Sign Bracing and Mounting details. For Sign Bridge Structure parts, see **Standard Specification Section 9-28.14(2)**.
3. Galvanize all non-stainless steel parts. See **Standard Specification Section 9-28.14(2)** for requirements.
4. For VMS mounting, the contractor may substitute W6 x 12 Steel or W8 x 13 Steel sections for the Vertical Brace W4 x 13 Steel.
5. 3' - 0" MAX. Vertical Brace spacing for Walk-In Cabinet Type VMS installation.
6. All locknuts shall conform to **Standard Specification Section 9-28.11** as supplemented in the Special Provisions.
7. For all sign lighting bracing details not shown, See **Standard Plan G-90.11**.

RICHARD P. ZELDENRUST
STATE OF WASHINGTON
25470
STRUCTURAL ENGINEER
PROFESSIONAL ENGINEER

Zeldenrust, Richard
Apr 21 2016 1:41 PM

OVERHEAD SIGN MOUNTING (TRUSS STRUCTURE)

STANDARD PLAN G-90.30-03

SHEET 1 OF 1 SHEET

APPROVED FOR PUBLICATION
Carpenter, JeffT
Apr 28 2016 3:10 PM
STATE DESIGN ENGINEER
Washington State Department of Transportation

DRAWN BY: BILL BERENS

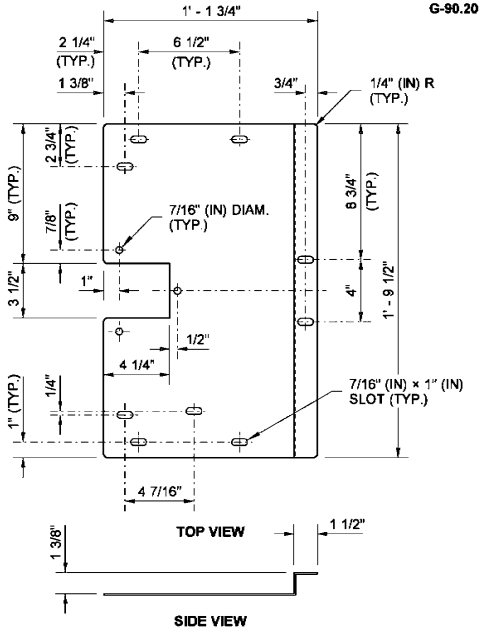

10 GAGE GALV. STEEL PLATE ~ ITEM AVAILABLE FROM LUMINAIRE MANUFACTURER

LUMINAIRE MOUNTING PLATE

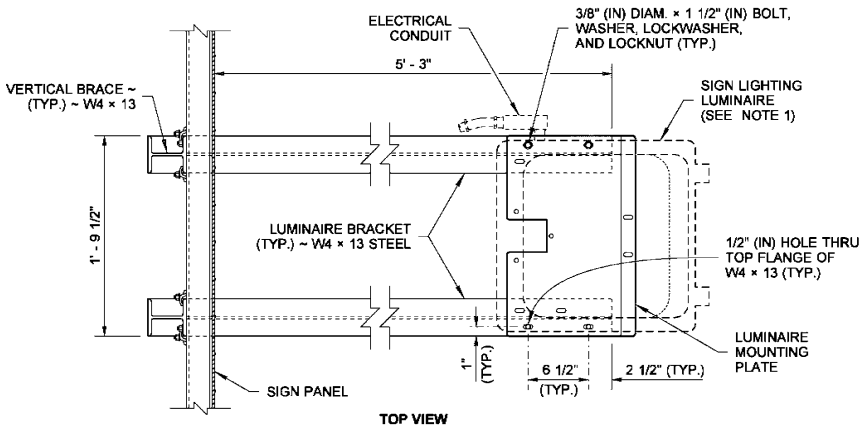

LUMINAIRE BRACKET

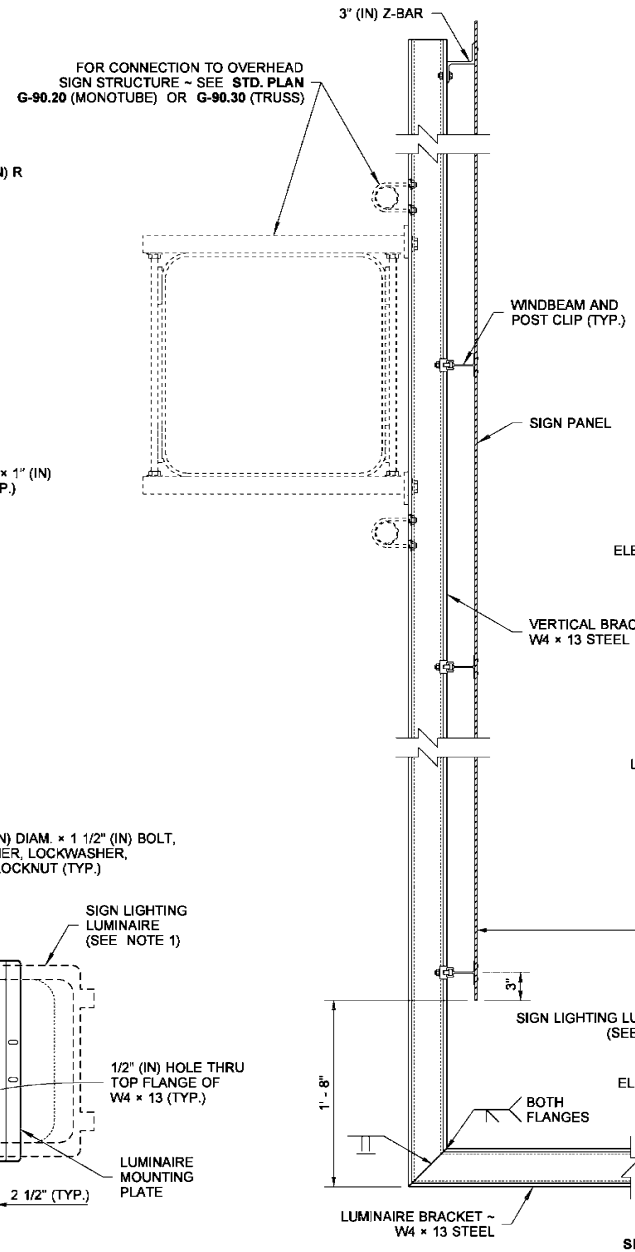

LUMINAIRE BRACKET

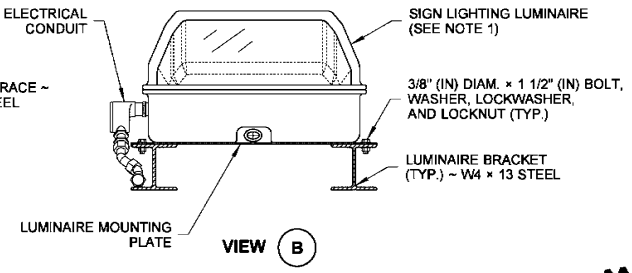

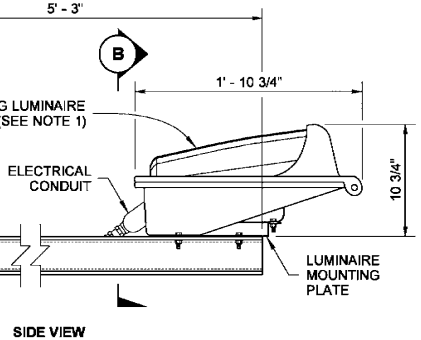

NOTES

1. Sign Lighting Luminaire shall include a 3/4" (in) threaded side entry, a gasketed front entry, a door prop, and 4 mounting holes. Refer to **Standard Spec. 8-20.3(13)** for additional requirements.
2. See **Standard Plan J-75.40** and **J-75.45** for Sign Light Luminaire Electrical Details.
3. For all sign lighting bracing details not shown, see **Standard Plan G-90.11**.

RICHARD P. ZELDENRUST STATE OF WASHINGTON 25470 STRUCTURAL ENGINEER PROFESSIONAL ENGINEER

Zeldenrust, Richard
Apr 21 2016 1:42 PM

OVERHEAD SIGN LIGHTING DETAILS

STANDARD PLAN G-90.40-02

SHEET 1 OF 1 SHEET

APPROVED FOR PUBLICATION
Carpenter, Jeff
Apr 28 2016 3:11 PM
STATE DESIGN ENGINEER
Washington State Department of Transportation

This page left blank intentionally.

DRAWN BY: LISA CYFORD

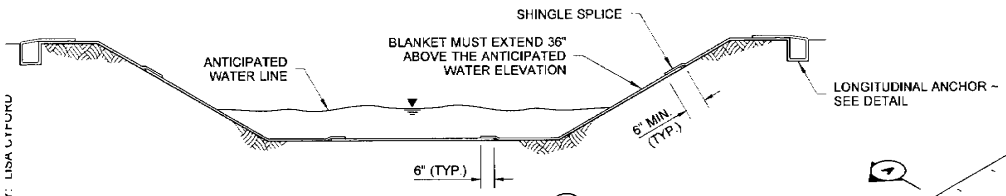

CHANNEL INSTALLATION ~ SECTION (A)

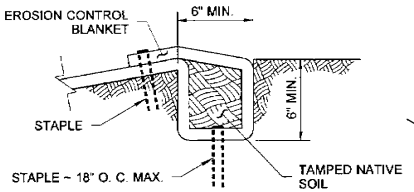

LONGITUDINAL ANCHOR DETAIL

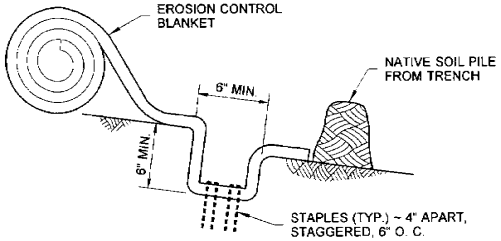

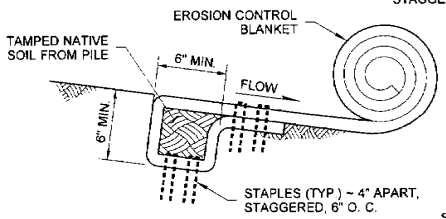

INITIAL ANCHOR ~ SECTION (B)

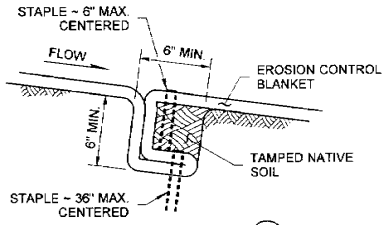

CHECK SLOT ~ SECTION (C)

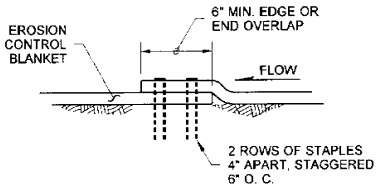

SHINGLE SPLICE AT END OF ROLL

SECTION (D)

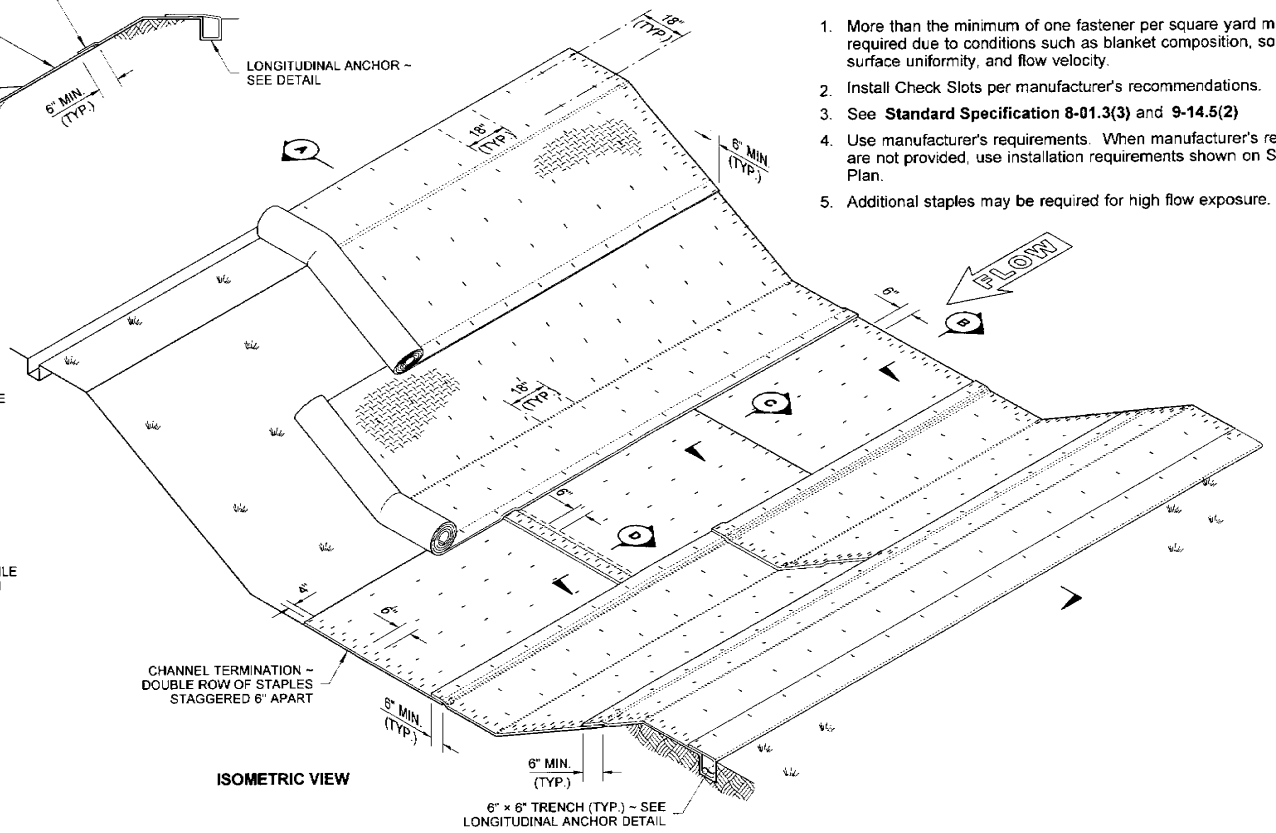

ISOMETRIC VIEW

NOTES

1. More than the minimum of one fastener per square yard may be required due to conditions such as blanket composition, soil type, surface uniformity, and flow velocity.
2. Install Check Slots per manufacturer's recommendations.
3. See **Standard Specification 8-01.3(3)** and **9-14.5(2)**
4. Use manufacturer's requirements. When manufacturer's requirements are not provided, use installation requirements shown on Standard Plan.
5. Additional staples may be required for high flow exposure.

INSTALLATION STEPS:

1. Prepare smooth slope.
2. Amend soil and seed, as specified.
3. Dig anchor trench. Set aside native soil removed from trench.
4. Secure blanket in anchor trench, staking or stapling blanket as shown.
5. Replace native soil previously removed from trench.
6. Roll blanket parallel to the slope in a controlled manner, taking care to remove excess slack, and taking care not to stretch blanket.
7. Stake or staple blanket as shown so there are no gaps between the blanket and the soil. Staple while unrolling blanket to minimize walking on blanket.

STATE OF WASHINGTON REGISTERED LANDSCAPE ARCHITECT
SANDRA L. SALISBURY
LICENSE NO. 860
DATE: 6 June 2015

BIODEGRADABLE EROSION CONTROL BLANKET PLACEMENT FOR DITCHES STANDARD PLAN I-60.20-01

SHEET 1 OF 1 SHEET

APPROVED FOR PUBLICATION
STATE DESIGN ENGINEER — DATE 6/10/15
Washington State Department of Transportation

DRAWN BY: FERN LIDDELL

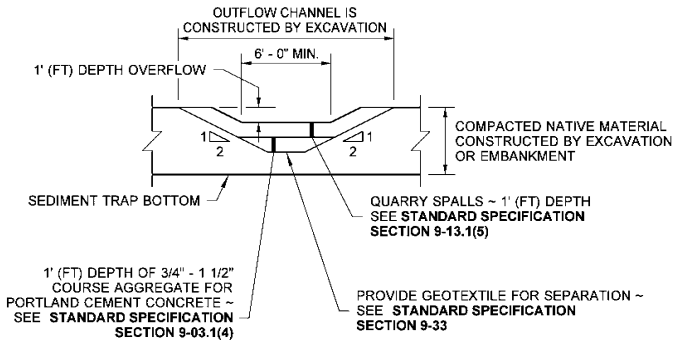

SECTION (A)

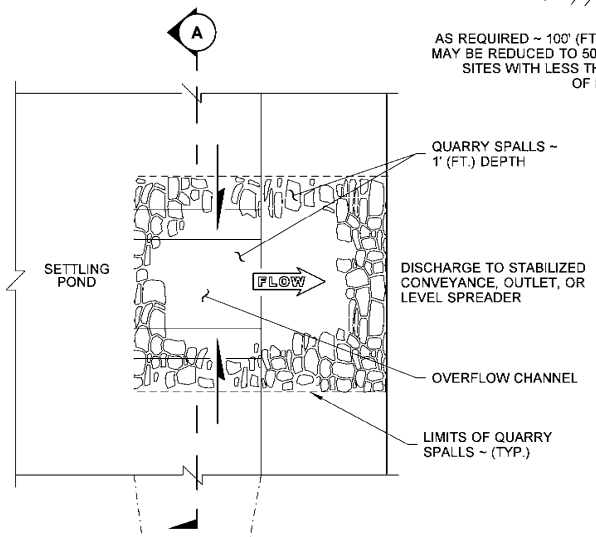

PARTIAL PLAN VIEW OF BERM

SHOWN LARGER FOR CLARITY

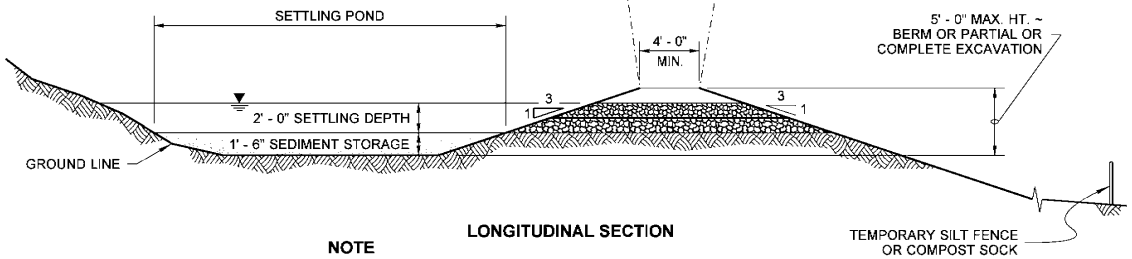

LONGITUDINAL SECTION

NOTE

PLACE GEOTEXTILE UNDER THE SPILLWAY AND SIDE SLOPES. PROVIDE A CONTINUOUS LAYER BETWEEN THE GRAVEL/ROCK AND THE NATIVE EARTHEN MATERIAL.

TEMPORARY SEDIMENT TRAP

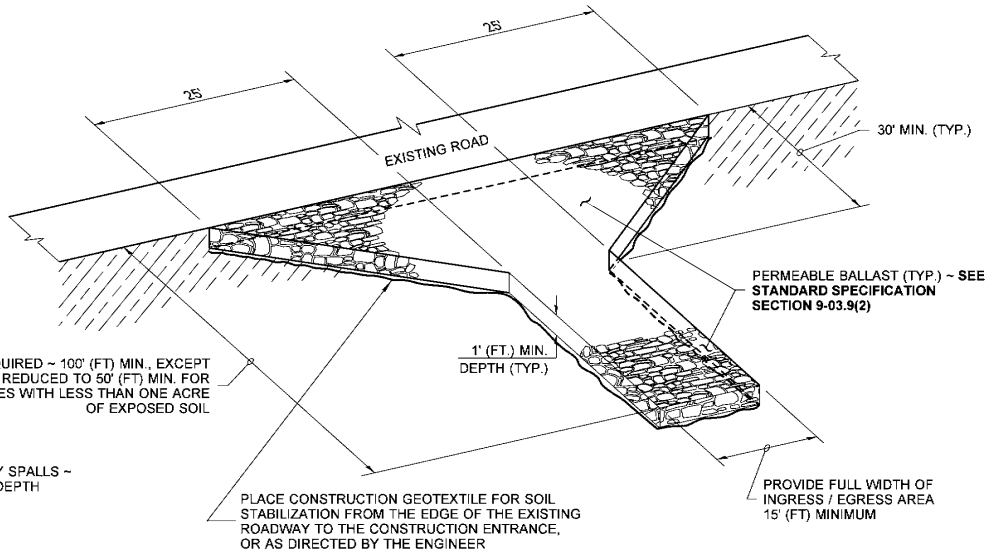

ISOMETRIC VIEW

STABILIZED CONSTRUCTION ENTRANCE

STABILIZED CONSTRUCTION ENTRANCE SHALL MEET THE REQUIREMENTS OF **STANDARD SPECIFICATION SECTION 8-01.3(7).**

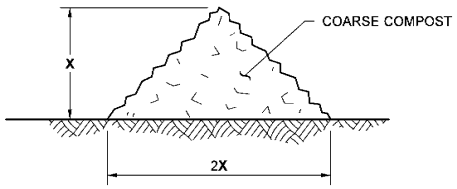

X = 1' - 0" FOR SLOPES 4H:1V OR FLATTER

X = 1' - 6" FOR SLOPES STEEPER THAN 4H:1V

TYPICAL SECTION

COMPOST BERM DETAIL

STATE OF WASHINGTON
REGISTERED
LANDSCAPE ARCHITECT
JULI DEE HARTWIG
LICENSE NO. 1422
DATE: 06-21-17

MISCELLANEOUS EROSION CONTROL DETAILS

STANDARD PLAN I-80.10-02

SHEET 1 OF 1 SHEET

APPROVED FOR PUBLICATION
Carpenter, Jeff
Jul 15 2016 2:28 PM
STATE DESIGN ENGINEER
Washington State Department of Transportation

NOTES (CONTINUED)

9. See **Standard Specification 9-29.24** (Service Cabinets).
10. Hinges shall have stainless steel or brass pins.
11. Cabinet shall be rated NEMA 3R and shall include two rain-tight vents.
12. The metering equipment door shall be pad-lockable. Each door shall be gasketed. See **Standard Plan J-10.20** for door hinge details. Concealed heavy-duty stainless steel lift-off hinges are allowed as an alternative. Upper left door shall have three hinges, lower left door shall have two hinges, and right door shall have three hinges. All doors shall have a two-position door stop assembly.
13. The following equipment within the service enclosure shall have an appropriately engraved phenolic name plate attached with screws or rivets:
    Key Numbers 2, 3, 4, 6, 7, 8, and 9.
    Key Number 4 name plate shall read as follows:
    "PHOTOCELL BYPASS TEST ON" AND "PHOTOCELL TEST OFF - AUTOMATIC."
    See service cabinet detail.
14. Dimensions shown are minimum and shall be adjusted to accommodate the various sizes of equipment installed.
15. All busswork shall be high-grade copper and shall equal or exceed the main breaker rating. All breakers shall bolt on to the busswork. Jumpering of breakers shall not be allowed. Busswork shall accommodate all future equipment as shown in the Breaker Schedule.
16. The photoelectric control unit shall be centered in the photoelectric control enclosure to permit 360 degree rotation of the photoelectric control unit without removal of the photoelectric control unit or the photoelectric control enclosure.
17. All internal wire runs shall be identified with "TO - FROM" coded tags labeled with the code letters and/or numbers shown on the Schedules. Approved PVC or polyolefin wire marking sleeves shall be used.
18. All nuts, bolts, screws, and washers used for mounting the photoelectric control enclosure, conduit body covers, and junction box cover shall be **ASTM F593** or **A193 Type 304** or **Type 316** stainless steel.
19. A 1% tolerance is allowed for all dimensions.
20. See Contract for Breaker Schedule.
21. Install conduit couplings on all conduits.
22. The photoelectric control enclosure shall be fabricated from 5/8" (in) expanded steel mesh with welded seams and mounting flanges and shall be hot-dip galvanized after fabrication. Type 5052 - H32 aluminum with 5/8" (in) x 5/8" (in) expanded steel mesh may be used as an alternative material. See **Standard Plan J-10.20** for enclosure mounting details.
23. Slotted steel channel and mounting hardware components shall be stainless steel. Conduit clamps shall be hot-dip galvanized steel or stainless steel.
24. When using alternate door hinge, remove hinge pin prior to welding the hinge to the cabinet and prior to hot-dip galvanizing. After galvanizing, replace pin with a brass pin or solder in place. See **Standard Plan J-10.20** for alternate door hinge details.

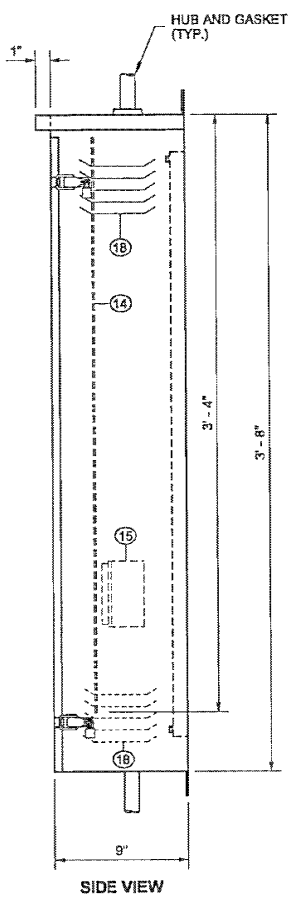

SIDE VIEW

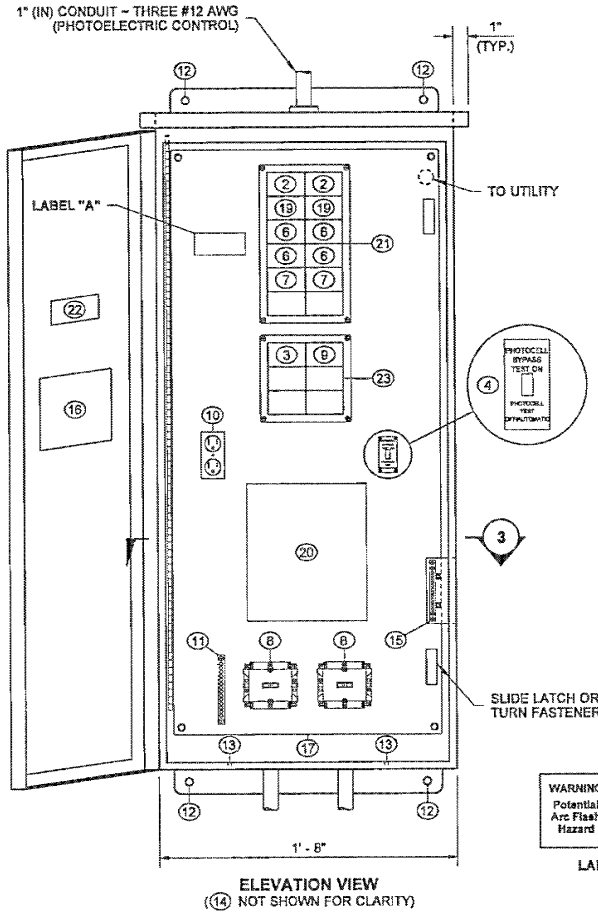

ELEVATION VIEW
((14) NOT SHOWN FOR CLARITY)

LABEL "A"

KEY

1. METER BASE PER SERVING UTILITY REQUIREMENTS ~ AS A MINIMUM, THE METER BASE SHALL BE SAFETY SOCKET BOX WITH FACTORY-INSTALLED TEST BYPASS FACILITY THAT MEETS THE REQUIREMENTS OF EUSERC **DRAWING 304** ~ METER BASE ENCLOSURE SHALL BE FABRICATED FROM TYPE 304 STAINLESS STEEL
2. MAIN BREAKER (DPST ~ SIZE PER BREAKER SCHEDULE)
3. PHOTOELECTRIC CONTROL BREAKER (SPST ~ 15 AMP ~ 120/240 VOLT)
4. TEST SWITCH (SPDT ~ SNAP ACTION ~ POSITIVE CLOSE ~ 15 AMP ~ 120/277 VOLT ~ "T" RATED)
5. PHOTOELECTRIC CONTROL UNIT ~ SEE **STANDARD SPECIFICATION 9-29.11(2)**
6. BRANCH BREAKER (DPST ~ SIZE PER BREAKER SCHEDULE)
7. SPARE BREAKER ~ SEE BREAKER SCHEDULE (DPST ~ 20 AMP ~ 240/480 VOLT)
8. CONTACTOR ~ SEE BREAKER SCHEDULE
9. RECEPTACLE BREAKER (SPST ~ 20 AMP ~ 120/240 VOLT)
10. RECEPTACLE ~ GROUNDED (GFCI ~ 20 AMP ~ 125 VOLT)
11. ISOLATED NEUTRAL BUSS ~ 14 LUG COPPER
12. MOUNTING HOLE ~ SEE **STANDARD PLAN J-10.20** FOR MOUNTING DETAILS
13. 1/4" (IN) DIAMETER DRAIN HOLE ~ DRILL BEFORE GALVANIZING
14. HINGED DEAD FRONT WITH 1/4 TURN FASTENERS OR SLIDE LATCH ~ DEAD FRONT PANEL BOLTS SHALL NOT EXTEND INTO VERTICAL LIMITS OF THE BREAKER ARRAY(S)
15. CABINET MAIN BONDING JUMPER ASSEMBLY ~ BUSS SHALL BE 12 LUG TINNED COPPER ~ SEE **STANDARD PLAN J-10.20** FOR CABINET MAIN BONDING JUMPER ASSEMBLY DETAILS
16. METAL WIRING DIAGRAM HOLDER
17. REMOVABLE SUBPANEL FOR EQUIPMENT
18. SCREENED VENTS ~ TWO REQUIRED (ONE EACH SIDE) ~ LOUVERED PLATES
19. TRANSFORMER BREAKER (DPST ~ 15 AMP ~ 480 VOLT)
20. DRY TRANSFORMER (480/120 VOLT) ~ 3 KVA ~ COPPER BUSSED AND COPPER WOUND
21. 12-CIRCUIT PANEL BOARD ~ MINIMUM SIZE WITH MAIN BREAKER
22. LABEL CABINET WITH BUSSWORK RATING
23. 6-CIRCUIT PANEL BOARD ~ MINIMUM SIZE
24. UTILITY DISCONNECT SWITCH ENCLOSURE WITH COVER ~ OMIT IF UTILITY DOES NOT REQUIRE THE DISCONNECT SWITCH

TYPE C SERVICE CABINET
(60 AMP TYPE 120 1ø SERVICE CABINET)

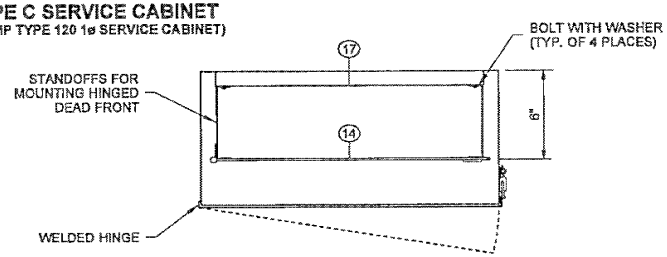

SECTION (3)

DRAWN BY: COLBY FLETCHER

THEODORE JOSEPH BAILEY
STATE OF WASHINGTON
39820
REGISTERED
PROFESSIONAL ENGINEER

Bailey, Ted
May 28 2015 10:09 AM

SERVICE CABINET TYPE C (0 - 60 AMP TYPE 240/480 VOLT SINGLE PHASE) STANDARD PLAN J-10.18-00

SHEET 2 OF 2 SHEETS

APPROVED FOR PUBLICATION
Bakotich, Pasco
Jun 3 2015 4:20 PM
STATE DESIGN ENGINEER

Washington State Department of Transportation

DRAWN BY: COLBY FLETCHER

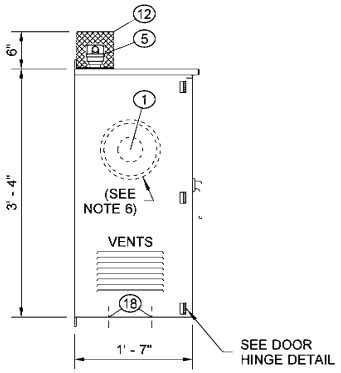

LEFT SIDE

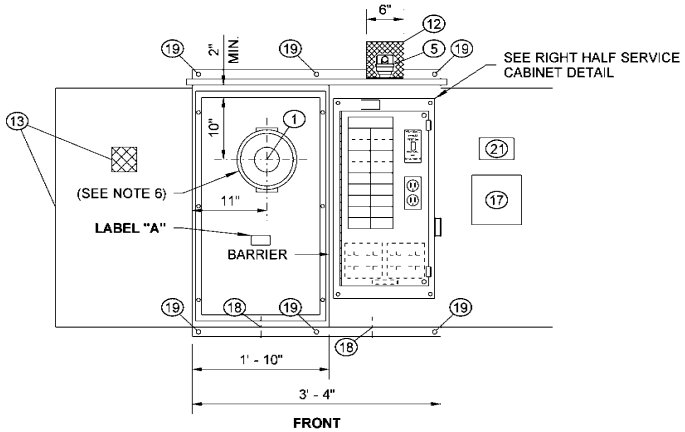

FRONT

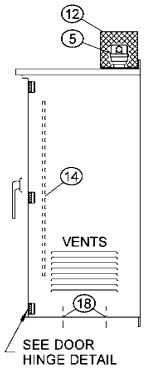

RIGHT SIDE

SERVICE CABINET DETAIL

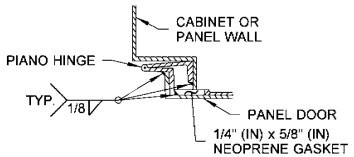

DOOR HINGE DETAIL

LABEL "A"

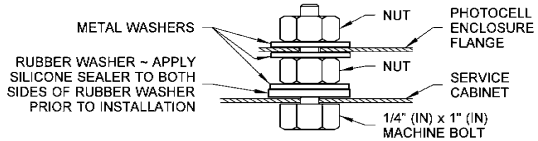

PHOTOCELL ENCLOSURE MOUNTING DETAIL

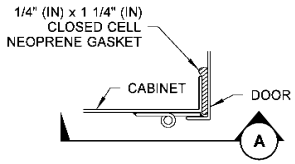

DOOR HINGE DETAIL
ALTERNATE TYPE B MODIFIED CABINET (SEE NOTE 15)

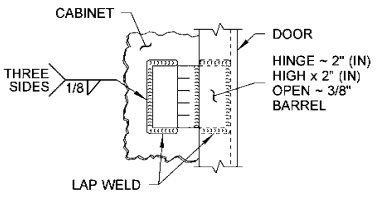

SECTION (A)

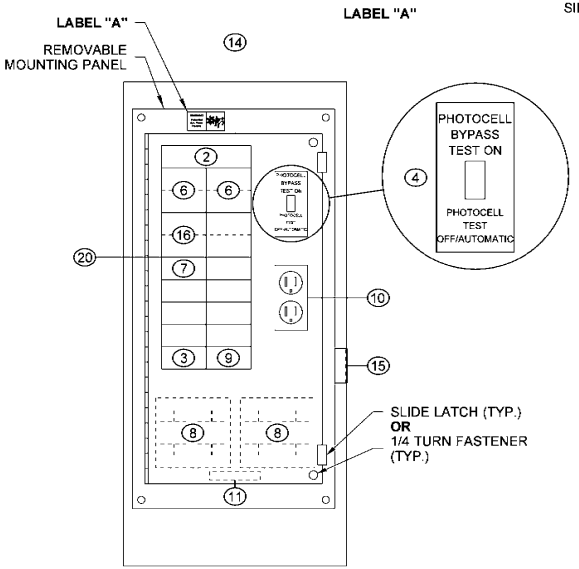

RIGHT HALF SERVICE CABINET DETAIL

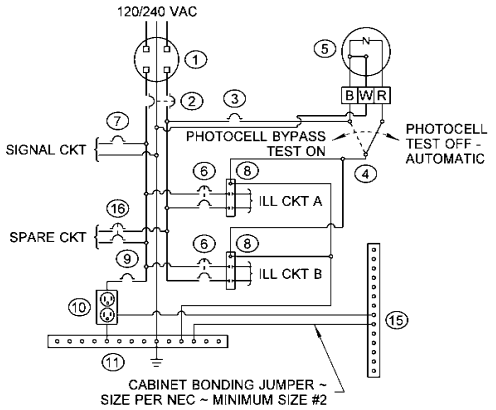

WIRING DIAGRAM

KEY

1. METER BASE PER SERVING UTILITY REQUIREMENTS ~ AS A MINIMUM, THE METER BASE SHALL BE SAFETY SOCKET BOX WITH FACTORY-INSTALLED TEST BYPASS FACILITY THAT MEETS THE REQUIREMENTS OF **EUSERC DRAWING 305** ~ WHEN THE UTILITY REQUIRES METER BASE TO BE MOUNTED ON THE SIDE OR BACK OF THE SERVICE CABINET, THE METER BASE ENCLOSURE SHALL BE FABRICATED FROM TYPE 304 STAINLESS STEEL
2. MAIN BREAKER ~ DPST ~ SIZE PER BREAKER SCHEDULE
3. PHOTOCELL BREAKER ~ SPST 15 AMP - 120/240 VOLT
4. TEST SWITCH ~ SPDT SNAP ACTION - POSITIVE CLOSE 15 AMP - 120/277 VOLT - "T" RATED
5. PHOTOELECTRIC CONTROL ~ SEE **STANDARD SPECIFICATION 9-29.11(2)**
6. BRANCH BREAKER ~ SEE BREAKER SCHEDULE
7. SIGNAL BREAKER ~ SEE BREAKER SCHEDULE
8. CONTACTOR (BEHIND DEAD FRONT) ~ SEE BREAKER SCHEDULE
9. RECEPTACLE BREAKER ~ SPST 20 AMP - 120/240 VOLT
10. RECEPTACLE (GROUNDED) ~ GFCI 20 AMP - 125 VOLT
11. ISOLATED NEUTRAL BUSS ~ 14 LUG COPPER
12. PHOTOCELL ENCLOSURE ~ ENCLOSURE TO BE FABRICATED FROM 5/8" (IN) EXPANDED STEEL MESH WITH WELDED SEAMS AND MOUNTING FLANGES ~ HOT-DIP GALVANIZED AFTER FABRICATION ~ TYPE 5052 - H32 ALUMINUM WITH 5/8" (IN) x 5/8" (IN) OPENINGS EQUIVALENT TO 5/8" (IN) EXPANDED STEEL MESH MAY BE USED AS ALTERNATIVE MATERIAL ~ SEE PHOTOCELL MOUNTING DETAIL
13. HINGED FRONT FACING DOOR WITH 4" (IN) x 4" (IN) MINIMUM POLISHED WIRE GLASS WINDOW
14. HINGED DEAD FRONT WITH 1/4 TURN FASTENERS OR SLIDE LATCHES ~ DEAD FRONT PANEL BOLTS SHALL NOT EXTEND INTO VERTICAL LIMITS OF THE BREAKER ARRAY(S)
15. CABINET MAIN BONDING JUMPER ASSEMBLY ~ BUSS SHALL BE 14 LUG TINNED COPPER ~ SEE CABINET MAIN BONDING JUMPER ASSEMBLY DETAIL
16. SPARE BRANCH BREAKER ~ DPST 20 AMP - 120/240 VOLT
17. METAL WIRING DIAGRAM HOLDER
18. 1/4" (IN) DIAMETER DRAIN HOLE ~ DRILL BEFORE GALVANIZING
19. MOUNTING HOLE ~ SEE SERVICE CABINET MOUNTING DETAILS
20. 18-CIRCUIT PANEL BOARD ~ MINIMUM SIZE WITH SEPARATE MAIN BREAKER
21. LABEL CABINET WITH BUSSWORK RATING

THEODORE JOSEPH BAILEY
STATE OF WASHINGTON
39820
REGISTERED
PROFESSIONAL ENGINEER

Bailey, Ted
May 24 2016 4:00 PM

SERVICE CABINET TYPE B MODIFIED (0 - 200 AMP TYPE 120/240 SINGLE PHASE) STANDARD PLAN J-10.20-01

SHEET 1 OF 5 SHEETS

APPROVED FOR PUBLICATION
Carpenter, Jeff
Jun 1 2016 3:49 PM
STATE DESIGN ENGINEER
Washington State Department of Transportation

NOTES (200 AMP TYPE 120/240 1ø SERVICE CABINET)

1. See **Standard Specification 9-29.24** (Service Cabinets).
2. Hinges shall have stainless steel or brass pins.
3. Cabinets shall be rated NEMA 3R and shall include two rain-tight vents.
4. Metering equipment door shall be pad-lockable. Each door shall be gasketed. Install Best CX Construction Core on right side door. See Door Hinge Detail.
5. The following equipment within the service enclosure shall have an appropriately engraved phenolic name plate attached with screws or rivets:
   Key Numbers 2, 3, 4, 6, 7, 8, 9, & 16
   Key Number 4 name plate shall read:
   "PHOTOCELL BYPASS TEST ON" and "PHOTOCELL TEST OFF-AUTOMATIC". See Service Cabinet Detail.
6. Metering arrangements vary with different serving Utilities. The Utility may require meter base mounting in the enclosure, on the side, or on the back of the enclosure. The Utility may require the dimension between the door and the front of the safety socket box to be less than the **11"** (in) shown in the Left Side - Safety Socket Box Mounting Detail. The Contractor shall verify the serving Utility's requirements prior to fabrication and installation of the service equipment.
7. Dimensions shown are minimum and shall be adjusted to accommodate the various sizes of equipment installed.
8. All busswork shall be high-grade copper and shall equal or exceed the main breaker rating. All breakers shall bolt onto the busswork. Jumpering of breakers shall not be allowed. Busswork shall accommodate all future equipment as shown in the breaker schedule.
9. The photocell unit shall be centered in the photocell enclosure to permit 360 degree rotation of the photocell without removal of the photocell unit or the photocell enclosure.
10. All internal wire runs shall be identified with "TO - FROM" coded tags labeled with the code letters and/or numbers shown on the schedules. Approved PVC or polyolefin wire marking sleeves shall be used.
11. All nuts, bolts, and washers used for mounting the photocell enclosure shall be stainless steel.
12. A 1% tolerance is allowed for all dimensions.
13. Slotted steel channel and mounting hardware components shall be stainless steel. Conduit clamps shall be hot-dipped galvanized steel or stainless steel.
14. The meter base portion of this service was designed to meet metering portion of **EUSERC Drawing 309** requirements.
15. When using alternate door hinge:
    Remove hinge pin prior to welding hinge to cabinet and prior to hot-dip galvanizing. After galvanizing, replace pin with brass pin and solder in place.
16. Verify the service utility stand-off dimension. Adjust the removable panel to the measurement provided by the Utility Company. After adjustment, cut off all-thread bolts so that no less than two and no more than three full threads extend past the face of the nuts.
17. As an alternate to the bolted or field welded strut mount supports, 1 5/8" (in) x 3 1/4" (in) 12-gage continuous slotted steel channel or factory welded 1 5/8" (in) x 1 5/8" (in) 12-gage back to back continuous slotted steel channel may be used. Three pairs required.

DRAWN BY: COLBY FLETCHER

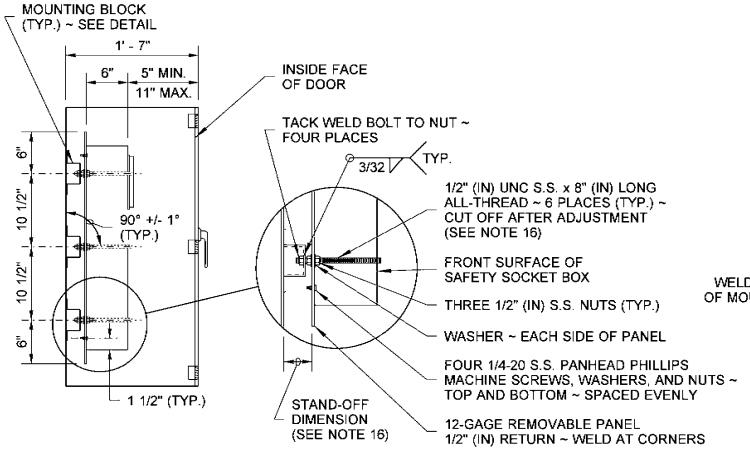

LEFT SIDE - SAFETY SOCKET BOX MOUNTING DETAIL

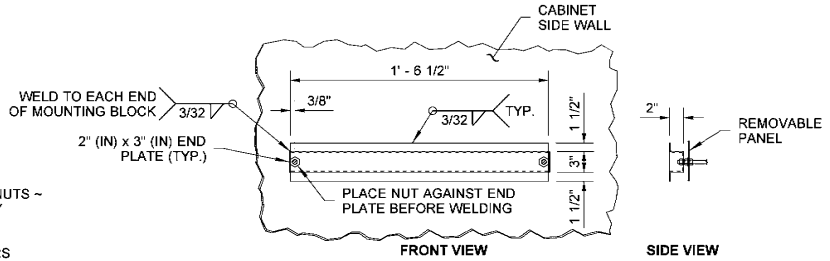

MOUNTING BLOCK DETAIL
12-GAGE ~ MATERIAL SHALL BE THE SAME AS CABINET MATERIAL

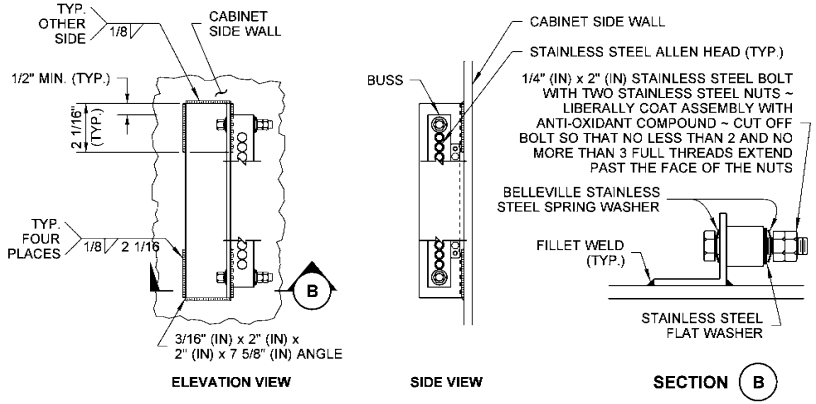

CABINET MAIN BONDING JUMPER ASSEMBLY DETAIL

THEODORE JOSEPH BAILEY
STATE OF WASHINGTON
39820
REGISTERED
PROFESSIONAL ENGINEER

Theodore Joseph Bailey
Bailey, Ted
May 24 2016 4:00 PM

SERVICE CABINET TYPE B MODIFIED (0 - 200 AMP TYPE 120/240 SINGLE PHASE) STANDARD PLAN J-10.20-01

SHEET 2 OF 5 SHEETS

APPROVED FOR PUBLICATION
Carpenter, Jeff
Jun 1 2016 3:49 PM
STATE DESIGN ENGINEER
Washington State Department of Transportation

DRAWN BY: COLBY FLETCHER

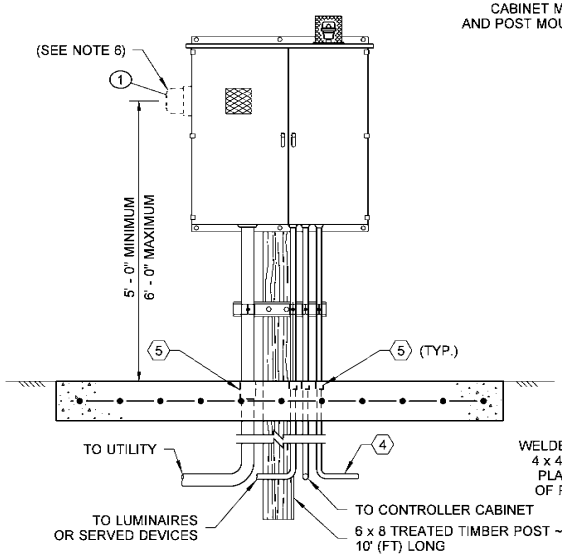

FRONT OF SERVICE CABINET

SINGLE POST MOUNT

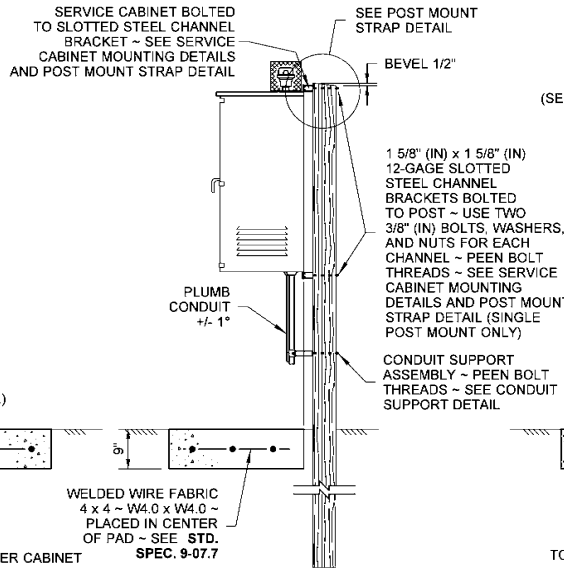

RIGHT SIDE OF SERVICE CABINET
(FOR SINGLE POST AND TWO POST MOUNTS)

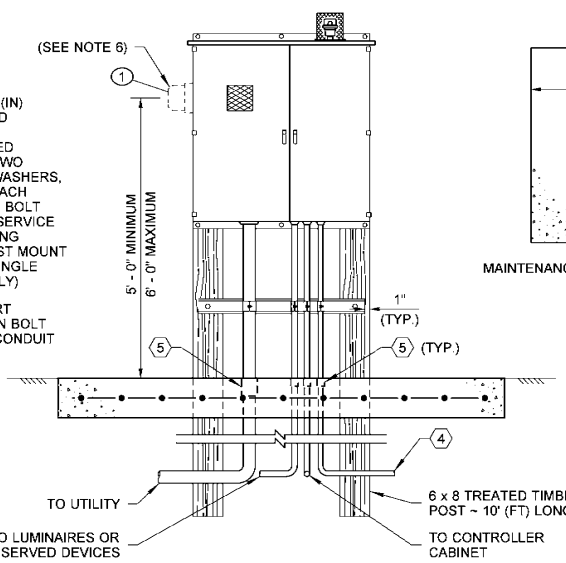

FRONT OF SERVICE CABINET

TWO POST MOUNT

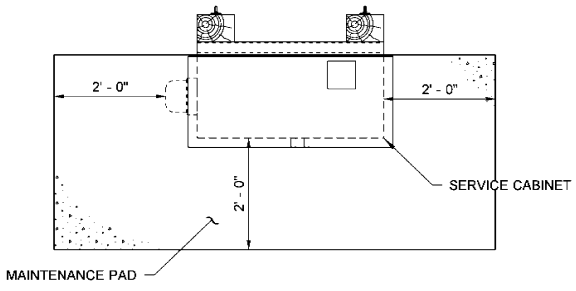

PLAN VIEW
MAINTENANCE PAD (FOR SINGLE POST AND TWO POST MOUNTS)

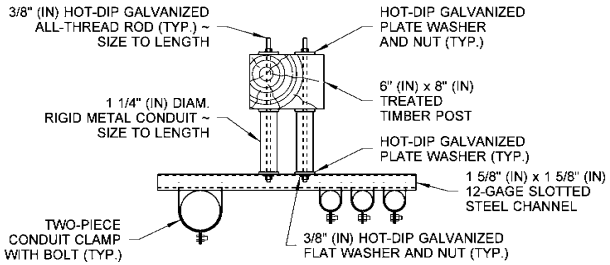

CONDUIT SUPPORT DETAIL
(SINGLE POST MOUNT ONLY)

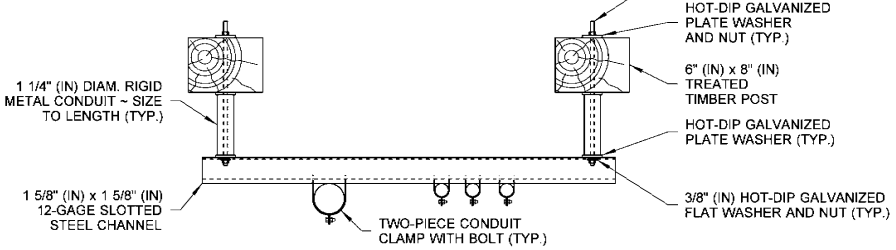

CONDUIT SUPPORT DETAIL
(TWO POST MOUNT ONLY)

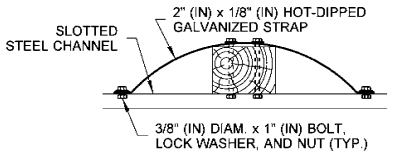

POST MOUNT STRAP DETAIL
(SINGLE POST MOUNT ONLY)

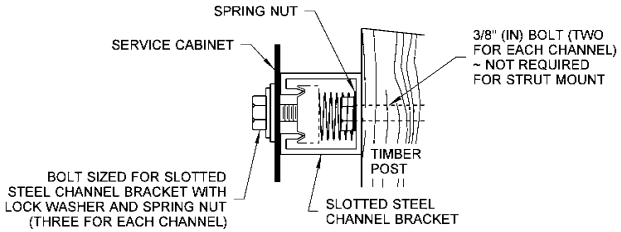

CABINET BRACKET MOUNTING DETAIL
(FOR SINGLE POST AND TWO POST MOUNTS)

THEODORE JOSEPH BAILEY
STATE OF WASHINGTON
39820
REGISTERED
PROFESSIONAL ENGINEER

Theodore Joseph Bailey
Bailey, Ted
May 24 2016 4:00 PM

SERVICE CABINET TYPE B MODIFIED (0 - 200 AMP TYPE 120/240 SINGLE PHASE) STANDARD PLAN J-10.20-01

SHEET 3 OF 5 SHEETS

APPROVED FOR PUBLICATION
Carpenter, Jeff
Carpenter, Jeff
Jun 1 2016 3:49 PM
STATE DESIGN ENGINEER
Washington State Department of Transportation

DRAWN BY: COLBY FLETCHER

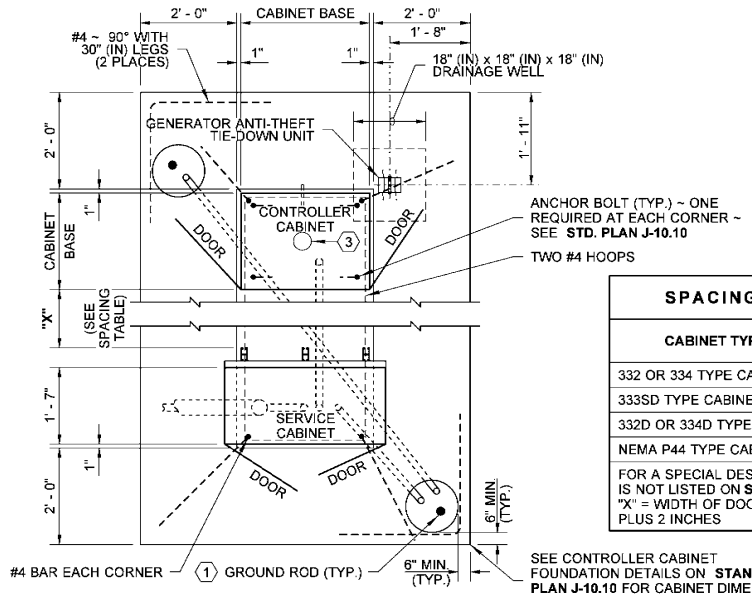

PLAN VIEW OF SERVICE CABINET

SPACING TABLE	
CABINET TYPE	**"X"**
332 OR 334 TYPE CABINET	26"
333SD TYPE CABINET	24"
332D OR 334D TYPE CABINET	26"
NEMA P44 TYPE CABINET	46 1/2"
FOR A SPECIAL DESIGN CABINET THAT IS NOT LISTED ON **STD. PLAN J-10.10**: "X" = WIDTH OF DOOR OPEN TO 180° PLUS 2 INCHES	

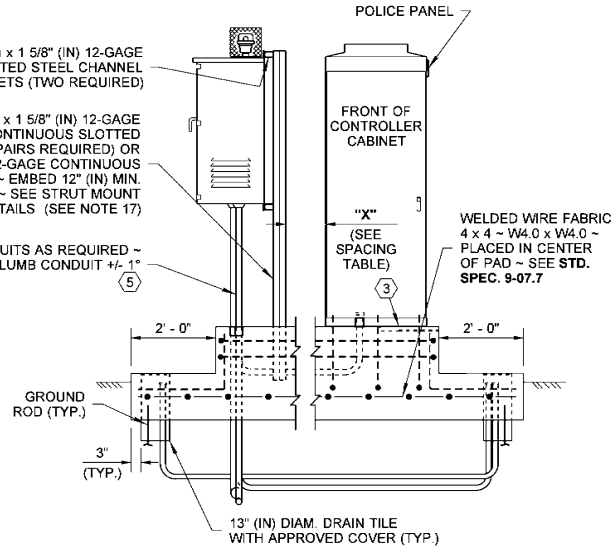

RIGHT SIDE OF SERVICE CABINET

1. DRIVE GROUND RODS BEFORE PLACING CONCRETE ~ MOVE ROD(S) AND DRAIN TILE(S) WITH COVER(S) AS REQUIRED TO ACHIEVE FULL GROUND PENETRATION ~ MAINTAIN A 6' (FT) MINIMUM CLEARANCE BETWEEN GROUND RODS AS DETAILED ON **STANDARD PLAN J-60.05**
2. ALL RMC CONDUITS PENETRATING CABINET SHALL BE TERMINATED WITH GROUNDING END BUSHING AND BONDED TO THE CABINET GROUNDING BUSS
3. 4" (IN) DIAM. x 1/2" (IN) DEEP SUMP. SLOPE FOUNDATION TOWARD SUMP ~ 3/8" (IN) DIAM. POLYETHYLENE OR COPPER DRAIN PIPE ~ SLOPE TO DRAIN OUTSIDE FOUNDATION ~ LOCATE DRAIN AWAY FROM ACCESS DOORS
4. TO SERVICE GROUND ~ PER **STANDARD PLAN J-60.05**
5. INSTALL CONDUIT COUPLINGS ON ALL CONDUITS ~ TOP OF CONDUIT COUPLINGS SHALL BE FLUSH WITH TOP OF CONCRETE ~ IF PVC CONDUITS ARE SPECIFIED,THE CONDUIT STUB AND END BELL BUSHING SHALL NOT BE GLUED TO THE COUPLING

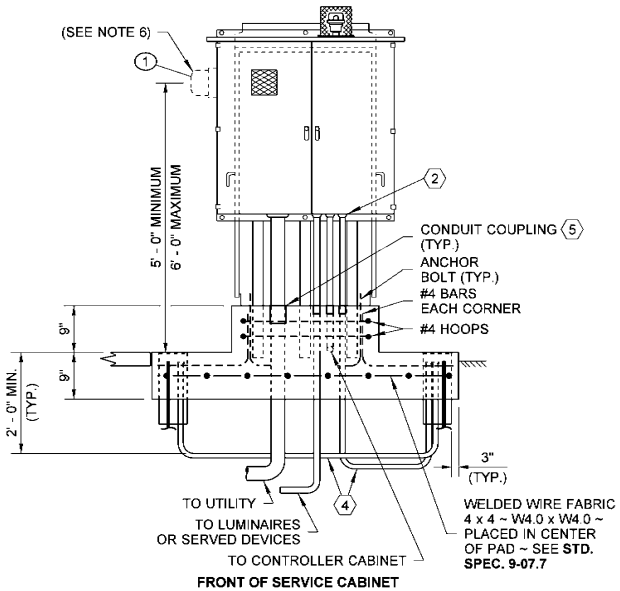

FRONT OF SERVICE CABINET

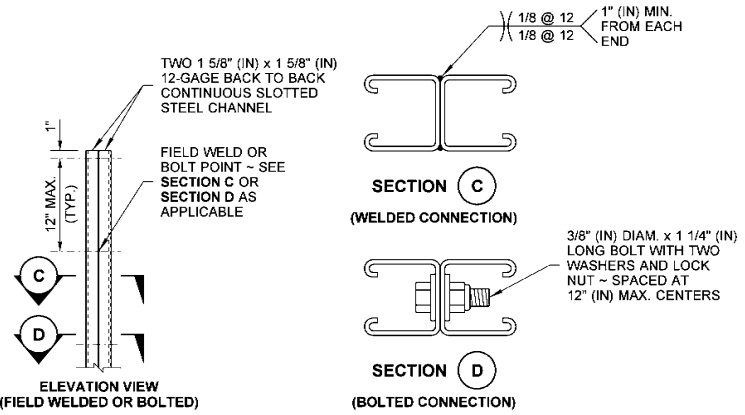

ELEVATION VIEW (FIELD WELDED OR BOLTED)

STRUT MOUNT SUPPORT DETAILS
(SEE NOTE 17)

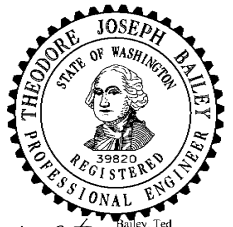

SERVICE CABINET TYPE B MODIFIED (0 - 200 AMP TYPE 120/240 SINGLE PHASE) STANDARD PLAN J-10.20-01

SHEET 4 OF 5 SHEETS

APPROVED FOR PUBLICATION
Carpenter, Jeff
Jun 1 2016 3:49 PM
STATE DESIGN ENGINEER
Washington State Department of Transportation

DRAWN BY: COLBY FLETCHER

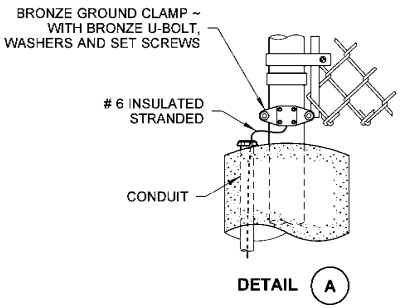

DETAIL A

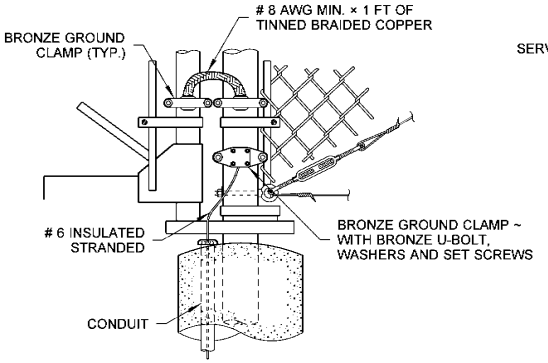

DETAIL B

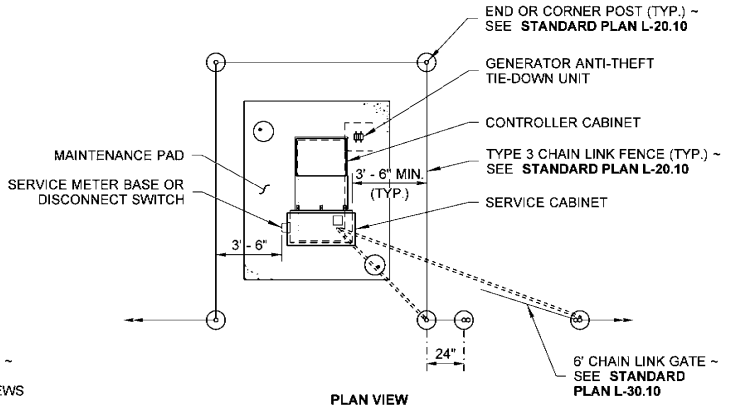

PLAN VIEW

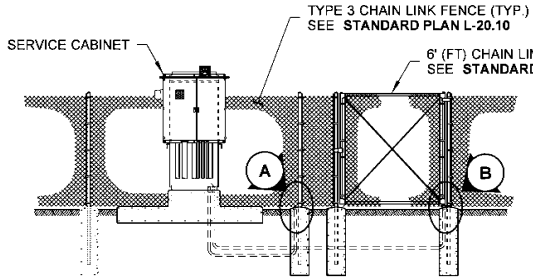

ELEVATION VIEW

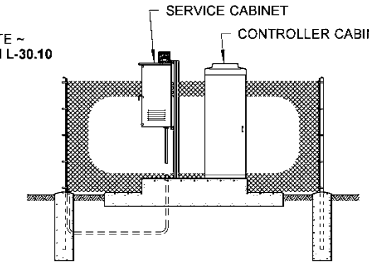

SIDE VIEW

PAD MOUNTED SERVICE CABINET WITHIN RIGHT-OF-WAY FENCE

FOR CONDUITS NOT SHOWN, DRAIN TILE FOR GROUNDING, DRAIN TUBES, REINFORCING STEEL, ETC. OMITTED FOR CLARITY, SEE SHEET 4 FOR ADDITIONAL DETAILS.

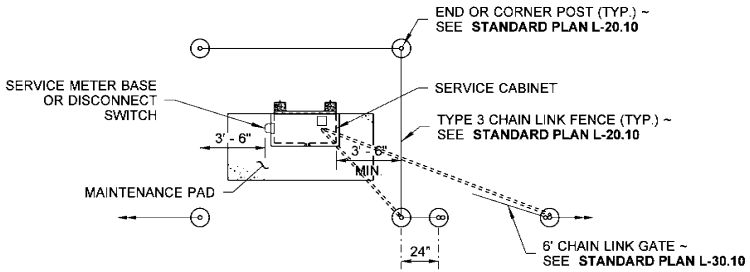

PLAN VIEW

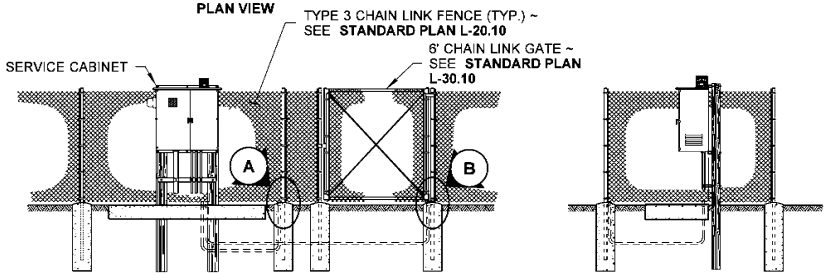

ELEVATION VIEW

SIDE VIEW

POST MOUNTED SERVICE CABINET WITHIN RIGHT-OF-WAY FENCE

FOR CONDUITS NOT SHOWN, DRAIN TILE FOR GROUNDING, DRAIN TUBES, REINFORCING STEEL, ETC. OMITTED FOR CLARITY, SEE SHEET 4 FOR ADDITIONAL DETAILS.

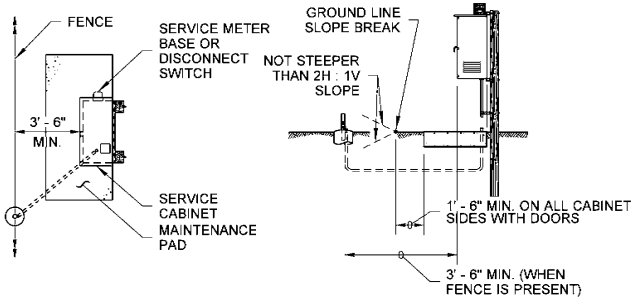

PLAN VIEW SIDE VIEW

SERVICE CABINET IN VICINITY OF CHAIN LINK FENCE

POST MOUNTED SERVICE CABINET SHOWN, PAD MOUNTED SERVICE CABINET SIMILAR

THEODORE JOSEPH BAILEY STATE OF WASHINGTON 39820 REGISTERED PROFESSIONAL ENGINEER

Bailey, Ted
May 24 2016 4:01 PM

SERVICE CABINET TYPE B MODIFIED (0 - 200 AMP TYPE 120/240 SINGLE PHASE) STANDARD PLAN J-10.20-01

SHEET 5 OF 5 SHEETS

APPROVED FOR PUBLICATION
Carpenter, Jeff
Jun 1 2016 3:50 PM
STATE DESIGN ENGINEER
Washington State Department of Transportation

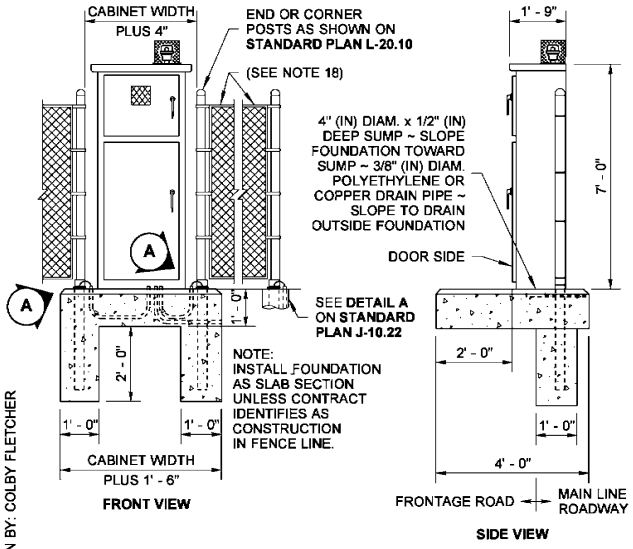

INSTALLATION DETAIL ~ IN FENCE LINE

DRAWN BY: COLBY FLETCHER

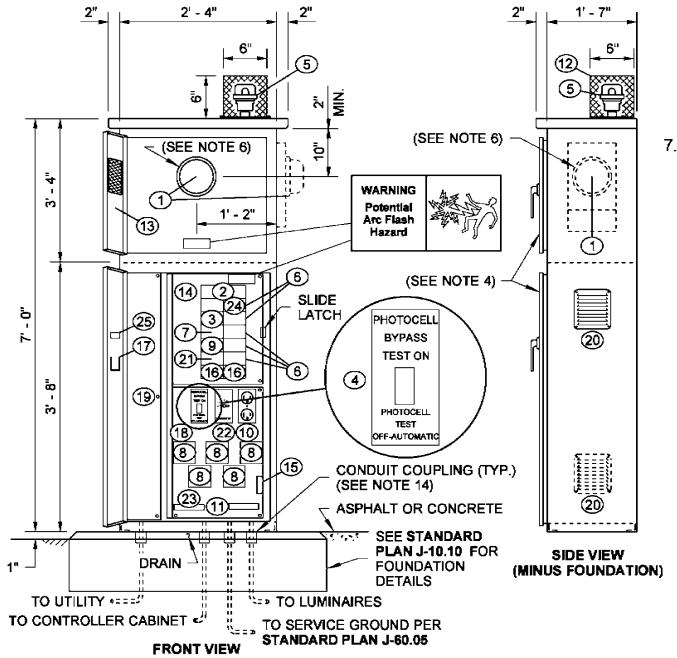

SERVICE CABINET ~ SLAB SECTION

NOTES (200 AMP TYPE 120/240 1ø SERVICE CABINET)

1. See **Standard Specification 9-29.24** (Service Cabinets).
2. Hinges shall have stainless steel or brass pins.
3. Cabinets shall be rated NEMA 3R and shall include two rain-tight vents.
4. Metering equipment door shall be pad-lockable. Each door shall be gasketed. Install Best CX Construction Core on bottom door. See Door Hinge Detail, **Standard Plan J-10.20**. Concealed heavy-duty stainless steel lift-off hinges are allowed as an alternative to Door Hinge Detail on **Standard Plan J-10.20**. Upper door shall have two hinges and lower door shall have three hinges. The lower door shall have a two-position door stop assembly.
5. The following equipment within the service enclosure shall have an appropriately engraved phenolic name plate attached with screws or rivets:
   Key Numbers 2, 3, 4, 6, 7, 8, 9, 16, & 21
   Key Number 4 name plate shall read: "PHOTOCELL BYPASS TEST ON" and "PHOTOCELL TEST OFF-AUTOMATIC."
   See Service Cabinet Detail.
6. Metering arrangements vary with different serving Utilities. The Utility may require meter base mounting in the enclosure, on the side, or on the back of the enclosure. The Utility may require the dimension between the door and the front of the safety socket box to be less than the 11" (in) shown in the Left Side - Safety Socket Box Mounting Detail. See **Standard Plan J-10.20** for Safety Socket Box Detail. The Contractor shall verify the serving Utility's requirements prior to fabrication and installation of the service equipment.
7. Dimensions shown are minimum and shall be adjusted to accommodate the various sizes of equipment installed.
8. All busswork shall be high-grade copper and shall equal or exceed the main breaker rating. All breakers shall bolt onto the busswork. Jumpering of breakers shall not be allowed. Busswork shall accommodate all future equipment as shown in the breaker schedule.
9. The photocell unit shall be centered in the photocell enclosure to permit 360 degree rotation of the photocell without removal of the photocell unit or the photocell enclosure.
10. All internal wire runs shall be identified with "TO - FROM" coded tags labeled with the code letters and/or numbers shown on the schedules. Approved PVC or polyolefin wire marking sleeves shall be used.
11. All nuts, bolts, and washers used for mounting the photocell enclosure shall be stainless steel.
12. A 1% tolerance is allowed for all dimensions.
13. The photocell circuit shall be installed in flex conduit within the meter compartment.
14. Install conduit couplings on all conduits. Top of conduit couplings shall be flush with the top of concrete foundation.
15. See Plans for Breaker Schedule.
16. Seal cabinet to foundation with a 1/2" (in) bead of silicone. Apply silicone to dry surface only.
17. The meter base portion of this service was designed to meet metering portion of **EUSERC Drawing 309** requirements.
18. When Service Cabinet is installed within right of way fence, see **Standard Plan J-10.22** for details.

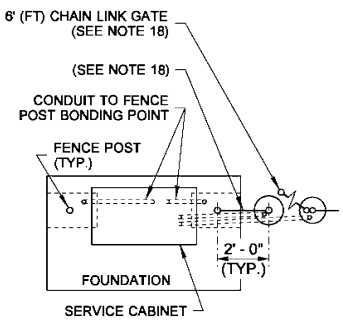

PLAN VIEW ~ IN FENCE LINE

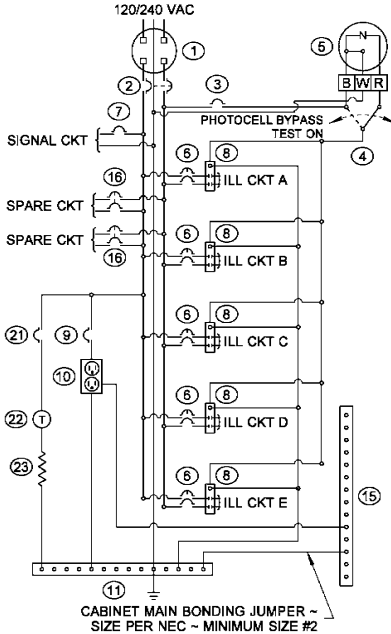

WIRING SCHEMATIC

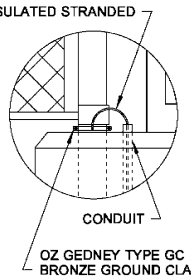

DETAIL A

KEY

1. METER BASE PER SERVING UTILITY REQUIREMENTS ~ AS A MINIMUM, THE METER BASE SHALL BE SAFETY SOCKET BOX WITH FACTORY-INSTALLED TEST BYPASS FACILITY THAT MEETS THE REQUIREMENTS OF **EUSERC DRAWING 305** ~ WHEN THE UTILITY REQUIRES METER BASE TO BE MOUNTED ON THE SIDE OR BACK OF THE SERVICE CABINET, THE METER BASE ENCLOSURE SHALL BE FABRICATED FROM TYPE 304 STAINLESS STEEL.
2. MAIN BREAKER ~ SEE BREAKER SCHEDULE
3. PHOTOCELL BREAKER ~ SPST 15 AMP - 120/240 VOLT
4. TEST SWITCH ~ SPDT SNAP ACTION - POSITIVE CLOSE 15 AMP - 120/277 VOLT - "T" RATED
5. PHOTOELECTRIC CONTROL ~ SEE **STANDARD SPECIFICATION 9-29.11(2)**
6. BRANCH BREAKER ~ SEE BREAKER SCHEDULE
7. SIGNAL BREAKER ~ SEE BREAKER SCHEDULE
8. CONTACTOR ~ SEE BREAKER SCHEDULE
9. RECEPTACLE BREAKER ~ SPST 20 AMP - 120/240 VOLT
10. RECEPTACLE (GROUNDED) ~ GFCI 20 AMP - 125 VOLT
11. ISOLATED NEUTRAL BUSS ~ 14 LUG COPPER
12. PHOTOCELL ENCLOSURE ~ ENCLOSURE TO BE FABRICATED FROM 5/8" (IN) EXPANDED STEEL MESH WITH WELDED SEAMS AND MOUNTING FLANGES ~ HOT-DIP GALVANIZED AFTER FABRICATION ~ TYPE 5052 - H32 ALUMINUM WITH 5/8" (IN) x 5/8" (IN) OPENINGS EQUIVALENT TO 5/8" (IN) EXPANDED STEEL MESH MAY BE USED AS ALTERNATIVE MATERIAL ~ SEE PHOTOCELL MOUNTING DETAIL ON **STANDARD PLAN J-10.20**
13. HINGED FRONT FACING DOOR WITH 4" (IN) x 4" (IN) MINIMUM POLISHED WIRE GLASS WINDOW
14. HINGED DEAD FRONT WITH 1/4 TURN FASTENERS OR SLIDE LATCH ~ DEAD FRONT PANEL BOLTS SHALL NOT EXTEND INTO VERTICAL LIMITS OF THE BREAKER ARRAY(S)
15. CABINET MAIN BONDING JUMPER ASSEMBLY ~ BUSS SHALL BE 14 LUG TINNED COPPER ~ SEE CABINET MAIN BONDING JUMPER ASSEMBLY DETAIL ON **STANDARD PLAN J-10.20**
16. SPARE BRANCH BREAKER ~ DPST 20 AMP - 120/240 VOLT
17. METAL WIRING DIAGRAM HOLDER
18. REMOVABLE EQUIPMENT MOUNTING PAN
19. 6" (IN) x 6" (IN) MIN. UNDERGROUND FEED ~ SERVICE WIREWAY (LEFT REAR CORNER)
20. SCREENED VENTS ~ TWO REQUIRED, 1 EACH SIDE ~ LOUVERED PLATES
21. HEATER BREAKER ~ SPST 15 AMP - 120/ 240VOLT
22. THERMOSTAT ~ 40° F CLOSURE - 3 DIFFERENTIAL
23. STRIP HEATER (100 WATT NOMINAL) WITH TERMINAL STRIP COVER
24. 24-CIRCUIT PANEL BOARD ~ MINIMUM SIZE SEPARATE MAIN BREAKER
25. LABEL CABINET WITH BUSSWORK RATING

THEODORE JOSEPH BAILEY STATE OF WASHINGTON 39820 REGISTERED PROFESSIONAL ENGINEER

Bailey, Ted
May 28 2015 10:10 AM

SERVICE CABINET TYPE D (0 - 200 AMP TYPE 120/240 SINGLE PHASE) STANDARD PLAN J-10.21-00

SHEET 1 OF 1 SHEET

APPROVED FOR PUBLICATION
Bakotich, Pasco
Jun 3 2015 4:22 PM
STATE DESIGN ENGINEER
Washington State Department of Transportation

DRAWN BY: LISA CYFORD

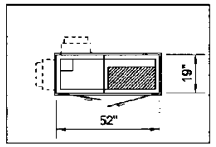

PLAN VIEW

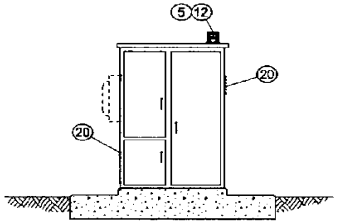

ELEVATION VIEW

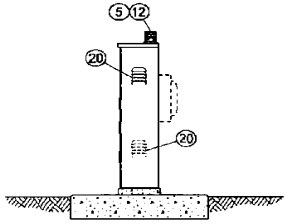

SIDE VIEW

SERVICE CABINET INSIDE RIGHT-OF-WAY

INSTALL FOUNDATION AS SLAB SECTION UNLESS IDENTIFIED FOR CONSTRUCTION IN FENCE LINE IN CONTRACT PLANS

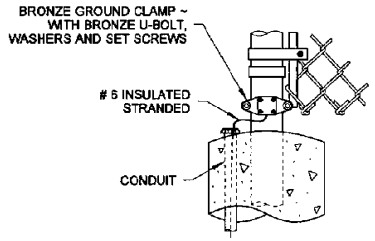

DETAIL (A)

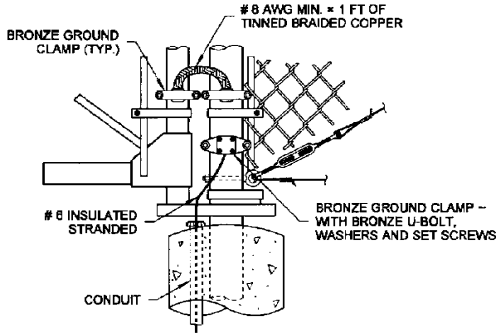

DETAIL (B)

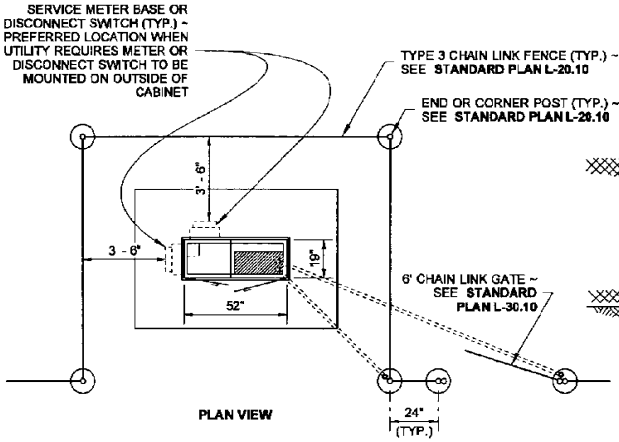

PLAN VIEW

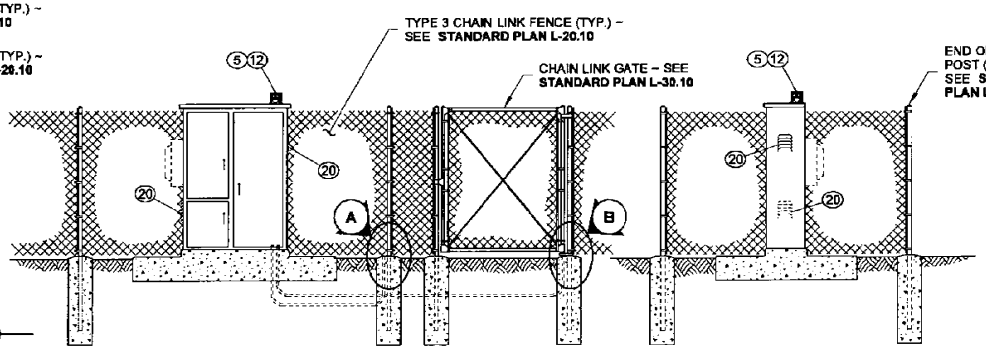

ELEVATION VIEW

SIDE VIEW

SERVICE CABINET WITHIN RIGHT-OF-WAY FENCE

FOR CONDUITS NOT SHOWN, DRAIN TILE FOR GROUNDING, DRAIN TUBES, REINFORCING STEEL, ETC. OMITTED FOR CLARITY, SEE **STANDARD PLAN J-10.10** FOR DETAILS.

NOTES

1. Metering Arrangements vary with different servicing utilities. The utility may require meter base mounting in the enclosure, on the side, or on the back of the enclosure. The utility may require the dimension between the door and the front of the safety socket box to be less than the 11" shown in the left side safety socket box mounting detail, see **Standard Plan J-3b**. The Contractor shall verify the serving utility's requirements prior to fabrication of and installing the service equipment.
2. The requirement for a disconnect switch ahead of the Meter varies with different serving utilities. The Contractor shall verify the serving utilities requirements prior to fabrication and installing the service equipment.
3. See **Standard Specification 9-29.24,** Service Cabinets.
4. Hinges shall have stainless steel or brass pins.
5. Cabinets shall be rated NEMA 3R and shall include two rain tight vents.
6. Metering equipment doors shall be pad lockable. Each door shall be gasketed. Install best construction core on bottom left and right doors. See door hinge detail, **Standard Plan J-3b**. Concealed heavy duty stainless steel lift off hinges are allowed as an alternative. Upper left door shall have 3 hinges, lower left door shall have 2 hinges, and right door shall have 3 hinges. All doors shall have a two position door stop assembly.
7. The following equipment within the service enclosure shall have an appropriately engraved phenolic name plate attached with screws or rivets: Key number 2, 3, 4, 6, 7, 8, 9, 16, 21 and 24. Key number 4 name plate shall read: "Photocell Bypass Test On" and "Photocell Test Off-Automatic". See Service Cabinet detail.
8. The dimensions shown are minimum and shall be adjusted to accommodate the various sizes of equipment installed.
9. All busswork shall be high grade copper and shall equal or exceed the main breaker rating. All breakers shall bolt onto the busswork. Jumpering of breakers shall not be allowed. Busswork shall accommodate all future equipment as shown in the breaker schedule.
10. The photocell unit shall be centered in the photocell enclosure to permit 360 degree rotation of the photocell without removal of the photocell unit or the photocell enclosure.
11. All internal wire runs shall be identified with "To-From" coded tags labeled with the code letters and/or numbers shown on the schedules. Approved PVC or Polyolefin wire marking sleeves shall be used.
12. All nuts, bolts, and washers used for mounting photocell enclosure shall be stainless steel.
13. A 1% tolerance is allowed for all dimensions.
14. See plans for breaker schedule.
15. Install conduit couplings on all conduits. Place couplings flush with top of concrete foundation.
16. Seal cabinet to foundation with a 1/2" bead of silicone. Apply silicone to dry surface only.
17. The meter base portion of this service was designed to meet metering portion of Euserc Drawing 309 requirements.

THEODORE JOSEPH BAILEY — STATE OF WASHINGTON — 39820 — REGISTERED PROFESSIONAL ENGINEER

5-29-13

SERVICE CABINET TYPE E (0 - 200 AMP TYPE 240/480 SINGLE PHASE

STANDARD PLAN J-10.22-00

SHEET 1 OF 2 SHEETS

APPROVED FOR PUBLICATION

STATE DESIGN ENGINEER — DATE 5/29/13

Washington State Department of Transportation

DRAWN BY: FERN LIDDELL

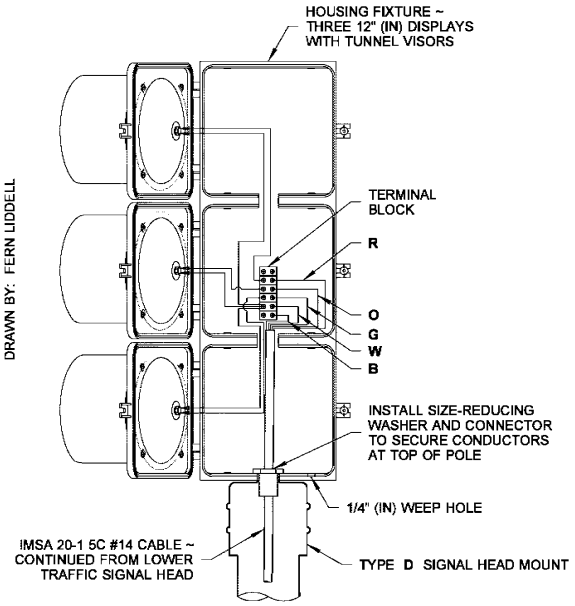

DETAIL (A)

UPPER TRAFFIC SIGNAL HEAD WIRING
(BACKPLATE NOT SHOWN FOR CLARITY)

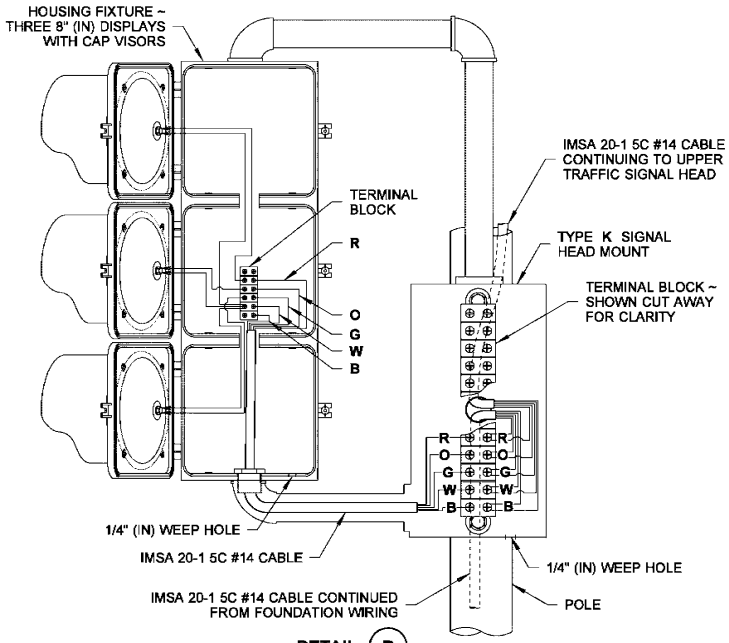

DETAIL (B)

LOWER TRAFFIC SIGNAL HEAD WIRING
(SHOWN LARGER FOR CLARITY)

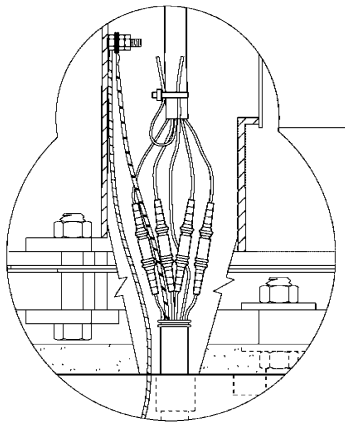

WIRING DETAIL

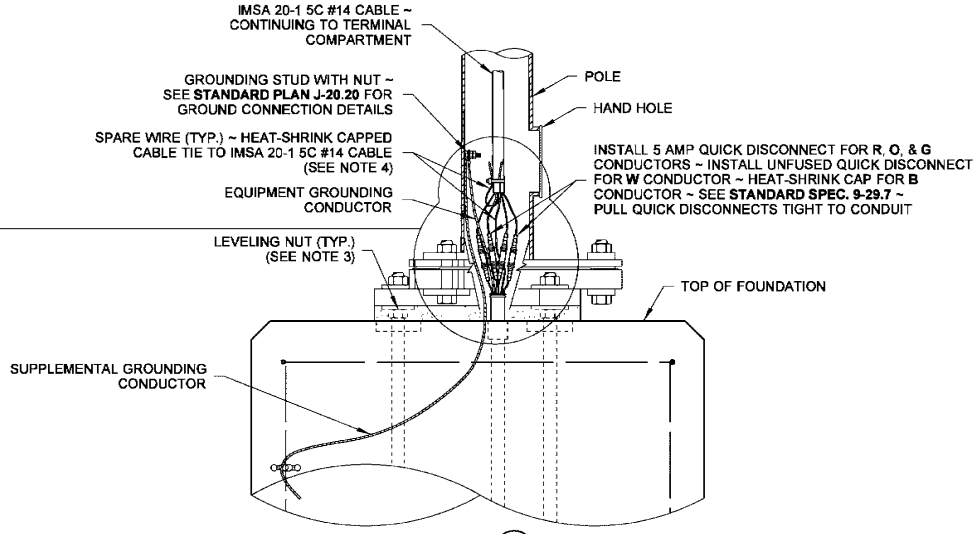

DETAIL (C)

FOUNDATION WIRING

NOTES

1. See **Standard Plan J-21.10** for Ramp Meter Signal Standard and Foundation Details.
2. See **Standard Specification 9-29.17** for additional Mounting Bracket and Fitting information not shown.
3. Top of Leveling Nut height shall be 1" (in) max. above foundation.
4. Heat-shrink cap for all spare conductors not terminated on a terminal strip.
5. Provide Cable Tie at wiring entering the Junction Box (Slip Base installations only). See **Detail A, Standard Plan J-28.70**.

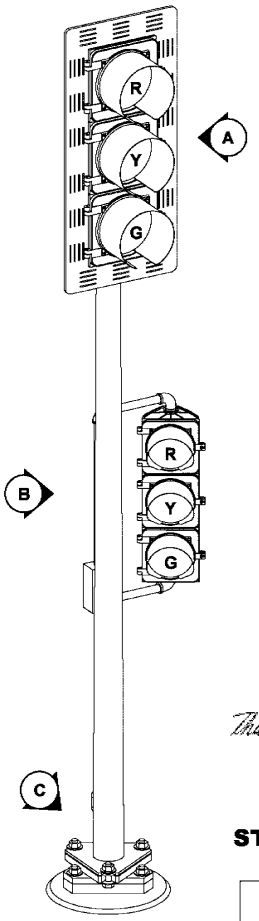

PERSPECTIVE VIEW
RAMP METER

COLOR CODE	USE
R	RED DISPLAY
O	AMBER DISPLAY
G	GREEN DISPLAY
W	NEUTRAL CONDUCTOR
B	SPARE CONDUCTOR

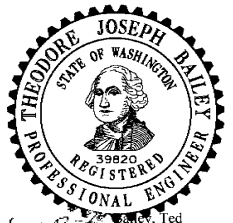

Bailey, Ted
Jul 8 2015 3:08 PM

RAMP METER SIGNAL STANDARD ELECTRICAL DETAILS

STANDARD PLAN J-22.16-03

SHEET 1 OF 1 SHEET

APPROVED FOR PUBLICATION
Carpenter, Jeff
Jul 10 2015 7:19 AM
STATE DESIGN ENGINEER
Washington State Department of Transportation

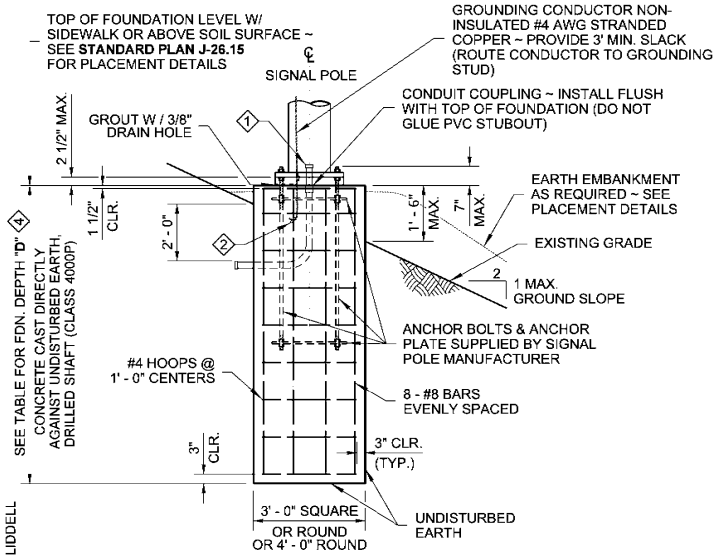

FOUNDATION REINFORCEMENT DETAIL

CONCRETE CAST DIRECTLY AGAINST UNDISTURBED EARTH, DRILLED SHAFT

ALTERNATE # 1

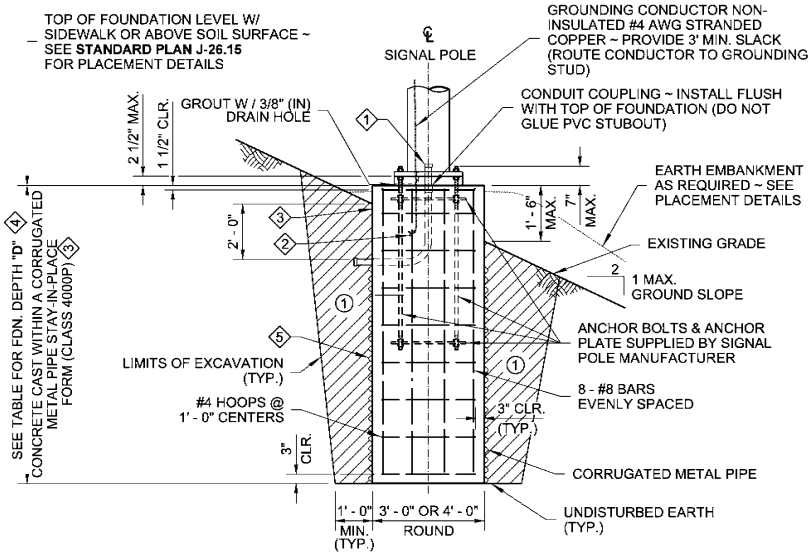

FOUNDATION REINFORCEMENT AND BACKFILL DETAIL

5 CONCRETE CAST WITHIN A CORRUGATED METAL PIPE STAY-IN-PLACE FORM

ALTERNATE # 2

1 CONDUIT SIZE AND QUANTITY AS SHOWN IN THE CONTRACT; CAP BOTH ENDS.

2 CLAMP CONDUCTOR TO STEEL REINFORCING WITH LISTED CONNECTOR SUITABLE FOR USE EMBEDDED IN CONCRETE

3 PAPER OR CARDBOARD FORM SHALL NOT STAY-IN-PLACE

4 SEE NOTE 5

DRAWN BY: FERN LIDDELL

NOTES

1. This structure has been designed according to the Fifth Edition 2009 AASHTO Standard Specifications for Structural Supports for Highway Signs, Luminaires and Traffic Signals. Basic wind velocity is 90 mph, Design Life/Recurrence Interval 50 years, and Fatigue Category III.
2. Foundations are designed for Type II, III, and SD Signal Standards with a maximum mast arm length of 65'.
3. Foundations are designed for Single Mast Arm Standards and Double Mast Arm Standards with 90° between arms. Special foundation design is required for Double Arm Standards where the angle between mast arms is other than 90°. For Double Mast Arm Standards with 90° between arms, use larger XYZ value for foundation depth selection.
4. Foundations not within the parameters of this standard require Special Design. Contact the **WSDOT Bridge and Structures Office** through the Engineer for Special Foundation Designs.
5. Where a foundation is constructed within a Media Filter Drain, the foundation depth shown in the Contract Plans shall be increased by the depth of the Media Filter Drain.
6. The top 2 feet of the foundation shall use a smooth form (such as paper or cardboard). After the concrete has cured, this entire form shall be removed.
7. For design parameters between the values listed in Table, depth requirements may be interpolated between the values provided.
8. Install Signal Foundation Identification Tag. See **Standard Plan J-26.15** for details.

FOUNDATION DEPTH "D" TABLE

ALTERNATE # 1 DRILLED SHAFT-TYPE CONSTRUCTION
FOR LATERAL BEARING PRESSURE = 2500 PSF & Ø = 34°, 1500 PSF & Ø = 28°, 1000 PSF & Ø = 26°

GROUND SLOPE = 3H : 1V OR FLATTER										GROUND SLOPE = GREATER THAN 3H : 1V TO 2H : 1V									
ALLOWABLE LATERAL BEARING PRESSURE	FOUNDATION TYPE	XYZ (FT)								ALLOWABLE LATERAL BEARING PRESSURE	FOUNDATION TYPE	XYZ (FT)							
		700	900	1350	1500	1900	2300	2600	3000			700	900	1350	1500	1900	2300	2600	3000
1000 PSF	3' - 0" ROUND	10' - 0"	10' - 0"	11' - 0"	11' - 0"	15' - 0"	18' - 0"	20' - 0"	20' - 0"	1000 PSF	3' - 0" ROUND	SPECIAL FOUNDATION TYPE							
	3' - 0" SQUARE	8' - 0"	8' - 0"	9' - 0"	9' - 0"	10' - 0"	11' - 0"	12' - 0"	12' - 0"		3' - 0" SQUARE	SPECIAL FOUNDATION TYPE							
	4' - 0" ROUND	8' - 0"	8' - 0"	9' - 0"	9' - 0"	10' - 0"	11' - 0"	12' - 0"	12' - 0"		4' - 0" ROUND	SPECIAL FOUNDATION TYPE							
1500 PSF	3' - 0" ROUND	8' - 0"	8' - 0"	9' - 0"	11' - 0"	13' - 0"	15' - 0"	18' - 0"	18' - 0"	1500 PSF	3' - 0" ROUND	11' - 0"	11' - 0"	12' - 0"	14' - 0"	16' - 0"	18' - 0"	21' - 0"	21' - 0"
	3' - 0" SQUARE	7' - 0"	7' - 0"	7' - 0"	8' - 0"	8' - 0"	9' - 0"	10' - 0"	10' - 0"		3' - 0" SQUARE	10' - 0"	10' - 0"	10' - 0"	11' - 0"	11' - 0"	12' - 0"	13' - 0"	13' - 0"
	4' - 0" ROUND	7' - 0"	7' - 0"	7' - 0"	8' - 0"	8' - 0"	9' - 0"	10' - 0"	10' - 0"		4' - 0" ROUND	10' - 0"	10' - 0"	10' - 0"	11' - 0"	11' - 0"	12' - 0"	13' - 0"	13' - 0"
2500 PSF OR GREATER	3' - 0" ROUND	6' - 0"	6' - 0"	7' - 0"	8' - 0"	9' - 0"	11' - 0"	15' - 0"	15' - 0"	2500 PSF OR GREATER	3' - 0" ROUND	9' - 0"	9' - 0"	10' - 0"	12' - 0"	12' - 0"	14' - 0"	18' - 0"	18' - 0"
	3' - 0" SQUARE	6' - 0"	6' - 0"	6' - 0"	6' - 0"	7' - 0"	7' - 0"	8' - 0"	8' - 0"		3' - 0" SQUARE	9' - 0"	9' - 0"	9' - 0"	9' - 0"	10' - 0"	10' - 0"	11' - 0"	11' - 0"
	4' - 0" ROUND	6' - 0"	6' - 0"	6' - 0"	6' - 0"	7' - 0"	7' - 0"	8' - 0"	8' - 0"		4' - 0" ROUND	9' - 0"	9' - 0"	9' - 0"	9' - 0"	10' - 0"	10' - 0"	11' - 0"	11' - 0"

ALTERNATE # 2 CORRUGATED METAL PIPE TYPE CONSTRUCTION
FOR LATERAL BEARING PRESSURE = 2500 PSF & Ø = 23°, 1500 PSF & Ø = 18°, 1000 PSF & Ø = 17°

GROUND SLOPE = 3H : 1V OR FLATTER										GROUND SLOPE = GREATER THAN 3H : 1V TO 2H : 1V									
ALLOWABLE LATERAL BEARING PRESSURE	FOUNDATION TYPE	XYZ (FT)								ALLOWABLE LATERAL BEARING PRESSURE	FOUNDATION TYPE	XYZ (FT)							
		700	900	1350	1500	1900	2300	2600	3000			700	900	1350	1500	1900	2300	2600	3000
1000 PSF	3' - 0" ROUND	10' - 0"	10' - 0"	11' - 0"	15' - 0"	20' - 0"	25' - 0"	28' - 0"	28' - 0"	1000 PSF	3' - 0" ROUND	SPECIAL FOUNDATION TYPE							
	4' - 0" ROUND	8' - 0"	8' - 0"	9' - 0"	12' - 0"	13' - 0"	14' - 0"	15' - 0"	15' - 0"		4' - 0" ROUND	SPECIAL FOUNDATION TYPE							
1500 PSF	3' - 0" ROUND	8' - 0"	8' - 0"	11' - 0"	15' - 0"	18 - 0"	21' - 0"	25' - 0"	25' - 0"	1500 PSF	3' - 0" ROUND	11' - 0"	11' - 0"	14' - 0"	18' - 0"	21' - 0"	24' - 0"	28' - 0"	23' - 0"
	4' - 0" ROUND	7' - 0"	7' - 0"	7' - 0"	8' - 0"	10' - 0"	13' - 0"	15' - 0"	15' - 0"		4' - 0" ROUND	10' - 0"	10' - 0"	10' - 0"	11' - 0"	13' - 0"	16' - 0"	18' - 0"	18' - 0"
2500 PSF OR GREATER	3' - 0" ROUND	6' - 0"	6' - 0"	7' - 0"	11' - 0"	13' - 0"	18' - 0"	20' - 0"	20' - 0"	2500 PSF OR GREATER	3' - 0" ROUND	9' - 0"	9' - 0"	10' - 0"	14' - 0"	16' - 0"	21' - 0"	23' - 0"	23' - 0"
	4' - 0" ROUND	6' - 0"	6' - 0"	6' - 0"	6' - 0"	7' - 0"	9' - 0"	9' - 0"	9' - 0"		4' - 0" ROUND	9' - 0"	9' - 0"	9' - 0"	9' - 0"	10' - 0"	12' - 0"	12' - 0"	12' - 0"

ALTERNATE #2 - CONSTRUCTION METHOD
METAL (SUBSURFACE) FORM REQUIRED

When the existing soil will not retain a vertical face, over-excavate the foundation area and install a 36" or 48" diameter corrugated metal (pipe) form. The top of the corrugated metal form shall terminate 1 foot below final grade. Continue forming to full height using paper or cardboard form to achieve a smooth finish on final exposed cement concrete. Support the form as necessary to remain plumb.

Place the concrete foundation.

After concrete has cured, remove the entire paper or cardboard form portion.

1 Shoring or Extra Excavation as required. Excavated area shall be backfilled with Controlled-Density Fill (CDF), or with soil in accordance with **Standard Specification Section 8-20.3(2)** and Compaction Method 1 of **Standard Specification Section 2-09.3(1)E.**

RICHARD P. ZELDENRUST — STATE OF WASHINGTON — 25470 — STRUCTURAL ENGINEER — PROFESSIONAL ENGINEER

Zeldenrust, Richard
Jul 20 2016 8:25 AM

TRAFFIC SIGNAL STANDARD FOUNDATION

STANDARD PLAN J-26.10-03

SHEET 1 OF 1 SHEET

APPROVED FOR PUBLICATION
Carpenter, Jeff
Jul 21 2016 8:27 AM
STATE DESIGN ENGINEER
Washington State Department of Transportation

This page left blank intentionally.

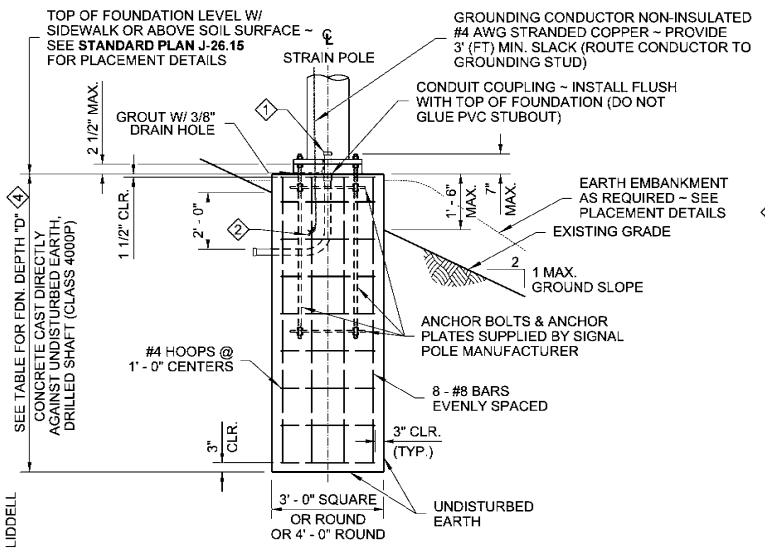

FOUNDATION REINFORCEMENT DETAIL

CONCRETE CAST DIRECTLY AGAINST UNDISTURBED EARTH, DRILLED SHAFT

ALTERNATE #1

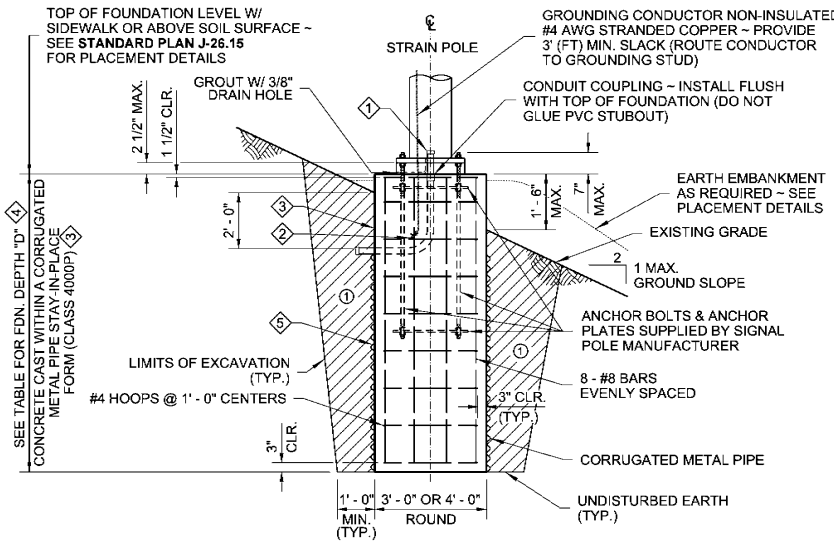

FOUNDATION REINFORCEMENT AND BACKFILL DETAIL

⑤ CONCRETE CAST WITHIN A CORRUGATED METAL PIPE STAY-IN-PLACE FORM

ALTERNATE #2

① CONDUIT SIZE AND QUANTITY AS SHOWN IN THE CONTRACT; CAP BOTH ENDS.

② CLAMP CONDUCTOR TO STEEL REINFORCING WITH LISTED CONNECTOR SUITABLE FOR USE EMBEDDED IN CONCRETE.

③ PAPER OR CARDBOARD FORM SHALL NOT STAY-IN-PLACE

④ SEE NOTE 4

NOTES

1. This structure has been designed according to the **Fifth Edition 2009 AASHTO Standard Specifications** for Structural Supports for Highway Signs, Luminaires, and Traffic Signals: Basic wind velocity 90 mph, Design Life/Recurrence Interval 50 years, and Fatigue Category III.
2. Foundations are designed for Type IV and V Strain Pole Standards with a maximum mast arm length of 16' - 0".
3. Foundations not within the parameters of this standard require Special Design. Contact the **WSDOT Bridge and Structures Office** through the Engineer for Special Foundation Designs.
4. Where a foundation is constructed within a Media Filter Drain, the foundation depth shown in the Contract Plans shall be increased by the depth of the Media Filter Drain.
5. The top 2 feet of the foundation shall use a smooth form (such as paper or cardboard). After the concrete has cured, this entire form shall be removed.
6. See **Standard Plan J-27.15** for Strain Pole Standards Type IV and V details.
7. Install Signal Foundation Identification Tag. See **Standard Plan J-26.15** for details.

DRAWN BY: FERN LIDDELL

ALTERNATE # 1 DRILLED SHAFT-TYPE CONSTRUCTION - DEPTH "D"
FOR LATERAL BEARING PRESSURE = 2500 PSF & Ø = 34°, 1500 PSF & Ø = 28°, 1000 PSF & Ø = 26°

GROUND SLOPE = 3H : 1V OR FLATTER									GROUND SLOPE = 3H : 1V TO 2H : 1V								
ALLOWABLE LATERAL BEARING PRESSURE	FOUNDATION TYPE	POLE CLASS - RESULTANT HORIZONTAL TENSION (LBS)							ALLOWABLE LATERAL BEARING PRESSURE	FOUNDATION TYPE	POLE CLASS - RESULTANT HORIZONTAL TENSION (LBS)						
		1900	2700	3700	4800	5600	6300	7200			1900	2700	3700	4800	5600	6300	7200
1000 PSF	3' - 0" ROUND	11' - 0"	13' - 0"	15' - 0"	16' - 0"	18' - 0"	19' - 0"	20' - 0"	1000 PSF	3' - 0" ROUND	SPECIAL FOUNDATION TYPE						
	3' - 0" SQUARE	11' - 0"	13' - 0"	15' - 0"	16' - 0"	18' - 0"	19' - 0"	20' - 0"		3' - 0" SQUARE	SPECIAL FOUNDATION TYPE						
	4' - 0" ROUND	10' - 0"	11' - 0"	13' - 0"	15' - 0"	15' - 0"	16' - 0"	18' - 0"		4' - 0" ROUND	SPECIAL FOUNDATION TYPE						
1500 PSF	3' - 0" ROUND	9' - 0"	11' - 0"	12' - 0"	14' - 0"	15' - 0"	15' - 0"	16' - 0"	1500 PSF	3' - 0" ROUND	10' - 0"	12' - 0"	13' - 0"	15' - 0"	16' - 0"	16' - 0"	17' - 0"
	3' - 0" SQUARE	9' - 0"	11' - 0"	12' - 0"	14' - 0"	15' - 0"	15' - 0"	16' - 0"		3' - 0" SQUARE	10' - 0"	12' - 0"	13' - 0"	15' - 0"	16' - 0"	16' - 0"	17' - 0"
	4' - 0" ROUND	8' - 0"	9' - 0"	10' - 0"	12' - 0"	13' - 0"	13' - 0"	14' - 0"		4' - 0" ROUND	9' - 0"	10' - 0"	11' - 0"	13' - 0"	14' - 0"	14' - 0"	15' - 0"
2500 PSF OR GREATER	3' - 0" ROUND	7' - 0"	8' - 0"	9' - 0"	10' - 0"	11' - 0"	12' - 0"	13' - 0"	2500 PSF OR GREATER	3' - 0" ROUND	8' - 0"	9' - 0"	10' - 0"	11' - 0"	12' - 0"	13' - 0"	14' - 0"
	3' - 0" SQUARE	7' - 0"	8' - 0"	9' - 0"	10' - 0"	11' - 0"	12' - 0"	13' - 0"		3' - 0" SQUARE	8' - 0"	9' - 0"	10' - 0"	11' - 0"	12' - 0"	13' - 0"	14' - 0"
	4' - 0" ROUND	6' - 0"	7' - 0"	8' - 0"	9' - 0"	10' - 0"	10' - 0"	11' - 0"		4' - 0" ROUND	7' - 0"	8' - 0"	9' - 0"	10' - 0"	11' - 0"	11' - 0"	12' - 0"

ALTERNATE # 2 CORRUGATED METAL PIPE TYPE CONSTRUCTION - DEPTH "D"
FOR LATERAL BEARING PRESSURE = 2500 PSF & Ø = 23°, 1500 PSF & Ø = 18°, 1000 PSF & Ø = 17°

GROUND SLOPE = 3H : 1V OR FLATTER									GROUND SLOPE = 3H : 1V TO 2H : 1V								
ALLOWABLE LATERAL BEARING PRESSURE	FOUNDATION TYPE	POLE CLASS - RESULTANT HORIZONTAL TENSION (LBS)							ALLOWABLE LATERAL BEARING PRESSURE	FOUNDATION TYPE	POLE CLASS - RESULTANT HORIZONTAL TENSION (LBS)						
		1900	2700	3700	4800	5600	6300	7200			1900	2700	3700	4800	5600	6300	7200
1000 PSF	3' - 0" ROUND	11' - 0"	13' - 0"	15' - 0"	16' - 0"	18' - 0"	19' - 0"	20' - 0"	1000 PSF	3' - 0" ROUND	SPECIAL FOUNDATION TYPE						
	4' - 0" ROUND	10' - 0"	11' - 0"	13' - 0"	15' - 0"	15' - 0"	16' - 0"	18' - 0"		4' - 0" ROUND	SPECIAL FOUNDATION TYPE						
1500 PSF	3' - 0" ROUND	9' - 0"	11' - 0"	12' - 0"	14' - 0"	15' - 0"	15' - 0"	16' - 0"	1500 PSF	3' - 0" ROUND	10' - 0"	12' - 0"	13' - 0"	15' - 0"	16' - 0"	16' - 0"	17' - 0"
	4' - 0" ROUND	8' - 0"	9' - 0"	10' - 0"	12' - 0"	13' - 0"	13' - 0"	14' - 0"		4' - 0" ROUND	9' - 0"	10' - 0"	11' - 0"	13' - 0"	14' - 0"	14' - 0"	15' - 0"
2500 PSF OR GREATER	3' - 0" ROUND	7' - 0"	8' - 0"	9' - 0"	10' - 0"	11' - 0"	12' - 0"	13' - 0"	2500 PSF OR GREATER	3' - 0" ROUND	8' - 0"	9' - 0"	10' - 0"	11' - 0"	12' - 0"	13' - 0"	14' - 0"
	4' - 0" ROUND	6' - 0"	7' - 0"	8' - 0"	9' - 0"	10' - 0"	10' - 0"	11' - 0"		4' - 0" ROUND	7' - 0"	8' - 0"	9' - 0"	10' - 0"	11' - 0"	11' - 0"	12' - 0"

ALTERNATE #2 - CONSTRUCTION METHOD
METAL (SUBSURFACE) FORM REQUIRED

When the existing soil will not retain a vertical face, over-excavate the foundation area and install a 36" or 48" (in) diameter corrugated metal (pipe) form. The top of the corrugated metal form shall terminate 1 foot below final grade. Continue forming to full height using a paper or cardboard form to achieve a smooth finish on final exposed cement concrete. Support the form as necessary to remain plumb.

Place the concrete foundation.

After concrete has cured, remove the entire paper or cardboard form portion.

① Shoring or Extra Excavation as required. Excavated area shall be be backfilled with Controlled-Density Fill (CDF), or with soil in accordance with **Standard Specification Section 8-20.3(2)** and Compaction Method 1 of **Standard Specification Section 2-09.3(1)E.**

RICHARD P. ZELDENRUST — STATE OF WASHINGTON — 25470 — STRUCTURAL ENGINEER — PROFESSIONAL ENGINEER

Zeldenrust, Richard
Jul 20 2016 8:27 AM

TYPE IV AND V STRAIN POLE TRAFFIC SIGNAL FOUNDATION

STANDARD PLAN J-27.10-01

SHEET 1 OF 1 SHEET

APPROVED FOR PUBLICATION
Carpenter, Jeff
Jul 21 2016 8:27 AM

STATE DESIGN ENGINEER

Washington State Department of Transportation

BASE TABLE				
ADAPTOR TYPE	ANCHOR BOLT (IN) ⟨1⟩	BOLT CIRCLE DIAMETER (IN) "BC" ⟨2⟩	EXISTING BASE TYPE	LUMINAIRE HEIGHT (± 2' - 6")
A-1	1"	11"	WELDED PLATE	⟨3⟩
A-2	1"	12 1/4"	CAST ALUMINUM	⟨3⟩
A-3	1"	12 3/4"	STEEL TRANSFORMER	⟨3⟩
A-4	1 1/8"	14 1/8"	2-PC. ALUM. CLAMP	⟨4⟩
A-5	1 1/4"	14 1/8"	2-PC. ALUM. CLAMP	40'

⟨1⟩ USE MATCHING DIAMETER FOR THREADED STUDS.

⟨2⟩ CONTRACTOR SHALL VERIFY BOLT CIRCLE "BC" IN THE FIELD BEFORE ORDERING. IF "BC" OR ANCHOR BOLT SIZES DIFFER FROM THOSE LISTED, CONTACT HQ BRIDGE AND STRUCTURES OFFICE.

⟨3⟩ 40' (FT) LUMINAIRE W/ 1 x 16' (FT) (MAX.) MAST ARM OR 35' (FT) LUMINAIRE W/ 2 x 16' (FT) MAST ARMS.

⟨4⟩ 50' (FT) LUMINAIRE W/ 1 x 16' (FT) (MAX.) MAST ARM OR 40' (FT) LUMINAIRE W/ 2 x 16' (FT) MAST ARMS - TOTAL WEIGHT 1000 LBS (MAX.).

DRAWN BY: COLBY FLETCHER

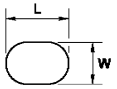

ANCHOR PLATE SLOT DETAIL

ANCHOR PLATE SLOT TABLE		
ANCHOR BOLT DIAMETER (IN)	SIZE W (IN)	SIZE L (IN)
1"	1 1/4"	2"
1 1/8"	1 1/4"	2"
1 1/4"	1 1/2"	2 1/4"

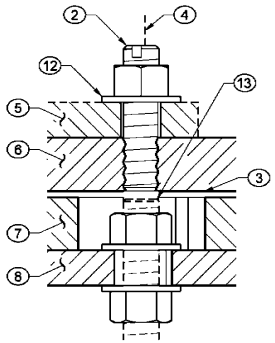

DETAIL (A)
(TYP. OF FOUR PLACES)

CONSTRUCTION NOTES

⟨1⟩ Wire brush existing threads.

⟨2⟩ Apply two coats of galvanizing paint (per **Standard Specification 9-08.1(2)B**).

⟨3⟩ Tighten bolt by "Turn of Nut" method (per **Standard Specification 6-03.3(33)**).

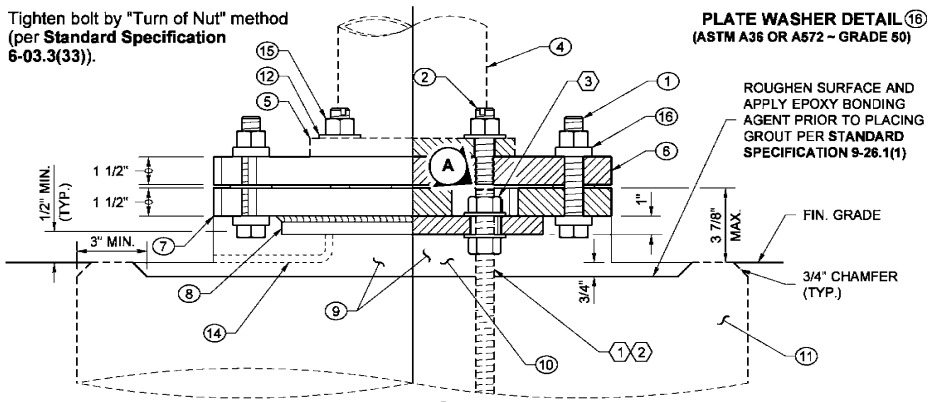

SECTION (1)

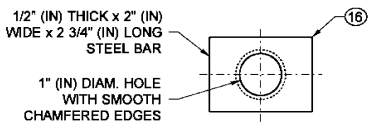

PLATE WASHER DETAIL (16)
(ASTM A36 OR A572 ~ GRADE 50)

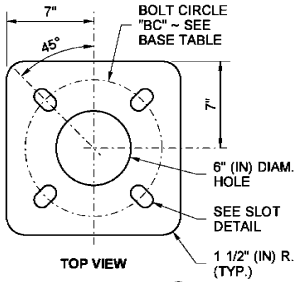

ANCHOR PLATE (8)

KEY

1. CLAMPING BOLTS, 7/8" (IN) DIAM. HEX HEAD BOLT AND NUT, TWO PLATE WASHERS, ONE HARDENED ROUND WASHER, 87 FT-LBS TORQUE (THREE CLAMPING BOLT ASSEMBLIES PER SLIP BASE) (**PER ASTM A325**)
2. THREADED SLOTTED STUD ~ SEE BASE TABLE FOR DIAMETER, HARDENED WASHER, AND HEAVY HEX NUT (FOUR PER BASE PLATE) ~ INSERT STUD AND CENTER PUNCH AT BOTTOM PERIPHERY TO LOCK TAPPED STUD IN PLACE PRIOR TO GALVANIZING (**PER ASTM F1554 ~ GRADE 105**)
3. KEEPER PLATE ~ 0.0149" (IN) 28 GAGE PLATE (**PER ASTM A653 ~ COATING DESIGNATION G90**)
4. POLE WALL (EXISTING)
5. POLE BASE PLATE (EXISTING)
6. TOP SLIP PLATE (**PER ASTM A36**)
7. BOTTOM SLIP PLATE (**PER ASTM A36**)
8. ANCHOR PLATE (**PER ASTM A36**)
9. REMOVE GROUT (EXISTING WITH DRAIN)
10. NEW GROUT PAD WITH DRAIN
11. FOUNDATION (EXISTING)
12. HARDENED WASHER (**PER ASTM F436**)
13. ANCHOR BOLT (EXISTING) ~ TRIM TO CLEAR SLIP PLATE BY 1/8" (IN) MIN.
14. 3/8" (IN) DIAM DRAIN TUBE (PER **STANDARD SPECIFICATION 9-29.2(3)**)
15. HEAVY HEX NUT (TYP.) (**PER ASTM A563 ~ GRADE DH**)
16. PLATE WASHER

NOTES

1. The purpose of this plan is to provide the details for retrofitting a 4-bolt frangible base with a slip base assembly.
2. Existing anchor bolts shall be inspected for corrosion, thread damage, and galvanizing. To minimize galvanic corrosion between dissimilar metals, ensure galvanizing remains intact while installing aluminum luminaire.
3. After bolting the bottom slip plate assembly to the foundation, fill the slotted bolt holes with mastic per **Standard Specification 9-08.7**.
4. Grade around the foundation to ensure the stub height does not exceed 3 7/8" (in). For grading requirements, see **Standard Plan J-28.22**.
5. Removal of the frangible base from the existing base plate is required.
6. Misaligned anchor bolts shall be removed and replaced.
7. This adaptor shall be used only on luminaire poles that contain a handhole. Replace standards and foundation when the handhole is located in the frangible base.
8. Galvanize the anchor plate, bottom slip plate, and top slip plate after fabrication according to **ASTM A123**.
9. Galvanize all hardware according to **ASTM F2329**.

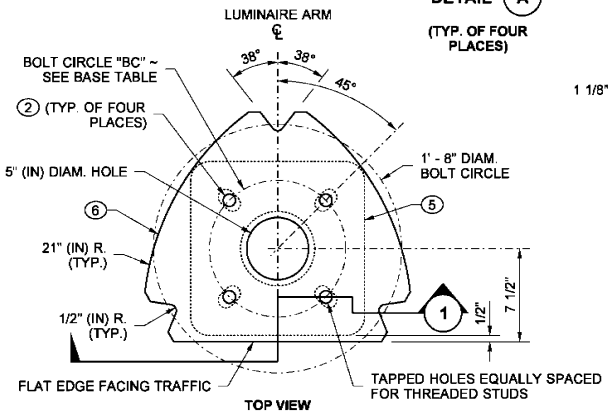

TOP SLIP PLATE (6)

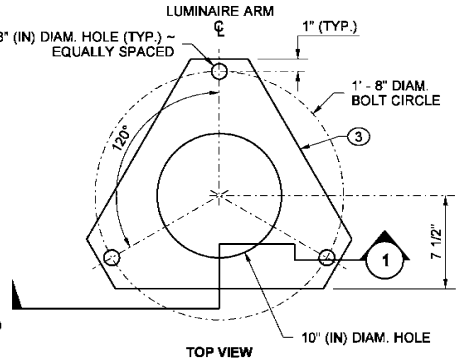

KEEPER PLATE (3)

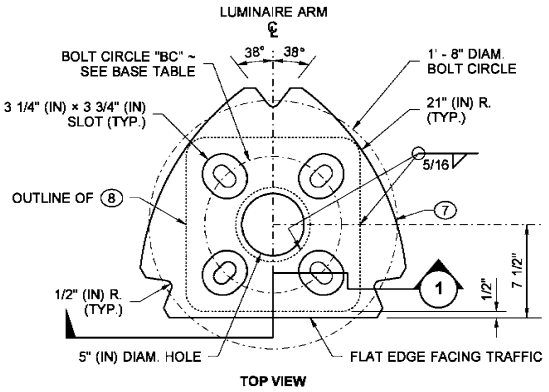

BOTTOM SLIP PLATE (7)

Zeldenrust, Richard
Jun 10 2014 1:02 PM

SLIP BASE ADAPTOR FOR 4-BOLT LIGHT STANDARD BASE STANDARD PLAN J-28.43-00

SHEET 1 OF 1 SHEET

APPROVED FOR PUBLICATION
Bakotich, Pasco
Jun 11 2014 1:35 PM
STATE DESIGN ENGINEER
Washington State Department of Transportation

DRAWN BY: FERN LIDDELL

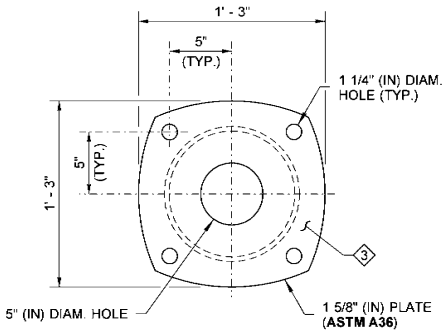

VIEW (A)

3 THE FACE SHALL BE PLANE AFTER FABRICATION, TO PROVIDE A SEAL BETWEEN THE BARRIER AND THE ELBOW.

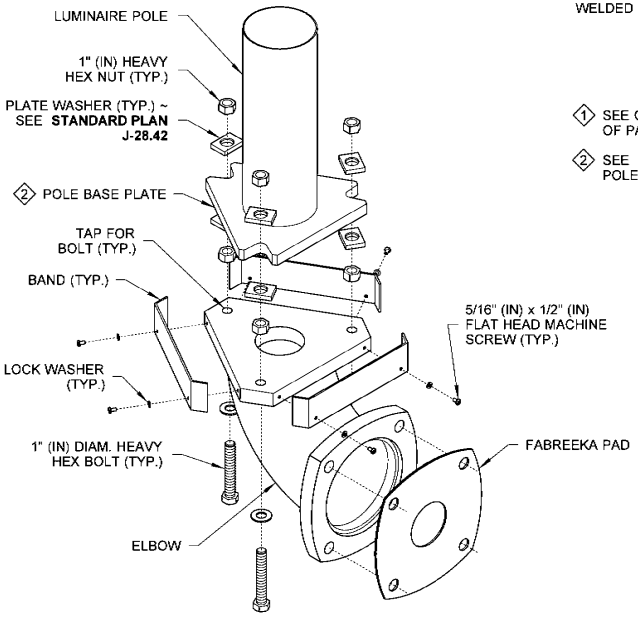

EXPLODED ISOMETRIC VIEW

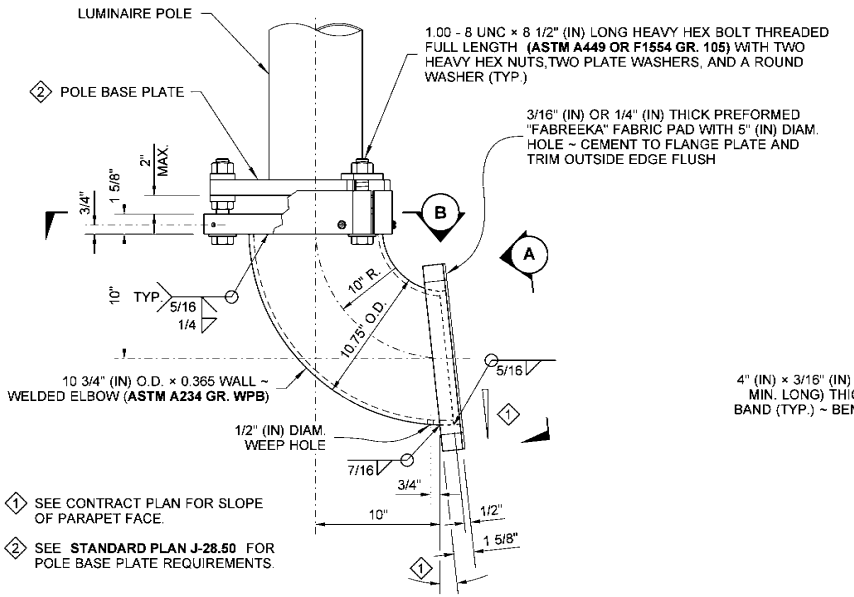

STEEL LIGHT STANDARD ELBOW DETAIL

FOR LUMINAIRE POLES WITH SINGLE MAST ARM 12' - 0" OR LESS AND DOUBLE MAST ARMS 8' - 0" OR LESS, MOUNTED ON BRIDGE OR RETAINING WALLS.

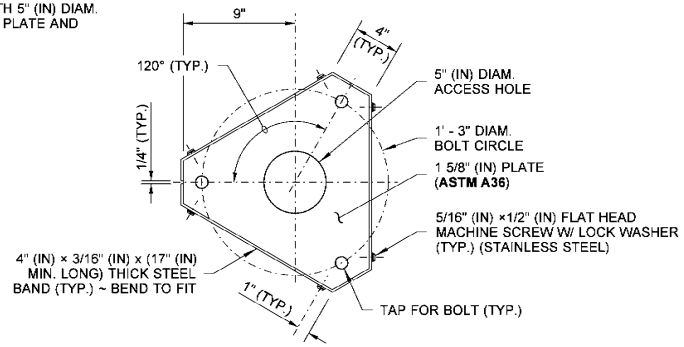

SECTION (B)

NOTES

1. Galvanize the Elbow Assembly after fabrication according to **AASHTO M 111**. All bolts, rods and related hardware shall be galvanized after fabrication per **ASTM F2329**.
2. See **Standard Plan J-28.50** for Pole Base and Hand Hole details.
3. The presence of pedestrian railing shall be verified prior to light standard fabrication. When pedestrian railing is present or to be installed, locate hand hole as detailed in the Bridge Pedestrian Barrier details.
4. See **Standard Plan J-28.70** for further wiring details.

RICHARD P. ZELDENRUST — STATE OF WASHINGTON — 25470 — STRUCTURAL ENGINEER — PROFESSIONAL ENGINEER

Zeldenrust, Richard
Jul 20 2016 8:28 AM

STEEL LIGHT STANDARD ELBOW MOUNTING ON BRIDGE & RETAINING WALL

STANDARD PLAN J-28.45-03

SHEET 1 OF 2 SHEETS

APPROVED FOR PUBLICATION
Carpenter, Jeff
Jul 21 2016 8:28 AM
STATE DESIGN ENGINEER
Washington State Department of Transportation

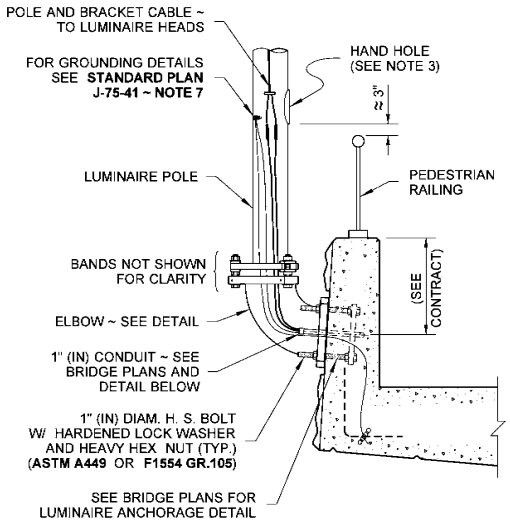

BRIDGE PEDESTRIAN BARRIER

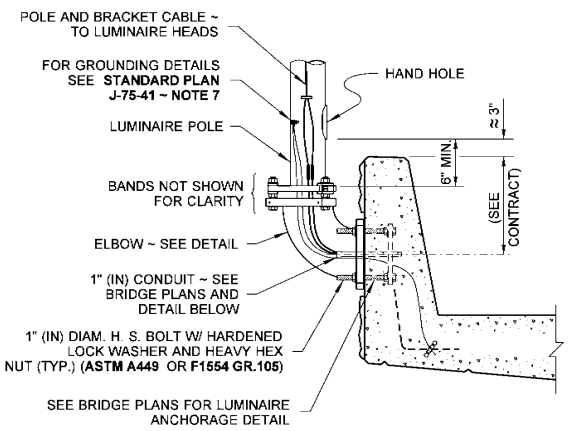

WHEN TRAFFIC BARRIER HEIGHT IS 42" (IN), MAINTAIN APPROXIMATE HEIGHT FROM TOP OF BARRIER TO HAND HOLE SHOWN.

SINGLE-SLOPE BRIDGE TRAFFIC BARRIER

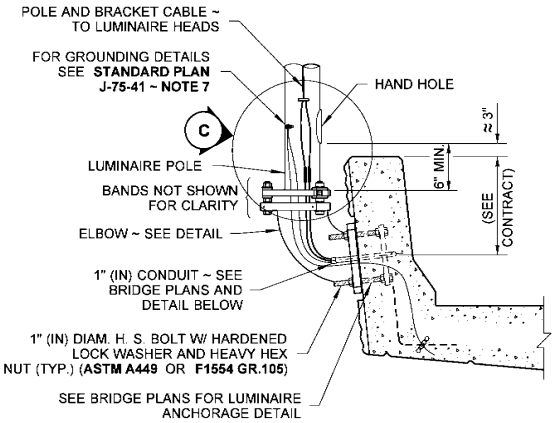

F-SHAPE BRIDGE TRAFFIC BARRIER

TYPICAL SECTIONS

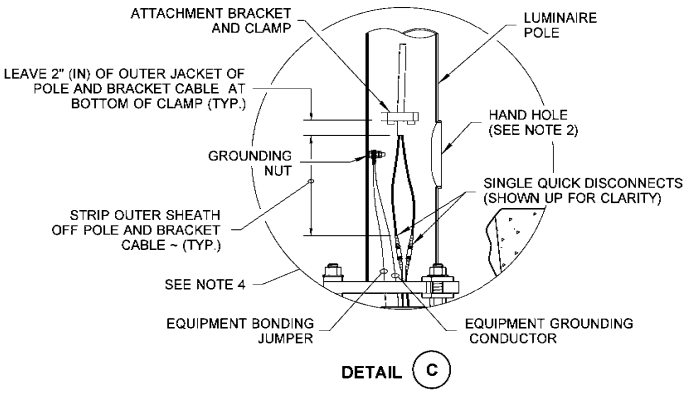

DETAIL C

(TYPICAL FOR ALL VIEWS)

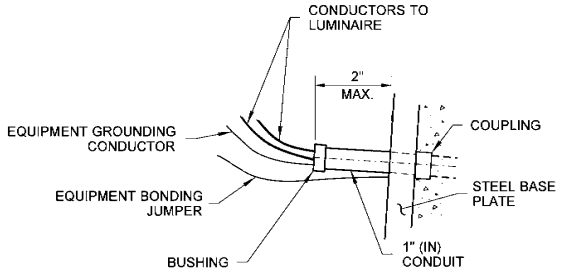

CONDUIT DETAIL

ROUTE CONDUCTORS TO LUMINAIRES AND BONDING CONNECTION AT HAND HOLE ~ SEE CONTRACT FOR QUANTITY (TYPICAL FOR ALL VIEWS)

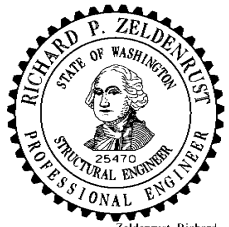

Zeldenrust, Richard
Jul 20 2016 8:31 AM

STEEL LIGHT STANDARD ELBOW MOUNTING ON BRIDGE & RETAINING WALL

STANDARD PLAN J-28.45-03

SHEET 2 OF 2 SHEETS

APPROVED FOR PUBLICATION
Carpenter, Jeff
Jul 21 2016 8:28 AM
STATE DESIGN ENGINEER
Washington State Department of Transportation

DRAWN BY: FERN LIDDELL

This page left blank intentionally.

DRAWN BY: FERN LIDDELL

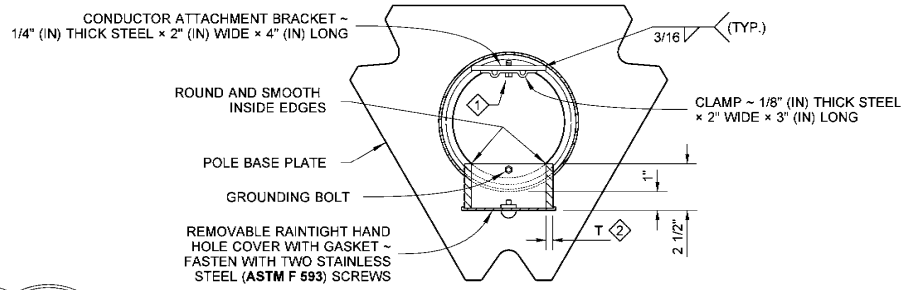

TYPICAL HAND HOLE ORIENTATION

VIEW (A)

1. THE **CONDUCTOR ATTACHMENT** CONFIGURATIONS VARY AMONG DIFFERENT MANUFACTURERS. CONDUCTOR ATTACHMENTS ARE REQUIRED ON ALL POLES, FIXED OR SLIP BASE.
2. **T** = RIM PLATE THICKNESS BY LUMINAIRE POLE FABRICATOR .

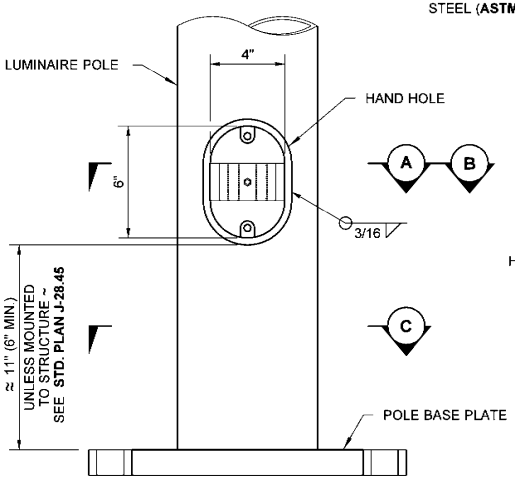

(COVER NOT SHOWN FOR CLARITY)

ELEVATION VIEW

CONFIGURATION AND LOCATION OF THE HAND HOLE VARIES AMONG MANUFACTURERS ~ MINIMUM SIZE OPENING SHOWN

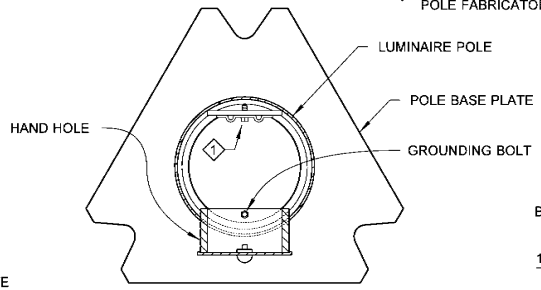

FOR DETAILS NOT SHOWN, SEE VIEW (A) ABOVE

ORIENTATION FOR INSTALLATION ON BRIDGE OR RETAINING WALL ~ SEE **STANDARD PLAN J-28.45**

VIEW (B)

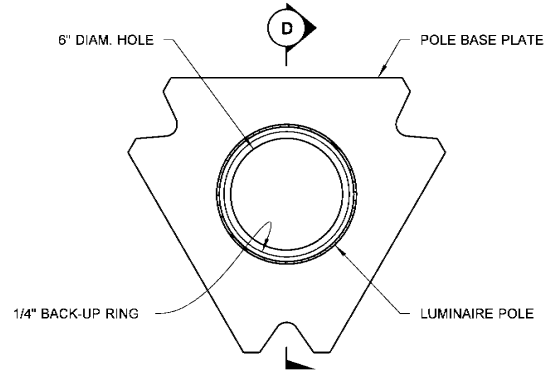

VIEW (C)

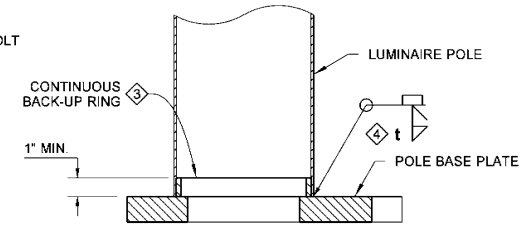

3. 1/4" (IN) THICK, OR NO THINNER THAN POLE WALL THICKNESS. TACK WELD IN ROOT OR CONTINUOUS SEAL WELD TO BASE PLATE OR POLE WALL.
4. **t** = SIZE OF FILLET WELD BY LUMINAIRE POLE FABRICATOR.

SECTION (D)

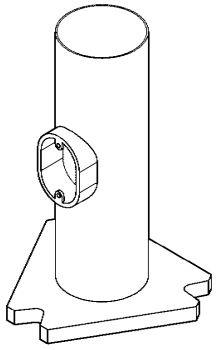

ISOMETRIC VIEW

NOTES

1. Pole Base Plate for a Slip Base design shall be 1 1/4" (in) steel manufactured from **ASTM A572 GR.50** or **ASTM A588.** Pole Base Plate for a Fixed Base design shall be either 1 1/4" (in) steel manufactured from **ASTM A572 GR. 50, ASTM A588,** or 1 1/2" (in) manufactured from **ASTM A36.** All Pole Base Plate notched surfaces shall be finished smooth.
2. Round and smooth all edges along wire-way to protect conductors. See **Standard Plan J-28.70** for wiring details.
3. Galvanizing shall be in accordance with **AASHTO M 111.**
4. See **Standard Plans C-8b, C-85.14,** and **J-28.60** for foundation and base plate requirements when steel light standards are mounted on concrete traffic barrier.
5. See **Standard Plan J-28.42** for details when Slip Base is required.

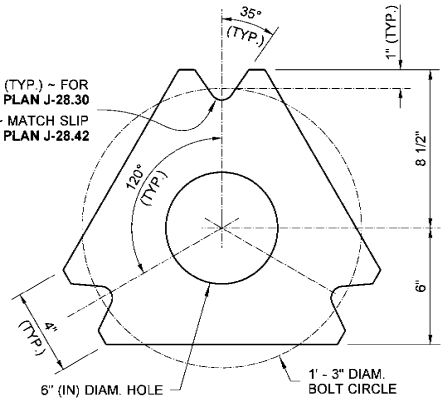

FOR PLATE THICKNESS, REFER TO NOTE 1

TOP VIEW

POLE BASE PLATE DETAIL

RICHARD P. ZELDENRUST — STATE OF WASHINGTON — 25470 — STRUCTURAL ENGINEER — PROFESSIONAL ENGINEER

Zeldenrust, Richard
Jul 20 2016 8:29 AM

STEEL LIGHT STANDARD POLE BASE AND HAND HOLE DETAILS

STANDARD PLAN J-28.50-03

SHEET 1 OF 1 SHEET

APPROVED FOR PUBLICATION

Carpenter, Jeff
Jul 21 2016 8:29 AM

STATE DESIGN ENGINEER

Washington State Department of Transportation

DRAWN BY: FERN LIDDELL

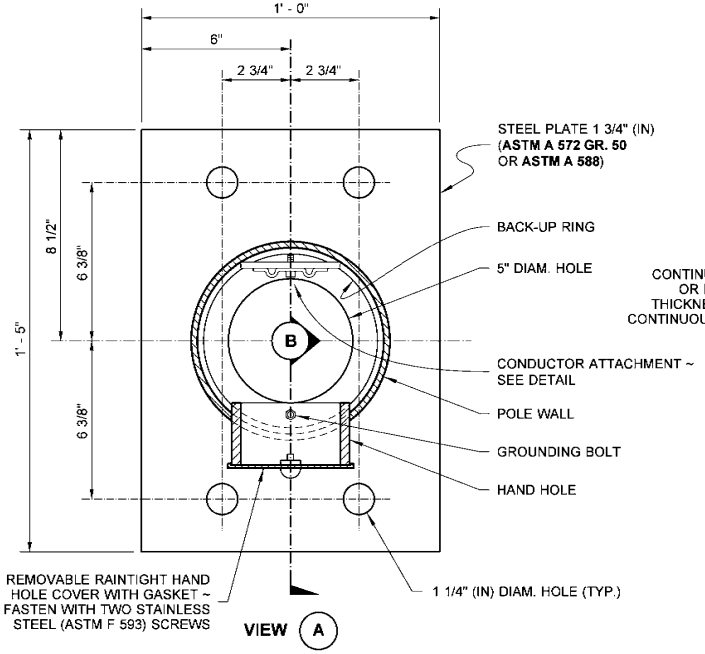

VIEW (A)

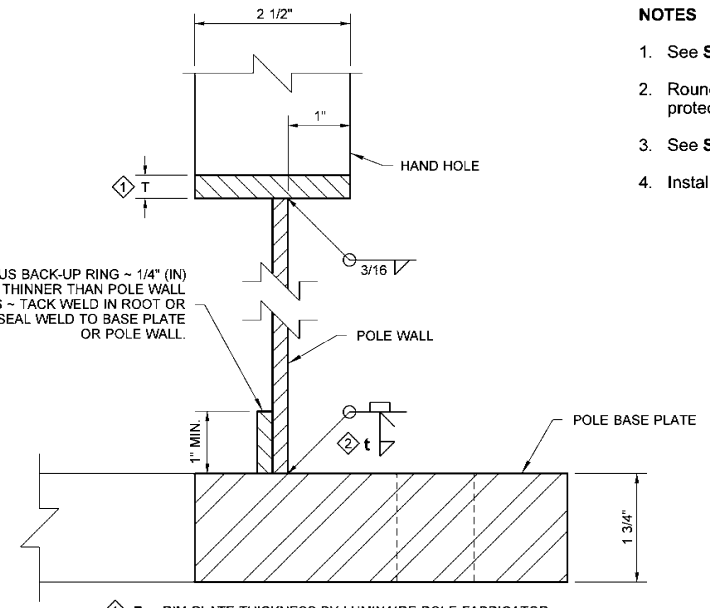

1 T = RIM PLATE THICKNESS BY LUMINAIRE POLE FABRICATOR

2 t = SIZE OF FILLET WELD BY LUMINAIRE POLE FABRICATOR

SECTION (B)

NOTES

1. See **Standard Plans C-8b** and **C-85.14** for foundation and anchor bolt details.
2. Round and smooth all edges around hand hole and along the wire-way to protect the conductors.
3. See **Standard Plan J-28.70** for wiring details.
4. Install grout after plumbing the pole.

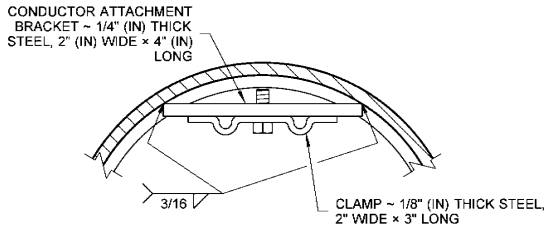

CONDUCTOR ATTACHMENT DETAIL

CONFIGURATIONS VARY AMONG DIFFERENT MANUFACTURERS

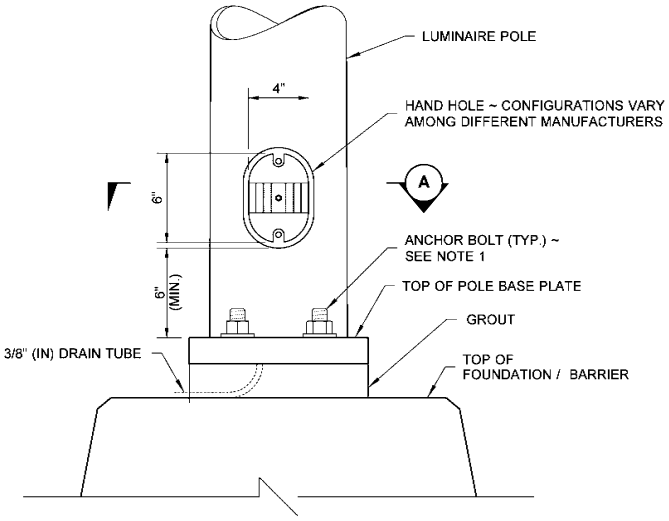

SEE NOTE 4

PLACEMENT DETAIL

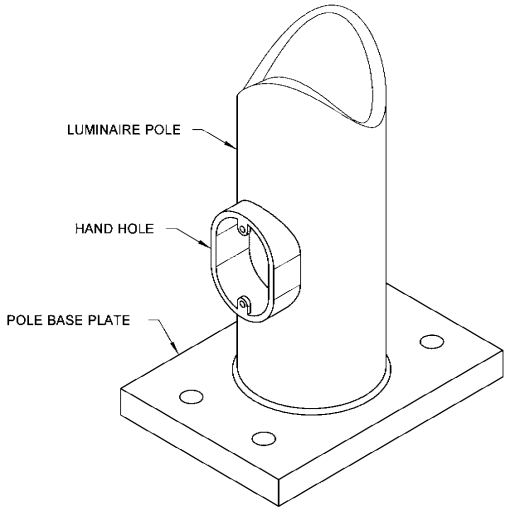

ISOMETRIC VIEW

RICHARD P. ZELDENRUST
STATE OF WASHINGTON
25470
STRUCTURAL ENGINEER
PROFESSIONAL ENGINEER

Zeldenrust, Richard
Jul 20 2016 8:32 AM

STEEL LIGHT STANDARD BARRIER MOUNTED BASE

STANDARD PLAN J-28.60-02

SHEET 1 OF 1 SHEET

APPROVED FOR PUBLICATION
Carpenter, Jeff
Jul 21 2016 8:29 AM

STATE DESIGN ENGINEER

Washington State Department of Transportation

DRAWN BY: FERN LIDDELL

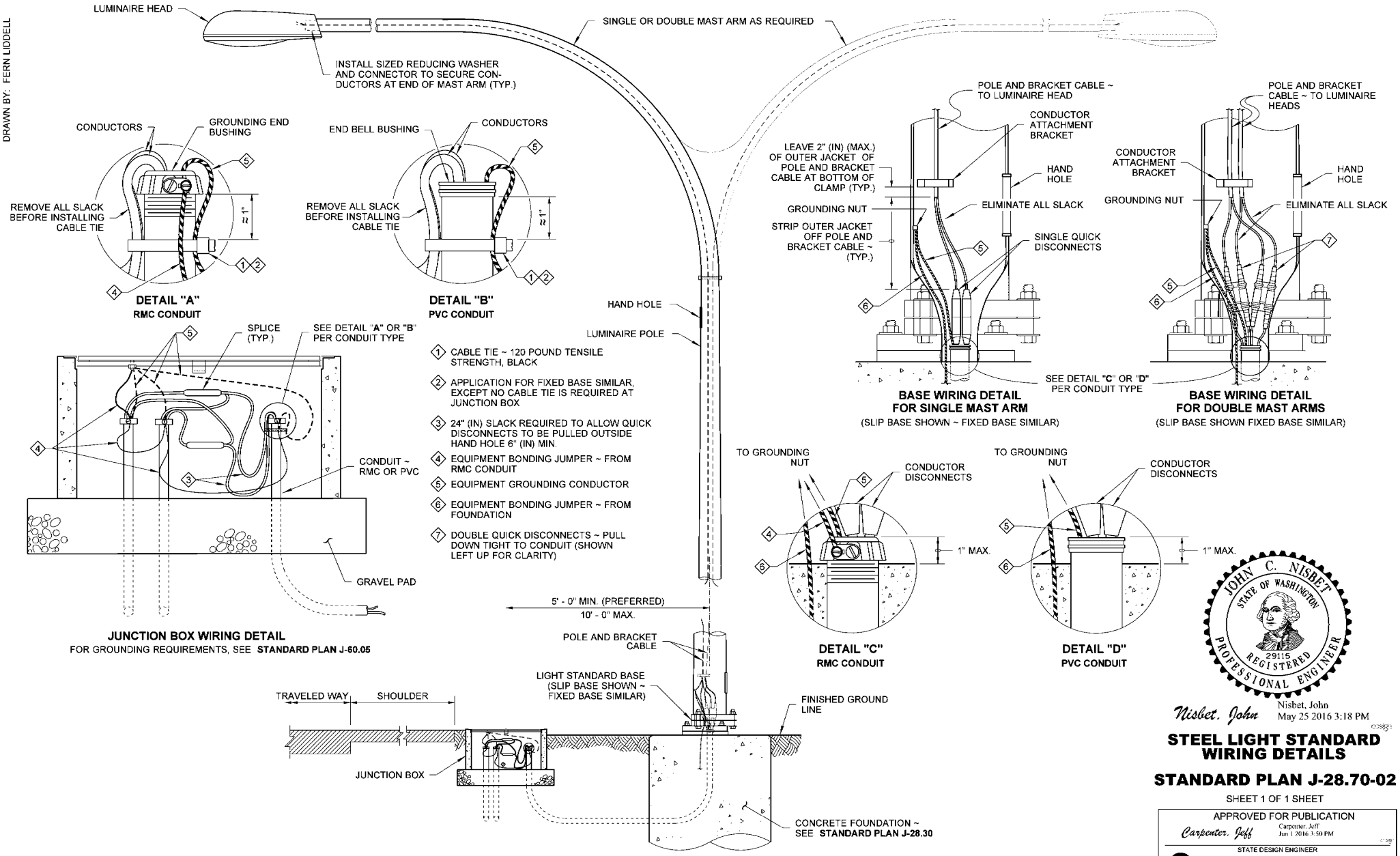

JOHN C. NISBET
STATE OF WASHINGTON
29115
REGISTERED
PROFESSIONAL ENGINEER

Nisbet, John
May 25 2016 3:18 PM

STEEL LIGHT STANDARD WIRING DETAILS

STANDARD PLAN J-28.70-02

SHEET 1 OF 1 SHEET

APPROVED FOR PUBLICATION
Carpenter, Jeff
Jun 1 2016 3:50 PM
STATE DESIGN ENGINEER
Washington State Department of Transportation

DRAWN BY: FERN LIDDELL

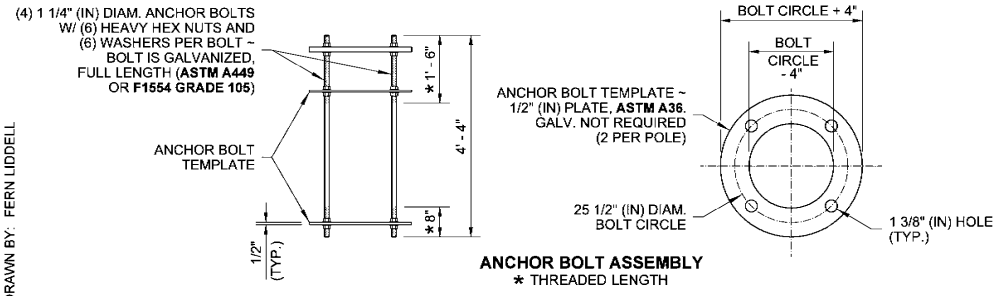

ANCHOR BOLT ASSEMBLY
* THREADED LENGTH

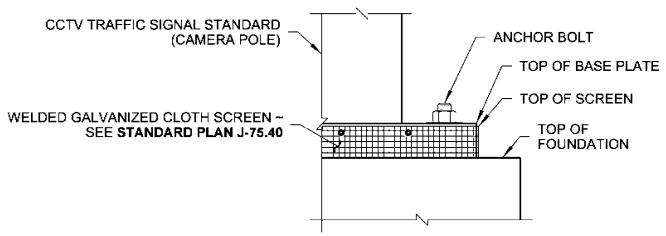

WELDED GALVANIZED CLOTH SCREEN

CAMERA POLE HEIGHT FOR LOAD CASES #1 and #2	DEPTH OF FOUNDATION "D" 3H : 1V OR FLATTER	DEPTH OF FOUNDATION "D" 2H : 1V	ANCHOR BOLT ASTM A449 OR F1554 GR 105 DIAMETER	ANCHOR BOLT LENGTH	ANCHOR BOLT CIRCLE
20' - 30'	4' - 6"	6' - 6"	1 1/4"	4' - 4"	25 1/2"
40'	5' - 6"	7' - 6"	1 1/4"	4' - 4"	25 1/2"
50'	7' - 0"	9' - 0"	1 1/4"	4' - 4"	25 1/2"

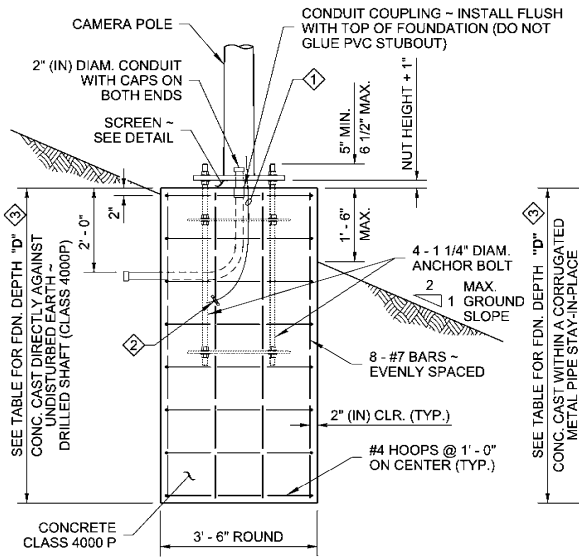

FOUNDATION REINFORCEMENT DETAIL
(CONCRETE CAST DIRECTLY AGAINST UNDISTURBED EARTH)
ALTERNATE # 1

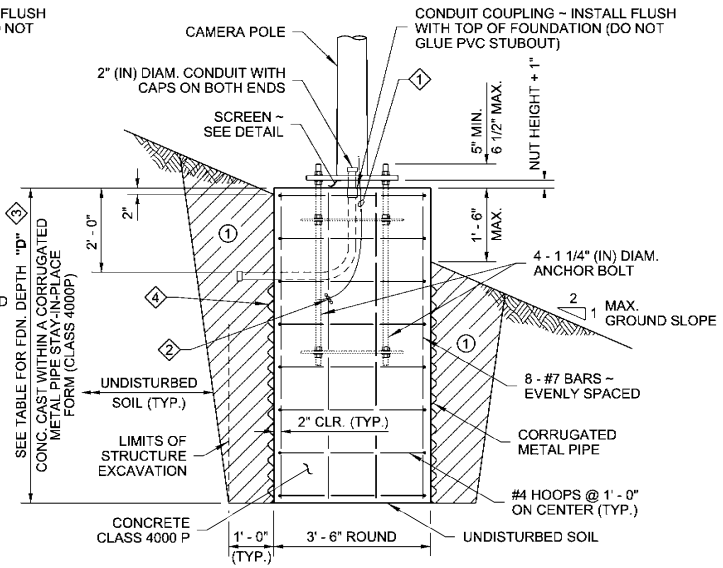

FOUNDATION REINFORCEMENT AND BACKFILL DETAIL
(4) (CONCRETE CAST INSIDE CORRUGATED METAL PIPE STAY-IN-PLACE FORM) (SEE NOTE 5)
ALTERNATE # 2

NOTES

1. These Foundations are designed for a minimum of 1,500 PSF allowable lateral bearing pressure for the soil. A Special Foundation shall be required for soil with allowable lateral bearing pressure lower than 1,500 PSF.
2. These Foundations are designed for installation on level ground, or on sloping ground, not to exceed 2H : 1V slopes. Slopes steeper than 2H : 1V require a special design.
3. Where a foundation is constructed within a Media Filter Drain, the foundation depth shown in the Contract Plans shall be increased by the depth of the Media filter Drain.
4. Foundations not within the parameters of this standard require Special Design. Contact the **WSDOT Bridge and Structures Office** through the Engineer for Special Foundation Designs.
5. The top 2' - 0" of the foundation shall use a smooth form (such as paper or cardboard). After the concrete has cured, this entire form shall be removed.

DESIGN CRITERIA:

This structure has been designed according to the Fifth Edition **2009 AASHTO Standard Specifications** for Structural Supports for Highway Signs, Luminaires, and Traffic Signals. Basic wind velocity is 90 MPH. Design Life/Recurrence Interval 50 years and Fatigue Category III.

WIND VELOCITY:

90 MPH
Maximum Pole Deflection shall not exceed 0.7" in 30 MPH and 1.4" in 70 MPH wind.

LOAD CASE # 1

Camera (1) - EPA = 4.00 sq. ft. @ 2' - 0" above pole top, and:

Dish (1) - 1' - 0" diameter @ pole top level.

LOAD CASE # 2

Camera (1) - EPA = 4.00 sq. ft. @ 2' - 0" above pole top, and:

Camera (2) - EPA = 0.54 sq. ft. each @ 1' - 0" and 2' - 0" from pole top, and:

NEMA Cabinet (2) - EPA = 1.33 sq. ft. each @ 3' - 8" from pole top, install both NEMA cabinets back to back, and:

Radio Equipment (2) - EPA = 2.25 sq ft. each @ 2' - 0" and 9' - 0" from pole top.

EPA = Effective Projected Area

ALTERNATE #2 - CONSTRUCTION METHOD

(1) Shoring or Extra Excavation as required. Excavated area shall be backfilled with Controlled-Density Fill (CDF), or with soil in accordance with **Standard Specification Section 8-20.3(2)** and Compaction Method 1 of **Standard Specification Section 2-09.3(1)E.**

(1) GROUNDING CONDUCTOR # 4 AWG STRANDED COPPER WITH 3' (FT) MIN. SLACK. ROUTE CONDUCTOR TO CCTV TRAFFIC SIGNAL STANDARD (CAMERA POLE) GROUNDING STUD.

(2) CLAMP CONDUCTOR TO STEEL REINFORCING WITH LISTED CONNECTOR SUITABLEFOR USE EMBEDDED IN CONCRETE.

(3) SEE NOTE 3.

RICHARD P. ZELDENRUST — STATE OF WASHINGTON — 25470 — STRUCTURAL ENGINEER — PROFESSIONAL ENGINEER

Zeldenrust, Richard
Jul 20 2016 8:34 AM

TYPE CCTV TRAFFIC SIGNAL STANDARD (CAMERA POLE) FOUNDATION DETAILS
STANDARD PLAN J-29.10-01

SHEET 1 OF 1 SHEET

APPROVED FOR PUBLICATION
Carpenter, Jeff
Jul 21 2016 8:30 AM
STATE DESIGN ENGINEER
Washington State Department of Transportation

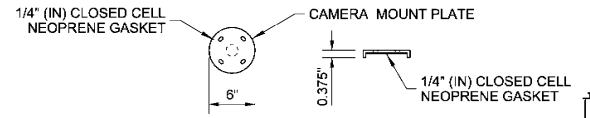

RAIN CAP DETAIL

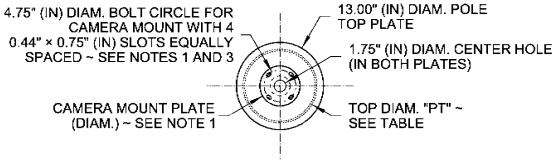

VIEW (A)

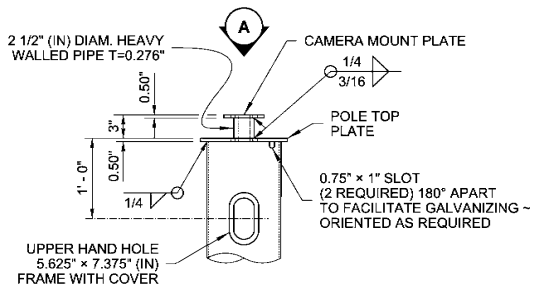

POLE TOP DETAIL

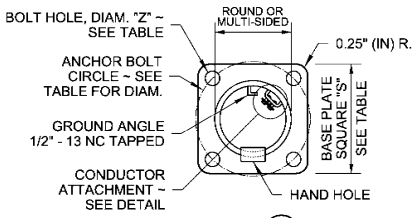

VIEW (B)

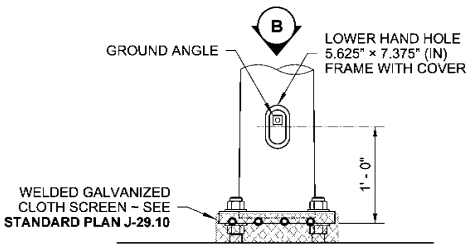

POLE BASE DETAIL

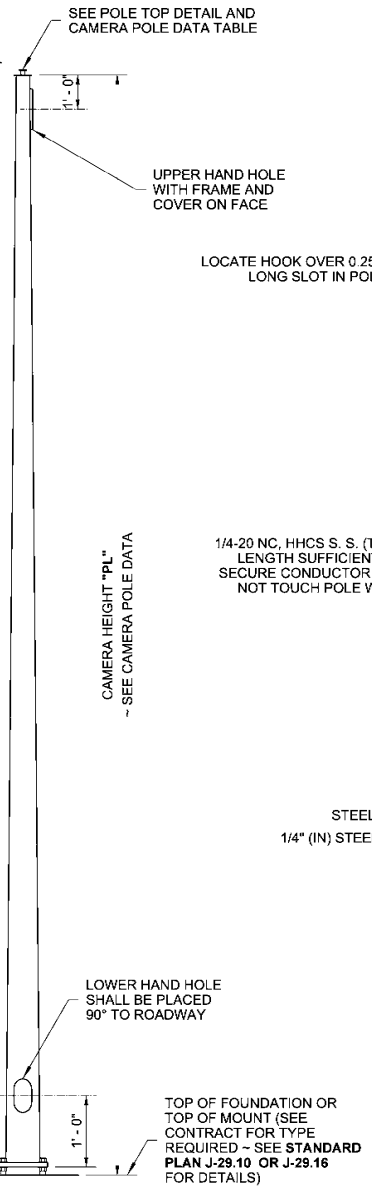

CAMERA POLE
CAMERA POLE FOR LOADING LOAD CASE #1
(TOP MOUNT CAMERA AND 1' - 0" DIAM. DISH)

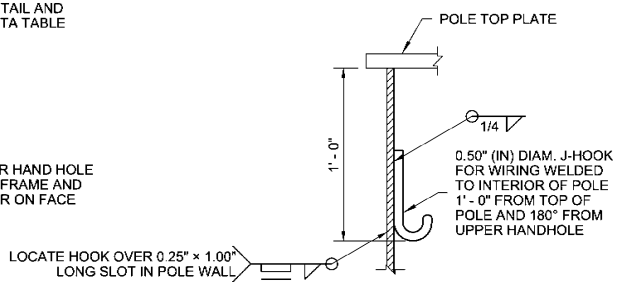

J-HOOK FOR WIRING LOAD CASE #1

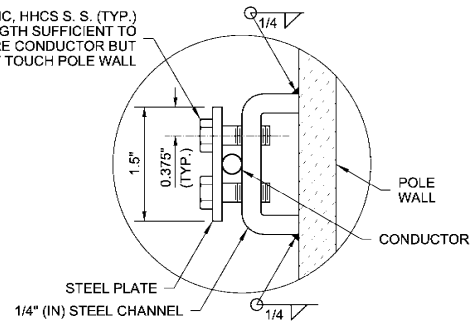

CONDUCTOR ATTACHMENT DETAIL

CONDUCTOR ATTACHMENT DETAILS MAY VARY PER MANUFACTURER

CAMERA POLE DATA

CAMERA HEIGHT "PL" (FT.)	POLE MOUNT TYPE	TOP DIAM. "PT" (IN.) (MIN.)	POLE TUBE			ANCHOR BOLT DIAM. (IN.)	CONNECTION BOLT DIAM. (IN.)
			SQUARE "S" (IN.)	BOLT CIRCLE (IN.)	HOLE "Z" (IN.)		
15	ELBOW	8.50	25.00	25.50	1.50	–	1.25
20	ELBOW	8.50	25.00	25.50	1.50	–	1.25
30	ELBOW	9.00	25.00	25.50	1.50	–	1.25
20 - 30	GROUND	9.00	25.00	25.50	1.50	1.25	–
40	ELBOW	9.00	25.00	25.50	1.50	–	1.25
40	GROUND	9.00	25.00	25.50	1.50	1.25	–
50	ELBOW	10.00	25.00	25.50	1.50	–	1.25
50	GROUND	10.00	25.00	25.50	1.50	1.25	–

NOTES

1. Verify Pole Top Plate, Camera Mount Plate, Bolt Circle, and Bolt Holes are adequate for the required Camera prior to releasing poles for manufacturing.
2. Steel shall be galvanized after fabrication per **AASHTO M111**. Hardware shall be galvanized per **AASHTO M232.** Fasteners less than 0.50" (in.) diameter shall be stainless or brass.
3. Attach Camera to Camera Mount Plate using four (4) 3/8"-16 UNC × 1.75" stainless steel bolts with eight (8) stainless steel washers and four (4) lock-nuts with nylon inserts, or as approved by the Camera Supplier.
4. For Ground Mount Details, see **Standard Plan J-29.10.** For Elbow Mount Details, see **Standard Plan J-29.16.**

DESIGN CRITERIA:

This structure has been designed according to the Fifth Edition **2009 AASHTO Standard Specifications** for Structural Supports for Highway Signs, Luminaires, and Traffic Signals. Basic wind velocity is 90 MPH. Design Life/Recurrence Interval 50 years.

WIND VELOCITY:

90 MPH

Maximum Pole Deflection shall not exceed 0.7" in 30 MPH and 1.4" in 70 MPH wind.

LOAD CASE #1:

Camera (1) - EPA = 4.00 sq. ft. @ 2' - 0" above pole top, and:

Dish (1) - 1' - 0" diameter @ pole top level.

LOAD CASE #2:

Camera (1) - EPA = 4.00 sq. ft. @ 2' - 0" above pole top, and:

Camera (2) - EPA = 0.54 sq. ft. @ 1' - 0" and 2' - 0" from pole top, and:

NEMA Cabinet (2) - EPA = 1.33 sq. ft. @ 3' - 8" from pole top, install back-to-back NEMA Cabinets, and:

Radio Equipment (2) - EPA = 2.25 sq. ft. each @ 2' - 0" and 9' - 0" from pole top.

EPA = Effective Projected Area

RICHARD P. ZELDENRUST STATE OF WASHINGTON 25470 STRUCTURAL ENGINEER PROFESSIONAL ENGINEER

Zeldenrust, Richard
Jul 20 2016 8:34 AM

TYPE CCTV TRAFFIC SIGNAL STANDARD (CAMERA POLE)
STANDARD PLAN J-29.15-01

SHEET 1 OF 2 SHEETS

APPROVED FOR PUBLICATION
Carpenter, Jeff
Jul 21 2016 8:30 AM
STATE DESIGN ENGINEER
Washington State Department of Transportation

DRAWN BY: FERN LIDDELL

DRAWN BY: FERN LIDDELL

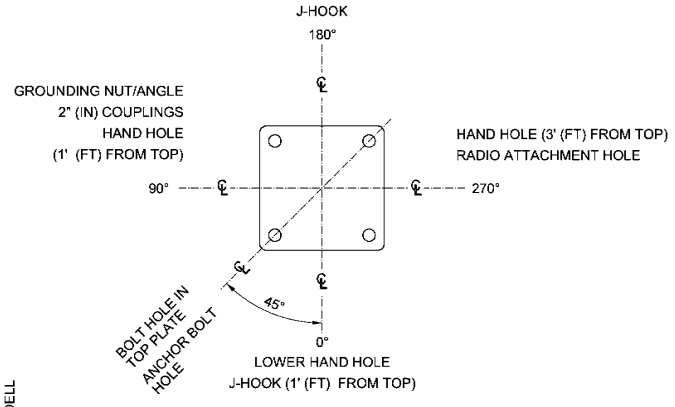

RADIAL INDEX
LOAD CASE #2

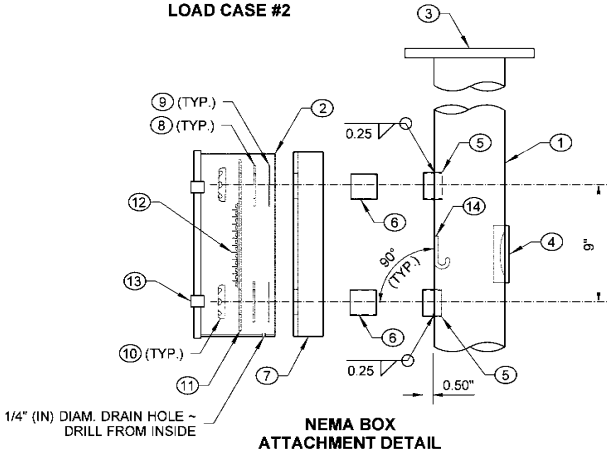

NEMA BOX
ATTACHMENT DETAIL

KEY

1. CAMERA/TDA POLE MOUNTS
2. NEMA 4X (STAINLESS STEEL) ~ SIZE 16" H × 12" W × 6" D
3. CAMERA MOUNT PLATE
4. CAMERA UPPER HANDHOLE
5. 2" COUPLING
6. 2" SHORT NIPPLE
7. CHANNEL DRILLED 1/8" OVERSIZE OF NIPPLE
8. STEEL WASHER
9. CONDUIT WATERTIGHT LOCKNUT
10. END BUSHING
11. BACK PLATE ~ DRILL OVER SIZE FOR CONDUIT, SEAL WASHER, AND LOCKNUT
12. TERMINAL BLOCK
13. HINGED DOOR WITH TWO PAD-LOCKABLE FLIP LATCHES (TYP.)
14. J-HOOK FOR WIRING

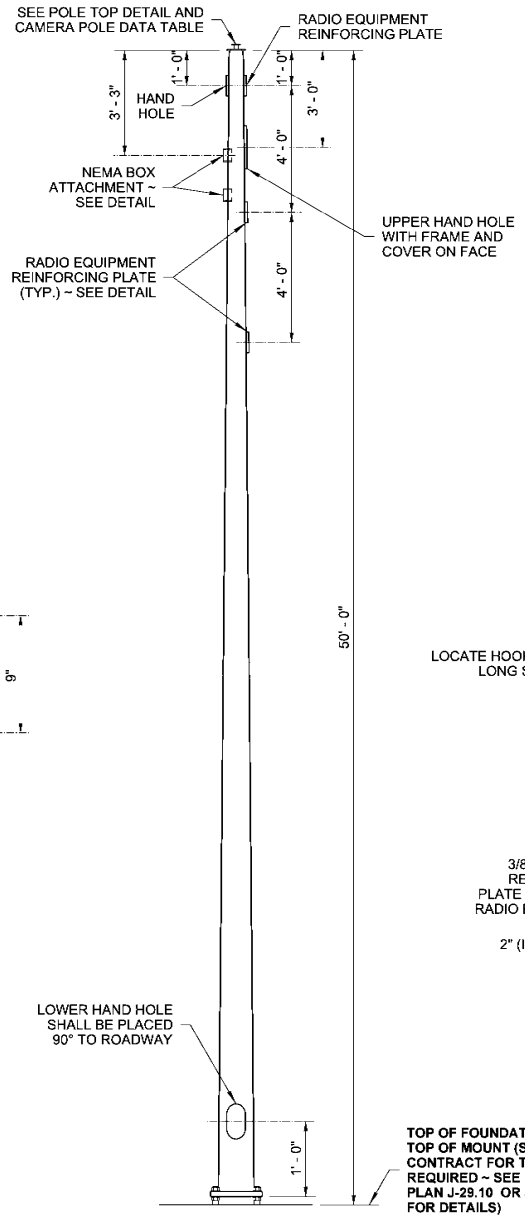

CAMERA POLE FOR LOADING
LOAD CASE #2
(TOP MOUNT CAMERA, 2 SIDEMOUNT CAMERAS, 2 NEMA CABINETS & 2 RADIO EQUIPMENTS)

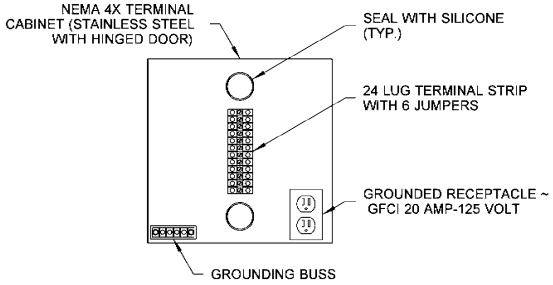

NEMA BOX DETAIL

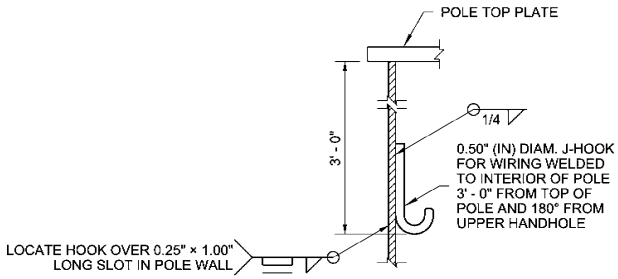

J-HOOK FOR WIRING
LOAD CASE #2

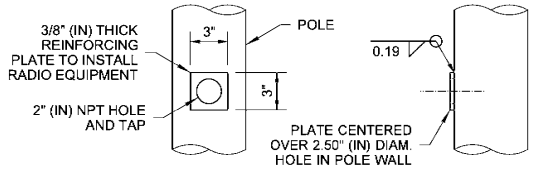

RADIO EQUIPMENT
REINFORCING PLATE

RICHARD P. ZELDENRUST
STATE OF WASHINGTON
25470
STRUCTURAL ENGINEER
PROFESSIONAL ENGINEER

Zeldenrust, Richard
Jul 20 2016 8:35 AM

TYPE CCTV TRAFFIC SIGNAL STANDARD (CAMERA POLE)

STANDARD PLAN J-29.15-01

SHEET 2 OF 2 SHEETS

APPROVED FOR PUBLICATION
Carpenter, Jeff
Jul 21 2016 8:30 AM

STATE DESIGN ENGINEER

Washington State Department of Transportation

DRAWN BY: FERN LIDDELL

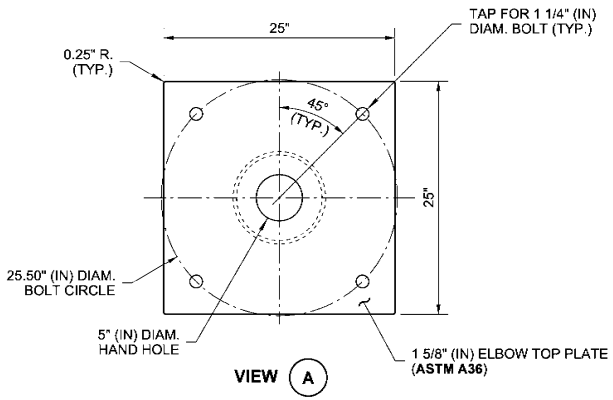

VIEW (A)

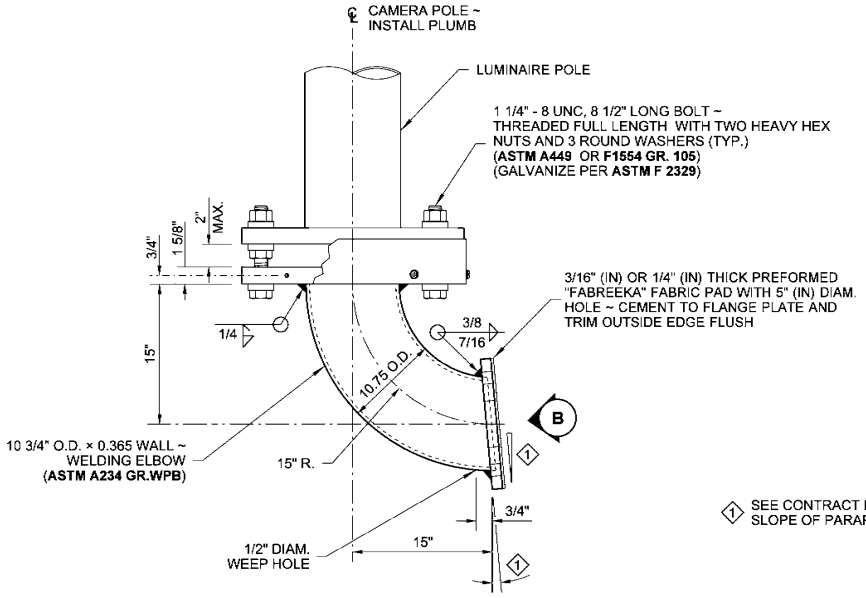

ELEVATION VIEW

◇1 SEE CONTRACT PLANS FOR SLOPE OF PARAPET FACE

CAMERA POLE ELBOW MOUNT ~ 25" SQUARE

NOTES

1. For information not shown, see Steel Light Standard Elbow detail, **Standard Plan J-28.45**. For Camera Pole Details, see **Standard Plan J-29.15**.
2. Round and smooth all edges along wire-way to protect conductors.
3. The manufacturer shall verify that the Elbow Top Plate matches the Camera Pole Base, and shall submit the shop drawings for approval.
4. Galvanize after fabrication according to **AASHTO M111**.
5. Install galvanized steel protective band (3/16" thick × 4" high (**ASTM A36**) on all four sides, as shown in **Standard Plan J-28.45**, except fasten 6" from corners on 25" square base.

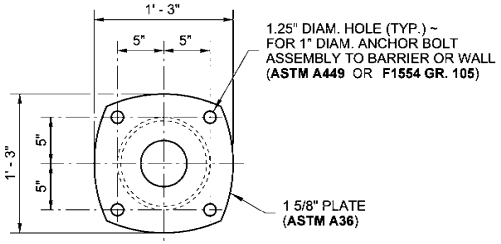

VIEW (B)

RICHARD P. ZELDENRUST
STATE OF WASHINGTON
25470
STRUCTURAL ENGINEER
PROFESSIONAL ENGINEER

Zeldenrust, Richard
Jul 20 2016 8:36 AM

TYPE CCTV TRAFFIC SIGNAL STANDARD (CAMERA POLE) ELBOW DETAILS

STANDARD PLAN J-29.16-02

SHEET 1 OF 1 SHEET

APPROVED FOR PUBLICATION
Carpenter, Jeff
Jul 21 2016 8:31 AM
STATE DESIGN ENGINEER
Washington State Department of Transportation

DRAWN BY: FERN LIDDELL

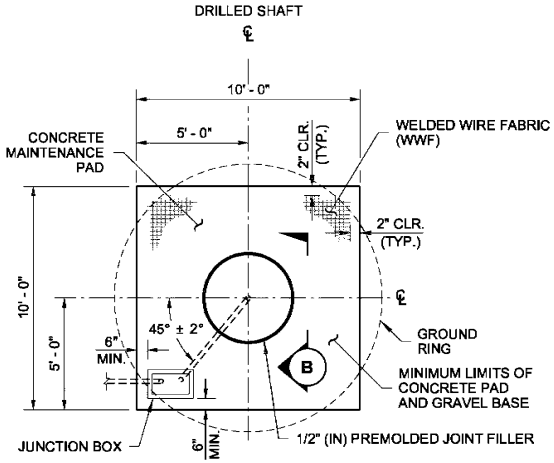

PLAN VIEW

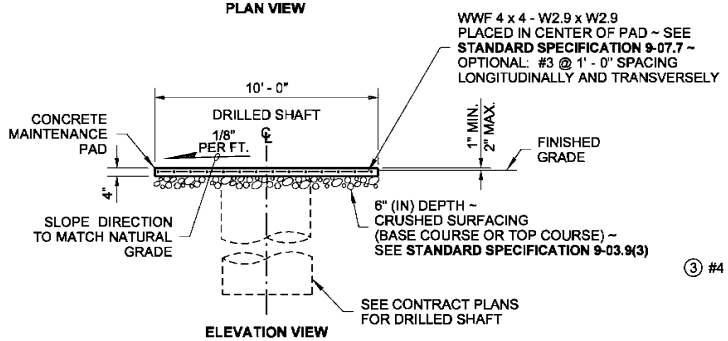

ELEVATION VIEW

4" (IN) MAINTENANCE PAD

ON SLOPES LEVEL TO 10H : 1V

NOTE: CONCRETE FOR 4" (IN) THICK PAD SHALL BE CLASS 3000

KEY NOTE

(1) LIMITS OF PIGMENTED SEALER. TYPICAL FOR ALL RETAINING WALLS.

REINFORCING STEEL BENDING DIAGRAM

SEE **STD. SPEC. 9-07.1(2)** FOR BENDING DIAM. ALL DIMENSIONS ARE OUT TO OUT

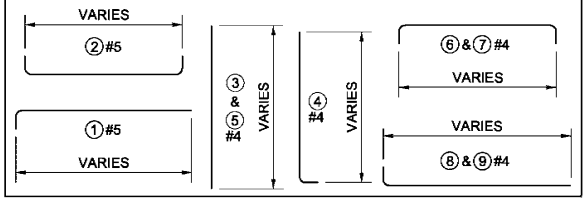

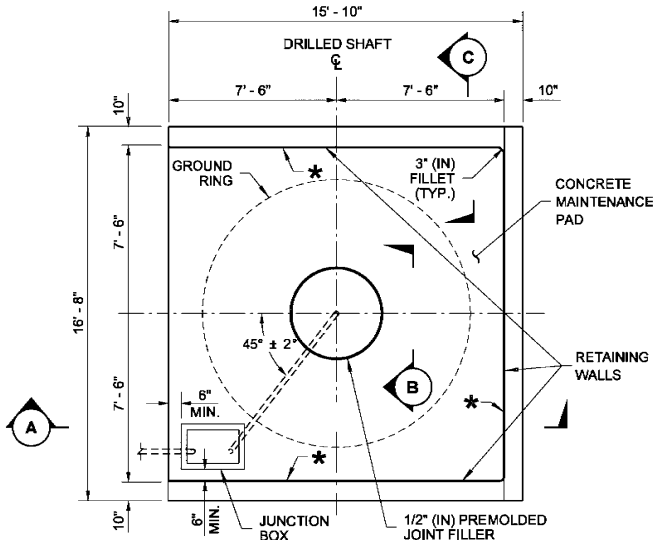

PLAN VIEW

(REINFORCING NOT SHOWN FOR CLARITY)

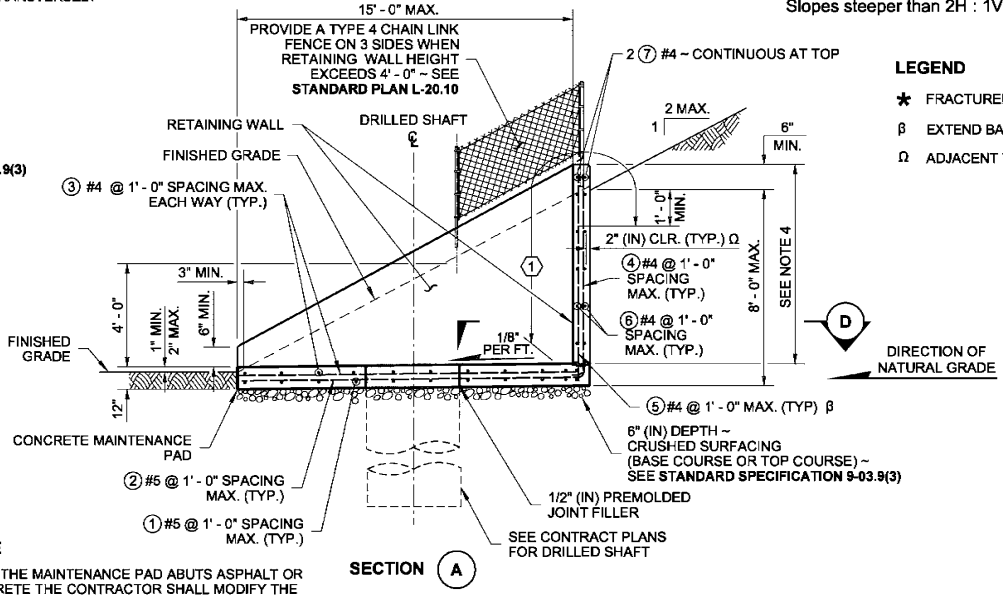

SECTION (A)

NOTE

WHEN THE MAINTENANCE PAD ABUTS ASPHALT OR CONCRETE THE CONTRACTOR SHALL MODIFY THE FINISHED GRADE 1" (IN) MINIMUM TO 2" (IN) MAXIMUM.

12" (IN) MAINTENANCE PAD

ON SLOPES STEEPER THAN 10H : 1V

NOTE: CONCRETE FOR 12" (IN) THICK PAD SHALL BE CLASS 4000
(GROUND RING NOT SHOWN FOR CLARITY)

NOTES

1. All material and workmanship shall be in accordance with the **Standard Specifications**.
2. The maintenance pad and retaining walls have been designed to meet the requirements of the **AASHTO LRFD Bridge Design Specifications, 7th Edition, 2014**.
3. Concrete for 12" (in) thick maintenance pad shall be class 4000. Concrete for 4" (in) thick maintenance pad shall be class 3000.
4. Height of wall varies to match slope of finished grade. Contractor shall field-determine wall height at each maintenance pad location and obtain approval from the Engineer prior to proceeding with construction.
5. All exposed corners shall have 3/4" (in) chamfers.
6. For grounding details not shown, see **Standard Plan J-60.05**.
7. Where concrete cover (clear) thickness is not shown, the clear distance from the face of the concrete to the face of any reinforcing steel shall be as follows: 3" (in) for bottom of maintenance pad, 2" (in) for top of maintenance pad, and 1 1/2" (in) at all other locations.
8. Falsework shall be carefully released to prevent impact or undue stress on the structure.
9. See Contract Plans for number, type, and location of conduits and conductors.
10. Contractor shall orient the maintenance pad to align with the direction of natural grade as shown. Engineer's approval of maintenance pad slope and orientation required prior to proceeding with construction.
11. Use 4" (in) Maintenance Pad on level ground or slopes not exceeding 10H : 1V. Use 12" (in) Maintenance Pad on slopes steeper than 10H : 1V. Slopes steeper than 2H : 1V shall require a special design.

LEGEND

* FRACTURED FIN FINISH

β EXTEND BAR 8" (IN) INTO FOOTING

Ω ADJACENT TO SOIL

RICHARD P. ZELDENRUST — STATE OF WASHINGTON — 25470 — STRUCTURAL ENGINEER — PROFESSIONAL ENGINEER

Zeldenrust, Richard
2015.06.11 15:07:03 -07'00'

HIGH MAST LUMINAIRE MAINTENANCE PAD

STANDARD PLAN J-30.10-00

SHEET 1 OF 2 SHEETS

APPROVED FOR PUBLICATION
Carpenter, Jeff
Jun 18 2015 7:54 AM
STATE DESIGN ENGINEER
Washington State Department of Transportation

DRAWN BY: FERN LIDDELL

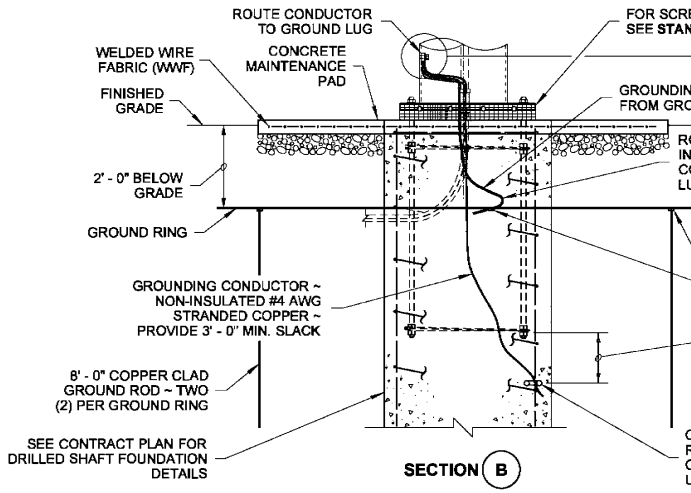

SECTION (B)

4" (IN) THICK MAINTENANCE PAD IS SHOWN IN THIS VIEW ~
12" (IN) THICK MAINTENANCE PAD DETAIL IS SIMILAR
(REINFORCING, ANCHOR BOLTS, AND GUIDEPOSTS NOT SHOWN IN THIS VIEW FOR CLARITY)

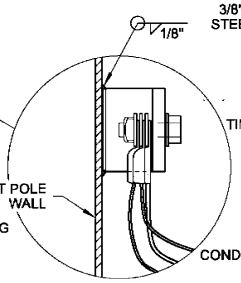

INTERIOR VIEW

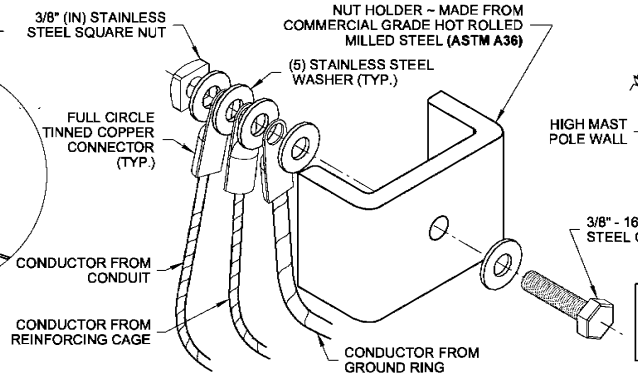

EXPLODED VIEW

BOLTS, NUTS, AND WASHERS ~ **ASTM F593** OR **A193 TYPE 304** OR **TYPE 316** STAINLESS STEEL (S.S.)

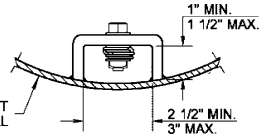

PLAN VIEW

GROUNDING LUG DETAIL

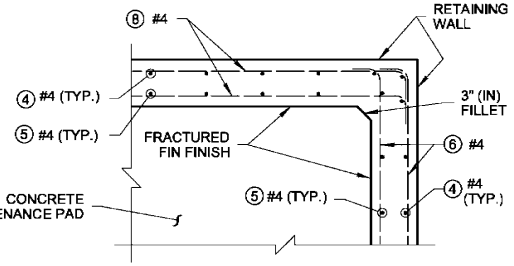

SECTION (D)

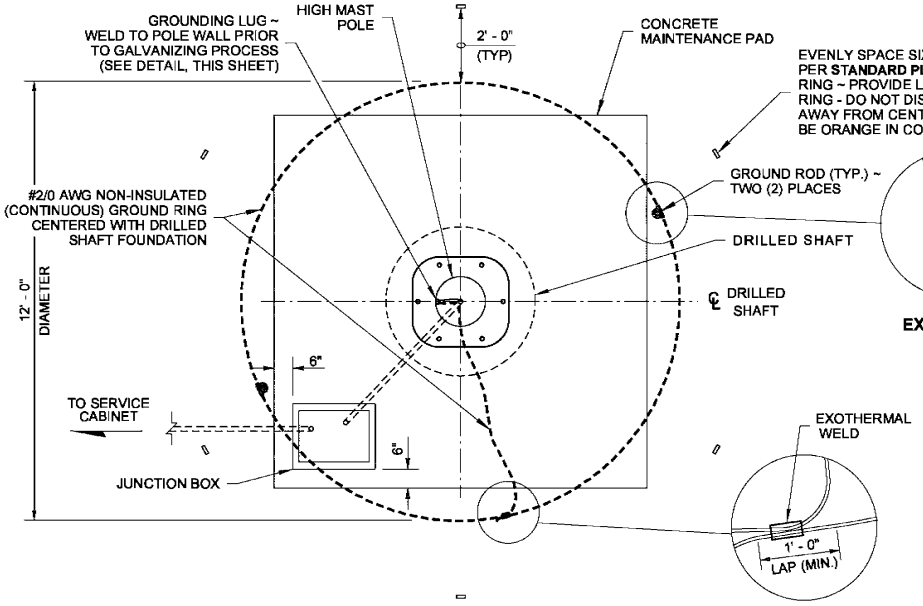

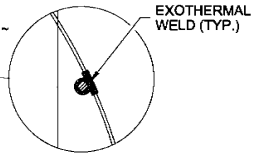

EXOTHERMAL WELD

PLAN VIEW

HIGH MAST POLE MAINTENANCE PAD AND GROUNDING DETAILS

4" (IN) THICK MAINTENANCE PAD IS SHOWN IN THIS VIEW ~
12" (IN) THICK MAINTENANCE PAD DETAIL IS SIMILAR
(REINFORCING NOT SHOWN FOR CLARITY)

EXOTHERMAL WELD

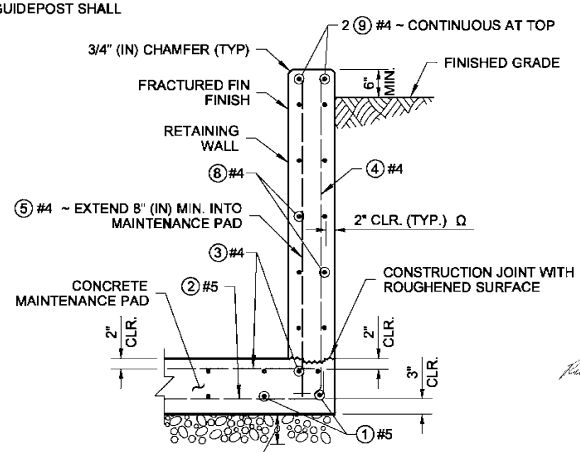

SECTION (C)

(CHAIN LINK FENCE NOT SHOWN FOR CLARITY)

RICHARD P. ZELDENRUST
STATE OF WASHINGTON
25470
STRUCTURAL ENGINEER
PROFESSIONAL ENGINEER

Zeldenrust, Richard
2015.06.11 15:07:28 -07'00'

HIGH MAST LUMINAIRE MAINTENANCE PAD

STANDARD PLAN J-30.10-00

SHEET 2 OF 2 SHEETS

APPROVED FOR PUBLICATION
Carpenter, Jeff
Jun 18 2015 7:54 AM
STATE DESIGN ENGINEER
Washington State Department of Transportation

This page left blank intentionally.

DRAWN BY: BILL BERENS

(1) 3/8" (in) × 2" (in) × 2" (in) Frame Bonding Stud Plate with 1/4 NC × 1" Stainless Steel Bonding Stud.
- Weld Bonding Stud to Frame Bonding Plate.
- Weld to lid support frame.
- 1/4" (in) weld ~ 3 sides.
- Grind lid bearing surface flat after welding.
- All corners rounded. Corners along exposed sheared or cut edges shall be broken by light grinding to achieve an approximate 1/16" (in) chamfer or rounding.
- Protect conductors with fireproof cloth prior to welding.
- Omit Frame Bonding Stud Plate if the Frame Bonding point already exists.

(2) Weld all around lid bonding stud ~ 1/4 NC × 1" stainless steel ~ liberally coat entire assembly w/ anti-seize compound.

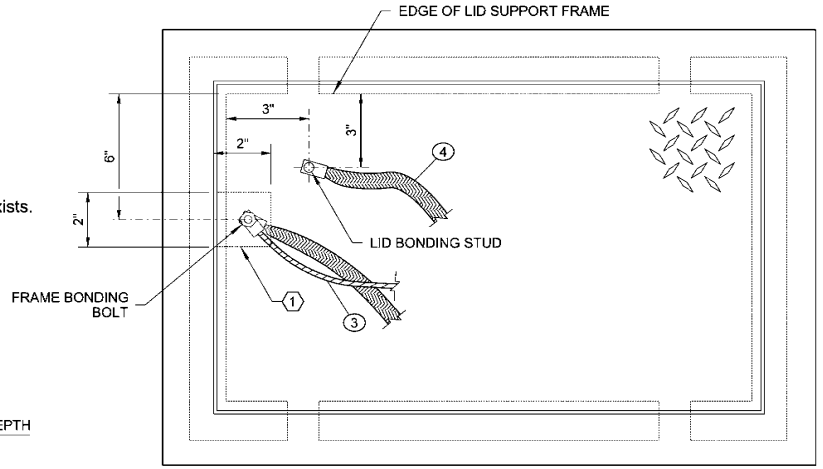

PLAN

KEY

(1) BONDING JUMPER

(2) EQUIPMENT GROUNDING CONDUCTOR

(3) BONDING JUMPER ATTACHED TO BOX WALL COUPLING NUT

(4) BONDING JUMPER ATTACHED TO BOX LID(S) GROUND STUD. # 8 AWG (MIN.) × 4' (FT) TINNED BRAIDED COPPER.

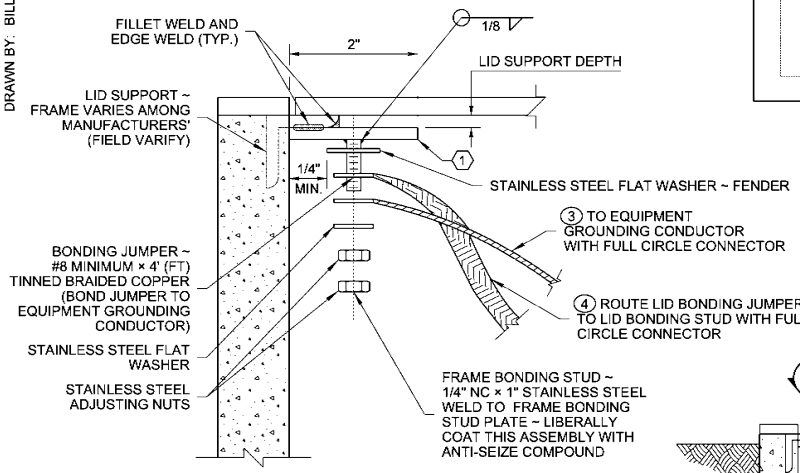

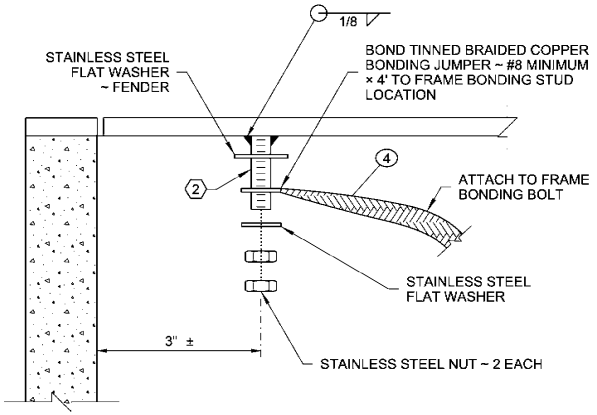

LID BONDING DETAIL (B)

FRAME BONDING DETAIL (A)

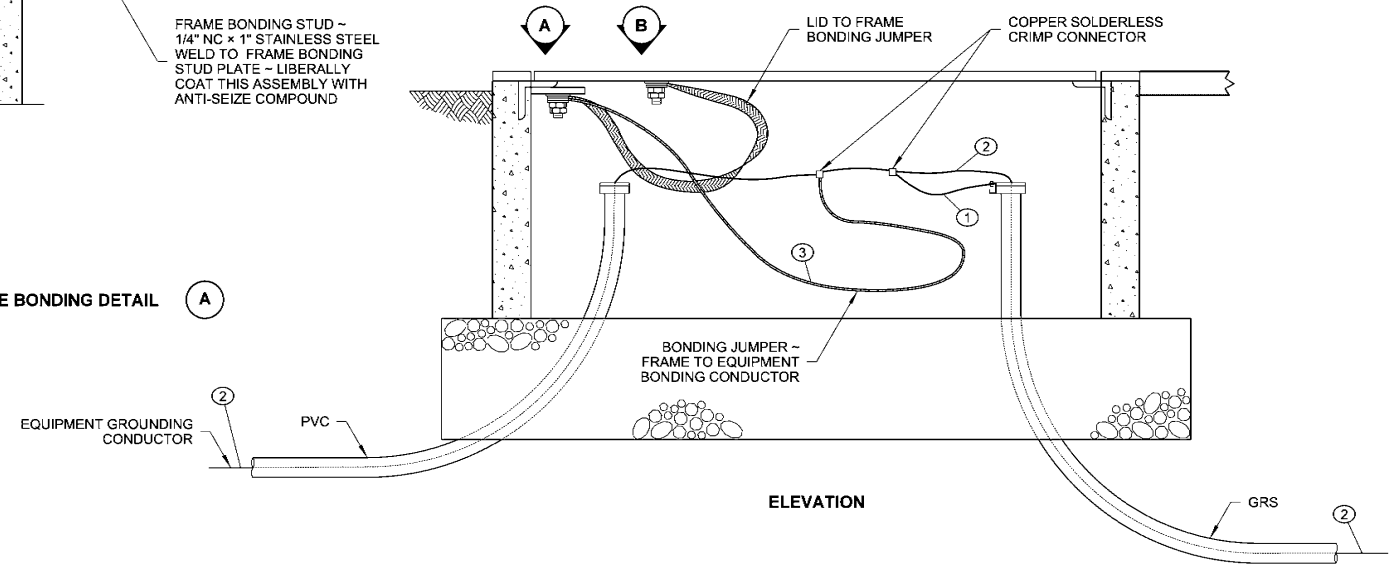

ELEVATION

THEODORE JOSEPH BAILEY
STATE OF WASHINGTON
39820
REGISTERED
PROFESSIONAL ENGINEER

Bailey, Ted
Jul 19 2016 1:28 PM

EXISTING JUNCTION BOX RETROFIT GROUNDING DETAILS

STANDARD PLAN J-40.05-00

SHEET 1 OF 1 SHEET

APPROVED FOR PUBLICATION
Carpenter, Jeff
Jul 21 2016 8:32 AM
STATE DESIGN ENGINEER
Washington State Department of Transportation

DRAWN BY: LISA CYFORD

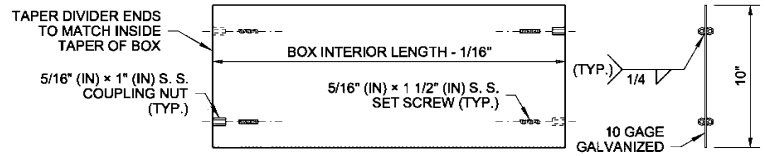

DIVIDER PLATE
ELEVATION VIEW
(FOR TYPE 2 JUNCTION BOX ONLY)

JUNCTION BOX DIMENSION TABLE

MARK	ITEM	BOX TYPE	
		TYPE 1	TYPE 2
A	OUTSIDE LENGTH OF JUNCTION BOX	22"	33"
B	OUTSIDE WIDTH OF JUNCTION BOX	17"	22 1/2"
C	INSIDE LENGTH OF JUNCTION BOX	18" ~ 19"	28" ~ 29"
D	INSIDE WIDTH OF JUNCTION BOX	13" ~ 14"	17" ~ 18"
E	LID LENGTH	17 5/8"	28 5/8"
F	LID WIDTH	12 5/8"	18 1/8"
	CAPACITY ~ CONDUIT DIAMETER	6"	12"

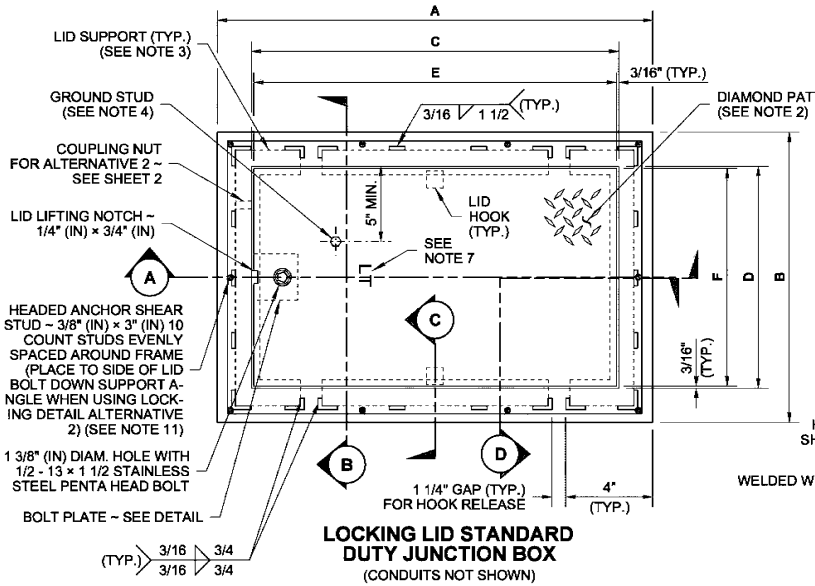

LOCKING LID STANDARD DUTY JUNCTION BOX
(CONDUITS NOT SHOWN)

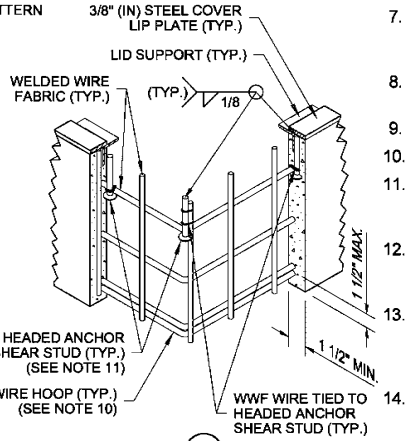

SECTION (D)
PERSPECTIVE VIEW

NOTES

1. All box dimensions are approximate. Exact configurations vary among manufacturers.
2. Minimum lid thickness shown. Junction Boxes installed in sidewalks, walkways, and shared-use paths shall have a slip-resistant coating on the lid and lip cover plate, and shall be installed with the surface flush with and matched to the grade of the sidewalk, walkway, or shared-use path. The non-slip lid shall be identified with permanent markings on the underside, indicating the type of surface treatment (see Contract Documents for details) and the year of manufacture. The permanent marking shall be 1/8" (in) line thickness formed with a mild steel weld bead and shall be placed prior to hot-dip galvanizing.
3. Lid support members shall be 3/16" (in) minimum thick steel C, L, or T shape, welded to the frame.
4. A 1/4-20 NC × 3/4" (in) stainless steel ground stud shall be welded to the bottom of the lid; include (2) stainless steel nuts and (2) stainless steel flat washers.
5. Bolts and nuts shall be liberally coated with anti-seize compound.
6. Equipment Bonding Jumper shall be # 8 AWG min. × 4' (ft) of tinned braided copper.
7. The System Identification letters shall be 1/8" (in) line thickness formed with a mild steel weld bead. See Cover Marking detail. Grind off diamond pattern before forming letters. For System Identification details, see **Standard Specification 9-29.2(4)**.
8. When required in the Contract, provide a 10" (in) x 27 1/2" (in), 10 gage divider plate, complete, with fasteners, in each Type 2 Junction Box where specified.
9. When required in Contract, provide a 12" (in) deep extension for each Type 2 Junction Box where specified.
10. See the **Standard Specifications** for alternative reinforcement and class of concrete.
11. Headed Anchor Shear Studs must be welded to the Steel Cover Lip Plate and wire tied in two places to the vertical Welded Wire Fabric when in contact with each other. Wire tie all other Headed Anchor Shear Studs to the horizontal Welded Wire Fabric.
12. Lid Bolt Down Attachment Tab provides a method of retrofitting by using a mechanical process in lieu of welding. Attachment Tab shown depicts a typical component arrangement; actual configurations of assembly will vary among manufacturers. See approved manufacturers' shop drawings for specifics.
13. Unless otherwise noted in the plans or approved by the Engineer, Junction Boxes, Cable Vaults, and Pull Boxes shall not be placed within the sidewalks, walkways, shared use paths, traveled ways or paved shoulders. All Junction Boxes, Cable Vaults, and Pull Boxes placed within the traveled way or paved shoulders shall be Heavy-Duty.
14. Distance between the top of the conduit and the bottom of the Junction Box lid shall be 6" (in) min. to 8" (in) max. for final grade of new construction only. See **Standard Specification 8-20.3(5)**. Where adjustments are to be made to existing Junction Boxes, or for interim construction stages during the contract, the limits shall be from 6" (in) min. to 10" (in) max. See **Standard Specification 8-20.3(6)**.

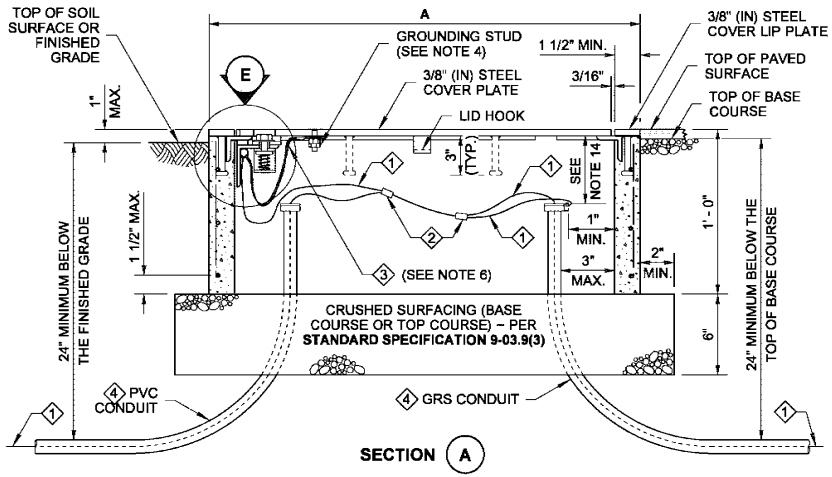

SECTION (A)

1. Equipment Grounding Conductor
2. Copper Solderless Crimp Connector
3. Equipment Bonding Jumper (See Note 6)
4. See Contract for conduit size and number

COVER MARKING DETAIL

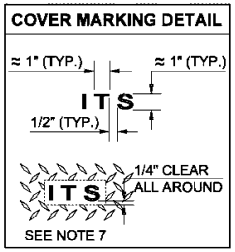

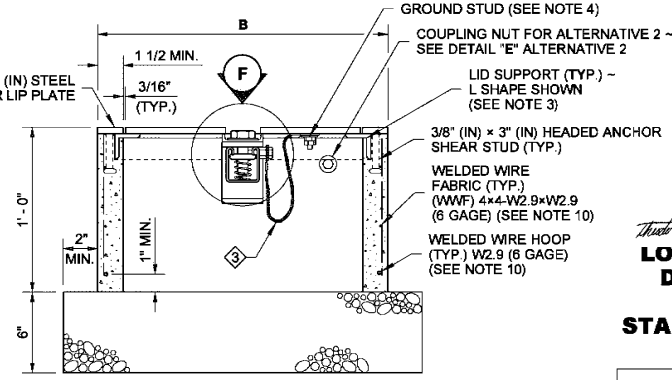

SECTION (B)
(CONDUITS NOT SHOWN)

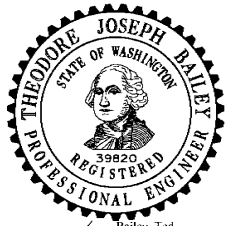

Theodore Joseph Bailey
Bailey, Ted
Apr 25 2016 9:32 AM

LOCKING LID STANDARD DUTY JUNCTION BOX TYPES 1 & 2 STANDARD PLAN J-40.10-04

SHEET 1 OF 2 SHEETS

APPROVED FOR PUBLICATION
Carpenter, Jeff
Apr 28 2016 3:12 PM
STATE DESIGN ENGINEER
Washington State Department of Transportation

DRAWN BY: LISA CYFORD

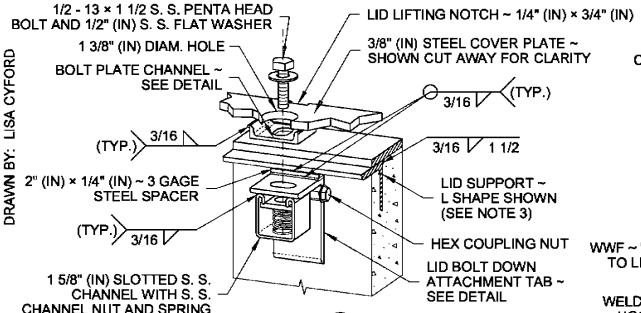

DETAIL F
ALTERNATIVE 1 SHOWN
PERSPECTIVE VIEW

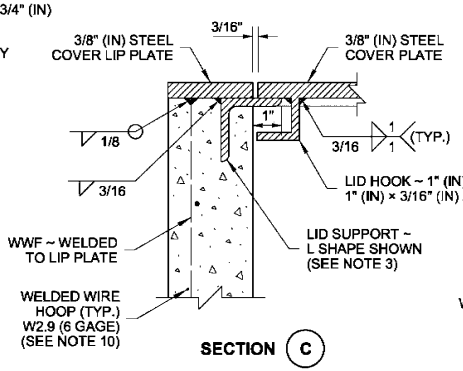

SECTION C

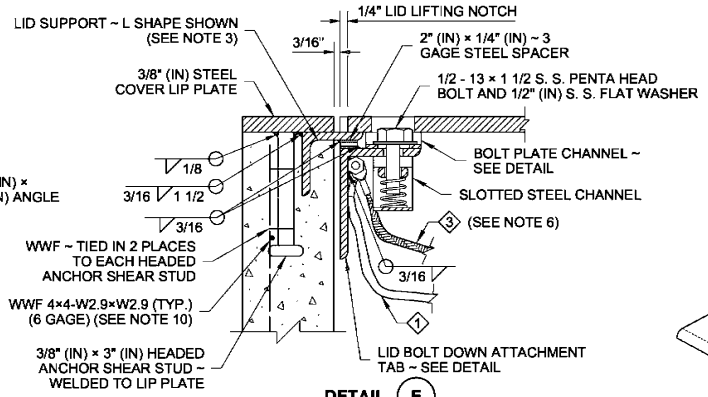

DETAIL E
ALTERNATIVE 1 SHOWN

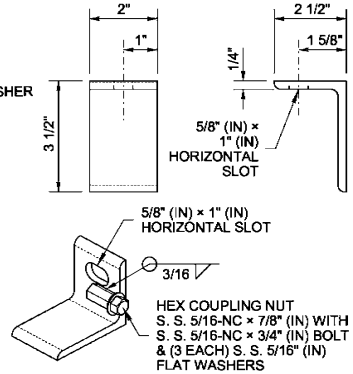

ALTERNATIVE 1
LID BOLT DOWN ATTACHMENT TAB
(SEE NOTE 12)

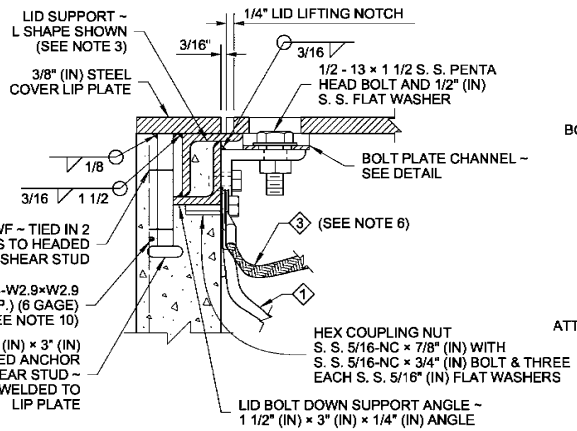

DETAIL E
ALTERNATIVE 2 SHOWN

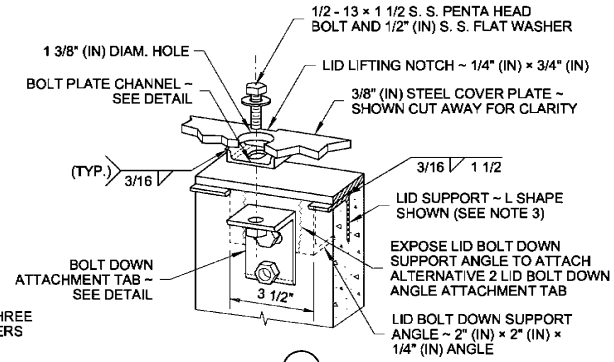

DETAIL F
ALTERNATIVE 2 SHOWN
PERSPECTIVE VIEW

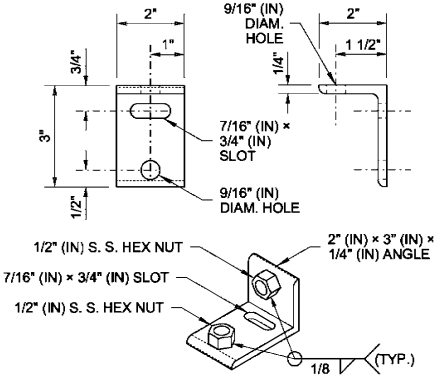

ALTERNATIVE 2
LID BOLT DOWN ATTACHMENT TAB
(SEE NOTE 12)

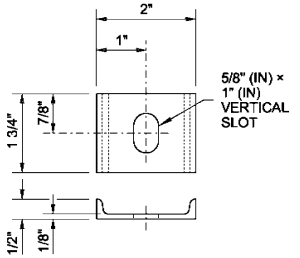

BOLT PLATE CHANNEL

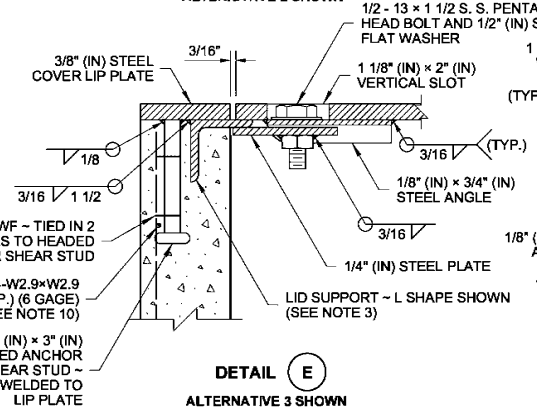

DETAIL E
ALTERNATIVE 3 SHOWN

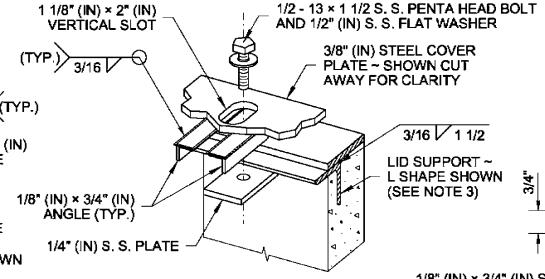

DETAIL F
ALTERNATIVE 3 SHOWN
PERSPECTIVE VIEW

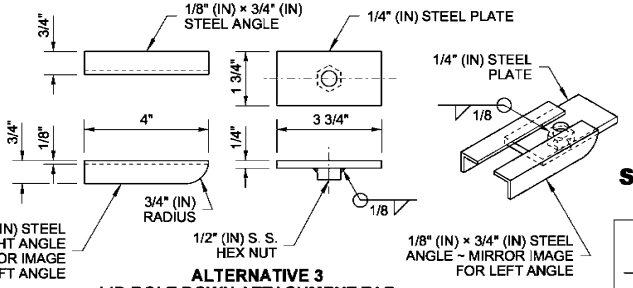

ALTERNATIVE 3
LID BOLT DOWN ATTACHMENT TAB
(SEE NOTE 12)

THEODORE JOSEPH BAILEY
STATE OF WASHINGTON
39820
REGISTERED
PROFESSIONAL ENGINEER

Bailey, Ted
Apr 25 2016 9:33 AM

LOCKING LID STANDARD DUTY JUNCTION BOX TYPES 1 & 2 STANDARD PLAN J-40.10-04

SHEET 2 OF 2 SHEETS

APPROVED FOR PUBLICATION
Carpenter, Jeff
Apr 28 2016 3:12 PM
STATE DESIGN ENGINEER
Washington State Department of Transportation

DRAWN BY: LISA CYFORD

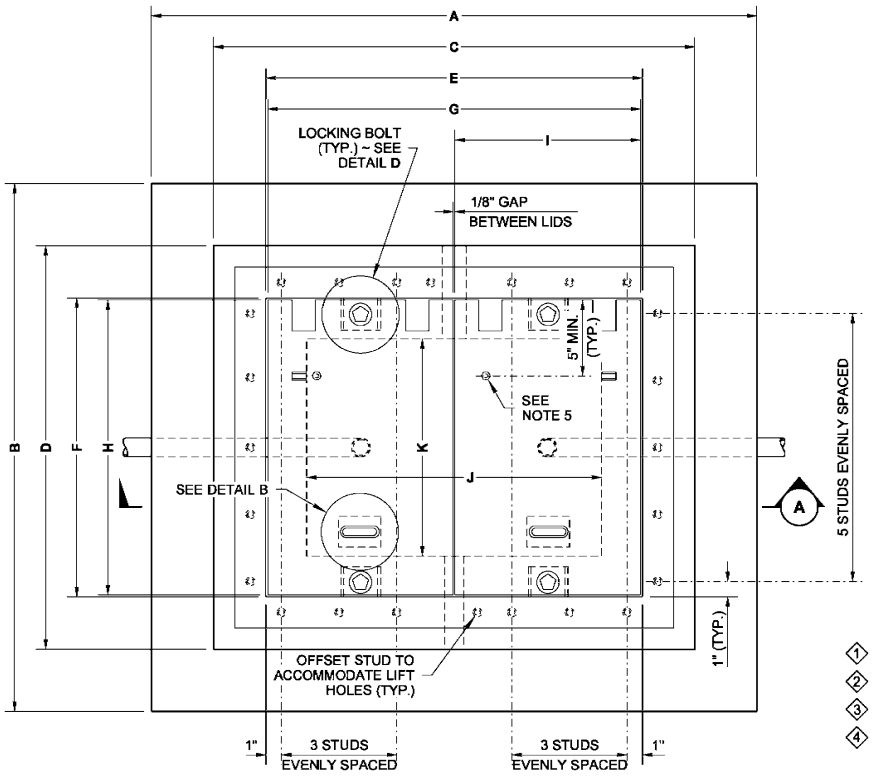

TOP VIEW

JUNCTION BOX DIMENSION TABLE				
MARK	ITEM	BOX TYPE		
		TYPE 4	TYPE 5	TYPE 6
A	OVERALL LENGTH	39"	48"	56"
B	OVERALL WIDTH	34"	37"	44"
C	JUNCTION BOX LENGTH	31"	40"	48"
D	JUNCTION BOX WIDTH	26"	29"	36"
E	LID OPENING LENGTH	24"	33 1/8"	41 1/8"
F	LID OPENING WIDTH	19"	22 1/8"	29 1/4"
G	TYPE 4 LID LENGTH	24"	——	——
H	TYPE 4, 5 & 6 LID WIDTH	19"	21 7/8"	29"
I	TYPE 5 & 6 LID LENGTH	——	16 3/8"	20 3/8"
J	INSIDE BOX LENGTH	19"	28"	36"
K	INSIDE BOX WIDTH	14"	17"	24"
X	STIFFENER SPACING	VARIES	VARIES	VARIES
Y	STIFFENER SPACING	VARIES	VARIES	VARIES
Z	STIFFENER LENGTH	18 1/4"	21 1/8"	28 1/4"
CAPACITY ~ CONDUIT DIAM.		6"	12"	24"

1. Equipment Grounding Conductor
2. Copper Solderless Crimp Connector
3. Equipment Bonding Jumper (See Note 8)
4. See Contract Plans and Special Provisions for conduit size and number

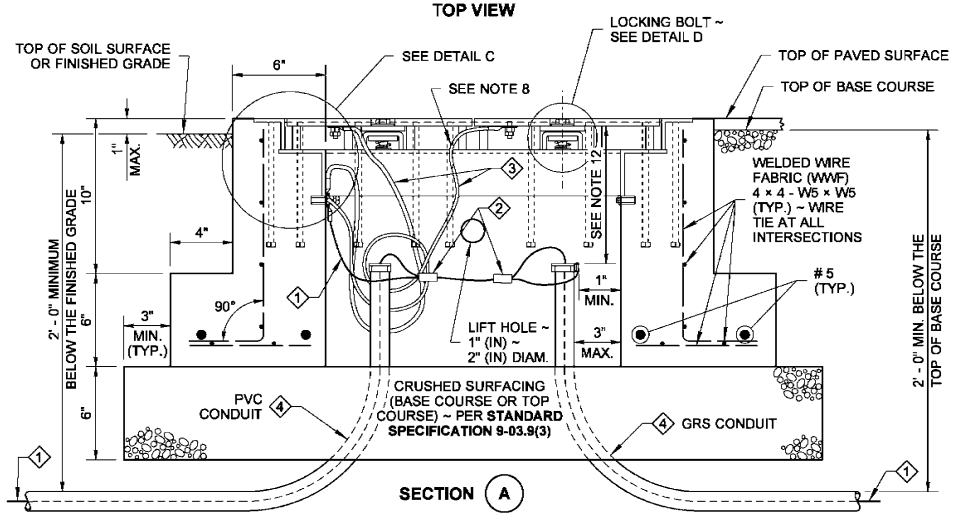

SECTION (A)

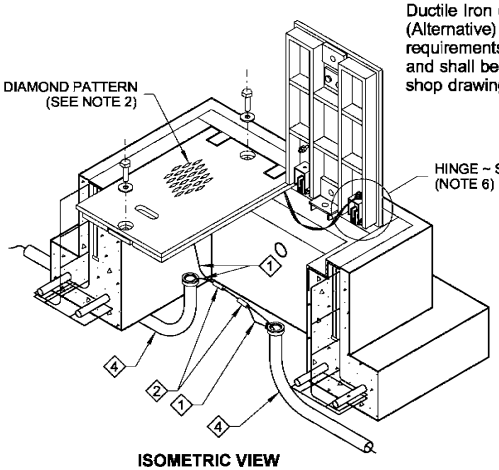

ISOMETRIC VIEW
TYPE 5 AND 6 SHOWN

NOTES

1. All box dimensions are approximate. Exact configurations vary among manufacturers.
2. All lid thicknesses are minimum.
3. Lid perimeter shall bear on frame. Mill to bearing seat and lid perimeter for full even contact after fabrication of frame and lid. Lid and frame units with uneven bearing will be rejected.
4. The installed lid and frame shall fit with full even contact around the perimeter of a junction box after installation. Care shall be taken to prevent debris accumulation on the contact surfaces.
5. A 1/4-20 NC × 1" (in) S. S. ground stud shall be welded to the bottom of each lid: include (2) each S. S. nuts and (3) each S. S. flat washers.
6. The hinges shall allow the lids to open 180°. When lid assembly is Ductile Iron (Alternative) and equipped with Safety Bars, lids shall open 110°.
7. Bolts and nuts shall be liberally coated with anti-seize compound.
8. Connect Equipment Bonding Jumper to ground stud on lid. As an alternative to ground stud connection, the Equipment Bonding Jumper shall be attached to the front face of the hinge pocket with a 5/16-20 NC × 1" (in) S. S. bolt, (2) each S. S. nuts, and (3) each S. S. flat washers. Equipment bonding jumper shall be #8 AWG min. × 4' (ft) of tinned braided copper.
9. The System Identification letters shall be 1/8" (in) line thickness formed by a mild steel weld bead. See Cover Marking details. Grind off diamond pattern before forming letters. Ductile iron lid lettering shall be recessed, 1/8" (in) line thickness. See **Standard Specification 9-29.2(4)** for details.
10. See **Standard Specification 9-29.2(1)B** for class of concrete.
11. Unless otherwise noted in the plans or approved by the Engineer, Junction Boxes, Cable Vaults, and Pull Boxes shall not be placed within the traveled way or paved shoulders. All Junction Boxes, Cable Vaults, and Pull Boxes placed within the traveled way or paved shoulders shall be Heavy-Duty. Heavy-Duty Junction Boxes shall not be installed in sidewalks, walkways, and shared use paths.
12. Distance between the top of the conduit and the bottom of the Junction Box lid shall be 6" (in) min. to 8" (in) max., for final grade of new construction only. See **Standard Specification 8-20.3(5)**. Where adjustments are to be made to existing Junction Boxes, or for interim construction stages during the contract, the limits shall be from 6" min. to 10" (in) max. See **Standard Specification 8-20.3(6)**.
13. Junction Box Types 4, 5, or 6 may be equipped with Ductile Iron (Alternative) Lid(s) and a Cast Iron (Alternative) Frame. Junction box shall meet the requirements of **Standard Specification 9-29.2** and shall be in accordance with approved shop drawings.

THEODORE JOSEPH BAILEY
STATE OF WASHINGTON
39820
REGISTERED
PROFESSIONAL ENGINEER

Theodore Joseph Bailey
Bailey, Ted
Apr 25 2016 5:08 PM

HEAVY-DUTY JUNCTION BOX TYPES 4, 5, & 6

STANDARD PLAN J-40.20-03

SHEET 1 OF 2 SHEETS

APPROVED FOR PUBLICATION
Carpenter, Jeff
Apr 28 2016 3:15 PM
STATE DESIGN ENGINEER
Washington State Department of Transportation

DRAWN BY: LISA CYFORD

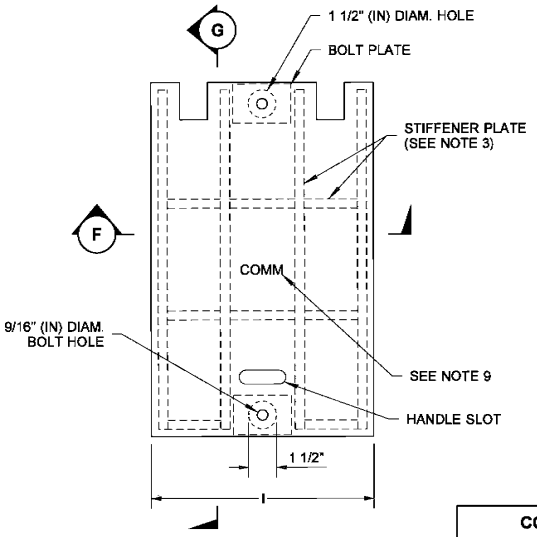

PLAN VIEW
LID
TYPE 5 AND 6 SHOWN

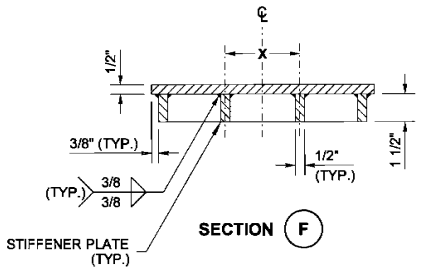

SECTION (F)

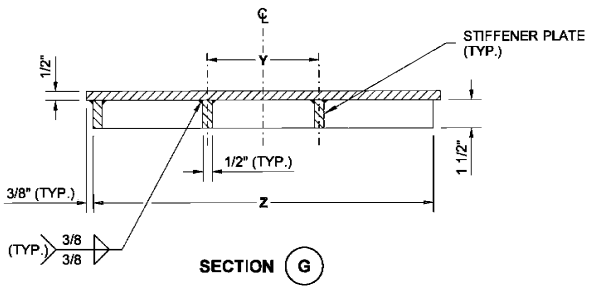

SECTION (G)

COVER MARKING DETAIL

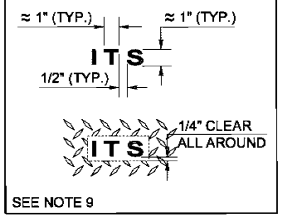

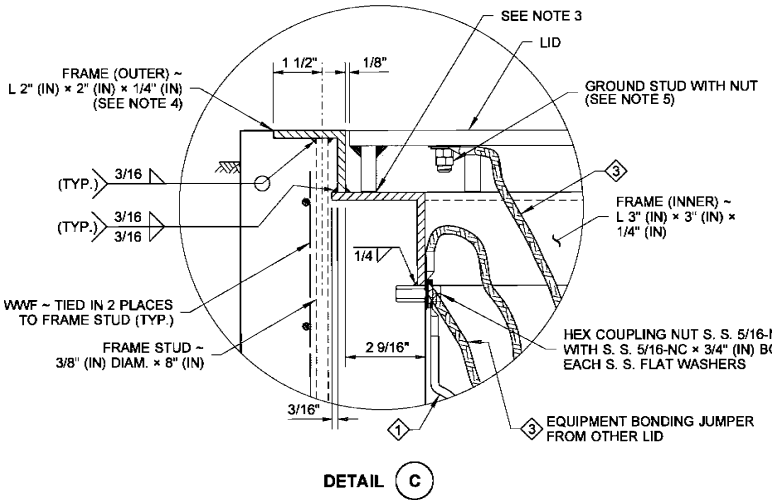

DETAIL (C)

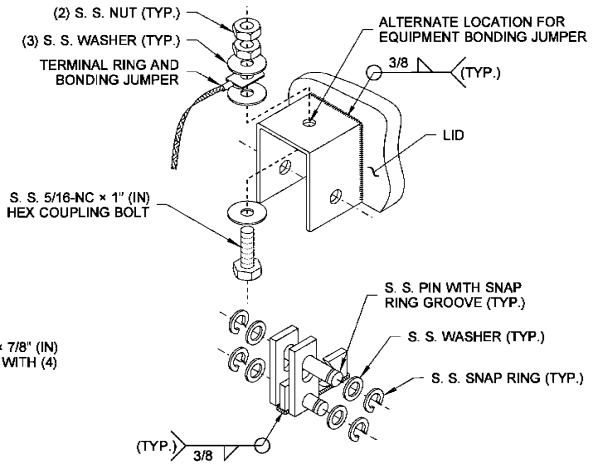

DETAIL (E)
HINGE

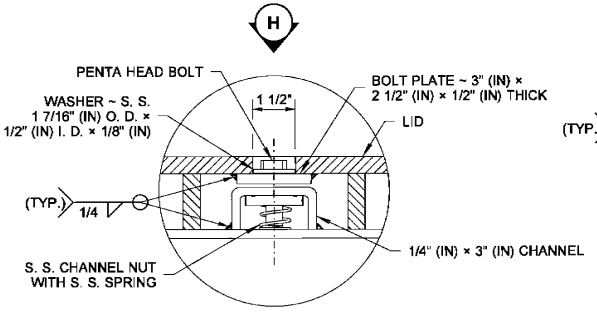

DETAIL (D)
LOCKING BOLT

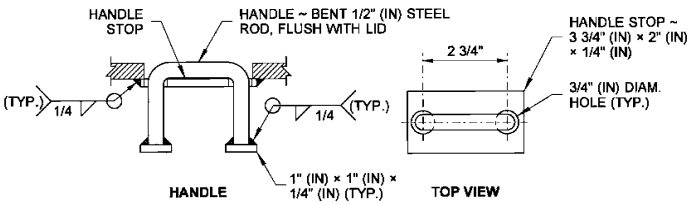

DETAIL (B)

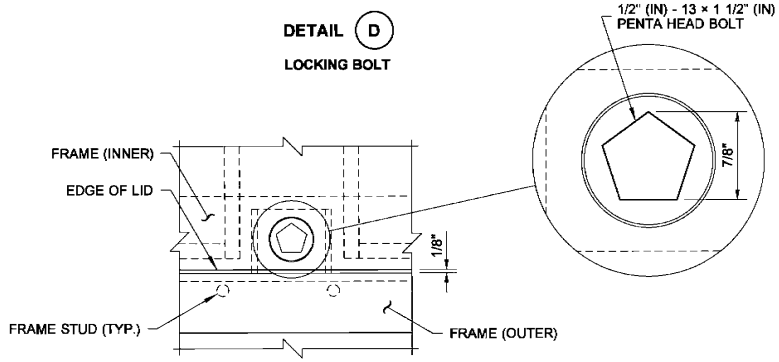

VIEW (H)

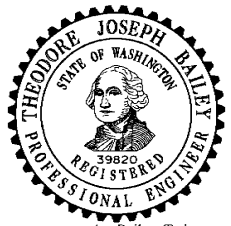

Bailey, Ted
Apr 25 2016 5:09 PM

HEAVY-DUTY JUNCTION BOX TYPES 4, 5, & 6

STANDARD PLAN J-40.20-03

SHEET 2 OF 2 SHEETS

APPROVED FOR PUBLICATION
Carpenter, Jeff
Apr 28 2016 3:15 PM
STATE DESIGN ENGINEER
Washington State Department of Transportation

DRAWN BY: LISA CYFORD

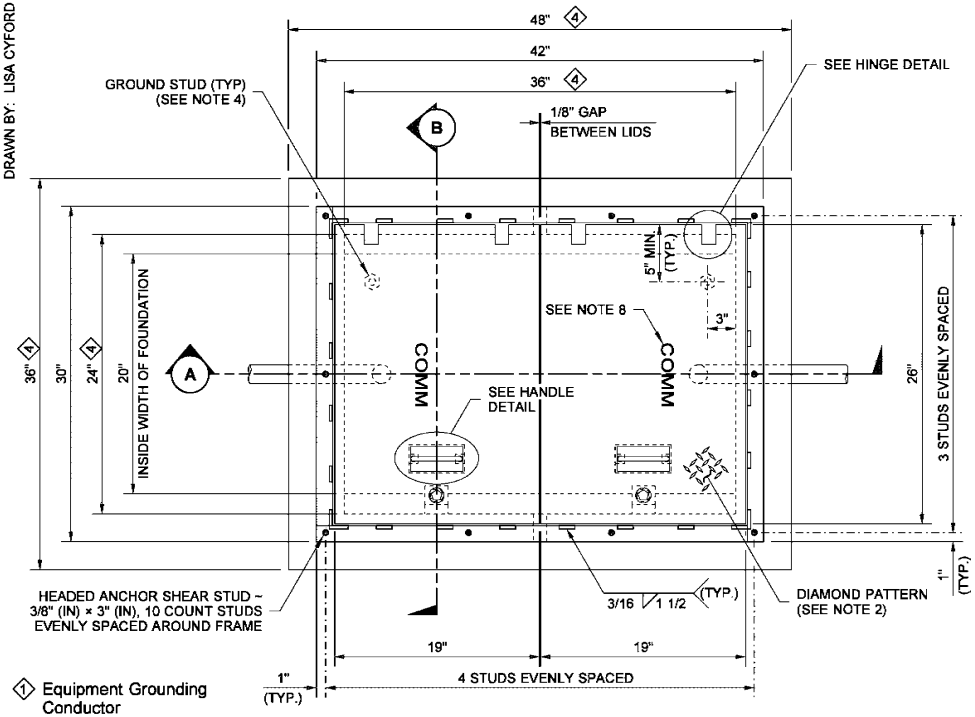

PLAN VIEW

LOCKING LID STANDARD DUTY JUNCTION BOX

1. Equipment Grounding Conductor
2. Copper Solderless Crimp Connector
3. Equipment Bonding Jumper
4. Foundation
5. See Contract for conduit size and number

COVER MARKING DETAIL

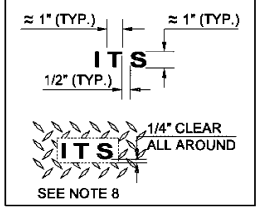

NOTES

1. All box dimensions are approximate. Exact configurations vary among manufacturers.
2. Minimum lid thicknesses are shown. Junction Boxes installed in sidewalks, walkways, and shared-use paths shall have a slip-resistant coating on the lid and lip cover plate and shall be installed with the surface flush with and matched to the grade of the sidewalk, walkway, or shared-use path. The non-slip lid shall be identified with permanent markings on the underside, indicating the type of surface treatment (see Contract Documents for details) and the year of manufacture. The permanent marking shall be 1/8" (in) line thickness formed with a mild steel weld bead and shall be placed prior to hot-dip galvanizing.
3. Lid support members shall be 3/16" (in) min. thick steel C, L, or T shape, welded to the frame. Exact configurations vary among manufacturers.
4. A 1/4-20 NC × 3/4" (in) S. S. ground stud shall be welded to the bottom of each lid; include (2) S. S. nuts and (2) S. S. flat washers.
5. The hinges shall allow the lids to open 180°.
6. Bolts and nuts shall be liberally coated with anti-seize compound.
7. Connect Equipment Bonding Jumper to ground stud on lid. As an alternative to the ground stud connection, the Equipment Bonding Jumper shall be attached to the front face of the hinge pocket with a 5/16-20 NC × 3/4" (in) S. S. bolt, (2) each S. S. nuts, and (2) each S. S. flat washers. Equipment Bonding Jumper shall be #8 AWG min. × 4' (ft) of tinned braided copper.
8. The System Identification letters shall be 1/8" (in) line thickness formed by a mild steel weld bead. See Cover Marking detail. Grind off diamond pattern before forming letters. See **Standard Specification 9-29.2(4)** for details.
9. See the **Standard Specifications** for alternative reinforcement and class of concrete.
10. See **Standard Plan J-40.10** for Welded Wire Fabric and Headed Anchor Shear Stud attachment details.
11. Capacity ~ conduit diameter = 24" (in)
12. Lid Bolt Down Attachment Tab provides a method of retrofitting by using a mechanical process in lieu of welding. Attachment Tab shown depicts a typical component arrangement; actual configurations of assembly will vary among manufacturers. See approved manufacturers' shop drawing for specifics.
13. Unless otherwise noted in the plans or approved by the Engineer, Junction Boxes, Cable Vaults and Pull Boxes shall not be placed within the sidewalk, walkway, shared use path, traveled way or paved shoulders. All Junction Boxes, Cable Vaults, and Pull Boxes placed within the traveled way or paved shoulders shall be Heavy-Duty.
14. Distance between the top of the conduit and the bottom of the Junction Box lid shall be 6" (in) min. to 8" (in) max. for final grade of new construction only. See **Standard Specification 8-20.3(5)**. Where adjustments are to be made to existing Junction Boxes, or for interim construction stages during the contract, the limits shall be from 6" (in) min. to 10" (in) max. See **Standard Specification 8-20.3(6)**.

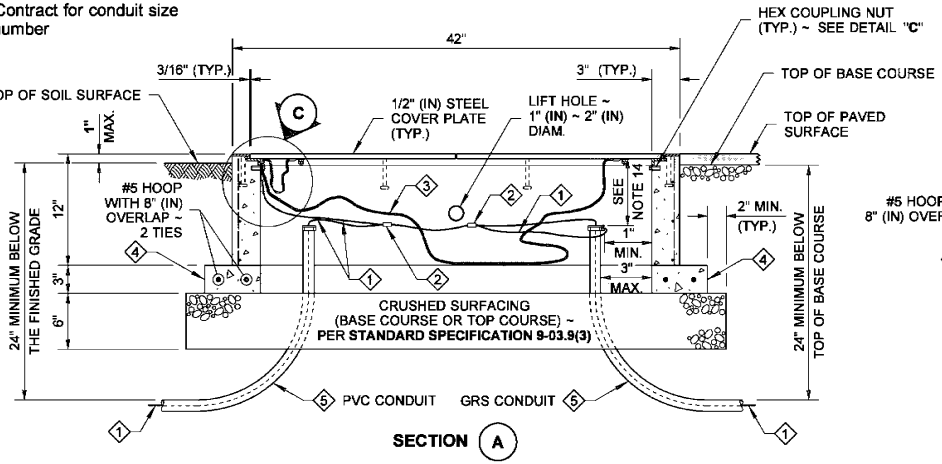

SECTION (A)

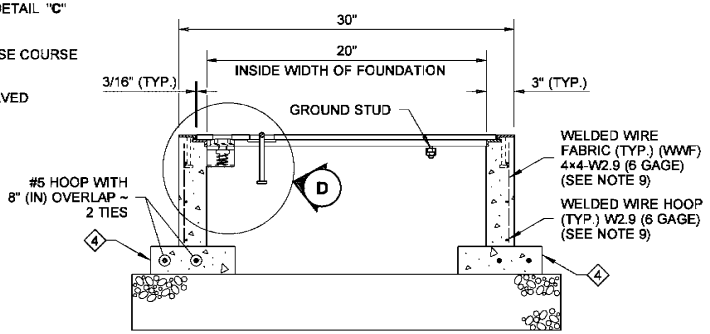

SECTION (B)

CONDUITS NOT SHOWN

THEODORE JOSEPH BAILEY
STATE OF WASHINGTON
39820
REGISTERED
PROFESSIONAL ENGINEER

Bailey, Ted
Apr 25 2016 5:09 PM

LOCKING LID STANDARD DUTY JUNCTION BOX TYPE 8 STANDARD PLAN J-40.30-04

SHEET 1 OF 2 SHEETS

APPROVED FOR PUBLICATION
Carpenter, Jeff
Apr 28 2016 3:15 PM
STATE DESIGN ENGINEER
Washington State Department of Transportation

DRAWN BY: LISA CYFORD

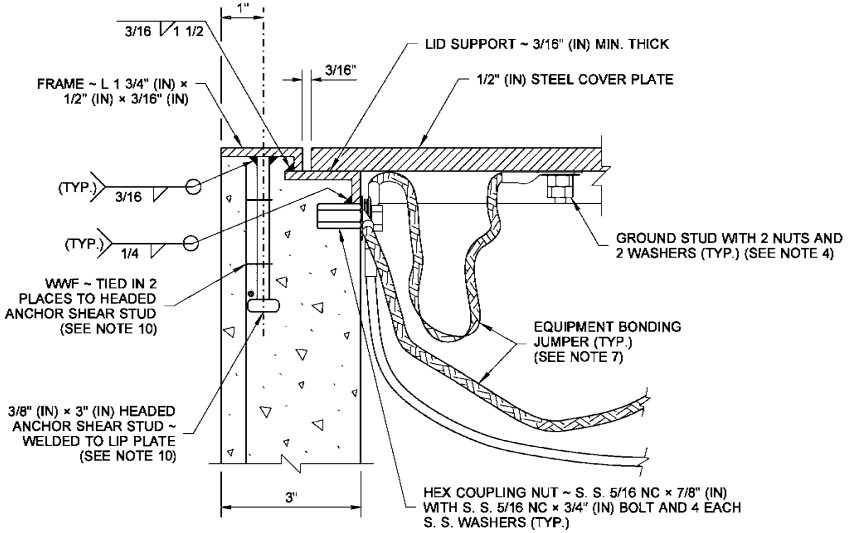

DETAIL C

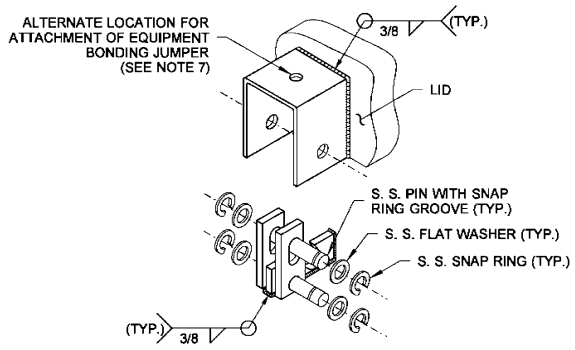

HINGE DETAIL

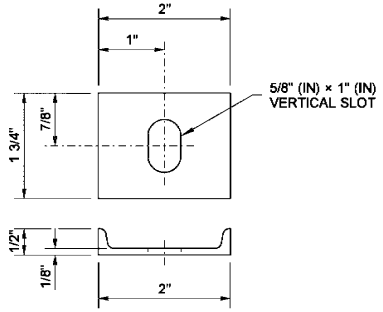

BOLT PLATE CHANNEL

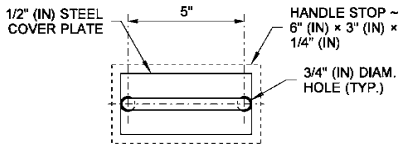

TOP VIEW

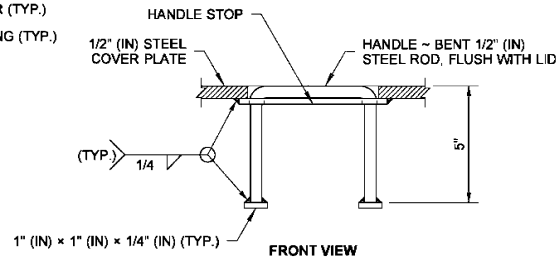

FRONT VIEW

HANDLE DETAIL

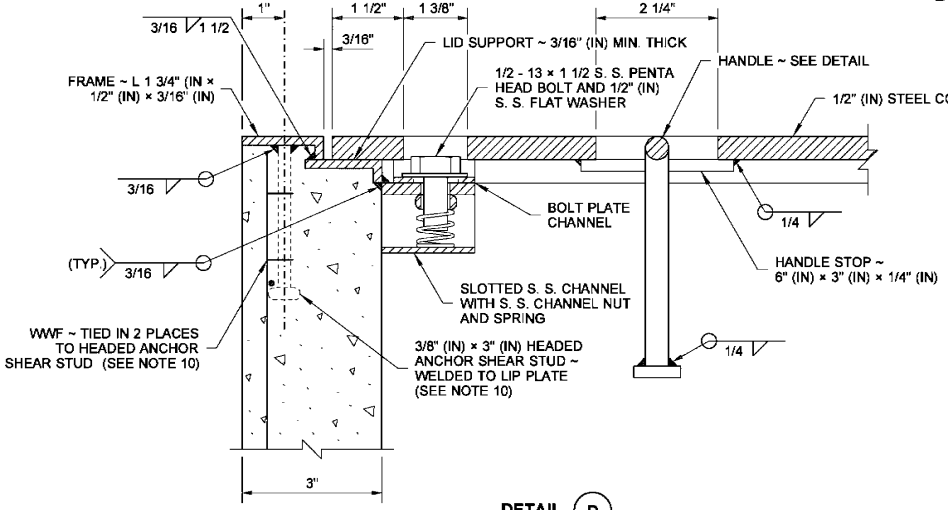

DETAIL D

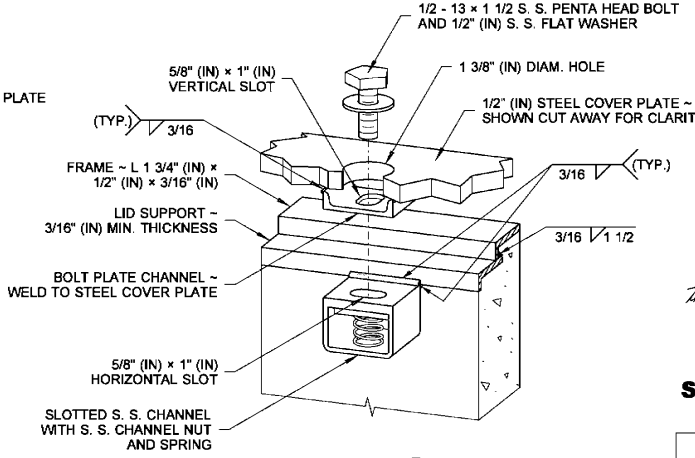

DETAIL D

ISOMETRIC VIEW

THEODORE JOSEPH BAILEY
STATE OF WASHINGTON
39820
REGISTERED
PROFESSIONAL ENGINEER

Apr 25 2016 5:10 PM

LOCKING LID STANDARD DUTY JUNCTION BOX TYPE 8 STANDARD PLAN J-40.30-04

SHEET 2 OF 2 SHEETS

APPROVED FOR PUBLICATION

Carpenter, Jeff
Apr 28 2016 3:15 PM

STATE DESIGN ENGINEER

Washington State Department of Transportation

DRAWN BY: LISA CYFORD

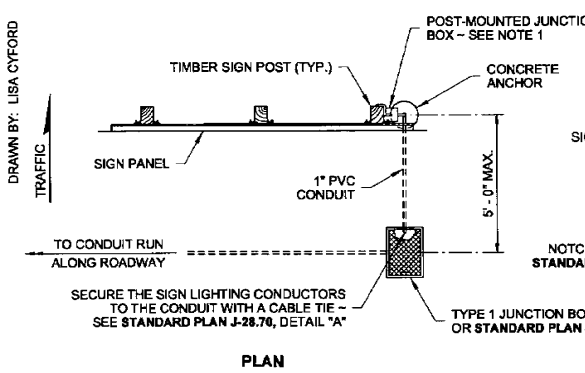

PLAN

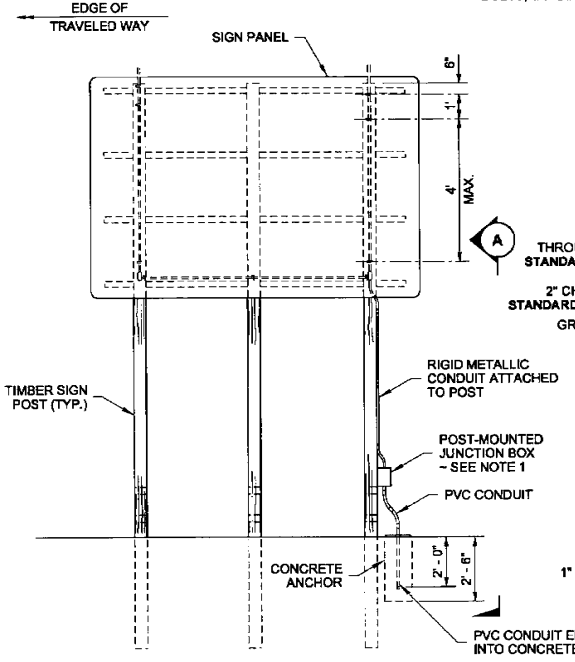

ELEVATION

JUNCTION BOX ATTACHMENT TO TIMBER SIGN SUPPORT

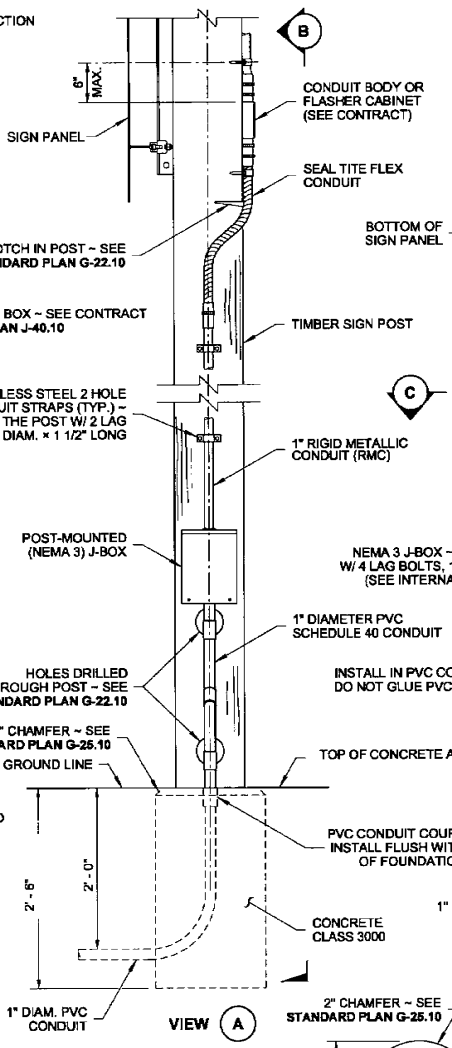

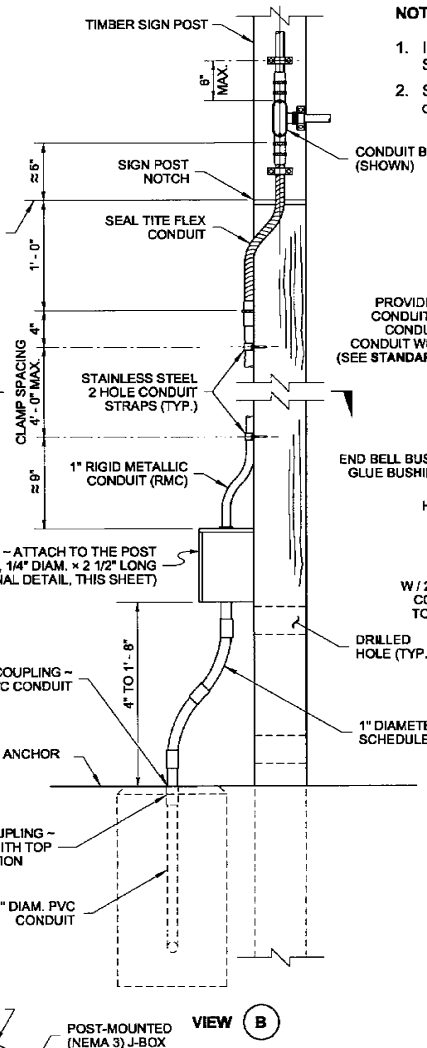

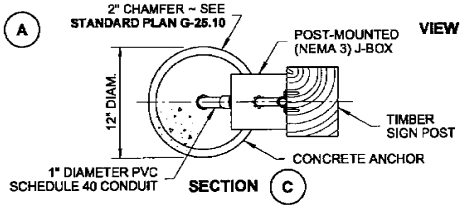

NOTE

1. Install the Junction Box on the Timber Sign Post or the Steel Sign Support that is farthest from the roadway.
2. See **Standard Plan J-21.16** for Flashing Beacon Installation details. See **Standard Plan J-21.17** for Electrical Wiring details.

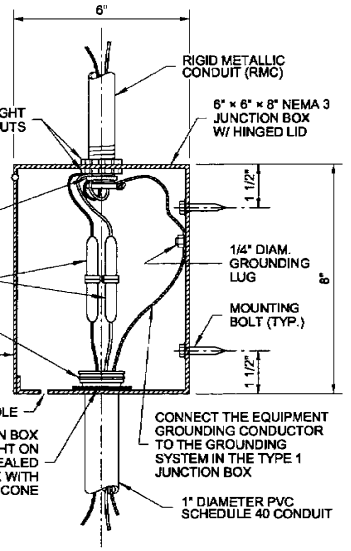

JUNCTION BOX INTERNAL DETAIL

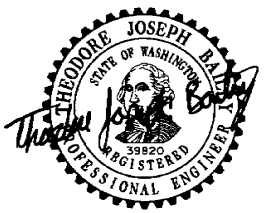

5-29-13

SIGN POST-MOUNTED JUNCTION BOX

STANDARD PLAN J-40.35-01

SHEET 1 OF 3 SHEETS

APPROVED FOR PUBLICATION

STATE DESIGN ENGINEER — DATE 5/29/13

Washington State Department of Transportation

DRAWN BY: LISA CYFORD

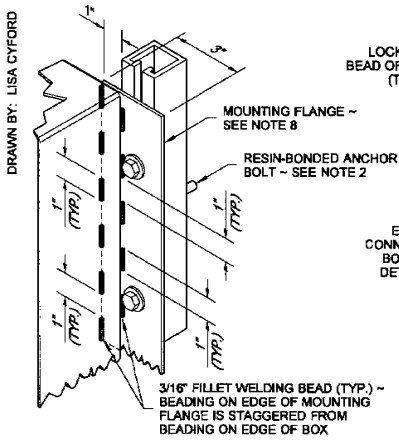

DETAIL (A)

STAINLESS STEEL CHANNEL MOUNTING DETAIL

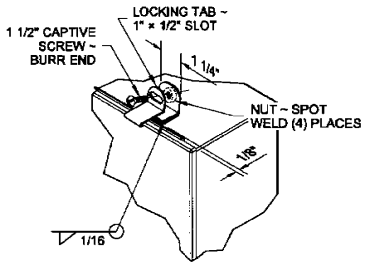

DETAIL (B)

LOCKING TAB DETAIL

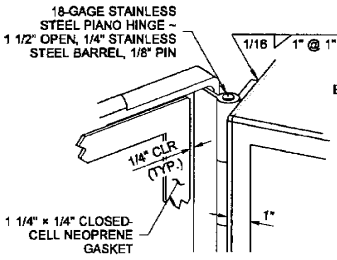

DETAIL (C)

PIANO HINGE DETAIL

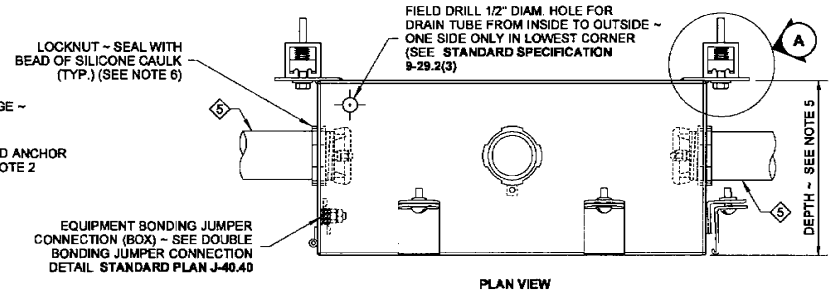

PLAN VIEW

(DOOR AND WIRING NOT SHOWN FOR CLARITY)

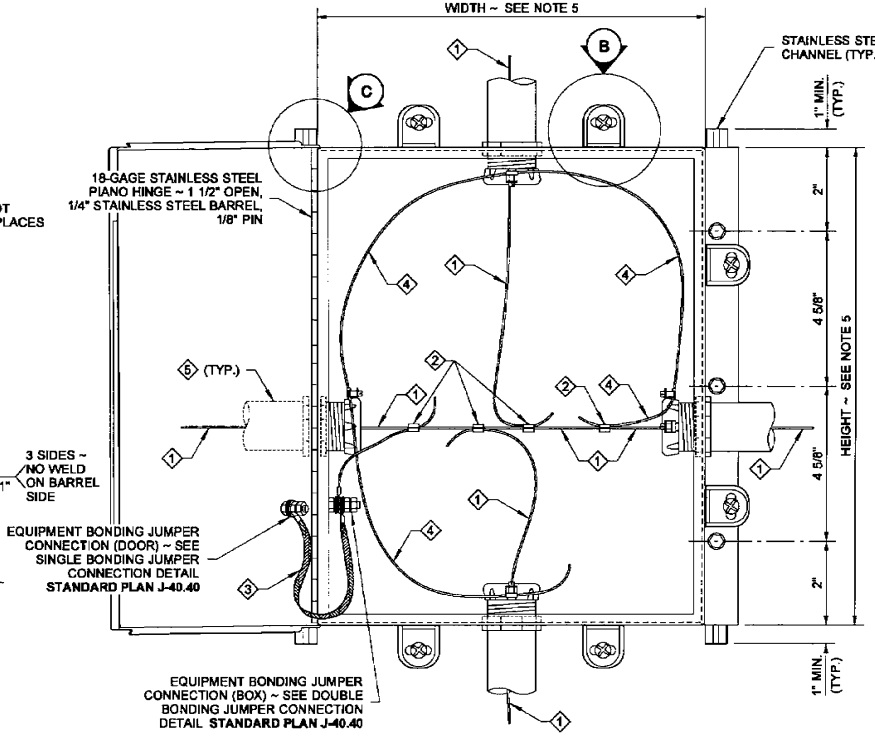

FRONT VIEW

(DOOR OPEN TO SHOW WIRE CONNECTION)

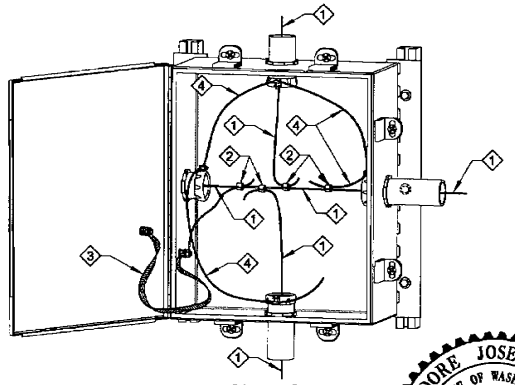

ISOMETRIC VIEW

NOTES

1. Drilling through reinforcing steel is not allowed. If steel is hit while drilling, the location shall be moved and the abandoned hole filled with grout conforming to **Standard Specification 6-02.3(20).**
2. Mount the stainless steel support using an approved resin-bonded anchor system, installed per manufacturer's recommendation. Resin-bonded anchors shall be stainless steel and shall be of 3/8" diameter (Expansion Anchors are not allowed). Anchor bolt embedment shall be 4 1/2" min.
3. There shall be a minimum of 3" edge distance to the centerline of anchor holes in concrete. See **Standard Plan J-60.13** for Stainless Steel Channel details.
4. The System Identification letters on the box lid shall be 1/8" line thickness formed by engraving, stamping, or with a stainless steel weld bead. See System Identification Detail and **Standard Specifications 9-29.2(4).**
5. Junction Box shall be dimensioned as shown in the Contract. If the conduit sizes shown in the Contract are changed, the box dimensions shall be revised in accordance with **NEC 314.28** using the 8 times multiplier for length and width dimensions.
6. Fittings shall be UL listed and CSA-certified watertight on the outside of the Junction Box conduit connection. An insulated grounded end bushing shall be used to terminate Rigid Metal Conduit.
7. Equipment Bonding Jumper shall be # 8 AWG (min.) × 1 foot of tinned, braided copper.
8. Junction Box shall be constructed of 12-gage, Type 304 stainless steel with welded seam construction and # 4 finish. Mounting Flange shall also be 12-gage, Type 304 stainless steel.

1. Equipment Grounding Conductor
2. Copper Solderless Crimp Connector
3. Equipment Bonding Jumper ~ See note 7
4. Equipment Bonding Jumper shall be a continuous conductor. Route to each grounded end bushing and then terminate at equipment grounding conductor.
5. See Contract for conduit size and number

SYSTEM IDENTIFICATION DETAIL

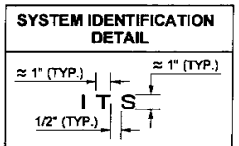

SEE NOTE 4

THEODORE JOSEPH BAILEY
STATE OF WASHINGTON
39820
REGISTERED
PROFESSIONAL ENGINEER

5-15-13

FRONT ENTRY NEMA 4X SURFACE-MOUNT JUNCTION BOX

STANDARD PLAN J-40.39-00

SHEET 1 OF 1 SHEET

APPROVED FOR PUBLICATION

STATE DESIGN ENGINEER — DATE 5/20/13

Washington State Department of Transportation

DRAWN BY: LISA CYFORD

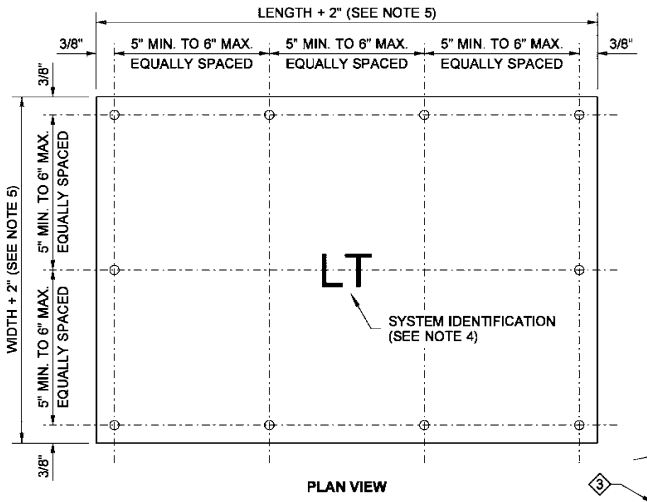

PLAN VIEW

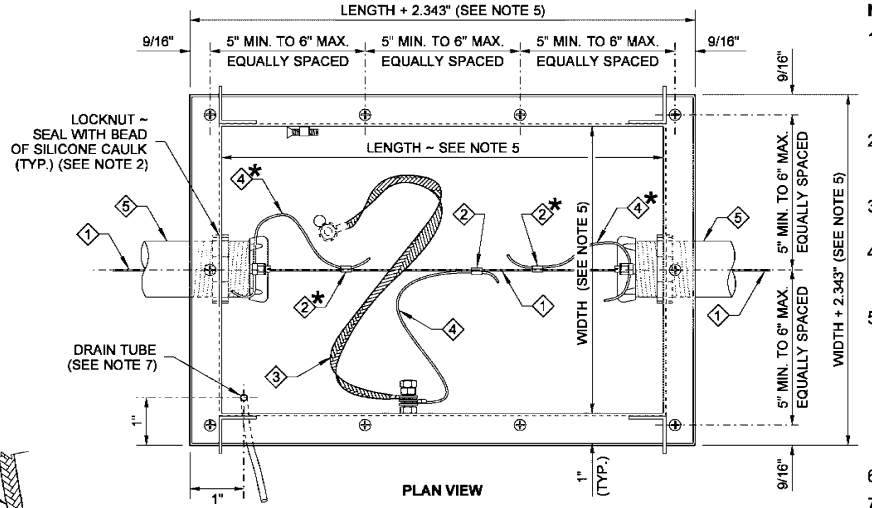

PLAN VIEW

JUNCTION BOX COVER

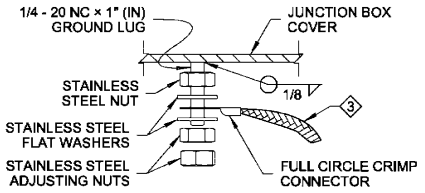

SINGLE BONDING JUMPER CONNECTION DETAIL

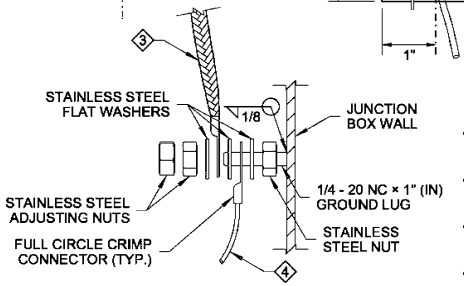

DOUBLE BONDING JUMPER CONNECTION DETAIL

1. Equipment Grounding Conductor
2. Copper Solderless Crimp Connector
3. Equipment Bonding Jumper (See Note 3)
4. Equipment Bonding Jumper
5. See Contract for conduit size and number

* = Omit when non-RMC conduit is installed

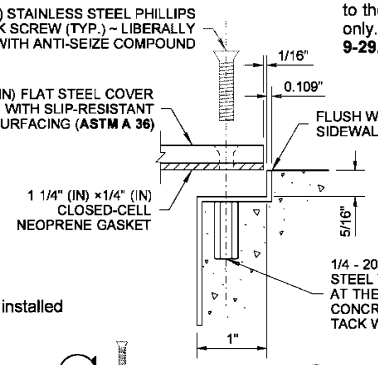

DETAIL (A)

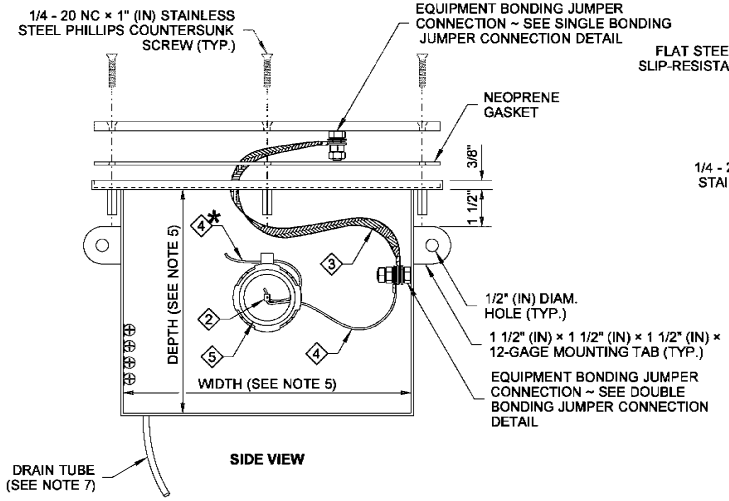

SIDE VIEW

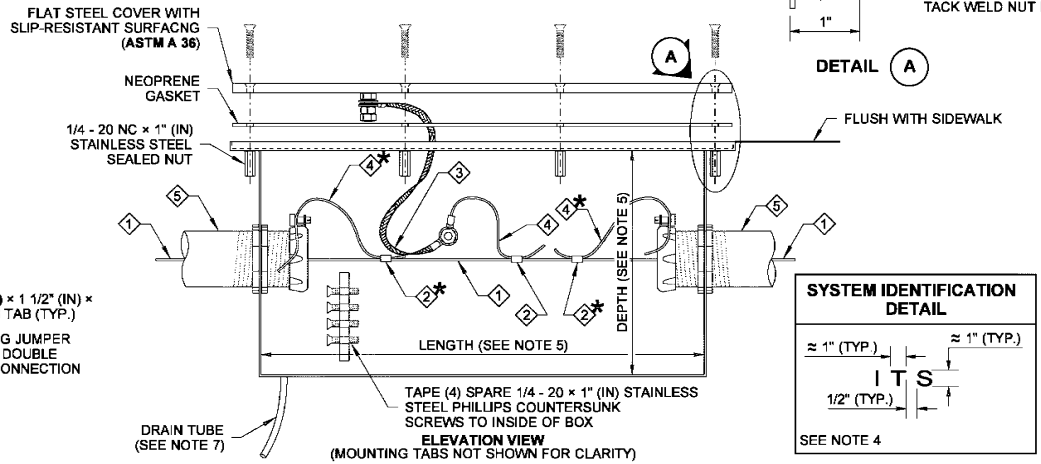

ELEVATION VIEW
(MOUNTING TABS NOT SHOWN FOR CLARITY)

SYSTEM IDENTIFICATION DETAIL

NOTES

1. Junction Box shall be constructed of 12-gage, Type 304 stainless steel with welded seam construction. Mounting Tabs shall be constructed of 12-gage, Type 304 stainless steel. Cover shall be constructed of **ASTM A 36** steel with slip-resistant surfacing.
2. Fittings shall be UL listed and CSA-certified concrete tight on the outside of the Junction Box connection. Use an insulated, grounding end bushing on the inside for Rigid Metal Conduit.
3. Equipment Bonding Jumper shall be # 8 AWG (min.) × 3 feet minimum of tinned, braided copper.
4. The System Identification letters shall be 1/8" (in) line thickness formed by a mild steel weld bead. See **Standard Specification 9-29.2(4).**
5. Junction Box shall be dimensioned as shown in the Contract. If the conduit sizes shown in the Contract are changed, the box dimensions shall be revised in accordance with **NEC 314.28** using the 8 times multiplier for length and width dimension.
   - Maximum Height = Sidewalk Depth
   - Maximum Interior Length = 29" (in)
   - Maximum Interior Width = 18" (in)
6. See **Standard Plan J-40.36** for additional requirements.
7. Field drill 1/2" (in) diameter hole for Drain Tube from the inside to the outside of Junction Box. One place, on the lowest side only. Seal with bead of silicone. See **Standard Specification 9-29.2(3).** For drain tube routing, see **Standard Plan J-50.16.**
8. Conduit capacity is 12" (in) ~ 4" (in) per side.
9. Conduits shall enter through the sides as shown. Conduits shall not enter through the bottom of Junction Box.
10. Liberally coat the threads of the cover fasteners with anti-seize compound during construction and before final closure.

THEODORE JOSEPH BAILEY STATE OF WASHINGTON 39820 REGISTERED PROFESSIONAL ENGINEER

Theodore Joseph Bailey
Bailey, Ted
Apr 25 2016 5:10 PM

NEMA 4X JUNCTION BOX IN SIDEWALK LOCATED ON STRUCTURE

STANDARD PLAN J-40.40-01

SHEET 1 OF 1 SHEET

APPROVED FOR PUBLICATION

Carpenter, Jeff
Carpenter, Jeff
Apr 28 2016 3:16 PM

STATE DESIGN ENGINEER

Washington State Department of Transportation

DRAWN BY: LISA CYFORD

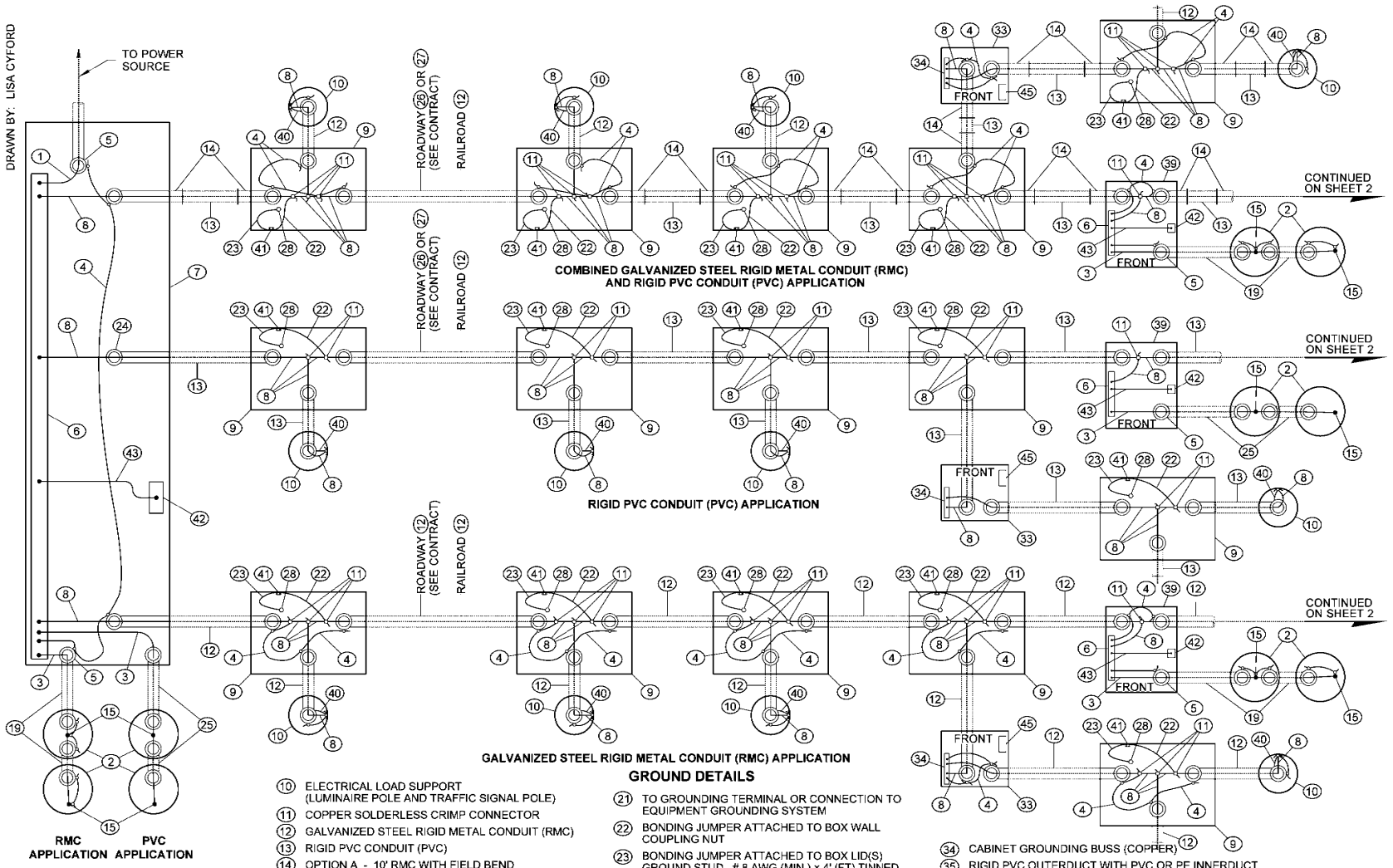

KEY

1. SERVICE NEUTRAL
2. SERVICE GROUND
3. GROUNDING ELECTRODE CONDUCTOR
4. BONDING JUMPER
5. GROUNDING BUSHING (TYP. ALL RMC CONDUIT TERMINATIONS)
6. GROUNDED NEUTRAL BUS (COPPER)
7. SERVICE ENCLOSURE
8. EQUIPMENT GROUNDING CONDUCTOR
9. JUNCTION BOX
10. ELECTRICAL LOAD SUPPORT (LUMINAIRE POLE AND TRAFFIC SIGNAL POLE)
11. COPPER SOLDERLESS CRIMP CONNECTOR
12. GALVANIZED STEEL RIGID METAL CONDUIT (RMC)
13. RIGID PVC CONDUIT (PVC)
14. OPTION A - 10' RMC WITH FIELD BEND
    - APPROVED ADAPTER FITTING
    - GROUNDING BUSHING

    OPTION B - 10' RMC
    - GS FACTORY ELBOWS
    - APPROVED ADAPTER FITTING
    - GS COUPLING
    - GROUNDING BUSHING
15. GROUND ROD
16. EDGE OF FOUNDATION, POLE OR SERVICE SUPPORT
17. CLAMP
18. JUNCTION BOX OR 8" DRAIN TILE WITH APPROVED CONCRETE COVER
19. CODE SIZE RMC
20. TO SERVICE NEUTRAL BUS

GROUND DETAILS

21. TO GROUNDING TERMINAL OR CONNECTION TO EQUIPMENT GROUNDING SYSTEM
22. BONDING JUMPER ATTACHED TO BOX WALL COUPLING NUT
23. BONDING JUMPER ATTACHED TO BOX LID(S) GROUND STUD. # 8 AWG (MIN.) × 4' (FT) TINNED BRAIDED COPPER.
24. END BELL BUSHING (TYP. ALL NON-METALLIC CONDUIT TERMINATIONS)
25. CODE SIZED PVC
26. HIGH-DENSITY POLYETHYLENE CONDUIT (HDPE)
27. NON-METALLIC CONDUIT (PVC) SCHEDULE 80
28. BOX LID(S) GROUND STUD
29. CABLE VAULT
30. PULL BOX
31. ITS CABINET
32. EDGE OF FOUNDATION
33. TRAFFIC SIGNAL CABINET
34. CABINET GROUNDING BUSS (COPPER)
35. RIGID PVC OUTERDUCT WITH PVC OR PE INNERDUCT
36. GALVANIZED STEEL RIGID METAL CONDUIT OUTERDUCT WITH PVC OR PE INNERDUCT
37. EQUIPMENT GROUNDING CONDUCTOR CONNECTION POINT IN CABLE VAULT OR PULL BOX BETWEEN SEPERATE SERVICES
38. DETECTABLE UNDERGROUND WARNING TAPE. COIL 2' INSIDE CABINET, CABLE VAULT, OR PULL BOX
39. TRANSFORMER CABINET
40. GROUNDING CONDUCTOR NON-INSULATED (FROM REINFORCING CAGE)
41. BOX FRAME BONDING ATTACHMENT POINT
42. GROUND LUG WELDED TO CABINET WALL (W/ TINNED COPPER BUSS)
43. CABINET MAIN BONDING JUMPER
44. ITS CAMERA, RAMP METER, TRAFFIC DATA STATION, HIGHWAY ADVISORY RADIO
45. UNGROUNDED CABINET NEUTRAL BUSS (COPPER)

NOTES

1. If parallel circuits of different sizes are contained in one conduit, the size of the grounding conductor shall be determined on the basis of the largest conductor. Only one grounding conductor is required for each conduit, regardless of the number of circuits contained.
2. Service ground per serving utility requirement. If the utility uses aluminum service conductors, an approved Al-Cu pressure-type ground connector shall be used to secure the service neutral to the copper neutral bar in the service enclosure. Except for the above, all grounding conductors shall be copper.
3. Equipment grounding conductors and grounding electrode conductors shall be sized in accordance with the National Electrical Code (No. 8 minimum).

THEODORE JOSEPH BAILEY
STATE OF WASHINGTON
39820
REGISTERED
PROFESSIONAL ENGINEER

Bailey, Ted
Jul 19 2016 1:29 PM

TYPICAL GROUNDING DETAILS

STANDARD PLAN J-60.05-01

SHEET 1 OF 3 SHEETS

APPROVED FOR PUBLICATION
Carpenter, Jeff
Jul 21 2016 8:33 AM
STATE DESIGN ENGINEER

Washington State Department of Transportation

DRAWN BY: LISA CYFORD

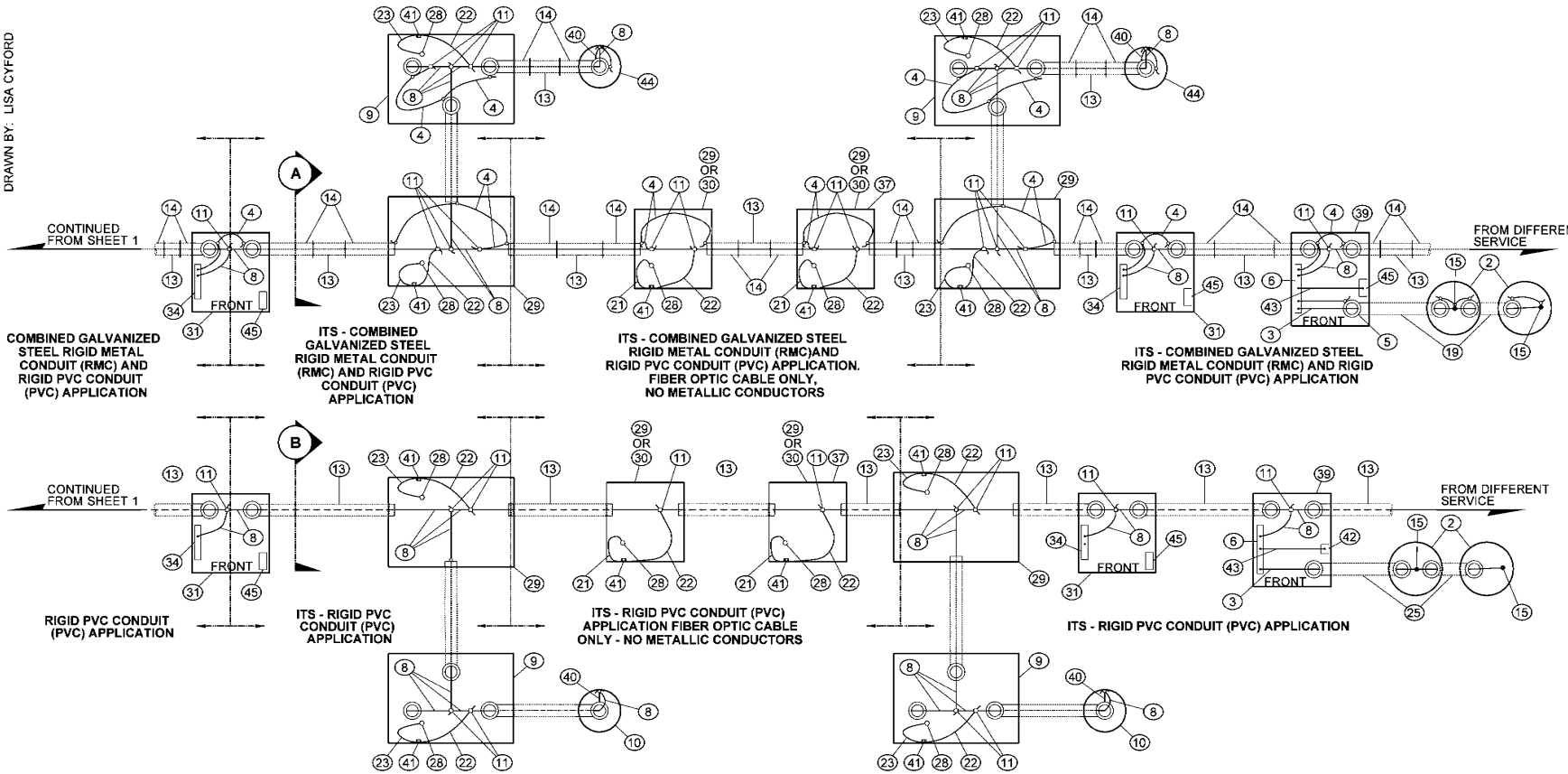

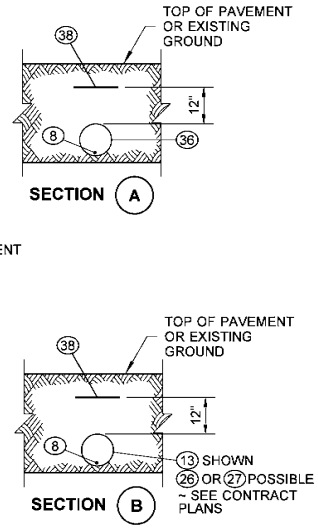

THEODORE JOSEPH BAILEY
STATE OF WASHINGTON
39820
REGISTERED
PROFESSIONAL ENGINEER

Bailey, Ted
Jul 19 2016 1:29 PM

TYPICAL GROUNDING DETAILS

STANDARD PLAN J-60.05-01

SHEET 2 OF 3 SHEETS

APPROVED FOR PUBLICATION
Carpenter, Jeff
Jul 21 2016 8:33 AM
STATE DESIGN ENGINEER
Washington State Department of Transportation

DRAWN BY: LISA CYFORD

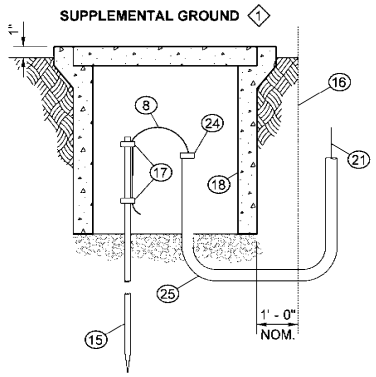

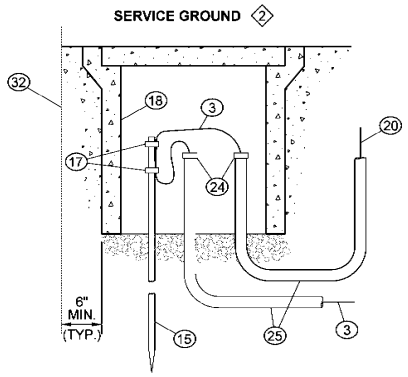

DETAIL A

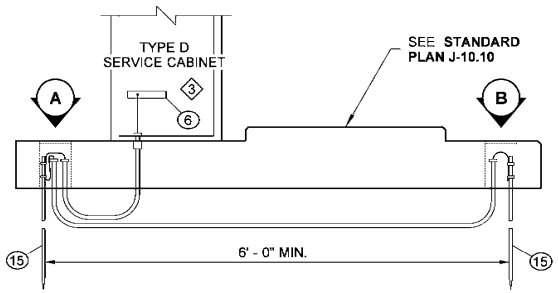

RIGID PVC CONDUIT (PVC) APPLICATION

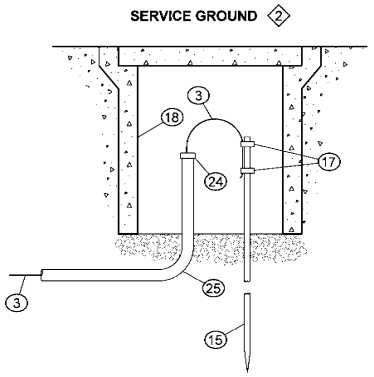

DETAIL B

SEE KEY ON SHEET 1
FOR PARTS

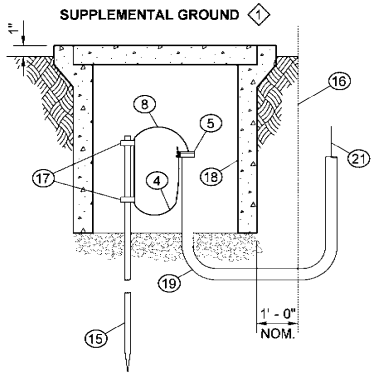

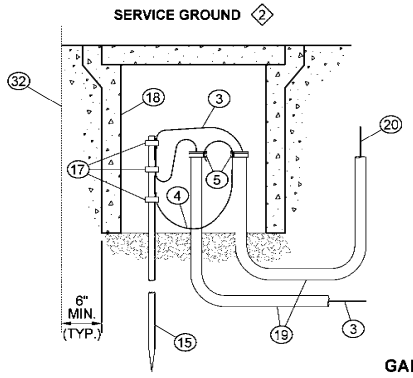

DETAIL C

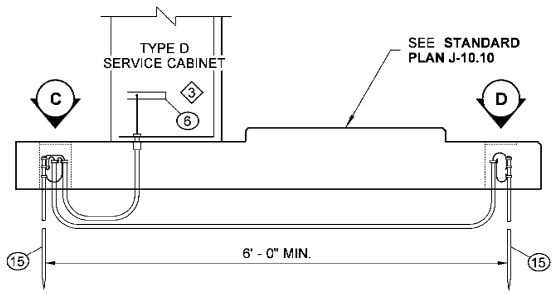

GALVANIZED STEEL RIGID METAL CONDUIT (RMC) APPLICATION

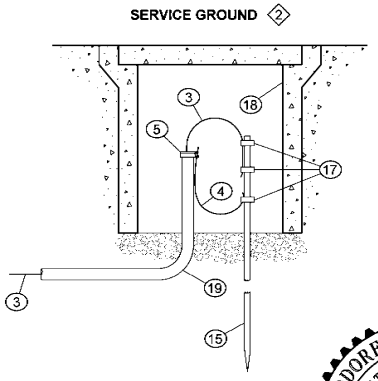

DETAIL D

1. Required to supplement equipment grounding for luminaire standards with direct burial aerial feeds, or where required in the plans
2. Required at all service and separately derived systems
3. Type D service cabinet shown. Use this concept for Type E cabinet or transformer. Type D service cabinet shall be installed on lower surface of foundation only. Type B service cabinet and transformer cabinet shall be installed on raised surface of foundation only.
4. Type B modified service cabinet
5. Grounding electrode conductor and equipment grounding conductor shall not be routed through lug on grounding bushing.

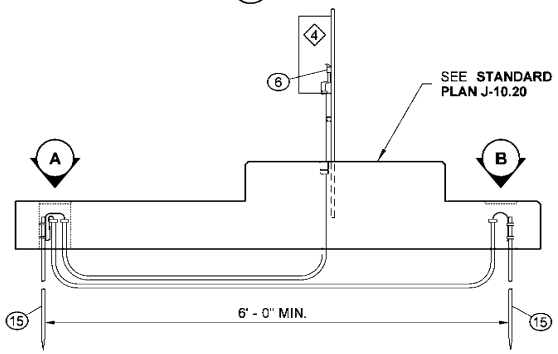

RIGID PVC CONDUIT (PVC) APPLICATION

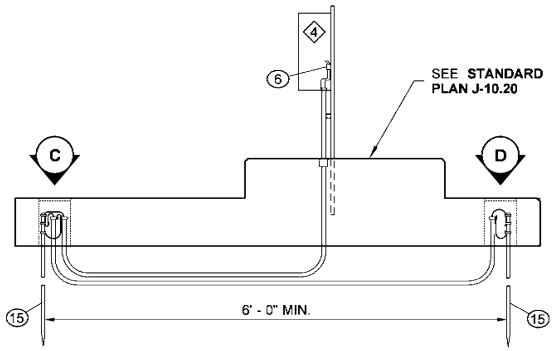

GALVANIZED STEEL RIGID METAL CONDUIT (RMC) APPLICATION

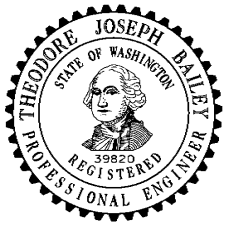

Bailey, Ted
Bailey, Ted
Jul 19 2016 1:30 PM

TYPICAL GROUNDING DETAILS

STANDARD PLAN J-60.05-01

SHEET 3 OF 3 SHEETS

APPROVED FOR PUBLICATION
Carpenter, Jeff
Carpenter, Jeff
Jul 21 2016 8:33 AM
STATE DESIGN ENGINEER
Washington State Department of Transportation

DRAWN BY: FERN LIDDELL

NOTES

1. Install Galvanized Steel Rigid Metal Conduit (RMC) between the Junction Box(es) Type 1 and the DX fitting(s) "**A**". RMC conduit shall also be used from the DX fitting(s) "**A**" to the PVC adaptor in the barrier.

   PVC Conduit may be used only in stationary-form barriers. Connect to RMC using a PVC adaptor.

   RMC Conduit may be used in stationary-form barriers, but it shall be used in slip-form barriers.

2. See **Standard Plan D-15.10** for additional information on F-Shape barrier, or see Standard Plan **D-15.20** for Single-Slope Barrier.

3. Pipe wrap tape shall be 2" wide, 20 ml thick, and installed with 1" minimum overlap.

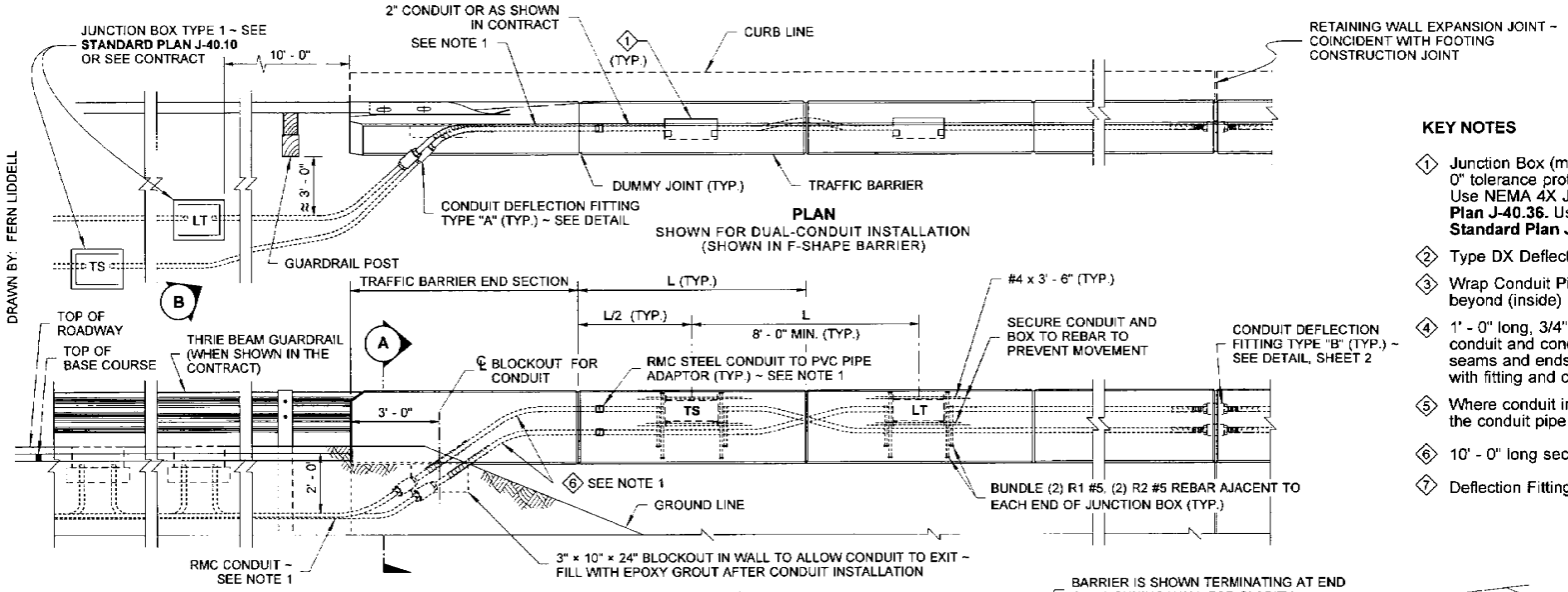

KEY NOTES

1. Junction Box (mount box so cover is flush with the barrier face with a 0" tolerance protruding beyond the barrier face and 1/8" recessed). Use NEMA 4X Junction Box with stationary-forms ~ See **Standard Plan J-40.36.** Use NEMA 3R Junction Box with slip-forms ~ See **Standard Plan J-40.37.**
2. Type DX Deflection (DX) Fitting with Internal Bonding Jumper.
3. Wrap Conduit Pipe from Conduit Deflection Fitting to 1' - 0" beyond (inside) barrier surface.
4. 1' - 0" long, 3/4" thick expanded closed-cell foam sleeve around conduit and conduit fitting. After placing wire ties, duct tape seams and ends to seal and prevent concrete from bonding with fitting and conduit.
5. Where conduit in a structure is routed across a joint, wrap the conduit pipe for 1' - 0" on each side of the joint.
6. 10' - 0" long section of RMC conduit.
7. Deflection Fitting shall be in neutral state after installation.

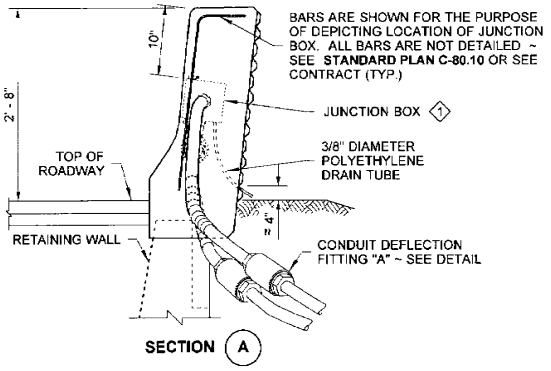

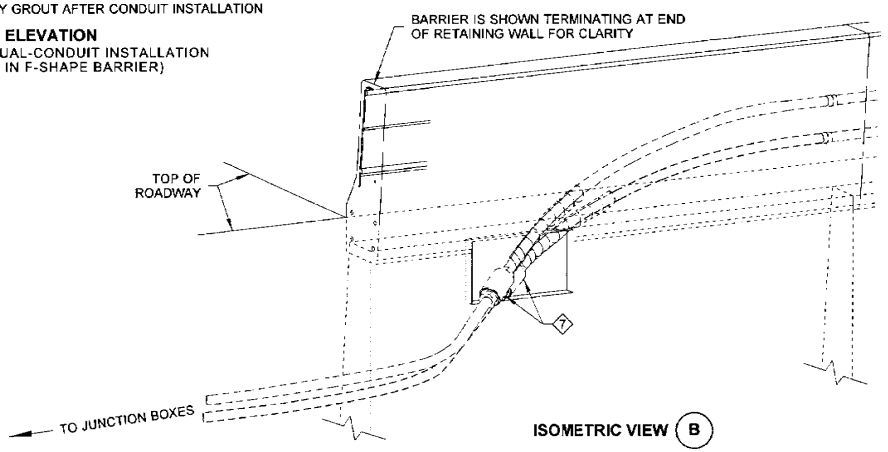

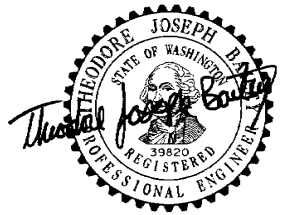

5-15-13

CONDUIT INSTALLATION IN TRAFFIC BARRIER ON RETAINING WALL

STANDARD PLAN J-60.11-00

SHEET 1 OF 2 SHEETS

APPROVED FOR PUBLICATION

STATE DESIGN ENGINEER — DATE 5/16/13

Washington State Department of Transportation

This page left blank intentionally.

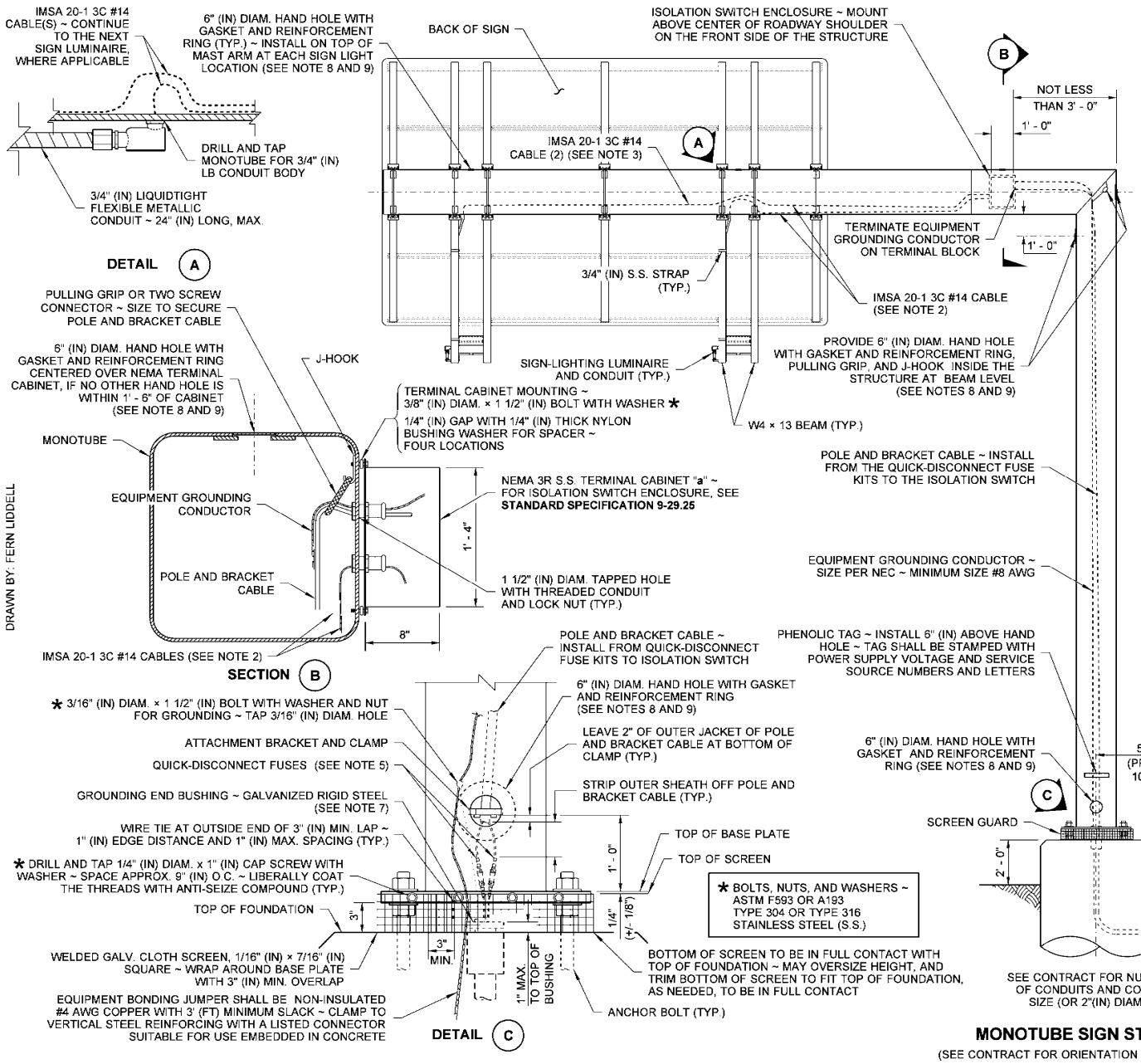

MONOTUBE SIGN STRUCTURE

(SEE CONTRACT FOR ORIENTATION OF SIGN STRUCTURE)

DRAWN BY: FERN LIDDELL

NOTES

1. Typical view shown. Verify power source location, quantities, location of signs, and sign structure fixtures in Contract Plans.
2. Route IMSA 20-1 3C **#14** cable(s) from isolation switch along inside bottom of the Monotube Mast Arm to the liquidtight conduit connector(s) at hand hole(s).
3. Route separate IMSA 20-1 3C #14 cable from load side of terminal strip to each additional light fixture (where applicable) and provide sufficient slack wire per **Standard Specification 8-20.3(8).**
4. Label all conductors with sign light and circuit number at isolation switch, hand hole(s), and ballast enclosure(s). Labels shall be a PVC or Polyolefin wire marking sleeve per **Standard Specification 9-29.**
5. Install quick-disconnect fuse kits between the power supply wires and the pole and bracket cable per **Standard Specification 9-29.7.** Pull down tight to conduit. (Disconnects left up for clarity). Fuse size shall be 200% larger than load size.
6. The conductors in the IMSA 20-1 3C #14 cable shall be black, red, and white. The white conductor shall be permanently identified as an equipment grounding conductor per the NEC.
7. All RMC conduits embedded in foundation shall be terminated with Grounding End Bushing and bonded to the Foundation Grounding Bus. All PVC conduits embedded in foundations shall be terminated with End Bell Bushing.
8. Hand holes shall be installed at the time of fabrication. Only additional conduits for lighting accommodations to previously non-illuminated structures may be installed in field as long as the proper repairs are made to the structure. For hand hole details, see **Standard Plan J-75.41**.
9. For details not shown, see **Standard Plan G-90.40**.
10. All holes shall be drilled and tapped.
11. Use the Retrofit Details only when the following conditions apply:
    A. Existing W4 × 13 Luminaire Brackets are to be reused for a new Sign-Lighting Luminaire.
    B. The span between the existing Luminaire Brackets is too wide to attach a new Sign-Lighting Luminaire and Luminaire Mounting Plate.
12. If the sign structure includes a maintenance walkway, the Luminaire Mounting Plate shall be bolted to the walkway grating.

THEODORE JOSEPH BAILEY STATE OF WASHINGTON 39820 REGISTERED PROFESSIONAL ENGINEER

Bailey, Ted
May 24 2016 4:01 PM

OVERHEAD SIGN ELECTRICAL DETAILS (MONOTUBE STRUCTURE) STANDARD PLAN J-75.40-02

SHEET 1 OF 2 SHEETS

APPROVED FOR PUBLICATION
Carpenter, Jeff
Jun 1 2016 4:13 PM
STATE DESIGN ENGINEER
Washington State Department of Transportation

DRAWN BY: FERN LIDDELL

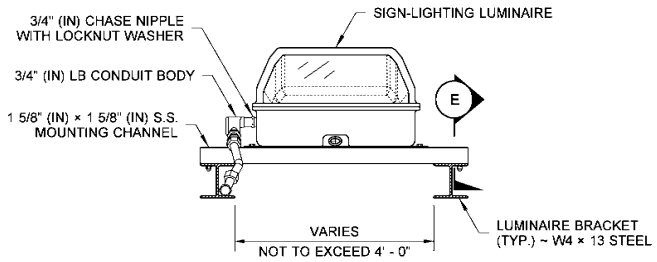

SECTION (D)

SIGN-LIGHTING FIXTURE WITH RETROFIT

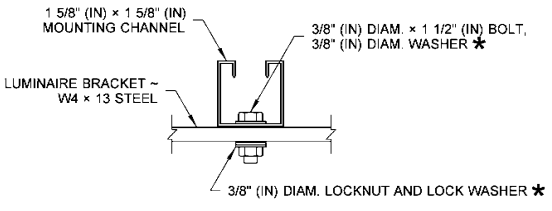

SECTION (E)

✱ BOLTS, NUTS, AND WASHERS ~ ASTM F593 OR A193 TYPE 304 OR TYPE 316 STAINLESS STEEL (S.S.)

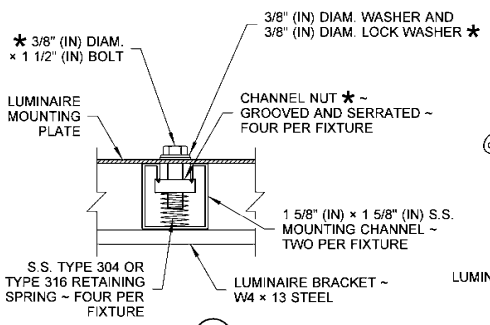

DETAIL (F)

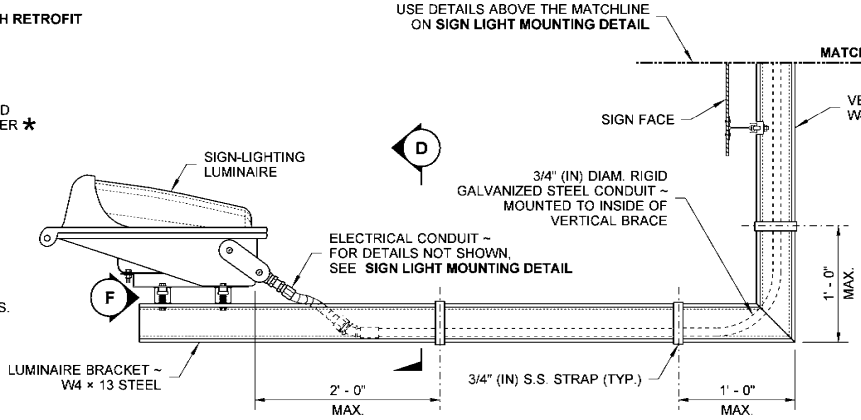

RETROFIT MOUNTING DETAIL

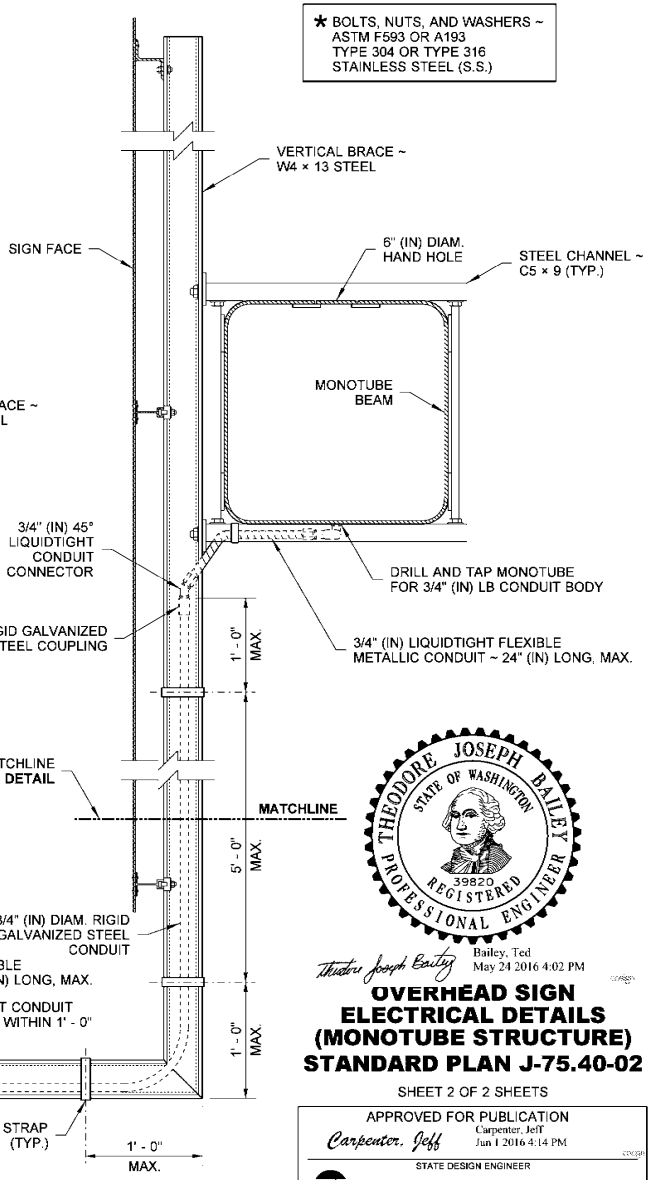

SIGN LIGHT MOUNTING DETAIL

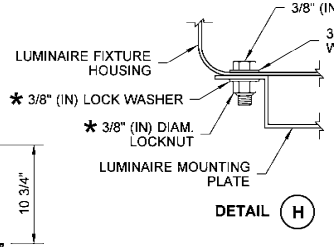

DETAIL (H)

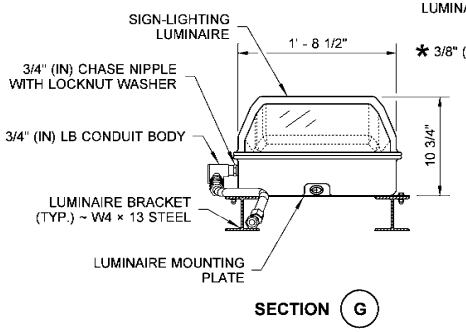

SECTION (G)

THEODORE JOSEPH BAILEY
STATE OF WASHINGTON
39820
REGISTERED
PROFESSIONAL ENGINEER

Bailey, Ted
May 24 2016 4:02 PM

OVERHEAD SIGN ELECTRICAL DETAILS (MONOTUBE STRUCTURE) STANDARD PLAN J-75.40-02

SHEET 2 OF 2 SHEETS

APPROVED FOR PUBLICATION
Carpenter, Jeff
Jun 1 2016 4:14 PM

STATE DESIGN ENGINEER

Washington State Department of Transportation

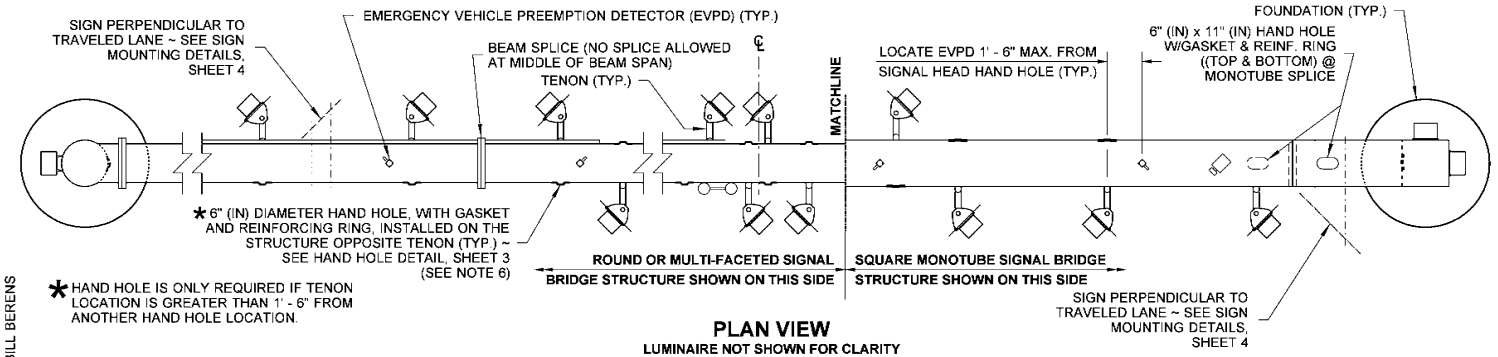

PLAN VIEW

LUMINAIRE NOT SHOWN FOR CLARITY

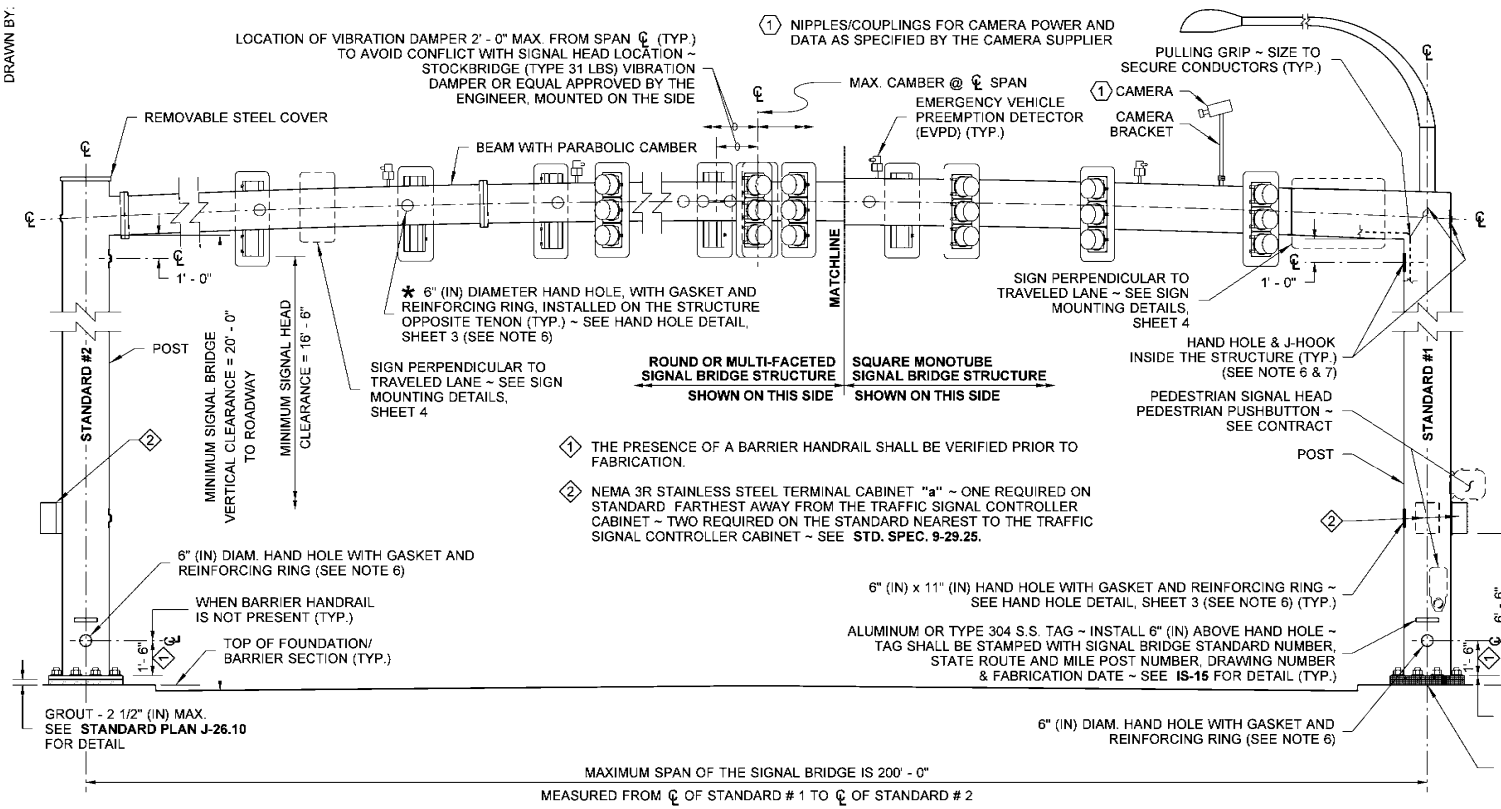

ELEVATION VIEW

DESIGN CRITERIA

SIGNAL BRIDGE SHALL BE DESIGNED AND ANALYZED IN ACCORDANCE WITH **AASHTO STANDARD SPECIFICATION FOR STRUCTURAL SUPPORTS FOR HIGHWAY SIGNS, LUMINAIRE AND TRAFFIC SIGNAL - FIFTH EDITION - DATED 2009** AND INTERIMS. USING BASIC WIND SPEED OF **90 MPH** AND **50 YEARS** OF DESIGN LIFE. FATIGUE DESIGN OF THE STRUCTURE CONFORMS TO **FATIGUE CATEGORY I** OF THE SPECIFIED AASHTO STANDARD SPECIFICATION.

NOTES

1. Sign bridge, sign support structure and signal bridge foundation shall be designed by the Engineer of Record for all installations (at grade, mounted on a bridge structure or on a wall structure).
2. Typical view shown. See Contract Plans for quantities and locations of signal heads, EVP detectors, cameras, and signs.
3. Route signal cable(s) from terminal cabinet along inside bottom of the Signal Bridge to the Tenon(s) connector(s) at hand hole(s). Provide sufficient slack wire to allow the conductor or cable to be pulled a minimum of 18" (in) outside the Signal Bridge at the nearest hand hole to the equipment connection point.
4. All conductors shall be labeled in accordance with **Standard Specification 8-20.3(8)**. Labels shall be provided at the terminal cabinet (at the terminal board and conduits), equipment terminals, and at the hand hole nearest equipment connection point.
5. All RMC conduits embedded in foundation shall be terminated with a grounding end bushing and bonded to the structure grounding terminal. All PVC conduits embedded in foundations shall be terminated with end bell bushing.
6. Hand holes shall be designed by the Engineer of Record and installed at the time of fabrication.
7. Install hand hole on outside of the post at beam level when foundation is cast at grade. Install hand hole on traffic side of post when signal bridge is mounted on bridge, retaining wall or other structure.
8. Equipment grounding conductor shall be non-insulated # 4 AWG copper with 3' (ft) minimum slack. Clamp to horizontal steel reinforcing with a listed connector suitable for use embedded in concrete. For details, see Elevation View Signal Bridge Hand Hole Placement on Standard, Sheet 2. Or see Foundation Detail in Bridge Deck or Bridge Deck Island, Sheet 2.
9. Equipment grounding conductor shall be non-insulated #4 AWG copper with 3' (ft) minimum slack. Clamp to vertical steel reinforcing with a listed connector suitable for use embedded in concrete. For Detail, see Partial Foundation Detail, Sheet 2.
10. Variable Message Signs (VMS) shall not be installed on signal bridge.
11. No sign larger than 12' (ft) long x 4' (ft) tall shall be installed on signal bridge.

THEODORE JOSEPH BAILEY STATE OF WASHINGTON 39820 REGISTERED PROFESSIONAL ENGINEER

Theodore Joseph Bailey Bailey, Ted Jun 23 2016 1:46 PM

DRAWN BY: BILL BERENS

SIGNAL BRIDGE STANDARD ELECTRICAL DETAILS

STANDARD PLAN J-75.41-01

SHEET 1 OF 4 SHEETS

APPROVED FOR PUBLICATION
Carpenter, Jeff
Carpenter, Jeff Jun 29 2016 2:30 PM
STATE DESIGN ENGINEER
Washington State Department of Transportation

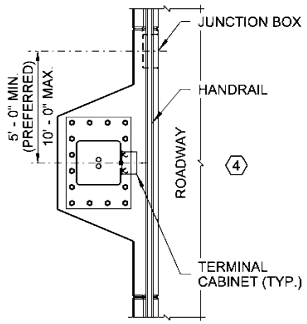

PLAN VIEW

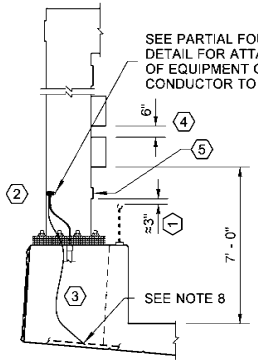

ELEVATION VIEW
WITH HANDRAIL
(SQUARE MONOTUBE SHOWN ~ ROUND OR MULTI-FACETED SIMILAR)

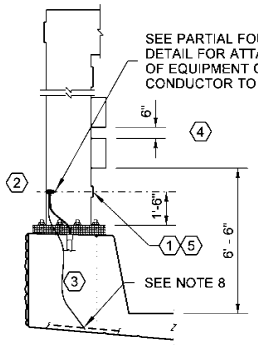

ELEVATION VIEW
WITHOUT HANDRAIL
(SQUARE MONOTUBE SHOWN ~ ROUND OR MULTI-FACETED SIMILAR)

SIGNAL BRIDGE HAND HOLE PLACEMENT ON STANDARD

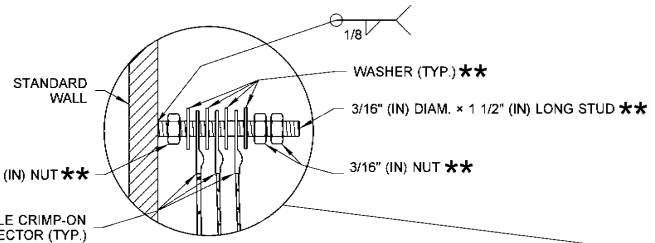

CONFIGURATIONS VARY AMONG MANUFACTURERS (SHOWN EXPLODED FOR CLARITY)

** BOLTS, NUTS, AND WASHERS ~ ASTM F593 OR A193 TYPE 304 OR TYPE 316 STAINLESS STEEL (S.S.)

1. PRESENCE OF A BARRIER HANDRAIL SHALL BE VERIFIED PRIOR TO SIGNAL BRIDGE FABRICATION
2. NO TERMINAL CABINET SHALL BE MOUNTED ON SIDE OPPOSITE THE ROADWAY
3. SEE BRIDGE SHEETS FOR FOUNDATION DESIGN
4. WHEN SIGNAL BRIDGE IS MOUNTED ON A STRUCTURE TERMINAL CABINETS SHALL BE MOUNTED ON THE TRAFFIC SIDE OF THE POST AS SHOWN
5. HAND HOLE ~ SEE NOTE 6

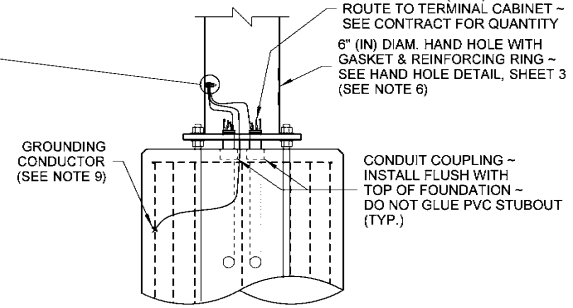

PARTIAL FOUNDATION DETAIL
(GROUT PAD/SCREEN NOT SHOWN FOR CLARITY)

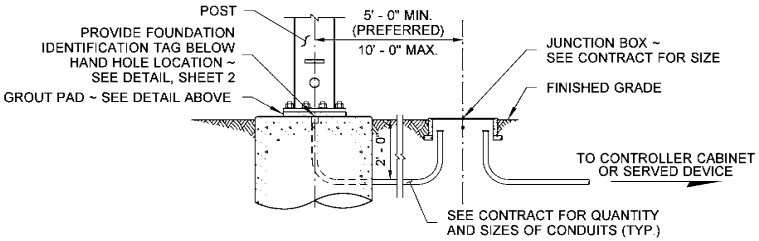

SEE **STANDARD PLAN J-26.15** FOR FOUNDATION PLACEMENT DETAILS

PARTIAL FOUNDATION TO JUNCTION BOX DETAIL

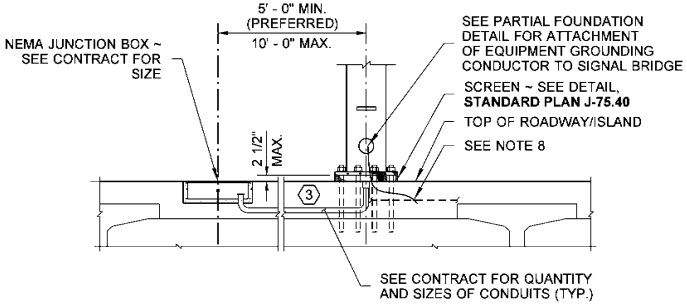

FOUNDATION DETAIL ON BRIDGE - CROSS BEAM
(NO FOUNDATION ALLOWED ON BRIDGE DECK)

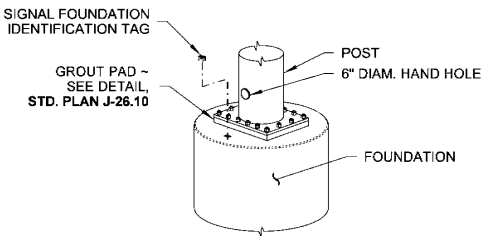

PARTIAL SIGNAL FOUNDATION DETAIL
(ROUND OR MULTI-FACETED SHOWN ~ SQUARE MONOTUBE SIMILAR)

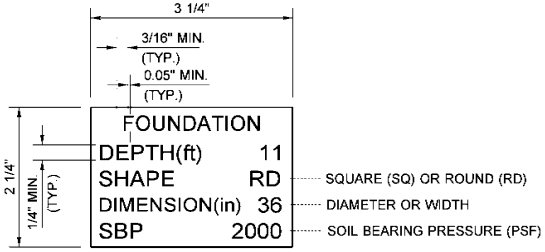

SAMPLE

SIGNAL FOUNDATION IDENTIFICATION TAG DETAIL

TEXT SHALL BE ENGRAVED 0.014" (IN) DEEP

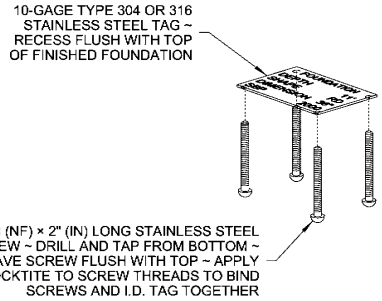

IDENTIFICATION TAG DETAIL

DRAWN BY: BILL BERENS

THEODORE JOSEPH BAILEY
STATE OF WASHINGTON
39820
REGISTERED
PROFESSIONAL ENGINEER

Bailey, Ted
Jun 23 2016 1:49 PM

SIGNAL BRIDGE STANDARD ELECTRICAL DETAILS

STANDARD PLAN J-75.41-01

SHEET 2 OF 4 SHEETS

APPROVED FOR PUBLICATION
Carpenter, Jeff
Jun 29 2016 2:30 PM
STATE DESIGN ENGINEER
Washington State Department of Transportation

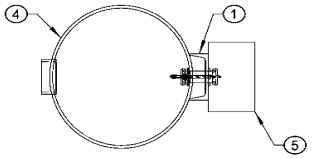

PLAN VIEW

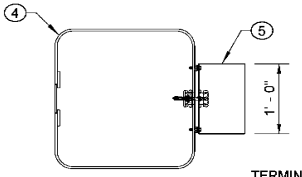

PLAN VIEW

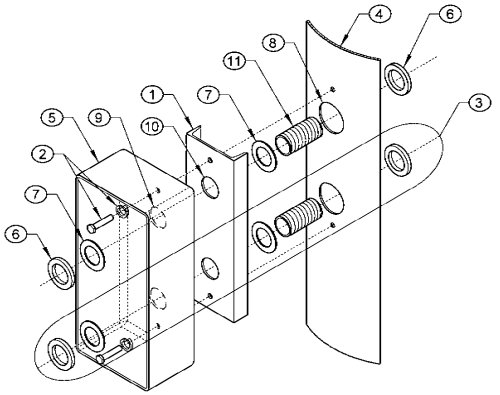

WIREWAY DETAIL
ISOMETRIC VIEW

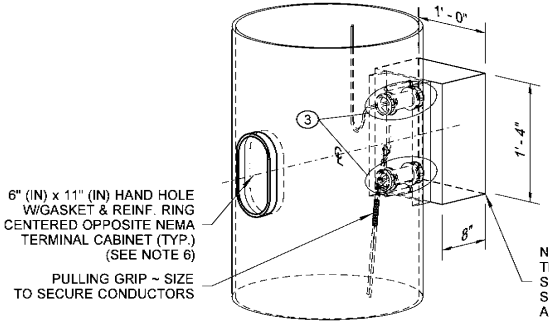

MULTI-SIDED (ROUND) TERMINAL CABINET MOUNTING DETAIL

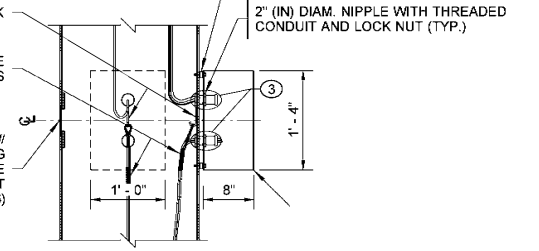

SQUARE TUBE SHOWN.
FOR MULTI-SIDED (ROUND) MONOTUBE STRUCTURE ~
ATTACH TERMINAL CABINET AS DETAILED
PER MULTI-SIDED (ROUND) TERMINAL CABINET MOUNTING DETAIL

SECTION @ TERMINAL CABINET

KEY NOTES

1. 6 × 8.2 LB/FT CHANNEL ~ HOT-DIP GALVANIZED
2. TWO EACH:
   - 1/2-13 NC × 2 1/2" (IN) HEX HEAD BOLT **
   - LOCK WASHERS (DRILL AND TAP POLE TO ACCEPT) **
3. WIREWAY (SEE DETAIL THIS SHEET)
4. METAL POST
5. CABINET
6. END BUSHING (TYP.)
7. SEALING LOCKNUT (TYP.)
8. POLE WALL DRILLED SO BUSHING WILL PASS THROUGH (TYP.)
9. CABINET WITH BACK WALL DRILLED 1/8" (IN) OVERSIZE OF NIPPLE (TYP.)
10. CHANNEL DRILLED 1/8" (IN) OVERSIZE OF NIPPLE (TYP.)
11. 2" (IN) DIAM. × 4" (IN) NIPPLE (UNLESS OTHERWISE NOTED) (TYP.)

SQUARE MONOTUBE CABINET MOUNTING DETAIL

" t " = MATCH REINFORCEMENT RING OR WELD SIZE TO MEMBER THICKNESS

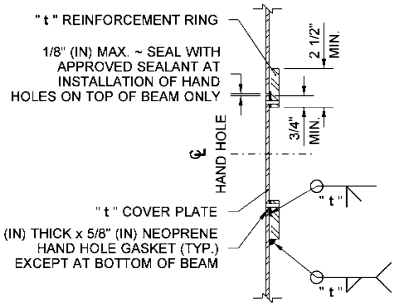

SECTION (A)

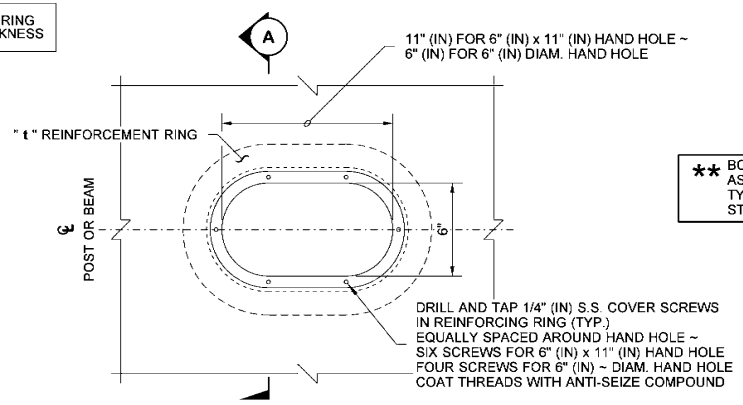

6" (IN) x 11" (IN) HAND HOLE SHOWN
6" (IN) DIAM. HAND HOLE SIMILAR EXCEPT AS SHOWN

SQUARE MONOTUBE STRUCTURE EXAMPLE HAND HOLE DETAIL
(OPENING DIMENSIONS ALSO APPLY TO MULTI-SIDED/ROUND STRUCTURES)

** BOLTS, NUTS, AND WASHERS ~ ASTM F593 OR A193 TYPE 304 OR TYPE 316 STAINLESS STEEL (S.S.)

DRAWN BY: BILL BERENS

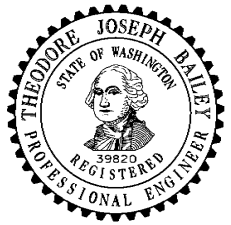

Bailey, Ted
Jun 23 2016 1:50 PM

SIGNAL BRIDGE STANDARD ELECTRICAL DETAILS

STANDARD PLAN J-75.41-01

SHEET 3 OF 4 SHEETS

APPROVED FOR PUBLICATION
Carpenter, Jeff
Jun 29 2016 2:30 PM

STATE DESIGN ENGINEER

Washington State Department of Transportation

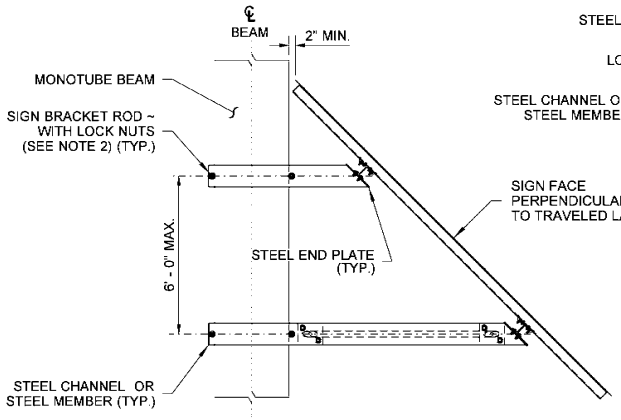

PLAN VIEW

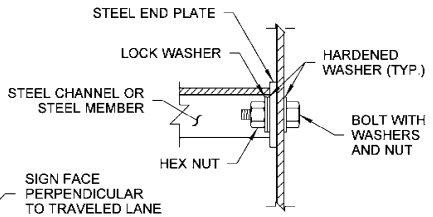

BOLT DETAIL

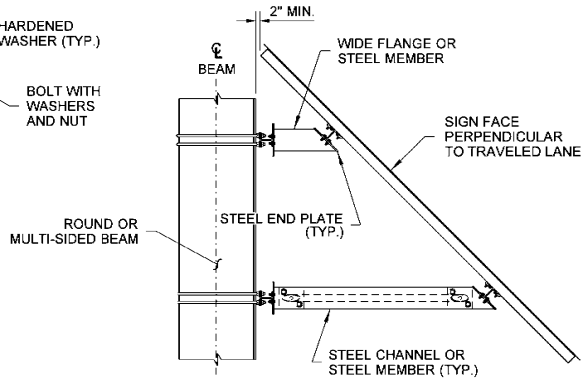

PLAN VIEW

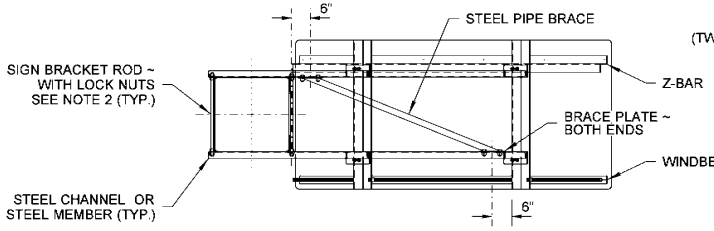

ELEVATION VIEW

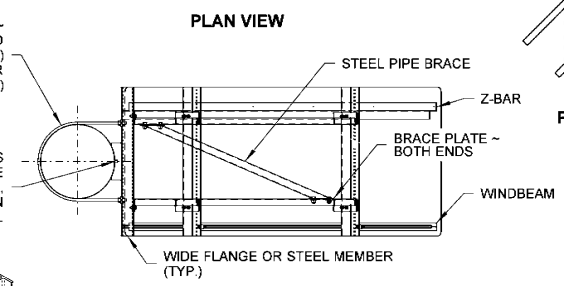

ELEVATION VIEW

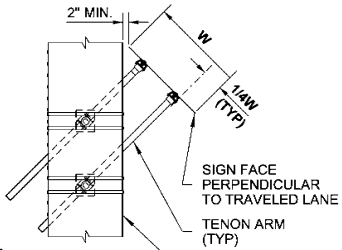

PLAN VIEW

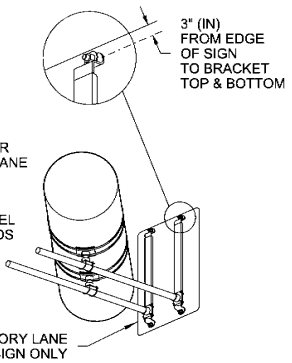

OBLIQUE VIEW
(VIEW IS FROM BELOW LOOKING UP)

ROUND OR MULTI-SIDED SIGNAL BRIDGE SIGN MOUNTING DETAILS FOR SMALL SIGN
(FOR SIGNS - 36" (IN) x 36" (IN) OR LESS)

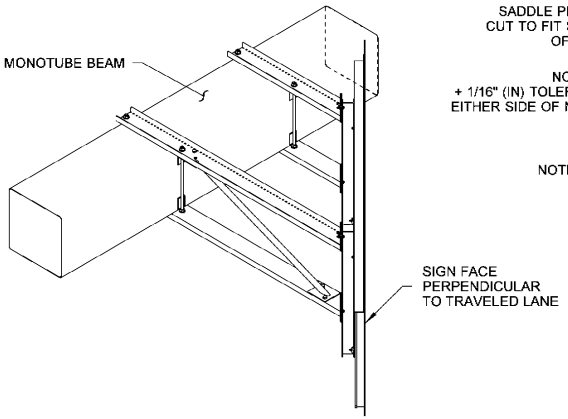

ISOMETRIC VIEW

MONOTUBE SIGNAL BRIDGE SIGN MOUNTING DETAILS (SKEWED SIGN DETAIL)

FOR DETAILS NOT SHOWN SEE STANDARD PLAN G-90.20

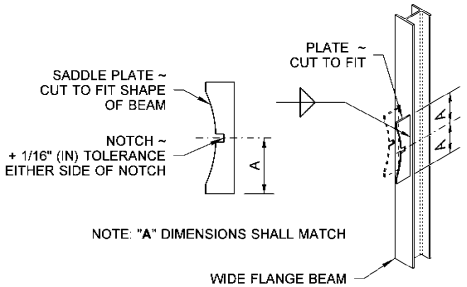

STIFFENER PLATE DETAIL

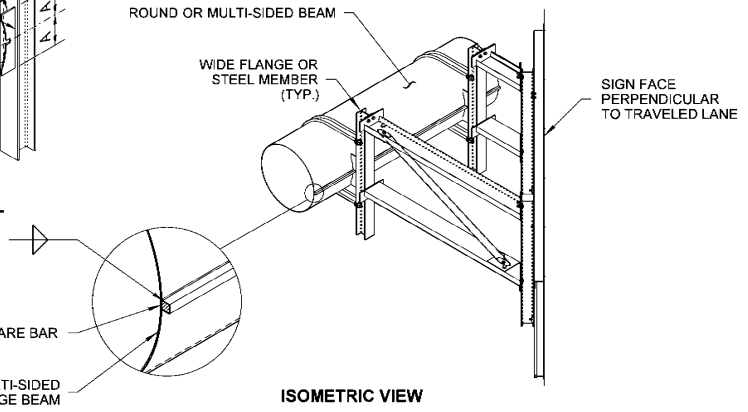

ISOMETRIC VIEW

ROUND OR MULTI-SIDED SIGNAL BRIDGE SIGN MOUNTING DETAILS FOR LARGE SIGN
(FOR SIGNS - 4' (FT) x 12' (FT) OR LESS)

SIGN MOUNTING NOTES

1. All Locknuts shall conform to **Standard Specification Section 9-28.11** as supplemented in the **Special Provisions**.
2. Hot dip galvinize all non-stainless parts.
3. For sign lighting details, See **Standard Plans J-75.40** (for Monotube) and **J-75.45** (for Round or Multi-sided) structures.
4. Each sign shall be supported by a minimum of two support structures.
5. This details conceptual sign support and bracing. Engineer of Record shall design and analyze sign support in accordance with AASHTO Standard Specifications for Structural Supports for Highway Signs, Luminaires and Traffic Signal - Latest edition.

DRAWN BY: BILL BERENS

THEODORE JOSEPH BAILEY STATE OF WASHINGTON 39820 REGISTERED PROFESSIONAL ENGINEER

Bailey, Ted
Jun 23 2016 1:50 PM

SIGNAL BRIDGE STANDARD ELECTRICAL DETAILS

STANDARD PLAN J-75.41-01

SHEET 4 OF 4 SHEETS

APPROVED FOR PUBLICATION
Carpenter, Jeff
Jun 29 2016 2:30 PM
STATE DESIGN ENGINEER
Washington State Department of Transportation

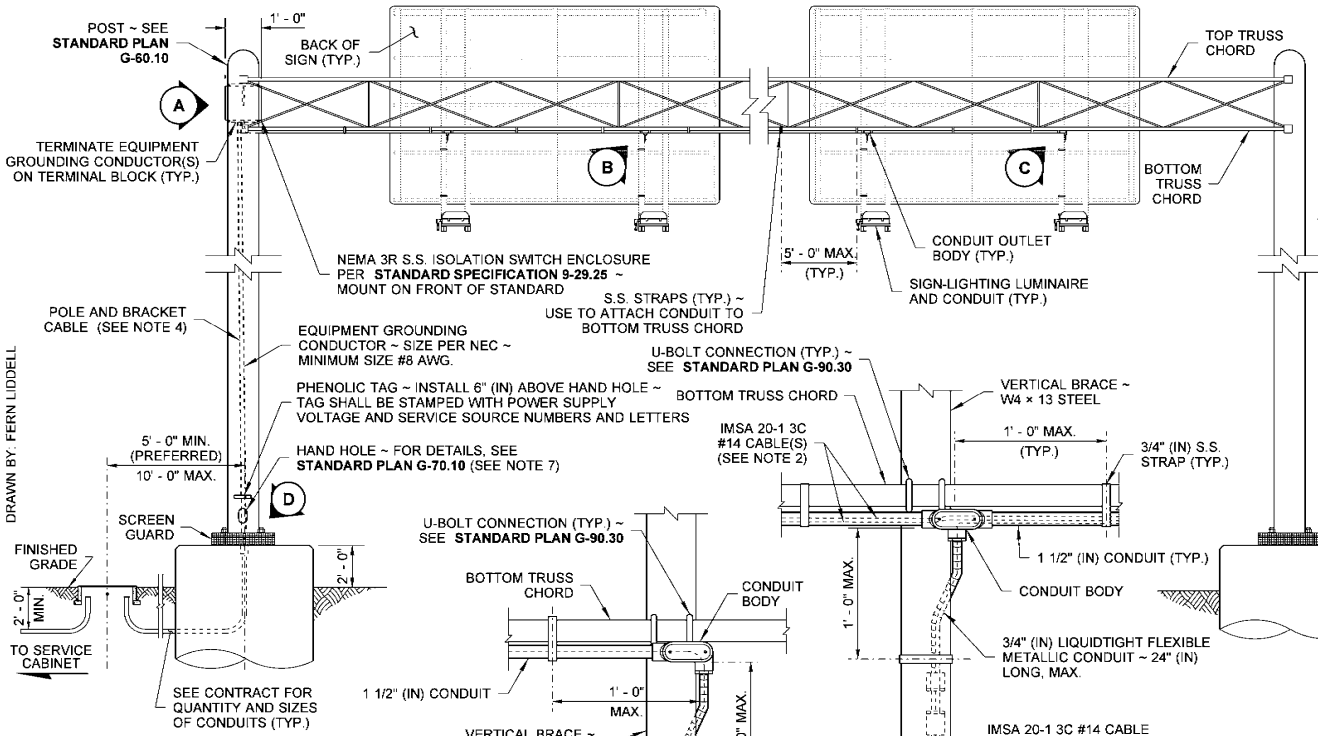

DRAWN BY: FERN LIDDELL

NOTES

1. Typical view shown. Verify power source location, quantities, and location of signs and sign structure fixtures in Contract Plans.
2. Route separate IMSA 20-1 3C #14 cables from load side of terminal strip to each additional Sign-Lighting Luminaire (where applicable) and provide sufficient slack wire per **Standard Specification 8-20.3(8).**
3. Label all conductors with sign light and circuit number at isolation switch, hand hole, and ballast enclosure. Label shall be a PVC or Polyolefin wire marking sleeve per **Standard Specification 9-29.**
4. Install quick-disconnect fuse kits between the power supply wires and pole and bracket cable per **Standard Specification 9-29.7.** Pull down tight to conduit. Fuse size shall be 200% larger than load size. (Disconnects shown left up for clarity.)
5. The conductors in the IMSA 20-1 3C #14 cable shall be black, red, and white. The white conductor shall be permanently identified as an equipment grounding conductor per the NEC.
6. All RMC conduits embedded in foundation shall be terminated with grounding end bushing and bonded to the ground terminal in the base of pole. All PVC conduits embedded in foundations shall be terminated with end bell bushing. See **Standard Plan J-10.10 note** (3)
7. Hand holes shall be installed at the time of fabrication. Hand Hole may be installed in field only when additional conduits for lighting accommodations to previously non-illuminated structures is needed, and as long as the proper repairs are made to structure. Contact **Bridge and Structures** office through PE for installation/repair procedures.
8. For details not shown, see **Standard Plan G-90.40.**
9. All holes shall be drilled and tapped.
10. Use the Retrofit details only when the following conditions apply:
    A. Existing W4 × 13 Steel Beam sign brackets are to be reused for a new Sign-Lighting Luminaire.
    B. The span between the existing Luminaire Brackets is too wide to attach the new Sign-Lighting Luminaire and Luminaire Mounting Plate.
11. If the sign structure includes a maintenance walkway, the Luminaire Mounting Plate shall be bolted to the walkway grating.

THEODORE JOSEPH BAILEY
STATE OF WASHINGTON
39820
REGISTERED
PROFESSIONAL ENGINEER

Bailey, Ted
May 24 2016 4:03 PM

OVERHEAD SIGN ELECTRICAL DETAILS (TRUSS STRUCTURE) STANDARD PLAN J-75.45-02

SHEET 1 OF 2 SHEETS

APPROVED FOR PUBLICATION
Carpenter, Jeff
Jun 1 2016 4:17 PM
STATE DESIGN ENGINEER
Washington State Department of Transportation

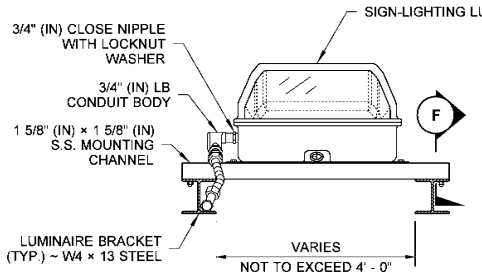

SECTION (E)

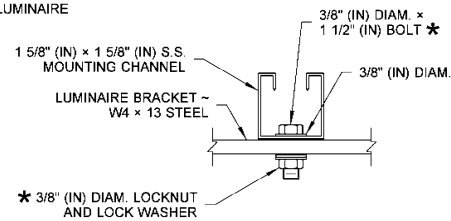

SECTION (F)

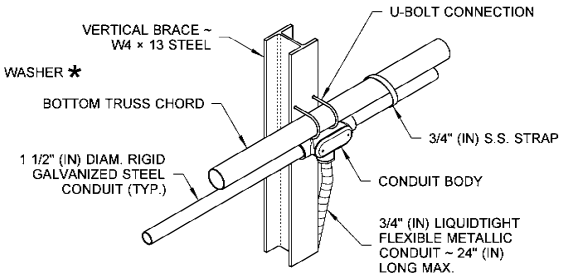

DETAIL (J)

SIGN-LIGHTING FIXTURE WITH RETROFIT

✱ BOLTS, NUTS, AND WASHERS ~ ASTM F593 OR A193 TYPE 304 OR TYPE 316 STAINLESS STEEL (S.S.)

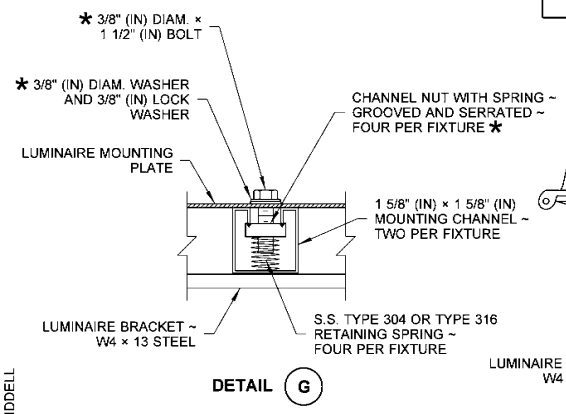

DETAIL (G)

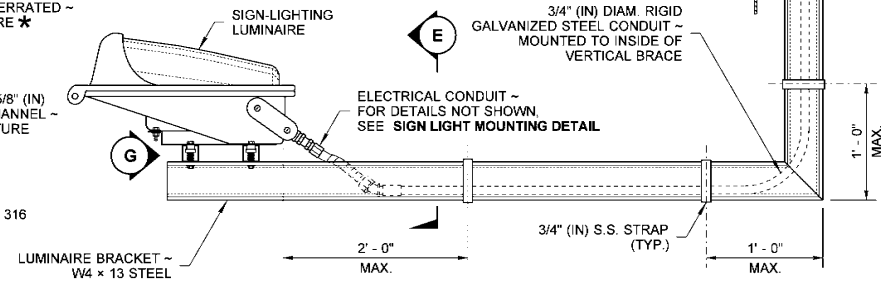

RETROFIT MOUNTING DETAIL

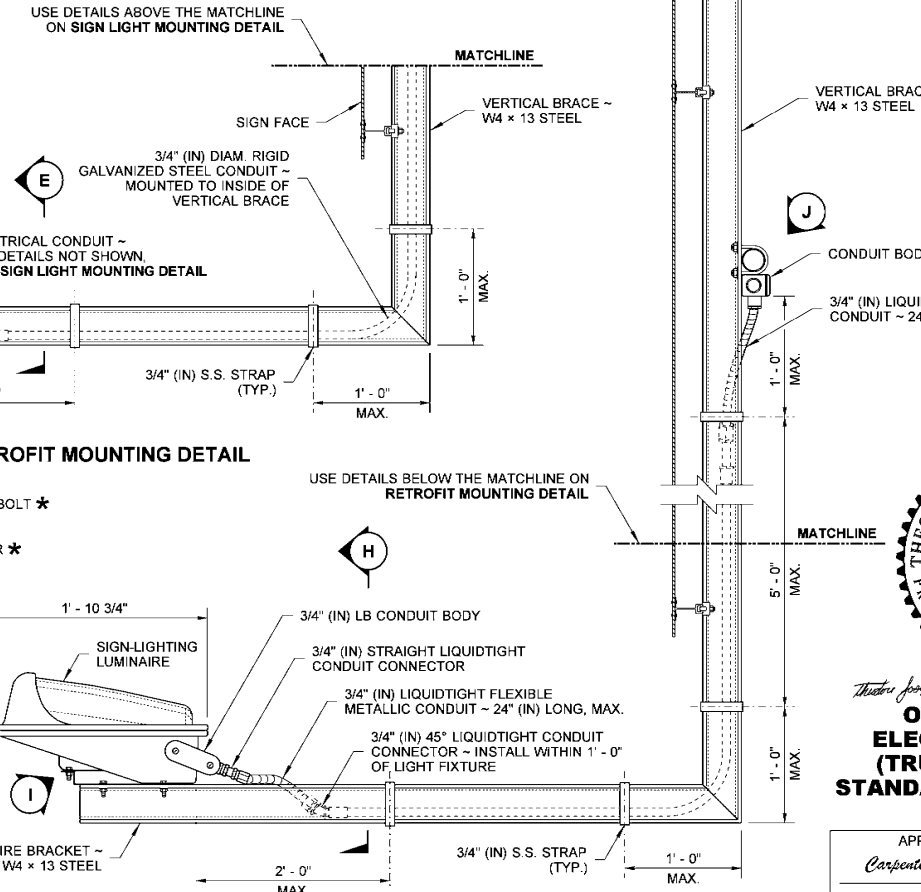

SIGN LIGHT MOUNTING DETAIL

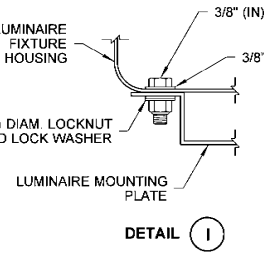

DETAIL (I)

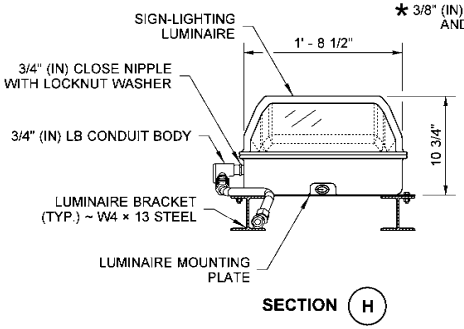

SECTION (H)

DRAWN BY: FERN LIDDELL

THEODORE JOSEPH BAILEY STATE OF WASHINGTON 39820 REGISTERED PROFESSIONAL ENGINEER

Bailey, Ted
May 24 2016 4:03 PM

OVERHEAD SIGN ELECTRICAL DETAILS (TRUSS STRUCTURE) STANDARD PLAN J-75.45-02

SHEET 2 OF 2 SHEETS

APPROVED FOR PUBLICATION
Carpenter, Jeff
Jun 1 2016 4:18 PM
STATE DESIGN ENGINEER

Washington State Department of Transportation

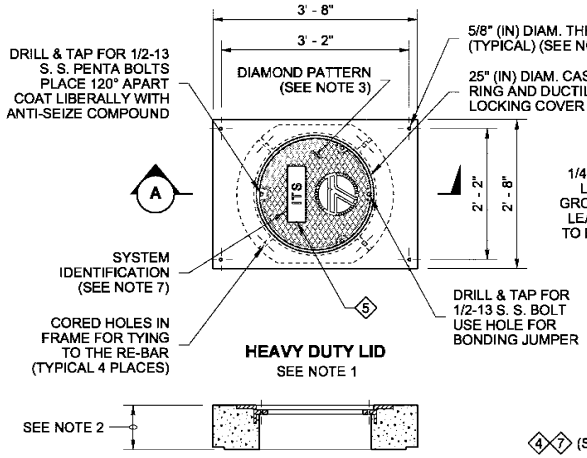

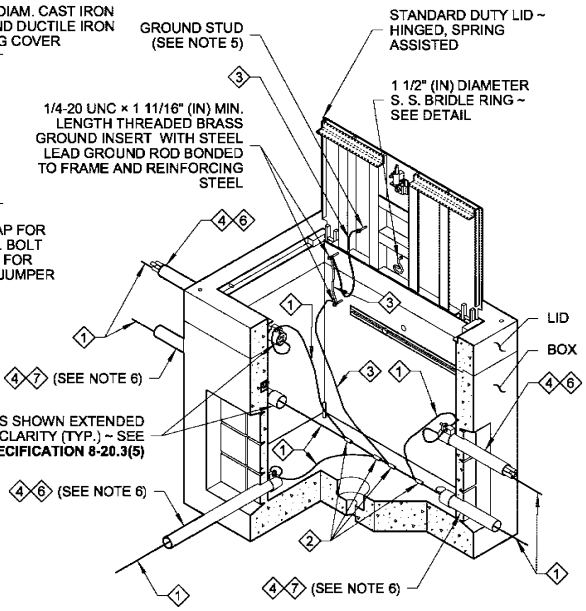

ISOMETRIC CUTAWAY

1. EQUIPMENT GROUNDING CONDUCTOR
2. COPPER SOLDERLESS CRIMP CONNECTOR
3. EQUIPMENT BONDING JUMPER (SEE NOTE 6)
4. SEE CONTRACT FOR CONDUIT SIZE AND NUMBER
5. PROVIDE A 1 1/2" (IN) WIDE × 3 1/2" (IN) HIGH × 3/16" (IN) THICK MIN. FLAT AREA FOR LIFTING PURPOSES (FOR DUCTILE IRON LID ONLY)
6. RMC SHOWN ~ SEE CONTRACT FOR CONDUIT TYPE
7. PVC OR HDPE (PVC SHOWN) ~ SEE CONTRACT FOR CONDUIT TYPE

DRAWN BY: LISA CYFORD

NOTES

1. A Heavy Duty Lid is required for all Pull Boxes placed in the traveled way or paved shoulder. A Standard Duty Lid shall be used for all other locations, including boxes placed in sidewalks (does not include driveways), walkways, or shared use paths.
2. The Heavy Duty Lid thickness shall be 9" (in) for all new installations. Where an existing Pull Box is to have a new Heavy Duty Lid installed, the lid thickness shall either be 6" (in), where no overlay is called for in the Contract, or it shall be fabricated such that the lid is flush with the top of the new overlay.
3. Minimum lid thickness shown. The diamond pattern shall be a minimum of 3/32" (in) thick.
4. Standard Duty Pull Boxes installed in sidewalks, walkways, or shared-use paths shall have a slip-resistant coating on lid and shall be installed with the surface flush with and matched to the grade of the sidewalk, walkway, or shared-use paths. The non-slip lid shall be identified with permanent marking on the underside indicating the type of surface treatment (see Contract Documents for details) and the year of manufacture. The permanent marking shall be 1/8" (in) line thickness formed with a weld bead and shall be placed prior to hot-dip galvanizing.
5. For Standard Duty Lids, attach a 1/4-20 UNC × 1" (in) S. S. ground stud, coated with anti-sieze compound. For Heavy Duty Lids, install a 1/2-13 UNC × 1 1/4" (in) S. S. bolt in a 5/8" (in) diameter cored hole in the ductile iron lid gusset as a ground stud. All ground studs shall include (3) S. S. nuts and (2) S. S. flat washers.
6. See Contract Plans and **Standard Plan J-60.05** for bonding jumper requirements. Bonding jumper between lid and frame shall be #8 AWG (min.) x 4' (ft) tinned braided copper.
7. The system identification letters shall be 1/8" (in) line thickness formed by casting or with a mild steel weld bead. See COVER MARKING DETAIL. See **Standard Specification 9-29.2(4)**. Ductile iron lid lettering shall be recessed.
8. Cement concrete shall be Class 4000.
9. Plastic plugs shall be put into the lid inserts after fabrication and the lid installation.
10. Capacity - conduit diameter = 40" (in).
11. Excavate material, place 6" (in) crushed surfacing pad per **Standard Specification Section 8-20.3(6).**
12. This drawing depicts a typical Pull Box assembly. Reinforcing not shown. Each manufacturer's Pull Box assembly will vary. Refer to the approved manufacturer's shop drawings for all dimensions and the actual arrangement.
13. The lid is an assembly consisting of the metal lid(s) and frame, reinforcing steel, brass ground inserts, and concrete.
14. Field bend #3 reinforcing bar to allow conduit into the Pull Box. Field bend reinforcing bar back into place, wire tie in (2) places, and cast in commercial concrete (commercial concrete only allowed for box bottom/wall completion).

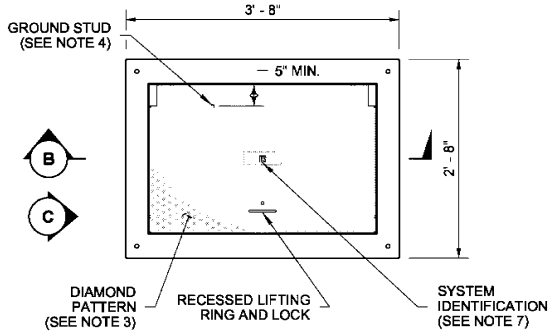

TOP

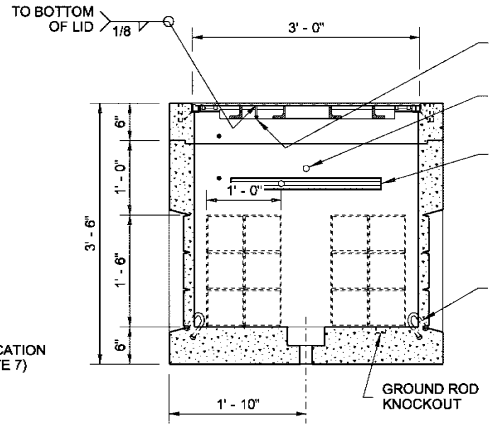

SECTION B

PULL BOX ASSEMBLY
(SHOWN WITH STANDARD DUTY LID)

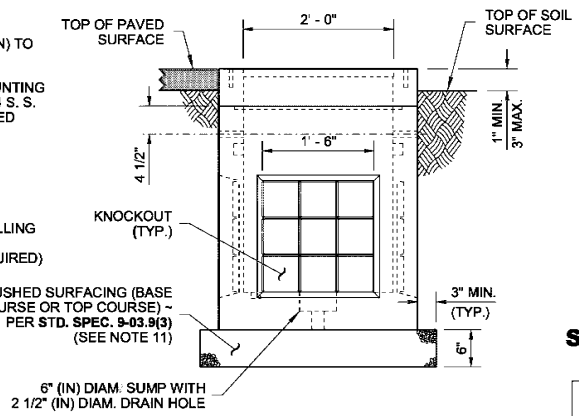

VIEW C

THEODORE JOSEPH BAILEY
STATE OF WASHINGTON
39820
REGISTERED
PROFESSIONAL ENGINEER

Theodore Joseph Bailey
Bailey, Ted
Apr 25 2016 5:10 PM

PULL BOX

STANDARD PLAN J-90.10-02

SHEET 1 OF 2 SHEETS

APPROVED FOR PUBLICATION
Carpenter, Jeff
Apr 28 2016 3:16 PM
STATE DESIGN ENGINEER
Washington State Department of Transportation

DRAWN BY: LISA CYFORD

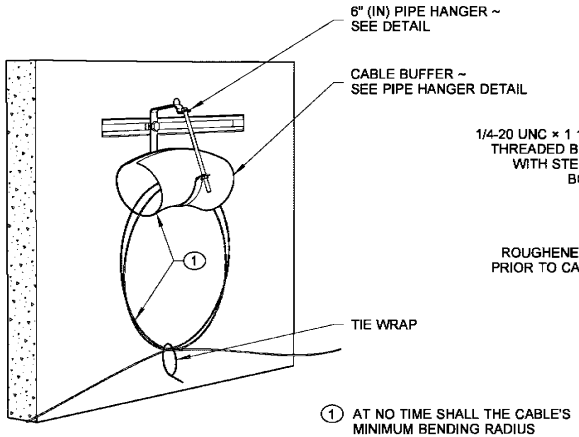

INTERNAL OBLIQUE VIEW
COIL THE CABLE BY USING A "FIGURE 8" FOLDED IN THE MIDDLE TO FORM A LOOP

1 AT NO TIME SHALL THE CABLE'S MINIMUM BENDING RADIUS LIMITATIONS BE COMPROMISED

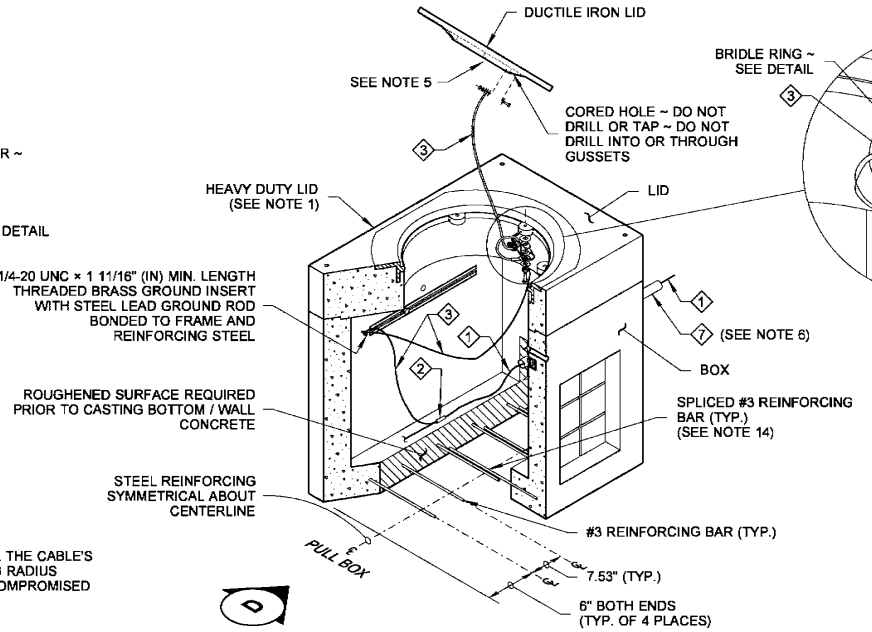

ISOMETRIC CUTAWAY

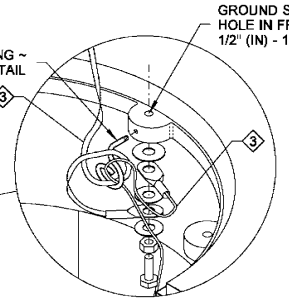

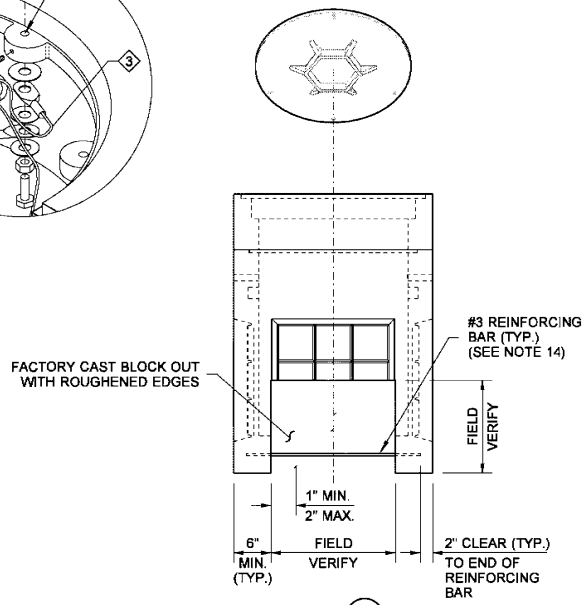

VIEW (D)

OPEN BOTTOM PULL BOX ASSEMBLY
(SHOWN WITH HEAVY DUTY LID)
SEE **PULL BOX**, SHEET 1, FOR DIMENSIONS NOT SHOWN

* BOLTS, NUTS AND WASHERS ~ **ASTM F593 OR A193, TYPE 304 OR TYPE 316** STAINLESS STEEL (S.S.)

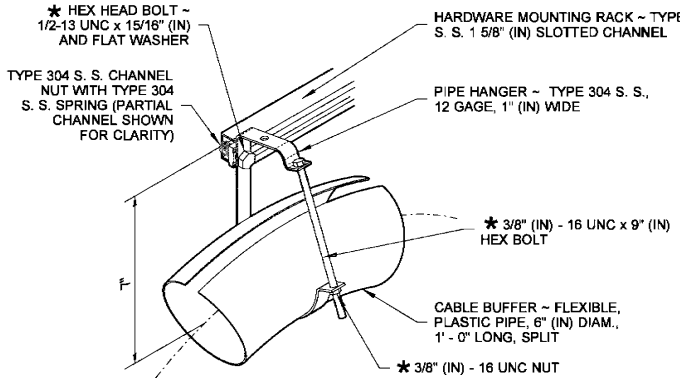

PIPE HANGER DETAIL
FABRICATE IF NOT AVAILABLE COMMERCIALLY

COVER MARKING DETAIL

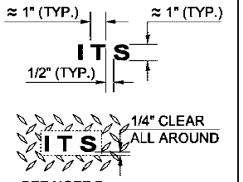

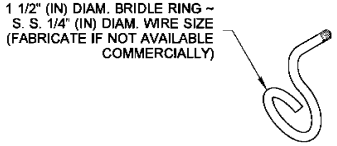

BRIDLE RING DETAIL

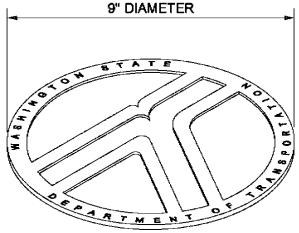

LOGO DETAIL

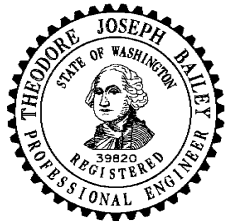

Bailey, Ted
Apr 25 2016 5:11 PM

PULL BOX

STANDARD PLAN J-90.10-02

SHEET 2 OF 2 SHEETS

APPROVED FOR PUBLICATION
Carpenter, Jeff
Apr 28 2016 3:17 PM
STATE DESIGN ENGINEER
Washington State Department of Transportation

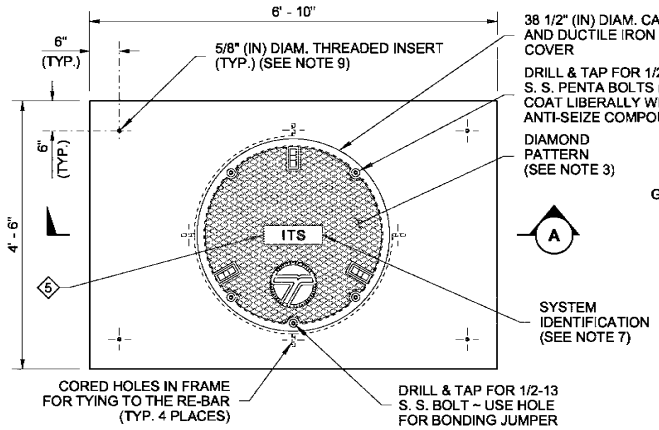

HEAVY DUTY LID

SEE NOTE 1

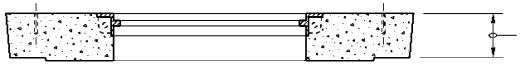

SECTION (A)

(LID NOT SHOWN)

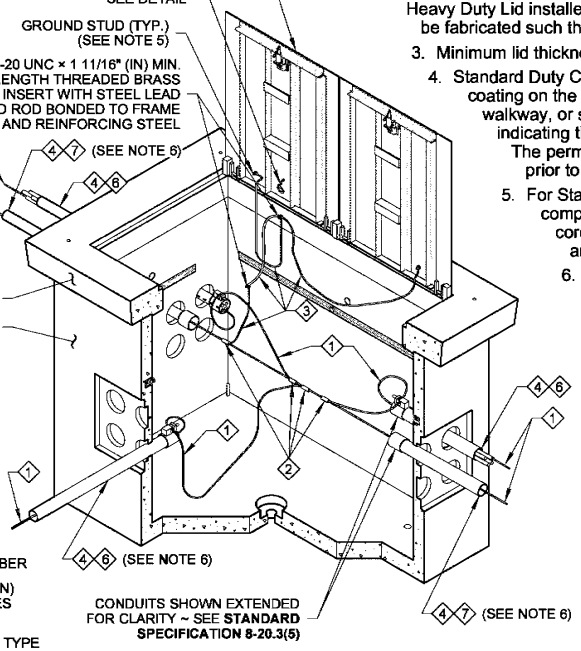

ISOMETRIC CUTAWAY

1. EQUIPMENT GROUNDING CONDUCTOR
2. COPPER SOLDERLESS CRIMP CONNECTOR
3. EQUIPMENT BONDING JUMPER (SEE NOTE 6)
4. SEE CONTRACT FOR CONDUIT SIZE AND NUMBER
5. PROVIDE A 5" (IN) WIDE × 3" (IN) HIGH × 3/16" (IN) THICK MIN. FLAT AREA FOR LIFTING PURPOSES (FOR DUCTILE IRON LID ONLY)
6. RMC SHOWN ~ SEE CONTRACT FOR CONDUIT TYPE
7. PVC OR HDPE (PVC SHOWN) ~ SEE CONTRACT FOR CONDUIT TYPE

NOTES

1. A Heavy Duty Lid is required for all Cable Vaults placed in the traveled way or paved shoulder. A Standard Duty Lid shall be used for all other locations, including vaults placed in sidewalks (does not include driveways), walkways, or shared use paths.
2. The Heavy Duty Lid thickness shall be 9" (in) for all new installations. Where an existing Cable Vault is to have a new Heavy Duty Lid installed, the lid thickness shall either be 6" (in), where no overlay is called for in the Contract, or it shall be fabricated such that the lid is flush with the top of the new overlay.
3. Minimum lid thickness shown. The diamond pattern shall be a minimum of 3/32" (in) thick.
4. Standard Duty Cable Vaults installed in sidewalks, walkways, or shared-use paths shall have a slip-resistant coating on the lid and shall be installed with the surface flush with and matched to the grade of the sidewalk, walkway, or shared-use paths. The non-slip lid shall be identified with permanent marking on the underside indicating the type of surface treatment (see Contract Documents for details) and the year of manufacture. The permanent marking shall be 1/8" (in) line thickness formed with a weld bead and shall be placed prior to hot-dip galvanizing.
5. For Standard Duty Lids, attach a 1/4-20 UNC × 1" (in) S. S. ground stud, coated with anti-sieze compound. For Heavy Duty Lids, install a 1/2-13 UNC × 1 1/4" (in) S. S. bolt in a 5/8" (in) diameter cored hole in the ductile iron lid gusset as a ground stud. All ground studs shall include (3) S. S. nuts and (2) S. S. flat washers.
6. See Contract Plan Sheets and **Standard Plan J-60.05** for Bonding Jumper requirements. Bonding jumper between lid and frame shall be #8 AWG (min.) x 4' (ft) tinned braided copper.
7. The system identification letters shall be 1/8" (in) line thickness formed by casting or with a mild steel weld bead. See COVER MARKING DETAIL, **Standard Specification 9-29.2(4)**. Ductile iron lid lettering shall be recessed.
8. Cement concrete shall be Class 4000.
9. Plastic plugs shall be put into the lid inserts after fabrication and the lid installation.
10. Capacity - conduit diameter = 60" (in).
11. Excavate material, place 6" (in) crushed surfacing pad per **Standard Specification 8-20.3(6)**.
12. This drawing depicts a typical Cable Vault assembly. Reinforcing not shown. Each manufacturer's Cable Vault assembly will vary. Refer to the approved manufacturer's shop drawings for all dimensions and the actual arrangement.
13. The lid is an assembly consisting of the metal lid(s) and frame, reinforcing steel, brass ground insert, and concrete.
14. Field bend #3 reinforcing bar to allow conduit into the Cable Vault. Field bend reinforcing bar back into place, wire tie in (2) places and cast in commercial concrete (commercial concrete only allowed for bottom/wall completion).

DRAWN BY: LISA CYFORD

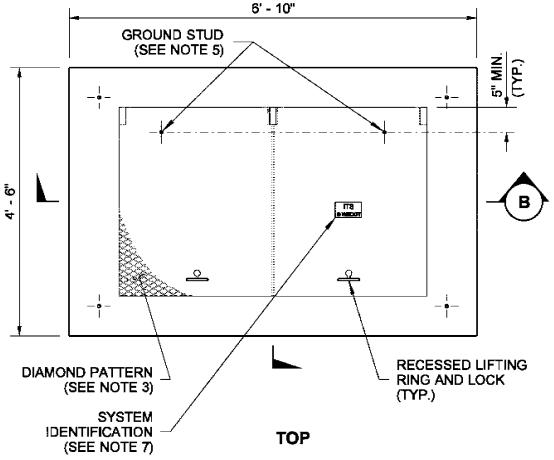

TOP

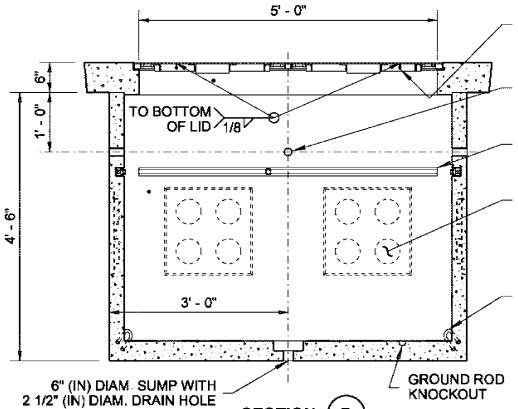

SECTION (B)

CABLE VAULT

(SHOWN WITH STANDARD DUTY LID)

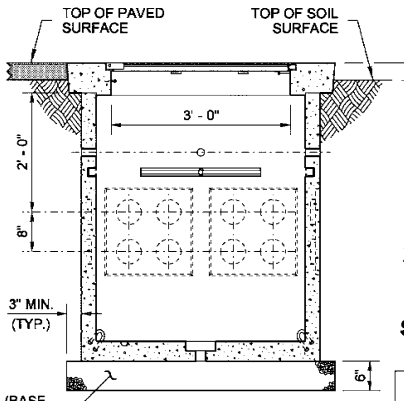

VIEW (C)

THEODORE JOSEPH BAILEY STATE OF WASHINGTON 39820 REGISTERED PROFESSIONAL ENGINEER

Bailey, Ted
Apr 25 2016 5:11 PM

CABLE VAULT

STANDARD PLAN J-90.20-02

SHEET 1 OF 2 SHEETS

APPROVED FOR PUBLICATION

Carpenter, Jeff
Apr 28 2016 3:17 PM

STATE DESIGN ENGINEER

Washington State Department of Transportation

DRAWN BY: LISA CYFORD

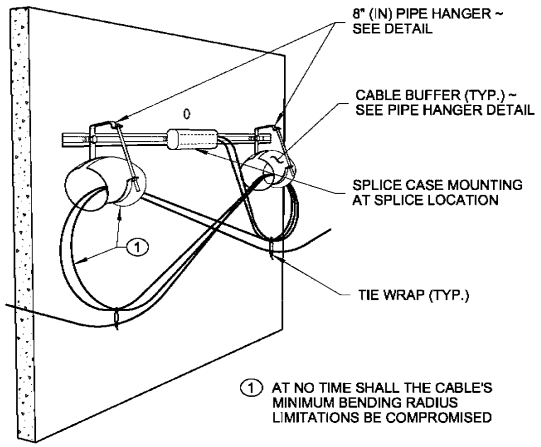

INTERNAL OBLIQUE VIEW

COVER MARKING DETAIL

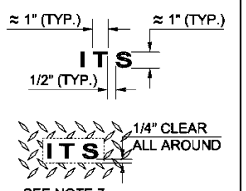

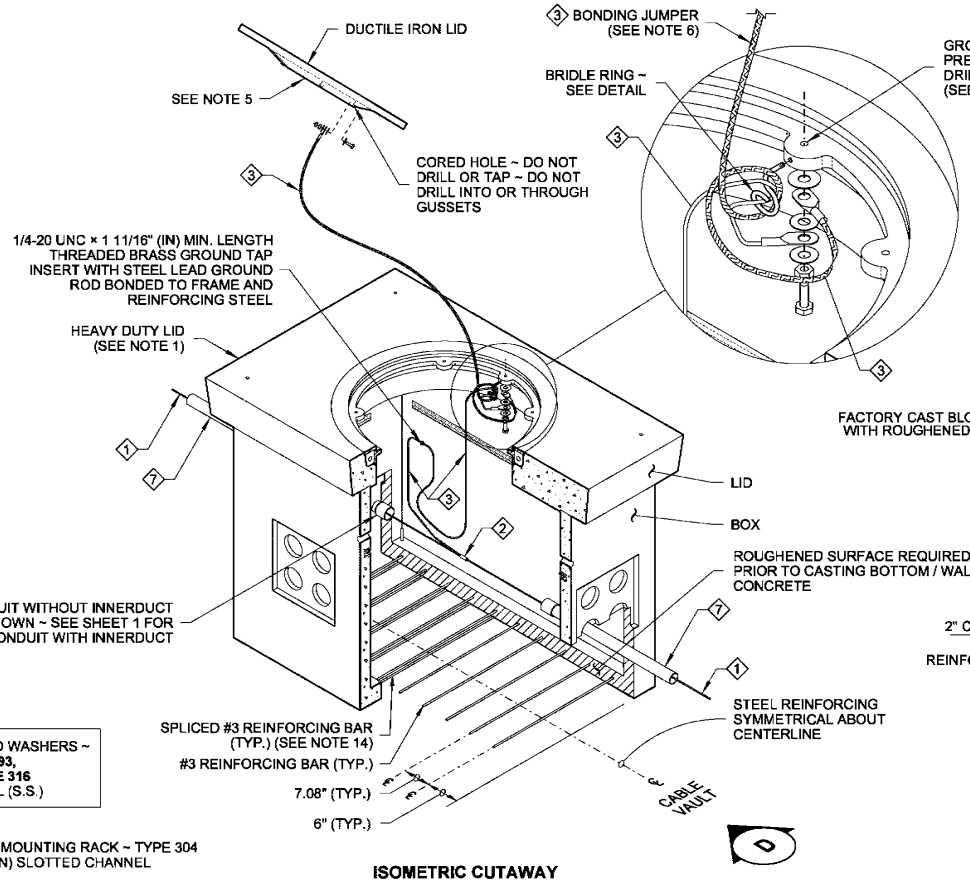

ISOMETRIC CUTAWAY

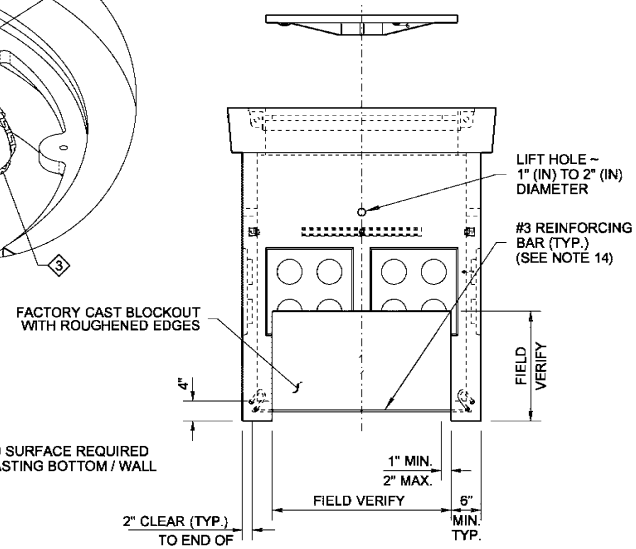

VIEW (D)

* BOLTS, NUTS AND WASHERS ~ **ASTM F593 OR A193, TYPE 304 OR TYPE 316** STAINLESS STEEL (S.S.)

OPEN BOTTOM CABLE VAULT
(SHOWN WITH HEAVY DUTY LID)
SEE **CABLE VAULT**, SHEET 1, FOR DIMENSIONS NOT SHOWN

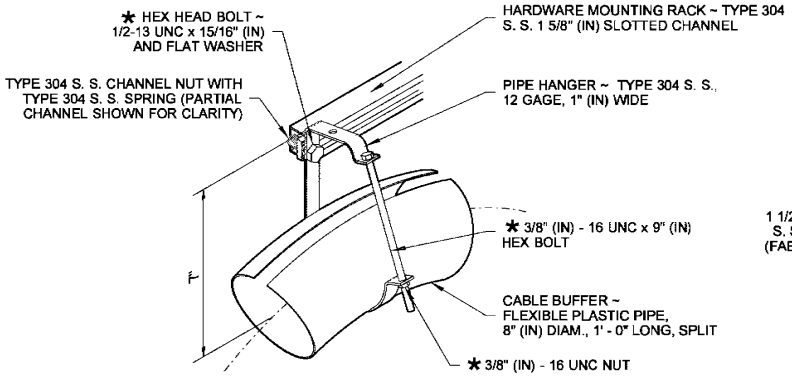

PIPE HANGER DETAIL
FABRICATE IF NOT AVAILABLE COMMERCIALLY

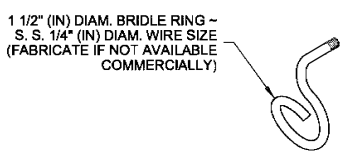

BRIDLE RING DETAIL

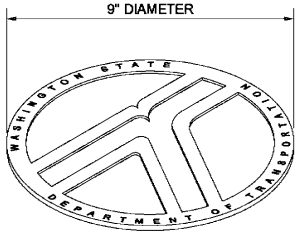

LOGO DETAIL

THEODORE JOSEPH BAILEY STATE OF WASHINGTON 39820 REGISTERED PROFESSIONAL ENGINEER

Theodore Joseph Bailey
Bailey, Ted
Apr 25 2016 5:11 PM

CABLE VAULT

STANDARD PLAN J-90.20-02

SHEET 2 OF 2 SHEETS

APPROVED FOR PUBLICATION
Carpenter, Jeff
Apr 28 2016 3:17 PM
STATE DESIGN ENGINEER
Washington State Department of Transportation

DRAWN BY: FERN LIDDELL

COVER MARKING DETAIL

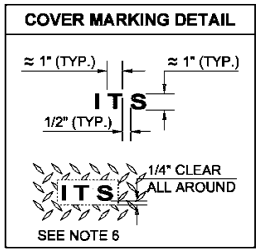

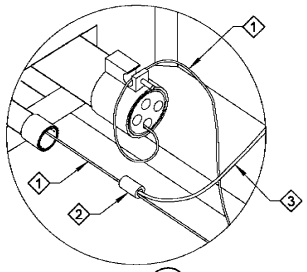

DETAIL (A)

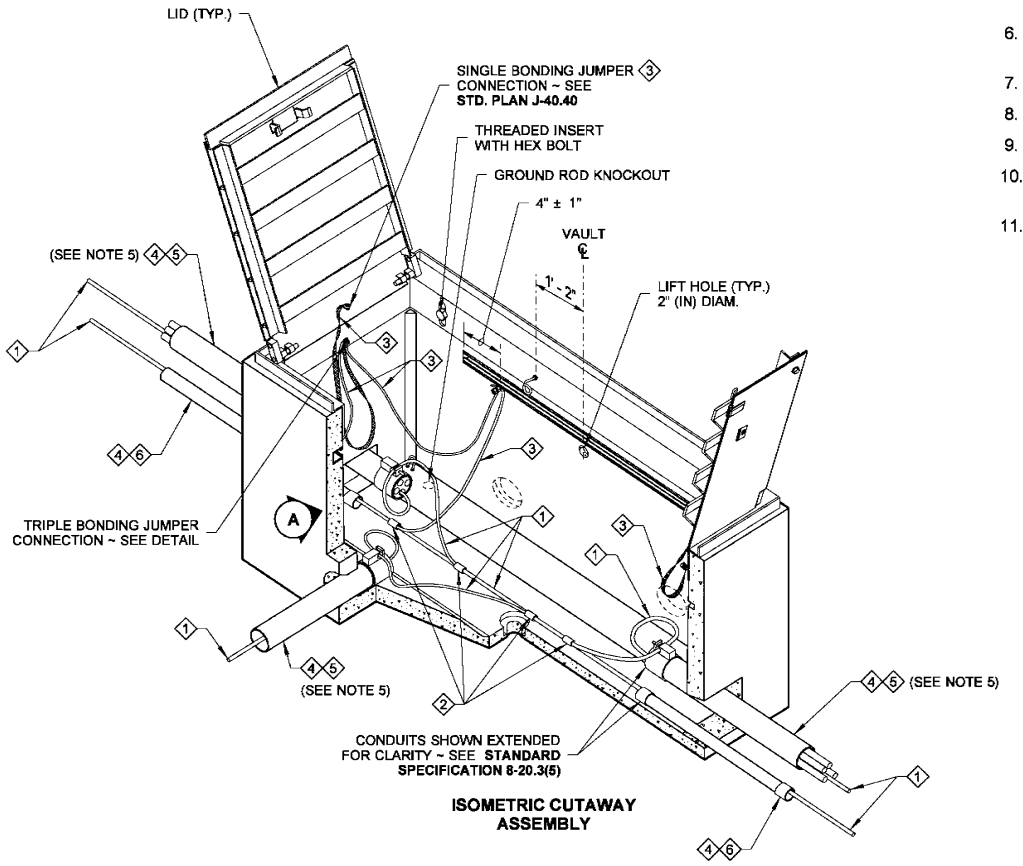

ISOMETRIC CUTAWAY ASSEMBLY

NOTES

1. The Small Cable Vault shall not be used within the traveled way or paved shoulder. The Small Cable Vault may be installed in walkways, sidewalks, and shared use paths.
2. The diamond pattern shall be a minimum of 3/32" (in) thick.
3. Small Cable Vaults installed in sidewalks, walkways, and shared-use paths shall have a slip-resistant coating on the lid and shall be installed with the surface flush with and matched to the grade of the sidewalk, walkway, and shared-use paths. The non-slip lid shall be identified with permanent marking on the underside indicating the type of surface treatment (see Contract Documents for details) and the year of manufacture. The permanent marking shall be 1/8" (in) line thickness formed with a weld bead and shall be placed prior to hot-dip galvanizing.
4. A 1/4 - 20 UNC x 1" (in) ground stud with three nuts and two flat washers shall be welded to each lid and coated with anti-seize compound. A 1/4 - 20 UNC x 1" (in) ground stud with three nuts and four washers shall be welded to the frame and coated with anti-seize compound.
5. Connect a bonding jumper to the grounded end bushing for RMC conduit and connect the RMC conduit bushing jumper to the equipment grounding conductor at the hex coupling nut welded to the stainless steel channel. Connect the equipment grounding conductors in the PVC and/or HDPE conduits to the hex coupling nut. The bonding jumper shall be #8 min. x 1' (ft) of tinned braided copper between the lid and the frame and shall be #8 AWG min. from the frame to the hex coupling nut. See Contract Plans and **Standard Plan J-60.05** for bonding jumper requirements.
6. The system identification letters shall be 1/8" (in) line thickness formed with a mild steel weld bead. See COVER MARKING DETAIL, **Standard Specification 9-29.2(4)**.
7. Cement concrete shall be Class 4000.
8. Capacity - conduit diameter = 40" (in).
9. Vault shall be installed on 6" (in) crushed surfacing pad in accordance with **Standard Specification 8-20.3(6)**.
10. Typical Small Cable Vault features and arrangement shown. Reinforcing not shown. Dimensions and arrangements will vary slightly by manufacturer See Approved shop drawings.
11. Small Cable Vaults for WSDOT Projects shall only be installed with the lid frame bearing on the concrete portion of cable vault.

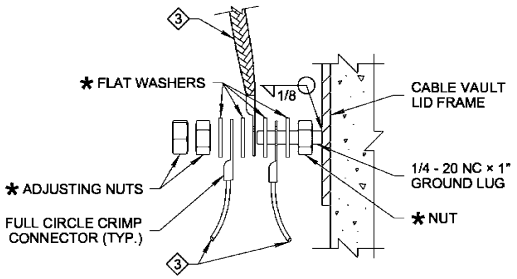

TRIPLE BONDING JUMPER CONNECTION DETAIL

* BOLTS, NUTS AND WASHERS ~ **ASTM F593 OR A193, TYPE 304 OR TYPE 316** STAINLESS STEEL (S.S.)

◇1 EQUIPMENT GROUNDING CONDUCTOR
◇2 COPPER SOLDERLESS CRIMP CONNECTOR
◇3 EQUIPMENT BONDING JUMPER (SEE NOTE 5)
◇4 SEE CONTRACT FOR CONDUIT SIZE AND NUMBER
◇5 RMC SHOWN ~ SEE CONTRACT FOR CONDUIT TYPE
◇6 PVC OR HDPE (PVC SHOWN) ~ SEE CONTRACT FOR CONDUIT TYPE

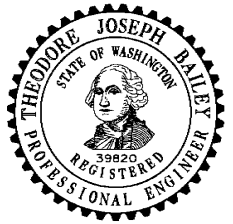

Theodore Joseph Bailey Bailey, Ted Apr 25 2016 5:12 PM

SMALL CABLE VAULT

STANDARD PLAN J-90.21-01

SHEET 1 OF 2 SHEETS

APPROVED FOR PUBLICATION
Carpenter, Jeff Apr 28 2016 3:18 PM
STATE DESIGN ENGINEER
Washington State Department of Transportation

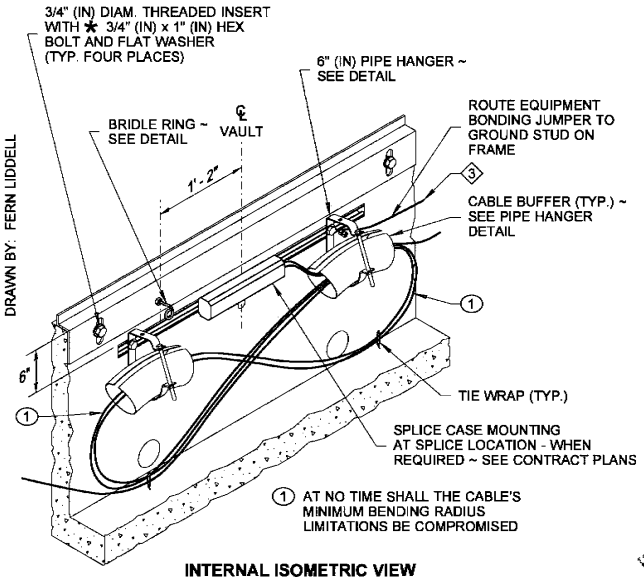

INTERNAL ISOMETRIC VIEW

DRAWN BY: FERN LIDDELL

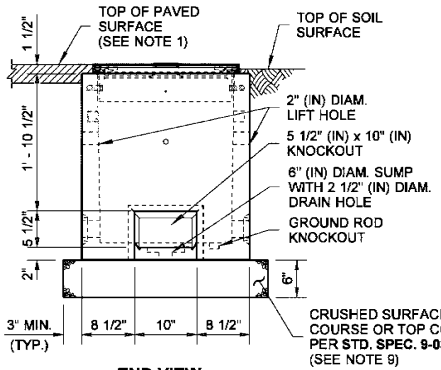

END VIEW

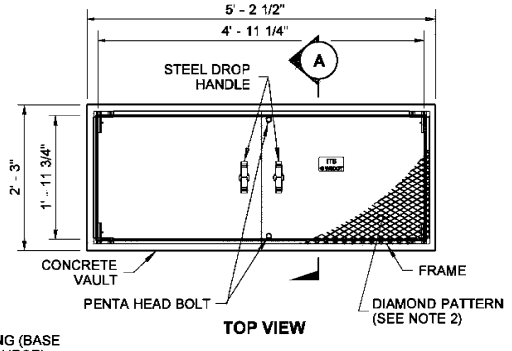

TOP VIEW

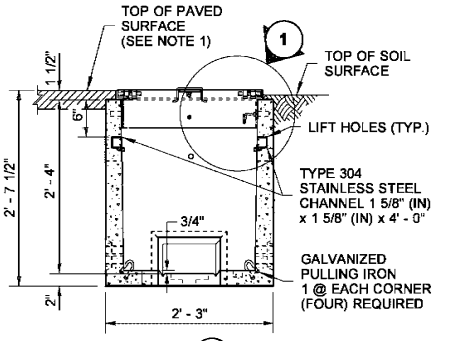

SECTION (A)

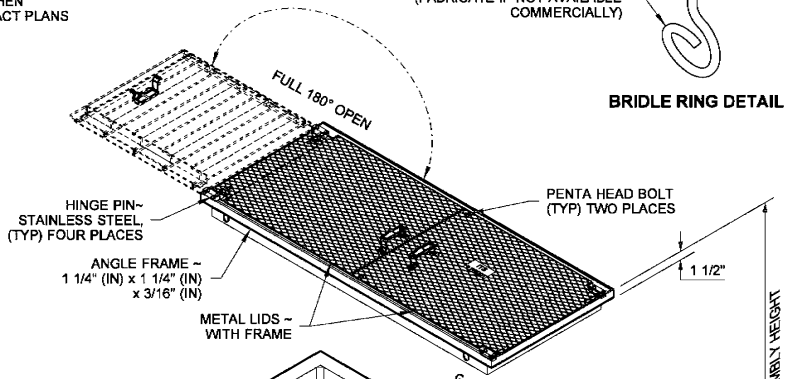

BRIDLE RING DETAIL

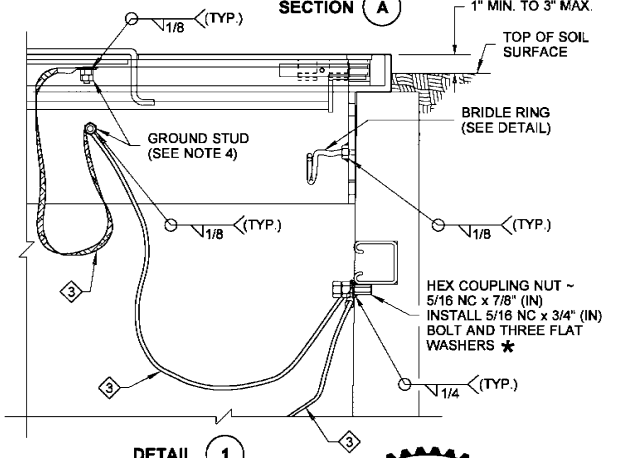

DETAIL (1)

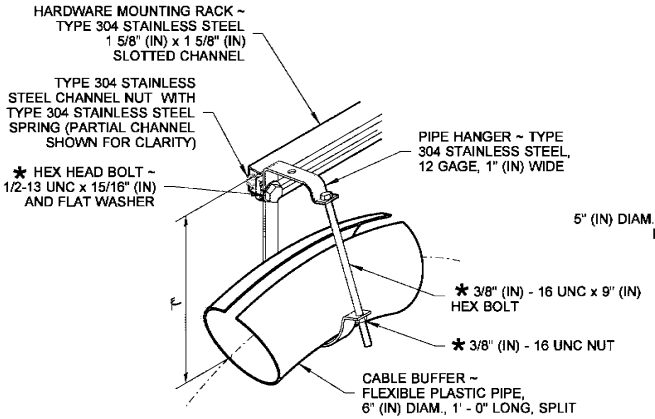

PIPE HANGER DETAIL

FABRICATE IF NOT AVAILABLE COMMERCIALLY

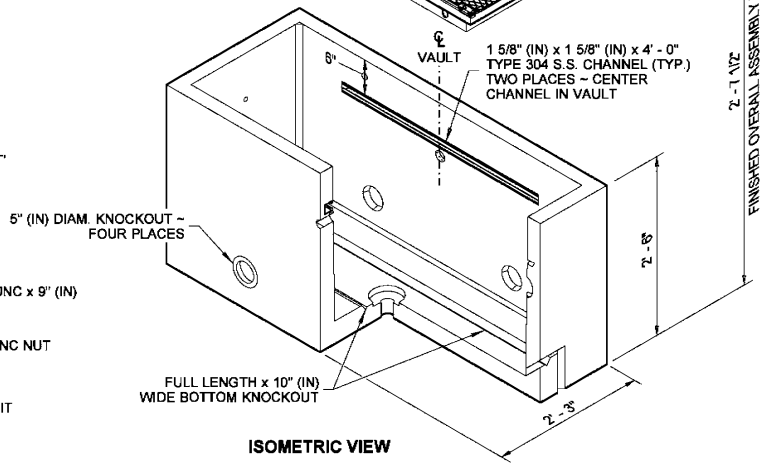

ISOMETRIC VIEW

SEE ISOMETRIC CUTAWAY ASSEMBLY ~ SHEET 1, FOR DIMENSIONS NOT SHOWN

THEODORE JOSEPH BAILEY STATE OF WASHINGTON 39820 REGISTERED PROFESSIONAL ENGINEER

Theodore Joseph Bailey Bailey, Ted Apr 25 2016 5:12 PM

SMALL CABLE VAULT

STANDARD PLAN J-90.21-01

SHEET 2 OF 2 SHEETS

APPROVED FOR PUBLICATION

Carpenter, Jeff Carpenter, Jeff Apr 28 2016 3:18 PM

STATE DESIGN ENGINEER

Washington State Department of Transportation

This page left blank intentionally.

This page left blank intentionally.

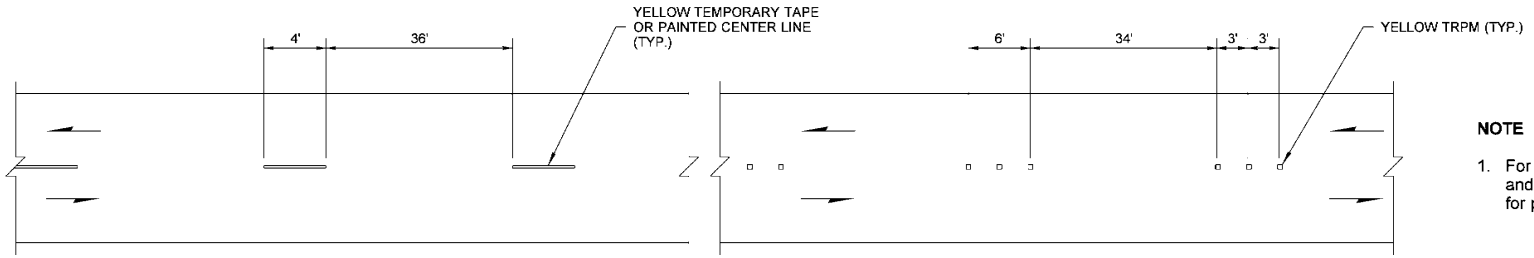

HOT MIX ASPHALT PAVEMENT

BITUMINOUS SURFACE TREATMENT

TWO-LANE ROADWAY

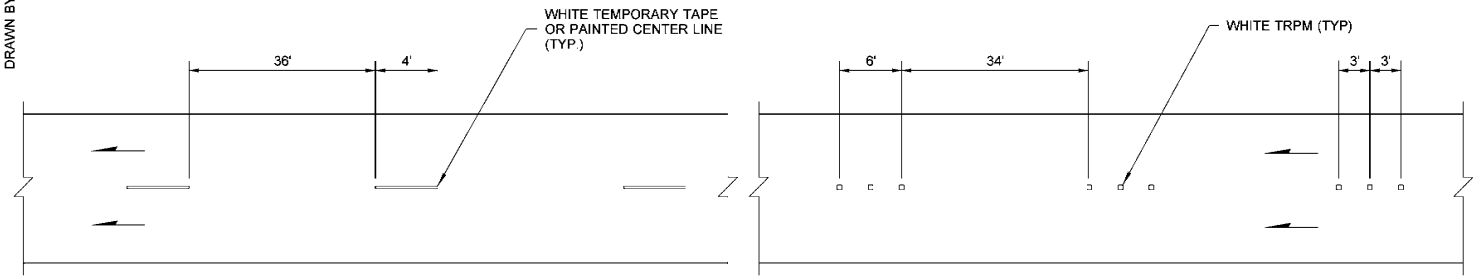

HOT MIX ASPHALT PAVEMENT

BITUMINOUS SURFACE TREATMENT

ONE-WAY TWO-LANE ROADWAY

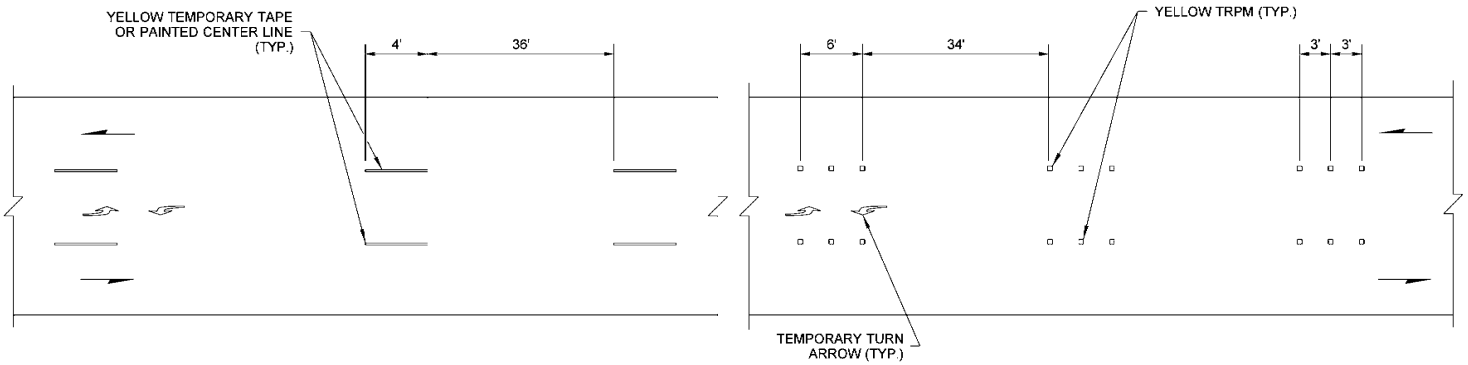

HOT MIX ASPHALT PAVEMENT

BITUMINOUS SURFACE TREATMENT

TWO-WAY TWO-LANE LEFT TURN ROADWAY

NOTE

1. For Hot Mix Asphalt Paving projects ~ "DO NOT PASS" and "PASS WITH CARE" signs shall be included for passing zones.

DRAWN BY: FERN LIDDELL

JOHN C. NISBET
STATE OF WASHINGTON
29115
REGISTERED
PROFESSIONAL ENGINEER

Nisbet, John
May 16 2016 9:56 AM

TEMPORARY PAVEMENT MARKING ~ SHORT DURATION STANDARD PLAN K-70.20-01

SHEET 1 OF 1 SHEET

APPROVED FOR PUBLICATION

Carpenter, Jeff
Jun 1 2016 4:19 PM

STATE DESIGN ENGINEER

Washington State Department of Transportation

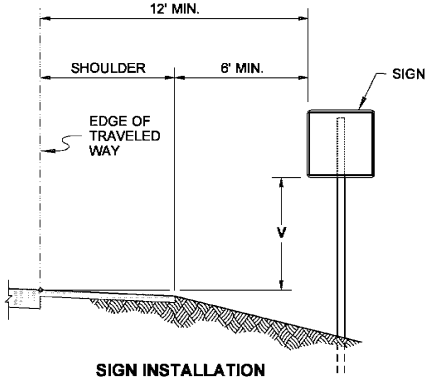

SIGN INSTALLATION (FILL SECTION)

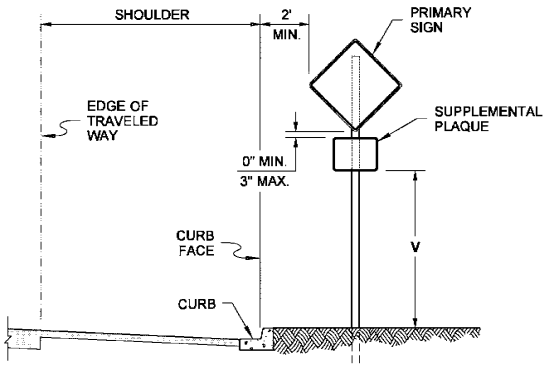

SIGN INSTALLATION (CURB SECTION)

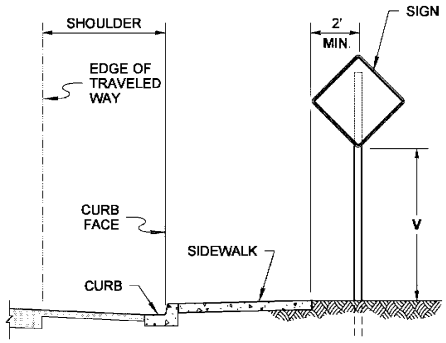

SIGN INSTALLATION (SIDEWALK AND CURB SECTION)

NOTES

1. For sign installation details, see **Standard Plan G - series.**
2. Where it is impractical to locate a sign with the lateral offset, a minimum of 2'(ft) offset may be used. A 1'(ft) lateral offset may be used in business, commercial or residential areas.
3. The "**V**" height for signs, with an area of more than 50 square feet and two or more sign supports, is 7 feet in both rural and urban areas.

HEIGHT V		
	TO BOTTOM OF SIGN (NO SUPPLEMENTAL PLAQUE)	**TO BOTTOM OF SUPPLEMENTAL PLAQUE** (WHEN REQUIRED)
RURAL	5' MINIMUM	4' MINIMUM
URBAN	7' MINIMUM	6' MINIMUM

DRAWN BY: FERN LIDDELL

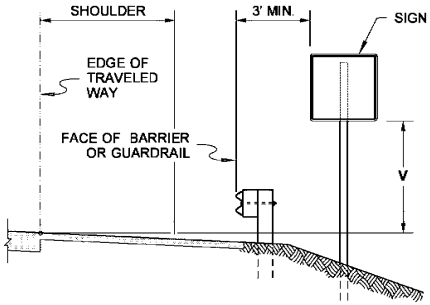

SIGN INSTALLATION (BEHIND TRAFFIC BARRIER)

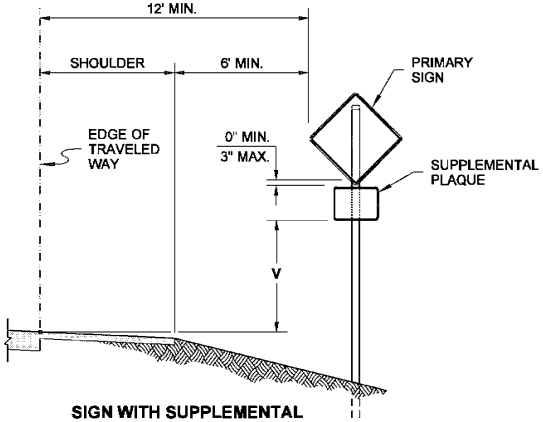

SIGN WITH SUPPLEMENTAL PLAQUE INSTALLATION (FILL SECTION)

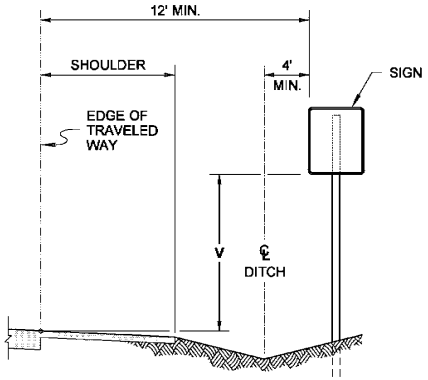

SIGN INSTALLATION (DITCH SECTION)

JOHN C. NISBET
STATE OF WASHINGTON
29115
REGISTERED
PROFESSIONAL ENGINEER

Nisbet, John
May 16 2016 9:57 AM

CLASS A CONSTRUCTION SIGNING INSTALLATION

STANDARD PLAN K-80.10-01

SHEET 1 OF 1 SHEET

APPROVED FOR PUBLICATION
Carpenter, Jeff
Jun 1 2016 4:20 PM
STATE DESIGN ENGINEER
Washington State Department of Transportation

DRAWN BY: LISA CYFORD

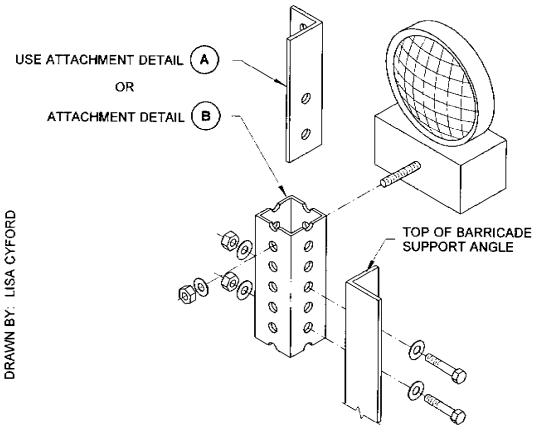

WARNING LIGHT ATTACHMENT DETAIL

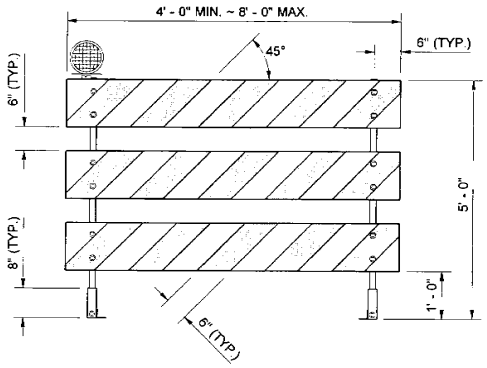

ELEVATION

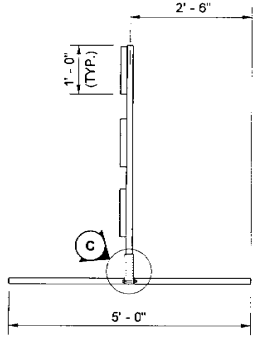

SIDE

TYPE 3 BARRICADE

NOTES

1. All fasteners may be zinc plated, galvanized or stainless steel. All steel angle and tubular steel shall be hot-rolled, high carbon steel, painted or galvanized.
2. Install one lightweight Type A Low-Intensity flashing warning light on the traffic side of the barricade. Install two Type A Low-Intensity flashing warning lights per barricade when the barricades are used to close a roadway. Attach the light to the barricade according to the light manufacturer's recommendations or use the details shown on this plan.
3. Stripes on barricade rails shall be alternating orange and white retroreflective stripes (sloping downward at an angle of 45 degrees in the direction traffic is to pass).
4. The Type 3 barricade design shown on this plan meets the crash test requirements of NCHRP 350. Alternative designs may be approved if they conform to the NCHRP 350 crash test criteria and the MUTCD.
5. When a sign is mounted on the barricade, it shall be securely bolted to at least two plywood panels. The top of the sign shall not be higher than the top panel of the barricade.
6. When sandbags are used in freezing weather, Urea fertilizer shall be mixed with the sand in a quantity to prevent the sand from freezing.

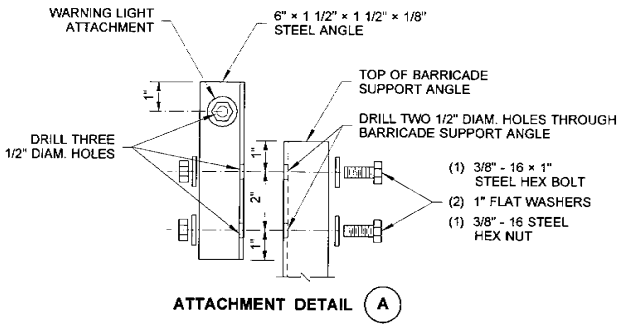

ATTACHMENT DETAIL (A)

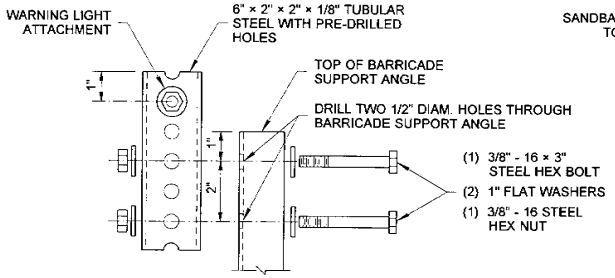

ATTACHMENT DETAIL (B)

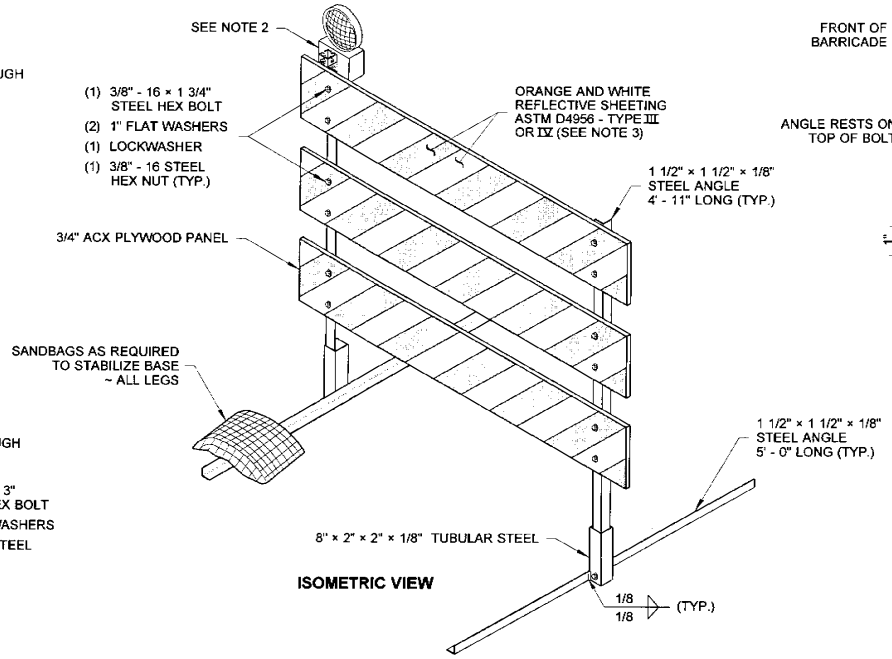

ISOMETRIC VIEW

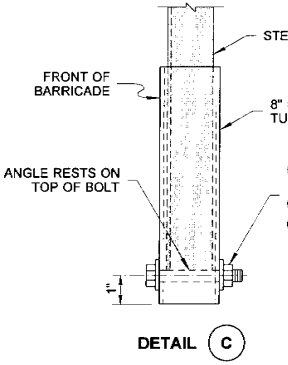

DETAIL (C)

THEODORE J. TREPANIER
STATE OF WASHINGTON
REGISTERED PROFESSIONAL ENGINEER
EXPIRES AUGUST 9, 2007

TYPE 3 BARRICADE

STANDARD PLAN K-80.20-00

SHEET 1 OF 2 SHEETS

APPROVED FOR PUBLICATION

STATE DESIGN ENGINEER — DATE

Washington State Department of Transportation

This page left blank intentionally.

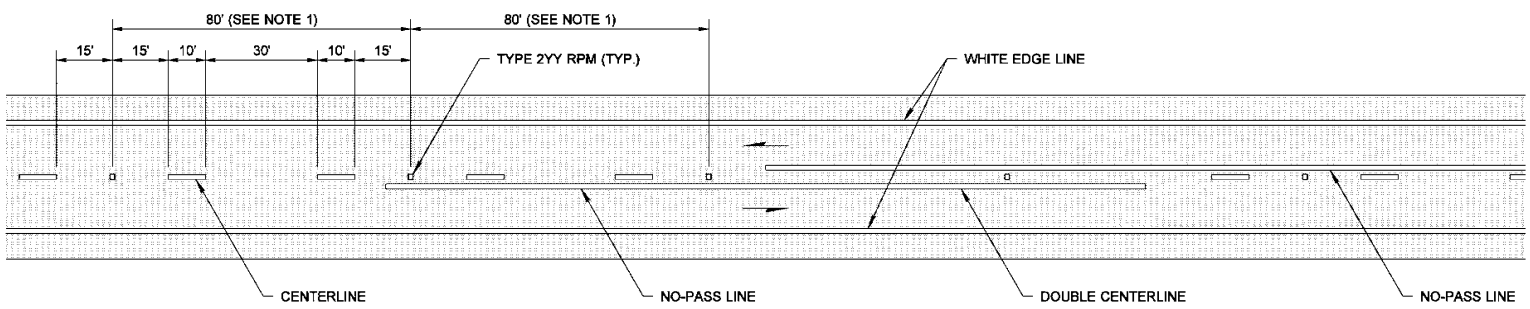

TWO-LANE TWO-WAY TRAFFIC

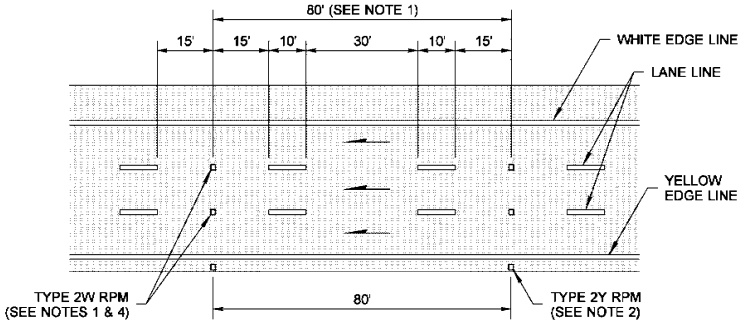

MULTILANE ONE-WAY TRAFFIC

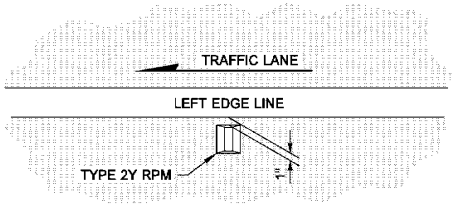

LEFT EDGE OF LANE PLACEMENT DETAIL
(SEE NOTE 2)

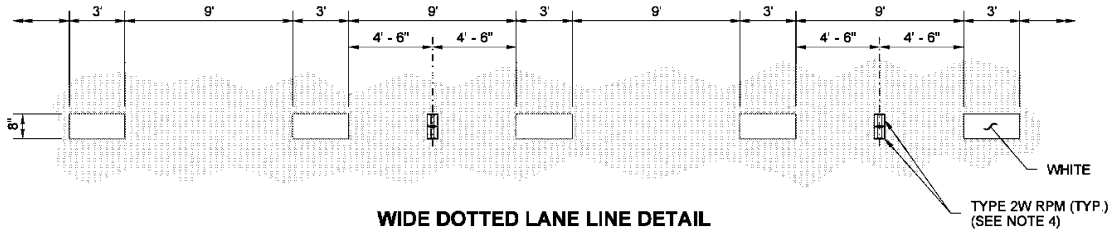

WIDE DOTTED LANE LINE DETAIL
(SEE NOTE 5)

NOTES

1. Raised Pavement Markers Types 2YY and 2W shall be spaced at 80' (ft) intervals on tangents and on horizontal curves with a radius of 1500' (ft) or more, and at 40' (ft) intervals on horizontal curves having radii of less than 1500' (ft). Center the RPMs in the gaps between the pavement marking lines.
2. Type 2Y RPMs, when specified, shall be placed outside the left Edge Line at 80' (ft) intervals. See "LEFT EDGE OF LANE PLACEMENT DETAIL."
3. Recessed pavement markers, when specified, shall be installed at the locations shown for Type 2W RPMs on multilane one-way roadways, and Type 2YY RPMs on two-lane two-way roadways.
4. The Type 2W RPMs placed on multilane one-way roadways and all RPMs set in recesses shall have an abrasion-resistant coating.
5. Do not recess side-to-side RPMs on Wide Dotted Lane Lines.

TYPE 2 RPM RAISED FACE COLORS	
TYPE 2YY	YELLOW AND YELLOW
TYPE 2W	WHITE ~ ONE SIDE ONLY
TYPE 2Y	YELLOW ~ ONE SIDE ONLY

DRAWN BY: COLBY FLETCHER

BRIAN J. WALSH
STATE OF WASHINGTON
36103
REGISTERED
PROFESSIONAL ENGINEER

Walsh, Brian
Walsh, Brian Feb 29 2016 10:18 AM

LONGITUDINAL MARKING SUPPLEMENT WITH RAISED PAVEMENT MARKERS
STANDARD PLAN M-20.30-04

SHEET 1 OF 2 SHEETS

APPROVED FOR PUBLICATION
Carpenter, Jeff
Carpenter, Jeff Feb 29 2016 12:39 PM
STATE DESIGN ENGINEER
Washington State Department of Transportation

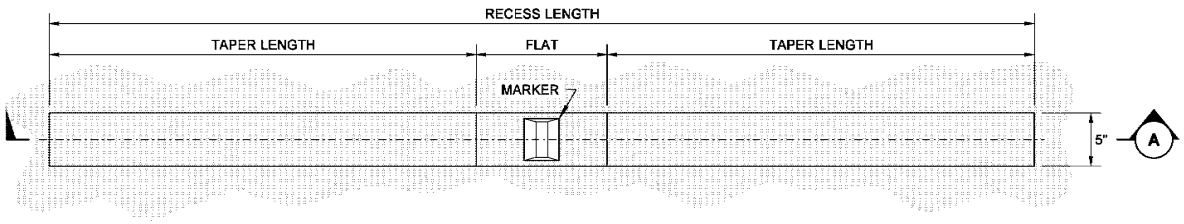

PLAN VIEW

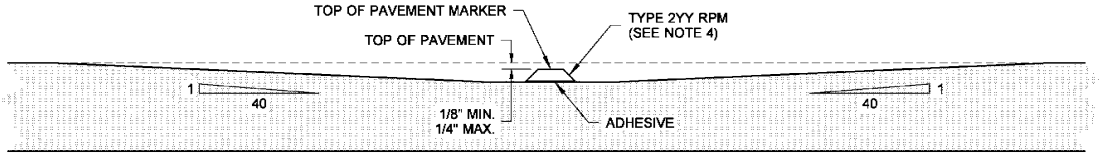

SECTION (A)

TWO-WAY ROADWAY RECESSED PAVEMENT MARKER DETAILS

FOR USE WHERE SPECIFIED IN CONTRACT

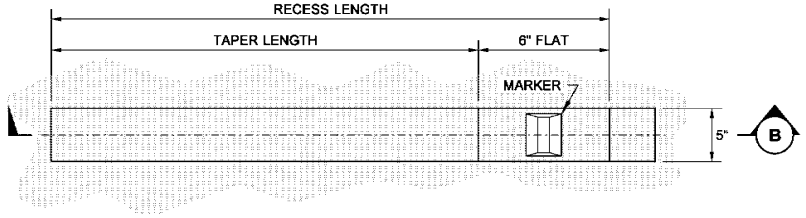

PLAN VIEW

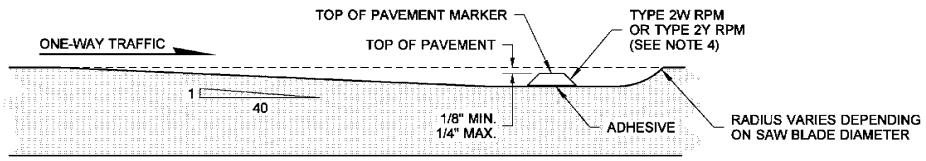

SECTION (B)

ONE-WAY ROADWAY RECESSED PAVEMENT MARKER DETAILS

FOR USE WHERE SPECIFIED IN CONTRACT

DRAWN BY: COLBY FLETCHER

BRIAN J. WALSH
STATE OF WASHINGTON
36103
REGISTERED
PROFESSIONAL ENGINEER

Walsh, Brian
Walsh. Brian Feb 29 2016 10:20 AM

LONGITUDINAL MARKING SUPPLEMENT WITH RAISED PAVEMENT MARKERS

STANDARD PLAN M-20.30-04

SHEET 2 OF 2 SHEETS

APPROVED FOR PUBLICATION
Carpenter, Jeff
Carpenter. Jeff Feb 29 2016 12:39 PM
STATE DESIGN ENGINEER
Washington State Department of Transportation

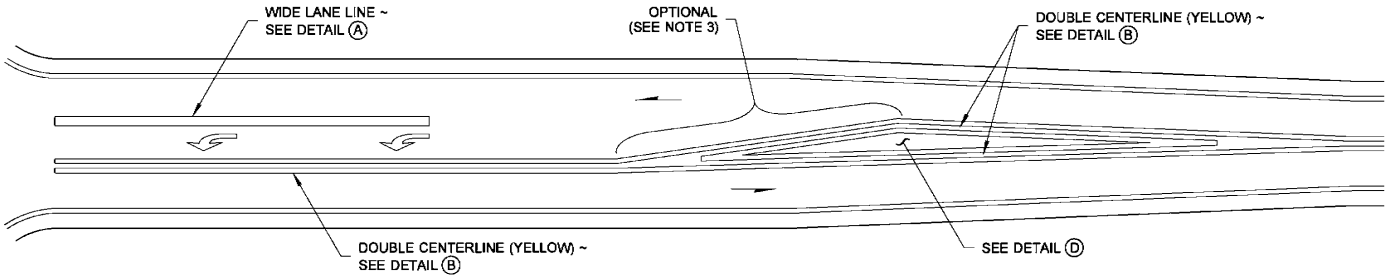

LEFT-TURN LANE
(SEE NOTE 3)

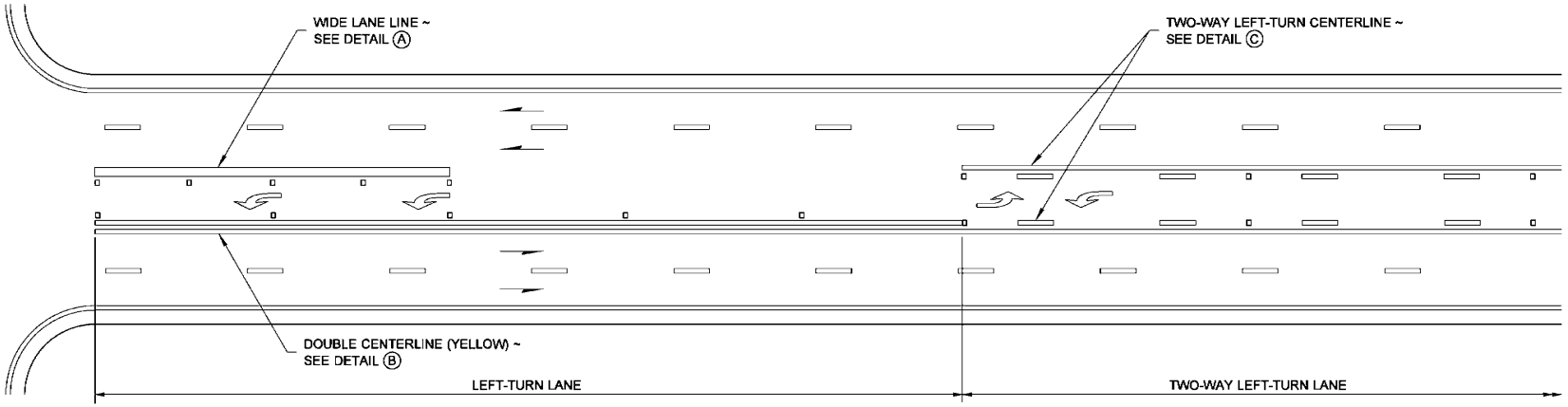

TWO-WAY LEFT-TURN LANE

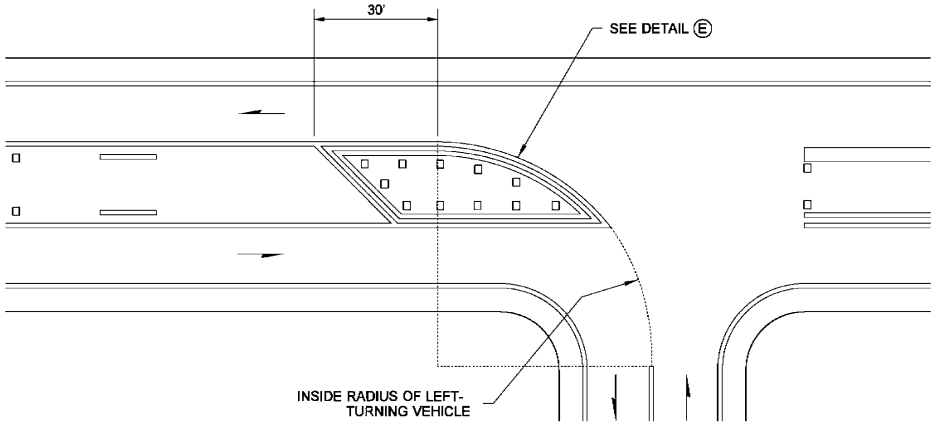

END TWO-WAY LEFT-TURN LANE

NOTES

1. Raised pavement markers shall be installed only when specified in the Contract Plans.
2. See the Standard Plans for marker designation.
3. The portion labeled "OPTIONAL" is used only when the Optional Marked Deceleration Taper (see **Standard Plans M-3.10 and M-3.20)** is specified in the Contract Plans.

Type 2L (SL) Traffic Arrow

DRAWN BY: LISA CYFORD

BRIAN J. WALSH
STATE OF WASHINGTON
36103
REGISTERED
PROFESSIONAL ENGINEER

Walsh, Brian
Jun 24 2014 2:33 PM

LONGITUDINAL MARKING SUPPLEMENT WITH RPMs ~ TURN LANES
STANDARD PLAN M-20.40-03

SHEET 1 OF 2 SHEETS

APPROVED FOR PUBLICATION
Bakotich, Pasco
Jun 24 2014 4:42 PM
STATE DESIGN ENGINEER
Washington State Department of Transportation