Washington State Department of Transportation

Publications Transmittal

Transmittal Number	Date
PT 15-048	August 3, 2015
Publication Distribution	
To: *Standard Plans* manual holders	
Publication Title	**Publication Number**
Standard Plans – August 2015	M 21-01
Originating Organization	
WSDOT Development Division, Design Office – Standard Plans Unit	

Remarks

Download the current electronic WSDOT *Standard Plans* and revision packages at:
http://www.wsdot.wa.gov/design/Standards

Instructions

- Replace Cover page with **new Cover page** provided.
- Remove **pages 1 ~ 12** from your current manual.
- Insert **pages 1 ~ 13**.
- Refer to the ***REMOVE & INSERT INSTRUCTIONS ~ Standard Plans Revision 8-3-2015***

If you have comments, questions, or suggestions, please don't hesitate to contact us:

Area of Practice	Your Contacts		
Standard Plans Engineer	Bill Berens	360-705-7256	berensb@wsdot.wa.gov
Standard Plan Technician	Fern Liddell	360-705-7255	liddelf@wsdot.wa.gov
Standard Plan Technician	Colby Fletcher	360-705-7247	fletcco@wsdot.wa.gov

To get the latest information on individual WSDOT publications

Sign up for email updates at: www.wsdot.wa.gov/publications/manuals/

HQ Design Office Signature	Phone Number
/s/John Donahue	360-705-7952

REMOVE AND INSERT INSTRUCTIONS - Standard Plans Revision 8-3-2015

REMOVE				*INSERT*			
A-30.15-00	11/8/07		Deleted	Blank			
A-30.30-01	6/16/11			A-30.30-01	6/16/11		Reprinted
A-40.10-02	6/2/11			A-40.10-03	12/23/14		Revised
A-40.15-00	8/11/09	Sheet 1 of 2		A-40.15-00	8/11/09	Sheet 1 of 2	Reprinted
A-40.20-02	5/29/13			A-40.20-03	12/23/14		Revised
A-40.50-01	6/2/11	Sheet 1 of 2		A-40.50-02	12/23/14	Sheet 1 of 2	Revised
A-40.50-01	6/2/11	Sheet 2 of 2		A-40.50-02	12/23/14	Sheet 2 of 2	Revised
A-50.10-00	11/17/08	Sheet 1 of 2		A-50.10-00	11/17/08	Sheet 1 of 2	Reprinted
Blank				Blank			
A-60.10-02	6/17/14	Sheet 1 of 2		A-60.10-03	12/23/14	Sheet 1 of 2	Revised
A-60.10-02	6/17/14	Sheet 2 of 2		A-60.10-03	12/23/14	Sheet 2 of 2	Revised
A-60.20-02	6/2/11	Sheet 1 of 2		A-60.20-03	12/23/14	Sheet 1 of 2	Revised
A-60.20-02	6/2/11	Sheet 2 of 2		A-60.20-03	12/23/14	Sheet 2 of 2	Revised
Blank				Blank			
C-1	6/16/11	Sheet 2 of 2		C-1	6/16/11	Sheet 2 of 2	Reprinted
C-1a	10/14/09			C-1a	7/14/15		Revised
Blank				Blank			
C-1b	6/16/11	Sheet 1 of 2		C-1b	7/14/15	Sheet 1 of 2	Revised
C-1b	6/16/11	Sheet 2 of 2		C-1b	7/14/15	Sheet 2 of 2	Revised
C-1c	5/30/97			C-1c	5/30/97		Reprinted
C-4b	6/8/06			C-4b	6/8/06		Reprinted
C-4e	2/20/03			C-4e	10/23/14		Revised
C-20.10-02	6/11/14			C-20.10-03	7/14/15		Revised
C-20.14-03	6/11/14			C-20.14-03	6/11/14		Reprinted
C-20.19-02	6/11/14			C-20.19-02	6/11/14		Reprinted
C-20.40-04	6/11/14			C-20.40-05	7/14/15		Revised
C-20.41-00	6/30/14			C-20.41-01	7/14/15		Revised
Blank				Blank			
C-20.42-04	6/11/14			C-20.42-05	7/14/15		Revised
C-20.45-01	7/2/12			C-20.45-01	7/2/12		Reprinted
C-22.14-03	6/11/14			C-22.14-03	6/11/14		Reprinted
C-22.16-04	6/11/14			C-22.16-05	7/14/15		Revised
C-22.40-03	6/11/14			C-22.40-04	10/23/14		Revised
C-22.41-00	6/11/14			C-22.41-01	10/23/14		Revised
C-22.45-00	6/16/11			C-22.45-01	10/23/14		Revised
Blank				Blank			
C-25.18-04	6/11/14			C-25.18-05	7/14/15		Revised
C-25.20-05	7/2/12			C-25.20-06	7/14/15		Revised
C-25.22-04	7/2/12			C-25.22-05	7/14/15		Revised
C-25.26-02	7/2/12			C-25.26-03	7/14/15		Revised
G-10.10-00	9/20/07			G-10.10-00	9/20/07		Reprinted
G-20.10-01	6/11/14			G-20.10-02	6/23/15		Revised
G-22.10-02	6/17/14	Sheet 1 of 3		G-22.10-03	7/10/15	Sheet 1 of 3	Revised
G-22.10-02	6/17/14	Sheet 2 of 3		G-22.10-03	7/10/15	Sheet 2 of 3	Revised
G-22.10-02	6/17/14	Sheet 3 of 3		G-22.10-03	7/10/15	Sheet 3 of 3	Revised
G-24.10-00	11/8/07			G-24.10-00	11/8/07		Reprinted
G-24.30-01	2/7/12	Sheet 2 of 2		G-24.30-01	2/7/12	Sheet 2 of 2	Reprinted
G-24.40-04	6/17/14	Sheet 1 of 4		G-24.40-05	6/23/15	Sheet 1 of 4	Revised
G-24.40-04	6/17/14	Sheet 2 of 4		G-24.40-05	6/23/15	Sheet 2 of 4	Revised
G-24.40-04	6/17/14	Sheet 3 of 4		G-24.40-05	6/23/15	Sheet 3 of 4	Revised
G-24.40-04	6/17/14	Sheet 4 of 4		G-24.40-05	6/23/15	Sheet 4 of 4	Revised
G-24.50-03	6/17/14			G-24.50-03	6/17/14		Reprinted
G-24.60-03	6/17/14	Sheet 1 of 2		G-24.60-04	6/23/15	Sheet 1 of 2	Revised
G-24.60-03	6/17/14	Sheet 2 of 2		G-24.60-04	6/23/15	Sheet 2 of 2	Revised
G-25.10-04	6/10/13			G-25.10-04	6/10/13		Reprinted
G-30.10-03	6/17/14	Sheet 1 of 2		G-30.10-04	6/23/15	Sheet 1 of 2	Revised
G-30.10-03	6/17/14	Sheet 2 of 2		G-30.10-04	6/23/15	Sheet 2 of 2	Revised
G-50.10-01	6/20/13	Sheet 1 of 2		G-50.10-02	6/23/15	Sheet 1 of 2	Revised
G-50.10-01	6/20/13	Sheet 2 of 2		G-50.10-02	6/23/15	Sheet 2 of 2	Revised
G-60.10-02	6/10/13	Sheet 1 of 4		G-60.10-03	6/18/15	Sheet 1 of 4	Revised
G-60.10-02	6/10/13	Sheet 2 of 4		G-60.10-03	6/18/15	Sheet 2 of 4	Revised
G-60.10-02	6/10/13	Sheet 3 of 4		G-60.10-03	6/18/15	Sheet 3 of 4	Revised

REMOVE AND INSERT INSTRUCTIONS - Standard Plans Revision 8-3-2015

REMOVE				***INSERT***			
G-60.10-02	6/10/13	Sheet 4 of 4		G-60.10-03	6/18/15	Sheet 4 of 4	Revised
G-60.20-01	6/27/11	Sheet 1 of 2		G-60.20-02	6/18/15	Sheet 1 of 2	Revised
G-60.20-01	6/27/11	Sheet 2 of 2		G-60.20-02	6/18/15	Sheet 2 of 2	Revised
G-60.30-01	6/27/11	Sheet 1 of 2		G-60.30-02	6/18/15	Sheet 1 of 2	Revised
G-60.30-01	6/27/11	Sheet 2 of 2		G-60.30-02	6/18/15	Sheet 2 of 2	Revised
G-70.10-02	6/10/13	Sheet 1 of 4		G-70.10-03	6/18/15	Sheet 1 of 4	Revised
G-70.10-02	6/10/13	Sheet 2 of 4		G-70.10-03	6/18/15	Sheet 2 of 4	Revised
G-70.10-02	6/10/13	Sheet 3 of 4		G-70.10-03	6/18/15	Sheet 3 of 4	Revised
G-70.10-02	6/10/13	Sheet 4 of 4		G-70.10-03	6/18/15	Sheet 4 of 4	Revised
G-70.20-02	6/10/13			G-70.20-02	6/10/13		Reprinted
G-90.10-01	5/11/11			G-90.10-01	5/11/11		Reprinted
G-90.20-02	3/25/13			G-90.20-03	7/10/15		Revised
Blank							
J-3	8/1/97	Sheet 1 of 2	Deleted				
J-3	8/1/97	Sheet 2 of 2	Deleted				
J-3b	3/4/05	Sheet 1 of 2	Deleted				
J-3b	3/4/05	Sheet 2 of 2	Deleted				
J-3c	6/24/02		Deleted				
J-10	7/8/97			Blank			
J-10.10-02	6/11/14	Sheet 1 of 5		J-10	7/8/97		Reprinted
J-10.10-02	6/11/14	Sheet 2 of 5		Blank			
J-10.10-02	6/11/14	Sheet 3 of 5		J-10.10-03	6/3/15	Sheet 1 of 6	Revised
J-10.10-02	6/11/14	Sheet 4 of 5		J-10.10-03	6/3/15	Sheet 2 of 6	Revised
J-10.10-02	6/11/14	Sheet 5 of 5		J-10.10-03	6/3/15	Sheet 3 of 6	Revised
J-10.15-01	6/11/14			J-10.10-03	6/3/15	Sheet 4 of 6	Revised
J-10.22-00	5/29/13	Sheet 1 of 2		J-10.10-03	6/3/15	Sheet 5 of 6	Revised
				J-10.10-03	6/3/15	Sheet 6 of 6	Revised
				Blank			
				J-10.15-01	6/11/14		Reprinted
				J-10.16-00	6/3/15	Sheet 1 of 2	New Plan
				J-10.16-00	6/3/15	Sheet 2 of 2	New Plan
				J-10.17-00	6/3/15	Sheet 1 of 2	New Plan
				J-10.17-00	6/3/15	Sheet 2 of 2	New Plan
				J-10.18-00	6/3/15	Sheet 1 of 2	New Plan
				J-10.18-00	6/3/15	Sheet 2 of 2	New Plan
				J-10.20-00	6/3/15	Sheet 1 of 2	New Plan
				J-10.20-00	6/3/15	Sheet 2 of 2	New Plan
				J-10.21-00	6/3/15		New Plan
				Blank			
				J-10.22-00	5/29/13	Sheet 1 of 2	Reprinted
J-15.10-01	6/11/14			J-15.10-01	6/11/14		Reprinted
J-15.15-01	6/11/14			J-15.15-02	7/10/15		Revised
J-21.20-01	6/10/13			J-21.20-01	6/10/13		Reprinted
J-22.15-01	6/10/13			J-22.15-02	7/10/15	Sheet 1 of 3	Revised
				J-22.15-02	7/10/15	Sheet 2 of 3	Revised
				J-22.15-02	7/10/15	Sheet 3 of 3	Revised
J-22.16-02	6/10/13			J-22.16-03	7/10/15		Revised
J-26.10-02	3/15/12			J-26.10-02	3/15/12		Reprinted
J-28.22-00	8/7/07	Sheet 2 of 2		J-28.22-00	8/7/07	Sheet 2 of 2	Reprinted
J-28.24-00	8/7/07			J-28.24-01	6/3/15		Revised
J-29.16-01	6/20/13			J-29.16-01	6/20/13		Reprinted
J-40.10-03	5/20/13	Sheet 1 of 2		J-30.10-00	6/18/15	Sheet 1 of 2	New Plan
				J-30.10-00	6/18/15	Sheet 2 of 2	New Plan
				J-40.10-03	5/20/13	Sheet 1 of 2	Reprinted
Blank				J-75.10-02	7/10/15		Revised
J-75.10-01	5/11/11			J-75.20-01	7/10/15	Sheet 1 of 2	Revised
J-75.20-00	2/10/09			J-75.20-01	7/10/15	Sheet 2 of 2	Revised
J-75.30-01	5/11/11			J-75.30-02	7/10/15		Revised
L-10.10-02	6/21/12	Sheet 2 of 2		L-10.10-02	6/21/12	Sheet 2 of 2	Reprinted
L-20.10-02	6/21/12	Sheet 1 of 2		L-20.10-03	7/14/15	Sheet 1 of 2	Revised
L-20.10-02	6/21/12	Sheet 2 of 2		L-20.10-03	7/14/15	Sheet 2 of 2	Revised
L-30.10-02	6/11/14	Sheet 1 of 2		L-30.10-02	6/11/14	Sheet 1 of 2	Reprinted

REMOVE AND INSERT INSTRUCTIONS - Standard Plans Revision 8-3-2015

REMOVE			***INSERT***			
M-2.20-02	6/3/11		M-2.20-03	7/10/15		Revised
M-3.10-03	6/3/11		M-2.21-00	7/10/15		New Plan
			Blank			
			M-3.10-03	6/3/11		Reprinted
M-20.10-02	6/3/11		M-20.10-02	6/3/11		Reprinted
M-20.20-01	1/30/07		M-20.20-02	4/20/15		Revised
M-20.30-02	10/14/09		Blank			
M-20.40-03	6/24/14	Sheet 1 of 2	M-20.30-03	4/20/15	Sheet 1 of 2	Revised
			M-20.30-03	4/20/15	Sheet 2 of 2	Revised
			M-20.40-03	6/24/14	Sheet 1 of 2	Reprinted
M-24.20-01	5/31/06	Sheet 1 of 3	M-24.20-02	4/20/15	Sheet 1 of 3	Revised
M-24.20-01	5/31/06	Sheet 2 of 3	M-24.20-02	4/20/15	Sheet 2 of 3	Revised
M-24.20-01	5/31/06	Sheet 3 of 3	M-24.20-02	4/20/15	Sheet 3 of 3	Revised
M-24.40-01	5/31/06	Sheet 1 of 2	M-24.40-02	4/20/15	Sheet 1 of 2	Revised
M-24.40-01	5/31/06	Sheet 2 of 2	M-24.40-02	4/20/15	Sheet 2 of 2	Revised
M-24.50-00	6/16/11		M-24.50-00	6/16/11		Reprinted

Washington State
Department of Transportation

Standard Plans

M 21-01

August 3, 2015

Engineering and Regional Operations
Development Division, Design Office

Americans with Disabilities Act (ADA) Information

Materials can be provided in alternative formats by calling the ADA Compliance Manager at 360-705-7097. Persons who are deaf or hard of hearing may contact that number via the Washington Relay Service at 7-1-1.

Title VI Notice to the Public

It is Washington State Department of Transportation (WSDOT) policy to ensure no person shall, on the grounds of race, color, national origin, or sex, as provided by Title VI of the Civil Rights Act of 1964, be excluded from participation in, be denied the benefits of, or be otherwise discriminated against under any of its federally funded programs and activities. Any person who believes his/her Title VI protection has been violated may file a complaint with WSDOT's Office of Equal Opportunity (OEO). For Title VI complaint forms and advice, please contact OEO's Title VI Coordinator at 360-705-7082 or 509-324-6018.

To get the latest information on WSDOT publications, sign up for individual email updates at www.wsdot.wa.gov/publications/manuals.

Washington State Department of Transportation
Engineering and Regional Operations
Development Division, Design Office
PO Box 47329
Olympia, WA 98504-7329

Email: designstandards@wsdot.wa.gov
www.wsdot.wa.gov/design/standards/plans.htm

Foreword

This manual contains standard engineering drawings used for road, bridge, and municipal construction. These drawings have been prepared under the direct supervision of a Washington State licensed professional engineer, who is knowledgeable in the specialized field of civil engineering depicted in each drawing. This manual standardizes fabrication, installation, and construction methods for specific items of work, and complements the contract documents and the *Standard Specifications for Road, Bridge, and Municipal Construction*.

Updating the manual is a continual process and revisions are issued periodically. Questions, comments, and recommendations for changes are welcome.

Contact the Design Standards Team at:

360-705-7256 (phone)
designstandards@wsdot.wa.gov (email)

For contact via conventional mail, the *Comment Request* Form on the reverse side of this page is provided to facilitate routing and prompt delivery. Making a copy will preserve the original form for future use. Attach a copy of the form as a cover sheet when sending comments or sketches made on other documents, such as marked copies of specific Standard Plans. Your questions, comments, and/or recommendations should be sent to:

Design Standards
Transportation Building
Olympia, WA 98504-7329.

Further information, as well as Bentley Micro Station (.dgn) CAD files, Adobe Acrobat (.pdf) files, and some AutoCAD (.dwg) CAD files, can be found on the Design Standards website at: www.wsdot.wa.gov/eesc/design/designstandards

Contact the Engineering Publications Office at 360-705-7430 if you require additional copies of this manual.

/s/Jeff Carpenter

Jeff Carpenter
State Design Engineer

Comment Form

From: _____ Date: _____

_____ Phone: _____

_____

To: WSDOT Headquarters
Development Division, Design Office
Attn: Policy, Standards, and Research Section
PO Box 47329
Olympia, WA 98504-7329

Subject: *Standard Plan Manual* Comment

Comment (marked copies attached):

Contents

Plan No.	Plan Title	Publication Approval Date	
Section A	**Roadway Construction**		
A-10.10-00	Survey Stakes	8/7/07	*2 Sheets*
A-10.20-00	Survey Monument Types 1 and 2	10/5/07	
A-10.30-00	Monument Case and Cover	10/5/07	
A-20.10-00	Slope Treatment	8/31/07	
A-30.10-00	Concrete Slope Protection	11/8/07	
A-30.30-01	Wire Mesh Slope Protection	6/16/11	
A-30.35-00	Slope Protection Anchors	10/12/07	
A-40.00-00	Dowel Bar Baskets	8/11/09	
A-40.10-03	Cement Concrete Pavement Joints	12/23/14	
A-40.15-00	PCC Pavement Isolation Joints	8/11/09	*2 Sheets*
A-40.20-03	Bridge Paving Joint Seals	12/23/14	
A-40.50-02	Bridge Approach Slab	12/23/14	*2 Sheets*
A-50.10-00	Embankment Widening at Bridge End with Wing Wall	11/17/08	*2 Sheets*
A-50.20-01	Embankment Widening at Bridge End with Curtain Wall	9/22/09	*2 Sheets*
A-50.30-00	Embankment Widening at Bridge End with "L" Shaped Abutment	11/17/08	*2 Sheets*
A-50.40-00	Embankment Widening at Bridge End with Sidewalk	11/17/08	
A-60.10-03	Cement Concrete Pavement Rehabilitation	12/23/14	*2 Sheets*
A-60.20-03	Dowel Bar Retrofit for Cement Concrete Pavement	12/23/14	*2 Sheets*
A-60.30-00	Bridge Deck Transition for HMA Overlay	11/8/07	
A-60.40-00	HMA Overlay Further Deck Preparation	8/31/07	
Section B	**Drainage Structures and Hydraulics**		
B-5.20-01	Catch Basin Type 1	6/16/11	
B-5.40-01	Catch Basin Type 1L	6/16/11	
B-5.60-01	Catch Basin Type 1P (for Parking Lot)	6/16/11	
B-10.20-01	Catch Basin Type 2	2/7/12	
B-10.40-00	Catch Basin Type 2 with Flow Restrictor	6/1/06	
B-10.60-00	Catch Basin Type 2 with Baffle Type Flow Restrictor	6/8/06	
B-15.20-01	Manhole Type 1	2/7/12	
B-15.40-01	Manhole Type 2	2/7/12	
B-15.60-01	Manhole Type 3	2/7/12	
B-20.20-02	Drywell Type 1 (for Swale)	3/16/12	
B-20.40-03	Drywell Type 2 (with Pipe Inlet)	3/16/12	
B-20.60-03	Drywell Type 3 (with At-Grade Inlet)	3/15/12	
B-25.20-01	Combination Inlet	3/15/12	
B-25.60-00	Concrete Inlet	6/1/06	
B-30.10-01	Rectangular Frame (Reversible)	4/26/12	
B-30.20-02	Rectangular Solid Metal Cover	4/26/12	
B-30.30-01	Rectangular Vaned Grate	4/26/12	
B-30.40-01	Rectangular Bi-Directional Vaned Grate	4/26/12	
B-30.50-01	Rectangular Herringbone Grate	4/26/12	
B-30.70-03	Circular Frame (Ring) and Cover	4/26/12	
B-30.80-00	Circular Grate	6/8/06	
B-30.90-01	Miscellaneous Details for Drainage Structures	9/20/07	
B-35.20-00	Grate Inlet Type 1 (Cast-In-Place)	6/8/06	
B-35.40-00	Grate Inlet Type 2	6/8/06	*2 Sheets*
B-40.20-00	Welded Grates for Grate Inlet	6/1/06	

Contents

Plan No.	Plan Title	Publication Approval Date	
B-40.40-01	Frame and Dual Vaned Grates for Grate Inlet	6/16/10	
B-45.20-00	Drop Inlet Type 1	6/1/06	
B-45.40-00	Drop Inlet Type 2	6/1/06	
B-50.20-00	Grates for Drop Inlet	6/1/06	
B-55.20-00	Pipe Zone Bedding and Backfill	6/1/06	
B-60.20-00	Connection Details for Dissimilar Culvert Pipe	6/8/06	
B-60.40-00	Coupling Bands for Corrugated Metal Pipe	6/1/06	
B-65.20-01	Animal Underpass	4/26/12	
B-65.40-00	Equipment Underpass	6/1/06	
B-70.20-00	Beveled End Sections (for Culverts 30” Diameter or Less)	6/1/06	
B-70.60-00	Flared End Sections	6/1/06	
B-75.20-01	Headwalls for Culvert Pipe and Underpass	6/10/08	
B-75.50-01	Type 1 Safety Bars for Stepped Culvert Pipe or Pipe Arch	6/10/08	
B-75.60-00	Type 2 Safety Bars for Culvert Pipe or Pipe Arch (On Cross Road)	6/8/06	
B-80.20-00	Tapered End Section with Type 3 Safety Bars	6/8/06	
B-80.40-00	Tapered End Section with Type 4 Safety Bars (On Cross Road)	6/1/06	
B-82.20-00	Residential Storm Drain, Under Sidewalk	6/1/06	
B-85.10-01	Vertical Connection (for Sanitary Sewer Use)	6/10/08	
B-85.20-00	Side Sewer Connection (for Sanitary Sewer Use)	6/1/06	
B-85.30-00	Standing Side Sewer Connection (for Sanitary Sewer Use)	6/1/06	
B-85.40-00	8 Inch Sewer Clean-Out (for Sanitary Sewer Use)	6/8/06	
B-85.50-01	Drop Connections (for Sanitary Sewer Use)	6/10/08	
B-90.10-00	Hydrant Setting Types A and B	6/8/06	
B-90.20-00	2 Inch Blowoff Assembly	6/8/06	
B-90.30-00	Combination Air Release / Air Vacuum Valve Assembly	6/8/06	
B-90.40-00	Concrete Thrust Block	6/8/06	
B-90.50-00	Concrete Thrust Block for Convex Vertical Bends	6/8/06	
B-95.20-01	Median Barrier Drainage Installation	2/3/09	
B-95.40-00	Inlet Placement at Bridge End	6/8/06	

Section C Traffic Barrier

C-1	Beam Guardrail Types 1 ~ 4 (W-Beam)	6/16/11	*2 Sheets*
C-1a	Beam Guardrail (Thrie Beam)	7/14/15	
C-1b	Beam Guardrail Posts and Blocks	7/14/15	*2 Sheets*
C-1c	Beam Guardrail	5/30/97	
C-1d	Thrie Beam Guardrail Reducer Section	10/31/03	
C-2	Guardrail Placement (Cases 1, 2 & 3)	1/6/00	
C-2a	Guardrail Placement (Cases 4, 5 & 6)	6/21/06	
C-2b	Guardrail Placement (Cases 7 & 8)	6/21/06	
C-2c	Guardrail Placement Median Bull Nose (Cases 9A, 9B & 9C)	6/21/06	
C-2d	Guardrail Placement (Cases 10A, 10B & 10C)	6/21/06	
C-2e	Guardrail Placement (Cases 11A, 11B & 11C)	6/21/06	
C-2f	Guardrail Placement Weak Post Intersection Design (8' - 6" Max. Radius) (Cases 12AC, 12AD, 12BC & 12BD)	3/14/97	

Plan No.	Plan Title	Publication Approval Date	
C-2g	Guardrail Placement Weak Post Intersection Design (35' Max. Radius) (Cases 13AC, 13AD, 13BC & 13BD)	7/27/01	
C-2h	Guardrail Placement (Case 14)	3/28/97	
C-2i	Guardrail Placement (Case 15)	3/28/97	
C-2j	Guardrail Placement (Cases 16, 17 & 18)	6/12/98	
C-2k	Guardrail Placement 12’ - 6” Span (Cases 19A & 19B)	7/27/01	
C-2n	Guardrail Placement 18’ - 9” Span (Case 20)	7/27/01	
C-2o	Guardrail Placement 25’ Span (Case 21)	7/13/01	
C-2p	Guardrail Placement Strong Post Intersection Design (Cases 22AC, 22AD, 22BC & 22BD)	10/31/03	
C-3	Beam Guardrail Transition Sections (Types 1, 1A, & 1B)	7/2/12	
C-3a	Beam Guardrail Transition Sections (Types 2, 4, 5, & 6)	10/4/05	
C-3b	Beam Guardrail Transition Sections (Types 10 ~ 15)	6/27/11	*2 Sheets*
C-3c	Beam Guardrail Transition Sections (Types 16, 17, & 18)	6/27/11	
C-4b	Beam Guardrail Flared Terminal	6/8/06	
C-4e	Beam Guardrail Non-Flared Terminal	10/23/14	
C-4f	Beam Guardrail Bull Nose Terminal	7/2/12	*4 Sheets*
C-6	Beam Guardrail Anchor Type 1	5/30/97	*2 Sheets*
C-6a	Beam Guardrail Anchor Type 2	10/14/09	
C-6c	Beam Guardrail Anchor Type 4	1/6/00	
C-6d	Beam Guardrail Anchor Type 5	5/30/97	
C-6f	Beam Guardrail Anchor Type 7	7/25/97	
C-7	Beam Guardrail End Sections	6/16/11	
C-7a	Thrie Beam End Sections	6/16/11	
C-8	Concrete Barrier Type 2	2/10/09	*2 Sheets*
C-8a	Concrete Barrier Type 4 and Transition Section	7/25/97	
C-8b	Concrete Barrier Light Standard Section	6/27/11	2 Sheets
C-8e	Precast Concrete Barrier Anchor ~ Type 3 (Permanent)	2/21/07	
C-8f	Concrete Barrier Transition Type 2 to Bridge F-Shape	6/30/04	
C-10	Box Culvert Guardrail Steel Post	6/3/10	*2 Sheets*
C-16a	Traffic Barrier Shoulder Widening ~ for Shoulders 8.0' and Wider	6/3/10	
C-16b	Traffic Barrier Shoulder Widening ~ for Shoulders Less Than 8.0' Wide	6/3/10	
C-20.10-03	Beam Guardrail Type 31	7/14/15	
C-20.14-03	Beam Guardrail Type 31 Placement (Cases 1-31, 2-31 & 3-31)	6/11/14	
C-20.15-02	Beam Guardrail Type 31 Placement (Cases 4-31 & 5-31)	6/11/14	
C-20.18-02	Beam Guardrail Type 31 Placement (Cases 10A-31, 10B-31 & 10C-31)	6/11/14	
C-20.19-02	Beam Guardrail Type 31 Placement (Cases 11A-31, 11B-31 & 11C-31)	6/11/14	
C-20.40-05	Beam Guardrail Type 31 Placement 12' - 6", 18' - 9", or 25' - 0" Span	7/14/15	
C-20.41-01	Box Culvert Guardrail Steel Post ~ Type 31	7/14/15	
C-20.42-05	Guardrail Placement Strong Post ~ Type 31 Intersection Design	7/14/15	
C-20.45-01	Beam Guardrail Type 31 - DS (Double sided) (W-Beam)	7/2/12	

Contents

Plan No.	Plan Title	Publication Approval Date	
C-22.14-03	Beam Guardrail Type 1 ~ Buried Terminal Type 2	6/11/14	
C-22.16-05	Beam Guardrail Type 31 ~ Buried Terminal Type 2	7/14/15	
C-22.40-04	Beam Guardrail Type 31 Non-Flared Terminal Steel Posts (All Posted Speeds)	10/23/14	
C-22.41-01	Beam Guardrail Type 31 Non-Flared Terminal Wood Posts (All Posted Speeds)	10/23/14	
C-22.45-01	Beam Guardrail Type 31 Non-Flared Terminal Steel Posts (Posted Speed ~ 40 MPH and Below)	10/23/14	
C-23.60-03	Beam Guardrail (Type 31) Anchor Type 10	6/11/14	
C-24.10-01	Guardrail Connection to Bridge Rail or Concrete Barrier	6/11/14	
C-25.18-05	Beam Guardrail (Type 31) Transition Section Type 20	7/14/15	
C-25.20-06	Beam Guardrail (Type 31) Transition Section Type 21	7/14/15	
C-25.22-05	Beam Guardrail (Type 31) Transition Section Type 22	7/14/15	
C-25.26-03	Beam Guardrail (Type 31) Transition Section Type 23	7/14/15	
C-25.80-03	Beam Guardrail Type 31 to Beam Guardrail Type 1 Adaptor	6/11/14	
C-40.14-02	Barrier Placement Cable to Thrie Beam Bull Nose Connection	7/2/12	
C-40.16-02	Barrier Placement ~ Cable to W-Beam Shielding for Redirectional Landform	7/2/12	
C-40.18-02	Barrier Placement ~ Cable Barrier Shielding for Redirectional Landform	7/2/12	
C-70.10-01	Single-Slope Concrete Barrier (Precast)	6/17/14	*3 Sheets*
C-75.10-01	Single-Slope Concrete Barrier (Precast)Transition Section	6/11/14	
C-75.20-01	Single-Slope Concrete Barrier (Precast) Vertical Back	6/11/14	
C-75.30-01	Single-Slope Concrete Barrier (Precast) Terminal	6/11/14	
C-80.10-01	Single-Slope Concrete Barrier (Cast-in-Place) Dual-Faced	6/11/14	*3 Sheets*
C-80.20-01	Single-Slope Concrete Barrier (Cast-in-Place) Terminal	6/11/14	
C-80.30-01	Single-Slope Concrete Barrier (Cast-in-Place) Transition Section	6/11/14	
C-80.40-01	Single-Slope Concrete Barrier (Cast-in-Place) Vertical Back	6/11/14	
C-80.50-00	Concrete Barrier Transition Type 2 to Single-Slope	4/18/12	
C-85.10-00	Single-Slope Concrete Barrier Placement (Split)	4/18/12	
C-85.11-00	Single-Slope Concrete Barrier Placement (Wrap)	4/18/12	
C-85.14-01	Single-Slope Concrete Barrier Light Standard Foundation	6/11/14	
C-85.15-01	Single-Slope Concrete Barrier (42") Light Standard Foundation	6/30/14	
C-85.16-01	Single-Slope Concrete Barrier Sign Bridge Foundation	6/17/14	*2 Sheets*
C-85.18-01	Single-Slope Concrete Barrier Transition for Monotube Sign Support	6/11/14	
C-85.20-01	Single-Slope Concrete Barrier Cantilever Sign Structure Foundation	6/11/14	*2 Sheets*
C-90.10-00	Impact Attenuator Inertial Barrier Configurations	7/3/08	

Contents

Plan No.	Plan Title	Publication Approval Date	
Section D	**Retaining, Noise Barrier, and Geosynthetic Walls**		
D-2.04-00	Noise Barrier Wall Type 2 (CIP Wall on Spread Footing)	11/10/05	*2 Sheets*
D-2.06-01	Noise Barrier Wall Type 3 (…on Offset Spread Footing)	1/6/09	*2 Sheets*
D-2.08-00	Noise Barrier Wall Type 4 (…on Shaft Foundation)	11/10/05	*2 Sheets*
D-2.14-00	Noise Barrier Wall Type 6 (…w/Traffic Barrier on Spread Footing)	11/10/05	
D-2.16-00	Noise Barrier Wall Type 6SS (…w/S. S. Traffic Barrier on Spread Footing)	11/10/05	
D-2.18-00	Noise Barrier Wall Type 7 (…w/Traffic Barrier on Shaft Foundation)	11/10/05	
D-2.20-00	Noise Barrier Wall Type 7SS (…w/S.S. Traffic Barrier on Shaft Foundation)	11/10/05	
D-2.32-00	Noise Barrier Wall Type 9 (Precast Wall on Spread Footing)	11/10/05	*2 Sheets*
D-2.34-01	Noise Barrier Wall Type 10 (…on Offset Spread Footing)	1/6/09	*2 Sheets*
D-2.36-03	Noise Barrier Wall Type 11 (...on Shaft Foundation)	6/11/14	*3 Sheets*
D-2.42-00	Noise Barrier Wall Type 13 (...w/Traffic Barrier on Spread Footing)	11/10/05	
D-2.44-00	Noise Barrier Wall Type 13SS (…w/S. S. Traffic Barrier on Spread Footing)	11/10/05	
D-2.46-01	Noise Barrier Wall Type 14 (…w/Traffic Barrier on Shaft Foundation)	6/11/14	*3 Sheets*
D-2.48-00	Noise Barrier Wall Type 14SS (…w/S. S. Traffic Barrier on Shaft Foundation)	11/10/05	*2 Sheets*
D-2.60-00	Noise Barrier Wall Type 16 (Masonry on Trench Footing)	11/10/05	*2 Sheets*
D-2-62-00	Noise Barrier Wall Type 17 (Masonry on Spread Footing)	11/10/05	*2 Sheets*
D-2.64-01	Noise Barrier Wall Type 18 (Masonry on Offset Spread Footing)	1/6/09	*2 Sheets*
D-2.66-00	Noise Barrier Wall Type 19 (…on Shaft w/Grade Beam Foundation)	11/10/05	*2 Sheets*
D-2.68-00	Noise Barrier Wall Type 20 (Masonry on Shaft Foundation)	11/10/05	*2 Sheets*
D-2.80-00	Noise Barrier Wall Access Door Type 1 (for CIP Wall on Offset Spread Footing)	11/10/05	
D-2.82-00	Noise Barrier Wall Access Door Type 2 (…w/Traffic Barrier)	11/10/05	*2 Sheets*
D-2.84-00	Noise Barrier Wall Access Door Type 3 (for Precast Wall on Shaft Foundation)	11/10/05	
D-2.86-00	Noise Barrier Wall Access Door Type 4 (…w/Traffic Barrier on Shaft Foundation)	11/10/05	*2 Sheets*
D-2.88-00	Noise Barrier Wall Access Door Type 5 (for Masonry Wall)	11/10/05	
D-2.92-00	Noise Barrier Wall Access Door & Frame	11/10/05	*2 Sheets*
D-3.09-00	Permanent Geosynthetic Wall	5/17/12	*4 Sheets*
D-3.10-01	Cast-In-Place Permanent Geosynthetic Wall Fascia and Facing	5/29/13	
D-3.11-03	Precast Permanent Geosynthetic Wall Fascia	6/11/14	*2 Sheets*
D-3.15-02	Permanent Geosynthetic Wall Single Slope Barrier	6/10/13	
D-3.16-02	Permanent Geosynthetic Wall F-Shape Barrier	5/29/13	
D-3.17-01	Permanent Geosynthetic Wall Expansion Joint Details	5/17/12	
D-4	Backfill and Drainage for Retaining Walls	12/11/98	

Contents

Plan No.	Plan Title	Publication Approval Date	
D-6	Gabions	6/19/98	
D-10.10-01	Reinforced Concrete Retaining Wall Type 1 and 1SW	12/2/08	*2 Sheets*
D-10.15-01	Reinforced Concrete Retaining Wall Type 2 and 2SW	12/2/08	*2 Sheets*
D-10.20-00	Reinforced Concrete Retaining Wall Type 3 and 3SW	7/8/08	*2 Sheets*
D-10.25-00	Reinforced Concrete Retaining Wall Type 4 and 4SW	7/8/08	*2 Sheets*
D-10.30-00	Reinforced Concrete Retaining Wall Type 5	7/8/08	*2 Sheets*
D-10.35-00	Reinforced Concrete Retaining Wall Type 6	7/8/08	*2 Sheets*
D-10.40-01	Reinforced Concrete Retaining Wall Type 7	12/2/08	*2 Sheets*
D-10.45-01	Reinforced Concrete Retaining Wall Type 8	12/2/08	*2 Sheets*
D-15.10-01	Traffic Barrier Details for Reinf. Conc. Retaining Walls	12/2/08	*2 Sheets*
D-15.20-02	Traffic Barrier Details for Reinf. Conc. Retaining Walls	6/2/11	*2 Sheets*
D-15.30-01	Traffic Barrier Details for Reinf. Conc. Retaining Walls	12/2/08	*2 Sheets*

Section E Bridges and Trestles

E-1	Date Numeral Placement on Bridge Traffic Barrier	2/21/07	
E-2	Pile or Frame Detour Bridge with Asphalt Overlay	5/29/98	*2 Sheets*
E-4	Precast Prestressed Concrete Piles	8/27/03	
E-4a	Precast Prestressed Concrete Piles Handling & Capping	8/27/03	

Section F Curbs, Sidewalks, and Driveways

F-10.12-03	Cement Concrete Curbs	6/11/14	
F-10.16-00	Cement Concrete Curb and Gutter Pan	12/20/06	
F-10.18-00	Roundabout Cement Concrete Curbs	6/27/11	
F-10.40-02	Extruded Curb Placement	6/21/12	
F-10.42-00	Extruded Curb	1/23/07	
F-10.62-02	Precast Sloped Mountable Curb	4/22/14	*2 Sheets*
F-10.64-03	Precast Dual Faced Sloped Mountable Curb	4/22/14	
F-30.10-03	Cement Concrete Sidewalk	6/11/14	
F-40.12-02	Parallel Curb Ramp	6/20/13	
F-40.14-02	Combination Curb Ramp	6/20/13	
F-40.15-02	Perpendicular Curb Ramp	6/20/13	
F-40.16-02	Single Direction Curb Ramp	6/20/13	
F-45.10-01	Detectable Warning Surface	6/21/12	
F-80.10-03	Cement Concrete Driveway Entrance Types 1, 2, 3, & 4	6/11/14	*2 Sheets*

Section G Signs and Sign Supports

G-10.10-00	Milepost	9/20/07	
G-20.10-02	Ground-Mounted Sign Placement	6/23/15	
G-22.10-03	Timber Sign Support	7/10/15	*3 Sheets*
G-24.10-00	Steel Sign Support Type AP Installation Details	11/8/07	
G-24.20-01	Steel Sign Support Type AS Installation Details	2/7/12	
G-24.30-01	Steel Sign Support Types PL, PL-T, & PL-U Inst. Det.	2/7/12	*2 Sheets*
G-24.40-05	Steel Sign Support Types SB-1, SB-2 & SB-3 Installation Details	6/23/15	*4 Sheets*
G-24.50-03	Steel Sign Support Types ST-1 - ST-4 Installation Details	6/17/14	
G-24.60-04	Steel Sign Support Types TP-A and TP-B Installation Details	6/23/15	*2 Sheets*

Plan No.	Plan Title	Publication Approval Date	
G-25.10-04	Steel Sign Support Foundation Details	6/10/13	
G-30.10-04	Sign Installation on Signal and Light Standards	6/23/15	*2 Sheets*
G-50.10-02	Sign Bracing	6/23/15	*2 Sheets*
G-60.10-03	Cantilever Sign Structure (Truss-Type)	6/18/15	*4 Sheets*
G-60.20-02	Cantilever Sign Structure (Truss-Type) Foundation Type 1	6/18/15	*2 Sheets*
G-60.30-02	Cantilever Sign Structure (Truss-Type) Fdn. Types 2 & 3	6/18/15	*2 Sheets*
G-70.10-03	Sign Bridge (Truss-Type)	6/18/15	*4 Sheets*
G-70.20-02	Sign Bridge (Truss-Type) Foundation Type1	6/10/13	
G-70.30-02	Sign Bridge (Truss-Type) Foundation Types 2 & 3	6/10/13	
G-90.10-01	Overhead Sign Bracing and Lighting Placement	5/11/11	
G-90.20-03	Overhead Sign Mounting (Monotube Structure)	7/10/15	
G-90.30-02	Overhead Sign Mounting (Truss Structure)	3/22/13	
G-90.40-01	Overhead Sign Lighting Details	10/14/09	
G-95.10-01	Maintenance Walkway for Sign Bridges	6/2/11	*3 Sheets*
G-95.20-02	Maintenance Walkway Mounting for Monotube Sign Bridge	6/2/11	*3 Sheets*
G-95.30-02	Maintenance Walkway Mounting for Truss-Type Sign Bridge	6/2/11	*2 Sheets*

Section H Roadside and Site Development

H-10.10-00	Tree and Shrub Planting Details	7/3/08	
H-10.15-00	Live Stake Installations	7/3/08	
H-30.10-00	Crest Gage	10/12/07	
H-32.10-00	Automated Ground Water Monitoring Well	9/20/07	
H-60.10-01	Bollard Type 1	7/3/08	
H-60.20-01	Bollard Type 2	7/3/08	
H-70.10-01	Mailbox Support Type 1	2/7/12	*2 Sheets*
H-70.20-01	Mailbox Support Type 2	2/16/12	*2 Sheets*
H-70.30-02	Mailbox Support Type 3	2/7/12	*2 Sheets*

Section I Site Preservation and Erosion Control

I-10.10-01	High Visibility Fence	8/11/09
I-30.10-02	Silt Fence with Backup Support	3/22/13
I-30.15-02	Silt Fence	3/22/13
I-30.16-00	High Visibility Silt Fence with Backup Support	3/22/13
I-30.17-00	High Visibility Silt Fence	3/22/13
I-30.20-00	Erosion Control At Culvert Ends	9/20/07
I-30.30-01	Wattle Installation On Slope	6/10/13
I-30.40-01	Compost Sock	6/10/13
I-30.60-00	Erosion Control Details Coir Log Placement	5/29/13
I-40.10-00	Temporary Silt Fence for Inlet Protection In Unpaved Areas	9/20/07
I-40.20-00	Storm Drain Inlet Protection	9/20/07
I-50.20-01	Check Dams on Channels	6/10/13
I-60.10-01	Biodegradable Erosion Control Blanket Placement for Slopes	6/10/13
I-60.20-01	Biodegradable Erosion Control Blanket Placement for Ditches	6/10/13
I-80.10-01	Miscellaneous Erosion Control Details	8/11/09

Contents

Plan No.	Plan Title	Publication Approval Date	
Section J	**Illumination, Signals, and ITS**		
J-10	Electrical Conduit Placement	7/18/97	
J-10.10-03	Cabinet Orientation, Conduit Layout and Foundation Detail	6/3/15	*6 Sheets*
J-10.15-01	Cabinet Enclosure on Slope	6/11/14	
J-10.16-00	Service Cabinet Type A (0 - 60 Amp Type 120 Volt Single Phase)	6/3/15	*2 Sheets*
J-10.17-00	Service Cabinet Type B (0 - 60 Amp Type 120/240 Volt Single Phase)	6/3/15	*2 Sheets*
J-10.18-00	Service Cabinet Type C (0 - 60 Amp Type 240/480 Volt Single Phase)	6/3/15	*2 Sheets*
J-10.20-00	Service Cabinet Type B Modified (0 - 200 Amp Type 120/240 Single Phase)	6/3/15	*2 Sheets*
J-10.21-00	Service Cabinet Type D (0 - 200 Amp Type 120/240 Single Phase)	6/3/15	
J-10.22-00	Service Cabinet Type E (0 - 200 Amp Type, 240/480 Single Phase)	5/29/13	*2 Sheets*
J-15.10-01	Timber Light Standard	6/11/14	
J-15.15-02	Span Wire Installation	7/10/15	
J-20.10-03	Accessible Pedestrian PushButton Post (PPB) and Foundation	6/30/14	
J-20.11-02	Accessible Pedestrian PushButton with Curb Base	6/30/14	*2 Sheets*
J-20.15-03	Accessible Breakaway Pedestrian PushButton (PPB) Post	6/30/14	
J-20.16-02	Pedestrian Signal Standard (Type PS) Details	6/30/14	
J-20.20-02	Pedestrian Signal Standard (Type PS) Electrical Details	5/20/13	
J-20.26-01	Accessible Pedestrian PushButton (PPB) Details	7/12/12	*2 Sheets*
J-21.10-04	Type PS, Type 1, RM & FB Signal Standard Foundation Details	6/30/14	*2 Sheets*
J-21.15-01	Type 1 Signal Standard Details	6/10/13	
J-21.16-01	Flashing Beacon Type 1 Signal Standard Details	6/10/13	
J-21.17-01	Flashing Beacon Type 1 Signal Standard Electrical Details	6/10/13	
J-21.20-01	Type 1 Signal Standard Electrical Details	6/10/13	
J-22.15-02	Ramp Meter Signal Standard Details	7/10/15	*3 Sheets*
J-22.16-03	Ramp Meter Signal Standard Electrical Details	7/10/15	
J-26.10-02	Signal Standard Foundation Plan	3/15/12	
J-26.15-01	Signal Standard Foundation Placements	5/17/12	*3 Sheets*
J-26.20-00	Temporary Signal Standard Adaptor	6/11/14	*5 Sheets*
J-27.10-00	Type 4 and 5 Strain Pole Foundation	3/15/12	
J-27.15-00	Type 4 and 5 Strain Pole Standard	3/15/12	
J-28.10-01	Steel Light Standard	5/11/11	*2 Sheets*
J-28.22-00	Steel Light Standard Placement (Slip Base)	8/7/07	*2 Sheets*
J-28.24-01	Steel Light Standard Placement (Fixed Base)	6/3/15	
J-28.26-01	Steel Light Standard Placement Miscellaneous	12/2/08	
J-28.30-03	Steel Light Standard Foundation Types A & B	6/11/14	*2 Sheets*
J-28.40-02	Steel Light Standard Base Mounting	6/11/14	
J-28.42-01	Steel Light Standard Anchor/Slip Plate for Slip Base	6/11/14	
J-28.43-00	Slip Base Adaptor for 4-Bolt Light Standard Base	6/11/14	
J-28.45-02	Steel Light Standard Elbow Mounting on Bridge & Retaining Wall	6/11/14	
J-28.50-02	Steel Light Standard Pole Base and Hand Hole Details	6/2/11	
J-28.60-01	Steel Light Standard Barrier Mounted Base	6/2/11	

Plan No.	Plan Title	Publication Approval Date	
J-28.70-01	Steel Light Standard Wiring Details	5/11/11	
J-29.10-00	Camera Pole Foundation Details	6/27/11	
J-29.15-00	Camera Pole Standard	6/27/11	*2 Sheets*
J-29.16-01	Camera Pole Standard Details	6/20/13	
J-30.10-00	High Mast Luminaire Maintenance Pad	6/18/15	*2 Sheets*
J-40.10-03	Locking Lid Standard Duty Junction Box Types 1 & 2	5/20/13	*2 Sheets*
J-40.20-02	Heavy-Duty Junction Box Types 4, 5 & 6	6/11/14	*2 Sheets*
J-40.30-03	Locking Lid Standard Duty Junction Box Type 8	5/20/13	*2 Sheets*
J-40.35-01	Sign Post-Mounted Junction Box	5/29/13	*3 Sheets*
J-40.36-01	Nema 4X Non-Adjustable Junction Box	5/20/13	
J-40.37-01	Nema 3R Adjustable Flush-Mount Junction Box	5/20/13	*2 Sheets*
J-40.38-01	Top Entry Nema 4x Surface-Mount Junction Box	5/20/13	
J-40.39-00	Front Entry Nema 4X Surface-Mount Junction Box	5/20/13	
J-40.40-00	Nema 4X Junction Box in Sidewalk Located on Structure	5/20/13	
J-50.10-00	Type 1 Induction Loop	6/3/11	
J-50.11-00	Type 2 Induction Loop	6/3/11	*2 Sheets*
J-50.12-00	Type 3 Induction Loop	6/3/11	*3 Sheets*
J-50.15-00	Induction Loop Details	6/3/11	*3 Sheets*
J-50.16-01	Preformed Loop Installation Details for New Bridge Decks	3/22/13	*2 Sheets*
J-50.20-00	Permanent Traffic Recorder Installations	6/3/11	*3 Sheets*
J-50.25-00	Weigh-In Motion Site Installation Details	6/3/11	*2 Sheets*
J-50.30-00	Permanent Traffic Recorder & Weigh-In-Motion Details	6/3/11	*3 Sheets*
J-60.05-00	Typical Grounding Details	6/16/11	*4 Sheets*
J-60.11-00	Conduit Installation in Traffic Barrier on Retaining Wall	5/20/13	*2 Sheets*
J-60.12-00	Conduit Installation in Single-Slope Concrete Barrier (Dual Faced)	5/20/13	
J-60.13-00	Stainless Steel Channel	6/16/10	
J-60.14-00	Stainless Steel Channel Mounting Details on Column or Pole	6/16/10	
J-75.10-02	Signal Head Mounting Details ~ Pole and Post Top Mountings	7/10/15	
J-75.20-01	Signal Head Mounting Details ~ Mast Arm and Span Wire Mountings	7/10/15	*2 Sheets*
J-75.30-02	Miscellaneous Signal Details	7/10/15	
J-75.40-01	Overhead Sign Electrical Details (Monotube Structure)	6/11/14	*2 Sheets*
J-75.41-00	Signal Bridge Standard Electrical Details	6/11/14	*4 Sheets*
J-75.45-01	Overhead Sign Electrical Details (Truss Structure)	6/11/14	*2 Sheets*
J-90.10-01	Pull Box	6/27/11	*2 Sheets*
J-90.20-01	Cable Vault	6/27/11	*2 Sheets*
J-90.21-00	Small Cable Vault	6/30/14	*2 Sheets*

Section K Work Zone Traffic Control

K-70.20-00	Temporary Channelization	2/15/07	
K-80.10-00	Class A Construction Signing Installation	2/21/07	
K-80.20-00	Type 3 Barricade	12/20/06	*2 Sheets*
K-80.30-00	Alternative Temporary Conc. Barrier (F-Shape)	2/21/07	
K-80.35-00	Temporary Conc. Barrier Anchoring	2/21/07	
K-80.37-00	Temporary Conc. Barrier Anchoring ~ Narrow	2/21/07	

Contents

Plan No.	Plan Title	Publication Approval Date	
Section L	**Fence and Glare Screen**		
L-10.10-02	Wire Fence Types 1 & 2 and Wire Gates	6/21/12	*2 Sheets*
L-20.10-03	Chain Link Fence Types 3 and 4	7/14/15	*2 Sheets*
L-30.10-02	Chain Link Gate	6/11/14	*2 Sheets*
L-40.10-02	Glare Screen Type 1 Design A	6/21/12	*2 Sheets*
L-40.15-01	Glare Screen Type 1 Design B	6/16/11	
L-40.20-02	Glare Screen Type 2 (Chain Link with Slats)	6/21/12	
L-70.10-01	Access Control Gate	5/21/08	
L-70.20-01	Access Control Double Gate	5/21/08	
Section M	**Roadway Delineation**		
M-1.20-03	Ramp Channelization Single Lane	6/24/14	
M-1.40-02	Ramp Channelization Two Lane	6/3/11	
M-1.60-02	Ramp Channelization Collector-Distributor Road	6/3/11	
M-1.80-03	Ramp Channelization Parallel On & Weaving Section	6/3/11	
M-2.20-03	Off-Ramp Gore Area Marking Layouts	7/10/15	
M-2.21-00	On-Ramp Gore Area Marking Layouts	7/10/15	
M-3.10-03	Left Turn Channelization	6/3/11	
M-3.20-02	Left Turn Channelization Reduced Tapers	6/3/11	
M-3.30-03	Left Turn Channelization Tee Intersection and Back-To-Back Turn Lanes	6/3/11	
M-3.40-03	Two-Way Left-Turn and Median Channelization	6/3/11	
M-3.50-02	Double Left-Turn Channelization	6/3/11	
M-5.10-02	Right-Turn Channelization	6/3/11	
M-7.50-01	High Occupancy Vehicle (HOV) Lane Symbol Layout	1/30/07	
M-9.50-02	Bicycle Lane Symbol Layout	6/24/14	
M-9.60-00	Shared - Use Path Markings	2/10/09	
M-11.10-01	Railroad Crossing Layout	1/30/07	
M-15.10-01	Crosswalk Layout	2/6/07	
M-17.10-02	Parking Space Layouts	7/3/08	
M-20.10-02	Longitudinal Marking Patterns	6/3/11	
M-20.20-02	Profiled and Embossed Plastic Lines	4/20/15	
M-20.30-03	Longitudinal Marking Supplement with Raised Pavement Markers	4/20/15	
M-20.40-03	Longitudinal Marking Supplement with RPM's ~ Turn Lanes	6/24/14	*2 Sheets*
M-20.50-02	Longitudinal Marking Substitution with RPM's	6/3/11	
M-24.20-02	Symbol Markings ~ Traffic Arrows for High Speed Roadways	4/20/15	*3 Sheets*
M-24.40-02	Symbol Markings ~ Traffic Arrows for Low Speed Roadways	4/20/15	*2 Sheets*
M-24.50-00	Roundabout Traffic Arrows	6/16/11	
M-24.60-04	Symbol Markings Miscellaneous	6/24/14	*2 Sheets*
M-40.10-03	Guide Posts and Barrier Delineators	6/24/14	
M-40.20-00	Guide Post Placement Interchanges	10/12/07	
M-40.30-00	Guide Post Placement Grade Intersections	9/20/07	
M-40.40-00	Guide Post Placement Horizontal Curves	9/20/07	
M-40.50-00	Guide Post Placement Bridges	9/20/07	
M-40.60-00	Guide Post Placement Miscellaneous	9/20/07	

Contents

Plan No.	Plan Title	Publication Approval Date	
M-60.10-01	Shoulder Rumble Strip Type 1 for Divided Highways	6/3/11	*4 Sheets*
M-60.20-02	Shoulder Rumble Strip, Types 2, 3, and 4, for Undivided Highways	6/27/11	*2 Sheets*
M-65.10-02	Centerline Rumble Strip	5/11/11	*2 Sheets*
M-80.10-01	Traffic Letter and Numeral Applications	6/3/11	*2 Sheets*
M-80.20-00	Traffic Letters and Numerals (High Speed Roadways)	6/10/08	
M-80.30-00	Traffic Letters and Numerals (Low Speed Roadways)	6/10/08	

This page left blank intentionally.

This page left blank intentionally.

DRAWN BY: FERN LIDDELL

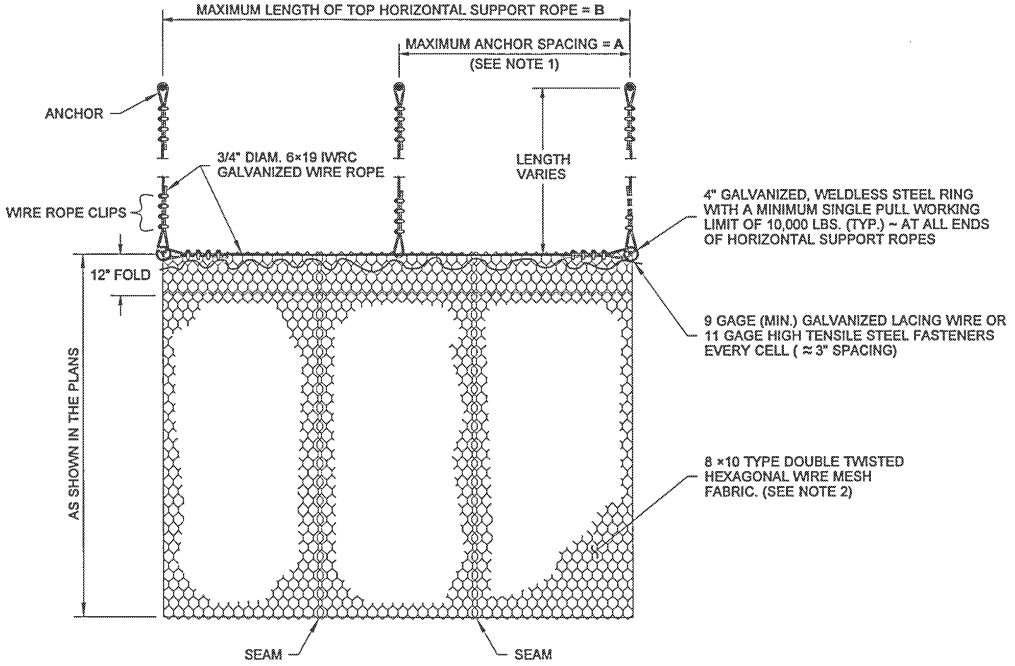

ELEVATION

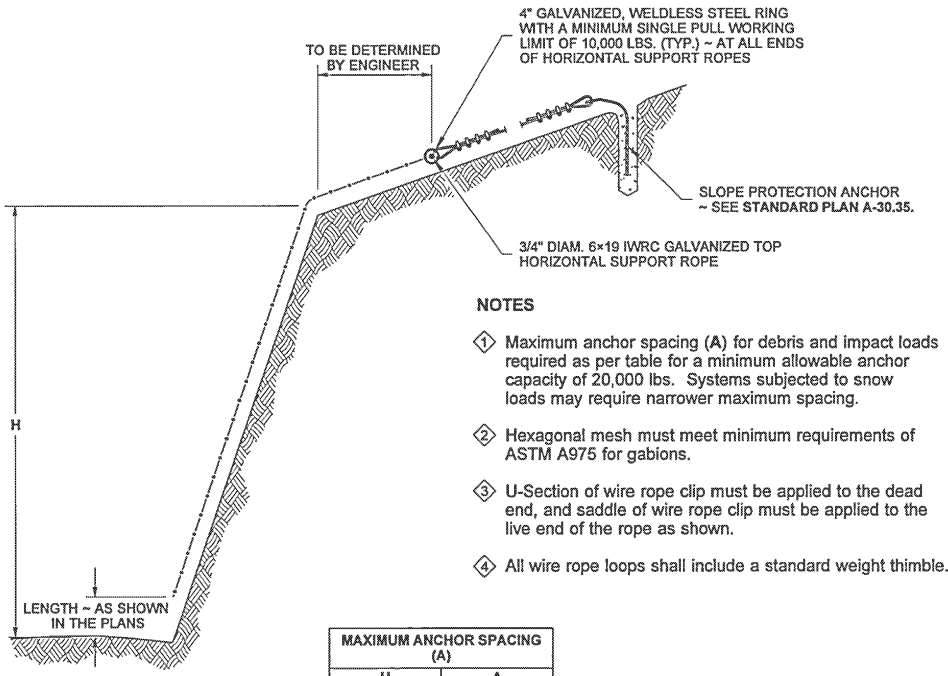

SECTION VIEW

NOTES

1. Maximum anchor spacing (**A**) for debris and impact loads required as per table for a minimum allowable anchor capacity of 20,000 lbs. Systems subjected to snow loads may require narrower maximum spacing.
2. Hexagonal mesh must meet minimum requirements of ASTM A975 for gabions.
3. U-Section of wire rope clip must be applied to the dead end, and saddle of wire rope clip must be applied to the live end of the rope as shown.
4. All wire rope loops shall include a standard weight thimble.

MAXIMUM ANCHOR SPACING (A)	
H	A
0' ~ 100'	50'
100' ~ 200'	35'
200' ~ 300'	20'

MAXIMUM LENGTH ~ TOP HORIZONTAL SUPPORT ROPE (B)	
H	B
50'	400'
100'	200'
200'	100'
300'	75'

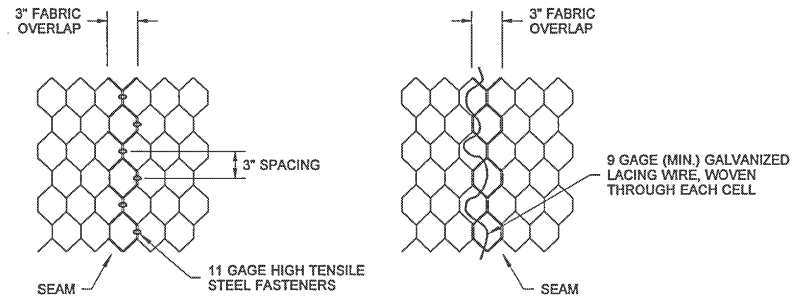

SEAM ALTERNATIVES

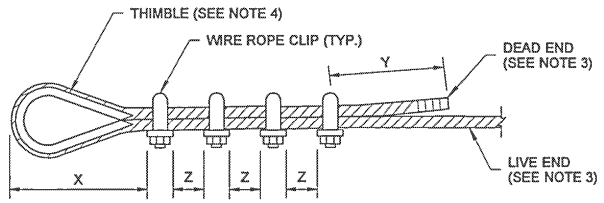

WIRE ROPE DETAIL

DISTANCES X,Y,Z AND TORQUE TO COMPLY WITH MANUFACTURER'S SPECIFICATIONS

WIRE MESH SLOPE PROTECTION

STANDARD PLAN A-30.30-01

SHEET 1 OF 1 SHEET

APPROVED FOR PUBLICATION

STATE DESIGN ENGINEER — DATE 6/16/11

Washington State Department of Transportation

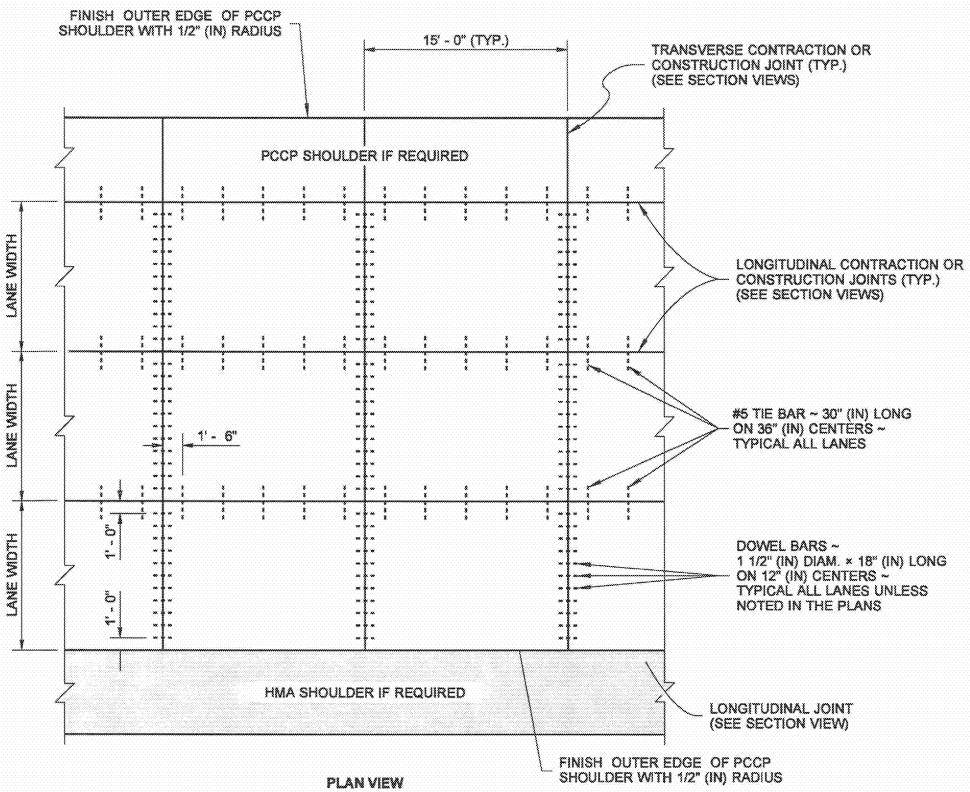

PLAN VIEW

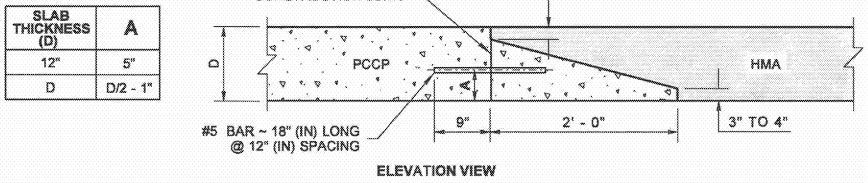

SLAB THICKNESS (D)	A
12"	5"
D	D/2 - 1"

ELEVATION VIEW

HMA TRANSITION DETAIL

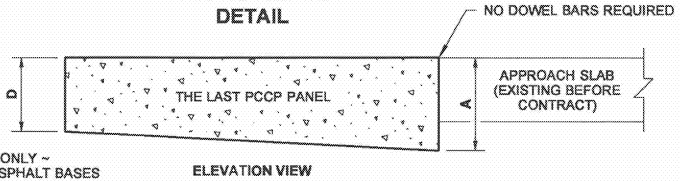

DEPTH OF PCCP (D)	A
12"	15"
D	1.25 × D

USE ON GRANULAR BASES ONLY ~
NO TAPER REQUIRED ON ASPHALT BASES

ELEVATION VIEW

EXISTING APPROACH SLAB TRANSITION DETAIL

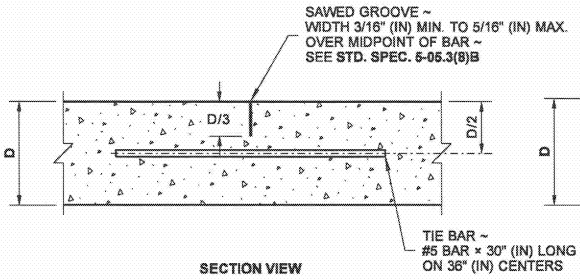

SECTION VIEW

LONGITUDINAL CONTRACTION JOINT

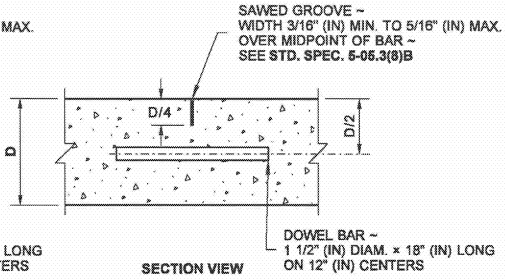

SECTION VIEW

TRANSVERSE CONTRACTION JOINT

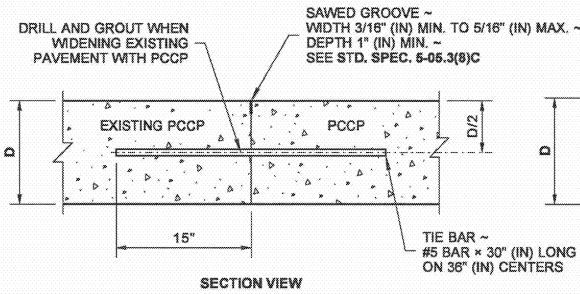

SECTION VIEW

PCCP TO PCCP LONGITUDINAL CONSTRUCTION JOINT

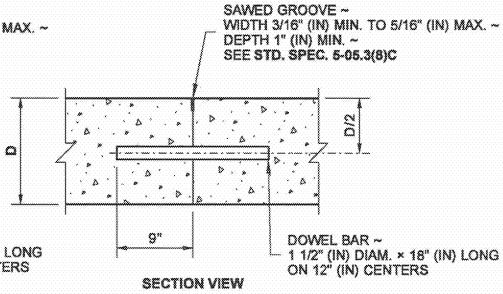

SECTION VIEW

TRANSVERSE CONSTRUCTION JOINT

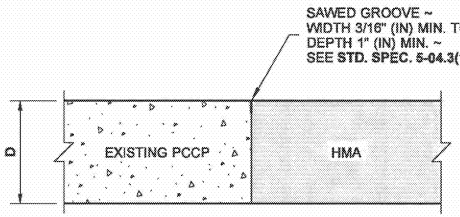

SECTION VIEW

PCCP TO HMA LONGITUDINAL JOINT

EDWARD J. CARPENTER
STATE OF WASHINGTON
29635
REGISTERED
PROFESSIONAL ENGINEER

Carpenter, Jeff
Dec 15 2014 4:10 PM

CEMENT CONCRETE PAVEMENT JOINTS

STANDARD PLAN A-40.10-03

SHEET 1 OF 1 SHEET

APPROVED FOR PUBLICATION
Bakotich, Pasco
Dec 23 2014 1:55 PM
STATE DESIGN ENGINEER

Washington State Department of Transportation

DRAWN BY: COLBY FLETCHER

DRAWN BY: FERN LIDDELL

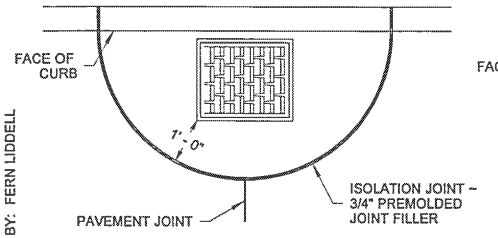

CONDITION A

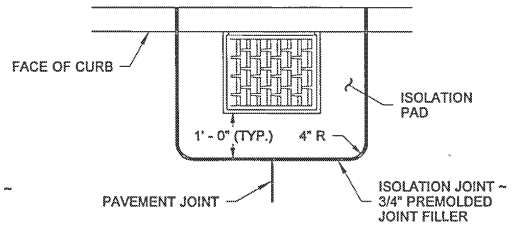

CONDITION B

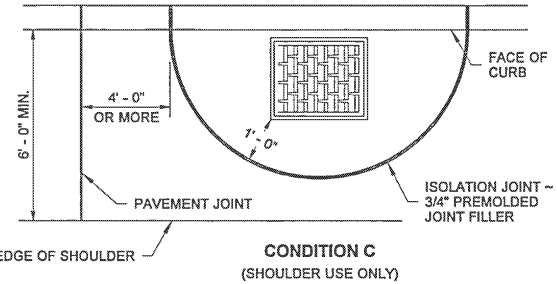

CONDITION C
(SHOULDER USE ONLY)

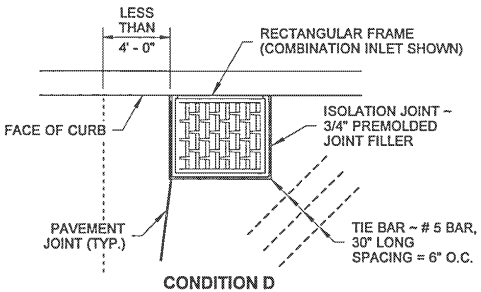

CONDITION D

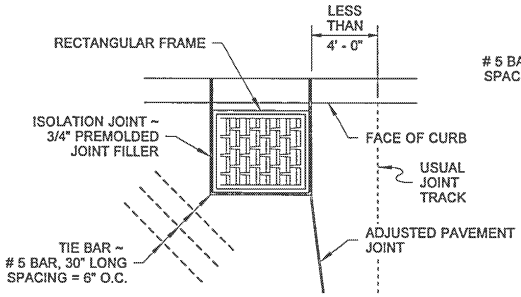

CONDITION E

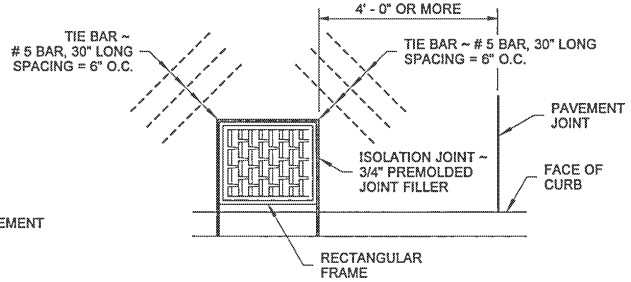

CONDITION F

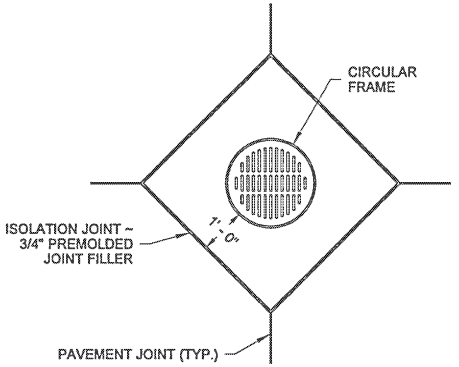

CONDITION G

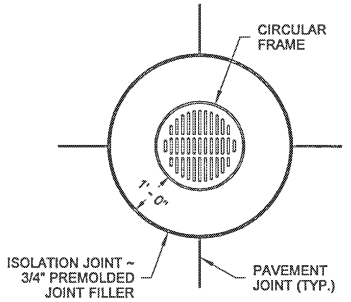

CONDITION H

NOTE

ALL CONDITIONS ARE SHOWN IN PLAN VIEW.

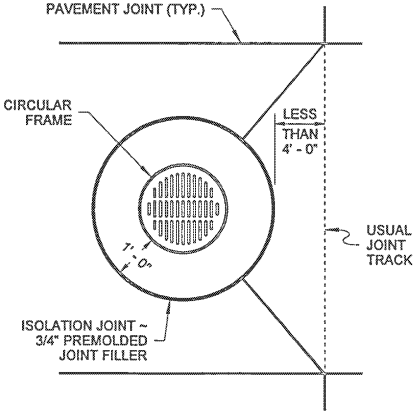

CONDITION I

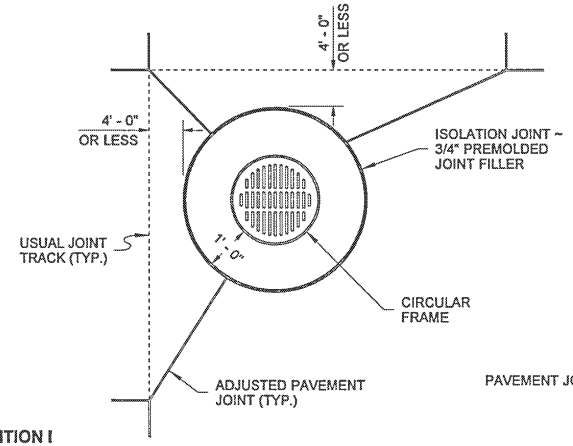

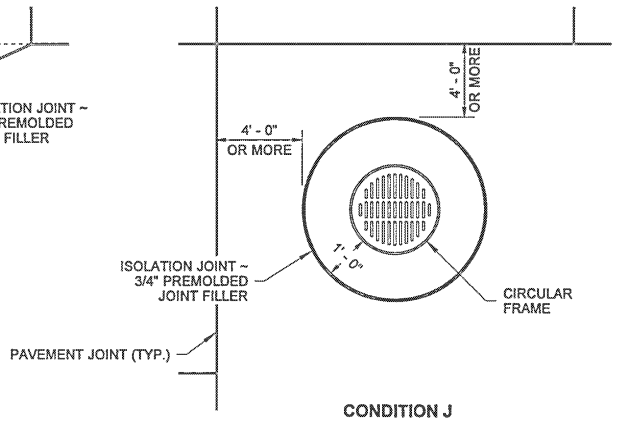

CONDITION J

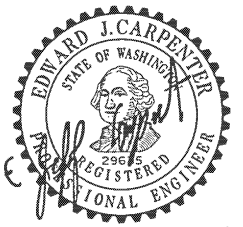

July 7 2009

PCC PAVEMENT ISOLATION JOINTS

STANDARD PLAN A-40.15-00

SHEET 1 OF 2 SHEETS

APPROVED FOR PUBLICATION

STATE DESIGN ENGINEER — DATE

Washington State Department of Transportation

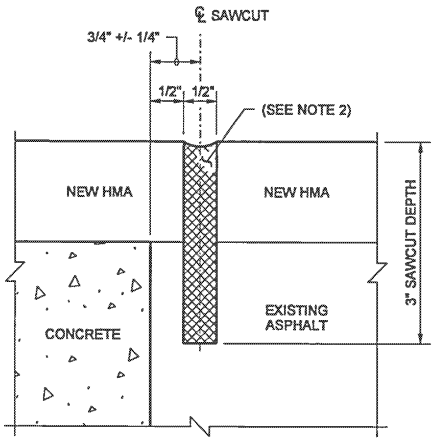

DETAIL 1
1/2 INCH JOINT SEAL AT END OF CONCRETE

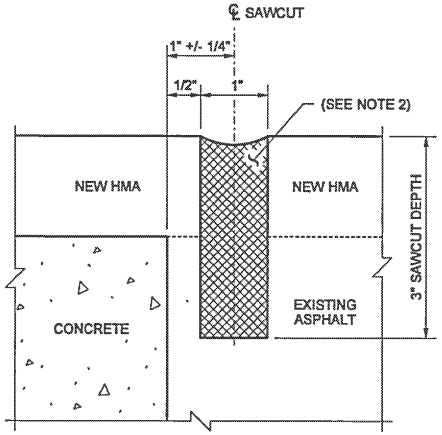

DETAIL 2
1 INCH JOINT SEAL AT END OF CONCRETE

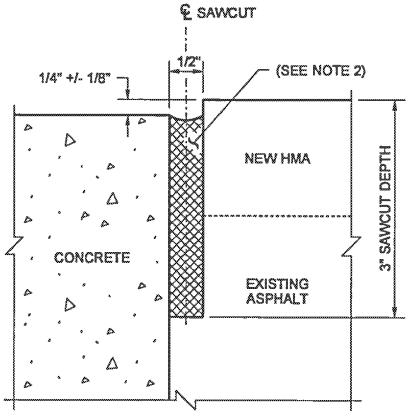

DETAIL 3
1/2 INCH CONCRETE ASPHALT BUTT JOINT

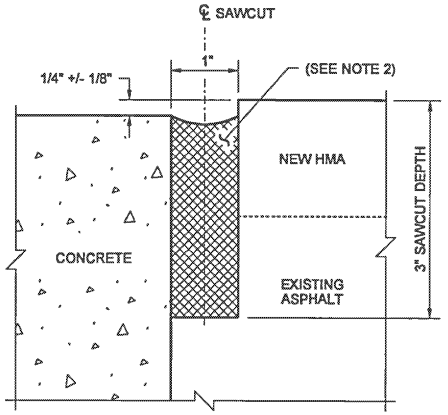

DETAIL 4
1 INCH CONCRETE ASPHALT BUTT JOINT

NOTES

1. Use the 1/2 inch joint details for bridges with expansion length less than 100 feet and for bridges with L type abutments. Use the 1 inch joint details for other applications. Use Detail 5 on steel trusses and timber bridges with concrete deck panels.
2. Sawcut shall be as described in **Standard Specification 5-05.3(8)** and sealed in accordance with **Standard Specification 5-05.3(8)B**.
3. The Contractor shall avoid sawcutting concrete at all locations. For Details 1 and 2, the construction tolerance to locate the sawcut is 1/4 inch (0 min. to 1/2 inch max.) from the concrete.
4. For Details 1, 2, 3, and 4, the item "HMA SAWCUT AND SEAL" shall be used for payment. For Details 5 and 6, the item "PAVED PANEL JOINT SEAL" shall be used for payment. For Detail 7, the item "SEALING EXISTING LONGITUDINAL AND TRANSVERSE JOINT" shall be used for payment.

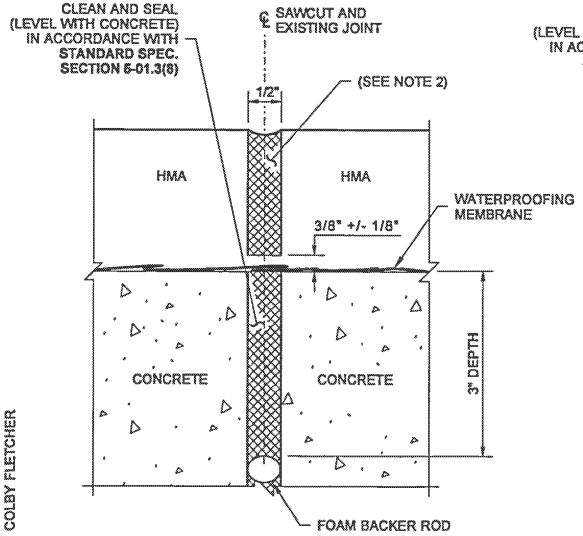

DETAIL 5
1/2 INCH PAVED PANEL JOINT SEAL

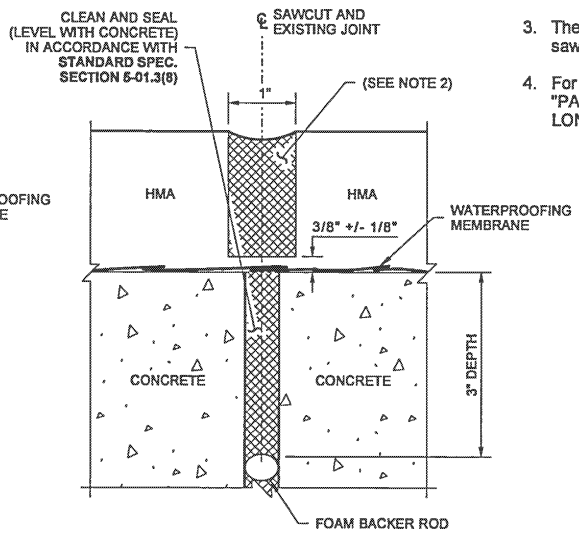

DETAIL 6
1 INCH PAVED PANEL JOINT SEAL

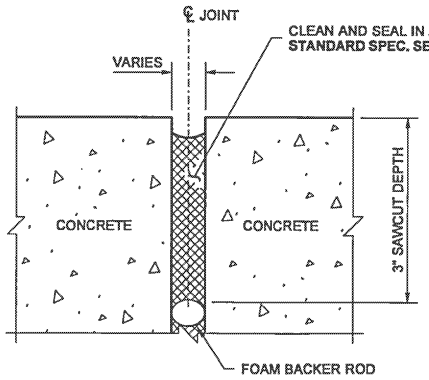

DETAIL 7
CONCRETE OPEN JOINT

BIJAN KHALEGHI
STATE OF WASHINGTON
27695
STRUCTURAL ENGINEER
PROFESSIONAL ENGINEER

Khaleghi, Bijan
Bijan Khaleghi Nov 25 2014 9:52 AM

BRIDGE PAVING JOINT SEALS

STANDARD PLAN A-40.20-03

SHEET 1 OF 1 SHEET

APPROVED FOR PUBLICATION
Bakotich, Pasco
Dec 23 2014 1:56 PM
STATE DESIGN ENGINEER

Washington State Department of Transportation

DRAWN BY: COLBY FLETCHER

DRAWN BY: COLBY FLETCHER

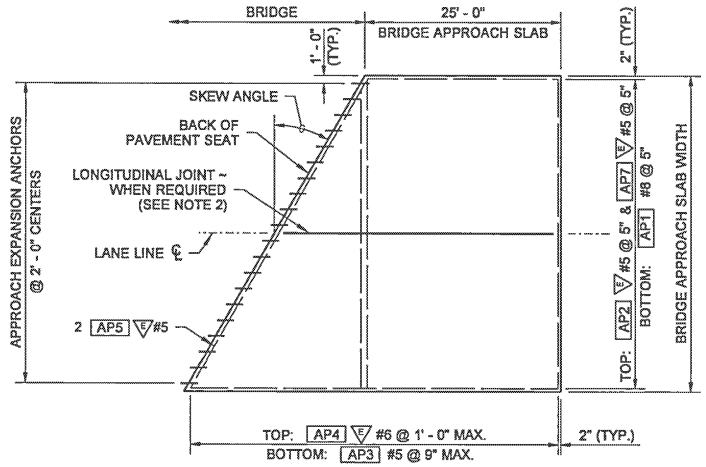

PLAN

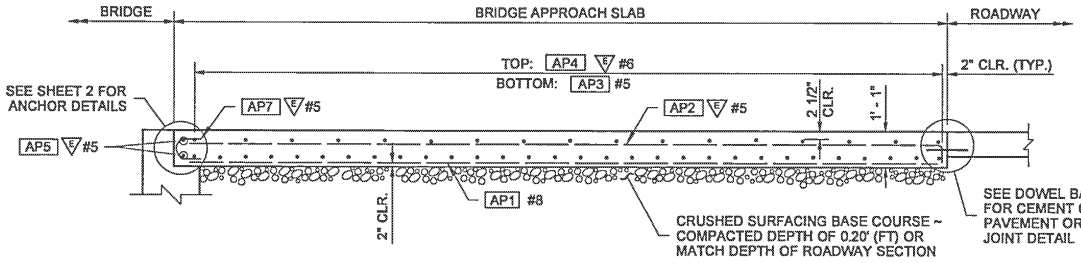

LONGITUDINAL SECTION

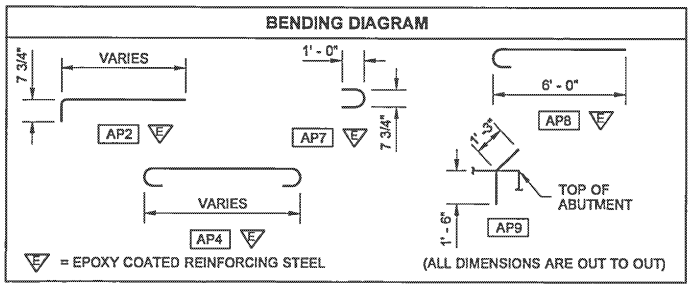

AP8 E #6 BARS SHALL BE PLACED WITH THE AP4 E #6 BARS ALONG EACH EDGE OF BRIDGE APPROACH SLAB HAVING A TRAFFIC BARRIER.

NOTES

1. All edges of the approach slab shall have 1/2" (in) radii except at longitudinal construction joints and adjacent to L-Type abutments.
2. Longitudinal joints shall be placed on lane lines and shall be constructed and sealed in accordance with **Standard Specification Section 5-05.3(8)**. Joints may be either a sawcut crack control joint or a construction joint. Sawcut joints shall terminate 1' - 0" before reaching edge of slab and must be sawcut as soon as possible after placement of concrete.
   (A) Approach slabs less than 40' (ft) wide – no joint is required.
   (B) Approach slabs wider than 40' (ft) – one or more joints are required to divide the slab into approximately 24' (ft) wide sections.
3. The minimum lap splice of #5 is 2' - 0". E#5 is 2' - 6". E#6 is 3' - 0". And #8 is 3' - 3". All lap splices shall be staggered so that no more than 50% of rebar is spliced at the same location. Lap splices shall be located within the middle half of the bridge approach slab. Optional splices are allowed for AP4 E #6.

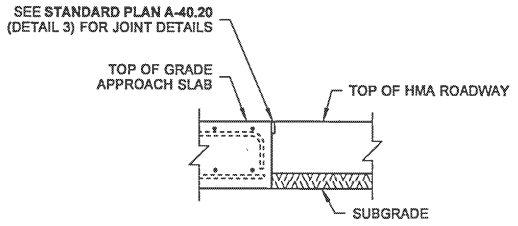

HMA ROADWAY JOINT DETAIL

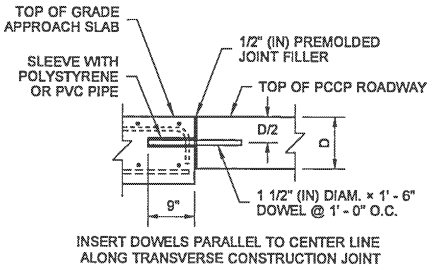

INSERT DOWELS PARALLEL TO CENTER LINE ALONG TRANSVERSE CONSTRUCTION JOINT

DOWEL BAR DETAIL FOR CEMENT CONCRETE PAVEMENT

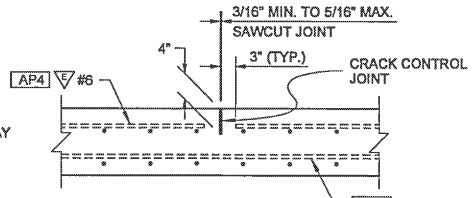

LONGITUDINAL CRACK CONTROL JOINT (SEE NOTE 2)

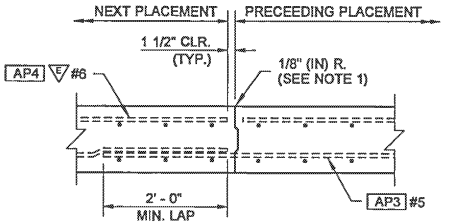

EDGE PRECEEDING PLACEMENT ONLY WITH 1/6" (IN) RADIUS

ALTERNATE LONGITUDINAL JOINT DETAIL (SEE NOTE 2)

FOR LOCAL AGENCY USE ONLY

BIJAN KHALEGHI STATE OF WASHINGTON 27695 STRUCTURAL ENGINEER PROFESSIONAL ENGINEER

Khaleghi, Bijan
Bijan Khaleghi Dec 18 2014 5:06 PM
CSign

BRIDGE APPROACH SLAB

STANDARD PLAN A-40.50-02

SHEET 1 OF 2 SHEETS

APPROVED FOR PUBLICATION
Bakotich, Pasco
Dec 23 2014 1:57 PM
STATE DESIGN ENGINEER
CSign
Washington State Department of Transportation

DRAWN BY: COLBY FLETCHER

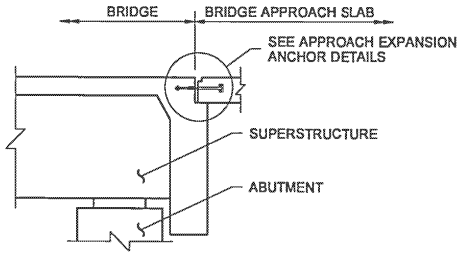

LONGITUDAL SECTION

SEMI-INTEGRAL TYPE ABUTMENT

NOTE

THE METAL COMPONENTS OF THE APPROACH EXPANSION ANCHOR SHALL EITHER BE PAINTED WITH ONE COAT OF INORGANIC ZINC PAINT CONFORMING TO **STANDARD SPECIFICATION SECTION 9-08.1(2)F** OR BE GALVANIZED IN ACCORDANCE WITH **AASHTO M 232.**

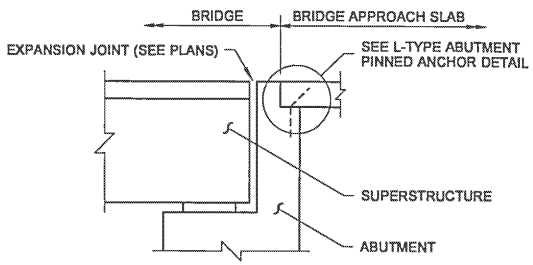

LONGITUDINAL SECTION

L - TYPE ABUTMENT

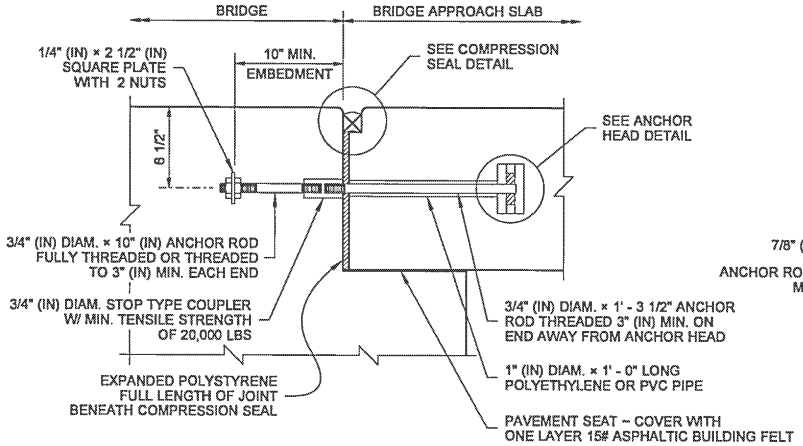

APPROACH EXPANSION ANCHOR ~ METHOD A

SEMI-INTEGRAL TYPE ONLY

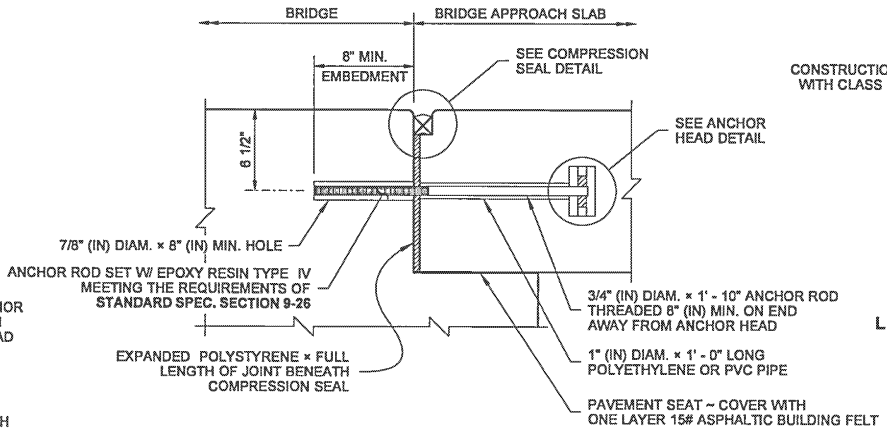

APPROACH EXPANSION ANCHOR ~ METHOD B

SEMI-INTEGRAL TYPE ONLY

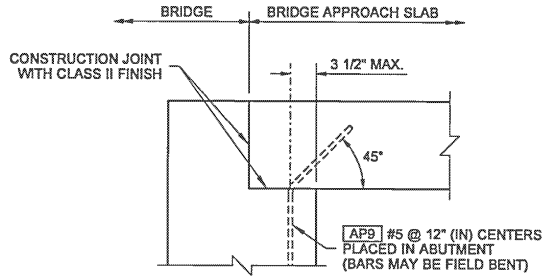

L - TYPE ABUTMENT PINNED ANCHOR DETAIL

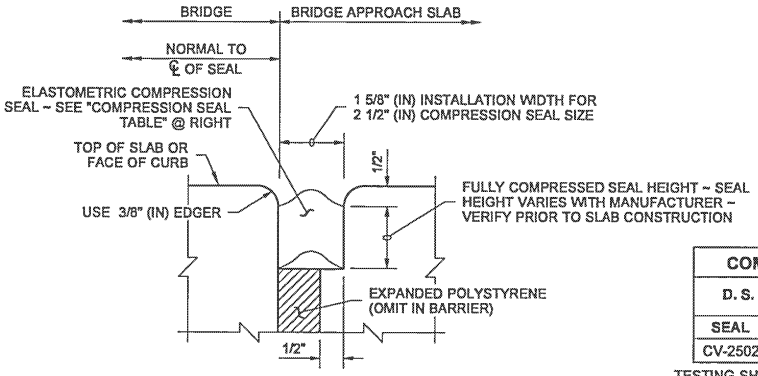

COMPRESSION SEAL DETAIL

COMPRESSION SEAL TABLE			
D. S. BROWN		WATSON BOWMAN ACME	
SEAL	WIDTH	SEAL	WIDTH
CV-2502	2 1/2	WA-250	2 1/2

TESTING SHALL BE PER **ASTM D2628** PRIOR TO USE

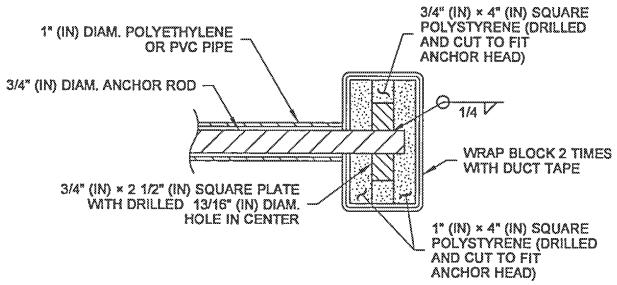

ANCHOR HEAD DETAIL

FOR LOCAL AGENCY USE ONLY

BIJAN KHALEGHI STATE OF WASHINGTON 27695 STRUCTURAL ENGINEER PROFESSIONAL ENGINEER

Khaleghi, Bijan
Bijan Khaleghi Dec 22 2014 7:33 AM
CoSign

BRIDGE APPROACH SLAB

STANDARD PLAN A-40.50-02

SHEET 2 OF 2 SHEETS

APPROVED FOR PUBLICATION
Bakotich, Pasco
Dec 23 2014 1:57 PM
STATE BRIDGE DESIGN ENGINEER
CoSign
Washington State Department of Transportation

DRAWN BY: FERN LIDDELL

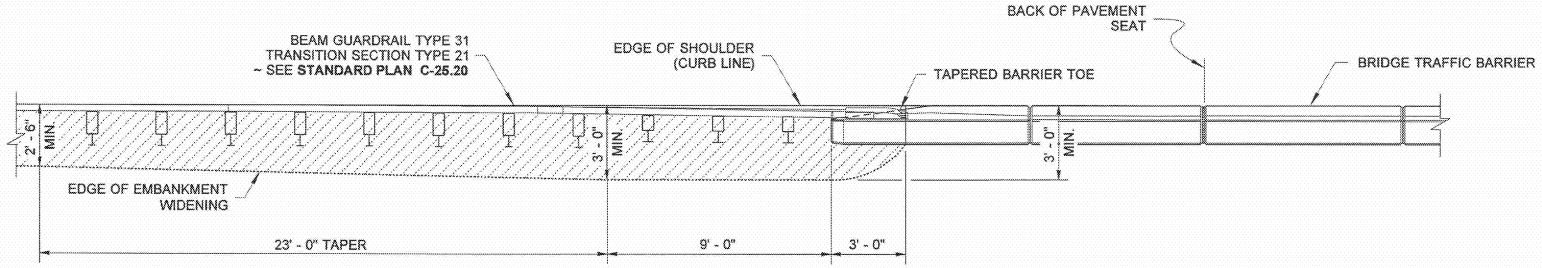

PLAN

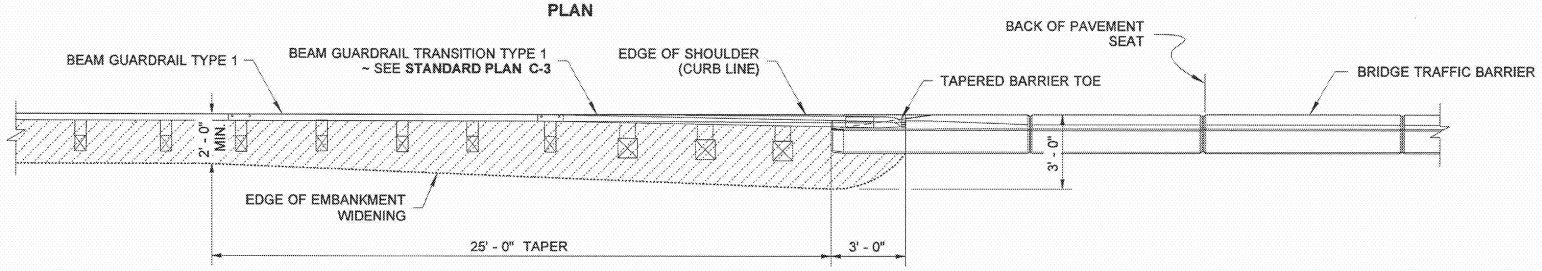

PLAN

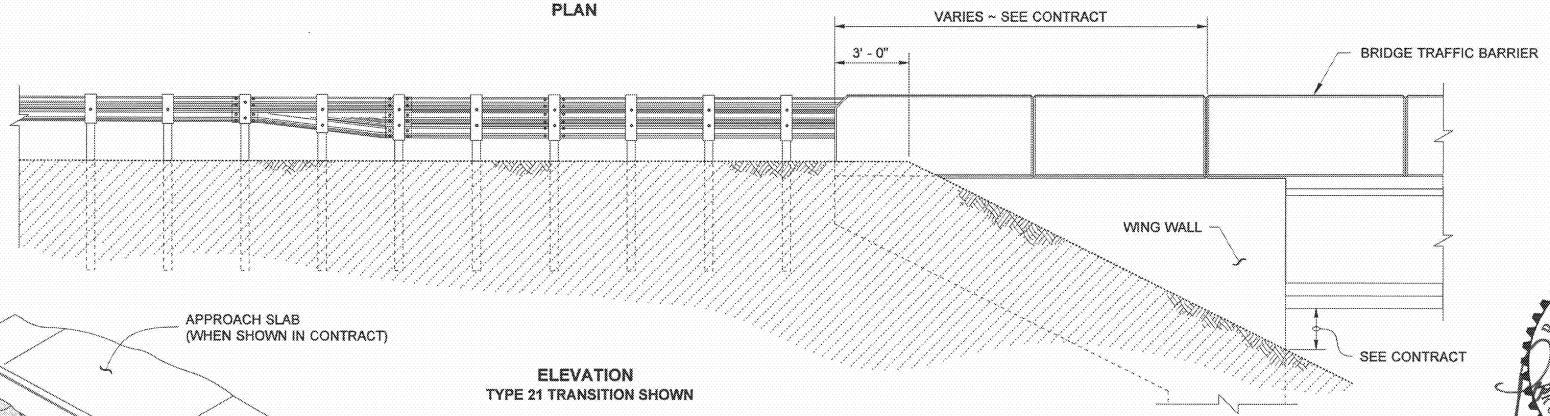

ELEVATION
TYPE 21 TRANSITION SHOWN

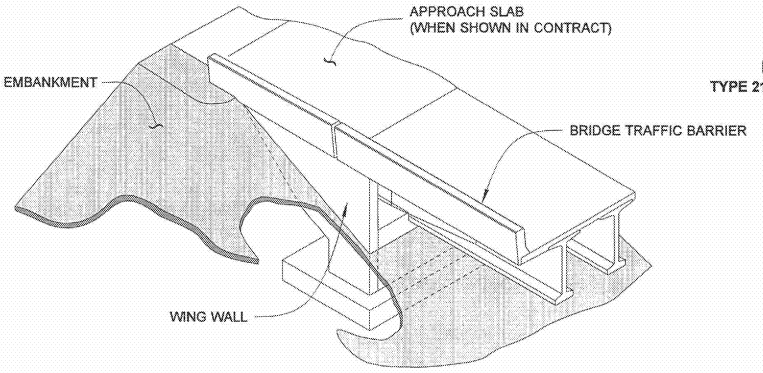

ISOMETRIC VIEW

BAKOTICH, PASCO III
STATE OF WASHINGTON
REGISTERED
PROFESSIONAL ENGINEER
11/17/08

EMBANKMENT WIDENING AT BRIDGE END WITH WING WALL
STANDARD PLAN A-50.10-00

SHEET 1 OF 2 SHEETS

APPROVED FOR PUBLICATION

STATE DESIGN ENGINEER — DATE 11/17/08

Washington State Department of Transportation

BEAM GUARDRAIL CONNECTION TO BRIDGE TRAFFIC BARRIER

This page left blank intentionally.

DRAWN BY: COLBY FLETCHER

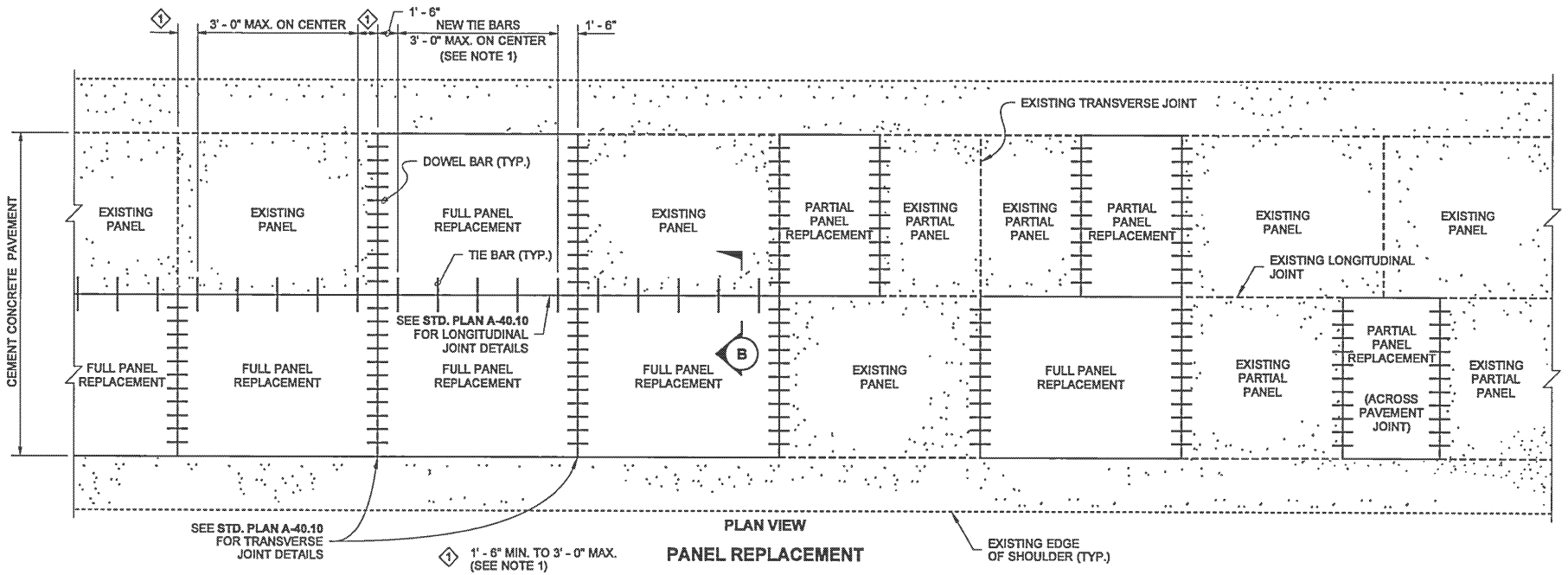

PLAN VIEW

PANEL REPLACEMENT

1 1' - 6" MIN. TO 3' - 0" MAX. (SEE NOTE 1)

2 1' - 0" MIN. (SEE NOTE 3)

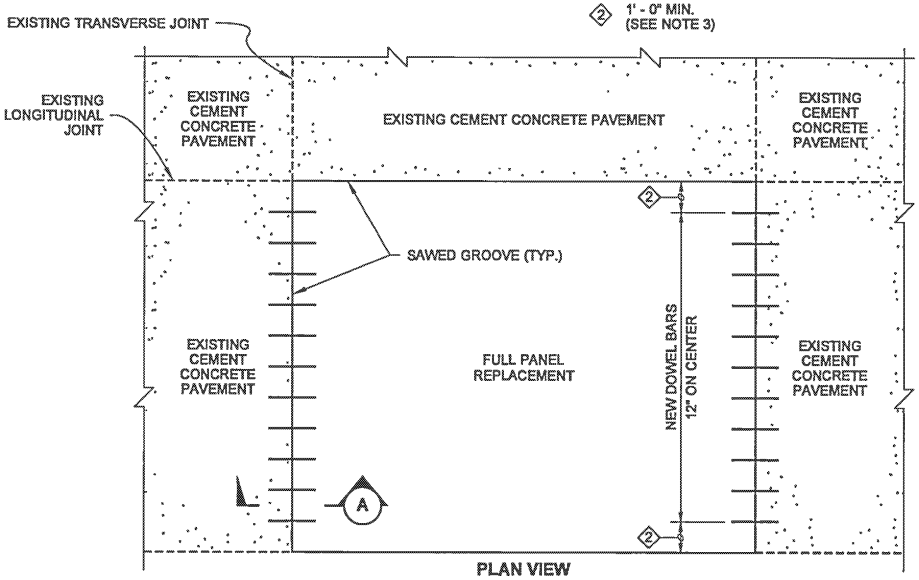

PLAN VIEW

FULL PANEL REPLACEMENT DETAIL

NOTES

1. Install tie bars across longitudinal joints between new panels (complete and partial) and existing cement concrete pavement lane or shoulder when four or more adjacent panels are replaced. Place new tie bars between existing tie bars.Tie bars are not installed between cement concrete pavement and hot mix asphalt shoulders.
2. Place a bond-breaking material such as polyethylene film, roofing paper, or other material approved by the Engineer along all existing concrete surfaces and between the bottom of the slab and bases prior to placing concrete.
3. Place new dowel bars between existing dowel bars. The 1' - 0" dimension from the edge of the panel may be increased by 6" (in) to avoid bar in existing panel.
4. Bars shall meet the requirements of **Standard Specification 9-07.5(1)** or **9-07.5(2)**.

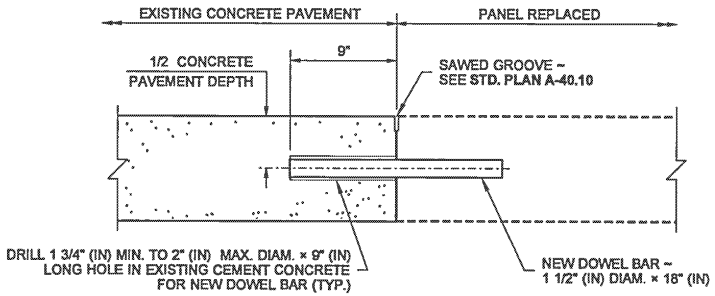

SECTION (A)

EDWARD J. CARPENTER
STATE OF WASHINGTON
29635
REGISTERED
PROFESSIONAL ENGINEER

Carpenter, Jeff
Dec 15 2014 4:09 PM

CEMENT CONCRETE PAVEMENT REHABILITATION STANDARD PLAN A-60.10-03

SHEET 1 OF 2 SHEETS

APPROVED FOR PUBLICATION
Bakotich, Pasco
Dec 23 2014 1:58 PM
STATE DESIGN ENGINEER

Washington State Department of Transportation

DRAWN BY: COLBY FLETCHER

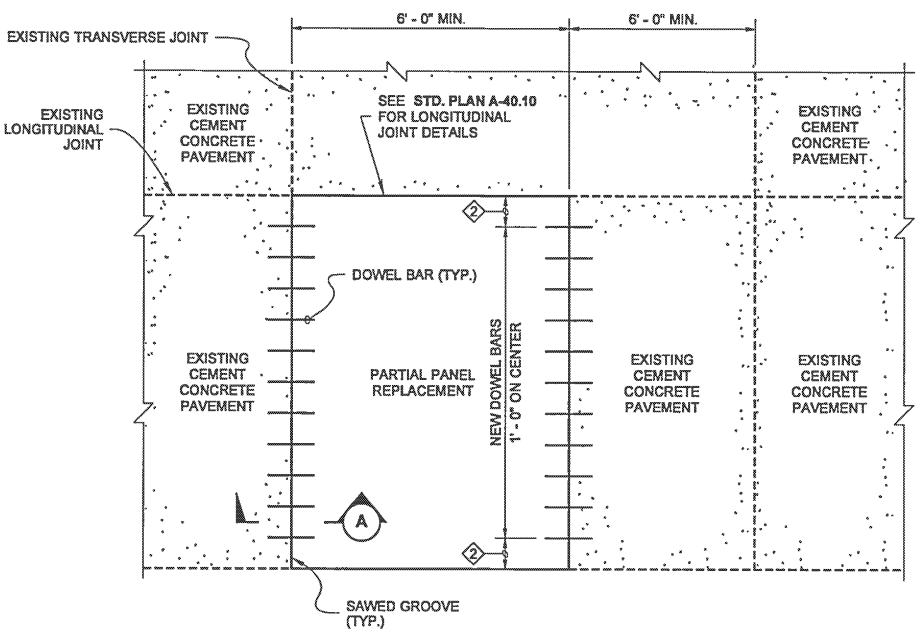

PLAN VIEW

PARTIAL PANEL REPLACEMENT
WITHOUT JOINT REPLACEMENT

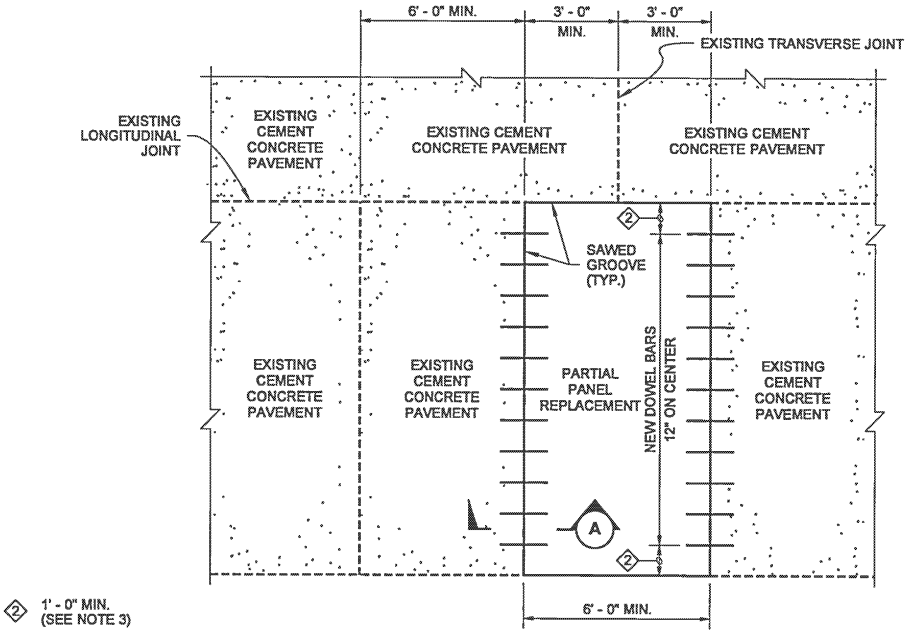

2 1' - 0" MIN. (SEE NOTE 3)

PLAN VIEW

PARTIAL PANEL REPLACEMENT
WITH JOINT REPLACEMENT

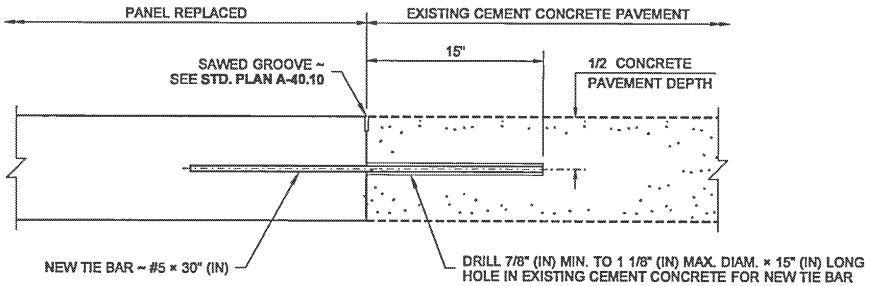

SECTION B

EDWARD J. CARPENTER
STATE OF WASHINGTON
29635
REGISTERED
PROFESSIONAL ENGINEER

Carpenter, Jeff
Dec 15 2014 4:09 PM

CEMENT CONCRETE PAVEMENT REHABILITATION STANDARD PLAN A-60.10-03

SHEET 2 OF 2 SHEETS

APPROVED FOR PUBLICATION

Bakotich, Pasco
Dec 23 2014 1:58 PM
STATE DESIGN ENGINEER

Washington State Department of Transportation

DRAWN BY: COLBY FLETCHER

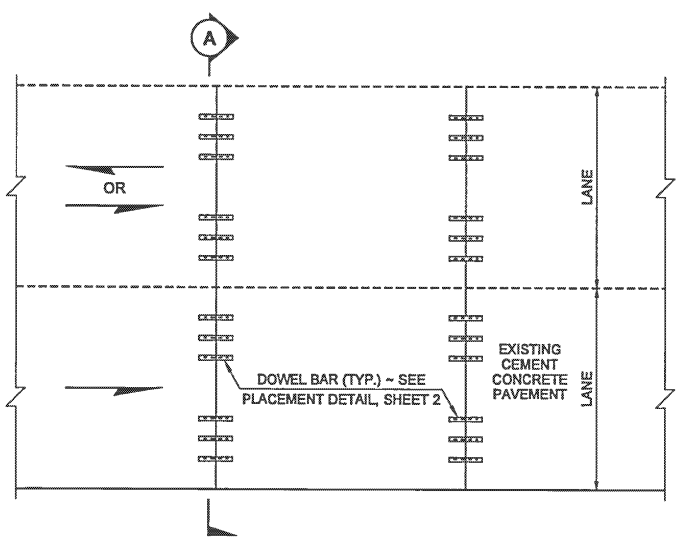

PLAN VIEW

DOWEL BAR RETROFIT

FOR TWO-LANE DIVIDED HIGHWAY (ONE-WAY TRAFFIC)
FOR EACH LANE IN UNDIVIDED HIGHWAY (TWO-WAY TRAFFIC)

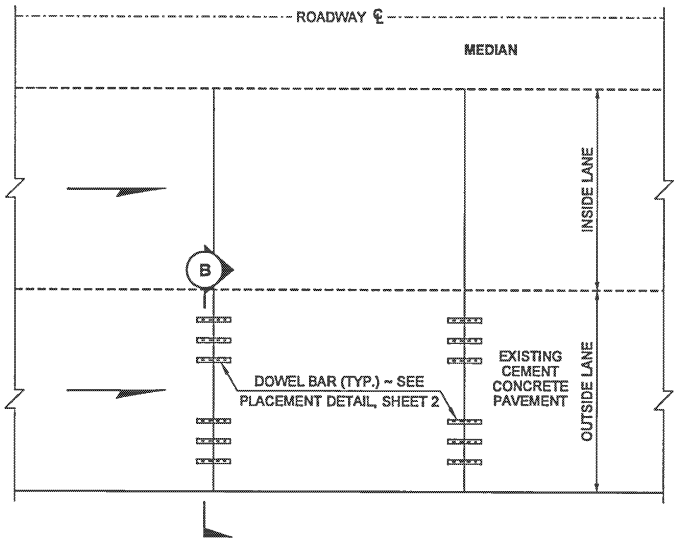

PLAN VIEW

DOWEL BAR RETROFIT FOR ONE LANE

DIVIDED HIGHWAY (ONE-WAY TRAFFIC)

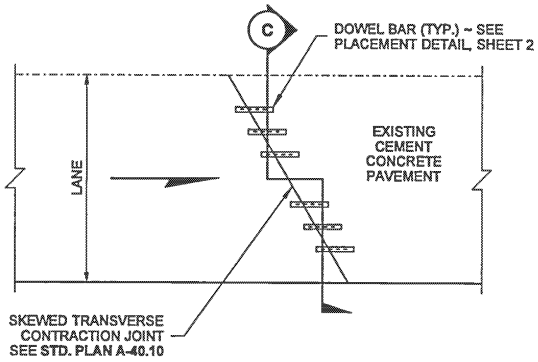

PLAN VIEW

SKEWED JOINT DETAIL

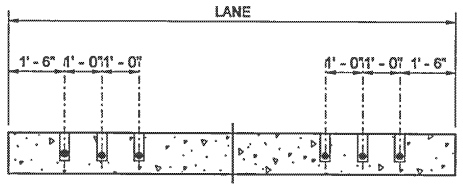

SECTION (C)

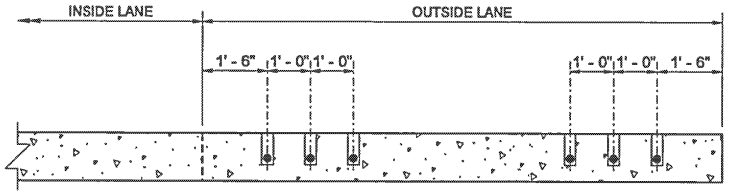

SECTION (B)

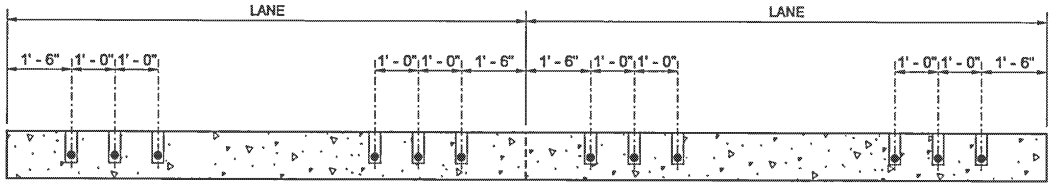

SECTION (A)

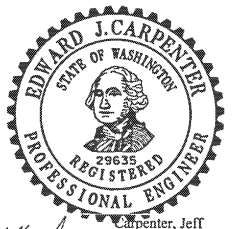

Carpenter, Jeff
Dec 15 2014 4:06 PM

DOWEL BAR RETROFIT FOR CEMENT CONCRETE PAVEMENT STANDARD PLAN A-60.20-03

SHEET 1 OF 2 SHEETS

APPROVED FOR PUBLICATION
Bakotich, Pasco
Dec 23 2014 2:00 PM
STATE DESIGN ENGINEER

Washington State Department of Transportation

DRAWN BY: COLBY FLETCHER

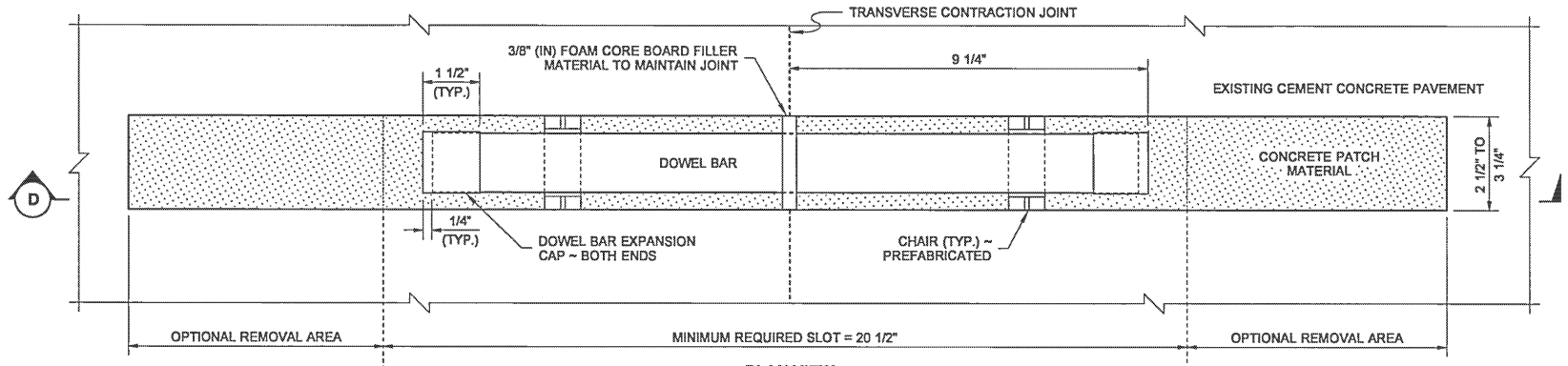

PLAN VIEW

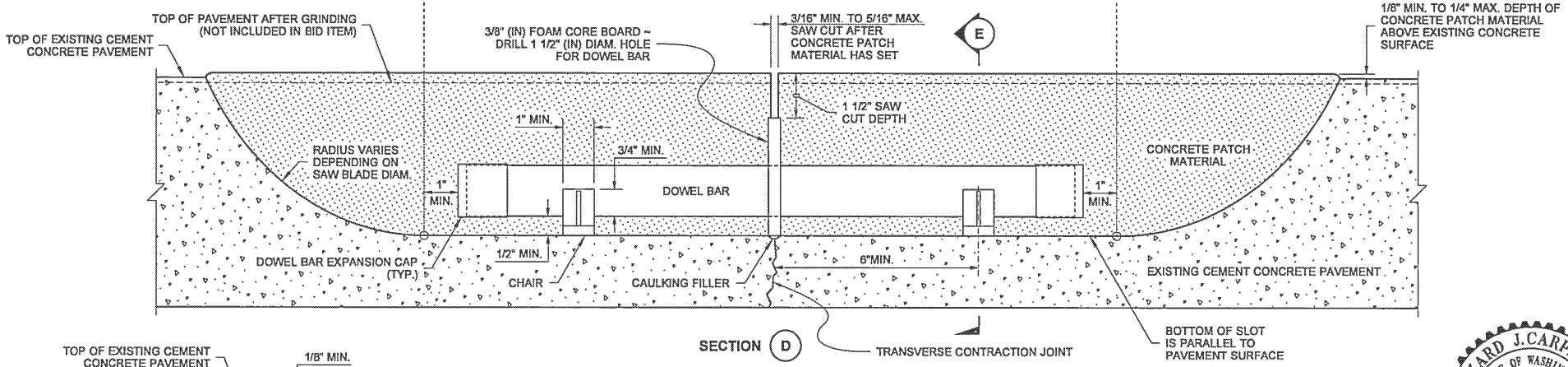

DOWEL BAR PLACEMENT DETAIL

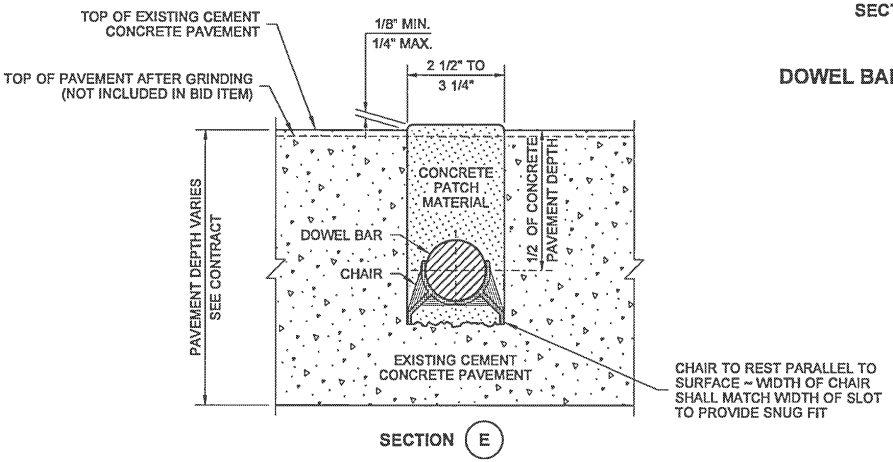

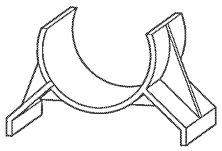

CHAIR DETAIL

EDWARD J. CARPENTER
STATE OF WASHINGTON
29635
REGISTERED
PROFESSIONAL ENGINEER

Carpenter, Jeff
Dec 15 2014 4:08 PM

DOWEL BAR RETROFIT FOR CEMENT CONCRETE PAVEMENT STANDARD PLAN A-60.20-03

SHEET 2 OF 2 SHEETS

APPROVED FOR PUBLICATION
Bakotich, Pasco
Dec 23 2014 2:01 PM
STATE DESIGN ENGINEER

Washington State Department of Transportation

This page left blank intentionally.

DRAWN BY: FERN LIDDELL

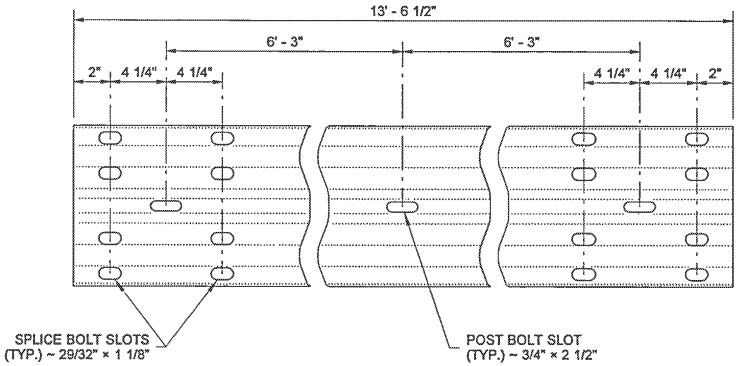

TYPICAL RAIL ELEMENT

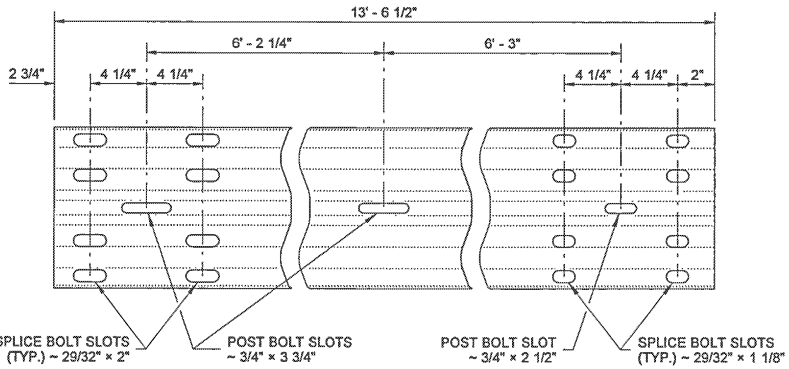

EXPANSION SECTION

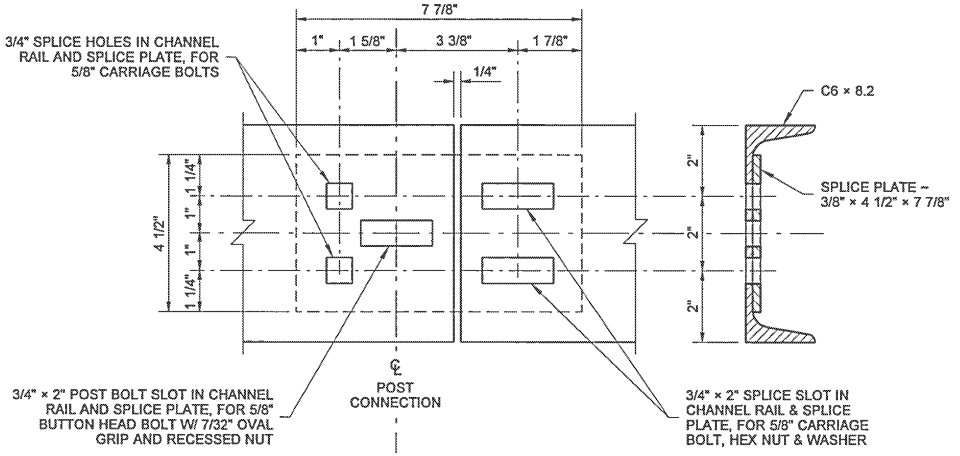

CHANNEL RAIL SPLICE

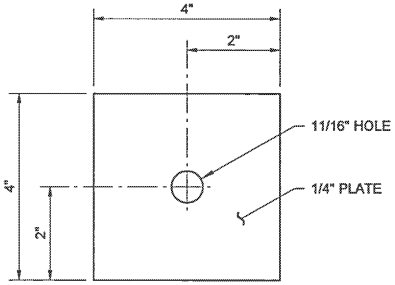

SNOW LOAD
POST WASHER
SEE NOTE 1

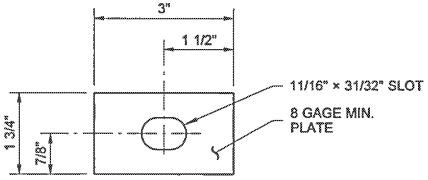

SNOW LOAD
RAIL WASHER
SEE NOTES 1 & 2

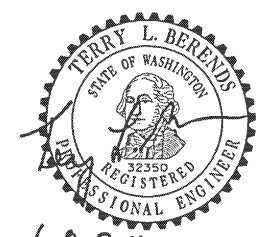

6-8-2011

BEAM GUARDRAIL
TYPES 1 ~ 4
(W-BEAM)
STANDARD PLAN C-1

SHEET 2 OF 2 SHEETS

APPROVED FOR PUBLICATION

Pasco Bakotich III — 6/16/11

STATE DESIGN ENGINEER — DATE

Washington State Department of Transportation

DRAWN BY: FERN LIDDELL

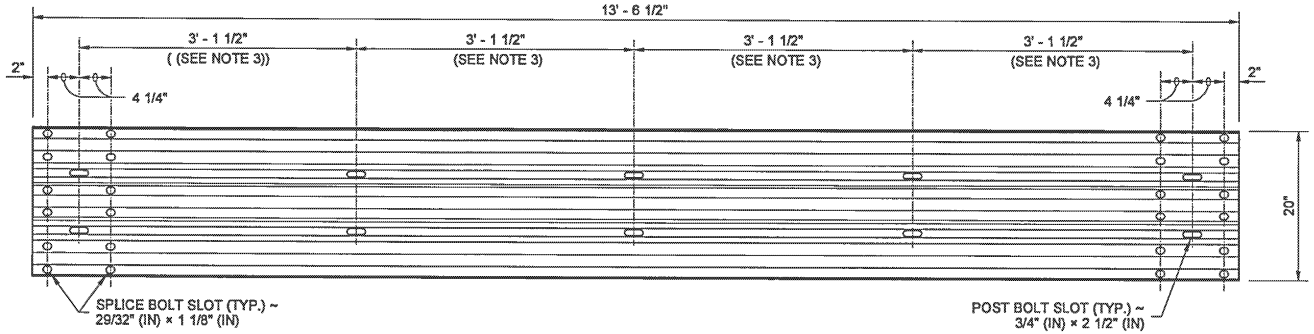

TYPICAL RAIL ELEMENT

NOTES

1. Type 10 post shall be 6 × 8 timber, OR either W6 × 9, or W6 × 8.5 steel. Type 11 post shall be 10 × 10 timber or W6 × 15. For additional details see **Standard Plan C-1b.**
2. Type 10 guardrail post spacing shall be 6' - 3" on center. Type 11 shall be a maximum of 3' - 1 1/2" on center.
3. Spacing may vary depending on application. See **Standard Specification Section 9-16.3(1)** for rail element requirements.

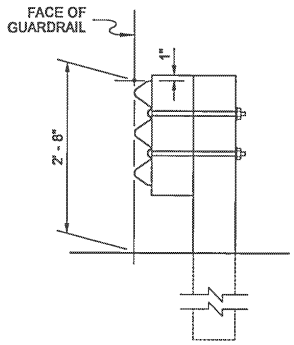

RAIL ASSEMBLY

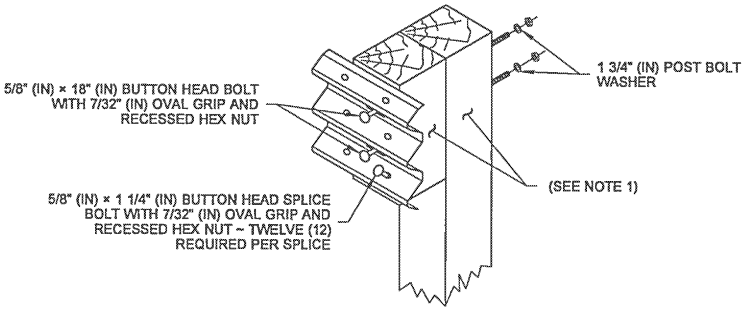

WOOD POST ASSEMBLY

TYPE 10

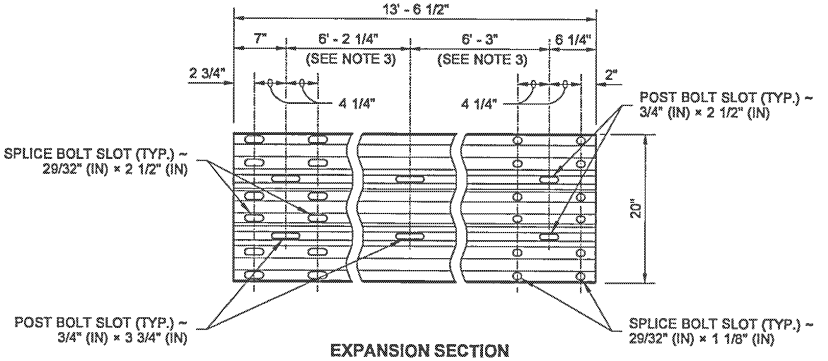

EXPANSION SECTION

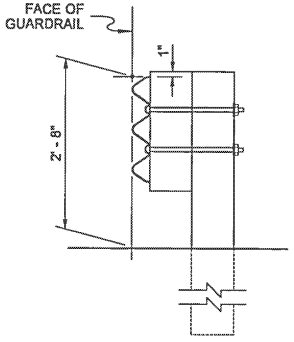

RAIL ASSEMBLY

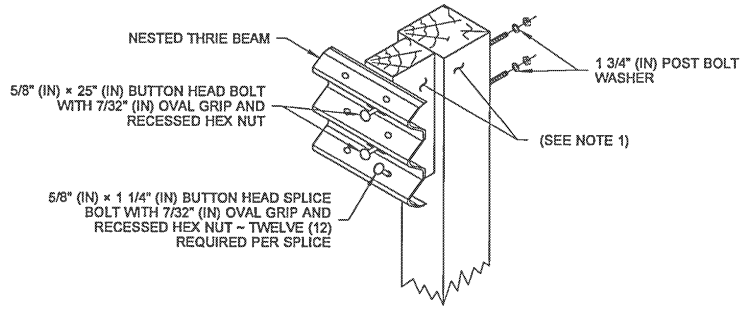

WOOD POST ASSEMBLY

TYPE 11

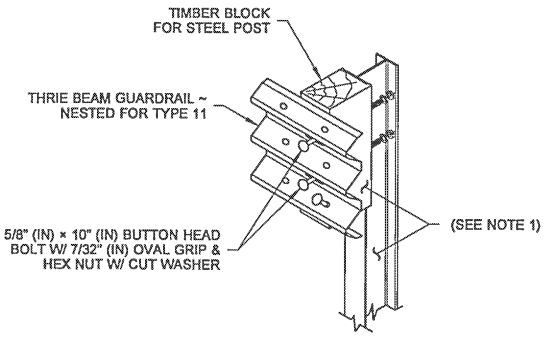

STEEL POST ASSEMBLY

TYPES 10 AND 11

EDWARD PATRICK BARRY
STATE OF WASHINGTON
34363
REGISTERED
PROFESSIONAL ENGINEER

Barry, Ed
Jul 14 2015 7:07 AM

BEAM GUARDRAIL (THRIE BEAM)

STANDARD PLAN C-1a

SHEET 1 OF 1 SHEET

APPROVED FOR PUBLICATION
Carpenter, Jeff
Jul 14 2015 11:30 AM
STATE DESIGN ENGINEER

Washington State Department of Transportation

This page left blank intentionally.

DRAWN BY: FERN LIDDELL

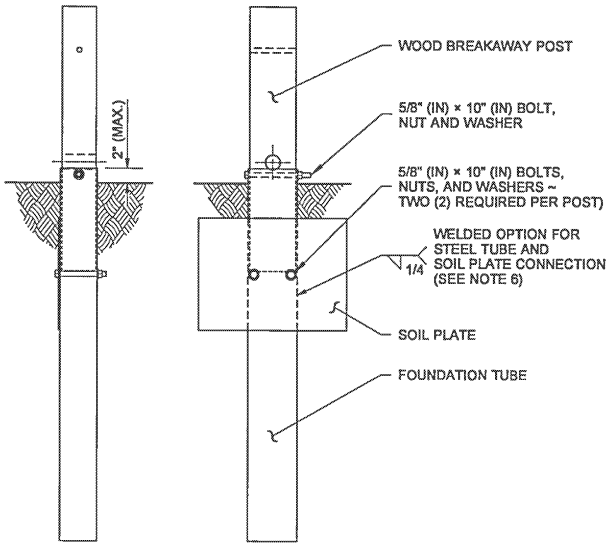

ANCHOR POST ASSEMBLY

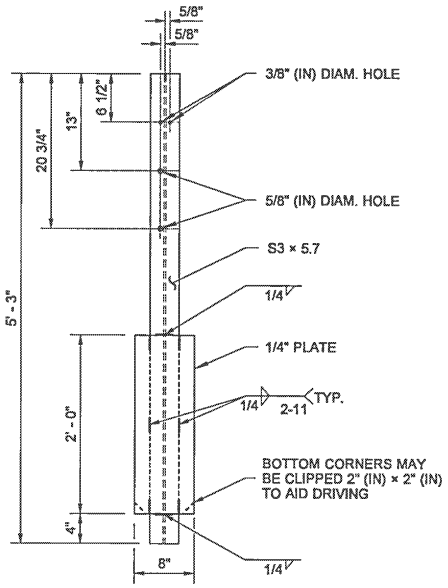

G-2 POST

NOTES

1. Wood posts for all guardrail placement plans shall be 6 × 8 except where noted otherwise.
2. Lower hole is for Rub Rail of Type 2 and Type 3 Beam Guardrail.
3. W6×8.5 or W6×9 steel posts and timber blocks are alternates for 6×8 timber posts and blocks. W6×15 steel posts and timber blocks are alternates for 10×10 timber posts and blocks.
4. Holes shall be located on approaching traffic side of web.
5. When "Beam Guardrail Type - _ _ Ft. Long Post" is specified in the Contract, the post length shall be stamped with numbers, 1 1/2" (in) min. high and 3/4" (in) wide at the location where the letter "H" is shown in the ASSEMBLY DETAIL. For wood post applications, the letter shall be stamped to a minimum depth of 1/4" (in). For steel post applications, the letter shall be legible after the post is galvanized. After post installation, it shall be the Contractor's responsibility to ensure the stamped numbers remain visible.
6. Soil plate may be welded to foundation tube. If so, holes in soil plate and foundation tube may be omitted.

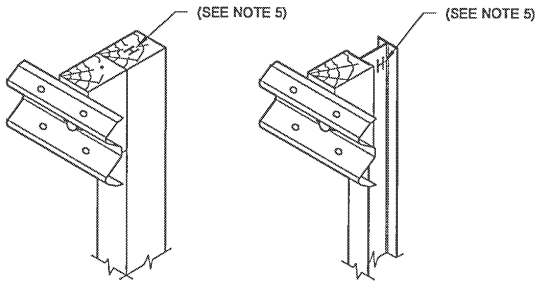

PARTIAL ASSEMBLY DETAIL

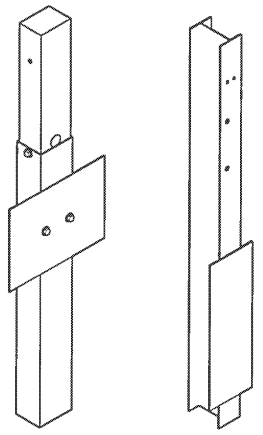

ISOMETRIC

EDWARD PATRICK BARRY
STATE OF WASHINGTON
34363
REGISTERED
PROFESSIONAL ENGINEER

Barry, Ed
Jul 14 2015 7:12 AM

BEAM GUARDRAIL POSTS AND BLOCKS

STANDARD PLAN C-1b

SHEET 1 OF 2 SHEETS

APPROVED FOR PUBLICATION
Carpenter, Jeff
Jul 14 2015 11:29 AM
STATE DESIGN ENGINEER

Washington State Department of Transportation

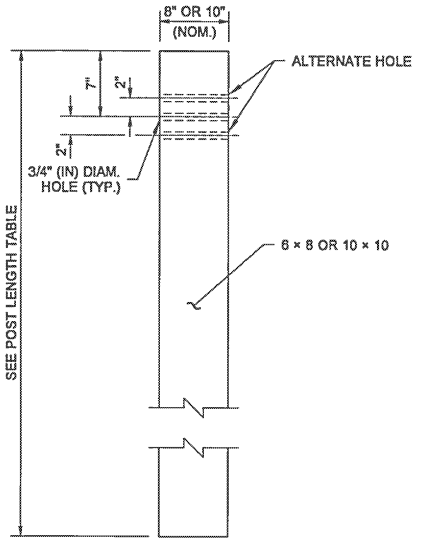

W-BEAM

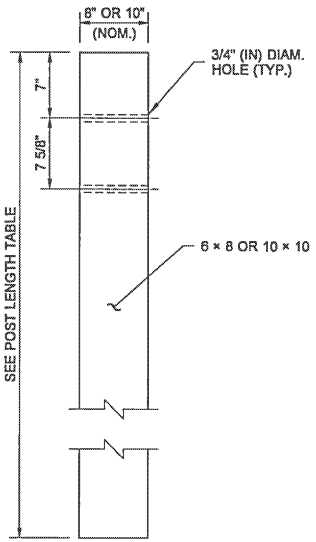

THRIE BEAM

WOOD POST

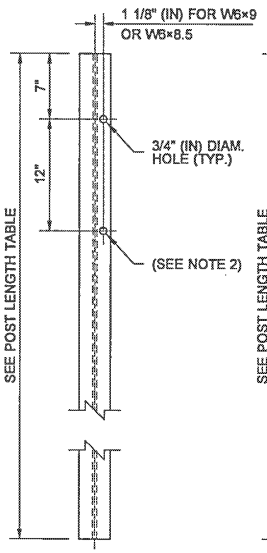

W-BEAM

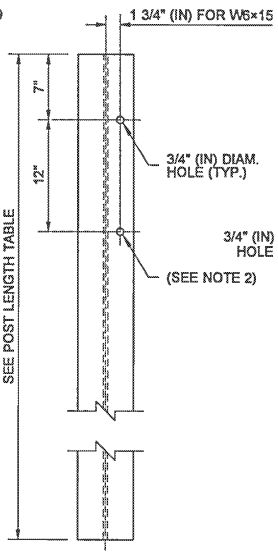

THRIE BEAM

STEEL POST
(SEE NOTES 3 AND 4)

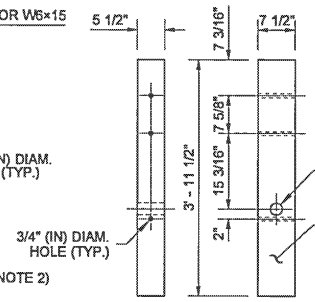

THRIE BEAM

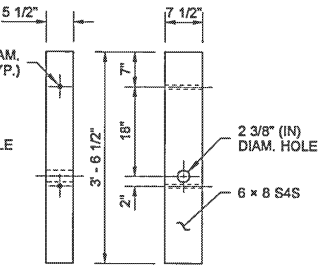

W-BEAM

WOOD BREAKAWAY POST

POST LENGTH TABLE	
GUARDRAIL TYPE	LENGTH
1 through 4 & 31	6' - 0"
10 or 11	6' - 6"

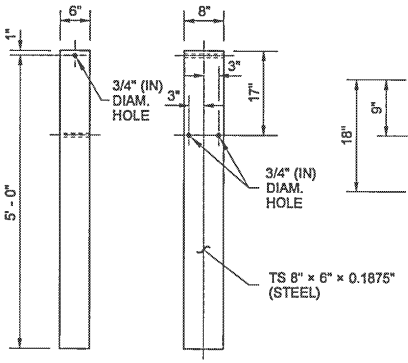

FOUNDATION TUBE

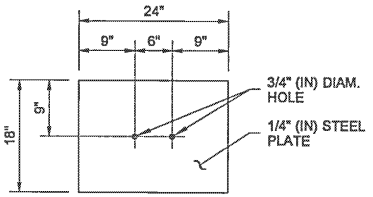

SOIL PLATE

DRAWN BY: FERN LIDDELL

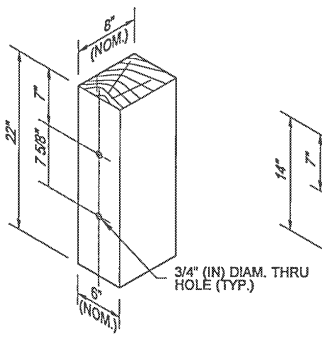

THRIE BEAM WOOD BLOCK FOR WOOD POST

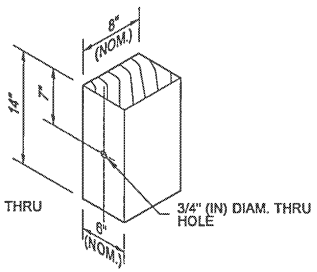

W-BEAM WOOD BLOCK FOR WOOD POST

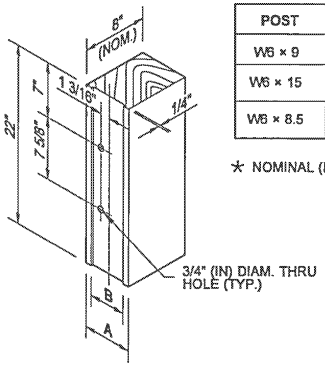

THRIE BEAM WOOD BLOCK FOR STEEL POST

POST	A	B
W6 × 9	6"★	4 1/4"
W6 × 15	8"★	6 1/4"
W6 × 8.5	8"★	6 1/4"

★ NOMINAL (NOM.)

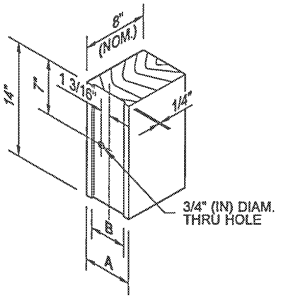

W-BEAM WOOD BLOCK FOR STEEL POST

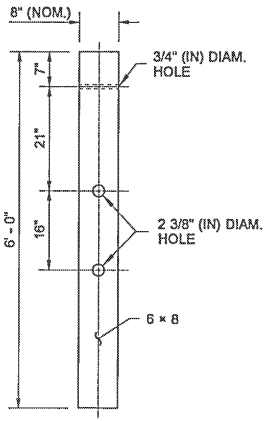

CONTROLLED RELEASING TERMINAL (CRT) POST

EDWARD PATRICK BARRY
STATE OF WASHINGTON
34363
REGISTERED
PROFESSIONAL ENGINEER

Barry, Ed
Jul 14 2015 7:12 AM

BEAM GUARDRAIL POSTS AND BLOCKS

STANDARD PLAN C-1b

SHEET 2 OF 2 SHEETS

APPROVED FOR PUBLICATION
Carpenter, Jeff
Jul 14 2015 11:29 AM
STATE DESIGN ENGINEER

Washington State Department of Transportation

NOTES

1. For post details see Standard Plan, "Beam Guardrail Posts and Blocks".

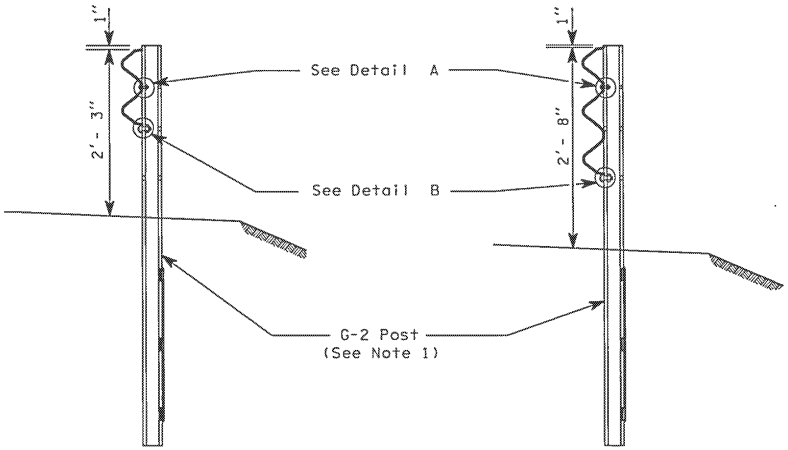

TYPE 20

TYPE 21

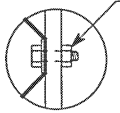

5/16" DIA x 1½" hex head bolt with hex nut and 1¾" square x .135" washer

DETAIL A

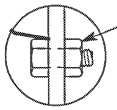

½" DIA x 1½" Hex head bolt with hex nut. Guardrail rests on top of bolt.

DETAIL B

BEAM GUARDRAIL

CLIFFORD E. MANSFIELD
STATE OF WASHINGTON
15224
REGISTERED
PROFESSIONAL ENGINEER
EXPIRES MAY 3, 1998

STANDARD PLAN C-1c

APPROVED FOR PUBLICATION

STATE DESIGN ENGINEER — DATE 5/12/87

WASHINGTON STATE DEPARTMENT OF TRANSPORTATION
OLYMPIA, WASHINGTON

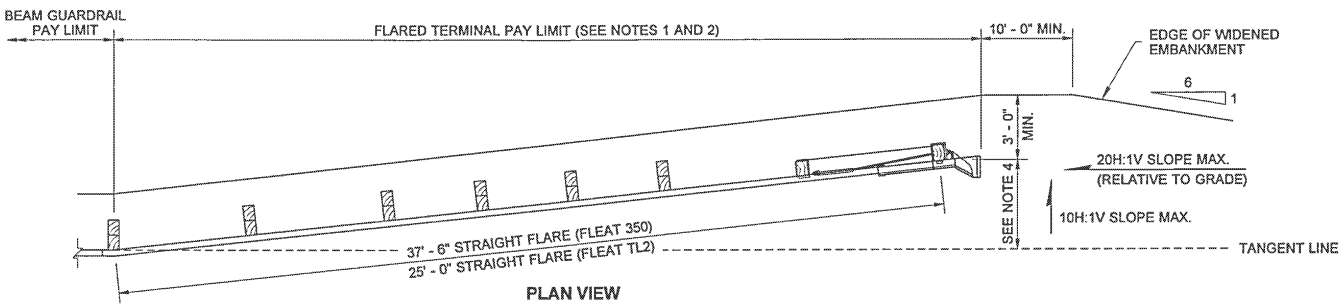

PLAN VIEW

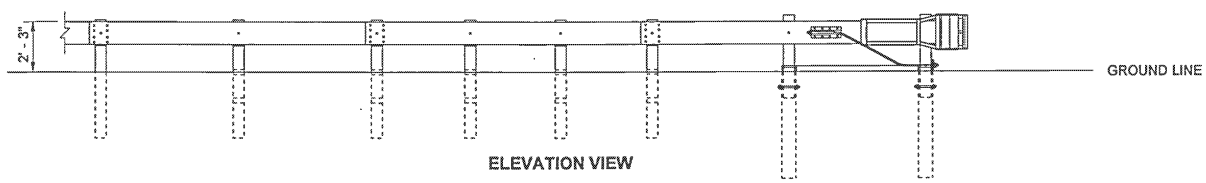

ELEVATION VIEW

FLEAT OPTION

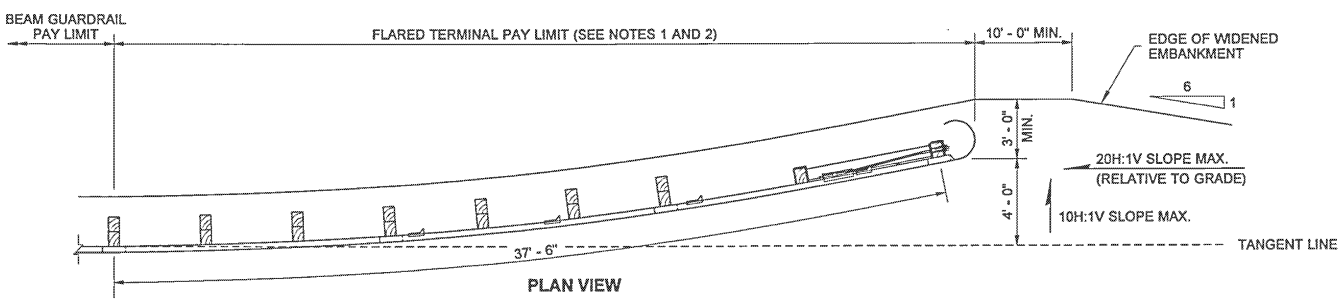

PLAN VIEW

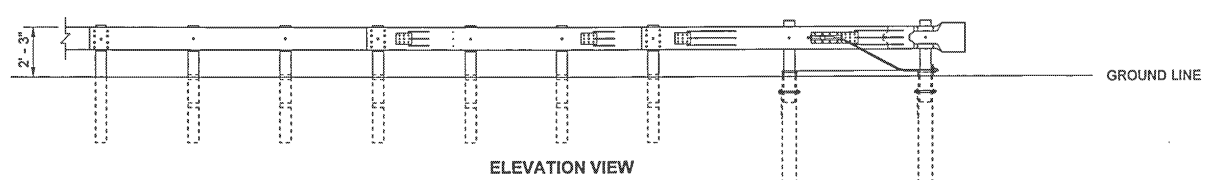

ELEVATION VIEW

SRT OPTION

NOTES

1. Unless otherwise indicated in the contract, the SRT - 350 (12.5, 8 Post) as manufactured by Trinity Industries, Inc., or a FLEAT 350 as manufactured by Road Systems Inc., shall be installed per manufacturer's recommendations. If specified in the Contract, the FLEAT TL2 as manufactured by Road Systems, Inc. shall be installed per manufacturers recommendations.
2. Where terminal is placed on a curve, and post offsets would result in the rail encroaching onto the shoulder (e.g., the inside of a curve), the posts shall be installed so that the faceof the rail is at the edge of the shoulder.
3. When snow load post washers and snow load rail washers are called for in the contract, the snow load rail washers must be omitted within the terminal limits.
4. Offset distances:
   FLEAT 350 ..... 4' - 0"
   FLEAT TL2 ..... 1' - 8" minimum

RICHARD BARSTOW ROBIN
STATE OF WASHINGTON
34042
REGISTERED PROFESSIONAL ENGINEER
6/7/2006

EXPIRES JULY 24, 2006

BEAM GUARDRAIL FLARED TERMINAL

STANDARD PLAN C-4b

SHEET 1 OF 1 SHEET

APPROVED FOR PUBLICATION

Harold Petrifeso 6-8-06

STATE DESIGN ENGINEER DATE

Washington State Department of Transportation

DATE	REVISION	BY
04/2006	Revised FLEAT Flare Lengths	AMC

DRAWN BY: COLBY FLETCHER

NOTES

1. An SKT-350 as manufactured by Road Systems, Inc. shall be installed according to manufacturer's recommendations. When a TL2 terminal is specified in the Contract an SKT-TL2 as manufactured by Road Systems, Inc. shall be installed according to the manufacturer's recommendations.
2. A reflectorized object marker shall be installed according to manufacturer's recommendations.
3. When snow load post washers and snow load rail washers are required by the Contract, the snow load rail wahsers must not be installed within the terminal limits.
4. Terminal shall be installed at a taper, ensuring that end piece is entirely off shoulder.
5. Length for SKT-350 is 50' (ft). Length for SKT-TL2 is 25' (ft).

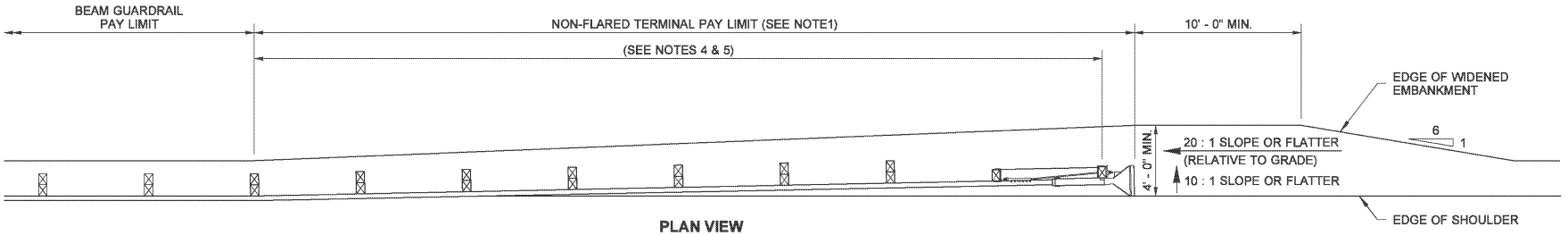

PLAN VIEW

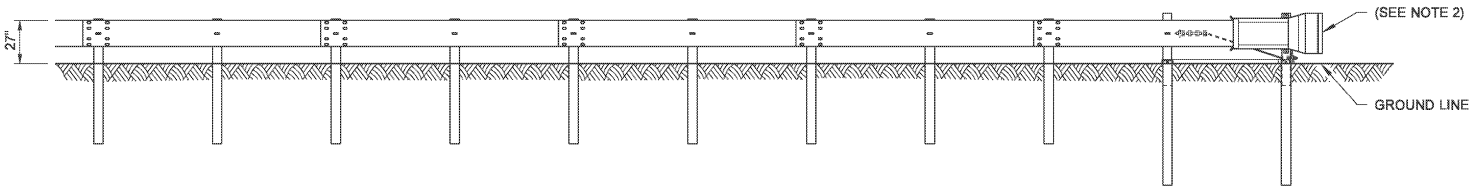

ELEVATION VIEW

EDWARD PATRICK BARRY
STATE OF WASHINGTON
34363
REGISTERED
PROFESSIONAL ENGINEER

Barry, Ed
Oct 23 2014 11:31 AM

BEAM GUARDRAIL NON-FLARED TERMINAL

STANDARD PLAN C-4e

SHEET 1 OF 1 SHEET

APPROVED FOR PUBLICATION
Bakotich, Pasco
Oct 23 2014 12:09 PM
STATE DESIGN ENGINEER

Washington State Department of Transportation

DATE	REVISION	BY
10/2014	REMOVED TRINITY NON-FLARED TERMINAL	CF

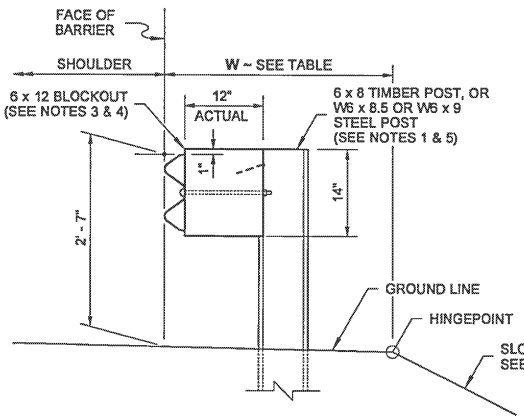

TYPICAL SECTION ~ WITHOUT CURB
(6' - 0" LONG POSTS)

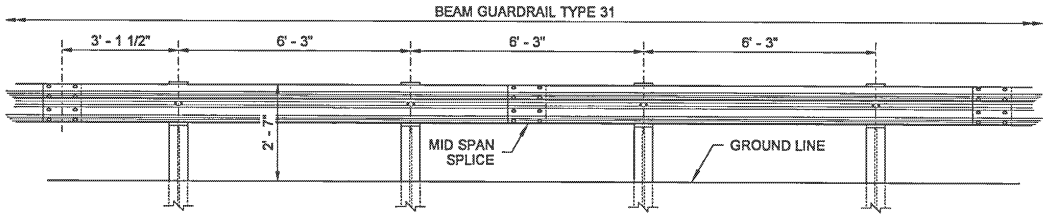

TYPICAL ELEVATION

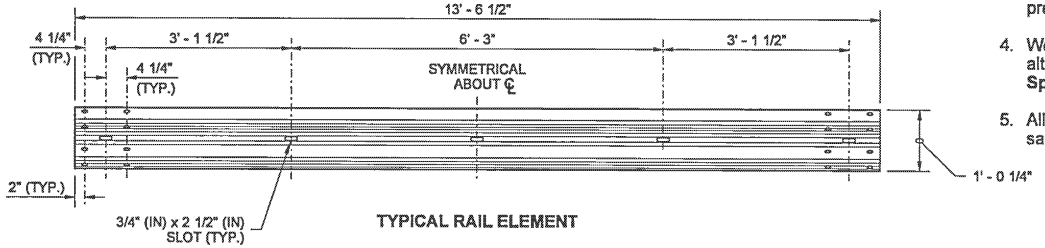

TYPICAL RAIL ELEMENT

NOTES

1. Refer to **Standard Plans C-1** and **C-1b** for additional details not shown on this plan.
2. Extend shoulder pavement to provide a base for the extruded curb. See Contract Plans for exceptions to distances shown.
3. Use a single block or combination of blocks (no more than two (2) to achieve the actual 12" (in) offset. See **Standard Specification 9-16.3(2)**. Wood blocks shall be secured to the posts with anti-rotation nails. If combination blocks are used, the adjacent blocks shall be toenailed with two 16d galvanized nails to prevent block rotation.
4. Wood blocks are shown. Blocks of an approved alternative material may be used. See **Standard Specification 9-16.3(2).**
5. All posts for any standard barrier run shall be of the same type: timber or steel.

SLOPE \ EMBANKMENT TABLE	
SLOPE	W (FT)
2H : 1V OR FLATTER	2.5' MIN.
STEEPER THAN 2H : 1V BUT NOT STEEPER THAN 1H : 1V	4.0' MIN.

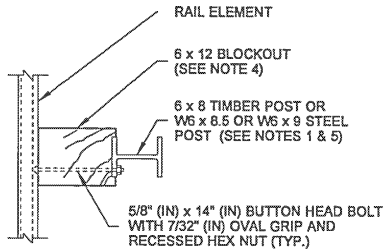

PLAN VIEW

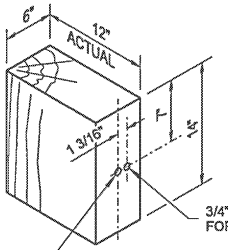

WOOD BLOCK

STEEL POST

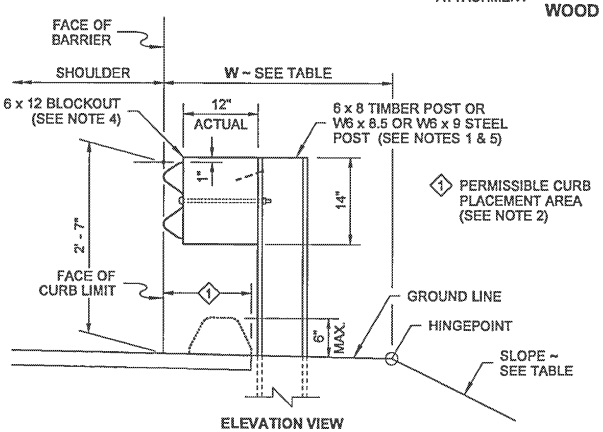

ELEVATION VIEW

TYPICAL SECTION ~ WITH CURB
(6' - 0" LONG POSTS)

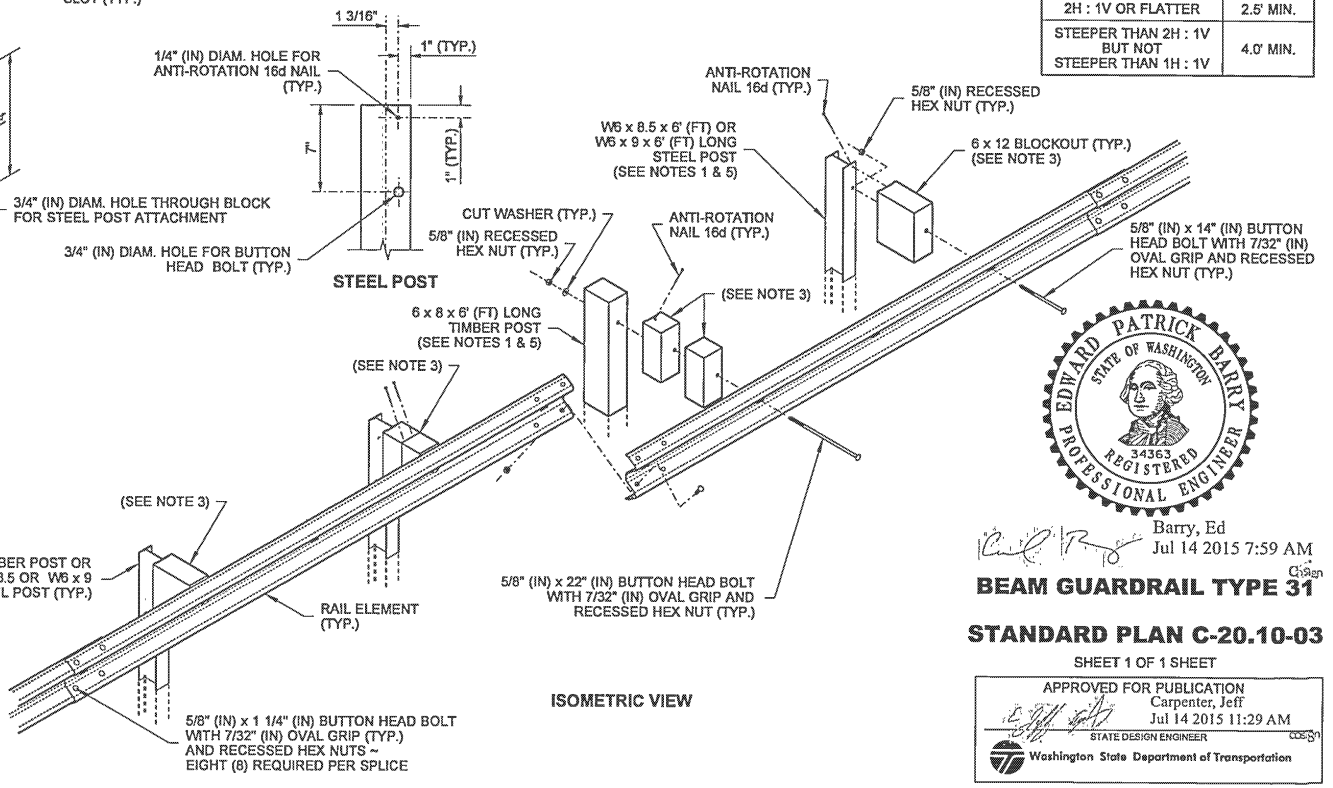

ISOMETRIC VIEW

DRAWN BY: FERN LIDDELL

EDWARD PATRICK BARRY
STATE OF WASHINGTON
34363
REGISTERED
PROFESSIONAL ENGINEER

Barry, Ed
Jul 14 2015 7:59 AM

BEAM GUARDRAIL TYPE 31

STANDARD PLAN C-20.10-03

SHEET 1 OF 1 SHEET

APPROVED FOR PUBLICATION
Carpenter, Jeff
Jul 14 2015 11:29 AM
STATE DESIGN ENGINEER

Washington State Department of Transportation

DRAWN BY: FERN LIDDELL

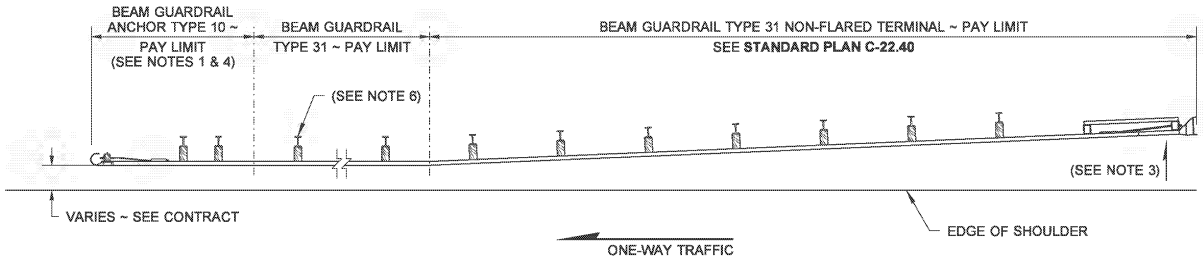

CASE 1-31

NOTES

1. For component details, see **Standard Plan C-23.60**.
2. For terminal type and details, see Contract Plans and applicable drawings.
3. The slope from the edge of the shoulder into the face of the guardrail cannot exceed 10H : 1V when the face of the guardrail is less than 12' - 0" from the edge of the shoulder.
4. For one-way traffic and where a crashworthy terminal is not required, use the Beam Guardrail Anchor Type 10; see **Standard Plan C-23.60**.
5. Where a crashworthy terminal is required, use a Beam Guardrail Type 31 Non-Flared Terminal; see **Standard Plan C-22.40**.
6. Timber or steel post. Steel post shown.

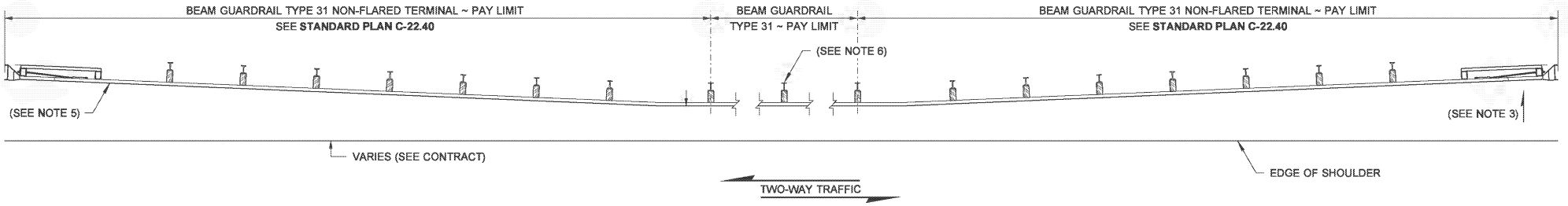

CASE 2-31

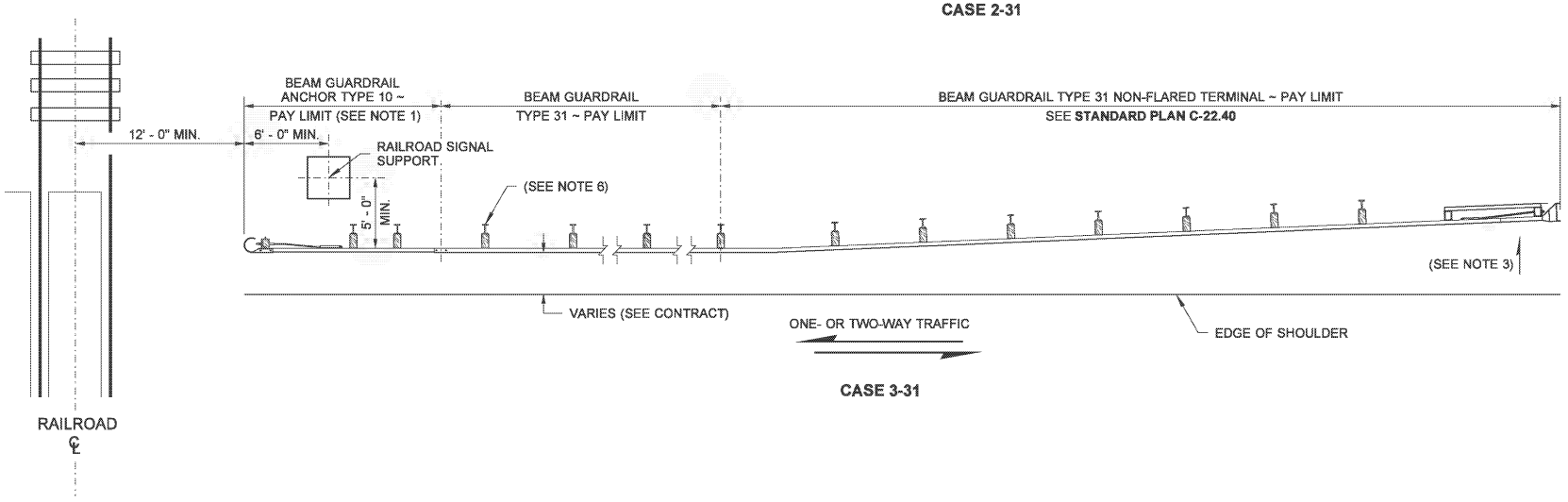

CASE 3-31

EDWARD PATRICK BARRY
STATE OF WASHINGTON
34363
REGISTERED
PROFESSIONAL ENGINEER

Barry, Ed
May 2 2014 1:18 PM

BEAM GUARDRAIL TYPE 31 PLACEMENT (CASES 1-31, 2-31 & 3-31) STANDARD PLAN C-20.14-03

SHEET 1 OF 1 SHEET

APPROVED FOR PUBLICATION
Bakotich, Pasco
Jun 11 2014 1:05 PM
STATE DESIGN ENGINEER
Washington State Department of Transportation

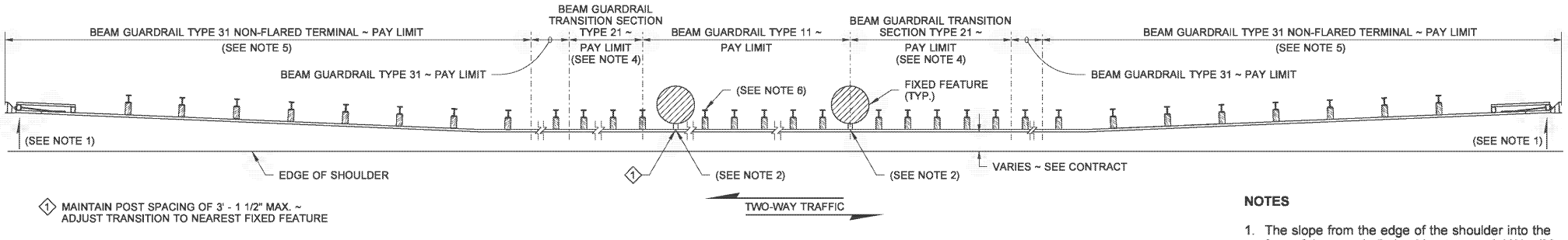

1 MAINTAIN POST SPACING OF 3' - 1 1/2" MAX. ~ ADJUST TRANSITION TO NEAREST FIXED FEATURE

CASE 11A-31

DRAWN BY: FERN LIDDELL

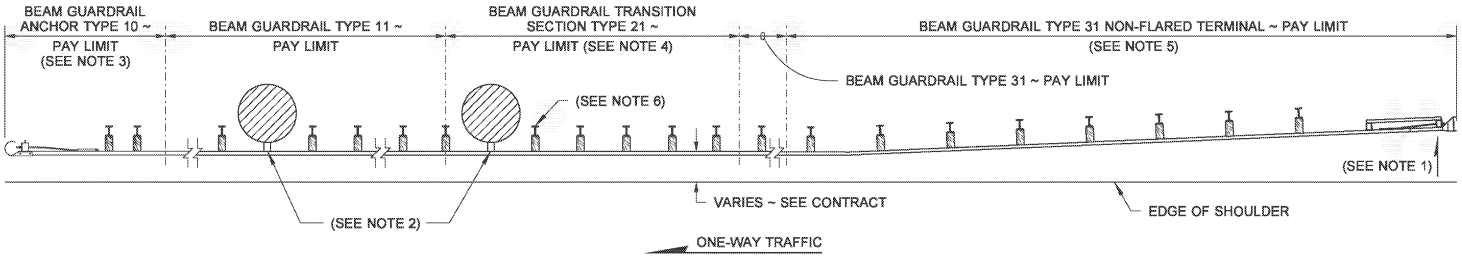

CASE 11B-31

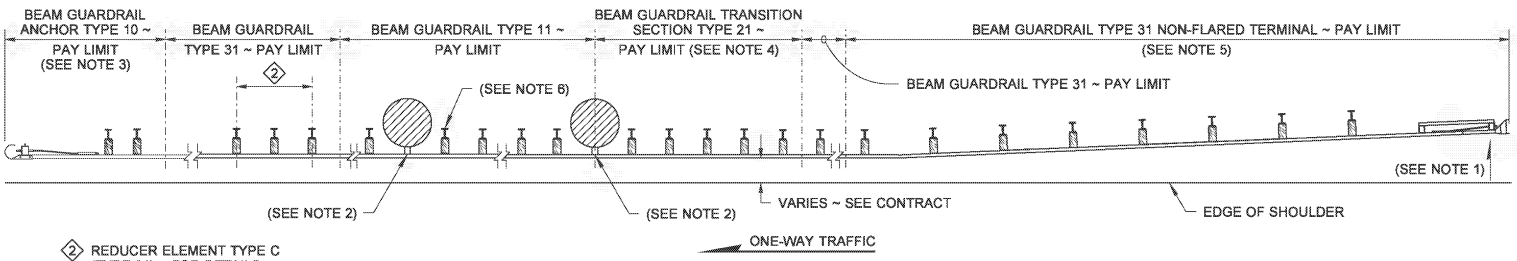

2 REDUCER ELEMENT TYPE C (TYPE 31) ~ FOR DETAILS, SEE **STD. PLAN C-25.20**

CASE 11C-31

NOTES

1. The slope from the edge of the shoulder into the face of the guardrail should not exceed 10H : 1V when the guardrail is within 12' - 0" from the edge of the shoulder.
2. Attach the standard wood block to the rail using two 5/8" (in) × 4" (in) lag bolts.
3. Beam Guardrail Anchor Type 10 (W-Beam) or Type 10 (Thrie Beam) required. For details, see **Standard Plan C-23.60**.
4. For details, see **Standard Plan C-25.20**.
5. For details, see **Standard Plan C-22.40**.
6. Timber or steel post. Steel post shown.

EDWARD PATRICK BARRY
STATE OF WASHINGTON
34363
REGISTERED
PROFESSIONAL ENGINEER

Barry, Ed
May 2 2014 2:09 PM

BEAM GUARDRAIL TYPE 31 PLACEMENT (CASES 11A-31, 11B-31 & 11C-31)

STANDARD PLAN C-20.19-02

SHEET 1 OF 1 SHEET

APPROVED FOR PUBLICATION
Bakotich, Pasco
Jun 11 2014 1:07 PM
STATE DESIGN ENGINEER
Washington State Department of Transportation

DRAWN BY: FERN LIDDELL

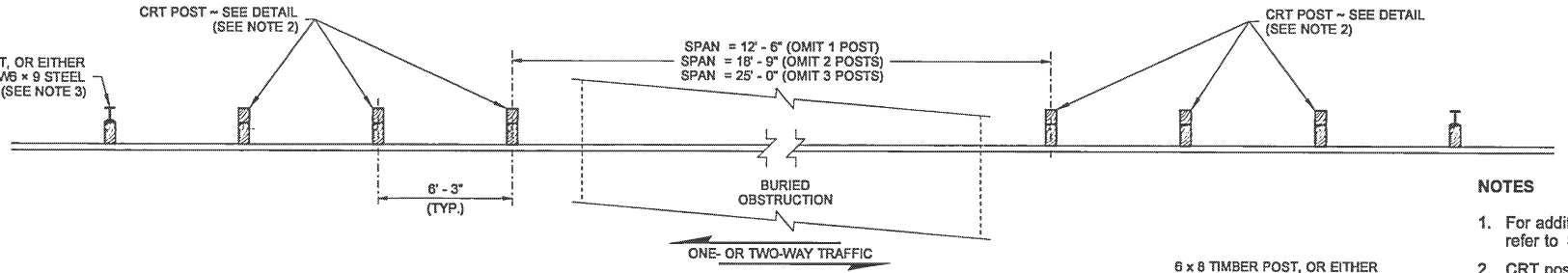

PLAN VIEW

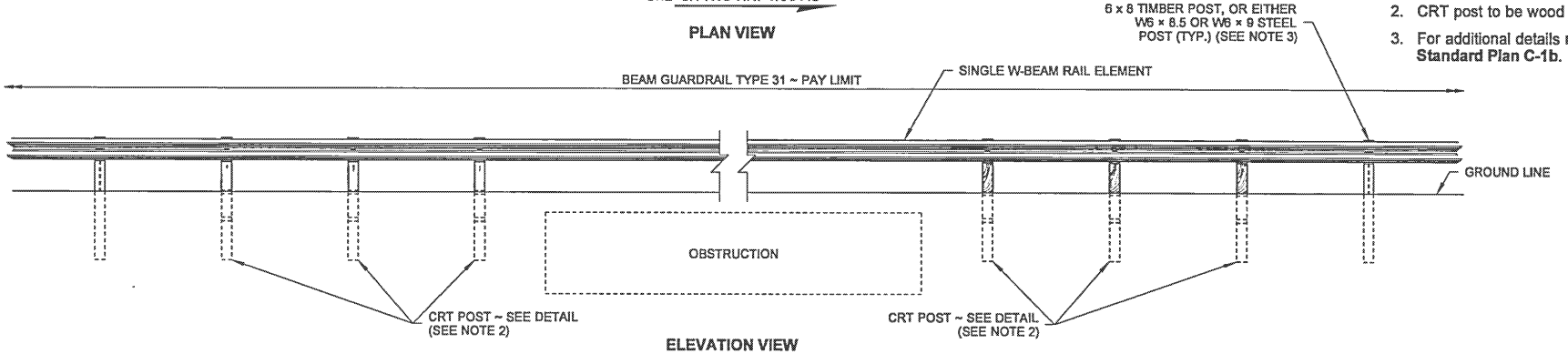

ELEVATION VIEW

NOTES

1. For additional details not shown on this plan, refer to **Standard Plan C-20.10.**
2. CRT post to be wood only.
3. For additional details not shown, see **Standard Plan C-1b.**

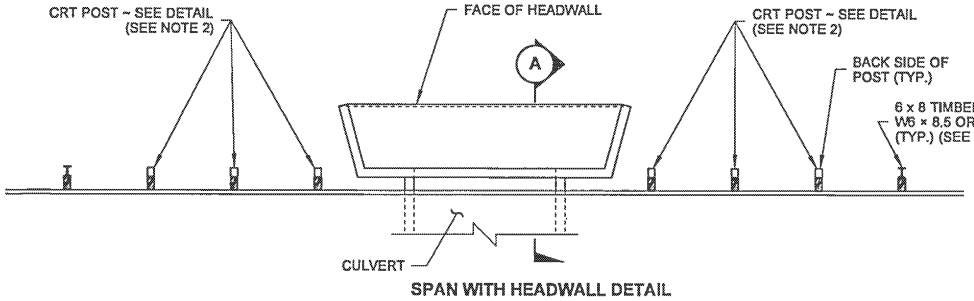

SPAN WITH HEADWALL DETAIL

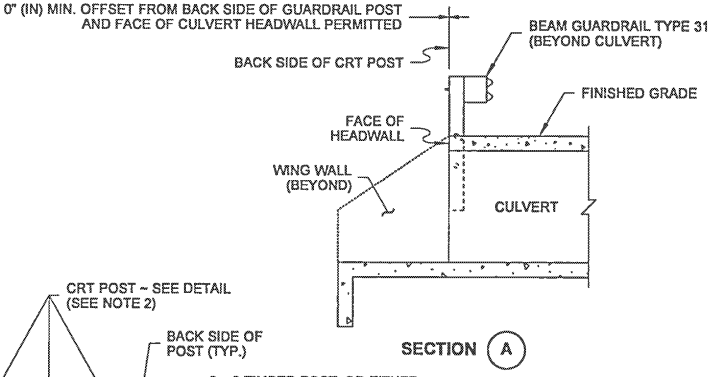

SECTION (A)

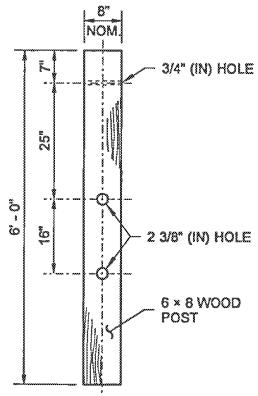

CONTROLLED RELEASING TERMINAL (CRT) POST DETAIL

EDWARD PATRICK BARRY
STATE OF WASHINGTON
34363
REGISTERED
PROFESSIONAL ENGINEER

Barry, Ed
Jul 14 2015 7:36 AM

BEAM GUARDRAIL TYPE 31 PLACEMENT 12' - 6", 18' - 9", OR 25' - 0" SPAN

STANDARD PLAN C-20.40-05

SHEET 1 OF 1 SHEET

APPROVED FOR PUBLICATION
Carpenter, Jeff
Jul 14 2015 11:28 AM
STATE DESIGN ENGINEER
Washington State Department of Transportation

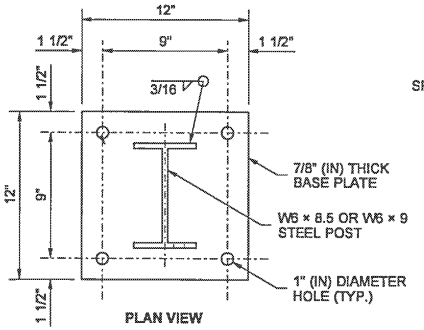

PLAN VIEW

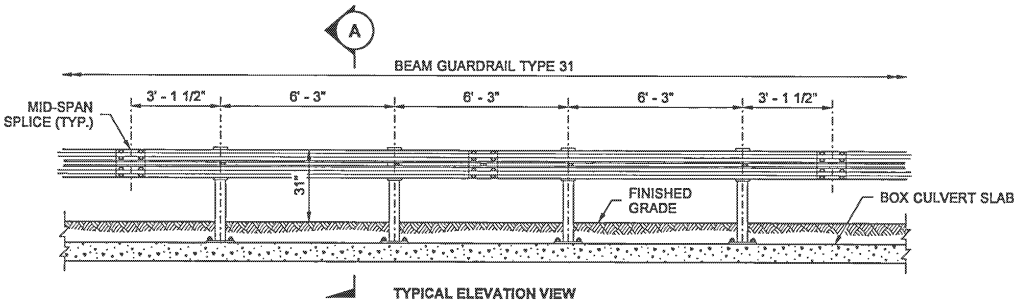

TYPICAL ELEVATION VIEW

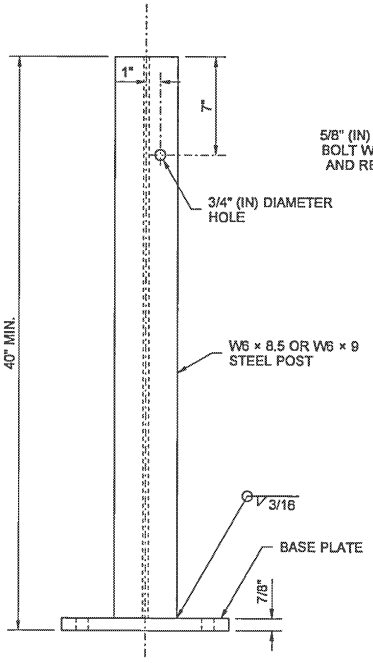

BOX CULVERT POST
ELEVATION VIEW

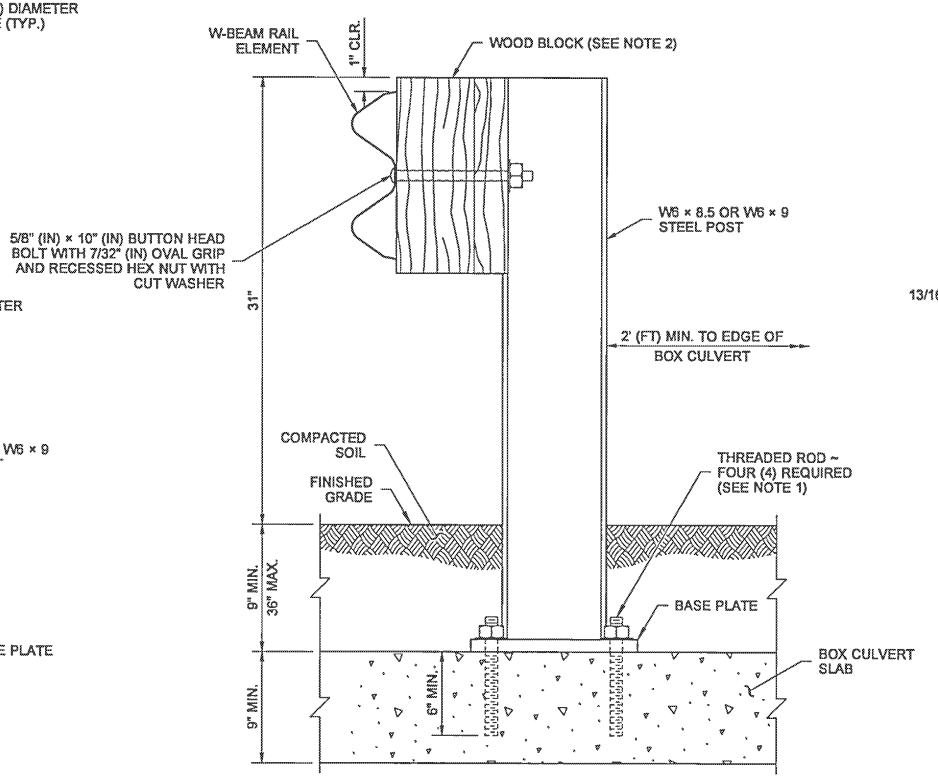

BOX CULVERT GUARDRAIL
STEEL POST TYPE 31

SECTION (A)

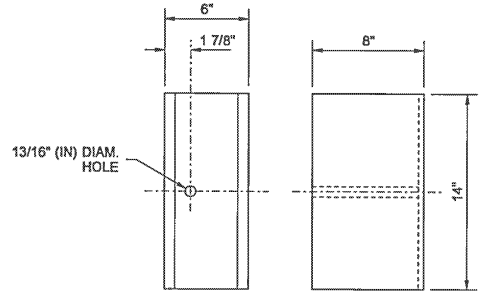

ELEVATION VIEW SIDE VIEW

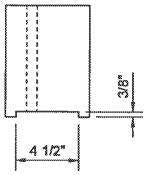

PLAN VIEW

WOOD BLOCKOUT
(SEE NOTE 2)

NOTES

1. Attach Guardrail Post to Box Culvert with 7/8" (in) diameter high-strength threaded rods 8 1/2" (in) in length with resin-bonded anchors.
2. Wood blocks are shown. Blocks of an approved alternative may be used. See **Standard Specification 9-16.3(2)**.

DRAWN BY: FERN LIDDELL

EDWARD PATRICK BARRY
STATE OF WASHINGTON
34363
REGISTERED
PROFESSIONAL ENGINEER

Barry, Ed
Jul 14 2015 7:41 AM

BOX CULVERT GUARDRAIL STEEL POST ~ TYPE 31

STANDARD PLAN C-20.41-01

SHEET 1 OF 1 SHEET

APPROVED FOR PUBLICATION
Carpenter, Jeff
Jul 14 2015 11:28 AM
STATE DESIGN ENGINEER

Washington State Department of Transportation

This page left blank intentionally.

DRAWN BY: FERN LIDDELL

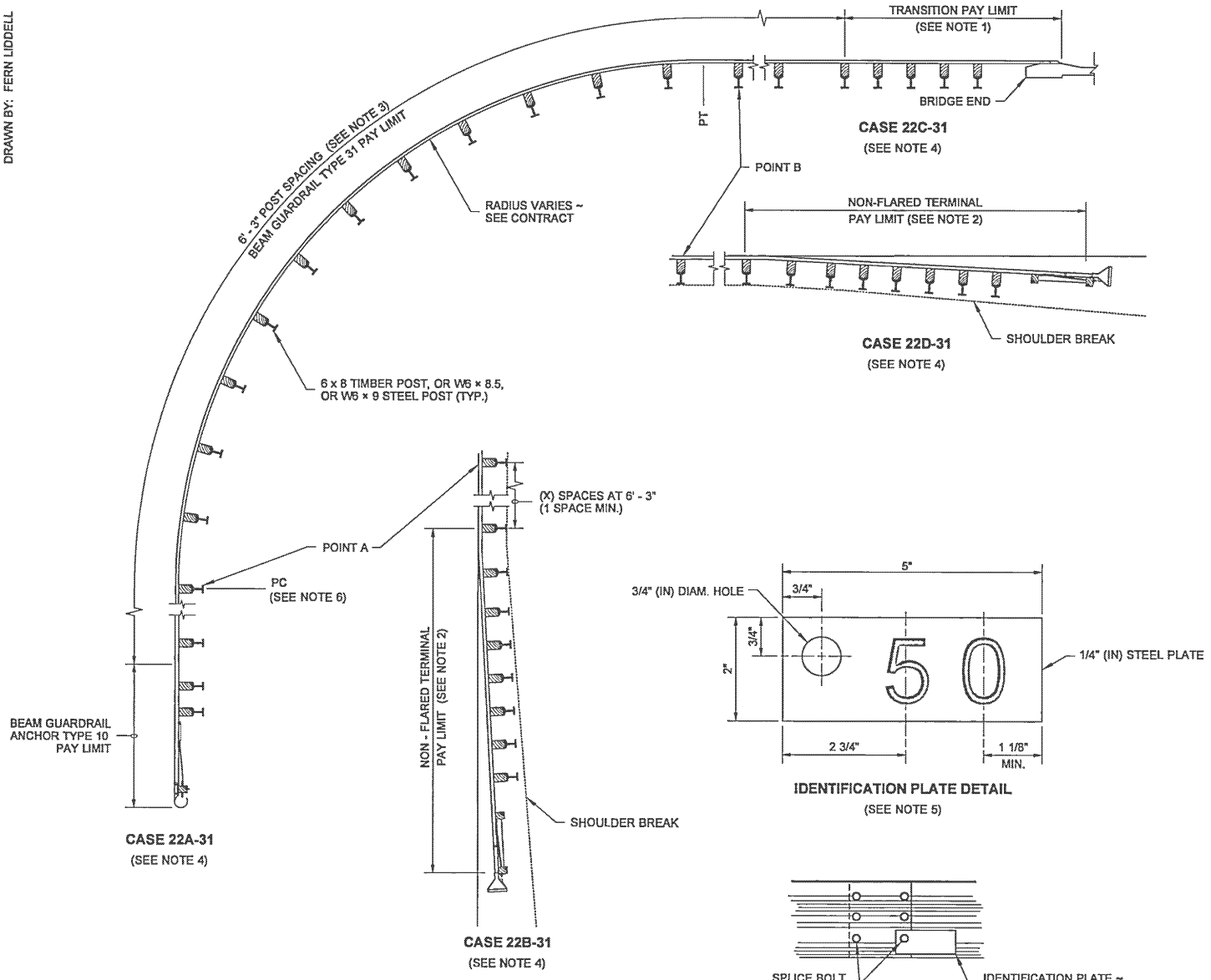

IDENTIFICATION PLATE DETAIL
(SEE NOTE 5)

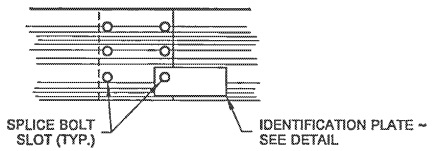

IDENTIFICATION PLATE MOUNTING DETAIL
(SEE NOTE 6)

NOTES

1. See Contract for transition and connection type.
2. For additional installation requirements for Non-Flared Terminal placement, see **Standard Plan C-22.40.**
3. Guardrail installation shall be Beam Guardrail Type 31 with standard post and block. See **Standard Plan C-20.10** for additional details.
4. The first letter of case designation indicates the end treatment on the side road. The second letter indicates the end treatment on the main road. For instance, a terminal on a side road and a bridge connection on the main road would be Case 22BC-31.
5. The radius dimension shall be etched into the plate as shown in the example on the Identification Plate Detail. Numerals shall be 1 1/2" (in) high minimum, and 3/4" (in) wide maximum. Plate shall be galvanized after etching and the letter shall remain permanently legible.
6. The guardrail Identification Plate shall be mounted at the lower splice bolt on the back side of the rail element at the PC of the guardrail radius.

EDWARD PATRICK BARRY
STATE OF WASHINGTON
34363
REGISTERED
PROFESSIONAL ENGINEER

Barry, Ed
Jul 14 2015 8:00 AM

GUARDRAIL PLACEMENT STRONG POST ~ TYPE 31 INTERSECTION DESIGN STANDARD PLAN C-20.42-05

SHEET 1 OF 1 SHEET

APPROVED FOR PUBLICATION
Carpenter, Jeff
Jul 14 2015 11:27 AM
STATE DESIGN ENGINEER

Washington State Department of Transportation

DRAWN BY: FERN LIDDELL

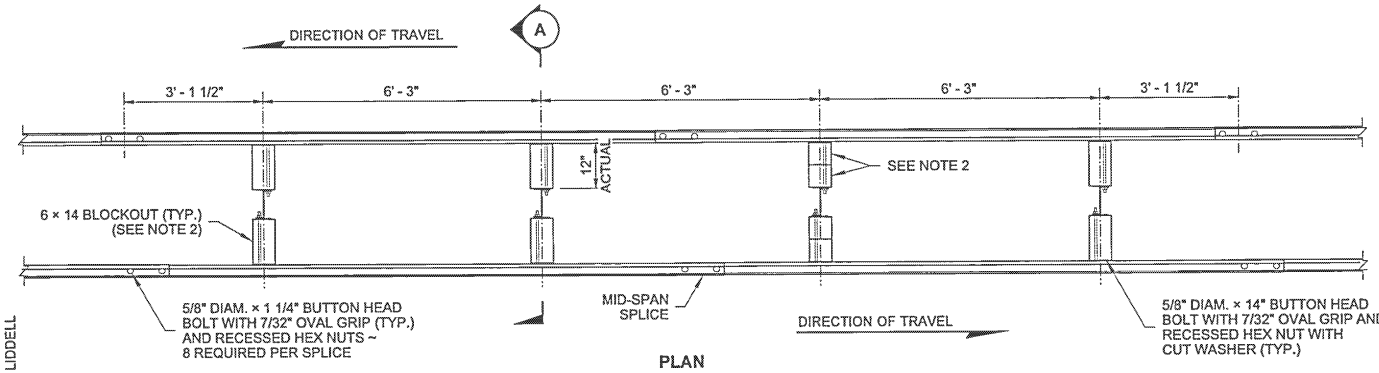

PLAN

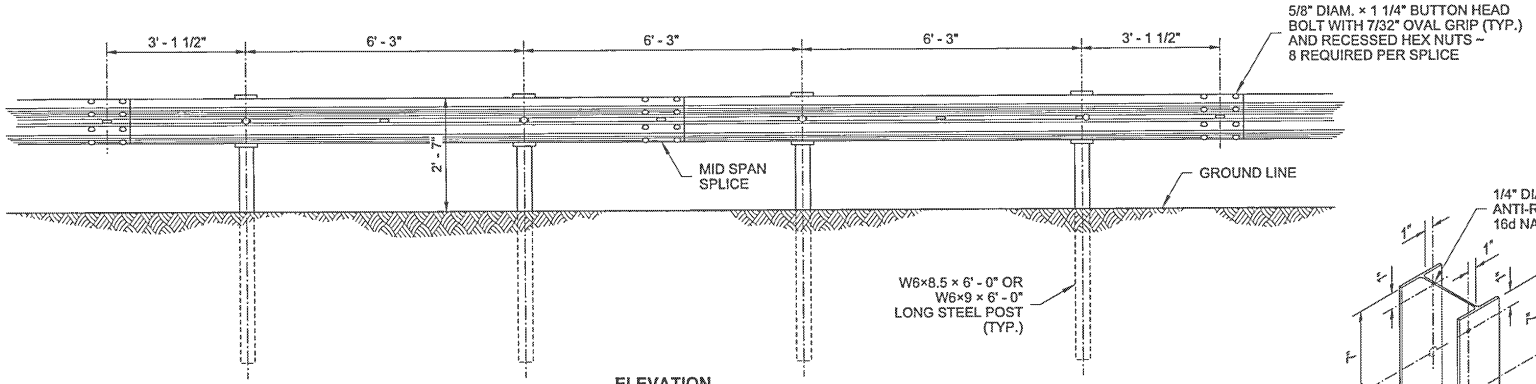

ELEVATION

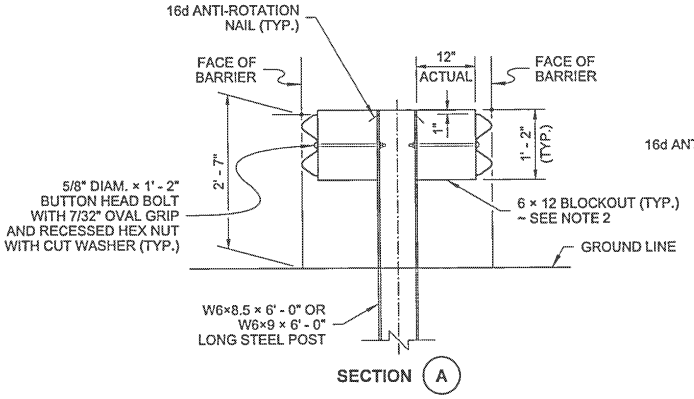

SECTION A

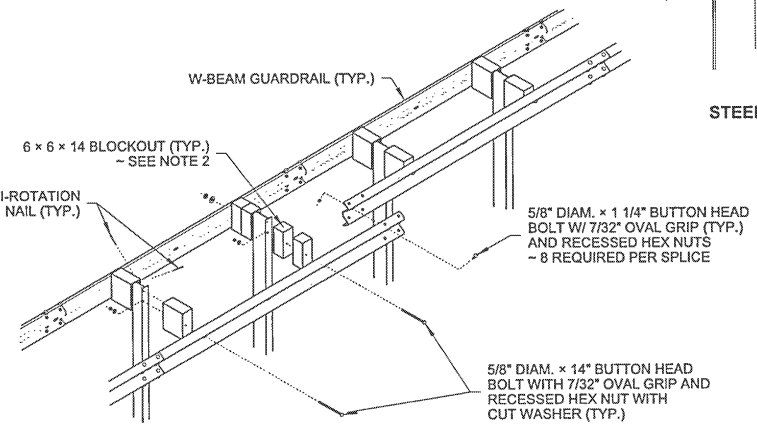

ISOMETRIC

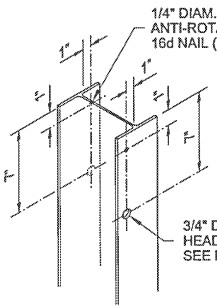

STEEL POST

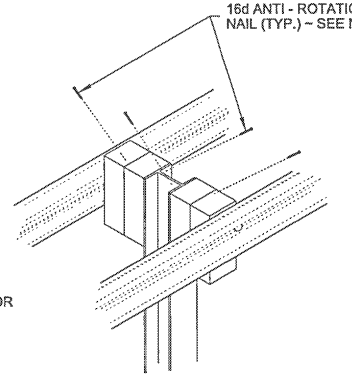

ANTI-ROTATION NAIL DETAIL

NOTES

1. Beam Guardrail post spacing shall be 6' - 3" on centers.
2. Use a single or combination of blocks to achieve the actual 12" offset. See **Standard Specification 9-16.3(2).** Wood blocks shall be toe-nailed to post (and blocks, if block combinations are used) with 16d galvanized nails to prevent block rotation.
3. Attach blockouts to steel posts using bolt holes on approaching traffic side of post web.
4. For details not shown, see **Standard Plan C-20.10.**
5. Wood blocks shown. Blocks of alternate material may be used. See **Standard Specification 9-16.3(2).**

7.2.2012

BEAM GUARDRAIL TYPE 31 DS (DOUBLE SIDED) (W-BEAM)

STANDARD PLAN C-20.45-01

SHEET 1 OF 1 SHEET

APPROVED FOR PUBLICATION

STATE DESIGN ENGINEER — DATE 7/2/12

Washington State Department of Transportation

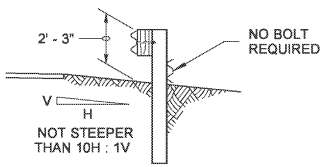

SECTION A

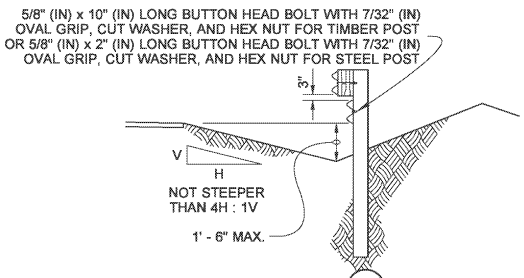

SECTION B

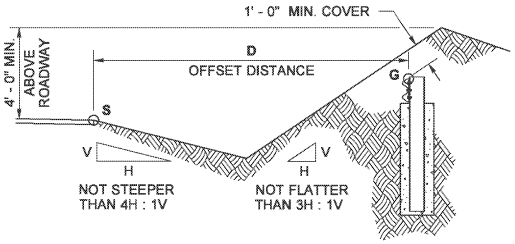

SECTION C
(SEE NOTE 3)

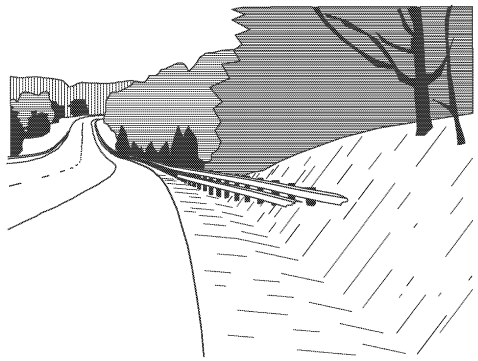

PERSPECTIVE

DRAWN BY: LISA CYFORD

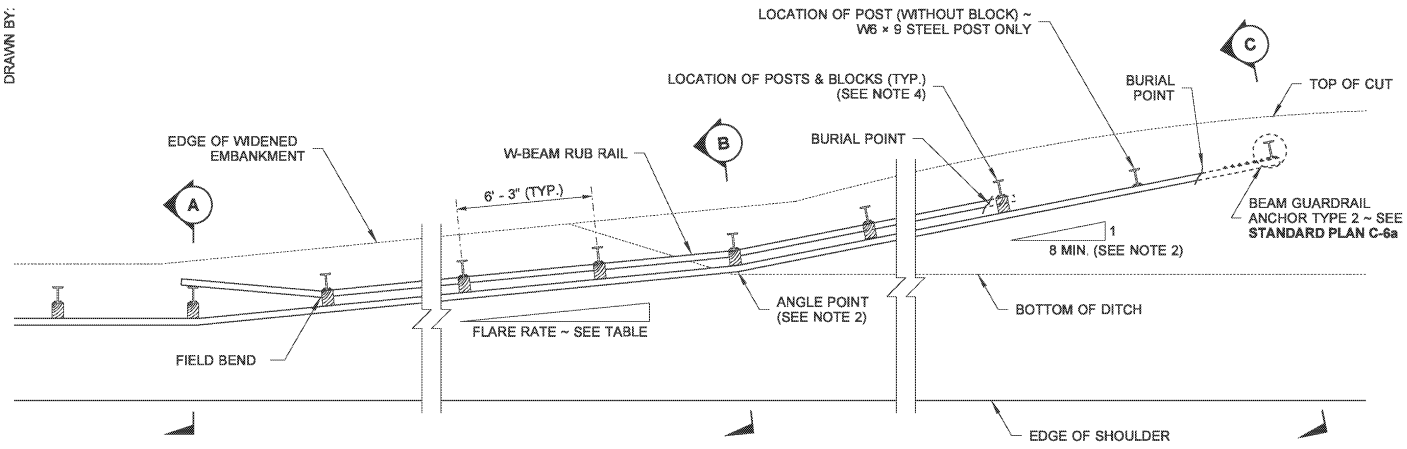

PLAN

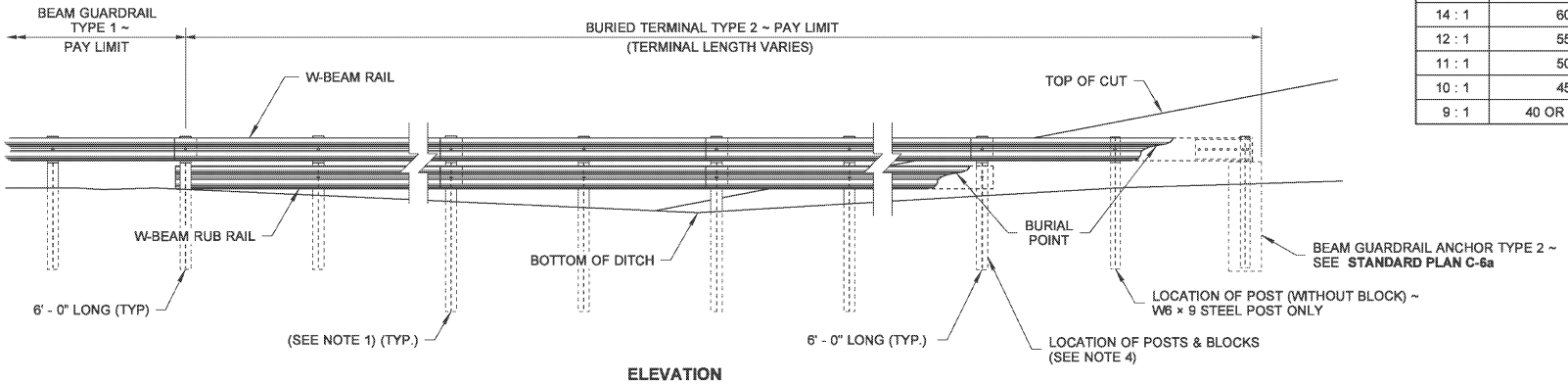

ELEVATION
(PROFILE ALONG RAIL)

NOTES

1. Posts installed on shoulder slopes steeper than 10H : 1V shall be 8' (ft) long.
2. The flare rate of the guardrail may be increased after crossing the ditch bottom to shorten the length of the terminal.
3. Determine the height of the W-Beam at the Anchor (**G**) by first calculating the perpendicular offset distance (**D**) from the edge of shoulder (**S**) to the Anchor (on station). Multiply that distance by 0.1, then subtract the product from the elevation of the same point (**S**) on the edge of shoulder used to obtain the offset distance (at the same station). Add Beam Guardrail design height (27" (in)) to that remainder for a sum that equals the elevation of the top of the W-Beam at the Anchor.

   Refer to SECTION "C":

   $$\text{Elevation}_{G} = (\text{Elevation}_{S} - D\ (0.1)\ ) + 27$$

4. Timber or steel post. Steel post shown.

FLARE RATE TABLE	
RATE (FT)	POSTED SPEED (MPH)
15 : 1	70
14 : 1	60
12 : 1	55
11 : 1	50
10 : 1	45
9 : 1	40 OR LESS

Barry, Ed
May 2 2014 2:25 PM

BEAM GUARDRAIL TYPE 1
BURIED TERMINAL TYPE 2

STANDARD PLAN C-22.14-03

SHEET 1 OF 1 SHEET

APPROVED FOR PUBLICATION
Bakotich, Pasco
Jun 11 2014 1:09 PM
STATE DESIGN ENGINEER
Washington State Department of Transportation

DRAWN BY: FERN LIDDELL

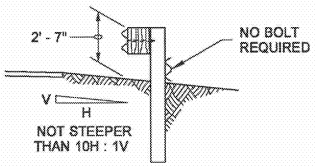

SECTION (A)

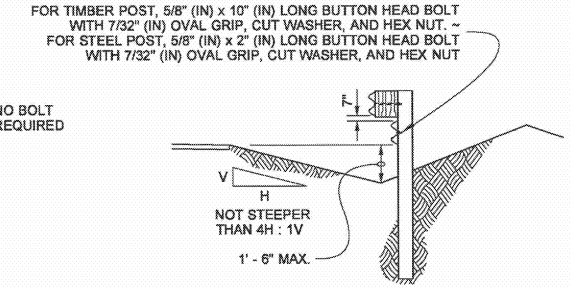

SECTION (B)

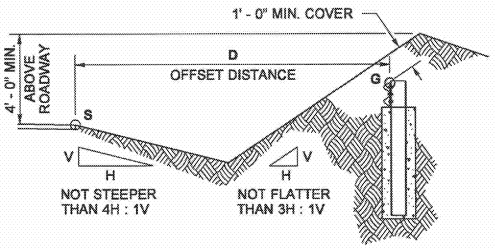

SECTION (C)

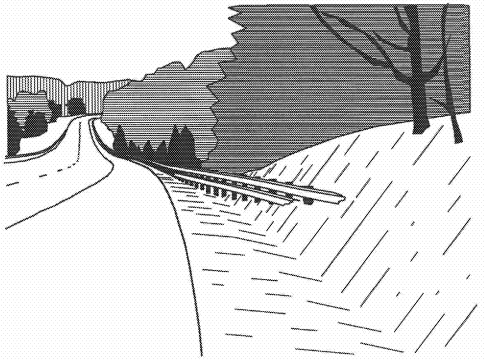

PERSPECTIVE

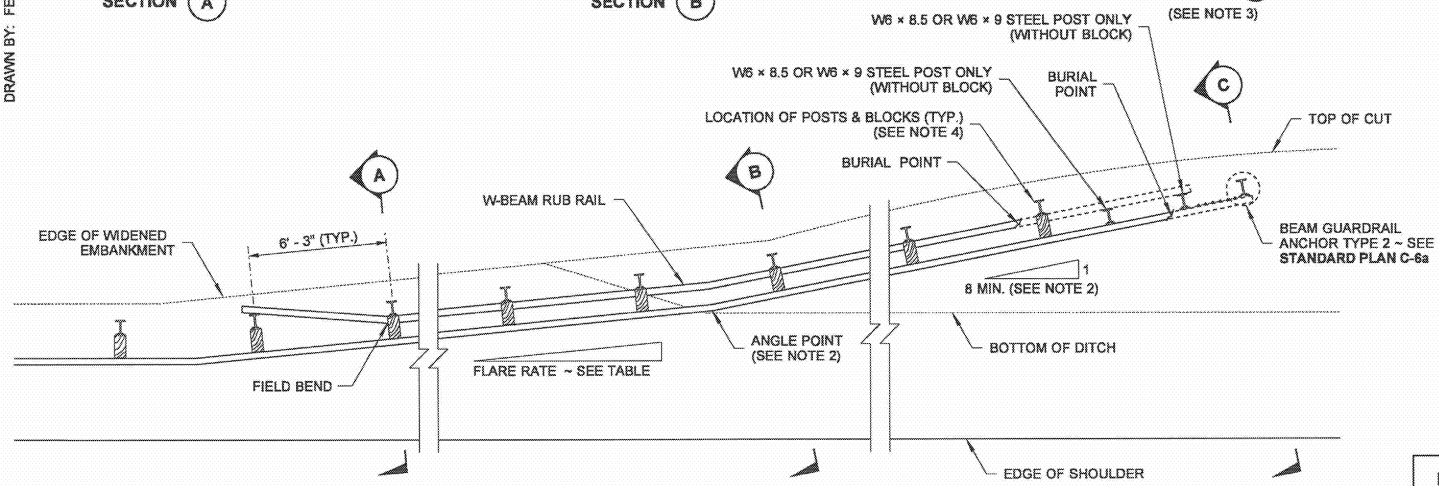

PLAN

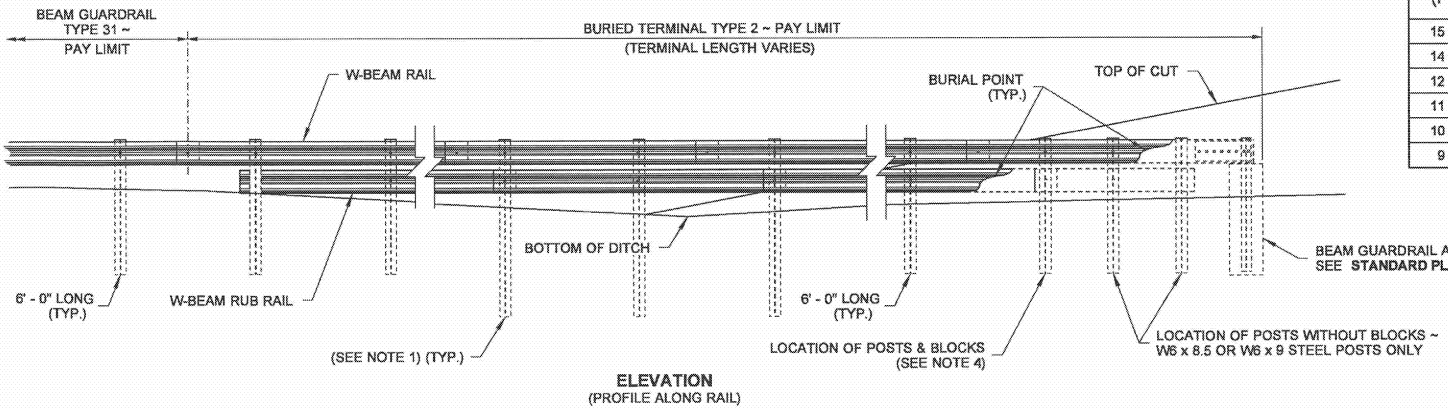

ELEVATION
(PROFILE ALONG RAIL)

NOTES

1. Posts installed on shoulder slopes steeper than 10H : 1V shall be 8' (ft) long.
2. The flare rate of the guardrail may be increased after crossing the ditch bottom to shorten the length of the terminal.
3. Determine the height of the W-Beam at the Anchor (**G**) by first calculating the perpendicular offset distance (**D**) from the edge of shoulder (**S**) to the Anchor (on station). Multiply that distance by 0.1, then subtract the product from the elevation of the same point (**S**) on the edge of shoulder used to obtain the offset distance (at the same station). Add Beam Guardrail design height (31" (in)) to that remainder for a sum that equals the elevation of the top of the W-Beam at the Anchor.

   Refer to SECTION "C":

   $$\text{Elevation}_G = (\text{Elevation}_S - D(0.1)) + 31$$

4. Timber or steel post. Steel post shown.

FLARE RATE TABLE	
RATE (FT)	POSTED SPEED (MPH)
15 : 1	70
14 : 1	60
12 : 1	55
11 : 1	50
10 : 1	45
9 : 1	40 OR LESS

EDWARD PATRICK BARRY
STATE OF WASHINGTON
34363
REGISTERED
PROFESSIONAL ENGINEER

Barry, Ed
Jul 14 2015 7:54 AM

BEAM GUARDRAIL TYPE 31 ~ BURIED TERMINAL TYPE 2

STANDARD PLAN C-22.16-05

SHEET 1 OF 1 SHEET

APPROVED FOR PUBLICATION
Carpenter, Jeff
Jul 14 2015 11:27 AM
STATE DESIGN ENGINEER

Washington State Department of Transportation

DRAWN BY: COLBY FLETCHER

NOTES

1. This terminal is FHWA accepted at Test Level Three (TL-3) and may be used for all posted speeds.
2. An SKT-SP-MGS (TL-3) as manufactured by Road Systems, Inc. shall be installed according to manufacturer's recommendations.
3. A reflectorized object marker shall be installed according to manufacturer's recommendations.
4. When snow load post washers and snow load rail washers are required by the Contract, the snow load rail washers shall not be installed within the terminal limits.
5. Terminal shall be installed at a widening, ensuring the end piece is entirely off the shoulder. While this terminal does not require an offset at the end, a flare is recommended. A maximum flare of 25 : 1 or flatter over the length of the terminal is allowed for the SKT-SP-MGS (TL-3), with a maximum offset of 24" (in) over 50' (ft).
6. For terminal details, see WSDOT approved manufacturer's drawings.

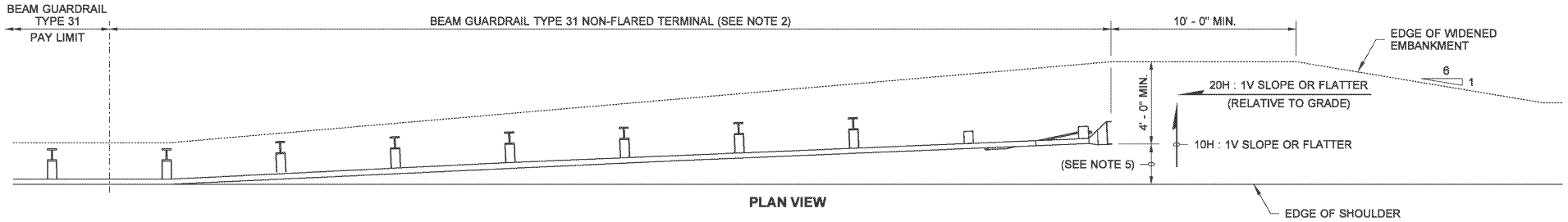

PLAN VIEW

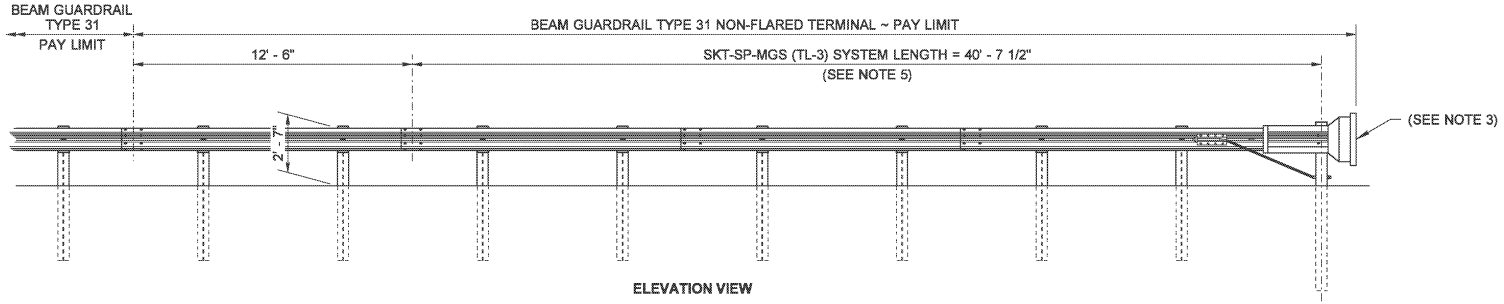

ELEVATION VIEW

EDWARD PATRICK BARRY
STATE OF WASHINGTON
34363
REGISTERED
PROFESSIONAL ENGINEER

Barry, Ed
Oct 23 2014 11:34 AM

BEAM GUARDRAIL TYPE 31 NON-FLARED TERMINAL STEEL POSTS (ALL POSTED SPEEDS) STANDARD PLAN C-22.40-04

SHEET 1 OF 1 SHEET

APPROVED FOR PUBLICATION
Bakotich, Pasco
Oct 23 2014 12:10 PM
STATE DESIGN ENGINEER
Washington State Department of Transportation

DRAWN BY: COLBY FLETCHER

NOTES

1. An SKT-MGS (TL-3) as manufactured by Road Systems, Inc. shall be installed according to the manufacturer's recommendations.
2. A reflectorized object marker shall be installed according to the manufacturer's recommendations.
3. When snow load post washers and snow load rail washers are required by the Contract, the snow load rail washers shall not be installed within the terminal limits.
4. Terminal shall be installed at a widening, ensuring the end piece is entirely off the shoulder. While this terminal does not require an offset at the end, a flare is recommended. A maximum flare rate of 25 : 1 or flatter over the length of the terminal is allowed for the SKT-MGS (TL-3).
5. This terminal is FHWA accepted at Test Level Three (TL-3) and may be used for all posted speeds.
6. For terminal details, see WSDOT approved manufacturer's drawings.

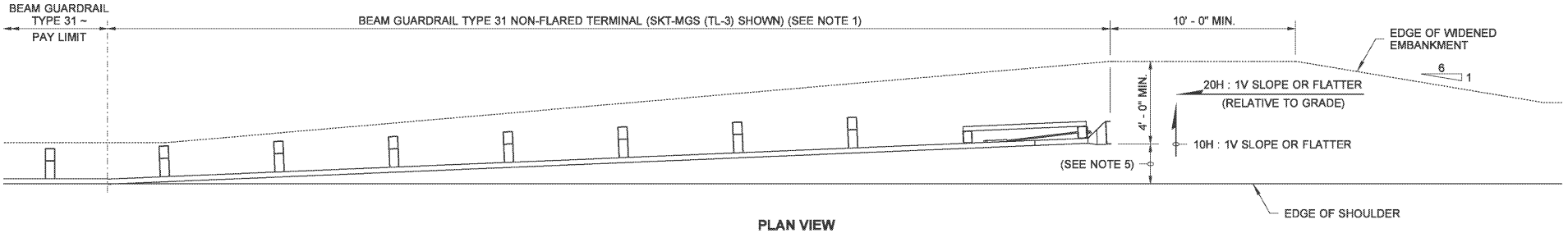

PLAN VIEW

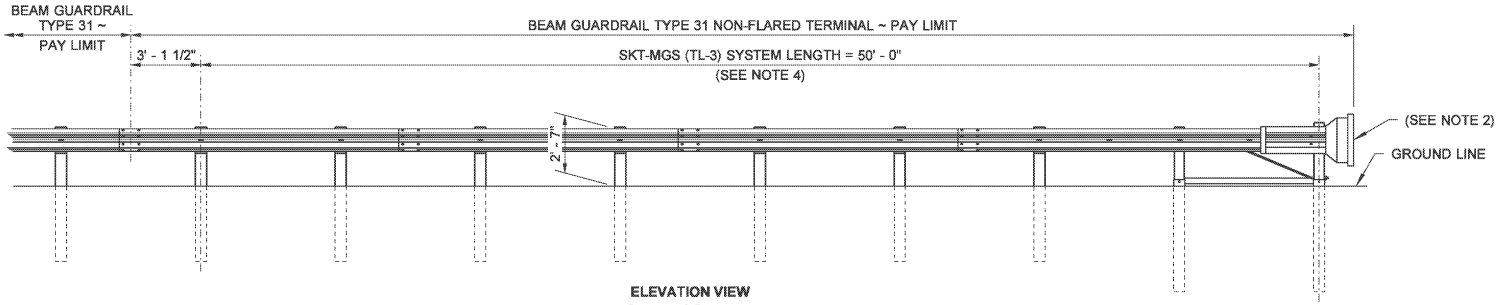

ELEVATION VIEW
SKT-MGS (TL-3)

EDWARD PATRICK BARRY
STATE OF WASHINGTON
34363
REGISTERED
PROFESSIONAL ENGINEER

Barry, Ed
Oct 23 2014 11:44 AM

BEAM GUARDRAIL TYPE 31 NON-FLARED TERMINAL WOOD POSTS (ALL POSTED SPEEDS) STANDARD PLAN C-22.41-01

SHEET 1 OF 1 SHEET

APPROVED FOR PUBLICATION
Bakotich, Pasco
Oct 23 2014 12:10 PM
STATE DESIGN ENGINEER
Washington State Department of Transportation

DRAWN BY: COLBY FLETCHER

NOTES

1. This terminal is FHWA accepted at Test Level Two (TL-2) and may be used in applications with speeds of 40 MPH or less.
2. An SKT-SP-MGS (TL-2) as manufactured by Road Systems Inc. shall be installed according to manufacturer's recommendations.
3. A reflectorized object marker shall be installed according to manufacturer's recommendations.
4. When snow load post washers and snow load rail washers are required by the Contract, the snow load rail washers shall not be installed within the terminal limits.
5. Terminal shall be installed at a widening, ensuring the end piece is entirely off the shoulder. While this terminal does not require an offset at the end, a flare is recommended. A maximum flare of 25 : 1 or flatter over the length of the terminal is allowed for the SKT-SP-MGS (TL-2), with a maximum offset of 24" (in) over 50' (ft).
6. For terminal details, see WSDOT-approved manufacturer's drawings.

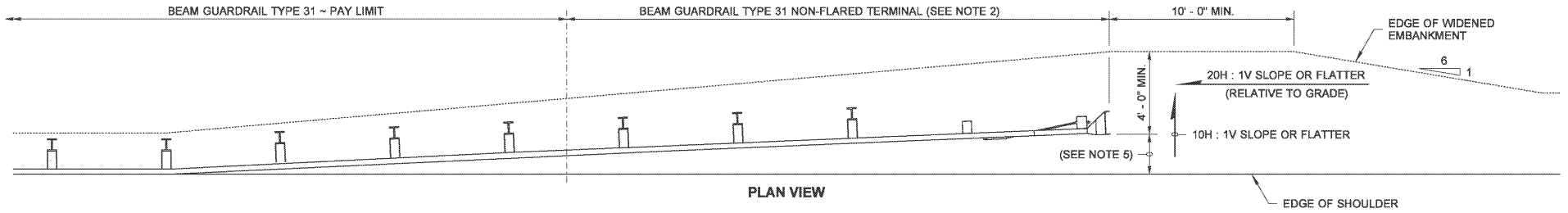

PLAN VIEW

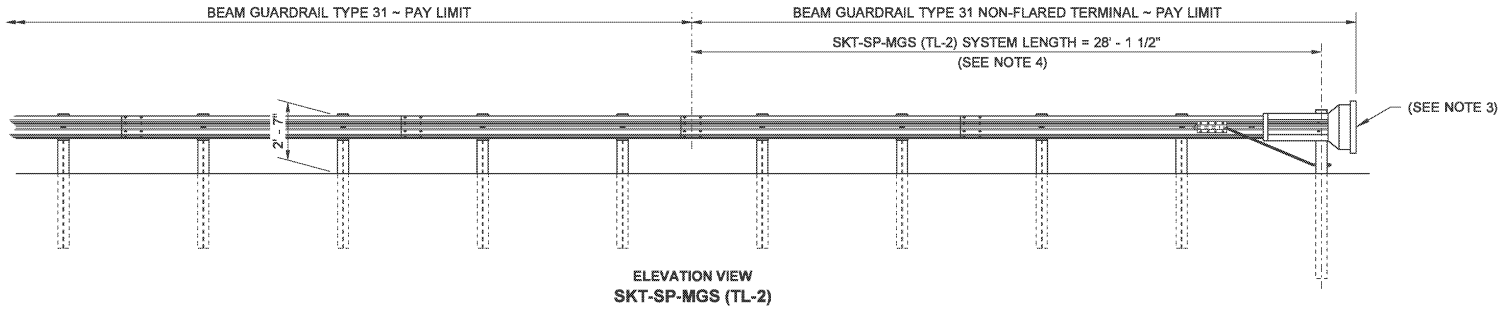

ELEVATION VIEW
SKT-SP-MGS (TL-2)

EDWARD PATRICK BARRY
STATE OF WASHINGTON
34363
REGISTERED
PROFESSIONAL ENGINEER

Barry, Ed
Oct 23 2014 11:46 AM

BEAM GUARDRAIL TYPE 31 NON-FLARED TERMINAL STEEL POSTS (POSTED SPEED ~ 40 MPH AND BELOW)

STANDARD PLAN C-22.45-01

SHEET 1 OF 1 SHEET

APPROVED FOR PUBLICATION
Bakotich, Pasco
Oct 23 2014 12:10 PM
STATE DESIGN ENGINEER
Washington State Department of Transportation

This page left blank intentionally.

DRAWN BY: FERN LIDDELL

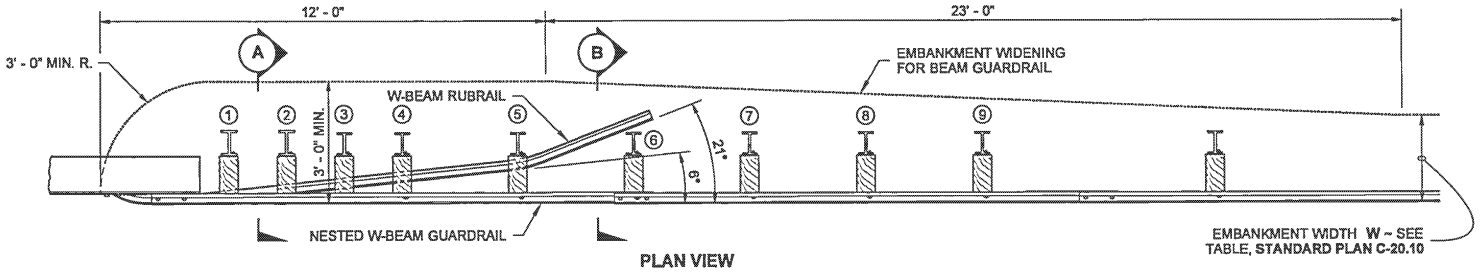

PLAN VIEW

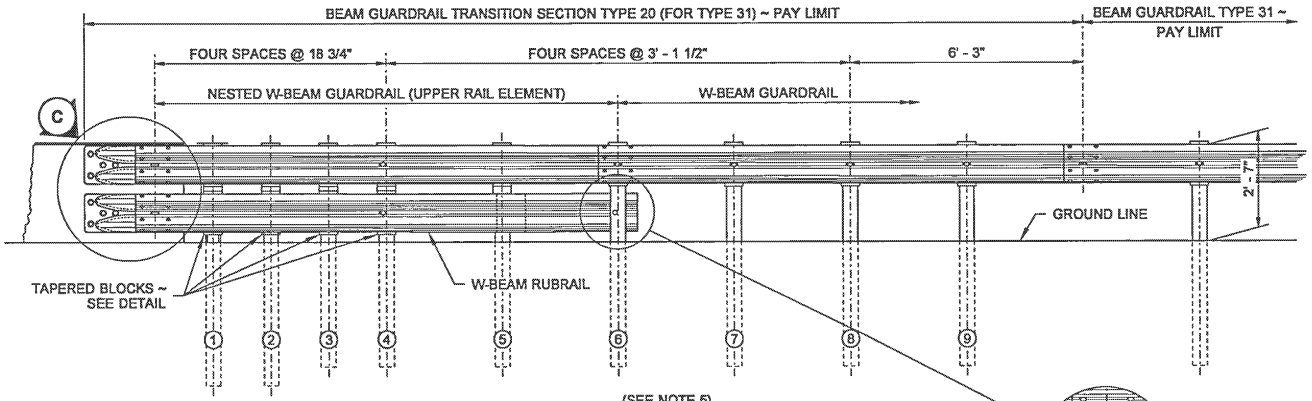

(SEE NOTE 5)

ELEVATION VIEW

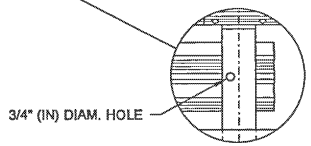

BOLT LOCATION DETAIL FOR STEEL POST

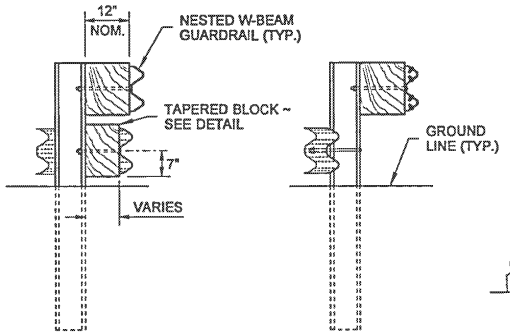

(OR)

SECTION A (STEEL POST)

SECTION B (STEEL POST)

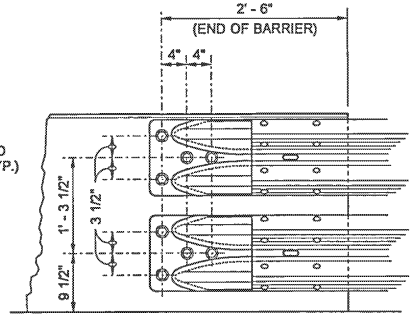

DETAIL C

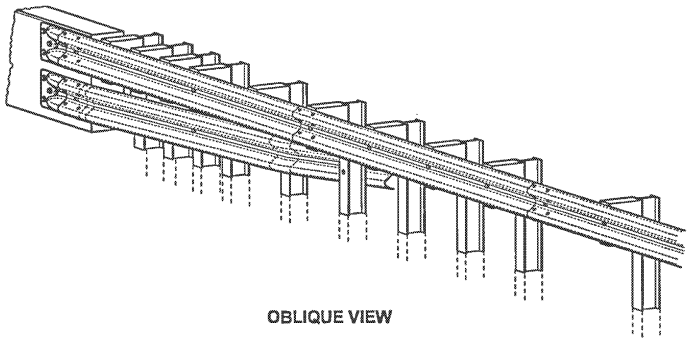

OBLIQUE VIEW

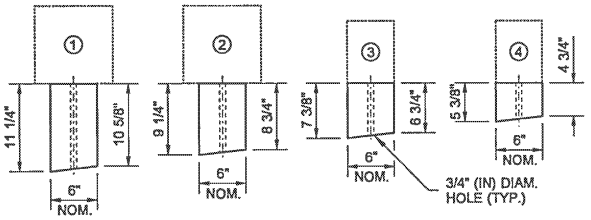

PLAN VIEW

TAPERED BLOCKS FOR RUBRAIL DETAIL

14" (IN) LONG (TYP.)

NOTES

1. For additional details not shown in this plan, refer to **Standard Plan C-20.10.**
2. This guardrail transition is for connection to a vertical concrete shape or single-slope barrier and cannot be connected directly to a concrete safety shape.
3. Do not bolt nested W-Beam or rubrail W-Beam to posts and blocks on posts 1, 2, 3, and 5. Bolt tapered blocks directly to posts.
4. The rubrail W-Beam can be shop bent to facilitate installation.
5. Posts 1, 2, 3, 4, and 6 require an additional hole to attach tapered blocks and/or rubrail.
6. Posts 1 and 2 are 10 x 10 timber posts, or W6 × 15 steel posts: 7' - 6" long. Posts 3 through 9 are 6 x 8 timber posts, or either W6 × 8.5 or W6 × 9 steel posts: 6' - 0" long.
7. Wood blocks shown. Blocks of alternate material may be used. See **Standard Specificdation 9-16.3(2).**

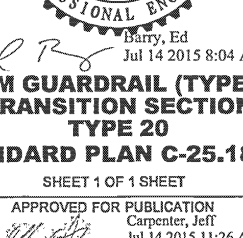

Barry, Ed
Jul 14 2015 8:04 AM

BEAM GUARDRAIL (TYPE 31) TRANSITION SECTION TYPE 20

STANDARD PLAN C-25.18-05

SHEET 1 OF 1 SHEET

APPROVED FOR PUBLICATION
Carpenter, Jeff
Jul 14 2015 11:26 AM
STATE DESIGN ENGINEER

Washington State Department of Transportation

DRAWN BY: FERN LIDDELL

NOTES

1. This guardrail transition is for connection to a vertical concrete shape, a single slope, or a safety-shape barrier. The toe of the single slope and the safety-shape barrier shall be tapered or the barrier blocked out so that the toe of the barrier does not project past the face of the approach guardrail.
2. See **Standard Plan C-24.10** for details regarding connection to bridge rail or traffic barrier.
3. For details of typical components, see **Standard Plans C-1b** and **C-20.10.**

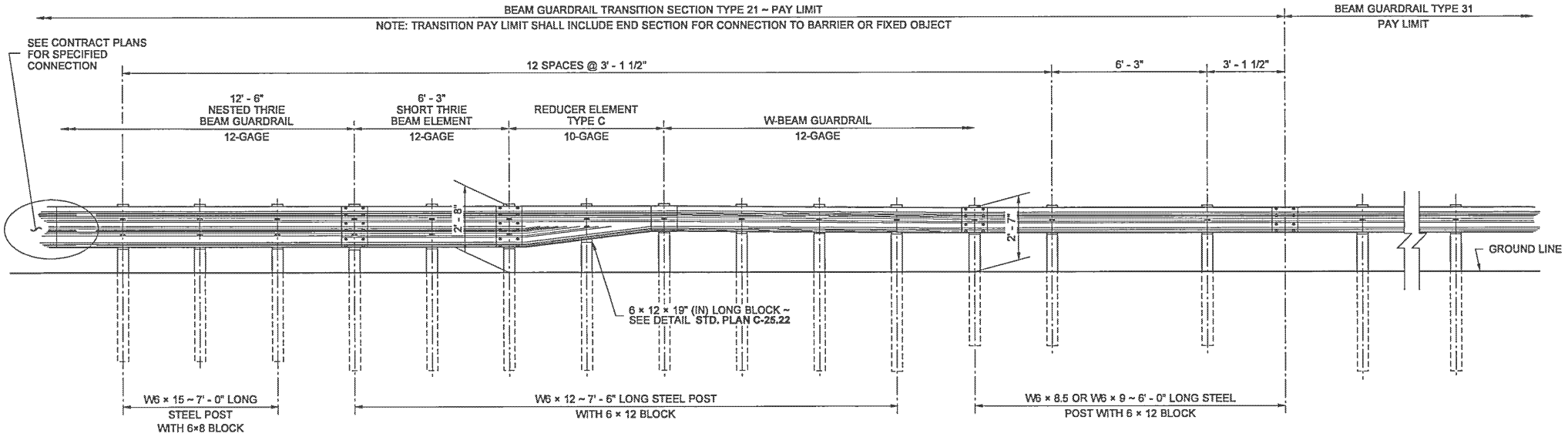

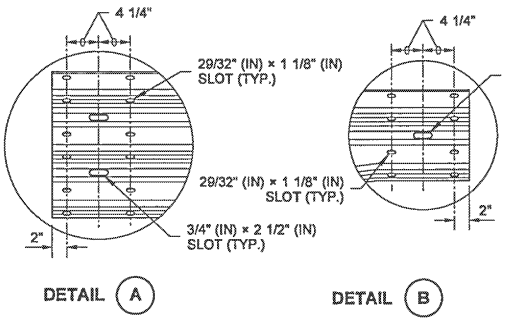

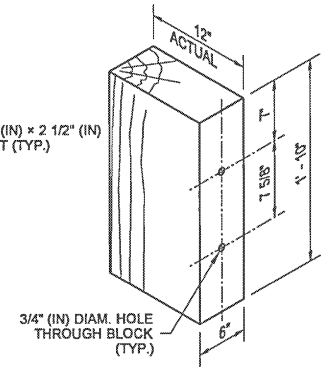

THRIE BEAM WOOD BLOCK

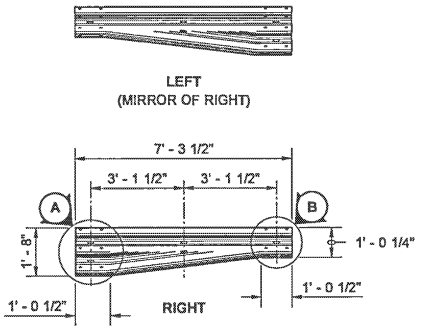

REDUCER ELEMENT TYPE C

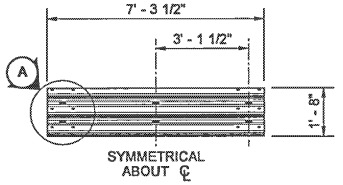

SHORT THRIE BEAM ELEMENT

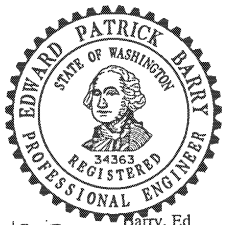

Barry, Ed
Jul 14 2015 8:06 AM

BEAM GUARDRAIL (TYPE 31) TRANSITION SECTION TYPE 21

STANDARD PLAN C-25.20-06

SHEET 1 OF 1 SHEET

APPROVED FOR PUBLICATION
Carpenter, Jeff
Jul 14 2015 11:26 AM
STATE DESIGN ENGINEER

Washington State Department of Transportation

DRAWN BY: FERN LIDDELL

NOTES

1. See **Standard Plans C-1b, C-1d, C-20.10,** and **C-25.20** for rail elements and thrie beam block details.
2. When a transition is required on the trailing end of the bridge, use a mirror image of this plan.

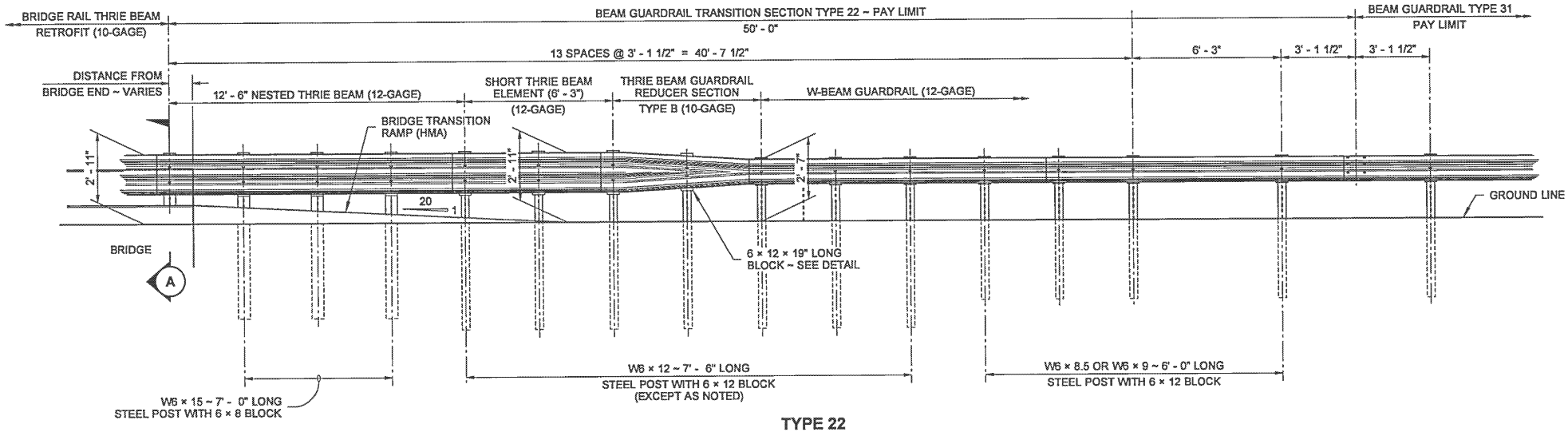

TYPE 22

APPROACH END (SHOWN - SEE NOTE 2)
THRIE BEAM INSTALLED AT FACE OF BRIDGE RAIL

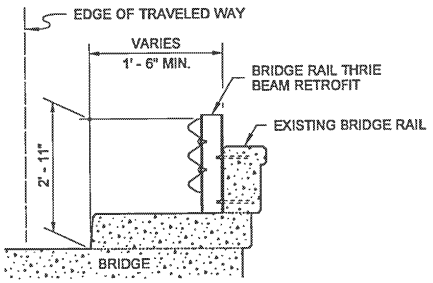

SECTION (A)

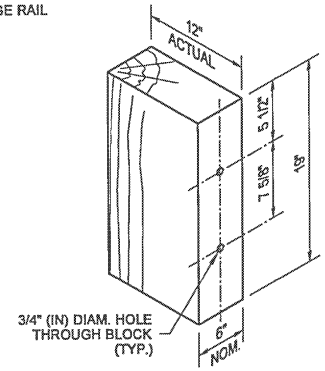

THRIE BEAM REDUCER WOOD BLOCK

EDWARD PATRICK BARRY
STATE OF WASHINGTON
34363
REGISTERED
PROFESSIONAL ENGINEER

Barry, Ed
Jul 14 2015 8:26 AM

BEAM GUARDRAIL (TYPE 31) TRANSITION SECTION TYPE 22

STANDARD PLAN C-25.22-05

SHEET 1 OF 1 SHEET

APPROVED FOR PUBLICATION
Carpenter, Jeff
Jul 14 2015 11:26 AM
STATE DESIGN ENGINEER

Washington State Department of Transportation

DRAWN BY: FERN LIDDELL

NOTES

1. See **Standard Plan C-1b, C-20.10,** and **C-25.20** for rail elements and thrie beam block details.
2. When a transition is required on the trailing end of the bridge, use a mirror image of this plan.
3. For additional alternatives not shown, see Contract Plans.

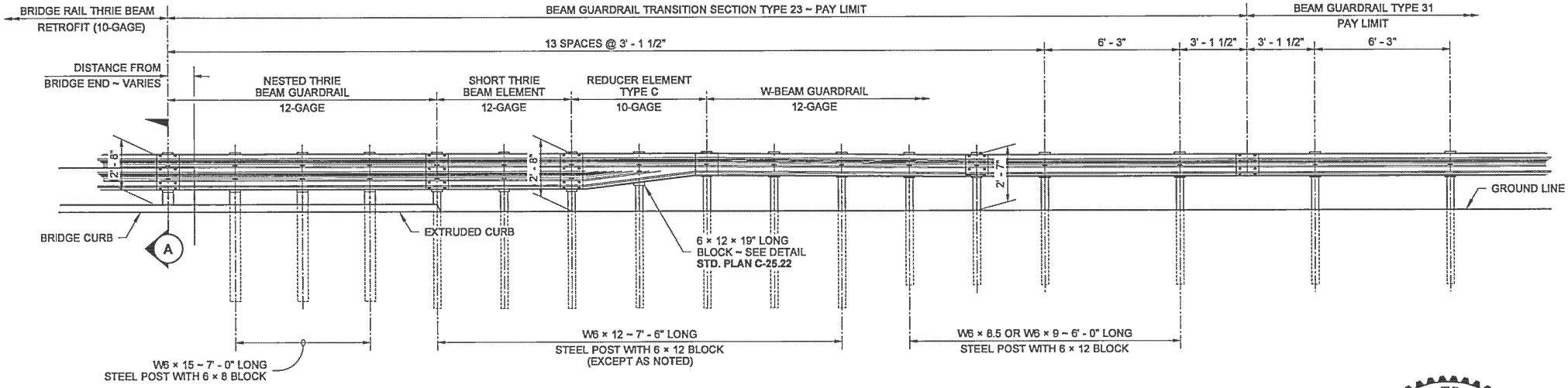

TYPE 23

APPROACH END (SHOWN - SEE NOTE 2)

THRIE BEAM INSTALLED AT FACE OF CURB

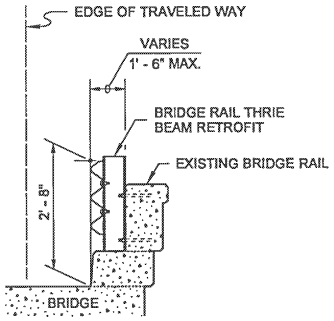

SECTION (A)

ALTERNATIVE 1

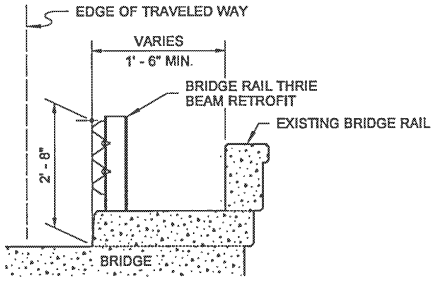

SECTION (A)

ALTERNATIVE 2

EDWARD PATRICK BARRY
STATE OF WASHINGTON
34363
REGISTERED
PROFESSIONAL ENGINEER

Barry, Ed
Jul 14 2015 8:27 AM

BEAM GUARDRAIL (TYPE 31) TRANSITION SECTION TYPE 23

STANDARD PLAN C-25.26-03

SHEET 1 OF 1 SHEET

APPROVED FOR PUBLICATION
Carpenter, Jeff
Jul 14 2015 11:25 AM
STATE DESIGN ENGINEER

Washington State Department of Transportation

DRAWN BY: MARK SUJKA

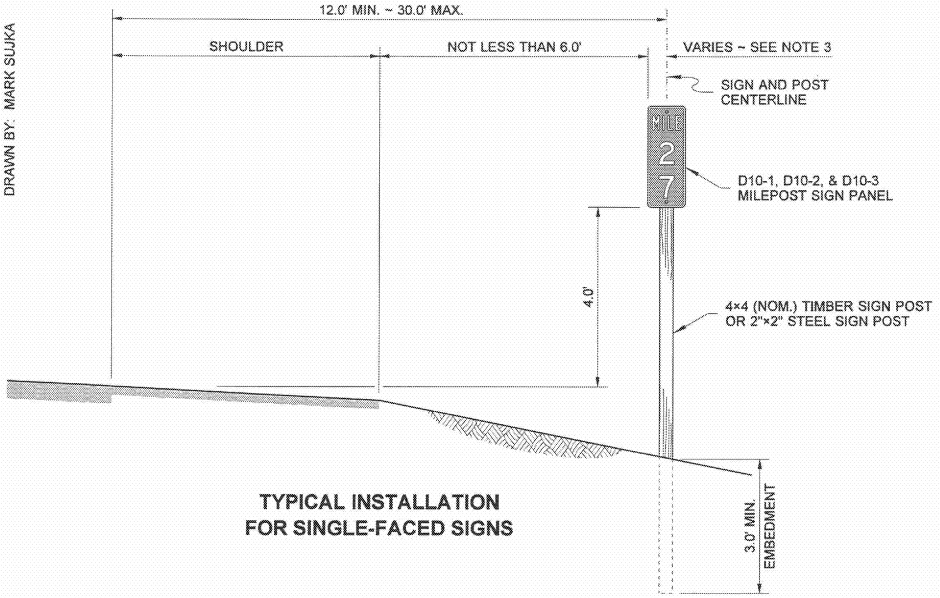

TYPICAL INSTALLATION FOR SINGLE-FACED SIGNS

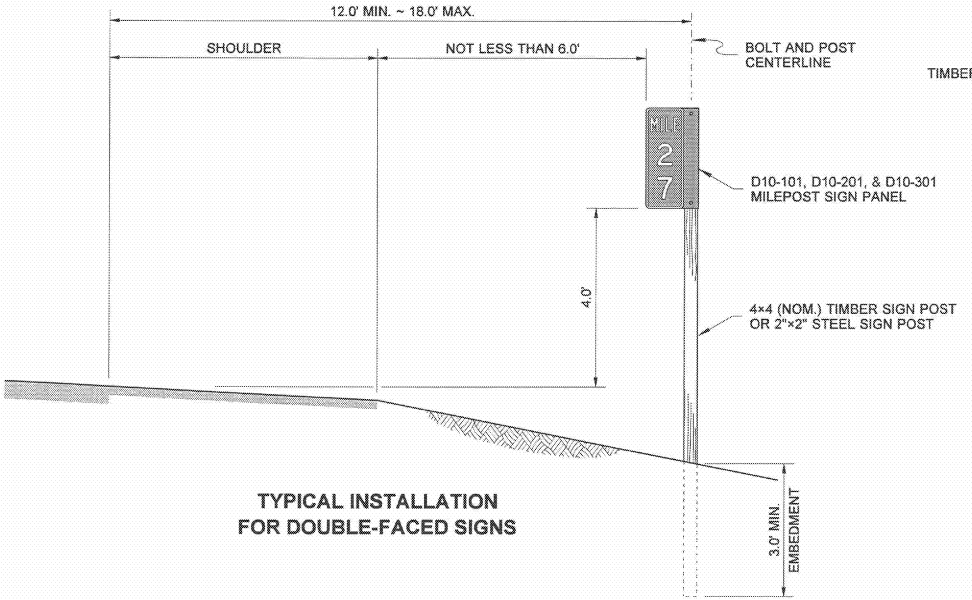

TYPICAL INSTALLATION FOR DOUBLE-FACED SIGNS

NOTES

1. Attach the Milepost Sign Panel to a timber sign post using two 3/8" diameter lag bolts, with washers; see Standard Plan G-22.10. For post and attachment details on steel sign posts, see Standard Plan G-24.50, Type ST-1.
2. Provide Supplemental Plaques and install on Mileposts where indicated in the Contract.
3. See the Contract for the width of the Single-Faced Milepost Signs required (10" or 12").
4. For lateral installations behind traffic barrier, 6" high curbs, and ditches, see Standard Plan G-20.10.
5. Install at the locations shown in the Contract. Installation may be moved 50 feet or less (longitudinally) before or after the contract location if obstructions are encountered, or to utilize the post of another sign. Mileposts that cannot be placed within this degree of accuracy shall be omitted entirely.

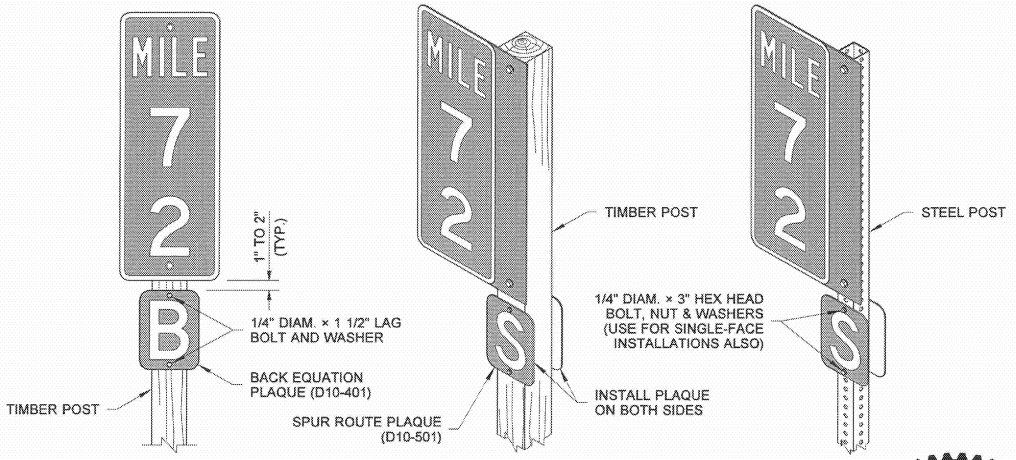

SINGLE-FACED SIGN **DOUBLE-FACED SIGN**

SUPPLEMENTAL PLAQUE ~ MOUNTING DETAIL

SEE NOTE 2

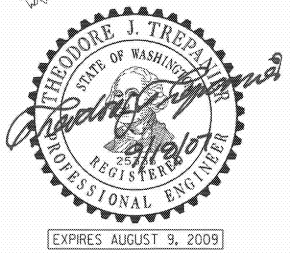

MILEPOST

STANDARD PLAN G-10.10-00

SHEET 1 OF 1 SHEET

APPROVED FOR PUBLICATION

STATE DESIGN ENGINEER DATE

Washington State Department of Transportation

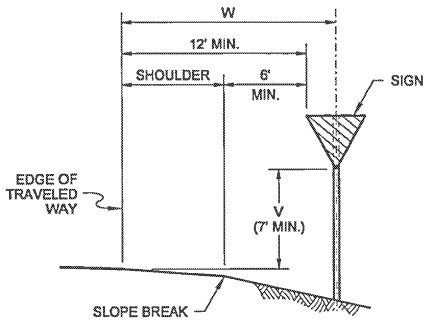

SIGN INSTALLATION IN FILL SECTION

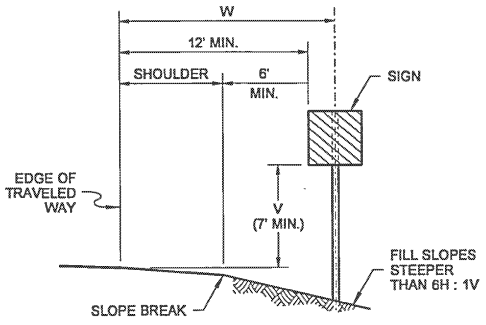

SIGN INSTALLATION ON STEEP FILL SLOPES

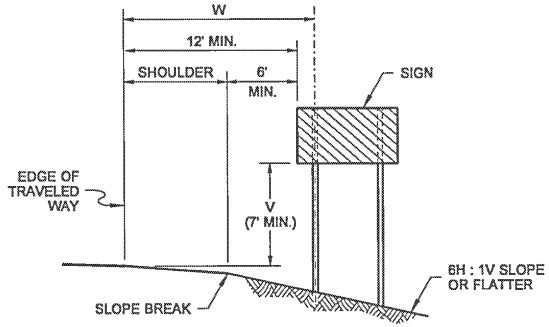

MULTIPLE SIGN POST INSTALLATION IN FILL SECTION

NOTES

1. Refer to the Sign Specification Sheet of the Contract for the 'V' and 'W' distances.
2. The minimum vertical distance from the bottom of the sign to the ground shall not be less than 7' (ft) for signs located within the Design Clear Zone.

DRAWN BY: FERN LIDDELL

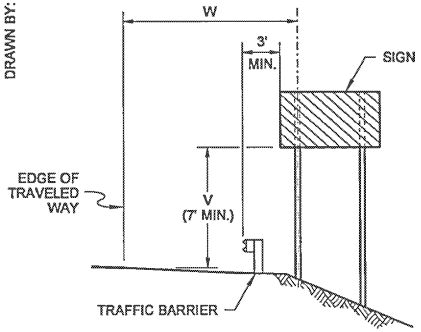

SIGN INSTALLATION BEHIND TRAFFIC BARRIER

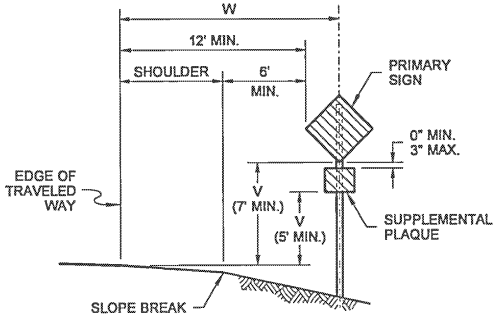

SIGN WITH SUPPLEMENTAL PLAQUE INSTALLATION IN FILL SECTION

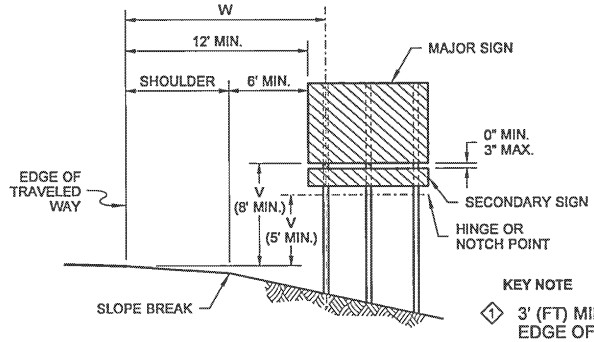

GUIDE OR DIRECTIONAL SIGN WITH SECONDARY SIGN INSTALLATION ON EXPRESSWAYS AND FREEWAYS

KEY NOTE

① 3' (FT) MIN. FROM ANY POINT ALONG BOTTOM EDGE OF SIGN PANEL TO THE GROUND

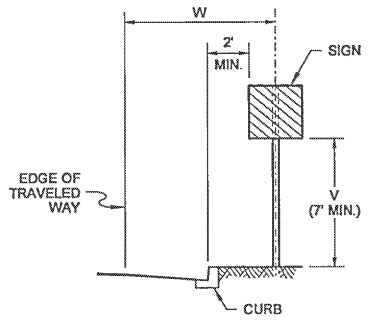

SIGN INSTALLATION IN CURB SECTION

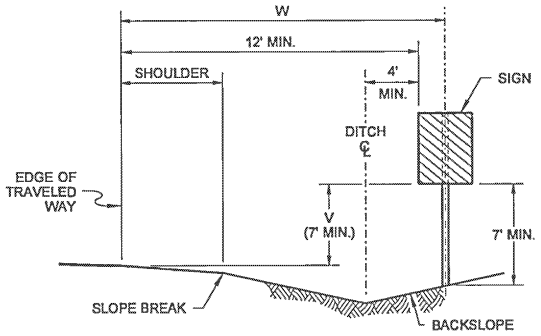

SIGN INSTALLATION IN DITCH SECTION

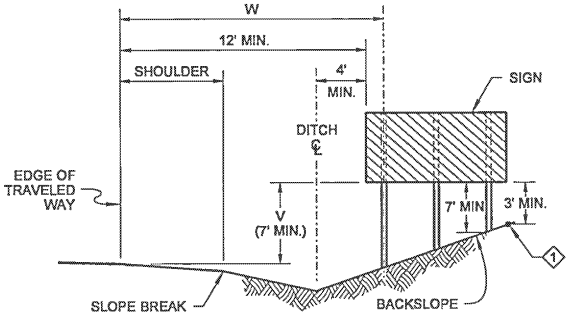

MULTIPLE SIGN POST INSTALLATION IN DITCH SECTION

JOHN C. NISBET
STATE OF WASHINGTON
29115
REGISTERED
PROFESSIONAL ENGINEER

Nisbet, John
Jun 22 2015 9:43 AM

GROUND-MOUNTED SIGN PLACEMENT

STANDARD PLAN G-20.10-02

SHEET 1 OF 1 SHEET

APPROVED FOR PUBLICATION
Jun 23 2015 7:35 AM
STATE DESIGN ENGINEER
Washington State Department of Transportation

DRAWN BY: BILL BERENS

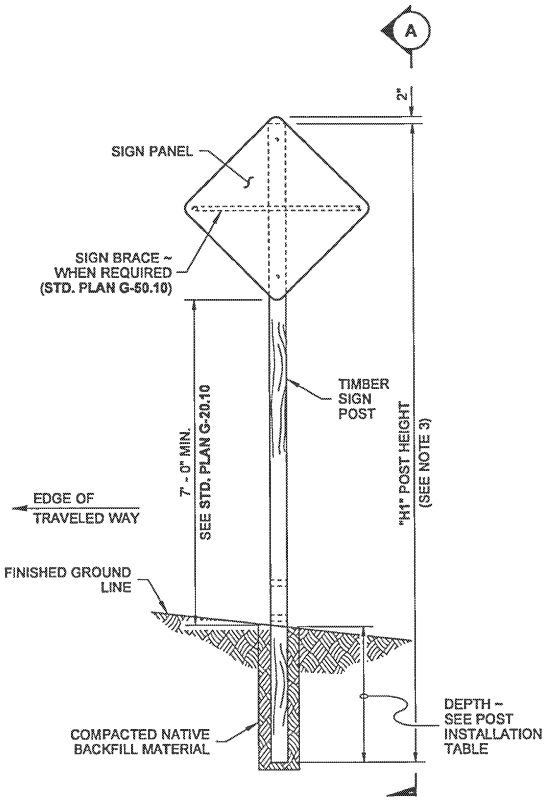

ELEVATION VIEW

SINGLE-POST INSTALLATION

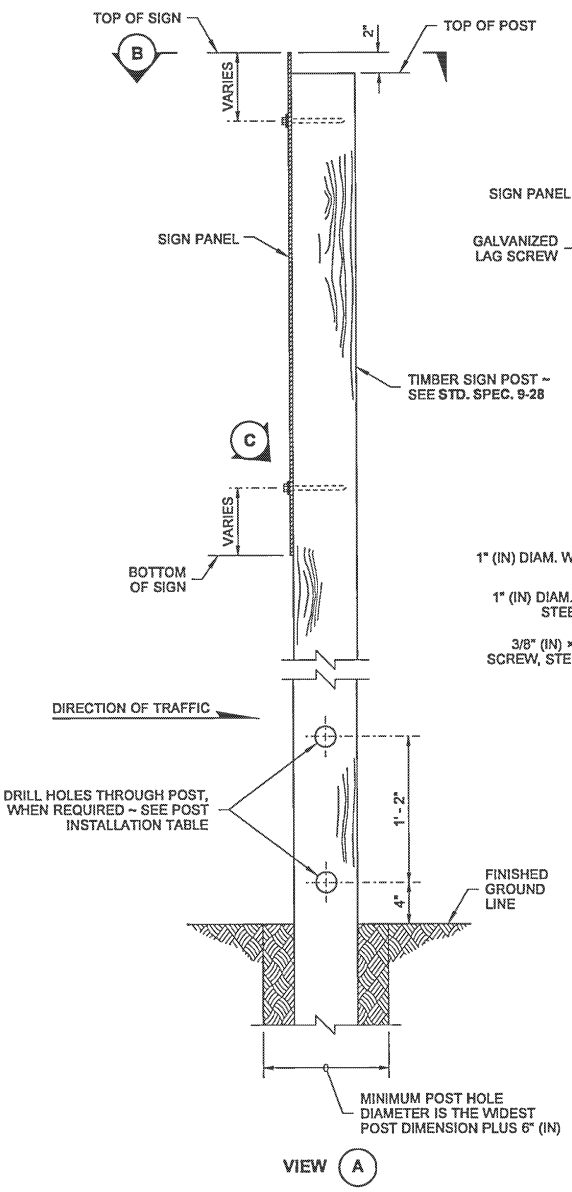

VIEW (A)

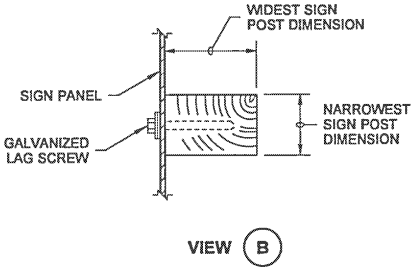

VIEW (B)

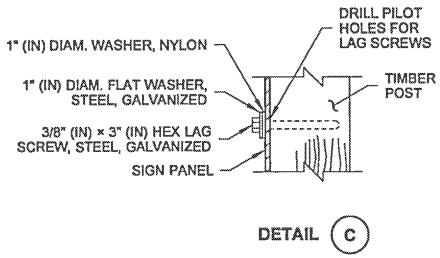

DETAIL (C)

NOTES

1. Notch is only required with multiple post installations.
2. 6×10, 8×10, and 6×12 Timber Sign Posts cannot be made breakaway and do not have holes or notches. These posts shall not be installed within the Design Clear Zone. They may be installed behind traffic barrier.
3. For **"X"**, **"Y"**, **"H1"**, **"H2"**, **"H3"**, and **"H4"**, refer to the Sign Specification Sheet in the Contract.
4. For 6×6 posts and larger, 7' (ft) minimum spacing is required between posts.
5. All materials shall meet the requirements of **Standard Specification 9-28**.

POST INSTALLATION TABLE			
POST SIZE (NOM.)	DEPTH	HOLE DIAMETER	NOTCH DEPTH (SEE NOTE 1)
4×4	3' - 0"	NOT REQ'D	NOT REQ'D
4×6	4' - 0"	1 1/2"	1 1/2"
6×6	4' - 0"	2" SEE NOTES 3 & 4	2" SEE NOTES 3 & 4
6×8	5' - 0"	3" SEE NOTES 3 & 4	3" SEE NOTES 3 & 4
6×10	6' - 0"	SEE NOTE 2	SEE NOTE 2
8×10	6' - 0"	SEE NOTE 2	SEE NOTE 2
6×12	7' - 0"	SEE NOTE 2	SEE NOTE 2

JOHN C. NISBET STATE OF WASHINGTON 29115 REGISTERED PROFESSIONAL ENGINEER

Nisbet, John
Jul 7 2015 3:57 PM
cosign

TIMBER SIGN SUPPORT

STANDARD PLAN G-22.10-03

SHEET 1 OF 3 SHEETS

APPROVED FOR PUBLICATION
Carpenter, Jeff
Jul 10 2015 7:22 AM
STATE DESIGN ENGINEER
cosign

Washington State Department of Transportation

DRAWN BY: BILL BERENS

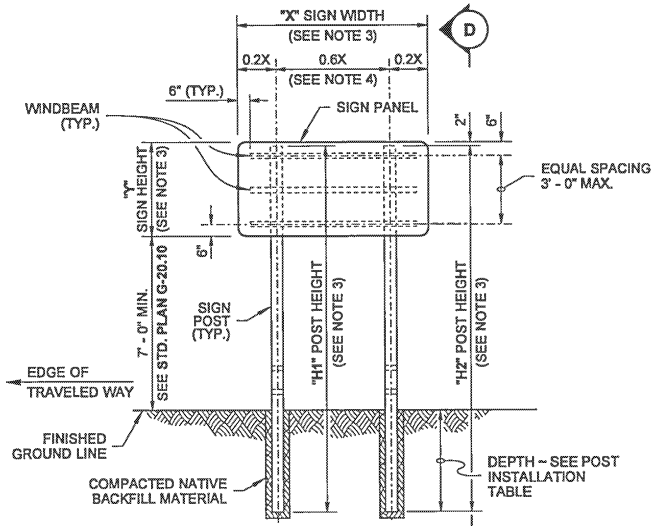

TWO-POST INSTALLATION

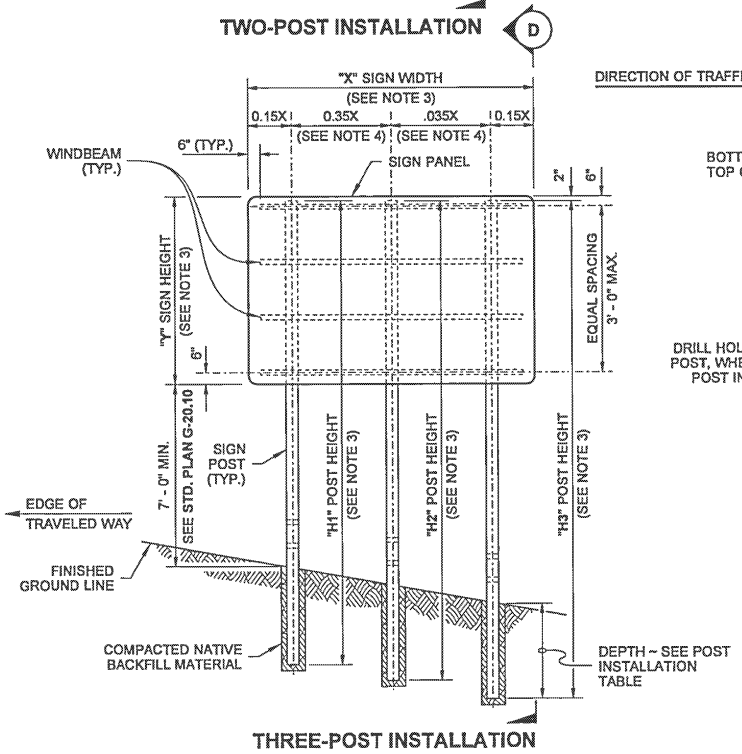

THREE-POST INSTALLATION

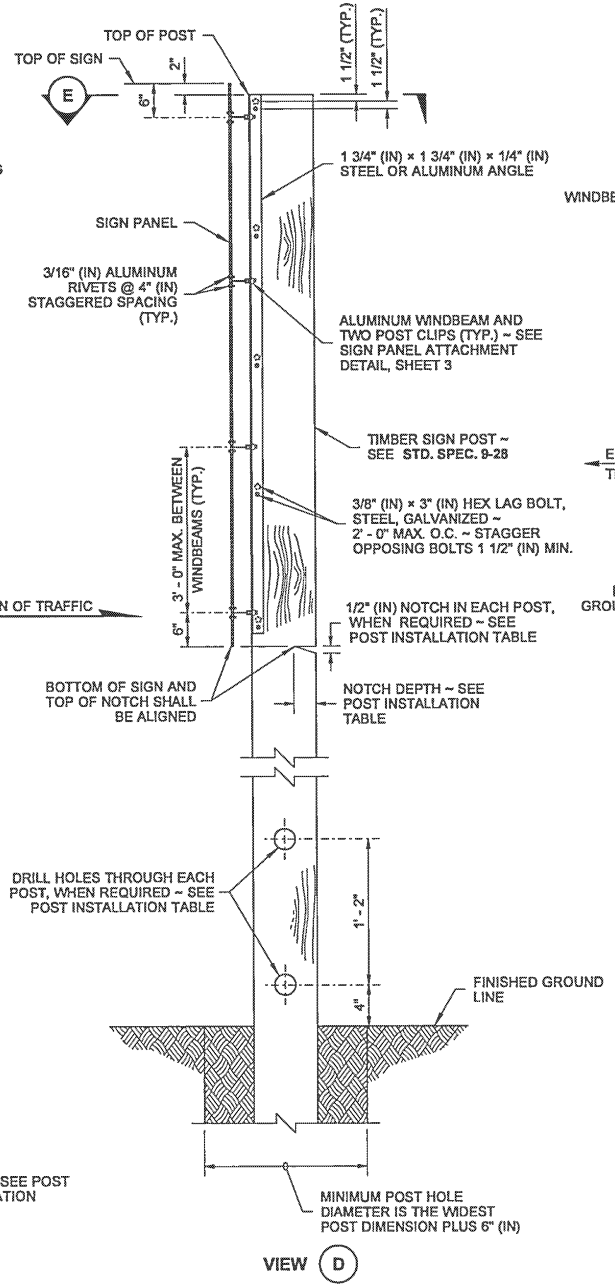

VIEW D

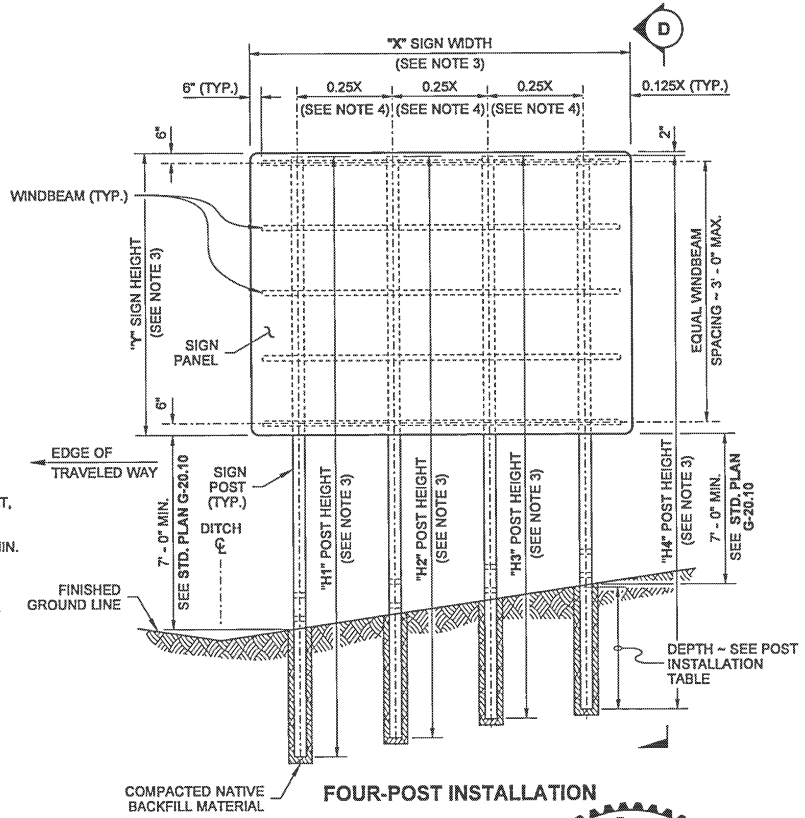

FOUR-POST INSTALLATION

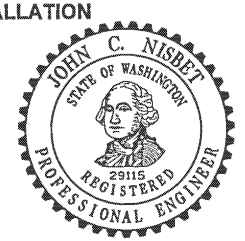

Nisbet, John
Jul 7 2015 3:58 PM

TIMBER SIGN SUPPORT

STANDARD PLAN G-22.10-03

SHEET 2 OF 3 SHEETS

APPROVED FOR PUBLICATION
Carpenter, Jeff
Jul 10 2015 7:22 AM
STATE DESIGN ENGINEER

Washington State Department of Transportation

DRAWN BY: BILL BERENS

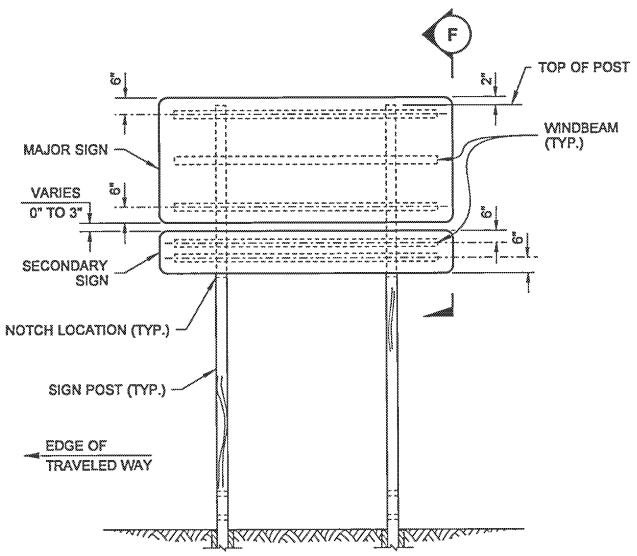

MAJOR AND SECONDARY SIGN INSTALLATION

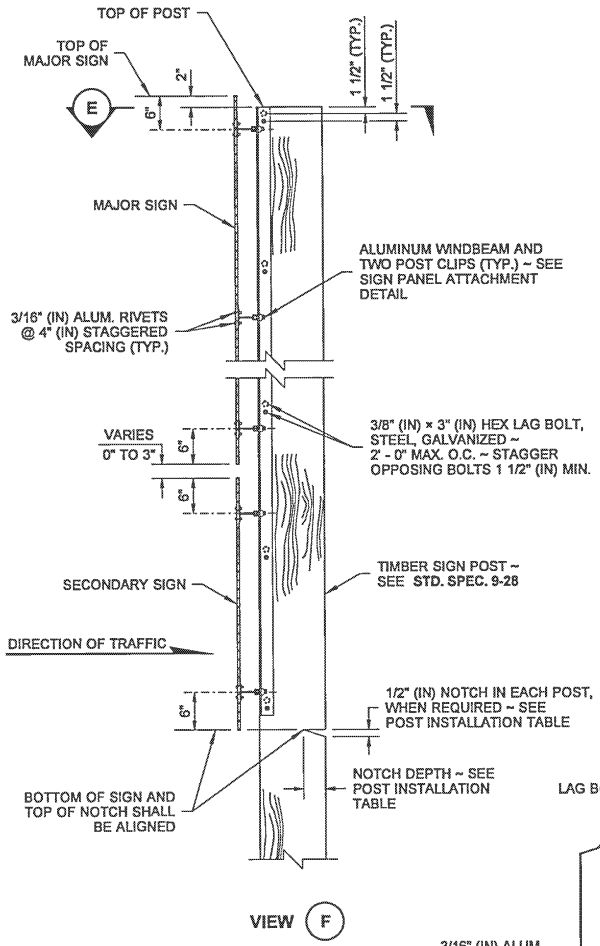

VIEW (F)

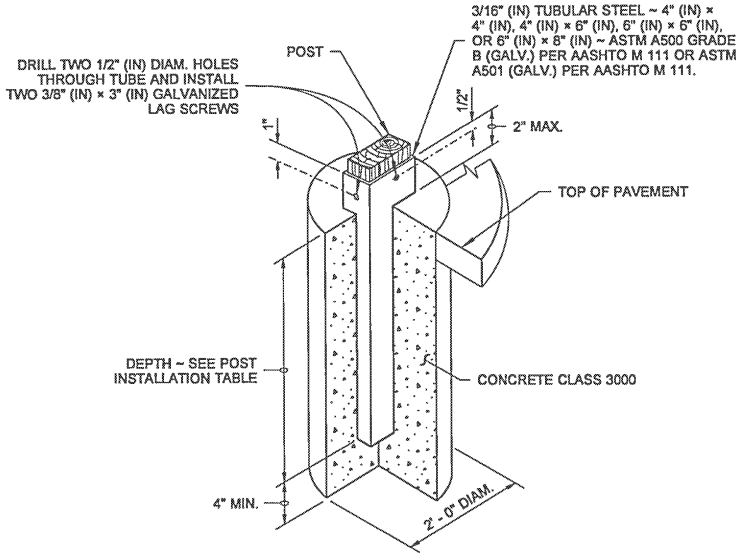

ISOMETRIC VIEW

CONCRETE FOUNDATION SLEEVE DETAIL

TO BE USED WHEN PLACING TIMBER POST IN A PAVED AREA

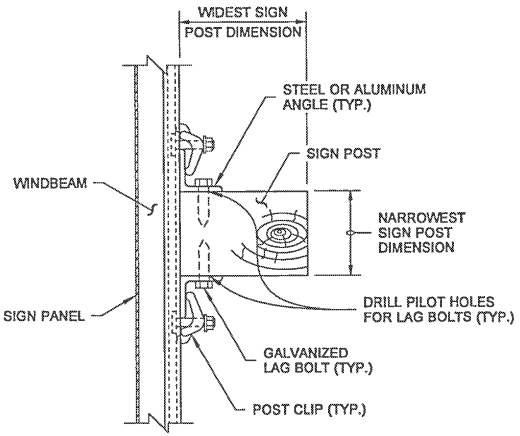

VIEW (E)

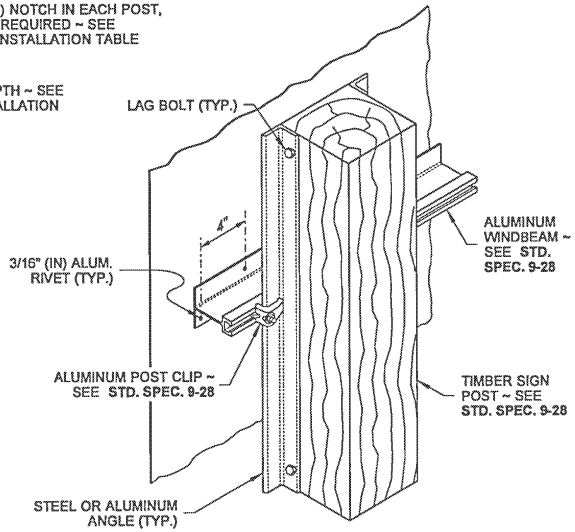

ISOMETRIC VIEW

SIGN PANEL ATTACHMENT DETAIL

JOHN C. NISBET
STATE OF WASHINGTON
29115
REGISTERED
PROFESSIONAL ENGINEER

Nisbet, John
Jul 7 2015 3:59 PM
cosign

TIMBER SIGN SUPPORT

STANDARD PLAN G-22.10-03

SHEET 3 OF 3 SHEETS

APPROVED FOR PUBLICATION
Carpenter, Jeff
Jul 10 2015 7:23 AM
STATE DESIGN ENGINEER
cosign

Washington State Department of Transportation

DRAWN BY: LISA CYFORD

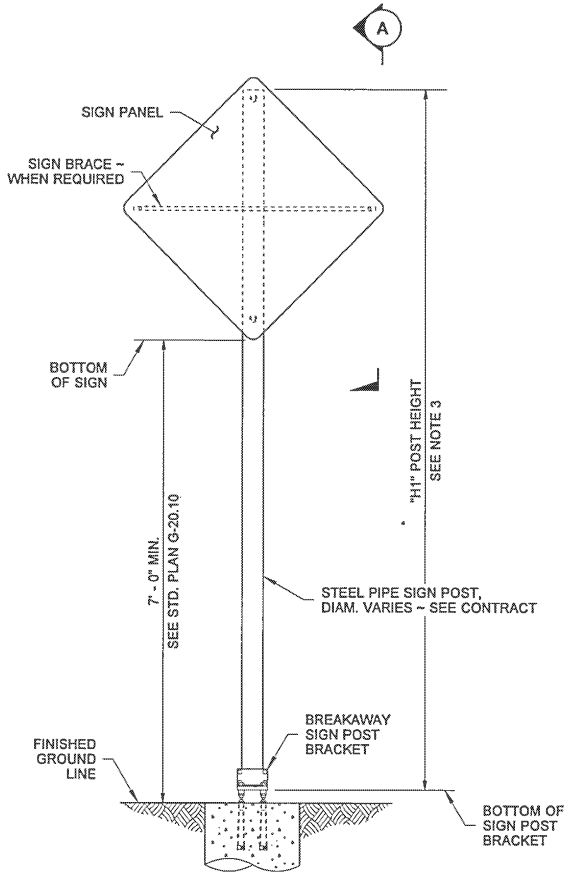

ELEVATION

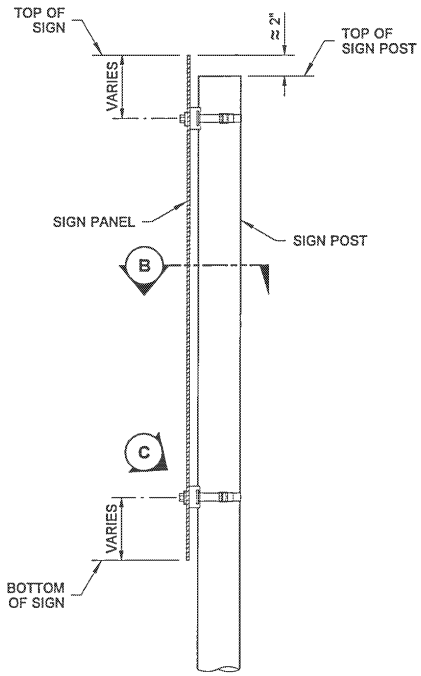

VIEW (A)

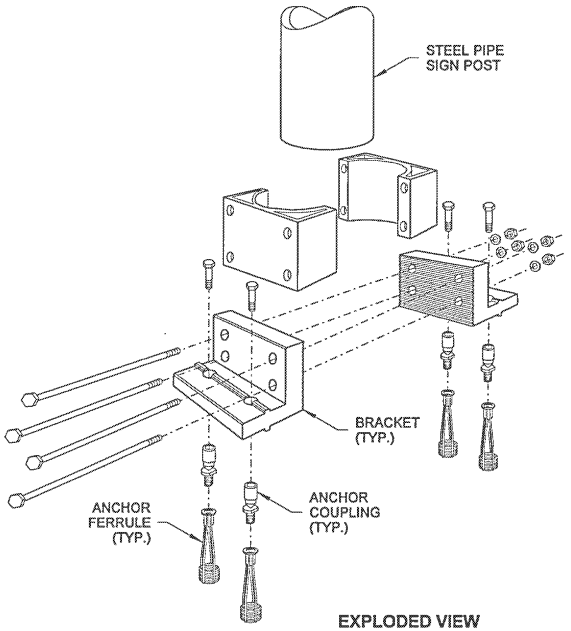

EXPLODED VIEW

BREAKAWAY SIGN BRACKET ASSEMBLY

NOTES

1. Dimensions for the parts used to assemble the base connections are intentionally not shown. Base connections are patented, manufactured products that are in compliance with NCHRP 350 crash test criteria. The base connection details are only shown on this plan to illustrate how the parts are assembled.
2. For Steel Sign Support Foundation, see Standard Plan G-25.10.
3. For "H1" refer to the Sign Specification Sheet in the Contract.
4. Mounting brackets with steel straps shall be the stainless steel one bolt, flared leg bracket and 3/4" wide, 0.030" thick strap "Band-it" products or an approved equal.

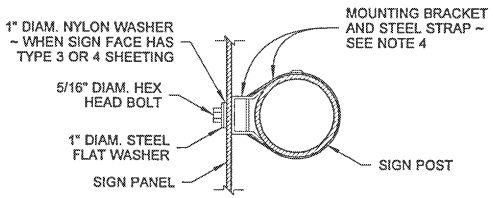

SECTION (B)

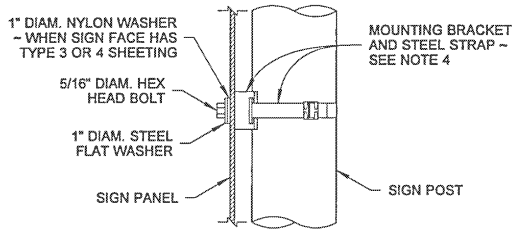

DETAIL (C)

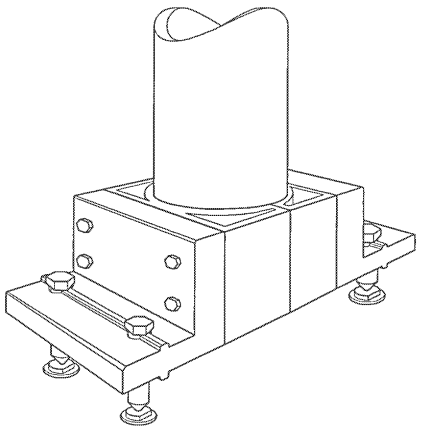

PERSPECTIVE VIEW

BREAKAWAY SIGN BRACKET ASSEMBLY

THEODORE J. TREPANIER
STATE OF WASHINGTON
25535
REGISTERED
PROFESSIONAL ENGINEER
EXPIRES AUGUST 9, 2009

STEEL SIGN SUPPORT TYPE AP INSTALLATION DETAILS STANDARD PLAN G-24.10-00

SHEET 1 OF 1 SHEET

APPROVED FOR PUBLICATION

STATE DESIGN ENGINEER — DATE 11/8/07

Washington State Department of Transportation

DRAWN BY: LISA CYFORD

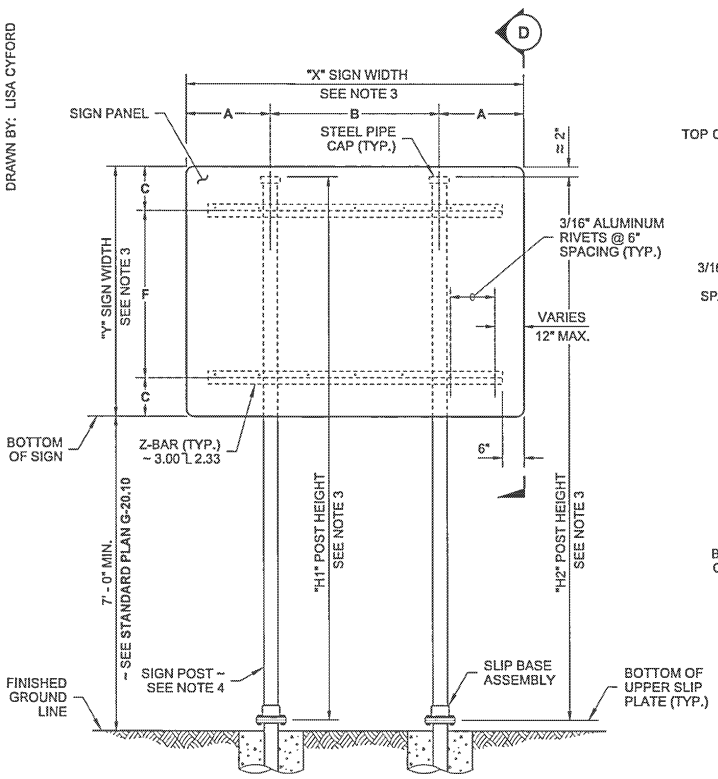

ELEVATION
TYPE PL SIGN SUPPORT
DUAL POST INSTALLATION

	"X" SIGN WIDTH		
	6' - 0"	8' - 0"	10' - 0"
A	1' - 0"	2' - 0"	3' - 0"
B	3' - 0"	4' - 0"	4' - 0"

	"Y" SIGN HEIGHT		
	6' - 0"	8' - 0"	10' - 0"
C	1' - 0"	2' - 0"	3' - 0"
F	4' - 0"	4' - 0"	4' - 0"

A, B, C, & F, MAY BE INTERPOLATED FOR INTERMEDIATE SIGN SIZES

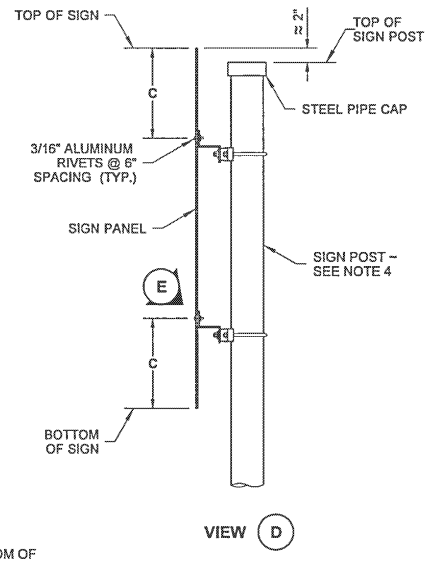

VIEW (D)

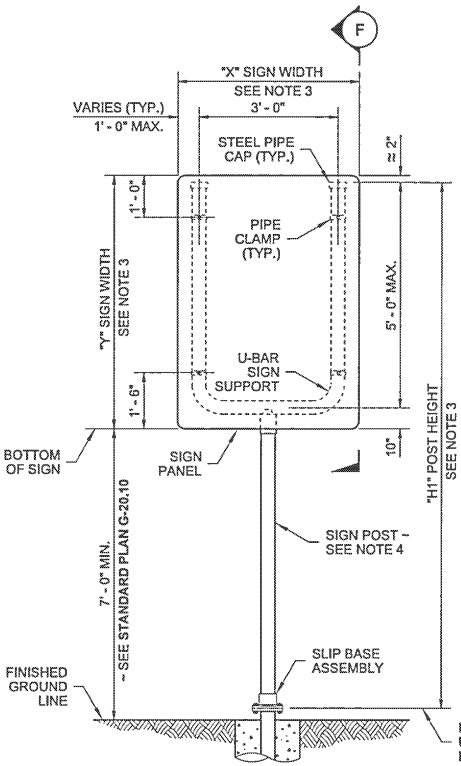

ELEVATION
TYPE PL-U SIGN SUPPORT

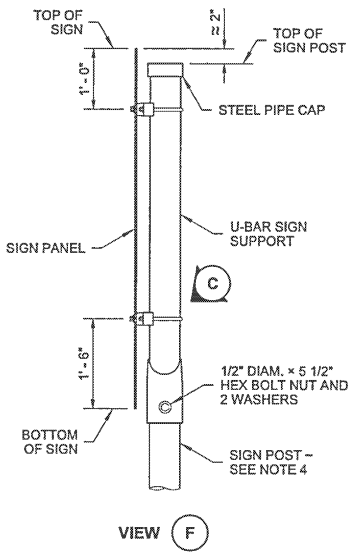

VIEW (F)

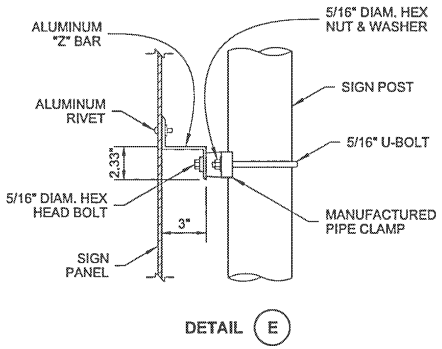

DETAIL (E)

JOHN C. NISBET
STATE OF WASHINGTON
29115
REGISTERED
PROFESSIONAL ENGINEER

STEEL SIGN SUPPORT TYPES PL, PL-T, & PL-U INSTALLATIONS DETAILS STANDARD PLAN G-24.30-01

SHEET 2 OF 2 SHEETS

APPROVED FOR PUBLICATION
STATE DESIGN ENGINEER — DATE 2/7/12
Washington State Department of Transportation

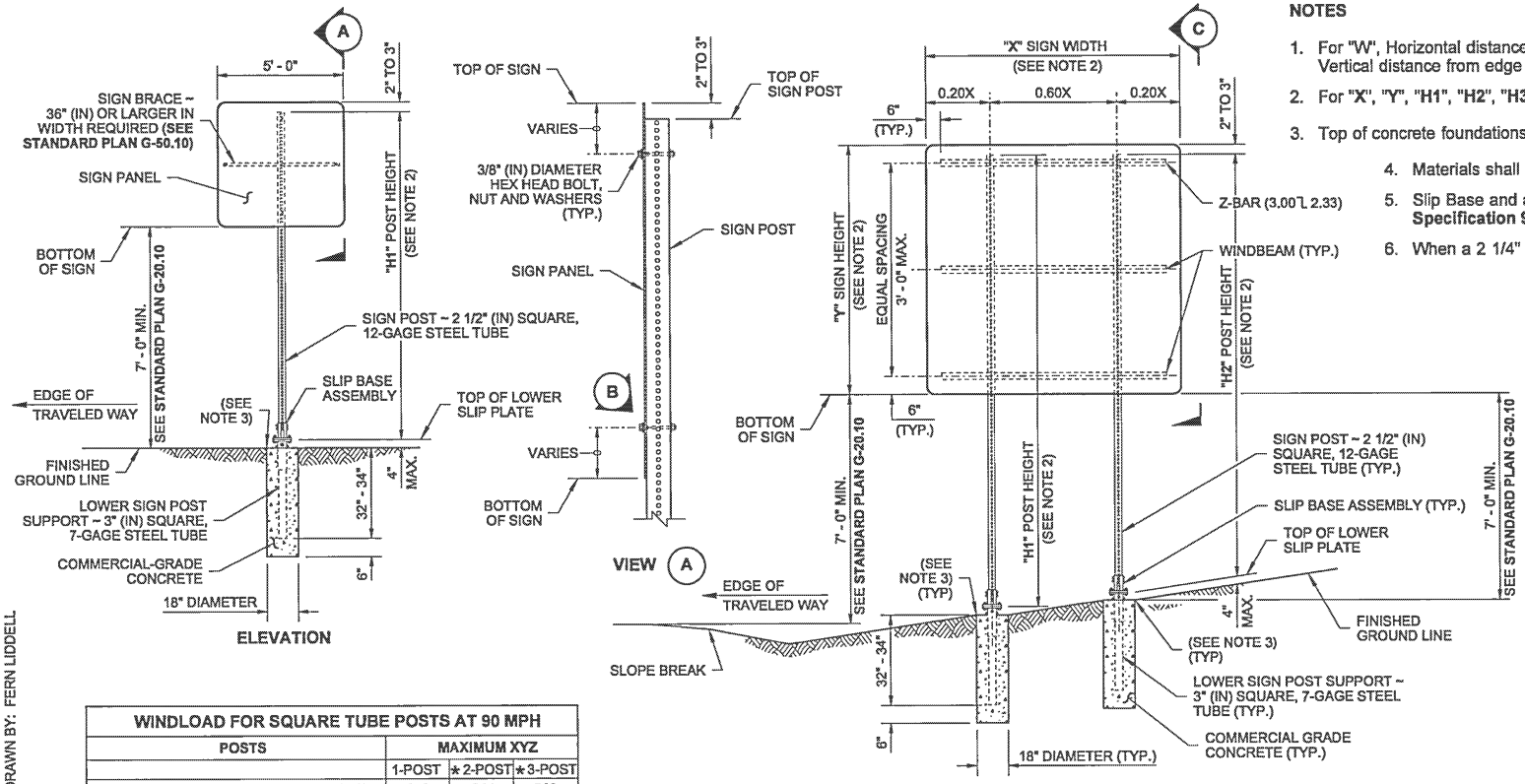

DRAWN BY: FERN LIDDELL

NOTES

1. For "W", Horizontal distance from edge of traveled way to center of nearest post, and "V", Vertical distance from edge of traveled way to bottom of sign, see **Standard Plan G-20.10**.
2. For "X", "Y", "H1", "H2", "H3", and "H4", refer to the Sign Specification Sheet in the Contract.
3. Top of concrete foundations shall be smooth, dense and uniform to finished groundline.
4. Materials shall meet the requirements of **Standard Specification 9-28**.
5. Slip Base and all other materials shall meet the requirements of **Standard Specification 9-06**.
6. When a 2 1/4" (in) insert is used, the insert shall be a minimum of 7 feet.

WINDLOAD FOR SQUARE TUBE POSTS AT 90 MPH				
POSTS		MAXIMUM XYZ		
		1-POST	✶2-POST	✶3-POST
2 1/2" PSST	12-GAGE	172	344	516
✶ 2 1/2" PSST with 2 1/4" Insert (SEE NOTE 6)	12-GAGE	309	618	927

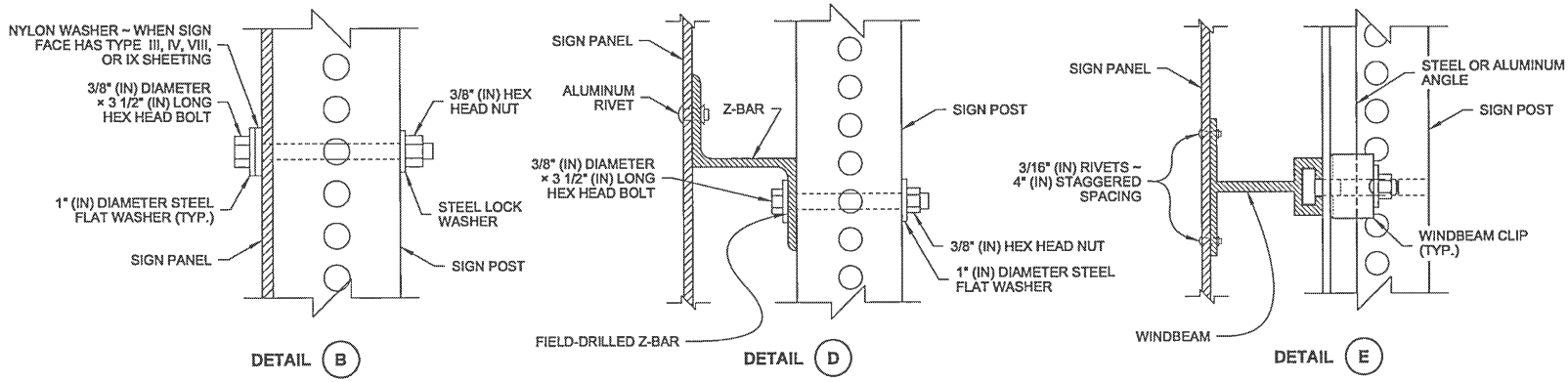

STEEL SIGN SUPPORT TYPES SB-1, SB-2 & SB-3 ~ 8" (IN)

JOHN C. NISBET
STATE OF WASHINGTON
29115
REGISTERED
PROFESSIONAL ENGINEER

Nisbet, John
Jun 22 2015 9:46 AM

STEEL SIGN SUPPORT TYPES SB-1, SB-2 & SB-3 INSTALLATION DETAILS STANDARD PLAN G-24.40-05

SHEET 1 OF 4 SHEETS

APPROVED FOR PUBLICATION
Carpenter, Jeff
Jun 23 2015 7:33 AM
STATE DESIGN ENGINEER
Washington State Department of Transportation

DRAWN BY: FERN LIDDELL

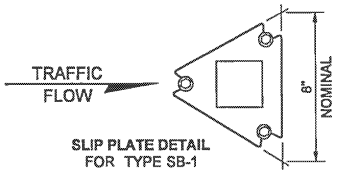

SLIP PLATE DETAIL
FOR TYPE SB-1

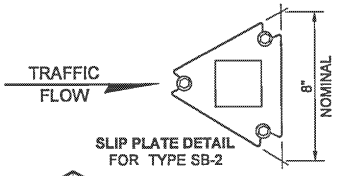

SLIP PLATE DETAIL
FOR TYPE SB-2

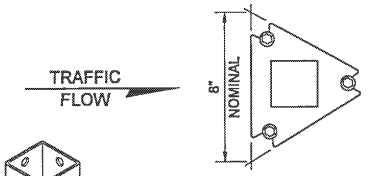

SLIP PLATE DETAIL
FOR TYPE SB-3

ASSEMBLY NOTES

1. Dimensions for the parts used to assemble the base connections are intentionally not shown. Base connections are patented, manufactured products that are in compliance with NCHRP 350 crash test criteria. The base connection details are shown on this plan only to illustrate how the parts are assembled.
2. Do not tighten any single Slip Plate Bolt to the recommended torque before pretightening the other bolts. Progressively tighten the three Slip Plate Bolts in 10 ft-lb increments, alternately, to a final torque of 40 ft-lbs on each.
3. Slip Base assembly and all other materails shall meet the requirements of **Standard Specifications 9-06** and **9-28**.

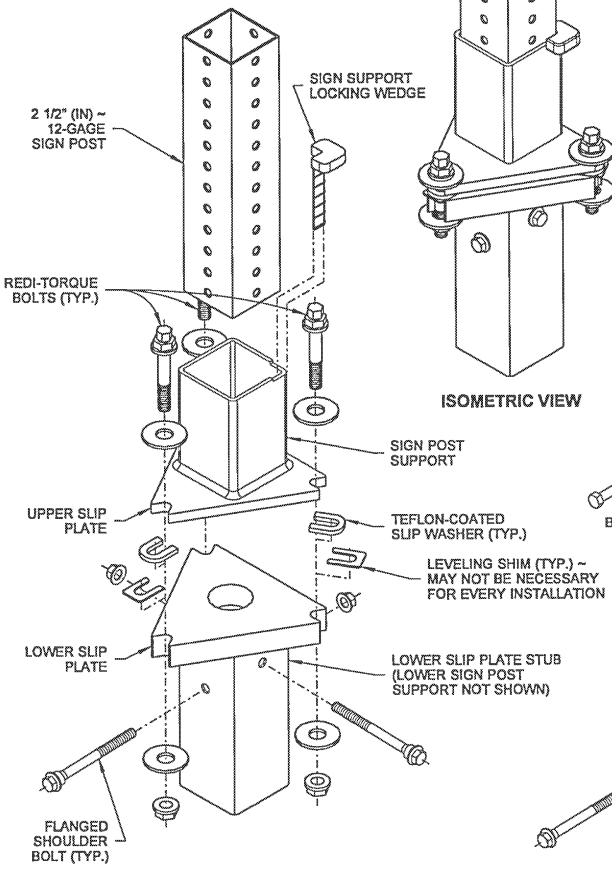

EXPLODED VIEW

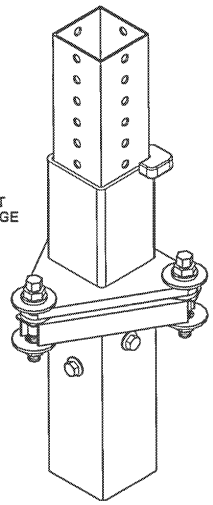

ISOMETRIC VIEW

TYPE SB-1
SLIP BASE ASSEMBLY

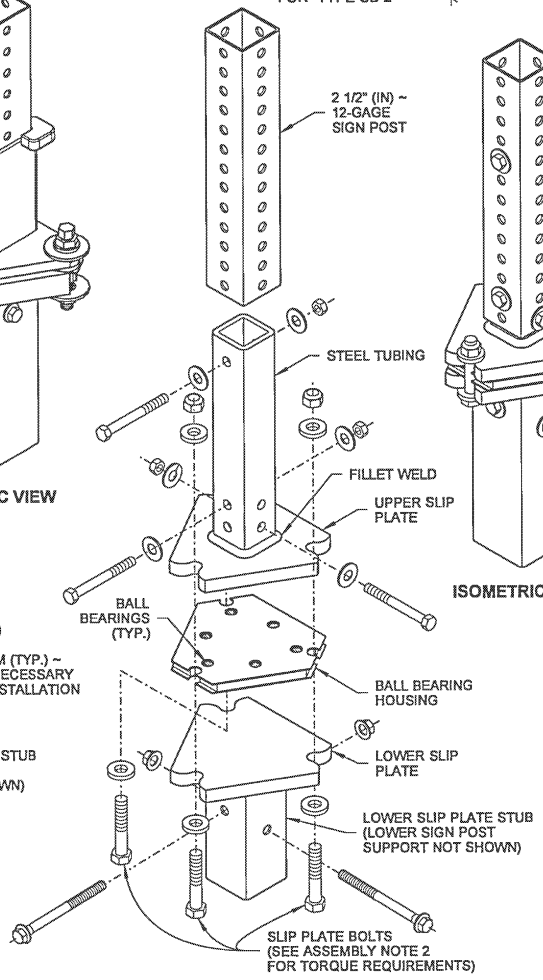

EXPLODED VIEW

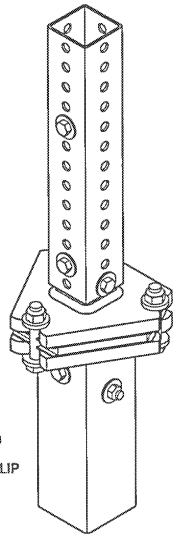

ISOMETRIC VIEW

TYPE SB-2
SLIP BASE ASSEMBLY

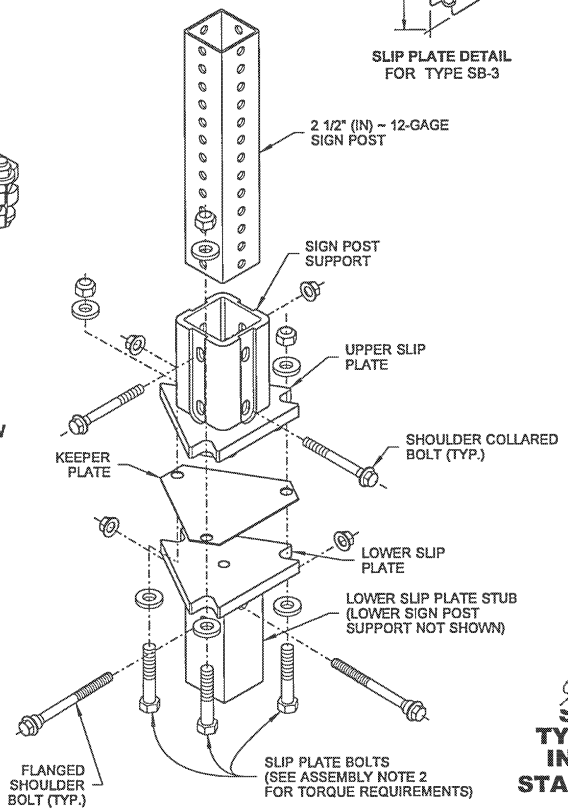

EXPLODED VIEW

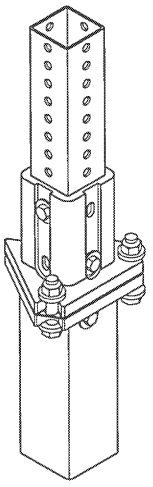

ISOMETRIC VIEW

TYPE SB-3
SLIP BASE ASSEMBLY

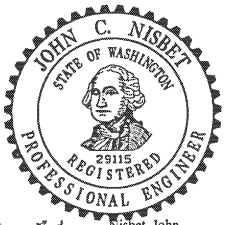

Nisbet, John
Jun 22 2015 9:47 AM

STEEL SIGN SUPPORT TYPES SB-1, SB-2 & SB-3 INSTALLATION DETAILS STANDARD PLAN G-24.40-05

SHEET 2 OF 4 SHEETS

APPROVED FOR PUBLICATION
Carpenter, Jeff
Jun 23 2015 7:33 AM
STATE DESIGN ENGINEER
Washington State Department of Transportation

STEEL SIGN SUPPORT TYPES SB-1, SB-2 & SB-3 ~ 8" (IN)

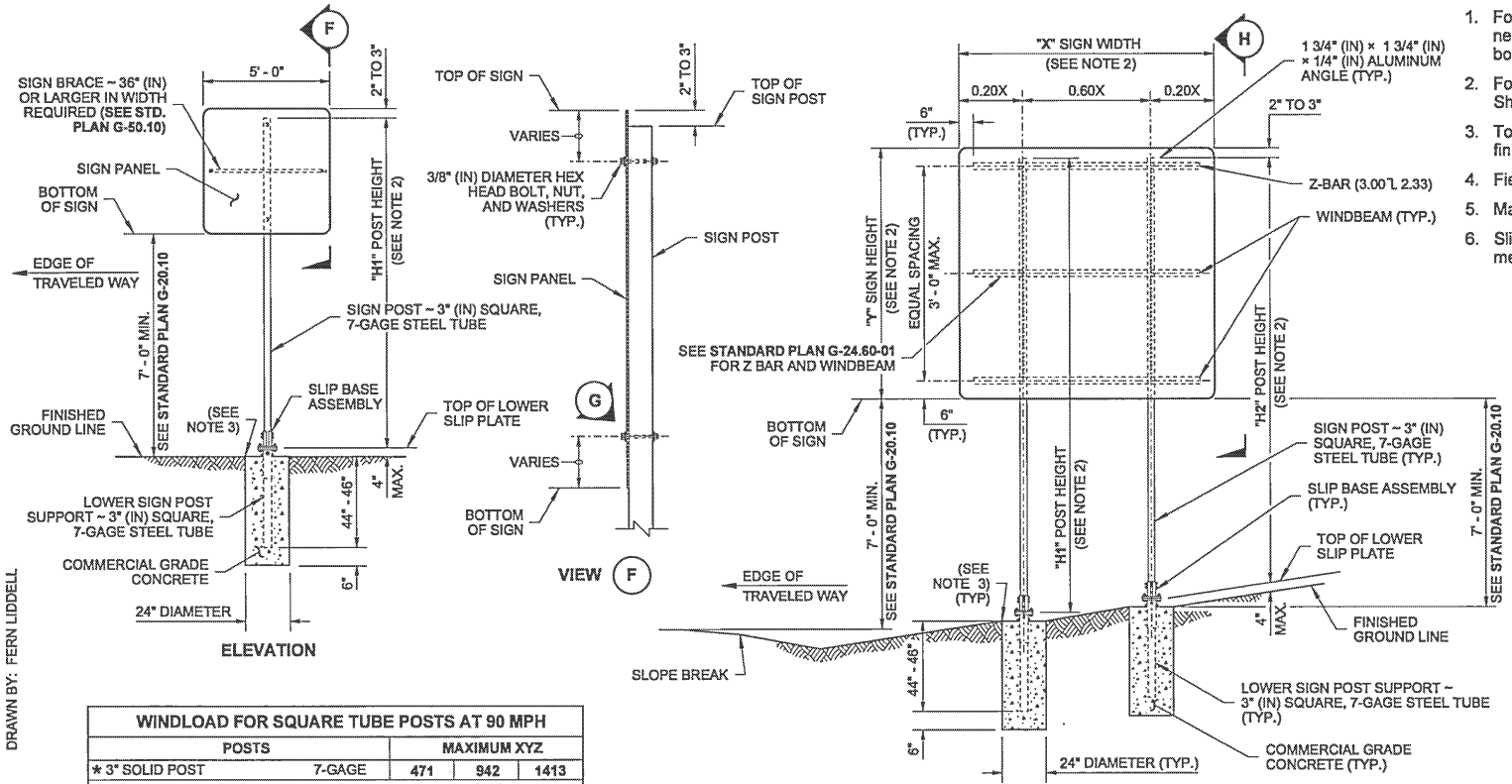

DRAWN BY: FERN LIDDELL

WINDLOAD FOR SQUARE TUBE POSTS AT 90 MPH				
POSTS		MAXIMUM XYZ		
* 3" SOLID POST	7-GAGE	471	942	1413
* SLIP BASE REQUIRED (UNLESS BEHIND BARRIER)				
(MAXIMUM 3 SLIP BASES ALLOWED IN 7' SPAN)				

NOTES

1. For "W", Horizontal distance from edge of traveled way to center of nearest post, and "V", Vertical distance from edge of traveled way to bottom of sign, see **Standard Plan G-20.10**.
2. For "X", "Y", "H1", "H2", "H3", and "H4", refer to the Sign Specification Sheet in the Contract.
3. Top of concrete foundation shall be smooth, dense, and uniform to finished ground line.
4. Field drill posts to accept angle and cold galvanized holes.
5. Materials shall meet the requirements of **Standard Specification 9-28**.
6. Slip Base assembly and all other materials shall meet the requirements of **Standard Specifications 9-06** and **9-28**.

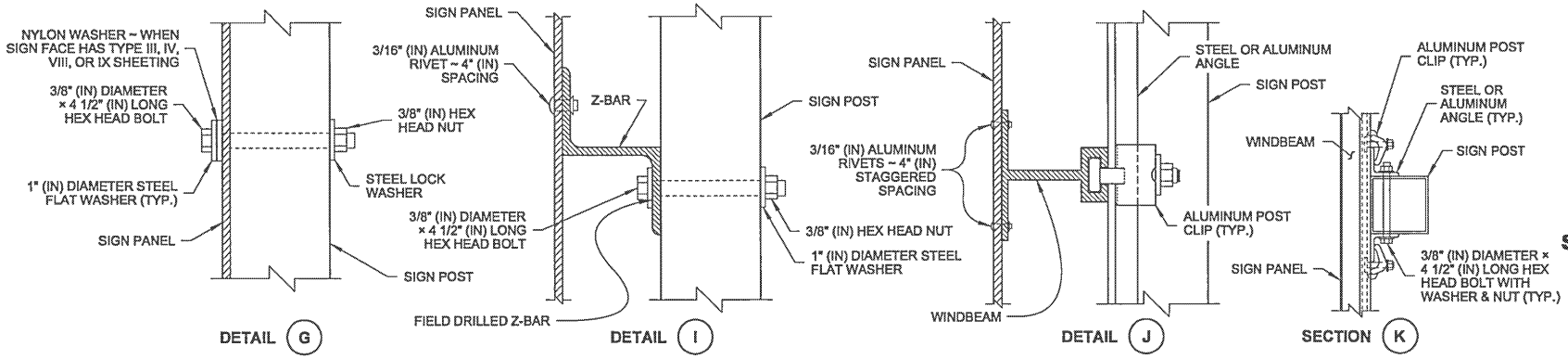

STEEL SIGN SUPPORT TYPES SB-1, SB-2 & SB-3 ~ 10" (IN)

JOHN C. NISBET
STATE OF WASHINGTON
29115
REGISTERED
PROFESSIONAL ENGINEER

Nisbet, John
Jun 22 2015 9:47 AM

STEEL SIGN SUPPORT TYPES SB-1, SB-2 & SB-3 INSTALLATION DETAILS STANDARD PLAN G-24.40-05

SHEET 3 OF 4 SHEETS

APPROVED FOR PUBLICATION
Carpenter, Jeff
Jun 23 2015 7:33 AM
STATE DESIGN ENGINEER
Washington State Department of Transportation

DRAWN BY: FERN LIDDELL

TRAFFIC FLOW

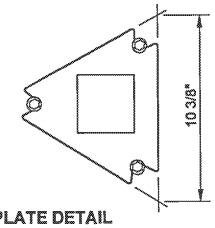

SLIP PLATE DETAIL
FOR TYPE SB-1

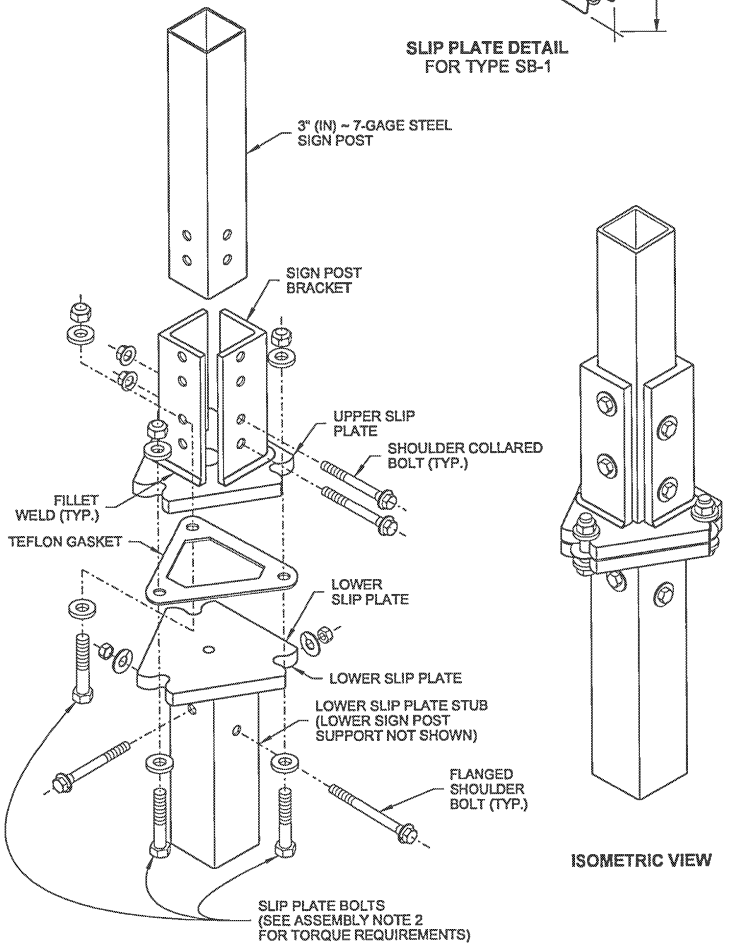

EXPLODED VIEW

ISOMETRIC VIEW

TYPE SB-1
SLIP BASE ASSEMBLY

ASSEMBLY NOTES

1. Dimensions for the parts used to assemble the base connections are intentionally not shown. Base connections are patented, manufactured products that are in compliance with NCHRP 350 crash test criteria. The base connection details are shown on this plan only to illustrate how the parts are assembled.
2. Do not tighten any single Slip Plate Bolt to the recommended torque before pretightening the other bolts. Progressively tighten the three Slip Plate Bolts in 10 ft-lb increments, alternately, to a final torque of 40 ft-lbs on each.
3. Use only Slip Base manufacturer supplied hardware that meets the requirements of **Standard Specifications 9-06** and **9-28**.

TRAFFIC FLOW

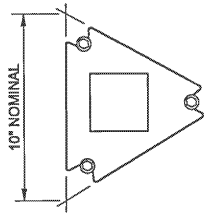

SLIP PLATE DETAIL
FOR TYPE SB-3

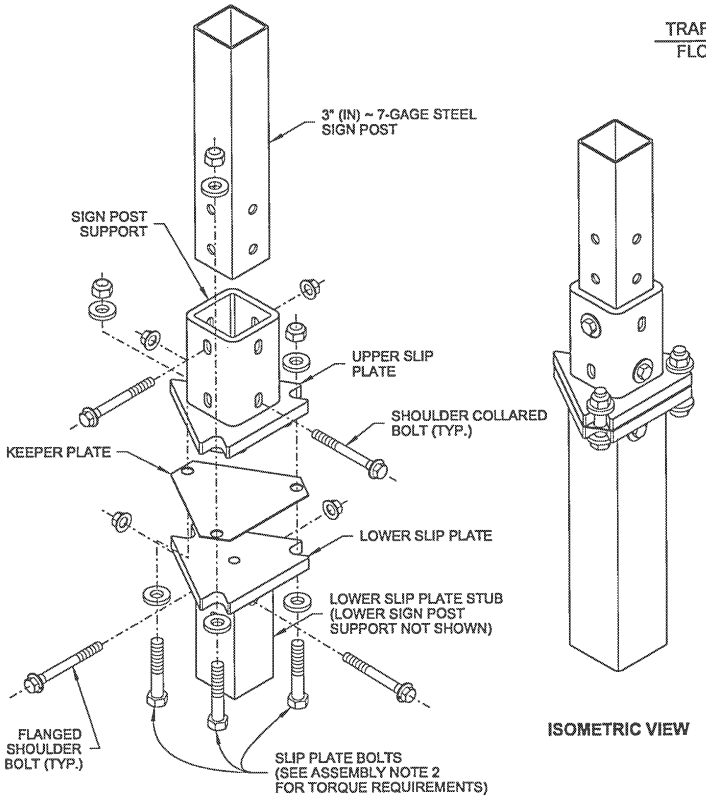

EXPLODED VIEW

ISOMETRIC VIEW

TYPE SB-3
SLIP BASE ASSEMBLY

JOHN C. NISBET
STATE OF WASHINGTON
29115
REGISTERED
PROFESSIONAL ENGINEER

Nisbet, John
Jun 22 2015 9:47 AM

STEEL SIGN SUPPORT TYPES SB-1, SB-2 & SB-3 INSTALLATION DETAILS STANDARD PLAN G-24.40-05

SHEET 4 OF 4 SHEETS

APPROVED FOR PUBLICATION
Carpenter, Jeff
Jun 23 2015 7:34 AM
STATE DESIGN ENGINEER
Washington State Department of Transportation

STEEL SIGN SUPPORT TYPES SB-1 & SB-3 ~ 10" (IN)

DRAWN BY: FERN LIDDELL

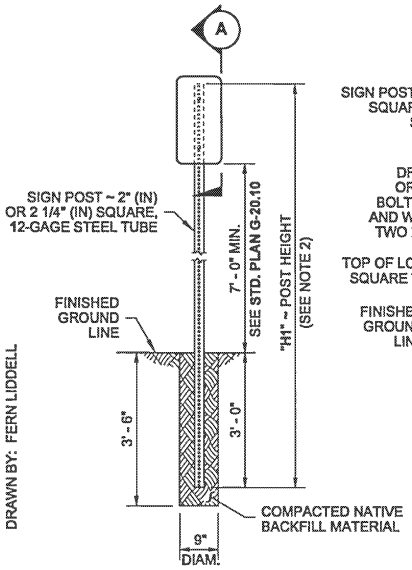

ELEVATION

TYPE ST-1 SIGN SUPPORT

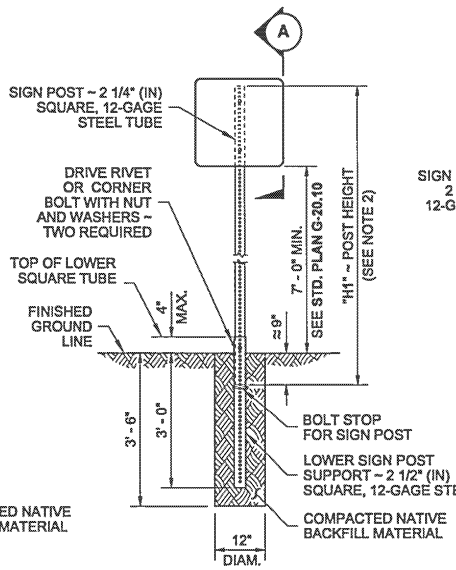

ELEVATION

TYPE ST-2 SIGN SUPPORT

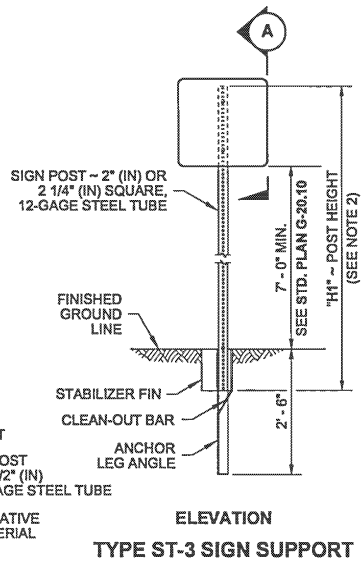

ELEVATION

TYPE ST-3 SIGN SUPPORT

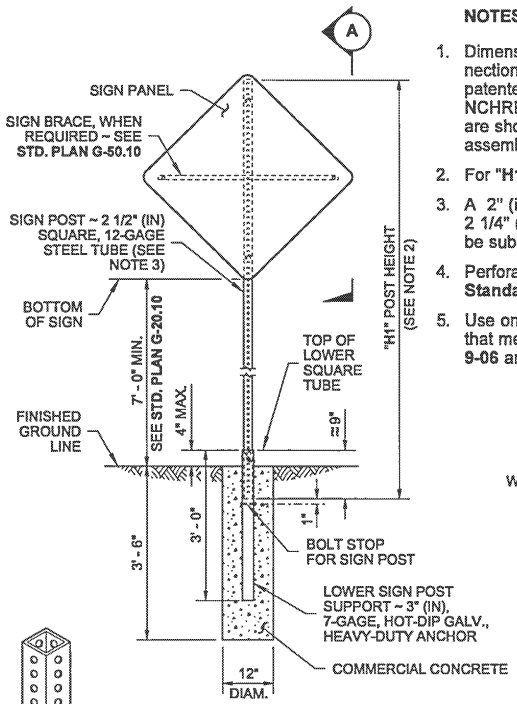

ELEVATION

TYPE ST-4 SIGN SUPPORT

NOTES

1. Dimensions for the parts used to assemble the base connections are intentionally not shown. Base connections are patented, manufactured products that are in compliance with NCHRP 350 crash test criteria. The base connection details are shown on this plan only to illustrate how the parts are assembled.
2. For "**H1**", refer to the Sign Specification Sheet in the Contract.
3. A 2" (in) post with a 2 1/4" (in) PSST anchor or a 2 1/4" (in) post with a 2 1/2" (in) PSST anchor may be substituted. See Contract Plans.
4. Perforated square steel post shall meet the requirements of **Standard Specification 9-06**.
5. Use only base connection manufacturer supplied hardware that meets the requirements of **Standard Specifications 9-06** and **9-28**.

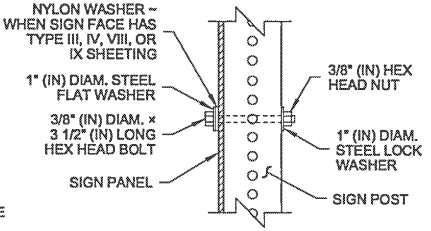

DETAIL B

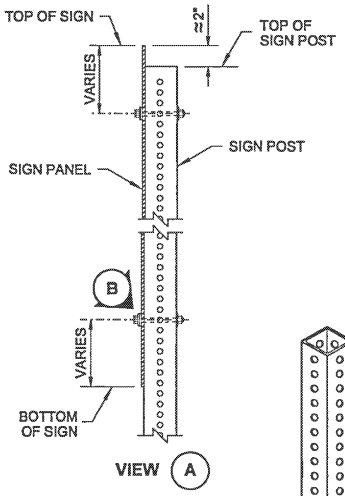

VIEW A

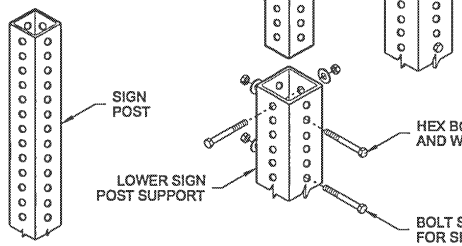

TYPE ST-1 TYPE ST-2

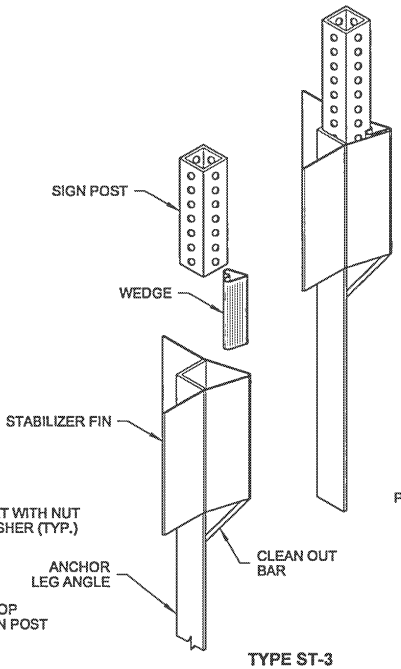

TYPE ST-3

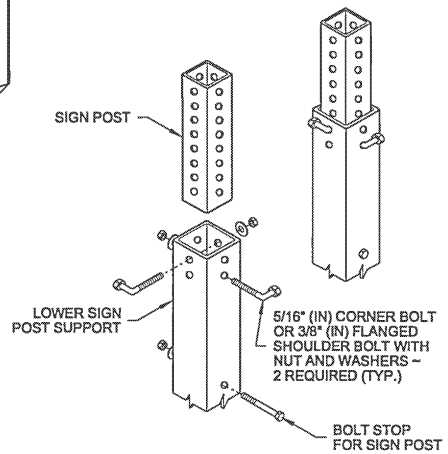

TYPE ST-4

JOHN C. NISBET
STATE OF WASHINGTON
29115
REGISTERED
PROFESSIONAL ENGINEER

Nisbet, John
Jun 12 2014 7:41 AM

STEEL SIGN SUPPORT TYPES ST-1 - ST-4 INSTALLATION DETAILS

STANDARD PLAN G-24.50-03

SHEET 1 OF 1 SHEET

APPROVED FOR PUBLICATION

Bakotich, Pasco
Jun 17 2014 9:39 AM

STATE DESIGN ENGINEER

Washington State Department of Transportation

DRAWN BY: FERN LIDDELL

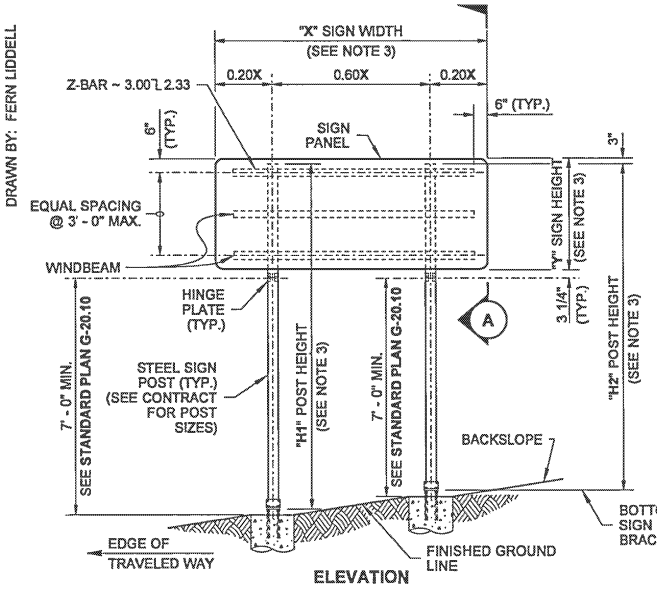

TYPE TP-A OR TP-B SIGN SUPPORT

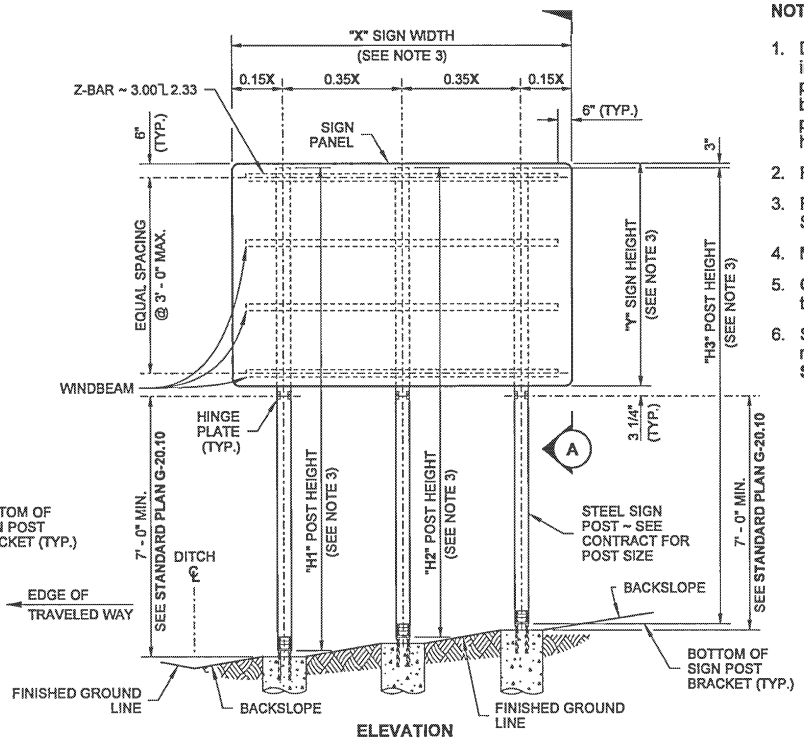

TYPE TP-A OR TP-B SIGN SUPPORT

NOTES

1. Dimensions for the parts used to assemble the base connections are intentionally not shown. Base connections are patented, manufactured products that are in compliance with NCHRP 350 crash test criteria. The base connection details are shown on this plan only to illustrate how the parts are assembled. Use only base connection manufacturer supplied hardware that meets the requirements of **Standard Specification 9-06.**
2. For Steel Sign Support Foundations, see **Standard Plan G-25.10.**
3. For **"X"**, **"Y"**, **"H1"**, **"H2"**, and **"H3"**, refer to the Sign Specification Sheet in the Contract.
4. Maximum of 34 lbs/ft in a 7' (ft) wheel path.
5. On fill slopes, the maximum sign height is 9' (ft) for posts closest to the edge of traveled way.
6. Sign mounting materials shall meet the requirements of **Standard Specification 9-28.**

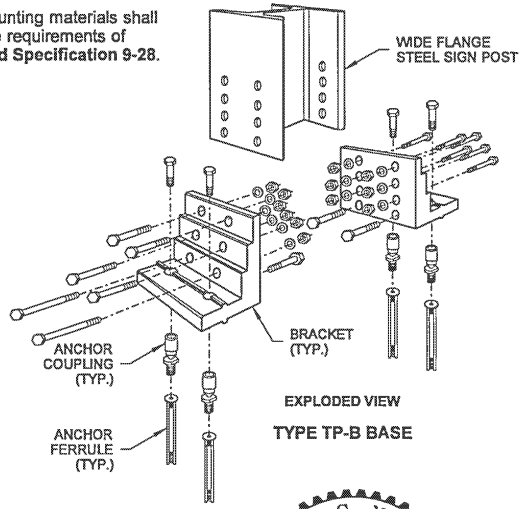

EXPLODED VIEW

TYPE TP-B BASE

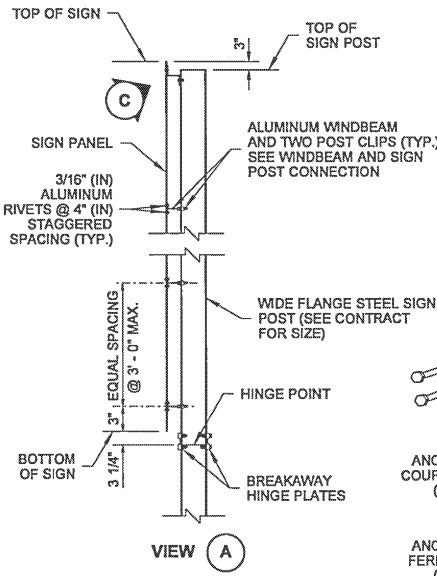

VIEW A

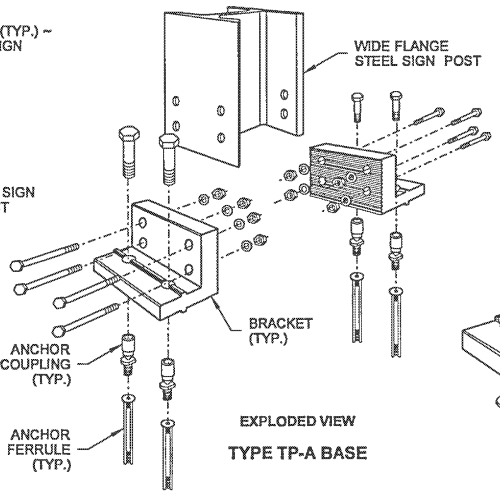

EXPLODED VIEW

TYPE TP-A BASE

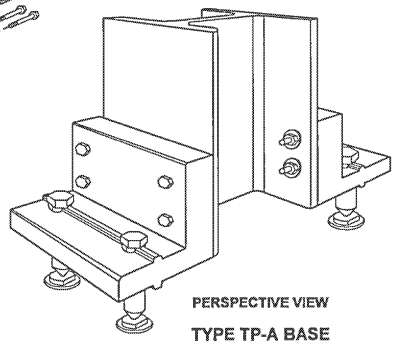

PERSPECTIVE VIEW

TYPE TP-A BASE
(W6×9)

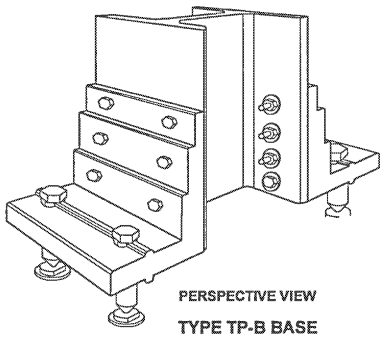

PERSPECTIVE VIEW

TYPE TP-B BASE
(W6×12 OR LARGER)

JOHN C. NISBET
STATE OF WASHINGTON
29115
REGISTERED
PROFESSIONAL ENGINEER

Nisbet, John
Jun 22 2015 9:49 AM

STEEL SIGN SUPPORT TYPES TP-A AND TP-B INSTALLATION DETAILS STANDARD PLAN G-24.60-04

SHEET 1 OF 2 SHEETS

APPROVED FOR PUBLICATION
Carpenter, Jeff
Jun 23 2015 7:33 AM
STATE DESIGN ENGINEER
Washington State Department of Transportation

DRAWN BY: FERN LIDDELL

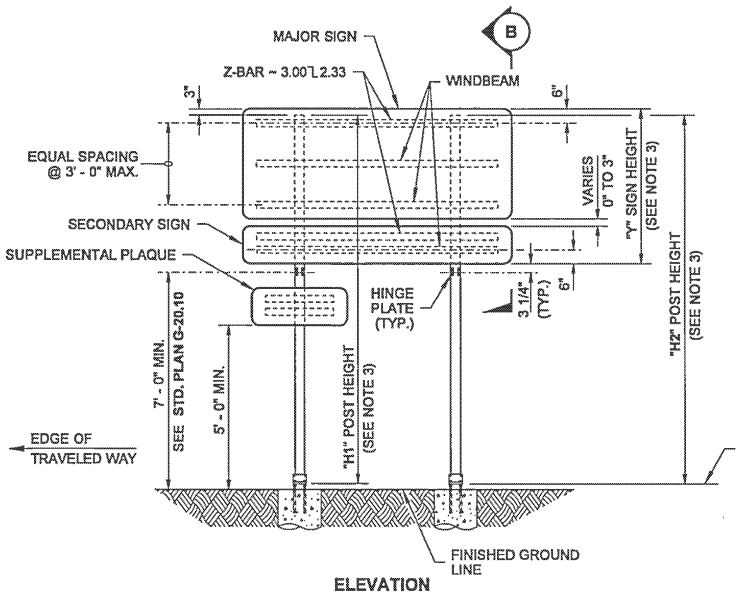

ELEVATION

MAJOR AND SECONDARY SIGN SUPPORT INSTALLATION

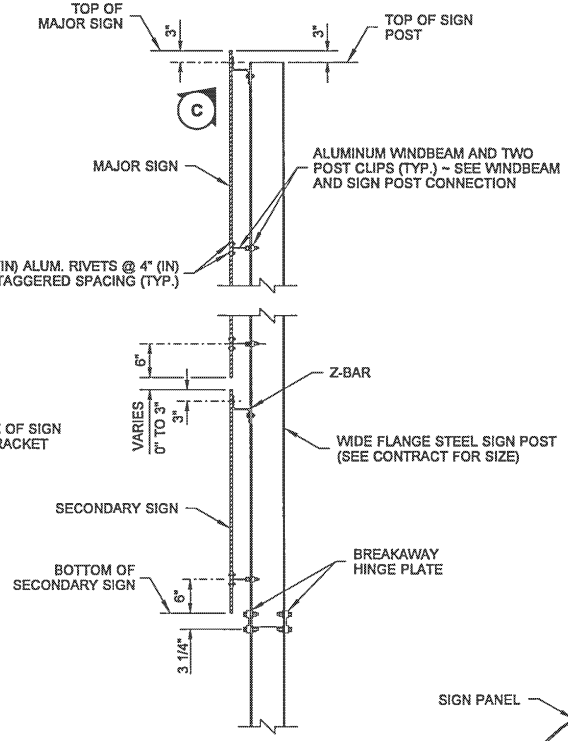

VIEW B

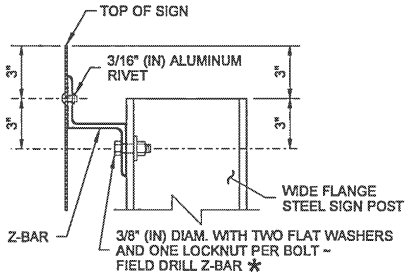

DETAIL C

* (BOLT ON ONE SIDE OF EACH WIDE FLANGE STEEL SIGN POST)

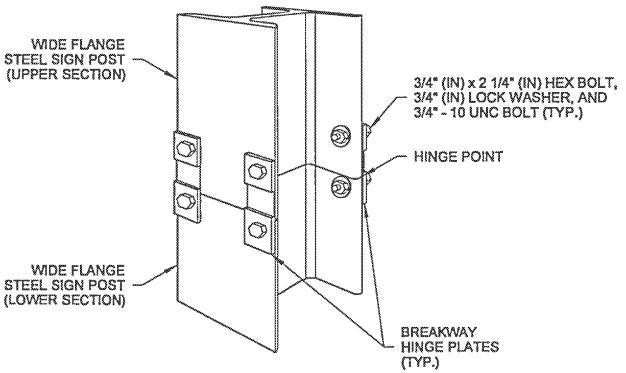

PERSPECTIVE VIEW

BREAKAWAY HINGE PLATE CONNECTION

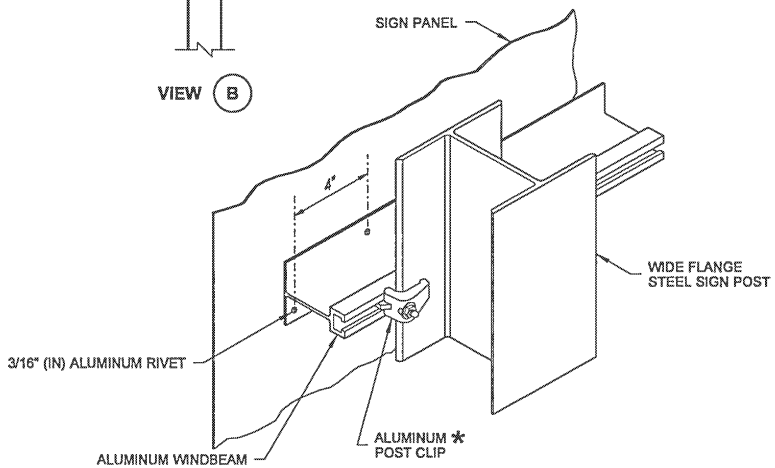

ISOMETRIC VIEW

WINDBEAM AND SIGN POST CONNECTION

* (ATTACH POST CLIPS ON BOTH SIDES OF WIDE FLANGE STEEL SIGN POST)

JOHN C. NISBET
STATE OF WASHINGTON
29115
REGISTERED
PROFESSIONAL ENGINEER

Nisbet, John
Jun 22 2015 9:49 AM

STEEL SIGN SUPPORT TYPES TP-A AND TP-B INSTALLATION DETAILS STANDARD PLAN G-24.60-04

SHEET 2 OF 2 SHEETS

APPROVED FOR PUBLICATION
Carpenter, Jeff
Jun 23 2015 7:33 AM
STATE DESIGN ENGINEER
Washington State Department of Transportation

DRAWN BY: LISA CYFORD

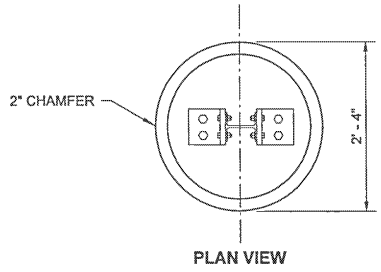

PLAN VIEW

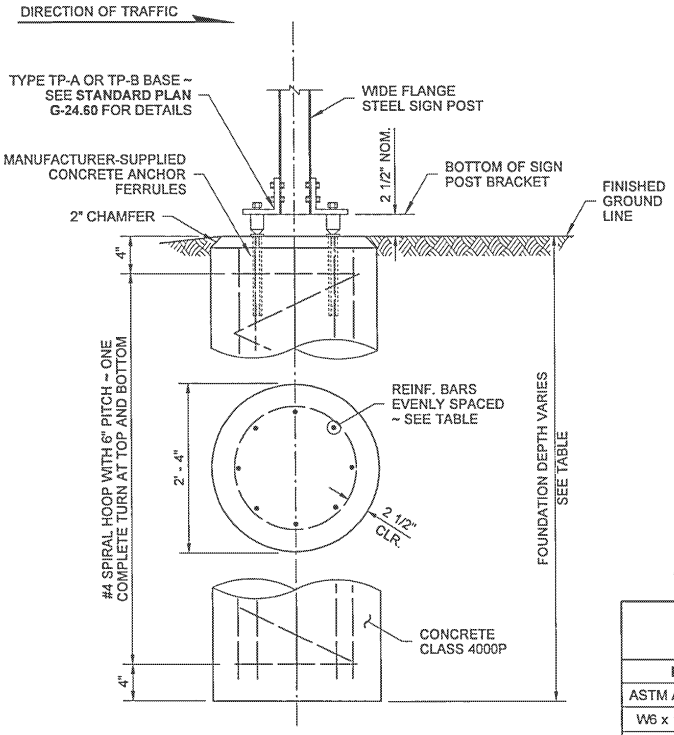

ELEVATION VIEW

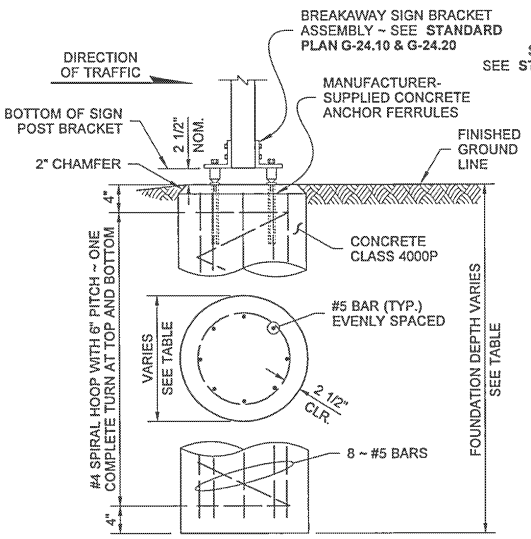

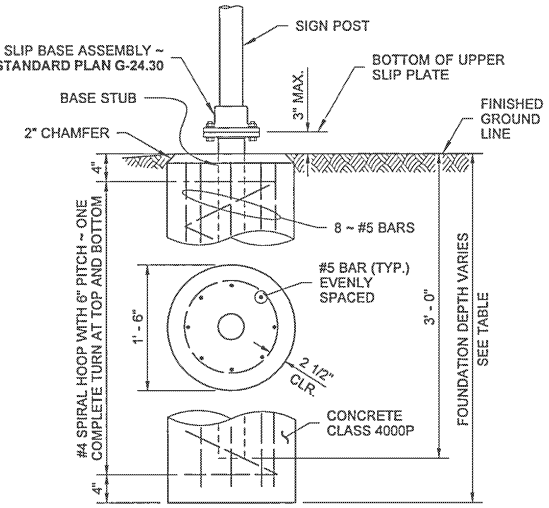

ELEVATION VIEW

TYPE AS & TYPE AP FOUNDATION

TYPE AS FOUNDATION TABLE			
POST SIZE	MAX. XYZ	FDN. DIAM.	FDN. DEPTH ◇1
4" SQ.	250	18"	4' - 0"

TYPE AP FOUNDATION TABLE			
POST SIZE	MAX. XYZ	FDN. DIAM.	FDN. DEPTH ◇1
3" O.D.	225	18"	3' - 6"
3 1/2" O.D.	250	18"	4' - 0"
4" O.D.	275	24"	4' - 0"
4 1/2" O.D.	300	24"	4' - 0"

TYPE TP-A & TYPE TP-B FOUNDATION

TYPE TP-A & TP-B FOUNDATION TABLE SEE NOTE 1					
POST SIZE		MAX. XYZ		VERTICAL REBAR	FDN. DEPTH ◇1
ASTM A 36	ASTM A 992	2 POST ◇3	3 POST		
W6 x 12	W6 x 9	1570	2355	8 ~ # 5	4' - 0"
W6 x 16	W6 x 12	2340	3510	8 ~ # 5	5' - 0"
W8 x 21	W8 x 18	4120	6180	8 ~ # 6	7' - 0"
W10 x 26	W10 x 22	6320	9480	8 ~ # 7	8' - 0"
W12 x 30	W12 x 26	8700	—	8 ~ # 7	9' - 0"

TYPE PL, TYPE PL-T & TYPE PL-U FOUNDATION

TYPE PL, TYPE PL-T & TYPE PL-U FOUNDATION TABLE	
MAX. XYZ	FDN. DEPTH ◇1
225	3' - 6"
265	4' - 0"
300	4' - 6"
600 ◇2	4' - 6"

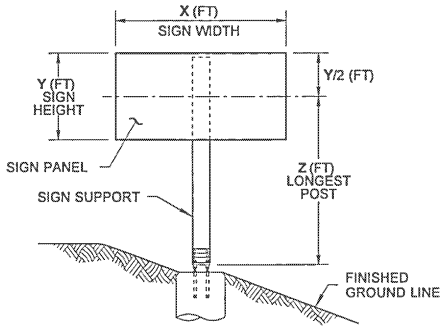

XYZ CALCULATION

$XYZ\ (FT^3) = X \times Y \times Z$

USED TO DETERMINE POST SIZE ~ SEE FOUNDATION TABLES

NOTES

1. Per TRANSPO: 5" to 8" square steel posts are acceptable and require type TP-B foundations.
2. Install conduit for post-mounted Junction Box in the concrete foundation, when required. See **Standard Plan J-40.35, Sheet 2.**

KEY NOTES

◇1 Foundation depths based on allowable lateral bearing pressure in excess of 2500 PSF.

◇2 Two-post installation.

◇3 Single-post installations require square steel posts. For single-post installations, divide the ◇2 post MAX. XYZ in half.

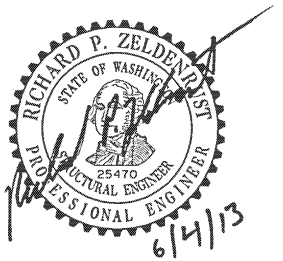

STEEL SIGN SUPPORT FOUNDATION DETAILS

STANDARD PLAN G-25.10-04

SHEET 1 OF 1 SHEET

APPROVED FOR PUBLICATION

STATE DESIGN ENGINEER — DATE 6/10/13

Washington State Department of Transportation

DRAWN BY: FERN LIDDELL

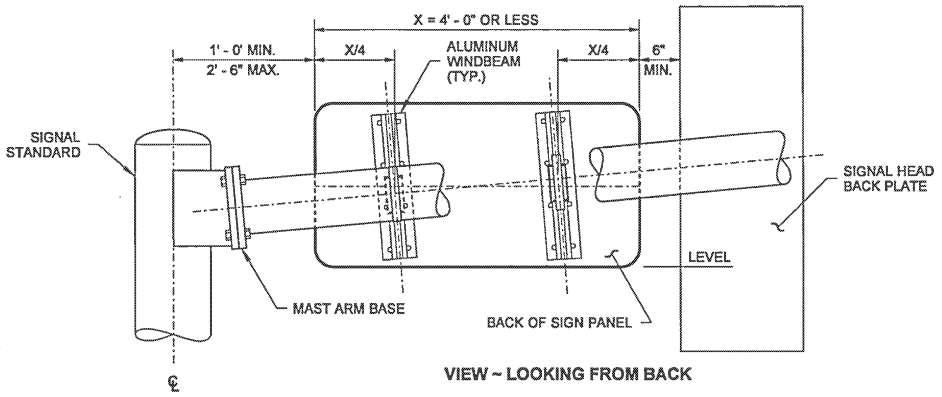

VIEW ~ LOOKING FROM BACK

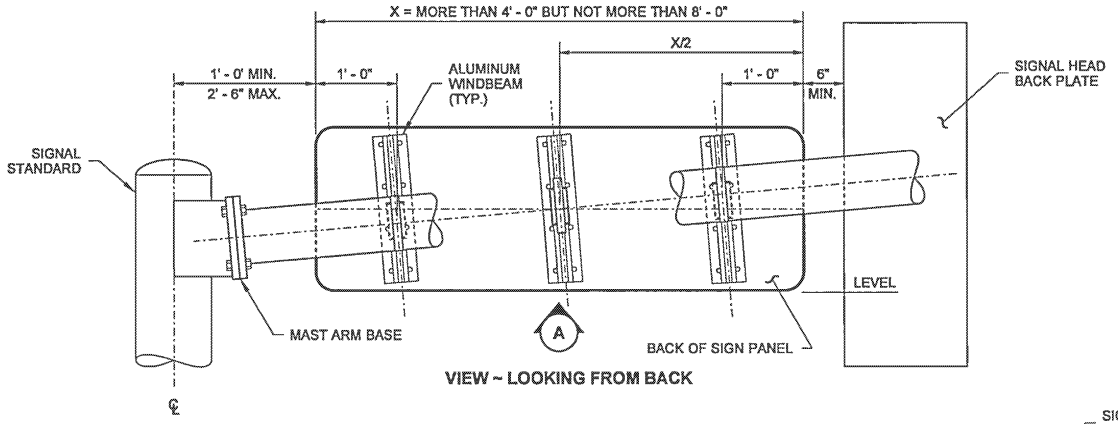

VIEW ~ LOOKING FROM BACK

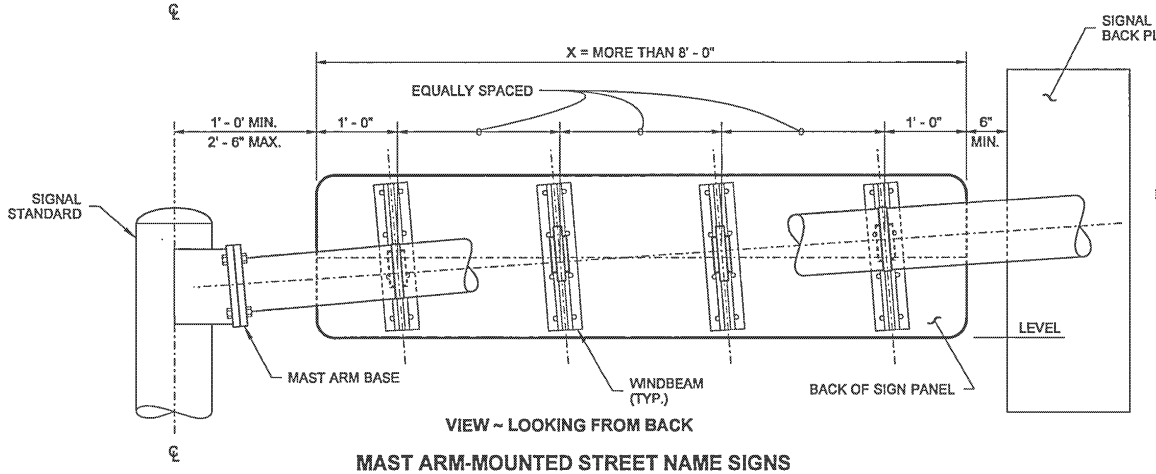

VIEW ~ LOOKING FROM BACK

MAST ARM-MOUNTED STREET NAME SIGNS

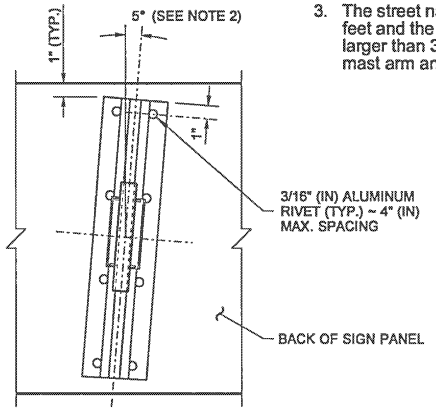

DETAIL (A)

TYPICAL FOR EACH CONNECTION

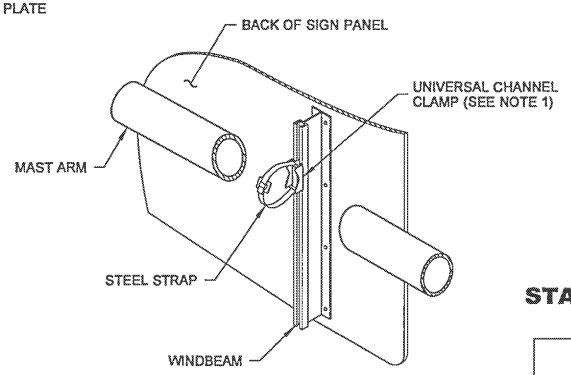

TYPICAL MAST ARM INSTALLATION

NOTES

1. Mounting brackets with steel straps shall be a stainless steel band and buckle system product or an approved equal. Mounting brackets shall be universal channel clamps; steel straps shall be 3/4" (in) wide and 0.030" (in) thick.
2. All signs installed on mast arms or standards (poles) require windbeams. All signs shall be installed with horizontal edges level. A skewed windbeam is required only when the sign is mounted within 12" (in) of the mast arm base (see Detail "A").
3. The street name sign shall be a maximum of 36 square feet and the sign height is a maximum of 3' (ft); signs larger than 36 square feet require a special design mast arm and signal pole.

JOHN C. NISBET
STATE OF WASHINGTON
29115
REGISTERED
PROFESSIONAL ENGINEER

Nisbet, John
Jun 22 2015 9:49 AM

SIGN INSTALLATION ON SIGNAL AND LIGHT STANDARDS STANDARD PLAN G-30.10-04

SHEET 1 OF 2 SHEETS

APPROVED FOR PUBLICATION
Carpenter, Jeff
Jun 23 2015 7:31 AM
STATE DESIGN ENGINEER
Washington State Department of Transportation

DRAWN BY: FERN LIDDELL

DIMENSIONS	
A	B
3' - 0"	9"
4' - 0"	1' - 0"

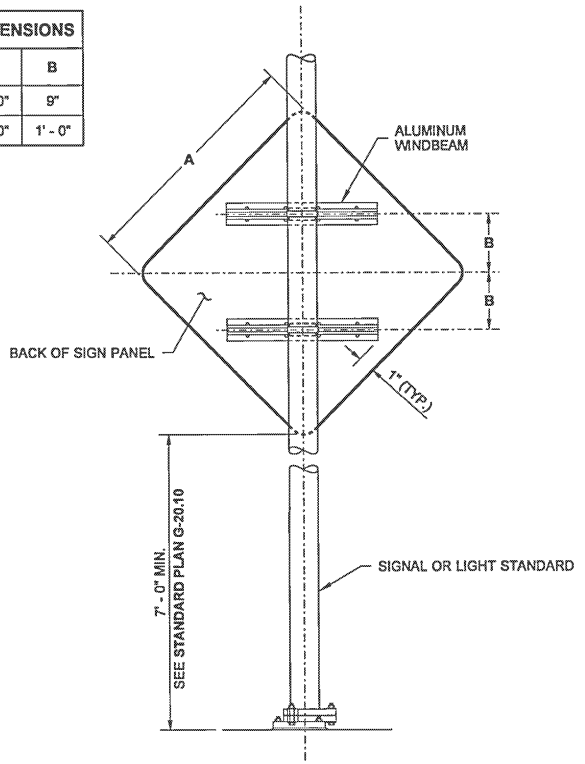

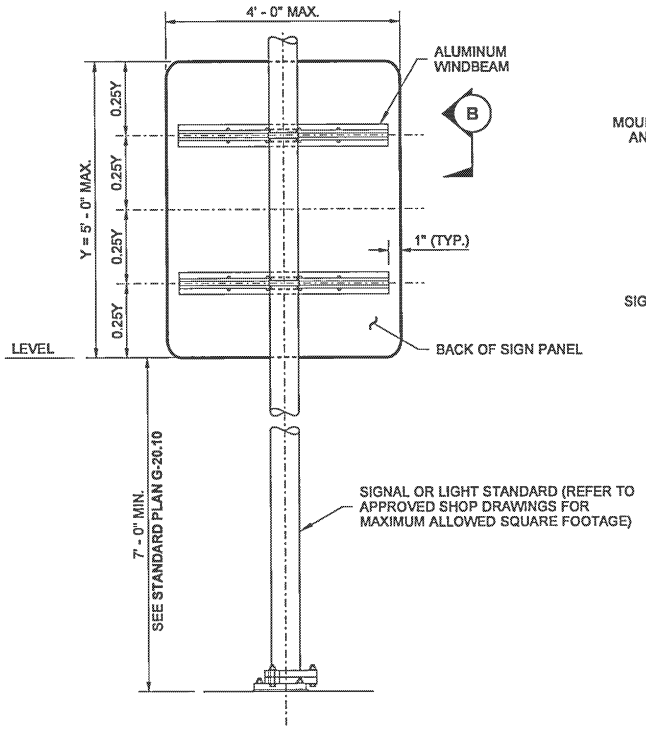

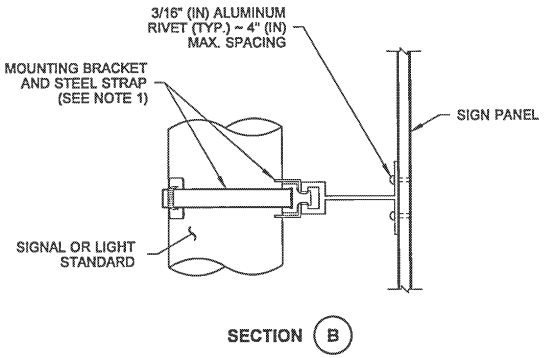

SECTION (B)

SIGN INSTALLATION ON SIGNAL OR LIGHT STANDARD

DIMENSIONS			
X	Y	C	D
3' - 0"	2' - 6"	1' - 0"	6"
3' - 0"	3' - 0"	1' - 0"	6"
3' - 0"	4' - 0"	1' - 3"	9"
4' - 0"	2' - 6"	1' - 3"	9"

NOTE:

Any Lane Use Sign greater than 7.5 sq ft. requires a Special Design Mast Arm and Signal Pole.

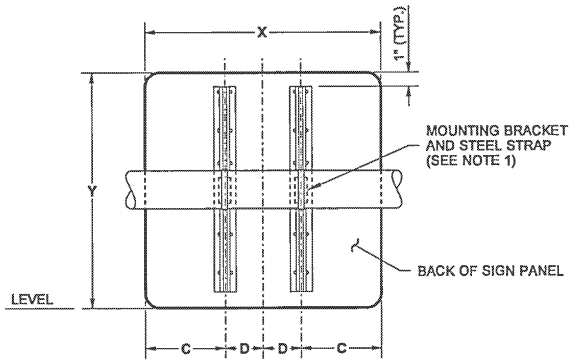

MAST ARM-MOUNTED LANE USE SIGNS

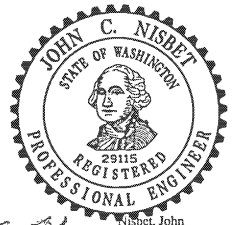

Nisbet, John
Jun 22 2015 9:50 AM

SIGN INSTALLATION ON SIGNAL AND LIGHT STANDARDS STANDARD PLAN G-30.10-04

SHEET 2 OF 2 SHEETS

APPROVED FOR PUBLICATION
Carpenter, Jeff
Jun 23 2015 7:31 AM
STATE DESIGN ENGINEER
Washington State Department of Transportation

DRAWN BY: FERN LIDDELL

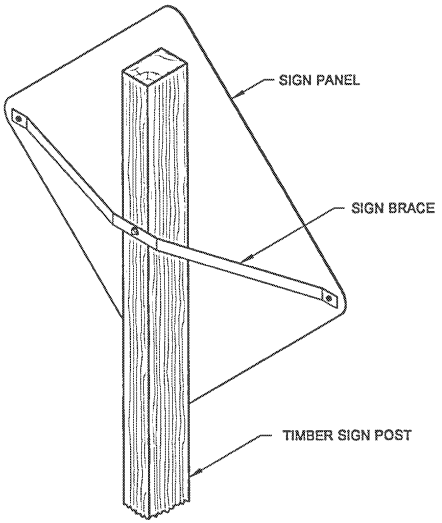

SIGN BRACE ON TIMBER POST

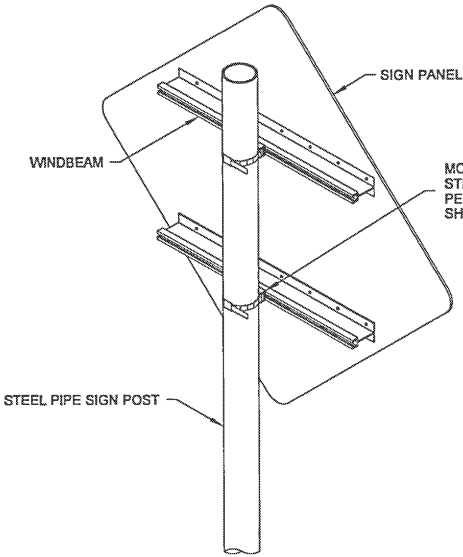

SIGN BRACE ON STEEL PIPE

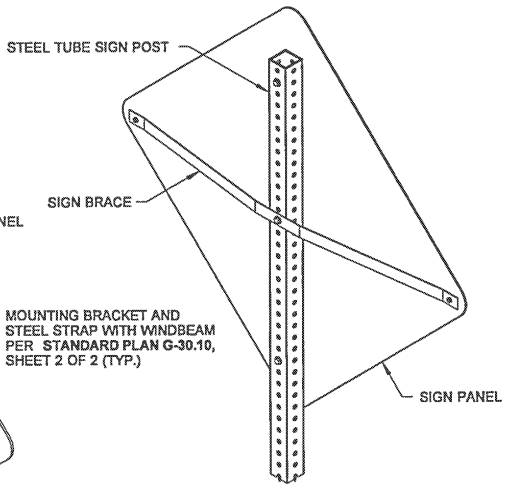

SIGN BRACE ON STEEL TUBE

NOTES

1. Mounting brackets with steel straps shall be a stainless steel band and buckle system product or an approved equal. Mounting brackets shall be one bolt, flared leg; steel straps shall be 3/4" (in) wide and 0.030" (in) thick.
2. Sign braces are required for sign widths of 48" (in) or greater. For sign widths of 36" (in), the sign braces are only installed when specified in the contract.
3. Sign braces are typically necessary on large sign panels that are exposed to high winds, traffic generated wind buffeting, or when snow thrown from plows might impact the sign.
4. A nylon washer shall be placed between the sign and the steel washer when the sign face has Type III, IV,VIII or IX sheeting.
5. Signs 48" (in) or greater can be pinned together, back to back.
6. For signs installed back to back on a single post, no bracing is required.

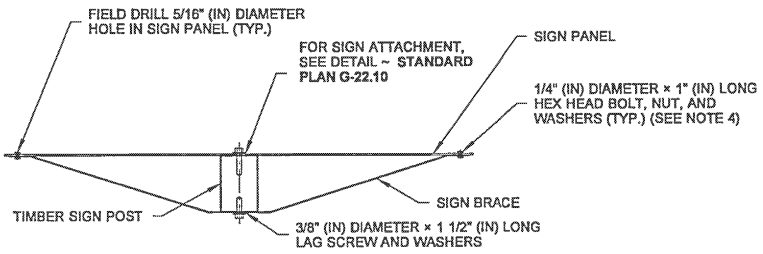

PLAN

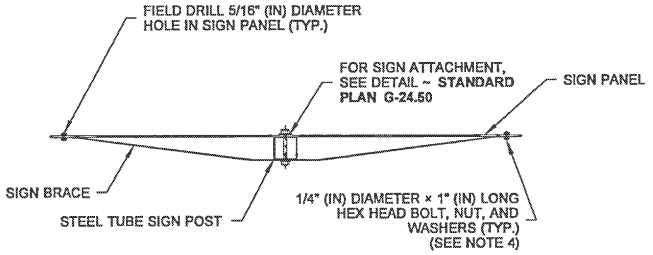

PLAN

JOHN C. NISBET
STATE OF WASHINGTON
29115
REGISTERED
PROFESSIONAL ENGINEER

Nisbet, John
Jun 22 2015 9:50 AM
cosign

SIGN BRACING

STANDARD PLAN G-50.10-02

SHEET 1 OF 2 SHEETS

APPROVED FOR PUBLICATION
Carpenter, Jeff
Jun 23 2015 7:30 AM
cosign
STATE DESIGN ENGINEER
Washington State Department of Transportation

DRAWN BY: FERN LIDDELL

SIGN BRACE DIMENSIONS				
	SIGN TYPE			
	YIELD	DIAMOND-SHAPED	OTHERS	
A	1/3 SIGN WIDTH - 1 3/4"	1/2 SIGN WIDTH - 2 1/4"	1/2 SIGN WIDTH - 1"	
	SIGN POST TYPE			
	4×6 OR 6×6 TIMBER POST	6×8 TIMBER POST	3" DIAM. STEEL PIPE	2 1/2" SQUARE TUBE
B	5 1/2"	7 1/2"	4 3/4"	2 1/2"

NOTE

1. For sign installations on round steel posts, see **Standard Plan G-30.10,** sheet 2 of 2.

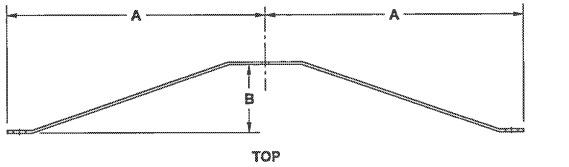

TOP

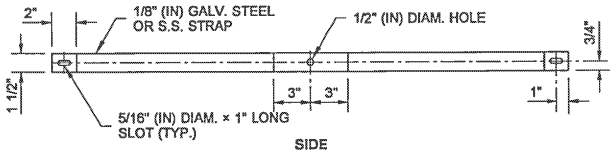

SIDE

SIGN BRACE DETAIL

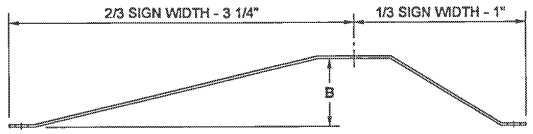

TOP

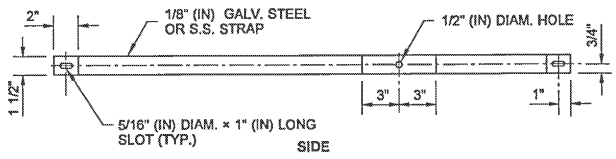

SIDE

NO PASSING ZONE SIGN BRACE DETAIL

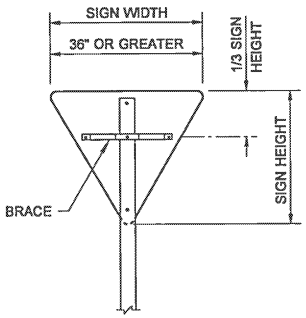

YIELD SIGN

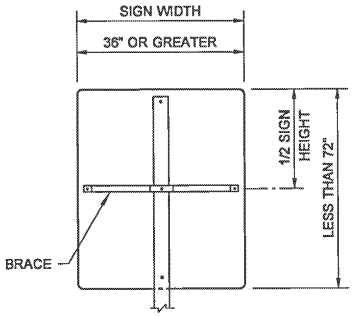

SMALL RECTANGULAR SIGN

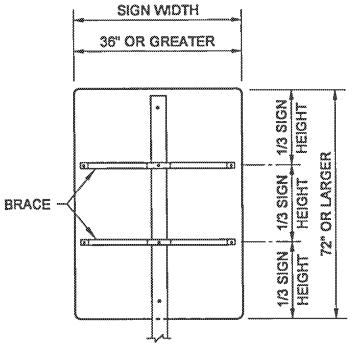

LARGE RECTANGULAR SIGN

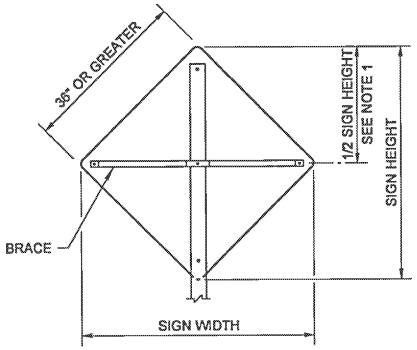

DIAMOND-SHAPED SIGN

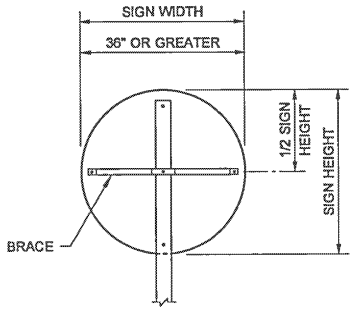

RAILROAD WARNING SIGN

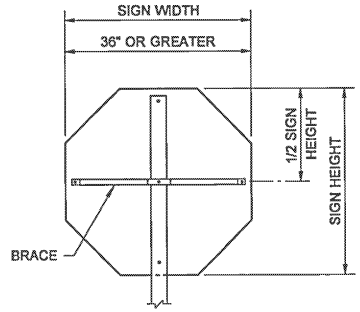

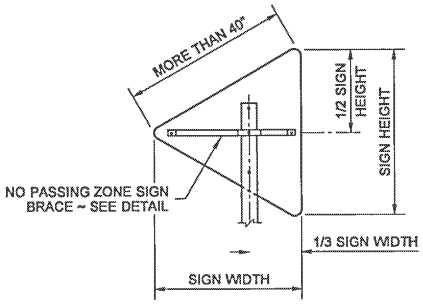

NO PASSING ZONE SIGN

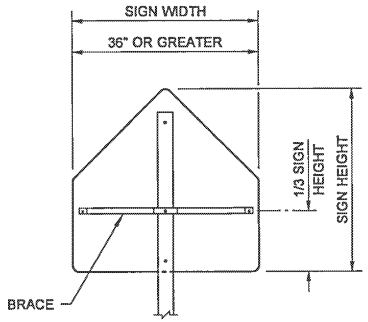

SCHOOL ZONE SIGN

SIGN BRACE PLACEMENT

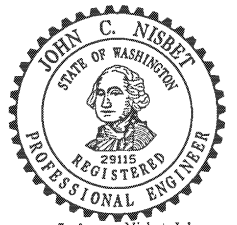

Nisbet, John
Jun 22 2015 9:51 AM

SIGN BRACING

STANDARD PLAN G-50.10-02

SHEET 2 OF 2 SHEETS

APPROVED FOR PUBLICATION
Carpenter, Jeff
Jun 23 2015 7:31 AM

STATE DESIGN ENGINEER

Washington State Department of Transportation

DRAWN BY: FERN LIDDELL

POST SELECTION		
TOTAL SIGN AREA ① Σ (X TIMES Y) (FT^2)	POST SIZE	
	O.D.	WALL
50 OR LESS	18"	0.438"
50+ to 100	18"	0.438"
100+ to 150	24"	0.375"
150+ to 200	24"	0.375"
200+ to 250	24"	0.375"
250+ to 300	24"	0.375"
300+ to 350	24"	0.438"
350+ to 400	24"	0.500"

SINGLE OR DOUBLE CANTILEVER

DOUBLE CANTILEVER ONLY

① SUM OF SIGN FOR DOUBLE CANTILEVER

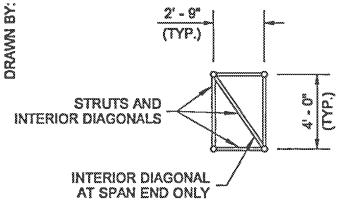

END

ALL TRUSS DIAGONALS AND STRUTS SHALL BE 1 1/2" (IN) PIPE (0.145" (IN) WALL)

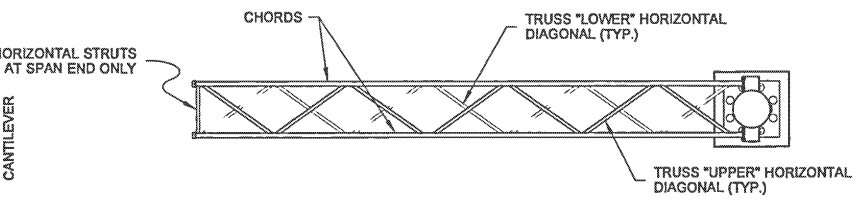

TOP

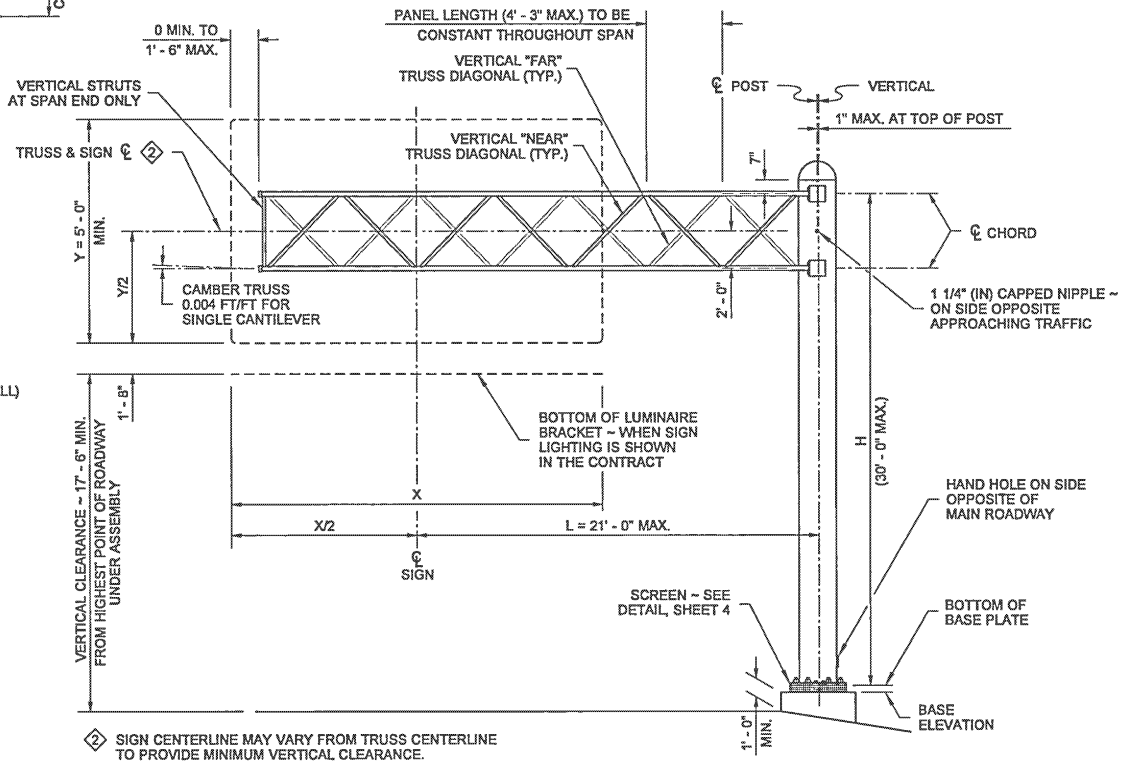

② SIGN CENTERLINE MAY VARY FROM TRUSS CENTERLINE TO PROVIDE MINIMUM VERTICAL CLEARANCE.

ELEVATION

SINGLE CANTILEVER SIGN STRUCTURE

MATERIAL SPECIFICATIONS	
PIPE (CHORDS, DIAGONALS, STRUTS AND POSTS)	ASTM A 36 OR ASTM A 53 GRADE B, TYPE E OR S, OR A 500 GRADE B
PLATES	ASTM A 36
SHAPES	ASTM A 36 ASTM A 992
BOLTS, NUTS, & WASHERS	STD. SPEC. 9-06.5(3)
PIPE, PLATE & SHAPE GALVANIZING	AASHTO M 111
FASTENER GALVANIZING	AASHTO M 232

CHORD SELECTION		
SIGN AREA (X TIMES Y) (FT^2)	CHORD SIZE	
	NOM. DIAM.	WALL
50 OR LESS	2"	0.154"
50+ TO 100	2"	0.218"
100+ TO 150	2 1/2"	0.203"
150+ TO 200	3"	0.216"

NOTES

1. Vertical and horizontal clearance requirements shall be as shown on the Contract Plans.
2. No post splices permitted in lower third of height, nor closer than 3' - 0" to bottom chord, except as otherwise noted. No chord shop splices permitted in first two-thirds of the span, except as otherwise noted. A maximum of two splices are permitted in the post. For post or chord shop splice details, see **Standard Plan G-70.10**.
3. The back-up plates or rings for all full penetration welds shall be welded continuously to the joined pieces. This can be done by either a continuous fillet weld on the back side of the piece, or by a continuous weld in the root of the full penetration weld.
4. All bolt holes shall be drilled, and the diameter shall be 1/16" (in) larger than the nominal bolt diameter, except as noted.
5. The design and analysis of the structures has been done in accordance with AASHTO Standard Specification for Structural Supports for Highway Signs, Luminaires and Traffic Signals Dated 2001, using 90 MPH wind velocity and fatigue category - I.
6. Adjust post alignment in plane normal to roadway centerline by means of leveling nuts located below base plate to maintain upward slope in cantilever arm(s). Tighten anchor nuts above base plate in accordance with **Standard Specification 6-03.3(33).**
7. Variable Message Signs (VMS) exceeding 700 lbs. and/or 200 sq. ft. shall not be installed on cantilever structure.
8. For electrical requirements, see **Standard Plan J-75.45.**

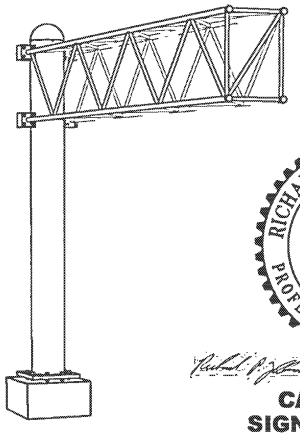

PERSPECTIVE

RICHARD P. ZELDENRUST — STATE OF WASHINGTON — 25470 — STRUCTURAL ENGINEER — PROFESSIONAL ENGINEER

Zeldenrust, Richard
2015.06.11 14:05:54 -07'00'

CANTILEVER SIGN STRUCTURE (TRUSS TYPE)

STANDARD PLAN G-60.10-03

SHEET 1 OF 4 SHEETS

APPROVED FOR PUBLICATION
Carpenter, Jeff
Jun 18 2015 7:49 AM
STATE DESIGN ENGINEER
Washington State Department of Transportation

DRAWN BY: FERN LIDDELL

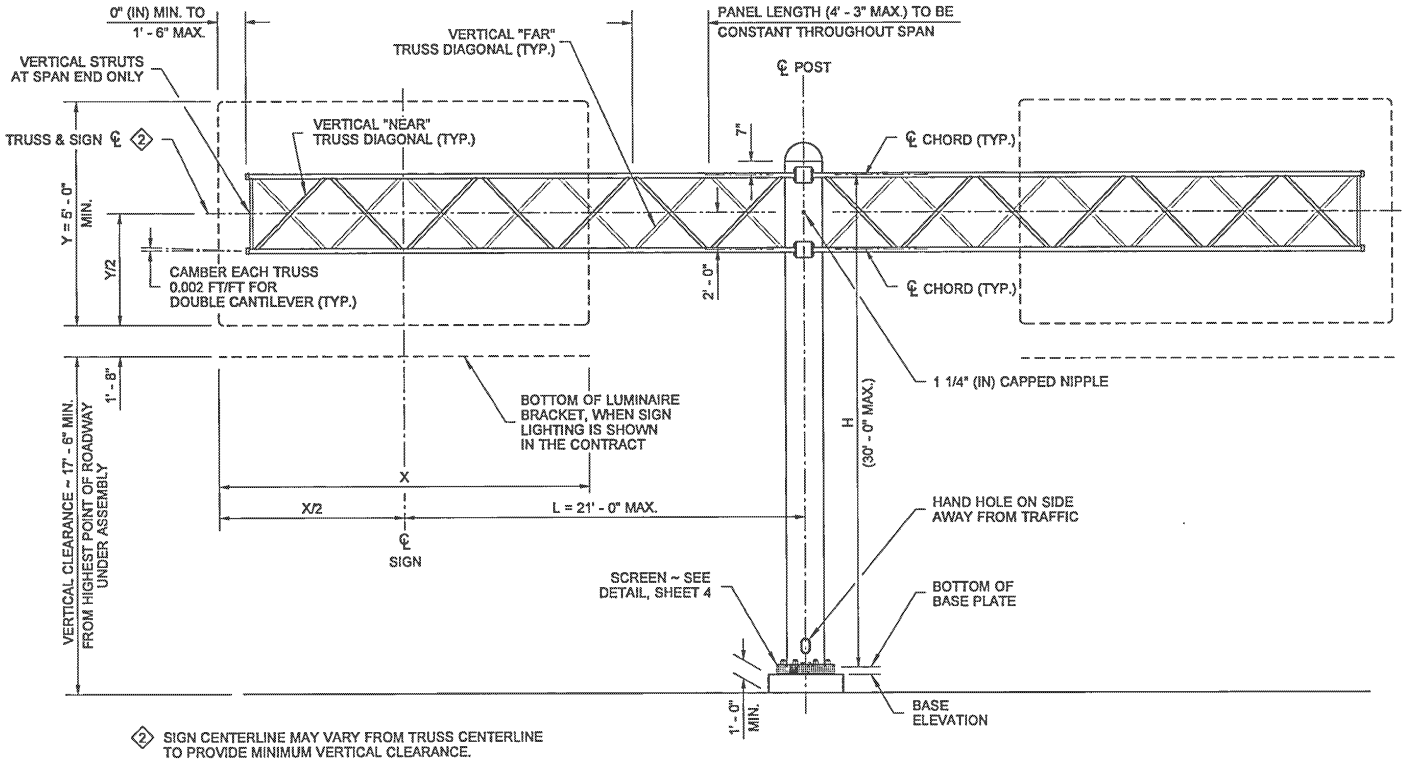

ELEVATION

DOUBLE CANTILEVER SIGN STRUCTURE

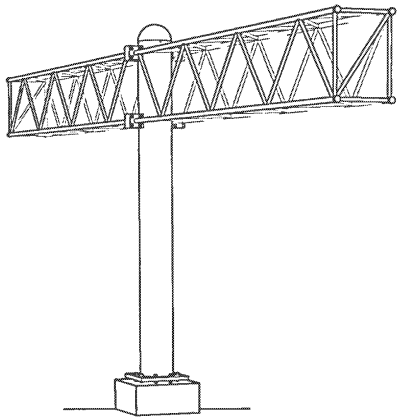

PERSPECTIVE

RICHARD P. ZELDENRUST
STATE OF WASHINGTON
25470
STRUCTURAL ENGINEER
PROFESSIONAL ENGINEER

Zeldenrust, Richard
2015.06.11 14:06:24 -07'00'

CANTILEVER SIGN STRUCTURE (TRUSS TYPE) STANDARD PLAN G-60.10-03

SHEET 2 OF 4 SHEETS

APPROVED FOR PUBLICATION
Carpenter, Jeff
Jun 18 2015 7:49 AM
STATE DESIGN ENGINEER
Washington State Department of Transportation

DRAWN BY: FERN LIDDELL

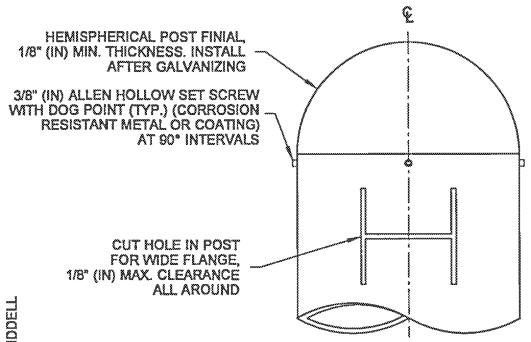

ELEVATION
ROTATED 90° TO SHOW CUTOUT

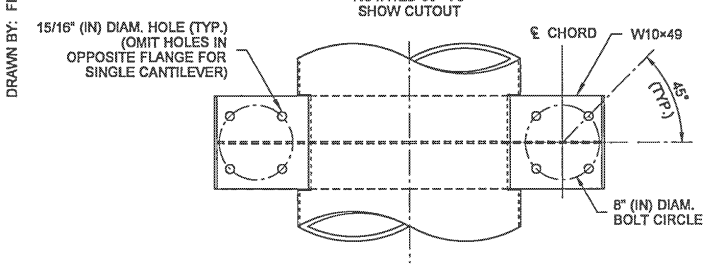

ELEVATION

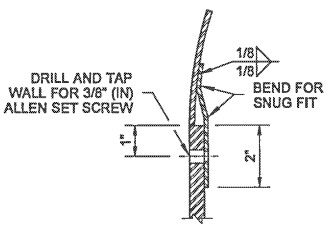

SECTION THROUGH FINIAL AND POST

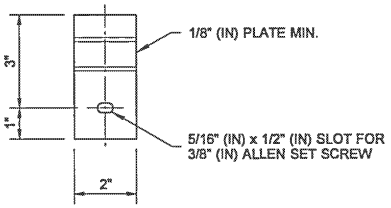

FINIAL BRACKET

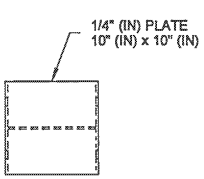

END OF CHORD

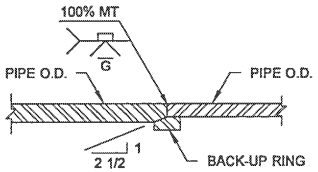

DETAIL "D"

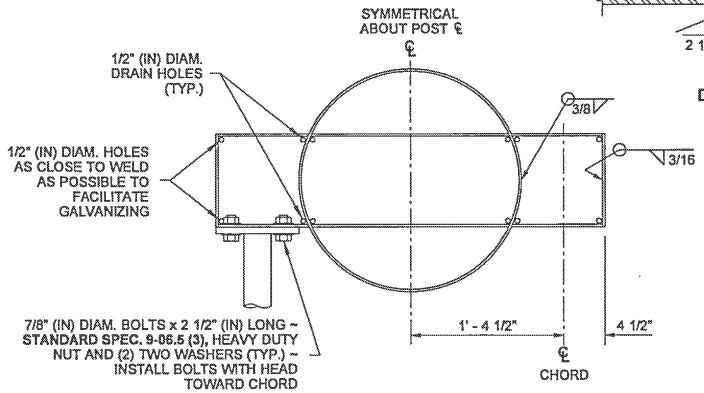

TOP

CHORD TO POST CONNECTION DETAIL

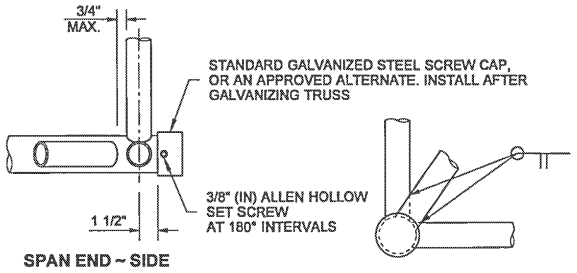

SPAN END ~ SIDE

SPAN END ~ END
OPPOSITE HAND SHOWN FOR CLARITY

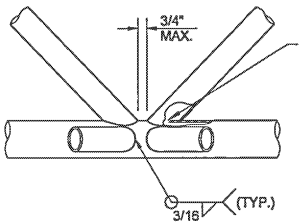

DIAGONAL CONNECTION DETAIL
TYPICAL OF ALL DIAGONALS

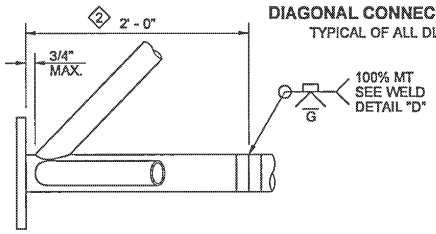

BASE ~ SIDE

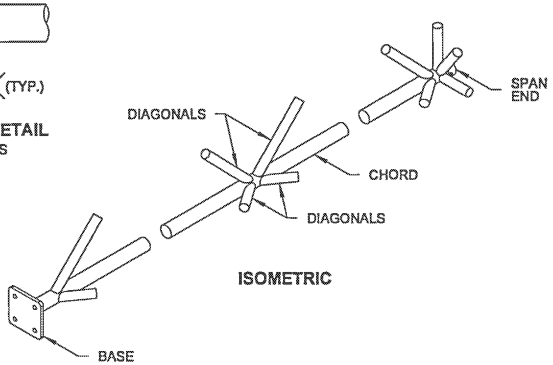

ISOMETRIC

② 3" (IN) DIAM. PIPE (t = 0.300) SPLICE WITH 3" (IN) DIAM. PIPE (t = 0.216) (SEE CHORD SELECTION TABLE)
2 1/2" (IN) DIAM. PIPE (t = 0.276) SPLICE WITH 2 1/2" (IN) DIAM. PIPE (t = 0.203) (SEE CHORD SELECTION TABLE)

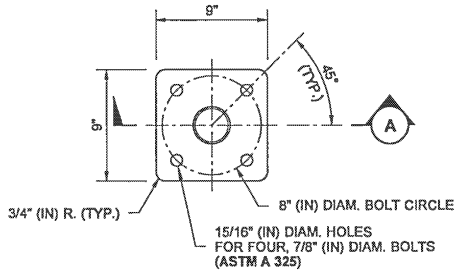

BASE ~ TOP

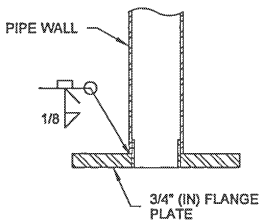

SECTION (A)

TYPICAL TRUSS DETAILS
ENDS OF DIAGONALS SHALL BE CUT TO FIT NEATLY AGAINST CHORDS

RICHARD P. ZELDENRUST
STATE OF WASHINGTON
25470
STRUCTURAL ENGINEER
PROFESSIONAL ENGINEER

Zeldenrust, Richard
2015.06.11 14:06:50 -07'00'

CANTILEVER SIGN STRUCTURE (TRUSS TYPE) STANDARD PLAN G-60.10-03

SHEET 3 OF 4 SHEETS

APPROVED FOR PUBLICATION
Carpenter, Jeff
Jun 18 2015 7:49 AM
STATE DESIGN ENGINEER
Washington State Department of Transportation

DRAWN BY: FERN LIDDELL

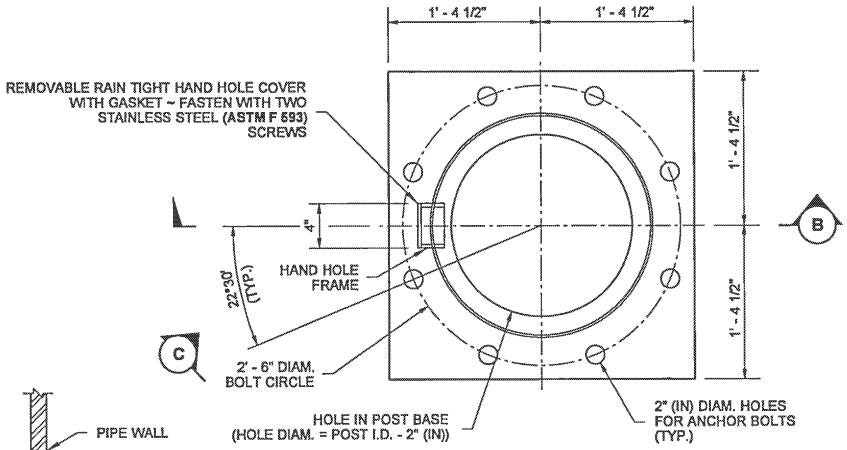

TOP

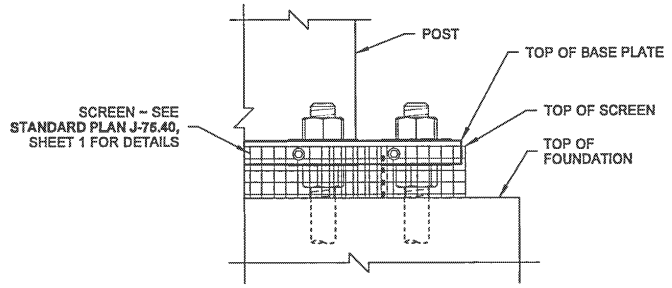

SCREEN DETAIL

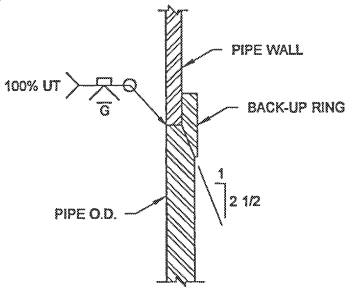

DETAIL "G"

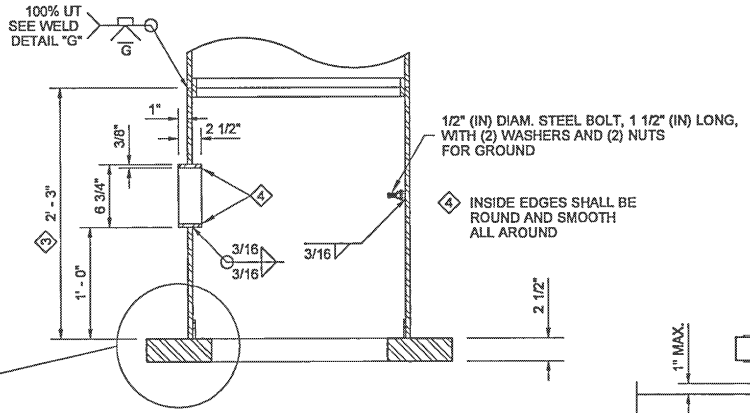

SECTION B

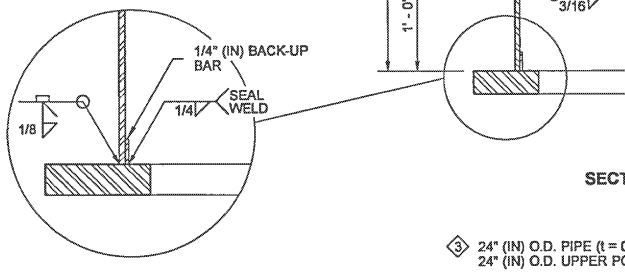

BASE WELD DETAIL

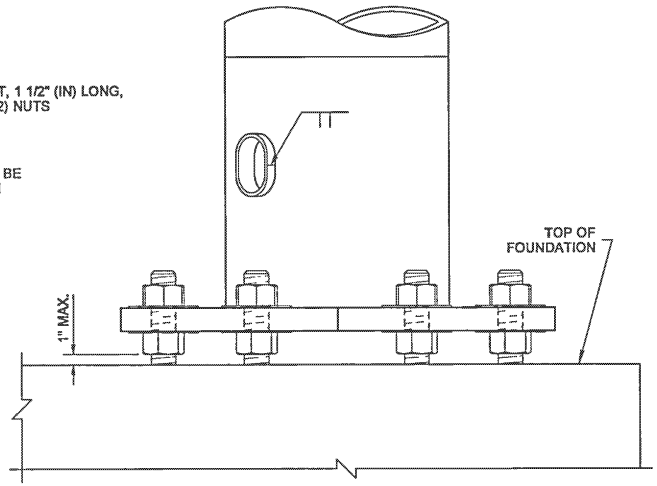

VIEW C

3 24" (IN) O.D. PIPE (t = 0.969) SPLICE WITH 24" (IN) O.D. UPPER POST (SEE POST SELECTION TABLE)
18" (IN) O.D. PIPE (t = 0.750) SPLICE WITH 18" (IN) O.D. UPPER POST (SEE POST SELECTION TABLE)

POST BASE DETAILS

RICHARD P. ZELDENRUST
STATE OF WASHINGTON
25470
STRUCTURAL ENGINEER
PROFESSIONAL ENGINEER

Zeldenrust, Richard
2015.06.11 14:07:16 -07'00'

CANTILEVER SIGN STRUCTURE (TRUSS TYPE) STANDARD PLAN G-60.10-03

SHEET 4 OF 4 SHEETS

APPROVED FOR PUBLICATION
Carpenter, Jeff
Jun 18 2015 7:50 AM
STATE DESIGN ENGINEER
Washington State Department of Transportation

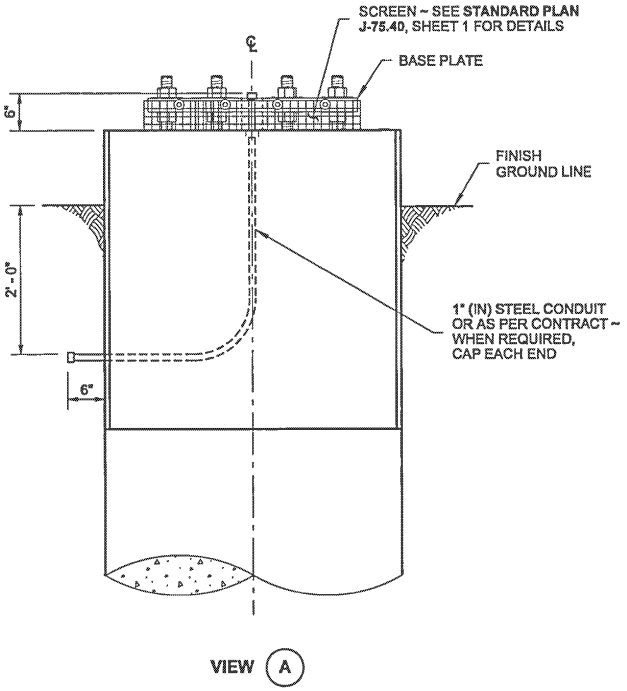

VIEW (A)

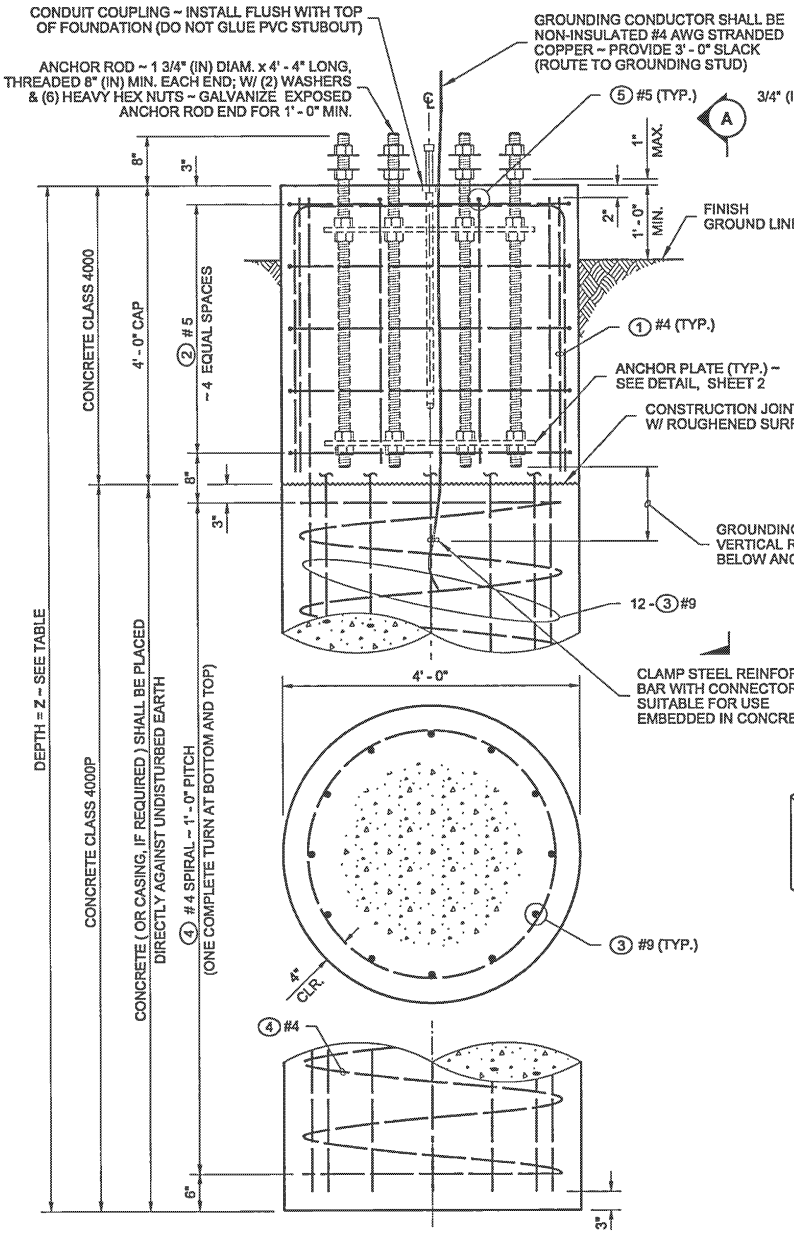

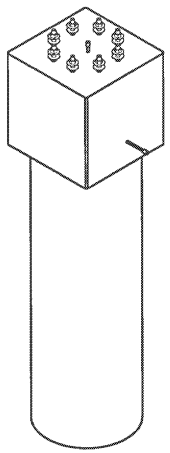

ISOMETRIC

VALUES OF Z			
FOUNDATION TYPE	TOTAL SIGN AREA		ALLOWABLE LATERAL BEARING PRESSURE (PSF)
	200 SF OR LESS	200 SF ~ 400 SF	
	Z	Z	
1	13' - 0"	18' - 0"	1500 AND UP
	16' - 0"	22' - 0"	1000 ~ 1499

NOTES

1. See **Standard Specification 8-21.3(9)** for construction requirements.
2. Use a template to locate and secure bolts in place during foundation installation.

DRAWN BY: FERN LIDDELL

RICHARD P. ZELDENRUST STATE OF WASHINGTON 25470 STRUCTURAL ENGINEER PROFESSIONAL ENGINEER

Zeldenrust, Richard
2015.06.11 14:08:52 -07'00'

CANTILEVER SIGN STRUCTURE (TRUSS-TYPE) FOUNDATION TYPE 1

STANDARD PLAN G-60.20-02

SHEET 1 OF 2 SHEETS

APPROVED FOR PUBLICATION
Carpenter, JeT
Jun 18 2015 7:51 AM
STATE DESIGN ENGINEER
Washington State Department of Transportation

DRAWN BY: FERN LIDDELL

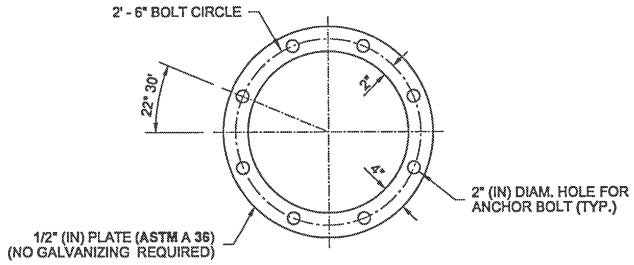

ANCHOR PLATE DETAIL

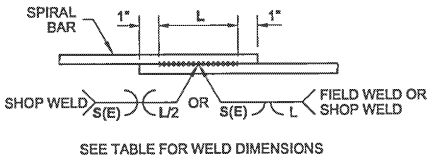

SPIRAL WELDED LAP SPLICE DETAIL

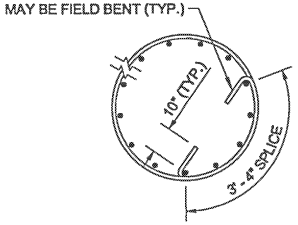

SPIRAL LAP SPLICE DETAIL

WELDING SHALL MEET THE REQUIREMENTS OF **STANDARD SPEC. 6-02.3(24)E** FOR WELD DIMENSIONS – SEE TABLE BELOW

COLUMN AND SHAFT SPIRAL OPTIONS

DEFORMED BAR AASHTO M 31 GRADE 60	PLAIN STEEL BAR AASHTO M 31 GRADE 60	COLD DRAWN WIRE AASHTO M 32	DEFORMED WIRE AASHTO M 225	WELD DIMENSIONS (INCHES)		
				S	E	L
# 4	1/2" DIAM.	W20	D20	1/4	1/8	4
# 5	5/8" DIAM.	W31	D31	5/16	3/16	6
# 6	3/4" DIAM.	W44	D44	3/8	3/16	6

BAR LIST

MARK	LOCATION	QTY.	LENGTH	SIZE	TYPE
①	CAP VERTICAL	4	3' - 10"	#4	STR.
②	CAP HOOPS	5	15' - 9"	#5	
③	SHAFT VERTICAL	12	"Z" MINUS CLEARANCES	#9	STR.
④	SHAFT SPIRAL	1	AS REQUIRED	#4	
⑤	CAP TOP	4	10' - 10"	#5	

BENDING DIAGRAM
(ALL DIMENSIONS ARE OUT TO OUT)

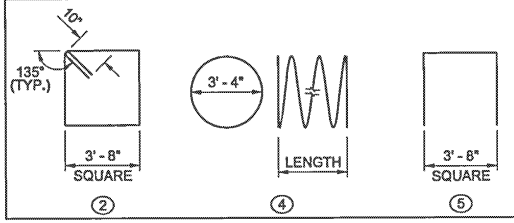

MATERIAL SPECIFICATIONS

SHAFT CONCRETE	CLASS 4000P
ALL OTHER CONCRETE	CLASS 4000
STEEL REINF. BAR	AASHTO M 31 GRADE 60
ANCHOR RODS	ASTM F 1554 GRADE 105
ANCHOR NUTS	ASTM A 563 GRADE DH
ANCHOR WASHERS	ASTM F436
ANCHORAGE GALVANIZING	AASHTO M 232
ANCHOR PLATE	ASTM A 36

RICHARD P. ZELDENRUST
STATE OF WASHINGTON
25470
STRUCTURAL ENGINEER
PROFESSIONAL ENGINEER

Zeldenrust, Richard
2015.06.11 14:09:11 -07'00'

CANTILEVER SIGN STRUCTURE (TRUSS-TYPE) FOUNDATION TYPE 1

STANDARD PLAN G-60.20-02

SHEET 2 OF 2 SHEETS

APPROVED FOR PUBLICATION
Carpenter, Jeff
Jun 18 2015 7:51 AM
STATE DESIGN ENGINEER
Washington State Department of Transportation

DRAWN BY: FERN LIDDELL

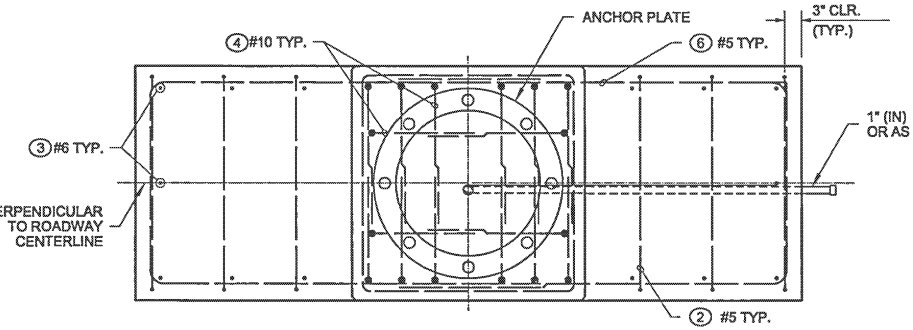

PLAN

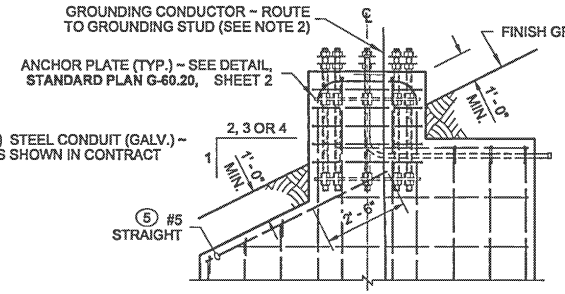

SIDE
ON SLOPED GRADE
(SHOWN AT REDUCED SCALE)

NOTES

1. See **Standard Specification 8-21.3(9)** for construction requirements.
2. Grounding Conductor shall be non-insulated #4 AWG stranded copper. Provide 3' - 0" min. slack.

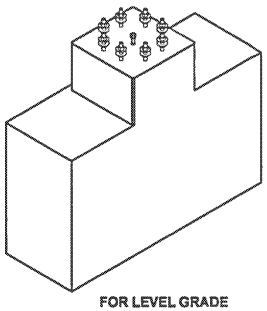

FOR LEVEL GRADE

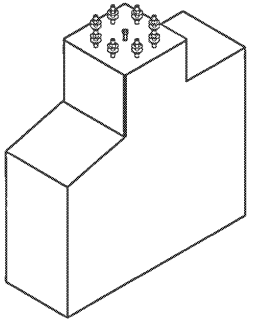

FOR SLOPED GRADE

ISOMETRIC

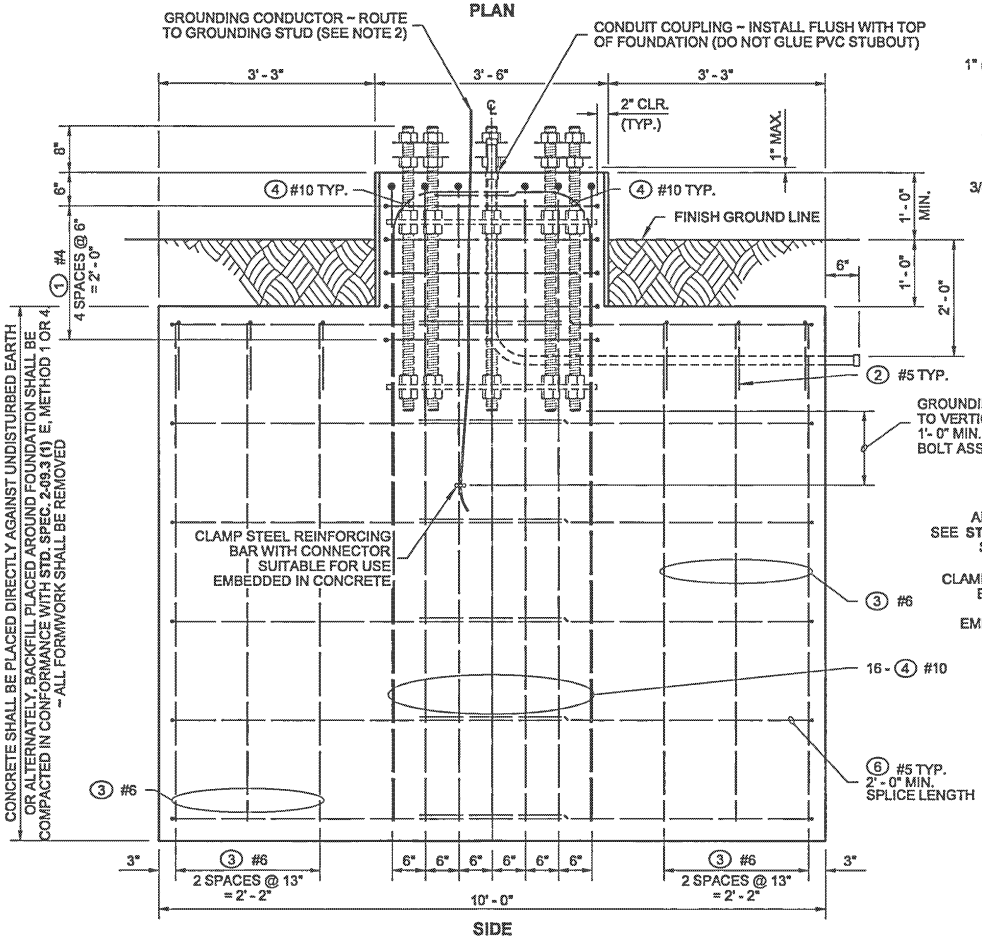

SIDE

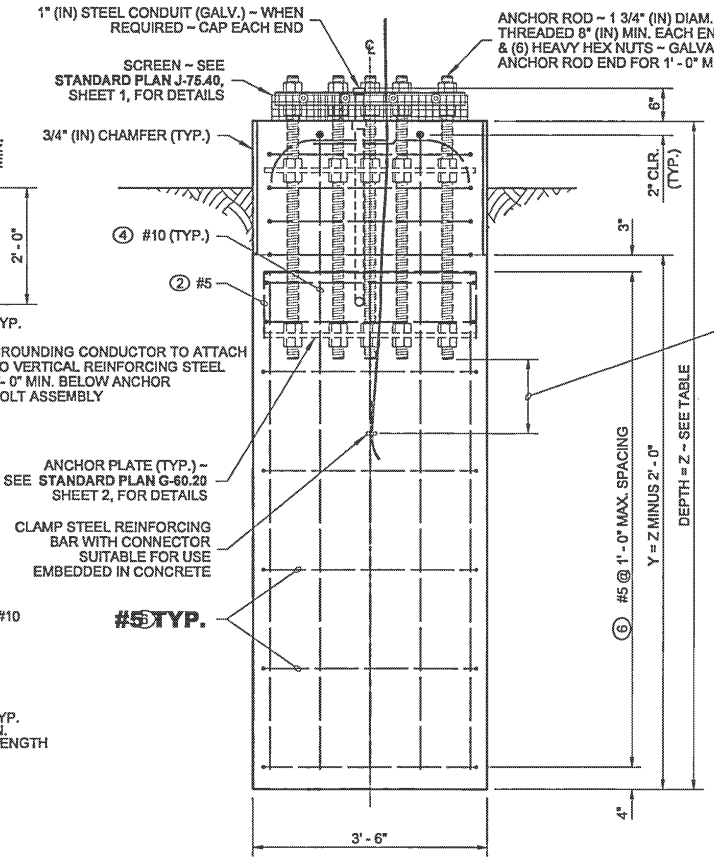

END

RICHARD P. ZELDENRUST
STATE OF WASHINGTON
25470
STRUCTURAL ENGINEER
PROFESSIONAL ENGINEER

Zeldenrust, Richard
2015.06.11 14:09:53 -07'00'

CANTILEVER SIGN STRUCTURE (TRUSS-TYPE) FOUNDATION TYPES 2 & 3

STANDARD PLAN G-60.30-02

SHEET 1 OF 2 SHEETS

APPROVED FOR PUBLICATION
Carpenter, Jeff
Jun 18 2015 7:52 AM
STATE DESIGN ENGINEER

Washington State Department of Transportation

DRAWN BY: FERN LIDDELL

BAR LIST ~ TYPES 2 AND 3

MARK	LOCATION	TOTAL SIGN AREA			
		200 SF OR LESS		+200 SF -400 SF	
		QTY.	SIZE	QTY.	SIZE
①	PEDESTAL HOOP	5	#4	5	#4
②	FOUNDATION WALL TIES	6	#5	6	#5
③	FOUNDATION VERTICALS	14	#6	14	#6
④	PEDESTAL VERTICALS	16	#10	16	#10
⑤	FOUNDATION WALL HORIZONTALS AT SLOPE	2	#5	2	#5
⑥	FOUNDATION WALL HORIZONTALS	VARIES SEE PLANS	#5	VARIES SEE PLANS	#5

BENDING DIAGRAM

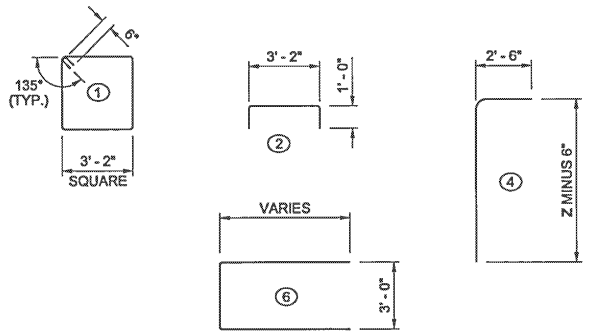

VALUES OF Z

FOUNDATION TYPE	TOTAL SIGN AREA		ALLOWABLE LATERAL BEARING PRESSURE (PSF)
	200 SF OR LESS	200 SF ~ 400 SF	
	Z	Z	
TYPE 2	9' - 0"	11' - 0"	2500 OR GREATER
TYPE 3	11' - 0"	13' - 6"	NOT LESS THAN 1500

MATERIAL SPECIFICATIONS

CONCRETE	CLASS 4000P
STEEL REINF. BAR	AASHTO M 31 GRADE 60
ANCHOR RODS	ASTM F 1554 GRADE 105
ANCHOR NUTS	ASTM A 563 GRADE DH
ANCHOR WASHERS	ASTM F436
ANCHORAGE GALVANIZING	AASHTO M 232
ANCHOR PLATE	ASTM A 36

RICHARD P. ZELDENRUST
STATE OF WASHINGTON
25470
STRUCTURAL ENGINEER
PROFESSIONAL ENGINEER

Zeldenrust, Richard
2015.06.11 14:10:17 -07'00'

CANTILEVER SIGN STRUCTURE (TRUSS-TYPE) FOUNDATION TYPES 2 & 3

STANDARD PLAN G-60.30-02

SHEET 2 OF 2 SHEETS

APPROVED FOR PUBLICATION
Carpenter, JeffT
Jun 18 2015 7:52 AM
STATE DESIGN ENGINEER
Washington State Department of Transportation

DRAWN BY: FERN LIDDELL

① SEE CHORD TO END POST CONNECTION TYPE Q

② SEE CHORD TO END POST CONNECTION TYPE R

③ TOP END TRUSS DIAGONAL JOINS END POSTS AT CHORDS WHERE VERTICAL AND HORIZONTAL DIAGONALS CONNECT

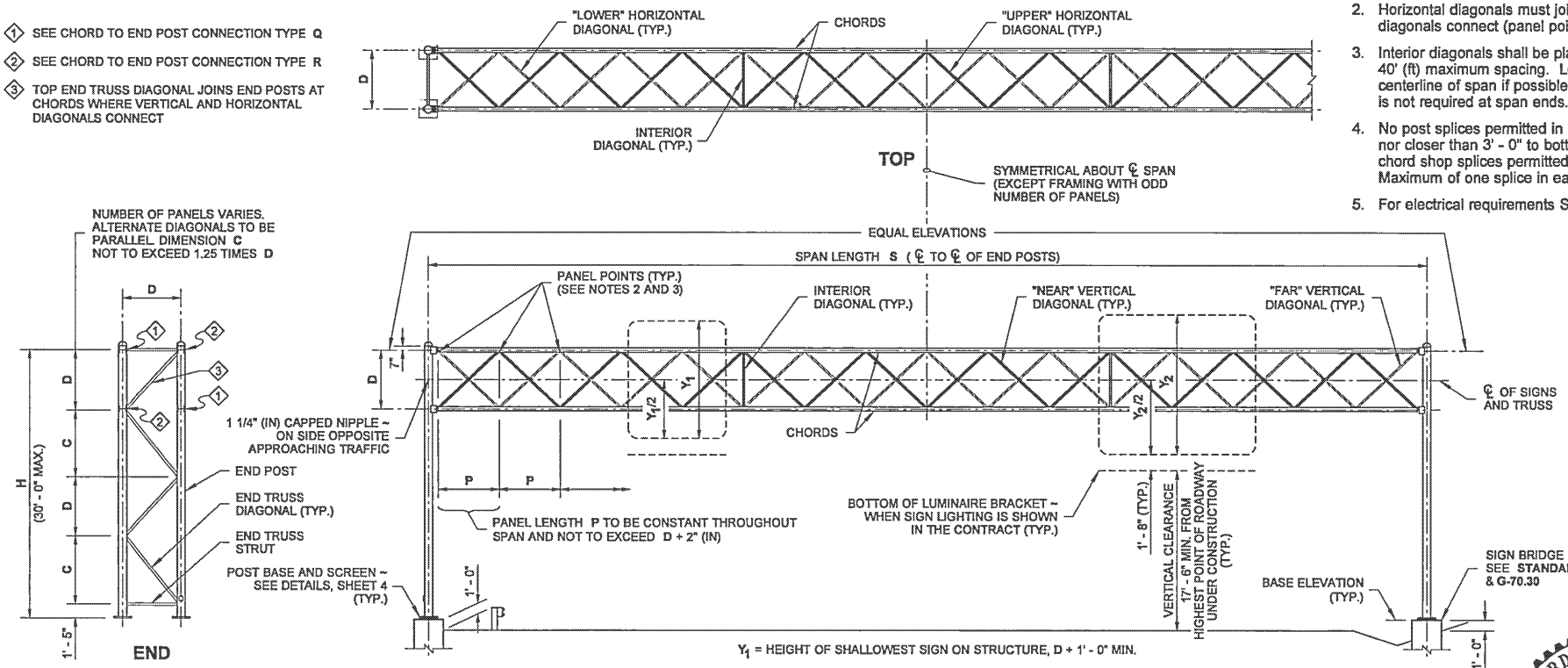

ELEVATION

NOTES

1. Horizontal and vertical clearance requirements shall be as shown in Contract Plans.
2. Horizontal diagonals must join chords where vertical diagonals connect (panel points).
3. Interior diagonals shall be placed at panel points, 40' (ft) maximum spacing. Locate symmetrically about centerline of span if possible. An interior diagonal is not required at span ends.
4. No post splices permitted in lower third of height, nor closer than 3' - 0" to bottom of chord. No chord shop splices permitted in middle third of span. Maximum of one splice in each end post.
5. For electrical requirements See **Standard Plan J-75.45.**

MATERIAL SPECIFICATIONS	
PIPE (CHORDS, DIAGONALS, STRUTS AND POSTS)	ASTM A 36 OR ASTM A 53 GRADE B, TYPE E OR S, OR A 500 GRADE B
PLATES	ASTM A 36
SHAPES	ASTM A 36 ASTM A 992
BOLTS, NUTS, & WASHERS	STD. SPEC. 9-06.5(3)
PIPE, PLATE & SHAPE GALVANIZING	AASHTO M 111
FASTENER GALVANIZING	AASHTO M 232

STRUCTURE DIMENSIONS						
SPAN LENGTH S	DIMENSION D	TOP AND BOTTOM CHORDS	DIAGONALS	END TRUSS POSTS	END TRUSS STRUTS AND DIAGONALS	TOTAL SIGN AREA (MAX.) (SQ. FT.)
60' OR LESS	4' - 0"	3" x .216"	1 1/4" x .140"	10" x .279"	2 1/2" x .203"	384
61' to 90'	5' - 0"	4" x .237"	2" x .154"	10" x .279"	2 1/2" x .203"	624
91' to 120'	6' - 0"	5" x .258"	2" x .154"	10" x .307"	3" x .216"	864
121' to 150'	7' - 0"	6" x .280"	2 1/2" x .203"	10" x .365"	3 1/2" x .226"	1104

ALL MEMBERS ARE PIPE. VALUES SHOWN ARE NOMINAL PIPE SIZE AND WALL THICKNESS.

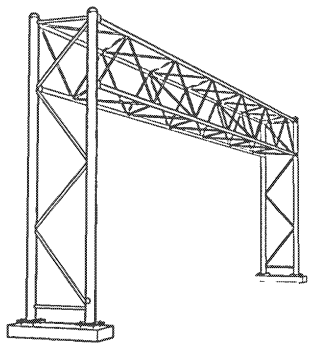

PERSPECTIVE

RICHARD P. ZELDENRUST — STATE OF WASHINGTON — 25470 — STRUCTURAL ENGINEER — PROFESSIONAL ENGINEER

Zeldenrust, Richard
2015.06.11 14:11:02 -07'00'

SIGN BRIDGE (TRUSS-TYPE)

STANDARD PLAN G-70.10-03

SHEET 1 OF 4 SHEETS

APPROVED FOR PUBLICATION
Carpenter, Jeff
Jun 18 2015 7:53 AM
STATE DESIGN ENGINEER

Washington State Department of Transportation

DRAWN BY: FERN LIDDELL

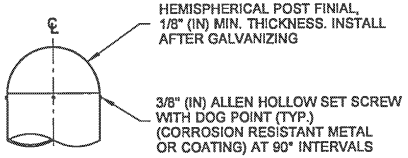

ELEVATION

FINIAL DETAIL

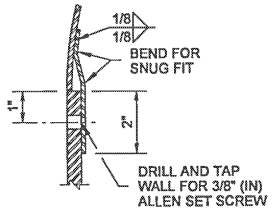

SECTION THROUGH FINIAL AND POST

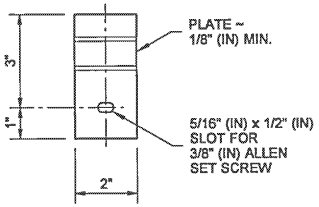

FINIAL BRACKET

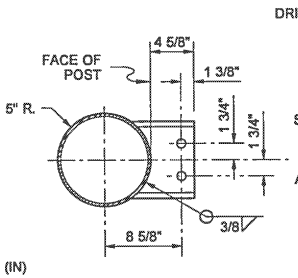

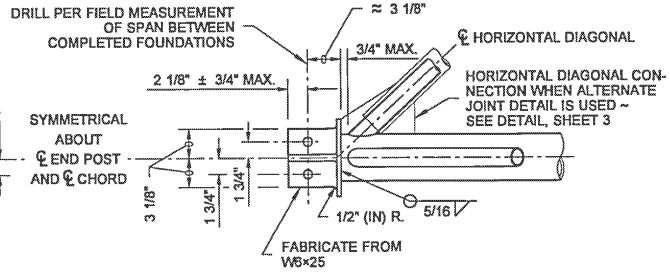

TOP

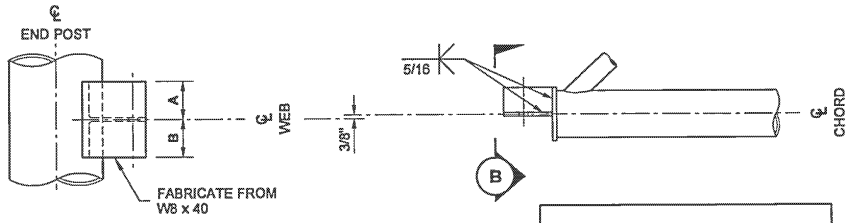

ELEVATION

CONNECTION DATA			
SPAN LENGTH	A	B	BOLT DIAMETER
60' OR LESS	2 3/8"	1 5/8"	7/8" ◇A
61' TO 90'	2 7/8"	2 1/8"	
91' TO 120'	3 3/8"	2 5/8"	
121' TO 150'	4 1/16"	3 1/4"	

◇A INSTALL BOLTS WITH HEAD UPWARD. EXCLUDE BOLT THREADING FROM GRIP.

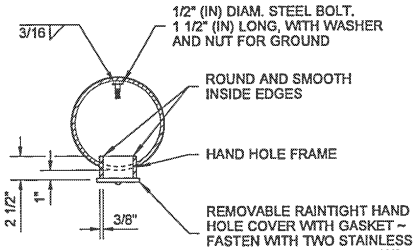

TOP

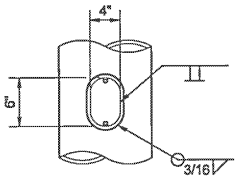

ELEVATION
(COVER NOT SHOWN FOR CLARITY)

HAND HOLE DETAIL

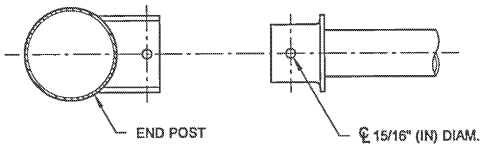

TOP

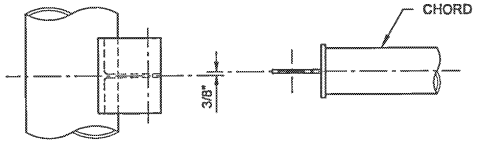

ELEVATION

CHORD TO END POST CONNECTION TYPE Q
USED WHERE NO DIAGONALS CONNECT
DETAILS NOT SHOWN ARE SAME AS CHORD TO END POST CONNECTION TYPE R, OMITTING THE 3/4" PLATE STIFFENER ON THE TEE MEMBER.

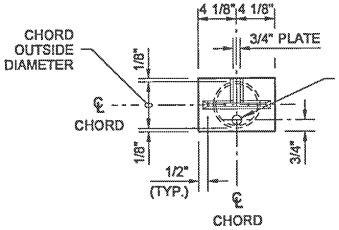

VIEW (B)

CHORD TO END POST CONNECTION TYPE R
USED WHERE DIAGONALS CONNECT

RICHARD P. ZELDENRUST
STATE OF WASHINGTON
25470
STRUCTURAL ENGINEER
PROFESSIONAL ENGINEER

Zeldenrust, Richard
2015.06.11 14:11:21 -07'00'

SIGN BRIDGE (TRUSS-TYPE)

STANDARD PLAN G-70.10-03

SHEET 2 OF 4 SHEETS

APPROVED FOR PUBLICATION
Carpenter, Jeff
Jun 18 2015 7:53 AM
STATE DESIGN ENGINEER
Washington State Department of Transportation

DRAWN BY: FERN LIDDELL

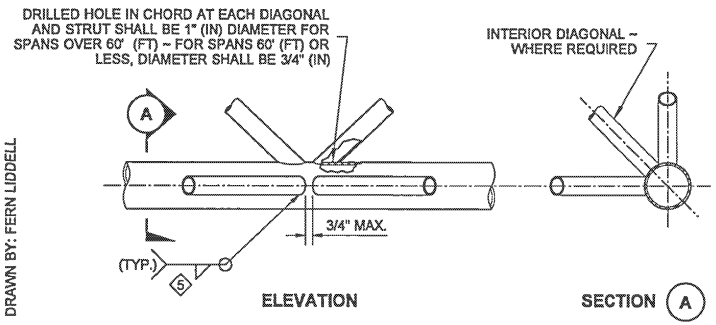

5 ENDS OF DIAGONALS SHALL BE CUT TO FIT NEATLY AGAINST CHORD OR POST. FILLET WELD SIZE TO BE DIAGONAL TUBE OR PIPE THICKNESS PLUS 1/16" (IN).

TYPICAL JOINT DETAIL

CHORD SHOWN ~ END POST SIMILAR

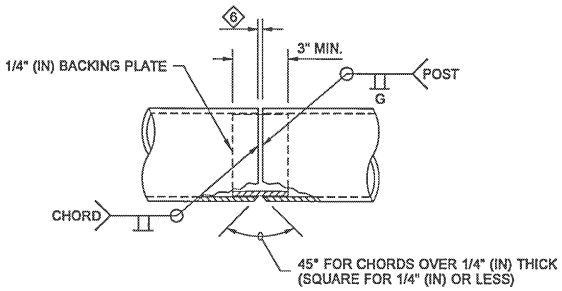

6 DIMENSION SHALL EQUAL CHORD THICKNESS OR 1/4" (IN), WHICHEVER IS LESS.

END POST OR CHORD SHOP SPLICE

NO POST SPLICES PERMITTED IN LOWER THIRD OF HEIGHT, NOR CLOSER THAN 3' - 0" TO BOTTOM OF CHORD. NO CHORD SHOP SPLICES PERMITTED IN MIDDLE THIRD OF SPAN. MAXIMUM OF ONE SPLICE IN EACH END POST.

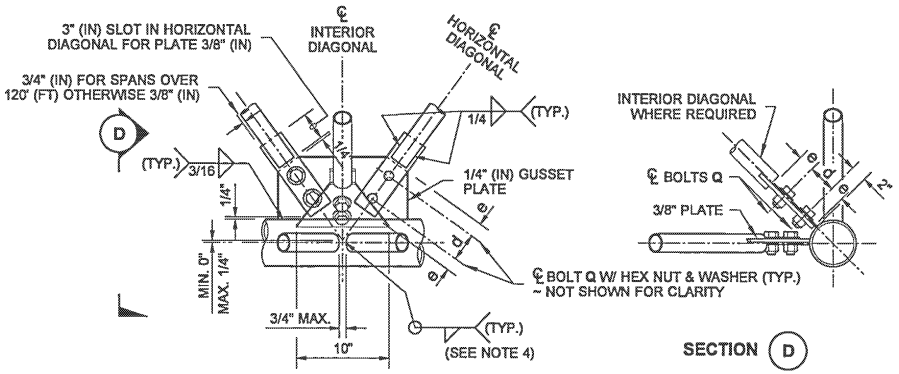

ALTERNATE JOINT DATA			
SPAN LENGTH	d	e	BOLT Q DIAMETER
60' OR LESS	2 1/2"	1 1/4"	3/4"
61' TO 90'	3"	1 1/2"	7/8"
91' TO 120'	3"	1 1/2"	7/8"
121' TO 150'	3 1/2"	1 3/4"	1"

ALTERNATE JOINT DETAIL

NOT FOR CONNECTIONS BETWEEN VERTICAL DIAGONALS AND CHORDS

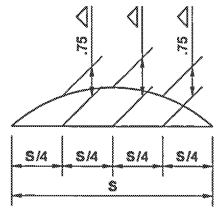

SPAN LENGTH S (FT.)	△ (IN.)
40	1/2
50	3/4
60	7/8
61	7/8
70	1
80	1 1/4
90	1 1/2
91	1 3/8
100	1 5/8
110	2
120	2 3/8
121	2 1/8
130	2 1/2
140	2 7/8
150	3 3/8

FOR SPAN LENGTHS NOT LISTED, INTERPOLATE VALUES OF △.

FABRICATE TRUSS WITH CHORDS CURVED TO PROVIDE CAMBER. DO NOT CAMBER BY USING SHIMS BETWEEN CHORDS AT SPLICES.

DEAD LOAD CAMBER

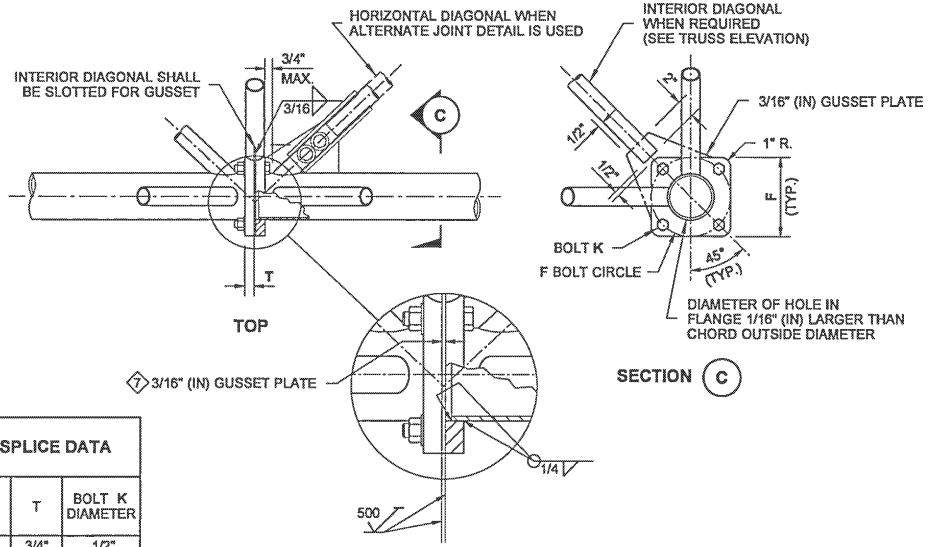

CHORD FIELD SPLICE DATA			
SPAN LENGTH	F	T	BOLT K DIAMETER
60' OR LESS	6"	3/4"	1/2"
61' TO 90'	7"	7/8"	5/8"
91' TO 120'	8 1/2"	1"	3/4"
121' TO 150'	9 1/2"	1 1/4"	7/8"

CHORD FIELD SPLICE

(NO CHORD FIELD SPLICE PERMITTED IN MIDDLE THIRD OF SPAN LENGTH)

7 3/16" (IN) SHIMS ARE REQUIRED AT THE REMAINING TWO CHORD JOINTS WHEN INTERIOR DIAGONAL IS INSTALLED.

RICHARD P. ZELDENRUST — STATE OF WASHINGTON — 25470 — STRUCTURAL ENGINEER — PROFESSIONAL ENGINEER

Zeldenrust, Richard
2015.06.11 14:11:39 -07'00'

SIGN BRIDGE (TRUSS-TYPE)

STANDARD PLAN G-70.10-03

SHEET 3 OF 4 SHEETS

APPROVED FOR PUBLICATION
Carpenter, Jeff
Jun 18 2015 7:53 AM
STATE DESIGN ENGINEER
Washington State Department of Transportation

DRAWN BY: FERN LIDDELL

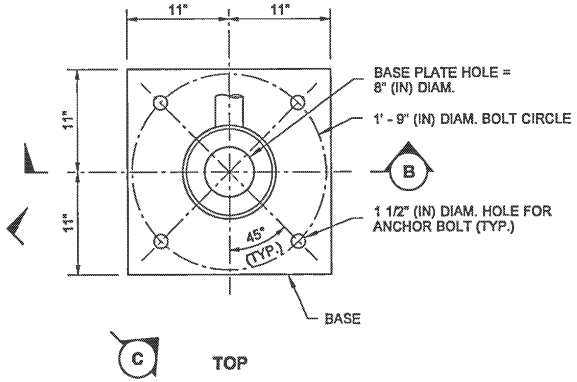

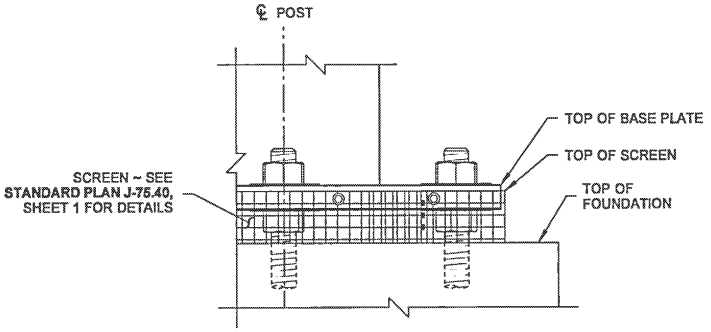

SCREEN DETAIL

CONDUIT OMITTED FOR CLARITY ~ FOR ELECTRICAL REQUIREMENTS
SEE **STANDARD PLAN J-75.45**

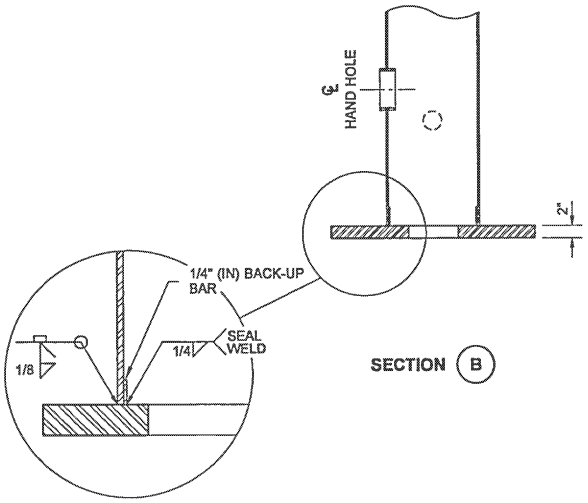

BASE WELD DETAIL

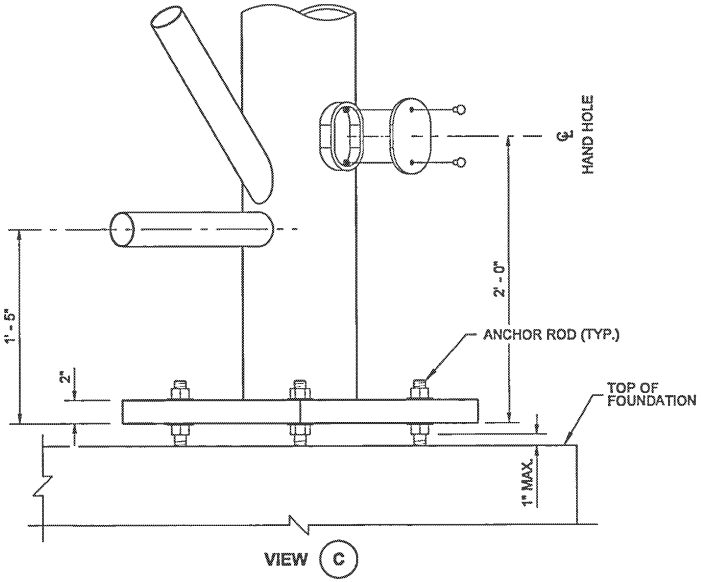

POST BASE DETAILS

CONDUIT OMITTED FOR CLARITY ~ FOR ELECTRICAL REQUIREMENTS
SEE **STANDARD PLAN J-75.45**

RICHARD P. ZELDENRUST
STATE OF WASHINGTON
25470
STRUCTURAL ENGINEER
PROFESSIONAL ENGINEER

Zeldenrust, Richard
2015.06.11 14:11:56 -07'00'

SIGN BRIDGE (TRUSS-TYPE)

STANDARD PLAN G-70.10-03

SHEET 4 OF 4 SHEETS

APPROVED FOR PUBLICATION
Carpenter, Jeff
Jun 18 2015 7:53 AM
STATE DESIGN ENGINEER
Washington State Department of Transportation

DRAWN BY: FERN LIDDELL

MATERIAL SPECIFICATIONS	
SHAFT CONCRETE	CLASS 4000P ①
ALL OTHER CONCRETE	CLASS 4000
STEEL REINF. BAR	AASHTO M 31 GRADE 60
ANCHOR RODS	ASTM F 1554 GRADE 105
ANCHOR NUTS	AASHTO M 291
ANCHOR WASHERS	AASHTO M 293
ANCHORAGE GALVANIZING	AASHTO M 232
ANCHOR PLATE	ASTM A 36

① CASE THE EXCAVATION AND PLACE USING TREMIE METHOD WHEN WATER IS PRESENT

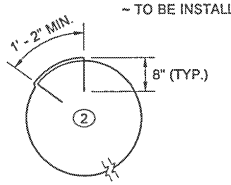

LAP SPLICE DETAIL

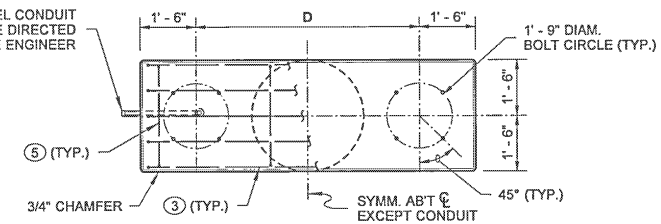

TOP

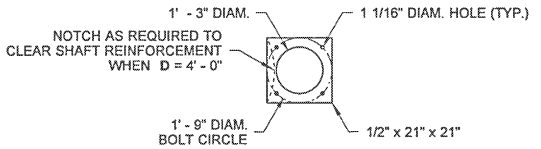

ANCHOR PLATE DETAIL

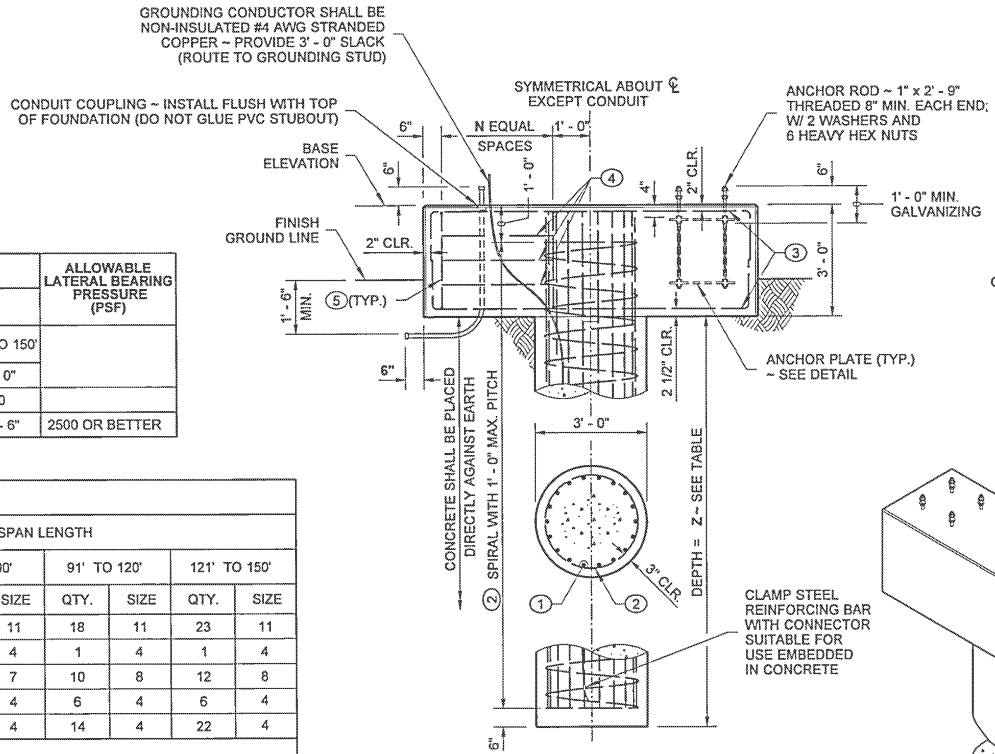

ELEVATION

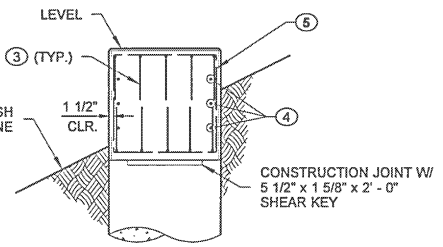

END

TABLE					ALLOWABLE LATERAL BEARING PRESSURE (PSF)
VARIABLES	SPAN LENGTH				
	60' OR LESS	61' TO 90'	91' TO 120'	121' TO 150'	
DIMENSION ~ D	4' - 0"	5' - 0"	6' - 0"	7' - 0"	
BAR SPACES ~ N	2	3	6	10	
SHAFT DEPTH ~ Z	11' - 6"	13' - 6"	15' - 0"	16' - 6"	2500 OR BETTER

BAR LIST									
MARK	LOCATION	SPAN LENGTH							
		60' OR LESS		61' TO 90'		91' TO 120'		121' TO 150'	
		QTY.	SIZE	QTY.	SIZE	QTY.	SIZE	QTY.	SIZE
①	SHAFT - VERTICAL	11	9	14	11	18	11	23	11
②	SHAFT - SPIRAL	1	4	1	4	1	4	1	4
③	CAP - TOP AND BOTTOM	8	6	8	7	10	8	12	8
④	CAP - SIDES	6	4	6	4	6	4	6	4
⑤	CAP - HOOPS	6	4	8	4	14	4	22	4

BENDING DIAGRAM

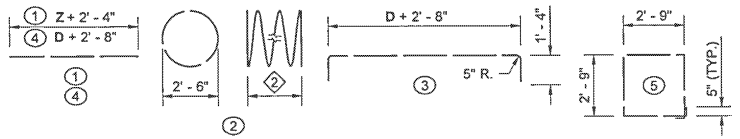

(ALL DIMENSIONS ARE OUT TO OUT)
2" RADIUS, UNLESS OTHERWISE NOTED

② DETERMINE LENGTH FROM PLANS

FOUNDATION TYPE 1

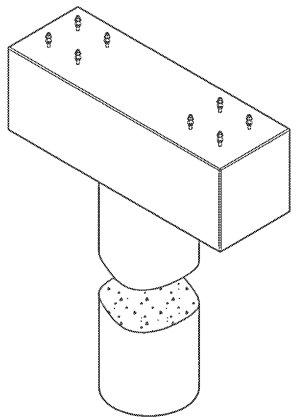

ISOMETRIC

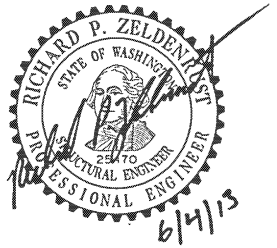

SIGN BRIDGE (TRUSS-TYPE) FOUNDATION TYPE 1

STANDARD PLAN G-70.20-02

SHEET 1 OF 1 SHEET

APPROVED FOR PUBLICATION

STATE DESIGN ENGINEER — DATE 6/6/13

Washington State Department of Transportation

DRAWN BY: LISA CYFORD

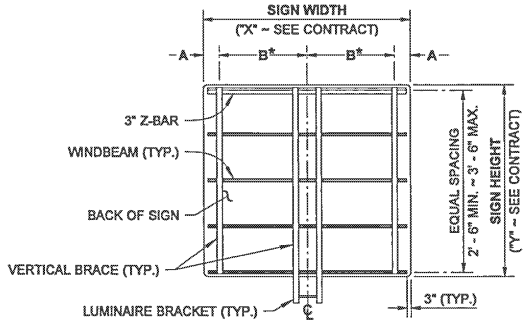

ONE SIGN LIGHTING LUMINAIRE
BRACE PLACEMENT

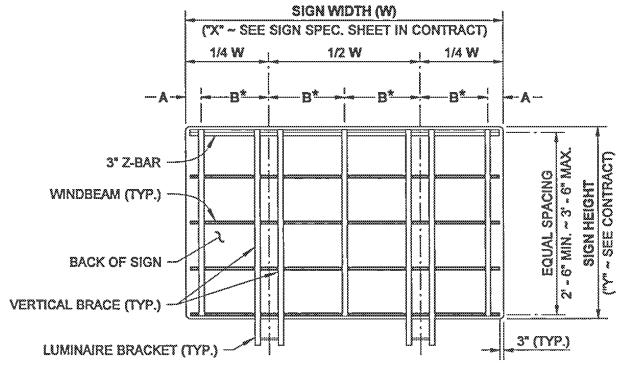

TWO SIGN LIGHTING LUMINAIRES
BRACE PLACEMENT

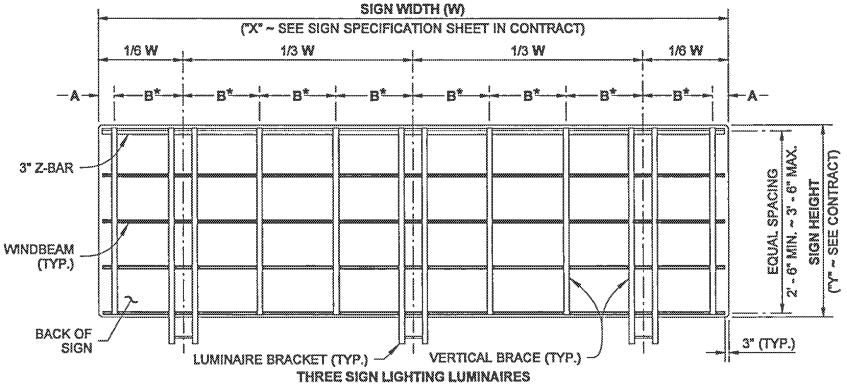

THREE SIGN LIGHTING LUMINAIRES
BRACE PLACEMENT

VERTICAL BRACE SPACING WITH SIGN LIGHTING		
SIGN WIDTH	A	B*
ONE SIGN LIGHTING LUMINAIRE		
8' - 0"	6"	3' - 6"
10' - 0"	6"	4' - 6"
12' - 0"	6"	5' - 6"
14' - 0"	1' - 0"	6' - 0"
16' - 0"	2' - 0"	6' - 0"
TWO SIGN LIGHTING LUMINAIRES		
18' - 0"	6"	4' - 3"
20' - 0"	6"	4' - 9"
22' - 0"	6"	5' - 3"
24' - 0"	6"	5' - 9"
26' - 0"	6"	6' - 3"
28' - 0"	6"	6' - 9"
30' - 0"	1' - 0"	7' - 0"
32' - 0"	2' - 0"	7' - 0"
THREE SIGN LIGHTING LUMINAIRES		
34' - 0"	6"	4' - 1 1/2"
36' - 0"	6"	4' - 4 1/2"

* IF "B" EXCEEDS THE SPACING LISTED ON THE VERTICAL BRACE SPACING TABLE, ADD AN ADDITIONAL VERTICAL BRACE

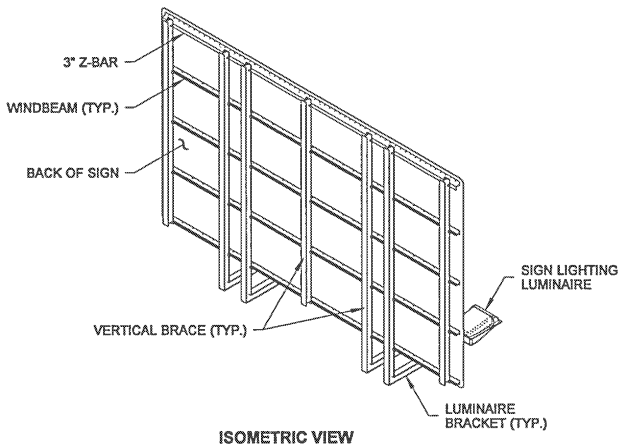

ISOMETRIC VIEW

NOTES

1. Install Sign Lighting Luminaires (and Brackets) only when required in the Contract.
2. Windbeam and 3" Z-Bar are aluminum. All nuts, bolts, washers, and other hardware shall be stainless steel, except as noted.
3. See **Standard Plan G-90.20** (Monotube), or **G-90.30** (Truss) for additional Overhead Sign Mounting details.
4. Galvanize all non-stainless steel parts.

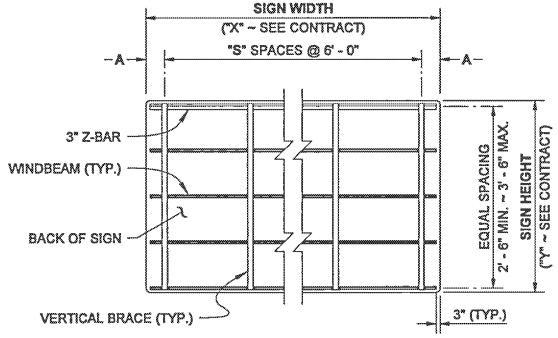

WITHOUT SIGN LIGHTING
BRACE PLACEMENT

VERTICAL BRACE SPACING WITHOUT SIGN LIGHTING		
SIGN WIDTH	A	S (SPACES)
8' - 0"	1' - 0"	1
10' - 0"	2' - 0"	1
12' - 0"	3' - 0"	1
14' - 0"	1' - 0"	2
16' - 0"	2' - 0"	2
18' - 0"	3' - 0"	2
20' - 0"	1' - 0"	3
22' - 0"	2' - 0"	3
24' - 0"	3' - 0"	3
26' - 0"	1' - 0"	4
28' - 0"	2' - 0"	4
30' - 0"	3' - 0"	4
32' - 0"	1' - 0"	5
34' - 0"	2' - 0"	5
36' - 0"	3' - 0"	5

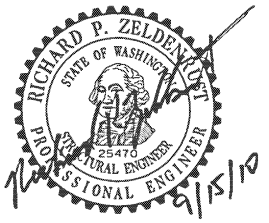

OVERHEAD SIGN BRACING AND LIGHTING PLACEMENT

STANDARD PLAN G-90.10-01

SHEET 1 OF 1 SHEET

APPROVED FOR PUBLICATION

STATE DESIGN ENGINEER — DATE 5/16/11

Washington State Department of Transportation

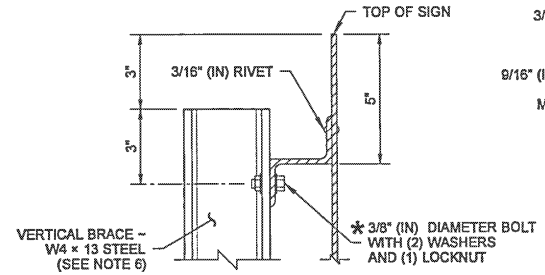

DETAIL (A)

* ATTACH ON BOTH SIDES OF WIDE FLANGE STEEL POST.

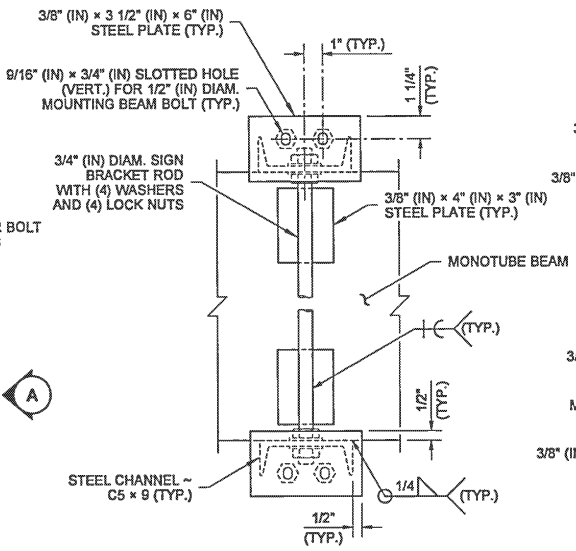

SECTION (B)

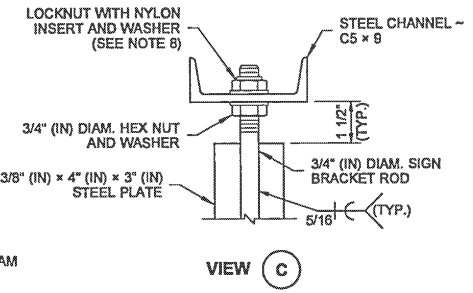

VIEW (C)

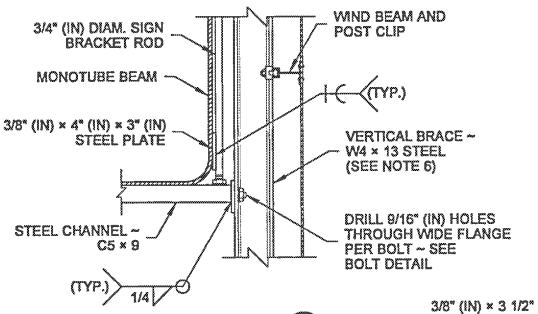

DETAIL (D)

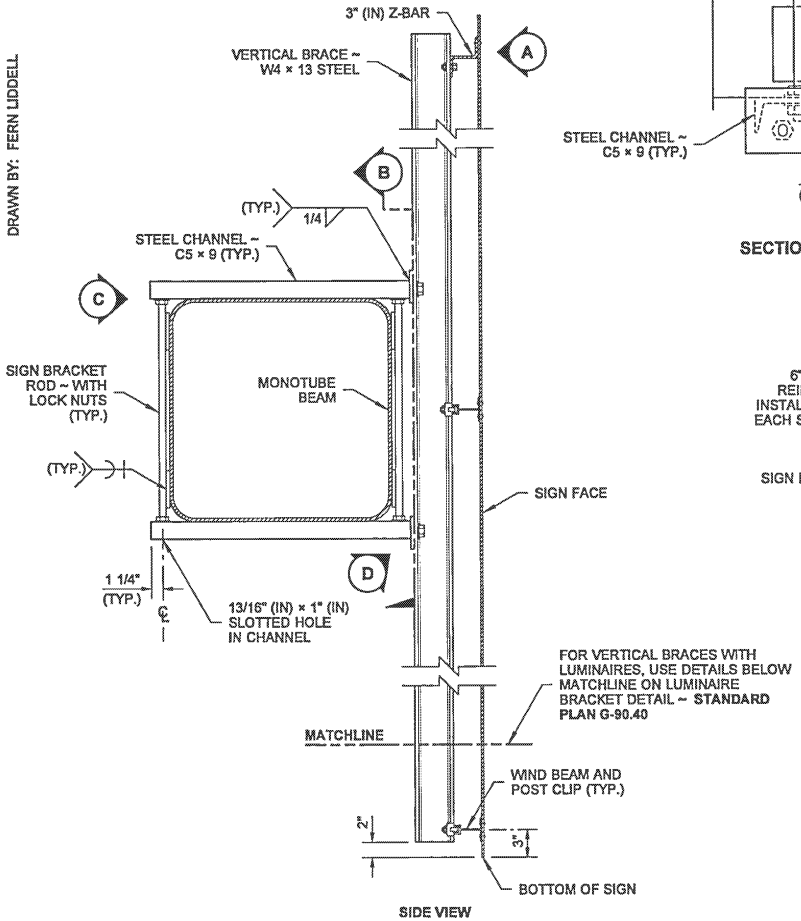

SIDE VIEW

MONOTUBE CONNECTION

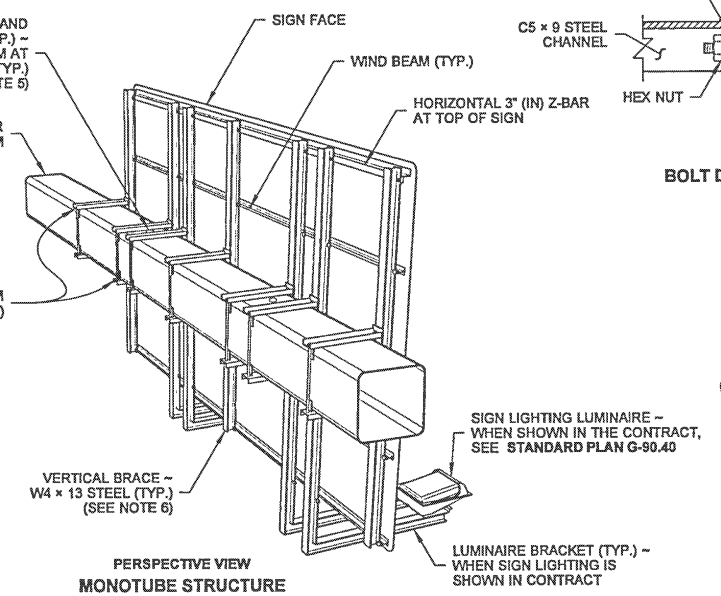

PERSPECTIVE VIEW

MONOTUBE STRUCTURE

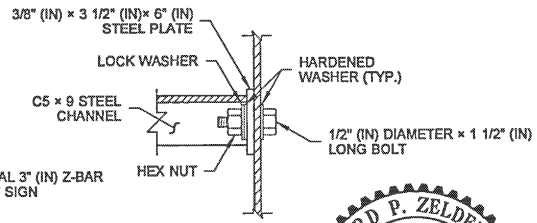

BOLT DETAIL

DRAWN BY: FERN LIDDELL

NOTES

1. Refer to Contract Plans for Monotube Beam Bracket element sizes, dimensions, and weld symbols.
2. See **Standard Plan G-90.10** for Sign Bracing and Lighting Placement details.
3. Galvanize all non-stainless steel parts.
4. See **Standard Plan G-90.40** for Sign Lighting details.
5. Hand holes shall be installed at the time of fabrication. Only additional conduits for lighting accommodations to previously non-illuminated structures may be installed in field as long as the proper repairs are made to the structure. For details not shown, see **Standard Plan J-75.40.**
6. For VMS mounting, the Contractor may substitute W6 × 12 steel or W8 × 13 steel sections for the Vertical Brace W4 × 13 steel.
7. 3' - 0" max. Vertical Brace and Monotube Beam Bracket spacing for walk-in cabinet Type VMS installation.
8. An acceptable alternative to a Locknut with nylon insert shall be as follows:
   - Nylock Blue Nylon Torque-Patch
   - Nylock Precote 30
   - ND Patch 360 Ring Patch

   All products shall be applied the full length of the bolt threads with 360 degrees coverage.

RICHARD P. ZELDENRUST STATE OF WASHINGTON 25470 STRUCTURAL ENGINEER PROFESSIONAL ENGINEER

Zeldenrust, Richard
2015.06.23 08:59:43 -07'00'

OVERHEAD SIGN MOUNTING (MONOTUBE STRUCTURE)

STANDARD PLAN G-90.20-03

SHEET 1 OF 1 SHEET

APPROVED FOR PUBLICATION
Carpenter, Jeff
Jul 10 2015 7:21 AM
STATE DESIGN ENGINEER

Washington State Department of Transportation

This page left blank intentionally.

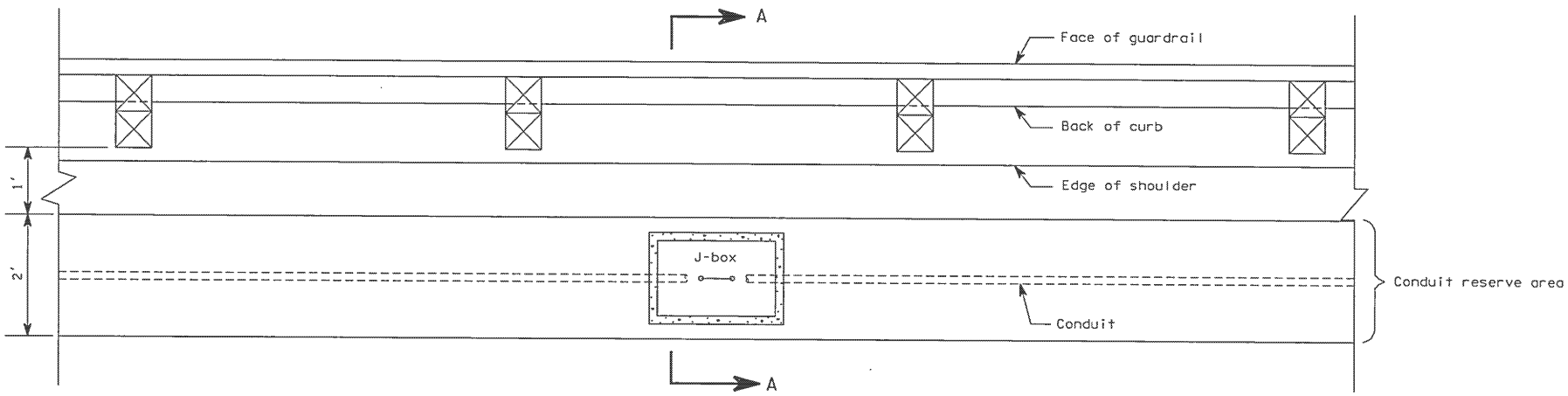

PLAN

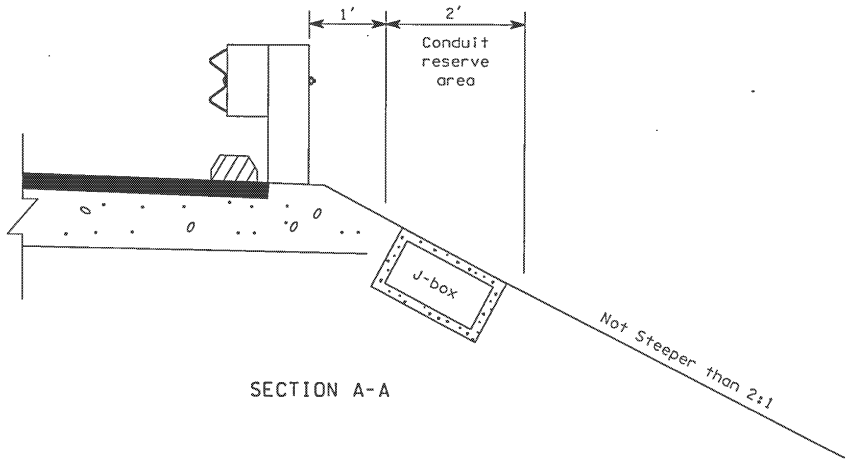

SECTION A-A

ELECTRICAL CONDUIT PLACEMENT

WILLIAM D. BROWN
STATE OF WASHINGTON
00148 12
REGISTERED
PROFESSIONAL ENGINEER
EXPIRES SEPT 10, 1998

STANDARD PLAN J-10

APPROVED FOR PUBLICATION

Clifford E. Crawford 7/18/97
STATE DESIGN ENGINEER DATE

WASHINGTON STATE DEPARTMENT OF TRANSPORTATION
OLYMPIA, WASHINGTON

This page left blank intentionally.

DRAWN BY: COLBY FLETCHER

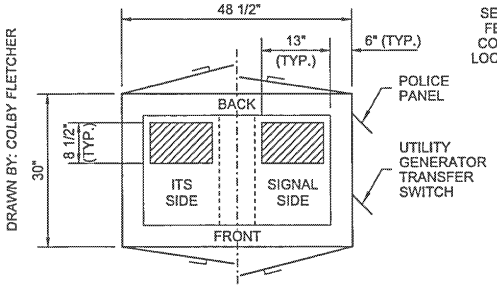

TYPE 332D CONTROLLER CABINET

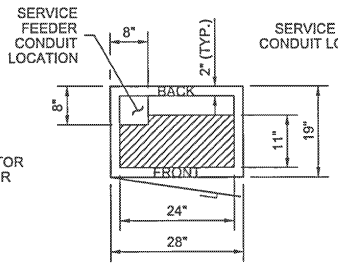

TYPE D SERVICE CABINET

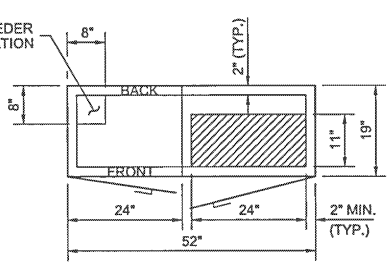

TYPE E SERVICE CABINET

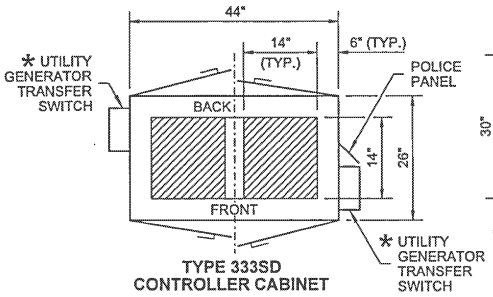

TYPE 333SD CONTROLLER CABINET

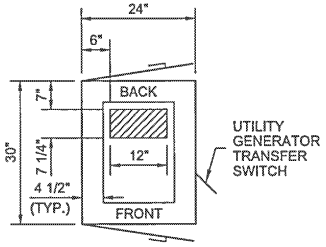

TYPE 332 UNINTERRUPTABLE POWER SUPPLY CABINET

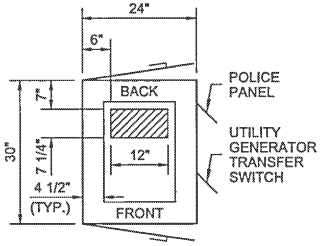

TYPE 332 CONTROLLER CABINET

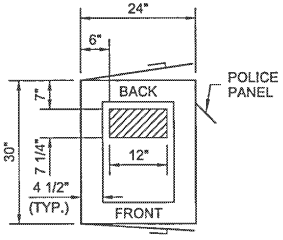

TYPE 334

* TO BE INSTALLED BY REGION MAINTAINANCE PERSONNEL ~ PROVIDE A 15' (FT) PIGTAIL (SEE NOTE 12)

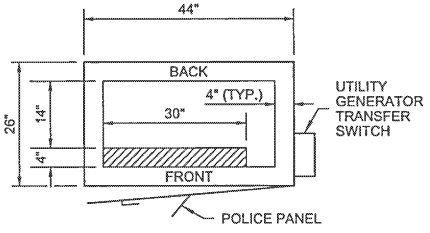

NEMA P44 CONTROLLER CABINET

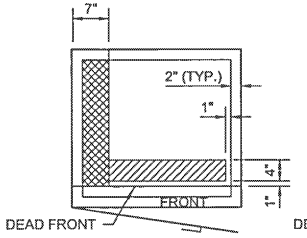

12.6 TO 35.0 KVA TRANSFORMER

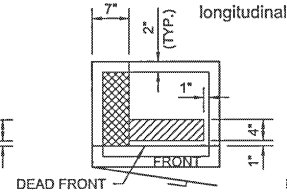

3.1 TO 12.5 KVA TRANSFORMER

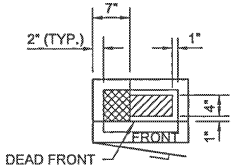

UP TO 3 KVA TRANSFORMER

PLAN VIEWS

CABINET FOOTPRINT AND CONDUIT PLACEMENT LOCATIONS

CONSTRUCTION NOTES

1. Drive ground rods before placing concrete. Move rod(s) and drain tiles with cover(s) as required to achieve full ground penetration. Maintain a 6' (ft) minimum clearance between ground rods and 6" (in) from foundation edge as detailed on **Standard Plan J-60.05**.
2. GRS conduits penetrating all cabinets shall be terminated with grounding end bushing and bonded to the cabinet grounding bus. All PVC conduits penetrating cabinet shall be terminated with end bell bushings.
3. Install conduit couplings on all conduits. Place coupling tops flush with top of concrete. If PVC conduits are specified, the conduit stub and end bell bushing shall not be glued to the coupling.
4. 4" (in) diam. × 1/2" (in) deep sump. Slope foundation within cabinet footprint toward sump. Drainpipe shall be 3/8" (in) diam. polyethylene or copper tubing.
5. The Type D Service shall not be installed on a raised section. All other cabinets shall be installed on 3 1/2" (in) or 9" (in) cabinet footing.
6. Cabinet power supply conduit.
7. Conduits for service grounding electrodes.
8. When distance detailed in Typical Foundation Plan is greater than 8' (ft), this conduit and conductor shall be deleted.

CONDUIT PLACEMENT LOCATION AREA (OR TRANSFORMER HIGH-VOLTAGE CONDUIT AREA)

LOW-VOLTAGE CONDUIT PLACEMENT LOCATION

TABLE

CONTROLLER OR CABINET BASE	SIZE W × D (IN)	CAPACITY CONDUIT DIAMETER (IN)
TYPE 332	24" × 30"	12"
TYPE 332D	48.5" × 30"	24" ①
NEMA P44	44" × 26"	15"
TYPE 333SD	44" × 26"	48" ②
TYPE 334	24" × 30"	12"
TRANSFORMER	**SIZE W × D (IN)**	
UP TO 3 KVA	18" × 12"	8"
3.1 TO 12.5 KVA	24" × 20"	12"
12.6 TO 35.0 KVA	32" × 30"	15"
UNINTERRUPTABLE POWER SUPPLY	**SIZE W × D (IN)**	
332 CABINET	24" × 30"	12"

① 12" (IN) OF CONDUIT IN EACH LOCATION SHOWN

② 24" (IN) OF CONDUIT IN EACH LOCATION SHOWN

NOTES

1. The cabinets shown in these details are shown for illustrative purposes only. The Contractor shall verify the plans and substitute those cabinets in place of the cabinets shown in these details. The Contractor shall install each cabinet type in the locations and orientations shown in these details.
2. The Contractor shall install the conduits in the locations shown. Conduits shall extend 2" (in) min. above the coupling. The grounded end bushing on GRS conduit and the end bell bushing on PVC conduit shall extend 3" (in) max. above the coupling. The conduit containing unfused utility conductors shall extend into the utility chase.
3. The ground rods, drain tiles, associated conduits, and #4 rebar (90° with 30" (in) legs), may be omitted if no transformer or service cabinet is to be installed.
4. The cabinets shall be attached to the foundation with 4 each: 1/2" (in) × 10" (in) × 2" (in) × 4" (in) anchor bolts (see Detail on Sheet 4 of 6), washers, and nuts conforming to **Standard Specification 9-06.5(1)** and hot-dip galvanized after fabrication in accordance with AASHTO M 232. Locate anchor bolts per cabinet manufacturer. Stainless steel epoxy anchors may be used as an alternative, and shall be 1/2" (in) diameter x 9" (in), or 5/8" (in) diameter x 8" (in). All threaded rod (conforming to ASTM F593), washers (conforming to ASTM A240), and nuts (conforming to ASTM F594), shall be Type 304 stainless steel. Bolts shall extend 1 1/2" (in) min. to 2" (in) max. above the concrete pad.
5. All reinforcing steel shall be embedded 2" (in) below surface of concrete.
6. Place a 1/2" (in) bead of silicone between cabinets and foundation.
7. Two ground rods are required for foundations with a service cabinet or transformer cabinet. See **Standard Plan J-60.05** for details.
8. Concrete shall be class 3000. See **Standard Specification 8-20.3(4)**.
9. Verify dead front locations from manufacturer prior to placing conduit in foundation.
10. Foundations installed in, or adjacent to, sidewalks shall be constructed with the top flush with the sidewalk surface and grade, not including concrete risers for cabinets. Omit chamfers where foundation abuts sidewalk.
11. If the slope is 3H : 1V or steeper, special considerations may be necessary for safety reasons. Coordinate with Maintenance and Project Engineer.
12. For Type 333SD Controller Cabinet, the cabinet vendor shall allow the Utility Transfer Switch to be installed on either side of the cabinet. The Utility Transfer Switch unit shall be shipped inside the cabinet for field installation by Region maintenance personnel.
13. Height of cabinet riser shall be adjusted to serve environmental needs. Type D Service cabinet shall have no riser. NEMA P44, Type 333SD, and Type B Modified shall have a 9' (in) riser. All other cabinets shall have a 3 1/2" (in) riser. See Contract for alternative height. Adjust length of conduit and rebar accordingly.
14. Use (1) #4 hoop for a 3 1/2" (in) cabinet footing and (2) #4 hoops for a 9" (in) cabinet footing.
15. The Police Panel location is set by industry standards on all Controller Cabinets.
16. See **Standard Plan J-10.20** for additional Foundation Construction and Conduit Routing for Type B Modified Service Cabinet with Controller Cabinet.
17. Verify pad size and location with Project Engineer prior to placing.
18. Field bend #4 rebar around the Generator Anti-Theft Tie-Down Unit when required.
19. See **Standard Plans J-10.21** and **J-10.22** for additional details for Type D and Type E Service Cabinets.
20. As an alternate, #3 rebar spaced at 1' - 0" O.C. longitudinally and transversely may be used.

THEODORE JOSEPH BAILEY STATE OF WASHINGTON 39820 REGISTERED PROFESSIONAL ENGINEER

Bailey, Ted
May 26 2015 9:33 AM

CABINET ORIENTATION CONDUIT LAYOUT AND FOUNDATION DETAIL

STANDARD PLAN J-10.10-03

SHEET 1 OF 6 SHEETS

APPROVED FOR PUBLICATION
Bakotich, Pasco
Jun 3 2015 4:14 PM
STATE DESIGN ENGINEER

Washington State Department of Transportation

DRAWN BY: COLBY FLETCHER

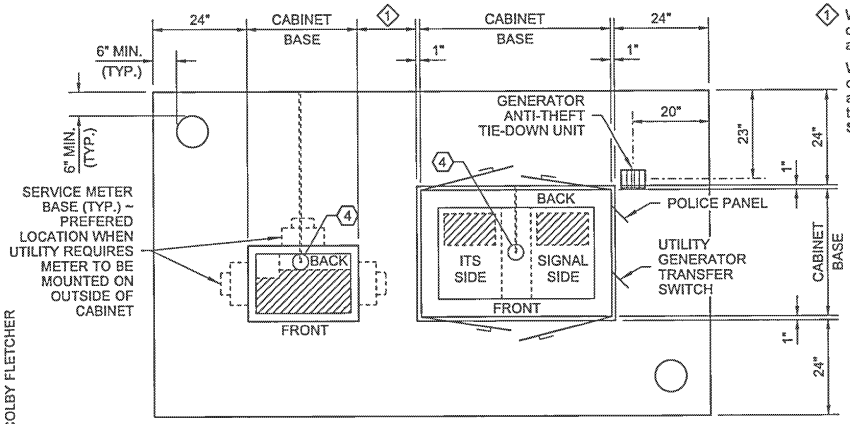

1 With Meter Base mounted on Inside of Service Cabinet, allow 6" (in) between cabinets.

With Meter Base mounted on outside of Service Cabinet, allow 36" (in) from face of meter to adjacent cabinet. See **Standard Plan J-10.21.**

PLAN VIEW

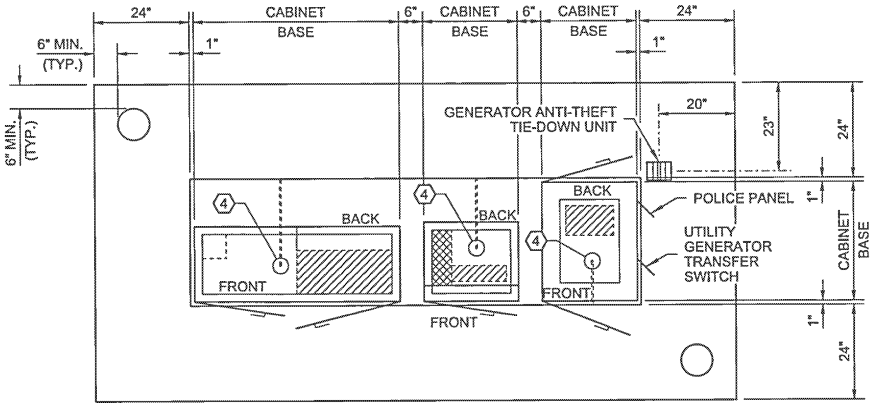

PLAN VIEW

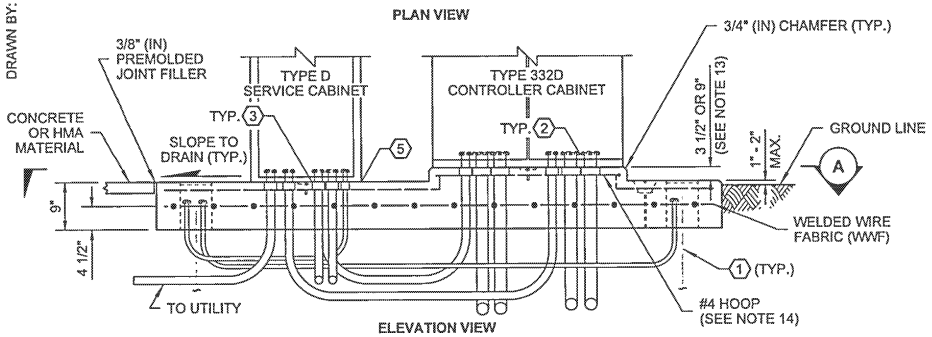

ELEVATION VIEW

TWO-CABINET FOUNDATION

(TYPE D SERVICE AND TYPE 332D CONTROLLER CABINET SHOWN)

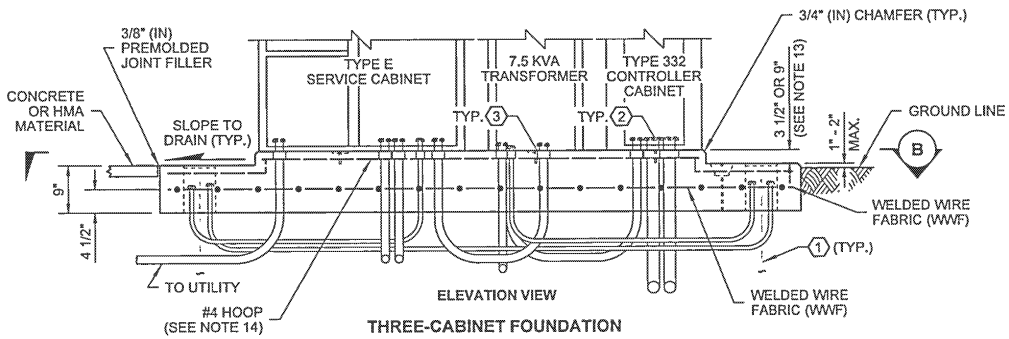

ELEVATION VIEW

THREE-CABINET FOUNDATION

(TYPE E SERVICE, 7.5 KVA TRANSFORMER AND TYPE 332 CONTROLLER CABINET SHOWN)

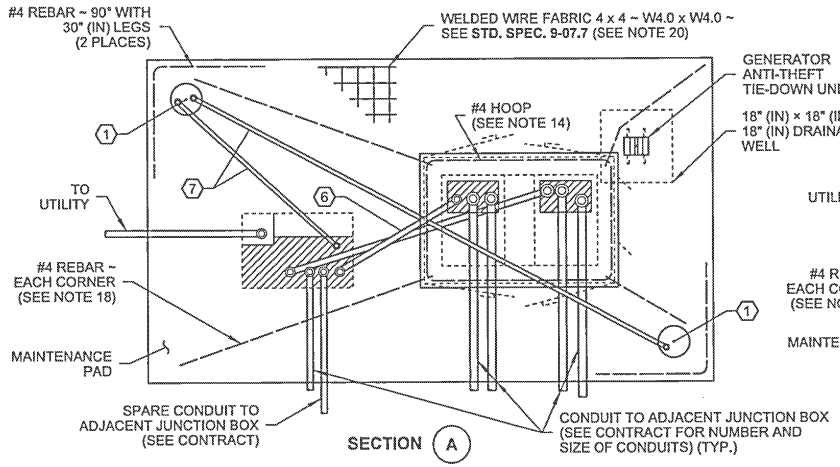

SECTION (A)

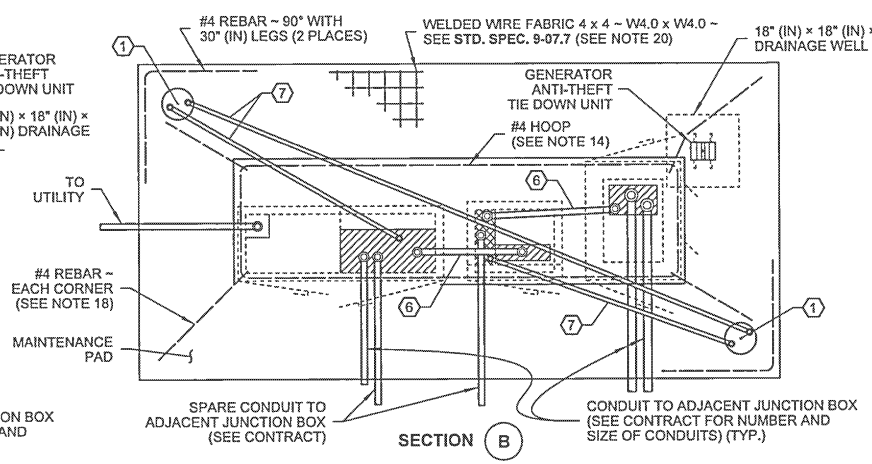

SECTION (B)

THEODORE JOSEPH BAILEY
STATE OF WASHINGTON
39820
REGISTERED
PROFESSIONAL ENGINEER

Bailey, Ted
May 26 2015 9:34 AM

CABINET ORIENTATION CONDUIT LAYOUT AND FOUNDATION DETAIL

STANDARD PLAN J-10.10-03

SHEET 2 OF 6 SHEETS

APPROVED FOR PUBLICATION
Bakotich, Pasco
Jun 3 2015 4:18 PM
STATE DESIGN ENGINEER

Washington State Department of Transportation

DRAWN BY: COLBY FLETCHER

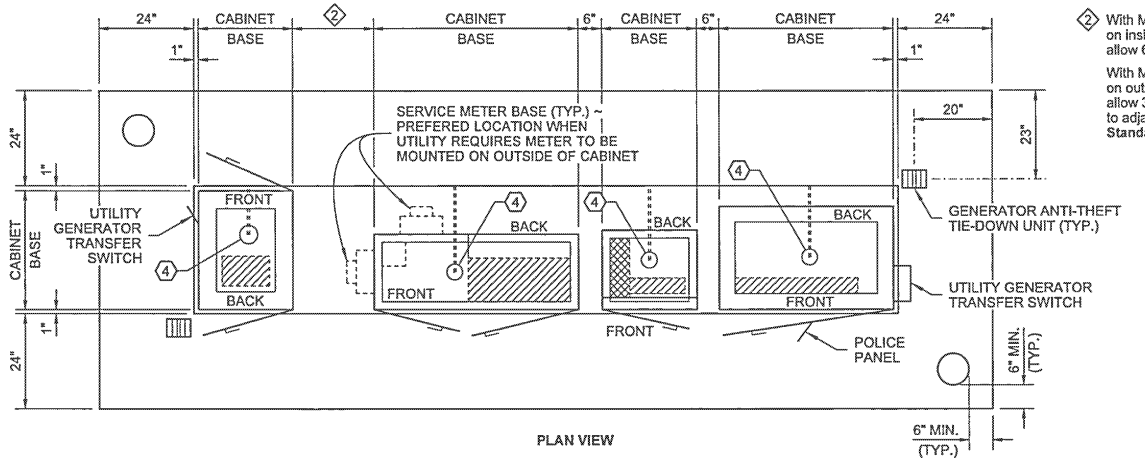

2 With Meter Base mounted on inside of Service Cabinet, allow 6" (in) between cabinets.

With Meter Base mounted on outside of Service Cabinet, allow 36" (in) from face of meter to adjacent cabinet. See **Standard Plan J-10.22.**

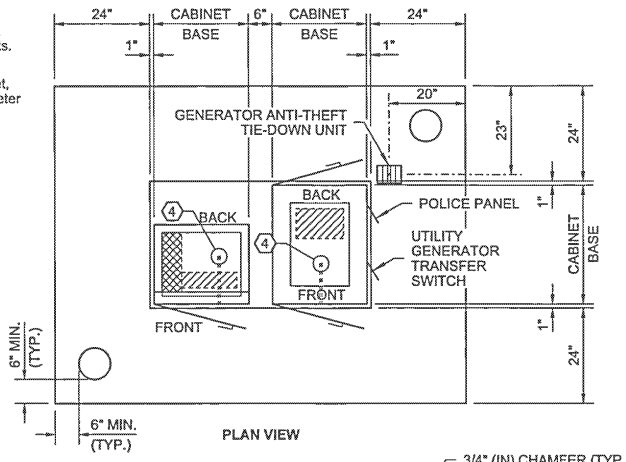

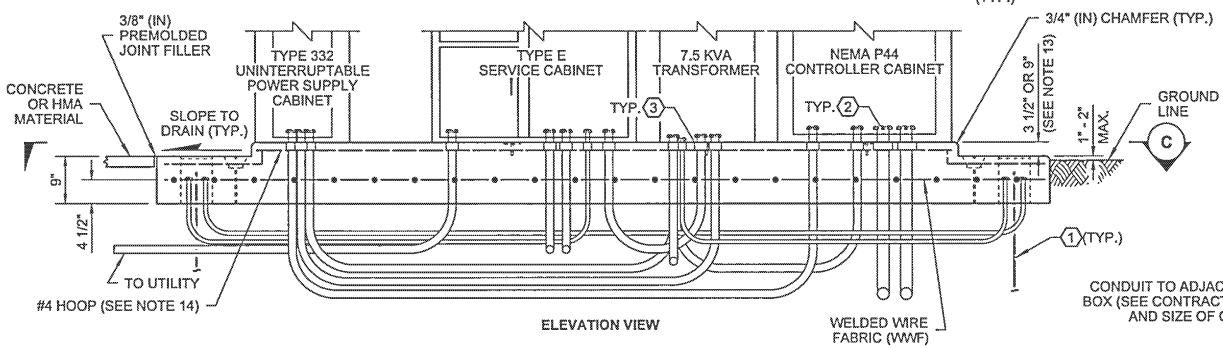

FOUR-CABINET FOUNDATION

(TYPE 332 UNINTERRUPTABLE POWER SUPPLY CABINET, TYPE E SERVICE CABINET, 7.5 KVA TRANSFORMER AND NEMA P44 CONTROLLER CABINET SHOWN)

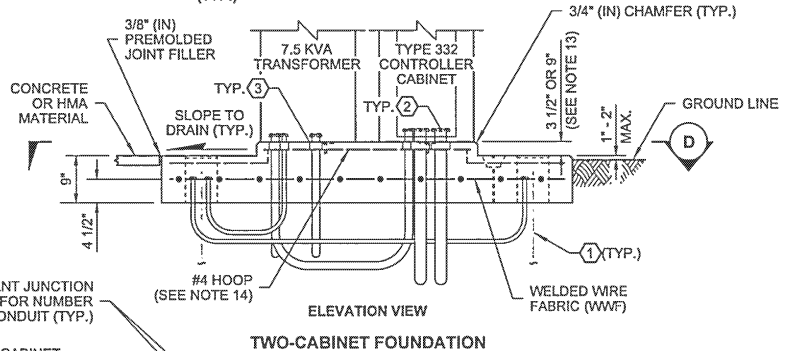

TWO-CABINET FOUNDATION

(7.5 KVA TRANSFORMER AND TYPE 332 CONTROLLER CABINET SHOWN)

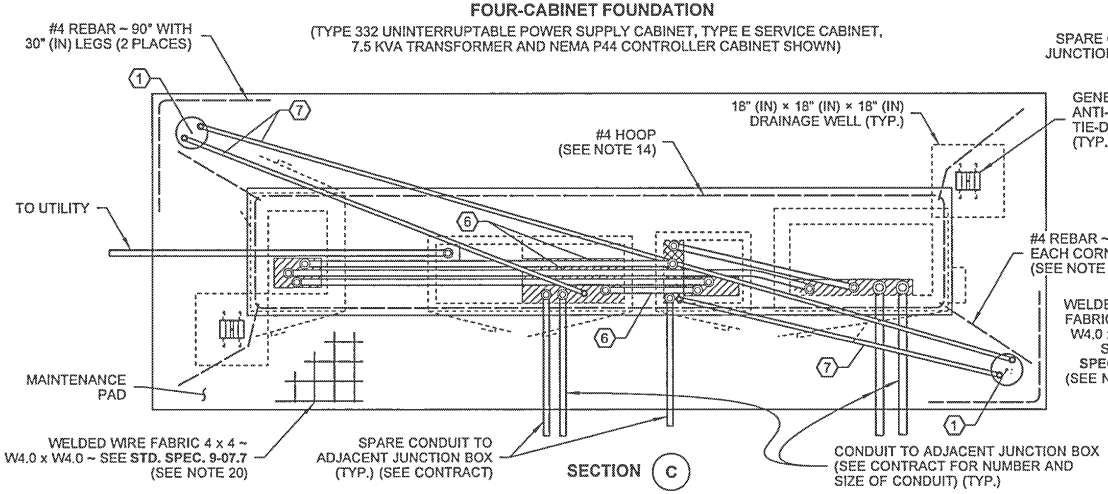

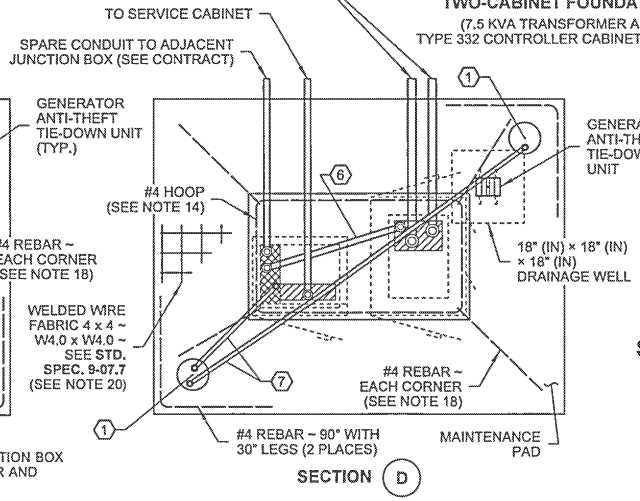

THEODORE JOSEPH BAILEY
STATE OF WASHINGTON
39820
REGISTERED
PROFESSIONAL ENGINEER

Bailey, Ted
May 26 2015 9:34 AM

CABINET ORIENTATION CONDUIT LAYOUT AND FOUNDATION DETAIL

STANDARD PLAN J-10.10-03

SHEET 3 OF 6 SHEETS

APPROVED FOR PUBLICATION
Bakotich, Pasco
Jun 3 2015 4:18 PM
STATE DESIGN ENGINEER
Washington State Department of Transportation

DRAWN BY: COLBY FLETCHER

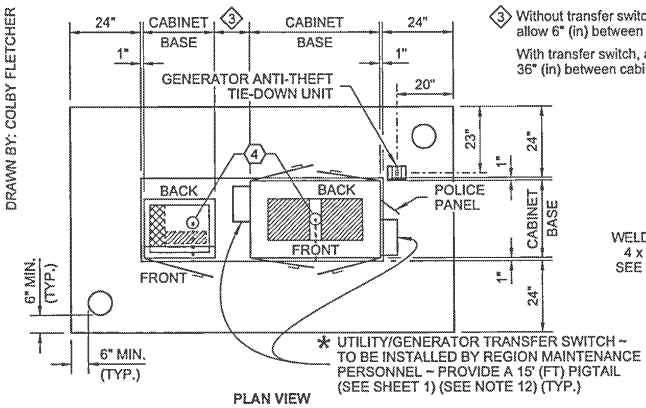

③ Without transfer switch, allow 6" (in) between cabinets.
With transfer switch, allow 36" (in) between cabinets.

PLAN VIEW

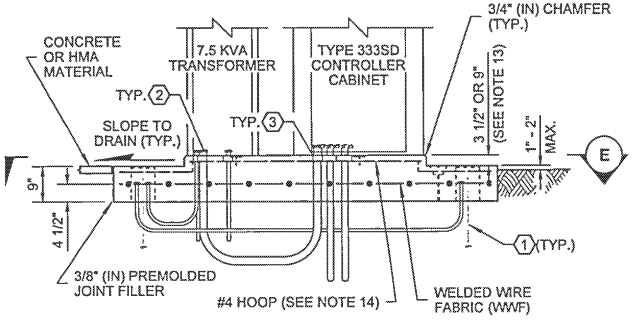

ELEVATION VIEW

TWO-CABINET FOUNDATION

(7.5 KVA TRANSFORMER AND TYPE 333SD CONTROLLER CABINET SHOWN)

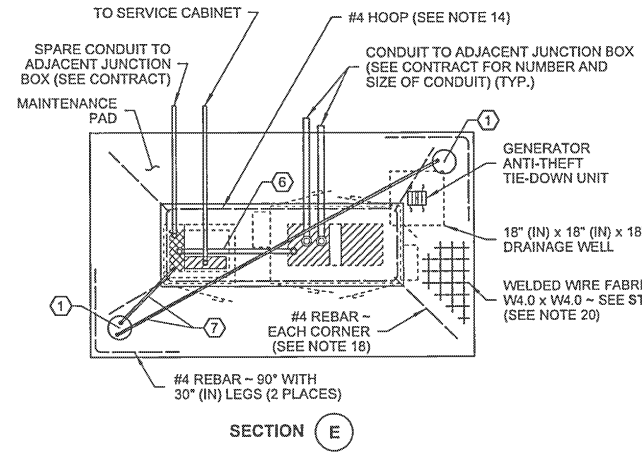

SECTION (E)

PLAN VIEW

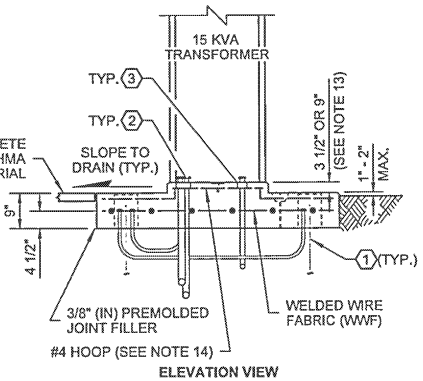

ELEVATION VIEW

SINGLE-CABINET FOUNDATION

(15 KVA TRANSFORMER SHOWN)

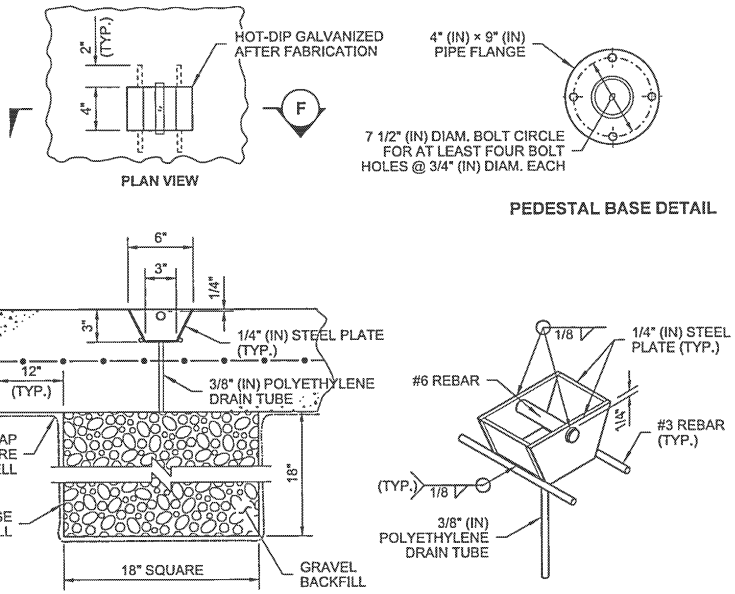

SECTION (F)

GENERATOR ANTI-THEFT TIE-DOWN UNIT

(FABRICATE IF NOT AVAILABLE COMMERCIALLY)

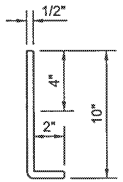

ANCHOR BOLT

(SEE NOTE 4)

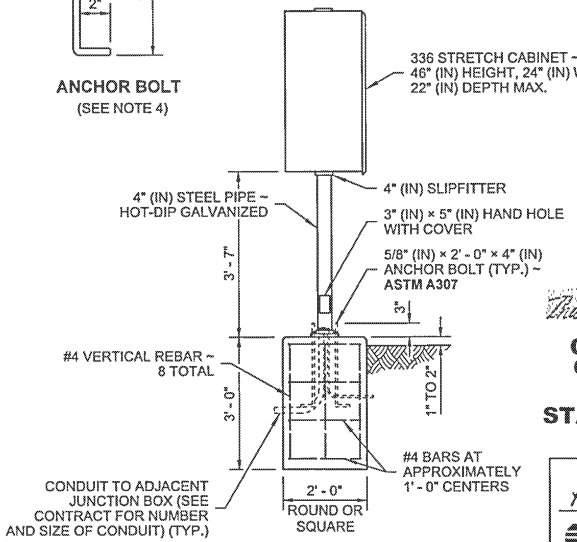

PEDESTAL MOUNT

THEODORE JOSEPH BAILEY
STATE OF WASHINGTON
39820
REGISTERED
PROFESSIONAL ENGINEER

Bailey, Ted
May 26 2015 9:34 AM

CABINET ORIENTATION CONDUIT LAYOUT AND FOUNDATION DETAIL

STANDARD PLAN J-10.10-03

SHEET 4 OF 6 SHEETS

APPROVED FOR PUBLICATION
Bakotich, Pasco
Jun 3 2015 4:18 PM
STATE DESIGN ENGINEER

Washington State Department of Transportation

DRAWN BY: COLBY FLETCHER

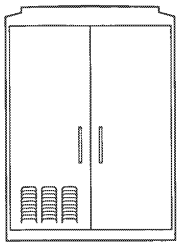

FRONT VIEW

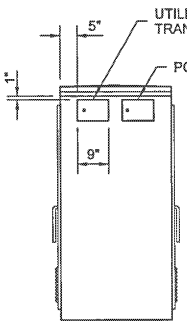

SIDE VIEW

TYPE 332D CONTROLLER CABINET

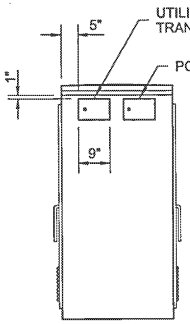

SIDE VIEW

TYPE 332 CONTROLLER CABINET

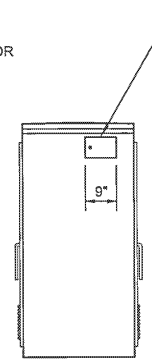

SIDE VIEW

TYPE 332 UNINTERRUPTABLE POWER SUPPLY (UPS) CABINET

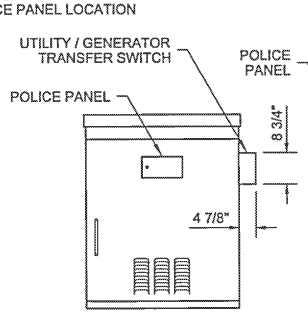

FRONT VIEW

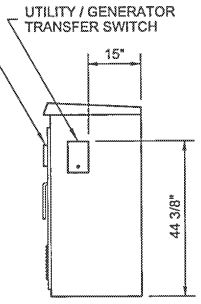

SIDE VIEW

NEMA P44 CONTROLLER CABINET

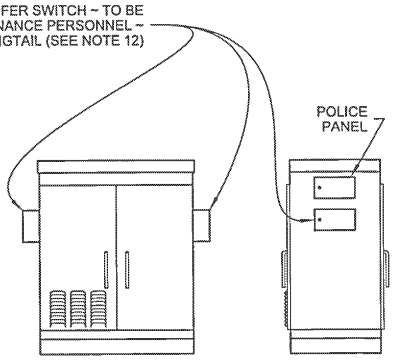

FRONT VIEW SIDE VIEW

TYPE 333SD CONTROLLER CABINET

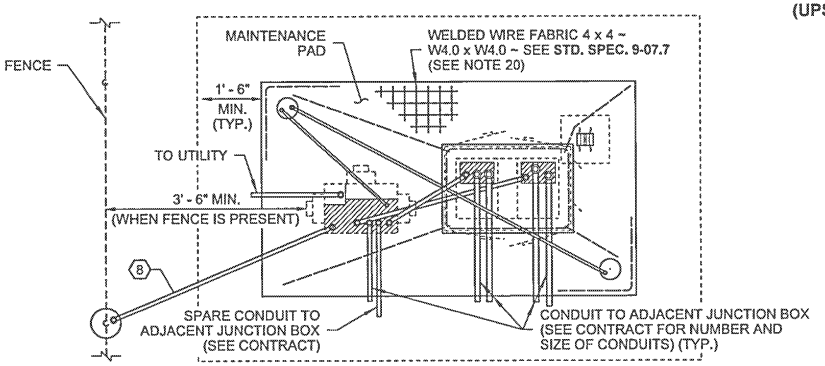

PLAN VIEW

TYPICAL FOUNDATION

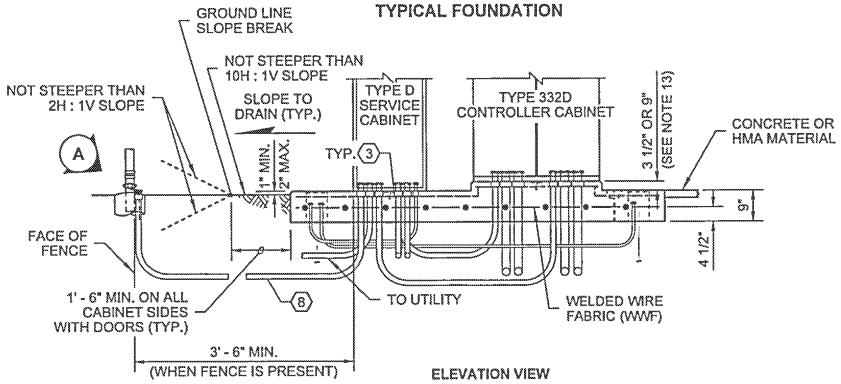

ELEVATION VIEW

TYPICAL FOUNDATION CROSS SECTION

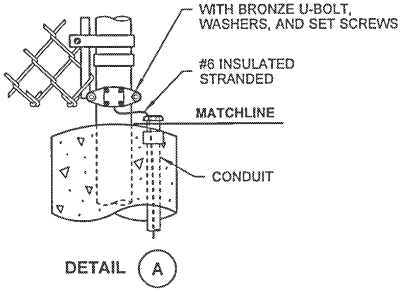

DETAIL A

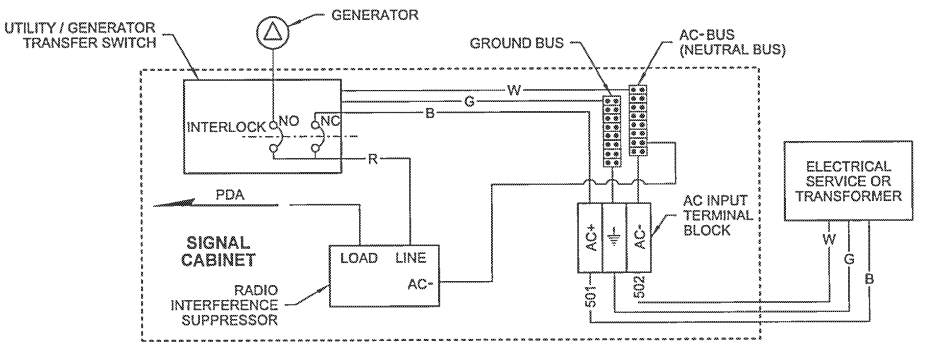

TRANSFER SWITCH CONNECTION TYPICAL WIRING DIAGRAM

THEODORE JOSEPH BAILEY
STATE OF WASHINGTON
39820
REGISTERED
PROFESSIONAL ENGINEER

Bailey, Ted
May 26 2015 9:34 AM

CABINET ORIENTATION CONDUIT LAYOUT AND FOUNDATION DETAIL

STANDARD PLAN J-10.10-03

SHEET 5 OF 6 SHEETS

APPROVED FOR PUBLICATION
Bakotich, Pasco
Jun 3 2015 4:19 PM
STATE DESIGN ENGINEER

Washington State Department of Transportation

DRAWN BY: COLBY FLETCHER

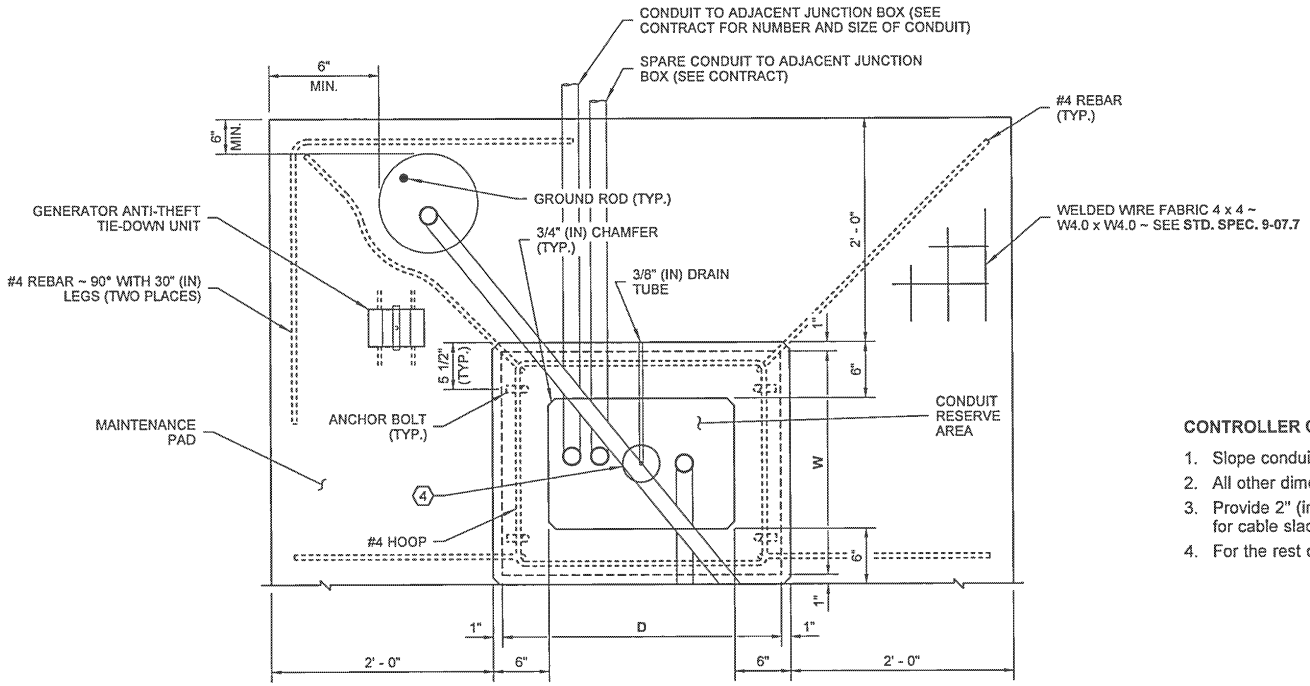

PLAN VIEW

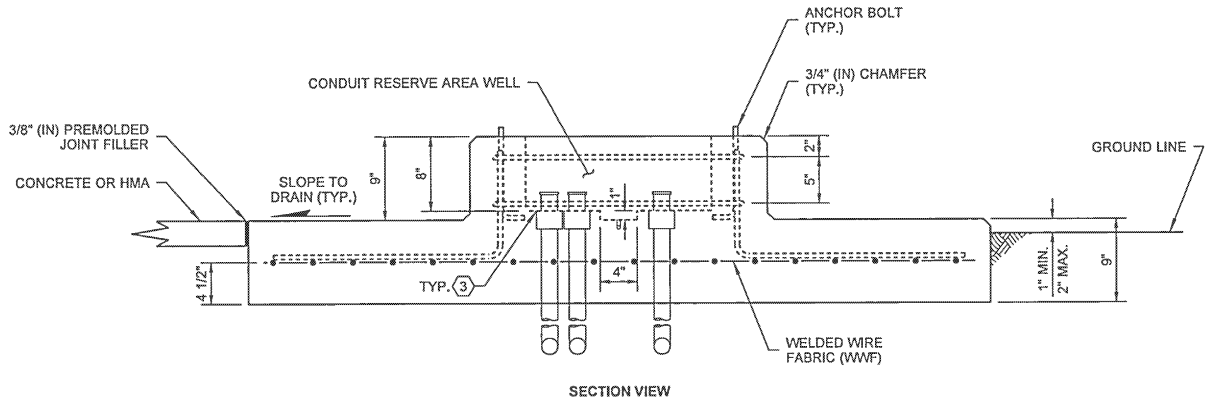

SECTION VIEW

CONTROLLER CABINET FOUNDATION DETAIL

CONTROLLER CABINET FOUNDATION NOTES

1. Slope conduit reserve area floor 1/4" (in) per 1' (ft) to the sump in the center.
2. All other dimensions shall be approved by the Engineer.
3. Provide 2" (in) clearance between conduit and edge of foundation well for cable slack.
4. For the rest of the foundation, see **Standard Plan J-10.20** for details.

THEODORE JOSEPH BAILEY
STATE OF WASHINGTON
39820
REGISTERED
PROFESSIONAL ENGINEER

Bailey, Ted
May 26 2015 9:35 AM

CABINET ORIENTATION CONDUIT LAYOUT AND FOUNDATION DETAIL

STANDARD PLAN J-10.10-03

SHEET 6 OF 6 SHEETS

APPROVED FOR PUBLICATION
Bakotich, Pasco
Jun 3 2015 4:15 PM
STATE DESIGN ENGINEER

Washington State Department of Transportation

This page left blank intentionally.

DRAWN BY: COLBY FLETCHER

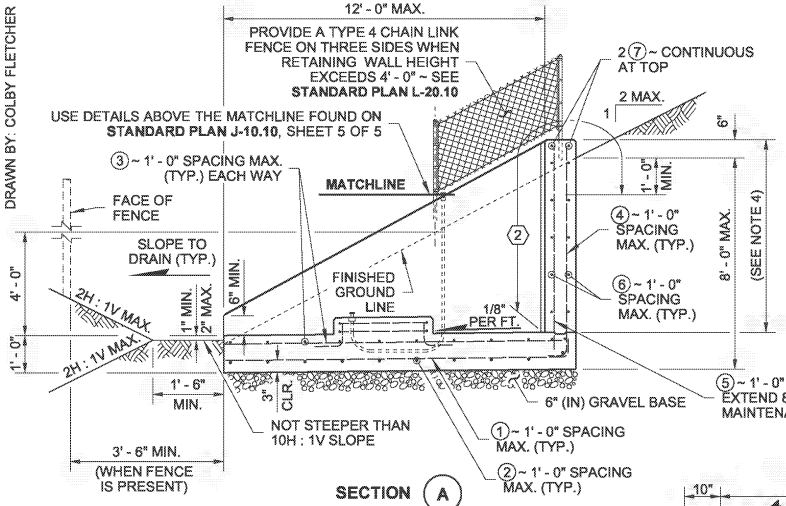

SECTION (A)

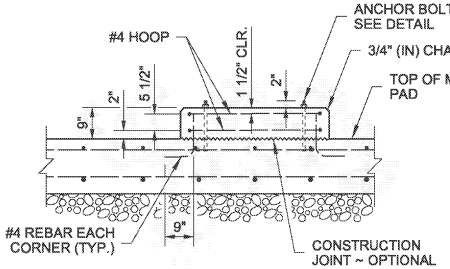

SECTION (B)

9" (IN) RAISED CABINET PAD SHOWN ~ 3 1/2" (IN) RAISED CABINET PAD IS SIMILAR, WITH ONE #4 TOP HOOP

NOTES

1. Contractor shall orient the maintenance pad to align with the direction of natural grade as shown. Obtain Engineer's approval of maintenance pad orientation prior to proceeding with construction.
2. The maintenance pad and retaining walls have been designed to meet the requirements of the AASHTO LRFD Bridge Design Specifications, 6th Edition, 2012.
3. Concrete for walls and bases shall be class 4000.
4. Height of wall varies to match slope of existing grade. Contractor shall field-determine wall height and each maintenance pad location and obtain approval from the Engineer prior to proceeding with construction.
5. 3/4" (in) chamfer for all exposed corners.
6. For grounding details not shown, see **Standard Plan J-60.05.**
7. For cabinet and conduit details not shown, see **Standard Plan J-10.10.**
8. The cabinets shall be attached to the foundation with 4 each: 1/2" (in) × 12" (in) × 2" (in) × 4" (in) anchor bolts (see Detail on this Sheet), washers, and nuts conforming to **Standard Specification 9-06.5(1)** and galvanized after fabrication in accordance with AASHTO M 232. Locate anchor bolts per cabinet manufacturer. Stainless steel epoxy anchors may be used as an alternative, and shall be 1/2" (in) diameter x 9" (in), or 5/8" (in) diameter x 8" (in). All threaded rod (conforming to ASTM F593), washers (conforming to ASTM A240), and nuts (conforming to ASTM F594), shall be Type 304 stainless steel. Bolts shall extend 1 1/2" (in) min to 2" (in) max above the concrete pad.

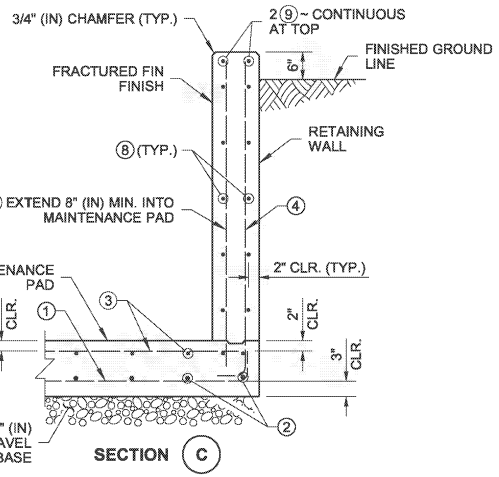

SECTION (C)

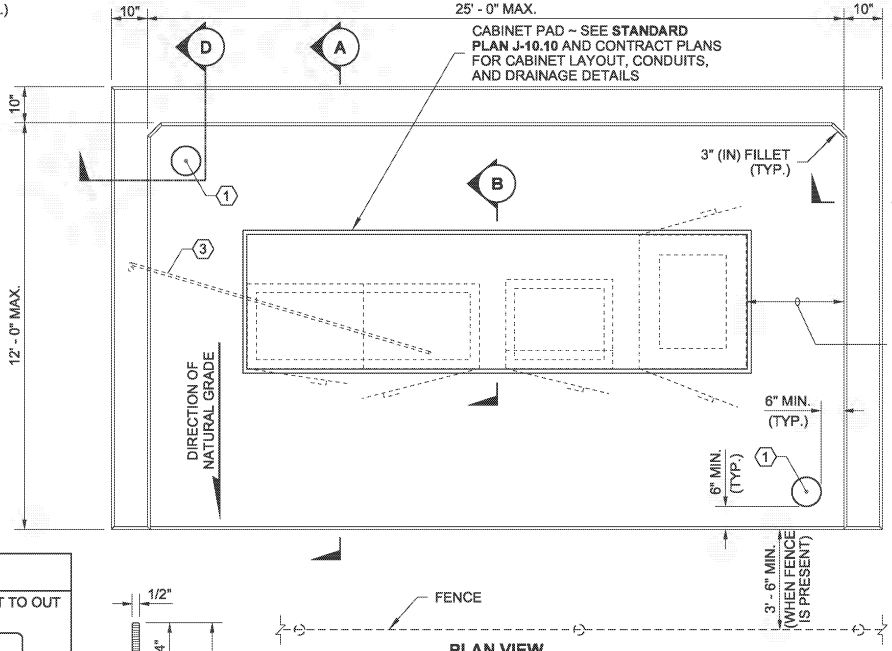

PLAN VIEW

CABINETS SHOWN FOR DISPLAY PURPOSES ONLY (SEE CONTRACT FOR CABINET LAYOUT)

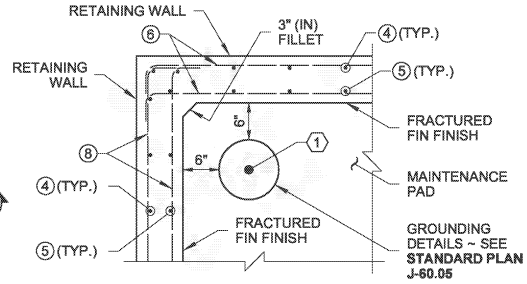

SECTION (D)

REINFORCING STEEL BENDING DIAGRAM

SEE **STD. SPEC. 9-07.1(2)** FOR BENDING DIAM. ALL DIMENSIONS ARE OUT TO OUT

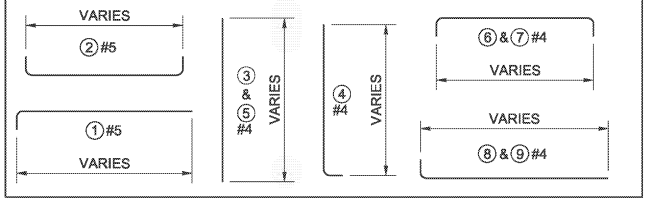

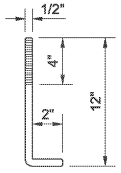

ANCHOR BOLT
SEE NOTE 8

① Drive ground rods before placing concrete. Move rod(s) and drain tile(s) with cover(s) as required to achieve full ground penetration. Maintain a 6' - 0" minimum clearance between ground rods as detailed on **Standard Plan J-60.05.**

② Limits of pigmented sealer. Typical for all retaining walls.

③ Delete conduit and conductor when fence is not present.

RICHARD P. ZELDENRUST
STATE OF WASHINGTON
25470
STRUCTURAL ENGINEER
PROFESSIONAL ENGINEER

Zeldenrust, Richard
Jun 10 2014 10:44 AM

CABINET ENCLOSURE ON SLOPE

STANDARD PLAN J-10.15-01

SHEET 1 OF 1 SHEET

APPROVED FOR PUBLICATION
Bakotich, Pasco
Jun 11 2014 1:29 PM
STATE DESIGN ENGINEER
Washington State Department of Transportation

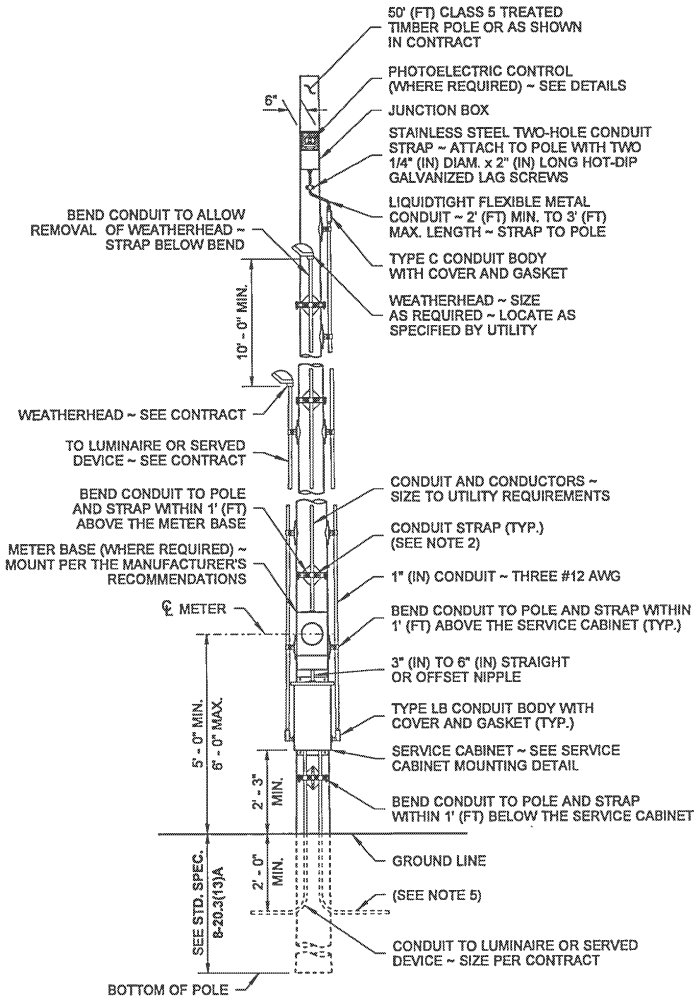

TYPE A SERVICE ~ 120 VOLT

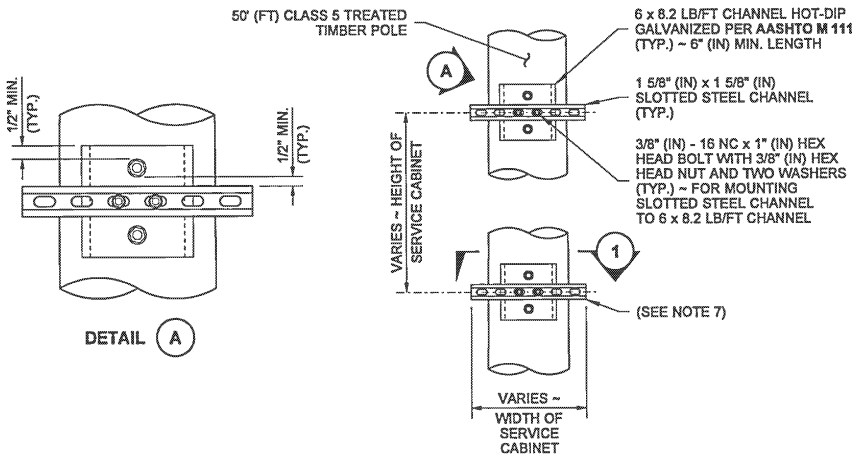

SERVICE CABINET MOUNTING DETAILS

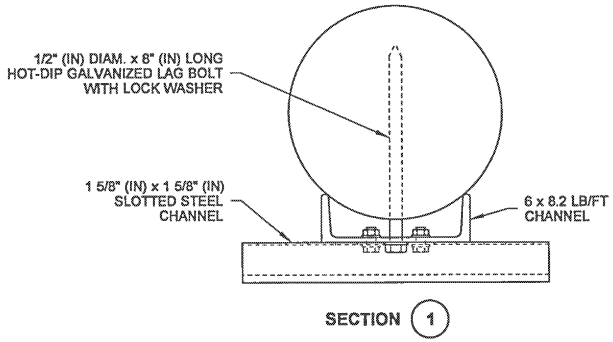

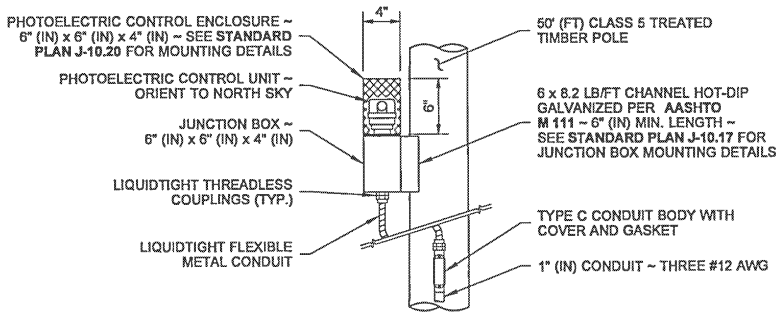

PHOTOELECTRIC CONTROL DETAILS

NOTES

1. Metering arrangements may vary with different serving utilities. The Contractor shall verify the requirements of the utility prior to installing the service equipment.
2. All service pole conduits shall be secured to the pole with two-hole conduit straps spaced at 5' (ft) maximum centers. See **Standard Plans J-60.13 and J-60.14** for steel channel support and wood pole mounting details. Where required by the Utility, an alternative-use hot-dip galvanized standoff bracket may be used. For details, see ALTERNATE STANDOFF BRACKET DETAIL on Sheet 2.
3. All risers and service equipment shall be installed on side of pole that is away from traffic.
4. Where required by the serving utility, service breakers shall be installed above meter socket in a separate rain-tight enclosure.
5. See **Standard Plan J-60.05** for grounding details.
6. See Breaker Schedule in Contract for breaker and contactor sizes.
7. See **Standard Plan J-60.13** for mounting details.

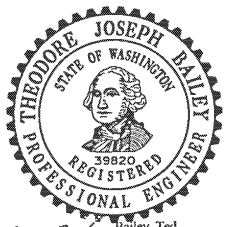

Bailey, Ted
May 28 2015 10:06 AM

SERVICE CABINET TYPE A (0 - 60 AMP TYPE 120 VOLT SINGLE PHASE)
STANDARD PLAN J-10.16-00

SHEET 1 OF 2 SHEETS

APPROVED FOR PUBLICATION
Bakotich, Pasco
Jun 3 2015 4:16 PM
STATE DESIGN ENGINEER
Washington State Department of Transportation

DRAWN BY: COLBY FLETCHER

NOTES (CONTINUED)

8. See **Standard Specification 9-29.24** (Service Cabinets).
9. Hinges shall have stainless steel or brass pins.
10. Cabinet shall be rated NEMA 3R.
11. The metering equipment door shall be pad-lockable. Each door shall be gasketed. See **Standard Plan J-10.20** for door hinge details.
12. The following equipment within the service enclosure shall have an appropriately engraved phenolic name plate attached with screws or rivets:
    Key Numbers 2, 3, 4, 6, 7, and 8.
    Key Number 4 name plate shall read as follows:
    "PHOTOCELL BYPASS TEST ON" AND "PHOTOCELL TEST OFF - AUTOMATIC."
    See service cabinet detail.
13. Dimensions shown are minimum and shall be adjusted to accommodate the various sizes of equipment installed.
14. All busswork shall be high grade copper and shall equal or exceed the main breaker rating. All breakers shall bolt on to the busswork. Jumpering of breakers shall not be allowed. Busswork shall accommodate all future equipment as shown in the Breaker Schedule.
15. The photoelectric control unit shall be centered in the photoelectric control enclosure to permit 360 degree rotation of the photoelectric control unit without removal of the photoelectric control unit or the photoelectric control enclosure.
16. All internal wire runs shall be identified with "TO - FROM" coded tags labeled with the code letters and/or numbers shown on the Schedules. Approved PVC or polyolefin wire marking sleeves shall be used.
17. All nuts, bolts, screws, and washers used for mounting the photoelectric control enclosure, conduit body covers, and junction box cover shall be **ASTM F593** or **A193 Type 304** or **Type 316** stainless steel.
18. A 1% tolerance is allowed for all dimensions.
19. Slotted steel channel and mounting hardware components shall be stainless steel. Conduit clamps shall be hot-dip galvanized steel or stainless steel.
20. Install conduit couplings on all conduits.
21. When using alternate door hinge, remove hinge pin prior to welding the hinge to the cabinet and prior to hot-dip galvanizing. After galvanizing, replace pin with a brass pin or solder in place. See **Standard Plan J-10.20** for alternate door hinge details.
22. The photoelectric control enclosure shall be fabricated from 5/8" (in) expanded steel mesh with welded seams and mounting flanges and shall be hot-dip galvanized after fabrication. Type 5052 - H32 aluminum with 5/8" (in) x 5/8" (in) expanded steel mesh may be used as an alternative material. See **Standard Plan J-10.20** for enclosure mounting details.
23. See Contract for Breaker Schedule.

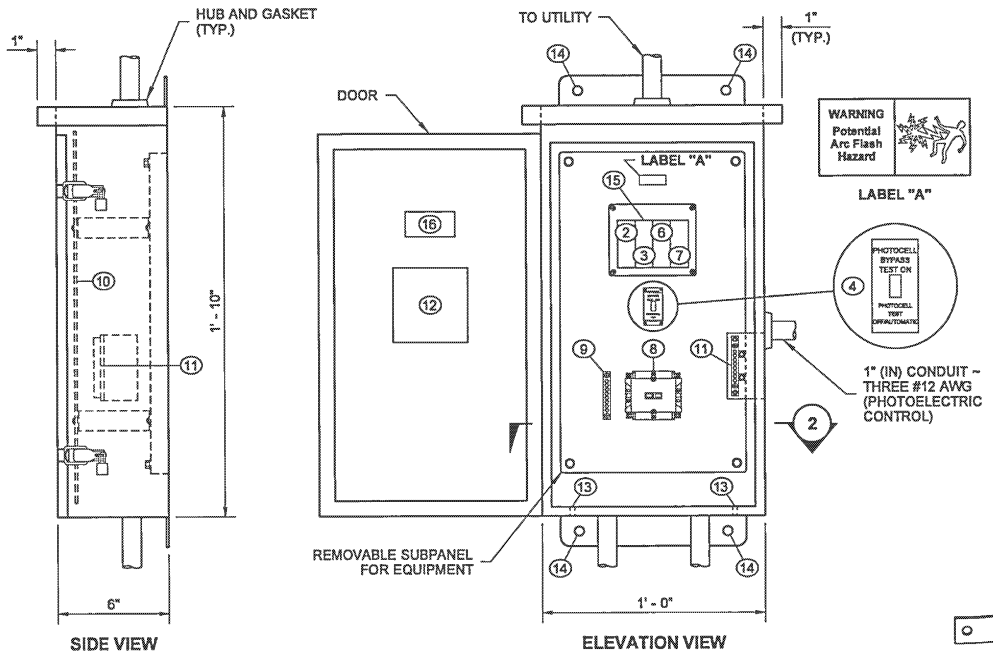

TYPE A SERVICE CABINET
(60 AMP TYPE 120 1ø SERVICE CABINET)

KEY

1. METER BASE PER SERVING UTILITY REQUIREMENTS ~ AS A MINIMUM, THE METER BASE SHALL BE SAFETY SOCKET BOX WITH FACTORY INSTALLED TEST BYPASS FACILITY THAT MEETS THE REQUIREMENTS OF **EUSERC DRAWING 304** ~ METER BASE ENCLOSURE SHALL BE FABRICATED FROM TYPE 304 STAINLESS STEEL
2. MAIN BREAKER (SPST - SIZE PER BREAKER SCHEDULE)
3. PHOTOELECTRIC CONTROL BREAKER (SPST ~ 15 AMP ~ 120/240 VOLT)
4. TEST SWITCH (SPDT ~ SNAP ACTION ~ POSITIVE CLOSE ~ 15 AMP ~ 120/277 VOLT ~ "T" RATED)
5. PHOTOELECTRIC CONTROL UNIT ~ SEE **STANDARD SPECIFICATION 9-29.11(2)**
6. BRANCH BREAKER ~ SEE BREAKER SCHEDULE (SPST ~ 120/240 VOLT)
7. SPARE BRANCH BREAKER (SPST ~ 20 AMP ~ 120/240 VOLT)
8. CONTACTOR ~ SEE BREAKER SCHEDULE
9. ISOLATED NEUTRAL BUSS ~ 8 LUG COPPER
10. DEAD FRONT ~ INSTALL SCREWS WITH WASHERS AT EACH CORNER ~ DEAD FRONT PANEL BOLTS SHALL NOT EXTEND INTO VERTICAL LIMITS OF THE BREAKER ARRAY(S)
11. CABINET MAIN BONDING JUMPER ASSEMBLY ~ BUSS SHALL BE 8 LUG TINNED COPPER ~ SEE **STANDARD PLAN J-10.20** FOR CABINET MAIN BONDING JUMPER ASSEMBLY DETAILS
12. METAL WIRING DIAGRAM HOLDER
13. 1/4" (IN) DIAMETER DRAIN HOLE ~ DRILL BEFORE GALVANIZING
14. MOUNTING HOLE ~ SEE **STANDARD PLAN J-10.20** FOR MOUNTING DETAILS
15. 4-CIRCUIT PANEL BOARD ~ MINIMUM SIZE WITH BACK-FED MAIN BREAKER
16. LABEL CABINET WITH BUSSWORK RATING

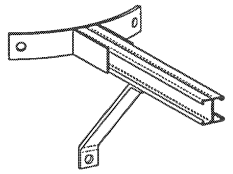

PERSPECTIVE VIEW

ALTERNATE STANDOFF BRACKET DETAIL
(SEE NOTE 2)

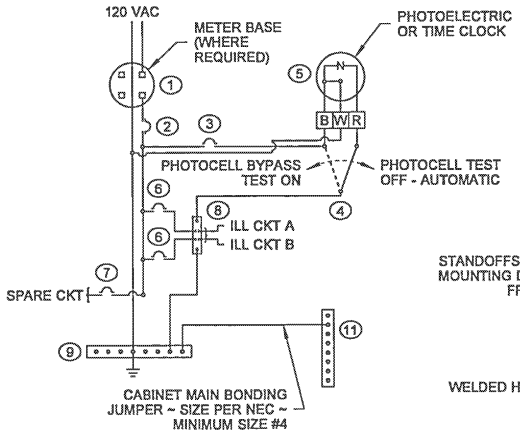

TYPE A WIRING DIAGRAM ~ 120 VOLT

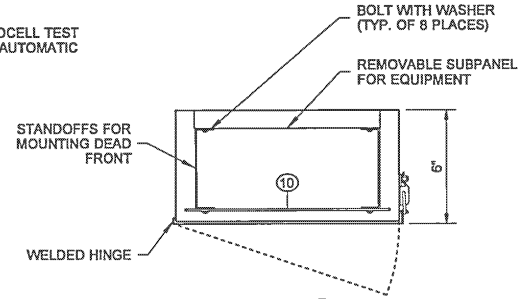

SECTION (2)

THEODORE JOSEPH BAILEY
STATE OF WASHINGTON
39820
REGISTERED
PROFESSIONAL ENGINEER

Bailey, Ted
May 28 2015 10:06 AM

SERVICE CABINET TYPE A
(0 - 60 AMP TYPE 120 VOLT SINGLE PHASE)
STANDARD PLAN J-10.16-00

SHEET 2 OF 2 SHEETS

APPROVED FOR PUBLICATION
Bakotich, Pasco
Jun 3 2015 4:17 PM
STATE DESIGN ENGINEER

Washington State Department of Transportation

DRAWN BY: COLBY FLETCHER

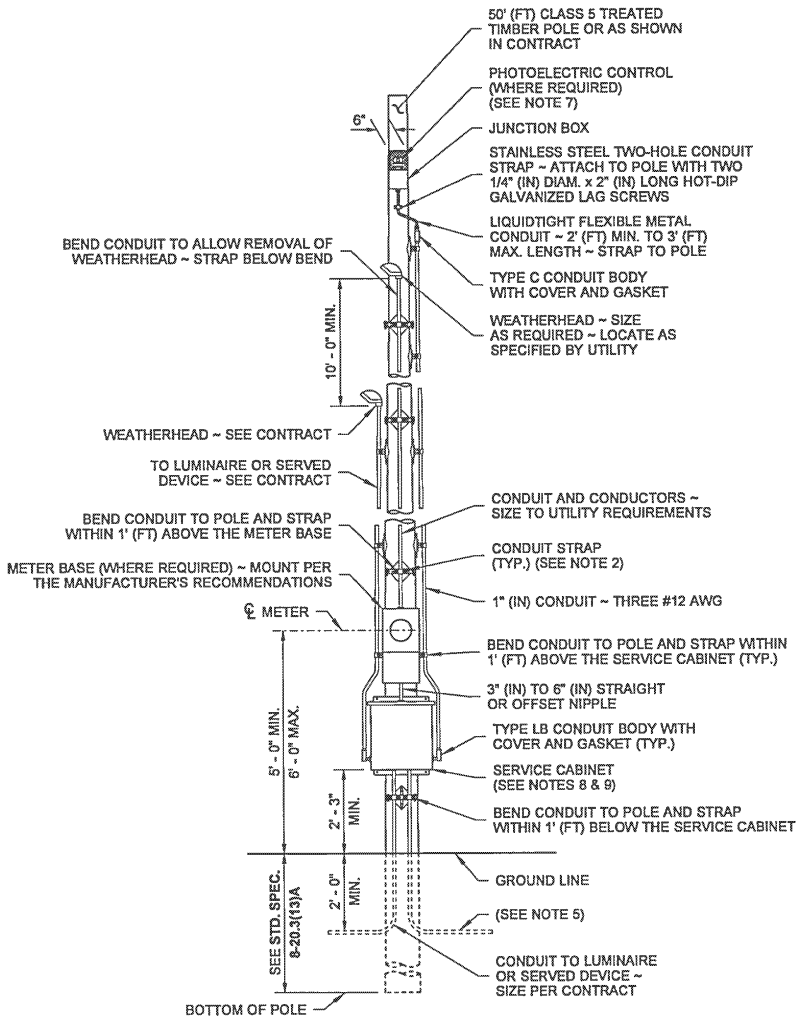

TYPE B SERVICE ~ 120/240 VOLT

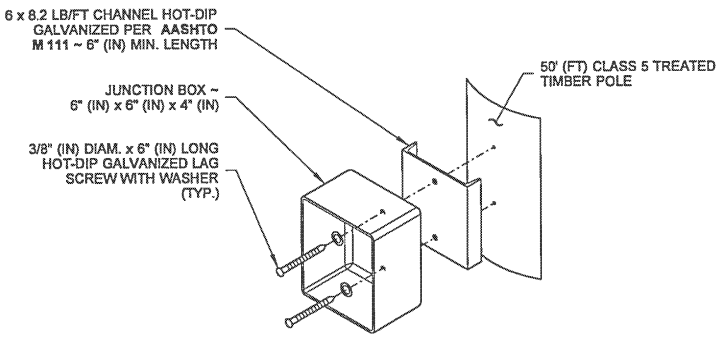

JUNCTION BOX MOUNTING DETAIL

ISOMETRIC VIEW

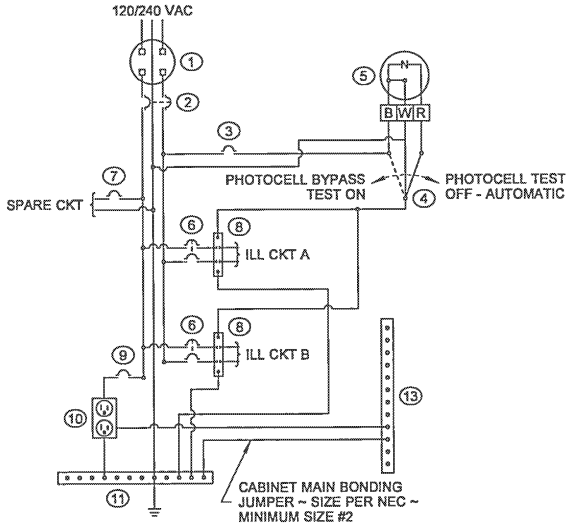

TYPE B WIRING DIAGRAM ~ 240 VOLT

NOTES

1. Metering arrangements may vary with different serving utilities. The Contractor shall verify the requirements of the utility prior to installing the service equipment.
2. All service pole conduits shall be secured to the pole with two-hole conduit straps spaced at 5' (ft) maximum centers. See **Standard Plans J-60.13 and J-60.14** for steel channel support and mounting details. Where required by the Utility, an alternative-use hot-dip galvanized standoff bracket may be used. See **Standard Plan J-10.16** for ALTERNATE STANDOFF BRACKET DETAIL.
3. All risers and service equipment shall be installed on side of pole that is away from traffic.
4. Where required by the serving utility, service breakers shall be installed above meter socket in a separate rain-tight enclosure.
5. See **Standard Plan J-60.05** for grounding details.
6. See Breaker Schedule in Contract for breaker and contactor sizes.
7. See **Standard Plan J-10.16** for photoelectric control details.
8. See **Standard Plan J-10.16** for service cabinet mounting details.

THEODORE JOSEPH BAILEY STATE OF WASHINGTON 39820 REGISTERED PROFESSIONAL ENGINEER

Bailey, Ted
May 28 2015 10:07 AM

SERVICE CABINET TYPE B (0 - 60 AMP TYPE 120/240 VOLT SINGLE PHASE) STANDARD PLAN J-10.17-00

SHEET 1 OF 2 SHEETS

APPROVED FOR PUBLICATION
Bakotich, Pasco
Jun 3 2015 4:19 PM
STATE DESIGN ENGINEER

Washington State Department of Transportation

DRAWN BY: COLBY FLETCHER

NOTES (CONTINUED)

9. See **Standard Specification 9-29.24** (Service Cabinets).
10. Hinges shall have stainless steel or brass pins.
11. Cabinet shall be rated NEMA 3R and shall include two rain-tight vents.
12. The metering equipment door shall be pad-lockable. Each door shall be gasketed. See **Standard Plan J-10.20** for door hinge details.
13. The following equipment within the service enclosure shall have an appropriately engraved phenolic name plate attached with screws or rivets:
    Key Numbers 2, 3, 4, 6, 7, 8, and 9.
    Key Number 4 name plate shall read as follows:
    "PHOTOCELL BYPASS TEST ON" AND "PHOTOCELL TEST OFF - AUTOMATIC."
    See service cabinet detail.
14. Metering arrangements vary with serving utilities. The Contractor shall verify the serving utility's requirements prior to fabrication and installation of the service equipment.
15. Dimensions shown are minimum and shall be adjusted to accommodate the various sizes of equipment installed.
16. All busswork shall be high-grade copper and shall equal or exceed the main breaker rating. All breakers shall bolt on to the busswork. Jumpering of breakers shall not be allowed. Busswork shall accommodate all future equipment as shown in the Breaker Schedule.
17. The photoelectric control unit shall be centered in the photoelectric control enclosure to permit 360 degree rotation of the photoelectric control unit without removal of the photoelectric control unit or the photoelectric control enclosure.
18. All internal wire runs shall be identified with "TO - FROM" coded tags labeled with the code letters and/or numbers shown on the Schedules. Approved PVC or polyolefin wire marking sleeves shall be used.
19. All nuts, bolts, screws, and washers used for mounting the photoelectric control enclosure, conduit body covers, and junction box cover shall be **ASTM F593** or **A193 Type 304** or **Type 316** stainless steel.
20. A 1% tolerance is allowed for all dimensions.
21. Slotted steel channel and mounting hardware components shall be stainless steel. Conduit clamps shall be hot-dip galvanized steel or stainless steel.
22. Install conduit couplings on all conduits.
23. When using alternate door hinge, remove hinge pin prior to welding the hinge to the cabinet and prior to hot-dip galvanizing. After galvanizing, replace pin with a brass pin or solder in place. See **Standard Plan J-10.20** for alternate door hinge details.
24. The photoelectric control enclosure shall be fabricated from 5/8" (in) expanded steel mesh with welded seams and mounting flanges and shall be hot-dip galvanized after fabrication. Type 5052 - H32 aluminum with 5/8" (in) x 5/8" (in) expanded steel mesh may be used as an alternative material. See **Standard Plan J-10.20** for enclosure mounting details.
25. See Contract for Breaker Schedule.

DRAWN BY: COLBY FLETCHER

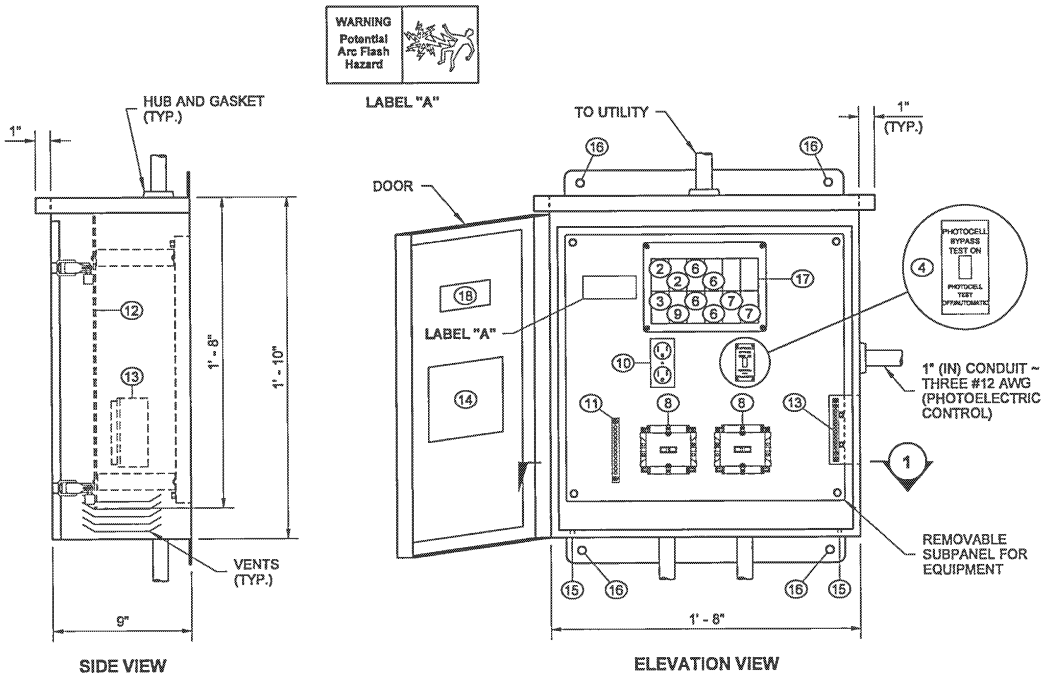

TYPE B SERVICE CABINET
(200 AMP TYPE 120/240 1ø SERVICE CABINET)

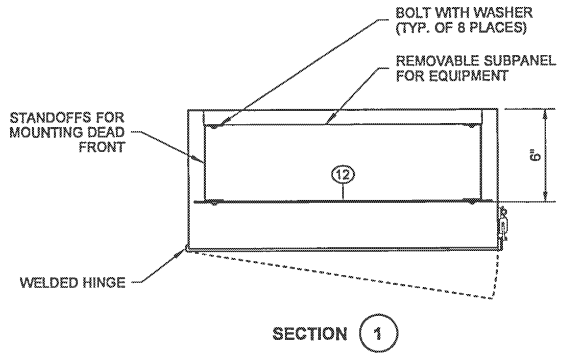

KEY

1. METER BASE PER SERVING UTILITY REQUIREMENTS ~ AS A MINIMUM, THE METER BASE SHALL BE SAFETY SOCKET BOX WITH FACTORY-INSTALLED TEST BYPASS FACILITY THAT MEETS THE REQUIREMENTS OF **EUSERC DRAWING 304** ~ METER BASE ENCLOSURE SHALL BE FABRICATED FROM TYPE 304 STAINLESS STEEL
2. MAIN BREAKER (DPST ~ SIZE PER BREAKER SCHEDULE)
3. PHOTOELECTRIC CONTROL BREAKER (SPST ~ 15 AMP ~ 120/240 VOLT)
4. TEST SWITCH (SPDT ~ SNAP ACTION ~ POSITIVE CLOSE ~ 15 AMP ~ 120/277 VOLT ~ "T" RATED)
5. PHOTOELECTRIC CONTROL UNIT ~ SEE **STANDARD SPECIFICATION 9-29.11(2)**
6. BRANCH BREAKER ~ SEE BREAKER SCHEDULE (DPST ~ 120/240 VOLT)
7. SPARE BREAKER ~ SEE BREAKER SCHEDULE (SPST ~ 20 AMP ~ 120/240 VOLT)
8. CONTACTOR ~ SEE BREAKER SCHEDULE
9. RECEPTACLE BREAKER (SPST ~ 20 AMP ~ 120/240 VOLT)
10. RECEPTACLE ~ GROUNDED (GFCI ~ 20 AMP ~ 125 VOLT)
11. ISOLATED NEUTRAL BUSS ~ 12 LUG COPPER
12. DEAD FRONT ~ INSTALL SCREWS WITH WASHERS AT EACH CORNER ~ DEAD FRONT PANEL BOLTS SHALL NOT EXTEND INTO VERTICAL LIMITS OF THE BREAKER ARRAY(S)
13. CABINET MAIN BONDING JUMPER ASSEMBLY ~ BUSS SHALL BE 12 LUG TINNED COPPER ~ SEE **STANDARD PLAN J-10.20** FOR CABINET MAIN BONDING JUMPER ASSEMBLY DETAILS
14. METAL WIRING DIAGRAM HOLDER
15. 1/4" (IN) DIAMETER DRAIN HOLE ~ DRILL BEFORE GALVANIZING
16. MOUNTING HOLE ~ SEE **STANDARD PLAN J-10.20** FOR MOUNTING DETAILS
17. 12-CIRCUIT PANEL BOARD ~ MINIMUM SIZE WITH BACK-FED MAIN BREAKER
18. LABEL CABINET WITH BUSSWORK RATING

THEODORE JOSEPH BAILEY
STATE OF WASHINGTON
39820
REGISTERED PROFESSIONAL ENGINEER

Bailey, Ted
May 28 2015 10:07 AM

SERVICE CABINET TYPE B (0 - 60 AMP TYPE 120/240 VOLT SINGLE PHASE) STANDARD PLAN J-10.17-00

APPROVED FOR PUBLICATION
Bakotich, Pasco
Jun 3 2015 4:20 PM
STATE DESIGN ENGINEER
Washington State Department of Transportation

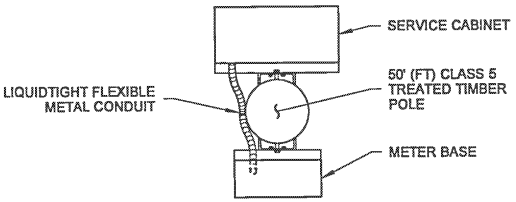

SECTION (1)

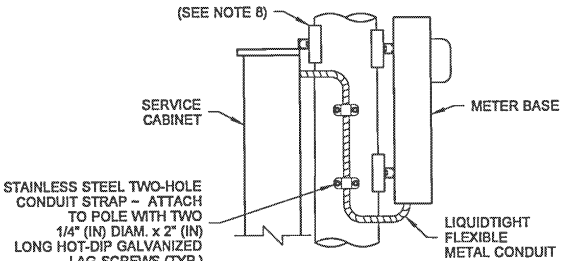

SECTION (2)

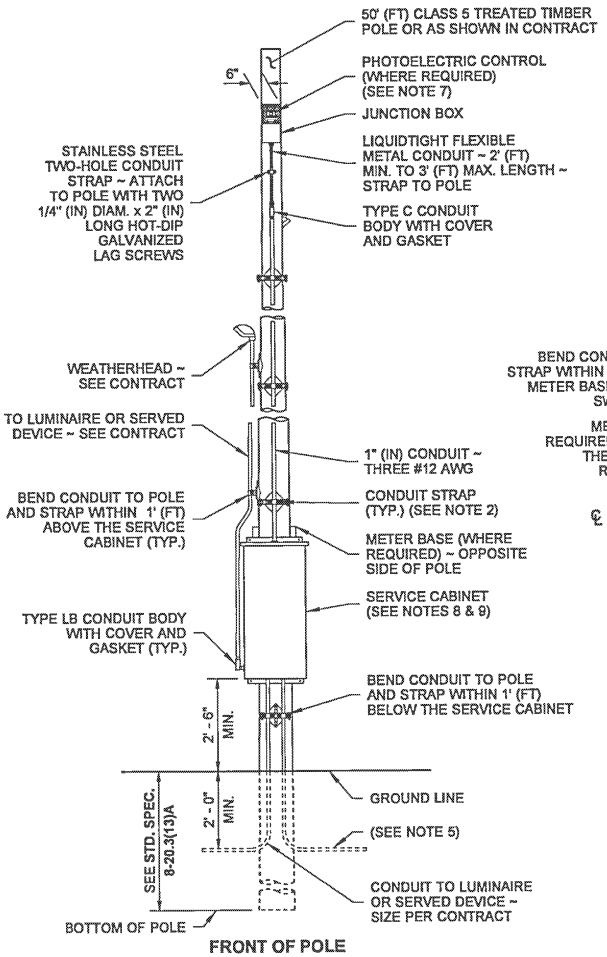

FRONT OF POLE

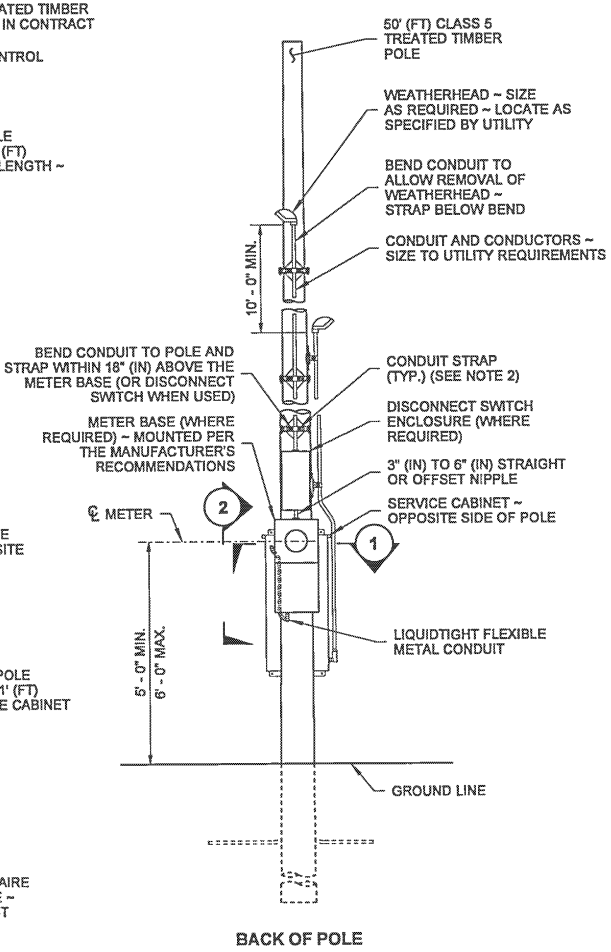

BACK OF POLE

TYPE C SERVICE ~ 480 VOLT

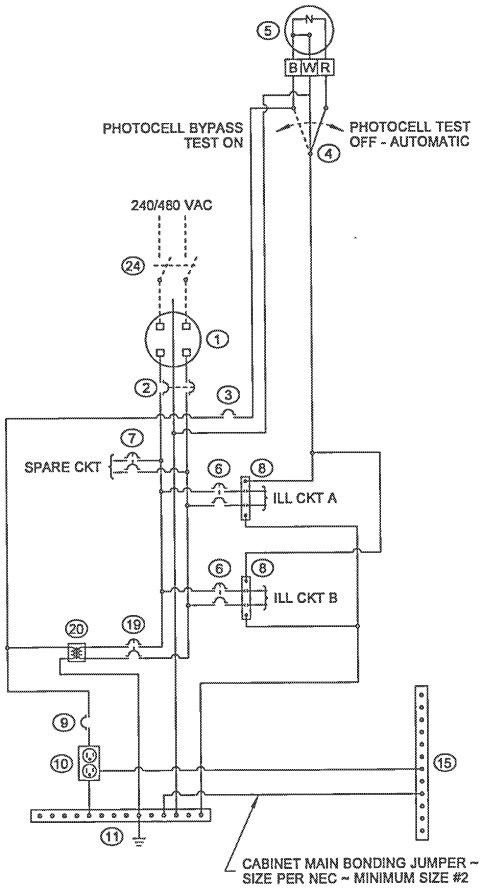

TYPE C WIRING DIAGRAM ~ 480 VOLT

DRAWN BY: COLBY FLETCHER

NOTES

1. Metering arrangements may vary with different serving utilities. The Contractor shall verify the requirements of the utility prior to installing the service equipment.
2. All service pole conduits shall be secured to the pole with two-hole conduit straps spaced at 5' (ft) maximum centers. See **Standard Plans J-60.13 and J-60.14** for steel channel support and mounting details. Where required by the Utility, an alternative-use hot-dip galvanized standoff bracket may be used. See **Standard Plan J-10.16** for ALTERNATE STANDOFF BRACKET DETAIL.
3. All risers and service equipment shall be installed on side of pole that is away from traffic.
4. Where required by the serving utility, service breakers shall be installed above meter socket in a separate rain-tight enclosure.
5. See **Standard Plan J-60.05** for grounding details.
6. See Breaker Schedule in Contract for breaker and contactor sizes.
7. See **Standard Plan J-10.16** for photolectric control details.
8. See **Standard Plan J-10.16** for service cabinet mounting details.

THEODORE JOSEPH BAILEY STATE OF WASHINGTON 39820 REGISTERED PROFESSIONAL ENGINEER

Bailey, Ted
May 28 2015 10:08 AM

SERVICE CABINET TYPE C (0 - 60 AMP TYPE 240/480 VOLT SINGLE PHASE) STANDARD PLAN J-10.18-00

SHEET 1 OF 2 SHEETS

APPROVED FOR PUBLICATION
Bakotich, Pasco
Jun 3 2015 4:20 PM
STATE DESIGN ENGINEER
Washington State Department of Transportation

NOTES (CONTINUED)

9. See **Standard Specification 9-29.24** (Service Cabinets).
10. Hinges shall have stainless steel or brass pins.
11. Cabinet shall be rated NEMA 3R and shall include two rain-tight vents.
12. The metering equipment door shall be pad-lockable. Each door shall be gasketed. See **Standard Plan J-10.20** for door hinge details. Concealed heavy-duty stainless steel lift-off hinges are allowed as an alternative. Upper left door shall have three hinges, lower left door shall have two hinges, and right door shall have three hinges. All doors shall have a two-position door stop assembly.
13. The following equipment within the service enclosure shall have an appropriately engraved phenolic name plate attached with screws or rivets:
    Key Numbers 2, 3, 4, 6, 7, 8, and 9.
    Key Number 4 name plate shall read as follows: "PHOTOCELL BYPASS TEST ON" AND "PHOTOCELL TEST OFF - AUTOMATIC."
    See service cabinet detail.
14. Dimensions shown are minimum and shall be adjusted to accommodate the various sizes of equipment installed.
15. All busswork shall be high-grade copper and shall equal or exceed the main breaker rating. All breakers shall bolt on to the busswork. Jumpering of breakers shall not be allowed. Busswork shall accommodate all future equipment as shown in the Breaker Schedule.
16. The photoelectric control unit shall be centered in the photoelectric control enclosure to permit 360 degree rotation of the photoelectric control unit without removal of the photoelectric control unit or the photoelectric control enclosure.
17. All internal wire runs shall be identified with "TO - FROM" coded tags labeled with the code letters and/or numbers shown on the Schedules. Approved PVC or polyolefin wire marking sleeves shall be used.
18. All nuts, bolts, screws, and washers used for mounting the photoelectric control enclosure, conduit body covers, and junction box cover shall be **ASTM F593** or **A193 Type 304** or **Type 316** stainless steel.
19. A 1% tolerance is allowed for all dimensions.
20. See Contract for Breaker Schedule.
21. Install conduit couplings on all conduits.
22. The photoelectric control enclosure shall be fabricated from 5/8" (in) expanded steel mesh with welded seams and mounting flanges and shall be hot-dip galvanized after fabrication. Type 5052 - H32 aluminum with 5/8" (in) x 5/8" (in) expanded steel mesh may be used as an alternative material. See **Standard Plan J-10.20** for enclosure mounting details.
23. Slotted steel channel and mounting hardware components shall be stainless steel. Conduit clamps shall be hot-dip galvanized steel or stainless steel.
24. When using alternate door hinge, remove hinge pin prior to welding the hinge to the cabinet and prior to hot-dip galvanizing. After galvanizing, replace pin with a brass pin or solder in place. See **Standard Plan J-10.20** for alternate door hinge details.

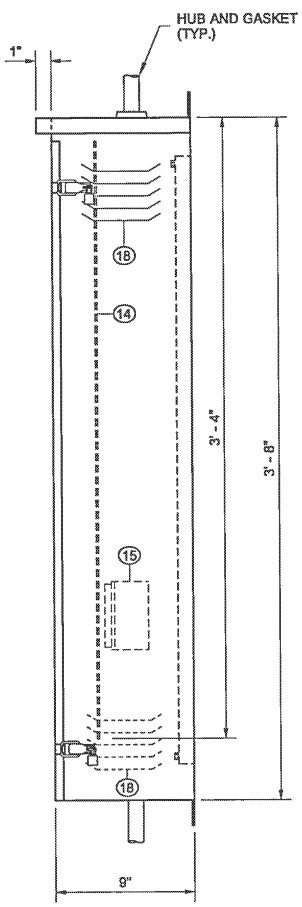

SIDE VIEW

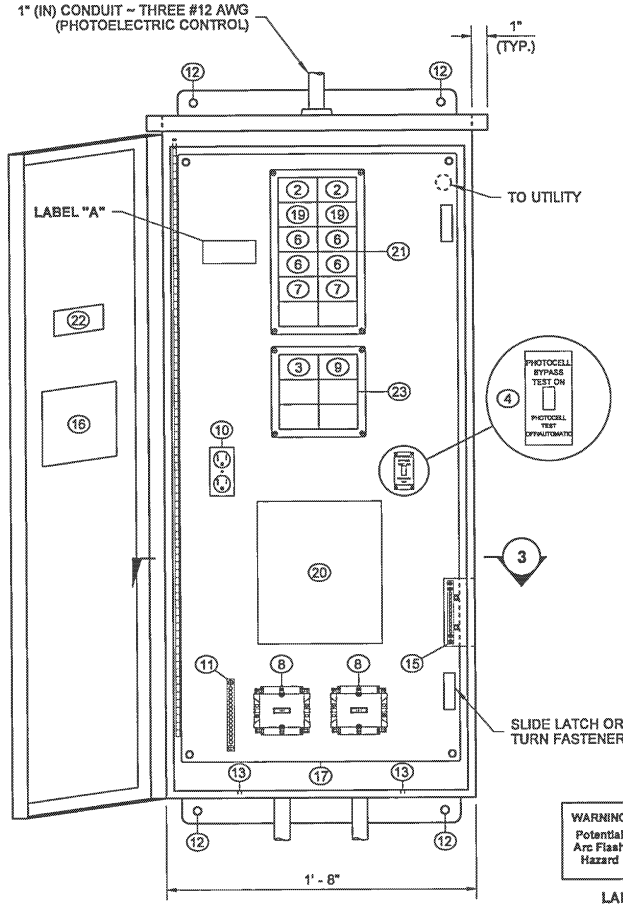

ELEVATION VIEW
((14) NOT SHOWN FOR CLARITY)

LABEL "A"

TYPE C SERVICE CABINET

(60 AMP TYPE 120 1ø SERVICE CABINET)

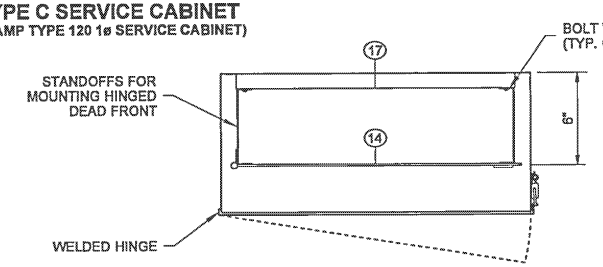

SECTION (3)

KEY

1. METER BASE PER SERVING UTILITY REQUIREMENTS ~ AS A MINIMUM, THE METER BASE SHALL BE SAFETY SOCKET BOX WITH FACTORY-INSTALLED TEST BYPASS FACILITY THAT MEETS THE REQUIREMENTS OF **EUSERC DRAWING 304** ~ METER BASE ENCLOSURE SHALL BE FABRICATED FROM TYPE 304 STAINLESS STEEL
2. MAIN BREAKER (DPST ~ SIZE PER BREAKER SCHEDULE)
3. PHOTOELECTRIC CONTROL BREAKER (SPST ~ 15 AMP ~ 120/240 VOLT)
4. TEST SWITCH (SPDT ~ SNAP ACTION ~ POSITIVE CLOSE ~ 15 AMP ~ 120/277 VOLT ~ "T" RATED)
5. PHOTOELECTRIC CONTROL UNIT ~ SEE **STANDARD SPECIFICATION 9-29.11(2)**
6. BRANCH BREAKER (DPST ~ SIZE PER BREAKER SCHEDULE)
7. SPARE BREAKER ~ SEE BREAKER SCHEDULE (DPST ~ 20 AMP ~ 240/480 VOLT)
8. CONTACTOR ~ SEE BREAKER SCHEDULE
9. RECEPTACLE BREAKER (SPST ~ 20 AMP ~ 120/240 VOLT)
10. RECEPTACLE ~ GROUNDED (GFCI ~ 20 AMP ~ 125 VOLT)
11. ISOLATED NEUTRAL BUSS ~ 14 LUG COPPER
12. MOUNTING HOLE ~ SEE **STANDARD PLAN J-10.20** FOR MOUNTING DETAILS
13. 1/4" (IN) DIAMETER DRAIN HOLE ~ DRILL BEFORE GALVANIZING
14. HINGED DEAD FRONT WITH 1/4 TURN FASTENERS OR SLIDE LATCH ~ DEAD FRONT PANEL BOLTS SHALL NOT EXTEND INTO VERTICAL LIMITS OF THE BREAKER ARRAY(S)
15. CABINET MAIN BONDING JUMPER ASSEMBLY ~ BUSS SHALL BE 12 LUG TINNED COPPER ~ SEE **STANDARD PLAN J-10.20** FOR CABINET MAIN BONDING JUMPER ASSEMBLY DETAILS
16. METAL WIRING DIAGRAM HOLDER
17. REMOVABLE SUBPANEL FOR EQUIPMENT
18. SCREENED VENTS ~ TWO REQUIRED (ONE EACH SIDE) ~ LOUVERED PLATES
19. TRANSFORMER BREAKER (DPST ~ 15 AMP ~ 480 VOLT)
20. DRY TRANSFORMER (480/120 VOLT) ~ 3 KVA ~ COPPER BUSSED AND COPPER WOUND
21. 12-CIRCUIT PANEL BOARD ~ MINIMUM SIZE WITH MAIN BREAKER
22. LABEL CABINET WITH BUSSWORK RATING
23. 6-CIRCUIT PANEL BOARD ~ MINIMUM SIZE
24. UTILITY DISCONNECT SWITCH ENCLOSURE WITH COVER ~ OMIT IF UTILITY DOES NOT REQUIRE THE DISCONNECT SWITCH

THEODORE JOSEPH BAILEY
STATE OF WASHINGTON
39820
REGISTERED
PROFESSIONAL ENGINEER

Bailey, Ted
May 28 2015 10:09 AM

SERVICE CABINET TYPE C (0 - 60 AMP TYPE 240/480 VOLT SINGLE PHASE) STANDARD PLAN J-10.18-00

SHEET 2 OF 2 SHEETS

APPROVED FOR PUBLICATION
Bakotich, Pasco
Jun 3 2015 4:20 PM
STATE DESIGN ENGINEER
Washington State Department of Transportation

DRAWN BY: COLBY FLETCHER

NOTES (200 AMP TYPE 120/240 1ø SERVICE CABINET)

1. See **Standard Specification 9-29.24** (Service Cabinets).
2. Hinges shall have stainless steel or brass pins.
3. Cabinets shall be rated NEMA 3R and shall include two rain-tight vents.
4. Metering equipment door shall be pad-lockable. Each door shall be gasketed. Install Best CX Construction Core on right side door. See Door Hinge Detail.
5. The following equipment within the service enclosure shall have an appropriately engraved phenolic name plate attached with screws or rivets:
   Key Numbers 2, 3, 4, 6, 7, 8, 9, & 16
   Key Number 4 name plate shall read:
   "PHOTOCELL BYPASS TEST ON" and "PHOTOCELL TEST OFF-AUTOMATIC". See Service Cabinet Detail.
6. Metering arrangements vary with different serving Utilities. The Utility may require meter base mounting in the enclosure, on the side, or on the back of the enclosure. The Utility may require the dimension between the door and the front of the safety socket box to be less than the 11" (in) shown in the Left Side - Safety Socket Box Mounting Detail. The Contractor shall verify the serving Utility's requirements prior to fabrication and installation of the service equipment.
7. Dimensions shown are minimum and shall be adjusted to accommodate the various sizes of equipment installed.
8. All busswork shall be high-grade copper and shall equal or exceed the main breaker rating. All breakers shall bolt onto the busswork. Jumpering of breakers shall not be allowed. Busswork shall accommodate all future equipment as shown in the breaker schedule.
9. The photocell unit shall be centered in the photocell enclosure to permit 360 degree rotation of the photocell without removal of the photocell unit or the photocell enclosure.
10. All internal wire runs shall be identified with "TO - FROM" coded tags labeled with the code letters and/or numbers shown on the schedules. Approved PVC or polyolefin wire marking sleeves shall be used.
11. All nuts, bolts, and washers used for mounting the photocell enclosure shall be stainless steel.
12. A 1% tolerance is allowed for all dimensions.
13. Slotted steel channel and mounting hardware components shall be stainless steel. Conduit clamps shall be hot-dipped galvanized steel or stainless steel.
14. The meter base portion of this service was designed to meet metering portion of **EUSERC Drawing 309** requirements.
15. When using alternate door hinge:
    Remove hinge pin prior to welding hinge to cabinet and prior to hot-dip galvanizing. After galvanizing, replace pin with brass pin and solder in place.
16. Verify the service utility stand-off dimension. Adjust the removable panel to the measurement provided by the Utility Company. After adjustment, cut off all-thread bolts so that no less than two and no more than three full threads extend past the face of the nuts.

DRAWN BY: COLBY FLETCHER

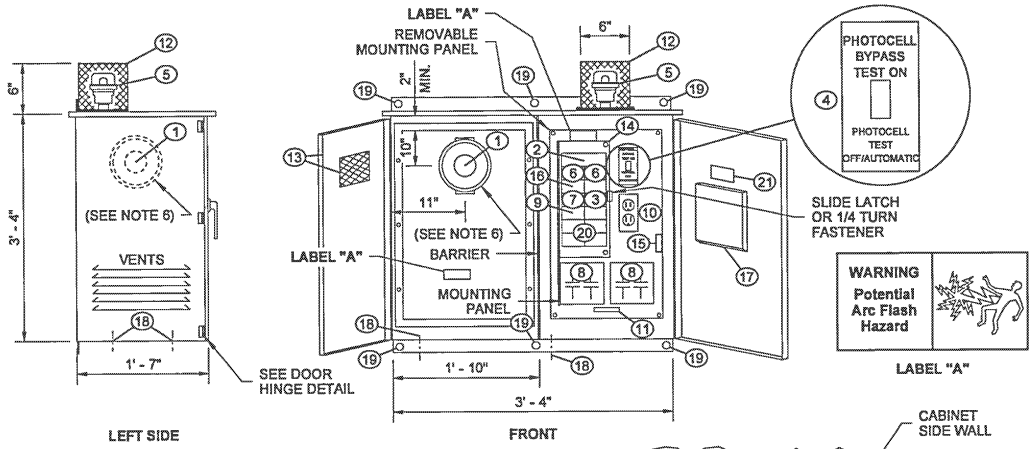

SERVICE CABINET DETAIL

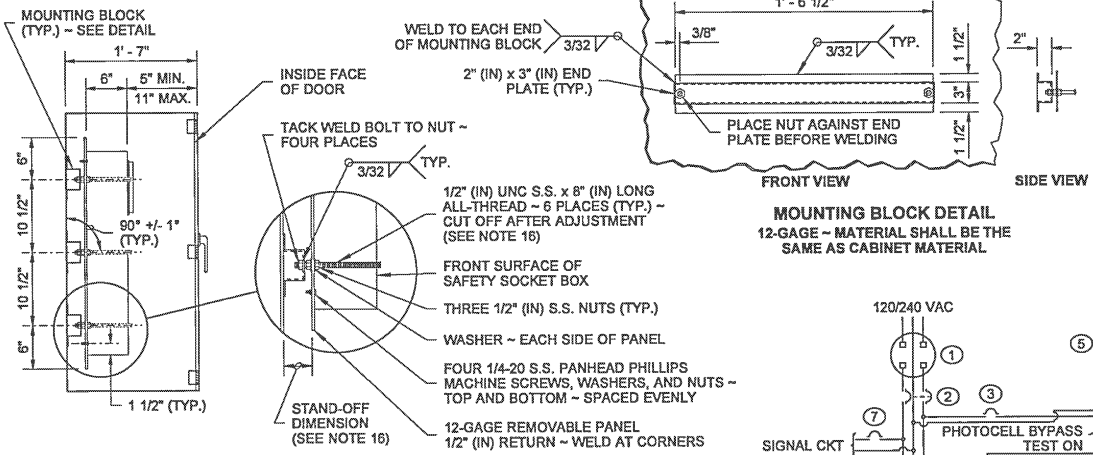

LEFT SIDE - SAFETY SOCKET BOX MOUNTING DETAIL

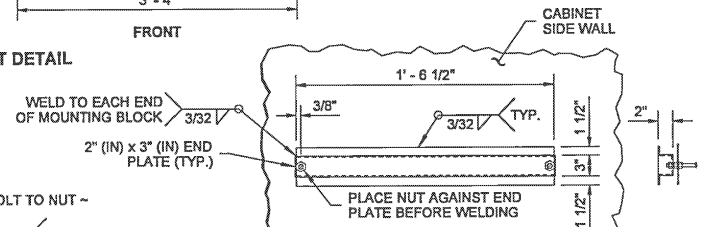

MOUNTING BLOCK DETAIL

12-GAGE ~ MATERIAL SHALL BE THE SAME AS CABINET MATERIAL

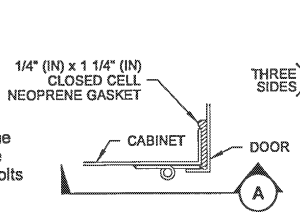

DOOR HINGE DETAIL

ALTERNATE TYPE B MODIFIED CABINET (SEE NOTE 15)

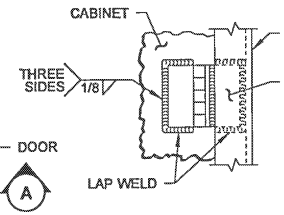

SECTION (A)

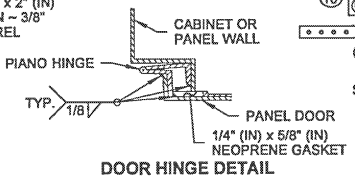

DOOR HINGE DETAIL

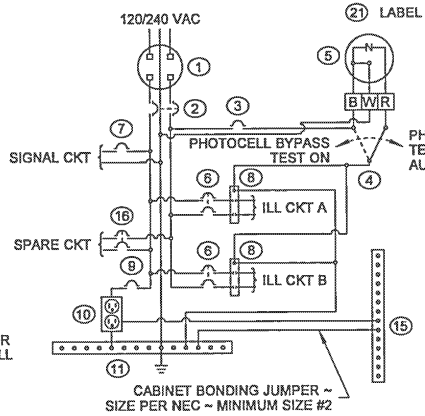

WIRING DIAGRAM

KEY

1. METER BASE PER SERVING UTILITY REQUIREMENTS ~ AS A MINIMUM, THE METER BASE SHALL BE SAFETY SOCKET BOX WITH FACTORY-INSTALLED TEST BYPASS FACILITY THAT MEETS THE REQUIREMENTS OF **EUSERC DRAWING 305** ~ WHEN THE UTILITY REQUIRES METER BASE TO BE MOUNTED ON THE SIDE OR BACK OF THE SERVICE CABINET, THE METER BASE ENCLOSURE SHALL BE FABRICATED FROM TYPE 304 STAINLESS STEEL.
2. MAIN BREAKER ~ DPST ~ SIZE PER BREAKER SCHEDULE
3. PHOTOCELL BREAKER ~ SPST 15 AMP - 120/240 VOLT
4. TEST SWITCH ~ SPDT SNAP ACTION - POSITIVE CLOSE 15 AMP - 120/277 VOLT - "T" RATED
5. PHOTOELECTRIC CONTROL ~ SEE **STANDARD SPECIFICATION 9-29.11(2)**
6. BRANCH BREAKER ~ SEE BREAKER SCHEDULE
7. SIGNAL BREAKER ~ SEE BREAKER SCHEDULE
8. CONTACTOR ~ SEE BREAKER SCHEDULE
9. RECEPTACLE BREAKER ~ SPST 20 AMP - 120/240 VOLT
10. RECEPTACLE (GROUNDED) ~ GFCI 20 AMP - 125 VOLT
11. ISOLATED NEUTRAL BUSS ~ 14 LUG COPPER
12. PHOTOCELL ENCLOSURE ~ ENCLOSURE TO BE FABRICATED FROM 5/8" (IN) EXPANDED STEEL MESH WITH WELDED SEAMS AND MOUNTING FLANGES ~ HOT-DIP GALVANIZED AFTER FABRICATION ~ TYPE 5052 - H32 ALUMINUM WITH 5/8" (IN) x 5/8" (IN) OPENINGS EQUIVALENT TO 5/8" (IN) EXPANDED STEEL MESH MAY BE USED AS ALTERNATIVE MATERIAL ~ SEE PHOTOCELL MOUNTING DETAIL
13. HINGED FRONT FACING DOOR WITH 4" (IN) x 4" (IN) MINIMUM POLISHED WIRE GLASS WINDOW
14. HINGED DEAD FRONT WITH 1/4 TURN FASTENERS OR SLIDE LATCH ~ DEAD FRONT PANEL BOLTS SHALL NOT EXTEND INTO VERTICAL LIMITS OF THE BREAKER ARRAY(S)
15. CABINET MAIN BONDING JUMPER ASSEMBLY ~ BUSS SHALL BE 14 LUG TINNED COPPER ~ SEE CABINET MAIN BONDING JUMPER ASSEMBLY DETAIL
16. SPARE BRANCH BREAKER ~ DPST 20 AMP - 120/240 VOLT
17. METAL WIRING DIAGRAM HOLDER
18. 1/4" (IN) DIAMETER DRAIN HOLE ~ DRILL BEFORE GALVANIZING
19. MOUNTING HOLE ~ SEE SERVICE CABINET MOUNTING DETAILS
20. 18-CIRCUIT PANEL BOARD ~ MINIMUM SIZE WITH SEPARATE MAIN BREAKER
21. LABEL CABINET WITH BUSSWORK RATING

THEODORE JOSEPH BAILEY
STATE OF WASHINGTON
39820
REGISTERED
PROFESSIONAL ENGINEER

Bailey, Ted
May 28 2015 10:09 AM

SERVICE CABINET TYPE B MODIFIED (0 - 200 AMP TYPE 120/240 SINGLE PHASE) STANDARD PLAN J-10.20-00

SHEET 1 OF 2 SHEETS

APPROVED FOR PUBLICATION
Bakotich, Pasco
Jun 3 2015 4:21 PM
STATE DESIGN ENGINEER

Washington State Department of Transportation

DRAWN BY: COLBY FLETCHER

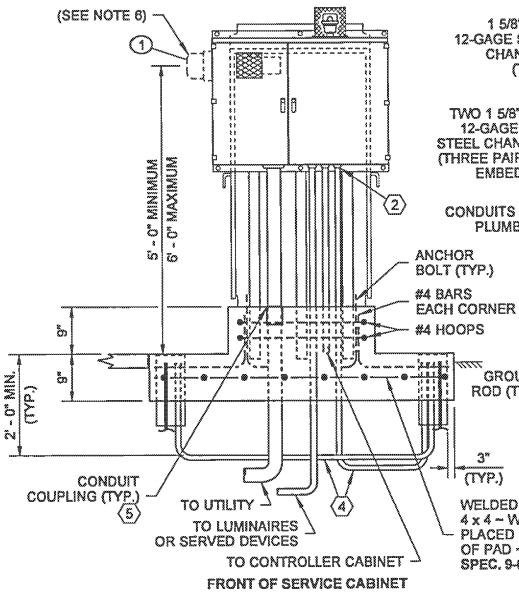

FRONT OF SERVICE CABINET

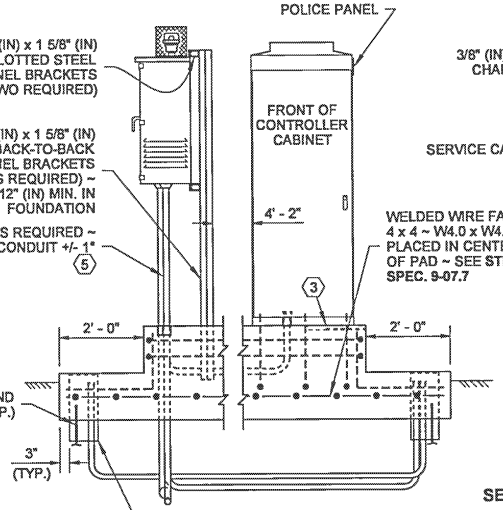

RIGHT SIDE OF SERVICE CABINET

STRUT MOUNT

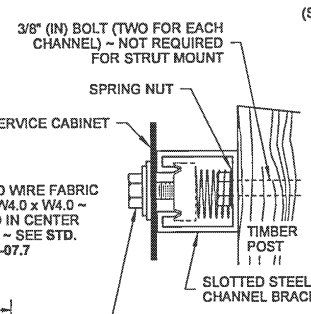

CABINET BRACKET MOUNTING DETAIL

SERVICE CABINET MOUNTING DETAILS

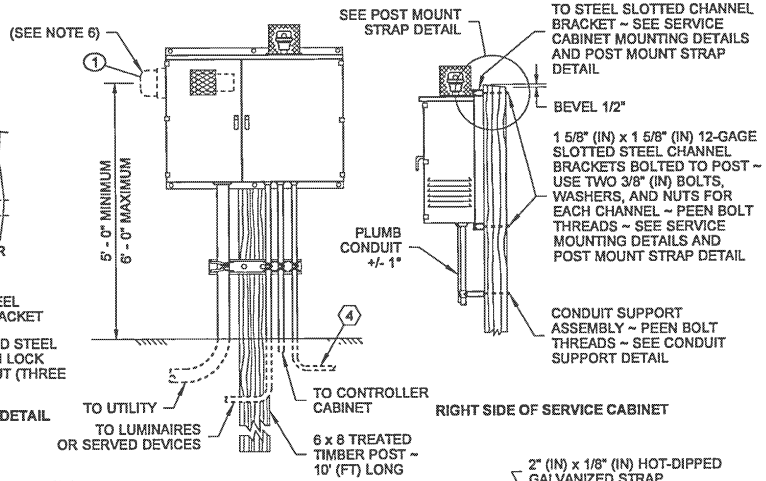

FRONT OF SERVICE CABINET

RIGHT SIDE OF SERVICE CABINET

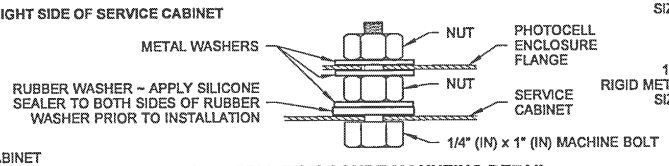

PHOTOCELL ENCLOSURE MOUNTING DETAIL

POST MOUNT

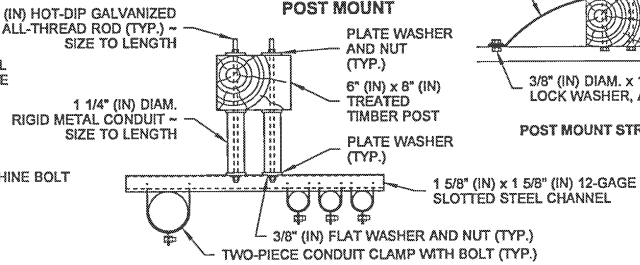

CONDUIT SUPPORT DETAIL

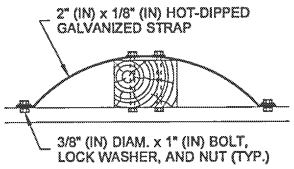

POST MOUNT STRAP DETAIL

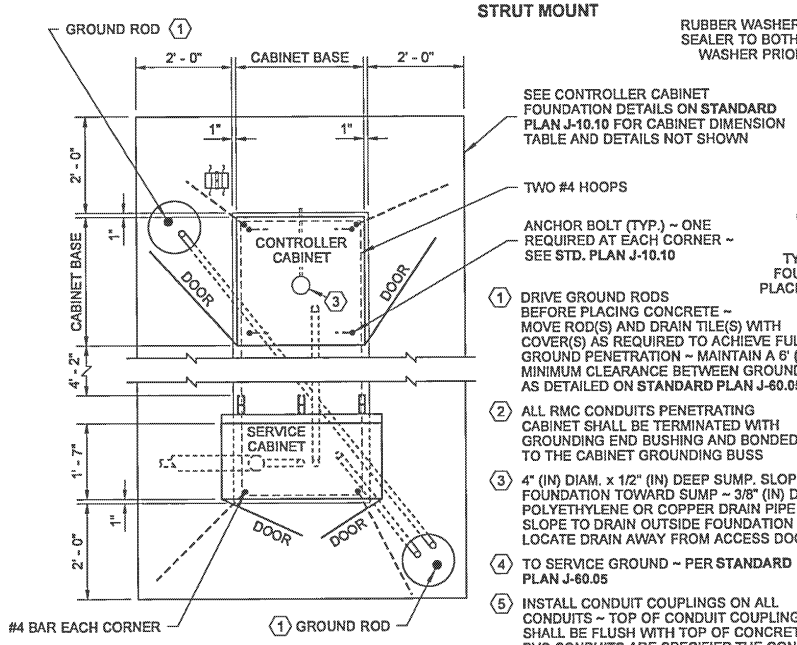

PLAN VIEW OF SERVICE CABINET

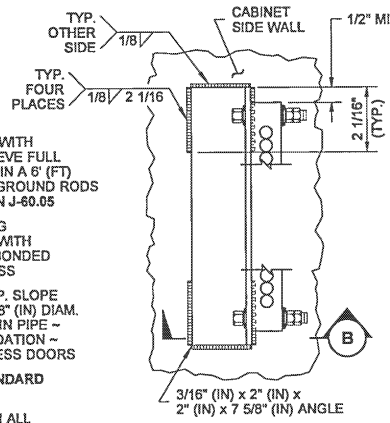

ELEVATION VIEW

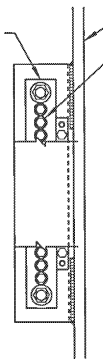

SIDE VIEW

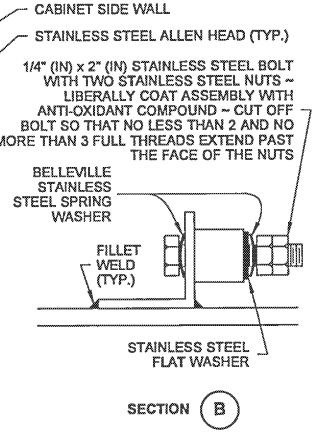

SECTION (B)

CABINET MAIN BONDING JUMPER ASSEMBLY DETAIL

THEODORE JOSEPH BAILEY
STATE OF WASHINGTON
39820
REGISTERED
PROFESSIONAL ENGINEER

Bailey, Ted
May 28 2015 10:10 AM

SERVICE CABINET TYPE B MODIFIED (0 - 200 AMP TYPE 120/240 SINGLE PHASE) STANDARD PLAN J-10.20-00

SHEET 2 OF 2 SHEETS

APPROVED FOR PUBLICATION
Bakotich, Pasco
Jun 3 2015 4:22 PM
STATE DESIGN ENGINEER

Washington State Department of Transportation

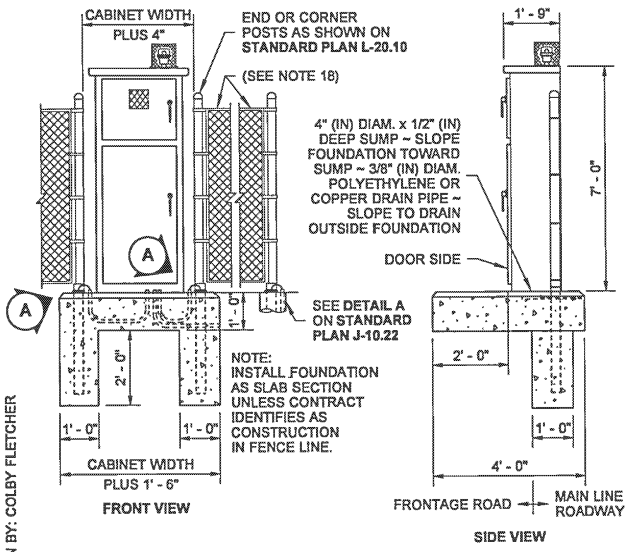

DRAWN BY: COLBY FLETCHER

INSTALLATION DETAIL ~ IN FENCE LINE

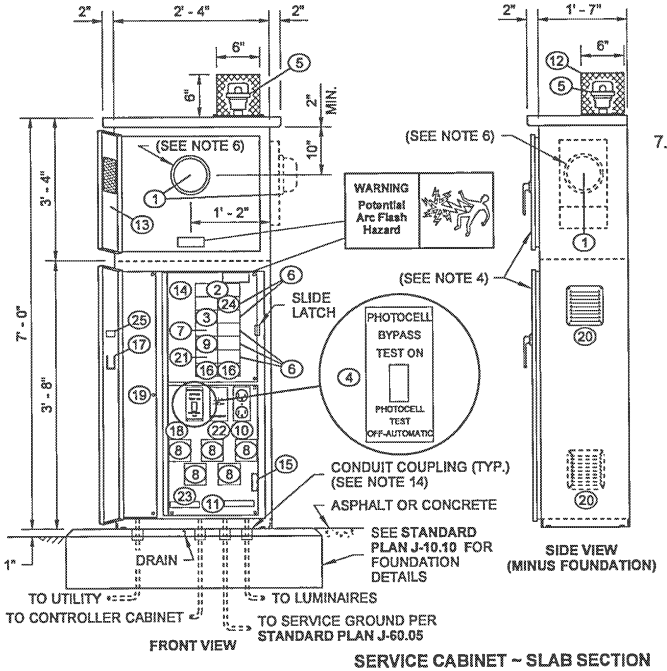

SERVICE CABINET ~ SLAB SECTION

NOTES (200 AMP TYPE 120/240 1ø SERVICE CABINET)

1. See **Standard Specification 9-29.24** (Service Cabinets).
2. Hinges shall have stainless steel or brass pins.
3. Cabinets shall be rated NEMA 3R and shall include two rain-tight vents.
4. Metering equipment door shall be pad-lockable. Each door shall be gasketed. Install Best CX Construction Core on bottom door. See Door Hinge Detail, **Standard Plan J-10.20**. Concealed heavy-duty stainless steel lift-off hinges are allowed as an alternative to Door Hinge Detail on **Standard Plan J-10.20**. Upper door shall have two hinges and lower door shall have three hinges. The lower door shall have a two-position door stop assembly.
5. The following equipment within the service enclosure shall have an appropriately engraved phenolic name plate attached with screws or rivets:
   Key Numbers 2, 3, 4, 6, 7, 8, 9, 16, & 21
   Key Number 4 name plate shall read: "PHOTOCELL BYPASS TEST ON" and "PHOTOCELL TEST OFF-AUTOMATIC."
   See Service Cabinet Detail.
6. Metering arrangements vary with different serving Utilities. The Utility may require meter base mounting in the enclosure, on the side, or on the back of the enclosure. The Utility may require the dimension between the door and the front of the safety socket box to be less than the 11" (in) shown in the Left Side - Safety Socket Box Mounting Detail. See **Standard Plan J-10.20** for Safety Socket Box Detail. The Contractor shall verify the serving Utility's requirements prior to fabrication and installation of the service equipment.
7. Dimensions shown are minimum and shall be adjusted to accommodate the various sizes of equipment installed.
8. All busswork shall be high-grade copper and shall equal or exceed the main breaker rating. All breakers shall bolt onto the busswork. Jumpering of breakers shall not be allowed. Busswork shall accommodate all future equipment as shown in the breaker schedule.
9. The photocell unit shall be centered in the photocell enclosure to permit 360 degree rotation of the photocell without removal of the photocell unit or the photocell enclosure.
10. All internal wire runs shall be identified with "TO - FROM" coded tags labeled with the code letters and/or numbers shown on the schedules. Approved PVC or polyolefin wire marking sleeves shall be used.
11. All nuts, bolts, and washers used for mounting the photocell enclosure shall be stainless steel.
12. A 1% tolerance is allowed for all dimensions.
13. The photocell circuit shall be installed in flex conduit within the meter compartment.
14. Install conduit couplings on all conduits. Top of conduit couplings shall be flush with the top of concrete foundation.
15. See Plans for Breaker Schedule.
16. Seal cabinet to foundation with a 1/2" (in) bead of silicone. Apply silicone to dry surface only.
17. The meter base portion of this service was designed to meet metering portion of **EUSERC Drawing 309** requirements.
18. When Service Cabinet is installed within right of way fence, see **Standard Plan J-10.22** for details.

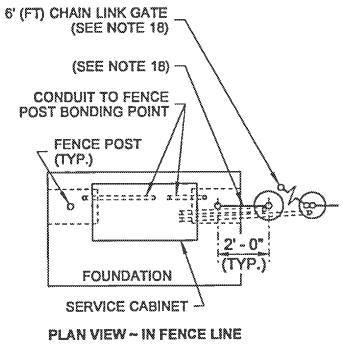

PLAN VIEW ~ IN FENCE LINE

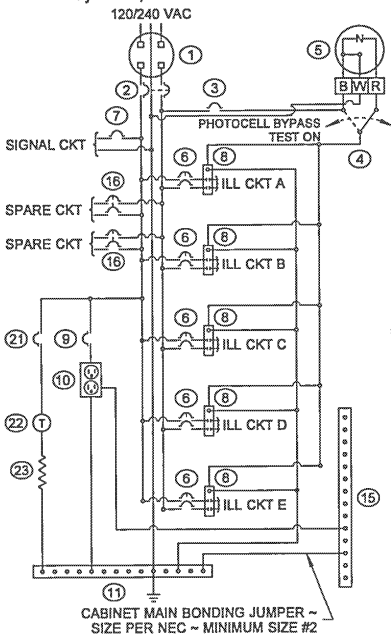

WIRING SCHEMATIC

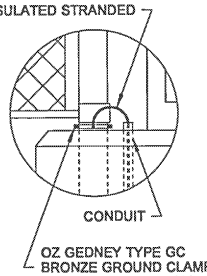

DETAIL A

KEY

1. METER BASE PER SERVING UTILITY REQUIREMENTS ~ AS A MINIMUM, THE METER BASE SHALL BE SAFETY SOCKET BOX WITH FACTORY-INSTALLED TEST BYPASS FACILITY THAT MEETS THE REQUIREMENTS OF **EUSERC DRAWING 305** ~ WHEN THE UTILITY REQUIRES METER BASE TO BE MOUNTED ON THE SIDE OR BACK OF THE SERVICE CABINET, THE METER BASE ENCLOSURE SHALL BE FABRICATED FROM TYPE 304 STAINLESS STEEL.
2. MAIN BREAKER ~ SEE BREAKER SCHEDULE
3. PHOTOCELL BREAKER ~ SPST 15 AMP - 120/240 VOLT
4. TEST SWITCH ~ SPDT SNAP ACTION - POSITIVE CLOSE 15 AMP - 120/277 VOLT - "T" RATED
5. PHOTOELECTRIC CONTROL ~ SEE **STANDARD SPECIFICATION 9-29.11(2)**
6. BRANCH BREAKER ~ SEE BREAKER SCHEDULE
7. SIGNAL BREAKER ~ SEE BREAKER SCHEDULE
8. CONTACTOR ~ SEE BREAKER SCHEDULE
9. RECEPTACLE BREAKER ~ SPST 20 AMP - 120/240 VOLT
10. RECEPTACLE (GROUNDED) ~ GFCI 20 AMP - 125 VOLT
11. ISOLATED NEUTRAL BUSS ~ 14 LUG COPPER
12. PHOTOCELL ENCLOSURE ~ ENCLOSURE TO BE FABRICATED FROM 5/8" (IN) EXPANDED STEEL MESH WITH WELDED SEAMS AND MOUNTING FLANGES ~ HOT-DIP GALVANIZED AFTER FABRICATION ~ TYPE 5052 - H32 ALUMINUM WITH 5/8" (IN) x 5/8" (IN) OPENINGS EQUIVALENT TO 5/8" (IN) EXPANDED STEEL MESH MAY BE USED AS ALTERNATIVE MATERIAL ~ SEE PHOTOCELL MOUNTING DETAIL ON **STANDARD PLAN J-10.20**
13. HINGED FRONT FACING DOOR WITH 4" (IN) x 4" (IN) MINIMUM POLISHED WIRE GLASS WINDOW
14. HINGED DEAD FRONT WITH 1/4 TURN FASTENERS OR SLIDE LATCH ~ DEAD FRONT PANEL BOLTS SHALL NOT EXTEND INTO VERTICAL LIMITS OF THE BREAKER ARRAY(S)
15. CABINET MAIN BONDING JUMPER ASSEMBLY ~ BUSS SHALL BE 14 LUG TINNED COPPER ~ SEE CABINET MAIN BONDING JUMPER ASSEMBLY DETAIL ON **STANDARD PLAN J-10.20**
16. SPARE BRANCH BREAKER ~ DPST 20 AMP - 120/240 VOLT
17. METAL WIRING DIAGRAM HOLDER
18. REMOVABLE EQUIPMENT MOUNTING PAN
19. 6" (IN) x 6" (IN) MIN. UNDERGROUND FEED ~ SERVICE WIREWAY (LEFT REAR CORNER)
20. SCREENED VENTS ~ TWO REQUIRED, 1 EACH SIDE ~ LOUVERED PLATES
21. HEATER BREAKER ~ SPST 15 AMP - 120/ 240VOLT
22. THERMOSTAT ~ 40° F CLOSURE - 3 DIFFERENTIAL
23. STRIP HEATER (100 WATT NOMINAL) WITH TERMINAL STRIP COVER
24. 24-CIRCUIT PANEL BOARD ~ MINIMUM SIZE SEPARATE MAIN BREAKER
25. LABEL CABINET WITH BUSSWORK RATING

THEODORE JOSEPH BAILEY
STATE OF WASHINGTON
39820
REGISTERED
PROFESSIONAL ENGINEER

Bailey, Ted
May 28 2015 10:10 AM

SERVICE CABINET TYPE D (0 - 200 AMP TYPE 120/240 SINGLE PHASE) STANDARD PLAN J-10.21-00

SHEET 1 OF 1 SHEET

APPROVED FOR PUBLICATION
Bakotich, Pasco
Jun 3 2015 4:22 PM
STATE DESIGN ENGINEER
Washington State Department of Transportation

This page left blank intentionally.

DRAWN BY: LISA CYFORD

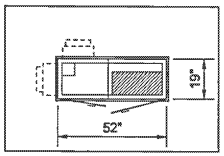

PLAN VIEW

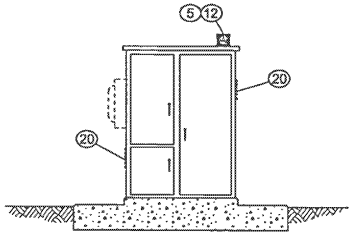

ELEVATION VIEW

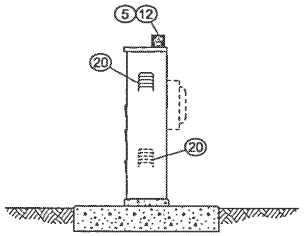

SIDE VIEW

SERVICE CABINET INSIDE RIGHT-OF-WAY

INSTALL FOUNDATION AS SLAB SECTION UNLESS IDENTIFIED FOR CONSTRUCTION IN FENCE LINE IN CONTRACT PLANS

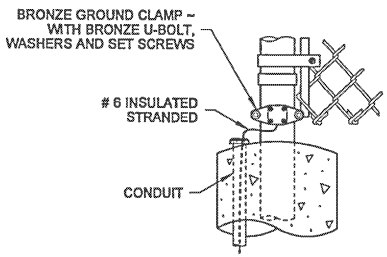

DETAIL (A)

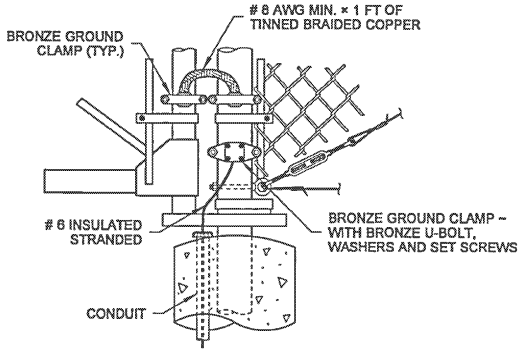

DETAIL (B)

NOTES

1. Metering Arrangements vary with different servicing utilities. The utility may require meter base mounting in the enclosure, on the side, or on the back of the enclosure. The utility may require the dimension between the door and the front of the safety socket box to be less than the 11" shown in the left side safety socket box mounting detail, see **Standard Plan J-3b**. The Contractor shall verify the serving utility's requirements prior to fabrication of and installing the service equipment.
2. The requirement for a disconnect switch ahead of the Meter varies with different serving utilities. The Contractor shall verify the serving utilities requirements prior to fabrication and installing the service equipment.
3. See **Standard Specification 9-29.24,** Service Cabinets.
4. Hinges shall have stainless steel or brass pins.
5. Cabinets shall be rated NEMA 3R and shall include two rain tight vents.
6. Metering equipment doors shall be pad lockable. Each door shall be gasketed. Install best construction core on bottom left and right doors. See door hinge detail, **Standard Plan J-3b**. Concealed heavy duty stainless steel lift off hinges are allowed as an alternative. Upper left door shall have 3 hinges, lower left door shall have 2 hinges, and right door shall have 3 hinges. All doors shall have a two position door stop assembly.
7. The following equipment within the service enclosure shall have an appropriately engraved phenolic name plate attached with screws or rivets: Key number 2, 3, 4, 6, 7, 8, 9, 16, 21 and 24. Key number 4 name plate shall read: "Photocell Bypass Test On" and "Photocell Test Off-Automatic". See Service Cabinet detail.
8. The dimensions shown are minimum and shall be adjusted to accommodate the various sizes of equipment installed.
9. All busswork shall be high grade copper and shall equal or exceed the main breaker rating. All breakers shall bolt onto the busswork. Jumpering of breakers shall not be allowed. Busswork shall accommodate all future equipment as shown in the breaker schedule.
10. The photocell unit shall be centered in the photocell enclosure to permit 360 degree rotation of the photocell without removal of the photocell unit or the photocell enclosure.
11. All internal wire runs shall be identified with "To-From" coded tags labeled with the code letters and/or numbers shown on the schedules. Approved PVC or Polyolefin wire marking sleeves shall be used.
12. All nuts, bolts, and washers used for mounting photocell enclosure shall be stainless steel.
13. A 1% tolerance is allowed for all dimensions.
14. See plans for breaker schedule.
15. Install conduit couplings on all conduits. Place couplings flush with top of concrete foundation.
16. Seal cabinet to foundation with a 1/2" bead of silicone. Apply silicone to dry surface only.
17. The meter base portion of this service was designed to meet metering portion of Euserc Drawing 309 requirements.

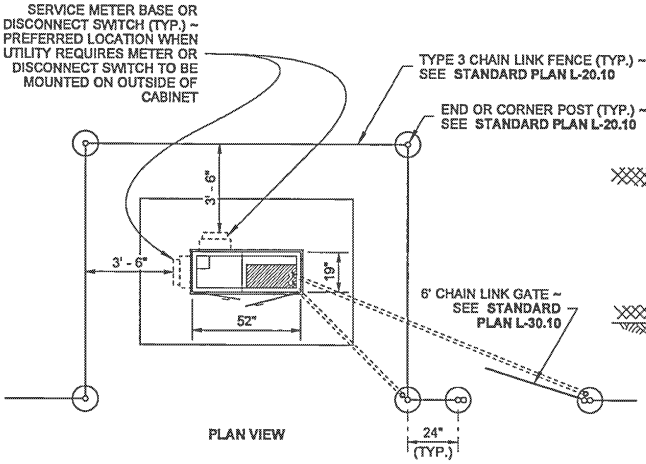

PLAN VIEW

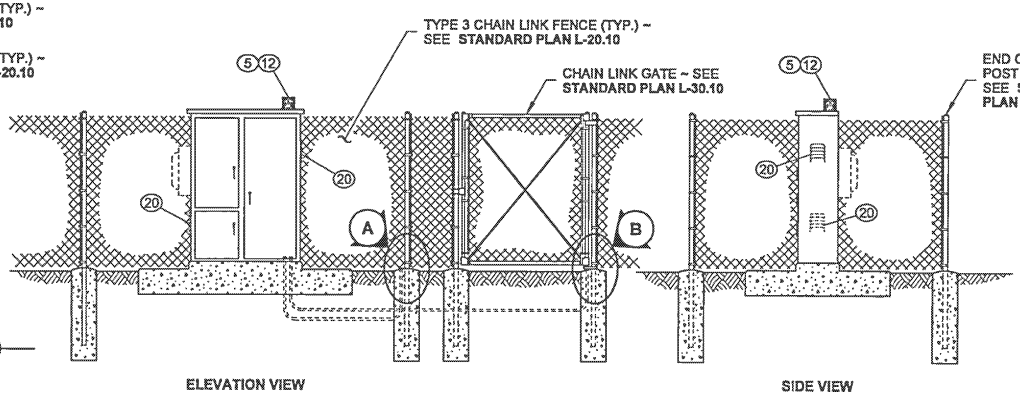

ELEVATION VIEW

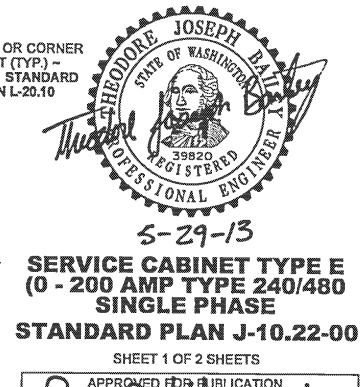

SIDE VIEW

SERVICE CABINET WITHIN RIGHT-OF-WAY FENCE

FOR CONDUITS NOT SHOWN, DRAIN TILE FOR GROUNDING, DRAIN TUBES, REINFORCING STEEL, ETC. OMITTED FOR CLARITY, SEE **STANDARD PLAN J-10.10** FOR DETAILS.

5-29-13

SERVICE CABINET TYPE E (0 - 200 AMP TYPE 240/480 SINGLE PHASE

STANDARD PLAN J-10.22-00

SHEET 1 OF 2 SHEETS

APPROVED FOR PUBLICATION

STATE DESIGN ENGINEER — DATE 5/29/13

Washington State Department of Transportation

DRAWN BY: LISA CYFORD

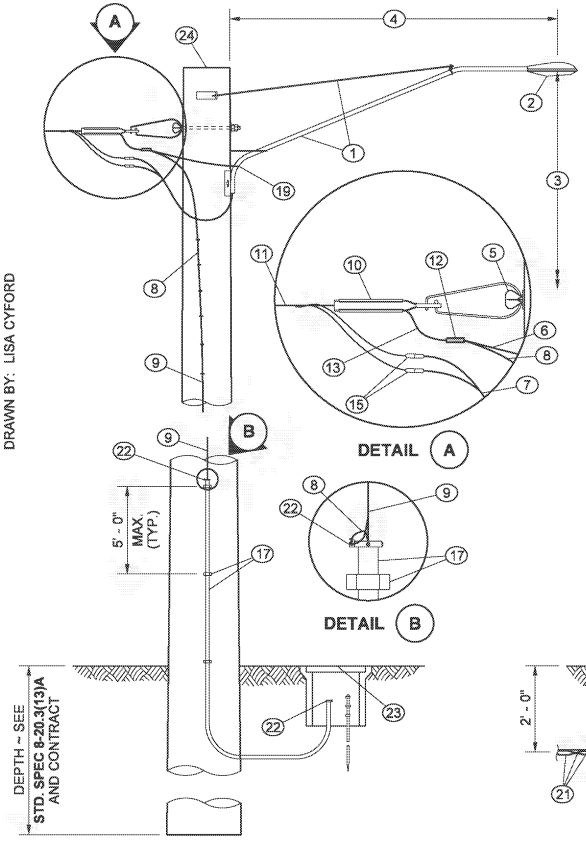

TIMBER LUMINAIRE SUPPORT

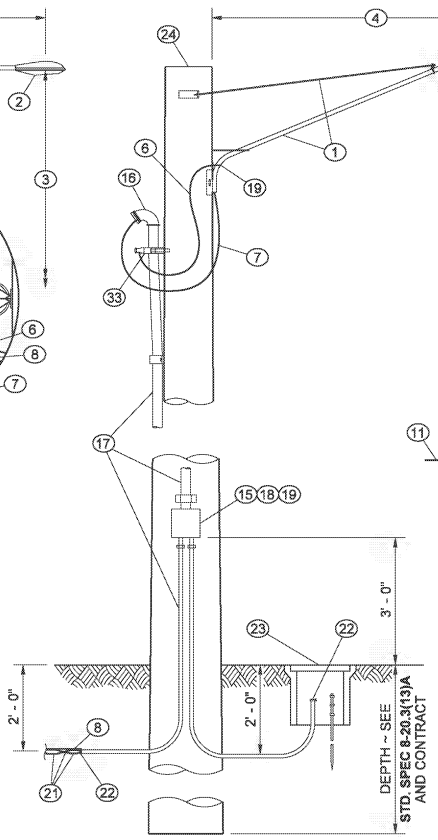

TIMBER LUMINAIRE SUPPORT

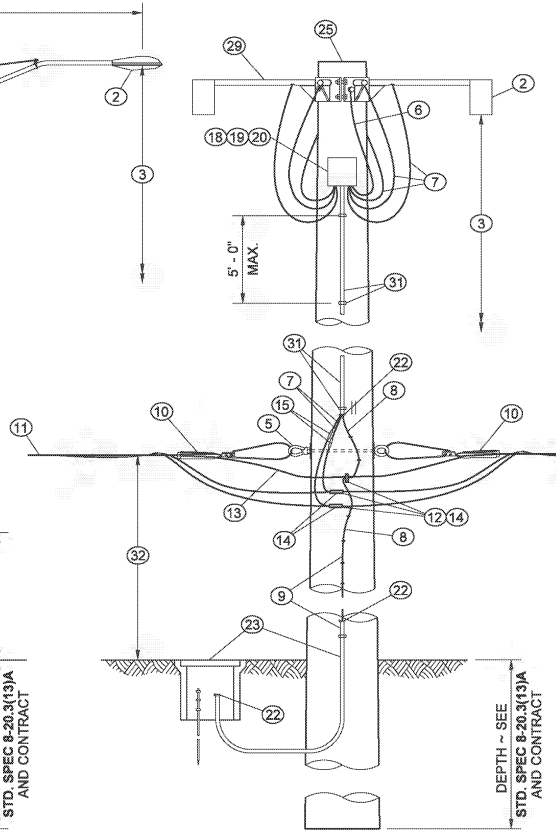

HIGH MAST TIMBER LUMINAIRE SUPPORT

SHOWN FOR 480 VAC POWER FEED ~
INCREASE CONDUCTOR AND FUSE SIZE
AS REQUIRED FOR 240 VAC POWER FEED

NOTES

1. Timber luminaire supports are allowed only for temporary installations where breakaway or Slip Bases are not required.
2. When down guys are required, see **Standard Plan J-15.15.**

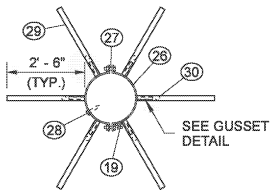

PLAN VIEW
LUMINAIRE SUPPORT BRACKET

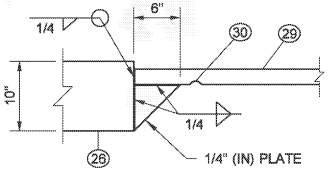

GUSSET DETAIL

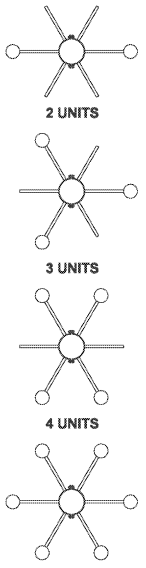

PLAN VIEW
TYPICAL LUMINAIRE MOUNTING CONFIGURATIONS

KEY

1. GALVANIZED STEEL OR ALUMINUM MAST ARM ~ CONFIGURATIONS VARY WITH MANUFACTURER
2. LUMINAIRE ~ SEE CONTRACT FOR TYPE AND NUMBER
3. MOUNTING HEIGHT ~ ROADWAY TO LUMINAIRE ELEVATION DIFFERENCE ± 2% ~ SEE CONTRACT
4. MAST ARM LENGTH ~ SEE CONTRACT
5. 5/8" (IN) GALVANIZED THIMBLE EYE BOLT (SINGLE OR DOUBLE) WITH WASHERS AND NUTS OR EYENUT
6. BONDING JUMPER
7. POLE AND BRACKET CABLE
8. EQUIPMENT GROUNDING CONDUCTOR ~ SEE **STANDARD PLAN J-60.05**
9. FROM GROUND LINE TO 10' (FT) ABOVE GROUND, ENCLOSE EQUIPMENT GROUNDING CONDUCTOR IN GALVANIZED STEEL CONDUIT, CODE SIZED ~ ABOVE 10' (FT) FROM GROUND, STAPLE EQUIPMENT GROUNDING CONDUCTOR TO POLE ~ CONNNECT TO SUPPLEMENTAL GROUND, PER **STANDARD PLAN J-60.05**
10. SERVICE WEDGE CLAMP
11. ACSR TRIPLEX OR FOURPLEX CONDUCTORS ~ SEE CONTRACT
12. CU \ AL SPLIT BOLT CONNECTOR
13. MESSENGER CABLE
14. INSULATING TAPE FOR WATERPROOF CONNECTION
15. FUSED QUICK DISCONNECT, PER **STANDARD SPECIFICATION 9-29.7(2)** ~ USE 30 AMP FUSES FOR HIGH MAST SUPPORTS
16. WEATHERHEAD ~ SIZE AS REQUIRED
17. STEEL CONDUIT ~ STRAPS SPACED MAXIMUM 5' (FT) APART AND NEAR ALL CONDUIT ENDS
18. 8" (IN) × 8" (IN) × 4" (IN) NEMA 3R JUNCTION BOX WITH RAIN-TIGHT HUBS AND REMOVABLE COVER
19. GROUNDING LUG
20. 12-POLE TERMINAL BLOCK
21. DIRECT BURIAL CONDUCTORS OR GALVANIZED STEEL OR PVC CONDUITS WITH CONDUCTORS ~ SEE CONTRACT
22. GROUNDING END BUSHING
23. SUPPLEMENTAL GROUND ~ SEE **STANDARD PLAN J-60.05**
24. CLASS 5 TIMBER POLE ~ LENGTH SUFFICIENT FOR MOUNTING HEIGHT AND BURIAL DEPTH
25. CLASS 2 TIMBER POLE ~ LENGTH SUFFICIENT FOR MOUNTING HEIGHT AND BURIAL DEPTH
26. 1/4" (IN) × 10" (IN) PLATE COLLAR BENT TO FIT POLE DIAMETER (8" (IN) - 10"(IN))
27. 3/8" (IN) × 4" (IN) MACHINE BOLTS (FOUR REQUIRED) WITH WASHERS AND NUTS
28. 1/2" (IN) LAG BOLTS (SIX REQUIRED) ~ DRILL 9/16" (IN) HOLE IN PLATE
29. 2" (IN) PIPE
30. 3/4" (IN) WIRE HOLE 2" (IN) FROM GUSSET PLATE, SMOOTH HOLE EDGES
31. 1" (IN) NON-METALLIC CONDUIT WITH 1" (IN) STRAPS SPACED MAXIMUM 5' (FT) APART AND NEAR ALL CONDUIT ENDS
32. DISTANCE VARIES, 35' (FT) MIN. TO 50' (FT) MAX. DEPENDING ON LINE CLEARANCE REQUIREMENTS
33. CONDUIT GROUND CLAMP

THEODORE JOSEPH BAILEY
STATE OF WASHINGTON
39820
REGISTERED
PROFESSIONAL ENGINEER

Theodore Joseph Bailey
Digitally signed by baileyte@wsdot.wa.gov
DN: cn=baileyte@wsdot.wa.gov
Date: 2014.05.12 13:31:25 -07'00'

TIMBER LIGHT STANDARD

STANDARD PLAN J-15.10-01

SHEET 1 OF 1 SHEET

APPROVED FOR PUBLICATION
Bakotich, Pasco
Jun 11 2014 1:29 PM
STATE DESIGN ENGINEER
Washington State Department of Transportation

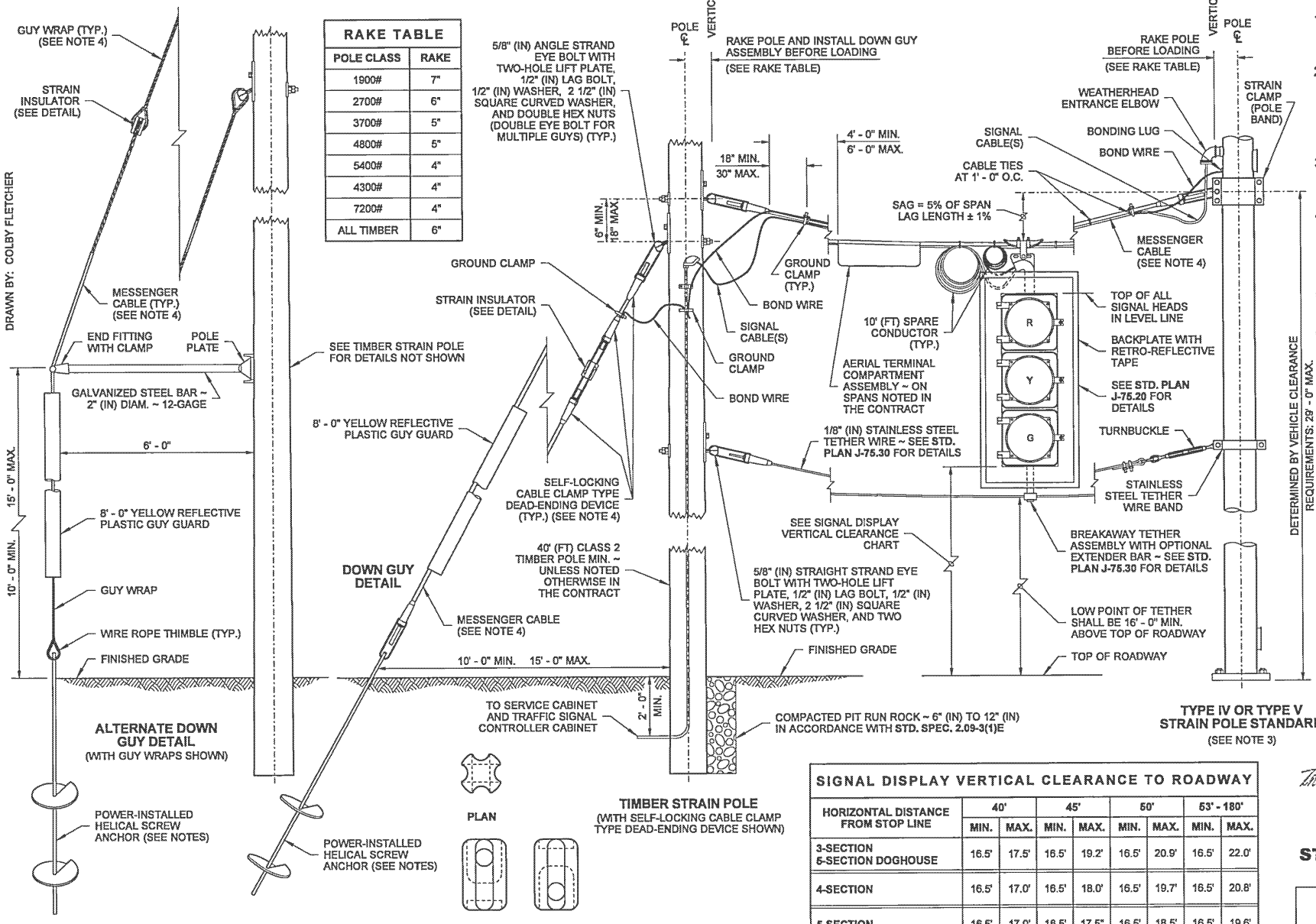

NOTES

1. An eight-way expanding anchor may be used as an acceptable alternate to power-installed helical screw anchor.
2. If anchor hole diameter is greater than nominal diameter of folded anchors, a 5' (ft) cover of 6" (in) to 12" (in) size rock shall be tamped in to replace the disturbed soil immediately above the anchor.
3. See **Standard Plans J-27.10** and **J-27.15** for Type IV or Type V Strain Pole details not shown.
4. Self-Locking Cable Clamp Type Dead-Ending Device or Guy Wrap may be used. See **Standard Spec. Sect. 8-20.3(7)** for additional requirements.
5. See Contract for Emergency Preempt Detector locations.
6. Timber strain pole burial depth is 10 percent (%) of the total pole length plus two (2) feet **(Standard Spec. Sect. 8-20.3(14)E)** when foundation soil lateral bearing pressure is 2000 PSF and a friction angle 32 degree (°) or greater soil lateral pressure. Helical anchor soil lateral bearing pressure is 1000 PSF and a friction angle 26 degree (°) or greater. Soil lateral bearing pressure below 2000 PSF for timber strain pole or soil lateral bearing pressure below 1000 PSF for helical anchor requires Special Design. Contact the WSDOT Bridge and Structures office through the Engineer for Special Design timber strain pole burial depth.

SIGNAL DISPLAY VERTICAL CLEARANCE TO ROADWAY

HORIZONTAL DISTANCE FROM STOP LINE	40'		45'		50'		53' - 180'	
	MIN.	MAX.	MIN.	MAX.	MIN.	MAX.	MIN.	MAX.
3-SECTION 5-SECTION DOGHOUSE	16.5'	17.5'	16.5'	19.2'	16.5'	20.9'	16.5'	22.0'
4-SECTION	16.5'	17.0'	16.5'	18.0'	16.5'	19.7'	16.5'	20.8'
5-SECTION	16.5'	17.0'	16.5'	17.5"	16.5'	18.5'	16.5'	19.6'

MEASURED FROM BOTTOM OF SIGNAL HEAD HOUSING TO ROADWAY

THEODORE JOSEPH BAILEY — STATE OF WASHINGTON — 39820 — REGISTERED PROFESSIONAL ENGINEER

Bailey, Ted
Jul 8 2015 3:05 PM

SPAN WIRE INSTALLATION

STANDARD PLAN J-15.15-02

SHEET 1 OF 1 SHEET

APPROVED FOR PUBLICATION
Carpenter, Jeff
Jul 10 2015 7:21 AM
STATE DESIGN ENGINEER

Washington State Department of Transportation

DRAWN BY: FERN LIDDELL

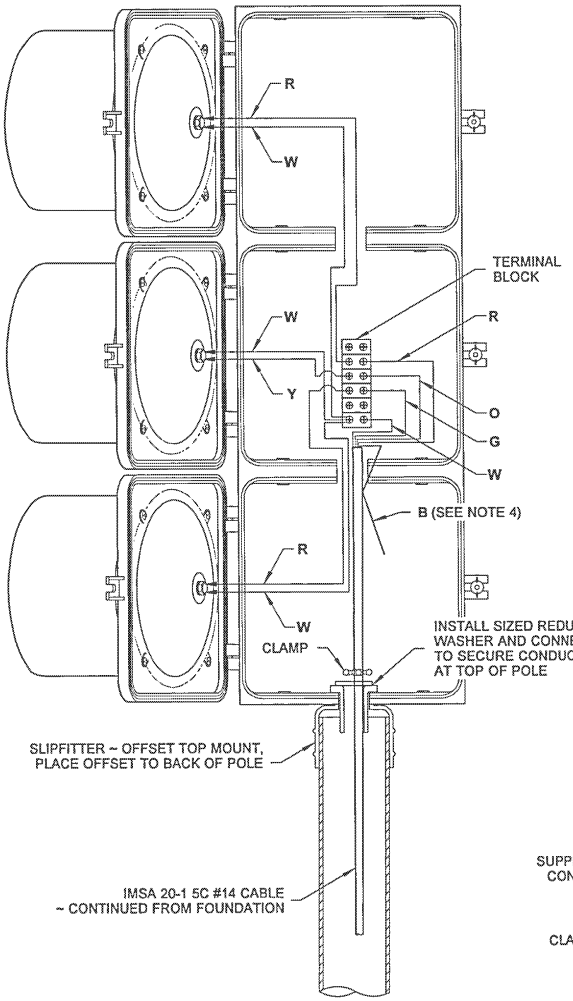

SIGNAL WIRING DETAIL

TERMINAL NUMBER	MARK	DEFINITION
6*1	R	RED DISPLAY
6*2	O	AMBER DISPLAY
6*3	G	GREEN DISPLAY
6*4	B	SPARE CONDUCTOR
6*6	W	NEUTRAL CONDUCTOR

* ASSOCIATED PHASE NUMBER

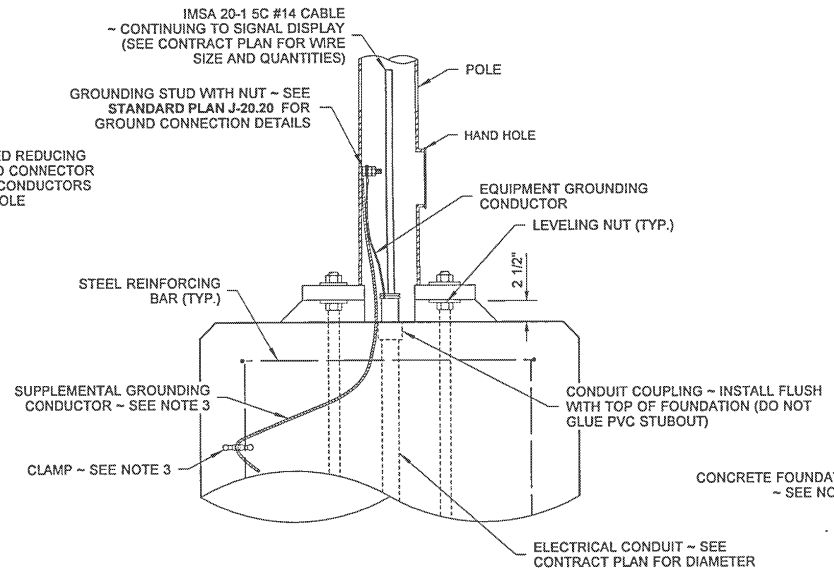

FOUNDATION WIRING DETAIL

NOTES

1. See **Standard Specification 9-29.3** for Cable Conductor requirements.
2. See **Standard Plan J-21.10** for Signal Standard Foundation with Fixed Base and Slip Base details.
3. Supplemental Grounding Conductor shall be non-insulated #4 AWG stranded copper, provide 3' - 0" min. slack. Clamp to steel reinforcing bar with connector suitable for use embedded in concrete.
4. Heat shrink cap all spare conductors not terminated on a terminal strip.
5. When a Pedestrian Push Button is specified in contract plans, see **Standard Plan J-20.20** for details.
6. Provide Cable Tie at wiring entering the Junction Box (for Slip Base installations only) ~ See **Detail A, Standard Plan J-28.70**.

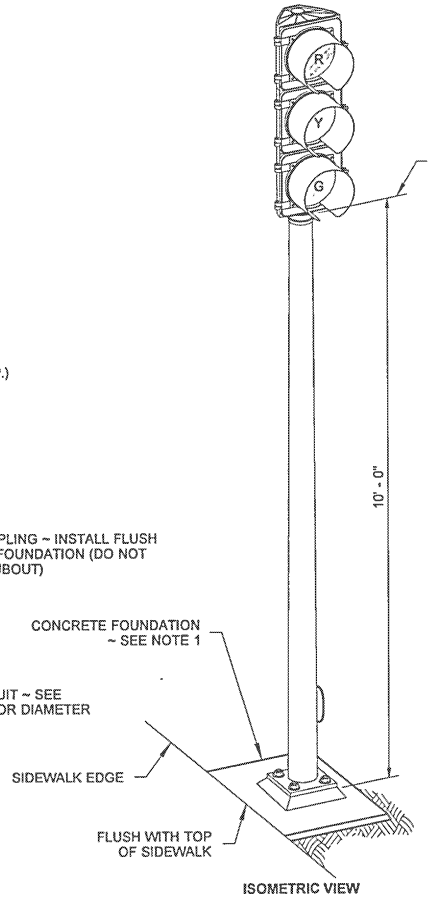

ISOMETRIC VIEW

THEODORE JOSEPH BAILEY
STATE OF WASHINGTON
39820
REGISTERED
PROFESSIONAL ENGINEER

6/6/13

TYPE 1 SIGNAL STANDARD ELECTRICAL DETAILS

STANDARD PLAN J-21.20-01

SHEET 1 OF 1 SHEET

APPROVED FOR PUBLICATION

STATE DESIGN ENGINEER — DATE 6/6/13

Washington State Department of Transportation

DRAWN BY: COLBY FLETCHER

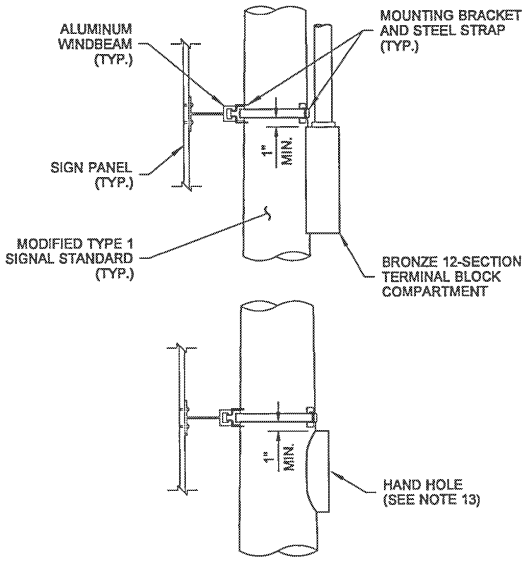

SIGN PLACEMENT DETAIL
(SEE NOTE 9)

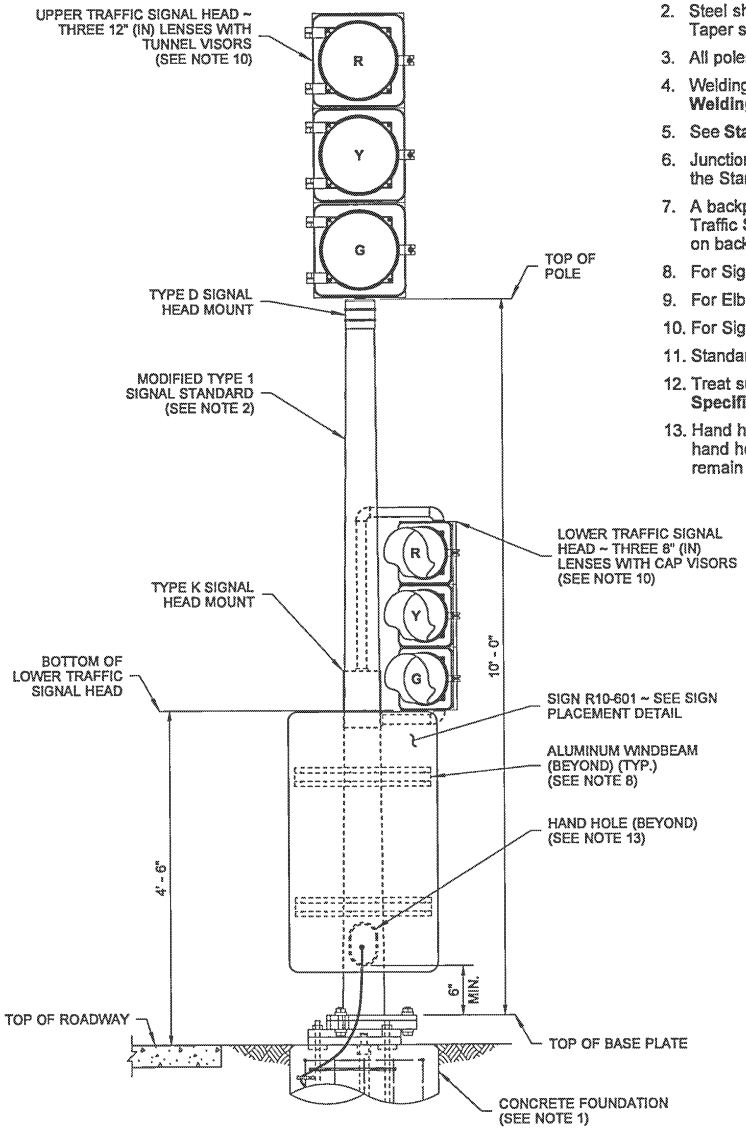

RAMP METER SIGNAL STANDARD ①
SLIP BASE SHOWN

① BACKPLATES NOT SHOWN FOR CLARITY.

NOTES

1. See **Standard Plan J-21.10** for Signal Standard Foundation Details.
2. Steel shaft shall be tapered either round or dodecagon (12-sided), 11-gage, 4 1/2" (in) O.D. at slipfitter. Taper shall be 0.14" (in) per foot.
3. All poles shall be hot-dip galvanized per **AASHTO M111**.
4. Welding of structures shall be in accordance with the latest edition of the **AWS D1.1 Structural Welding Code - Steel**. All butt welds shall be ground flush with base metal.
5. See **Standard Plan J-22.16** for Wiring and Electrical Details.
6. Junction Box serving the Standard shall be located no more than 10' - 0" (5' - 0" preferred) from the Standard.
7. A backplate shall be installed on the Upper Traffic Signal Head. Install a backplate on the Lower Traffic Signal Head only when required by the contract. Do not install retro-reflective tape on backplates.
8. For Sign Installation Details, see **Standard Plan G-30.10**.
9. For Elbow Mounting Details, see **Standard Plan J-28.45**. Verify barrier angle prior to fabricating elbow.
10. For Signal Head Mounting Details, see **Standard Plan J-75.10**.
11. Standard shall use slip base if installed closer than 4' (ft) from the face of guardrail.
12. Treat surrounding pole with galvanizing repair paint meeting the requirements of **Standard Specification 9-08.1(2)**. Apply two coats. Paint shall be dry before applying second coat.
13. Hand hole shall face toward roadway for Elbow Mount Barrier installations. For all other installations, hand hole shall face the opposite direction from the Upper Traffic Signal Head. Hand hole face shall remain accessible after pole and sign installation is complete.

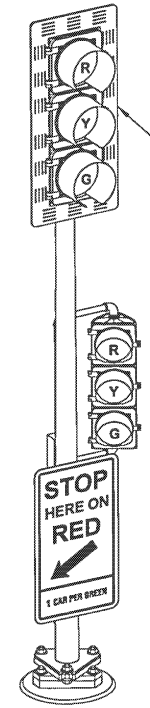

PERSPECTIVE VIEW

THEODORE JOSEPH BAILEY
STATE OF WASHINGTON
39820
REGISTERED
PROFESSIONAL ENGINEER

Bailey, Ted
Jul 8 2015 3:06 PM

RAMP METER SIGNAL STANDARD DETAILS

STANDARD PLAN J-22.15-02

SHEET 1 OF 3 SHEETS

APPROVED FOR PUBLICATION
Carpenter, Jeff
Jul 10 2015 7:20 AM
STATE DESIGN ENGINEER
Washington State Department of Transportation

DRAWN BY: COLBY FLETCHER

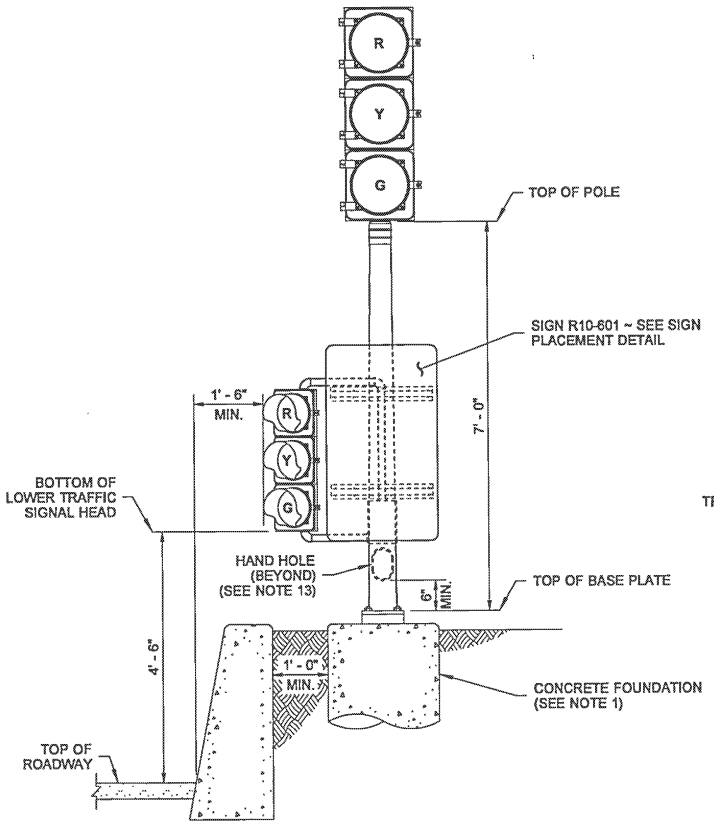

CUT SECTION BEHIND BARRIER ① (GROUND-MOUNTED)

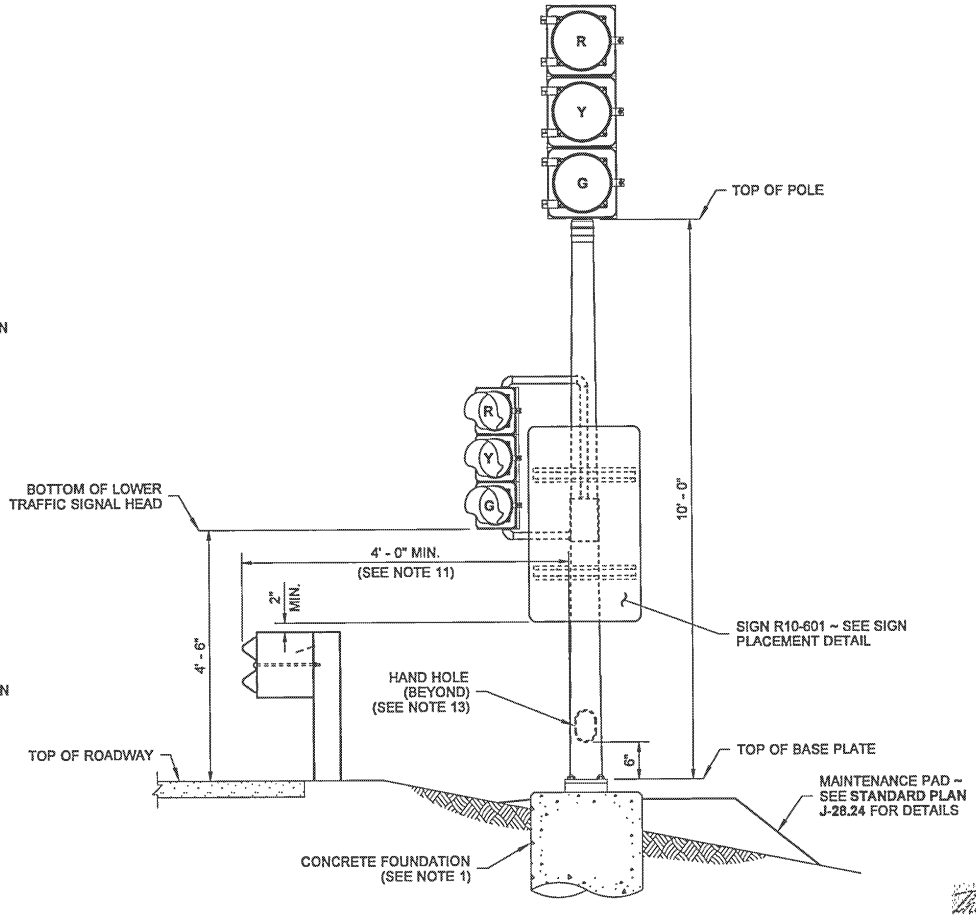

EMBANKMENT SECTION BEHIND BEAM GUARDRAIL ① (GROUND-MOUNTED)

① BACKPLATES NOT SHOWN FOR CLARITY.

THEODORE JOSEPH BAILEY
STATE OF WASHINGTON
39820
REGISTERED
PROFESSIONAL ENGINEER

Bailey, Ted
Jul 8 2015 3:07 PM

RAMP METER SIGNAL STANDARD DETAILS

STANDARD PLAN J-22.15-02

SHEET 2 OF 3 SHEETS

APPROVED FOR PUBLICATION
Carpenter, Jeff
Jul 10 2015 7:20 AM
STATE DESIGN ENGINEER

Washington State Department of Transportation

DRAWN BY: COLBY FLETCHER

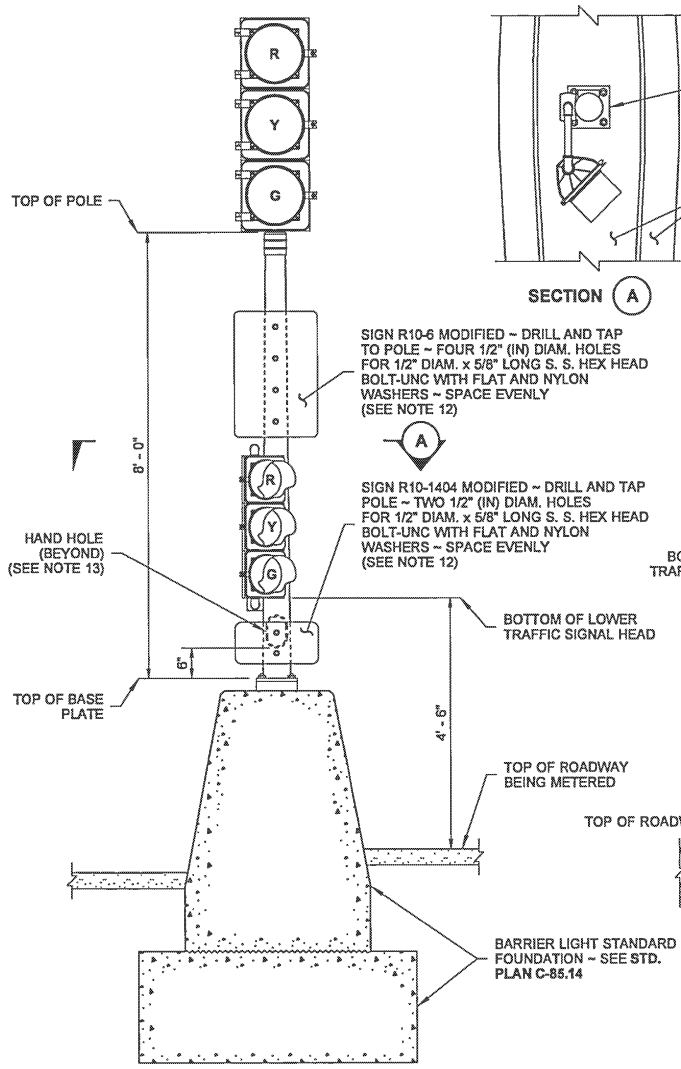

GRADE SEPARATION SECTION ① (BARRIER FOUNDATION-MOUNTED)

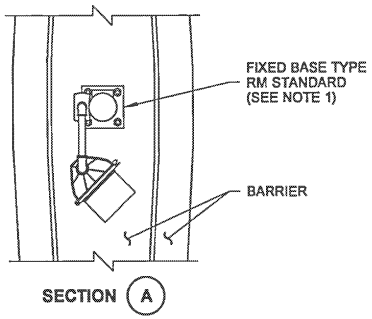

SECTION (A)

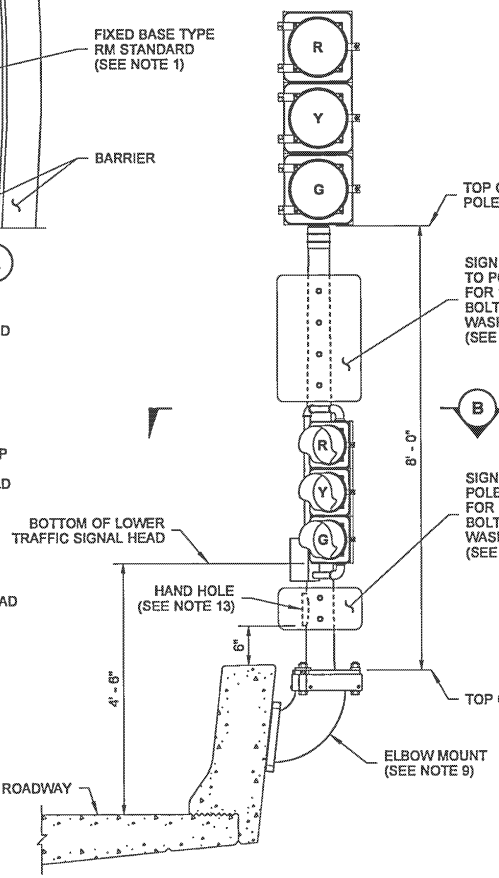

BRIDGE SECTION ① (BARRIER-MOUNTED)

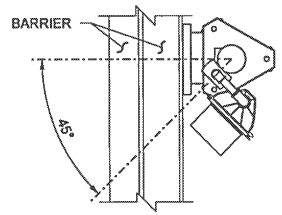

SECTION (B)

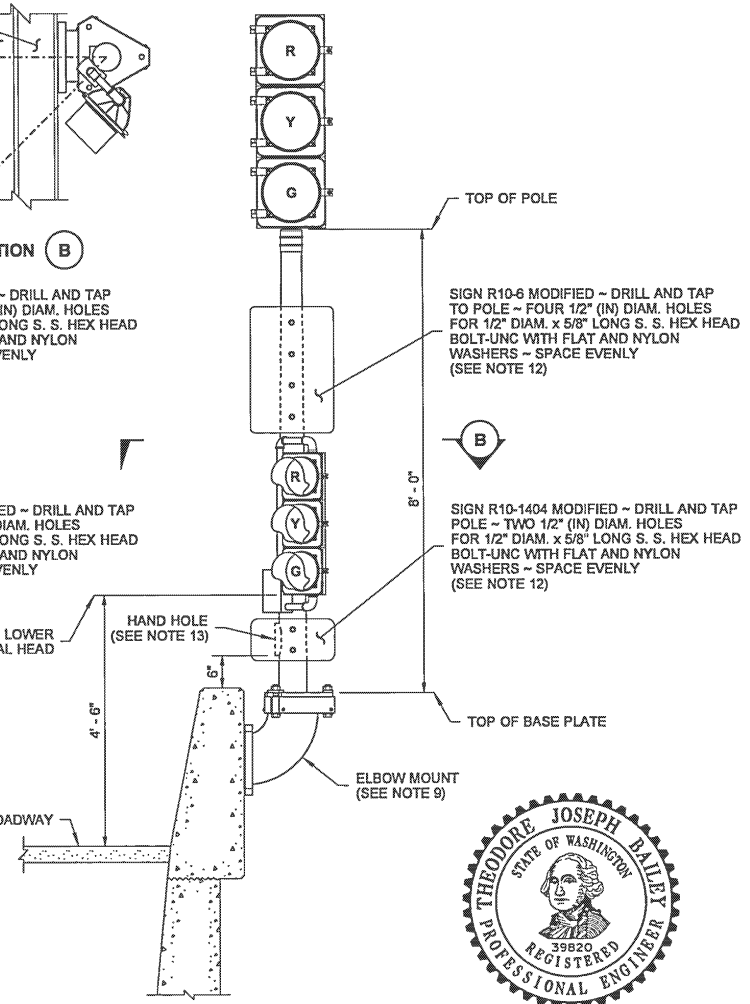

RETAINING WALL SECTION ① (BARRIER-MOUNTED)

① BACKPLATES NOT SHOWN FOR CLARITY.

THEODORE JOSEPH BAILEY
STATE OF WASHINGTON
39820
REGISTERED
PROFESSIONAL ENGINEER

Bailey, Ted
Jul 8 2015 3:07 PM

RAMP METER SIGNAL STANDARD DETAILS

STANDARD PLAN J-22.15-02

SHEET 3 OF 3 SHEETS

APPROVED FOR PUBLICATION
Carpenter, Jeff
Jul 10 2015 7:20 AM
STATE DESIGN ENGINEER

Washington State Department of Transportation

DRAWN BY: FERN LIDDELL

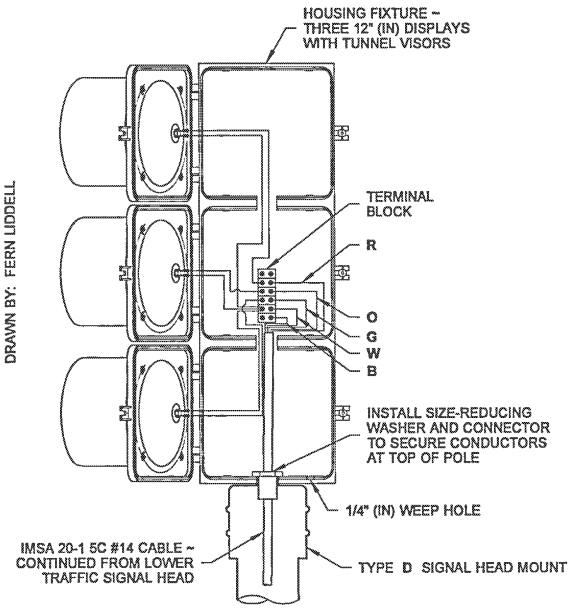

DETAIL (A)

UPPER TRAFFIC SIGNAL HEAD WIRING
(BACKPLATE NOT SHOWN FOR CLARITY)

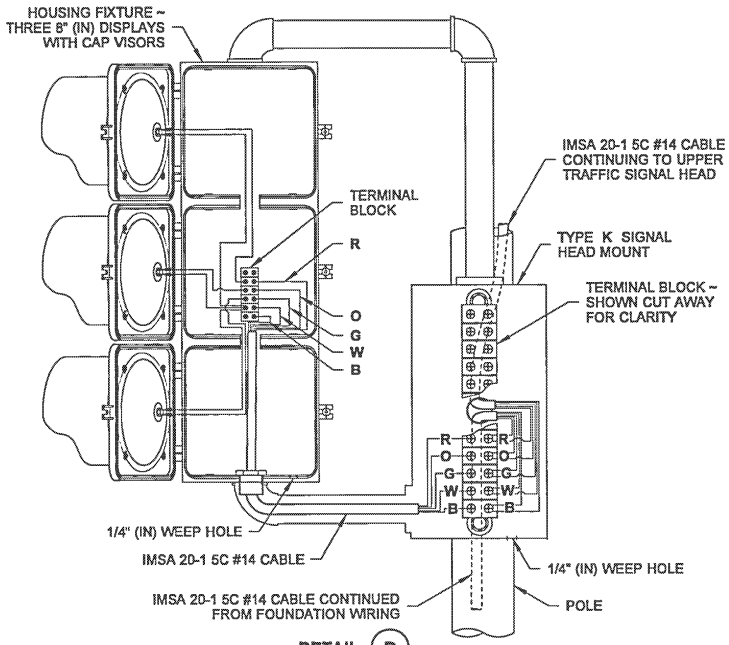

DETAIL (B)

LOWER TRAFFIC SIGNAL HEAD WIRING
(SHOWN LARGER FOR CLARITY)

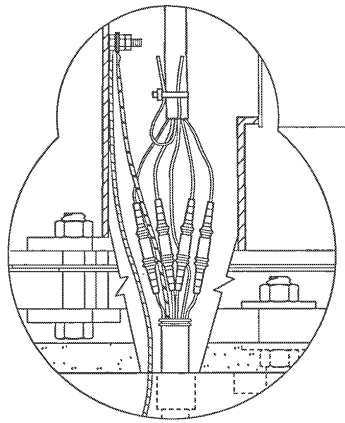

WIRING DETAIL

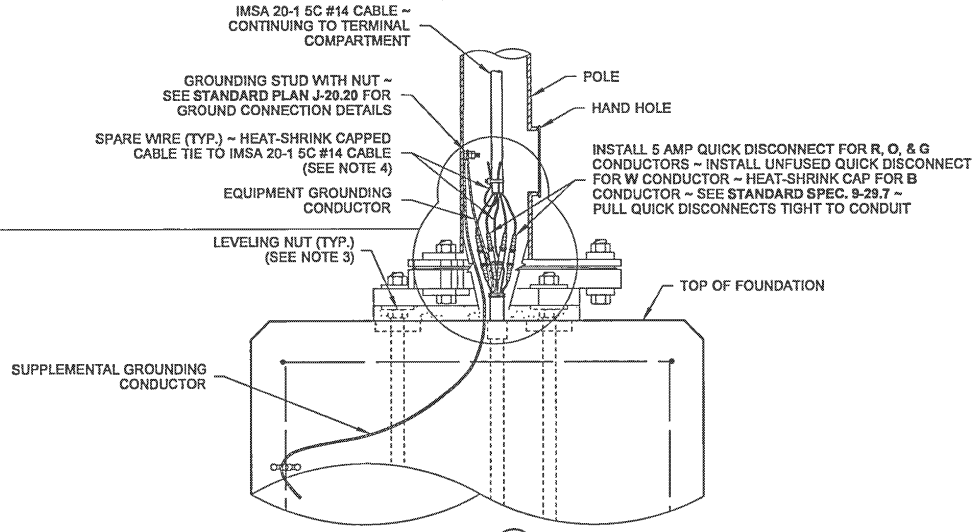

DETAIL (C)

FOUNDATION WIRING

NOTES

1. See **Standard Plan J-21.10** for Ramp Meter Signal Standard and Foundation Details.
2. See **Standard Specification 9-29.17** for additional Mounting Bracket and Fitting information not shown.
3. Top of Leveling Nut height shall be 1" (in) max. above foundation.
4. Heat-shrink cap for all spare conductors not terminated on a terminal strip.
5. Provide Cable Tie at wiring entering the Junction Box (Slip Base installations only). See **Detail A, Standard Plan J-28.70**.

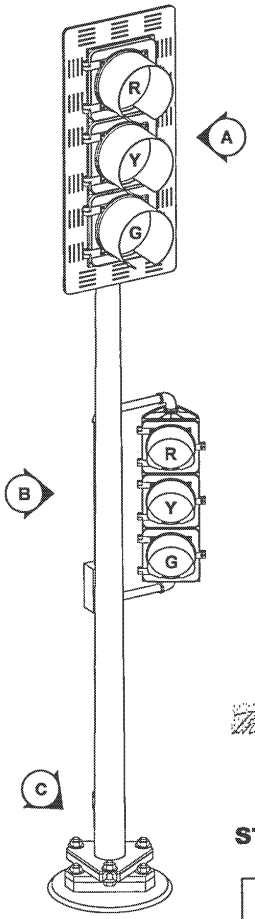

PERSPECTIVE VIEW
RAMP METER

COLOR CODE	USE
R	RED DISPLAY
O	AMBER DISPLAY
G	GREEN DISPLAY
W	NEUTRAL CONDUCTOR
B	SPARE CONDUCTOR

THEODORE JOSEPH BAILEY
STATE OF WASHINGTON
39820
REGISTERED
PROFESSIONAL ENGINEER

Bailey, Ted
Jul 8 2015 3:08 PM

RAMP METER SIGNAL STANDARD ELECTRICAL DETAILS

STANDARD PLAN J-22.16-03

SHEET 1 OF 1 SHEET

APPROVED FOR PUBLICATION
Carpenter, Jeff
Jul 10 2015 7:19 AM
STATE DESIGN ENGINEER

Washington State Department of Transportation

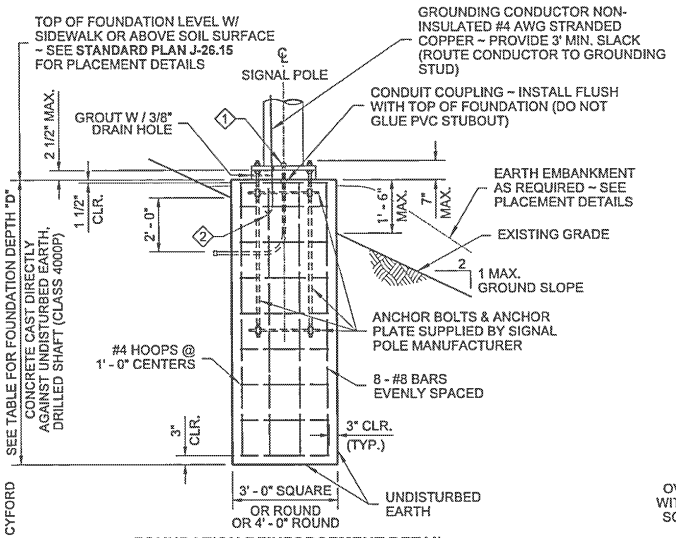

FOUNDATION REINFORCEMENT DETAIL

CONCRETE CAST DIRECTLY AGAINST UNDISTURBED EARTH, DRILLED SHAFT

ALTERNATE # 1

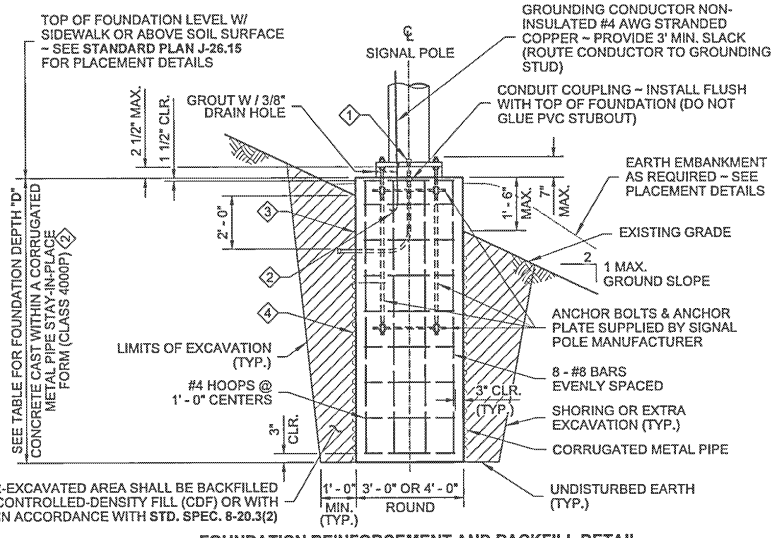

FOUNDATION REINFORCEMENT AND BACKFILL DETAIL

④ CONCRETE CAST WITHIN A CORRUGATED METAL PIPE STAY-IN-PLACE FORM

ALTERNATE # 2

① CONDUIT SIZE AND QUANTITY AS SHOWN IN THE CONTRACT; CAP BOTH ENDS

② CLAMP CONDUCTOR TO STEEL REINFORCING WITH LISTED CONNECTOR SUITABLE FOR USE EMBEDDED IN CONCRETE

③ PAPER OR CARDBOARD FORM SHALL NOT STAY-IN-PLACE

DRAWN BY: LISA CYFORD

FOUNDATION DEPTH "D" TABLE

ALTERNATE # 1 DRILLED SHAFT-TYPE CONSTRUCTION
FOR LATERAL BEARING PRESSURE = 2500 PSF & Ø = 34°, 1500 PSF & Ø = 28°, 1000 PSF & Ø = 26°

GROUND SLOPE = 3H : 1V OR FLATTER

ALLOWABLE LATERAL BEARING PRESSURE	FOUNDATION TYPE	XYZ (FT) 700	900	1350	1500	1900	2300	2600	3000
1000 PSF	3' - 0" ROUND	10' - 0"	10' - 0"	11' - 0"	11' - 0"	15' - 0"	18' - 0"	20' - 0"	20' - 0"
	3' - 0" SQUARE	8' - 0"	8' - 0"	9' - 0"	9' - 0"	10' - 0"	11' - 0"	12' - 0"	12' - 0"
	4' - 0" ROUND	8' - 0"	8' - 0"	9' - 0"	9' - 0"	10' - 0"	11' - 0"	12' - 0"	12' - 0"
1500 PSF	3' - 0" ROUND	8' - 0"	8' - 0"	9' - 0"	11' - 0"	13' - 0"	15' - 0"	18' - 0"	18' - 0"
	3' - 0" SQUARE	7' - 0"	7' - 0"	7' - 0"	8' - 0"	8' - 0"	9' - 0"	10' - 0"	10' - 0"
	4' - 0" ROUND	7' - 0"	7' - 0"	7' - 0"	8' - 0"	8' - 0"	9' - 0"	10' - 0"	10' - 0"
2500 PSF OR GREATER	3' - 0" ROUND	6' - 0"	6' - 0"	7' - 0"	8' - 0"	9' - 0"	11' - 0"	15' - 0"	15' - 0"
	3' - 0" SQUARE	6' - 0"	6' - 0"	6' - 0"	6' - 0"	7' - 0"	7' - 0"	8' - 0"	8' - 0"
	4' - 0" ROUND	6' - 0"	6' - 0"	6' - 0"	6' - 0"	7' - 0"	7' - 0"	8' - 0"	8' - 0"

GROUND SLOPE = GREATER THAN 3H : 1V TO 2H : 1V

ALLOWABLE LATERAL BEARING PRESSURE	FOUNDATION TYPE	XYZ (FT) 700	900	1350	1500	1900	2300	2600	3000
1000 PSF	3' - 0" ROUND	SPECIAL FOUNDATION TYPE							
	3' - 0" SQUARE	SPECIAL FOUNDATION TYPE							
	4' - 0" ROUND	SPECIAL FOUNDATION TYPE							
1500 PSF	3' - 0" ROUND	11' - 0"	11' - 0"	12' - 0"	14' - 0"	16' - 0"	18' - 0"	21' - 0"	21' - 0"
	3' - 0" SQUARE	10' - 0"	10' - 0"	10' - 0"	11' - 0"	11' - 0"	12' - 0"	13' - 0"	13' - 0"
	4' - 0" ROUND	10' - 0"	10' - 0"	10' - 0"	11' - 0"	11' - 0"	12' - 0"	13' - 0"	13' - 0"
2500 PSF OR GREATER	3' - 0" ROUND	9' - 0"	9' - 0"	10' - 0"	12' - 0"	12' - 0"	14' - 0"	18' - 0"	18' - 0"
	3' - 0" SQUARE	9' - 0"	9' - 0"	9' - 0"	9' - 0"	10' - 0"	10' - 0"	11' - 0"	11' - 0"
	4' - 0" ROUND	9' - 0"	9' - 0"	9' - 0"	9' - 0"	10' - 0"	10' - 0"	11' - 0"	11' - 0"

ALTERNATE # 2 CORRUGATED METAL PIPE TYPE CONSTRUCTION
FOR LATERAL BEARING PRESSURE = 2500 PSF & Ø = 23°, 1500 PSF & Ø = 18°, 1000 PSF & Ø = 17°

GROUND SLOPE = 3H : 1V OR FLATTER

ALLOWABLE LATERAL BEARING PRESSURE	FOUNDATION TYPE	XYZ (FT) 700	900	1350	1500	1900	2300	2600	3000
1000 PSF	3' - 0" ROUND	10' - 0"	10' - 0"	11' - 0"	15' - 0"	20' - 0"	25' - 0"	28' - 0"	28' - 0"
	4' - 0" ROUND	8' - 0"	8' - 0"	9' - 0"	12' - 0"	13' - 0"	14' - 0"	15' - 0"	15' - 0"
1500 PSF	3' - 0" ROUND	8' - 0"	8' - 0"	11' - 0"	15' - 0"	18 - 0"	21' - 0"	25' - 0"	25' - 0"
	4' - 0" ROUND	7' - 0"	7' - 0"	7' - 0"	8' - 0"	10' - 0"	13' - 0"	15' - 0"	15' - 0"
2500 PSF OR GREATER	3' - 0" ROUND	6' - 0"	6' - 0"	7' - 0"	11' - 0"	13' - 0"	18' - 0"	20' - 0"	20' - 0"
	4' - 0" ROUND	6' - 0"	6' - 0"	6' - 0"	6' - 0"	7' - 0"	9' - 0"	9' - 0"	9' - 0"

GROUND SLOPE = GREATER THAN 3H : 1V TO 2H : 1V

ALLOWABLE LATERAL BEARING PRESSURE	FOUNDATION TYPE	XYZ (FT) 700	900	1350	1500	1900	2300	2600	3000
1000 PSF	3' - 0" ROUND	SPECIAL FOUNDATION TYPE							
	4' - 0" ROUND	SPECIAL FOUNDATION TYPE							
1500 PSF	3' - 0" ROUND	11' - 0"	11' - 0"	14' - 0"	18' - 0"	21' - 0"	24' - 0"	28' - 0"	23' - 0"
	4' - 0" ROUND	10' - 0"	10' - 0"	10' - 0"	11' - 0"	13' - 0"	16' - 0"	18' - 0"	18' - 0"
2500 PSF OR GREATER	3' - 0" ROUND	9' - 0"	9' - 0"	10' - 0"	14' - 0"	16' - 0"	21' - 0"	23' - 0"	23' - 0"
	4' - 0" ROUND	9' - 0"	9' - 0"	9' - 0"	9' - 0"	10' - 0"	12' - 0"	12' - 0"	12' - 0"

NOTES

1. This structure has been designed according to the Fifth Edition 2009 AASHTO Standard Specifications for Structural Supports for Highway Signs, Luminaires and Traffic Signals. Basic wind velocity is 90 mph, Design Life/Recurrence Interval 50 years, and Fatigue Category III.
2. Foundations are designed for Type II, III, and SD Signal Standards with a maximum mast arm length of 65'.
3. Foundations are designed for Single Mast Arm Standards and Double Mast Arm Standards with 90° between arms. Special foundation design is required for Double Arm Standards where the angle between mast arms is other than 90°. For Double Mast Arm Standards with 90° between arms, use larger XYZ value for foundation depth selection.
4. Foundations not within the parameters of this standard require Special Design. Contact the WSDOT Bridge and Structures Office through the Engineer for Special Foundation Designs.
5. Foundations constructed within Ecology Embankments shall be increased in depth by the depth of the Ecology Embankment.
6. The top 2 feet of the foundation shall use a smooth form (such as paper or cardboard). After the concrete has cured, this entire form shall be removed.
7. For design parameters between the values listed in Table, depth requirements may be interpolated between the values provided.
8. Install Signal Foundation Identification Tag. See **Standard Plan J-26.15** for details.

ALTERNATE #2 - CONSTRUCTION METHOD
METAL (SUBSURFACE) FORM REQUIRED

When the existing soil will not retain a vertical face, over-excavate the foundation area and install a 36" or 48" diameter corrugated metal (pipe) form. The top of the corrugated metal form shall terminate 1 foot below final grade. Continue forming to full height using paper or cardboard form to achieve a smooth finish on final exposed cement concrete. Support the form as necessary to remain plumb.

Place the concrete foundation.

After concrete has cured, remove the entire paper or cardboard form portion.

Backfill with controlled-density fill or compacted borrow in accordance with **Standard Specification 8-20.3(2).**

RICHARD P. ZELDENRUST — STATE OF WASHINGTON — 21470 — STRUCTURAL ENGINEER — PROFESSIONAL ENGINEER

2/6/12

SIGNAL STANDARD FOUNDATION PLAN

STANDARD PLAN J-26.10-02

SHEET 1 OF 1 SHEET

APPROVED FOR PUBLICATION

STATE DESIGN ENGINEER — DATE 3/13/12

Washington State Department of Transportation

DRAWN BY: BILL BERENS

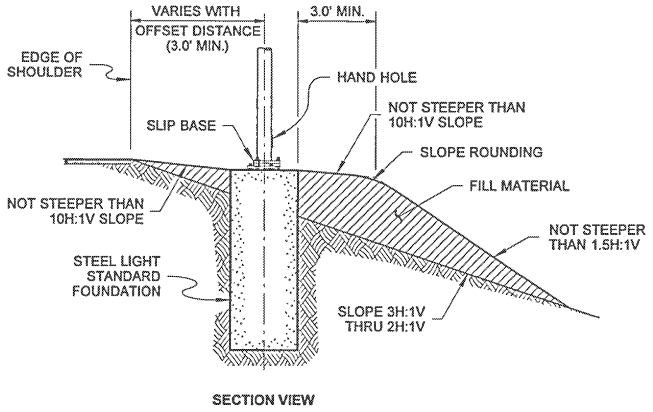

CASE A

SLOPES 3H:1V THRU 2H:1V (MAX.)

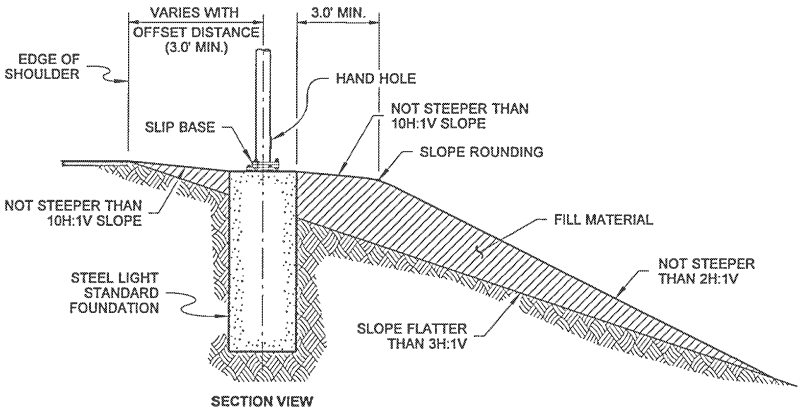

CASE B

SLOPES FLATTER THAN 3H:1V

EMBANKMENTS

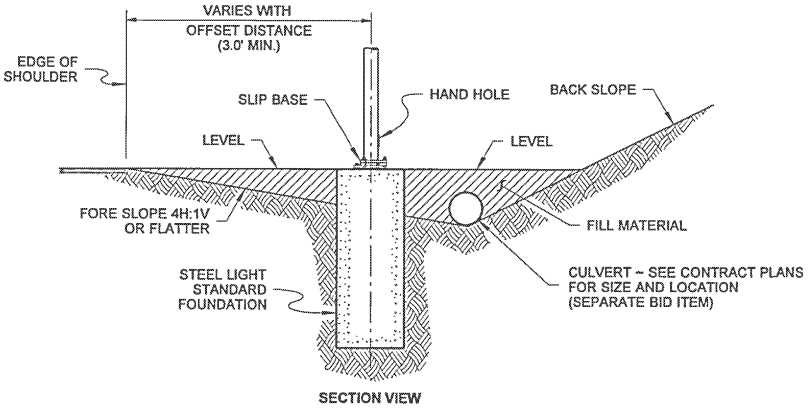

CASE C

FORE SLOPES 4H:1V OR FLATTER

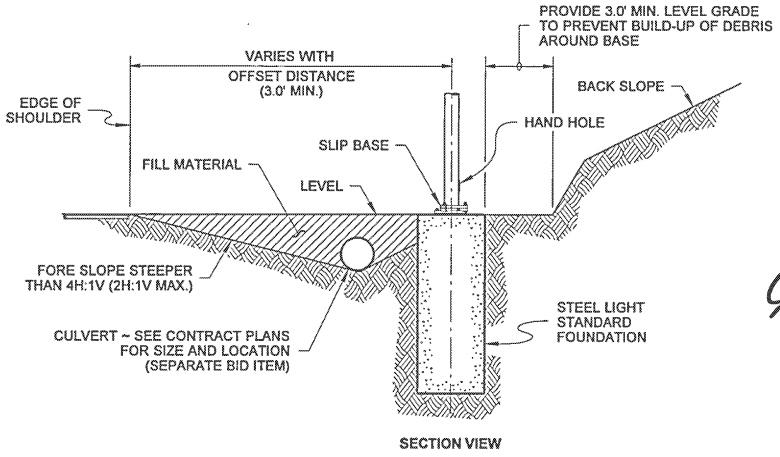

CASE D

FORE SLOPES STEEPER THAN 4H:1V (2H:1V MAX.)

DITCH SECTIONS

EXPIRES AUGUST 9, 2007

STEEL LIGHT STANDARD PLACEMENT (SLIP BASE)

STANDARD PLAN J-28.22-00

SHEET 2 OF 2 SHEETS

APPROVED FOR PUBLICATION

STATE DESIGN ENGINEER — DATE 8/7/07

Washington State Department of Transportation

DRAWN BY: COLBY FLETCHER

MAXIMUM CONCRETE EXPOSURE TABLE (CASE F ONLY)	
SLOPE	HEIGHT (SEE NOTE 3)
1.75H : 1V	1' - 8 1/2"
1.50H : 1V	2' - 0"
1.25H : 1V	2' - 4 3/4"

NOTES

1. See **Standard Plan J-28.30** for foundation details and construction methods.
2. See **Standard Plan J-28.50** for pole base and hand hole details.
3. Values listed in the Table were determined using a 3' - 0" diameter foundation. For design parameters between the values listed, exposure requirements may be interpolated between the values provided.
4. Fill material for Maintenance Pad shall be granular material. Alternately, Crushed Surfacing (Base Course or Top Course) per **Standard Specification 9-03.9(3)** may be used.

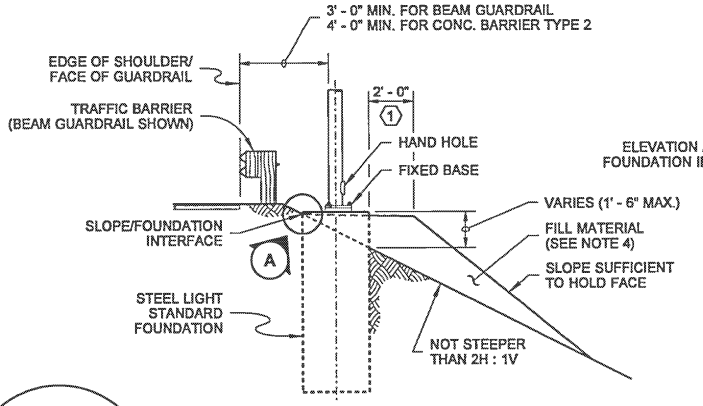

SECTION VIEW

CASE E

SLOPES 2H : 1V OR FLATTER
BEHIND TRAFFIC BARRIER

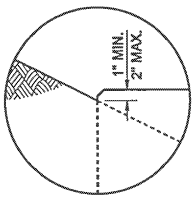

DETAIL (A)

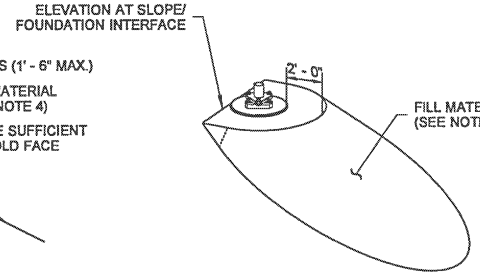

PERSPECTIVE VIEW

CASE E & CASE F

MAINTENANCE PAD

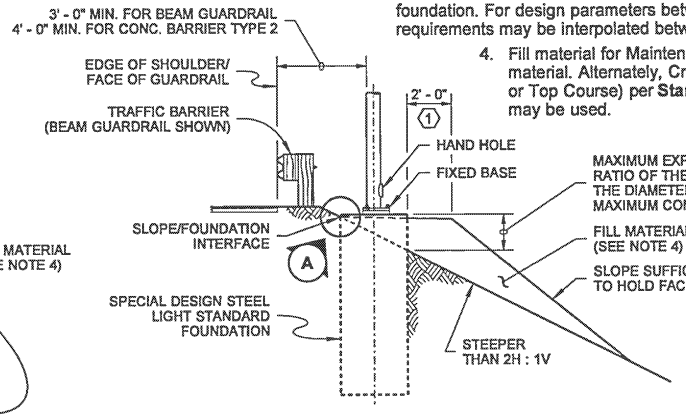

SECTION VIEW

CASE F

SLOPES STEEPER THAN 2H : 1V
BEHIND TRAFFIC BARRIER
(SPECIAL DESIGN FOUNDATION)

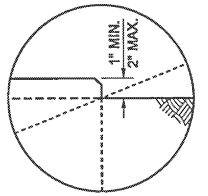

DETAIL (B)

EMBANKMENTS

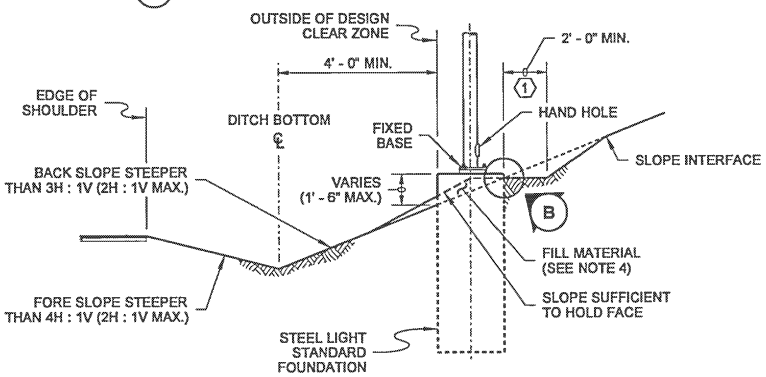

SECTION VIEW

CASE G

ROADSIDE DITCH WITH FORE SLOPE
STEEPER THAN 4H : 1V (2H : 1V MAX.)

1 MAINTENANCE PAD ~ SLOPE TO DRAIN AWAY FROM THE FOUNDATION ~ NOT STEEPER THAN 5%

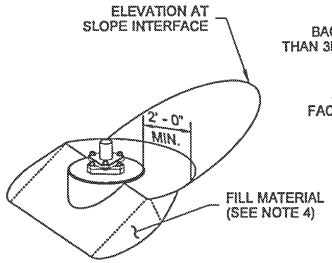

PERSPECTIVE VIEW

CASE G & CASE H

MAINTENANCE PAD

BACK SLOPES

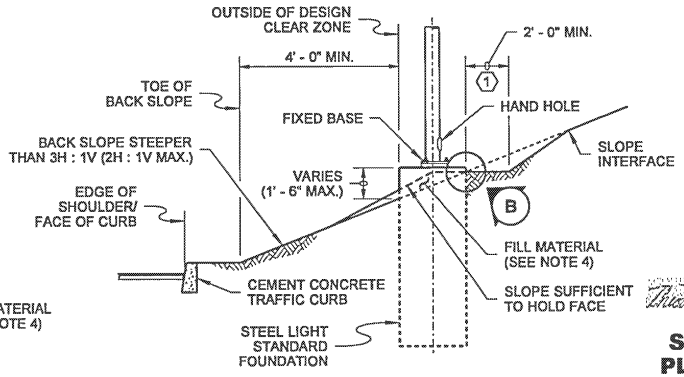

SECTION VIEW

CASE H

CUT SECTION WITH BACK SLOPE
STEEPER THAN 3H : 1V (2H : 1V MAX.)

THEODORE JOSEPH BAILEY
STATE OF WASHINGTON
39820
REGISTERED
PROFESSIONAL ENGINEER

Bailey, Ted
May 28 2015 10:11 AM

STEEL LIGHT STANDARD PLACEMENT (FIXED BASE)

STANDARD PLAN J-28.24-01

SHEET 1 OF 1 SHEET

APPROVED FOR PUBLICATION
Bakotich, Pasco
Jun 3 2015 4:23 PM
STATE DESIGN ENGINEER

Washington State Department of Transportation

DRAWN BY: BILL BERENS

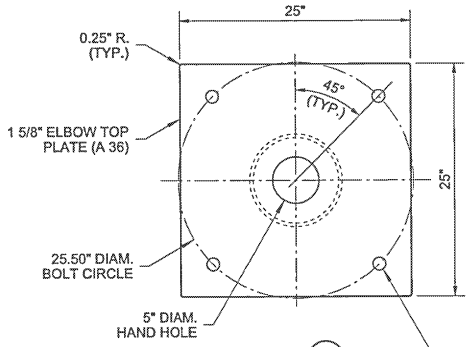

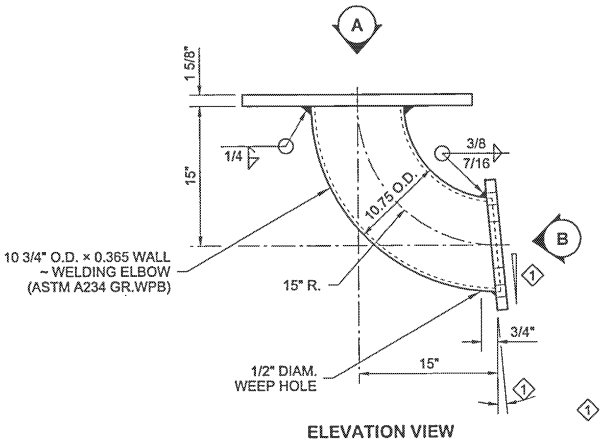

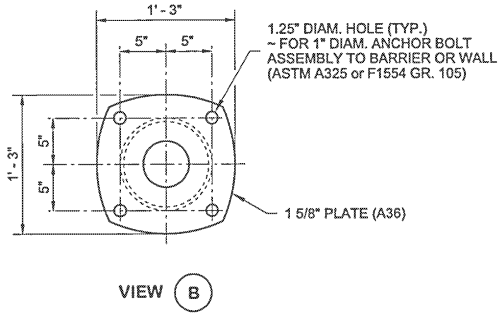

NOTES

1. For information not shown, see Steel Light Standard Elbow detail, **Standard Plan J-28.45.** For Camera Pole Details, see **Standard Plan J-29.15.**
2. Round and smooth all edges along wire-way to protect conductors.
3. The manufacturer shall verify that the Elbow Top Plate matches the Camera Pole Base, and shall submit the shop drawings for approval.
4. Galvanize after fabrication according to AASHTO M111.
5. Install galvanized steel protective band (3/16" thick × 3 1/2" high (A36)) on all four sides after truing pole, as shown in **Standard Plan J-28.45,** except fasten 6" from corners on 25" square base.

CAMERA POLE ELBOW MOUNT ~ 25" SQUARE

RICHARD P. ZELDENRUST
STATE OF WASHINGTON
25470
STRUCTURAL ENGINEER
PROFESSIONAL ENGINEER
6/12/13

CAMERA POLE STANDARD DETAILS

STANDARD PLAN J-29.16-01

SHEET 1 OF 1 SHEET

APPROVED FOR PUBLICATION

STATE DESIGN ENGINEER — DATE 6/20/13

Washington State Department of Transportation

DRAWN BY: FERN LIDDELL

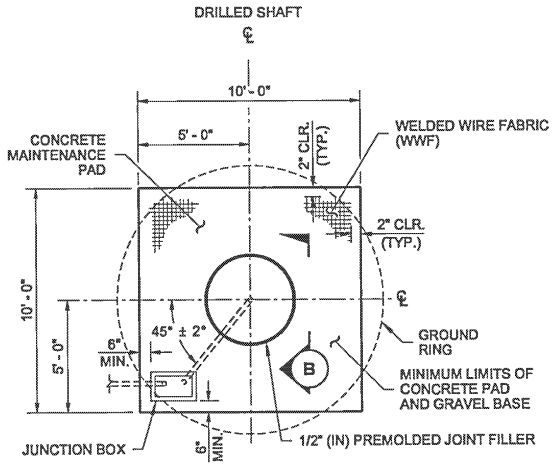

PLAN VIEW

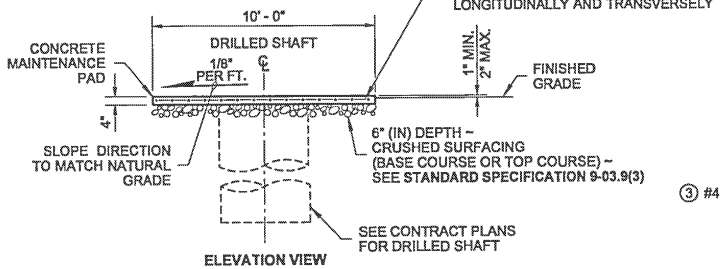

ELEVATION VIEW

4" (IN) MAINTENANCE PAD

ON SLOPES LEVEL TO 10H : 1V

NOTE: CONCRETE FOR 4" (IN) THICK PAD SHALL BE CLASS 3000

KEY NOTE

① LIMITS OF PIGMENTED SEALER. TYPICAL FOR ALL RETAINING WALLS.

REINFORCING STEEL BENDING DIAGRAM

SEE STD. SPEC. 9-07.1(2) FOR BENDING DIAM. ALL DIMENSIONS ARE OUT TO OUT

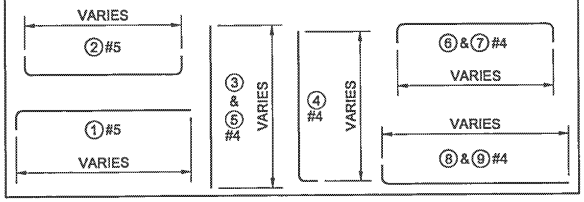

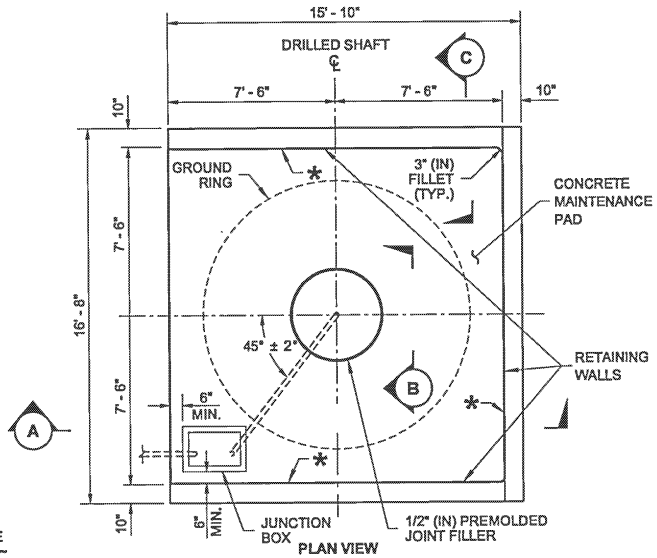

PLAN VIEW

(REINFORCING NOT SHOWN FOR CLARITY)

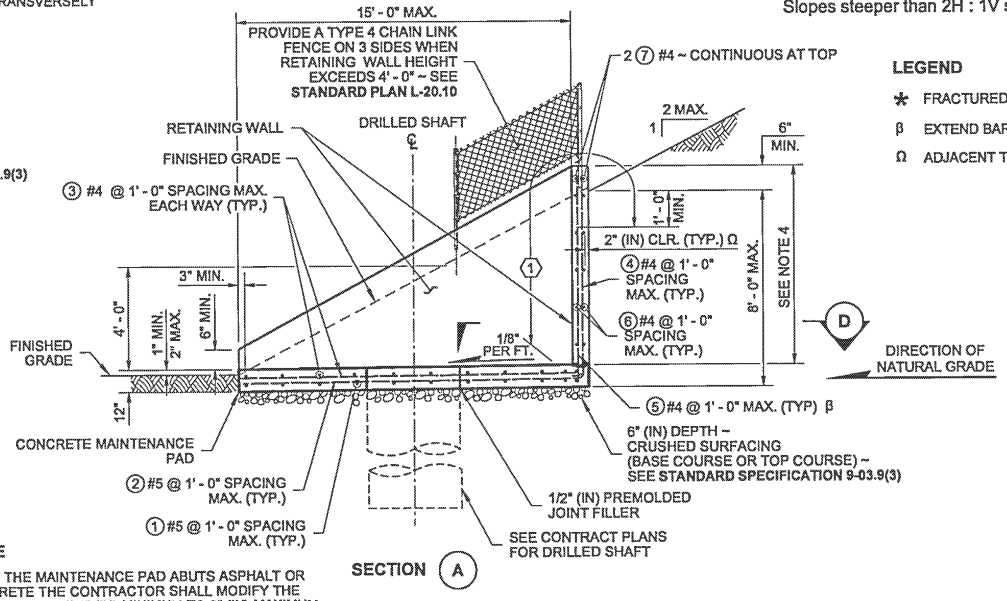

NOTE

WHEN THE MAINTENANCE PAD ABUTS ASPHALT OR CONCRETE THE CONTRACTOR SHALL MODIFY THE FINISHED GRADE 1" (IN) MINIMUM TO 2" (IN) MAXIMUM.

SECTION (A)

12" (IN) MAINTENANCE PAD

ON SLOPES STEEPER THAN 10H : 1V

NOTE: CONCRETE FOR 12" (IN) THICK PAD SHALL BE CLASS 4000

(GROUND RING NOT SHOWN FOR CLARITY)

NOTES

1. All material and workmanship shall be in accordance with the **Standard Specifications**.
2. The maintenance pad and retaining walls have been designed to meet the requirements of the **AASHTO LRFD Bridge Design Specifications, 7th Edition, 2014**.
3. Concrete for 12" (in) thick maintenance pad shall be class 4000. Concrete for 4" (in) thick maintenance pad shall be class 3000.
4. Height of wall varies to match slope of finished grade. Contractor shall field-determine wall height at each maintenance pad location and obtain approval from the Engineer prior to proceeding with construction.
5. All exposed corners shall have 3/4" (in) chamfers.
6. For grounding details not shown, see **Standard Plan J-60.05**.
7. Where concrete cover (clear) thickness is not shown, the clear distance from the face of the concrete to the face of any reinforcing steel shall be as follows: 3" (in) for bottom of maintenance pad, 2" (in) for top of maintenance pad, and 1 1/2" (in) at all other locations.
8. Falsework shall be carefully released to prevent impact or undue stress on the structure.
9. See Contract Plans for number, type, and location of conduits and conductors.
10. Contractor shall orient the maintenance pad to align with the direction of natural grade as shown. Engineer's approval of maintenance pad slope and orientation required prior to proceeding with construction.
11. Use 4" (in) Maintenance Pad on level ground or slopes not exceeding 10H : 1V. Use 12" (in) Maintenance Pad on slopes steeper than 10H : 1V. Slopes steeper than 2H : 1V shall require a special design.

LEGEND

* FRACTURED FIN FINISH
β EXTEND BAR 8" (IN) INTO FOOTING
Ω ADJACENT TO SOIL

RICHARD P. ZELDENRUST
STATE OF WASHINGTON
25470
STRUCTURAL ENGINEER
PROFESSIONAL ENGINEER

Zeldenrust, Richard
2015.06.11 15:07:03 -07'00'

HIGH MAST LUMINAIRE MAINTENANCE PAD

STANDARD PLAN J-30.10-00

SHEET 1 OF 2 SHEETS

APPROVED FOR PUBLICATION
Carpenter, Jeff
Jun 18 2015 7:54 AM
STATE DESIGN ENGINEER

Washington State Department of Transportation

DRAWN BY: FERN LIDDELL

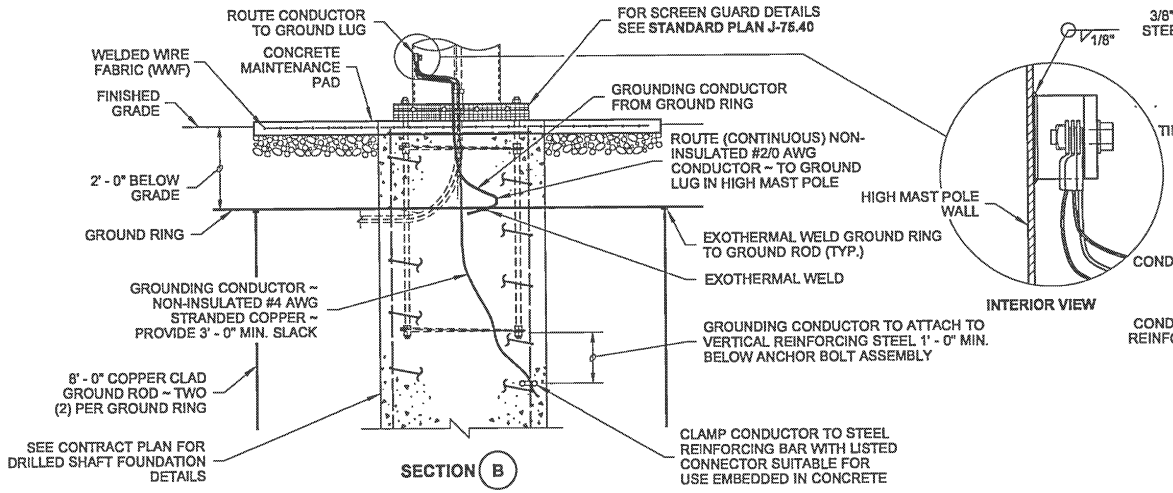

SECTION (B)

4" (IN) THICK MAINTENANCE PAD IS SHOWN IN THIS VIEW ~
12" (IN) THICK MAINTENANCE PAD DETAIL IS SIMILAR
(REINFORCING, ANCHOR BOLTS, AND GUIDEPOSTS NOT SHOWN IN THIS VIEW FOR CLARITY)

INTERIOR VIEW

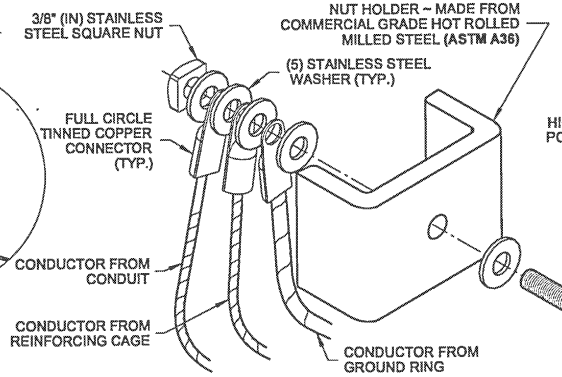

EXPLODED VIEW

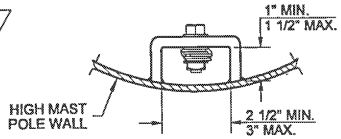

PLAN VIEW

BOLTS, NUTS, AND WASHERS ~ ASTM F593 OR A193 TYPE 304 OR TYPE 316 STAINLESS STEEL (S.S.)

GROUNDING LUG DETAIL

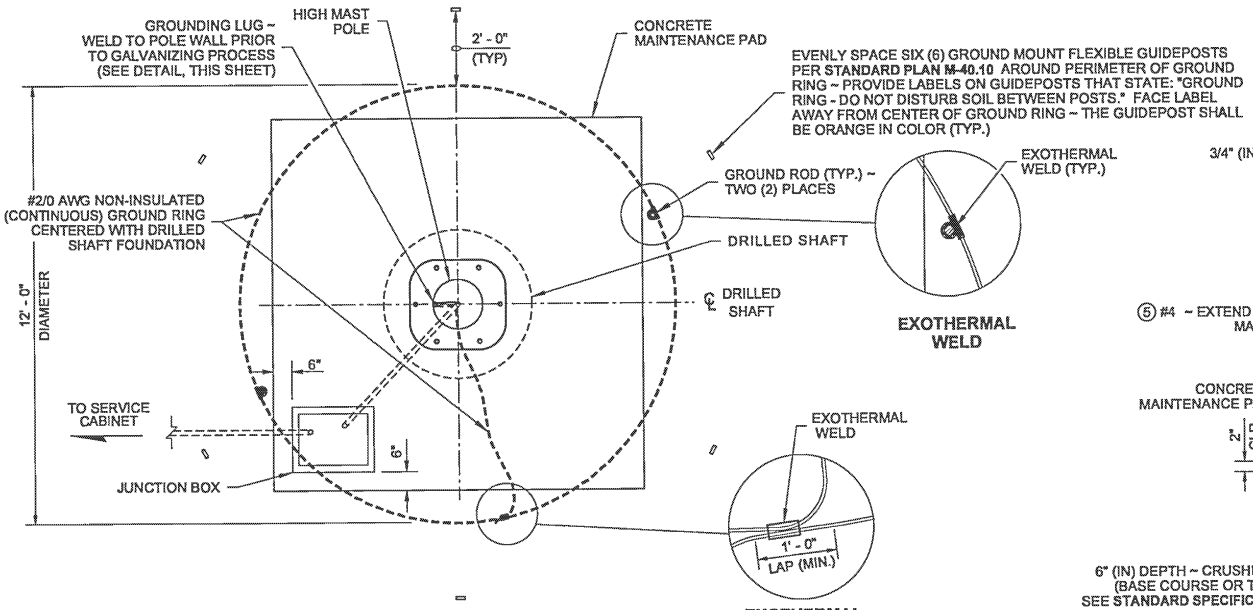

PLAN VIEW

HIGH MAST POLE MAINTENANCE PAD AND GROUNDING DETAILS

4" (IN) THICK MAINTENANCE PAD IS SHOWN IN THIS VIEW ~
12" (IN) THICK MAINTENANCE PAD DETAIL IS SIMILAR
(REINFORCING NOT SHOWN FOR CLARITY)

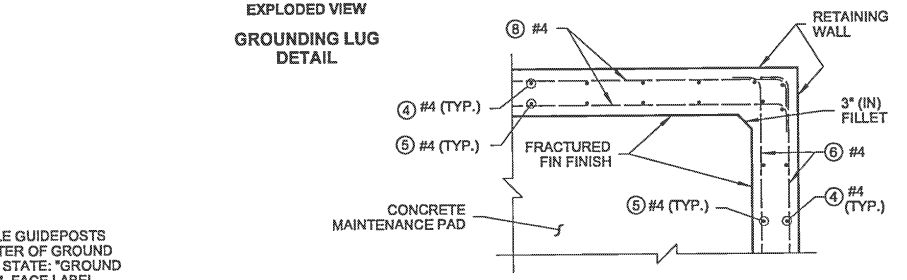

SECTION (D)

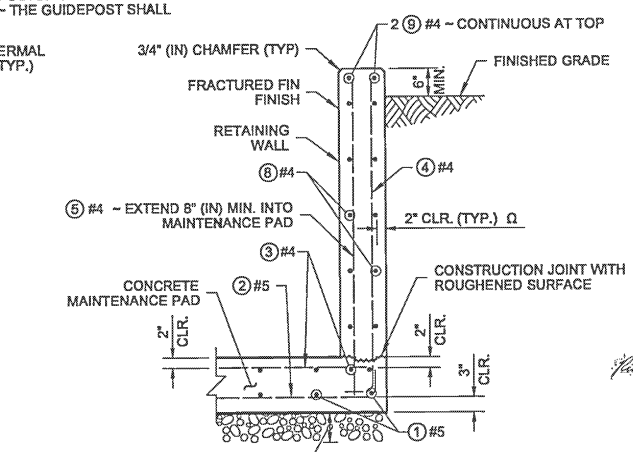

6" (IN) DEPTH ~ CRUSHED SURFACING (BASE COURSE OR TOP COURSE) ~ SEE STANDARD SPECIFICATION 9-03.9(3)

SECTION (C)

(CHAIN LINK FENCE NOT SHOWN FOR CLARITY)

RICHARD P. ZELDENRUST
STATE OF WASHINGTON
25470
STRUCTURAL ENGINEER
PROFESSIONAL ENGINEER

Zeldenrust, Richard
2015.06.11 15:07:28 -07'00'

HIGH MAST LUMINAIRE MAINTENANCE PAD

STANDARD PLAN J-30.10-00

SHEET 2 OF 2 SHEETS

APPROVED FOR PUBLICATION
Carpenter, Jeff
Jun 18 2015 7:54 AM
STATE DESIGN ENGINEER

Washington State Department of Transportation

DRAWN BY: LISA CYFORD

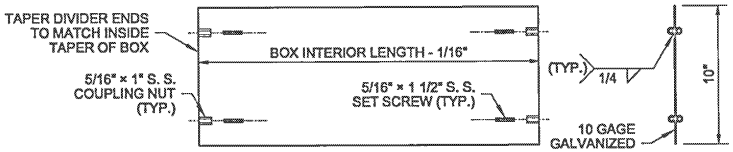

DIVIDER PLATE
ELEVATION VIEW
(FOR TYPE 2 JUNCTION BOX ONLY)

JUNCTION BOX DIMENSION TABLE

MARK	ITEM	BOX TYPE	
		TYPE 1	TYPE 2
A	OUTSIDE LENGTH OF JUNCTION BOX	22"	33"
B	OUTSIDE WIDTH OF JUNCTION BOX	17"	22 1/2"
C	INSIDE LENGTH OF JUNCTION BOX	18" ~ 19"	28" ~ 29"
D	INSIDE WIDTH OF JUNCTION BOX	13" ~ 14"	17" ~ 18"
E	LID LENGTH	17 5/8"	28 5/8"
F	LID WIDTH	12 5/8"	18 1/8"
	CAPACITY ~ CONDUIT DIAMETER	6"	12"

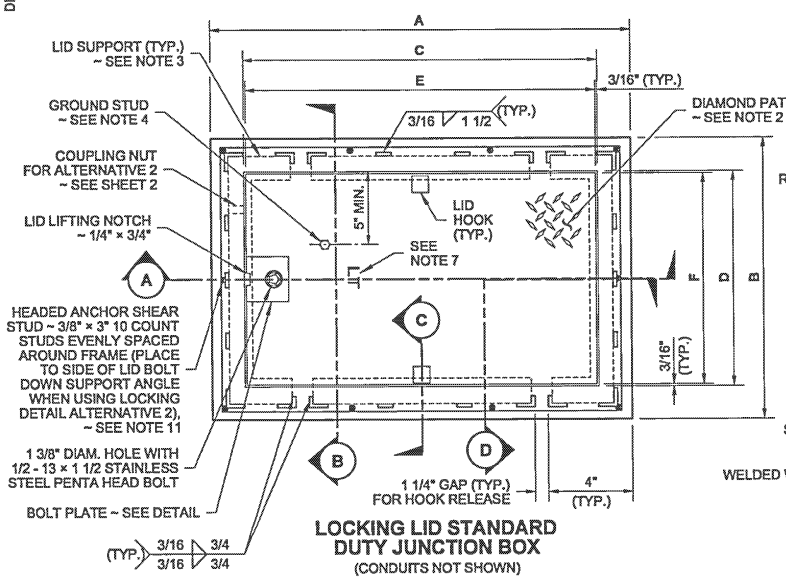

LOCKING LID STANDARD DUTY JUNCTION BOX
(CONDUITS NOT SHOWN)

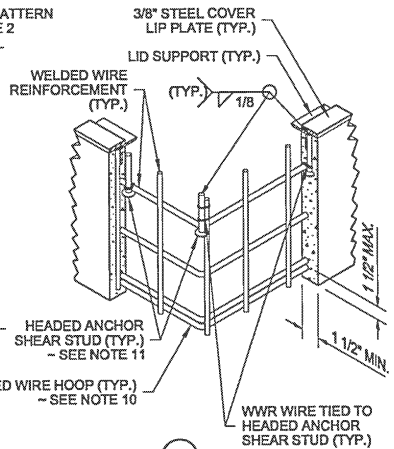

SECTION (D)
PERSPECTIVE VIEW

NOTES

1. All box dimensions are approximate. Exact configurations vary among manufacturers.
2. Minimum lid thickness shown. The diamond pattern shall be a minimum of 28% of the overall thickness. Junction Boxes installed in sidewalks, walkways, and shared-use paths shall have a slip-resistant coating on the lid and lip cover plate, and shall be installed with the surface flush with and matched to the grade of the sidewalk, walkway, or shared-use path. The non-slip lid shall be identified with permanent markings on the underside, indicating the type of surface treatment (see Contract Documents for details) and the year of manufacture. The permanent marking shall be 1/8" inch line thickness formed with a stainless steel weld bead and shall be placed prior to hot-dip galvanizing.
3. Lid support members shall be 3/16" minimum thick steel C, L, or T shape, welded to the frame.
4. A 1/4-20 NC × 3/4" stainless steel ground stud shall be welded to the bottom of the lid; include (2) stainless steel nuts and (2) stainless steel flat washers.
5. Bolts and nuts shall be liberally coated with anti-seize compound.
6. Equipment Bonding Jumper shall be # 8 AWG min. × 4' of tinned braided copper.
7. The System Identification letters shall be 1/8" line thickness formed by engraving, stamping, or with a S. S. weld bead. See Cover Marking detail. Grind off diamond pattern before forming letters. For System Identification details, see **Standard Specification 9-29.2(4).**
8. When required in the Contract, provide a 10" x 27 1/2", 10 gage divider plate, complete, with fasteners, in each Type 2 Junction Box where specified.
9. When required in Contract, provide a 12" deep extension for each Type 2 Junction Box where specified.
10. See the Standard Specifications for alternative reinforcement and class of concrete.
11. Headed Anchor Shear Studs must be welded to the Steel Cover Lip Plate and wire tied in two places to the vertical Welded Reinforcement Wire when in contact with each other. Wire tie all other Headed Anchor Shear Studs to the horizontal Welded Reinforcement Wire.
12. Lid Bolt Down Attachment Tab provides a method of retrofitting by using a mechanical process in lieu of welding. Attachment Tab shown depicts a typical component arrangement; actual configurations of assembly will vary among manufacturers. See approved manufacturers' shop drawings for specifics.
13. Unless otherwise noted in the plans or approved by the Engineer, Junction Boxes, Cable Vaults, and Pull Boxes shall not be placed within the sidewalks, walkways, shared use paths, traveled ways or paved shoulders. All Junction Boxes, Cable Vaults, and Pull Boxes placed within the traveled way or paved shoulders shall be Heavy-Duty.
14. Distance between the top of the conduit and the bottom of the Junction Box lid shall be 6" min. to 8" max. for final grade of new construction only. See **Standard Specification 8-20.3(5).** Where adjustments are to be made to existing Junction Boxes, or for interim construction stages during the contract, the limits shall be from 6" min. to 10" max. See **Standard Specification 8-20.3(6).**

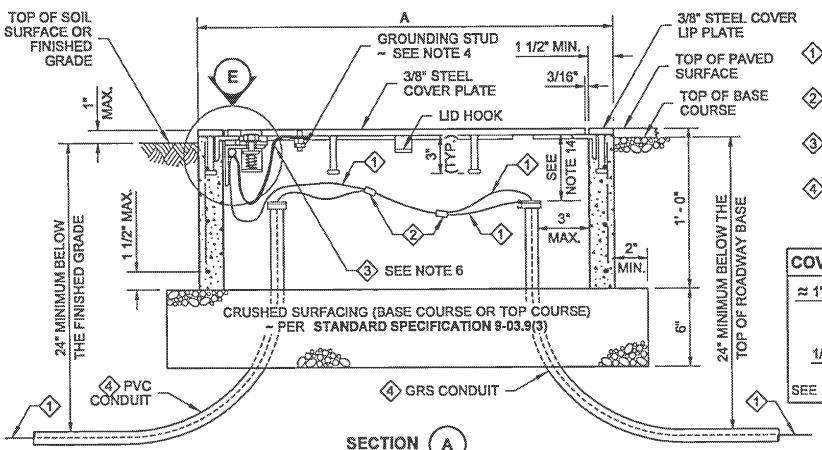

SECTION (A)

① Equipment Grounding Conductor
② Copper Solderless Crimp Connector
③ Equipment Bonding Jumper ~ see note 6
④ See Contract for conduit size and number

COVER MARKING DETAIL

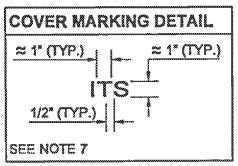

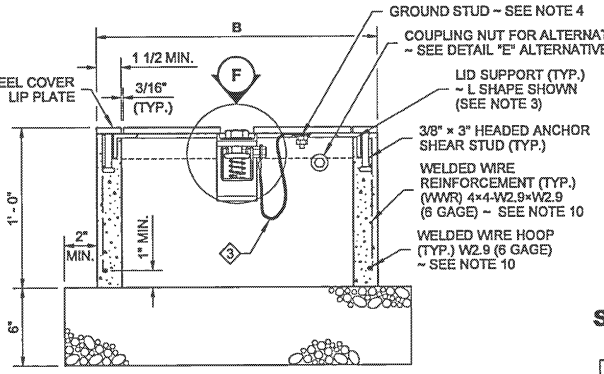

SECTION (B)
(CONDUITS NOT SHOWN)

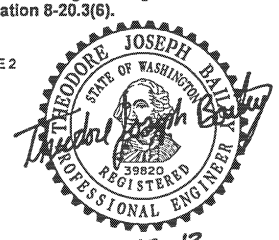

LOCKING LID STANDARD DUTY JUNCTION BOX TYPES 1 & 2

STANDARD PLAN J-40.10-03

SHEET 1 OF 2 SHEETS

APPROVED FOR PUBLICATION

STATE DESIGN ENGINEER — DATE 5/20/13

Washington State Department of Transportation

DRAWN BY: COLBY FLETCHER

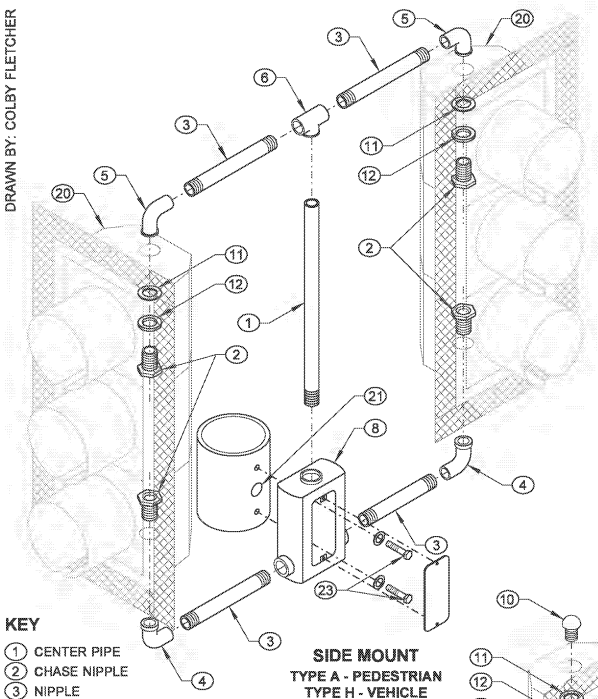

SIDE MOUNT
TYPE A - PEDESTRIAN
TYPE H - VEHICLE

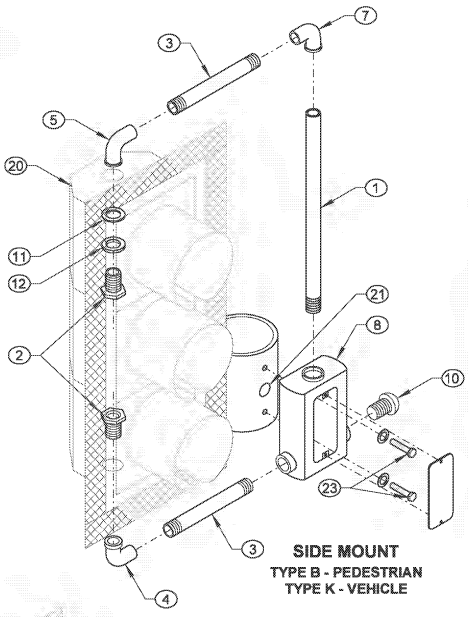

SIDE MOUNT
TYPE B - PEDESTRIAN
TYPE K - VEHICLE

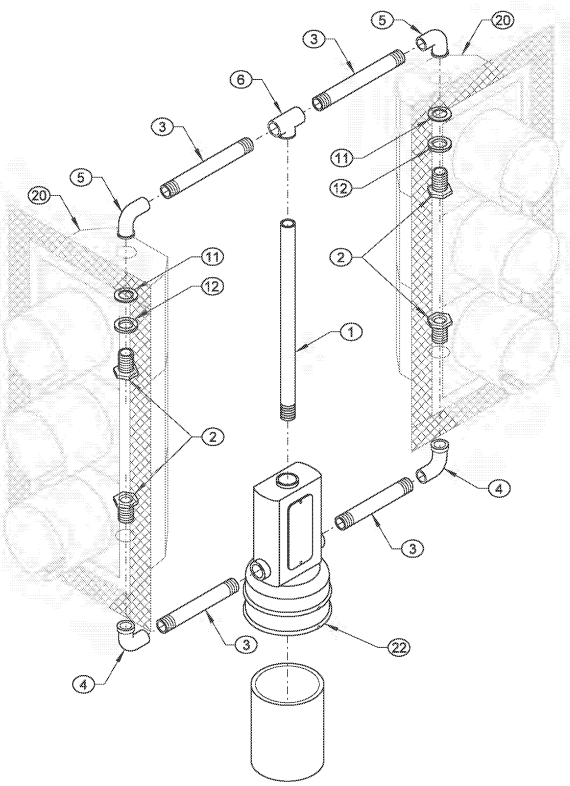

TOP MOUNT
TYPE C - PEDESTRIAN
TYPE F - VEHICLE

KEY

1. CENTER PIPE
2. CHASE NIPPLE
3. NIPPLE
4. SERRATED ELBOW
5. SERRATED OR FLANGED ELBOW
6. REAMED TEE WITH SET SCREW
7. REAMED ELBOW WITH SET SCREW
8. BRONZE TERMINAL COMPARTMENT WITH:
   - GASKETED COVER
   - FASTENERS
   - WIRE LEADS
   - MOUNTING SADDLE FOR SIDE MOUNTS ON ROUND/TAPERED POLES ~ OMIT SADDLE ON MULTI-SIDED POLES
   - 1/4" (IN) DIAM. DRAIN HOLE
   - 12-POSITION TERMINAL STRIP
   - WIREWAY FOR SIDE MOUNTS
9. BRONZE COLLAR ~ 4 1/4" (IN) I.D. OFFSET OPENING W/SET SCREWS
10. ORNAMENT CAP
11. NEOPRENE GASKET
12. WASHER
13. CONDUIT LOCKNUT
14. TYPE E HINGE CLAMSHELL MOUNT ~ LEFT OR RIGHT, SEE CONTRACT
15. FASTENER WITH SPACER ~
    - 1/2" (IN) LAG SCREWS ON WOOD POLE
    - 1/2" (IN) BOLTS TAPPED TO METAL POLE
16. FLATHEAD SOCKET BOLT
17. 1/2" (IN) INSERT HOLE FOR EXTERNAL WIRE ENTRANCE (REQUIRED ON TIMBER POLE MOUNTING ONLY)
18. TERMINAL BLOCK AND PHENOLIC TAG
19. INSULINER ~ 1" (IN) MIN. DIAM. HOLE
20. SIGNAL HEAD WITH BACKPLATE
21. FIELD DRILL POLE AND INSERT AN INSULINER OR SIMILAR DEVICE TO PROTECT CONDUCTORS
22. SIMILAR TO (8) WITH BRONZE INTEGRAL COLLAR
23. 1/2" (IN) DIAM. x 3" (IN) LONG BOLT WITH WASHER

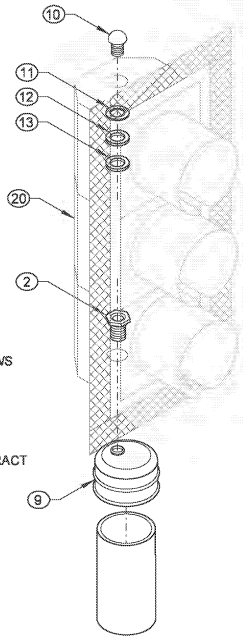

TOP MOUNT
TYPE D - PEDESTRIAN ~ OFFSET BRONZE COLLAR TO FRONT
OR VEHICLE (SHOWN) ~ OFFSET BRONZE COLLAR TO BACK

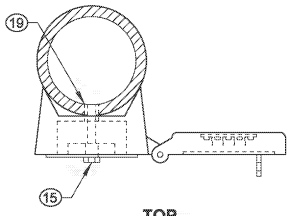

TOP

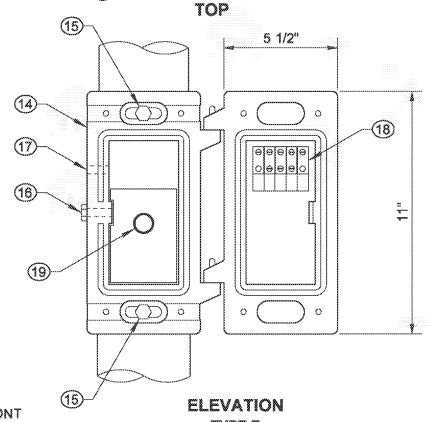

ELEVATION
TYPE E
MOUNTING DETAILS

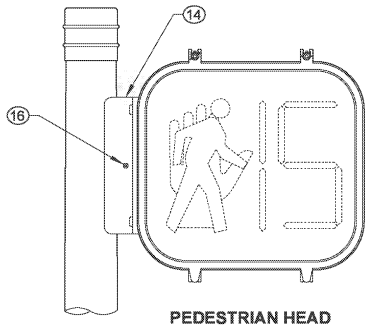

PEDESTRIAN HEAD
SIDE MOUNT
(LEFT SIDE SHOWN)
TYPE E - COUNTDOWN LED
PEDESTRIAN HEAD

NOTES

1. See Contract for head type, mounting height, and orientation.
2. All nipples, fittings, and center pipes shall be 1 1/2" (in) diameter.
3. Install neoprene gasket inside head when flanged elbows are supplied.
4. Extend wire sheath a minimum of 1" (in) inside all signal and sign housings and terminal compartments.
5. Apply bead of silicone to the serrated ring and around the perimeter of all top openings prior to installation of fittings.
6. See **Standard Specification 9-29.16** for backplate requirements. Where required, prismatic sheeting shall be applied in accordance with the manufacturer's recommendations. The application surface of the backplate shall be cleaned, degreased with isopropyl alcohol, and dried prior to application of the sheeting.
7. Drill a 1/4" (in) drain hole in the bottom of each signal display assembly, and one in the bottom of each pedestrian head. When signal display assembly is mounted horizontally, drill a 1/4" (in) drain hole at the lowest point of each section of the signal assembly.

THEODORE JOSEPH BAILEY
STATE OF WASHINGTON
39820
REGISTERED
PROFESSIONAL ENGINEER

Bailey, Ted
Jul 8 2015 3:09 PM

SIGNAL HEAD MOUNTING DETAILS ~ POLE AND POST TOP MOUNTINGS

STANDARD PLAN J-75.10-02

SHEET 1 OF 1 SHEET

APPROVED FOR PUBLICATION
Carpenter, Jeff
Jul 10 2015 7:19 AM
STATE DESIGN ENGINEER

Washington State Department of Transportation

DRAWN BY: COLBY FLETCHER

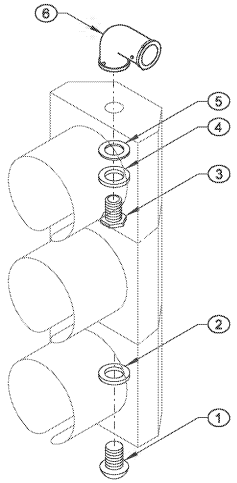

ARM MOUNT
TYPE L

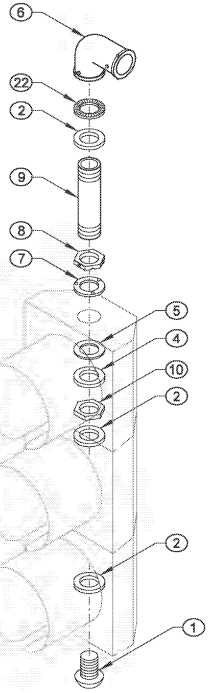

ARM MOUNT
TYPE LE

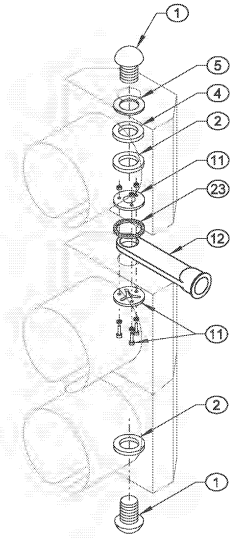

ARM MOUNT
TYPE M

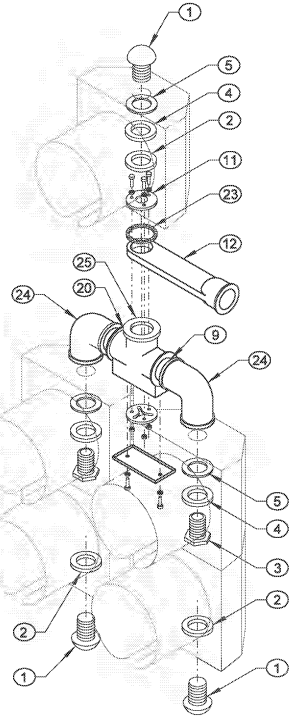

ARM MOUNT
TYPE M-5S
(TYPE M WITH
5-SECTION HEAD)

KEY

1. END CAP
2. 1 1/2" (IN) DIAM. CONDUIT LOCKNUT
3. 1 1/2" (IN) DIAM. CHASE NIPPLE
4. STEEL WASHER
5. NEOPRENE GASKET
6. BRONZE SERRATED ELL FITTING WITH:
   - 3/8" (IN) STAINLESS STEEL THROUGH BOLT AND NUTS
   - THREE STAINLESS STEEL SET SCREWS AT SLIPFITTER CONNECTION
   - THREE ALLEN HEAD STAINLESS STEEL SET SCREWS AT CONDUIT NIPPLE CONNECTION
7. SERRATED RING WITH PINS
8. HEX LOCKNUT WITH:
   - TWO ALLEN HEAD STAINLESS STEEL SET SCREWS
   - PIN RECEPTACLES
9. 1 1/2" (IN) DIAM. CONDUIT NIPPLE
10. 1 1/2" (IN) DIAM. HEX LOCKNUT
11. MOUNTING ASSEMBLY
12. BRONZE ELEVATOR PLUMBIZER WITH 3/8" (IN) STAINLESS STEEL THROUGH BOLT, WASHERS, AND TWO NUTS
13. ALUMINUM ARM WITH SET SCREW
14. SLOTTED TUBE WITH CLOSURE STRIP
15. 2 1/2" (IN) I.D. MIN. TUBE CLAMP
16. INTERNALLY THREADED CLAMP ASSEMBLY WITH:
    - TWO SET SCREWS
    - 1/2" (IN) × 0.045" (IN) STAINLESS STEEL BANDS
    - 7/16" (IN) SCREW BUCKLES WITH SWIVELS, NUTS, AND WASHERS
    - BAND CLIPS WITH ALLEN HEAD STAINLESS STEEL SET SCREWS
17. BRONZE MESSENGER HANGER WITH:
    - 1/2" (IN) DIAM. J-BOLTS
    - CABLE LOCK BAR
    - RIVET
    - COTTER KEY
18. BRONZE INTERNALLY THREADED WIRE ENTRANCE WITH:
    - BUSHING INSERT OR RUBBER GROMMET
    - ALLEN HEAD STAINLESS STEEL SET SCREW
19. BRONZE BALANCE ADJUSTER (WHERE REQUIRED)
20. MULTI-HEAD MOUNTING ASSEMBLY
21. LOWER ARM ASSEMBLY
22. SERRATED RING WITH NO PINS
23. SERRATED WASHER
24. 1 1/2" (IN) DIAM. SERRATED OR FLANGED ELBOW
25. CENTER SUPPORT WITH 1 1/2" (IN) DIAM. HUBS WITH COVER AND GASKET
26. 1 1/2" (IN) DIAM. SERRATED COUPLING
27. 1 1/2" (IN) BREAKAWAY TETHER ASSEMBLY WITH OPTIONAL EXTENDER BAR
28. SERRATED CROSS

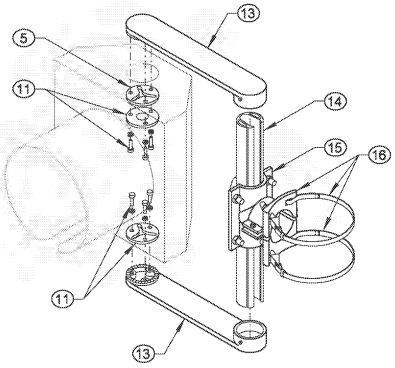

ARM MOUNT
TYPE N

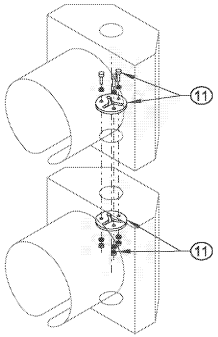

HOUSING FIXTURE
CONNECTION DETAIL

NOTES

1. Type M mounting shall have "O" ring groove and seal on top and bottom of signal attachment.
2. Type M mounting for conventional heads shall have a 2" (in) diameter opening at the signal attachment.
3. Type M mounting for optically programmed heads shall have a 3 1/2" (in) diameter opening at the signal attachment.
4. Type N mounting with optically programmed heads shall be installed with 14" (in) nominal arms.
5. See **Standard Plan J-75.30** for tether wire and backplate requirements.
6. Apply bead of silicone around the perimeter of all top end cap openings prior to installation of the end cap assembly.
7. See **Standard Specification 9-29.16** for backplate requirements. Where required, prismatic sheeting shall be applied in accordance with the manufacturer's recommendations. The application surface of the backplate shall be cleaned, degreased with isopropyl alcohol, and dried prior to application of the sheeting.
8. Drill a 1/4" (in) drain hole in the bottom of each signal assembly. When signal display assembly is mounted horizontally, drill a 1/4" (in) drain hole at the lowest point of each section of the signal assembly.

NOTE: BACKPLATES NOT SHOWN FOR CLARITY

THEODORE JOSEPH BAILEY
STATE OF WASHINGTON
39820
REGISTERED
PROFESSIONAL ENGINEER

Bailey, Ted
Jul 8 2015 3:10 PM

SIGNAL HEAD MOUNTING DETAILS ~ MAST ARM AND SPAN WIRE MOUNTINGS

STANDARD PLAN J-75.20-01

SHEET 1 OF 2 SHEETS

APPROVED FOR PUBLICATION
Carpenter, Jeff
Jul 10 2015 7:18 AM
STATE DESIGN ENGINEER

Washington State Department of Transportation

DRAWN BY: COLBY FLETCHER

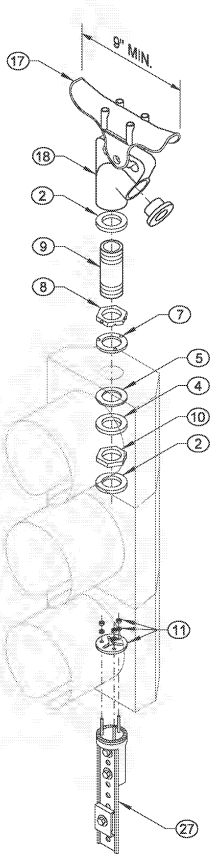

SPAN WIRE
TYPE P (1 HEAD)

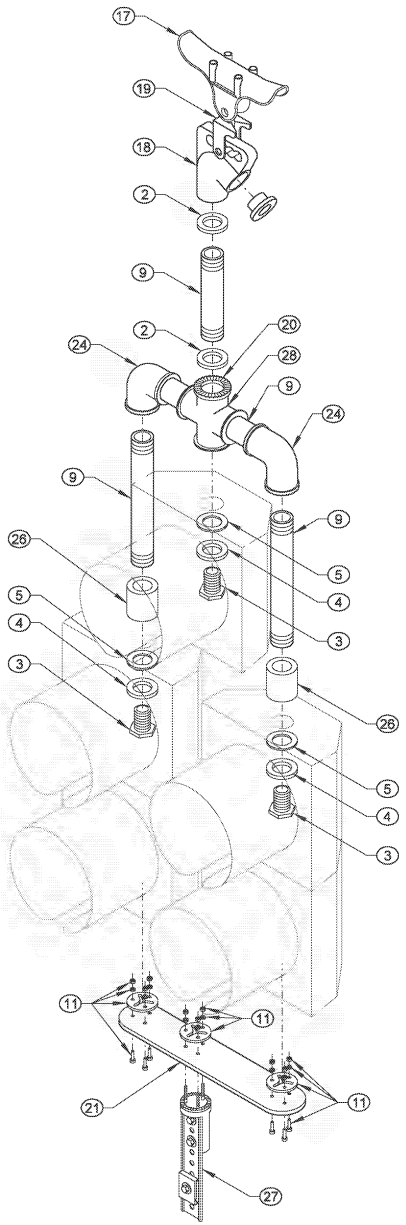

SPAN WIRE
TYPE P-5S
(TYPE P WITH 5-SECTION HEAD)

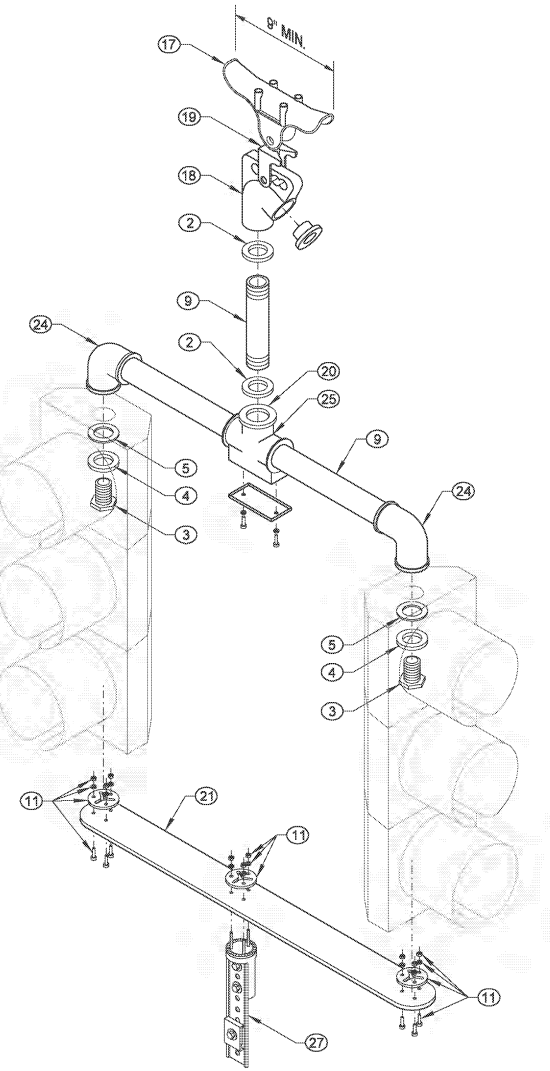

SPAN WIRE
TYPE Q (2 HEADS)
TYPE R (3 HEADS)
TYPE S (4 HEADS)

NOTE: BACKPLATES NOT SHOWN FOR CLARITY

THEODORE JOSEPH BAILEY
STATE OF WASHINGTON
39820
REGISTERED
PROFESSIONAL ENGINEER

Bailey, Ted
Jul 8 2015 3:10 PM

SIGNAL HEAD MOUNTING DETAILS ~ MAST ARM AND SPAN WIRE MOUNTINGS

STANDARD PLAN J-75.20-01

SHEET 2 OF 2 SHEETS

APPROVED FOR PUBLICATION
Carpenter, Jeff
Jul 10 2015 7:18 AM
STATE DESIGN ENGINEER

Washington State Department of Transportation

KEY

1. METAL OR TIMBER POLE
2. 2" (IN) x 3/16" (IN) S.S. TETHER WIRE BAND WITH TWO EACH:
   - 3/8" (IN) - 16 NC x 3/4" (IN) S.S. HEX HEAD BOLT
   - LOCK WASHERS AND NUTS
3. 5/16" (IN) EYE AND EYE TURNBUCKLE
4. 3/8" (IN) MILD STEEL S-HOOK
5. 1/8" (IN) S.S. WIRE ROPE CLAMP (U-BOLT TYPE)
6. 1/8" (IN) S.S. TETHER WIRE
7. 1 1/2" (IN) BREAKAWAY TETHER ASSEMBLY WITH OPTIONAL EXTENDER BAR
8. SIGNAL HEAD
9. 6 x 8.2 LB/FT CHANNEL
10. TWO EACH:
    - 1/2" (IN) - 13 NC x 2 1/2" (IN) S.S. HEX HEAD BOLT
    - LOCK WASHERS (DRILL AND TAP POLE TO ACCEPT)
11. WIREWAY (SEE DETAIL THIS SHEET)
12. METAL POLE
13. CABINET
14. END BUSHING
15. SEALING LOCKNUT
16. WIRE ROPE THIMBLE
17. CABINET WALL DRILLED 1/8" (IN) OVERSIZE OF NIPPLE
18. CHANNEL DRILLED 1/8" (IN) OVERSIZE OF NIPPLE
19. 2" (IN) DIAM. x 4" (IN) NIPPLE (UNLESS OTHERWISE NOTED)
20. POLE WALL DRILLED SO BUSHING WILL PASS THROUGH ~ HOLE SIZE TO BE A MAXIMUM OF 1/8" (IN) LARGER DIAMETER THAN THE CONDUIT NIPPLE END BUSHING ~ INSTALL NIPPLE IN POLE WITH BUSHING INSTALLED
21. 6063 EXTRUDED ALUMINUM FRAME BLANK OUT SIGN WITH VISOR
22. LIGHT EMITTING DIODE (LED) BLANK OUT SIGN
23. TRANSLUCENT PLEXIGLASS SIGN FACE ~ SEE CONTRACT FOR LEGEND
24. 1 1/2" (IN) CAST IRON HUB WITH 5/16" (IN) PIN AND COTTER KEY
25. SPAN WIRE MOUNT ASSEMBLY WITH:
    - 1 1/2" (IN) DIAM. CONDUIT LOCKNUT
    - 1 1/2" (IN) DIAM. CONDUIT NIPPLE
    - BRONZE MESSENGER HANGER WITH:
      - ~ 1/2" (IN) DIAM. J-BOLTS
      - ~ CABLE LOCK BAR
      - ~ RIVET
      - ~ COTTER KEY
    - BRONZE INTERNALLY THREADED WIRE ENTRANCE WITH:
      - ~ BUSHING INSERT
      - ~ ALLEN HEAD S.S. SET SCREW
26. ARM MOUNT ASSEMBLY WITH:
    - 1 1/2" (IN) DIAM. CONDUIT LOCKNUT
    - BRONZE SERRATED ELL FITTING WITH:
      - ~ 3/8" (IN) S.S. THROUGH BOLT AND NUTS
      - ~ THREE S.S. SET SCREWS AT SLIPFITTER CONNECTION
      - ~ THREE ALLEN HEAD S.S. SET SCREWS AT CONDUIT NIPPLE CONNECTION
    - 1 1/2" (IN) DIAM. CONDUIT NIPPLE
    - SERRATED RING WITH NO PINS
27. SIDE POLE MOUNT ASSEMBLY WITH:
    - 1 1/2" (IN) DIAM. CONDUIT LOCKNUT
    - 1 1/2" (IN) DIAM. CONDUIT NIPPLE
    - SERRATED RING WITH NO PINS
28. 1 1/2" (IN) SERRATED ELBOW
29. 1 1/2" (IN) DIAM. NIPPLE (DRILL AND TAP POLE TO ACCEPT)
30. TWO EACH:
    - 1/2" (IN) - 20 NF x 3/4" (IN) S.S. HEX HEAD BOLT
    - LOCK WASHERS (DRILL AND TAP POLE TO ACCEPT)
31. MOUNTING BRACKET
32. LOCKNUT

LEGEND:
S.S. = STAINLESS STEEL

DRAWN BY: COLBY FLETCHER

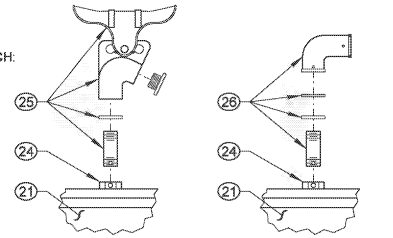

SPAN WIRE MOUNT **MAST ARM MOUNT**

INTERNALLY ILLUMINATED SIGN MOUNTING DETAILS

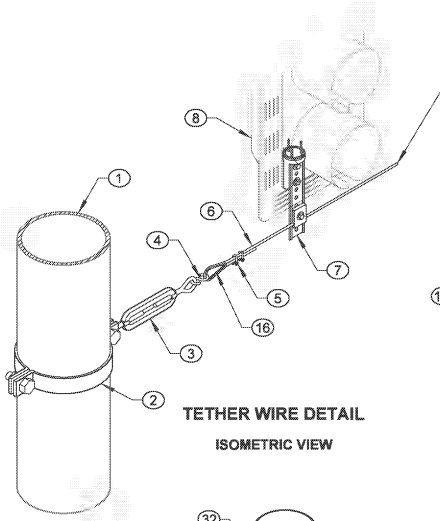

TETHER WIRE DETAIL

ISOMETRIC VIEW

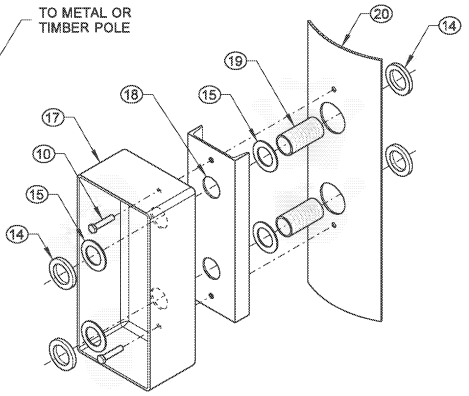

WIREWAY DETAIL

ISOMETRIC VIEW

NOTES

1. Backplates shall be installed with stainless steel screws and stainless steel washers.
2. Silicone top of channel and around nipples at openings into pole.
3. Breakaway tether extender bar shall extend one hole and one flat past tether wire.

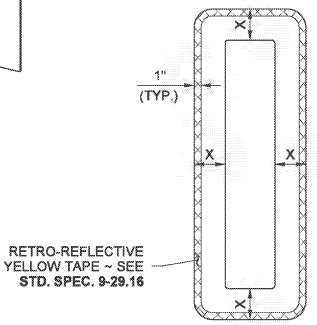

BACKPLATE DETAIL

8" (IN) OR 12" (IN) SECTIONS

8" (IN) SECTION X = 5 1/2" (IN) ± 1/2" (IN)
12" (IN) SECTION X = 5 1/2" (IN) ± 1/2" (IN)

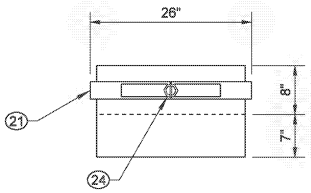

PLAN VIEW

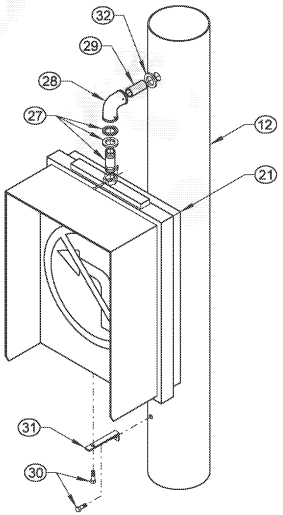

SIDE POLE MOUNT

ISOMETRIC VIEW

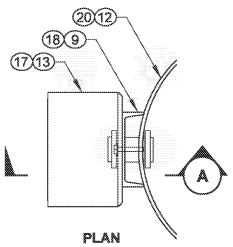

PLAN

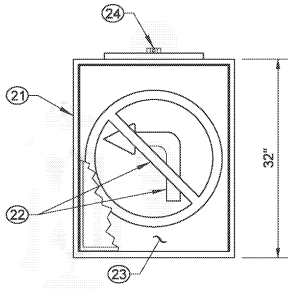

ELEVATION VIEW

INTERNALLY ILLUMINATED SIGN MOUNTING DETAILS

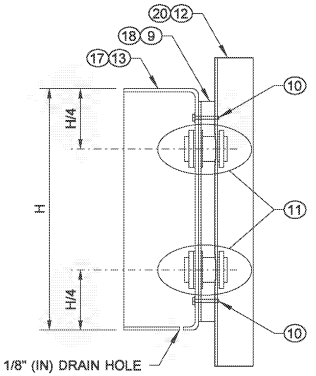

SECTION (A)

ELEVATION VIEW

CABINET MOUNTING DETAILS

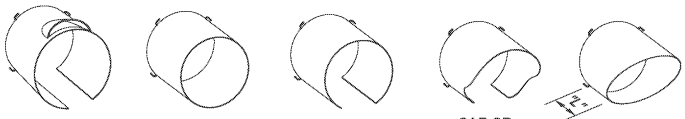

VISORS

PERSPECTIVE VIEWS

Bailey, Ted
Jul 8 2015 3:12 PM

MISCELLANEOUS SIGNAL DETAILS

STANDARD PLAN J-75.30-02

SHEET 1 OF 1 SHEET

APPROVED FOR PUBLICATION
Carpenter, Jeff
Jul 10 2015 7:17 AM
STATE DESIGN ENGINEER

Washington State Department of Transportation

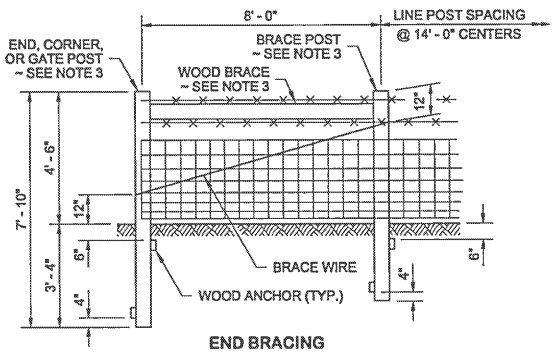

END BRACING
(WIRE FENCE TYPE 1 SHOWN)

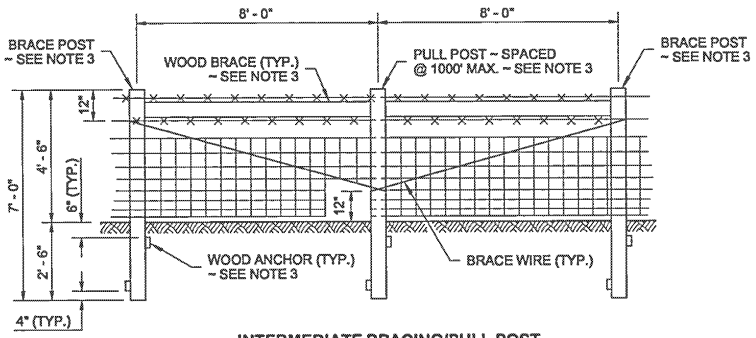

INTERMEDIATE BRACING/PULL POST
(WIRE FENCE TYPE 1 SHOWN)

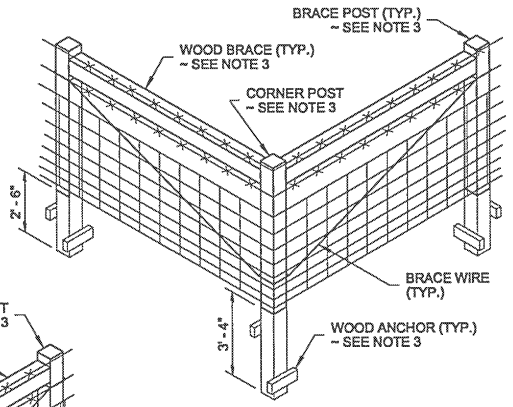

CORNER BRACING
(WIRE FENCE TYPE 1 SHOWN)

DRAWN BY: LISA CYFORD

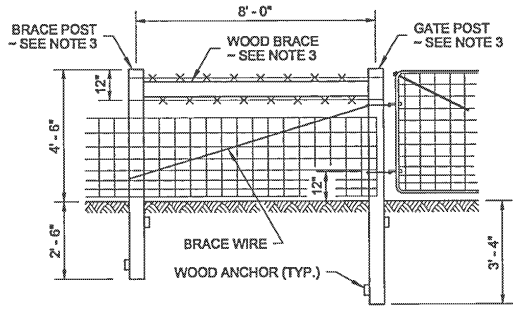

GATE BRACING
(WIRE FENCE TYPE 1 SHOWN)

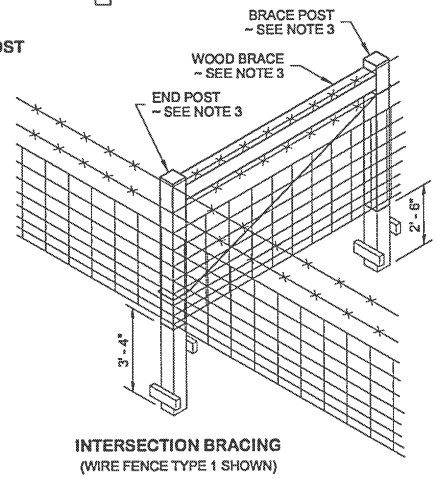

INTERSECTION BRACING
(WIRE FENCE TYPE 1 SHOWN)

WOOD POSTS AND BRACES

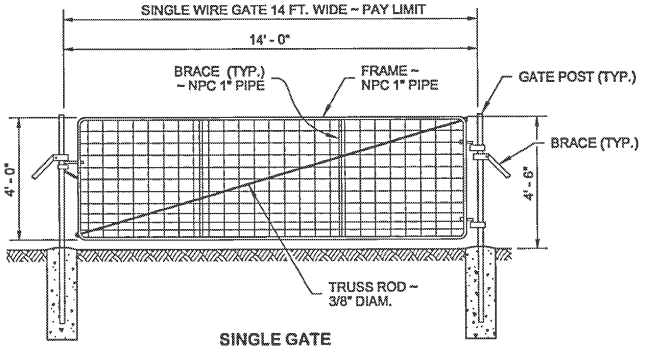

SINGLE GATE
(STEEL POSTS SHOWN)

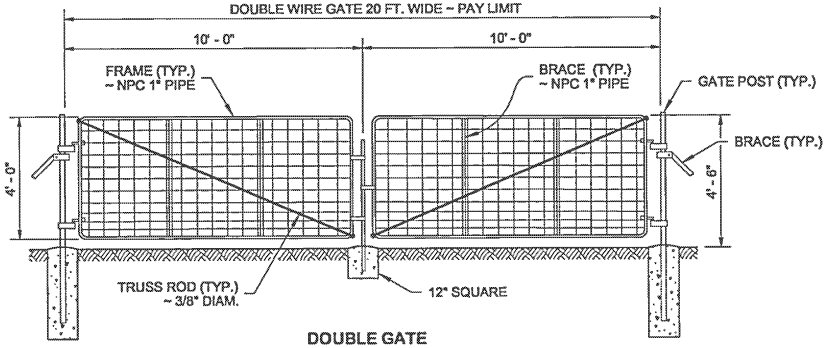

DOUBLE GATE
(STEEL POSTS SHOWN)

GATES

EDWARD PATRICK BARRY
STATE OF WASHINGTON
34363
REGISTERED
PROFESSIONAL ENGINEER

6-19-12

WIRE FENCE TYPES 1 & 2 AND WIRE GATES

STANDARD PLAN L-10.10-02

SHEET 2 OF 2 SHEETS

APPROVED FOR PUBLICATION

STATE DESIGN ENGINEER — DATE 6/21/12

Washington State Department of Transportation

DRAWN BY: COLBY FLETCHER

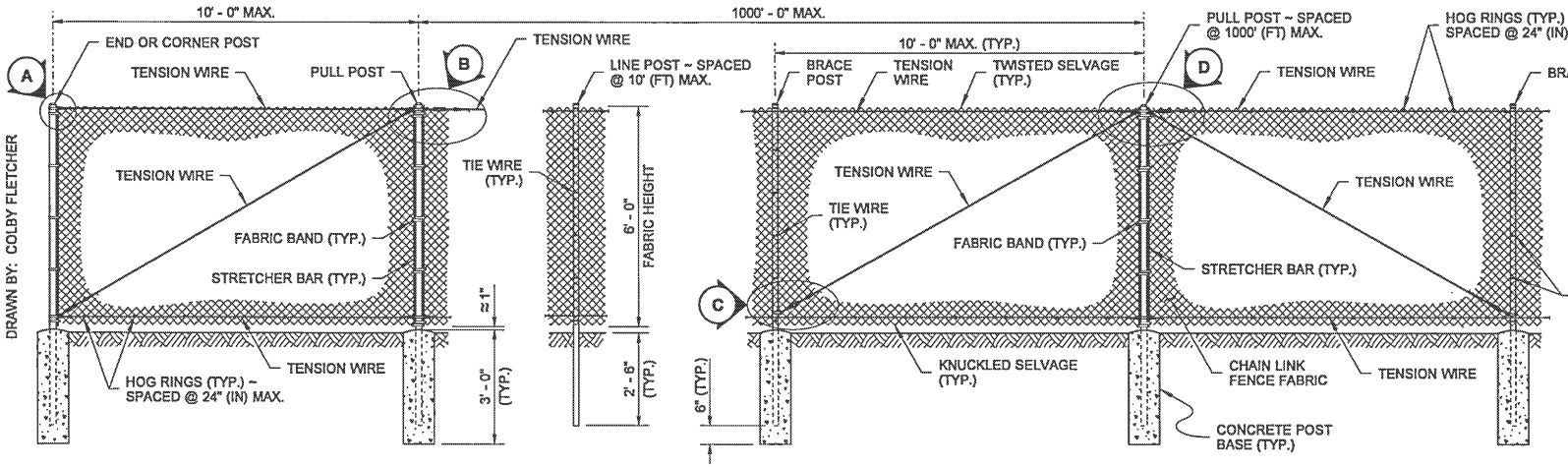

TYPE 3

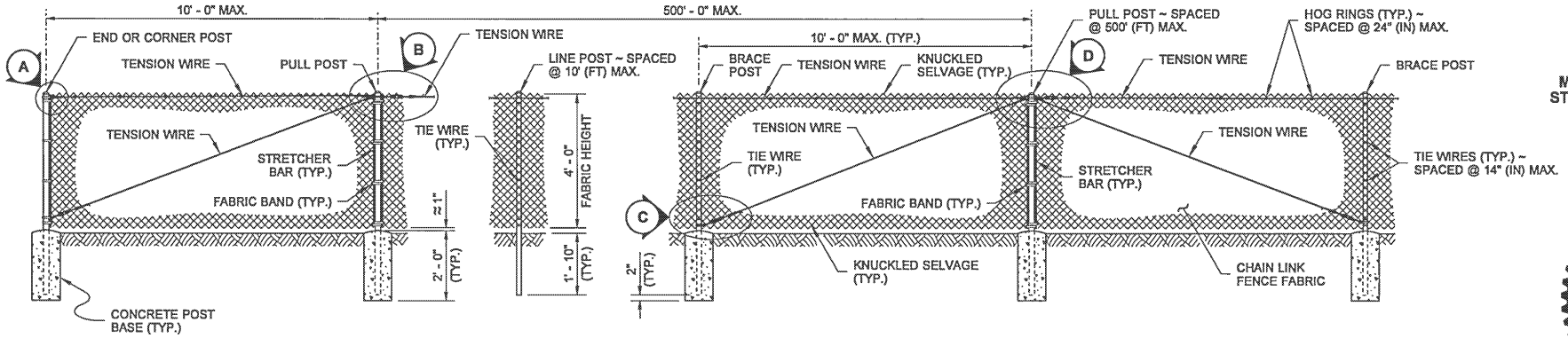

TYPE 4

NOTES

1. All concrete post bases shall be 10" (in) minimum diameter.
2. Along the top and bottom, using Hog Rings, fasten the Chain Link Fence Fabric to the Tension Wire within the limits of the first full fabric weave.
3. Details are illustrative and shall not limit hardware design or post selection of any particular fence type.
4. Fencing shall be used for security and boundary delineation only.

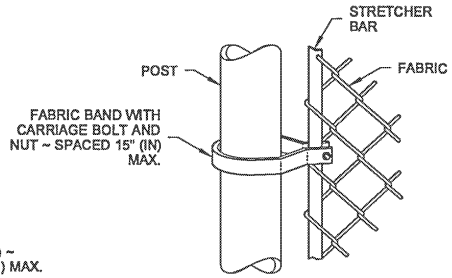

METHOD OF FASTENING STRETCHER BAR TO POST

POST AND RAIL SPECIFICATIONS			
POST	PIPE	ROLL FORMED	
	NOM. SIZE (SCH. 40) I.D.	SECTION	WEIGHT (lb/ft)
END, CORNER, OR PULL POST	2 1/2" DIAM.	(Y)	5.10
LINE OR BRACE POST	2" DIAM.	(Z)	1.85

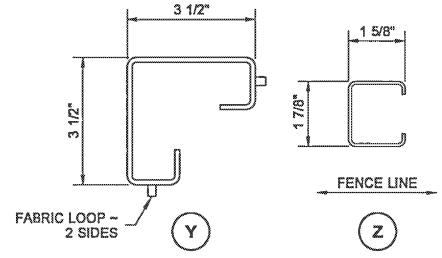

EDWARD PATRICK BARRY
STATE OF WASHINGTON
34363
REGISTERED PROFESSIONAL ENGINEER

Barry, Ed
Jul 14 2015 11:14 AM

CHAIN LINK FENCE TYPES 3 AND 4

STANDARD PLAN L-20.10-03

SHEET 1 OF 2 SHEETS

APPROVED FOR PUBLICATION
Carpenter, Jeff
Jul 14 2015 11:24 AM
STATE DESIGN ENGINEER
Washington State Department of Transportation

DRAWN BY: COLBY FLETCHER

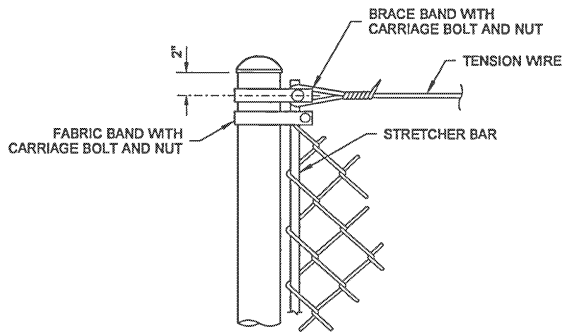

END OR CORNER POST

DETAIL (A)

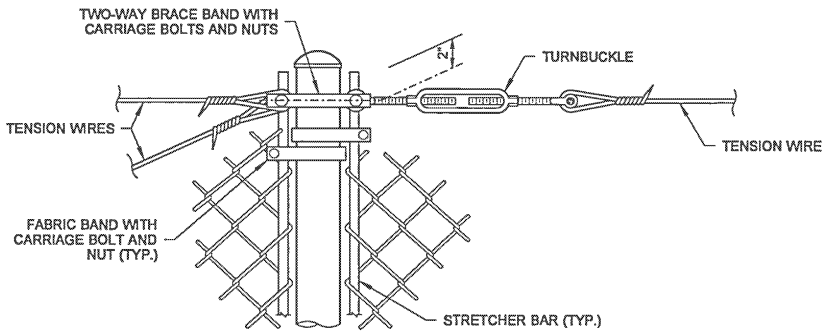

PULL POST (AT END OR CORNER)

DETAIL (B)

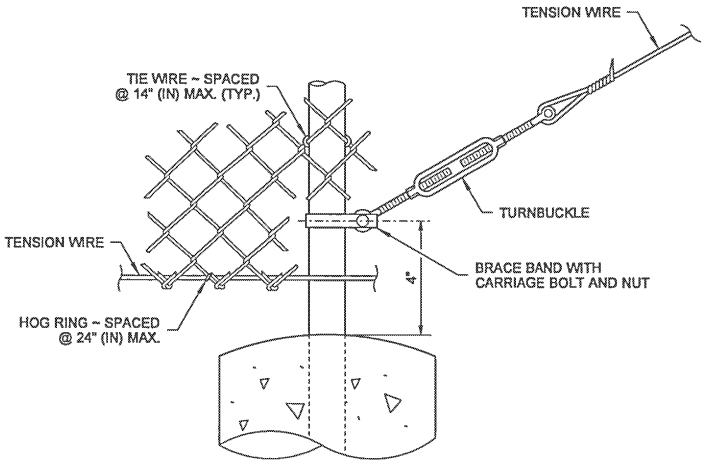

BRACE POST

DETAIL (C)

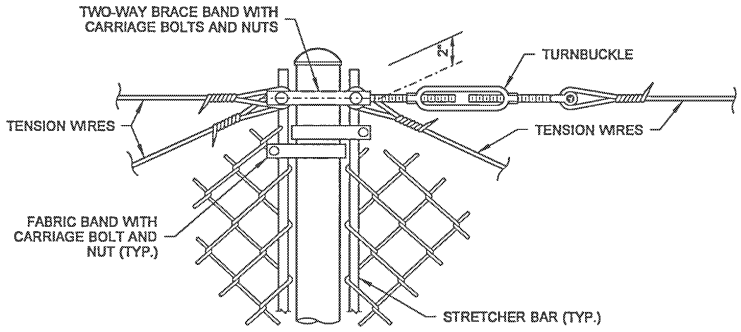

PULL POST (WITHIN RUN)

DETAIL (D)

EDWARD PATRICK BARRY
STATE OF WASHINGTON
34363
REGISTERED
PROFESSIONAL ENGINEER

Barry, Ed
Jul 14 2015 11:14 AM

CHAIN LINK FENCE TYPES 3 AND 4

STANDARD PLAN L-20.10-03

SHEET 2 OF 2 SHEETS

APPROVED FOR PUBLICATION
Carpenter, Jeff
Jul 14 2015 11:25 AM
STATE DESIGN ENGINEER

Washington State Department of Transportation

NOTES

1. Materials shall meet the requirements of **Standard Specification 9-16**.

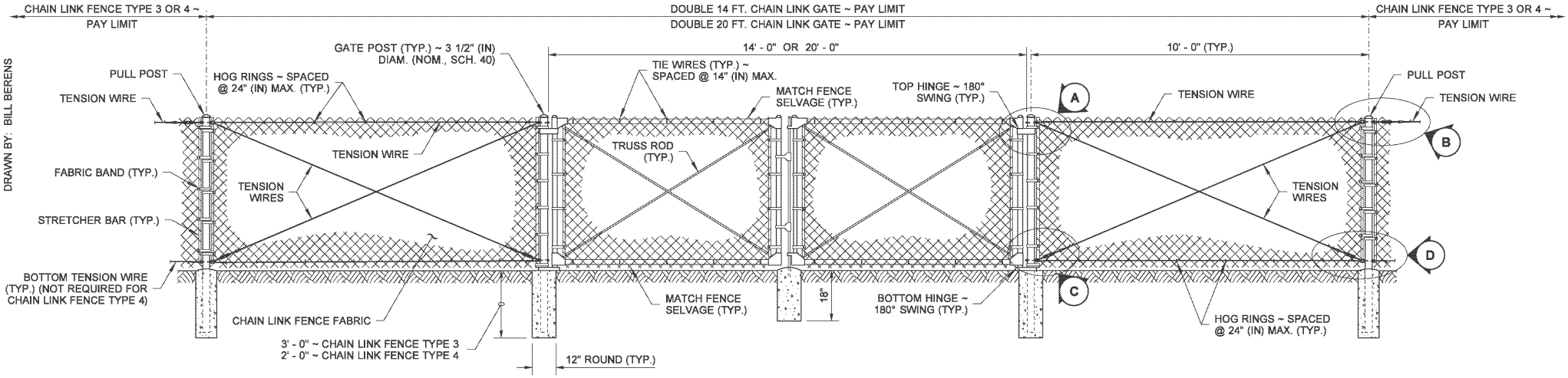

DOUBLE GATE

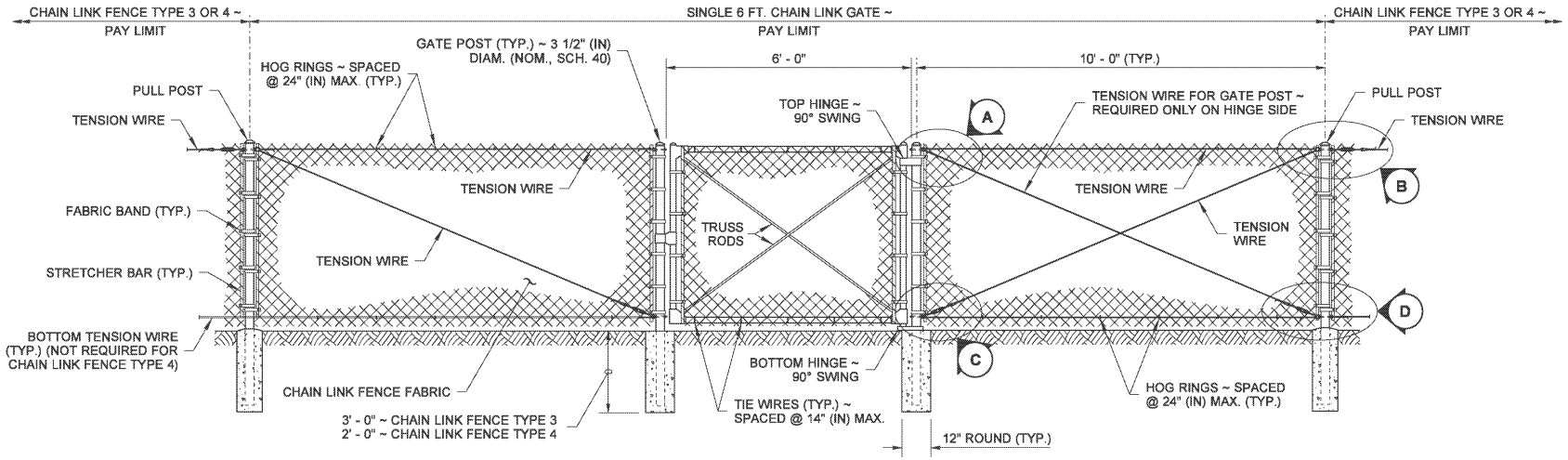

SINGLE GATE

EDWARD PATRICK BARRY
STATE OF WASHINGTON
34363
REGISTERED PROFESSIONAL ENGINEER

Barry, Ed
May 6 2014 3:57 PM

CHAIN LINK GATE

STANDARD PLAN L-30.10-02

SHEET 1 OF 2 SHEETS

APPROVED FOR PUBLICATION
Bakotich, Pasco
Jun 11 2014 1:40 PM
STATE DESIGN ENGINEER
Washington State Department of Transportation

DRAWN BY: COLBY FLETCHER

NOTE

1. Install a minimum of 3 sets of diagonals/chevrons in the gore area. A 50' (ft) spacing is standard; however, for gore areas shorter than 150' (ft), use a 25' (ft) spacing, and for gore areas greater than 400' (ft), a spacing of 100' (ft) may be used.

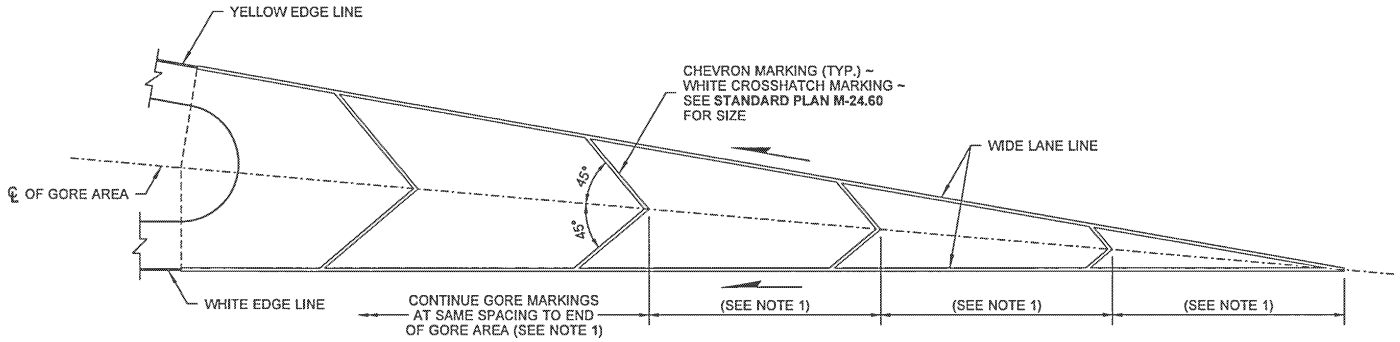

GORE AREA MARKINGS WITH CHEVRONS

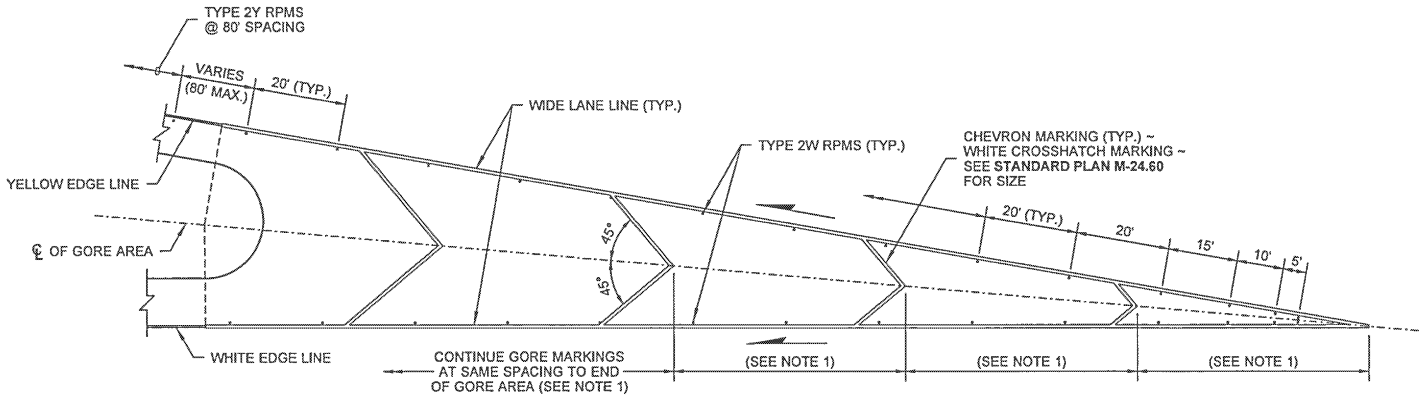

GORE AREA SUPPLEMENT WITH TYPE 2 RAISED PAVEMENT MARKERS

JOHN C. NISBET
STATE OF WASHINGTON
29115
REGISTERED
PROFESSIONAL ENGINEER

Nisbet, John
Jul 7 2015 3:51 PM
cosign

OFF-RAMP GORE AREA MARKING LAYOUTS

STANDARD PLAN M-2.20-03

SHEET 1 OF 1 SHEET

APPROVED FOR PUBLICATION
Carpenter, Jeff
Jul 10 2015 7:16 AM
cosign
STATE DESIGN ENGINEER
Washington State Department of Transportation

DRAWN BY: COLBY FLETCHER

NOTE

1. Install a minimum of 3 sets of diagonals/chevrons in the gore area. A 50' (ft) spacing is standard; however, for gore areas shorter than 150' (ft), use a 25' (ft) spacing, and for gore areas greater than 400' (ft), a spacing of 100' (ft) may be used.

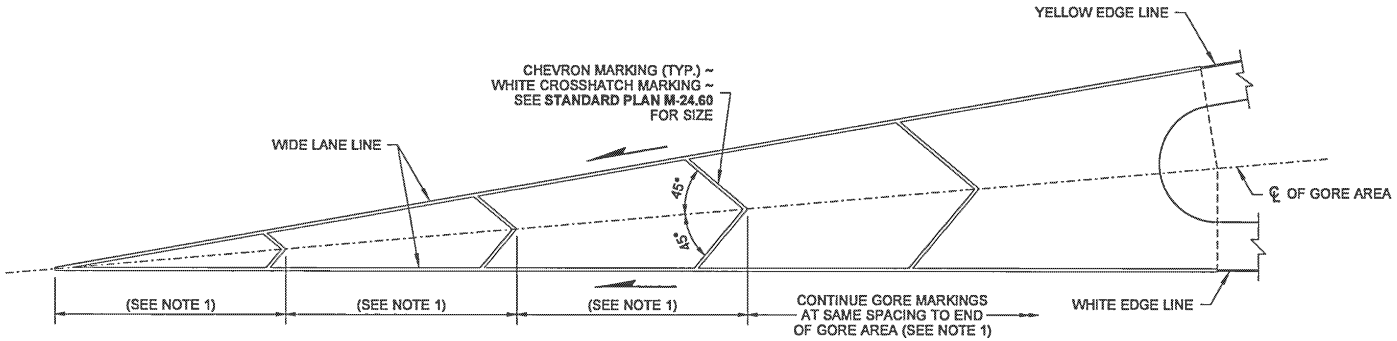

GORE AREA MARKINGS WITH CHEVRONS

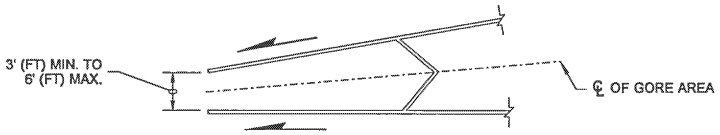

TRUNCATED GORE ALTERNATIVE

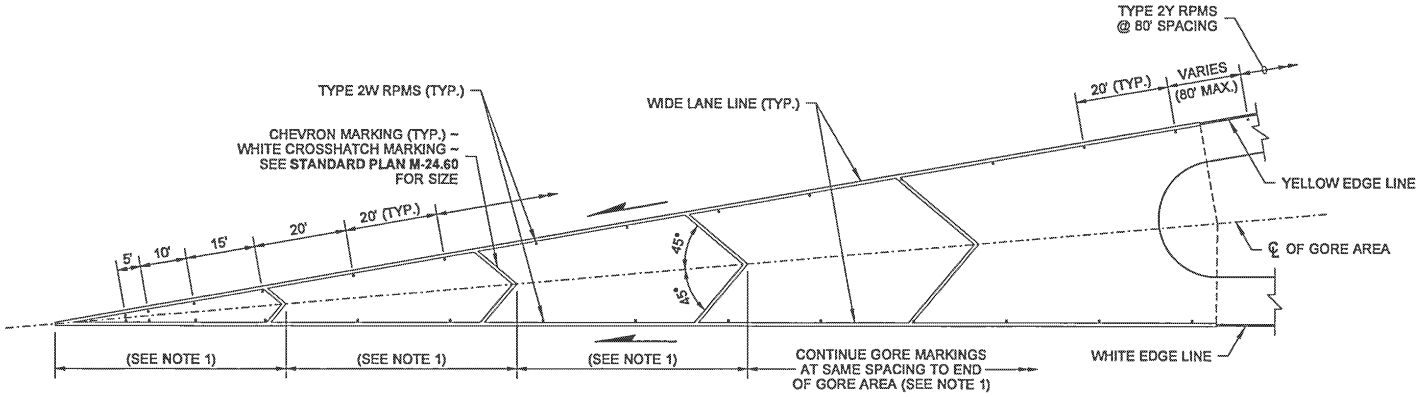

GORE AREA SUPPLEMENT WITH TYPE 2 RAISED PAVEMENT MARKERS

JOHN C. NISBET
STATE OF WASHINGTON
29115
REGISTERED
PROFESSIONAL ENGINEER

Nisbet, John
Jul 7 2015 3:52 PM
cosign

ON-RAMP GORE AREA MARKING LAYOUTS

STANDARD PLAN M-2.21-00

SHEET 1 OF 1 SHEET

APPROVED FOR PUBLICATION
Carpenter, Jeff
Jul 10 2015 7:14 AM
STATE DESIGN ENGINEER
cosign

Washington State Department of Transportation

This page left blank intentionally.

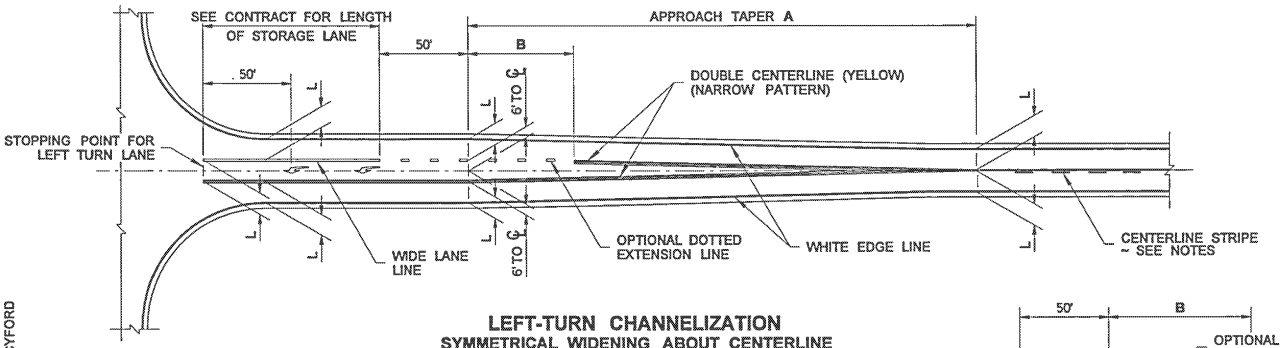

LEFT-TURN CHANNELIZATION
SYMMETRICAL WIDENING ABOUT CENTERLINE

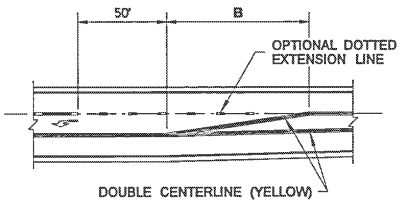

OPTIONAL MARKED DECELERATION TAPER

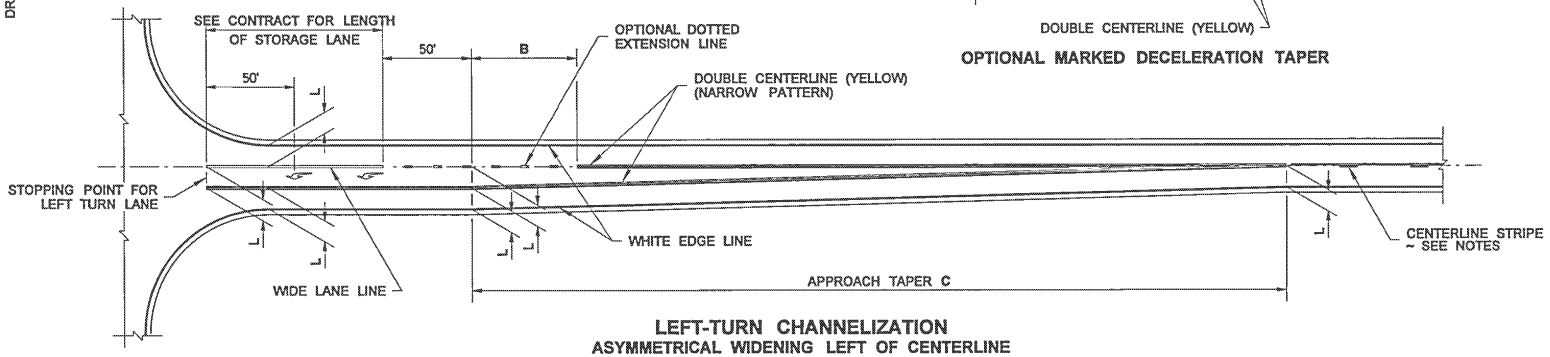

LEFT-TURN CHANNELIZATION
ASYMMETRICAL WIDENING LEFT OF CENTERLINE

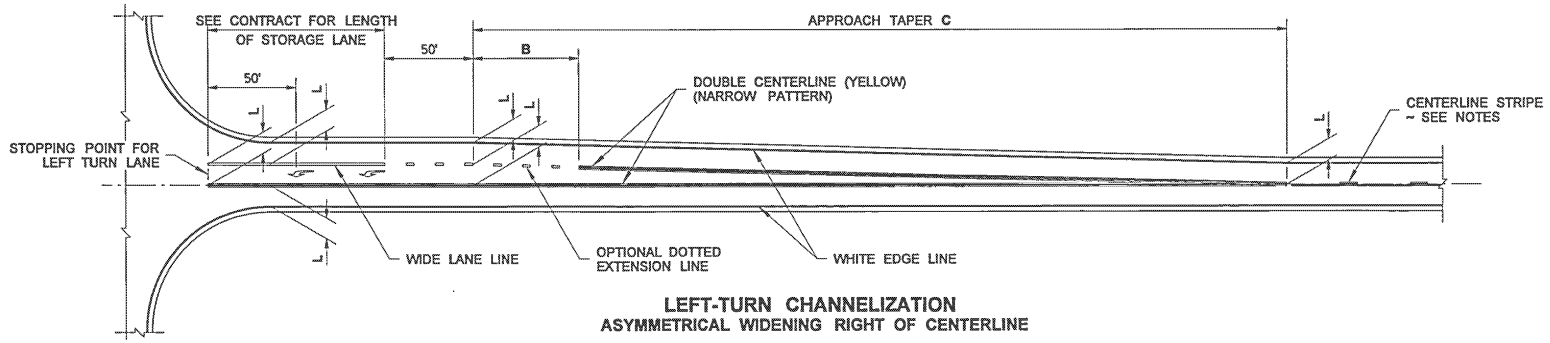

LEFT-TURN CHANNELIZATION
ASYMMETRICAL WIDENING RIGHT OF CENTERLINE

DRAWN BY: LISA CYFORD

NOTES

1. The channelization shown on this plan assumes optimal roadway geometric design. The dimensions may vary to fit existing conditions. See Contract.
2. The channelization shown on this plan is for a two-lane highway. The channelization plan may be used on four-lane undivided highways, with the appropriate considerations.
3. Centerline striping on the approach to raised channelization shall be No Pass in accordance with MUTCD figure 3B-15. Centerline striping on the departure from raised channelization shall be determined by an engineering study.
4. Centerline striping on the approach to and departure from painted channelization shall be determined by an engineering study.
5. Centerline striping on four-lane undivided highways shall be a double centerline.
6. The two Type 2L (SL) Traffic Arrows shown in the left-turn storage lane are optional, but recommended. Arrows may be added for longer storage lanes or deleted for shorter storage lanes. See Contract Plans.

LEGEND

L = 12' Typical Lane Width. See Contract for specified lane widths.

Type 2L (SL) Traffic Arrow

POSTED SPEED	APPROACH TAPER A	DIMENSION B	APPROACH TAPER C
60 MPH	360'	60'	720'
55 MPH	330'	55'	660'
50 MPH	300'	50'	600'
45 MPH	270'	45'	540'
40 MPH	240'	40'	480'
35 MPH	210'	35'	420'
30 MPH	180'	30'	360'
25 MPH	150'	25'	300'
20 MPH	120'	20'	240'

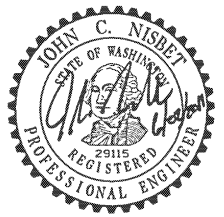

LEFT-TURN CHANNELIZATION

STANDARD PLAN M-3.10-03

SHEET 1 OF 1 SHEET

APPROVED FOR PUBLICATION

STATE DESIGN ENGINEER — DATE 6/3/11

Washington State Department of Transportation

DRAWN BY: LISA CYFORD

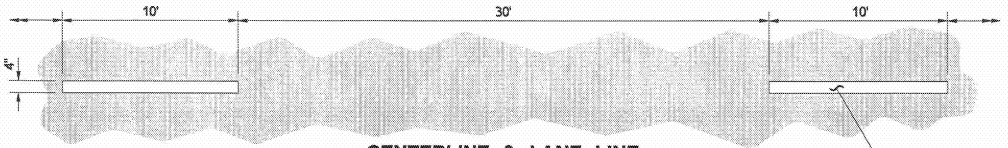

CENTERLINE & LANE LINE

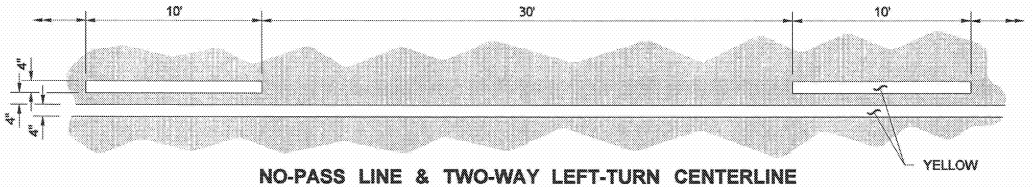

NO-PASS LINE & TWO-WAY LEFT-TURN CENTERLINE

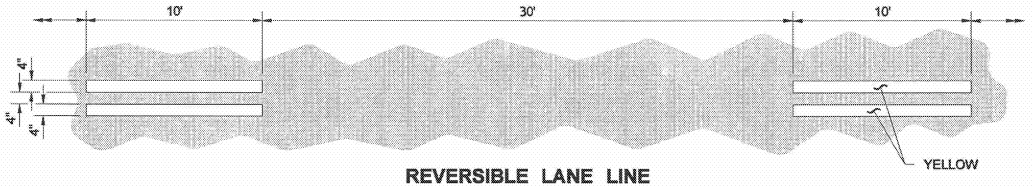

REVERSIBLE LANE LINE

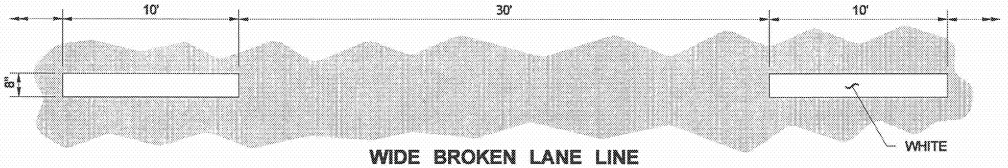

WIDE BROKEN LANE LINE

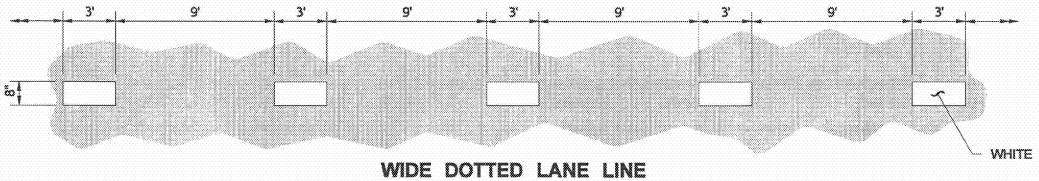

WIDE DOTTED LANE LINE

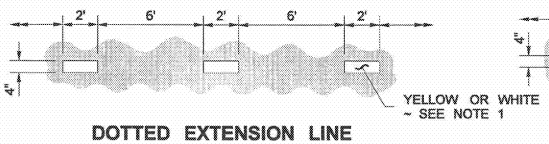

DOTTED EXTENSION LINE

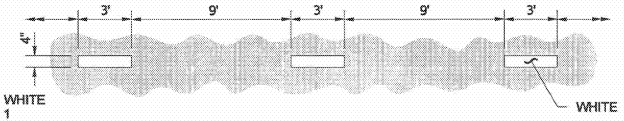

DOTTED LANE LINE

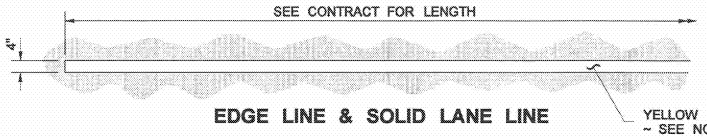

EDGE LINE & SOLID LANE LINE

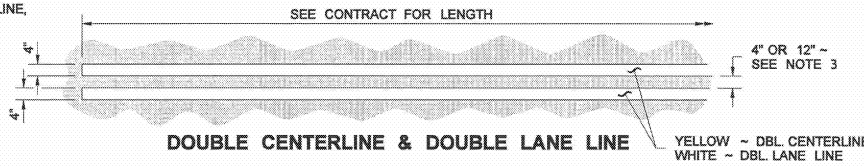

DOUBLE CENTERLINE & DOUBLE LANE LINE

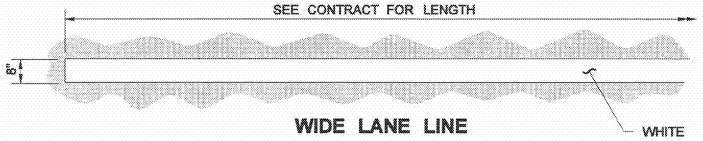

WIDE LANE LINE

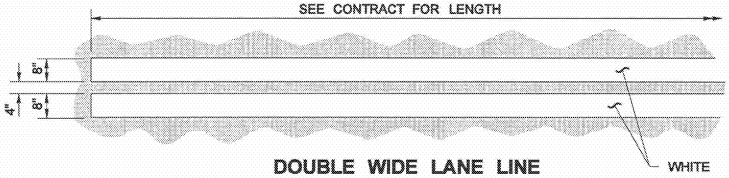

DOUBLE WIDE LANE LINE

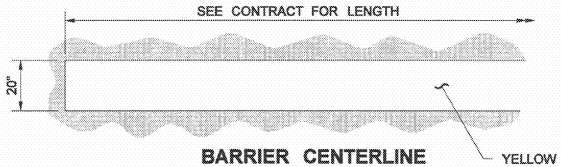

BARRIER CENTERLINE

NOTES

1. Dotted Extension Line shall be the same color as the line it is extending.
2. Edge Line shall be white on the right edge of traveled way, and yellow on the left edge of traveled way (on one-way roadways). Solid Lane Line shall be white.
3. The distance between the lines of the Double Centerline shall be 12" everywhere, except 4" for left-turn channelization and narrow roadways with lane widths of 10 feet or less. Local Agencies (on non-state routes) may specify a 4" distance for all locations.

   The distance between the lines of the Double Lane Line shall be 4".

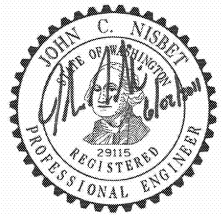

LONGITUDINAL MARKING PATTERNS

STANDARD PLAN M-20.10-02

SHEET 1 OF 1 SHEET

APPROVED FOR PUBLICATION

STATE DESIGN ENGINEER — DATE 6/3/11

Washington State Department of Transportation

GENERAL NOTE

See **Standard Plan M-20.10** for pattern and color requirements.

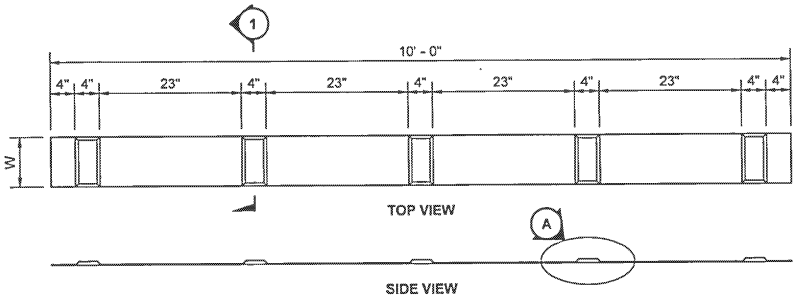

PROFILED PLASTIC (BROKEN LINE) FOR:
- CENTERLINE & LANE LINE ~ W = 4"
- NO-PASS LINE & TWO-WAY LEFT-TURN CENTERLINE~ W = 4"
- REVERSIBLE LANE LINE ~ W = 4"
- WIDE BROKEN LANE LINE ~ W = 8"

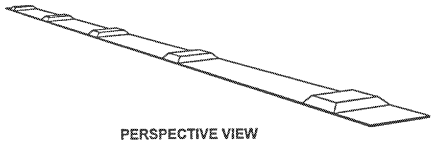

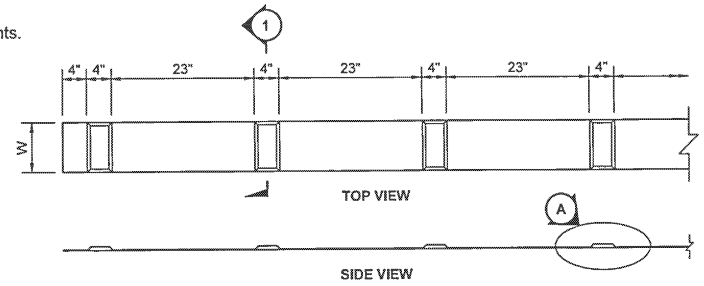

PROFILED PLASTIC (SOLID LINE) FOR:
- NO-PASS LINE ~ W = 4"
- TWO-WAY LEFT-TURN CENTERLINE ~ W = 4"
- DOUBLE CENTERLINE & DOUBLE LANE LINE ~ W = 4"
- EDGE LINE & SOLID LANE LINE ~ W = 4"
- WIDE LANE LINE & WIDE LINE ~ W = 8"
- DOUBLE WIDE LANE LINE ~ W = 8"
- BARRIER CENTERLINE ~ W = 20"

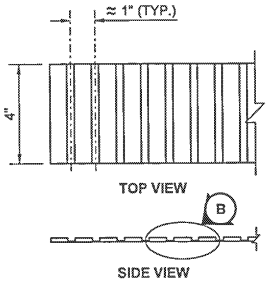

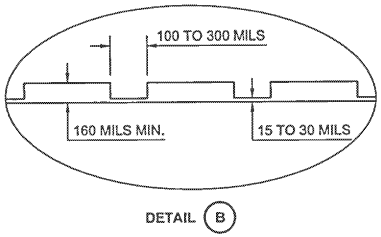

EMBOSSED PLASTIC (SOLID OR BROKEN LINE) FOR:
- CENTERLINE & LANE LINE
- NO-PASS LINE & TWO-WAY LEFT-TURN CENTERLINE
- REVERSIBLE LANE LINE
- DOUBLE CENTERLINE & DOUBLE LANE LINE
- EDGE LINE & SOLID LANE LINE

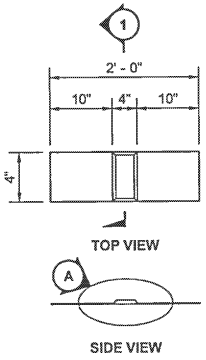

DOTTED EXTENSION LINE

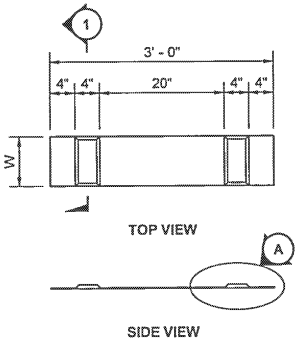

DOTTED LANE LINE ~ W = 4"
WIDE DOTTED LANE LINE ~ W = 8"

PROFILED PLASTIC (BROKEN LINE)

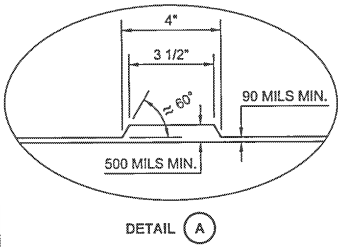

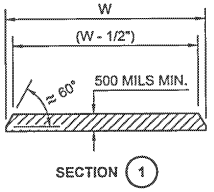

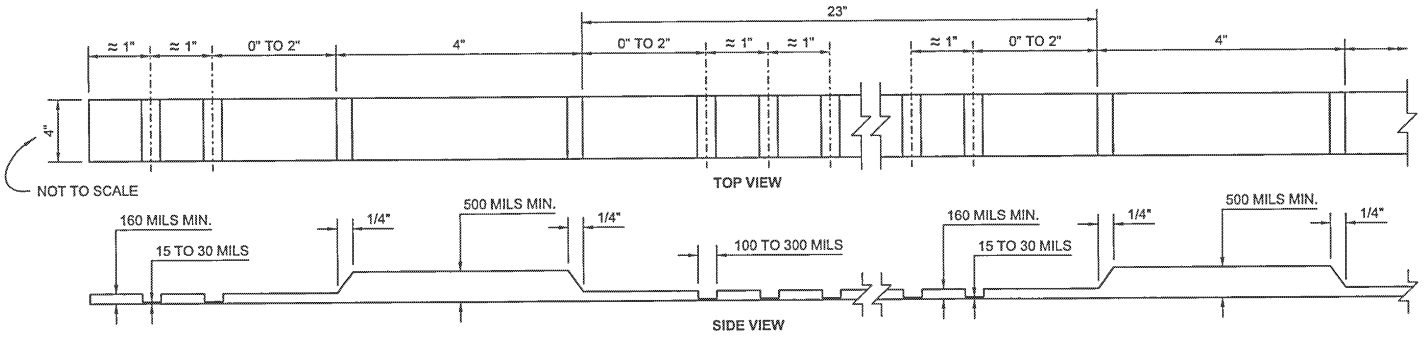

PROFILED EMBOSSED PLASTIC (SOLID OR BROKEN LINE) FOR:
- CENTERLINE & LANE LINE
- NO-PASS LINE
- TWO-WAY LEFT-TURN CENTERLINE
- REVERSIBLE LANE LINE
- DOUBLE CENTERLINE & DOUBLE LANE LINE
- EDGE LINE & SOLID LANE LINE

DRAWN BY: COLBY FLETCHER

BRIAN J. WALSH
STATE OF WASHINGTON
36103
REGISTERED
PROFESSIONAL ENGINEER

Walsh, Brian
Apr 16 2015 2:27 PM

PROFILED AND EMBOSSED PLASTIC LINES

STANDARD PLAN M-20.20-02

SHEET 1 OF 1 SHEET

APPROVED FOR PUBLICATION
Apr 20 2015 10:07 AM
STATE DESIGN ENGINEER
Washington State Department of Transportation

This page left blank intentionally.

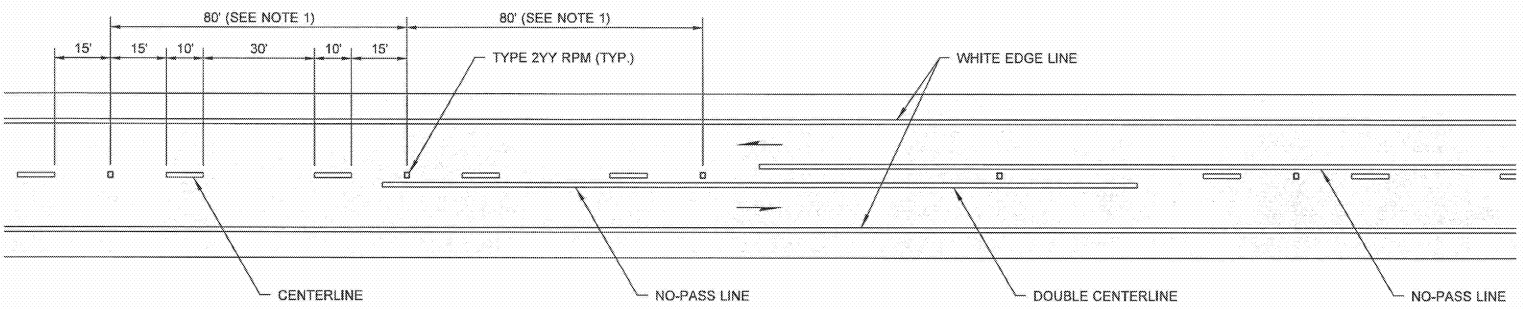

TWO-LANE TWO-WAY TRAFFIC

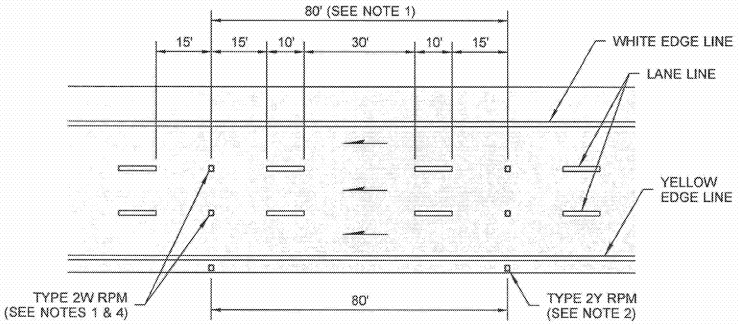

MULTILANE ONE-WAY TRAFFIC

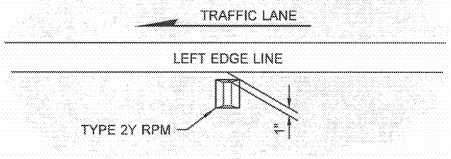

LEFT EDGE OF LANE PLACEMENT DETAIL
(SEE NOTE 2)

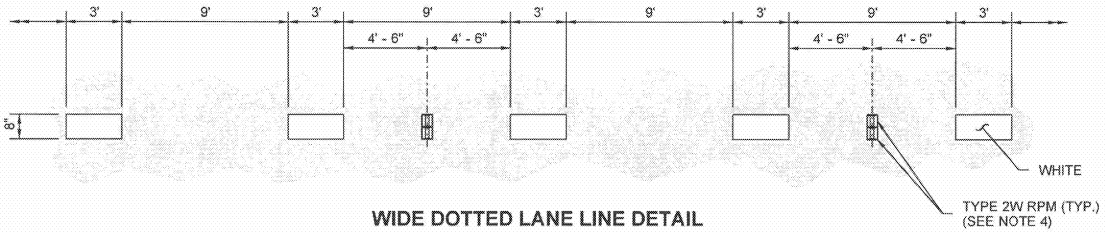

WIDE DOTTED LANE LINE DETAIL
(SEE NOTE 5)

NOTES

1. Raised Pavement Markers Types 2YY and 2W shall be spaced at 80' (ft) intervals on tangents and on horizontal curves with a radius of 1500' (ft) or more, and at 40' (ft) intervals on horizontal curves having radii of less than 1500' (ft). Center the RPMs in the gaps between the pavement marking lines.
2. Type 2Y RPMs, when specified, shall be placed outside the left Edge Line at 80' (ft) intervals. See "LEFT EDGE OF LANE PLACEMENT DETAIL."
3. Recessed pavement markers, when specified, shall be installed at the locations shown for Type 2W RPMs on multilane one-way roadways, and Type 2YY RPMs on two-lane two-way roadways.
4. The Type 2W RPMs placed on multilane one-way roadways and all RPMs set in recesses shall have an abrasion-resistant coating.
5. Do not recess side-to-side RPMs on Wide Dotted Lane Lines.

TYPE 2 RPM RAISED FACE COLORS	
TYPE 2YY	YELLOW AND YELLOW
TYPE 2W	WHITE ~ ONE SIDE ONLY
TYPE 2Y	YELLOW ~ ONE SIDE ONLY

DRAWN BY: COLBY FLETCHER

BRIAN J. WALSH
STATE OF WASHINGTON
36103
REGISTERED
PROFESSIONAL ENGINEER

Walsh, Brian
Apr 16 2015 2:25 PM

LONGITUDINAL MARKING SUPPLEMENT WITH RAISED PAVEMENT MARKERS
STANDARD PLAN M-20.30-03

SHEET 1 OF 2 SHEETS

APPROVED FOR PUBLICATION
Bakotich, Pasco
Apr 20 2015 10:08 AM
STATE DESIGN ENGINEER
Washington State Department of Transportation

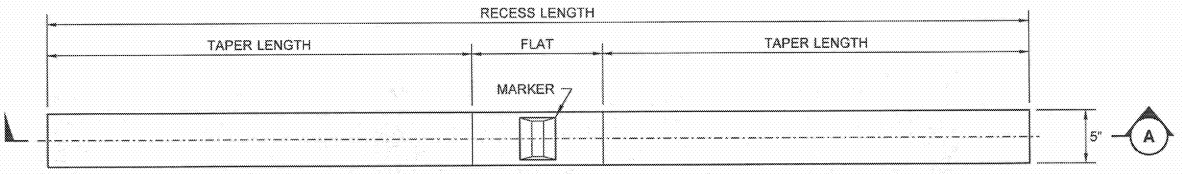

PLAN VIEW

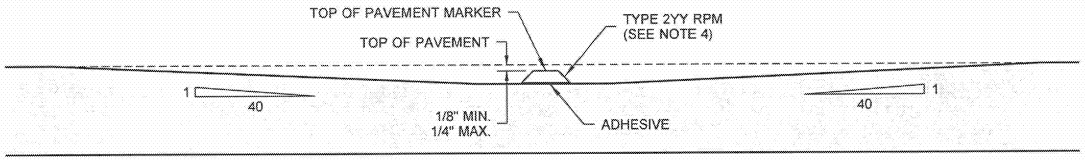

SECTION (A)

TWO-WAY ROADWAY RECESSED PAVEMENT MARKER DETAILS

FOR USE WHERE SPECIFIED IN CONTRACT

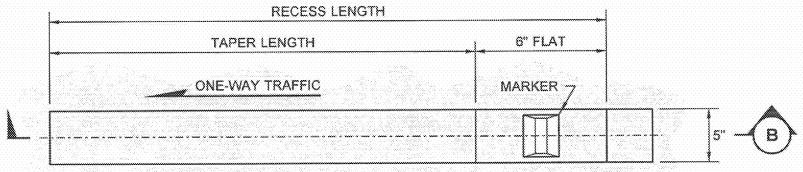

PLAN VIEW

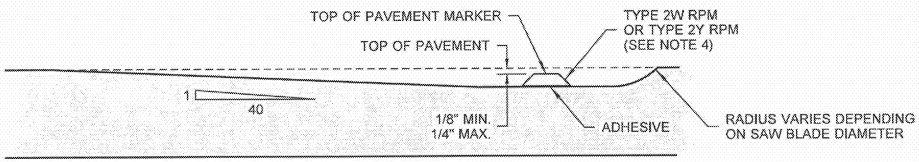

SECTION (B)

ONE-WAY ROADWAY RECESSED PAVEMENT MARKER DETAILS

FOR USE WHERE SPECIFIED IN CONTRACT

DRAWN BY: COLBY FLETCHER

BRIAN J. WALSH
STATE OF WASHINGTON
36103
REGISTERED
PROFESSIONAL ENGINEER

Walsh, Brian
Apr 16 2015 2:26 PM

LONGITUDINAL MARKING SUPPLEMENT WITH RAISED PAVEMENT MARKERS

STANDARD PLAN M-20.30-03

SHEET 2 OF 2 SHEETS

APPROVED FOR PUBLICATION
Bakotich, Pasco
Apr 20 2015 10:09 AM
STATE DESIGN ENGINEER

Washington State Department of Transportation

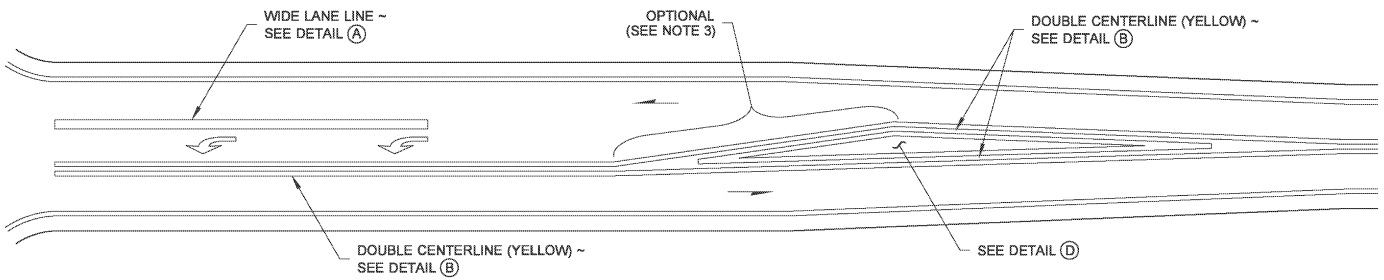

LEFT-TURN LANE

(SEE NOTE 3)

NOTES

1. Raised pavement markers shall be installed only when specified in the Contract Plans.
2. See the Standard Plans for marker designation.
3. The portion labeled "OPTIONAL" is used only when the Optional Marked Deceleration Taper (see **Standard Plans M-3.10 and M-3.20)** is specified in the Contract Plans.

Type 2L (SL) Traffic Arrow

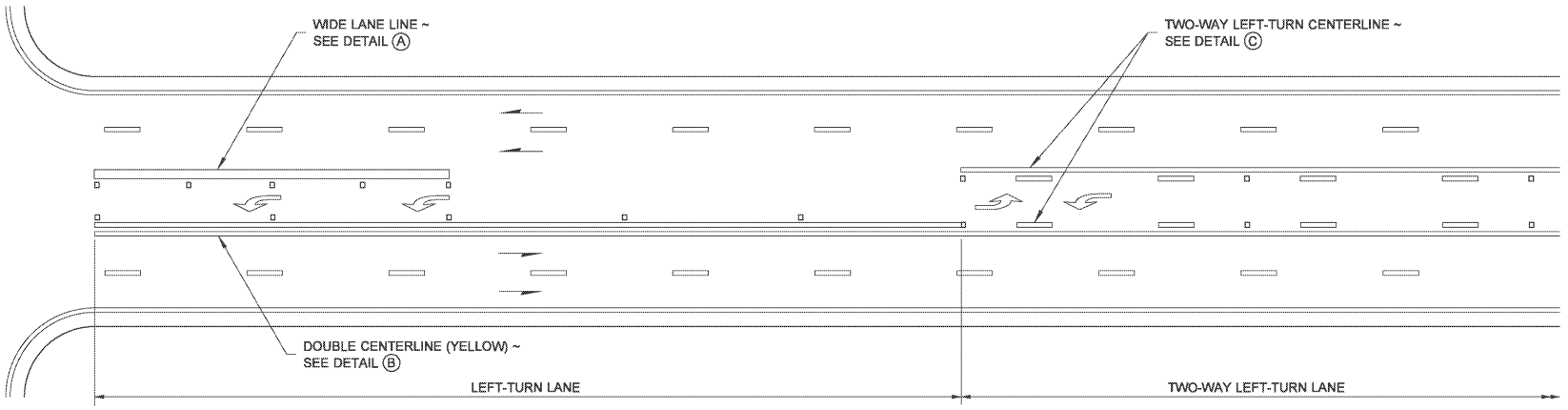

TWO-WAY LEFT-TURN LANE

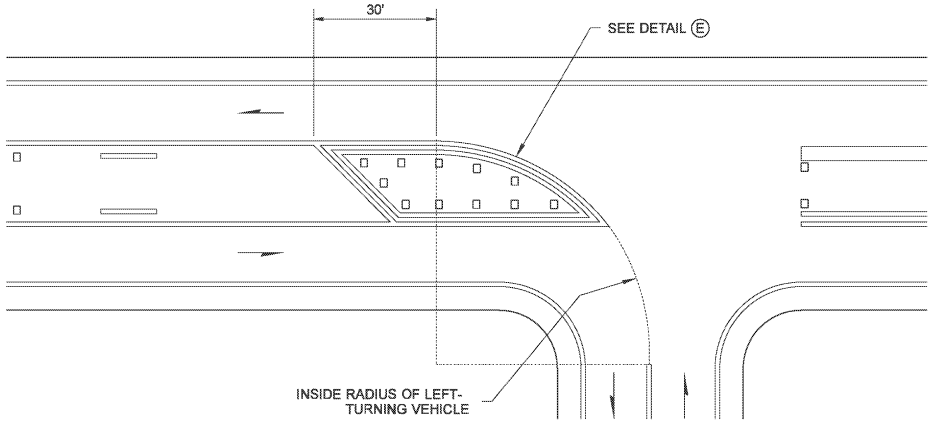

END TWO-WAY LEFT-TURN LANE

DRAWN BY: LISA CYFORD

BRIAN J. WALSH
STATE OF WASHINGTON
36103
REGISTERED
PROFESSIONAL ENGINEER

Walsh, Brian
Jun 24 2014 2:33 PM

LONGITUDINAL MARKING SUPPLEMENT WITH RPMs ~ TURN LANES STANDARD PLAN M-20.40-03

SHEET 1 OF 2 SHEETS

APPROVED FOR PUBLICATION
Bakotich, Pasco
Jun 24 2014 4:42 PM
STATE DESIGN ENGINEER
Washington State Department of Transportation

DRAWN BY: COLBY FLETCHER

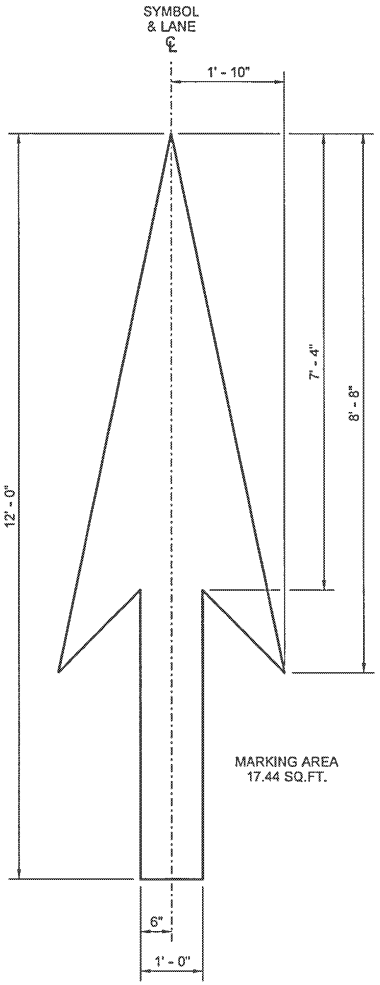

TYPE 1 TRAFFIC ARROW

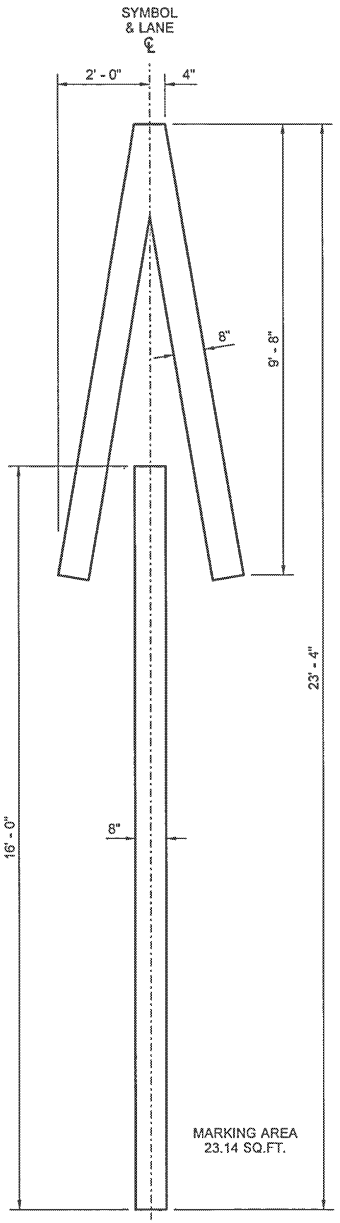

TYPE 5 TRAFFIC ARROW

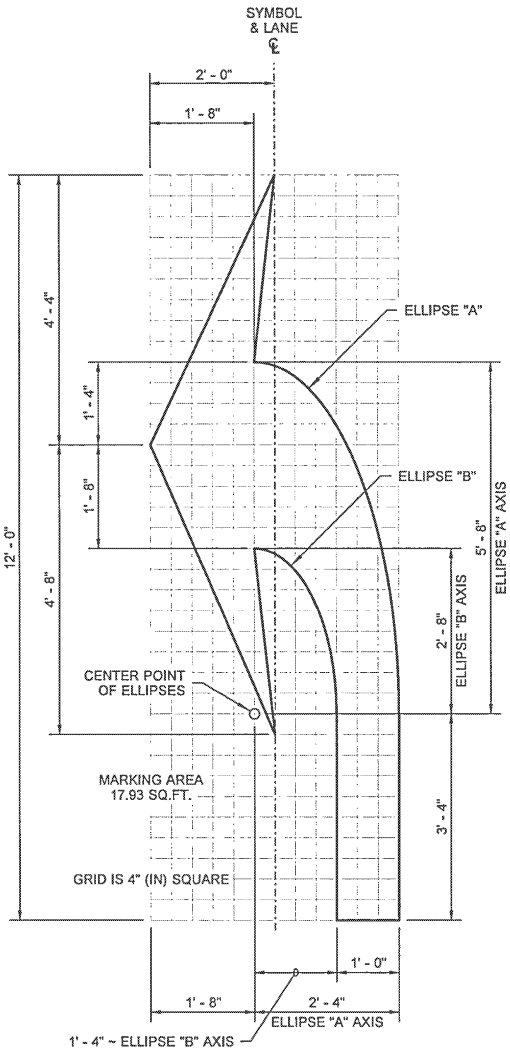

TYPE 2L (LEFT)
TRAFFIC ARROW

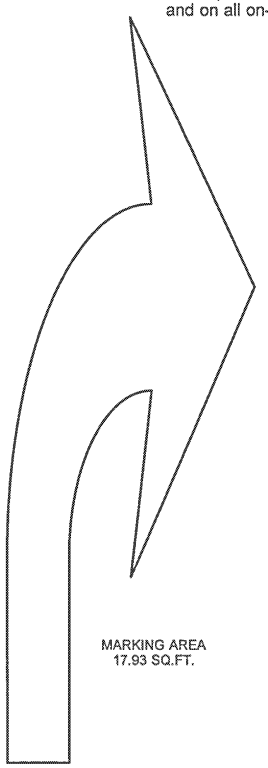

TYPE 2R (RIGHT)
TRAFFIC ARROW
MIRROR IMAGE OF
TYPE 2L TRAFFIC ARROW

NOTE

Use the dimensions shown on this plan for each type of Traffic Arrow being placed on roadways with a posted speed limit of 45 mph or higher and on all on-ramps and off-ramps.

BRIAN J. WALSH
STATE OF WASHINGTON
36103
REGISTERED
PROFESSIONAL ENGINEER

Apr 16 2015 2:23 PM

SYMBOL MARKINGS ~ TRAFFIC ARROWS FOR HIGH-SPEED ROADWAYS STANDARD PLAN M-24.20-02

SHEET 1 OF 3 SHEETS

APPROVED FOR PUBLICATION

Apr 20 2015 10:10 AM

STATE DESIGN ENGINEER

Washington State Department of Transportation

DRAWN BY: COLBY FLETCHER

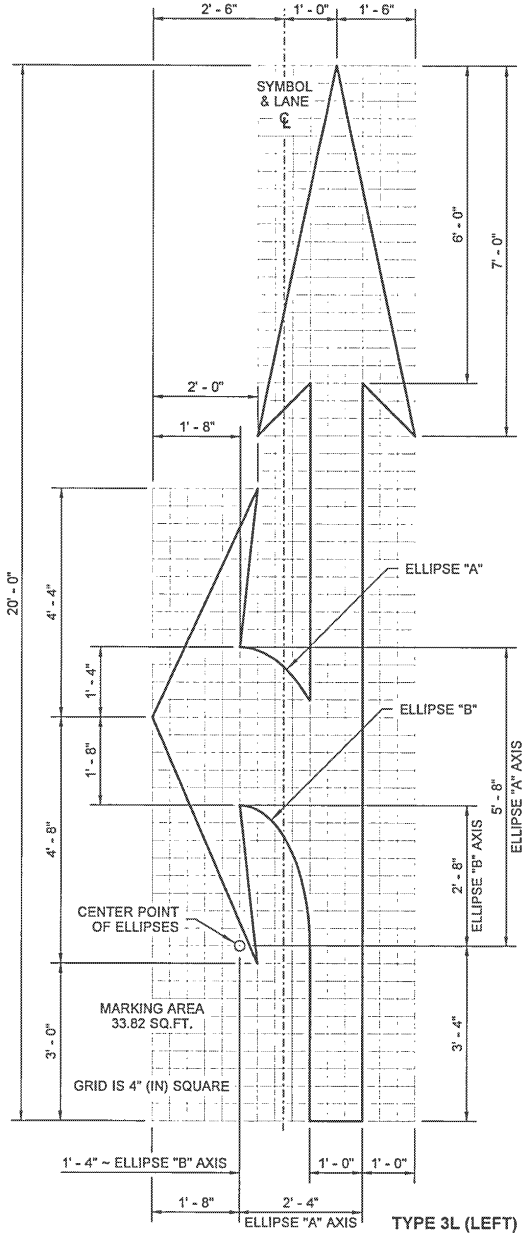

TYPE 3L (LEFT) TRAFFIC ARROW

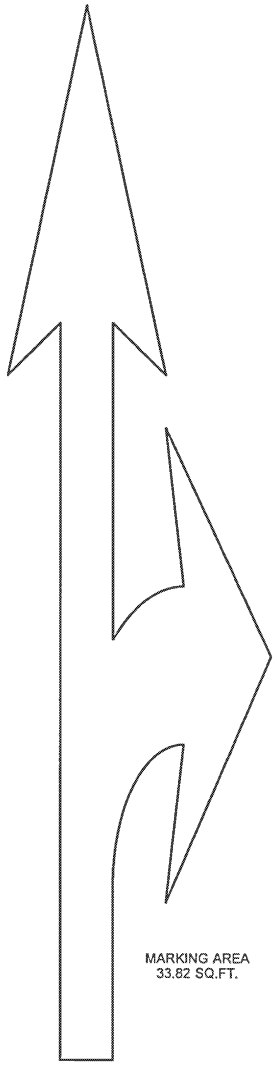

TYPE 3R (RIGHT) TRAFFIC ARROW

MIRROR IMAGE OF TYPE 3L TRAFFIC ARROW

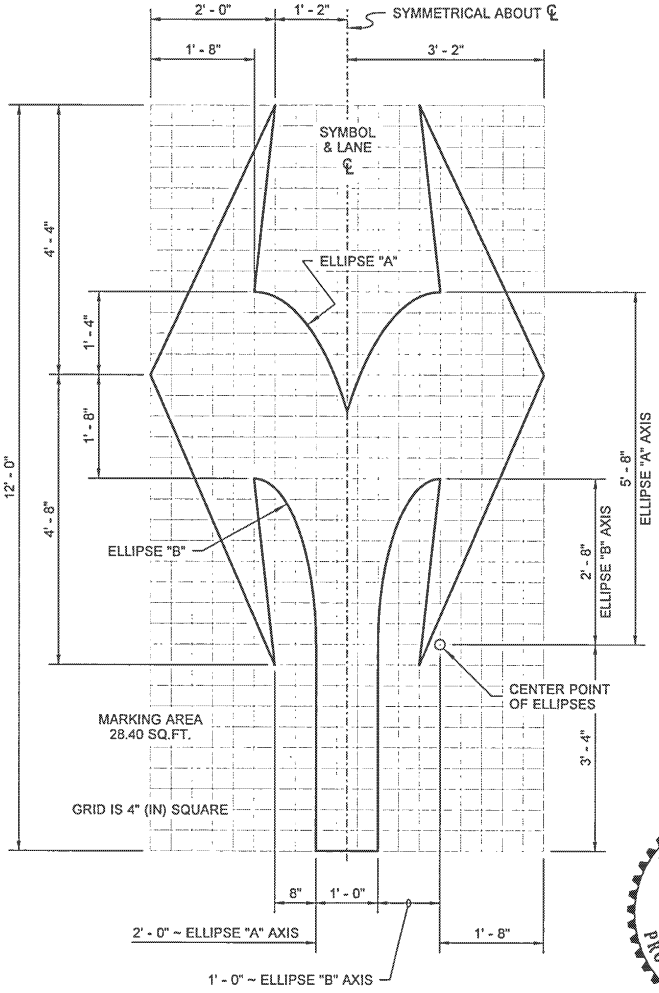

TYPE 4 TRAFFIC ARROW

BRIAN J. WALSH
STATE OF WASHINGTON
36103
REGISTERED
PROFESSIONAL ENGINEER

Apr 16 2015 5:10 PM

SYMBOL MARKINGS ~ TRAFFIC ARROWS FOR HIGH-SPEED ROADWAYS

STANDARD PLAN M-24.20-02

SHEET 2 OF 3 SHEETS

APPROVED FOR PUBLICATION

Apr 20 2015 10:10 AM

STATE DESIGN ENGINEER

Washington State Department of Transportation

DRAWN BY: COLBY FLETCHER

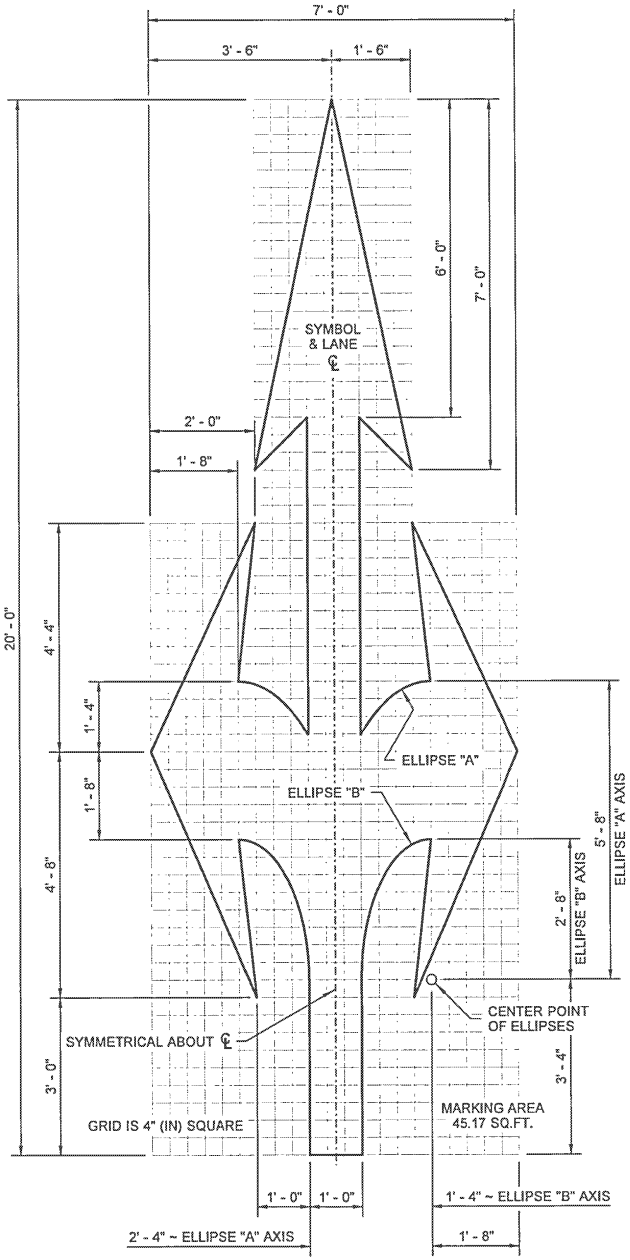

TYPE 7 TRAFFIC ARROW

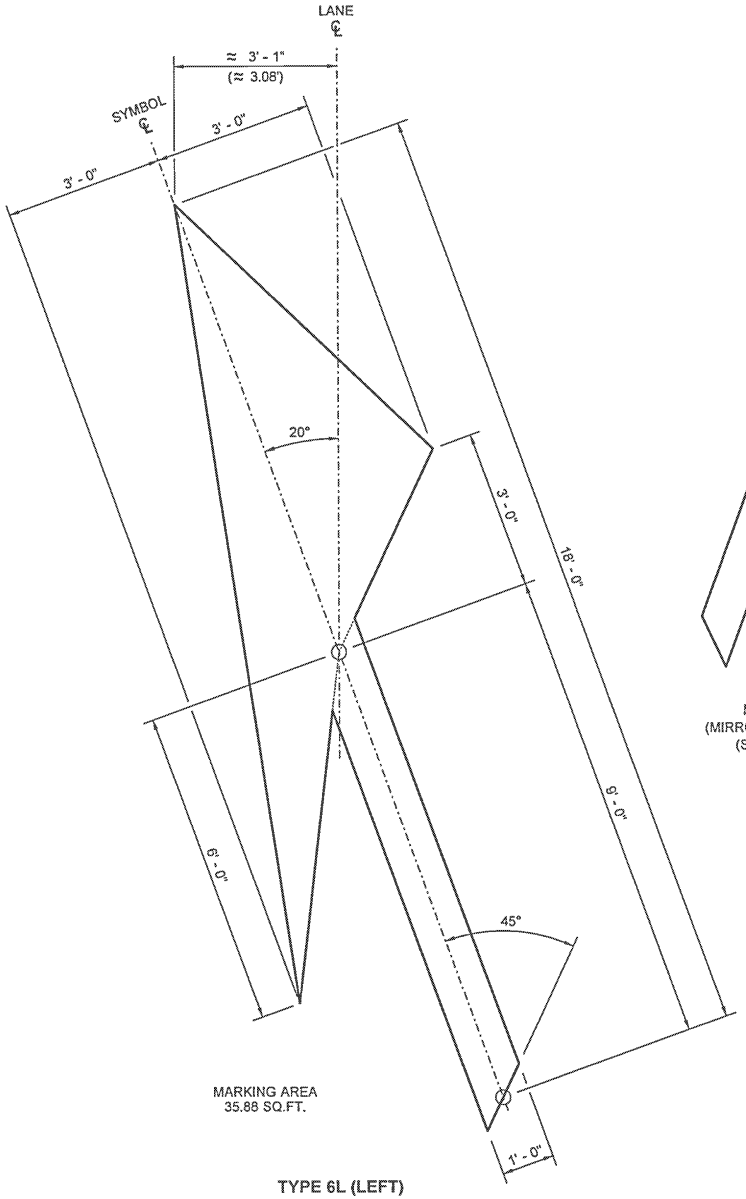

TYPE 6L (LEFT)
TRAFFIC ARROW

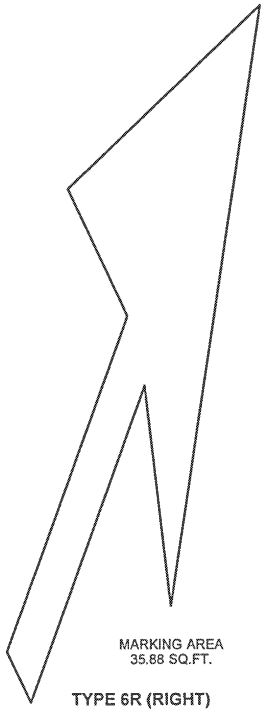

TYPE 6R (RIGHT)
TRAFFIC ARROW

MIRROR IMAGE OF TYPE 6L
(MIRRORED ABOUT LANE CENTERLINE)
(SHOWN AT REDUCED SCALE)

BRIAN J. WALSH
STATE OF WASHINGTON
36103
REGISTERED
PROFESSIONAL ENGINEER

Apr 16 2015 5:10 PM

SYMBOL MARKINGS ~ TRAFFIC ARROWS FOR HIGH-SPEED ROADWAYS STANDARD PLAN M-24.20-02

SHEET 3 OF 3 SHEETS

APPROVED FOR PUBLICATION

Apr 20 2015 10:10 AM

STATE DESIGN ENGINEER

Washington State Department of Transportation

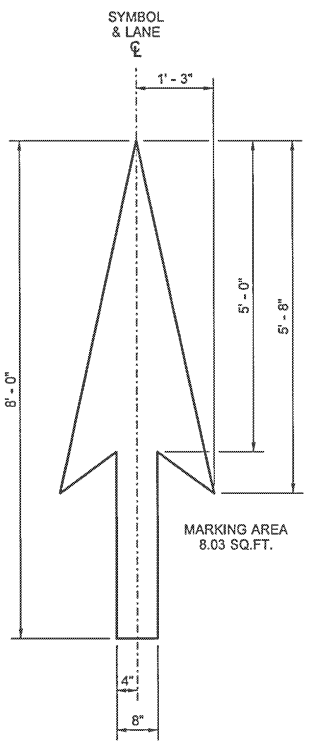

TYPE 1S
TRAFFIC ARROW

TYPE 2SR (RIGHT)
TRAFFIC ARROW

MIRROR IMAGE OF
TYPE 2SL TRAFFIC ARROW
(SHOWN AT REDUCED SCALE)

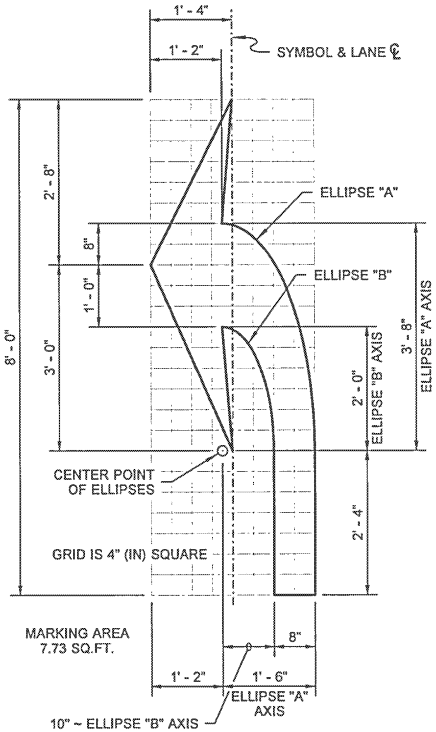

TYPE 2SL (LEFT) TRAFFIC ARROW

NOTE

Use the dimensions shown on this plan for each type of Traffic Arrow being placed on roadways with a posted speed limit of 40 mph or lower.

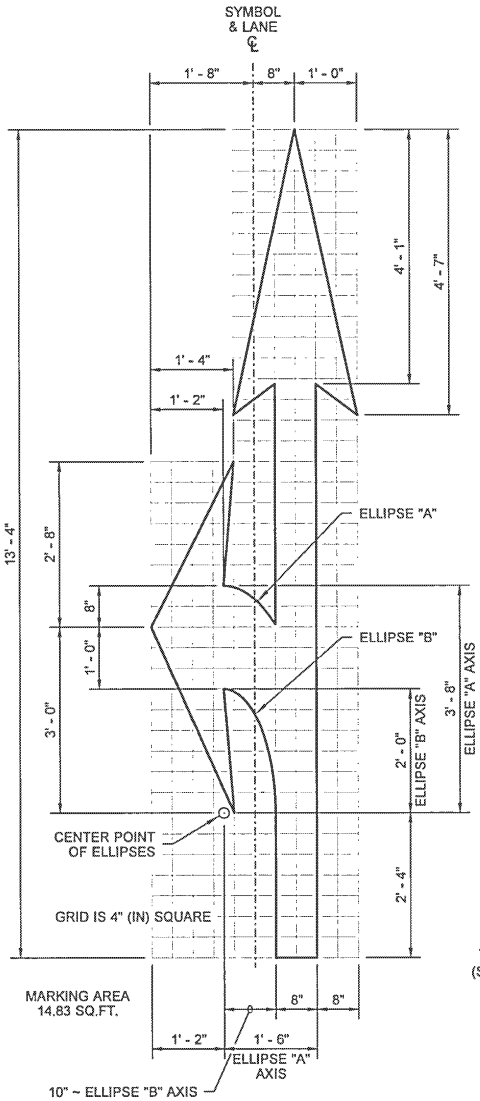

TYPE 3SL (LEFT) TRAFFIC ARROW

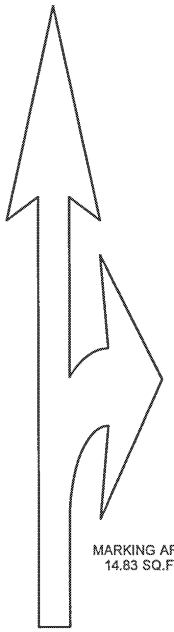

TYPE 3SR (RIGHT)
TRAFFIC ARROW

MIRROR IMAGE OF
TYPE 3SL TRAFFIC ARROW
(SHOWN AT REDUCED SCALE)

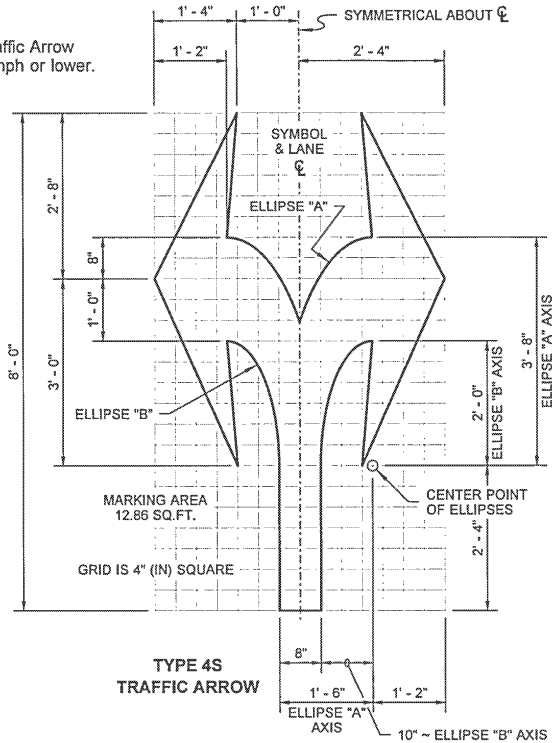

TYPE 4S
TRAFFIC ARROW

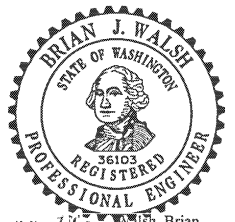

Walsh, Brian
Apr 16 2015 2:21 PM

SYMBOL MARKINGS ~ TRAFFIC ARROWS FOR LOW-SPEED ROADWAYS

STANDARD PLAN M-24.40-02

SHEET 1 OF 2 SHEETS

APPROVED FOR PUBLICATION
Bakotich, Pasco
Apr 20 2015 10:11 AM

STATE DESIGN ENGINEER

Washington State Department of Transportation

DRAWN BY: COLBY FLETCHER

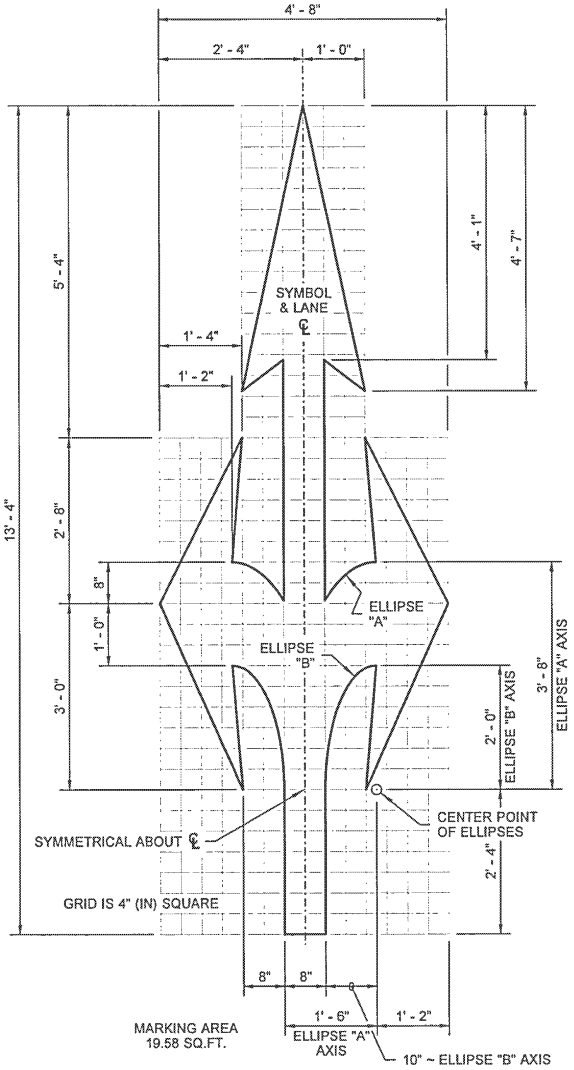

TYPE 7S TRAFFIC ARROW

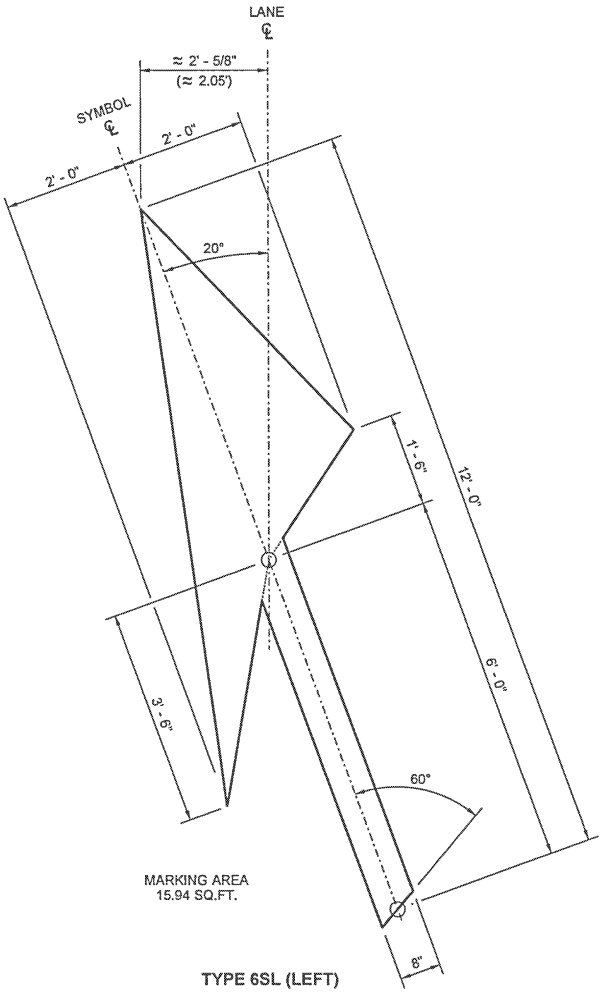

TYPE 6SL (LEFT)
TRAFFIC ARROW

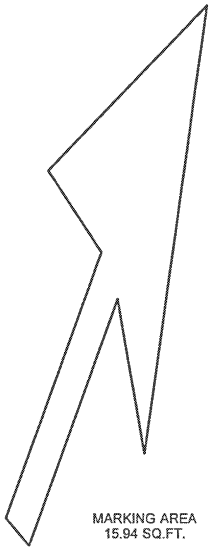

TYPE 6SR (RIGHT)
TRAFFIC ARROW

MIRROR IMAGE OF TYPE 6SL
(MIRRORED ABOUT LANE CENTERLINE)
(SHOWN AT REDUCED SCALE)

Walsh, Brian
Apr 16 2015 2:21 PM

SYMBOL MARKINGS ~ TRAFFIC ARROWS FOR LOW-SPEED ROADWAYS

STANDARD PLAN M-24.40-02

SHEET 2 OF 2 SHEETS

APPROVED FOR PUBLICATION
Bakotich, Pasco
Apr 20 2015 10:11 AM
STATE DESIGN ENGINEER
Washington State Department of Transportation

DRAWN BY: COLBY FLETCHER

DRAWN BY: FERN LIDDELL

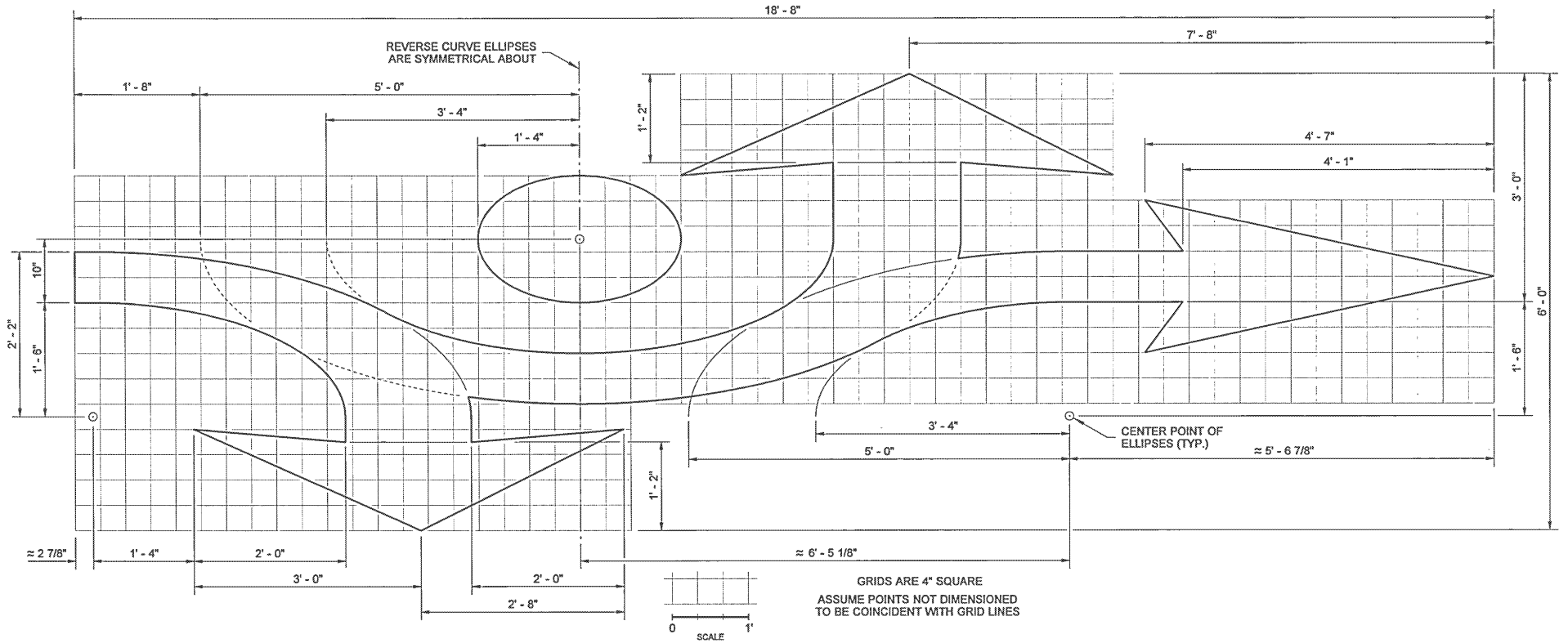

DETAIL

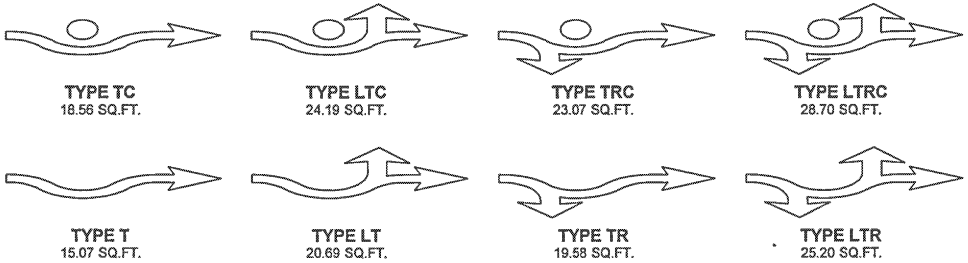

TYPE TC
18.56 SQ.FT.

TYPE LTC
24.19 SQ.FT.

TYPE TRC
23.07 SQ.FT.

TYPE LTRC
28.70 SQ.FT.

TYPE T
15.07 SQ.FT.

TYPE LT
20.69 SQ.FT.

TYPE TR
19.58 SQ.FT.

TYPE LTR
25.20 SQ.FT.

TYPE LC
18.07 SQ.FT.

PAVEMENT MARKING ~ ROUNDABOUT TRAFFIC ARROW

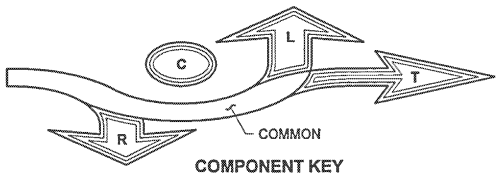

COMPONENT KEY

THE LABELED AREAS ABOVE CORRESPOND TO THE PORTIONS NEEDED FOR EACH TYPE OF ROUNDABOUT TRAFFIC ARROW.

FOR EXAMPLE: THE ROUNDABOUT TRAFFIC ARROW TYPE TRC REQUIRES THE "COMMON", "T", "R", AND "C" AREAS.

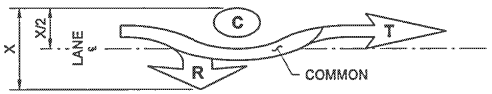

ROUNDABOUT TRAFFIC ARROW TYPE TRC

CENTER THE ARROW ON THE LANE CENTERLINE BETWEEN THE LATERAL EXTREMITIES OF THAT ARROW TYPE.

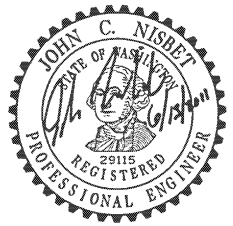

ROUNDABOUT TRAFFIC ARROWS

STANDARD PLAN M-24.50-00

SHEET 1 OF 1 SHEET

APPROVED FOR PUBLICATION

STATE DESIGN ENGINEER — DATE 6/16/11

Washington State Department of Transportation