Washington State Department of Transportation

Publications Transmittal

Transmittal Number	Date
PT 14-046	August 4, 2014
Publication Distribution	
To: *Standard Plans* manual holders	
Publication Title	Publication Number
Standard Plans – August 2014	M 21-01
Originating Organization	
WSDOT Development Division, Design Office – Standard Plans Unit	

Remarks

Download the current electronic WSDOT *Standard Plans* and revision packages at:
www.wsdot.wa.gov/design/standards/plans.htm

Instructions

- Replace Cover page with **new Cover page** provided.
- Remove **pages 3 ~ 13** from your current manual.
- Insert **pages 3 ~ 12**.
- Refer to the ***REMOVE & INSERT INSTRUCTIONS ~ Standard Plans Revision 8-4-2014***

If you have comments, questions, or suggestions, please don't hesitate to contact us:

Area of Practice	Your Contacts		
Standard Plans Engineer	Bill Berens	360-705-7256	berensb@wsdot.wa.gov
Standard Plan Technician	Fern Liddell	360-705-7255	liddelf@wsdot.wa.gov
Standard Plan Technician	Colby Fletcher	360-705-7247	fletcco@wsdot.wa.gov

To get the latest information on individual WSDOT publications

Sign up for email updates at: www.wsdot.wa.gov/publications/manuals/

HQ Design Office Signature	Phone Number
/s/ John Donahue	360-705-7952

REMOVE AND INSERT INSTRUCTIONS - Standard Plans Revision 8-4-2014

REMOVE			*INSERT*			
Blank			Blank			
A-60.10-01	10/14/09	Sheet 1 of 2	A-60.10-02	6/17/14	Sheet 1 of 2	Revised
A-60.10-01	10/14/09	Sheet 2 of 2	A-60.10-02	6/17/14	Sheet 2 of 2	Revised
A-60.20-02	6/2/11	Sheet 1 of 2	A-60.20-02	6/2/11	Sheet 1 of 2	Reprinted
C-20.10-01	6/20/13		C-20.10-02	6/11/14		Revised
C-20.14-02	7/2/12		C-20.14-03	6/11/14		Revised
C-20.15-01	7/2/12		C-20.15-02	6/11/14		Revised
C-20.18-01	7/2/12		C-20.18-02	6/11/14		Revised
C-20.19-01	7/2/12		C-20.19-02	6/11/14		Revised
C-20.40-03	7/2/12		C-20.40-04	6/11/14		Revised
			C-20.41-00	6/30/14		New Plan
			Blank			
C-20.42-03	7/2/12		C-20.42-04	6/11/14		Revised
C-20.45-01	7/2/12		C-20.45-01	7/2/12		Reprinted
C-22.14-02	6/16/11		C-22.14-03	6/11/14		Revised
C-22.16-03	4/18/12		C-22.16-04	6/11/14		Revised
C-22.40-02	6/16/10		C-22.40-03	6/11/14		Revised
C-22.45-00	6/16/11		C-22.41-00	6/11/14		New Plan
			C-22.45-00	6/16/11		Reprinted
			Blank			
C-23.60-02	6/21/12		C-23.60-03	6/11/14		Revised
C-24-10.00	7/2/12		C-24.10-01	6/11/14		Revised
C-25.18-03	7/2/12		C-25.18-04	6/11/14		Revised
C-25.20-05	7/2/12		C-25.20-05	7/2/12		Reprinted
C-25.80-02	7/2/12		C-25.80-03	6/11/14		Revised
C-40.14-02	7/2/12		C-40.14-02	7/2/12		Reprinted
C-70.10-00	4/18/12	Sheet 1 of 3	C-70.10-01	6/17/14	Sheet 1 of 3	Revised
C-70.10-00	4/18/12	Sheet 2 of 3	C-70.10-01	6/17/14	Sheet 2 of 3	Revised
C-70.10-00	4/18/12	Sheet 3 of 3	C-70.10-01	6/17/14	Sheet 3 of 3	Revised
C-75.10-00	4/18/12		C-75.10-01	6/11/14		Revised
C-75.20-00	4/18/12		C-75.20-01	6/11/14		Revised
C-75.30-00	4/18/12		C-75.30-01	6/11/14		Revised
C-80.10-00	4/18/12	Sheet 1 of 3	C-80.10-01	6/11/14	Sheet 1 of 3	Revised
C-80.10-00	4/18/12	Sheet 2 of 3	C-80.10-01	6/11/14	Sheet 2 of 3	Revised
C-80.10-00	4/18/12	Sheet 3 of 3	C-80.10-01	6/11/14	Sheet 3 of 3	Revised
C-80.20-00	4/18/12		C-80.20-01	6/11/14		Revised
C-80.30-00	4/18/12		C-80.30-01	6/11/14		Revised
C-80.40-00	4/18/12		C-80.40-01	6/11/14		Revised
C-85.11-00	4/18/12		C-85.11-00	4/18/12		Reprinted
C-85.14-00	6/16/11		C-85.14-01	6/11/14		Revised
C-85.15-00	6/16/11		C-85.15-01	6/30/14		Revised
C-85.16-00	6/16/11	Sheet 1 of 2	C-85.16-01	6/17/14	Sheet 1 of 2	Revised
C-85.16-00	6/16/11	Sheet 2 of 2	C-85.16-01	6/17/14	Sheet 2 of 2	Revised
Blank			Blank			
C-85.18-00	6/16/11		C-85.18-01	6/11/14		Revised
C-85.20-00	6/16/11	Sheet 1 of 2	C-85.20-01	6/11/14	Sheet 1 of 2	Revised
C-85.20-00	6/16/11	Sheet 2 of 2	C-85.20-01	6/11/14	Sheet 2 of 2	Revised
C-90.10-00	7/3/08		C-90.10-00	7/3/08		Reprinted
D-2.34-01	1/6/09	Sheet 2 of 2	D-2.34-01	1/6/09	Sheet 2 of 2	Reprinted
D-2.36-02	1/6/09	Sheet 1 of 3	D-2.36-03	6/11/14	Sheet 1 of 3	Revised
D-2.36-02	1/6/09	Sheet 2 of 3	D-2.36-03	6/11/14	Sheet 2 of 3	Revised
D-2.36-02	1/6/09	Sheet 3 of 3	D-2.36-03	6/11/14	Sheet 3 of 3	Revised
D-2.44-00	11/10/05		D-2.44-00	11/10/05		Reprinted
D-2.46-00	11/10/05	Sheet 1 of 2	D-2.46-01	6/11/14	Sheet 1 of 3	Revised
D-2.46-00	11/10/05	Sheet 2 of 2	D-2.46-01	6/11/14	Sheet 2 of 3	Revised
D-2.48-00	11/10/05	Sheet 1 of 2	D-2.46-01	6/11/14	Sheet 3 of 3	Revised
			Blank			
			D-2.48-00	11/10/05	Sheet 1 of 2	Reprinted
D-3.10-01	5/29/13		D-3.10-01	5/29/13		Reprinted
D-3.11-02	5/29/13	Sheet 1 of 2	D-3.11-03	6/11/14	Sheet 1 of 2	Revised
D-3.11-02	5/29/13	Sheet 2 of 2	D-3.11-03	6/11/14	Sheet 2 of 2	Revised
D-3.15-02	6/10/13		D-3.15-02	6/10/13		Reprinted

REMOVE AND INSERT INSTRUCTIONS - Standard Plans Revision 8-4-2014

REMOVE			*INSERT*			
Blank			Blank			
F-10.12-02	6/16/11		F-10.12-03	6/11/14		Revised
Blank			Blank			
F-10.62-01	9/5/07	Sheet 1 of 2	F-10.62-02	4/22/14	Sheet 1 of 2	Revised
F-10.62-01	9/5/07	Sheet 2 of 2	F-10.62-02	4/22/14	Sheet 2 of 2	Revised
F-10.64-02	7/3/08		F-10.64-03	4/22/14		Revised
F-30.10-02	6/20/13		F-30.10-03	6/11/14		Revised
Blank			Blank			
F-45.10-01	6/21/12		F-45.10-01	6/21/12		Reprinted
F-80.10-02	3/15/12	Sheet 1 of 2	F-80.10-03	6/11/14	Sheet 1 of 2	Revised
F-80.10-02	3/15/12	Sheet 2 of 2	F-80.10-03	6/11/14	Sheet 2 of 2	Revised
Blank			Blank			
G-10.10-00	9/20/07		G-10.10-00	9/20/07		Reprinted
G-20.10-00	9/20/07		G-20.10-01	6/11/14		Revised
G-22.10-01	7/3/08	Sheet 1 of 3	G-22.10-02	6/17/14	Sheet 1 of 3	Revised
G-22.10-01	7/3/08	Sheet 2 of 3	G-22.10-02	6/17/14	Sheet 2 of 3	Revised
G-22.10-01	7/3/08	Sheet 3 of 3	G-22.10-02	6/17/14	Sheet 3 of 3	Revised
G-24.10-00	11/8/07		G-24.10-00	11/8/07		Reprinted
G-24.30-01	2/7/12	Sheet 2 of 2	G-24.30-01	2/7/12	Sheet 2 of 2	Reprinted
G-24.40-03	6/20/13	Sheet 1 of 4	G-24.40-04	6/17/14	Sheet 1 of 4	Revised
G-24.40-03	6/20/13	Sheet 2 of 4	G-24.40-04	6/17/14	Sheet 2 of 4	Revised
G-24.40-03	6/20/13	Sheet 3 of 4	G-24.40-04	6/17/14	Sheet 3 of 4	Revised
G-24.40-03	6/20/13	Sheet 4 of 4	G-24.40-04	6/17/14	Sheet 4 of 4	Revised
G-24.50-02	6/20/13		G-24.50-03	6/17/14		Revised
G-24.60-02	5/20/13	Sheet 1 of 2	G-24.60-03	6/17/14	Sheet 1 of 2	Revised
G-24.60-02	5/20/13	Sheet 2 of 2	G-24.60-03	6/17/14	Sheet 2 of 2	Revised
G-25.10-04	6/10/13		G-25.10-04	6/10/13		Reprinted
G-30.10-02	6/20/13	Sheet 1 of 2	G-30.10-03	6/17/14	Sheet 1 of 2	Revised
G-30.10-02	6/20/13	Sheet 2 of 2	G-30.10-03	6/17/14	Sheet 2 of 2	Revised
G-50.10-01	6/20/13	Sheet 1 of 2	G-50.10-01	6/20/13	Sheet 1 of 2	Reprinted
J-10	7/18/97		J-10	7/18/97		Reprinted
J-10.10-01	5/11/11	Sheet 1 of 5	J-10.10-02	6/11/14	Sheet 1 of 5	Revised
J-10.10-01	5/11/11	Sheet 2 of 5	J-10.10-02	6/11/14	Sheet 2 of 5	Revised
J-10.10-01	5/11/11	Sheet 3 of 5	J-10.10-02	6/11/14	Sheet 3 of 5	Revised
J-10.10-01	5/11/11	Sheet 4 of 5	J-10.10-02	6/11/14	Sheet 4 of 5	Revised
J-10.10-01	5/11/11	Sheet 5 of 5	J-10.10-02	6/11/14	Sheet 5 of 5	Revised
J-10.15-00	7/2/12		J-10.15-01	6/11/14		Revised
J-10.22-00	5/29/13	Sheet 1 of 2	J-10.22-00	5/29/13	Sheet 1 of 2	Reprinted
J-15.10-00	5/18/12		J-15.10-01	6/11/14		Revised
J-15.15-00	6/16/10		J-15.15-01	6/11/14		Revised
J-20.10-02	6/10/13		J-20.10-03	6/30/14		Revised
J-20.11-01	6/10/13	Sheet 1 of 2	J-20.11-02	6/30/14	Sheet 1 of 2	Revised
J-20.11-01	6/10/13	Sheet 2 of 2	J-20.11-02	6/30/14	Sheet 2 of 2	Revised
J-20.15-02	6/10/13		J-20.15-03	6/30/14		Revised
J-20.16-01	7/12/12		J-20.16-02	6/30/14		Revised
J-20.20-02	5/20/13		J-20.20-02	5/20/13		Reprinted
J-20.26-01	7/12/12	Sheet 2 of 2	J-20.26-01	7/12/12	Sheet 2 of 2	Reprinted
J-21.10-03	6/10/13	Sheet 1 of 2	J-21.10-04	6/30/14	Sheet 1 of 2	Revised
J-21.10-03	6/10/13	Sheet 2 of 2	J-21.10-04	6/30/14	Sheet 2 of 2	Revised
J-21.15-01	6/10/13		J-21.15-01	6/10/13		Reprinted
J-26.15-01	5/17/12	Sheet 3 of 3	J-26.15-01	5/17/12	Sheet 3 of 3	Reprinted
J-27.10-00	3/15/12		J-26.20-00	6/11/14	Sheet 1 of 5	New Plan
			J-26.20-00	6/11/14	Sheet 2 of 5	New Plan
			J-26.20-00	6/11/14	Sheet 3 of 5	New Plan
			J-26.20-00	6/11/14	Sheet 4 of 5	New Plan
			J-26.20-00	6/11/14	Sheet 5 of 5	New Plan
			Blank			
			J-27.10-00	3/15/12		Reprinted

REMOVE AND INSERT INSTRUCTIONS - Standard Plans Revision 8-4-2014

REMOVE			*INSERT*			
J-28.26-01	12/2/08		J-28.26-01	12/2/08		Reprinted
J-28.30-02	6/27/11	Sheet 1 of 2	J-28.30-03	6/11/14	Sheet 1 of 2	Revised
J-28.30-02	6/27/11	Sheet 2 of 2	J-28.30-03	6/11/14	Sheet 2 of 2	Revised
J-28.40-01	10/14/09		J-28.40-02	6/11/14		Revised
J-28.42-00	8/7/07		J-28.42-01	6/11/14		Revised
J-28.45-01	6/27/11		Blank			
			J-28.43-00	6/11/14		New Plan
			J-28.45-02	6/11/14		Revised
J-40.10-03	5/20/13	Sheet 2 of 2	J-40.10-03	5/20/13	Sheet 2 of 2	Reprinted
J-40.20-01	5/17/12	Sheet 1 of 2	J-40.20-02	6/11/14	Sheet 1 of 2	Revised
J-40.20-01	5/17/12	Sheet 2 of 2	J-40.20-02	6/11/14	Sheet 2 of 2	Revised
J-40.30-03	5/20/13	Sheet 1 of 2	J-40.30-03	5/20/13	Sheet 1 of 2	Reprinted
Blank			Blank			
J-75.40-00	10/14/09	Sheet 1 of 2	J-75.40-01	6/11/14	Sheet 1 of 2	Revised
J-75.40-00	10/14/09	Sheet 2 of 2	J-75.40-01	6/11/14	Sheet 2 of 2	Revised
J-75.45-00	10/14/09	Sheet 1 of 2	J-75.41-00	6/11/14	Sheet 1 of 4	New Plan
J-75.45-00	10/14/09	Sheet 2 of 2	J-75.41-00	6/11/14	Sheet 2 of 4	New Plan
J-90.10-01	6/27/11	Sheet 1 of 2	J-75.41-00	6/11/14	Sheet 3 of 4	New Plan
			J-75.41-00	6/11/14	Sheet 4 of 4	New Plan
			J-75.45-01	6/11/14	Sheet 1 of 2	Revised
			J-75.45-01	6/11/14	Sheet 2 of 2	Revised
			J-90.10-01	6/27/11	Sheet 1 of 2	Reprinted
J-90.20-01	6/27/11	Sheet 2 of 2	J-90.20-01	6/27/11	Sheet 2 of 2	Reprinted
Blank			J-90.21-00	6/30/14	Sheet 1 of 2	New Plan
			J-90.21-00	6/30/14	Sheet 2 of 2	New Plan
			Blank			
L-20.10-02	6/21/12	Sheet 2 of 2	L-20.10-02	6/21/12	Sheet 2 of 2	Reprinted
L-30.10-01	6/16/11	Sheet 1 of 2	L-30.10-02	6/11/14	Sheet 1 of 2	Revised
L-30.10-01	6/16/11	Sheet 2 of 2	L-30.10-02	6/11/14	Sheet 2 of 2	Revised
L-40.10-02	6/21/12	Sheet 1 of 2	L-40.10-02	6/21/12	Sheet 1 of 2	Reprinted
M-1.20-02	6/3/11		M-1.20-03	6/24/14		Revised
M-1.40-02	6/3/11		M-1.40-02	6/3/11		Reprinted
M-9.50-01	1/30/07		M-9.50-02	6/24/14		Revised
M-9.60-00	2/10/09		M-9.60-00	2/10/09		Reprinted
M-20.30-02	10/14/09		M-20.30-02	10/14/09		Reprinted
M-20.40-02	6/3/11	Sheet 1 of 2	M-20.40-03	6/24/14	Sheet 1 of 2	Revised
M-20.40-02	6/3/11	Sheet 2 of 2	M-20.40-03	6/24/14	Sheet 2 of 2	Revised
M-20.50-02	6/3/11		M-20.50-02	6/3/11		Reprinted
Blank			Blank			
M-24.60-03	5/11/11	Sheet 1 of 2	M-24.60-04	6/24/14	Sheet 1 of 2	Revised
M-24.60-03	5/11/11	Sheet 2 of 2	M-24.60-04	6/24/14	Sheet 2 of 2	Revised
M-40.10-02	5/11/11		M-40.10-03	6/24/14		Revised

Washington State
Department of Transportation

Standard Plans

M 21-01

August 4, 2014

Engineering and Regional Operations
Development Division, Design Office

Americans with Disabilities Act (ADA) Information

Materials can be provided in alternative formats by calling the ADA Compliance Manager at 360-705-7097. Persons who are deaf or hard of hearing may contact that number via the Washington Relay Service at 7-1-1.

Title VI Notice to the Public

It is Washington State Department of Transportation (WSDOT) policy to ensure no person shall, on the grounds of race, color, national origin, or sex, as provided by Title VI of the Civil Rights Act of 1964, be excluded from participation in, be denied the benefits of, or be otherwise discriminated against under any of its federally funded programs and activities. Any person who believes his/her Title VI protection has been violated may file a complaint with WSDOT's Office of Equal Opportunity (OEO). For Title VI complaint forms and advice, please contact OEO's Title VI Coordinator at 360-705-7082 or 509-324-6018.

To get the latest information on WSDOT publications, sign up for individual email updates at www.wsdot.wa.gov/publications/manuals.

Washington State Department of Transportation
Engineering and Regional Operations
Development Division, Design Office
PO Box 47329
Olympia, WA 98504-7329

Email: designstandards@wsdot.wa.gov
www.wsdot.wa.gov/design/standards/plans.htm

Contents

Plan No.	Plan Title	Publication Approval Date	
Section A	**Roadway Construction**		
A-10.10-00	Survey Stakes	8/7/07	*2 Sheets*
A-10.20-00	Survey Monument Types 1 and 2	10/5/07	
A-10.30-00	Monument and Cover	10/5/07	
A-20.10-00	Slope Treatment	8/31/07	
A-30.10-00	Concrete Slope Protection	11/8/07	
A-30.15-00	Semi-open Concrete Masonry Slope Protection	11/8/07	
A-30.30-01	Wire Mesh Slope Protection	6/16/11	
A-30.35-00	Slope Protection Anchors	10/12/07	
A-40.00-00	Dowel Bar Baskets	8/11/09	
A-40.10-02	Cement Concrete Pavement Joints	6/2/11	
A-40.15-00	PCC Pavement Isolation Joints	8/11/09	*2 Sheets*
A-40.20-02	Bridge Transverse Joint Seals	5/29/13	
A-40.50-01	Bridge Approach Slab	6/2/11	*2 Sheets*
A-50.10-00	Embankment Widening at Bridge End with Wing Wall	11/17/08	*2 Sheets*
A-50.20-01	Embankment Widening at Bridge End with Curtain Wall	9/22/09	*2 Sheets*
A-50.30-00	Embankment Widening at Bridge End with "L" Shaped Abutment	11/17/08	*2 Sheets*
A-50.40-00	Embankment Widening at Bridge End with Sidewalk	11/17/08	
A-60.10-02	Cement Concrete Pavement Rehabilitation	6/17/14	*2 Sheets*
A-60.20-02	Dowel Bar Retrofit for Cement Concrete Pavement	6/2/11	*2 Sheets*
A-60.30-00	Bridge Deck Transition for HMA Overlay	11/8/07	
A-60.40-00	HMA Overlay Further Deck Preparation	8/31/07	
Section B	**Drainage Structures and Hydraulics**		
B-5.20-01	Catch Basin Type 1	6/16/11	
B-5.40-01	Catch Basin Type 1L	6/16/11	
B-5.60-01	Catch Basin Type 1P (for Parking Lot)	6/16/11	
B-10.20-01	Catch Basin Type 2	2/7/12	
B-10.40-00	Catch Basin Type 2 with Flow Restrictor	6/1/06	
B-10.60-00	Catch Basin Type 2 with Baffle Type Flow Restrictor	6/8/06	
B-15.20-01	Manhole Type 1	2/7/12	
B-15.40-01	Manhole Type 2	2/7/12	
B-15.60-01	Manhole Type 3	2/7/12	
B-20.20-02	Drywell Type 1 (for Swale)	3/16/12	
B-20.40-03	Drywell Type 2 (with Pipe Inlet)	3/16/12	
B-20.60-03	Drywell Type 3 (with At-Grade Inlet)	3/15/12	
B-25.20-01	Combination Inlet	3/15/12	
B-25.60-00	Concrete Inlet	6/1/06	
B-30.10-01	Rectangular Frame (Reversible)	4/26/12	
B-30.20-02	Rectangular Solid Metal Cover	4/26/12	
B-30.30-01	Rectangular Vaned Grate	4/26/12	
B-30.40-01	Rectangular Bi-Directional Vaned Grate	4/26/12	
B-30.50-01	Rectangular Herringbone Grate	4/26/12	
B-30.70-03	Circular Frame (Ring) and Cover	4/26/12	
B-30.80-00	Circular Grate	6/8/06	
B-30.90-01	Miscellaneous Details for Drainage Structures	9/20/07	
B-35.20-00	Grate Inlet Type 1 (Cast-In-Place)	6/8/06	
B-35.40-00	Grate Inlet Type 2	6/8/06	*2 Sheets*
B-40.20-00	Welded Grates for Grate Inlet	6/1/06	

Contents

Plan No.	Plan Title	Publication Approval Date	
B-40.40-01	Frame and Dual Vaned Grates for Grate Inlet	6/16/10	
B-45.20-00	Drop Inlet Type 1	6/1/06	
B-45.40-00	Drop Inlet Type 2	6/1/06	
B-50.20-00	Grates for Drop Inlet	6/1/06	
B-55.20-00	Pipe Zone Bedding and Backfill	6/1/06	
B-60.20-00	Connection Details for Dissimilar Culvert Pipe	6/8/06	
B-60.40-00	Coupling Bands for Corrugated Metal Pipe	6/1/06	
B-65.20-01	Animal Underpass	4/26/12	
B-65.40-00	Equipment Underpass	6/1/06	
B-70.20-00	Beveled End Sections (for Culverts 30” Diameter or Less)	6/1/06	
B-70.60-00	Flared End Sections	6/1/06	
B-75.20-01	Headwalls for Culvert Pipe and Underpass	6/10/08	
B-75.50-01	Type 1 Safety Bars for Stepped Culvert Pipe or Pipe Arch	6/10/08	
B-75.60-00	Type 2 Safety Bars for Culvert Pipe or Pipe Arch (On Cross Road)	6/8/06	
B-80.20-00	Tapered End Section with Type 3 Safety Bars	6/8/06	
B-80.40-00	Tapered End Section with Type 4 Safety Bars (On Cross Road)	6/1/06	
B-82.20-00	Residential Storm Drain, Under Sidewalk	6/1/06	
B-85.10-01	Vertical Connection (for Sanitary Sewer Use)	6/10/08	
B-85.20-00	Side Sewer Connection (for Sanitary Sewer Use)	6/1/06	
B-85.30-00	Standing Side Sewer Connection (for Sanitary Sewer Use)	6/1/06	
B-85.40-00	8 Inch Sewer Clean-Out (for Sanitary Sewer Use)	6/8/06	
B-85.50-01	Drop Connections (for Sanitary Sewer Use)	6/10/08	
B-90.10-00	Hydrant Setting Types A and B	6/8/06	
B-90.20-00	2 Inch Blowoff Assembly	6/8/06	
B-90.30-00	Combination Air Release / Air Vacuum Valve Assembly	6/8/06	
B-90.40-00	Concrete Thrust Block	6/8/06	
B-90.50-00	Concrete Thrust Block for Convex Vertical Bends	6/8/06	
B-95.20-01	Median Barrier Drainage Installation	2/3/09	
B-95.40-00	Inlet Placement at Bridge End	6/8/06	

Section C Traffic Barrier

C-1	Beam Guardrail Types 1 ~ 4 (W-Beam)	6/16/11	*2 Sheets*
C-1a	Beam Guardrail (Thrie Beam)	10/14/09	
C-1b	Beam Guardrail Posts and Blocks	6/16/11	*2 Sheets*
C-1c	Beam Guardrail	5/30/97	
C-1d	Thrie Beam Guardrail Reducer Section	10/31/03	
C-2	Guardrail Placement (Cases 1, 2 & 3)	1/6/00	
C-2a	Guardrail Placement (Cases 4, 5 & 6)	6/21/06	
C-2b	Guardrail Placement (Cases 7 & 8)	6/21/06	
C-2c	Guardrail Placement Median Bull Nose (Cases 9A, 9B & 9C)	6/21/06	
C-2d	Guardrail Placement (Cases 10A, 10B & 10C)	6/21/06	
C-2e	Guardrail Placement (Cases 11A, 11B & 11C)	6/21/06	
C-2f	Guardrail Placement Weak Post Intersection Design (8' - 6" Max. Radius) (Cases 12AC, 12AD, 12BC & 12BD)	3/14/97	

Plan No.	Plan Title	Publication Approval Date	
C-2g	Guardrail Placement Weak Post Intersection Design (35' Max. Radius) (Cases 13AC, 13AD, 13BC & 13BD)	7/27/01	
C-2h	Guardrail Placement (Case 14)	3/28/97	
C-2i	Guardrail Placement (Case 15)	3/28/97	
C-2j	Guardrail Placement (Cases 16, 17 & 18)	6/12/98	
C-2k	Guardrail Placement 12' - 6" Span (Cases 19A & 19B)	7/27/01	
C-2n	Guardrail Placement 18' - 9" Span (Case 20)	7/27/01	
C-2o	Guardrail Placement 25' Span (Case 21)	7/13/01	
C-2p	Guardrail Placement Strong Post Intersection Design (Cases 22AC, 22AD, 22BC & 22BD)	10/31/03	
C-3	Beam Guardrail Transition Sections (Types 1, 1A, & 1B)	7/2/12	
C-3a	Beam Guardrail Transition Sections (Types 2, 4, 5, & 6)	10/4/05	
C-3b	Beam Guardrail Transition Sections (Types 10 ~ 15)	6/27/11	*2 Sheets*
C-3c	Beam Guardrail Transition Sections (Types 16, 17, & 18)	6/27/11	
C-4b	Beam Guardrail Flared Terminal	6/8/06	
C-4e	Beam Guardrail Non-Flared Terminal	2/20/03	
C-4f	Beam Guardrail Bull Nose Terminal	7/2/12	*4 Sheets*
C-6	Beam Guardrail Anchor Type 1	5/30/97	*2 Sheets*
C-6a	Beam Guardrail Anchor Type 2	10/14/09	
C-6c	Beam Guardrail Anchor Type 4	1/6/00	
C-6d	Beam Guardrail Anchor Type 5	5/30/97	
C-6f	Beam Guardrail Anchor Type 7	7/25/97	
C-7	Beam Guardrail End Sections	6/16/11	
C-7a	Thrie Beam End Sections	6/16/11	
C-8	Concrete Barrier Type 2	2/10/09	*2 Sheets*
C-8a	Concrete Barrier Type 4 and Transition Section	7/25/97	
C-8b	Concrete Barrier Light Standard Section	6/27/11	2 Sheets
C-8e	Precast Concrete Barrier Anchor ~ Type 3 (Permanent)	2/21/07	
C-8f	Concrete Barrier Transition, Type 2 to Bridge F-Shape	6/30/04	
C-10	Box Culvert Guardrail Steel Post	6/3/10	*2 Sheets*
C-16a	Traffic Barrier Shoulder Widening ~ for Shoulders 8.0' and Wider	6/3/10	
C-16b	Traffic Barrier Shoulder Widening ~ for Shoulders Less Than 8.0' Wide	6/3/10	
C-20.10-02	Beam Guardrail Type 31	6/11/14	
C-20.14-03	Beam Guardrail Type 31 Placement (Cases 1-31, 2-31 & 3-31)	6/11/14	
C-20.15-02	Beam Guardrail Type 31 Placement (Cases 4-31 & 5-31)	6/11/14	
C-20.18-02	Beam Guardrail Type 31 Placement (Cases 10A-31, 10B-31 & 10C-31)	6/11/14	
C-20.19-02	Beam Guardrail Type 31 Placement (Cases 11A-31, 11B-31 & 11C-31)	6/11/14	
C-20.40-04	Beam Guardrail Type 31 Placement 12' - 6", 18' - 9", or 25' - 0"	6/11/14	
C-20.41-00	Box Culvert Guardrail Steel Post Type 31	6/30/14	
C-20.42-04	Guardrail Placement Strong Post ~ Type 31 Intersection Design	6/11/14	
C-20.45-01	Beam Guardrail Type 31 - DS (Double sided) (W-Beam)	7/2/12	

Contents

Plan No.	Plan Title	Publication Approval Date	
C-22.14-03	Beam Guardrail Type 1 Buried Terminal Type 2	6/11/14	
C-22.16-04	Beam Guardrail Type 31 Buried Terminal Type 2	6/11/14	
C-22.40-03	Beam Guardrail Type 31 Non-Flared Terminal Steel Posts (All posted speeds)	6/11/14	
C-22.41-00	Beam Guardrail Type 31 Non-Flared Terminal Wood Posts (All posted speeds)	6/11/14	
C-22.45-00	Beam Guardrail Type 31 Non-Flared Terminal Steel Posts (Posted speed-40 mph and below)	6/16/11	
C-23.60-03	Beam Guardrail (Type 31) Anchor Type 10	6/11/14	
C-24.10-01	Guardrail Connection to Bridge Rail or Concrete Barrier	6/11/14	
C-25.18-04	Beam Guardrail (Type 31) Transition Section Type 20	6/11/14	
C-25.20-05	Beam Guardrail (Type 31) Transition Section Type 21	7/2/12	
C-25.22-04	Beam Guardrail (Type 31) Transition Section Type 22	7/2/12	
C-25.26-02	Beam Guardrail (Type 31) Transition Section Type 23	7/2/12	
C-25.80-03	Beam Guardrail Type 31 to Beam Guardrail Type 1 Adaptor	6/11/14	
C-40.14-02	Barrier Placement Cable to Thrie Beam Bull Nose Connection	7/2/12	
C-40.16-02	Barrier Placement ~ Cable to W-Beam Shielding for Redirectional Landform	7/2/12	
C-40.18-02	Barrier Placement ~ Cable Barrier Shielding for Redirectional Landform	7/2/12	
C-70.10-01	Single-Slope Concrete Barrier (Precast)	6/17/14	*3 Sheets*
C-75.10-01	Single-Slope Concrete Barrier (Precast)Transition Section	6/11/14	
C-75.20-01	Single-Slope Concrete Barrier (Precast) Vertical Back	6/11/14	
C-75.30-01	Single-Slope Concrete Barrier (Precast) Terminal	6/11/14	
C-80.10-01	Single-Slope Concrete Barrier (Cast-in-Place) Dual-Faced	6/11/14	*3 Sheets*
C-80.20-01	Single-Slope Concrete Barrier (Cast-in-Place) Terminal	6/11/14	
C-80.30-01	Single-Slope Concrete Barrier (Cast-in-Place) Transition Section	6/11/14	
C-80.40-01	Single-Slope Concrete Barrier (Cast-in-Place) Vertical Back	6/11/14	
C-80.50-00	Concrete Barrier Transition, Type 2 to Single-Slope	4/18/12	
C-85.10-00	Single-Slope Concrete Barrier Placement (Split)	4/18/12	
C-85.11-00	Single-Slope Concrete Barrier Placement (Wrap)	4/18/12	
C-85.14-01	Single-Slope Concrete Barrier Light Standard Foundation	6/11/14	
C-85.15-01	Single-Slope Concrete Barrier (42") Light Standard Foundation	6/30/14	
C-85.16-01	Single-Slope Concrete Barrier Sign Bridge Foundation	6/17/14	*2 Sheets*
C-85.18-01	Single-Slope Concrete Barrier Transition for Monotube Sign Support	6/11/14	
C-85.20-01	Single-Slope Concrete Barrier Cantilever Sign Structure Foundation	6/11/14	*2 Sheets*
C-90.10-00	Impact Attenuator Inertial Barrier Configurations	7/3/08	

Plan No.	Plan Title	Publication Approval Date	
Section D	**Retaining, Noise Barrier, and Geosynthetic Walls**		
D-2.04-00	Noise Barrier Wall Type 2 (CIP Wall on Spread Footing)	11/10/05	*2 Sheets*
D-2.06-01	Noise Barrier Wall Type 3 (… on Offset Spread Footing)	1/6/09	*2 Sheets*
D-2.08-00	Noise Barrier Wall Type 4 (… on Shaft Foundation)	11/10/05	*2 Sheets*
D-2.14-00	Noise Barrier Wall Type 6 (…w/Traffic Barrier on Spread Ftg.)(CIP Conc. w/ Traffic Barrier on Spread Footing)	11/10/05	
D-2.16-00	Noise Barrier Wall Type 6SS (…w/S. S. Traffic Barrier on Spread Ftg.)(CIP Conc. w/ S. S. Traffic Barrier on Spread Footing)	11/10/05	
D-2.18-00	Noise Barrier Wall Type 7 (…w/Traffic Barrier on Shaft Fdn.)(CIP Conc. w/ Traffic Barrier on Shaft Foundation)	11/10/05	
D-2.20-00	Noise Barrier Wall Type 7SS (…w/Traffic Barrier on Shaft Fdn.)(CIP Conc. w/ S. S. Traffic Barrier on Shaft Fdn.)	11/10/05	
D-2.32-00	Noise Barrier Wall Type 9 (Precast Wall on Spread Footing)	11/10/05	*2 Sheets*
D-2.34-01	Noise Barrier Wall Type 10 (… on Offset Spread Footing)	1/6/09	*2 Sheets*
D-2.36-03	Noise Barrier Wall Type 11 (... on Shaft Foundation)	6/11/14	*3 Sheets*
D-2.42-00	Noise Barrier Wall Type 13 (...w/Traffic Barrier on Spread Ftg.)(Precast Conc. w/Traffic Barrier on Spread Footing)	11/10/05	
D-2.44-00	Noise Barrier Wall Type 13SS (…w/S. S. Traffic Barrier on Spread Ftg.)(Precast w/ S. S. Traffic Barrier on Spread Footing)	11/10/05	
D-2.46-01	Noise Barrier Wall Type 14 (…w/Traffic Barrier on Shaft Fdn.)(Precast Conc. w/ Traffic Barrier on Shaft Foundation)	6/11/14	*3 Sheets*
D-2.48-00	Noise Barrier Wall Type 14SS (…w/S. S. Traffic Barrier on Shaft Fdn.)(Precast Conc. w/ Single Slope Traffic Barrier on Shaft Fdn.)	11/10/05	*2 Sheets*
D-2.60-00	Noise Barrier Wall Type 16 (Masonry on Trench Footing)	11/10/05	*2 Sheets*
D-2-62-00	Noise Barrier Wall Type 17 (Masonry on Spread Footing)	11/10/05	*2 Sheets*
D-2.64-01	Noise Barrier Wall Type 18 (Masonry on Offset Spread Ftg.)	1/6/09	*2 Sheets*
D-2.66-00	Noise Barrier Wall Type 19 (…on Shaft w/Grade beam Fdn.)(Masonry on Shaft with Grade Beam Foundation)	11/10/05	*2 Sheets*
D-2.68-00	Noise Barrier Wall Type 20 (Masonry on Shaft Foundation)	11/10/05	*2 Sheets*
D-2.80-00	Noise Barrier Wall Access Door Type 1 (for CIP Wall on Offset Spread Ftg.)	11/10/05	
D-2.82-00	Noise Barrier Wall Access Door Type 2 (…w/Traffic Barrier)	11/10/05	*2 Sheets*
D-2.84-00	Noise Barrier Wall Access Door Type 3 (for Precast Wall on Shaft Fdn.)	11/10/05	
D-2.86-00	Noise Barrier Wall Access Door Type 4 (…w/Traffic Barrier on Shaft Fdn.)	11/10/05	*2 Sheets*
D-2.88-00	Noise Barrier Wall Access Door Type 5 (for Masonry Wall)	11/10/05	
D-2.92-00	Noise Barrier Wall Access Door & Frame	11/10/05	*2 Sheets*
D-3.09-00	Permanent Geosynthetic Wall	5/17/12	*4 Sheets*
D-3.10-01	Cast-In-Place Permanent Geosynthetic Wall Fascia and Facing	5/29/13	
D-3.11-03	Precast Permanent Geosynthetic Wall Fascia	6/11/14	*2 Sheets*
D-3.15-02	Permanent Geosynthetic Wall Single Slope Barrier	6/10/13	
D-3.16-02	Permanent Geosynthetic Wall F-Shape Barrier	5/29/13	
D-3.17-01	Permanent Geosynthetic Wall Expansion Joint Details	5/17/12	
D-4	Backfill and Drainage for Retaining Walls	12/11/98	

Contents

Plan No.	Plan Title	Publication Approval Date	
D-6	Gabions	6/19/98	
D-10.10-01	Reinforced Concrete Retaining Wall Type 1 and 1SW	12/2/08	*2 Sheets*
D-10.15-01	Reinforced Concrete Retaining Wall Type 2 and 2SW	12/2/08	*2 Sheets*
D-10.20-00	Reinforced Concrete Retaining Wall Type 3 and 3SW	7/8/08	*2 Sheets*
D-10.25-00	Reinforced Concrete Retaining Wall Type 4 and 4SW	7/8/08	*2 Sheets*
D-10.30-00	Reinforced Concrete Retaining Wall Type 5	7/8/08	*2 Sheets*
D-10.35-00	Reinforced Concrete Retaining Wall Type 6	7/8/08	*2 Sheets*
D-10.40-01	Reinforced Concrete Retaining Wall Type 7	12/2/08	*2 Sheets*
D-10.45-01	Reinforced Concrete Retaining Wall Type 8	12/2/08	*2 Sheets*
D-15.10-01	Traffic Barrier Details for Reinf. Conc. Retaining Walls	12/2/08	*2 Sheets*
D-15.20-02	Traffic Barrier Details for Reinf. Conc. Retaining Walls	6/2/11	*2 Sheets*
D-15.30-01	Traffic Barrier Details for Reinf. Conc. Retaining Walls	12/2/08	*2 Sheets*

Section E Bridges and Trestles

E-1	Date Numeral Placement on Bridge Traffic Barrier	2/21/07	
E-2	Pile or Frame Detour Bridge with Asphalt Overlay	5/29/98	*2 Sheets*
E-4	Precast Prestressed Concrete Piles	8/27/03	
E-4a	Precast Prestressed Concrete Piles Handling & Capping	8/27/03	

Section F Curbs, Sidewalks, and Driveways

F-10.12-03	Cement Concrete Curbs	6/11/14	
F-10.16-00	Cement Concrete Curb and Gutter Pan	12/20/06	
F-10.18-00	Roundabout Cement Concrete Curbs	6/27/11	
F-10.40-02	Extruded Curb Placement	6/21/12	
F-10.42-00	Extruded Curb	1/23/07	
F-10.62-02	Precast Sloped Mountable Curb	4/22/14	*2 Sheets*
F-10.64-03	Precast Dual Faced Sloped Mountable Curb	4/22/14	
F-30.10-03	Cement Concrete Sidewalk	6/11/14	
F-40.12-02	Parallel Curb Ramp	6/20/13	
F-40.14-02	Combination Curb Ramps	6/20/13	
F-40.15-02	Perpendicular Curb Ramps	6/20/13	
F-40.16-02	Single Direction Curb Ramps	6/20/13	
F-45.10-01	Detectable Warning Surface	6/21/12	
F-80.10-03	Cement Concrete Driveway Entrance Types 1, 2, 3, & 4	6/11/14	*2 Sheets*

Section G Signs and Sign Supports

G-10.10-00	Milepost	9/20/07	
G-20.10-01	Ground-Mounted Sign Placement	6/11/14	
G-22.10-02	Timber Sign Support	6/17/14	*3 Sheets*
G-24.10-00	Steel Sign Support Type AP Installation Details	11/8/07	
G-24.20-01	Steel Sign Support Type AS Installation Details	2/7/12	
G-24.30-01	Steel Sign Support, Types PL, PL-T, & PL-U, Inst. Det.	2/7/12	*2 Sheets*
G-24.40-04	Steel Sign Support Types SB-1, SB-2 & SB-3 Installation Details	6/17/14	*4 Sheets*
G-24.50-03	Steel Sign Support Types ST-1 - ST-4, Installation Details	6/17/14	
G-24.60-03	Steel Sign Support Types TP-A and TP-B, Installation Details	6/17/14	*2 Sheets*

Plan No.	Plan Title	Publication Approval Date	
G-25.10-04	Steel Sign Support Foundation Details	6/10/13	
G-30.10-03	Sign Installation on Signal and Light Standards	6/17/14	*2 Sheets*
G-50.10-01	Sign Bracing	6/20/13	*2 Sheets*
G-60.10-02	Cantilever Sign Structure (Truss-Type)	6/10/13	*4 Sheets*
G-60.20-01	Cantilever Sign Structure (Truss-Type) Foundation Type 1	6/27/11	*2 Sheets*
G-60.30-01	Cantilever Sign Structure (Truss-Type) Fdn., Types 2 & 3	6/27/11	*2 Sheets*
G-70.10-02	Sign Bridge (Truss-Type)	6/10/13	*4 Sheets*
G-70.20-02	Sign Bridge (Truss-Type) Foundation Type1	6/10/13	
G-70.30-02	Sign Bridge (Truss-Type) Foundation Types 2 & 3	6/10/13	
G-90.10-01	Overhead Sign Bracing and Lighting Placement	5/11/11	
G-90.20-02	Overhead Sign Mounting (Monotube Structure)	3/25/13	
G-90.30-02	Overhead Sign Mounting (Truss Structure)	3/22/13	
G-90.40-01	Overhead Sign Lighting Details	10/14/09	
G-95.10-01	Maintenance Walkway for Sign Bridges	6/2/11	*3 Sheets*
G-95.20-02	Maintenance Walkway Mounting for Monotube Sign Bridge	6/2/11	*3 Sheets*
G-95.30-02	Maintenance Walkway Mounting for Truss-Type Sign Bridge	6/2/11	*2 Sheets*

Section H Roadside and Site Development

H-10.10-00	Tree and Shrub Planting Details	7/3/08	
H-10.15-00	Live Stake Installations	7/3/08	
H-30.10-00	Crest Gage	10/12/07	
H-32.10-00	Automated Ground Water Monitoring Well	9/20/07	
H-60.10-01	Bollard Type 1	7/3/08	
H-60.20-01	Bollard Type 2	7/3/08	
H-70.10-01	Mailbox Support Type 1	2/7/12	*2 Sheets*
H-70.20-01	Mailbox Support Type 2	2/16/12	*2 Sheets*
H-70.30-02	Mailbox Support Type 3	2/7/12	*2 Sheets*

Section I Site Preservation and Erosion Control

I-10.10-01	High Visibility Fence	8/11/09	
I-30.10-02	Silt Fence with Backup Support	3/22/13	
I-30.15-02	Silt Fence	3/22/13	
I-30.16-00	High Visibility Silt Fence with Backup Support	3/22/13	
I-30.17-00	High Visibility Silt Fence	3/22/13	
I-30.20-00	Erosion Control At Culvert Ends	9/20/07	
I-30.30-01	Wattle Installation On Slope	6/10/13	
I-30.40-01	Compost Sock	6/10/13	
I-30.60-00	Erosion Control Details Coir Log Placement	5/29/13	
I-40.10-00	Temporary Silt Fence for Inlet Protection In Unpaved Areas	9/20/07	
I-40.20-00	Storm Drain Inlet Protection	9/20/07	
I-50.20-01	Check Dams on Channels	6/10/13	
I-60.10-01	Biodegradable Erosion Control Blanket Placement for Slopes	6/10/13	
I-60.20-01	Biodegradable Erosion Control Blanket Placement for Ditches	6/10/13	
I-80.10-01	Miscellaneous Erosion Control Details	8/11/09	

Contents

Plan No.	Plan Title	Publication Approval Date	
Section J	**Illumination, Signals, and ITS**		
J-3	Type A, B, and C Service Lighting Details	8/1/97	*2 Sheets*
J-3b	Service Cabinet Type B Modified (0 - 200 Amp Type, 120/240 Single Phase)	3/4/05	*2 Sheets*
J-3c	Service Cabinet Type D (0 - 200 Amp Type, 120/240 Single Phase)	6/24/02	
J-10	Electrical Conduit Placement	7/18/97	
J-10.10-02	Cabinet Orientation, Conduit Layout and Foundation Detail	6/11/14	*5 Sheets*
J-10.15-01	Cabinet Enclosure on Slope	6/11/14	
J-10.22-00	Service Cabinet Type E (0 - 200 Amp Type, 240/480 Single Phase)	5/29/13	*2 Sheets*
J-15.10-01	Timber Light Standard	6/11/14	
J-15.15-01	Span Wire Installation	6/11/14	
J-20.10-03	Accessible Pedestrian PushButton Post (PPB) and Foundation	6/30/14	
J-20.11-02	Accessible Pedestrian PushButton with Curb Base	6/30/14	*2 Sheets*
J-20.15-03	Accessible Breakaway Pedestrian PushButton (PPB) Post	6/30/14	
J-20.16-02	Pedestrian Signal Standard (Type PS) Details	6/30/14	
J-20.20-02	Pedestrian Signal Standard (Type PS) Electrical Details	5/20/13	
J-20.26-01	Accessible Pedestrian PushButton (PPB) Details	7/12/12	*2 Sheets*
J-21.10-04	Type PS, Type 1, RM and FB Signal Standard Foundation Details	6/30/14	*2 Sheets*
J-21.15-01	Type 1 Signal Standard Details	6/10/13	
J-21.16-01	Flashing Beacon Type 1 Signal Standard Details	6/10/13	
J-21.17-01	Flashing Beacon Type 1 Signal Standard Electrical Details	6/10/13	
J-21.20-01	Type 1 Signal Standard Electrical Details	6/10/13	
J-22.15-02	Ramp Meter Signal Standard Details	6/10/13	
J-22.16-02	Ramp Meter Signal Standard Electrical Details	6/10/13	
J-26.10-02	Signal Standard Foundation Plan	3/15/12	
J-26.15-01	Signal Standard Foundation Placements	5/17/12	*3 Sheets*
J-26.20-00	Temporary Signal Standard Adaptor	6/11/14	*5 Sheets*
J-27.10-00	Type 4 and 5 Strain Pole Foundation	3/15/12	
J-27.15-00	Type 4 and 5 Strain Pole Standard	3/15/12	
J-28.10-01	Steel Light Standard	5/11/11	*2 Sheets*
J-28.22-00	Steel Light Standard Placement (Slip Base)	8/7/07	*2 Sheets*
J-28.24-00	Steel Light Standard Placement (Fixed Base)	8/7/07	
J-28.26-01	Steel Light Standard Placement Miscellaneous	12/2/08	
J-28.30-03	Steel Light Standard Foundation Types A & B	6/11/14	*2 Sheets*
J-28.40-02	Steel Light Standard Base Mounting	6/11/14	
J-28.42-01	Steel Light Standard Anchor/Slip Plate for Slip Base	6/11/14	
J-28.43-00	Slip Base Adaptor for 4-Bolt Light Standard Base	6/11/14	
J-28.45-02	Steel Light Standard Elbow Mounting on Bridge & Retaining Wall	6/11/14	
J-28.50-02	Steel Light Standard Pole Base and Hand Hole Details	6/2/11	
J-28.60-01	Steel Light Standard Barrier Mounted Base	6/2/11	
J-28.70-01	Steel Light Standard Wiring Details	5/11/11	
J-29.10-00	Camera Pole Foundation Details	6/27/11	
J-29.15-00	Camera Pole Standard	6/27/11	*2 Sheets*
J-29.16-01	Camera Pole Standard Details	6/20/13	
J-40.10-03	Locking Lid Standard Duty Junction Box Types 1 & 2	5/20/13	*2 Sheets*
J-40.20-02	Heavy-Duty Junction Box Types 4, 5 & 6	6/11/14	*2 Sheets*

Plan No.	Plan Title	Publication Approval Date	
J-40.30-03	Locking Lid Standard Duty Junction Box Type 8	5/20/13	*2 Sheets*
J-40.35-01	Sign Post-Mounted Junction Box	5/29/13	*3 Sheets*
J-40.36-01	Nema 4X Non-Adjustable Junction Box	5/20/13	
J-40.37-01	Nema 3R Adjustable Flush Mounted Junction Box	5/20/13	*2 Sheets*
J-40.38-01	Top Entry Nema 4x Surface-Mounted Junction Box	5/20/13	
J-40.39-00	Front Entry Nema 4X Surface Mount Junction Box	5/20/13	
J-40.40-00	Nema 4X Junction Box in Sidewalk	5/20/13	
J-50.10-00	Type 1 Induction Loop	6/3/11	
J-50.11-00	Type 2 Induction Loop	6/3/11	*2 Sheets*
J-50.12-00	Type 3 Induction Loop	6/3/11	*3 Sheets*
J-50.15-00	Induction Loop Details	6/3/11	*3 Sheets*
J-50.16-01	Preformed Loop Detail in New Bridge Deck	3/22/13	*2 Sheets*
J-50.20-00	Permanent Traffic Recorder Installations	6/3/11	*3 Sheets*
J-50.25-00	Weigh-In Motion Site Installation Details	6/3/11	*2 Sheets*
J-50.30-00	Permanent Traffic Recorder & Weigh-In-Motion Details	6/3/11	*3 Sheets*
J-60.05-00	Typical Grounding Details	6/16/11	*4 Sheets*
J-60.11-00	Conduit Installation in Traffic Barrier on Retaining Wall	5/20/13	*2 Sheets*
J-60.12-00	Conduit Installation in Single Slope Conc. Barrier (Dual Face)	5/20/13	
J-60.13-00	Stainless Steel Channel	6/16/10	
J-60.14-00	Stainless Steel Channel Mounting Details on Column or Pole	6/16/10	
J-75.10-01	Signal Head Mounting Details~Pole and Post Top Mountings	5/11/11	
J-75.20-00	Signal Head Mounting Details Mast Arm and Span Wire Mountings	2/10/09	
J-75.30-01	Miscellaneous Signal Details	5/11/11	
J-75.40-01	Overhead Sign Electrical Details (Monotube Structure)	6/11/14	*2 Sheets*
J-75.41-00	Signal Bridge Standard Electrical Details	6/11/14	*4 Sheets*
J-75.45-01	Overhead Sign Electrical Details (Truss Structure)	6/11/14	*2 Sheets*
J-90.10-01	Pull Box	6/27/11	*2 Sheets*
J-90.20-01	Cable Vault	6/27/11	*2 Sheets*
J-90.21-00	Small Cable Vault	6/30/14	*2 Sheets*
Section K	**Work Zone Traffic Control**		
K-70.20-00	Temporary Channelization	2/15/07	
K-80.10-00	Class A Construction Signing Installation	2/21/07	
K-80.20-00	Type 3 Barricade	12/20/06	*2 Sheets*
K-80.30-00	Alternative Temporary Conc. Barrier (F-Shape)	2/21/07	
K-80.35-00	Temporary Conc. Barrier Anchoring	2/21/07	
K-80.37-00	Temporary Conc. Barrier Anchoring ~ Narrow	2/21/07	
Section L	**Fence and Glare Screen**		
L-10.10-02	Wire Fence Types 1 & 2, and Wire Gates	6/21/12	*2 Sheets*
L-20.10-02	Chain Link Fence Types 3 and 4	6/21/12	*2 Sheets*
L-30.10-02	Chain Link Gate	6/11/14	*2 Sheets*
L-40.10-02	Glare Screen Type 1 Design A	6/21/12	*2 Sheets*
L-40.15-01	Glare Screen Type 1 Design B	6/16/11	
L-40.20-02	Glare Screen Type 2 (Chain Link with Slats)	6/21/12	
L-70.10-01	Access Control Gate	5/21/08	
L-70.20-01	Access Control Double Gate	5/21/08	

Contents

Plan No.	Plan Title	Publication Approval Date	
Section M	**Roadway Delineation**		
M-1.20-03	Ramp Channelization Single Lane	6/24/14	
M-1.40-02	Ramp Channelization Two Lane	6/3/11	
M-1.60-02	Ramp Channelization Collector Distributor Road	6/3/11	
M-1.80-03	Ramp Channelization Parallel On & Weaving Section	6/3/11	
M-2.20-02	Gore Area Marking Layouts	6/3/11	
M-3.10-03	Left Turn Channelization	6/3/11	
M-3.20-02	Left Turn Channelization: Reduced Tapers	6/3/11	
M-3.30-03	Left Turn Channelization: Tee Intersection and Back-to-back Turn Lanes	6/3/11	
M-3.40-03	Two-way Left-Turn and Median Channelization	6/3/11	
M-3.50-02	Double Left Turn Channelization	6/3/11	
M-5.10-02	Right-Turn Channelization	6/3/11	
M-7.50-01	High Occupancy Vehicle (HOV) Lane Symbol Layout	1/30/07	
M-9.50-02	Bicycle Lane Symbol Layout	6/24/14	
M-9.60-00	Shared - Use Path Markings	2/10/09	
M-11.10-01	Railroad Crossing Layout	1/30/07	
M-15.10-01	Crosswalk Layout	2/6/07	
M-17.10-02	Parking Space Layouts	7/3/08	
M-20.10-02	Longitudinal Marking Patterns	6/3/11	
M-20.20-01	Profiled and Embossed Plastic Lines	1/30/07	
M-20.30-02	Longitudinal Marking Supplement with Raised Pavement Markers Raised Pavement Markers (RPM's)	10/14/09	
M-20.40-03	Longitudinal Marking Supplement with RPM's ~ Turn Lanes	6/24/14	*2 Sheets*
M-20.50-02	Longitudinal Marking Substitution with RPM's	6/3/11	
M-24.20-01	Symbol Markings Traffic Arrows for High Speed Roadways	5/31/06	*3 Sheets*
M-24.40-01	Symbol Markings Traffic Arrows for Low Speed Roadways	5/31/06	*2 Sheets*
M-24.50-00	Roundabout Traffic Arrows	6/16/11	
M-24.60-04	Symbol Markings Miscellaneous	6/24/14	*2 Sheets*
M-40.10-03	Guide Posts and Barrier Delineators	6/24/14	
M-40.20-00	Guide Post Placement Interchanges	10/12/07	
M-40.30-00	Guide Post Placement Grade Intersections	9/20/07	
M-40.40-00	Guide Post Placement Horizontal Curves	9/20/07	
M-40.50-00	Guide Post Placement Bridges	9/20/07	
M-40.60-00	Guide Post Placement Miscellaneous	9/20/07	
M-60.10-01	Shoulder Rumble Strip Type 1 for Divided Highways	6/3/11	*4 Sheets*
M-60.20-02	Shoulder Rumble Strip, Types 2, 3, and 4, for Undivided Highways	6/27/11	*2 Sheets*
M-65.10-02	CenterLine Rumble Strip	5/11/11	*2 Sheets*
M-80.10-01	Traffic Letter and Numeral Applications	6/3/11	*2 Sheets*
M-80.20-00	Traffic Letters and Numerals (High Speed Roadways)	6/10/08	
M-80.30-00	Traffic Letters and Numerals (Low Speed Roadways)	6/10/08	

This page left blank intentionally.

DRAWN BY: FERN LIDDELL

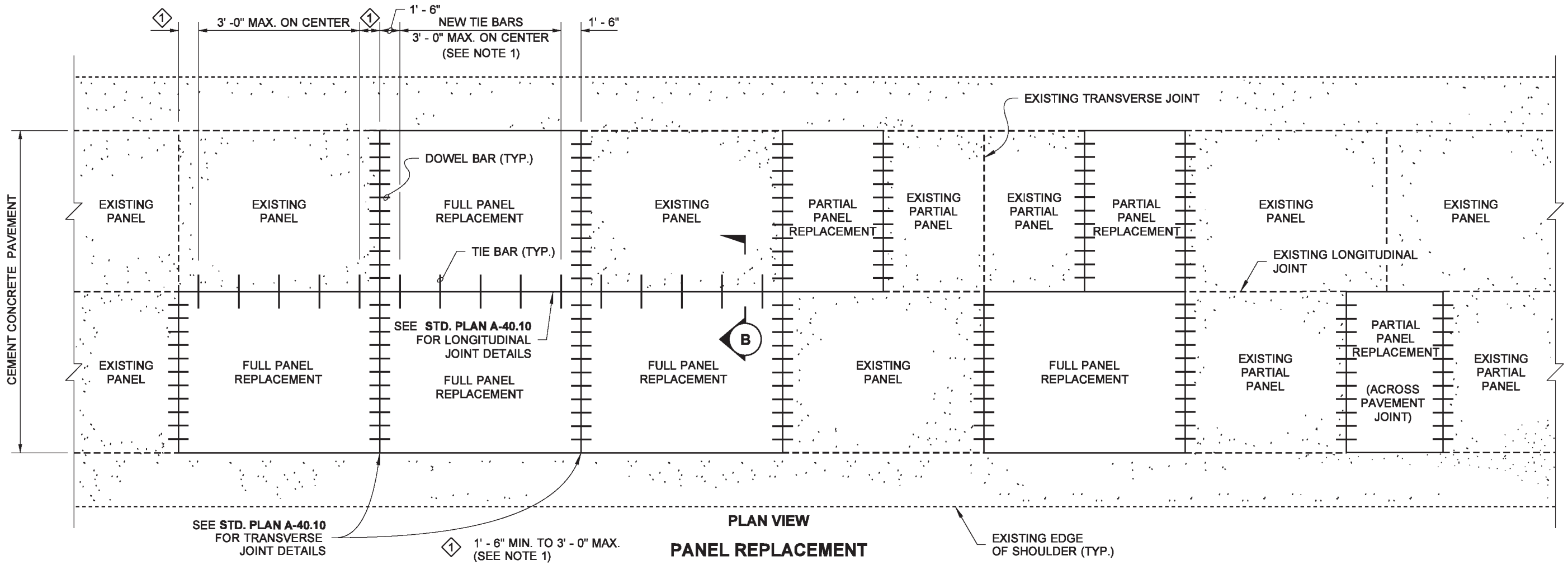

PLAN VIEW

PANEL REPLACEMENT

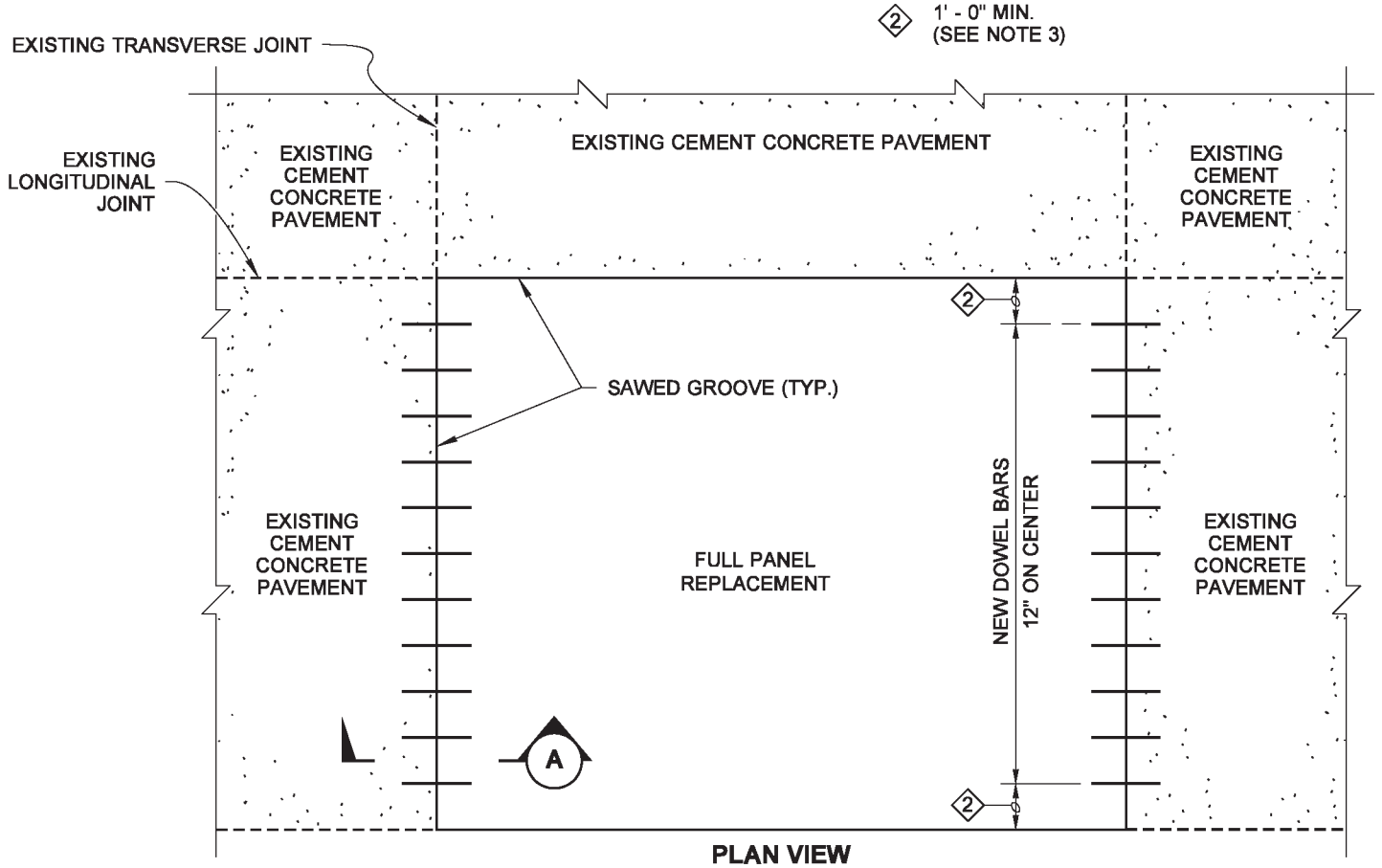

PLAN VIEW

FULL PANEL REPLACEMENT DETAIL

NOTES

1. Install tie bars across longitudinal joints between new panels (complete and partial) and existing cement concrete pavement lane or shoulder when three or more adjacent panels are replaced. Place new tie bars between existing tie bars.Tie bars are not installed between cement concrete pavement and hot mix asphalt shoulders.
2. Place a bond breaking material such as polyethylene film, roofing paper or other material approved by the Engineer along all existing concrete surfaces and between the bottom of the slab and bases prior to placing concrete.
3. Place new dowel bars between existing dowel bars.The 1' - 0" dimension from the edge of the panel may be increased by 6" (in) to avoid bar in existing panel.
4. Bars shall meet the requirements of **Standard Specification 9.07.5(1) or 9.07.5(2)**

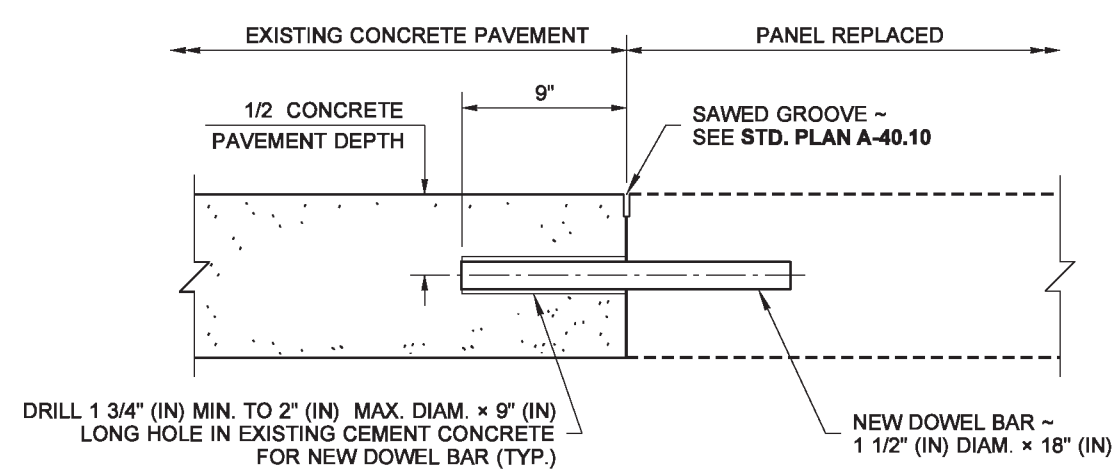

SECTION A

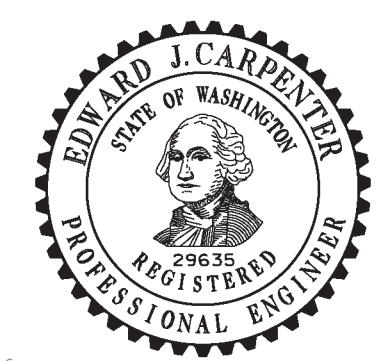

Carpenter, Jeff
Jun 12 2014 12:48 PM

CEMENT CONCRETE PAVEMENT REHABILITATION STANDARD PLAN A-60.10-02

SHEET 1 OF 2 SHEETS

APPROVED FOR PUBLICATION
Bakotich, Pasco
Jun 17 2014 9:33 AM
STATE DESIGN ENGINEER

Washington State Department of Transportation

DRAWN BY: FERN LIDDELL

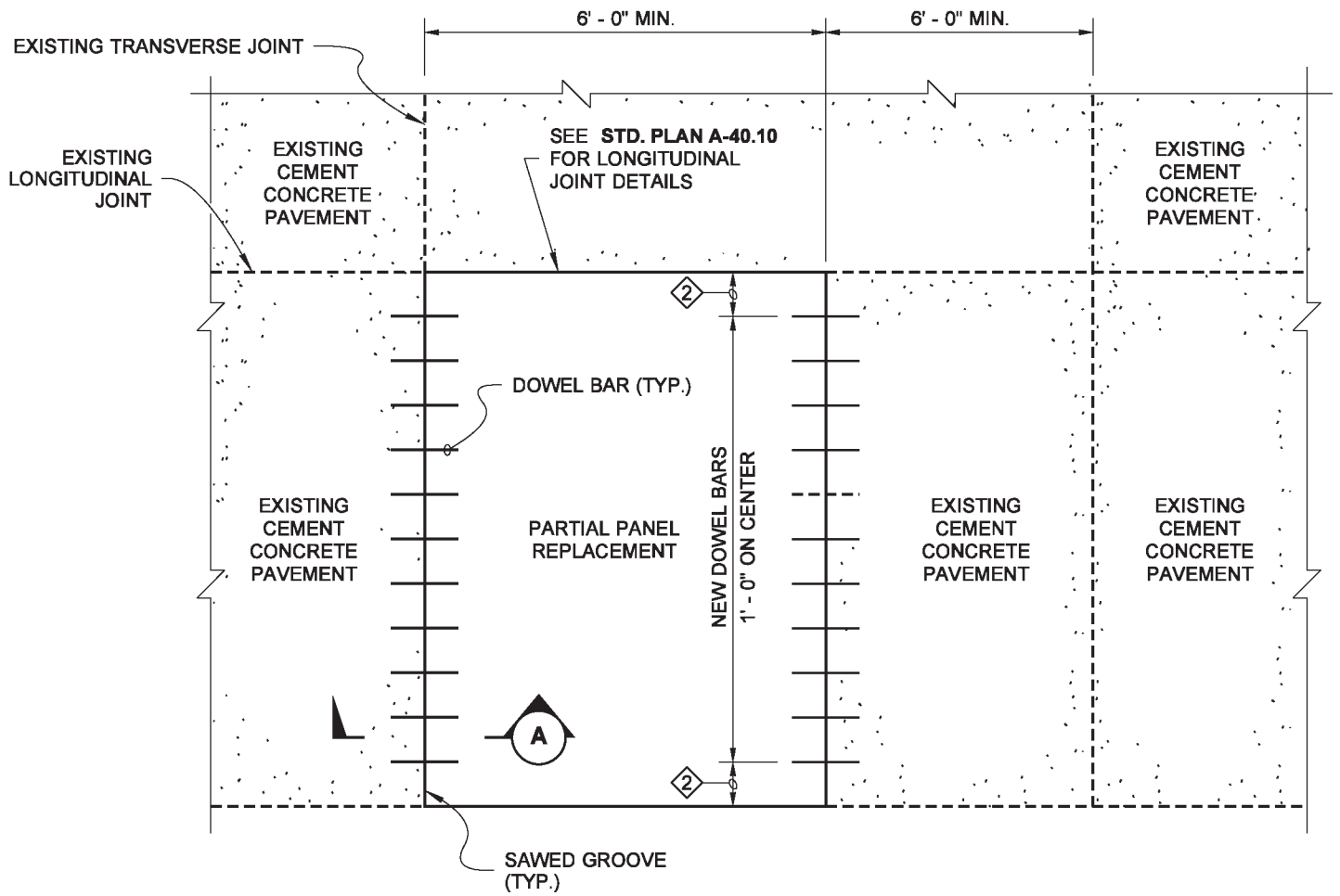

PLAN VIEW

PARTIAL PANEL REPLACEMENT
WITHOUT JOINT REPLACEMENT

2 1' - 0" MIN. (SEE NOTE 3)

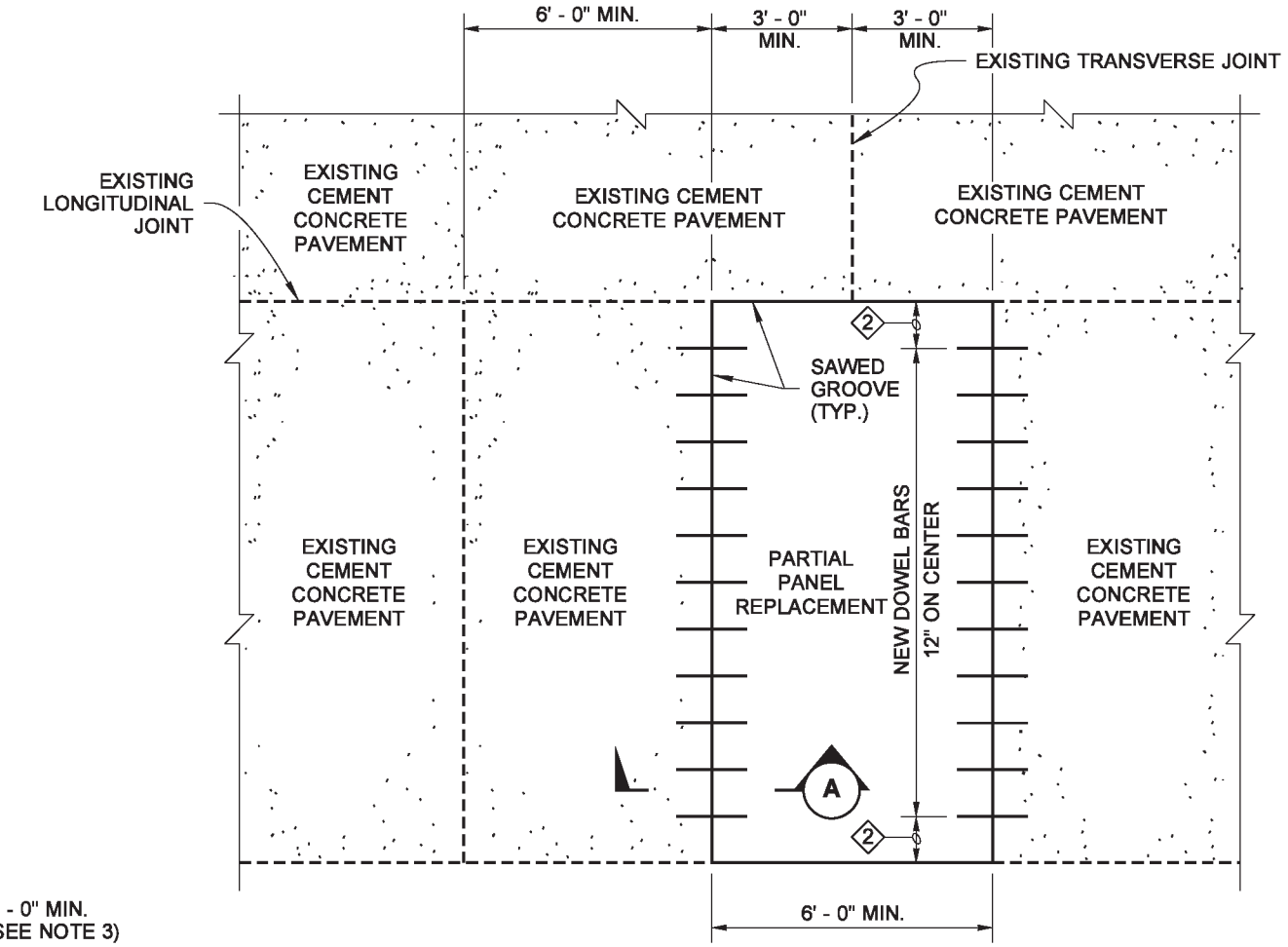

PLAN VIEW

PARTIAL PANEL REPLACEMENT
WITH JOINT REPLACEMENT

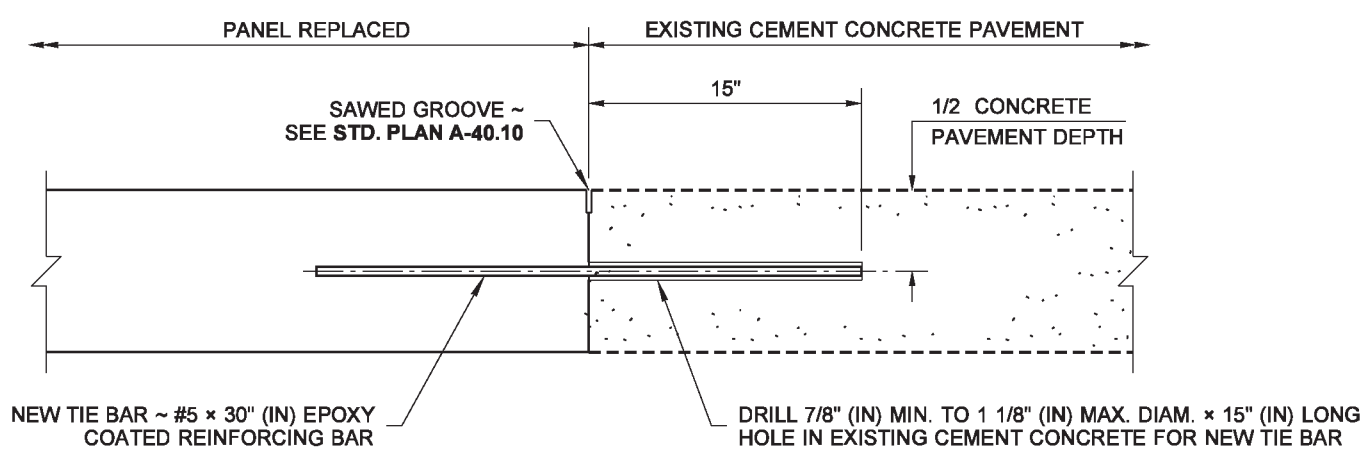

SECTION B

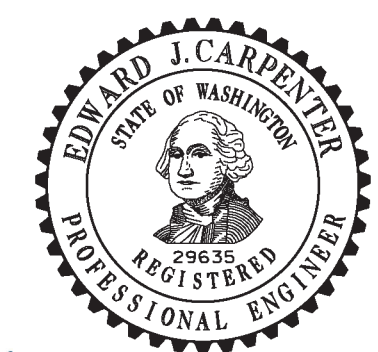

Carpenter, Jeff
Jun 12 2014 12:49 PM

CEMENT CONCRETE PAVEMENT REHABILITATION STANDARD PLAN A-60.10-02

SHEET 2 OF 2 SHEETS

APPROVED FOR PUBLICATION
Bakotich, Pasco
Jun 17 2014 9:33 AM
STATE DESIGN ENGINEER
Washington State Department of Transportation

DRAWN BY: FERN LIDDELL

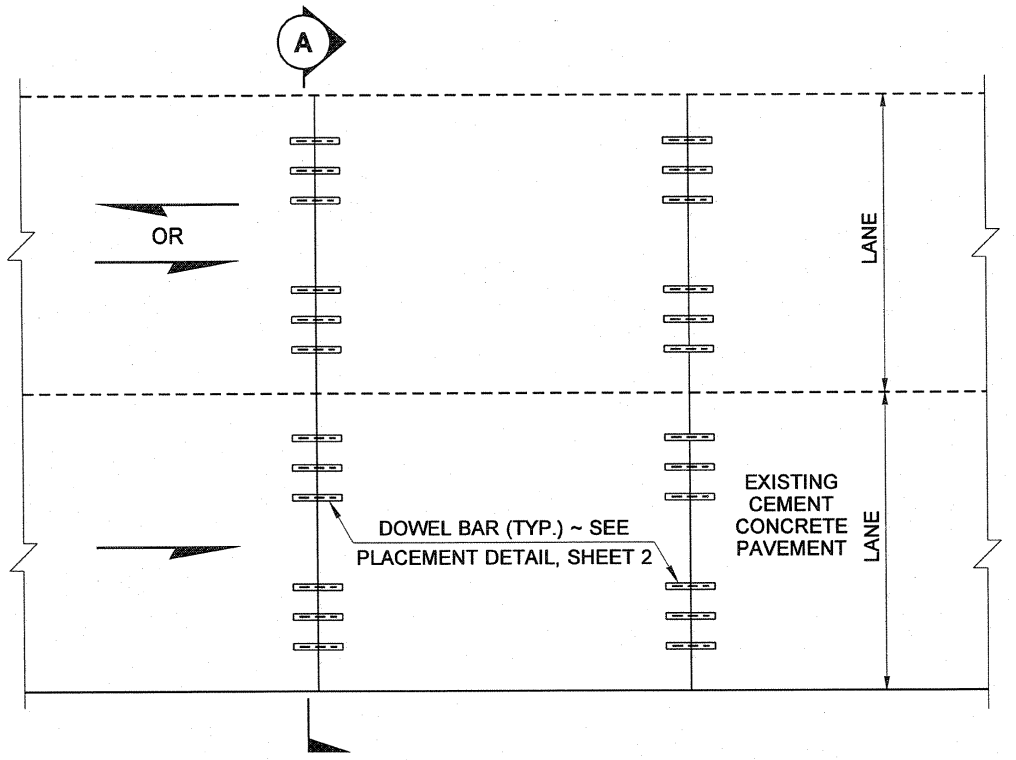

PLAN VIEW

DOWEL BAR RETROFIT

FOR TWO LANE DIVIDED HIGHWAY (ONE WAY TRAFFIC)
FOR EACH LANE IN UNDIVIDED HIGHWAY (TWO WAY TRAFFIC)

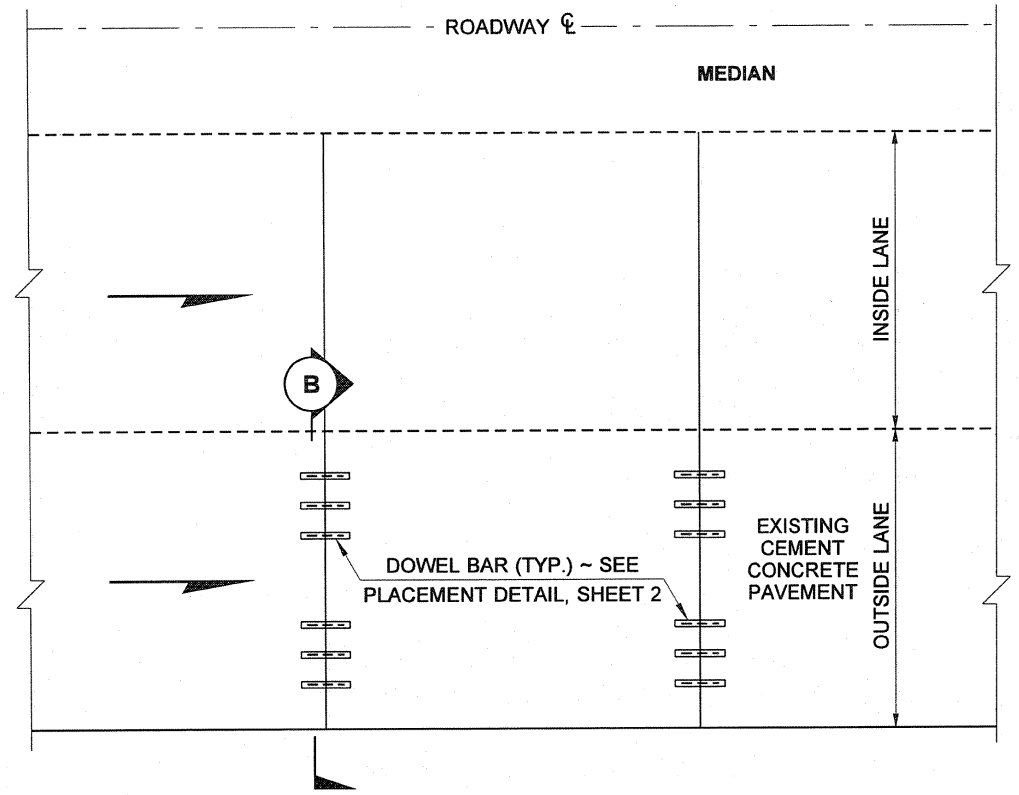

PLAN VIEW

DOWEL BAR RETROFIT FOR ONE LANE

DIVIDED HIGHWAY (ONE WAY TRAFFIC)

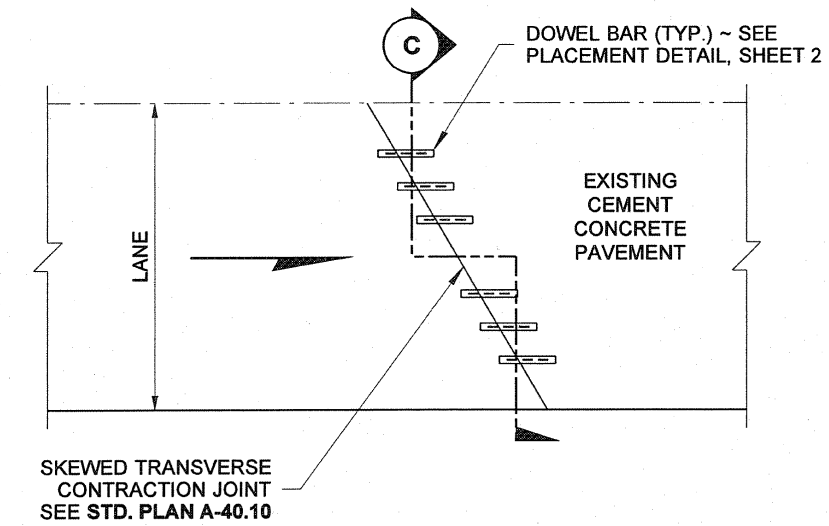

PLAN VIEW

SKEWED JOINT DETAIL

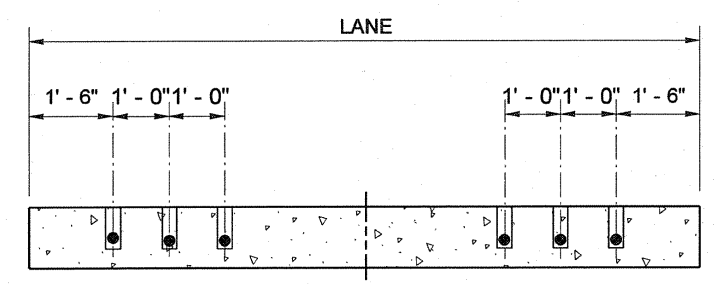

SECTION C

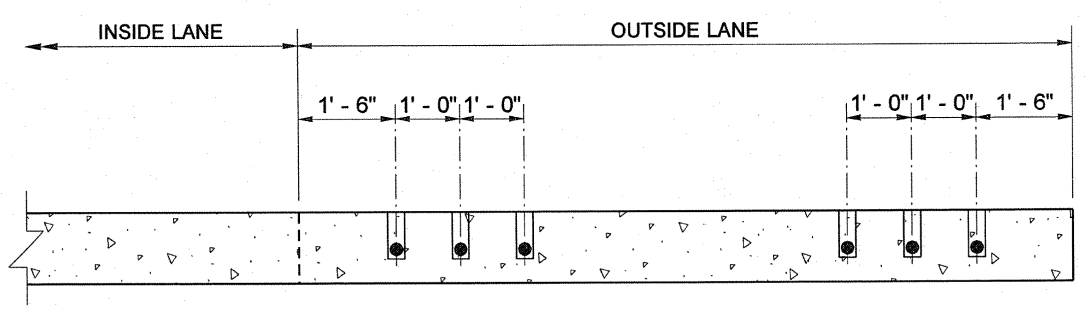

SECTION B

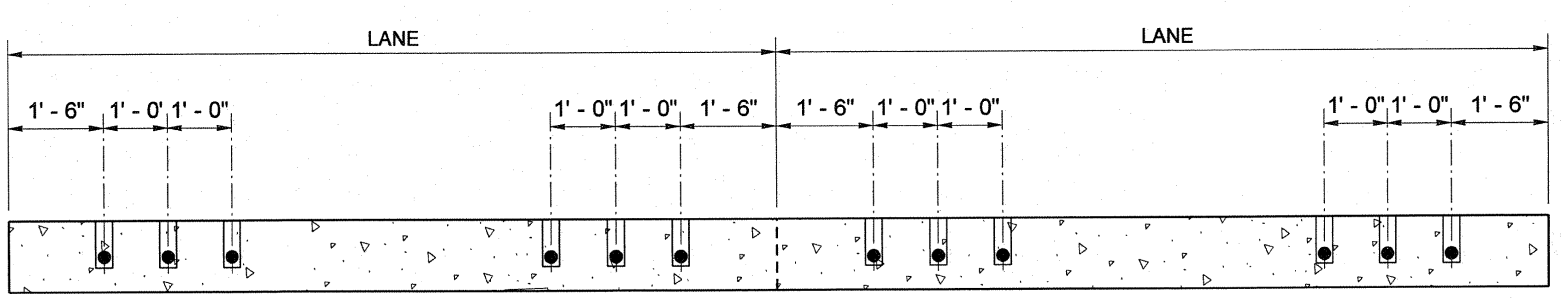

SECTION A

DOWEL BAR RETROFIT FOR CEMENT CONCRETE PAVEMENT STANDARD PLAN A-60.20-02

SHEET 1 OF 2 SHEETS

APPROVED FOR PUBLICATION

STATE DESIGN ENGINEER — DATE 6/2/11

Washington State Department of Transportation

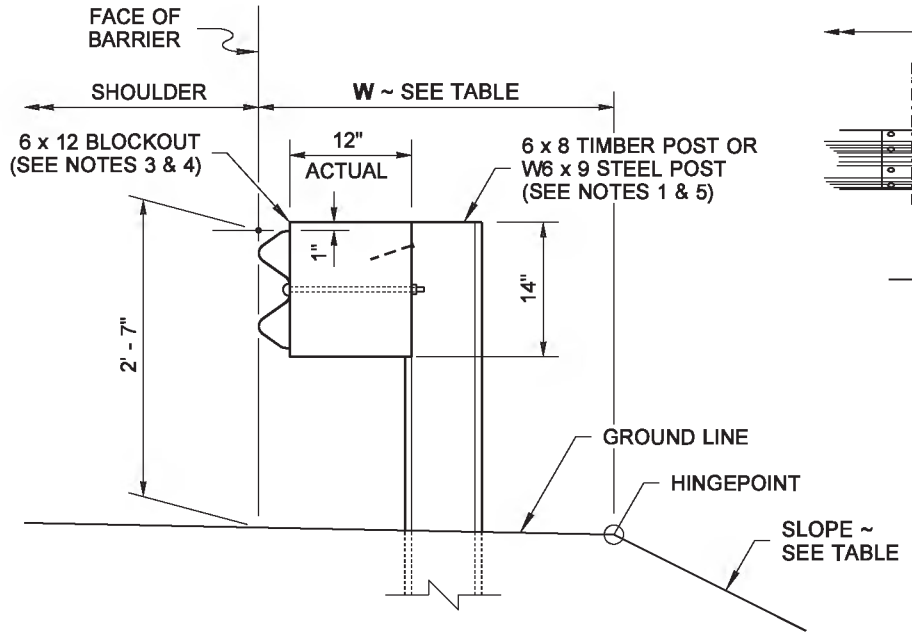

TYPICAL SECTION ~ WITHOUT CURB
(6' - 0" LONG POSTS)

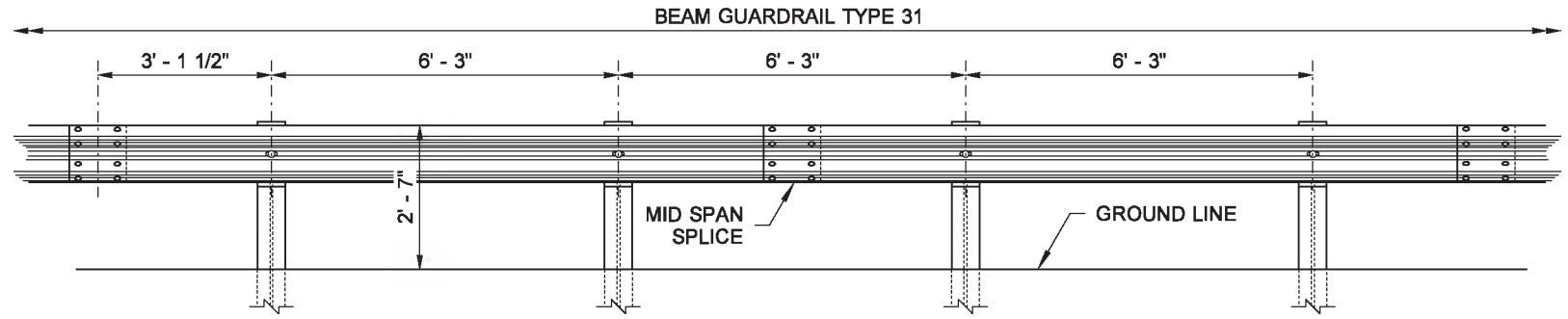

TYPICAL ELEVATION

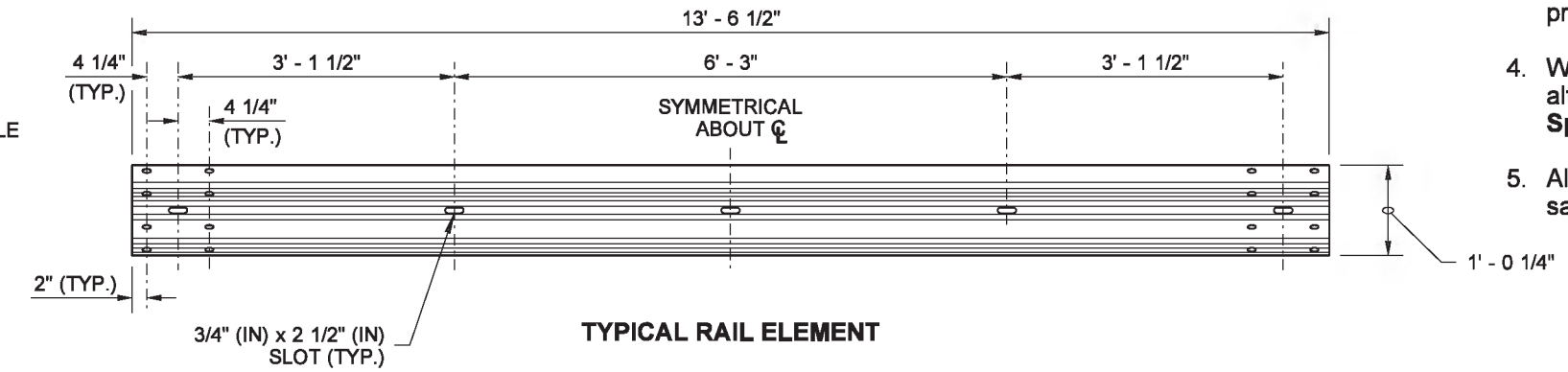

TYPICAL RAIL ELEMENT

NOTES

1. Refer to **Standard Plans C-1** and **C-1b** for additional details not shown on this plan.
2. Extend shoulder pavement to provide a base for the extruded curb. See Contract Plans for exceptions to distances shown.
3. Use a single block or combination of blocks (no more than 2) to achieve the actual 12" (in) offset. See **Standard Specification 9-16.3(2)**. Wood blocks shall be secured to the posts with anti-rotation nails. If combination blocks are used, the adjacent blocks shall be toenailed with two 16d galvanized nails to prevent block rotation.
4. Wood blocks are shown. Blocks of an approved alternative material may be used. See **Standard Specification 9-16.3(2).**
5. All posts for any standard barrier run shall be of the same type: timber or steel.

SLOPE \ EMBANKMENT TABLE	
SLOPE	W (FT)
2H : 1V OR FLATTER	2.5' MIN.
STEEPER THAN 2H : 1V BUT NOT STEEPER THAN 1H : 1V	4.0' MIN.

DRAWN BY: FERN LIDDELL

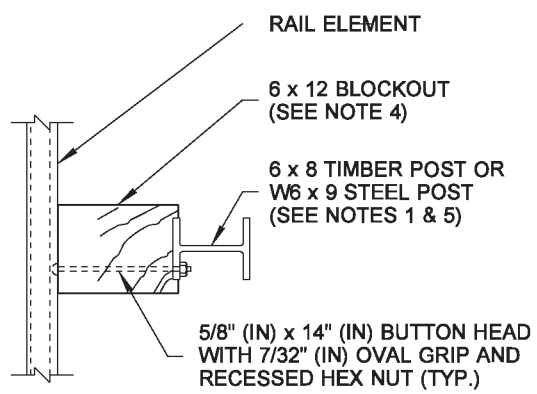

PLAN VIEW

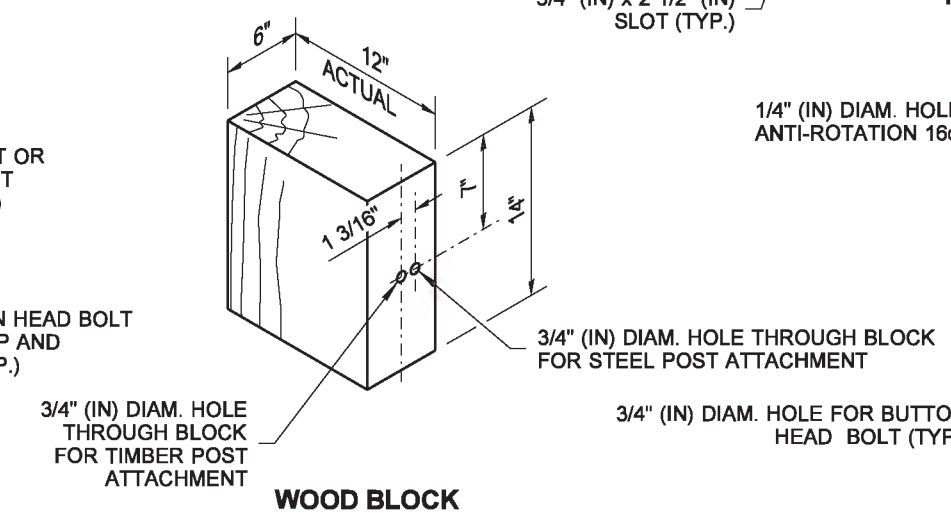

WOOD BLOCK

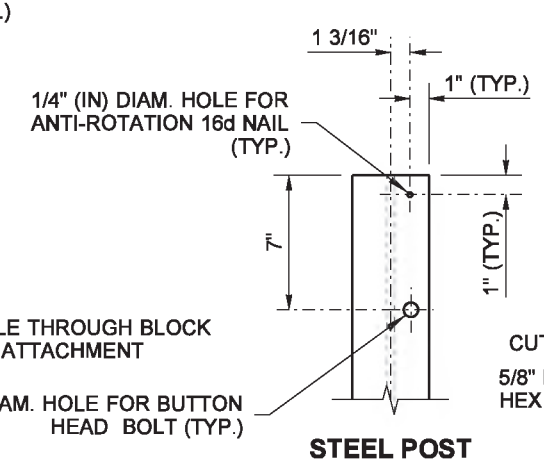

STEEL POST

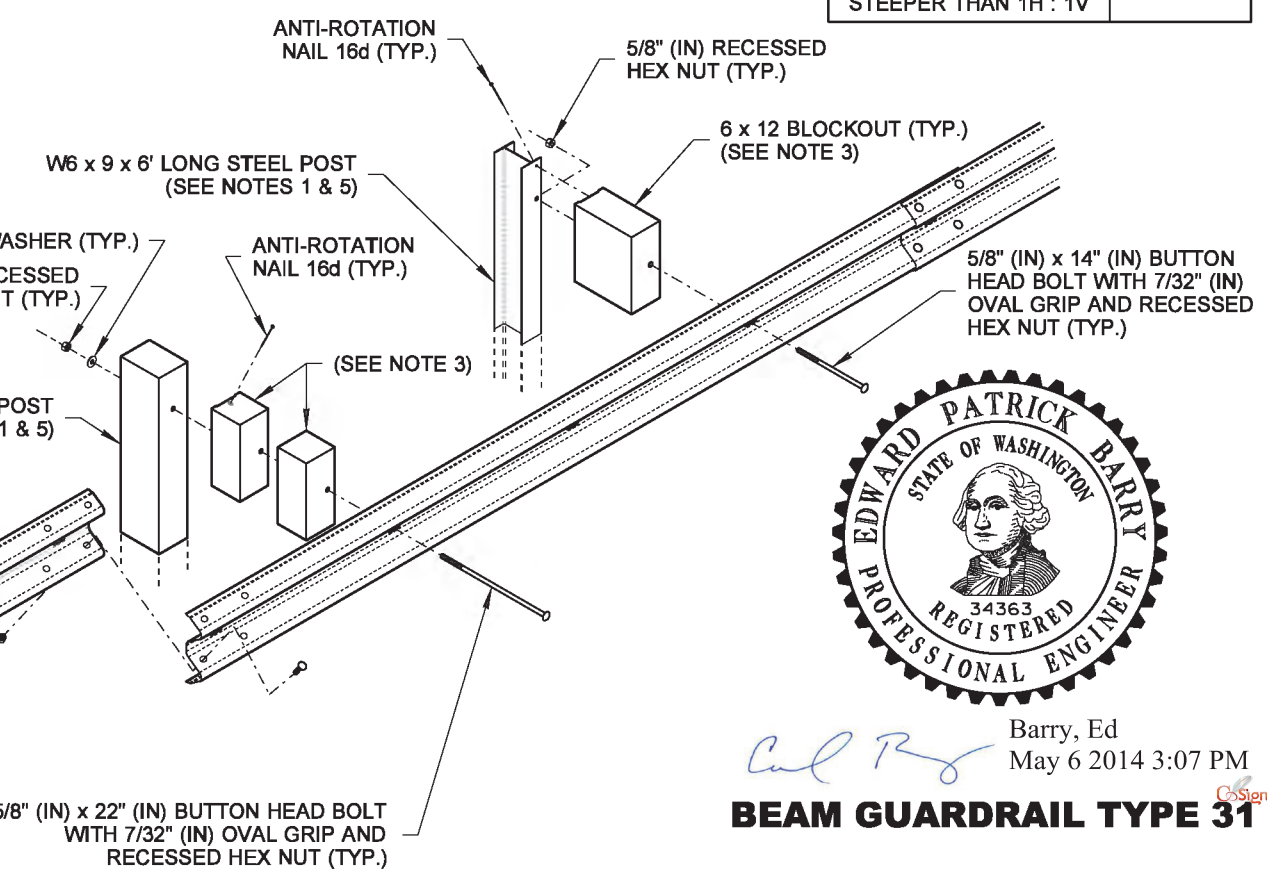

ISOMETRIC VIEW

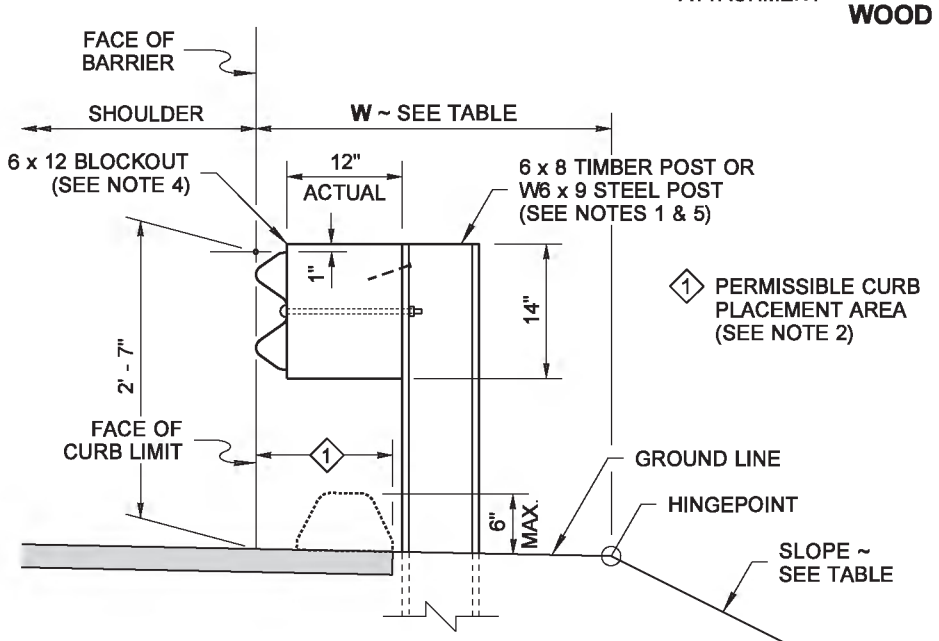

ELEVATION VIEW

TYPICAL SECTION ~ WITH CURB
(6' - 0" LONG POSTS)

Barry, Ed
May 6 2014 3:07 PM

BEAM GUARDRAIL TYPE 31

STANDARD PLAN C-20.10-02

SHEET 1 OF 1 SHEET

APPROVED FOR PUBLICATION
Bakotich, Pasco
Jun 11 2014 1:04 PM
STATE DESIGN ENGINEER
Washington State Department of Transportation

DRAWN BY: FERN LIDDELL

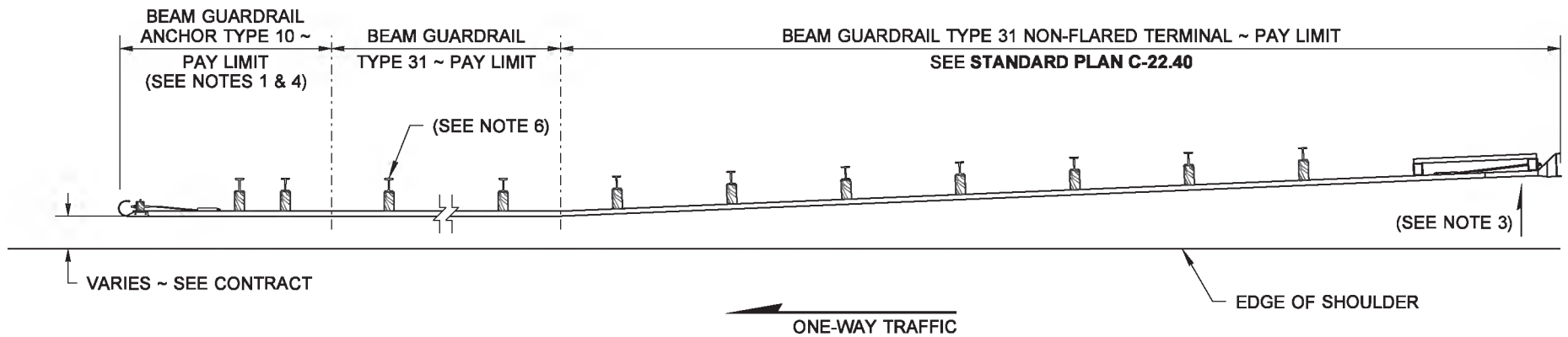

CASE 1-31

NOTES

1. For component details, see **Standard Plan C-23.60**.
2. For terminal type and details, see Contract Plans and applicable drawings.
3. The slope from the edge of the shoulder into the face of the guardrail cannot exceed 10H : 1V when the face of the guardrail is less than 12' - 0" from the edge of the shoulder.
4. For one-way traffic and where a crashworthy terminal is not required, use the Beam Guardrail Anchor Type 10; see **Standard Plan C-23.60**.
5. Where a crashworthy terminal is required, use a Beam Guardrail Type 31 Non-Flared Terminal; see **Standard Plan C-22.40**.
6. Timber or steel post. Steel post shown.

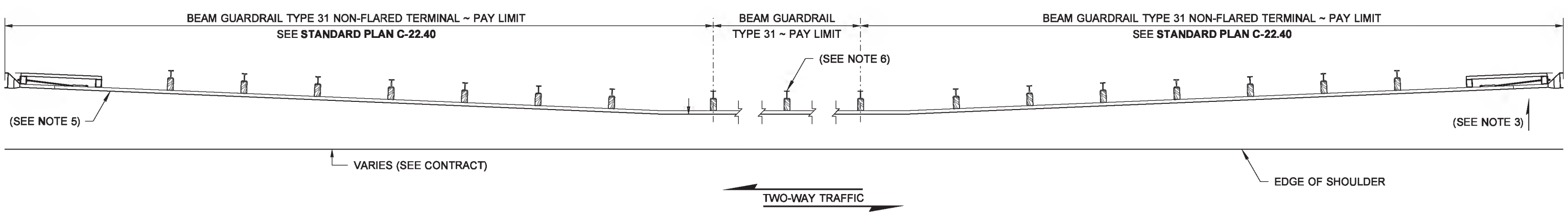

CASE 2-31

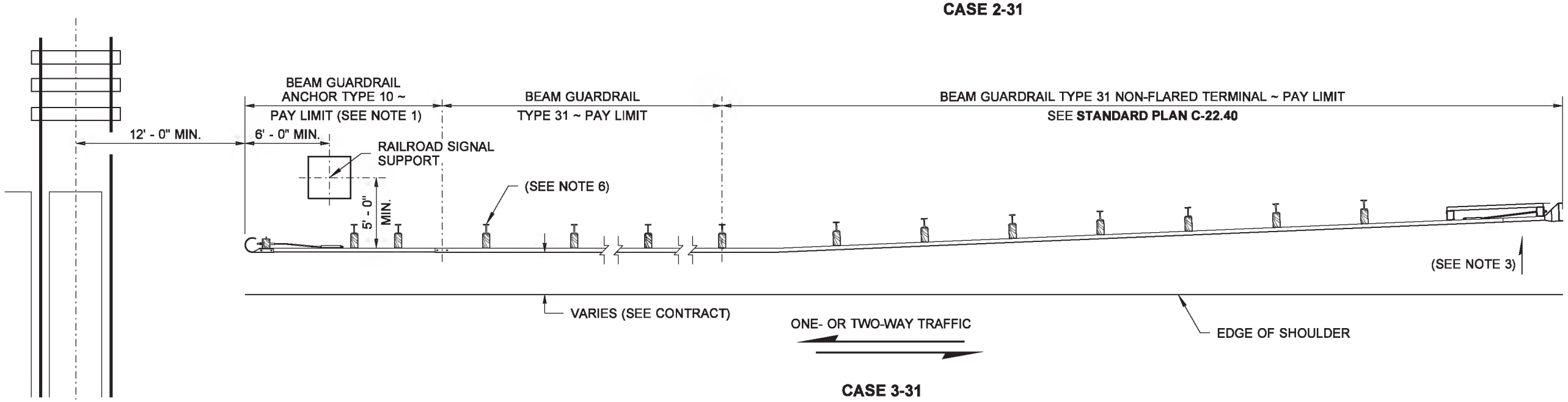

CASE 3-31

Barry, Ed
May 2 2014 1:18 PM

BEAM GUARDRAIL TYPE 31 PLACEMENT (CASES 1-31, 2-31 & 3-31) STANDARD PLAN C-20.14-03

SHEET 1 OF 1 SHEET

APPROVED FOR PUBLICATION

Bakotich, Pasco
Jun 11 2014 1:05 PM

STATE DESIGN ENGINEER

Washington State Department of Transportation

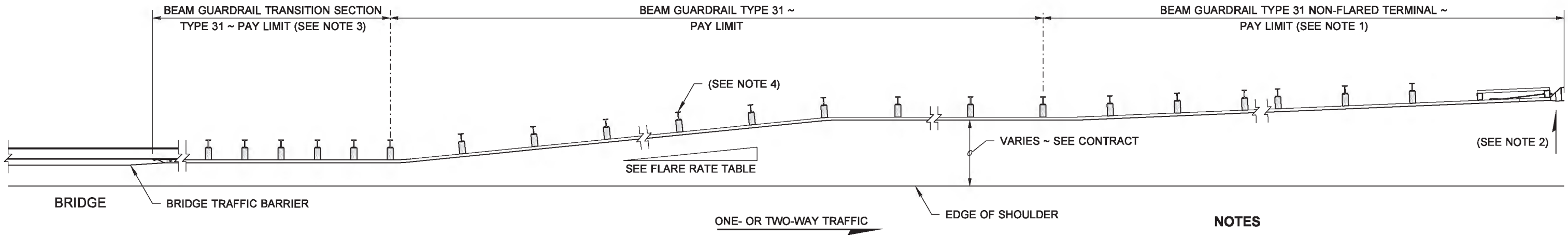

CASE 4 - 31

DRAWN BY: FERN LIDDELL

NOTES

1. For details, see **Standard Plan C-22.40**.
2. The slope from the edge of the shoulder into the face of the guardrail should not be steeper than 10H : 1V when the guardrail is within 12' - 0" from the edge of the shoulder.
3. See Contract for Beam Guardrail Transition Section type and Connection to Bridge Traffic Barrier or Concrete Barrier. See **Standard Plan C-24.10** for connection details.
4. Timber or steel post. Steel post shown.

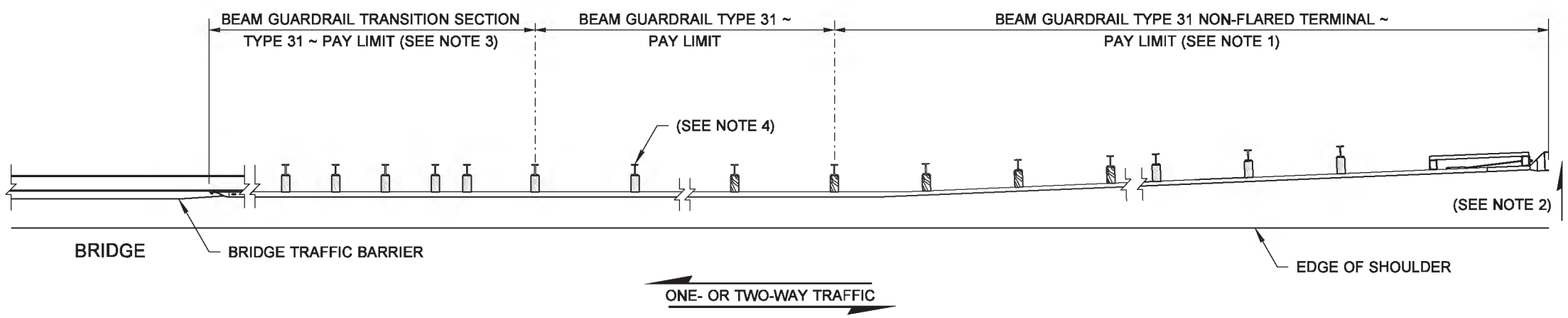

CASE 5 - 31

FLARE RATE TABLE	
POSTED SPEED (MPH)	RATE (FT)
70	15 : 1
60	14 : 1
55	12 : 1
50	11 : 1
45	10 : 1
40 OR LESS	9 : 1

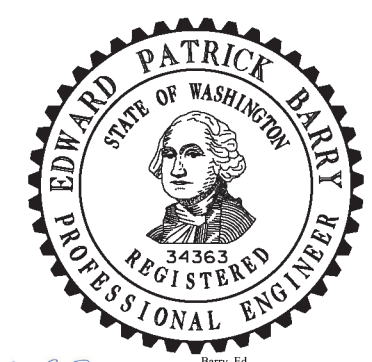

Barry, Ed
May 2 2014 1:23 PM

BEAM GUARDRAIL TYPE 31 PLACEMENT (CASES 4-31 & 5-31)

STANDARD PLAN C-20.15-02

SHEET 1 OF 1 SHEET

APPROVED FOR PUBLICATION
Bakotich, Pasco
Jun 11 2014 1:06 PM

STATE DESIGN ENGINEER

Washington State Department of Transportation

DRAWN BY: FERN LIDDELL

NOTES

1. The slope from the edge of the shoulder into the face of the guardrail should not exceed 10H : 1V when the guardrail is within 12' - 0" from the edge of the shoulder.
2. For details, see **Standard Plan C-23.60**.
3. For details, see **Standard Plan C-22.40**.
4. Timber or steel post. Steel post shown.

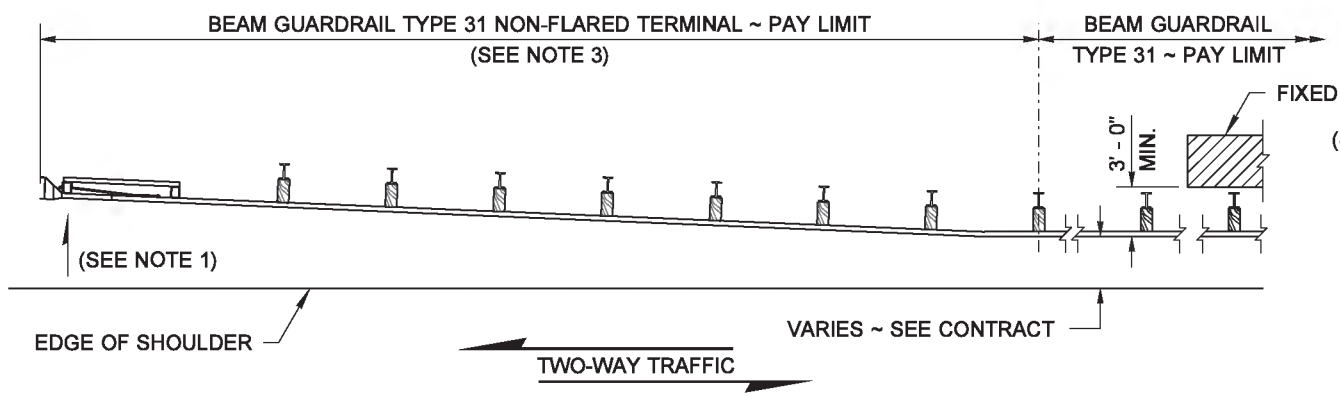

CASE 10A - 31
(TRAILING END)

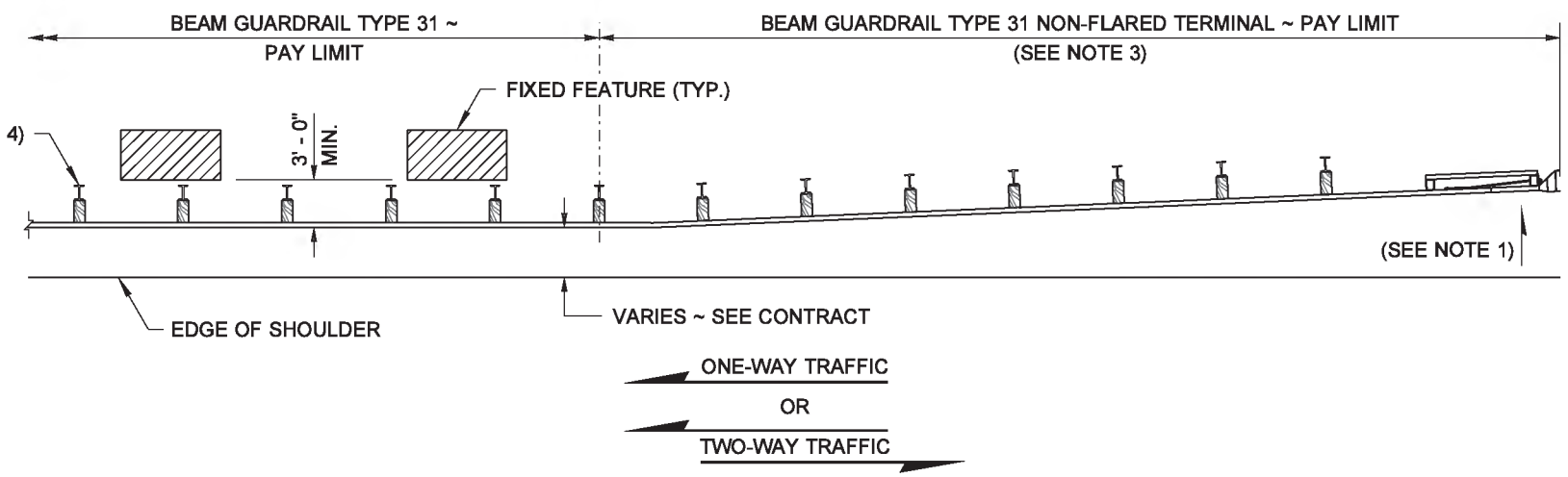

CASE 10A-31, 10B-31, OR 10C-31
(APPROACH END)

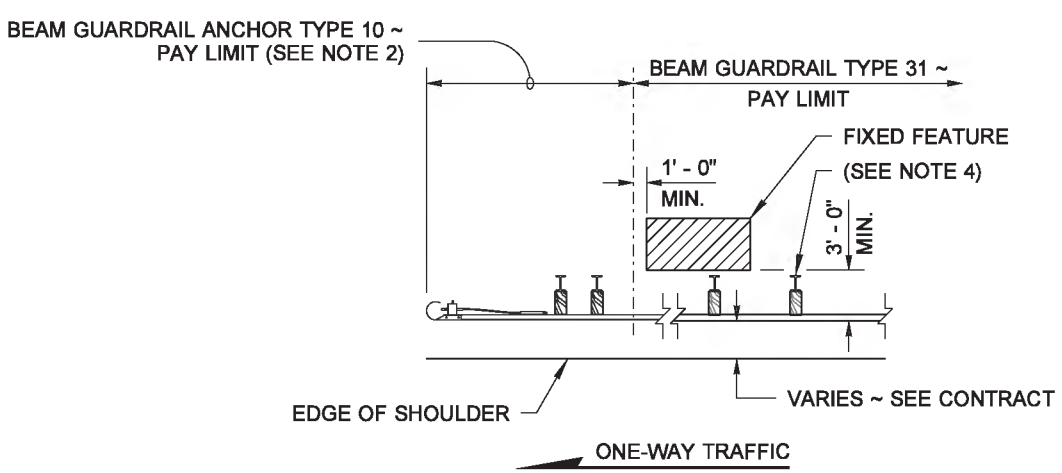

CASE 10B-31
(TRAILING END)

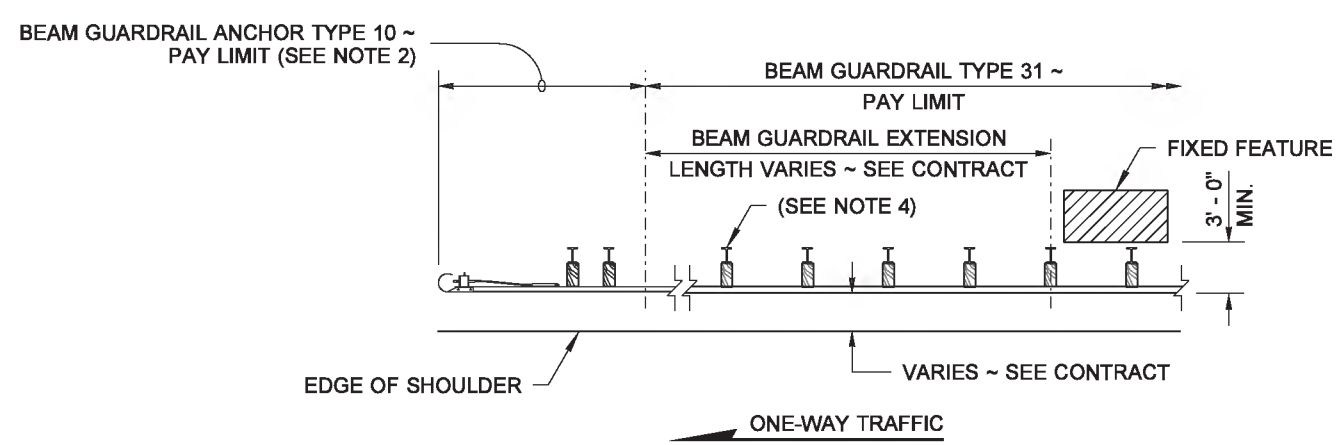

CASE 10C-31
(TRAILING END)

EDWARD PATRICK BARRY
STATE OF WASHINGTON
34363
REGISTERED
PROFESSIONAL ENGINEER

Barry, Ed
May 2 2014 2:06 PM

BEAM GUARDRAIL TYPE 31 PLACEMENT (CASES 10A-31, 10B-31 & 10C-31)
STANDARD PLAN C-20.18-02

SHEET 1 OF 1 SHEET

APPROVED FOR PUBLICATION
Bakotich, Pasco
Jun 11 2014 1:07 PM
STATE DESIGN ENGINEER
Washington State Department of Transportation

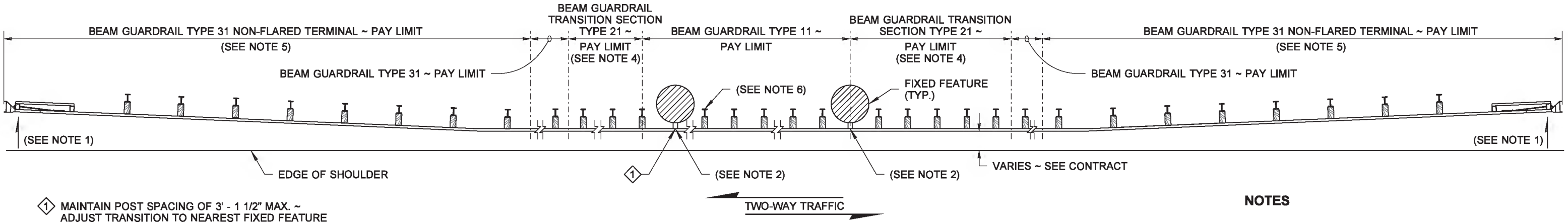

1 MAINTAIN POST SPACING OF 3' - 1 1/2" MAX. ~
ADJUST TRANSITION TO NEAREST FIXED FEATURE

CASE 11A-31

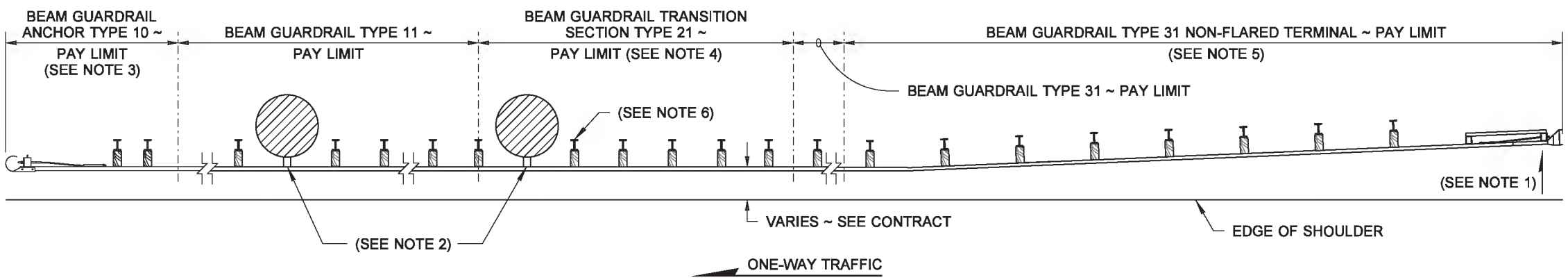

CASE 11B-31

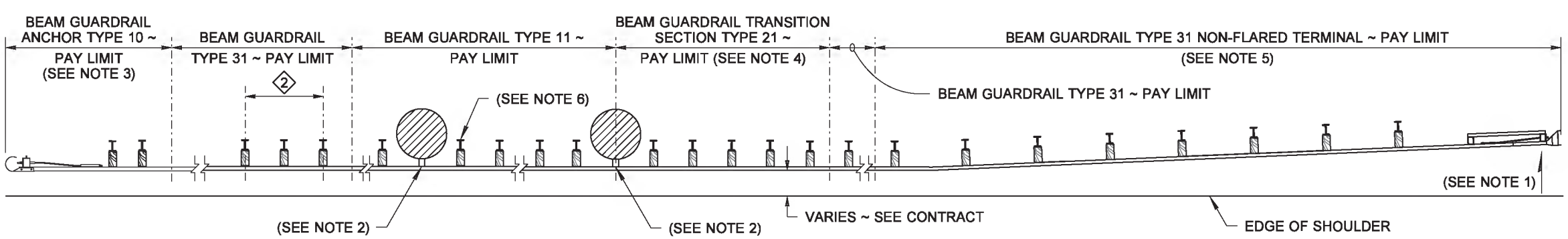

2 REDUCER ELEMENT TYPE C
(TYPE 31) ~ FOR DETAILS,
SEE **STD. PLAN C-25.20**

CASE 11C-31

DRAWN BY: FERN LIDDELL

NOTES

1. The slope from the edge of the shoulder into the face of the guardrail should not exceed 10H : 1V when the guardrail is within 12' - 0" from the edge of the shoulder.
2. Attach the standard wood block to the rail using two 5/8" (in) × 4" (in) lag bolts.
3. Beam Guardrail Anchor Type 10 (W-Beam) or Type 10 (Thrie Beam) required. For details, see **Standard Plan C-23.60**.
4. For details, see **Standard Plan C-25.20**.
5. For details, see **Standard Plan C-22.40**.
6. Timber or steel post. Steel post shown.

Barry, Ed
May 2 2014 2:09 PM

BEAM GUARDRAIL TYPE 31 PLACEMENT (CASES 11A-31, 11B-31 & 11C-31)
STANDARD PLAN C-20.19-02

SHEET 1 OF 1 SHEET

APPROVED FOR PUBLICATION
Bakotich, Pasco
Jun 11 2014 1:07 PM
STATE DESIGN ENGINEER
Washington State Department of Transportation

DRAWN BY: FERN LIDDELL

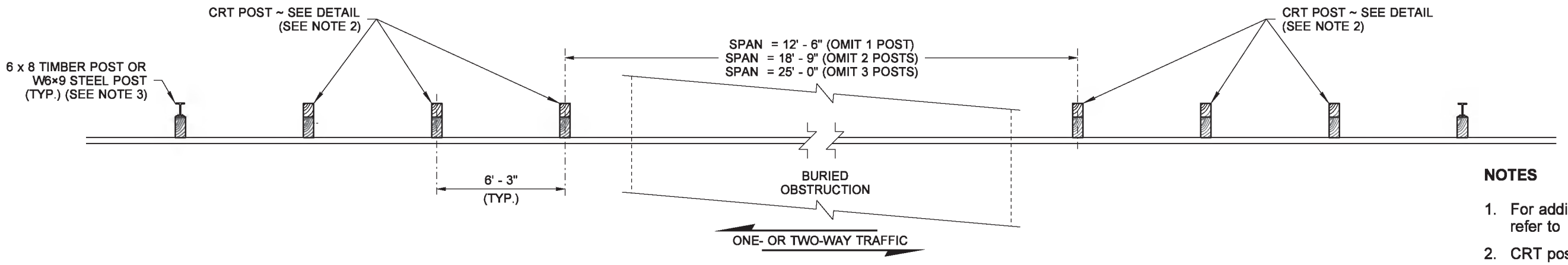

PLAN VIEW

NOTES

1. For additional details not shown on this plan, refer to **Standard Plan C-20.10.**
2. CRT post to be wood only.
3. For additional details not shown, see **Standard Plan C-1b**.

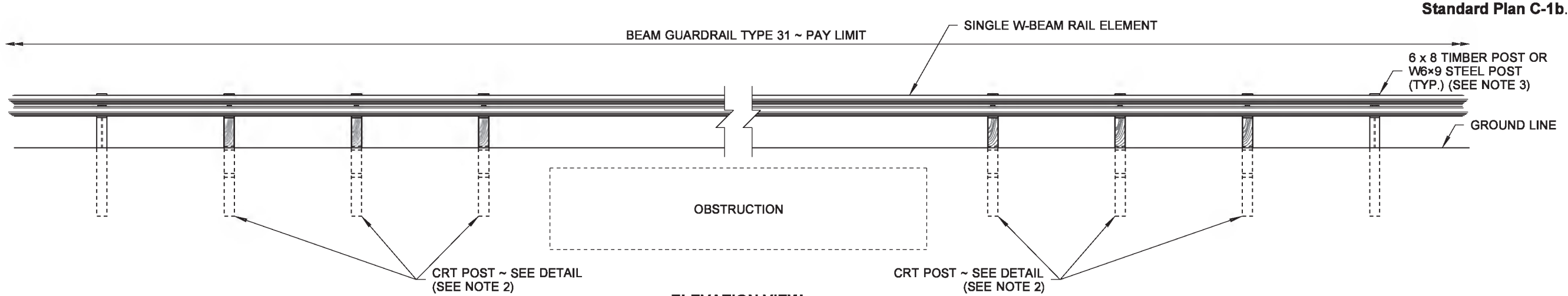

ELEVATION VIEW

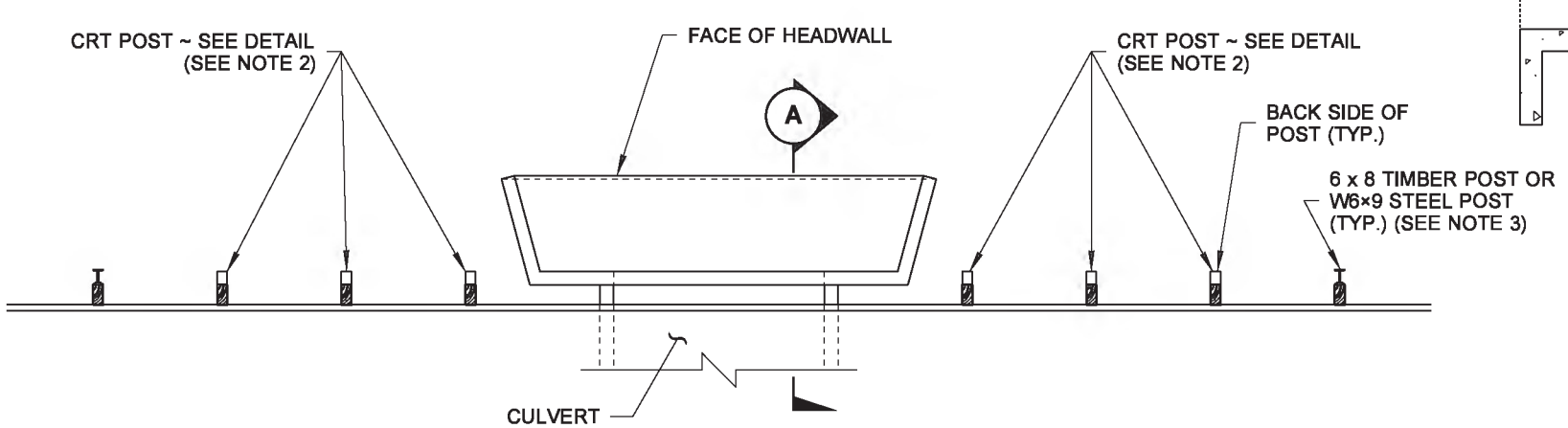

SPAN WITH HEADWALL DETAIL

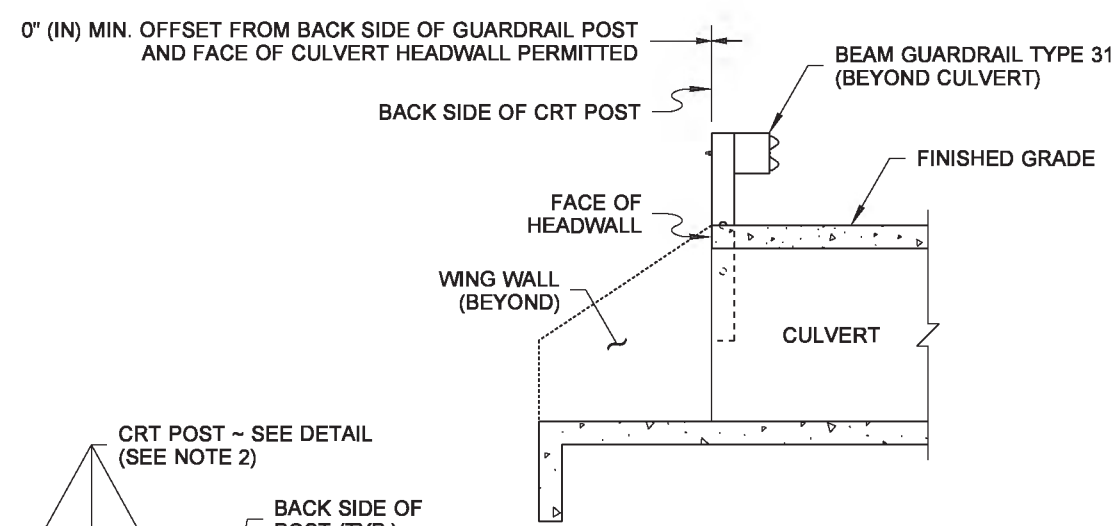

SECTION A

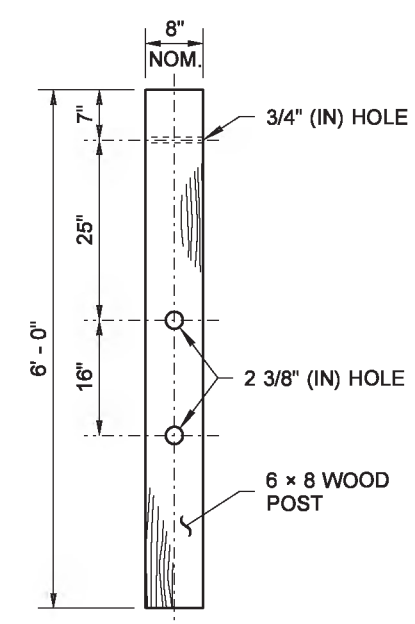

CONTROLLED RELEASING TERMINAL (CRT) POST DETAIL

EDWARD PATRICK BARRY
STATE OF WASHINGTON
34363
REGISTERED
PROFESSIONAL ENGINEER

Barry, Ed
May 6 2014 3:09 PM

BEAM GUARDRAIL TYPE 31 PLACEMENT 12' - 6", 18' - 9", OR 25' - 0" SPAN

STANDARD PLAN C-20.40-04

SHEET 1 OF 1 SHEET

APPROVED FOR PUBLICATION
Bakotich, Pasco
Jun 11 2014 1:08 PM

STATE DESIGN ENGINEER

Washington State Department of Transportation

NOTES

1. Attach Guardrail Post to Box Culvert with 7/8" (in) diameter high-strength threaded rods 8 1/2" (in) in length with resin-bonded anchors.
2. Wood blocks are shown. Blocks of an approved alternative may be used. See **Standard Specification 9-16.3(2)**.

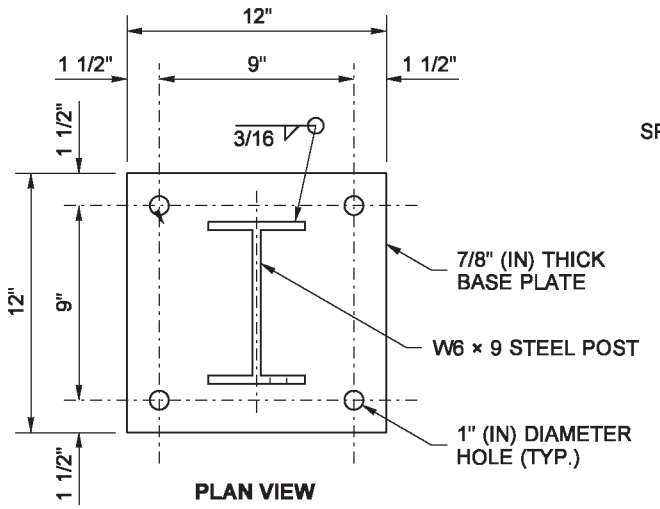

PLAN VIEW

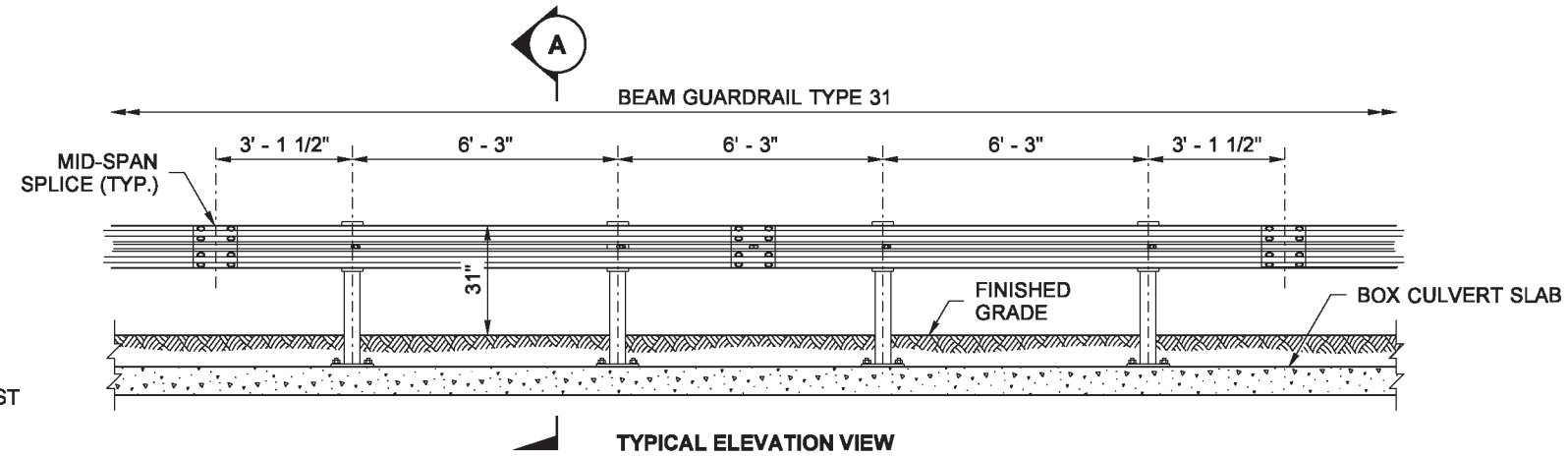

TYPICAL ELEVATION VIEW

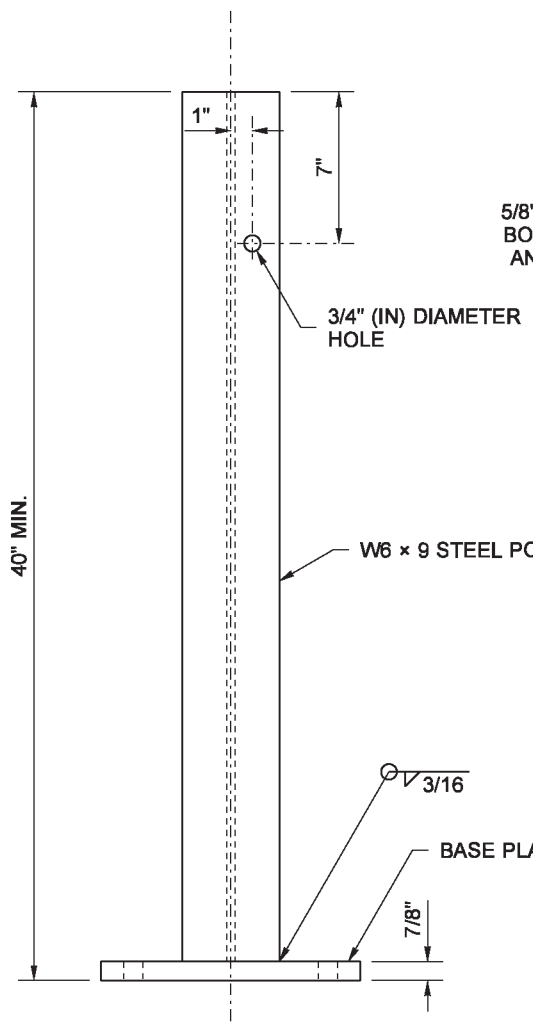

BOX CULVERT POST

ELEVATION VIEW

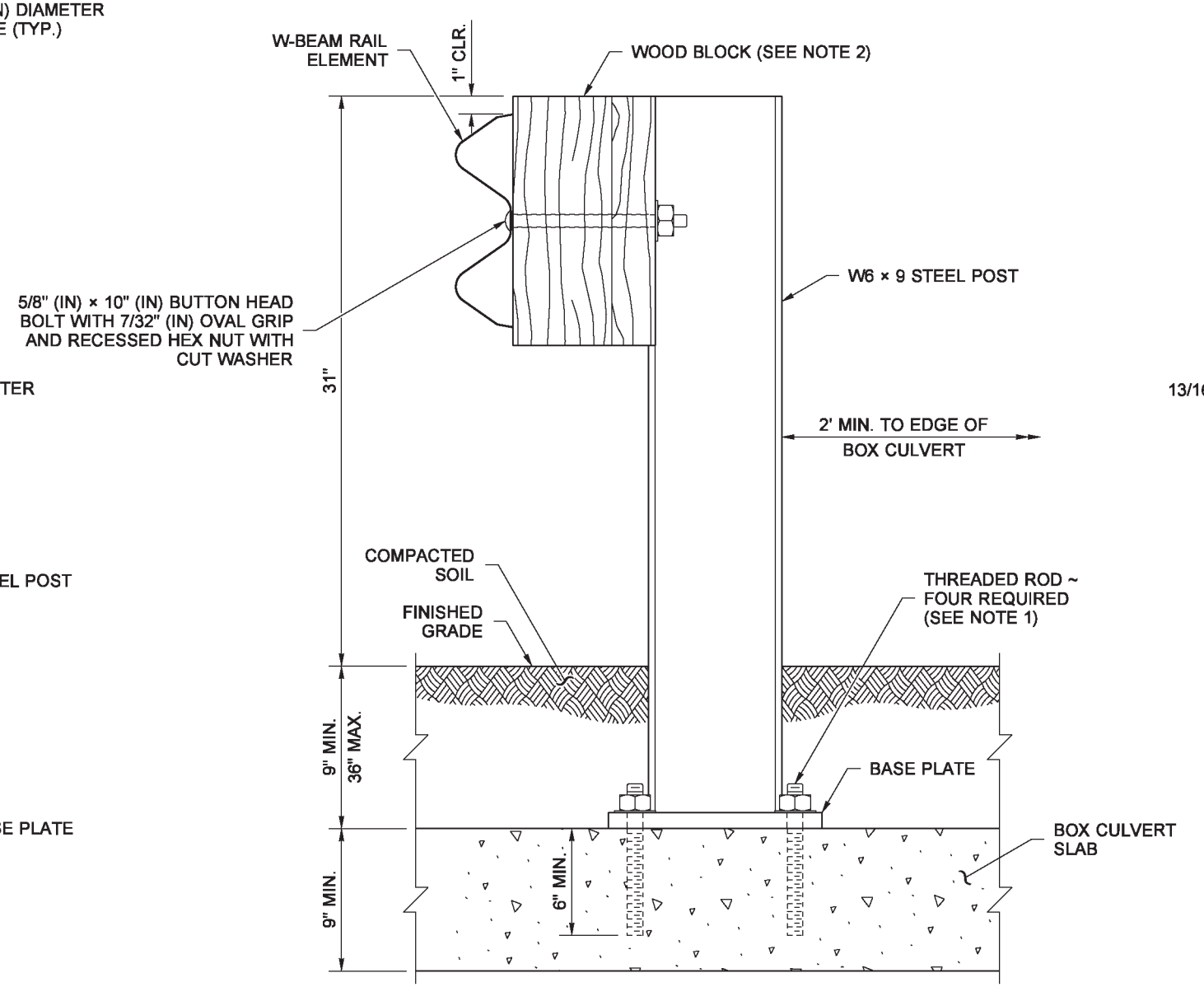

BOX CULVERT GUARDRAIL STEEL POST TYPE 31

SECTION A

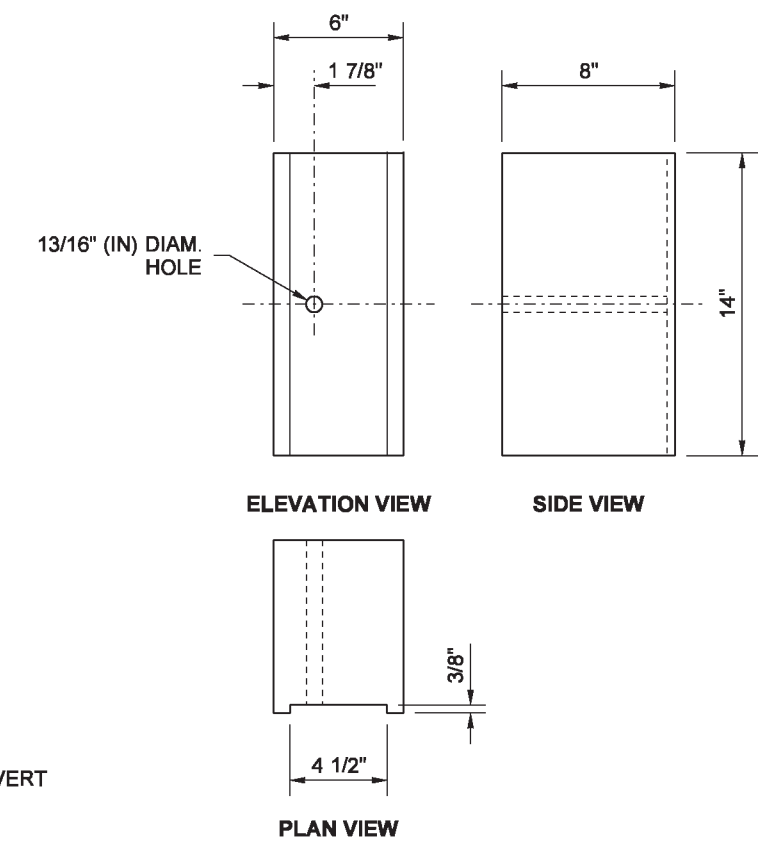

ELEVATION VIEW

SIDE VIEW

PLAN VIEW

WOOD BLOCKOUT

(SEE NOTE 2)

Barry, Ed
Jun 30 2014 8:59 AM

BOX CULVERT GUARDRAIL STEEL POST TYPE 31

STANDARD PLAN C-20.41-00

SHEET 1 OF 1 SHEET

APPROVED FOR PUBLICATION
Bakotich, Pasco
Jun 30 2014 3:07 PM

STATE DESIGN ENGINEER

Washington State Department of Transportation

This page left blank intentionally.

DRAWN BY: BILL BERENS

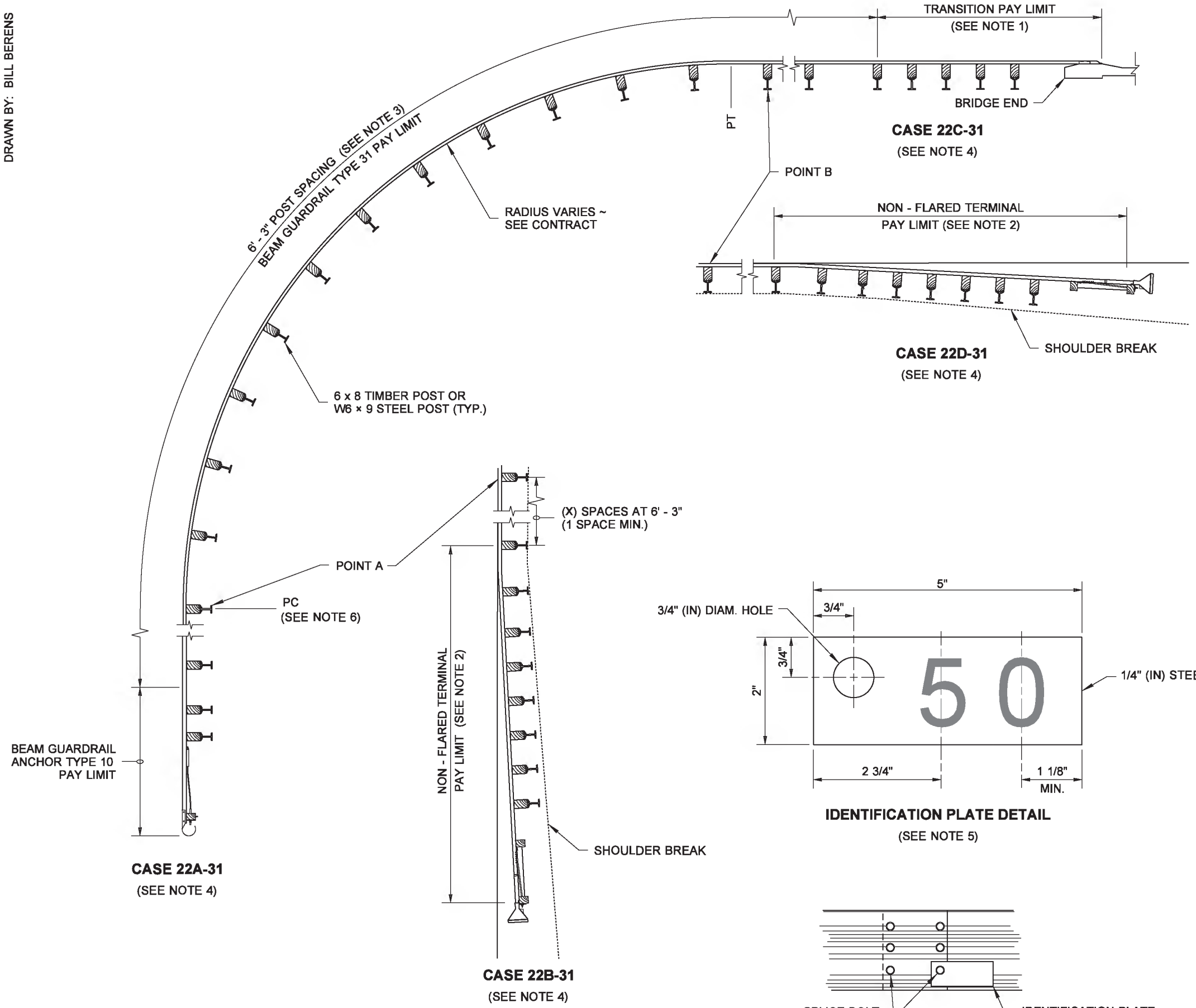

IDENTIFICATION PLATE DETAIL

(SEE NOTE 5)

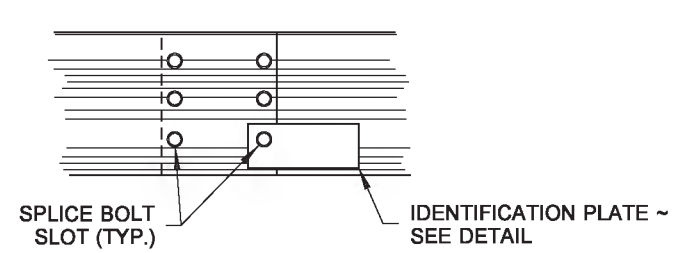

IDENTIFICATION PLATE MOUNTING DETAIL

(SEE NOTE 6)

NOTES

1. See Contract for transition and connection type.
2. For additional installation requirements for Non-Flared Terminal placement, see **Standard Plan C-22.40.**
3. Guardrail installation shall be Beam Guardrail Type 31 with standard post and block. See **Standard Plan C-20.10** for additional details.
4. The first letter of case designation indicates the end treatment on the side road. The second letter indicates the end treatment on the main road. For instance, a terminal on a side road and a bridge connection on the main road would be Case 22BC-31.
5. The radius dimension shall be etched into the plate as shown in the example on the Identification Plate Detail. Numerals shall be 1 1/2" (in) high minimum, and 3/4" (in) wide maximum. Plate shall be galvanized after etching and the letter shall remain permanently legible.
6. The guardrail Identification Plate shall be mounted at the lower splice bolt on the back side of the rail element at the PC of the guardrail radius.

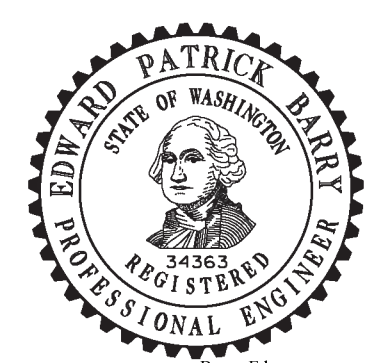

Barry, Ed
May 2 2014 2:20 PM

GUARDRAIL PLACEMENT
STRONG POST ~ TYPE 31
INTERSECTION DESIGN
STANDARD PLAN C-20.42-04

SHEET 1 OF 1 SHEET

APPROVED FOR PUBLICATION
Bakotich, Pasco
Jun 11 2014 1:08 PM

STATE DESIGN ENGINEER

Washington State Department of Transportation

DRAWN BY: FERN LIDDELL

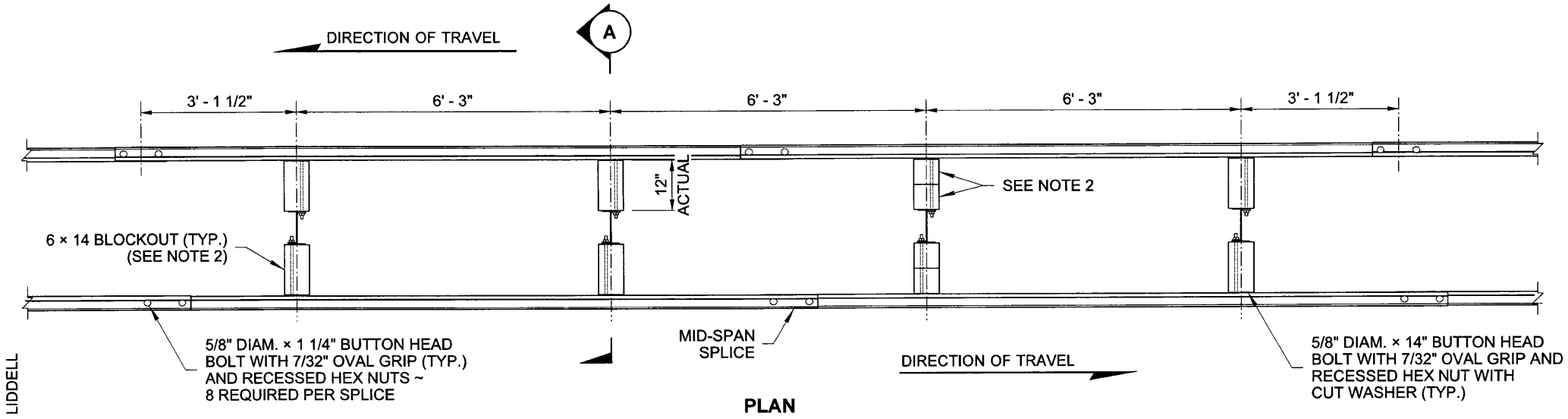

PLAN

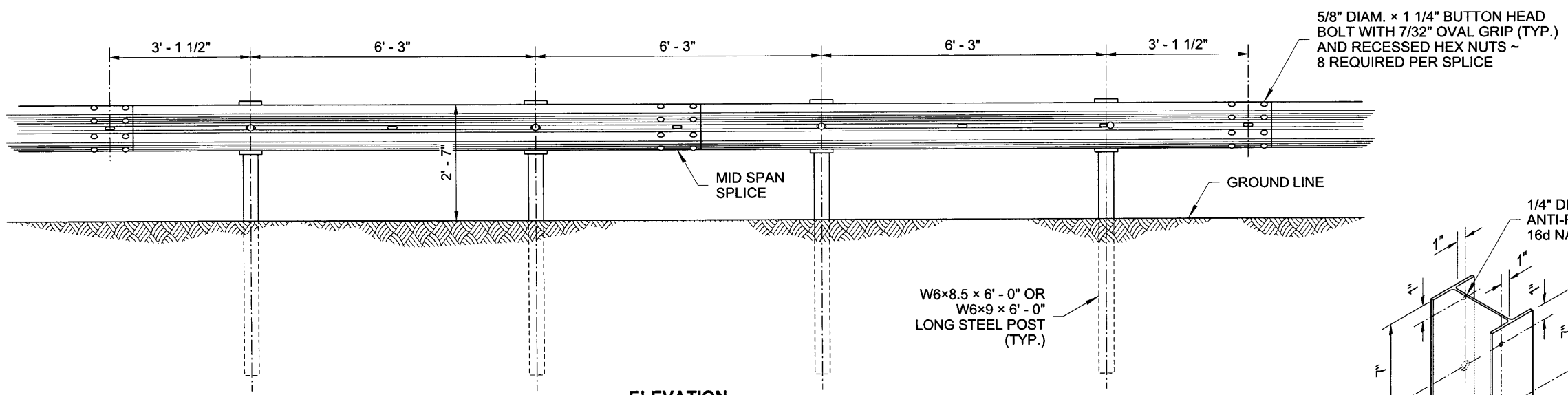

ELEVATION

NOTES

1. Beam Guardrail post spacing shall be 6' - 3" on centers.
2. Use a single or combination of blocks to achieve the actual 12" offset. See **Standard Specification 9-16.3(2)**. Wood blocks shall be toe-nailed to post (and blocks, if block combinations are used) with 16d galvanized nails to prevent block rotation.
3. Attach blockouts to steel posts using bolt holes on approaching traffic side of post web.
4. For details not shown, see **Standard Plan C-20.10.**
5. Wood blocks shown. Blocks of alternate material may be used. See **Standard Specification 9-16.3(2).**

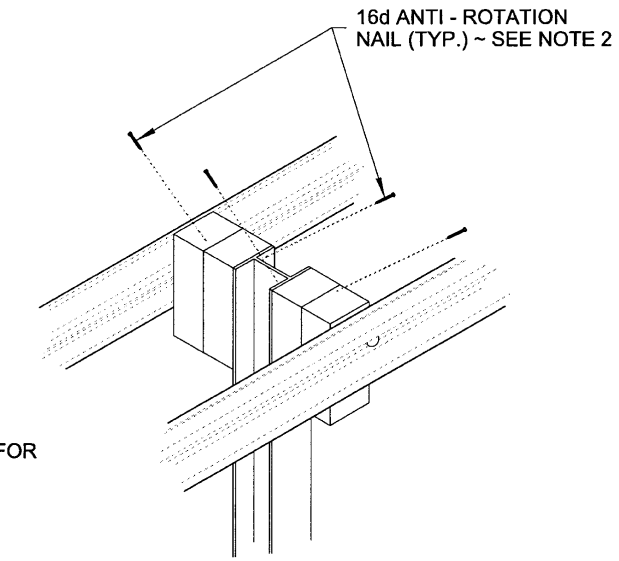

ANTI-ROTATION NAIL DETAIL

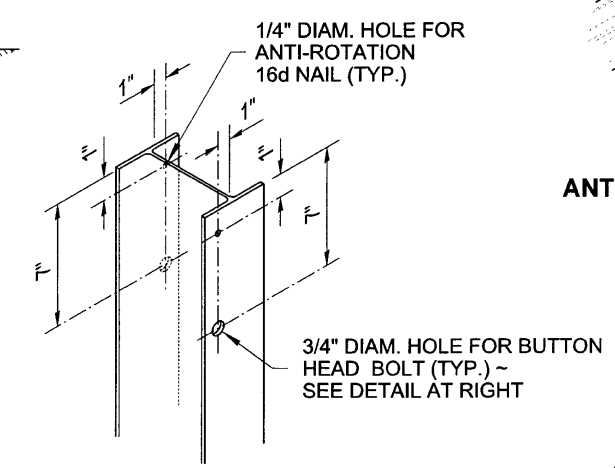

STEEL POST

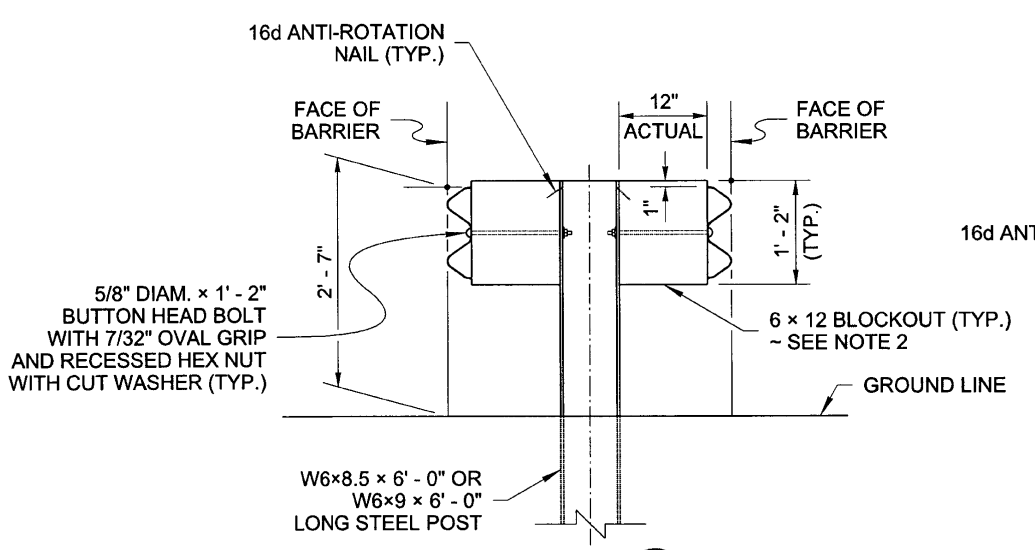

SECTION A

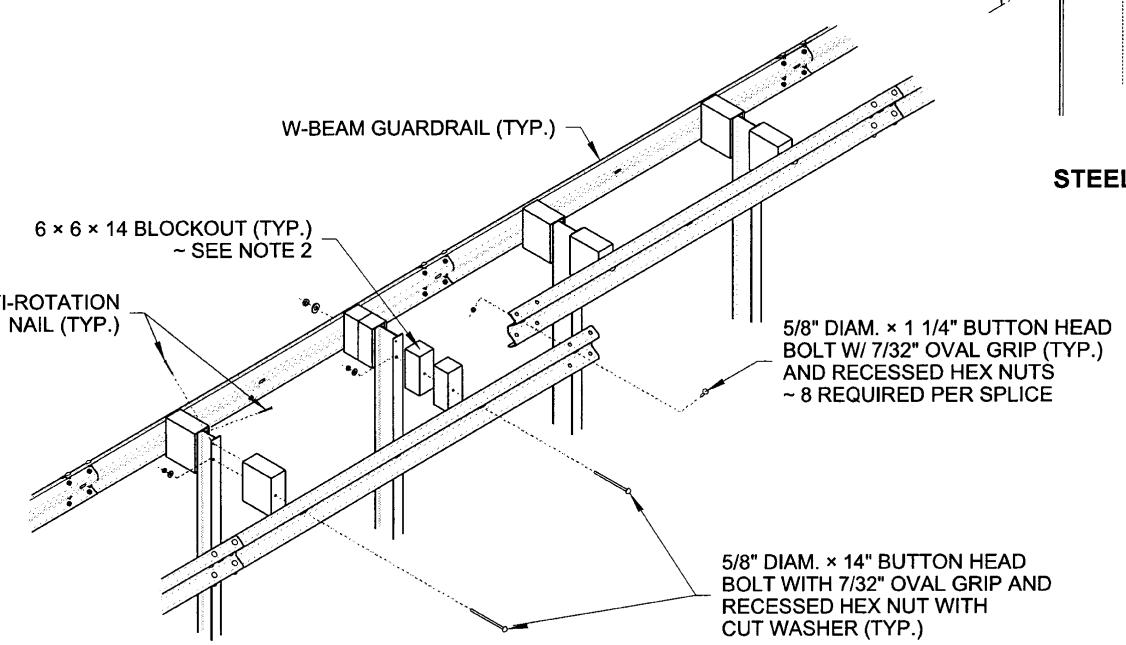

ISOMETRIC

EDWARD PATRICK BARRY
STATE OF WASHINGTON
34363
REGISTERED
PROFESSIONAL ENGINEER

7-2-2012

BEAM GUARDRAIL TYPE 31 DS (DOUBLE SIDED) (W-BEAM)

STANDARD PLAN C-20.45-01

SHEET 1 OF 1 SHEET

APPROVED FOR PUBLICATION

STATE DESIGN ENGINEER — DATE 7/2/12

Washington State Department of Transportation

DRAWN BY: LISA CYFORD

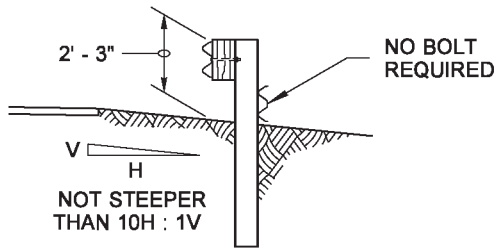

SECTION A

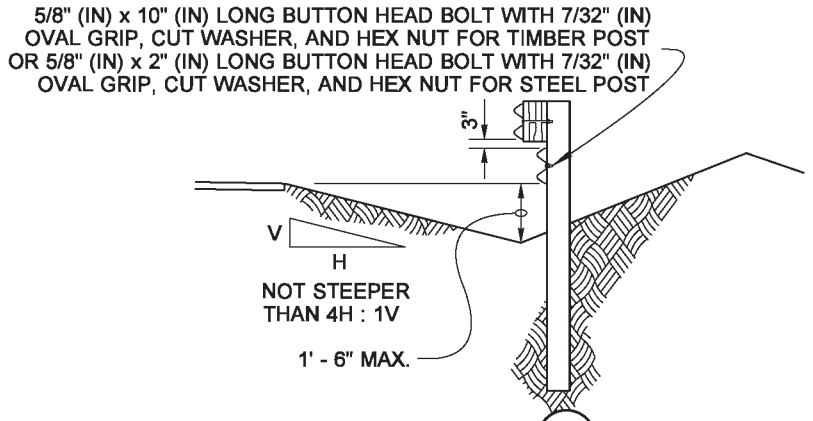

SECTION B

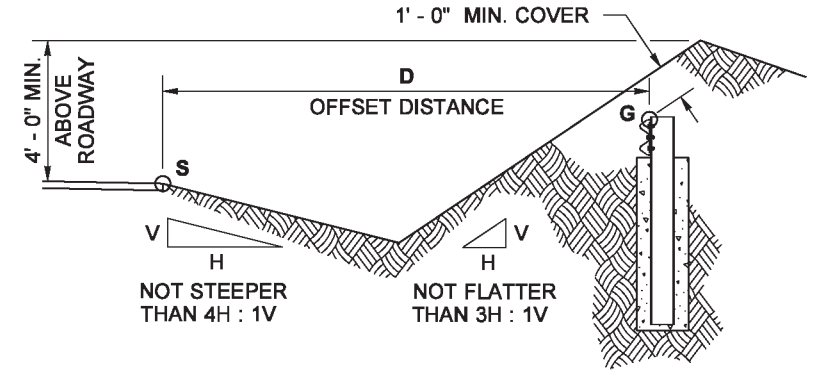

SECTION C

(SEE NOTE 3)

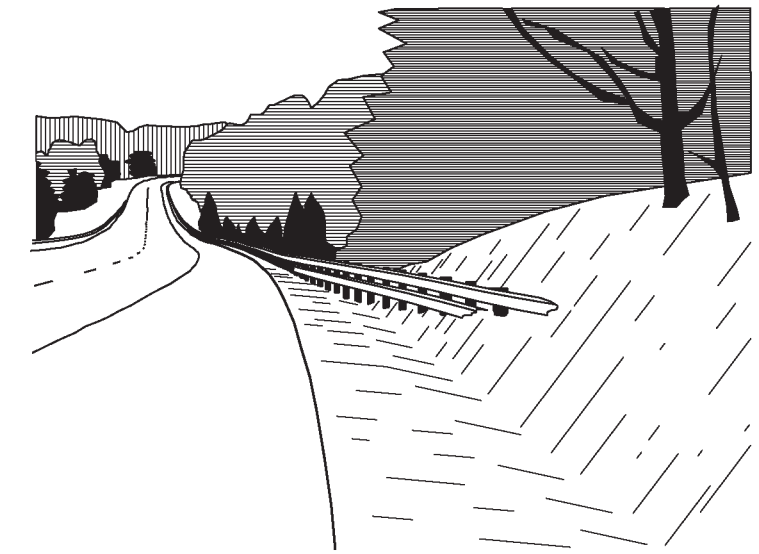

PERSPECTIVE

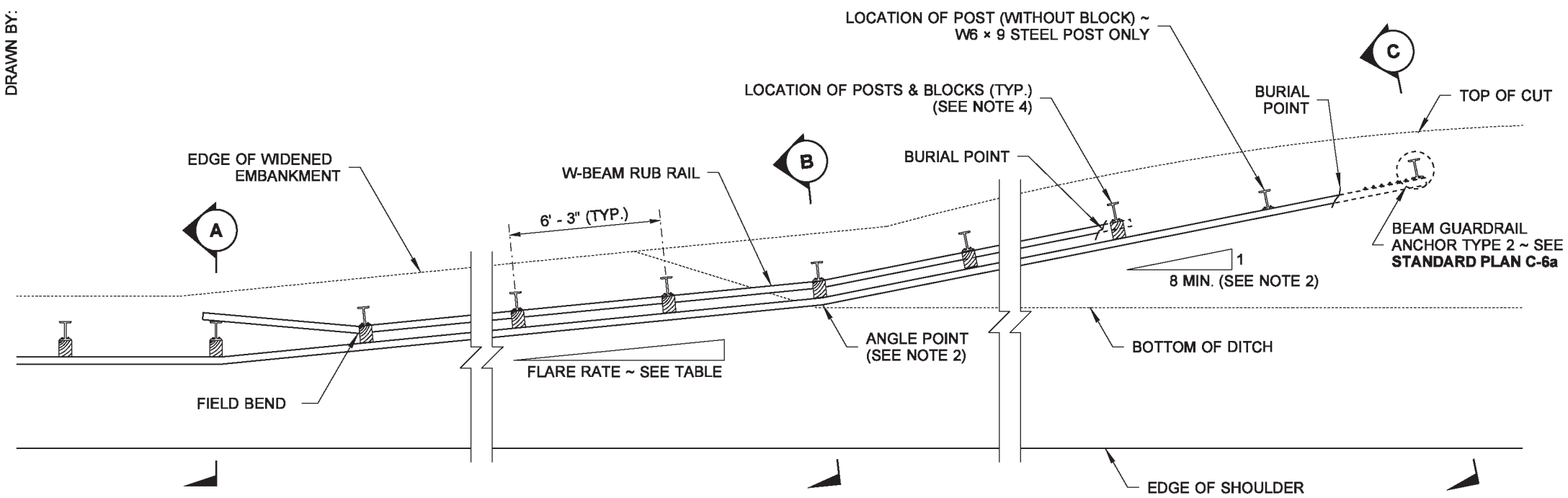

PLAN

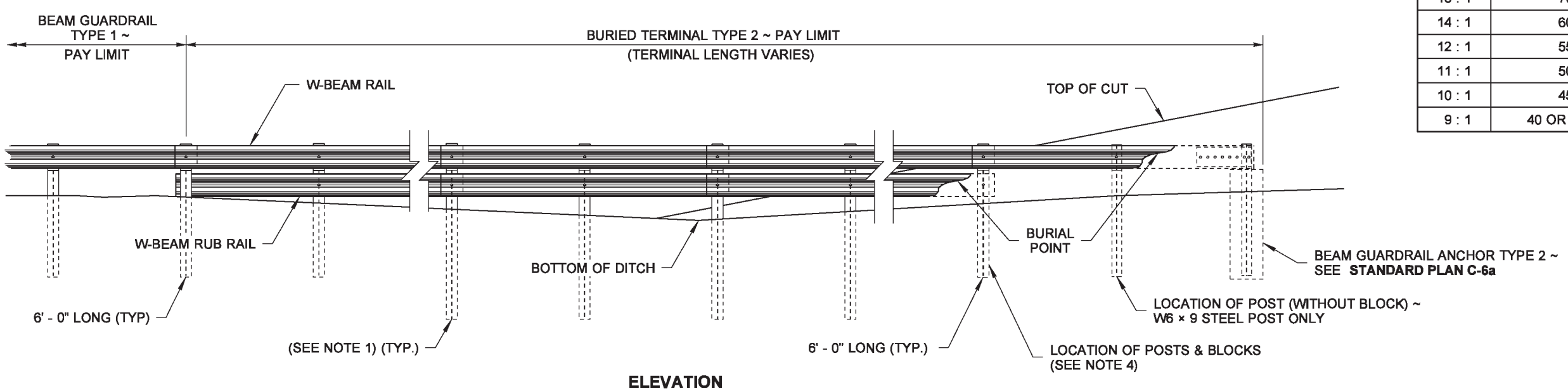

ELEVATION
(PROFILE ALONG RAIL)

NOTES

1. Posts installed on shoulder slopes steeper than 10H : 1V shall be 8' (ft) long.
2. The flare rate of the guardrail may be increased after crossing the ditch bottom to shorten the length of the terminal.
3. Determine the height of the W-Beam at the Anchor (**G**) by first calculating the perpendicular offset distance (**D**) from the edge of shoulder (**S**) to the Anchor (on station). Multiply that distance by 0.1, then subtract the product from the elevation of the same point (**S**) on the edge of shoulder used to obtain the offset distance (at the same station). Add Beam Guardrail design height (27" (in)) to that remainder for a sum that equals the elevation of the top of the W-Beam at the Anchor.

   Refer to SECTION "C":

   $$\text{Elevation}_{G} = (\text{Elevation}_{S} - D\,(0.1)) + 27$$
4. Timber or steel post. Steel post shown.

FLARE RATE TABLE	
RATE (FT)	POSTED SPEED (MPH)
15 : 1	70
14 : 1	60
12 : 1	55
11 : 1	50
10 : 1	45
9 : 1	40 OR LESS

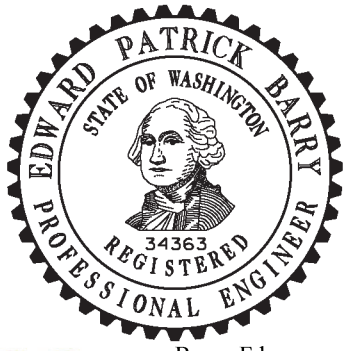

Barry, Ed
May 2 2014 2:25 PM

BEAM GUARDRAIL TYPE 1
BURIED TERMINAL TYPE 2

STANDARD PLAN C-22.14-03

SHEET 1 OF 1 SHEET

APPROVED FOR PUBLICATION
Bakotich, Pasco
Jun 11 2014 1:09 PM
STATE DESIGN ENGINEER
Washington State Department of Transportation

DRAWN BY: BILL BERENS

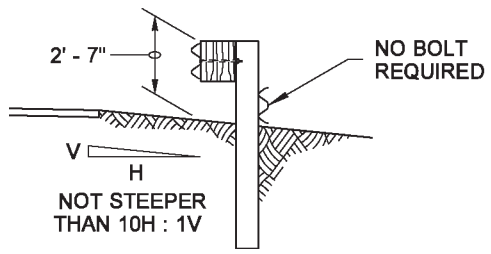

SECTION A

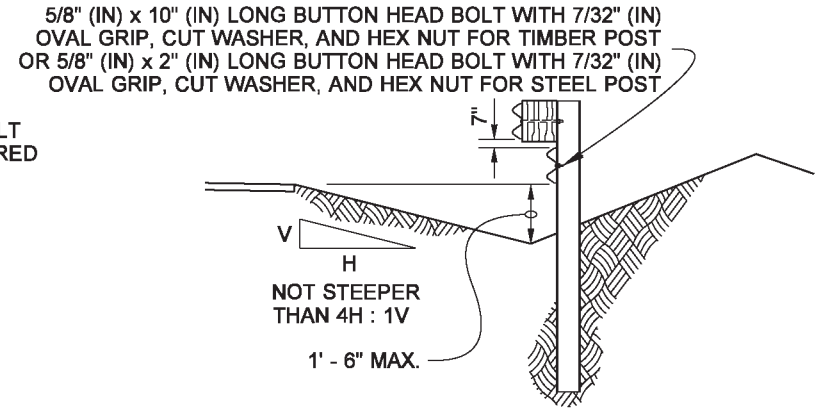

SECTION B

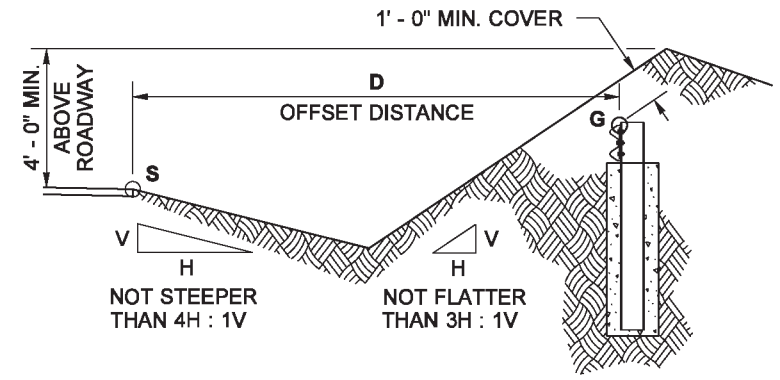

SECTION C

(SEE NOTE 3)

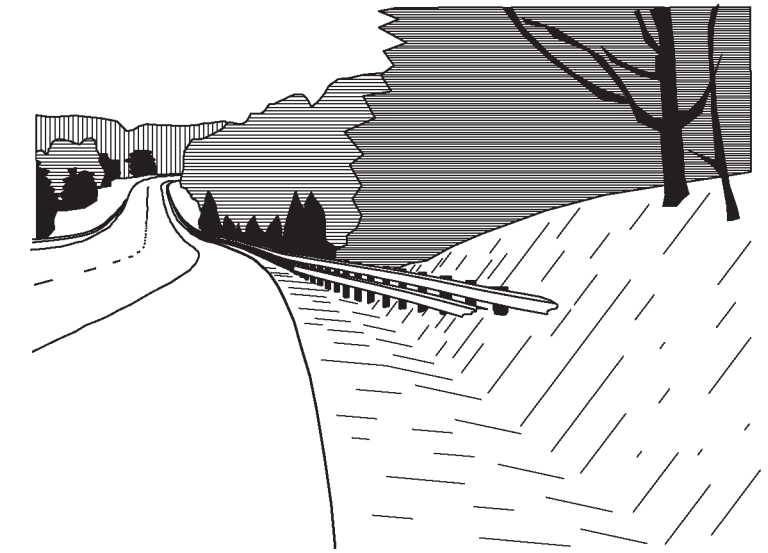

PERSPECTIVE

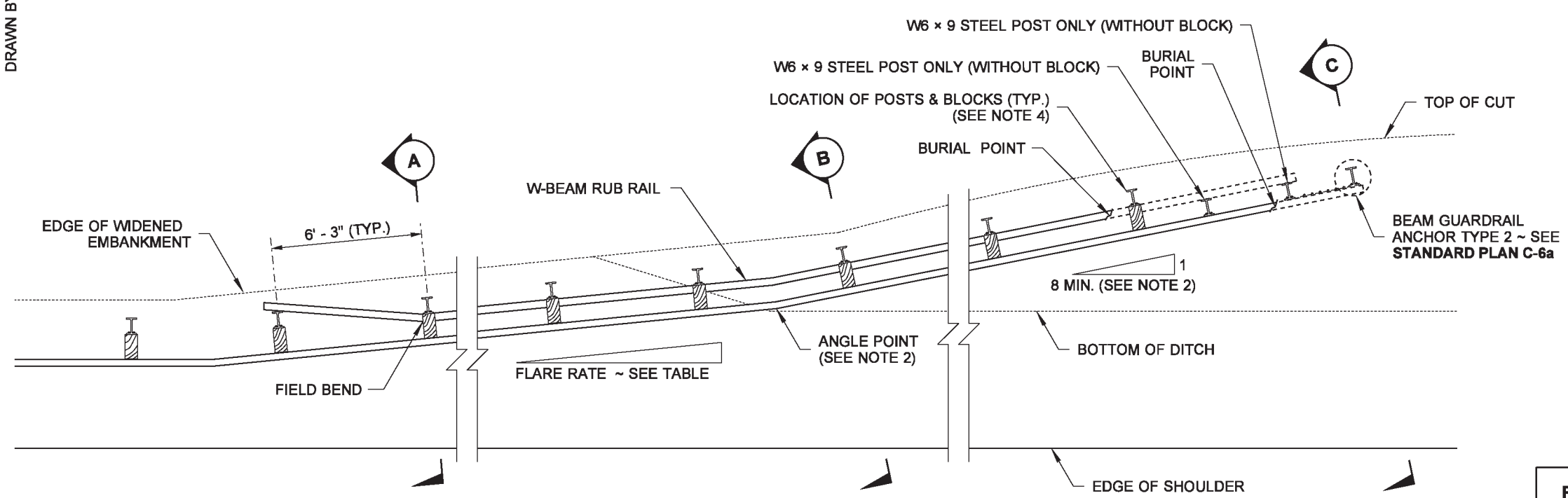

PLAN

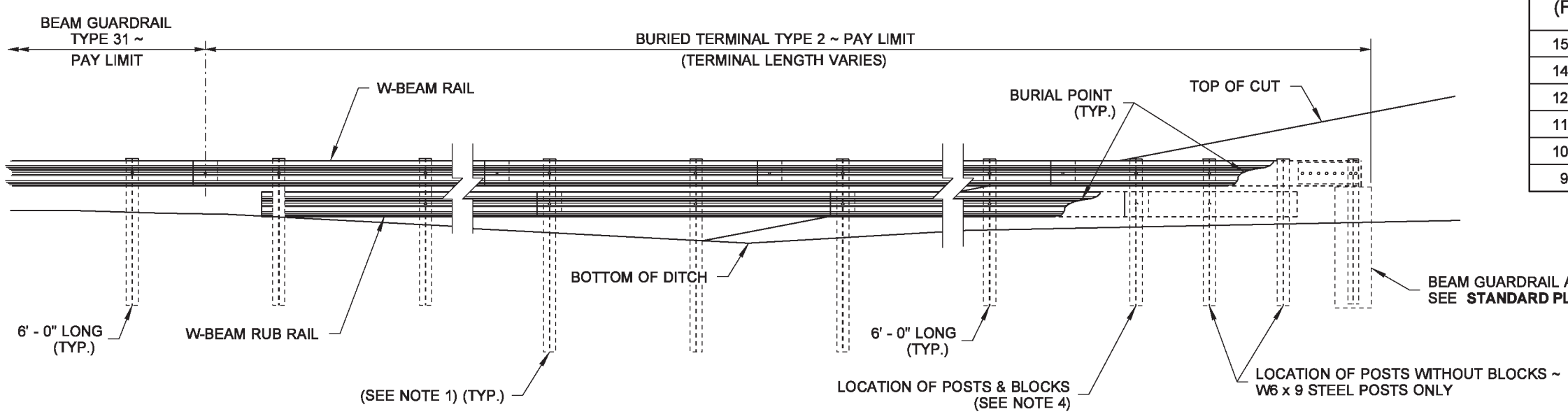

ELEVATION

(PROFILE ALONG RAIL)

NOTES

1. Posts installed on shoulder slopes steeper than 10H : 1V shall be 8' (ft) long.
2. The flare rate of the guardrail may be increased after crossing the ditch bottom to shorten the length of the terminal.
3. Determine the height of the W-Beam at the Anchor (**G**) by first calculating the perpendicular offset distance (**D**) from the edge of shoulder (**S**) to the Anchor (on station). Multiply that distance by 0.1, then subtract the product from the elevation of the same point (**S**) on the edge of shoulder used to obtain the offset distance (at the same station). Add Beam Guardrail design height (31" (in)) to that remainder for a sum that equals the elevation of the top of the W-Beam at the Anchor.

   Refer to SECTION "C":

   $$\text{Elevation}_{G} = (\text{Elevation}_{S} - D(0.1)) + 31$$
4. Timber or steel post. Steel post shown.

FLARE RATE TABLE	
RATE (FT)	POSTED SPEED (MPH)
15 : 1	70
14 : 1	60
12 : 1	55
11 : 1	50
10 : 1	45
9 : 1	40 OR LESS

Barry, Ed
May 6 2014 3:15 PM

BEAM GUARDRAIL TYPE 31
BURIED TERMINAL TYPE 2

STANDARD PLAN C-22.16-04

SHEET 1 OF 1 SHEET

APPROVED FOR PUBLICATION
Bakotich, Pasco
Jun 11 2014 1:09 PM

STATE DESIGN ENGINEER

Washington State Department of Transportation

DRAWN BY: LISA CYFORD

NOTES

1. These terminals are FHWA accepted at Test Level Three (TL-3) and may be used for all posted speeds.
2. An ET-31 (TL-3) - Steel as manufactured by Trinity Industries, Inc. or an SKT-SP-MGS (TL-3) as manufactured by Road Systems, Inc. shall be installed according to manufacturer's recommendations.
3. A reflectorized object marker shall be installed according to manufacturer's recommendations.
4. When snow load post washers and snow load rail washers are required by the Contract, the snow load rail washers shall not be installed within the terminal limits.
5. Terminal shall be installed at a widening, ensuring the end piece is entirely off the shoulder. While these terminals do not require an offset at the end, a flare is recommended. A maximum flare of 25 : 1 or flatter over the length of the terminal is allowed for either the ET-31 (TL-3) - Steel or the SKT-SP-MGS (TL-3), with a maximum offset of 24" (in) over 50' (ft).
6. For terminal details, see WSDOT approved manufacturer's drawings.

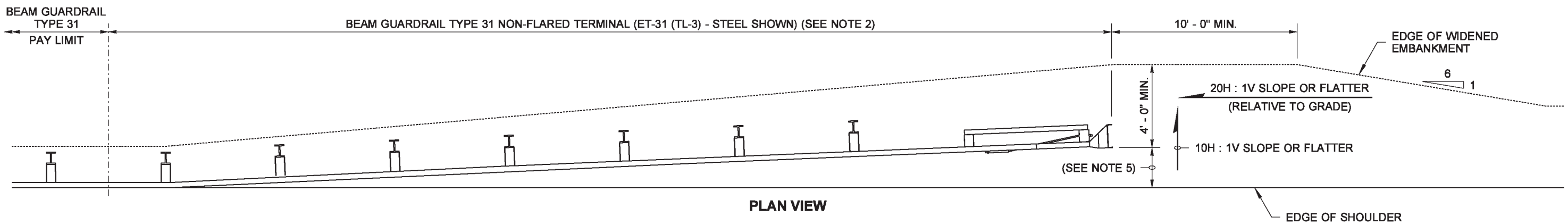

PLAN VIEW

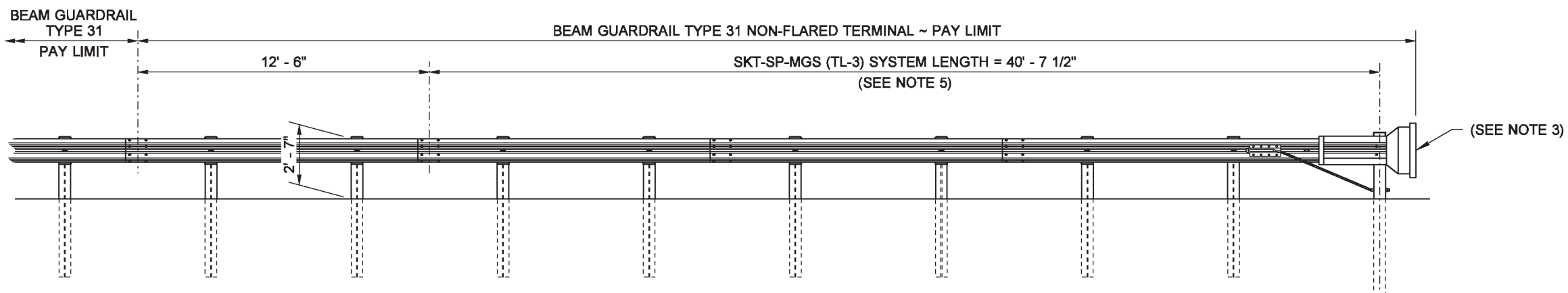

ELEVATION VIEW
SKT-SP-MGS (TL-3)

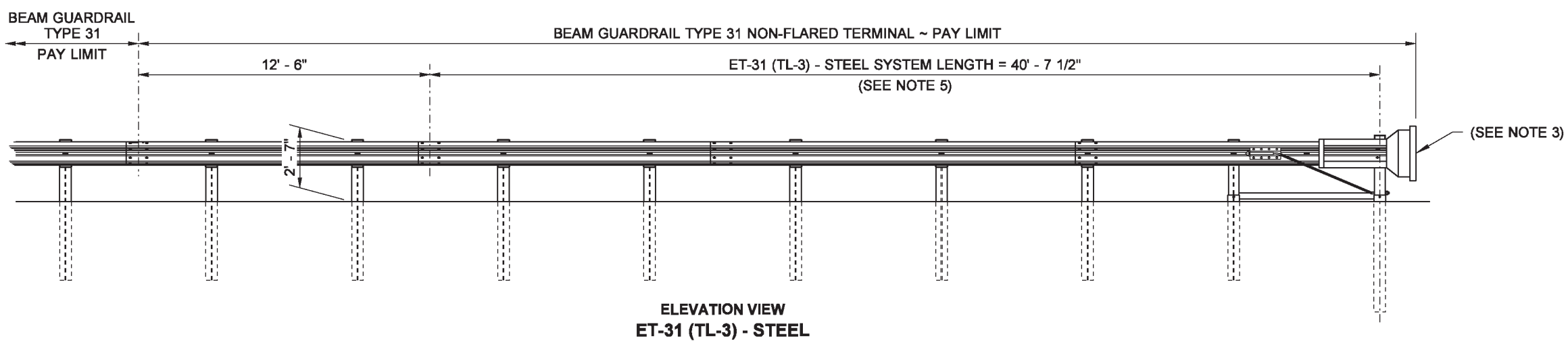

ELEVATION VIEW
ET-31 (TL-3) - STEEL

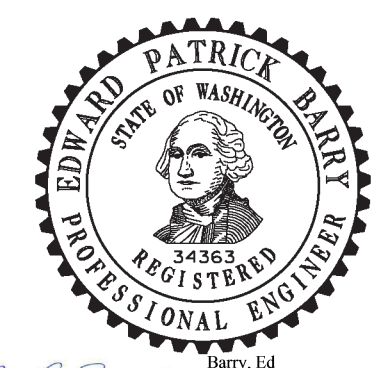

Barry, Ed
May 22 2014 12:48 PM

BEAM GUARDRAIL TYPE 31 NON-FLARED TERMINAL STEEL POSTS (ALL POSTED SPEEDS) STANDARD PLAN C-22.40-03

SHEET 1 OF 1 SHEET

APPROVED FOR PUBLICATION

Bakotich, Pasco
Jun 11 2014 1:09 PM

STATE DESIGN ENGINEER

Washington State Department of Transportation

DRAWN BY: COLBY FLETCHER

NOTES

1. An ET-31 (TL-3) - Wood as manufactured by Trinity Industries, Inc. or an SKT-MGS (TL-3) as manufactured by Road Systems, Inc. shall be installed according to the manufacturer's recommendations.
2. A reflectorized object marker shall be installed according to the manufacturer's recommendations.
3. When snow load post washers and snow load rail washers are required by the Contract, the snow load rail washers shall not be installed within the terminal limits.
4. Terminal shall be installed at a widening, ensuring the end piece is entirely off the shoulder.
5. While these terminals do not require an offset at the end, a flare is recommended. A maximum flare rate of 25 : 1 or flatter over the length of the terminal is allowed for either the ET-31 (TL-3) - Wood or SKT-MGS (TL-3).
6. These terminals are FHWA accepted at Test Level Three (TL-3) and may be used for all posted speeds.
7. For terminal details, see WSDOT approved manufacturer's drawings.

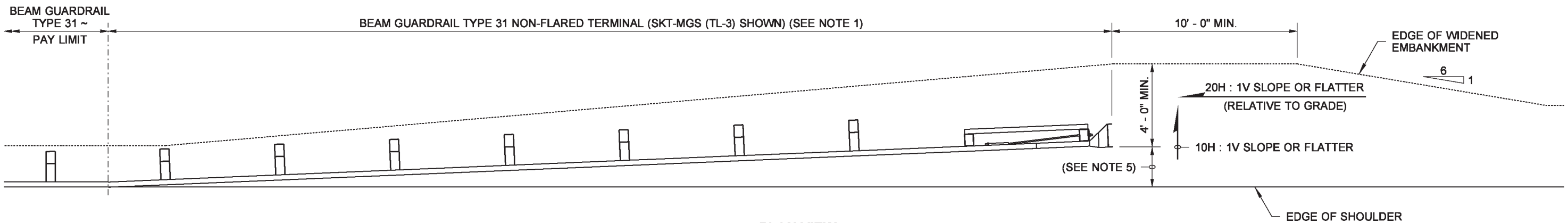

PLAN VIEW
(FOR BOTH SYSTEMS)

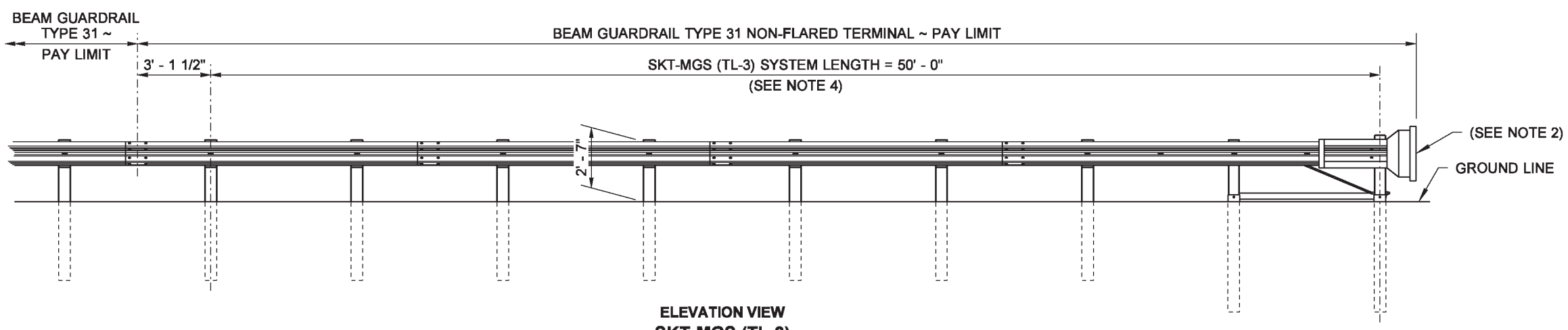

ELEVATION VIEW
SKT-MGS (TL-3)

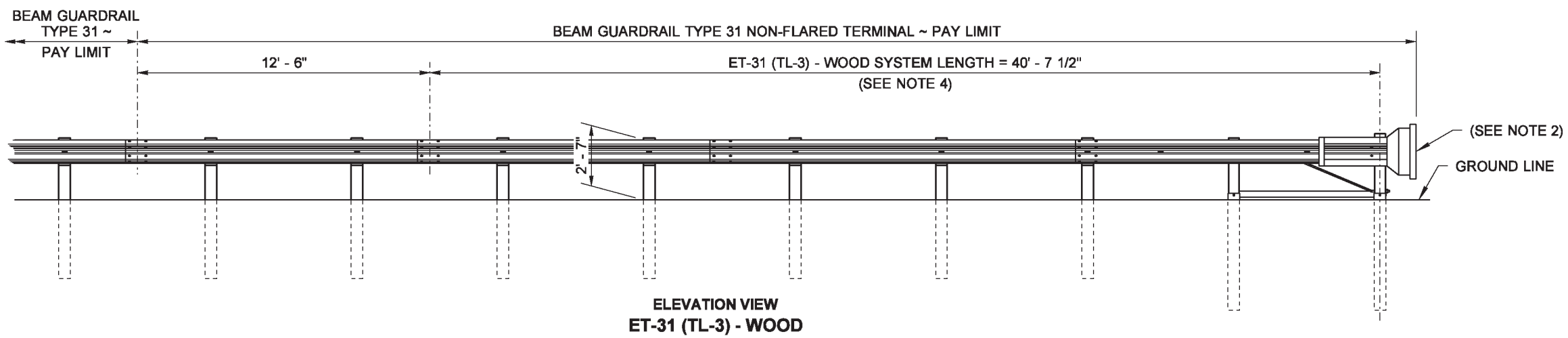

ELEVATION VIEW
ET-31 (TL-3) - WOOD

Barry, Ed
May 22 2014 12:48 PM

BEAM GUARDRAIL TYPE 31 NON-FLARED TERMINAL WOOD POSTS (ALL POSTED SPEEDS) STANDARD PLAN C-22.41-00

SHEET 1 OF 1 SHEET

APPROVED FOR PUBLICATION
Bakotich, Pasco
Jun 11 2014 1:10 PM
STATE DESIGN ENGINEER
Washington State Department of Transportation

DRAWN BY: LISA CYFORD

NOTES

1. These Terminals are FHWA accepted at Test Level Two (TL-2) and may be used in applications with speeds of 40 MPH or less.
2. An ET-31 (TL-2) as manufactured by Trinity Industries, Inc. or an SKT-SP-MGS (TL-2) as manufactured by Road Systems Inc. shall be installed according to manufacturers' recommendations.
3. A reflectorized object marker shall be installed according to manufacturers' recommendations.
4. When snow load post washers and snow load rail washers are required by the Contract, the snow load rail washers shall not be installed within the Terminal limits.
5. Terminal shall be installed at a widening, ensuring the end piece is entirely off the shoulder. While these Terminals do not require an offset at the end, a flare is recommended. A maximum flare of 25 : 1 or flatter over the length of the Terminal is allowed for either the ET-31 (TL-2) or the SKT-SP-MGS (TL-2), with a maximum offset of 24" (in.) over 50' (ft.).
6. For Terminal details, see WSDOT-approved manufacturers' drawings.

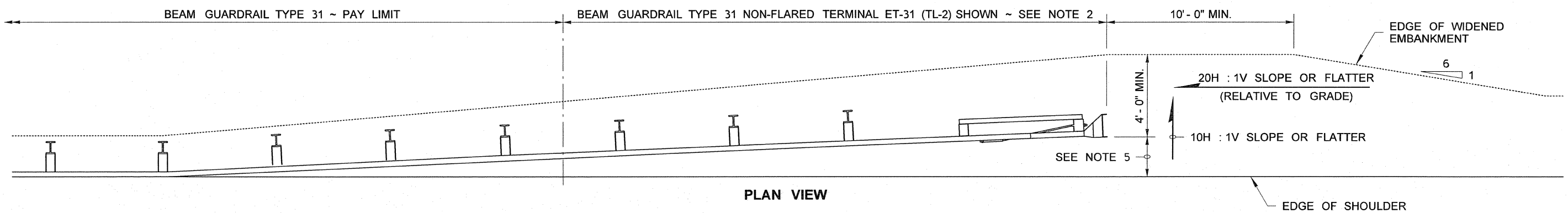

PLAN VIEW

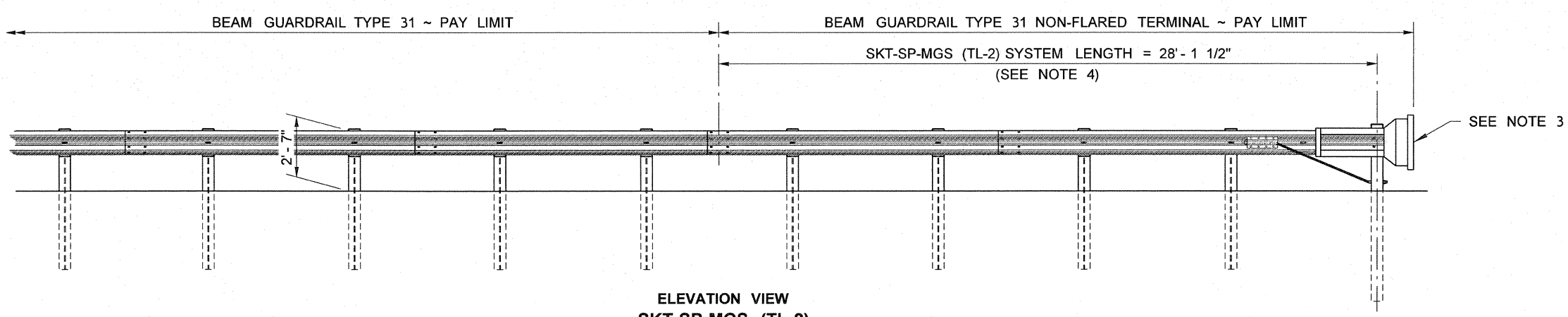

ELEVATION VIEW
SKT-SP-MGS (TL-2)

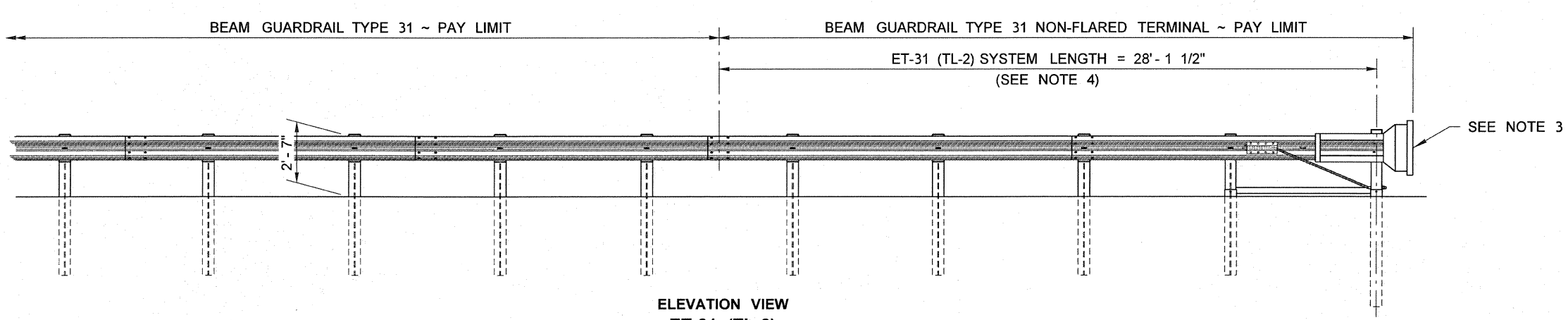

ELEVATION VIEW
ET-31 (TL-2)

BEAM GUARDRAIL TYPE 31 NON-FLARED TERMINAL STEEL POSTS (POSTED SPEED ~ 40 MPH AND BELOW)

STANDARD PLAN C-22.45-00

SHEET 1 OF 1 SHEET

APPROVED FOR PUBLICATION

STATE DESIGN ENGINEER — DATE 6/16/11

Washington State Department of Transportation

This page left blank intentionally.

NOTES

1. For use on the end of guardrail runs when a crashworthy terminal is not required.
2. For additional details not shown, see **Standard Plan C-6c**.
3. For end section details, see **Standard Plans C-7** and **C-7a**.
4. Use details for Wood Breakaway post shown on this plan and components shown on **Standard Plan C-1b**.
5. Fasten the Anchor Cable using two 1" (in) nuts and washer, at both ends of cable. Outside nut shall be torqued against inside nut a minimum of 100 ft.-lbs.
6. Wood blocks shown. Blocks of alternate material may be used. See **Standard Specification 9-16.3(2)**.
7. Posts shall match those of the connecting run: timber or steel.

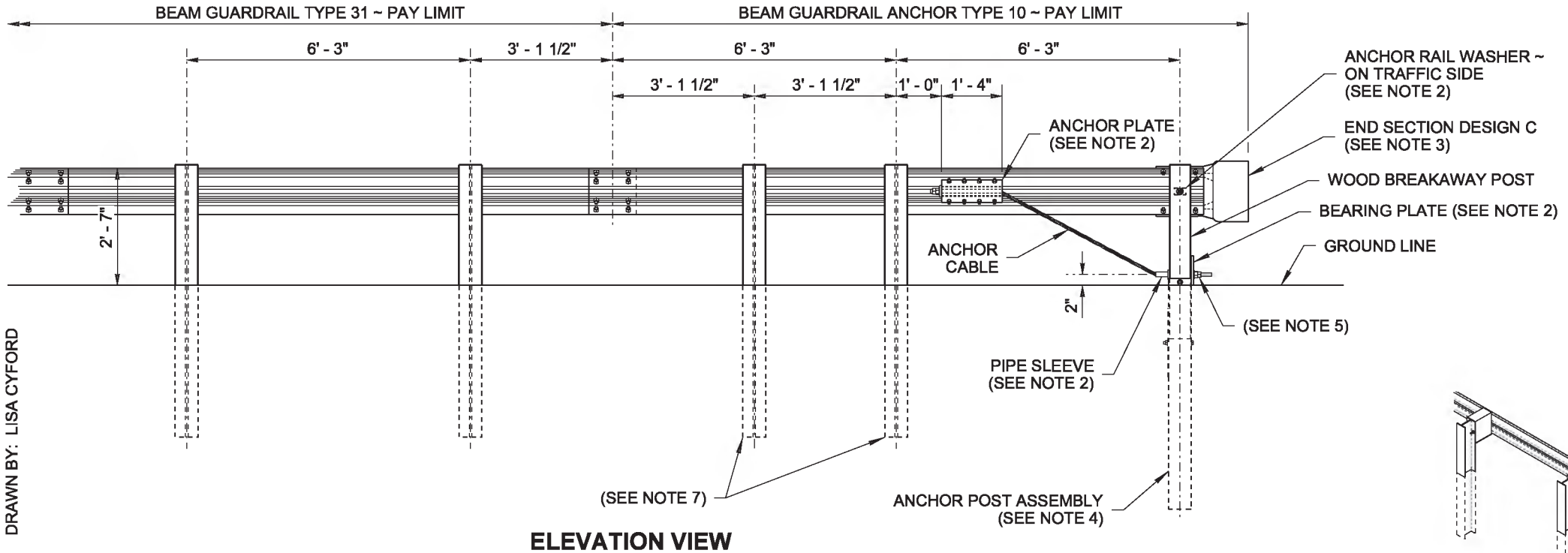

ELEVATION VIEW
W-BEAM

DRAWN BY: LISA CYFORD

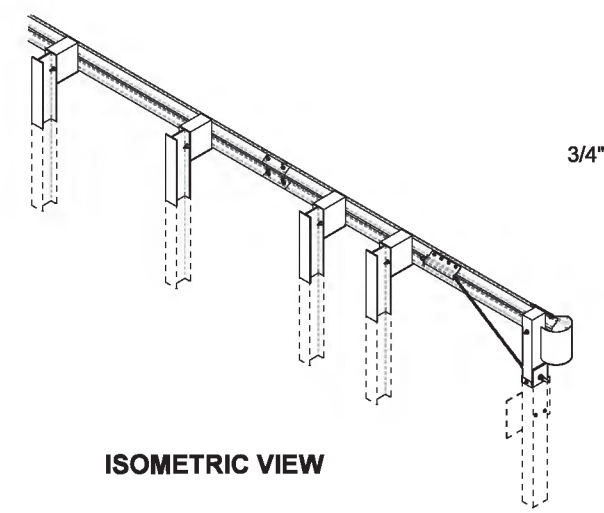

ISOMETRIC VIEW

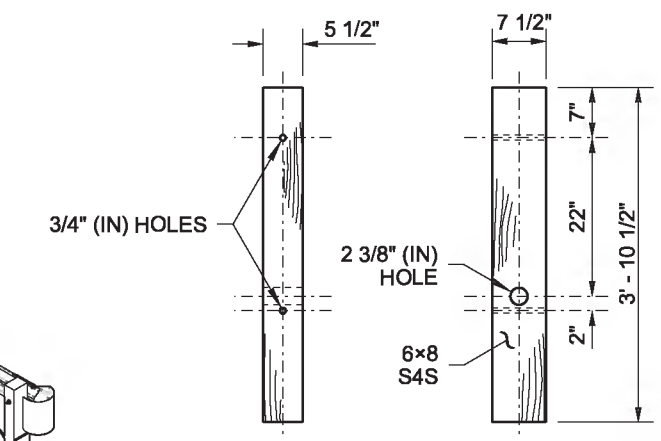

WOOD BREAKAWAY POST DETAIL

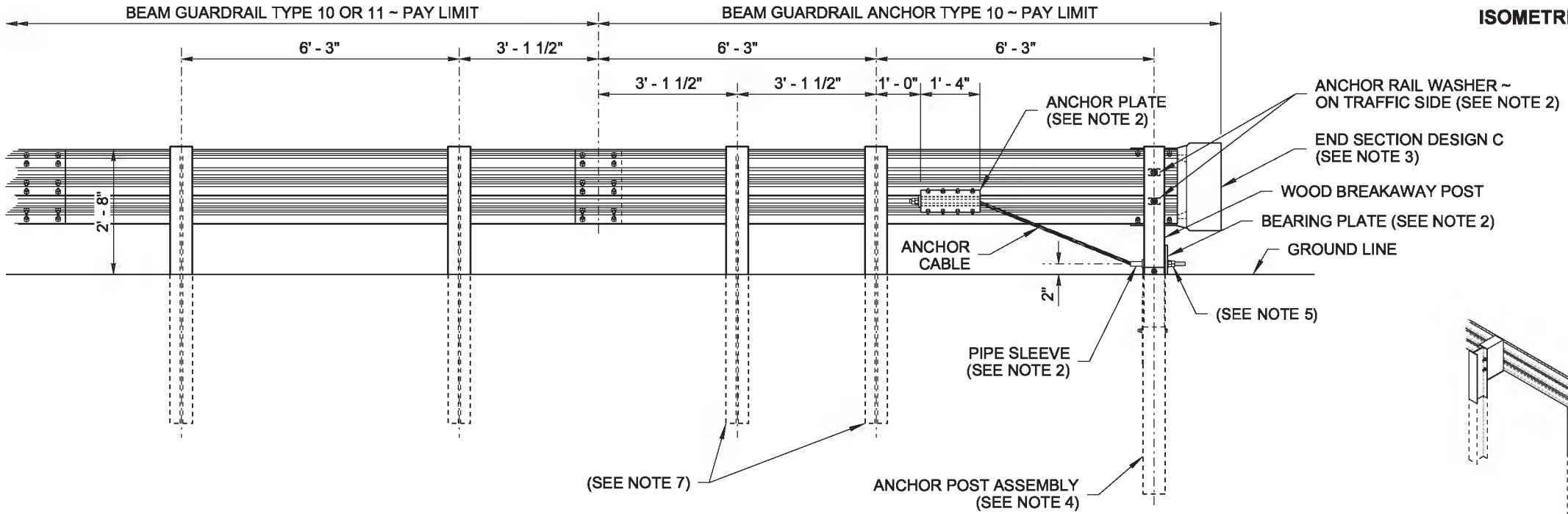

ELEVATION VIEW
THRIE BEAM

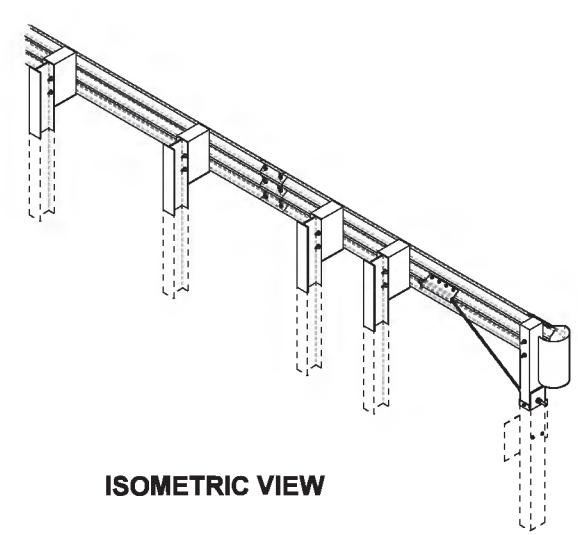

ISOMETRIC VIEW

Barry, Ed
May 6 2014 3:16 PM

BEAM GUARDRAIL (TYPE 31) ANCHOR TYPE 10

STANDARD PLAN C-23.60-03

SHEET 1 OF 1 SHEET

APPROVED FOR PUBLICATION
Bakotich, Pasco
Jun 11 2014 1:10 PM
STATE DESIGN ENGINEER
Washington State Department of Transportation

DRAWN BY: FERN LIDDELL

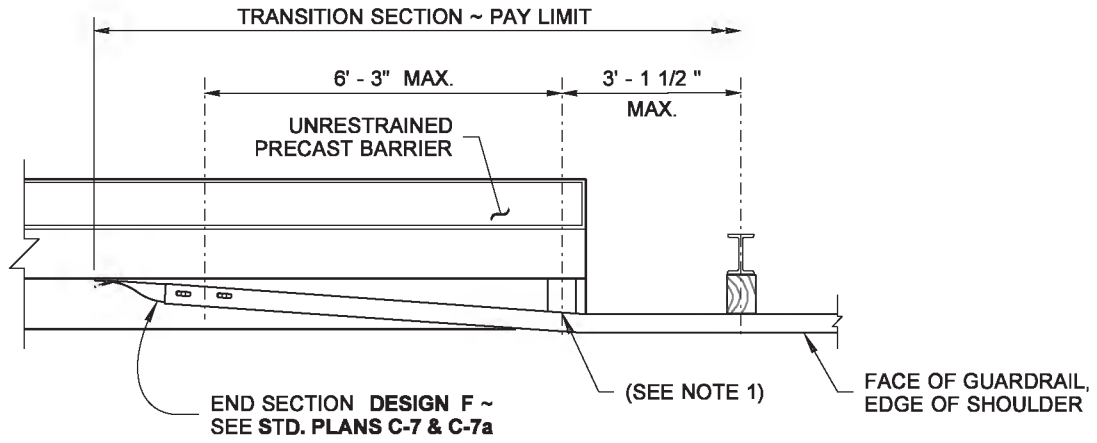

PLAN

A CONNECTION

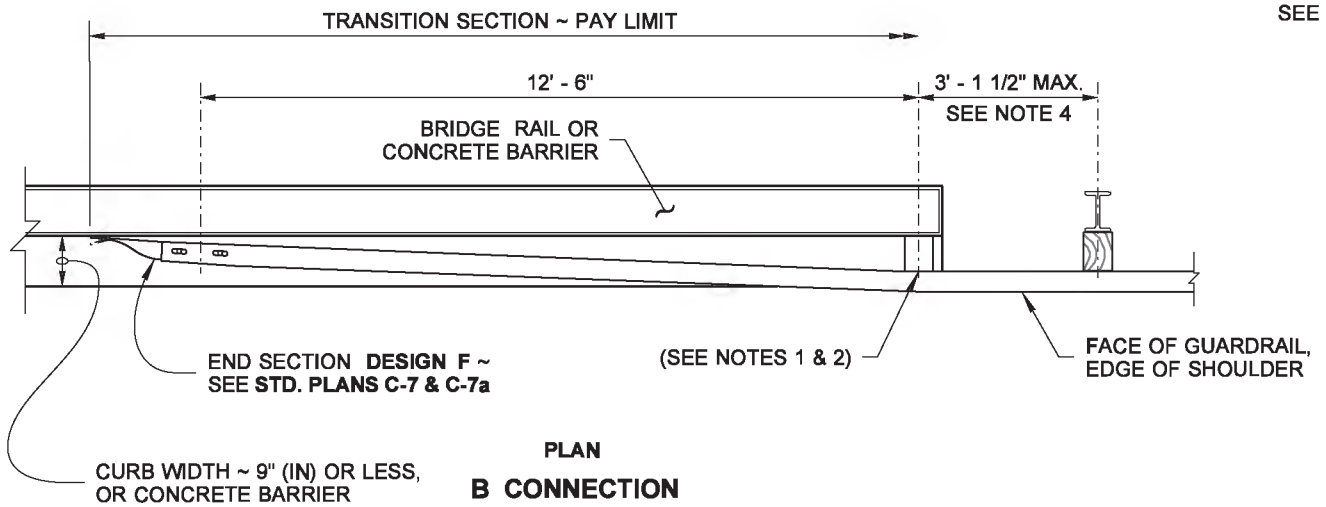

PLAN

B CONNECTION

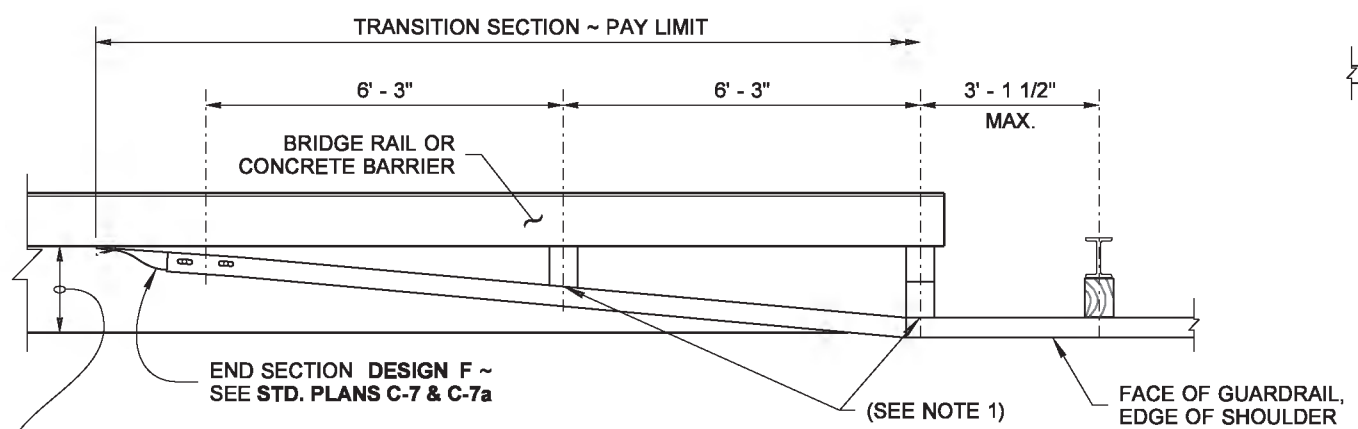

PLAN

C CONNECTION

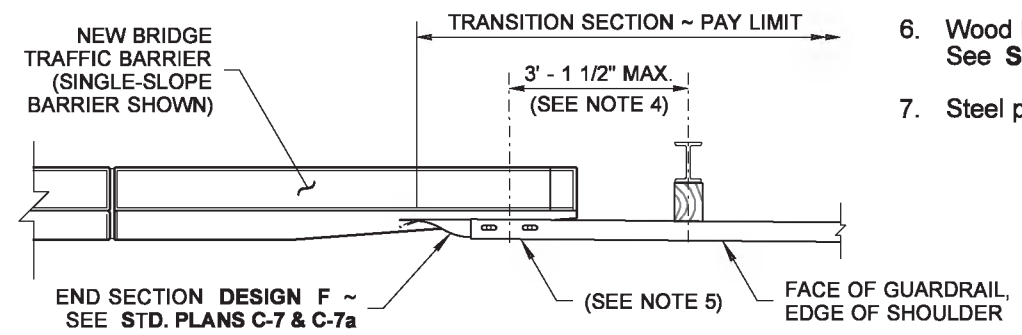

PLAN

D CONNECTION

(SEE NOTE 3)

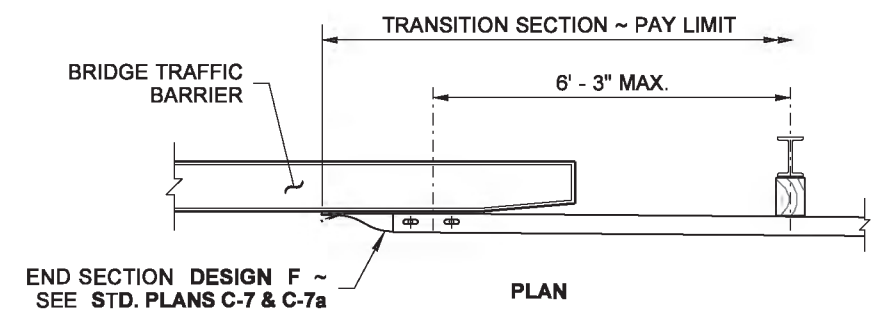

PLAN

E CONNECTION

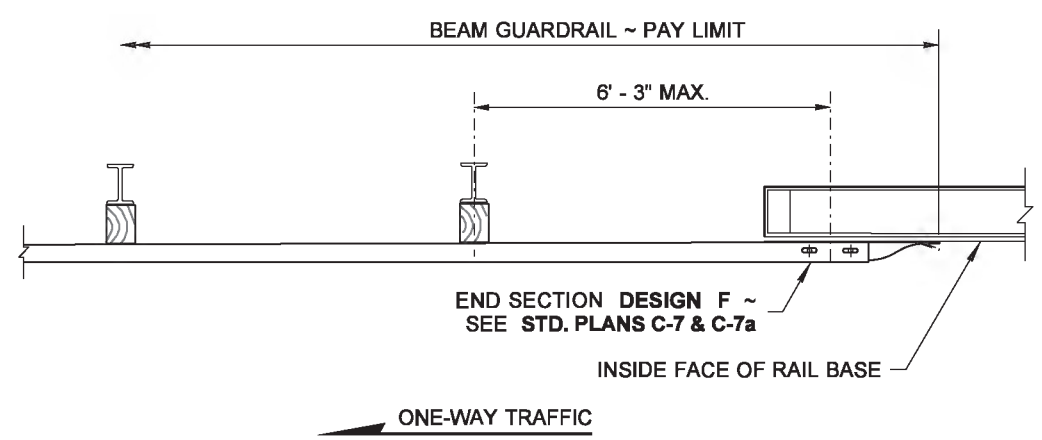

PLAN

F CONNECTION

NOTES

1. Attach guardrail to bridge rail or concrete barrier with 7/8" (in) diameter bolts in accordance with **Standard Spec. 9-06.5(4),** with thin slab ferrule inserts or resin-bonded anchors. See Contract Plans.
2. If the last guardrail post is 3" (in) or less from the end of the bridge barrier, this attachment and blockout is not necessary.
3. This case is also applicable for F-shape and vertical faces with no curbs.
4. When B connection is used with Type 1A Transition, the maximum spacing between bolts is 6' - 3".
5. See Bridge Plans for additional connection details.
6. Wood blocks shown. Blocks of alternate material may be used. See **Standard Specification 9-16.3 (2).**
7. Steel posts shown. Timber posts may be used.

Barry, Ed
May 2 2014 2:33 PM

GUARDRAIL CONNECTION TO BRIDGE RAIL OR CONCRETE BARRIER STANDARD PLAN C-24.10-01

SHEET 1 OF 1 SHEET

APPROVED FOR PUBLICATION
Bakotich, Pasco
Jun 11 2014 1:11 PM
STATE DESIGN ENGINEER

Washington State Department of Transportation

DRAWN BY: FERN LIDDELL

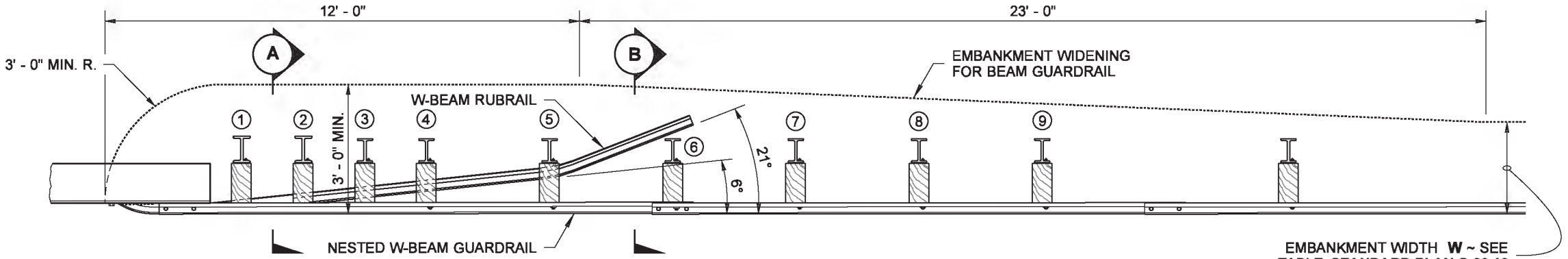

PLAN VIEW

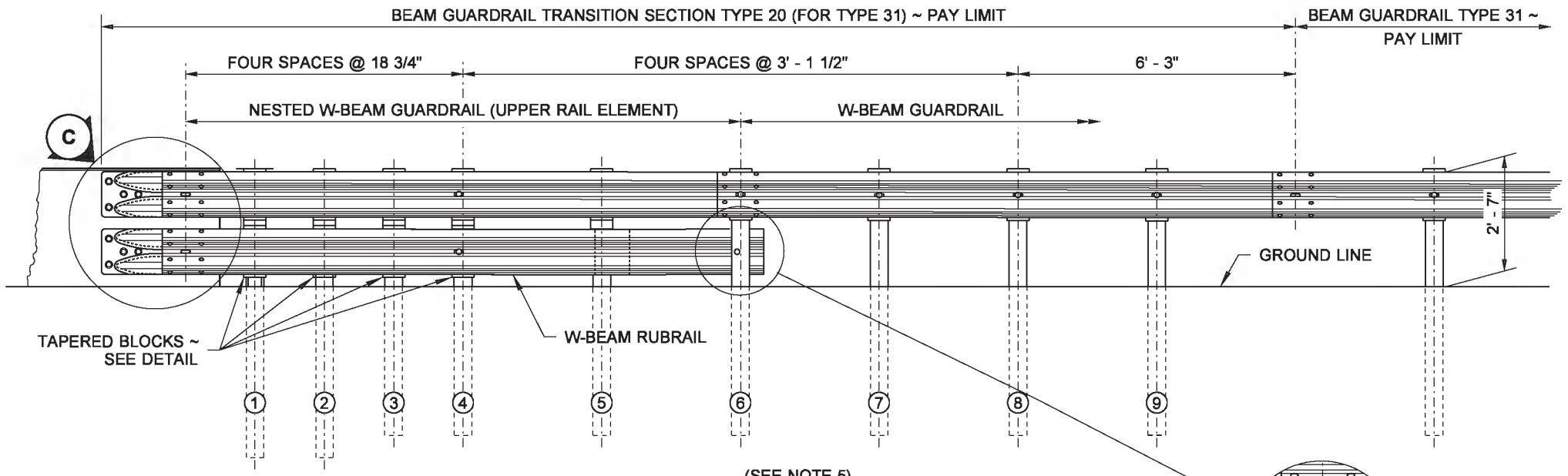

ELEVATION VIEW

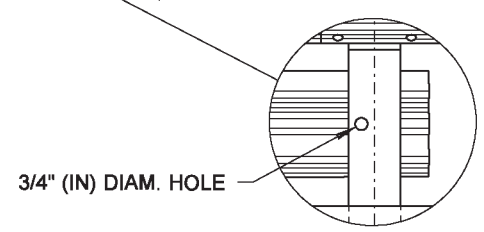

BOLT LOCATION DETAIL FOR STEEL POST

NOTES

1. For additional details not shown in this plan, refer to **Standard Plan C-20.10.**
2. This guardrail transition is for connection to a vertical concrete shape or single-slope barrier and cannot be connected directly to a concrete safety shape.
3. Do not bolt nested W-Beam or rubrail W-Beam to posts and blocks on posts 1, 2, 3 and 5. Bolt tapered blocks directly to posts.
4. The rubrail W-Beam can be shop bent to facilitate installation.
5. Posts 1, 2, 3, 4 and 6 require an additional hole to attach tapered blocks and/or rubrail.
6. Posts 1 and 2 are 10 x 10 timber posts or W6 × 15 steel posts: 7' - 6" long. Posts 3 through 9 are 6 x 8 timber posts or W6 × 9 steel posts: 6' - 0" long.
7. Wood blocks shown. Blocks of alternate material may be used. See **Standard Specificdation 9-16.3(2).**

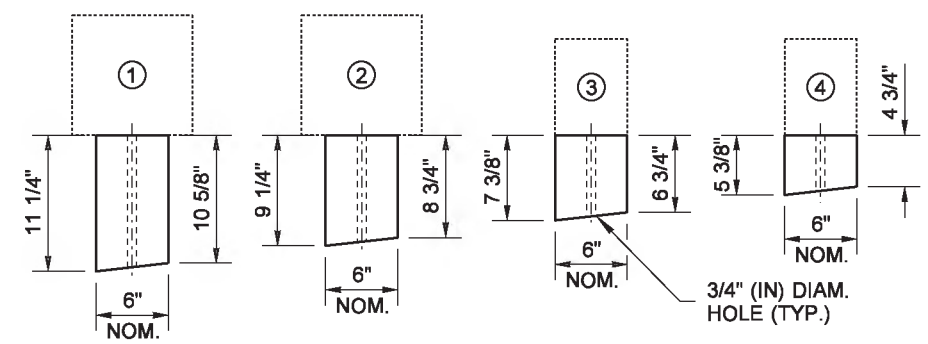

PLAN VIEW

TAPERED BLOCKS FOR RUBRAIL DETAIL

14" (IN) LONG (TYP.)

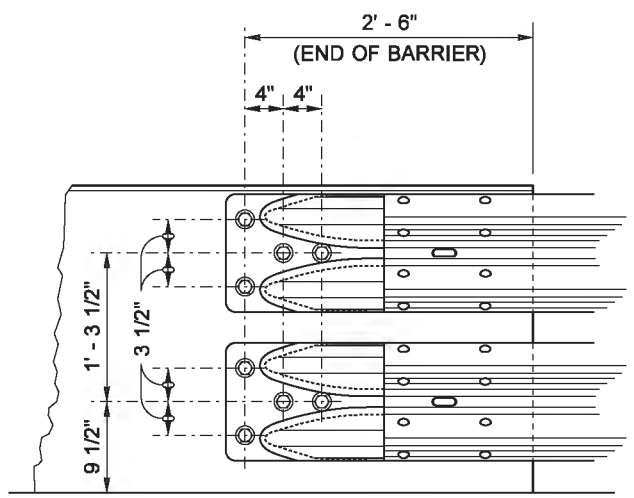

DETAIL C

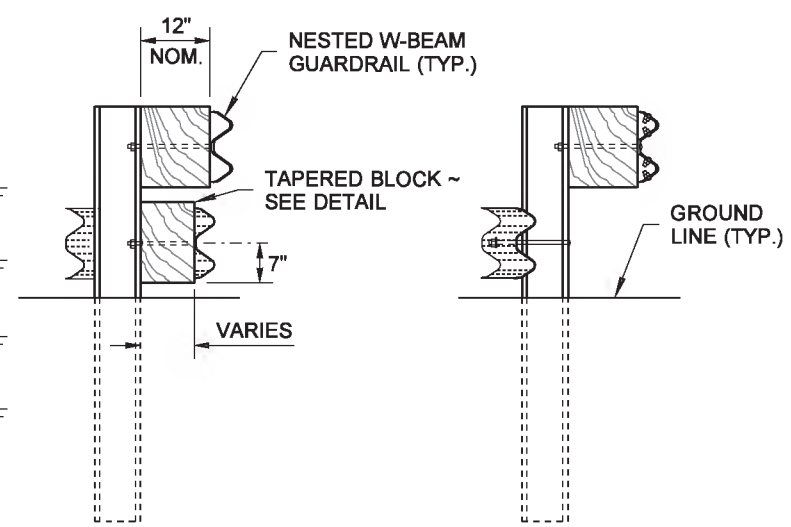

SECTION A
(STEEL POST)

(OR)

SECTION B
(STEEL POST)

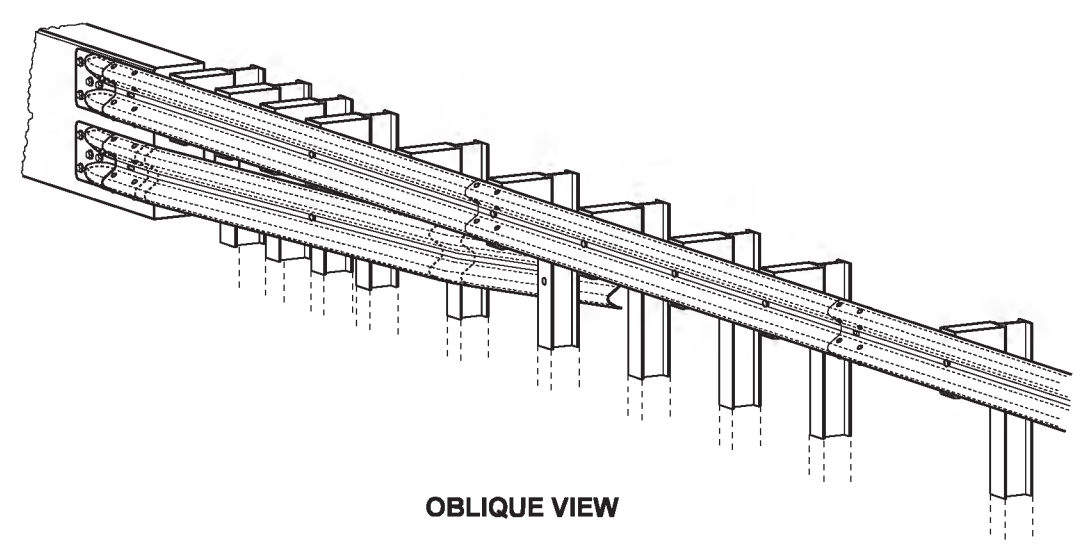

OBLIQUE VIEW

Barry, Ed
May 19 2014 11:53 AM

BEAM GUARDRAIL (TYPE 31) TRANSITION SECTION TYPE 20

STANDARD PLAN C-25.18-04

SHEET 1 OF 1 SHEET

APPROVED FOR PUBLICATION
Bakotich, Pasco
Jun 11 2014 1:11 PM
STATE DESIGN ENGINEER

Washington State Department of Transportation

DRAWN BY: FERN LIDDELL

NOTES

1. This guardrail transition is for connection to a vertical concrete shape, a single slope, or a safety shape barrier. The toe of the single slope and the safety shaped barrier shall be tapered or the barrier blocked out so that the toe of the barrier does not project past the face of the approach guardrail.
2. See **Standard Plan C-24.10** for details regarding connection to Bridge rail or traffic barrier.
3. For details of typical components, see **Standard Plans C-1b** and **C-20.10**.

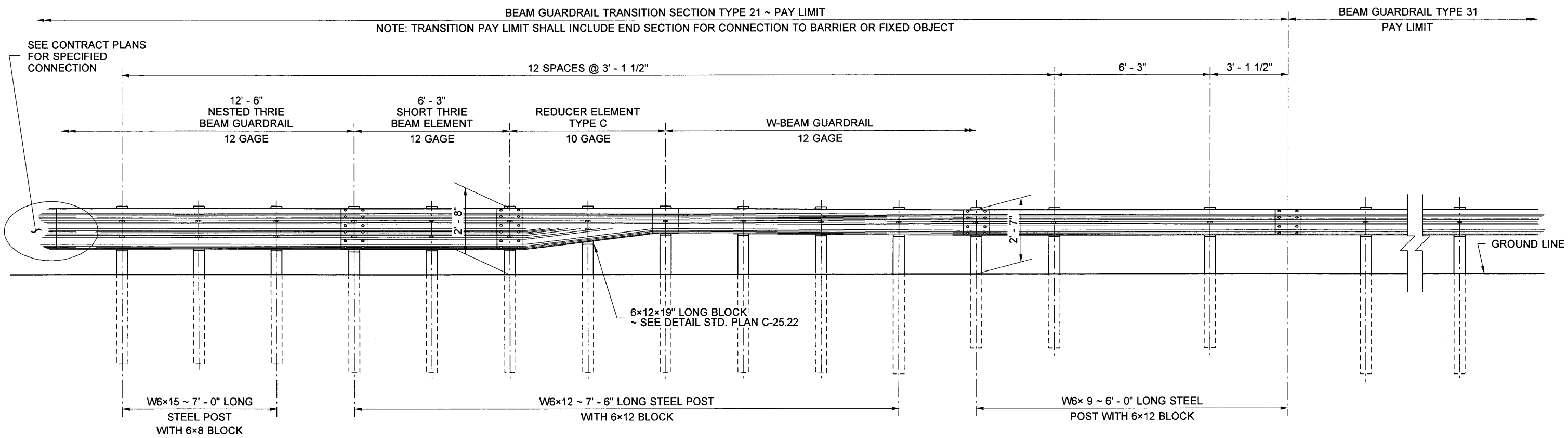

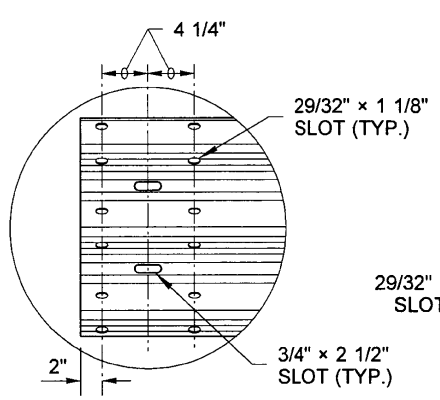

DETAIL (A)

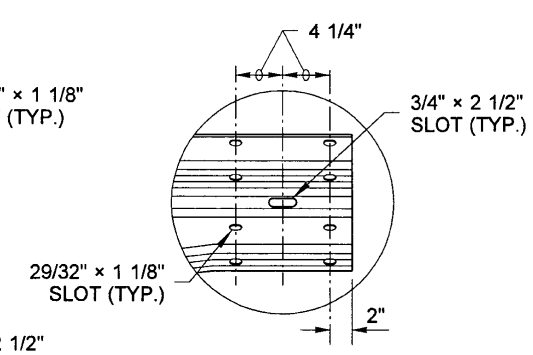

DETAIL (B)

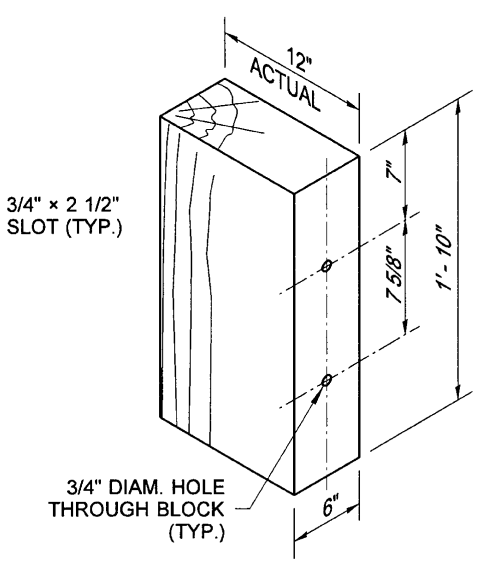

THRIE BEAM WOOD BLOCK

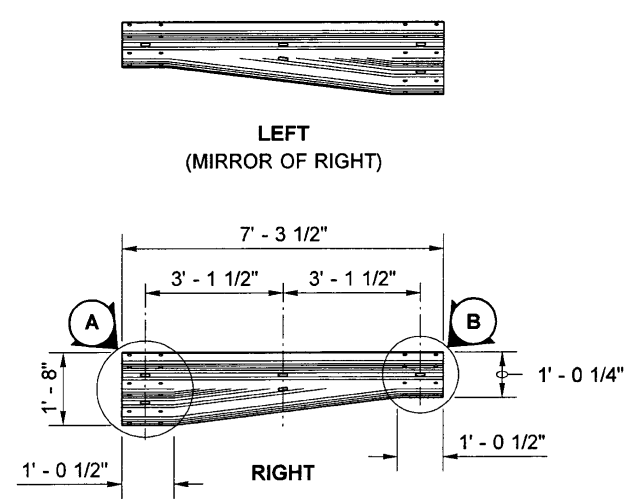

REDUCER ELEMENT TYPE C

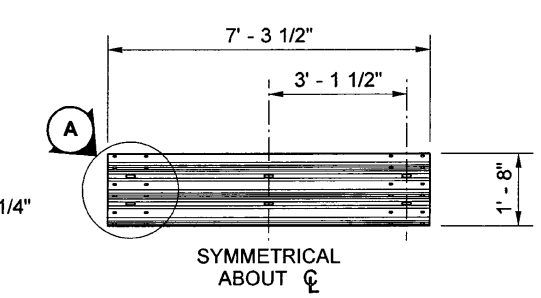

SHORT THRIE BEAM ELEMENT

7·2·2012

BEAM GUARDRAIL (TYPE 31)
TRANSITION SECTION
TYPE 21
STANDARD PLAN C-25.20-05

SHEET 1 OF 1 SHEET

APPROVED FOR PUBLICATION

STATE DESIGN ENGINEER — DATE 7/2/12

Washington State Department of Transportation

DRAWN BY: FERN LIDDELL

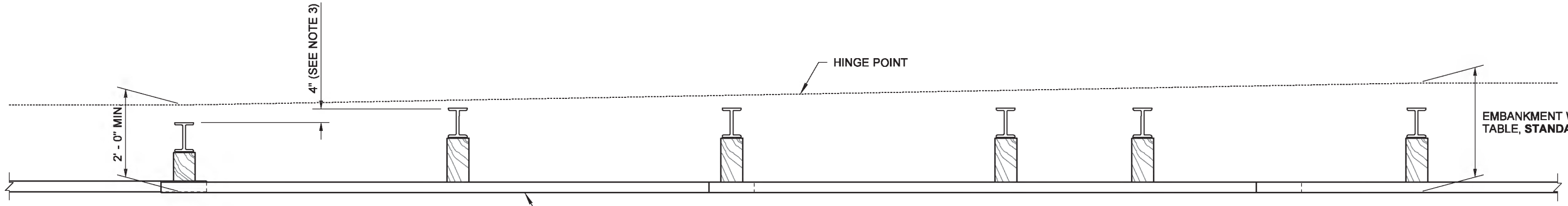

PLAN VIEW

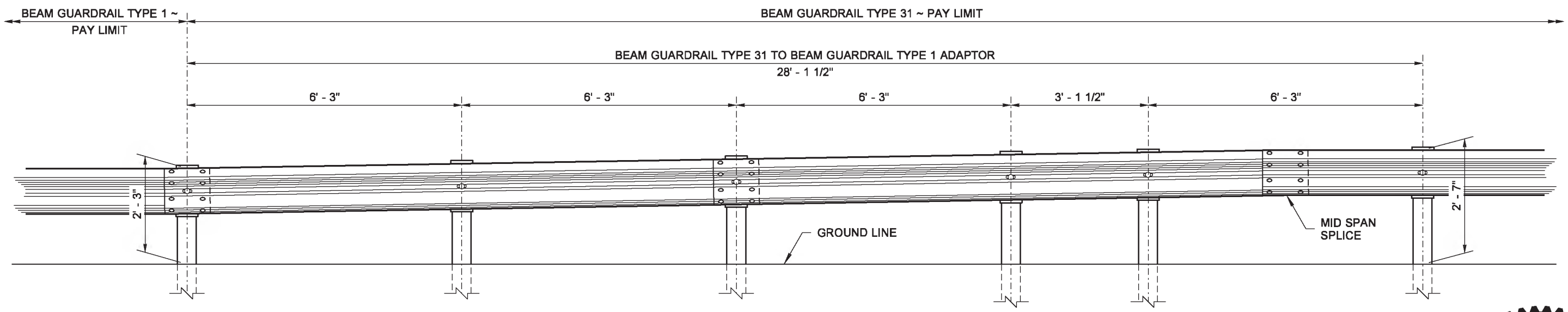

ELEVATION VIEW ~ PROFILE TAPER

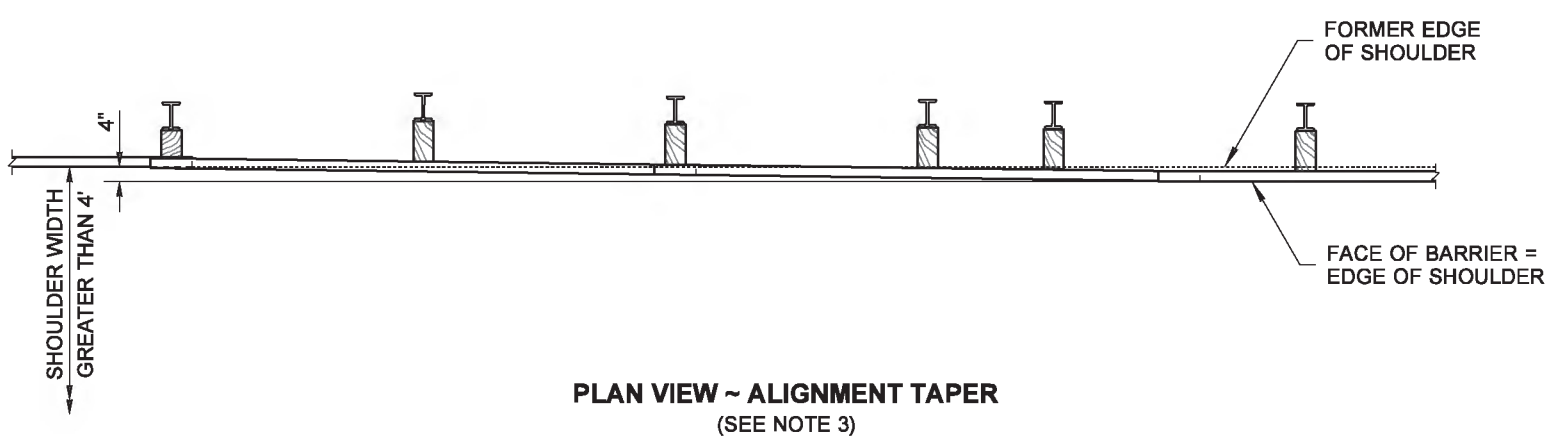

PLAN VIEW ~ ALIGNMENT TAPER
(SEE NOTE 3)

NOTES

1. Refer to **Standard Plans C-1** and **C-1b** for component details for Beam Guardrail Type 1 (not shown on this plan).
2. Refer to **Standard Plan C-20.10** for component details for Beam Guardrail Type 31 (not shown on this plan).
3. Where post offset is constrained, and when the existing shoulder will not be widened and is wider than 4' (ft), the existing shoulder may be reduced up to 4" (in) to accommodate the 12" (in) blockouts of the Beam Guardrail Type 31. See **PLAN VIEW ~ ALIGNMENT TAPER**.
4. Wood blocks shown. Blocks of alternate material may be used. See **Standard Specification 9-16.3(2).**
5. All posts for any standard barrier run shall be of the same type: timber or steel.

EDWARD PATRICK BARRY
STATE OF WASHINGTON
34363
REGISTERED
PROFESSIONAL ENGINEER

Barry, Ed
May 6 2014 3:22 PM

BEAM GUARDRAIL TYPE 31 TO BEAM GUARDRAIL TYPE 1 ADAPTOR
STANDARD PLAN C-25.80-03

SHEET 1 OF 1 SHEET

APPROVED FOR PUBLICATION
Bakotich, Pasco
Jun 11 2014 1:12 PM
STATE DESIGN ENGINEER

Washington State Department of Transportation

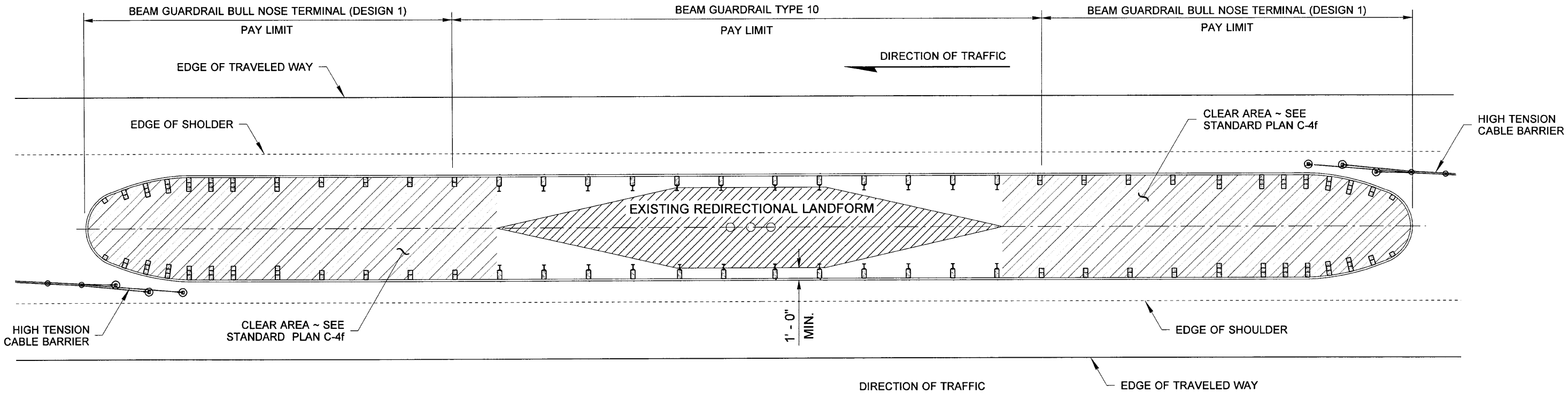

PLAN VIEW

CASE 9A

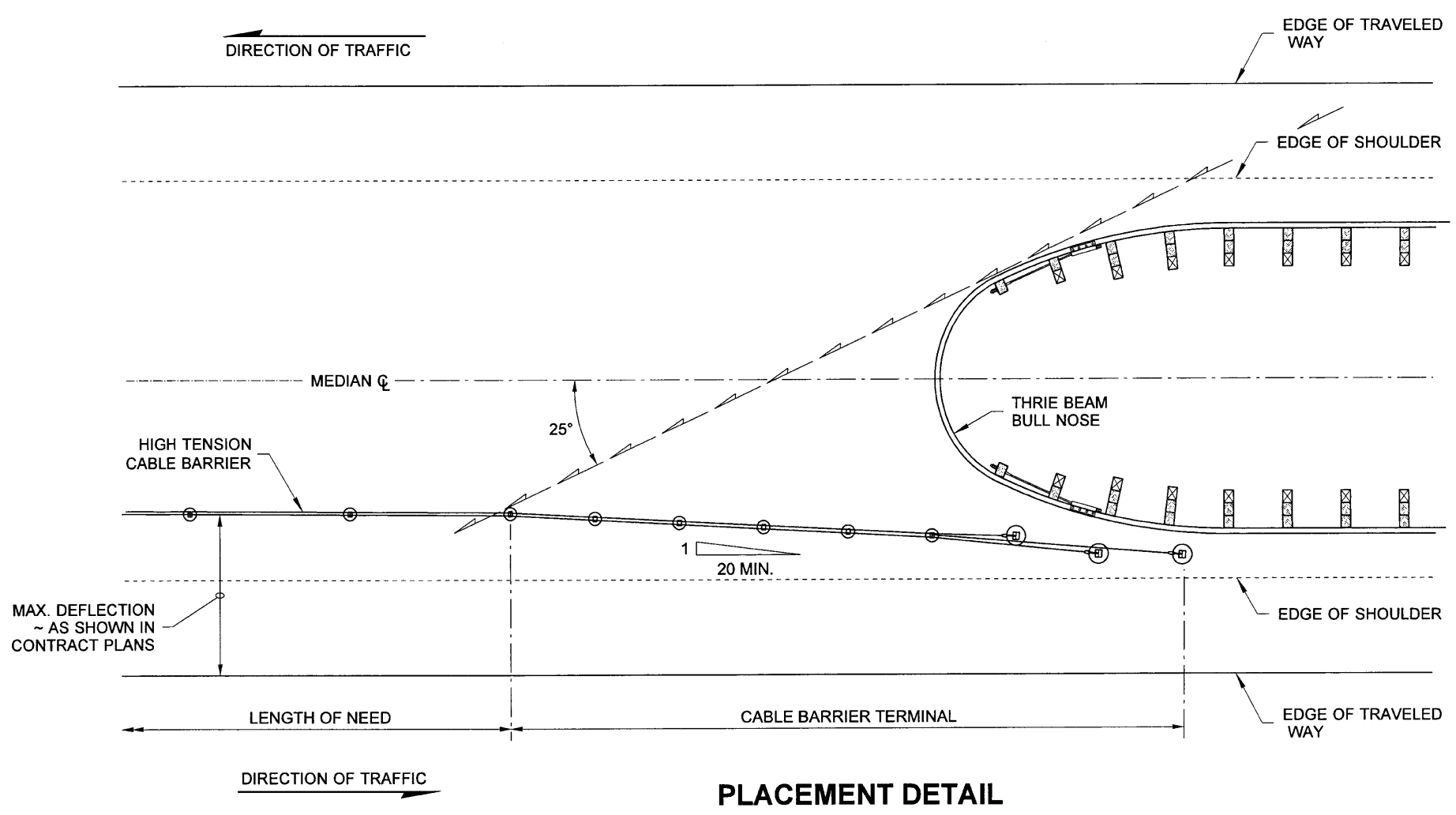

PLACEMENT DETAIL

LEGEND

Design Layout Line

7-2-2012

BARRIER PLACEMENT CABLE TO THRIE BEAM BULL NOSE CONNECTION STANDARD PLAN C-40.14-02

SHEET 1 OF 1 SHEET

APPROVED FOR PUBLICATION

STATE DESIGN ENGINEER — DATE 7/2/12

Washington State Department of Transportation

DRAWN BY: FERN LIDDELL

DRAWN BY: LISA CYFORD

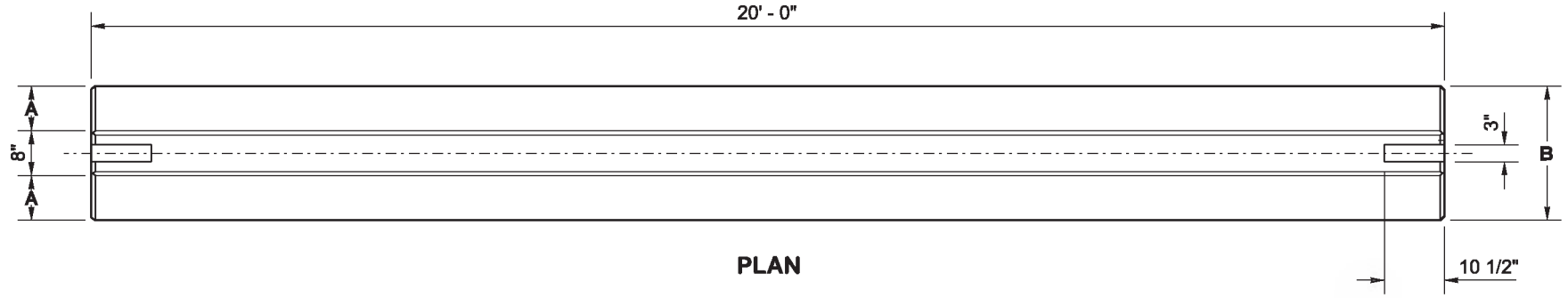

PLAN

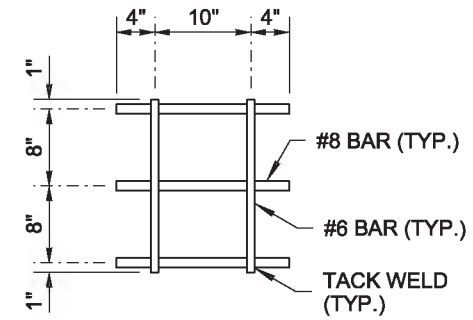

REBAR GRID DETAIL
FOR PERMANENT INSTALLATION

NOTES

1. PERMANENT INSTALLATION requirements: Embed barrier 3" (in) minimum; install 3/8" (in) Premolded Joint Filler between segments; fill the Connection Blockout with grout, centering the Rebar Grid in the blockout before adding grout.
2. TEMPORARY INSTALLATION requirement: Place a Rebar Grid in the Connection Blockout between barrier segments.
3. Installation on a horizontal curve with a radius less than 2,000' (ft) requires a modified end design.
4. For Barrier with a 2' - 10" reveal, see Sheet 2. For High-Performance Barrier with a 3' - 6" reveal, see Sheet 3.

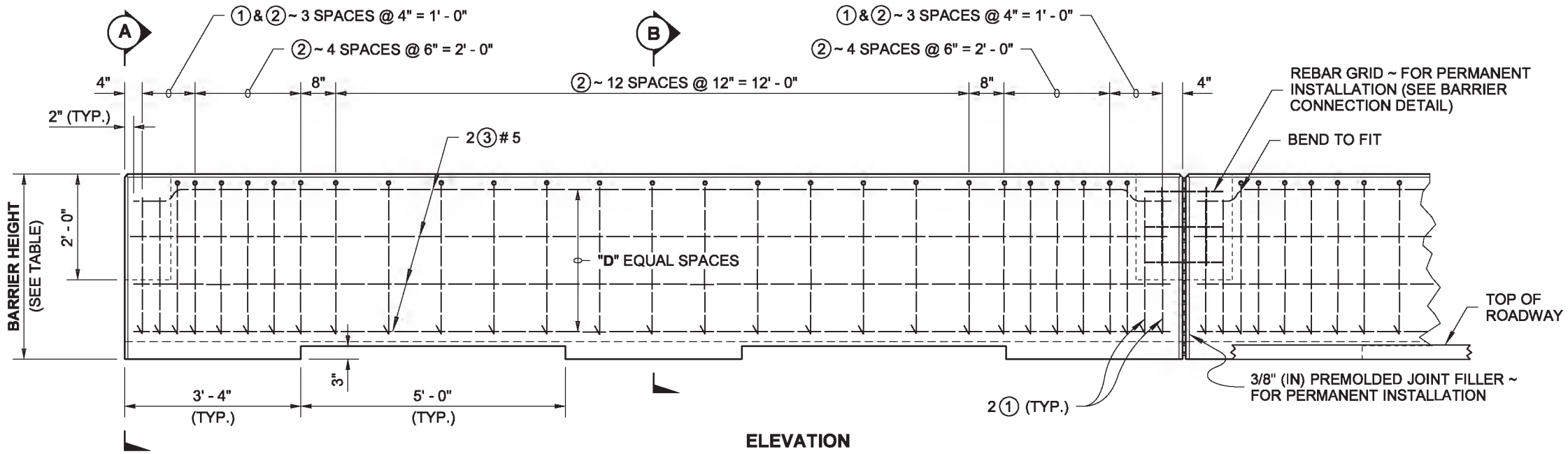

ELEVATION

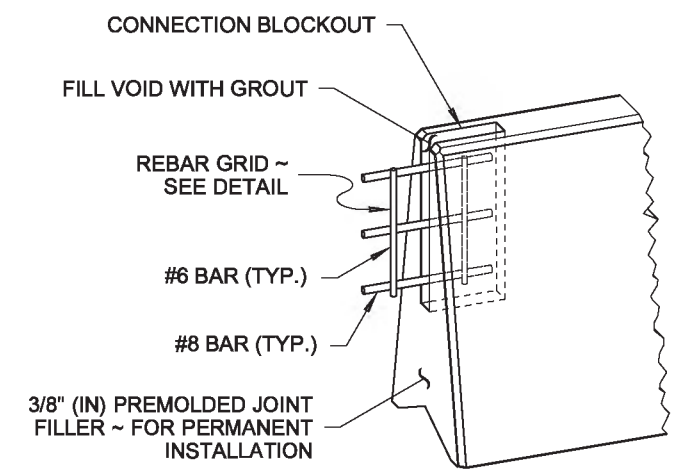

BARRIER CONNECTION DETAIL
FOR PERMANENT INSTALLATION

NOTE:
STEEL WELDED WIRE REINFORCEMENT DEFORMED FOR CONCRETE MAY BE SUBSTITUTED FOR REINFORCING STEEL IN ACCORDANCE WITH **STANDARD SPECIFICATION 6-10.3**

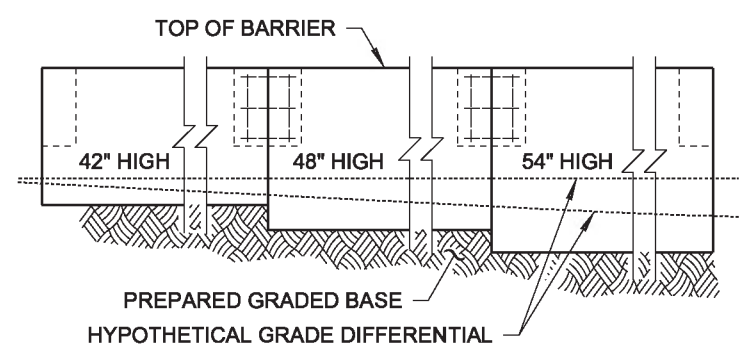

BARRIER TRANSITION DETAIL

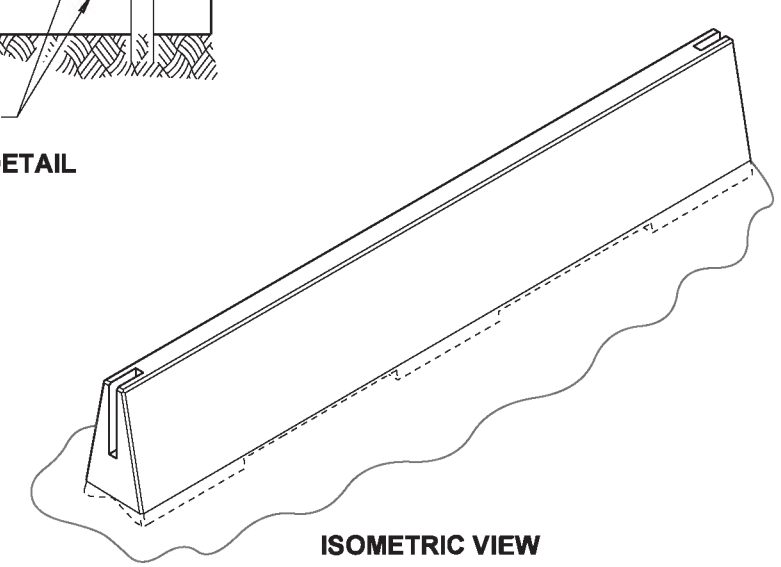

ISOMETRIC VIEW

REINFORCING STEEL BENDING DIAGRAM

SEE **STD. SPEC. 9-07.1(2)** FOR BENDING DIAMETERS

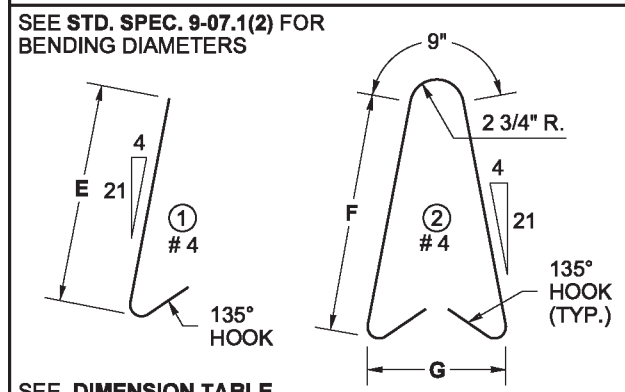

SEE **DIMENSION TABLE**

DIMENSION TABLE

BARRIER HEIGHT	A	B	D	E	F	G	HORIZONTAL BARS (QTY.)
3' - 6"	8"	2' - 0"	3	2' - 8"	2' - 10"	1' - 7"	8
4' - 0"	9 1/8"	2' - 2 1/4"	4	3' - 2"	3' - 4"	1' - 9"	10
4' - 6"	10 1/4"	2' - 4 1/2"	5	3' - 8"	3' - 10"	1' - 11"	12

EDWARD PATRICK BARRY
STATE OF WASHINGTON
34363
REGISTERED
PROFESSIONAL ENGINEER

Barry, Ed
May 19 2014 8:24 AM

SINGLE-SLOPE CONCRETE BARRIER (PRECAST)

STANDARD PLAN C-70.10-01

SHEET 1 OF 3 SHEETS

APPROVED FOR PUBLICATION
Bakotich, Pasco
Jun 17 2014 9:34 AM

STATE DESIGN ENGINEER

Washington State Department of Transportation

DRAWN BY: LISA CYFORD

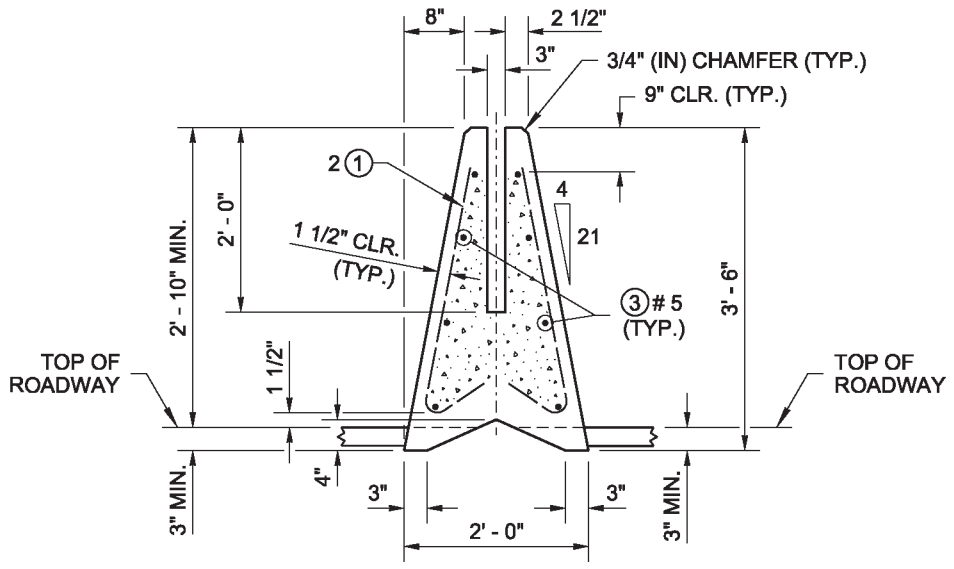

SECTION (A)

3' - 6" BARRIER
SHOWN LEVEL

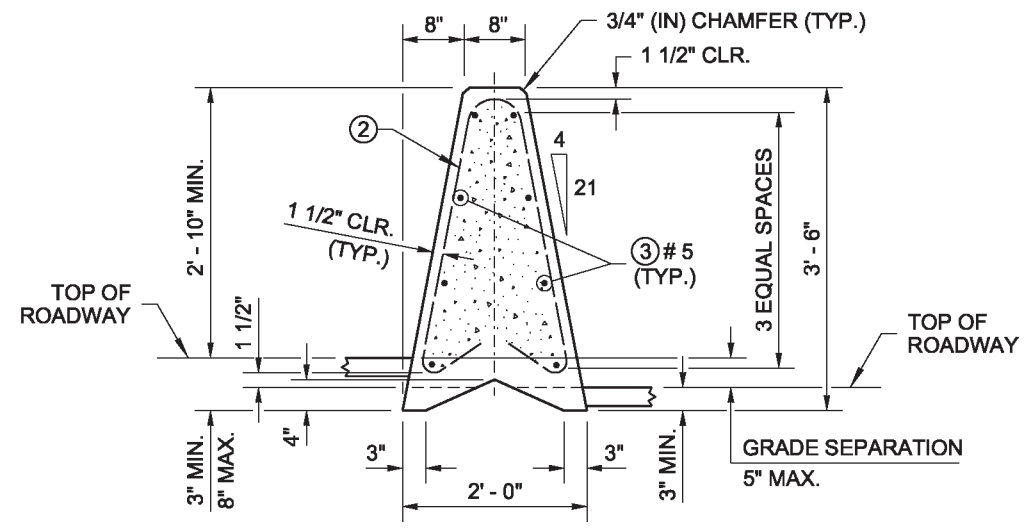

SECTION (B)

3' - 6" BARRIER FOR USE WITH A
0" (IN) TO 5" (IN) MAX. GRADE SEPARATION

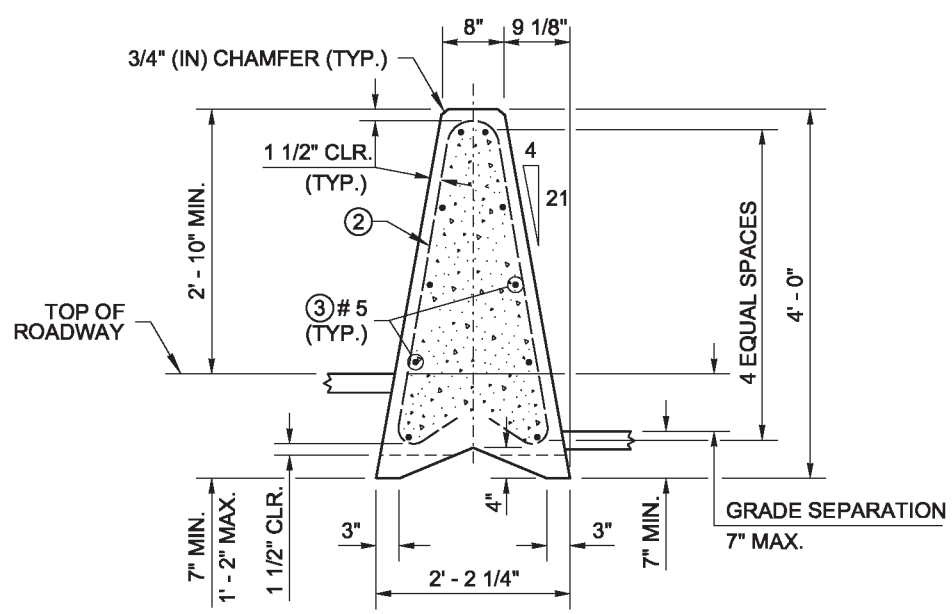

SECTION (B)

4' - 0" BARRIER FOR USE WITH A
GREATER THAN 5" (IN) TO 7" (IN) MAX.
GRADE SEPARATION

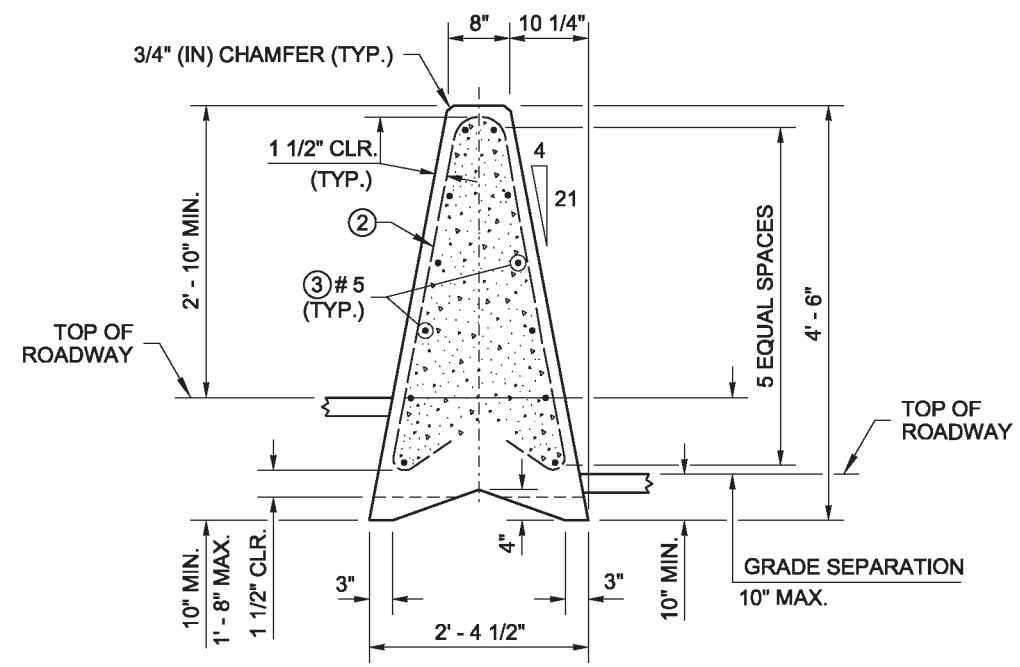

SECTION (B)

4' - 6" BARRIER FOR USE WITH A
GREATER THAN 7" (IN) TO 10" (IN) MAX.
GRADE SEPARATION

STANDARD MOUNTING HEIGHT

EDWARD PATRICK BARRY
STATE OF WASHINGTON
34363
REGISTERED
PROFESSIONAL ENGINEER

Barry, Ed
May 19 2014 8:25 AM

SINGLE-SLOPE CONCRETE BARRIER (PRECAST)

STANDARD PLAN C-70.10-01

SHEET 2 OF 3 SHEETS

APPROVED FOR PUBLICATION
Bakotich, Pasco
Jun 17 2014 9:34 AM

STATE DESIGN ENGINEER

Washington State Department of Transportation

DRAWN BY: LISA CYFORD

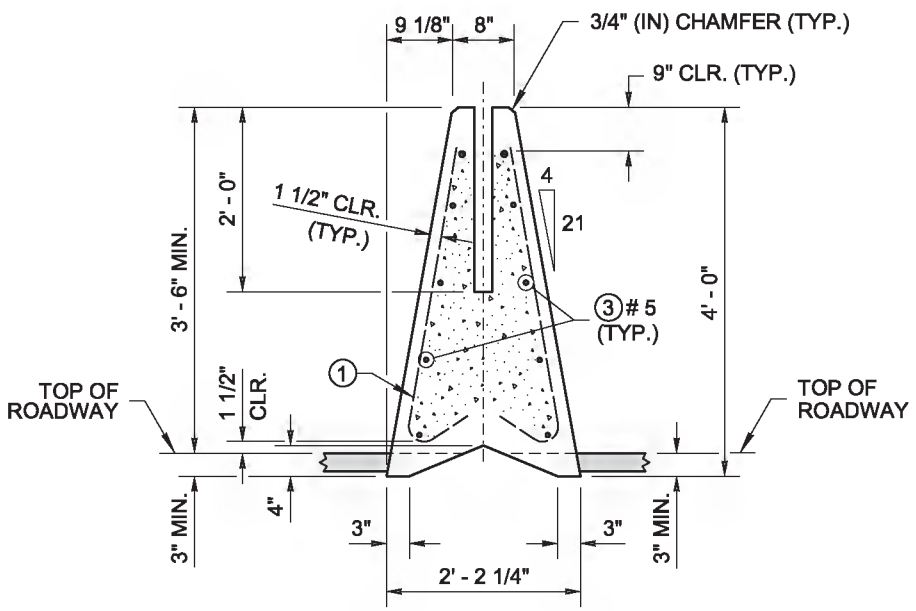

SECTION (A)

4' - 0" BARRIER
SHOWN LEVEL

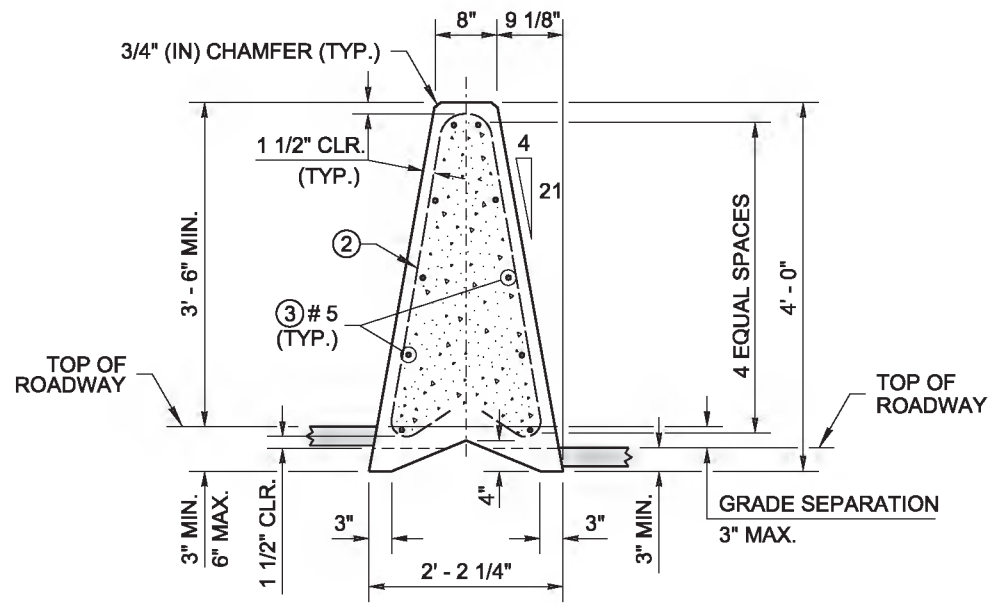

SECTION (B)

4' - 0" BARRIER FOR USE WITH A
0" (IN) TO 3" (IN) MAX. GRADE SEPARATION

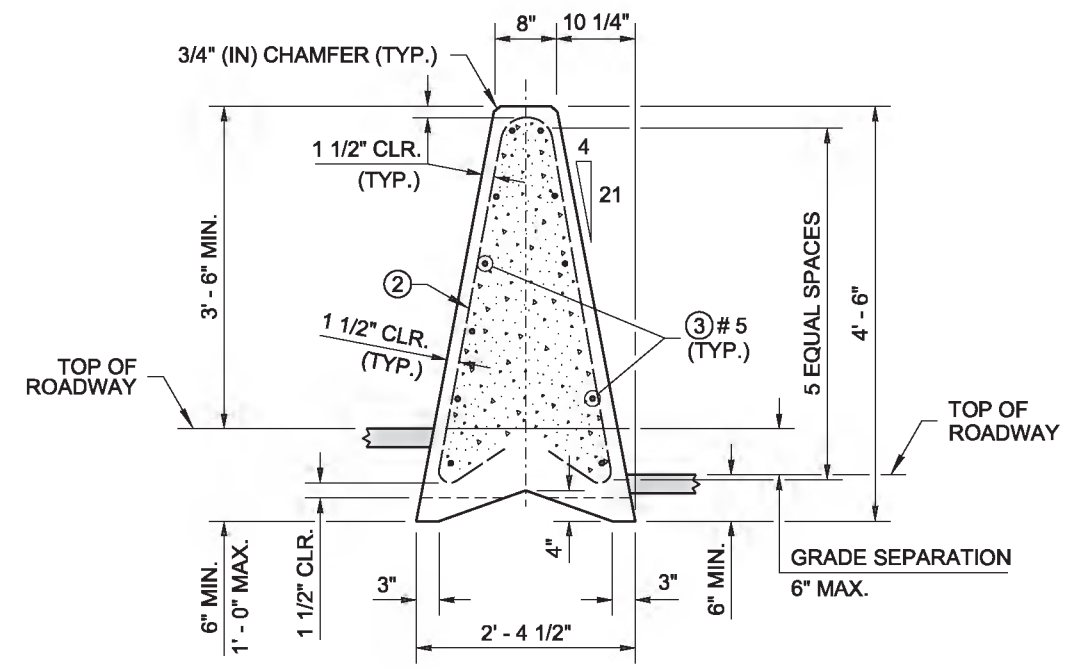

SECTION (B)

4' - 6" BARRIER FOR USE WITH A
GREATER THAN 3" (IN) TO 6" (IN) MAX.
GRADE SEPARATION

EDWARD PATRICK BARRY
STATE OF WASHINGTON
34363
REGISTERED
PROFESSIONAL ENGINEER

Barry, Ed
May 19 2014 8:26 AM

SINGLE-SLOPE CONCRETE BARRIER (PRECAST)

STANDARD PLAN C-70.10-01

SHEET 3 OF 3 SHEETS

APPROVED FOR PUBLICATION
Bakotich, Pasco
Jun 17 2014 9:34 AM
STATE DESIGN ENGINEER
Washington State Department of Transportation

HIGH-PERFORMANCE BARRIER

DRAWN BY: LISA CYFORD

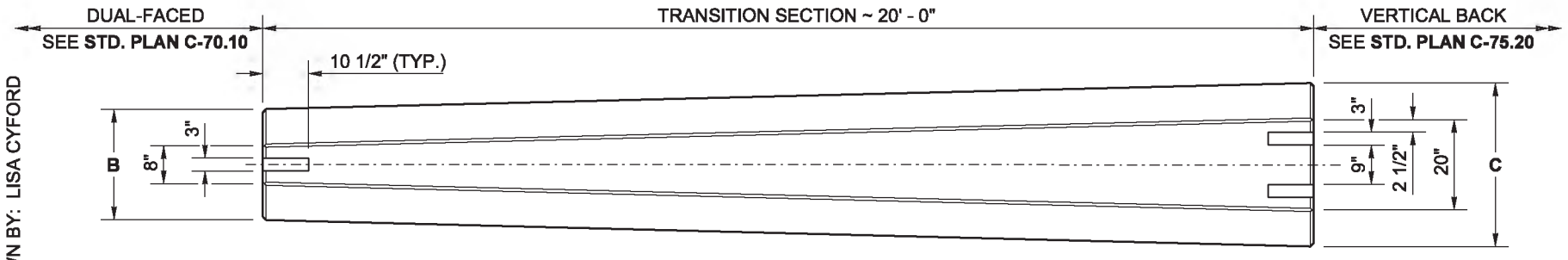

PLAN

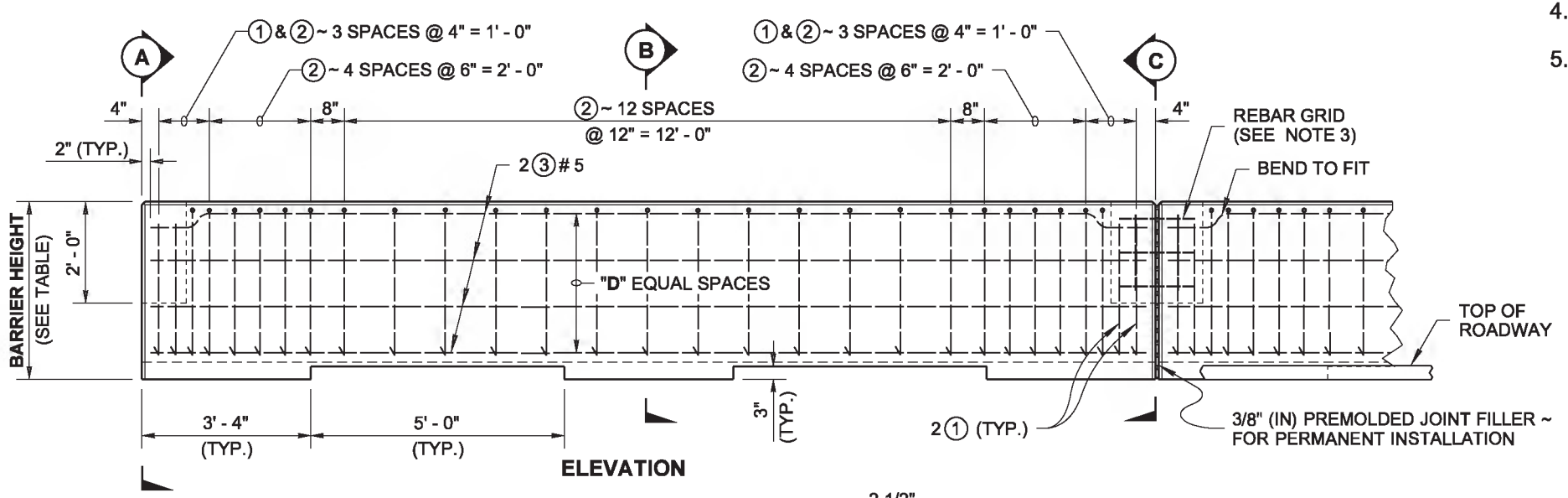

ELEVATION

NOTES

1. PERMANENT INSTALLATION requirements: Embed barrier 3" (in) minimum; install 3/8" (in) Premolded Joint Filler between segments; fill the Connection Blockout with grout, centering the Rebar Grid in the blockout before adding grout.
2. TEMPORARY INSTALLATION requirement: Place a Rebar Grid in the Connection Blockout between barrier segments.
3. See **Standard Plan C-70.10** for REBAR GRID DETAIL and BARRIER CONNECTION DETAIL.
4. This plan is for transitions to precast concrete barriers only.
5. When **High-Performance Concrete Barrier** is specified in the Contract, use the dimensions given in the H/P row in the DIMENSION TABLE, with a minimum height above roadway of 3' - 6" and a minimum embedment of 3" (in).

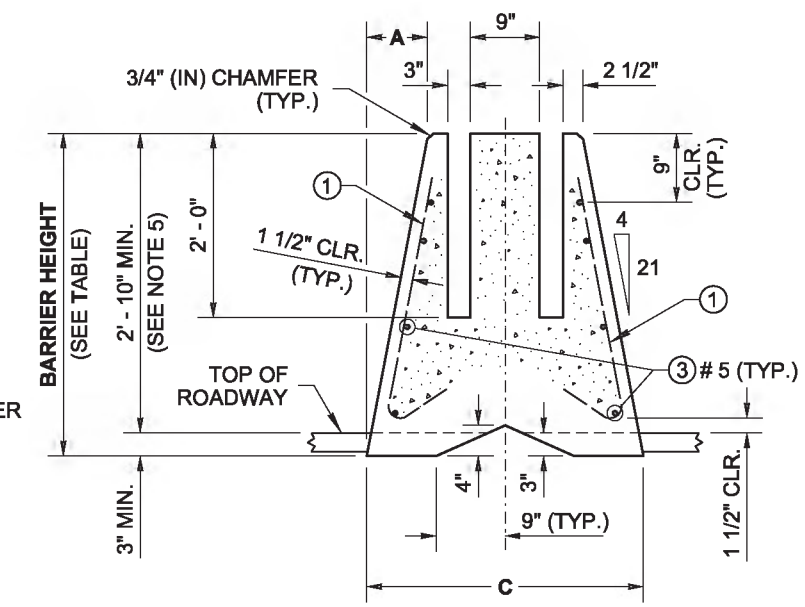

SECTION (C)

NOTE:
STEEL WELDED WIRE REINFORCEMENT DEFORMED FOR CONCRETE MAY BE SUBSTITUTED FOR REINFORCING STEEL IN ACCORDANCE WITH **STANDARD SPECIFICATION 6-10.3**

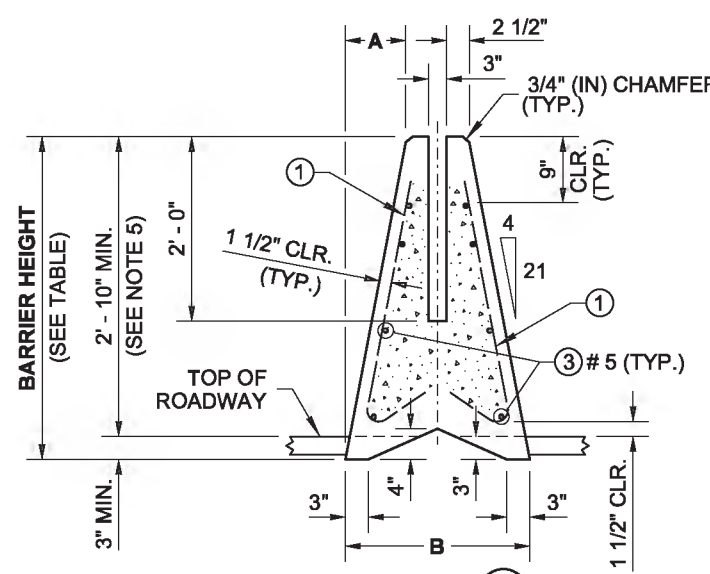

SECTION (A)

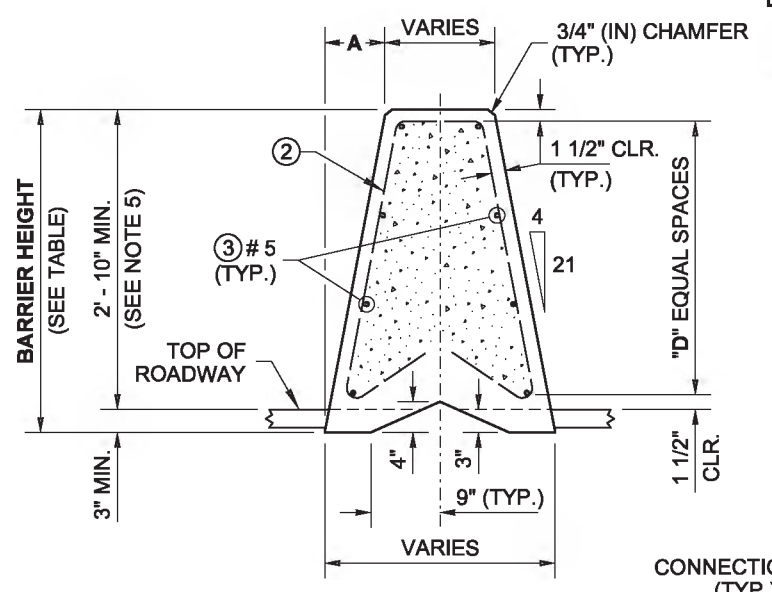

SECTION (B)

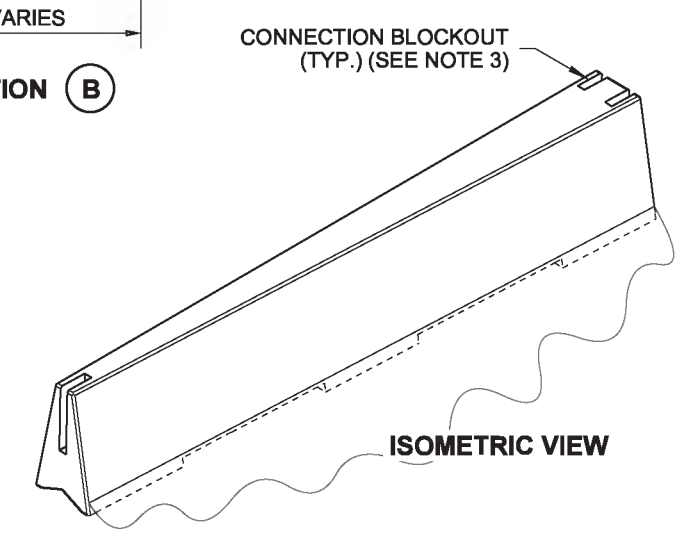

ISOMETRIC VIEW

REINFORCING STEEL BENDING DIAGRAM

SEE **STD. SPEC. 9-07.1(2)** FOR BENDING DIAMETERS

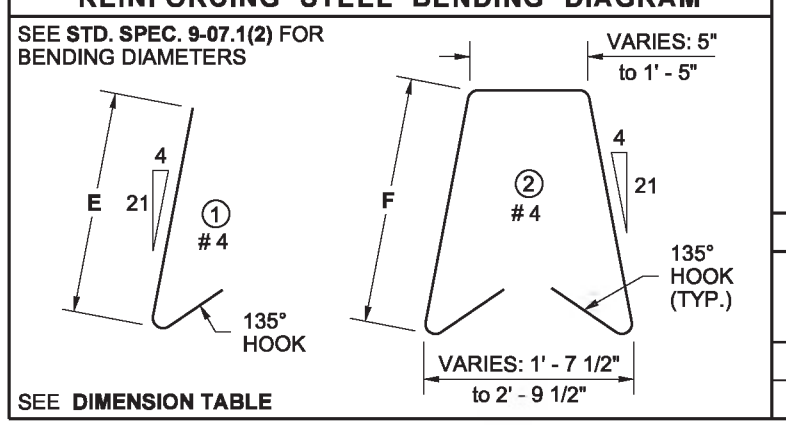

SEE **DIMENSION TABLE**

DIMENSION TABLE (SEE NOTE 5)

	BARRIER HEIGHT	A	B	C	D	E	F	HORIZONTAL BARS (QTY.)
STD.	3' - 6"	8"	2' - 0"	3' - 0"	3	2' - 8"	2' - 9"	8
H/P	4' - 0"	9 1/8"	2' - 2 1/4"	3' - 2 1/4"	4	3' - 2"	3' - 3"	10

Barry, Ed
May 19 2014 8:27 AM

SINGLE-SLOPE CONCRETE BARRIER (PRECAST) TRANSITION SECTION

STANDARD PLAN C-75.10-01

SHEET 1 OF 1 SHEET

APPROVED FOR PUBLICATION
Bakotich, Pasco
Jun 11 2014 1:13 PM

STATE DESIGN ENGINEER

Washington State Department of Transportation

DRAWN BY: LISA CYFORD

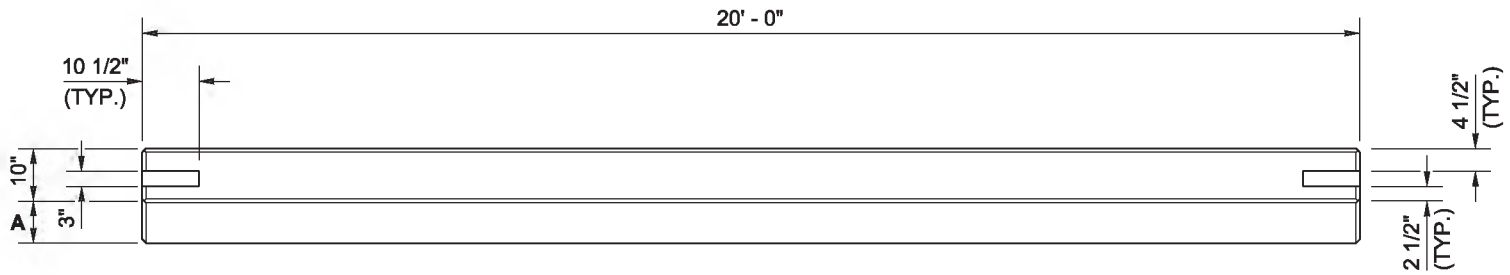

PLAN

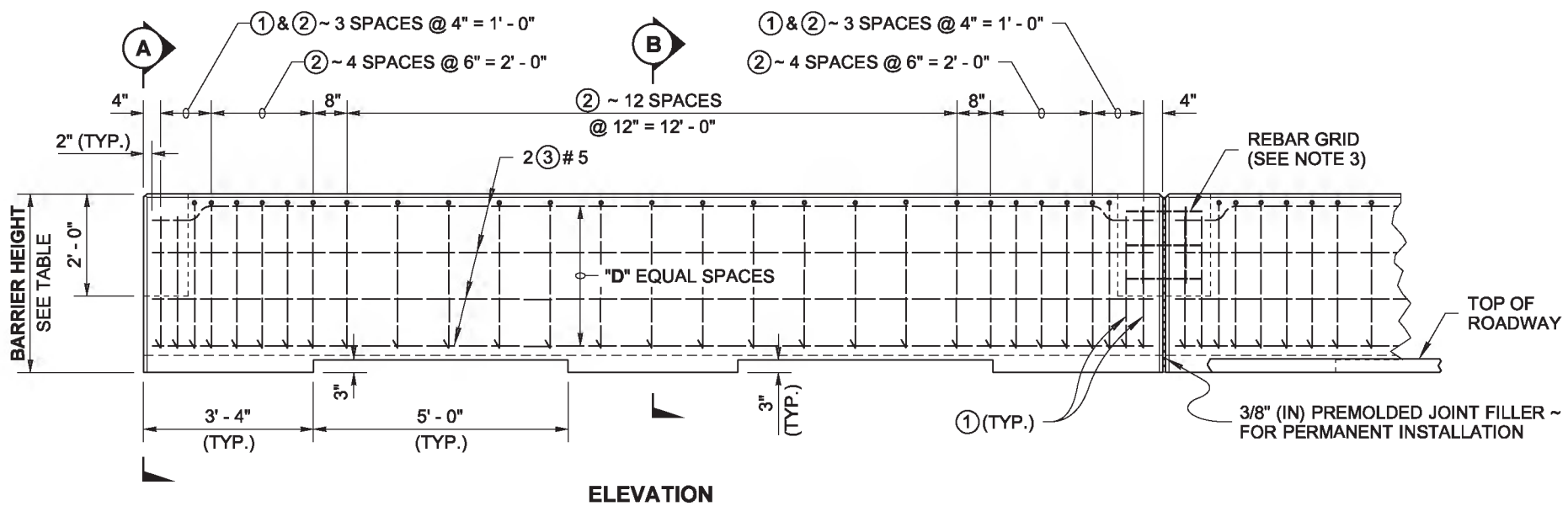

ELEVATION

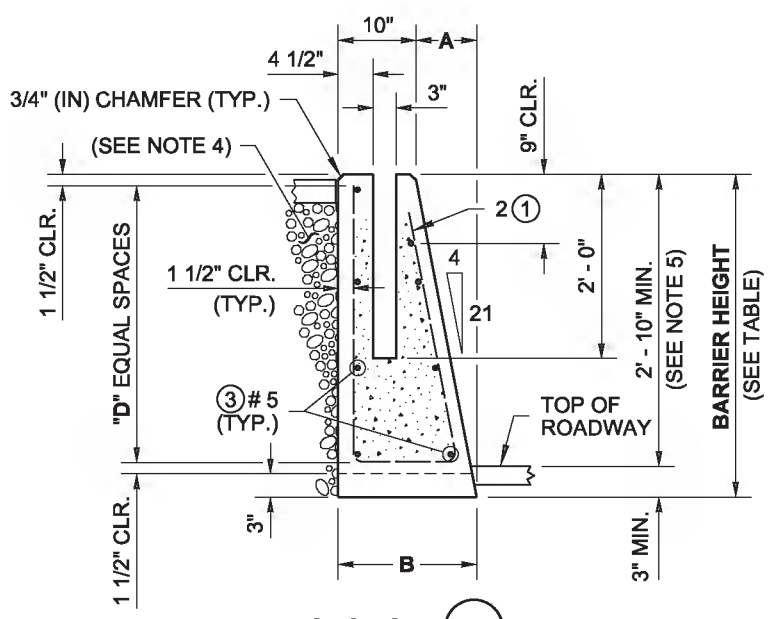

SECTION A

NOTE:
STEEL WELDED WIRE REINFORCEMENT DEFORMED FOR CONCRETE MAY BE SUBSTITUTED FOR REINFORCING STEEL IN ACCORDANCE WITH **STANDARD SPECIFICATION 6-10.3**

REINFORCING STEEL BENDING DIAGRAM

SEE **STD. SPEC. 9-07.1(2)** FOR BENDING DIAMETERS

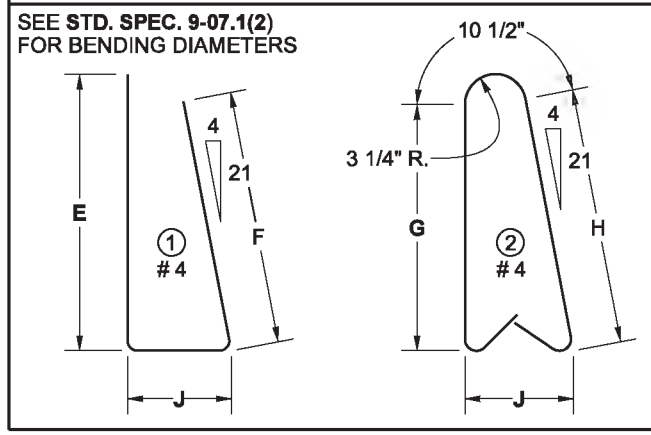

DIMENSION TABLE (SEE NOTE 5)										
	BARRIER HEIGHT	A	B	D	E	F	G	H	J	HORIZONTAL BARS (QTY.)
STD.	3' - 6"	8"	1' - 6"	3	3' - 0"	2' - 8 1/2"	2' - 8"	2' - 9 1/2"	1' - 2"	8
H/P	4' - 0"	9 1/8"	1' - 7 1/8"	4	3' - 6"	3' - 2 1/2"	3' - 2"	3' - 3 1/2"	1' - 3"	10

NOTES

1. PERMANENT INSTALLATION requirements: Embed barrier 3" (in) minimum; install 3/8" (in) Premolded Joint Filler between segments; fill the Connection Blockout with grout, centering the Rebar Grid in the blockout before adding grout.
2. TEMPORARY INSTALLATION requirement: Place a Rebar Grid in the Connection Blockout between barrier segments.
3. See **Standard Plan C-70.10** for REBAR GRID DETAIL and BARRIER CONNECTION DETAIL.
4. Vertical Back barrier is used only in the configurations shown in **Standard Plans C-85.10** and **C-85.20**, and when placed against a retaining wall.
5. When **High-Performance Concrete Barrier** is specified in the Contract, use the dimensions given in the H/P row in the DIMENSION TABLE, with a minimum height above roadway of 3' - 6" and a minimum embedment of 3" (in).

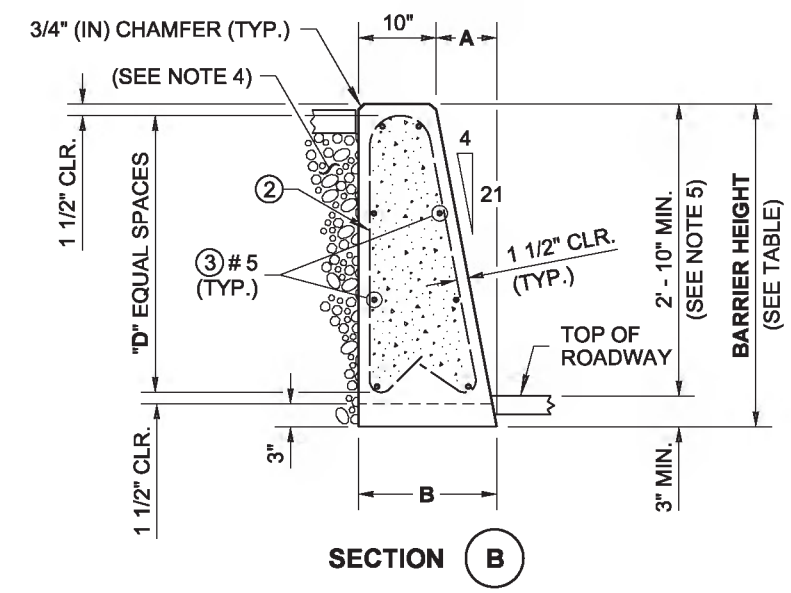

SECTION B

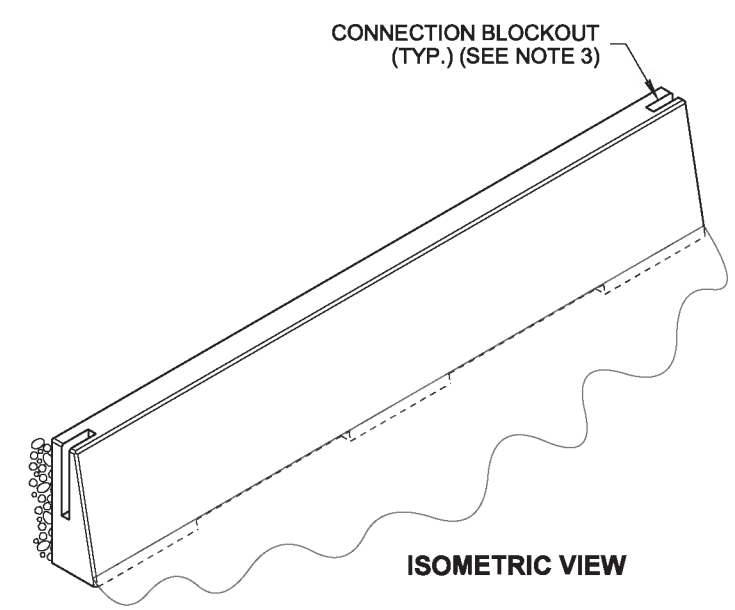

ISOMETRIC VIEW

Barry, Ed
May 19 2014 8:28 AM

SINGLE-SLOPE CONCRETE BARRIER (PRECAST) VERTICAL BACK

STANDARD PLAN C-75.20-01

SHEET 1 OF 1 SHEET

APPROVED FOR PUBLICATION
Bakotich, Pasco
Jun 11 2014 1:13 PM

STATE DESIGN ENGINEER

Washington State Department of Transportation

DRAWN BY: LISA CYFORD

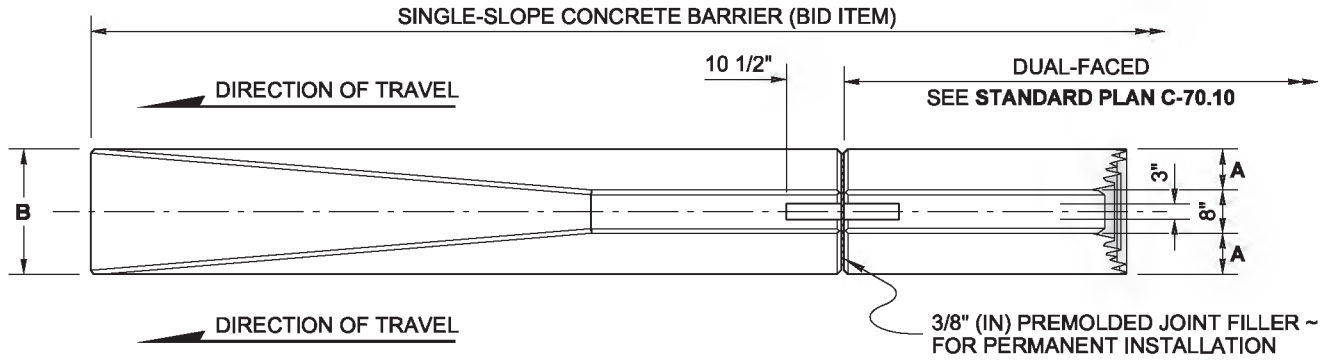

PLAN

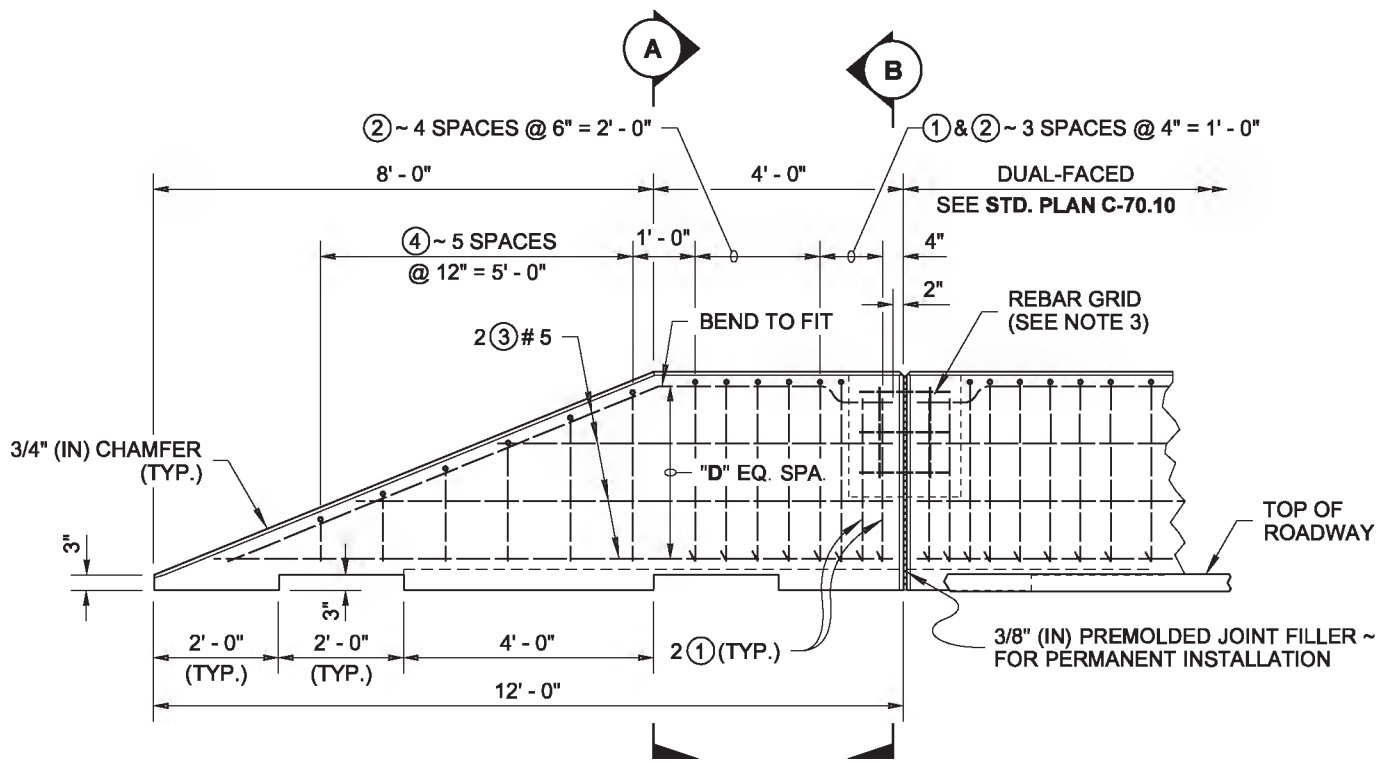

ELEVATION

NOTES

1. PERMANENT INSTALLATION requirements: Embed barrier 3" (in) minimum; install 3/8" (in) Premolded Joint Filler between segments; fill the Connection Blockout with grout, centering the Rebar Grid in the blockout before adding grout.
2. TEMPORARY INSTALLATION requirement: Place a Rebar Grid in the Connection Blockout between barrier segments.
3. See **Standard Plan C-70.10** for REBAR GRID DETAIL and BARRIER CONNECTION DETAIL.
4. The Terminal is used only on the trailing end of a barrier, unless otherwise shown in the Contract.
5. When **High-Performance Concrete Barrier** is specified in the Contract, use the dimensions given in the H/P row in the DIMENSION TABLE, with a minimum height above roadway of 3' - 6" and a minimum embedment of 3" (in).

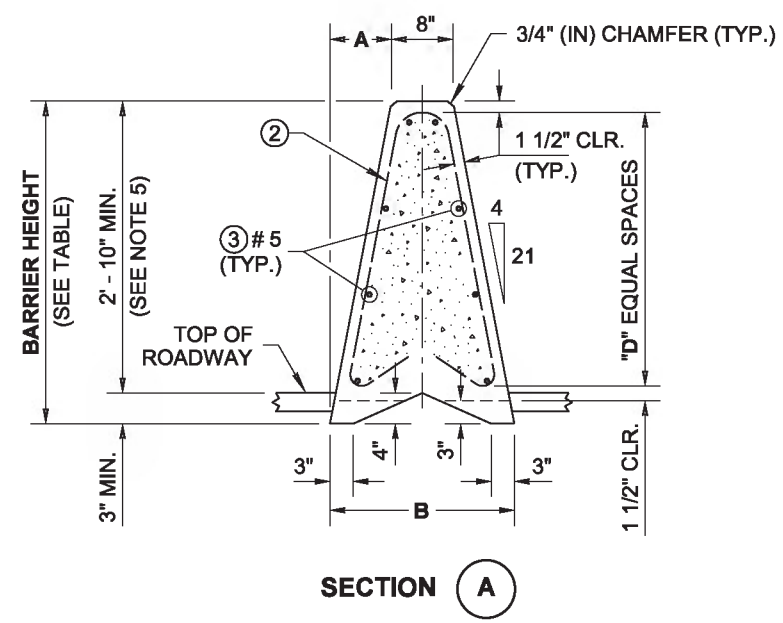

SECTION A

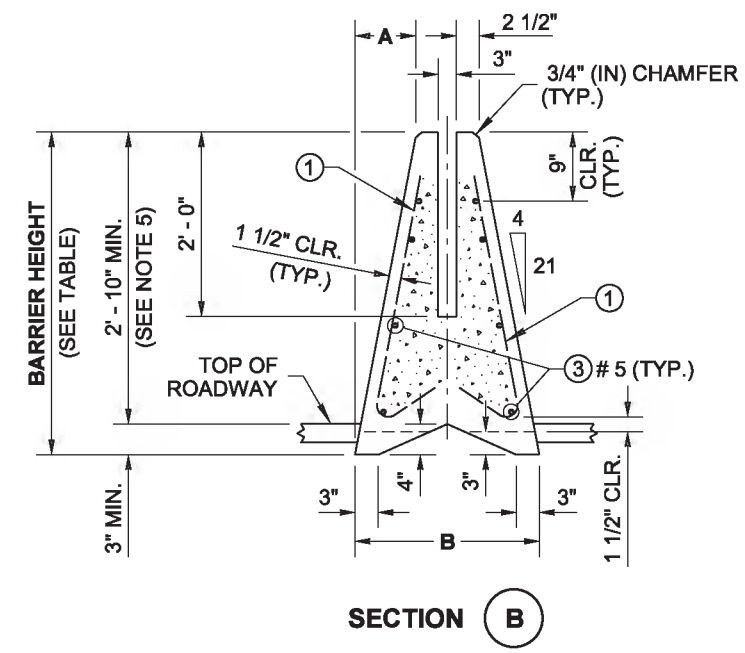

SECTION B

NOTE:
STEEL WELDED WIRE REINFORCEMENT DEFORMED FOR CONCRETE MAY BE SUBSTITUTED FOR REINFORCING STEEL IN ACCORDANCE WITH **STANDARD SPECIFICATION 6-10.3**

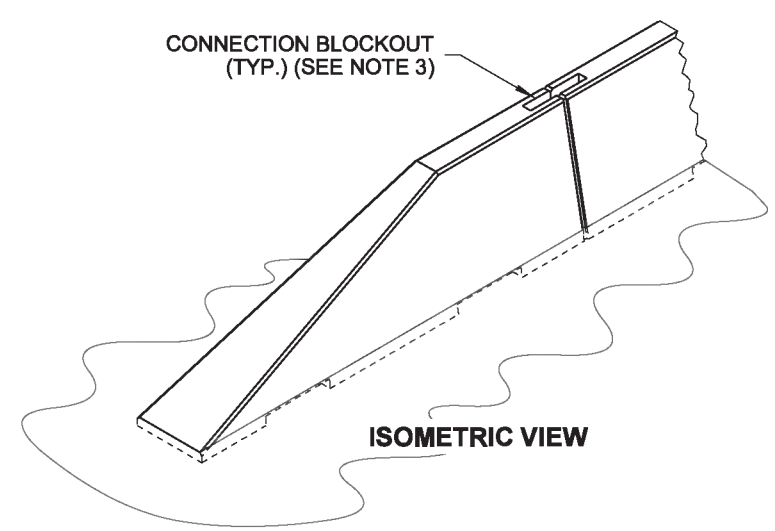

ISOMETRIC VIEW

REINFORCING STEEL BENDING DIAGRAM

SEE **STD. SPEC. 9-07.1(2)** FOR BENDING DIAMETERS

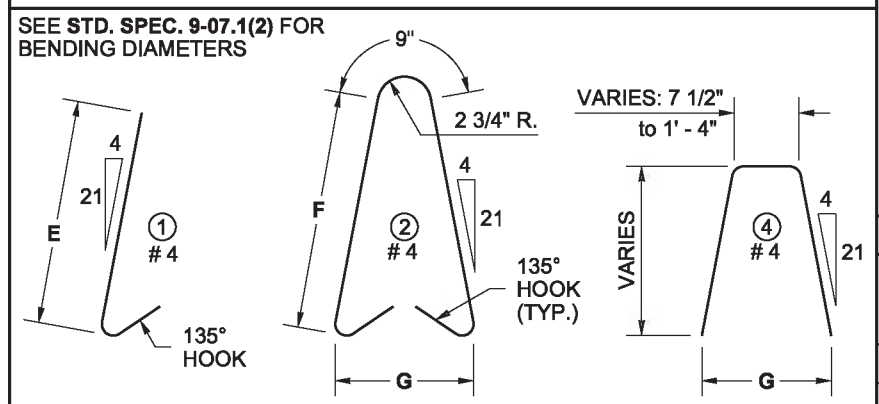

DIMENSION TABLE (SEE NOTE 5)

	BARRIER HEIGHT	A	B	D	E	F	G	HORIZONTAL BARS (QTY.)
STD.	3' - 6"	8"	2' - 0"	3	2' - 8"	2' - 9"	1' - 7"	8
H/P	4' - 0"	9 1/8"	2' - 2 1/4"	4	3' - 2"	3' - 3"	1' - 9"	10

EDWARD PATRICK BARRY
STATE OF WASHINGTON
34363
REGISTERED
PROFESSIONAL ENGINEER

Barry, Ed
May 19 2014 8:28 AM

SINGLE-SLOPE CONCRETE BARRIER (PRECAST) TERMINAL

STANDARD PLAN C-75.30-01

SHEET 1 OF 1 SHEET

APPROVED FOR PUBLICATION
Bakotich, Pasco
Jun 11 2014 1:13 PM

STATE DESIGN ENGINEER

Washington State Department of Transportation

DRAWN BY: LISA CYFORD

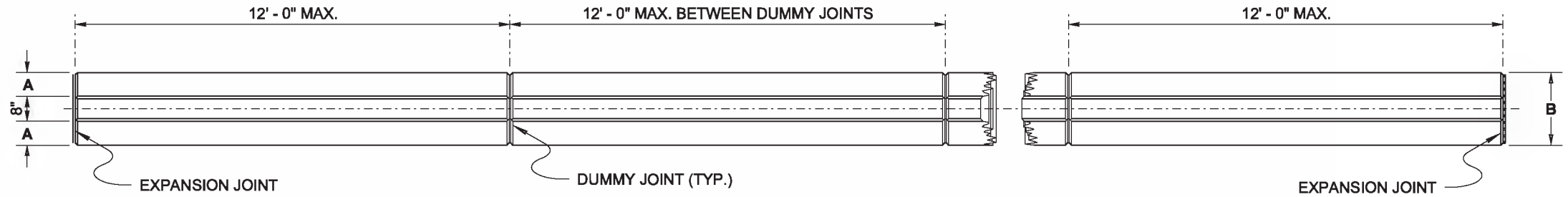

PLAN

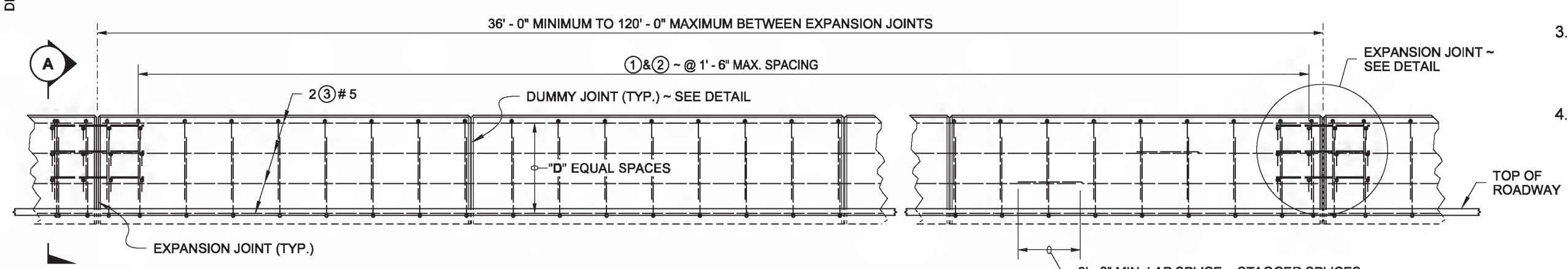

ELEVATION

NOTES

1. Reinforcing steel dimensions and clearances are shown for stationary form construction. When slipform construction is used, increase reinforcing steel clearances to the outside surfaces of the barrier to 2 1/2" (in) and adjust the rebar dimensions as required.
2. When connecting between cast-in-place and pre-cast single-slope barrier, provide a Blockout, Rebar Grid, and added rebar, as shown in **Standard Plan C-70.10.**
3. The actual dimensions will vary as the grades change and the barrier transitions in height and width. The dimensions may be interpolated for intermediate barrier heights.
4. For barrier with a 2' - 10" reveal, see Sheet 2. For High-Performance Barrier with a 3' - 6" reveal, see Sheet 3.

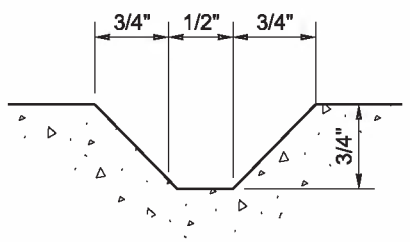

TYPICAL SECTION

DUMMY JOINT DETAIL

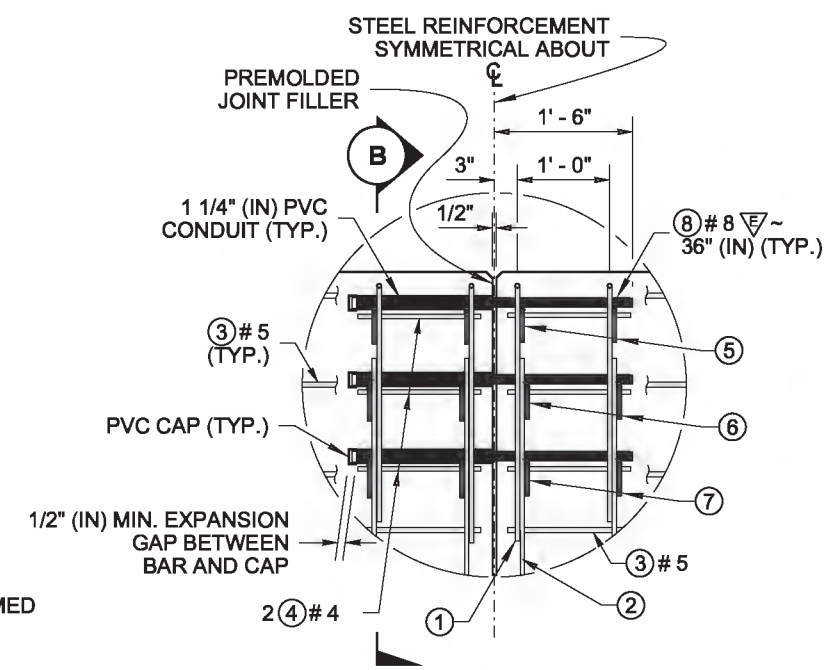

ENSURE NO CEMENT CONCRETE ENTERS THE PVC CONDUIT WHEN POURING

E = EPOXY COATED

EXPANSION JOINT DETAIL

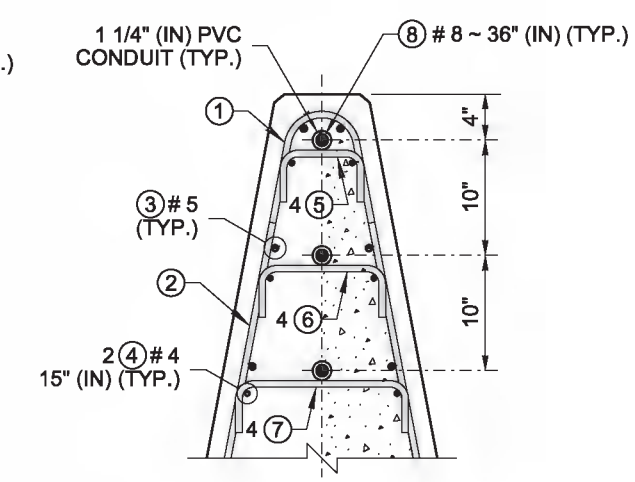

SECTION B

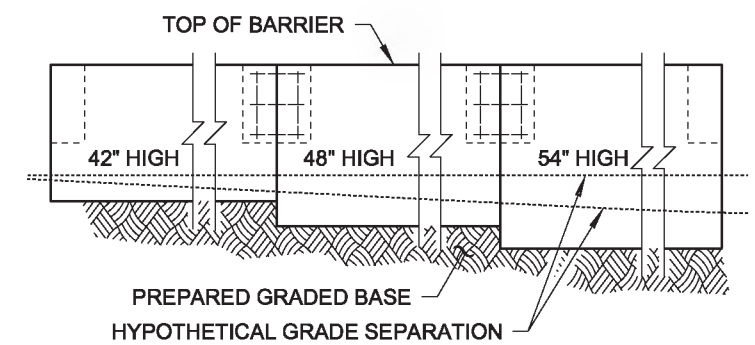

BARRIER TRANSITION DETAIL

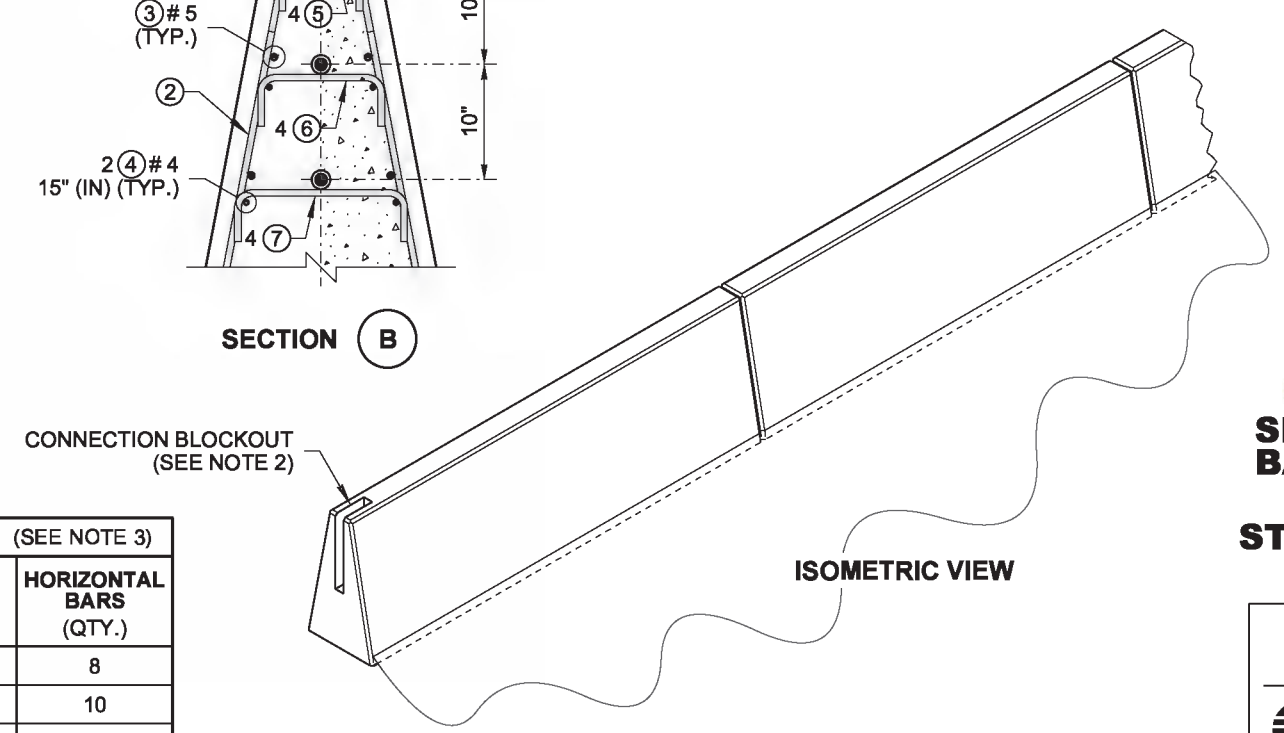

ISOMETRIC VIEW

NOTE:
STEEL WELDED WIRE REINFORCEMENT DEFORMED FOR CONCRETE MAY BE SUBSTITUTED FOR REINFORCING STEEL IN ACCORDANCE WITH **STANDARD SPECIFICATION 6-10.3**

REINFORCING STEEL BENDING DIAGRAM

SEE **STD. SPEC. 9-07.1(2)** FOR BENDING DIAMETERS

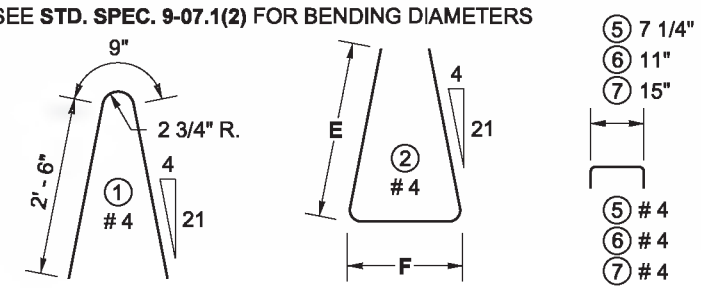

DIMENSION TABLE (SEE NOTE 3)

BARRIER HEIGHT	A	B	D	E	F	HORIZONTAL BARS (QTY.)
3' - 6"	8"	2' - 0"	3	2' - 6"	1' - 8"	8
4' - 0"	9 1/8"	2' - 2 1/4"	4	3' - 0"	1' - 10"	10
4' - 6"	10 1/4"	2' - 4 1/2"	5	3' - 6 1/2"	2' - 0"	12

EDWARD PATRICK BARRY
STATE OF WASHINGTON
34363
REGISTERED
PROFESSIONAL ENGINEER

Barry, Ed
May 19 2014 8:30 AM

SINGLE-SLOPE CONCRETE BARRIER (CAST-IN-PLACE) DUAL-FACED

STANDARD PLAN C-80.10-01

SHEET 1 OF 3 SHEETS

APPROVED FOR PUBLICATION
Bakotich, Pasco
Jun 11 2014 1:14 PM
STATE DESIGN ENGINEER
Washington State Department of Transportation

DRAWN BY: LISA CYFORD

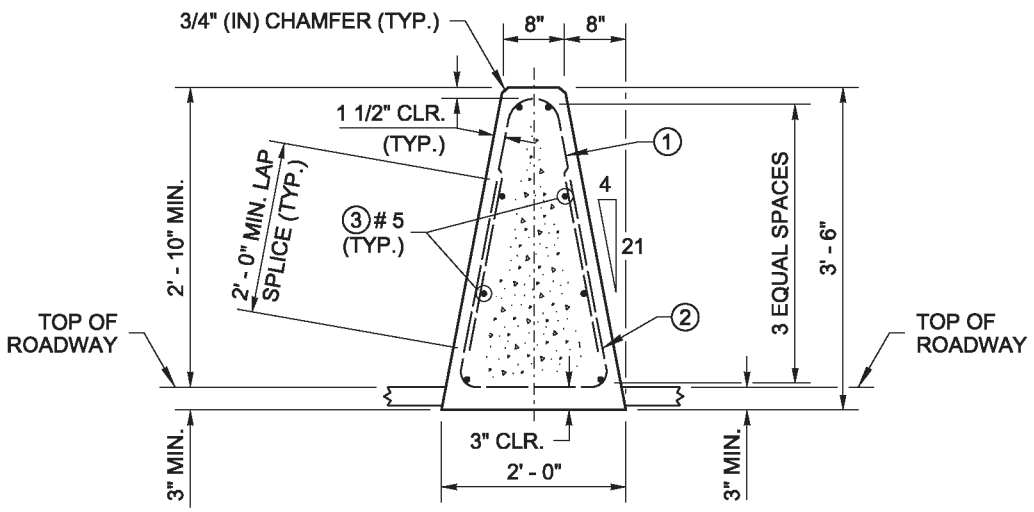

SECTION A

3' - 6" BARRIER
SHOWN LEVEL

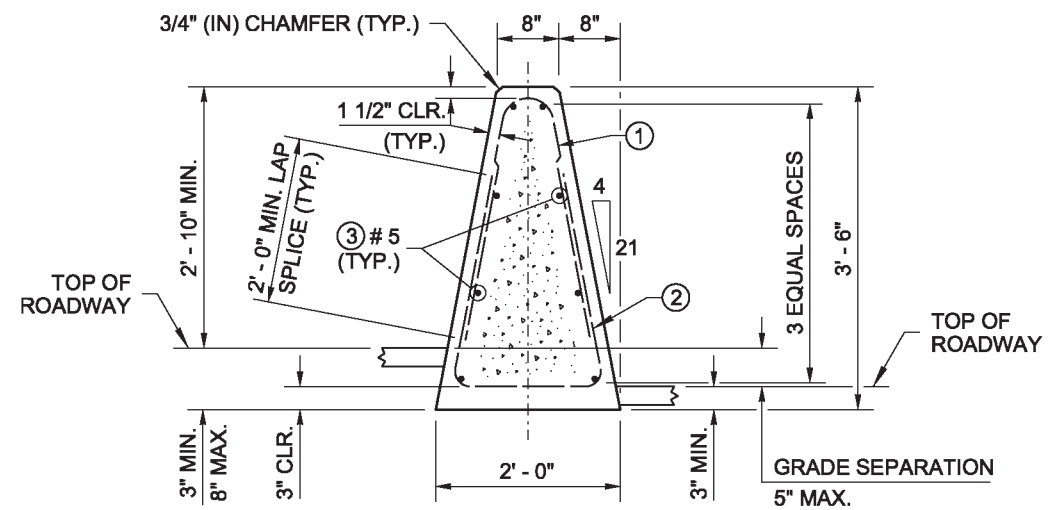

SECTION A

3' - 6" BARRIER FOR USE WITH A
0" (IN) TO 5" (IN) MAX. GRADE SEPARATION
(SEE NOTE 3)

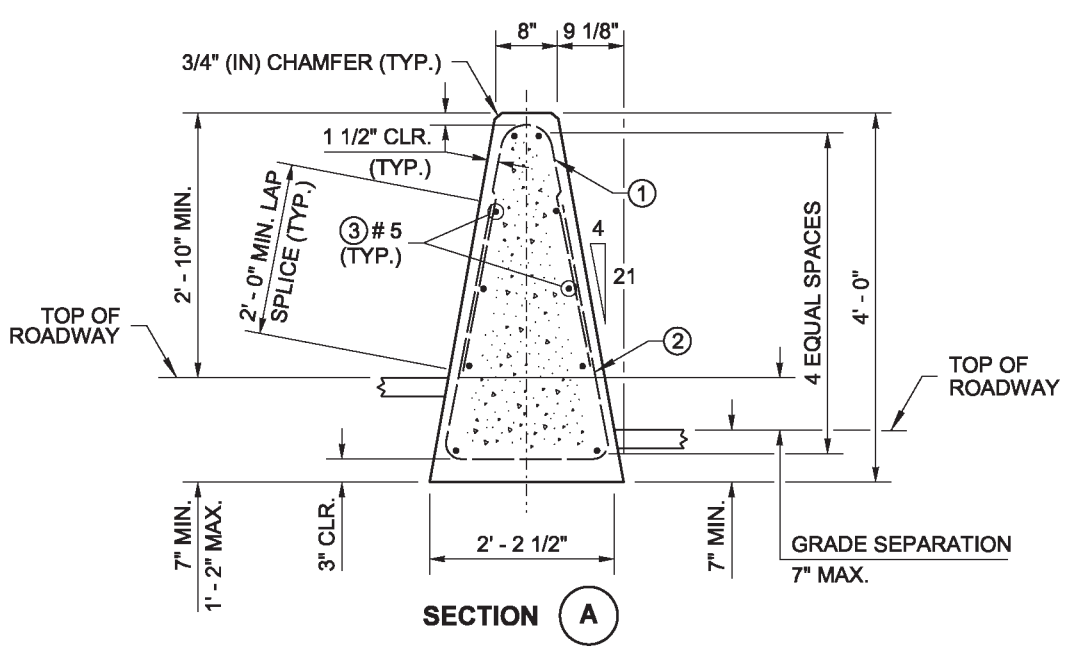

SECTION A

4' - 0" BARRIER FOR USE WITH A
GREATER THAN 5" (IN) TO 7" (IN) MAX.
GRADE SEPARATION
(SEE NOTE 3)

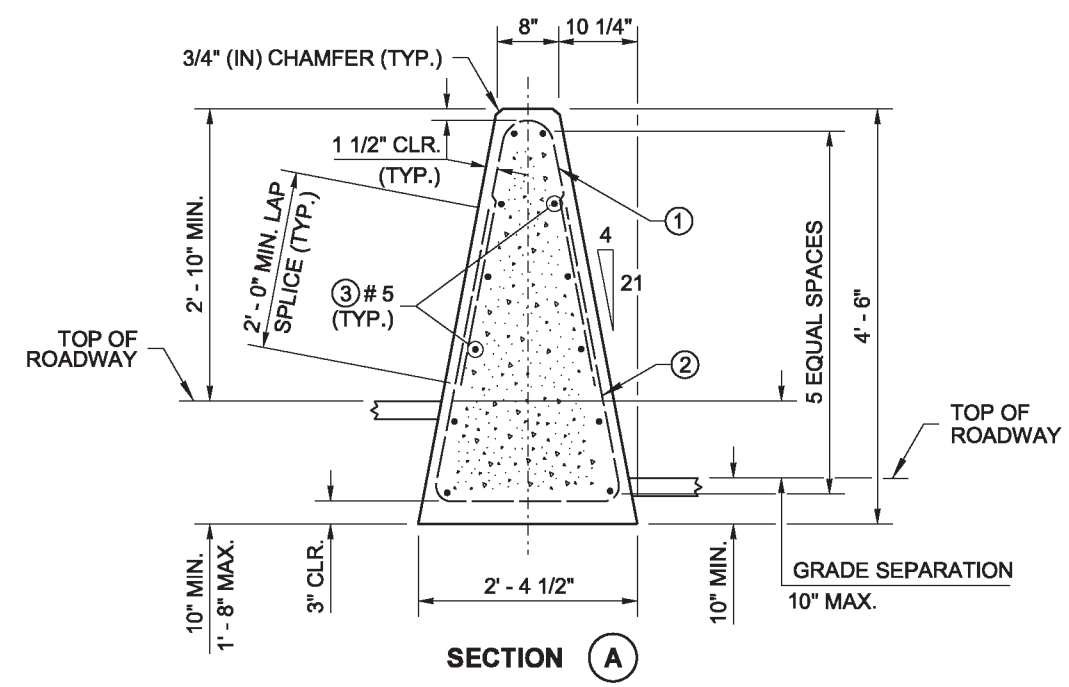

SECTION A

4' - 6" BARRIER FOR USE WITH A
GREATER THAN 7" (IN) TO 10" (IN) MAX.
GRADE SEPARATION
(SEE NOTE 3)

STANDARD MOUNTING HEIGHT

Barry, Ed
May 19 2014 8:30 AM

SINGLE-SLOPE CONCRETE BARRIER (CAST-IN-PLACE) DUAL-FACED

STANDARD PLAN C-80.10-01

SHEET 2 OF 3 SHEETS

APPROVED FOR PUBLICATION
Bakotich, Pasco
Jun 11 2014 1:14 PM

STATE DESIGN ENGINEER

Washington State Department of Transportation

DRAWN BY: LISA CYFORD

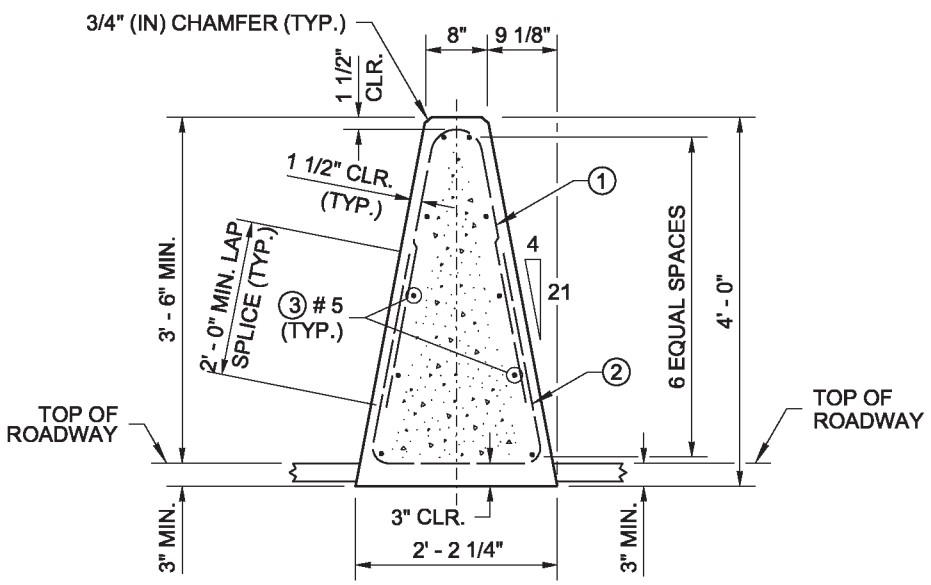

SECTION A

4' - 0" BARRIER
SHOWN LEVEL

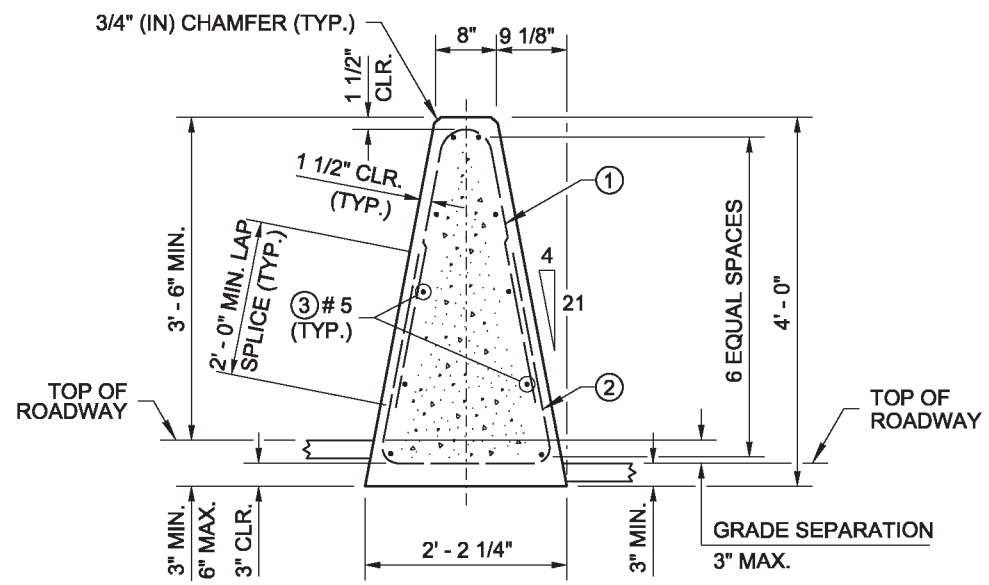

SECTION A

4' - 0" BARRIER FOR USE WITH A
0" (IN) TO 3" (IN) MAX. GRADE SEPARATION
(SEE NOTE 3)

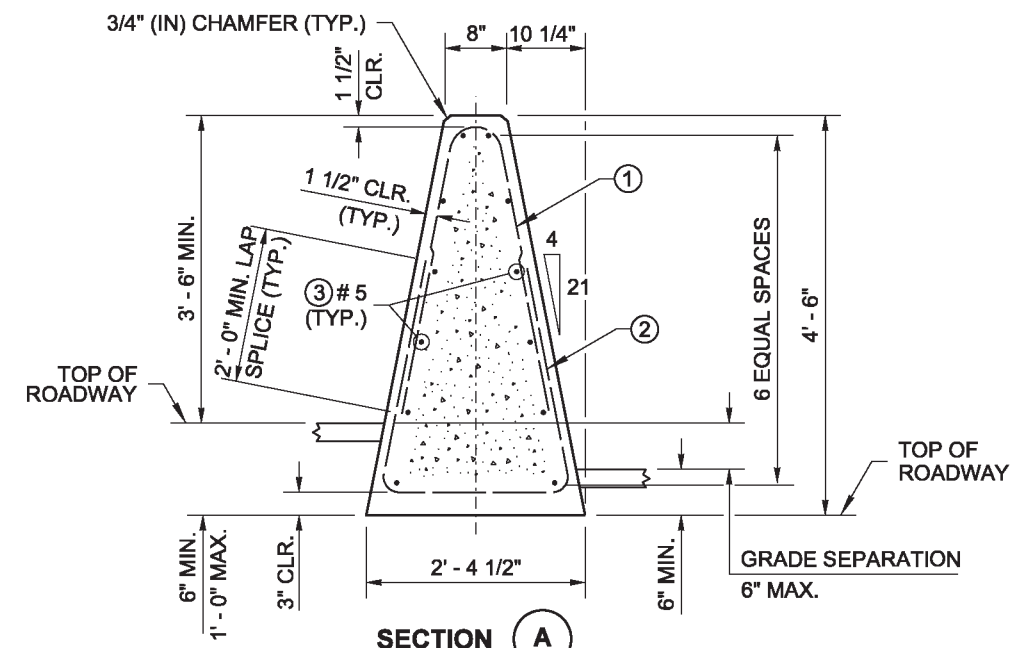

SECTION A

4' - 6" BARRIER FOR USE WITH A
GREATER THAN 3" (IN) TO 6" (IN) MAX.
GRADE SEPARATION
(SEE NOTE 3)

HIGH-PERFORMANCE BARRIER

Barry, Ed
May 19 2014 8:30 AM

SINGLE-SLOPE CONCRETE BARRIER (CAST-IN-PLACE) DUAL-FACED

STANDARD PLAN C-80.10-01

SHEET 3 OF 3 SHEETS

APPROVED FOR PUBLICATION
Bakotich, Pasco
Jun 11 2014 1:14 PM

STATE DESIGN ENGINEER

Washington State Department of Transportation

DRAWN BY: LISA CYFORD

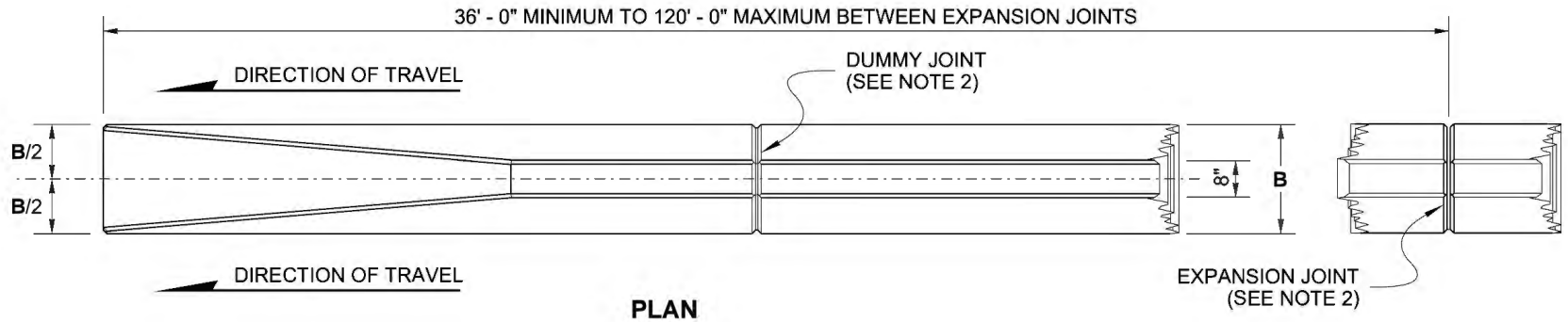

PLAN

NOTES

1. The Terminal is used only on the trailing end of a barrier, unless otherwise shown in the Contract.
2. See **Standard Plan C-80.10**, Sheet 1, for EXPANSION JOINT and DUMMY JOINT details.
3. When **High-Performance Concrete Barrier** is specified in the Contract, use the dimensions given in the H/P row in the DIMENSION TABLE, with a minimum height above roadway of 3' - 6" and a minimum embedment of 3" (in).

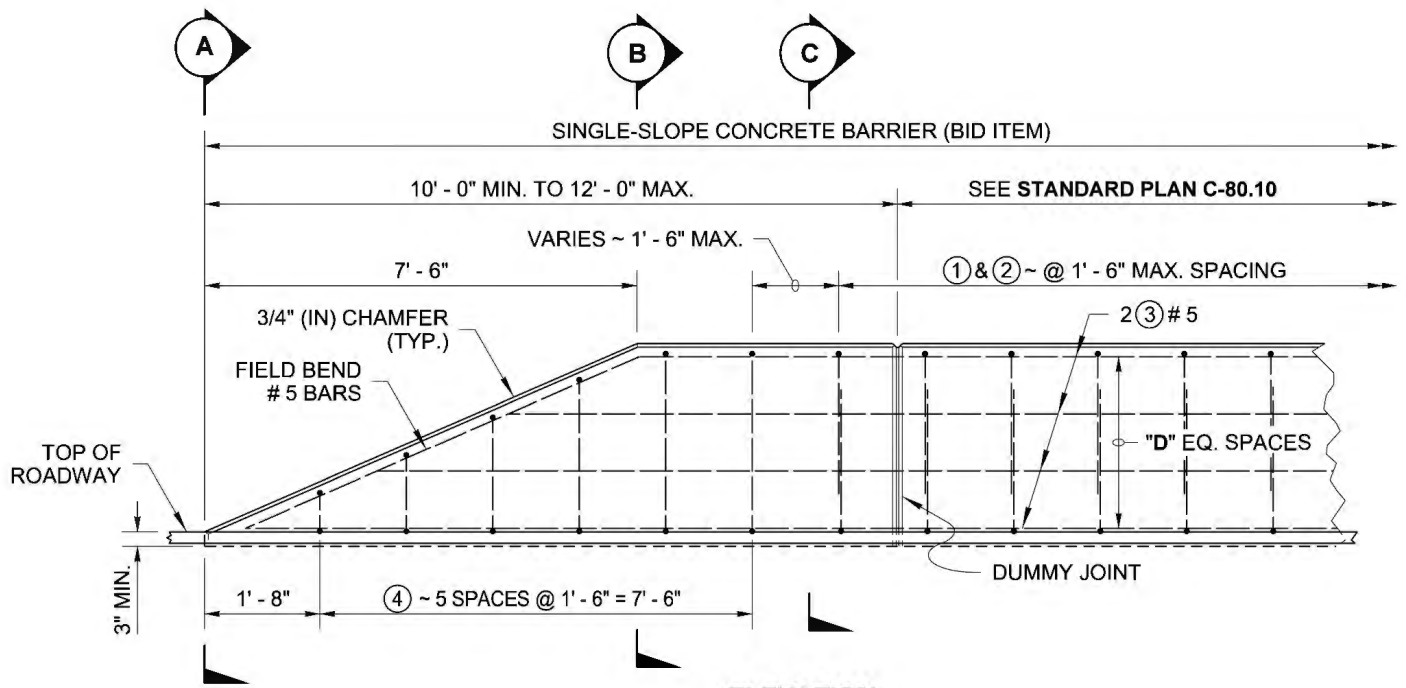

ELEVATION

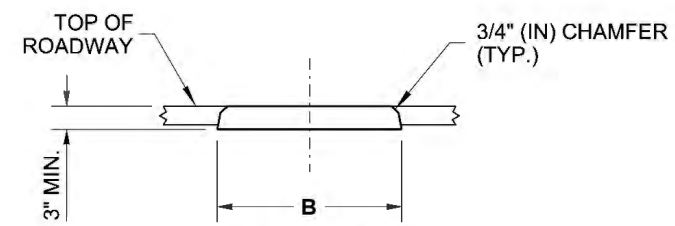

SECTION A

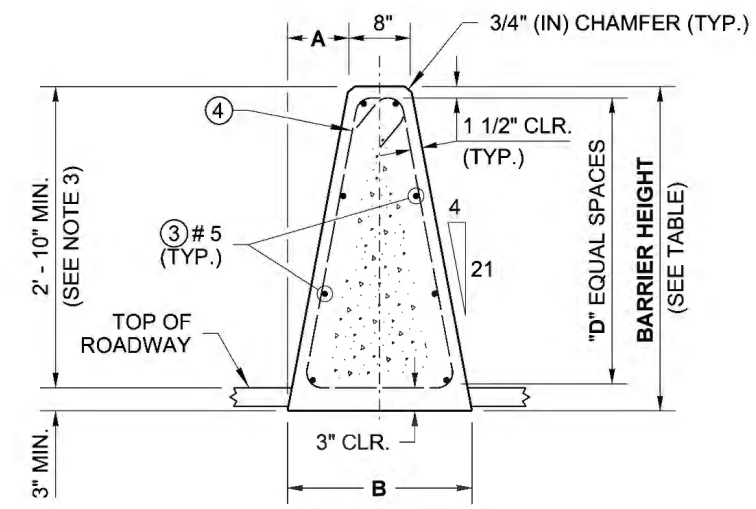

SECTION B

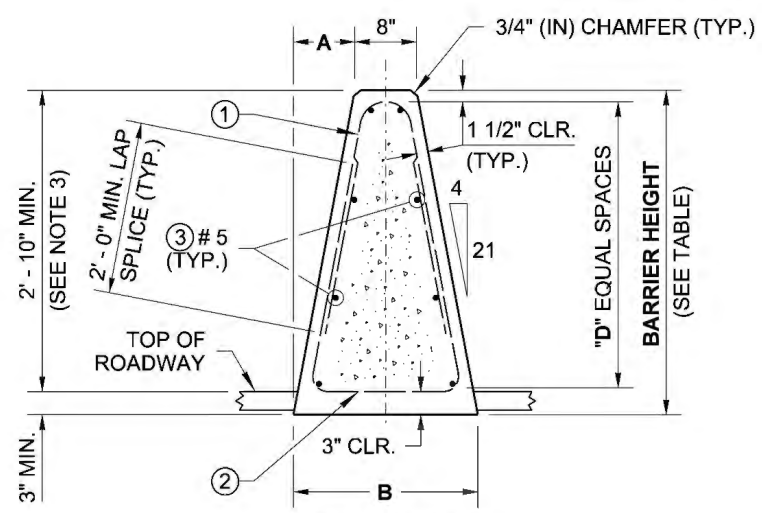

SECTION C

NOTE:
STEEL WELDED WIRE REINFORCEMENT DEFORMED FOR CONCRETE MAY BE SUBSTITUTED FOR REINFORCING STEEL IN ACCORDANCE WITH **STANDARD SPECIFICATION 6-10.3**

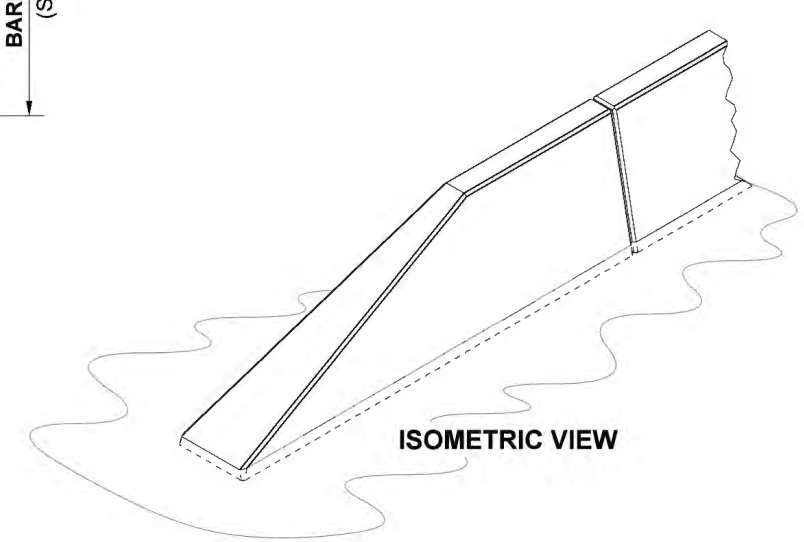

ISOMETRIC VIEW

REINFORCING STEEL BENDING DIAGRAM

SEE **STD. SPEC. 9-07.1(2)** FOR BENDING DIAMETERS

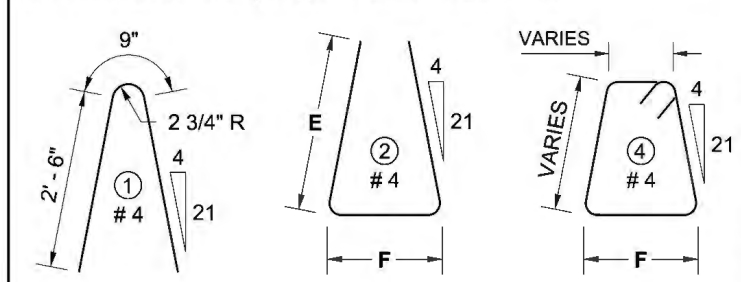

DIMENSION TABLE (SEE NOTE 3)

	BARRIER HEIGHT	A	B	D	E	F	HORIZONTAL BARS (QTY.)
STD.	3' - 6"	8"	2' - 0"	3	2' - 6"	1' - 8"	8
H/P	4' - 0"	9 1/8"	2' - 2 1/4"	4	3' - 0"	1' - 10"	10

EDWARD PATRICK BARRY
STATE OF WASHINGTON
34363
REGISTERED
PROFESSIONAL ENGINEER

Barry, Ed
May 19 2014 8:31 AM

SINGLE-SLOPE CONCRETE BARRIER (CAST-IN-PLACE) TERMINAL

STANDARD PLAN C-80.20-01

SHEET 1 OF 1 SHEET

APPROVED FOR PUBLICATION
Bakotich, Pasco
Jun 11 2014 1:18 PM

STATE DESIGN ENGINEER

Washington State Department of Transportation

DRAWN BY: LISA CYFORD

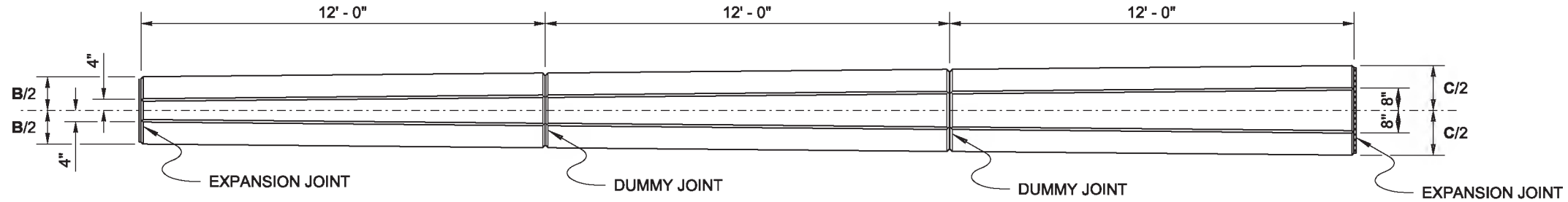

PLAN

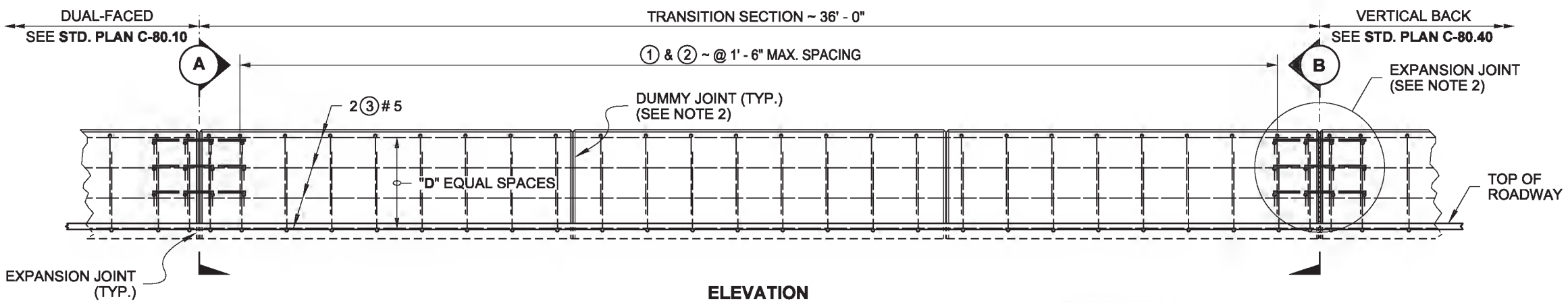

ELEVATION

NOTES

1. The Transition Section is used in the configurations shown in **Standard Plans C-85.10** and **C-85.11.**
2. See **Standard Plan C-80.10**, Sheet 1, for EXPANSION JOINT and DUMMY JOINT details. Modify rebar on wider end as shown in EXPANSION JOINT MODIFICATION.
3. Reinforcing steel dimensions and clearances are shown for stationary form construction. When slip-form construction is used, increase reinforcing steel clearances to the outside surfaces of the barrier to 2 1/2" (in) and adjust steel dimensions as required.
4. When **High-Performance Concrete Barrier** is specified in the Contract, use the dimensions given in the H/P row in the DIMENSION TABLE, with a minimum height above roadway of 3' - 6" and a minimum embedment of 3" (in).

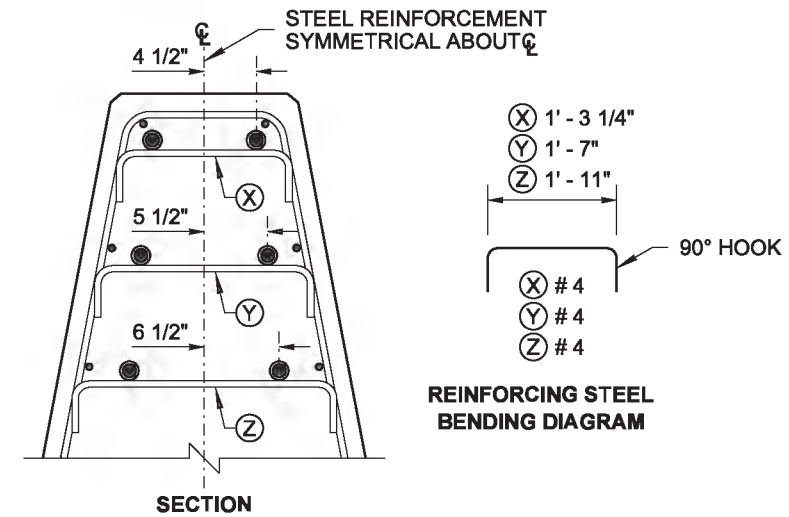

EXPANSION JOINT MODIFICATION
(SEE NOTE 2)

NOTE:
STEEL WELDED WIRE REINFORCEMENT DEFORMED FOR CONCRETE MAY BE SUBSTITUTED FOR REINFORCING STEEL IN ACCORDANCE WITH **STANDARD SPECIFICATION 6-10.3**

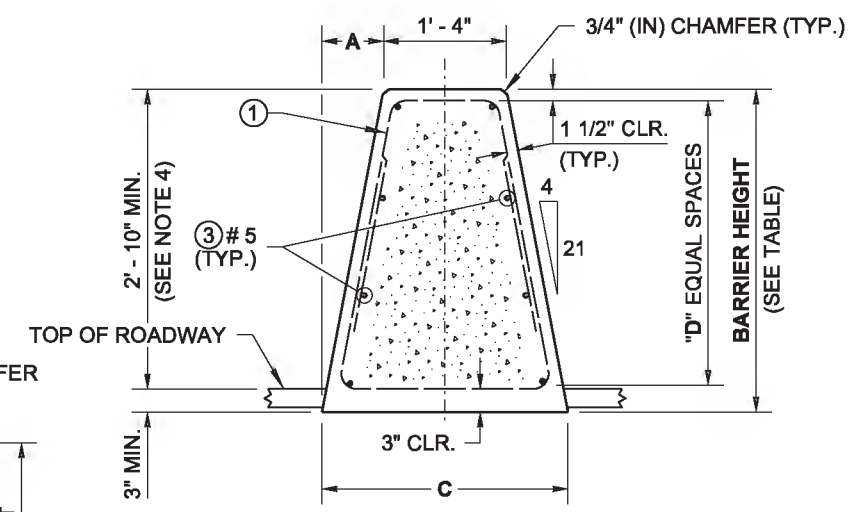

SECTION (B)

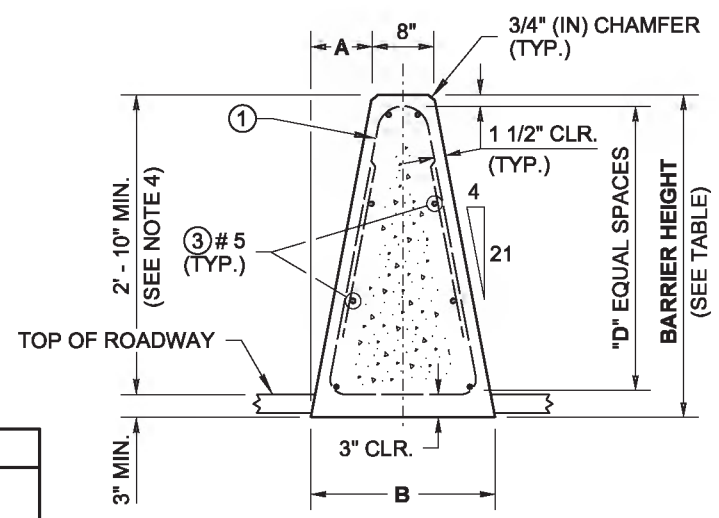

SECTION (A)

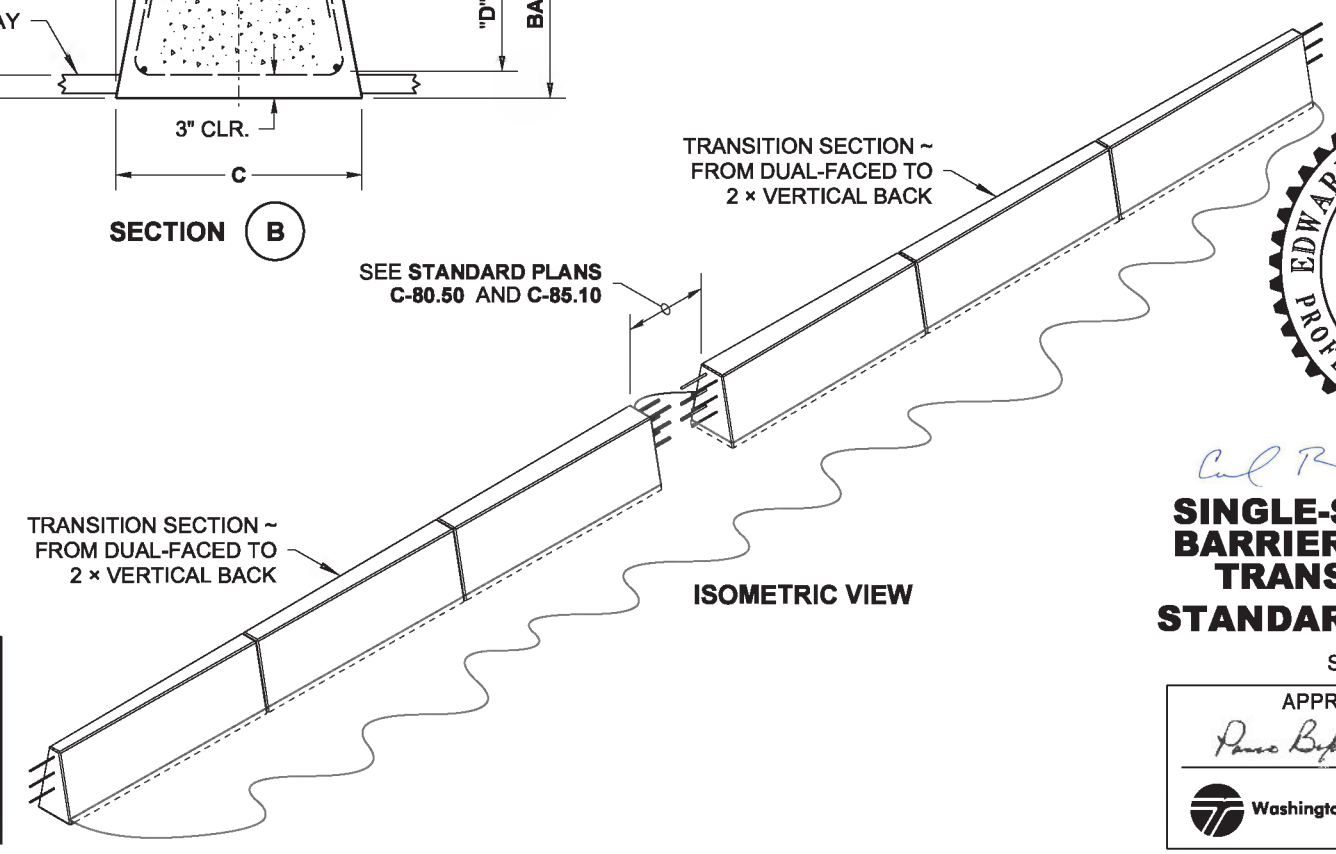

ISOMETRIC VIEW

REINFORCING STEEL BENDING DIAGRAM

SEE **STD. SPEC. 9-07.1(2)** FOR BENDING DIAMETERS

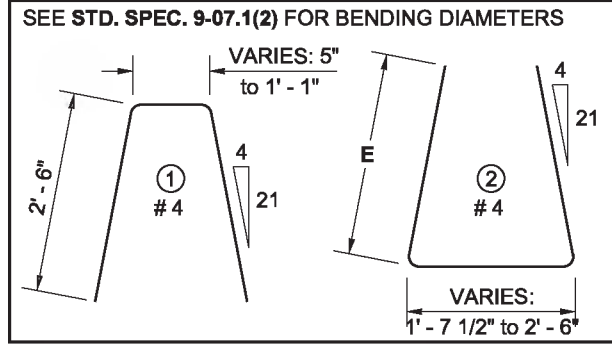

DIMENSION TABLE (SEE NOTE 4)

	BARRIER HEIGHT	A	B	C	D	E	HORIZONTAL BARS (QTY.)
STD.	3' - 6"	8"	2' - 0"	2' - 8"	3	2' - 6"	8
H/P	4' - 0"	9 1/8"	2' - 2 1/4"	2' - 10 1/4"	4	3' - 0"	10

EDWARD PATRICK BARRY
STATE OF WASHINGTON
34363
REGISTERED
PROFESSIONAL ENGINEER

Barry, Ed
May 19 2014 8:32 AM

SINGLE-SLOPE CONCRETE BARRIER (CAST-IN-PLACE) TRANSITION SECTION

STANDARD PLAN C-80.30-01

SHEET 1 OF 1 SHEET

APPROVED FOR PUBLICATION
Bakotich, Pasco
Jun 11 2014 1:19 PM

STATE DESIGN ENGINEER

Washington State Department of Transportation

DRAWN BY: LISA CYFORD

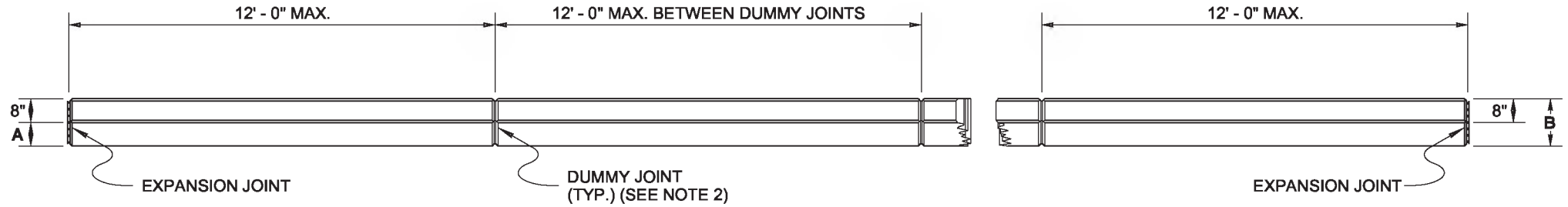

PLAN

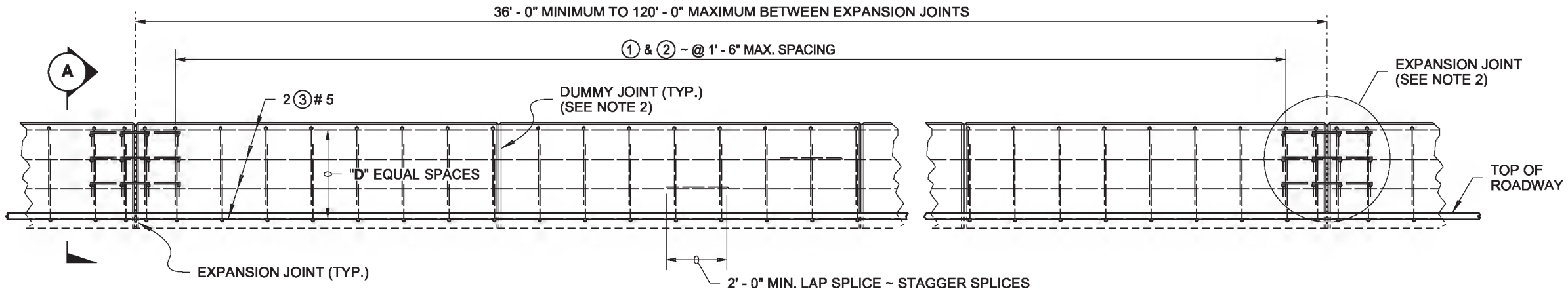

ELEVATION

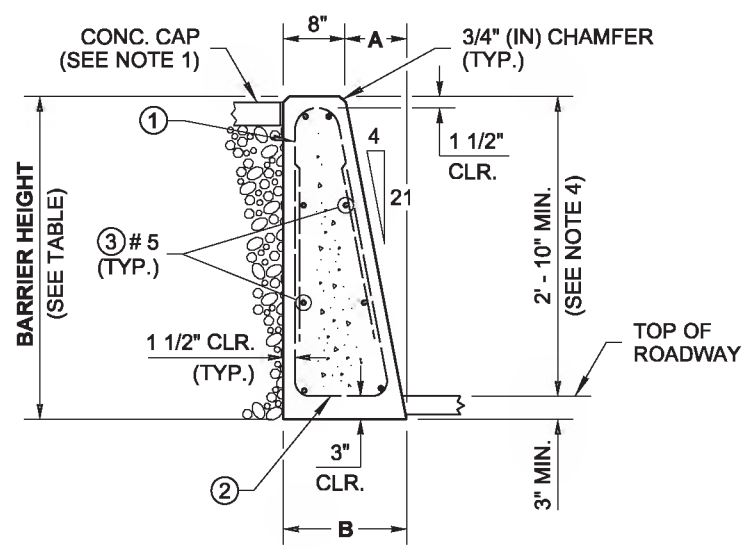

SECTION (A)

NOTES

1. The Vertical Back barrier is used only in the configurations shown in **Standard Plans C-85.10** and **C-85.11,** and when placed against a retaining wall.
2. See **Standard Plan C-80.10,** Sheet 1, for EXPANSION JOINT and DUMMY JOINT details. Modify rebar as shown in EXPANSION JOINT MODIFICATION.
3. Reinforcing steel dimensions and clearances are shown for stationary form construction. When slip-form construction is used, increase reinforcing steel clearances to the outside surfaces of the barrier to 2 1/2" (in) and adjust steel dimensions as required.
4. When **High-Performance Concrete Barrier** is specified in the Contract, use the dimensions given in the H/P row in the DIMENSION TABLE, with a minimum height above roadway of 3' - 6" and a minimum embedment of 3" (in).

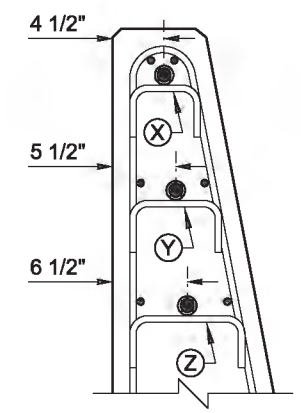

SECTION

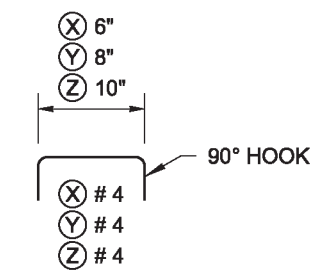

REINFORCING STEEL BENDING DIAGRAM

EXPANSION JOINT MODIFICATION

(SEE NOTE 2)

NOTE:
STEEL WELDED WIRE REINFORCEMENT DEFORMED FOR CONCRETE MAY BE SUBSTITUTED FOR REINFORCING STEEL IN ACCORDANCE WITH **STANDARD SPECIFICATION 6-10.3**

REINFORCING STEEL BENDING DIAGRAM

SEE STD. SPEC. 9-07.1(2) FOR BENDING DIAMETERS

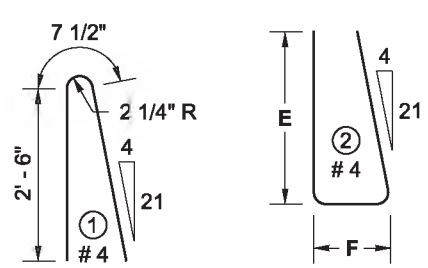

DIMENSION TABLE (SEE NOTE 4)

	BARRIER HEIGHT	A	B	D	E	F	HORIZONTAL BARS (QTY.)
STD.	3' - 6"	8"	1' - 4"	3	2' - 6"	1' - 0 1/4"	8
H/P	4' - 0"	9 1/8"	1' - 5 1/8"	4	3' - 0"	1' - 1 1/2"	10

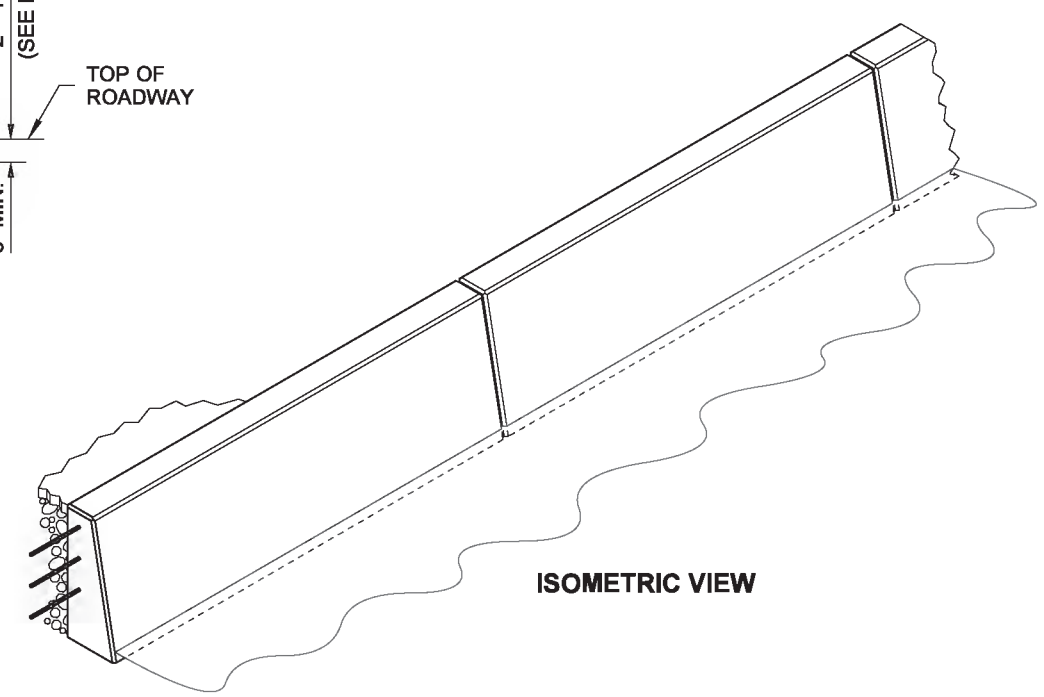

ISOMETRIC VIEW

Barry, Ed
May 19 2014 8:33 AM

SINGLE-SLOPE CONCRETE BARRIER (CAST-IN-PLACE) VERTICAL BACK

STANDARD PLAN C-80.40-01

SHEET 1 OF 1 SHEET

APPROVED FOR PUBLICATION
Bakotich, Pasco
Jun 11 2014 1:19 PM

STATE DESIGN ENGINEER

Washington State Department of Transportation

DRAWN BY: LISA CYFORD

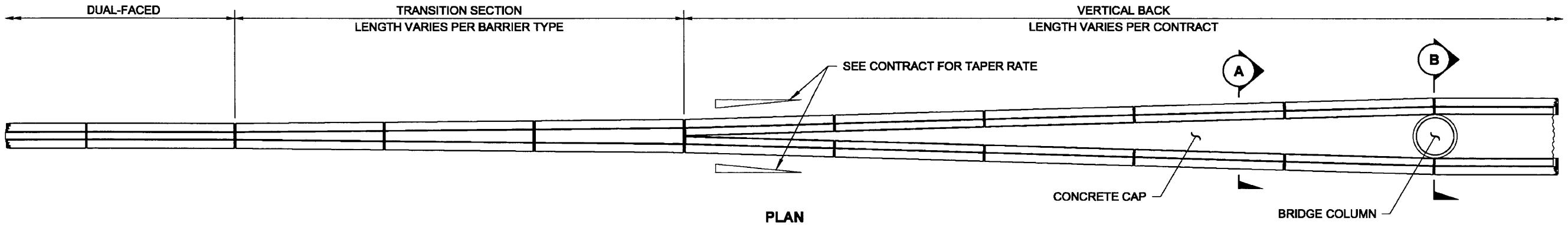

PLAN
(CAST-IN-PLACE SHOWN)

NOTES

1. Use the barrier type, precast or cast-in-place, as specified in the Contract.
2. For Single-Slope Concrete Barrier details, see **Standard Plan series C-70's** (precast) or **C-80's** (cast-in-place).

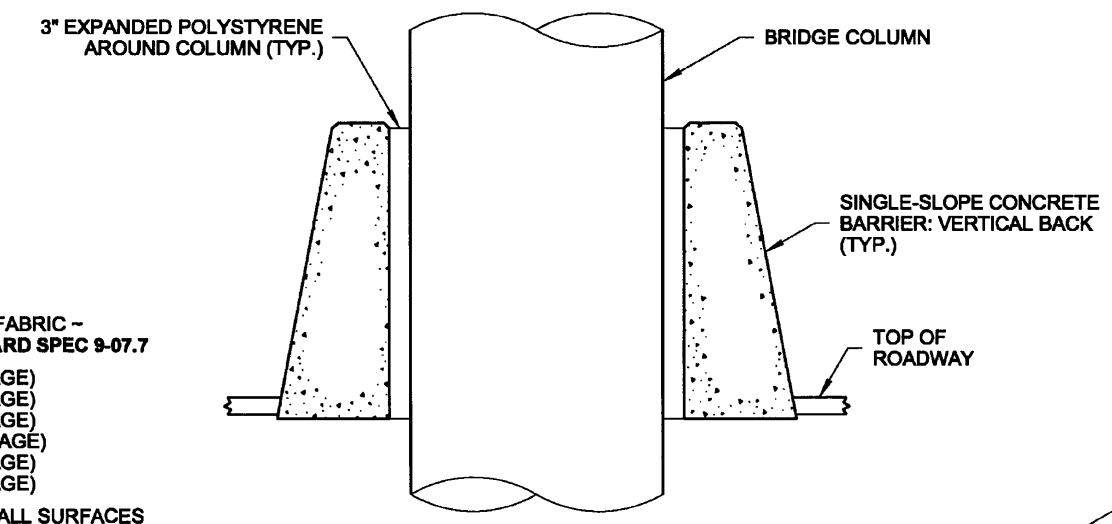

SECTION (B)

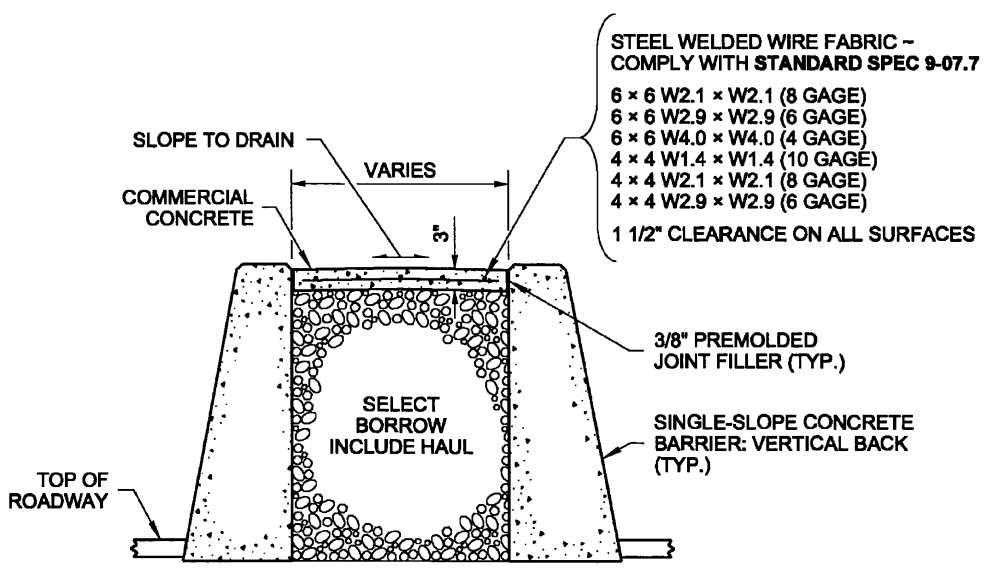

SECTION (A)

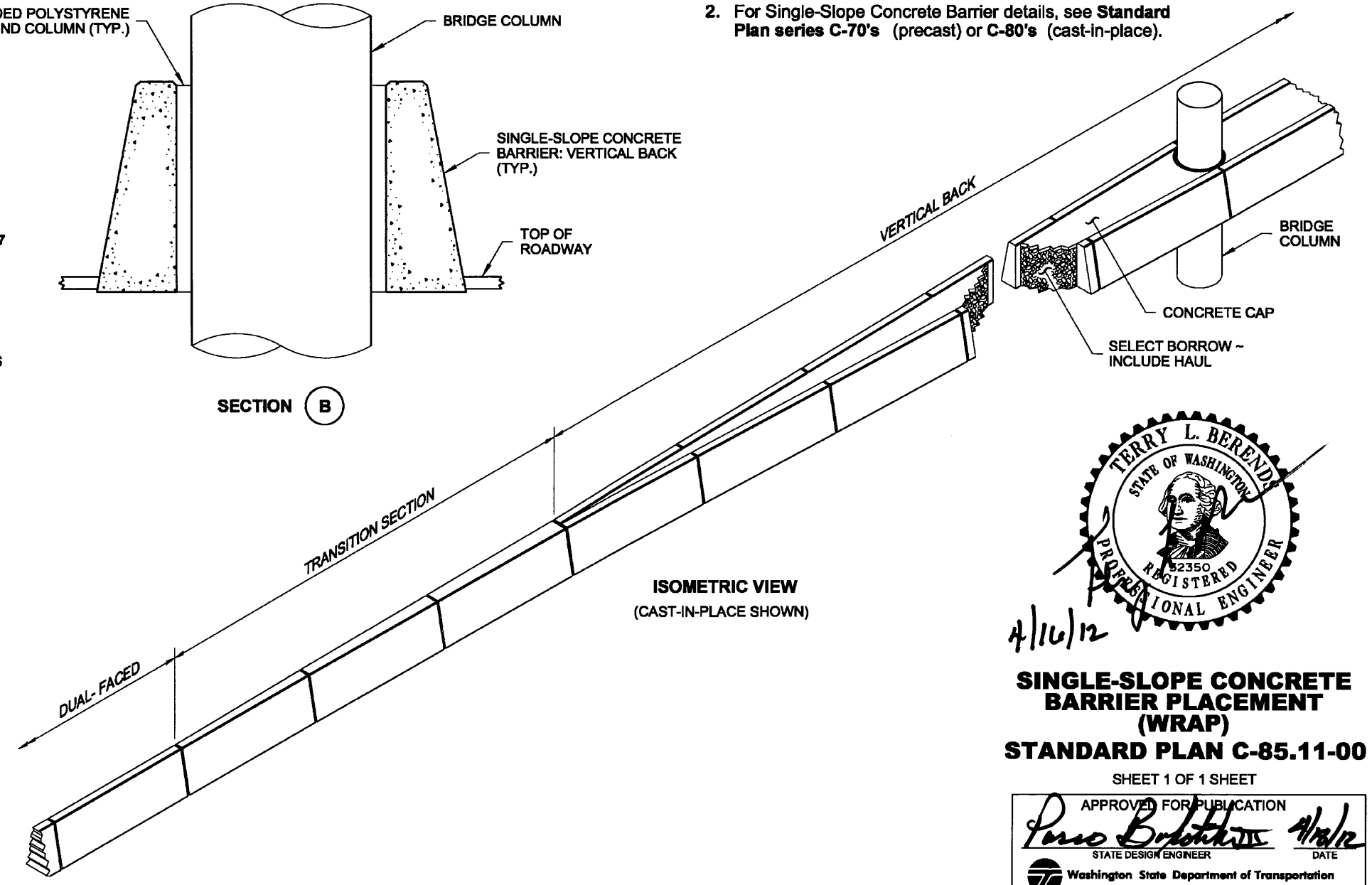

ISOMETRIC VIEW
(CAST-IN-PLACE SHOWN)

TERRY L. BERENDS
STATE OF WASHINGTON
32350
REGISTERED
PROFESSIONAL ENGINEER

4/16/12

SINGLE-SLOPE CONCRETE BARRIER PLACEMENT (WRAP)

STANDARD PLAN C-85.11-00

SHEET 1 OF 1 SHEET

APPROVED FOR PUBLICATION

STATE DESIGN ENGINEER — DATE 4/16/12

Washington State Department of Transportation

DRAWN BY: LISA CYFORD

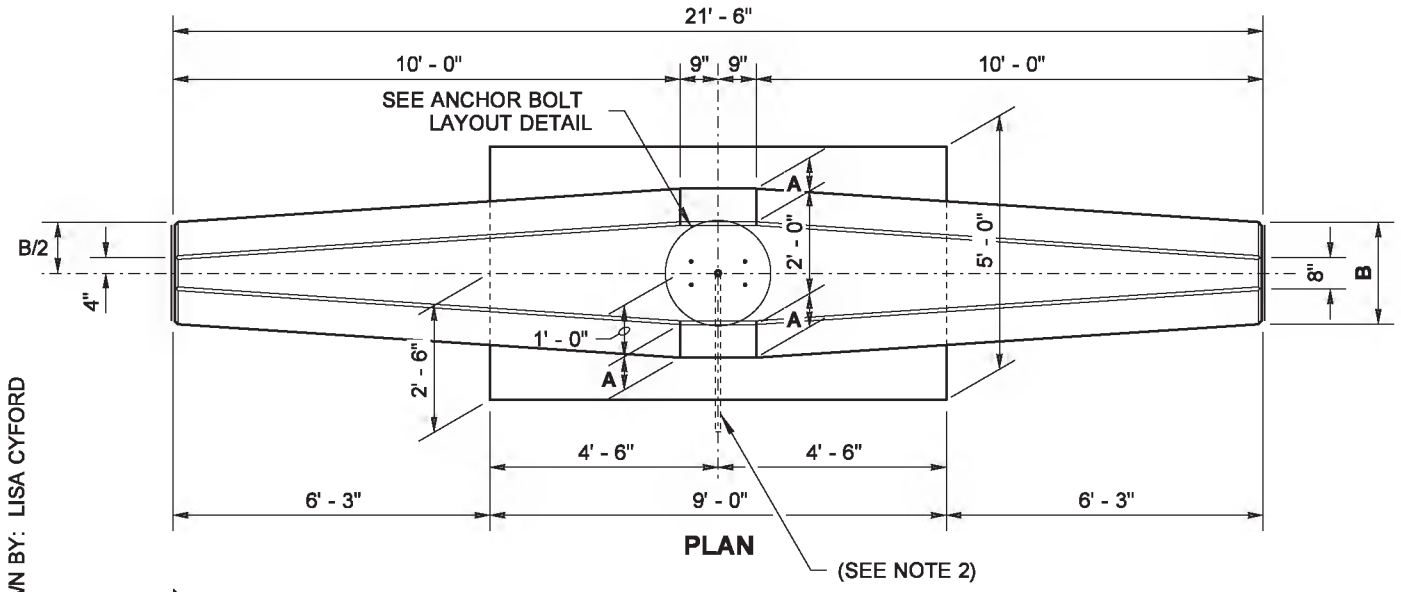

PLAN

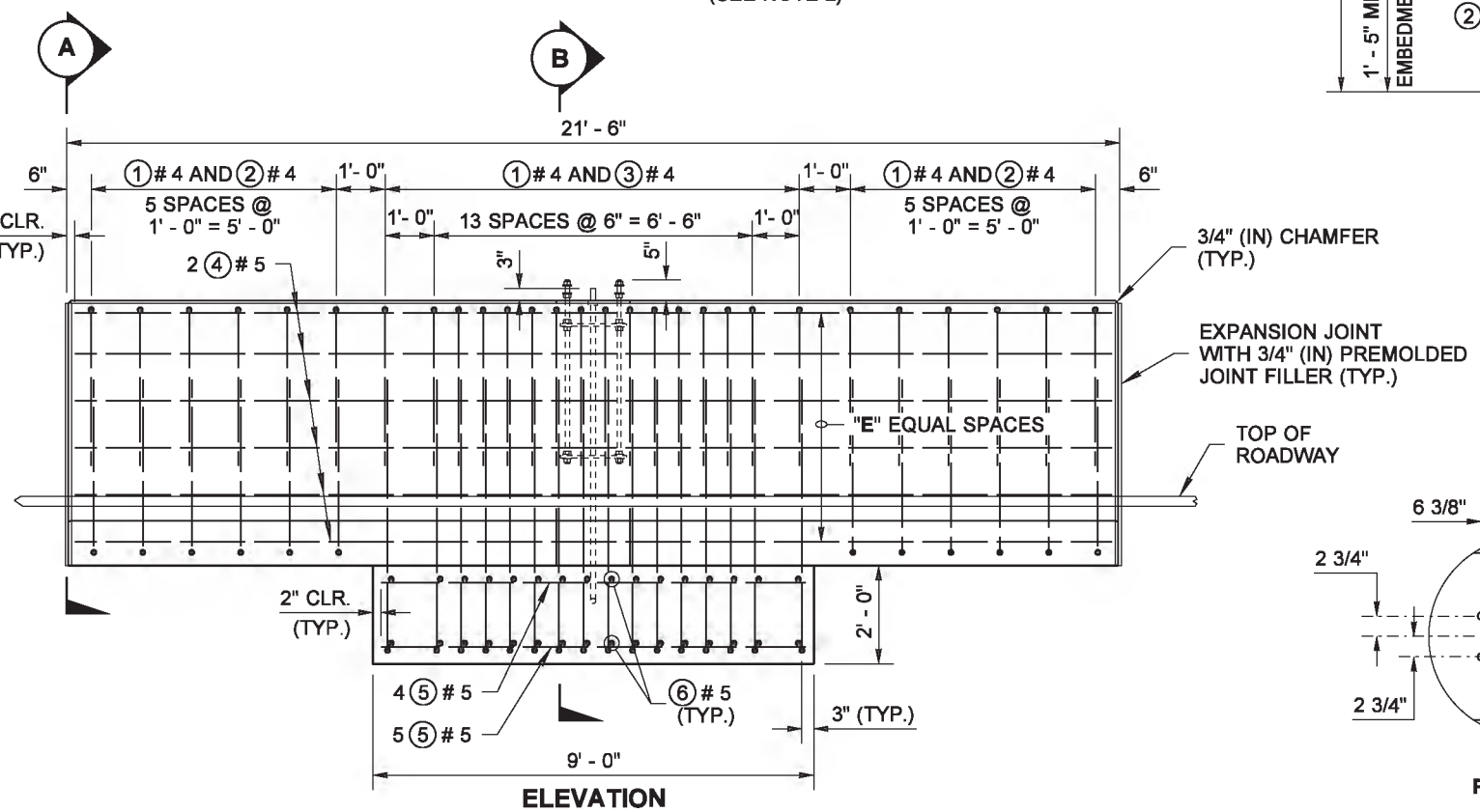

ELEVATION

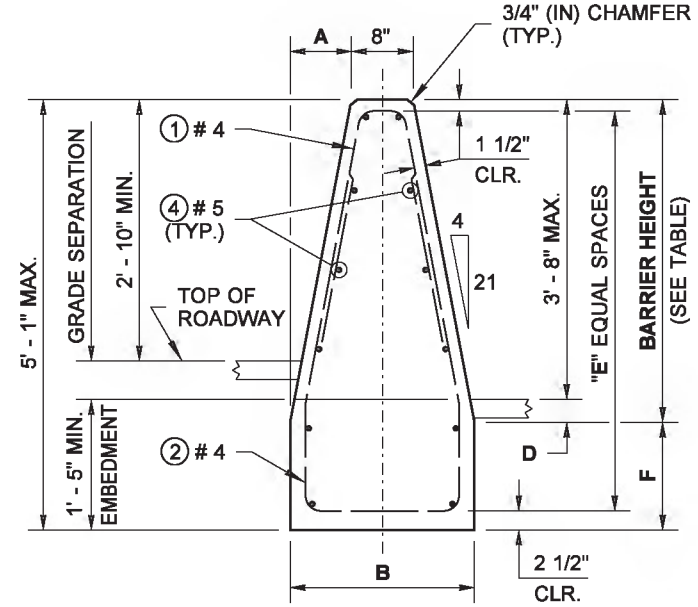

SECTION (A)

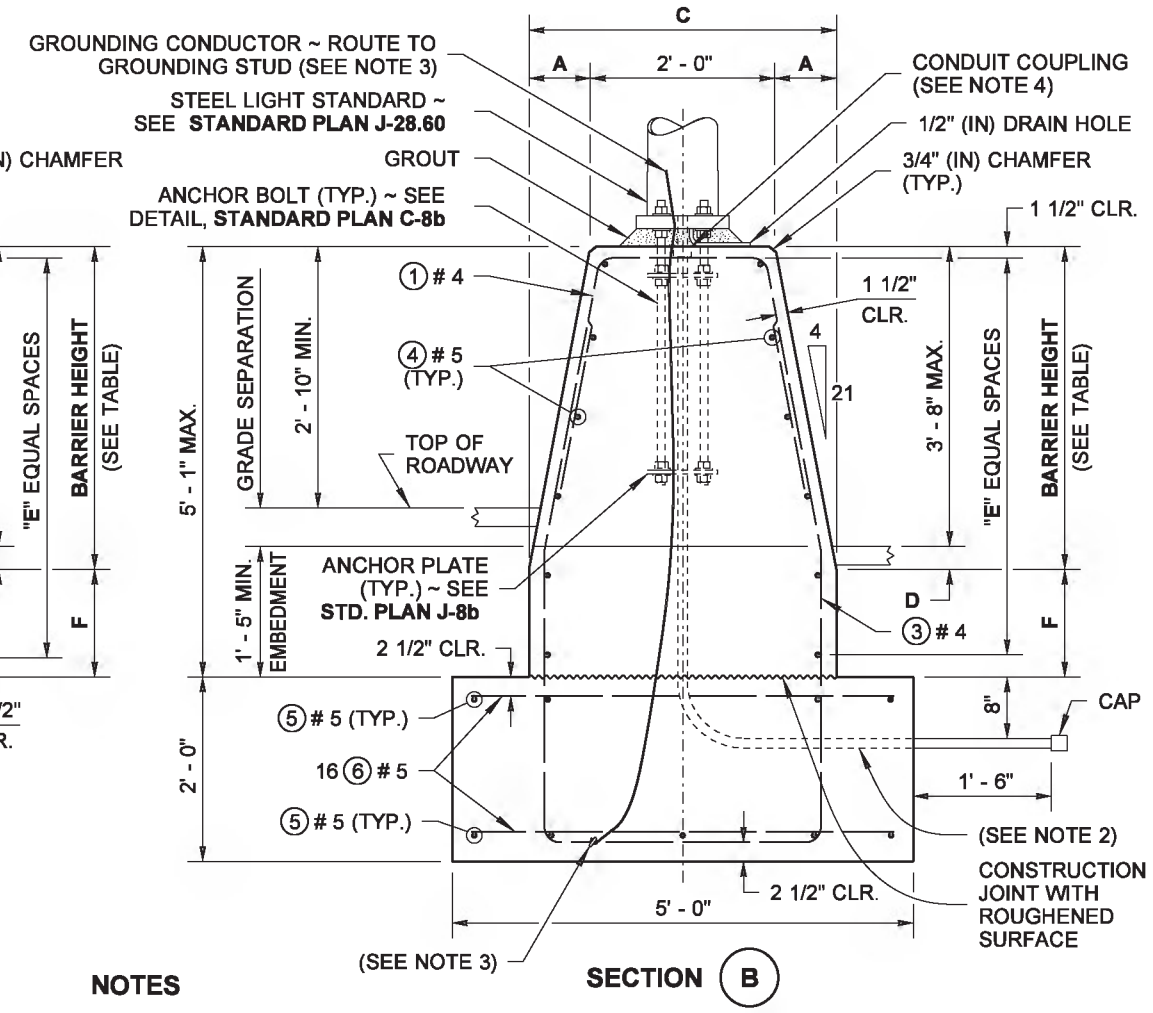

SECTION (B)

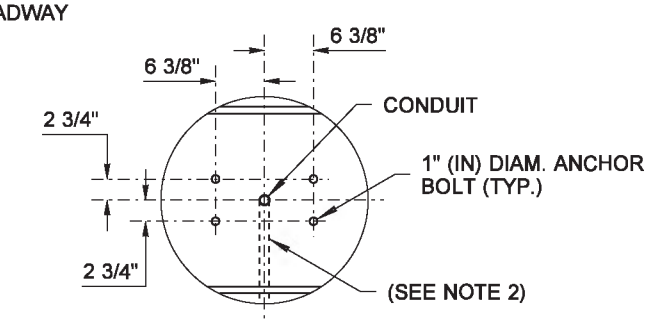

PLAN VIEW

ANCHOR BOLT LAYOUT DETAIL

NOTES

1. When connecting between cast-in-place and precast Single-Slope Barrier, provide a Connection Blockout and Rebar Grid as shown on **Standard Plan C-70.10.**
2. See the Contract Plans for conduit placement.
3. Grounding Conductor shall be non-insulated #4 AWG stranded copper; provide 3' - 0" min. slack. Clamp steel reinforcing bar with connector suitable for use embedded in concrete.
4. Install Conduit Coupling flush with top of foundation. Do not glue PVC stubout.
5. This plan shall be used for 40' (ft) and 50' (ft) Light Standards with 16' (ft) max. length double mast arms.
6. Concrete shall be Class 4000.
7. This spread footing is designed for an allowable soil bearing pressure of 2500 psf or better.

ALL DIMENSIONS ARE OUT TO OUT
ALL BENDS ARE 2" (IN) RADIUS

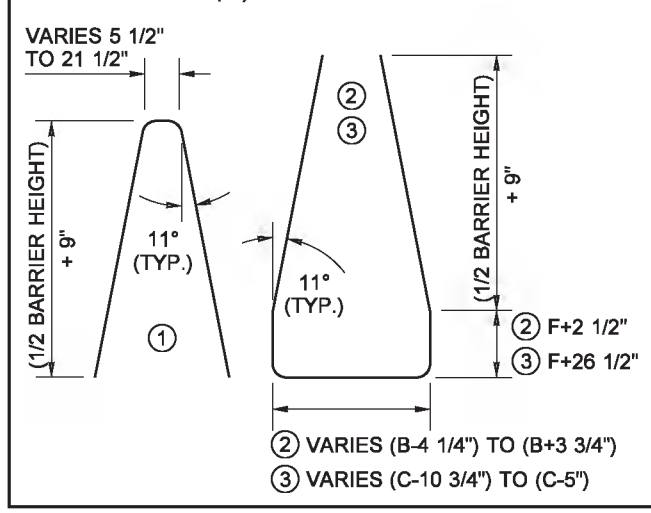

BAR LIST

MARK NO.	LOCATION	SIZE	QUANTITY
①	BARRIER ~ TOP VERTICAL	# 4	28
②	BARRIER ~ BOTTOM VERTICAL	# 4	12
③	FND. & BARRIER ~ VERTICAL	# 4	16
④	BARRIER ~ HORIZONTAL	# 5	"Q"
⑤	FOUNDATION	# 5	9
⑥	FOUNDATION	# 5	32

TABLE

GRADE SEPARATION	BARRIER HEIGHT	A	B	C	D	E	F	Q
0 TO 5"	3' - 6"	8"	2' - 0"	3' - 4"	3" MIN.	5	1' - 2"	12
UP TO 7"	4' - 0"	9 1/8"	2' - 2 1/4"	3' - 6 1/4"	7" MIN.	5	10"	12
UP TO 10"	4' - 6"	10 1/4"	2' - 4 1/2"	3' - 8 1/2"	10" MIN.	6	7"	14

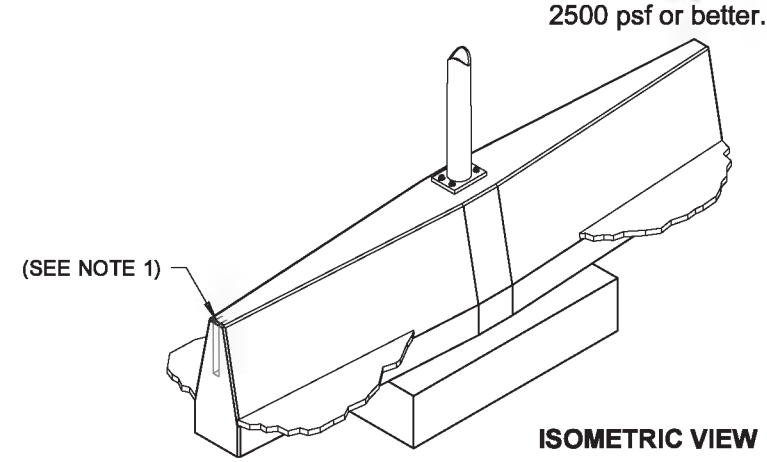

ISOMETRIC VIEW

RICHARD P. ZELDENRUST
STATE OF WASHINGTON
25470
STRUCTURAL ENGINEER
PROFESSIONAL ENGINEER

Zeldenrust, Richard
Jun 10 2014 10:11 AM

SINGLE-SLOPE CONCRETE BARRIER LIGHT STANDARD FOUNDATION

STANDARD PLAN C-85.14-01

SHEET 1 OF 1 SHEET

APPROVED FOR PUBLICATION
Bakotich, Pasco
Jun 11 2014 1:20 PM

STATE DESIGN ENGINEER

Washington State Department of Transportation

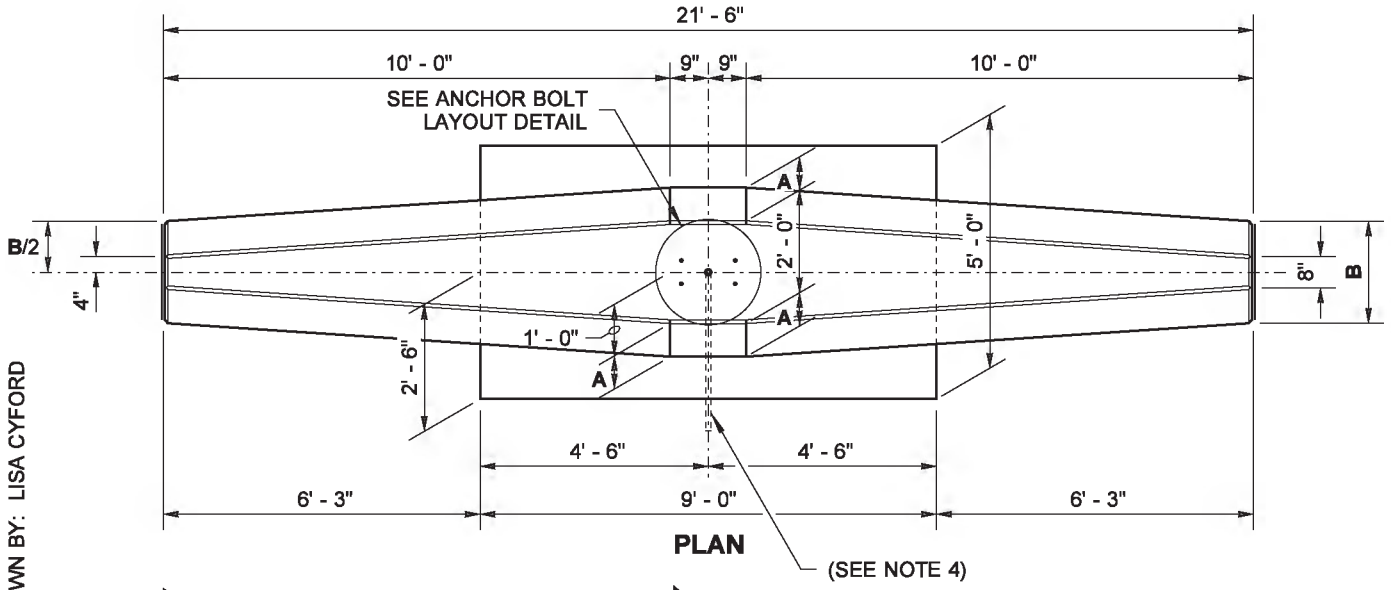

PLAN

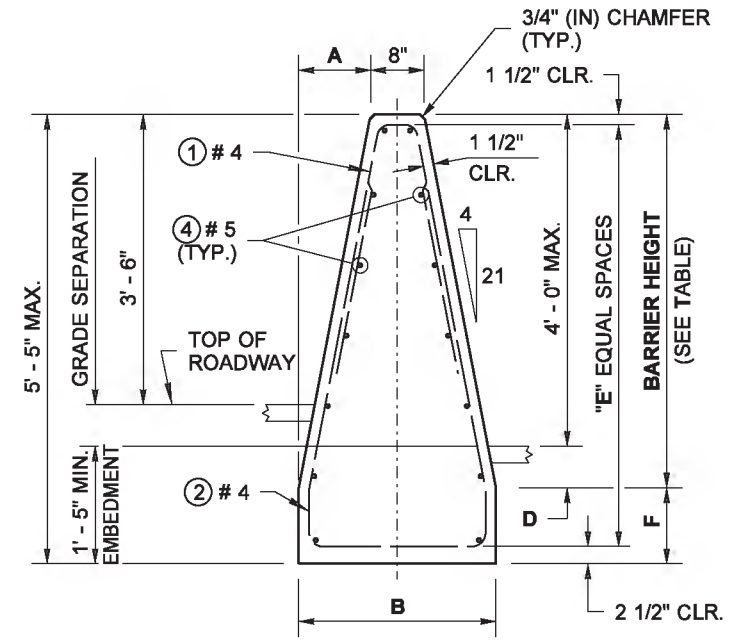

SECTION (A)

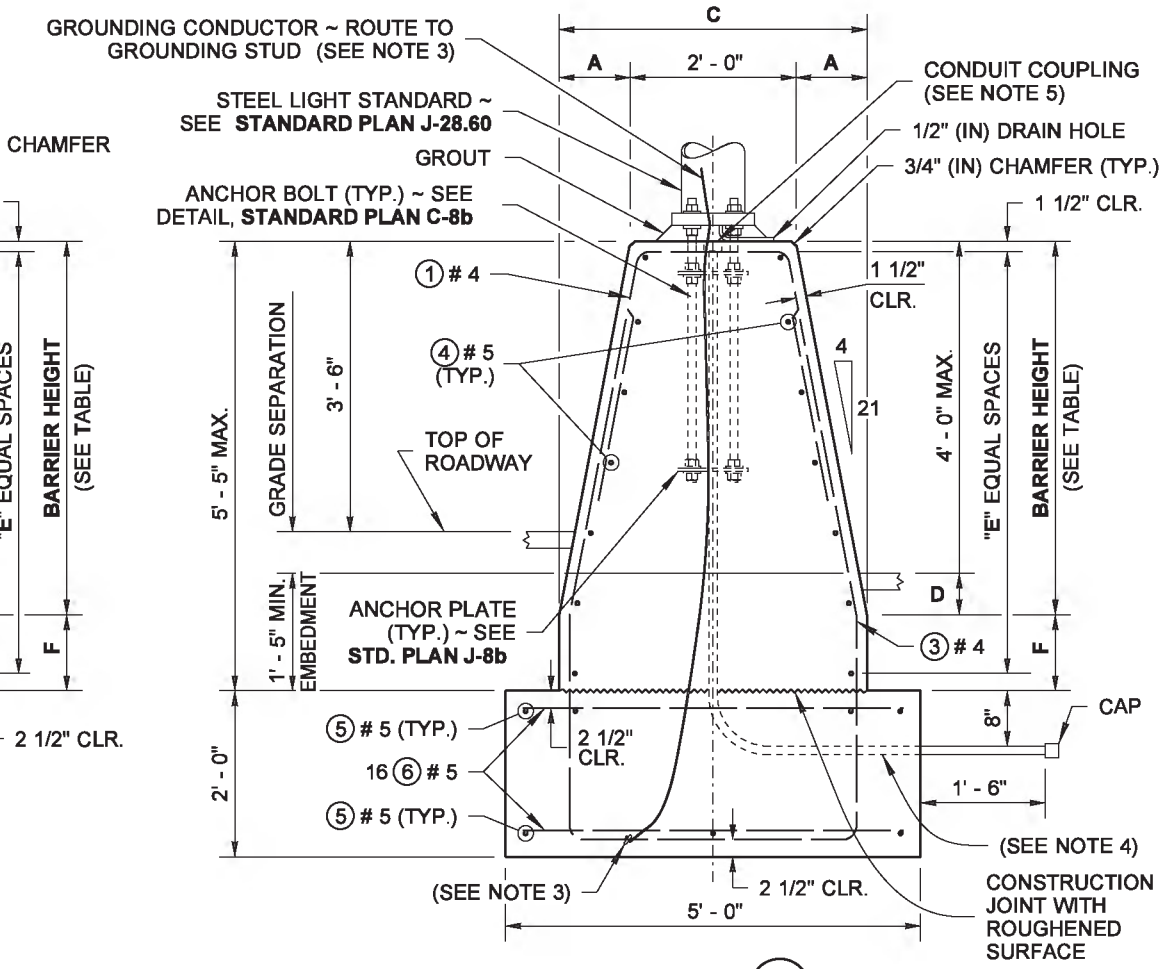

SECTION (B)

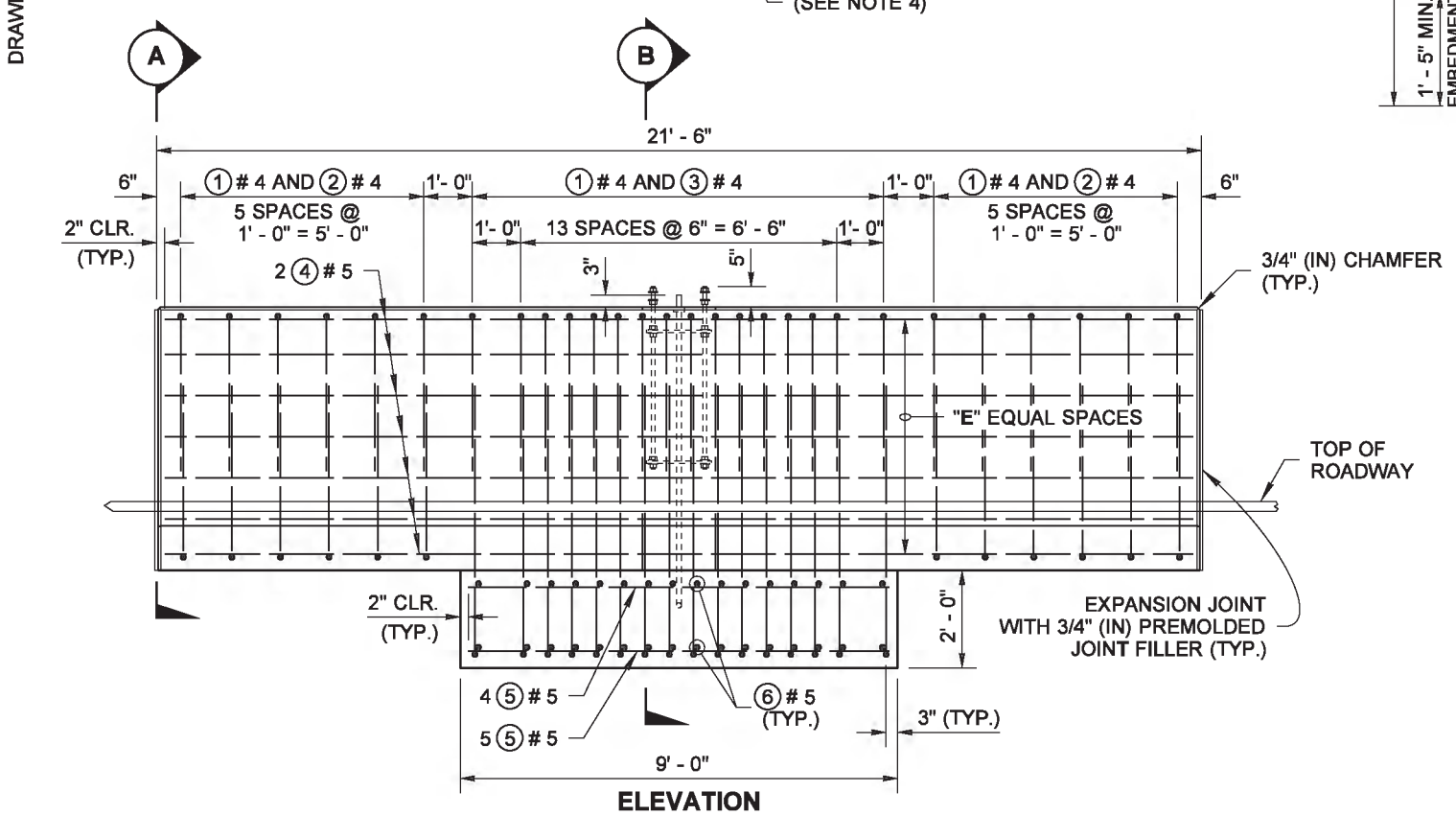

ELEVATION

NOTES

1. This Barrier/Foundation combination has been designed in accordance with AASHTO LRFD Test Level 4 requirements. The horizontal vehicle impact force at the top of the barrier is taken at 54 kips for Strength and Extreme Limit States, and 10 kips for footing stability (overturning and sliding) in the Service Limit State.
2. When connecting between cast-in-place and precast Single-Slope Barrier, provide a Connection Blockout and Rebar Grid as shown on **Standard Plan C-70.10.**
3. Grounding conductor shall be non-insulated #4 AWG stranded copper; provide 3' - 0" min. slack. Clamp steel reinforcing bar with connector suitable for use embedded in concrete.
4. See the Contract Plans for conduit placement.
5. Install Conduit Coupling flush with top of foundation. Do not glue PVC stubout.
6. This plan shall be used for 40' (ft) and 50' (ft) Light Standards with 16' (ft) max. length double mast arms.
7. Concrete shall be Class 4000.
8. The factored soil bearing resistance shall equal or exceed the following:
   i) Service limit state = 6 ksf
   ii) Strength limit state = 24 ksf
   iii) Extreme limit state = 48 ksf

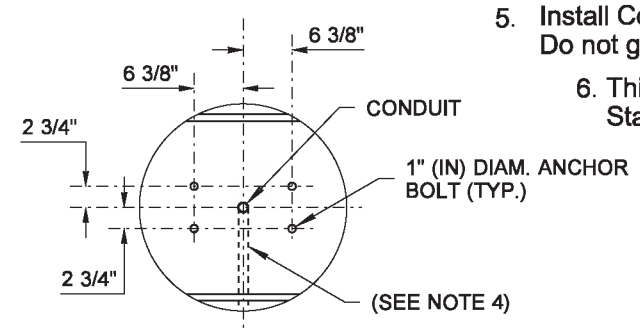

PLAN VIEW

ANCHOR BOLT LAYOUT DETAIL

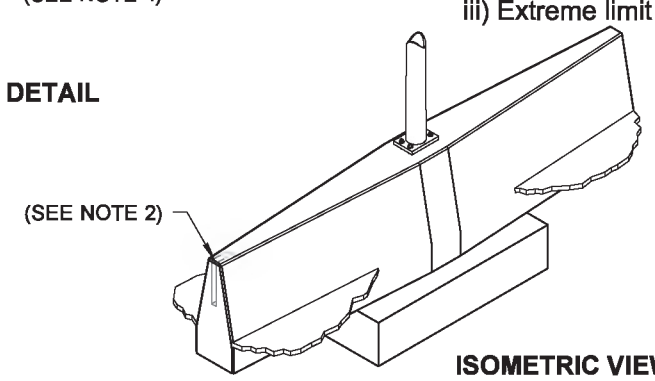

ISOMETRIC VIEW

ALL DIMENSIONS ARE OUT TO OUT
ALL BENDS ARE 2" (IN) RADIUS

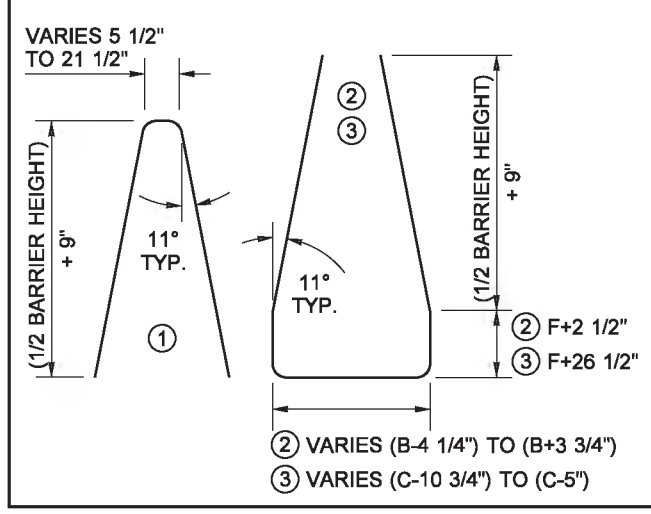

BAR LIST

MARK NO.	LOCATION	SIZE	QUANTITY
①	BARRIER ~ TOP VERTICAL	# 4	28
②	BARRIER ~ BOTTOM VERTICAL	# 4	12
③	FND. & BARRIER ~ VERTICAL	# 4	16
④	BARRIER ~ HORIZONTAL	# 5	"Q"
⑤	FOUNDATION	# 5	9
⑥	FOUNDATION	# 5	32

TABLE

GRADE SEPARATION	BARRIER HEIGHT	A	B	C	D	E	F	Q
0 TO 3"	4' - 0"	9 1/8"	2' - 2 1/4"	3' - 6 1/4"	VARIES 6" TO 9"	6	1' - 2"	14
UP TO 6" MAX.	4' - 6"	10 1/4"	2' - 4 1/2"	3' - 8 1/2"	VARIES 6" TO 9"	6	11"	14

RICHARD P. ZELDENRUST
STATE OF WASHINGTON
25470
STRUCTURAL ENGINEER
PROFESSIONAL ENGINEER

Zeldenrust, Richard
Jun 30 2014 7:44 AM

SINGLE-SLOPE CONCRETE BARRIER (42") LIGHT STANDARD FOUNDATION

STANDARD PLAN C-85.15-01

SHEET 1 OF 1 SHEET

APPROVED FOR PUBLICATION
Bakotich, Pasco
Jun 30 2014 3:08 PM

STATE DESIGN ENGINEER

Washington State Department of Transportation

DRAWN BY: LISA CYFORD

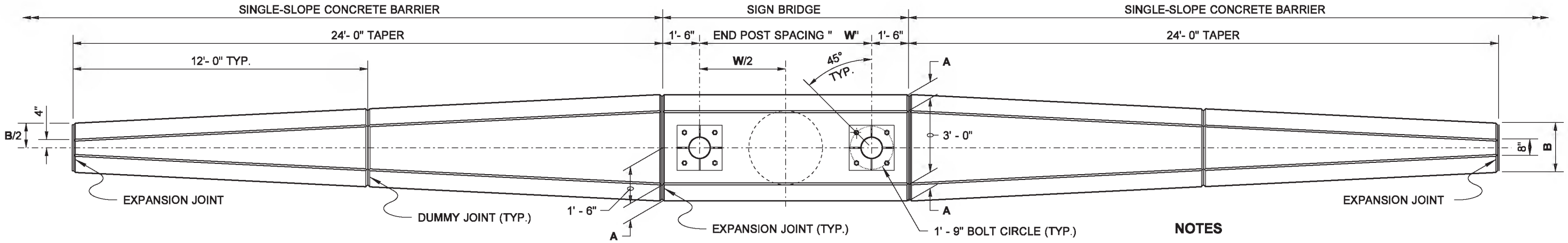

PLAN

DRAWN BY: LISA CYFORD

NOTES

1. When connecting between Cast-in-Place and Precast Single-Slope Barrier, provide a Connection Blockout and Rebar Grid as shown in **Standard Plan C-70.10.**
2. Grounding Conductor shall be non-insulated #4 AWG stranded copper; provide 3' - 0" min. slack. Clamp steel reinforcing bar with connector suitable for use embeded in concrete.
3. Install Conduit Coupling flush with top of Barrier. Do not glue PVC stubout.
4. Concrete shall be Class 4000, unless otherwise noted.

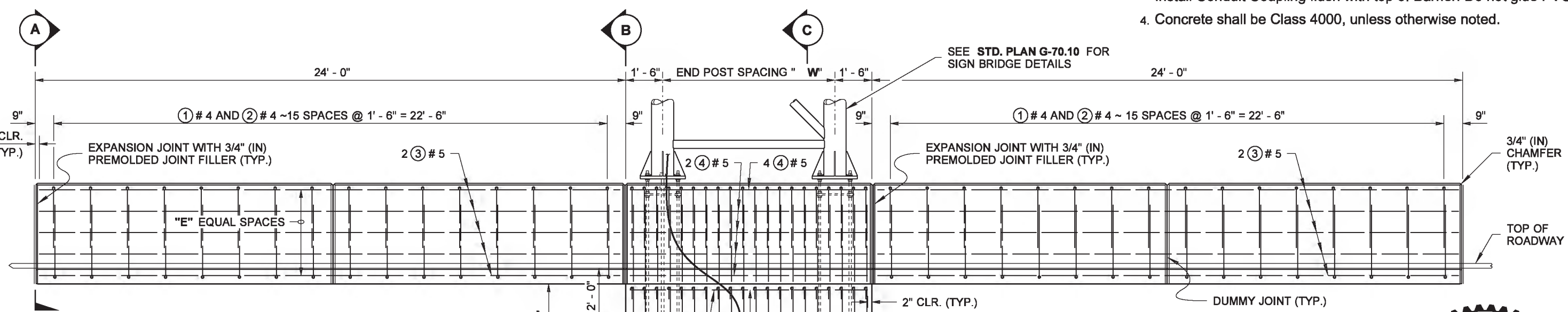

ELEVATION

DUMMY JOINT

DIMENSIONS "W" AND "Z"		
SIGN BRIDGE SPAN LENGTH	W	Z
60' OR LESS	4' - 0"	11' - 6"
61' TO 90'	5' - 0"	13' - 6"
91' TO 120'	6' - 0"	15' - 0"
121' TO 150'	7' - 0"	16' - 6"

SHAFT DEPTH "Z" IS BASED ON ALLOWABLE LATERAL BEARING PRESSURE IN EXCESS OF 1500 PSF WITH Ø = 28 DEGREES OR GREATER

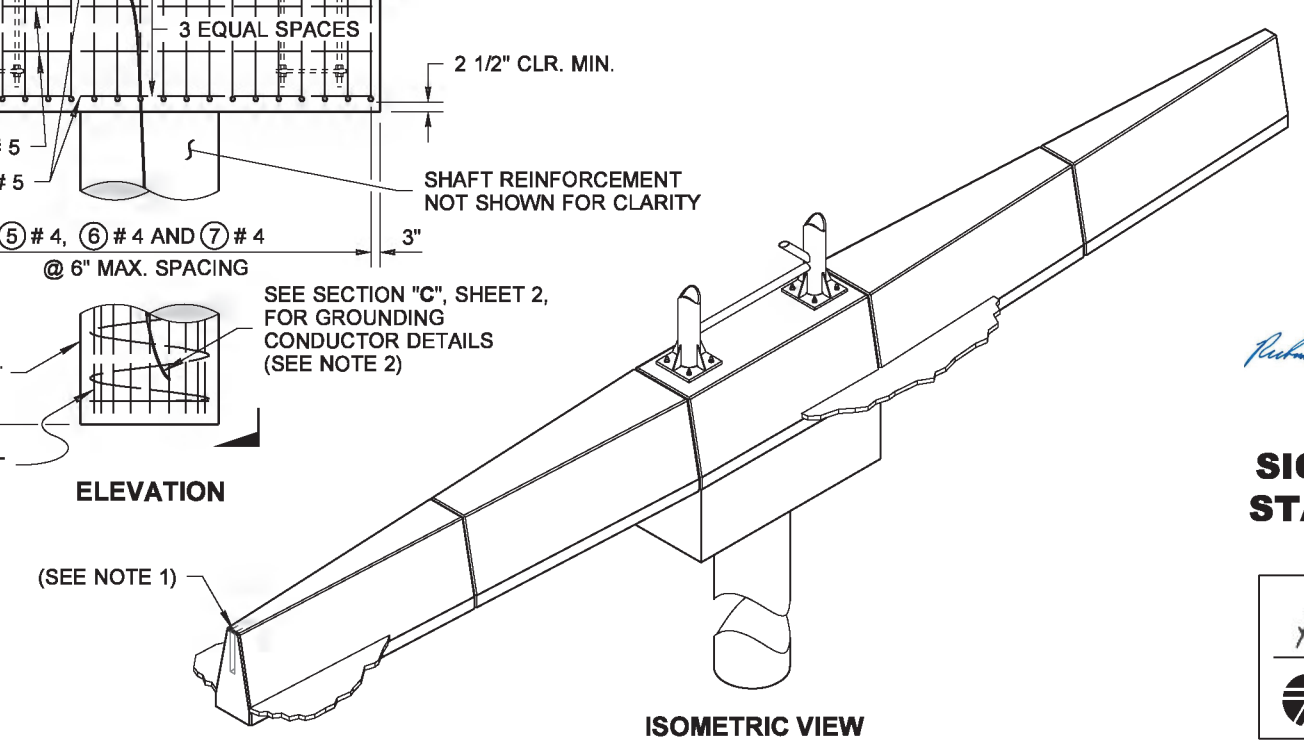

ISOMETRIC VIEW

RICHARD P. ZELDENRUST
STATE OF WASHINGTON
25470
STRUCTURAL ENGINEER
PROFESSIONAL ENGINEER

Zeldenrust, Richard
Jun 10 2014 10:20 AM

SINGLE-SLOPE CONCRETE BARRIER SIGN BRIDGE FOUNDATION

STANDARD PLAN C-85.16-01

SHEET 1 OF 2 SHEETS

APPROVED FOR PUBLICATION
Bakotich, Pasco
Jun 17 2014 9:35 AM
STATE DESIGN ENGINEER
Washington State Department of Transportation

DRAWN BY: LISA CYFORD

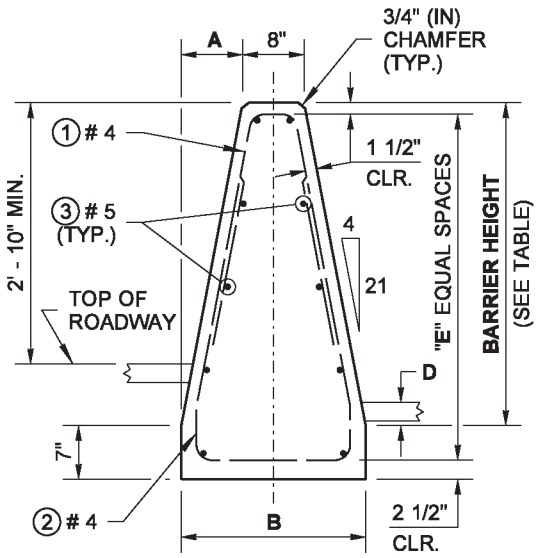

SECTION (A)

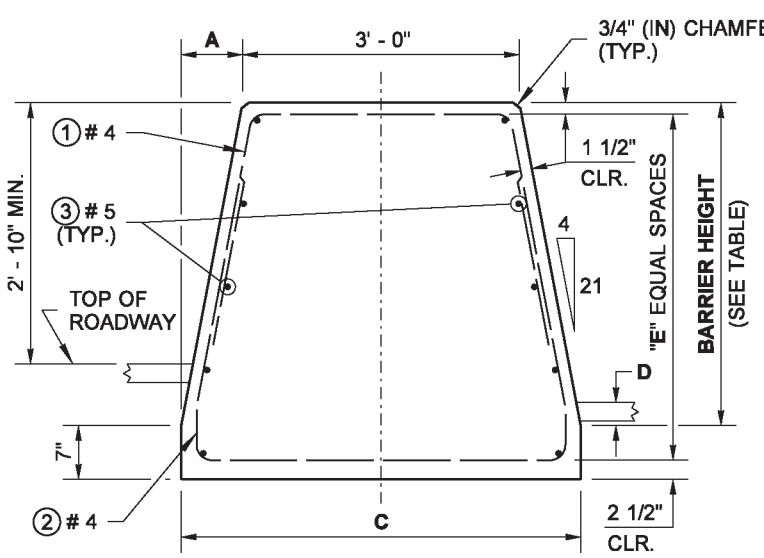

SECTION (B)

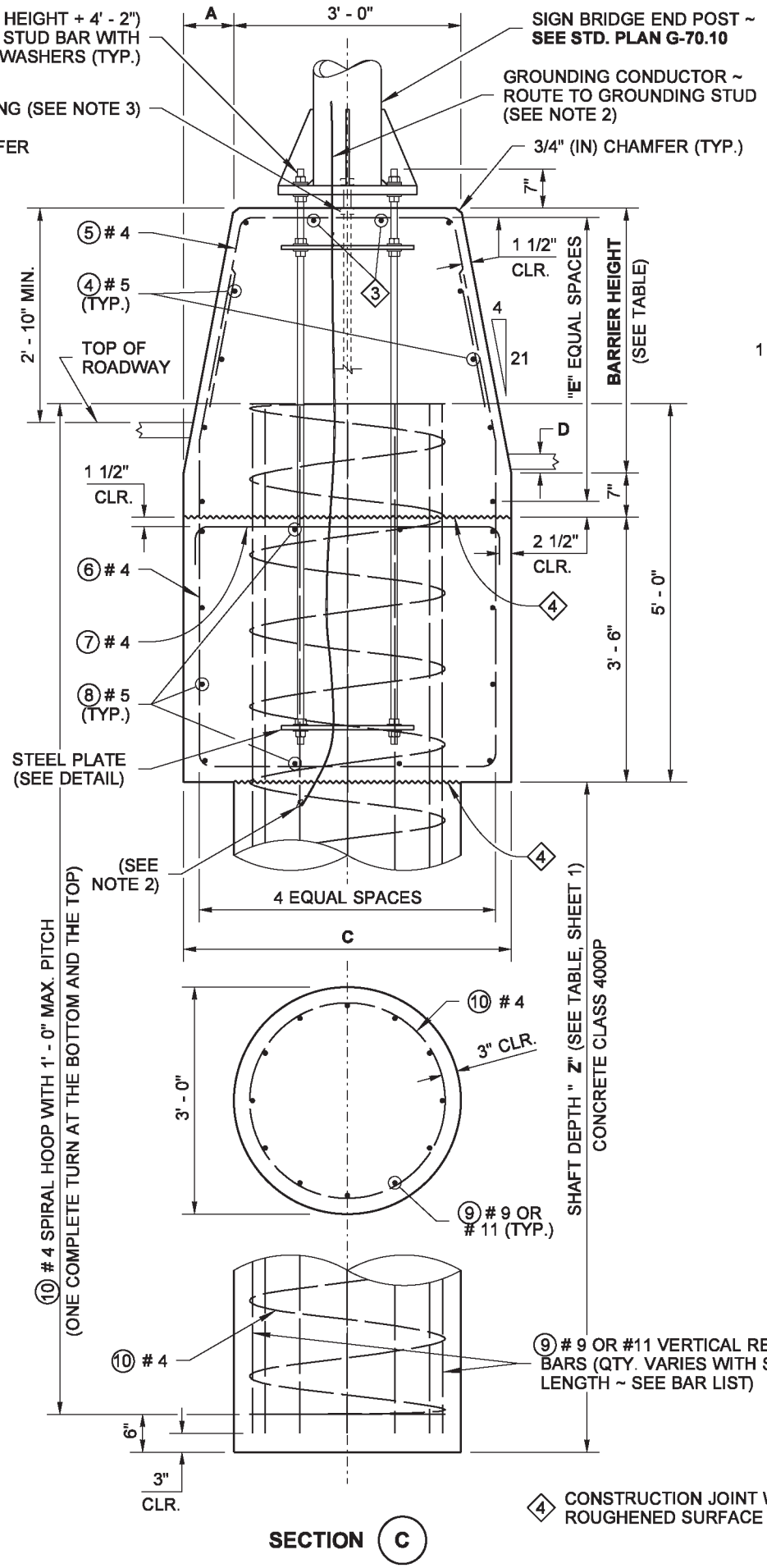

SECTION (C)

④ CONSTRUCTION JOINT WITH ROUGHENED SURFACE

TABLE							
GRADE SEPARATION	BARRIER HEIGHT	A	B	C	D	E	Q
0" TO 5"	3' - 6"	8"	2' - 0"	4' - 4"	3" MIN.	4	10 ③
UP TO 7"	4' - 0"	9 1/8"	2' - 2 1/4"	4' - 6 1/4"	7" MIN.	5	12 ③
UP TO 10"	4' - 6"	10 1/4"	2' - 4 1/2"	4' - 8 1/2"	10" MIN.	6	14 ③

③ ADD TWO ④ # 5 BARS, EQUALLY SPACED, AT THE TOP OF THE FOUNDATION BARRIER

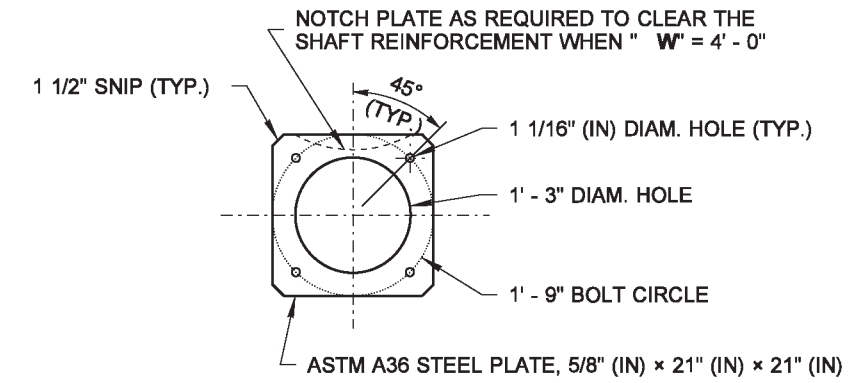

STEEL PLATE DETAIL

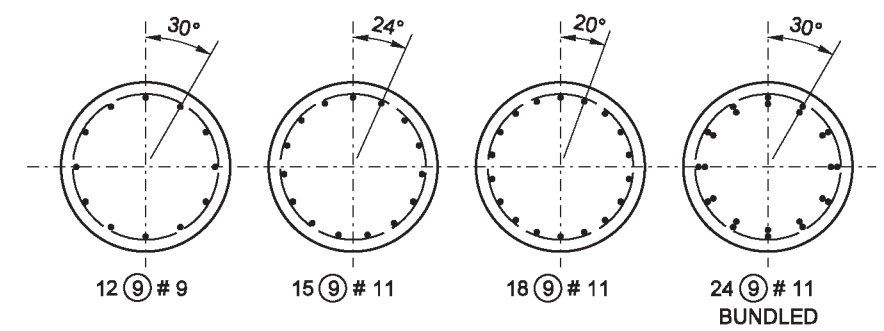

VERTICAL SHAFT STEEL LAYOUT

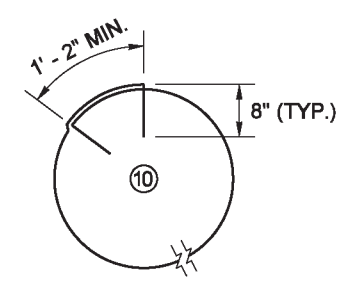

LAP SPLICE DETAIL

BAR LIST									
MARK NO.	LOCATION	SPAN LENGTH							
		60' OR LESS		61' TO 90'		91' TO 120'		121' TO 150'	
		SIZE	QTY.	SIZE	QTY.	SIZE	QTY.	SIZE	QTY.
①	BARRIER ~ TOP VERTICAL	# 4	32	# 4	32	# 4	32	# 4	32
②	BARRIER ~ BOTTOM VERTICAL	# 4	28	# 4	28	# 4	28	# 4	28
③	BARRIER ~ HORIZONTAL	# 5	①	# 5	①	# 5	①	# 5	①
④	BARRIER ~ HORIZONTAL	# 5	①	# 5	①	# 5	①	# 5	①
⑤	BARRIER ~ TOP VERTICAL	# 4	14	# 4	16	# 4	18	# 4	20
⑥	CAP & BARRIER ~ VERTICAL	# 4	14	# 4	16	# 4	18	# 4	20
⑦	CAP ~ TOP TRANSVERSE	# 4	14	# 4	16	# 4	18	# 4	20
⑧	CAP ~ HORIZONTAL	# 5	12	# 5	12	# 5	12	# 5	12
⑨	SHAFT ~ VERTICAL	# 9	12	# 11	15	# 11	18	# 11	24
⑩	SHAFT ~ SPIRAL	# 4	1 ②	# 4	1 ②	# 4	1 ②	# 4	1 ②

① SEE TABLE, THIS SHEET, COLUMN "Q"

② IF JOINING TWO SPIRALS, SEE LAP SPLICE DETAIL

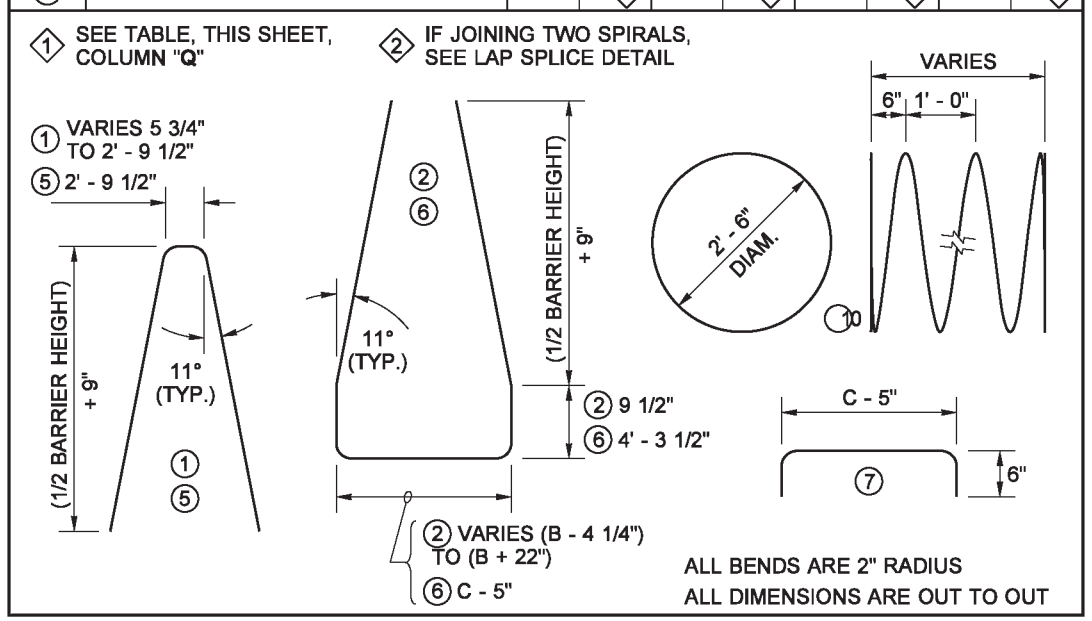

ALL BENDS ARE 2" RADIUS

ALL DIMENSIONS ARE OUT TO OUT

Zeldenrust, Richard
Jun 10 2014 10:21 AM

SINGLE-SLOPE CONCRETE BARRIER SIGN BRIDGE FOUNDATION

STANDARD PLAN C-85.16-01

SHEET 2 OF 2 SHEETS

APPROVED FOR PUBLICATION
Bakotich, Pasco
Jun 17 2014 9:35 AM

STATE DESIGN ENGINEER

Washington State Department of Transportation

This page left blank intentionally.

DRAWN BY: LISA CYFORD

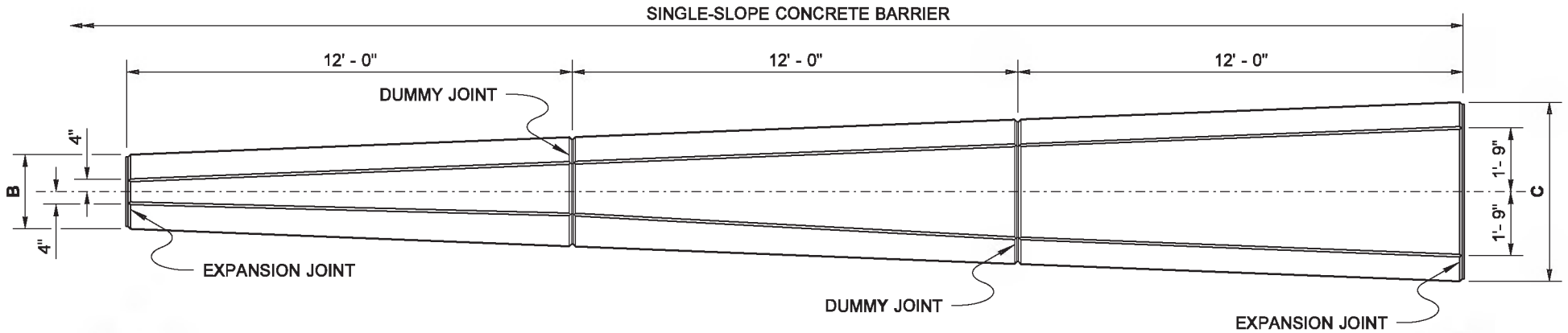

PLAN

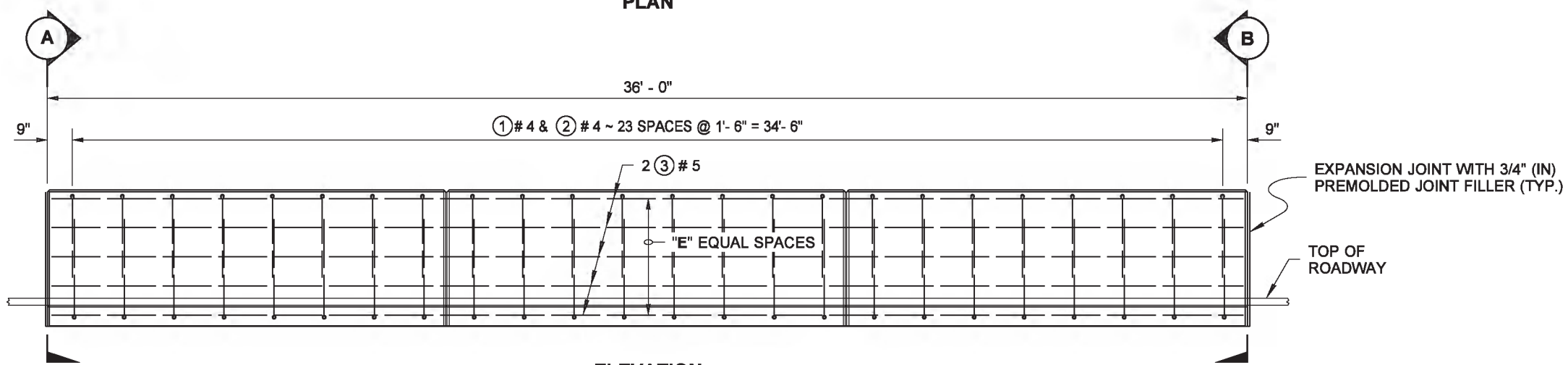

ELEVATION

NOTES

1. When connecting between Cast-in-Place and Precast Single-Slope Barrier, provide a Connection Blockout and Rebar Grid as shown in **Standard Plan C-70.10**.
2. All concrete shall be class 4000.
3. This barrier transition section is designed for an allowable soil bearing pressure of 2500 psf or better.

BAR LIST			
MARK NO.	LOCATION	SIZE	QTY.
①	BARRIER ~ TOP VERTICAL	# 4	24
②	BARRIER ~ BOTTOM VERTICAL	# 4	24
③	BARRIER ~ HORIZONTAL	# 5	◇1

◇1 SEE DIMENSION TABLE ~ NOT COUNTING SPLICES

ALL DIMENSIONS ARE OUT TO OUT
ALL BENDS ARE 2" RADIUS

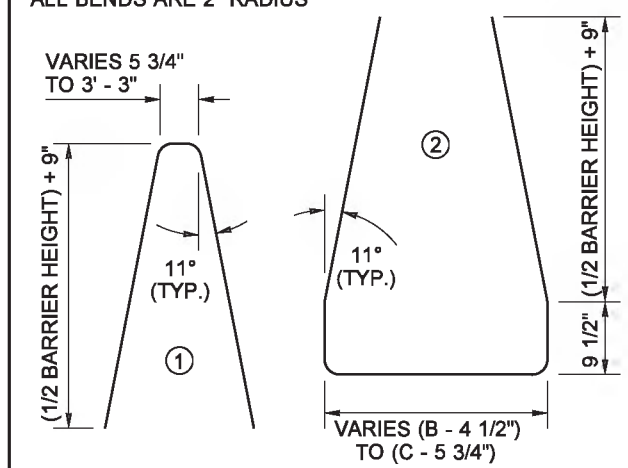

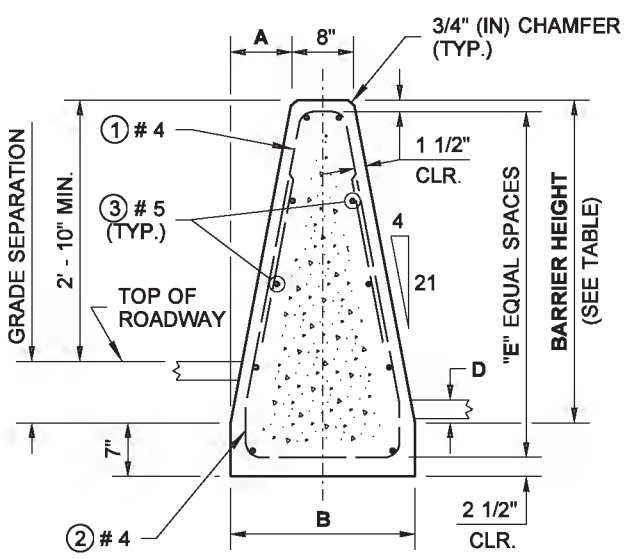

SECTION (A)

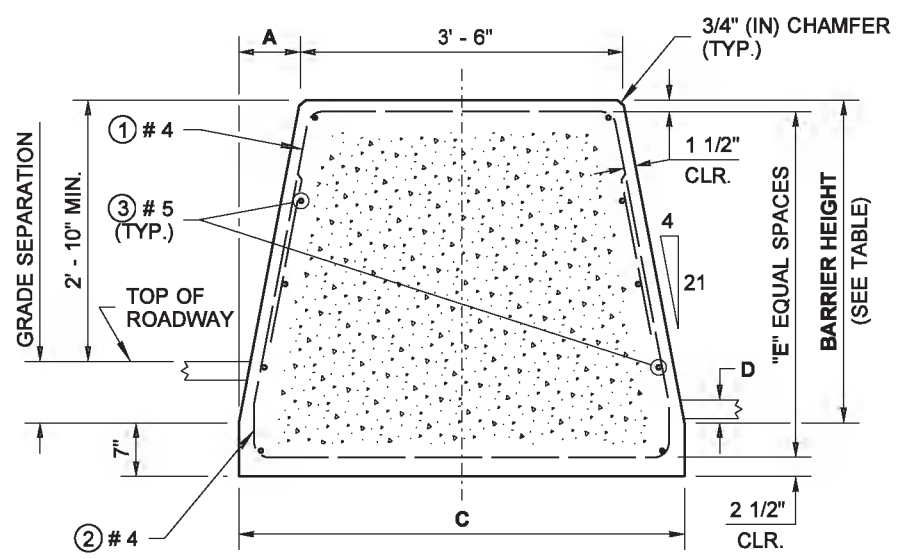

SECTION (B)

DUMMY JOINT

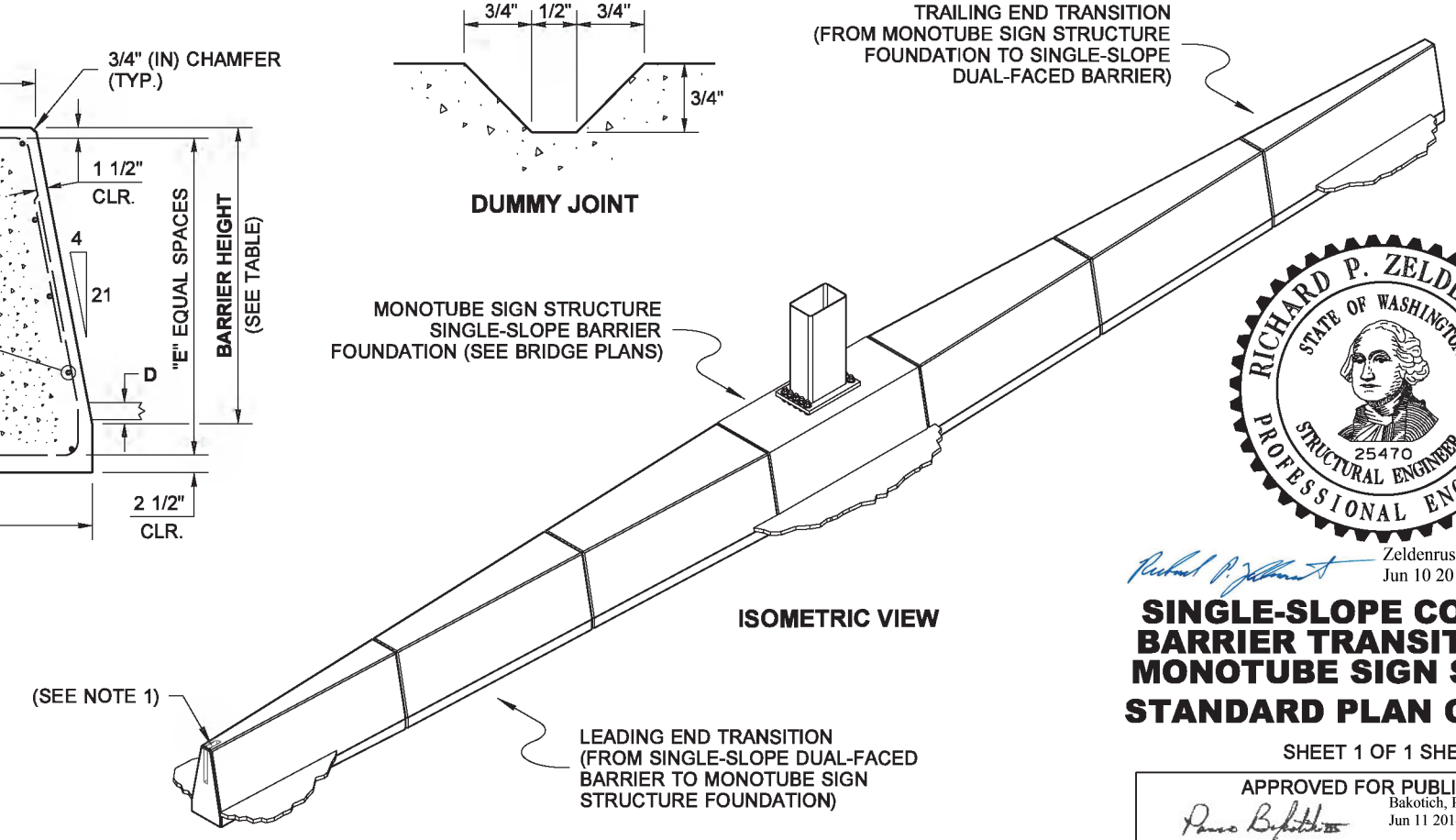

ISOMETRIC VIEW

TABLE							
GRADE SEPARATION	BARRIER HEIGHT	A	B	C	D	E	HORIZONTAL BARS (QTY.)
0" TO 5"	3' - 6"	8"	2' - 0"	4' - 10"	3" MIN.	4	10
UP TO 7"	4' - 0"	9 1/8"	2' - 2 1/4"	5' - 0 1/4"	7" MIN.	5	12
UP TO 10"	4' - 6"	10 1/4"	2' - 4 1/2"	5' - 2 1/2"	10" MIN.	6	14

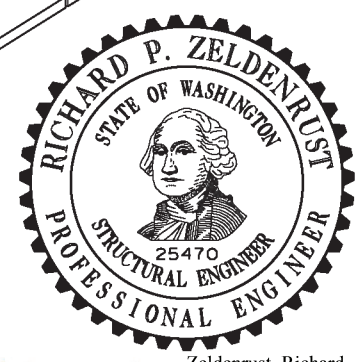

Zeldenrust, Richard
Jun 10 2014 10:26 AM

SINGLE-SLOPE CONCRETE BARRIER TRANSITION FOR MONOTUBE SIGN SUPPORT

STANDARD PLAN C-85.18-01

SHEET 1 OF 1 SHEET

APPROVED FOR PUBLICATION
Bakotich, Pasco
Jun 11 2014 1:21 PM

STATE DESIGN ENGINEER

Washington State Department of Transportation

DRAWN BY: LISA CYFORD

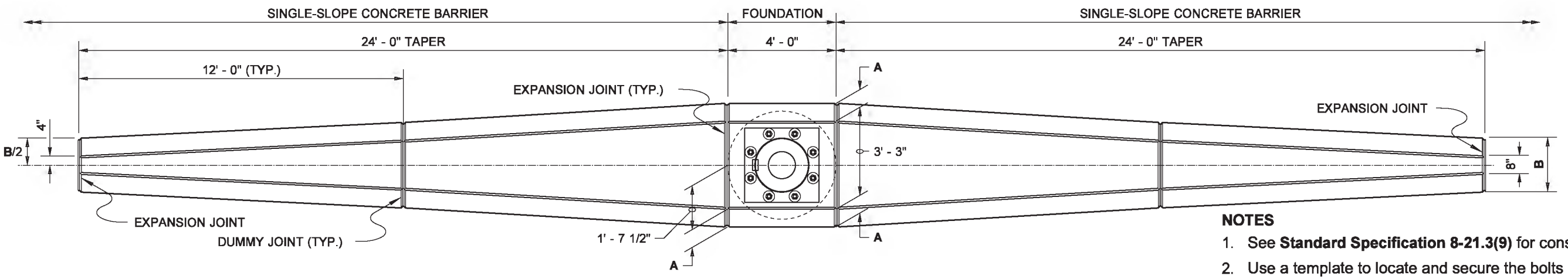

PLAN

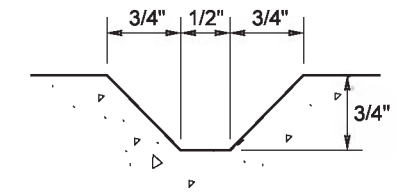

DUMMY JOINT

NOTES

1. See **Standard Specification 8-21.3(9)** for construction requirements.
2. Use a template to locate and secure the bolts during foundation installation.
3. When connecting between cast-in-place and precast Single-Slope Barrier, provide a Connection Blockout and Rebar Grid as shown in **Standard Plan C-70.10.**
4. Grounding Conductor shall be non-insulated #4 AWG stranded copper; provide 3' - 0" min. slack. Clamp steel reinforcing bar with connector suitable for use embedded in concrete.
5. Install Conduit Coupling flush with top of Barrier. Do not glue PVC stubout.

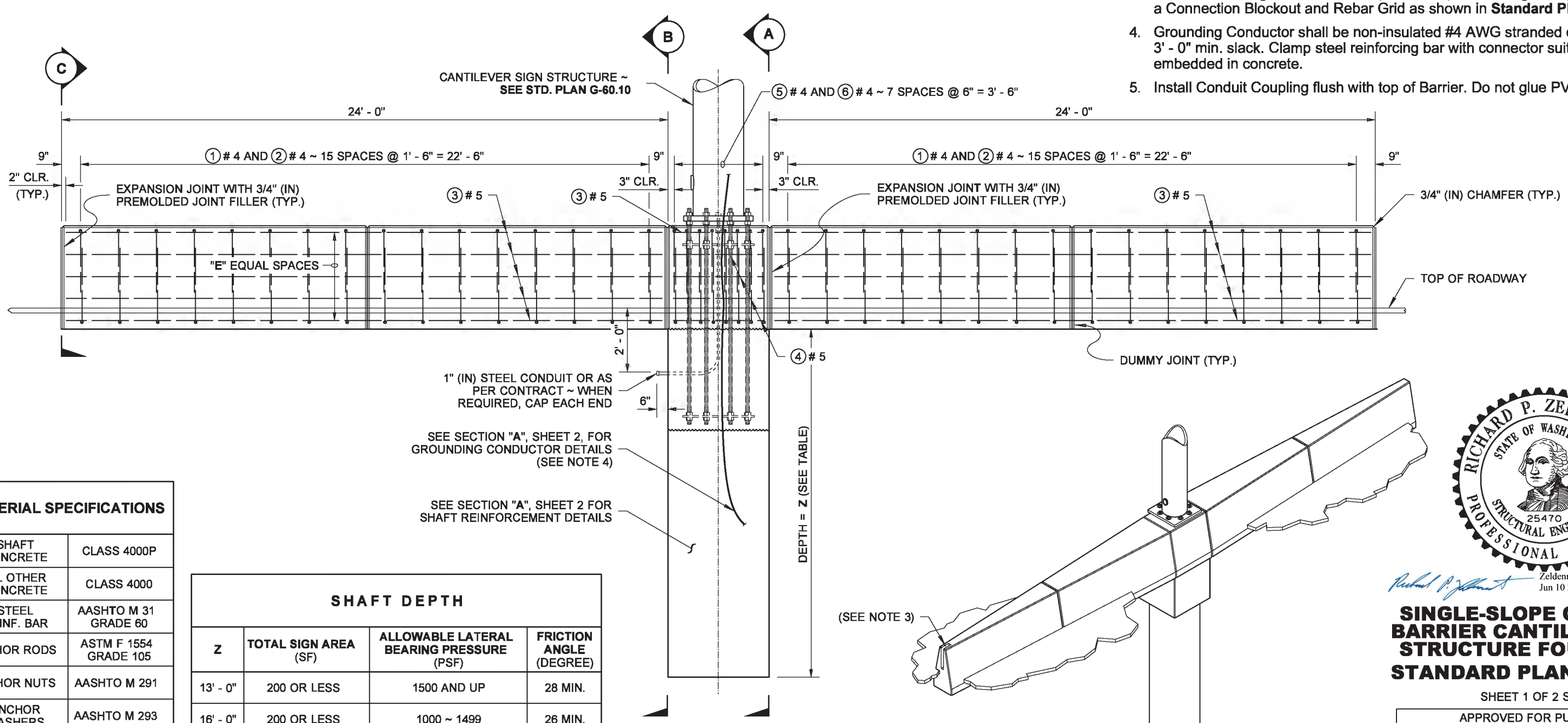

ELEVATION

ISOMETRIC

MATERIAL SPECIFICATIONS	
SHAFT CONCRETE	CLASS 4000P
ALL OTHER CONCRETE	CLASS 4000
STEEL REINF. BAR	AASHTO M 31 GRADE 60
ANCHOR RODS	ASTM F 1554 GRADE 105
ANCHOR NUTS	AASHTO M 291
ANCHOR WASHERS	AASHTO M 293
ANCHORAGE GALVANIZING	AASHTO M 232
STEEL PLATE	ASTM A 36

SHAFT DEPTH

Z	TOTAL SIGN AREA (SF)	ALLOWABLE LATERAL BEARING PRESSURE (PSF)	FRICTION ANGLE (DEGREE)
13' - 0"	200 OR LESS	1500 AND UP	28 MIN.
16' - 0"	200 OR LESS	1000 ~ 1499	26 MIN.
18' - 0"	200 ~ 400	1500 AND UP	28 MIN.
22' - 0"	200 ~ 400	1000 ~ 1499	26 MIN.

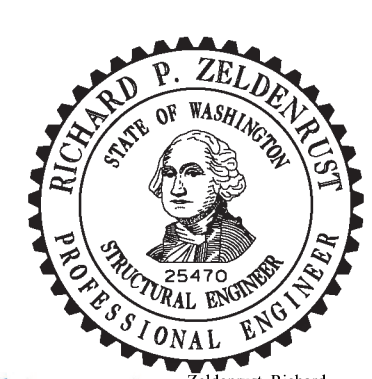

Zeldenrust, Richard
Jun 10 2014 10:27 AM

SINGLE-SLOPE CONCRETE BARRIER CANTILEVER SIGN STRUCTURE FOUNDATION

STANDARD PLAN C-85.20-01

SHEET 1 OF 2 SHEETS

APPROVED FOR PUBLICATION
Bakotich, Pasco
Jun 11 2014 1:21 PM
STATE DESIGN ENGINEER

Washington State Department of Transportation

DRAWN BY: LISA CYFORD

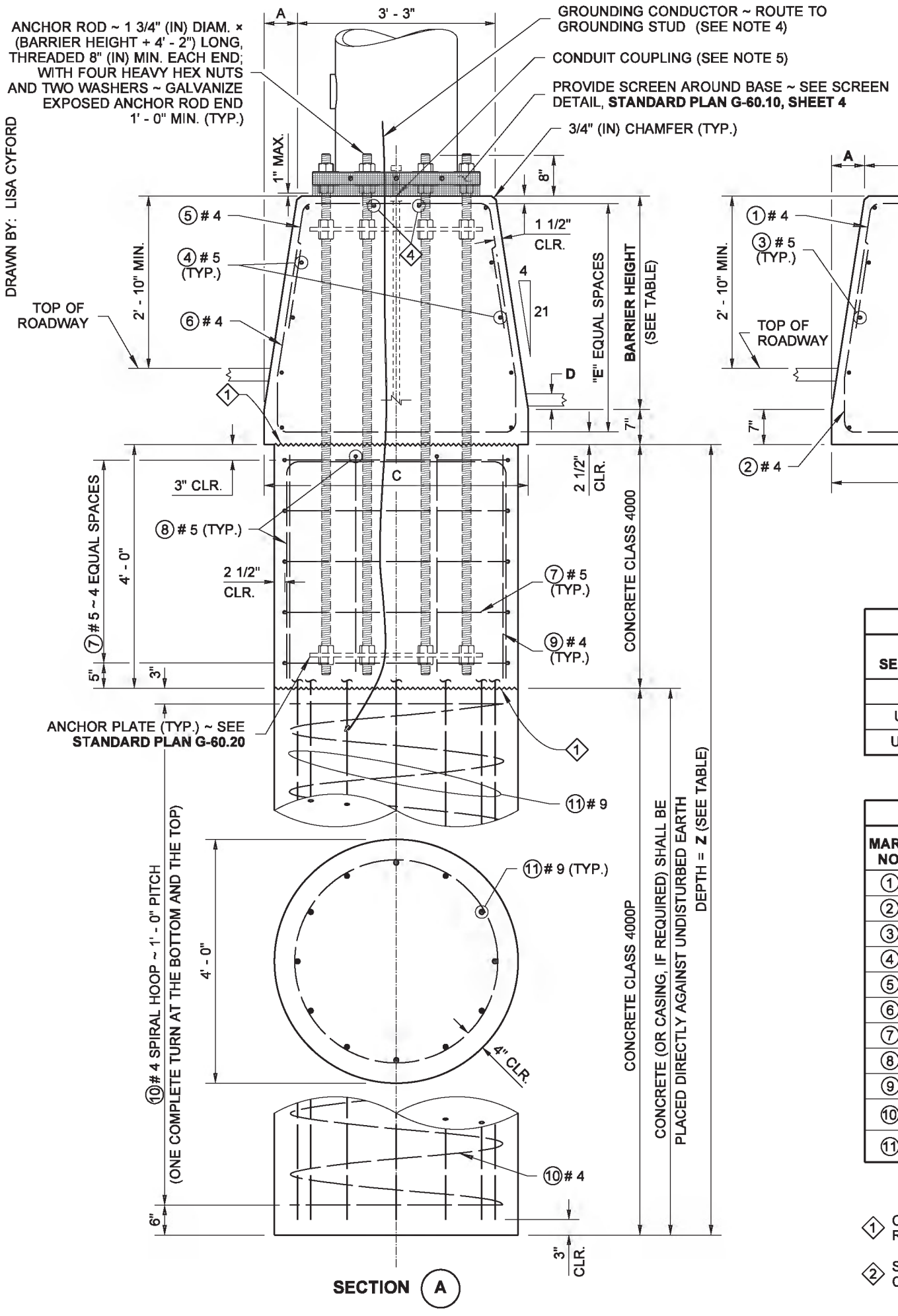

SECTION (A)

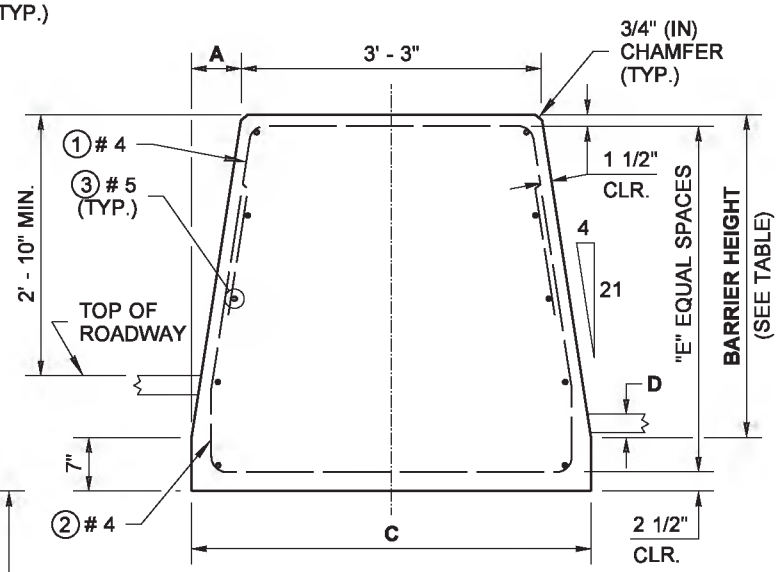

SECTION (B)

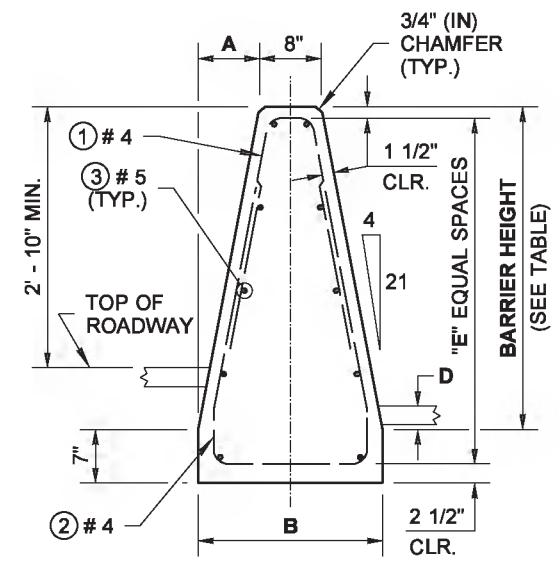

SECTION (C)

BENDING DIAGRAM

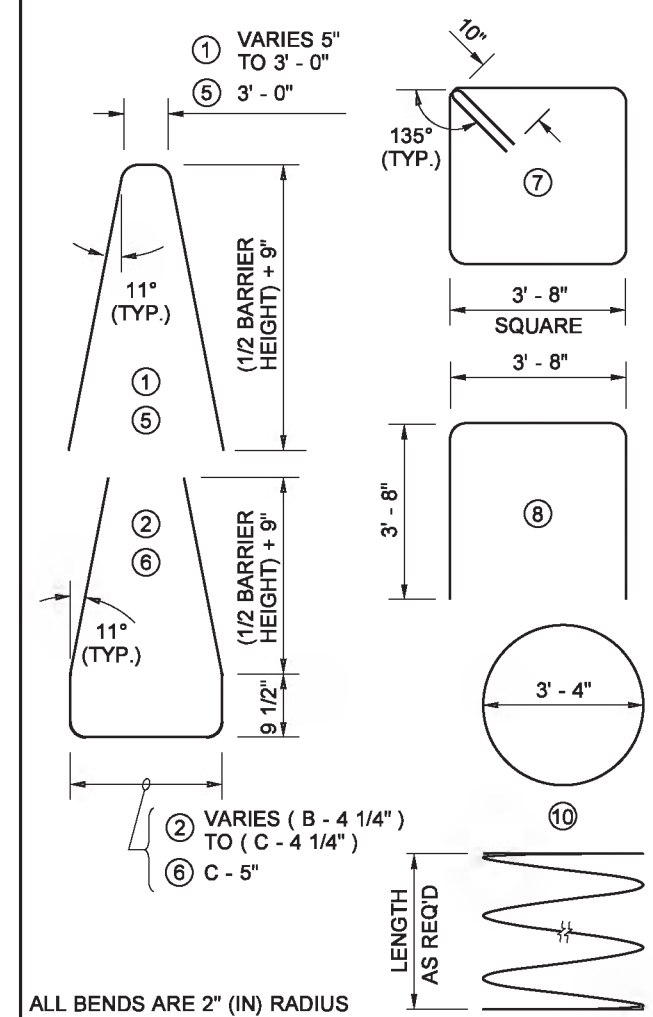

ALL BENDS ARE 2" (IN) RADIUS
ALL DIMENSIONS ARE OUT TO OUT

TABLE

GRADE SEPARATION	BARRIER HEIGHT	A	B	C	D	E	Q
0 TO 5"	3' - 6"	8"	2' - 0"	4' - 7"	3" MIN.	4	10 ◇4
UP TO 7"	4' - 0"	9 1/8"	2' - 2 1/4"	4' - 9 1/4"	7" MIN.	5	12 ◇4
UP TO 10"	4' - 6"	10 1/4"	2' - 4 1/2"	4' - 11 1/2"	10" MIN.	6	14 ◇4

BAR LIST

MARK NO.	LOCATION	QTY.	LENGTH	SIZE	TYPE
①	BARRIER ~ TOP VERTICAL	32	VARIES	# 4	
②	BARRIER ~ BOTTOM VERTICAL	32	VARIES	# 4	
③	BARRIER ~ HORIZONTAL	◇2	23' - 8"	# 5	STR.
④	BARRIER ~ HORIZONTAL	◇2	3' - 8"	# 5	STR.
⑤	BARRIER ~ TOP VERTICAL	8	VARIES	# 4	
⑥	BARRIER ~ BOTTOM VERTICAL	8	VARIES	# 4	
⑦	CAP ~ HOOP	5	15' - 9"	# 5	
⑧	CAP ~ TOP	4	10' - 10"	# 5	
⑨	CAP ~ VERTICAL, EACH CORNER	4	3' - 4"	# 4	STR.
⑩	SHAFT ~ SPIRAL	1 ◇3	AS REQ'D	# 4	
⑪	SHAFT ~ VERTICAL	12	"Z" MINUS CLEARANCES	# 9	STR.

◇1 CONSTRUCTION JOINT WITH ROUGHENED SURFACE

◇2 SEE TABLE, THIS SHEET, COLUMN "Q"

◇3 IF JOINING TWO SPIRALS, SEE LAP SPLICE DETAIL, **STANDARD PLAN G-60.20, SHEET 2**

◇4 ADD TWO ④ #5 BARS, EQUALLY SPACED, AT THE TOP OF THE FOUNDATION BARRIER

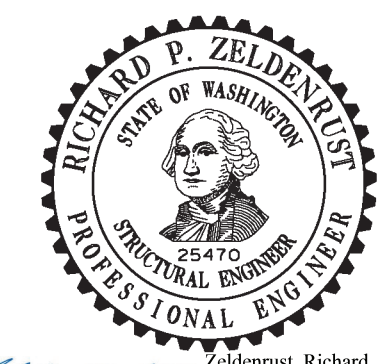

Zeldenrust, Richard
Jun 10 2014 10:46 AM

SINGLE-SLOPE CONCRETE BARRIER CANTILEVER SIGN STRUCTURE FOUNDATION

STANDARD PLAN C-85.20-01

SHEET 2 OF 2 SHEETS

APPROVED FOR PUBLICATION
Bakotich, Pasco
Jun 11 2014 1:22 PM

STATE DESIGN ENGINEER

Washington State Department of Transportation

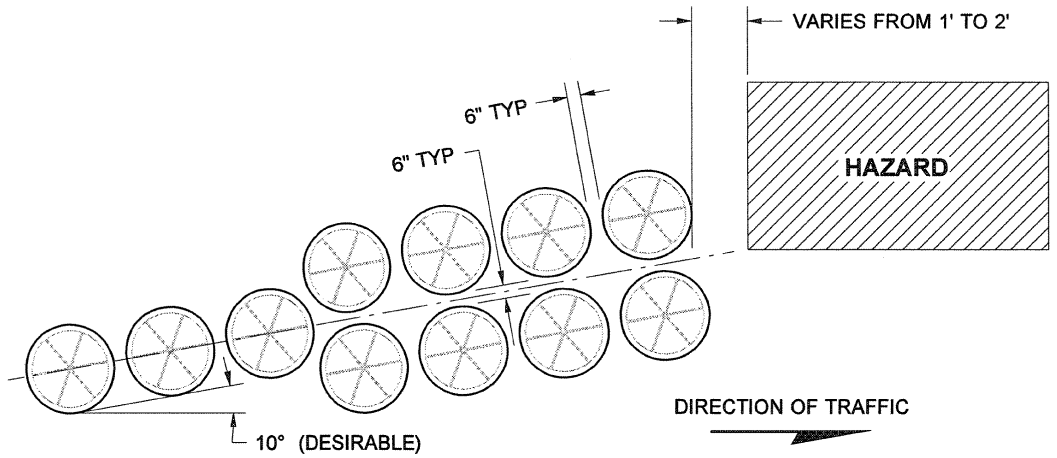

ROADSIDE INSTALLATION DETAIL

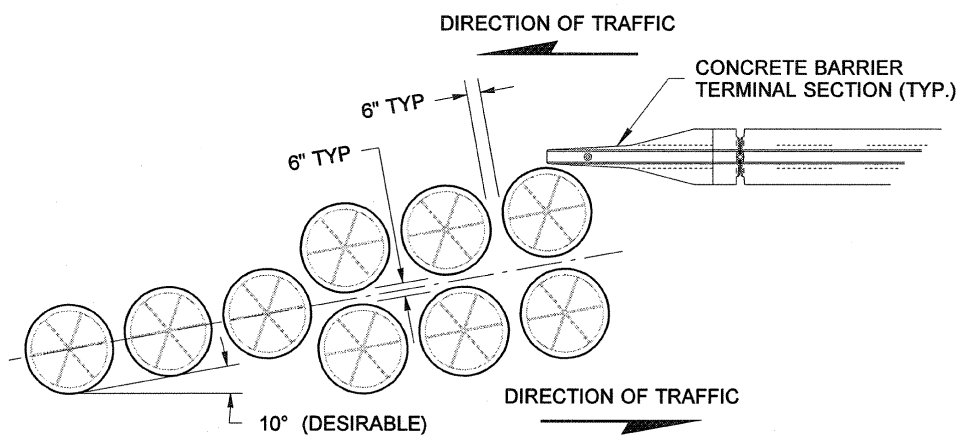

MEDIAN INSTALLATION DETAIL

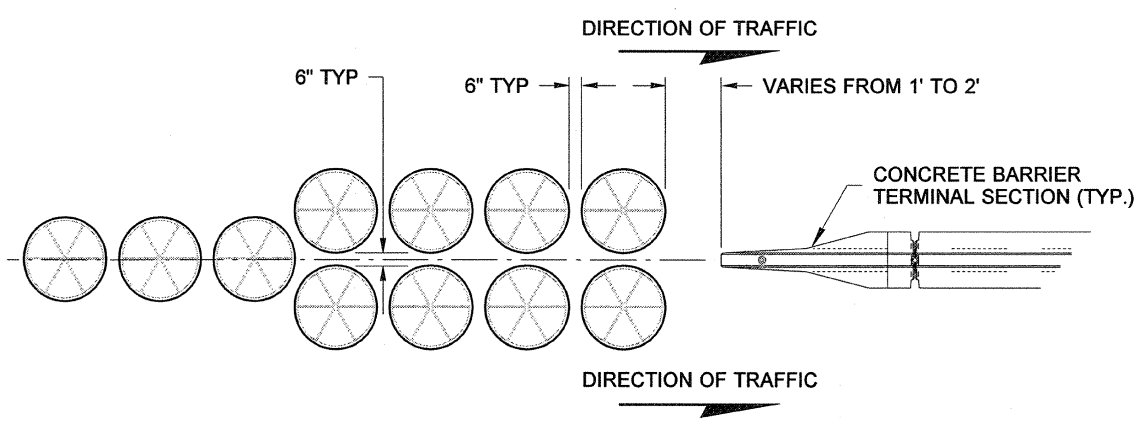

GORE INSTALLATION DETAIL

INSTALLATION DETAILS

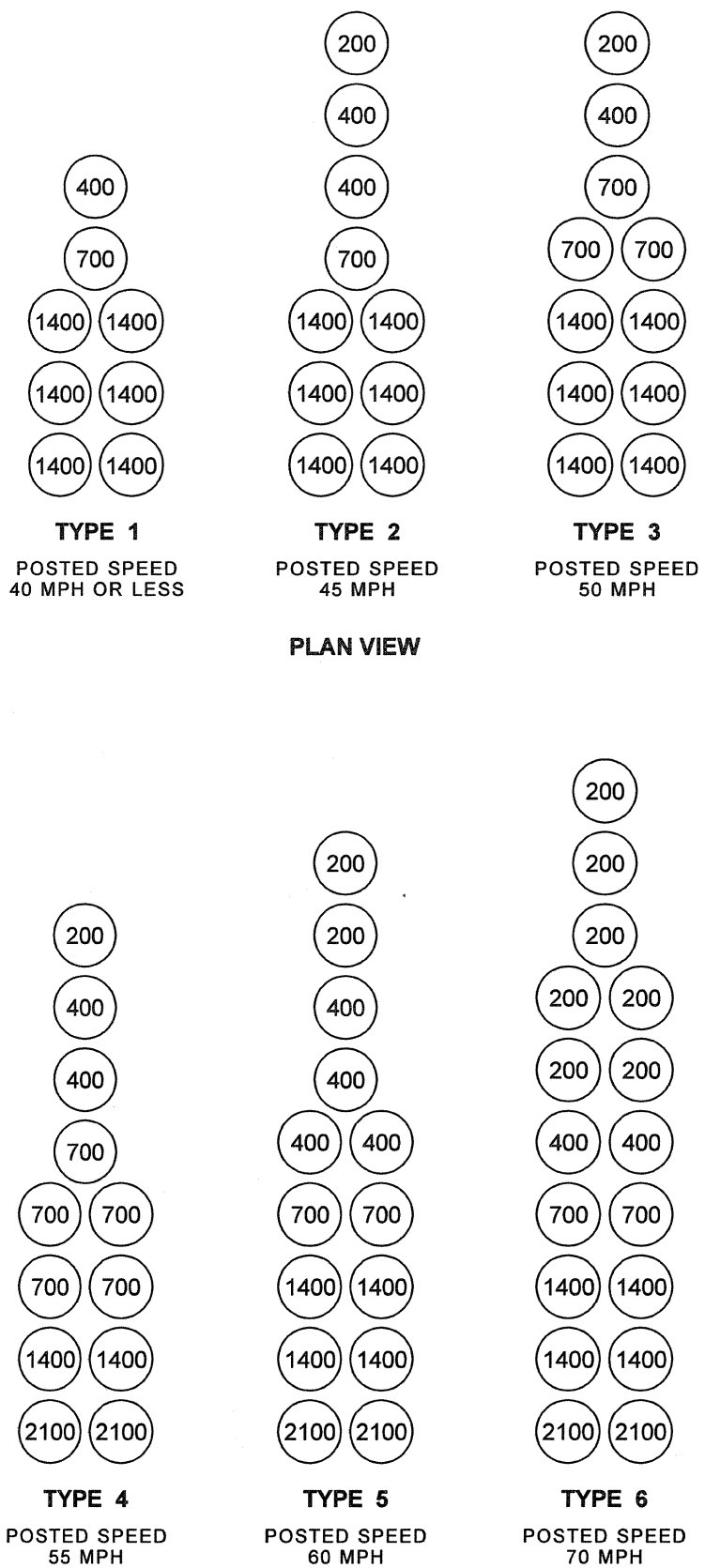

TYPE 1
POSTED SPEED
40 MPH OR LESS

TYPE 2
POSTED SPEED
45 MPH

TYPE 3
POSTED SPEED
50 MPH

PLAN VIEW

TYPE 4
POSTED SPEED
55 MPH

TYPE 5
POSTED SPEED
60 MPH

TYPE 6
POSTED SPEED
70 MPH

PLAN VIEW

ATTENUATOR CONFIGURATIONS

(NUMBERS INSIDE BARRELS INDICATE LBS.)

NOTES

1. Approved Inertial Barrier Systems (sand barrel arrays) are listed in the Qualified Products List and shall be installed in accordance with the manufacturer's recommendations. When products not listed on the Qualified Products List are considered, a Request of Approval of Materials (RAM) form is required.
2. For temporary installations, the inertial barriers may be placed on wood pallets that are 4" or less in height.

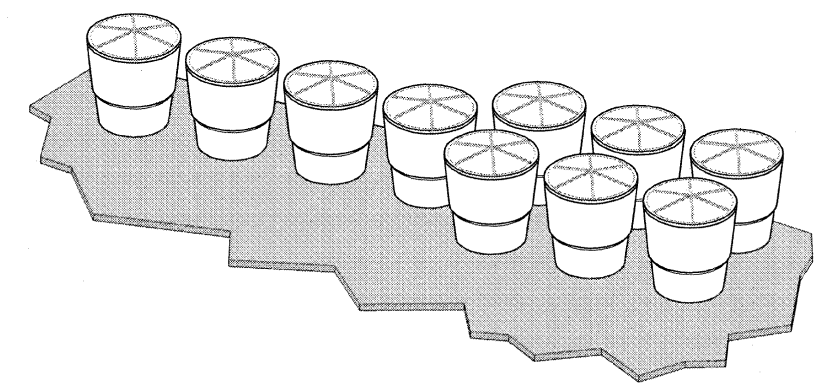

EXAMPLE CONFIGURATION

EXPIRES JULY 24, 2008

IMPACT ATTENUATOR
INERTIAL BARRIER
CONFIGURATIONS
STANDARD PLAN C-90.10-00

SHEET 1 OF 1 SHEET

APPROVED FOR PUBLICATION

STATE DESIGN ENGINEER — DATE 7/3/08

Washington State Department of Transportation

DRAWN BY: ADAM COCHRAN

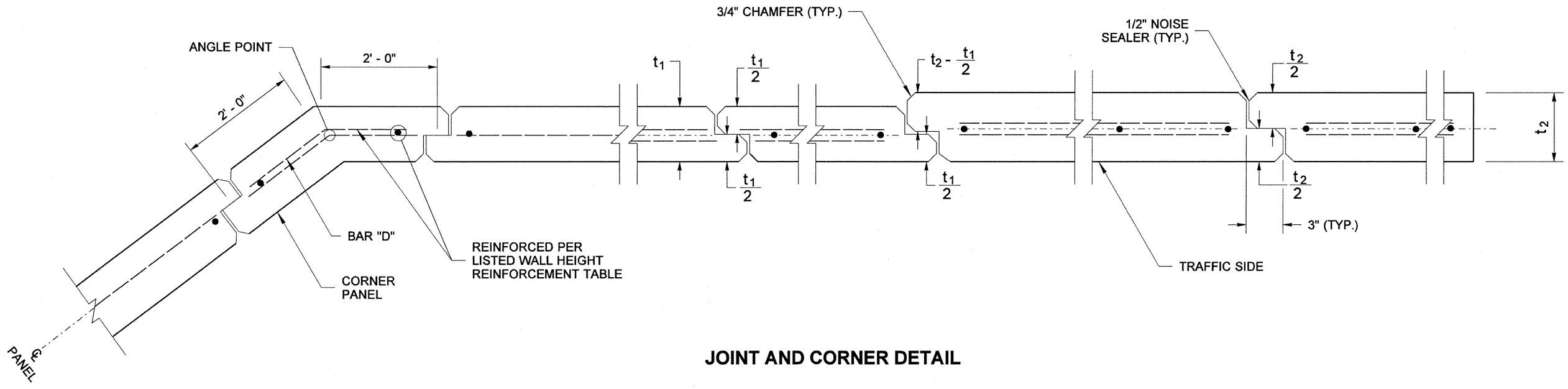

JOINT AND CORNER DETAIL

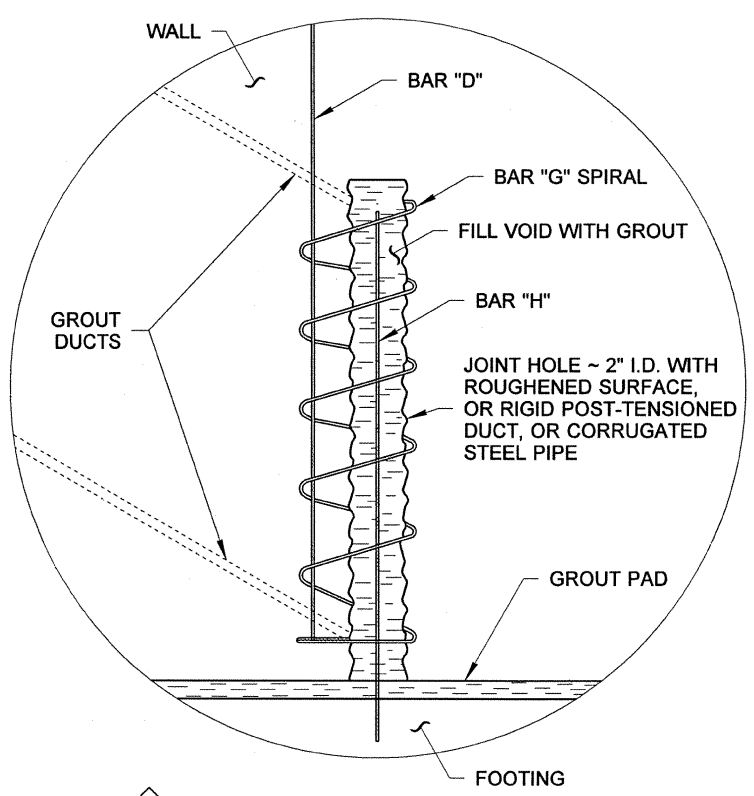

2 FILL THE JOINT HOLE WITH GROUT USING DUCTS. DUCTS SHALL BE LOCATED ON PANEL FACE OPPOSITE TRAFFIC

DETAIL A

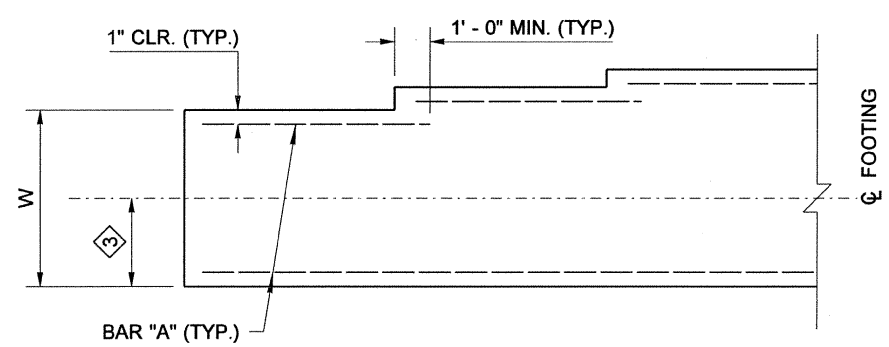

(TRANSVERSE BARS NOT SHOWN)

FOOTING WIDTH TRANSITION DETAIL

FOR LOCATIONS WITHOUT FOOTING STEP

PRECAST CONCRETE WALL ON OFFSET SPREAD FOOTING

BIJAN KHALEGHI
STATE OF WASHINGTON
27695
STRUCTURAL ENGINEER
PROFESSIONAL ENGINEER
12/31/08

NOISE BARRIER WALL TYPE 10

STANDARD PLAN D-2.34-01

SHEET 2 OF 2 SHEETS

APPROVED FOR PUBLICATION

STATE DESIGN ENGINEER — DATE 1/6/09

Washington State Department of Transportation

DRAWN BY: FERN LIDDELL

EXPOSED WALL HT H	WESTERN WASHINGTON								
	SHAFT DEPTH		ROD "A" DIAM.	BAR "B"	LAPSPLICE Y	ANCHOR BOLT DIAM.	BASE PLATE		
	D1	D2					F	Q	T
6' - 0"	5' - 6"	4' - 6"	1/2"	4 ~ #4	2' - 3"	1/2"	1 1/8"	1 21/32"	1 1/2"
8' - 0"	6' - 6"	5' - 3"	5/8"	4 ~ #4	2' - 9"	5/8"	1 1/8"	1 21/32"	1 1/2"
10' - 0"	7' - 3"	6' - 0"	3/4"	4 ~ #5	3' - 0"	3/4"	1 1/8"	1 21/32"	1 1/2"
12' - 0"	8' - 3"	7' - 0"	7/8"	4 ~ #6	3' - 9"	7/8"	1 1/8"	1 21/32"	1 1/2"
14' - 0"	9' - 0"	7' - 6"	1"	4 ~ #6	6' - 0"	1"	1 3/8"	2"	2"
16' - 0"	9' - 9"	8' - 3"	1 1/4"	4 ~ #6	8' - 0"	1 1/8"	1 3/8"	2"	2"
18' - 0"	10' - 6"	8' - 9"	1 1/4" *	4 ~ #6	10' - 0"	1 1/4"	*	*	2 1/4"
20' - 0"	11' - 3"	9' - 6"	SPECIAL DESIGN REQUIRED						
22' - 0"	12' - 0"	10' - 0"							
24' - 0"	12' - 6"	10' - 6"							

* ONLY ANCHOR BOLT OPTION FOR ROD "A" ALLOWED, WEDGE HEAD OPTION NOT ALLOWED

EXPOSED WALL HT H	EASTERN WASHINGTON								
	SHAFT DEPTH		ROD "A" DIAM.	BAR "B"	LAPSPLICE Y	ANCHOR BOLT DIAM.	BASE PLATE		
	D1	D2					F	Q	T
6' - 0"	4' - 9"	3' - 9"	1/2"	4 ~ #4	2' - 3"	1/2"	1 1/8"	1 21/32"	1 1/2"
8' - 0"	5' - 3"	4' - 6"	1/2"	4 ~ #4	2' - 3"	1/2"	1 1/8"	1 21/32"	1 1/2"
10' - 0"	6' - 0"	5' - 0"	5/8"	4 ~ #4	4' - 0"	5/8"	1 1/8"	1 21/32"	1 1/2"
12' - 0"	7' - 3"	6' - 0"	3/4"	4 ~ #5	4' - 0"	3/4"	1 1/8"	1 21/32"	1 1/2"
14' - 0"	8' - 0"	6' - 9"	7/8"	4 ~ #6	4' - 0"	7/8"	1 1/8"	1 21/32"	1 1/2"
16' - 0"	8' - 9"	7' - 3"	1"	4 ~ #6	6' - 0"	1"	1 3/8"	2"	2"
18' - 0"	9' - 6"	8' - 0"	1 1/8"	4 ~ #7	6' - 0"	1 1/8"	1 3/8"	2"	2"
20' - 0"	10' - 0"	8' - 6"	1 1/4"	4 ~ #7	8' - 3"	1 1/4"	1 3/8"	2"	2"
22' - 0"	10' - 9"	9' - 0"	SPECIAL DESIGN REQUIRED						
24' - 0"	11' - 3"	9' - 6"							

NOTES

1. All rods "**A**" and Anchor bolts shall be per **ASTM F1554** grade 105.
2. Anchor Bolts, Nuts, Washers and Rod "**A**" shall have a protective coating of either Hot Dipped Galvanizing per **AASHTO M232** for hardware or **AASHTO M111** for Washers and Plates.
3. For intermediate wall heights, use the next higher H.
4. Panels shall have at least 3 feet of level ground on each side.
5. The Contract specifies actual foundation requirements for **D1** or **D2** and location of **Western WA** and **Eastern WA.**
6. Maximum panel length shall be 12 feet.
7. Materials shall meet the requirements of **Standard Specification Section 6-12** and **Special Provisions Section 6-12.**

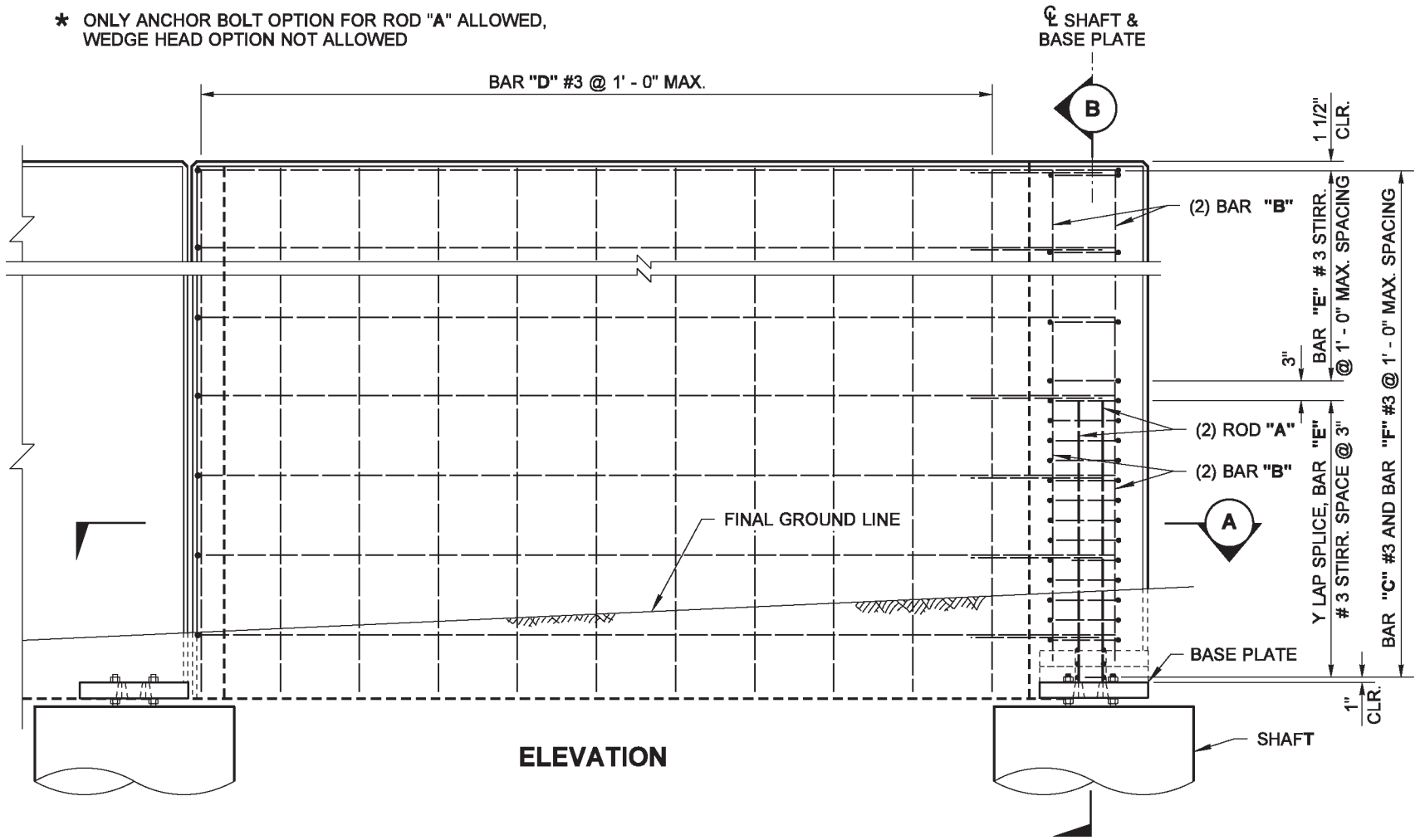

ELEVATION

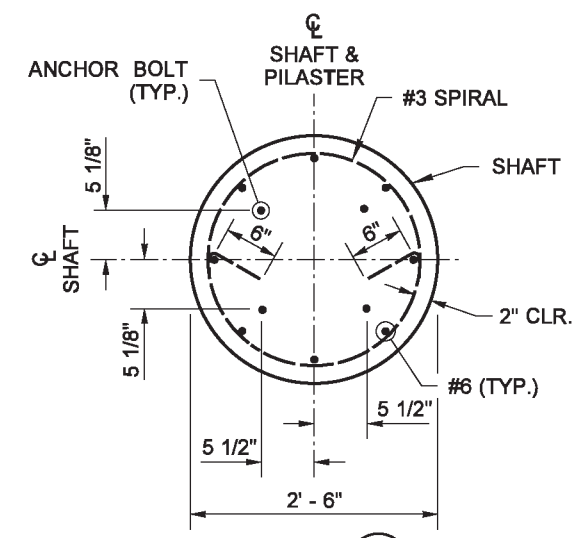

SECTION C

SHAFT REINFORCEMENT SHOWN ACCEPTABLE FOR HEIGHTS "H" ≤ 18' IN WESTERN WASHINGTON AND HEIGHTS "H" ≤ 20' IN EASTERN WASHINGTON

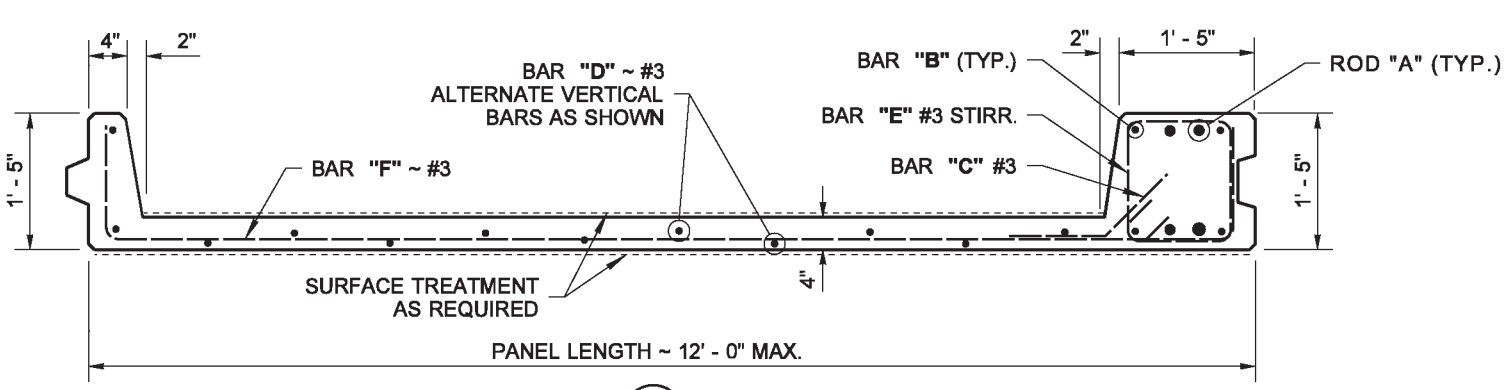

SECTION A

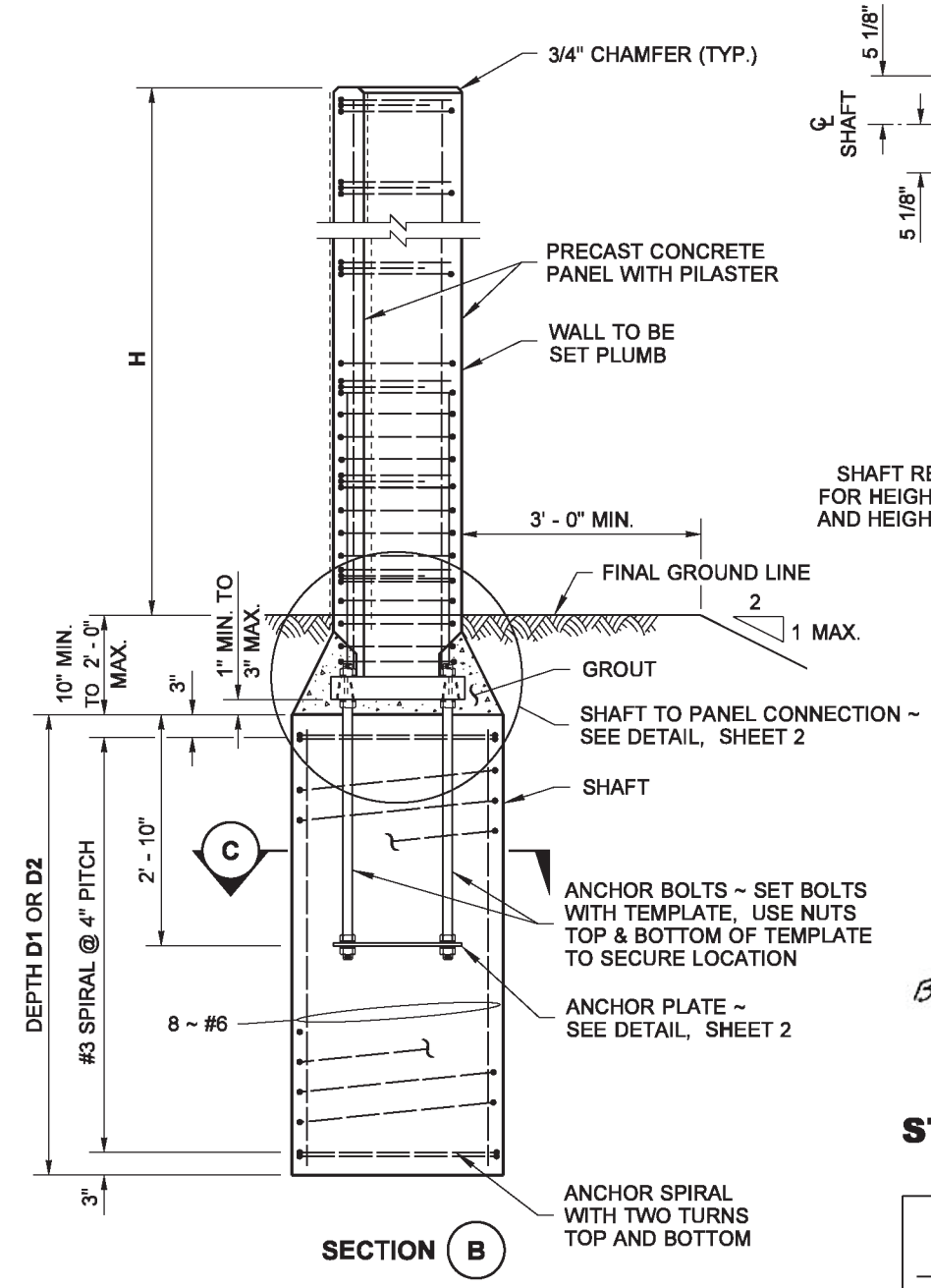

SECTION B

TYPICAL SECTION

Khaleghi, Bijan
Bijan Khaleghi Apr 30 2014 3:42 PM

NOISE BARRIER WALL TYPE 11

STANDARD PLAN D-2.36-03

SHEET 1 OF 3 SHEETS

APPROVED FOR PUBLICATION
Bakotich, Pasco
Jun 11 2014 1:22 PM
STATE DESIGN ENGINEER
Washington State Department of Transportation

DRAWN BY: FERN LIDDELL

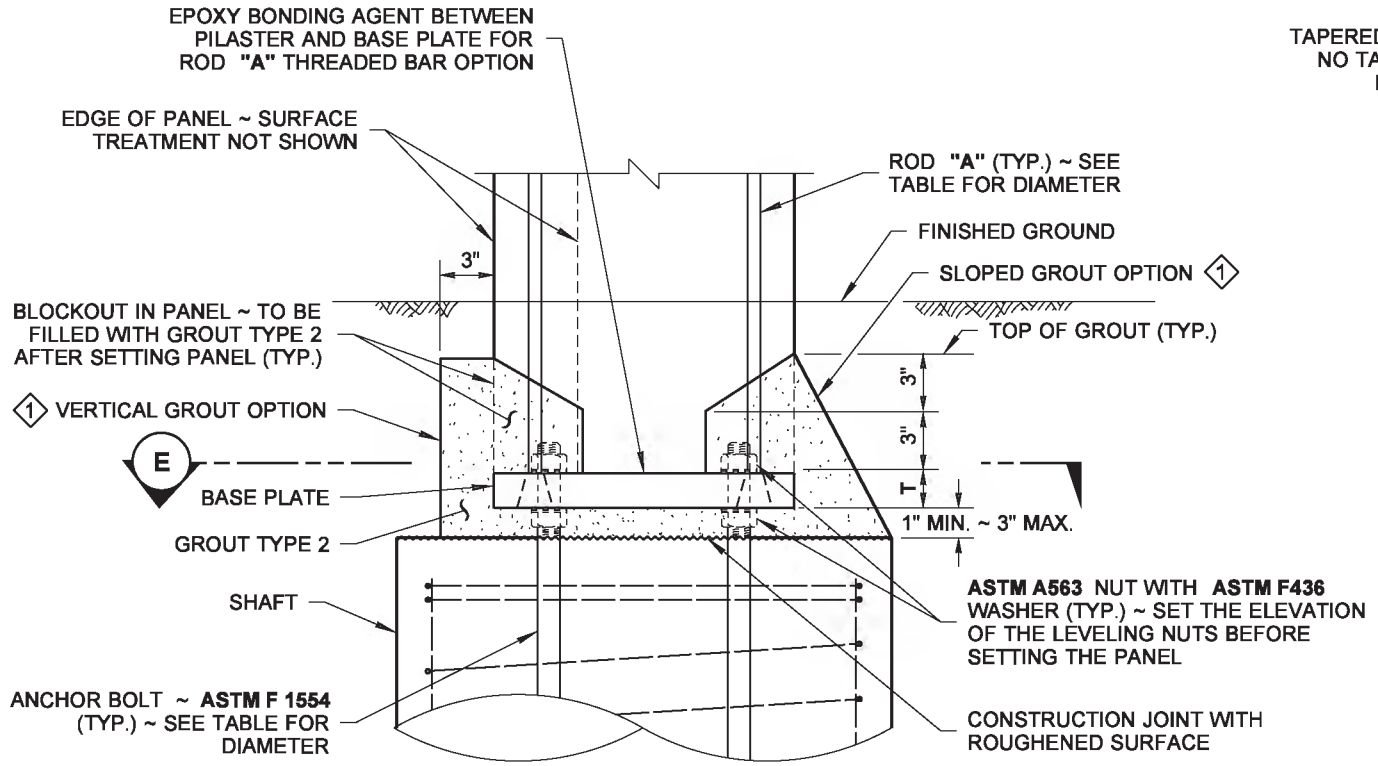

SHAFT TO PANEL CONNECTION DETAIL

1 EITHER OPTION ACCEPTABLE TO GROUT BLOCKOUTS, ANCHOR BOLTS AND BASE PLATE TO THE LIMITS SHOWN

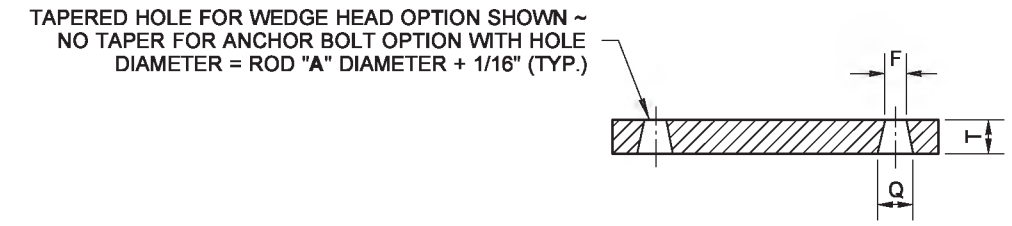

SECTION F

WIND AND SEISMIC LIMITATIONS			
LOCATION	WIND EXPOSURE	WIND VELOCITY (MPH)	PEAK SEISMIC GROUND ACCELERATION COEFFICIENT ON ROCK,SITE CLASS B (g)
WESTERN WASHINGTON	SPARSE SUBURBAN	100	0.45
EASTERN WASHINGTON	SPARSE SUBURBAN	80	0.19

FOUNDATION DESIGN	
SOIL TYPE	ANGLE OF INTERNAL FRICTION, ã (DEGREES)
D1	32
D2	38

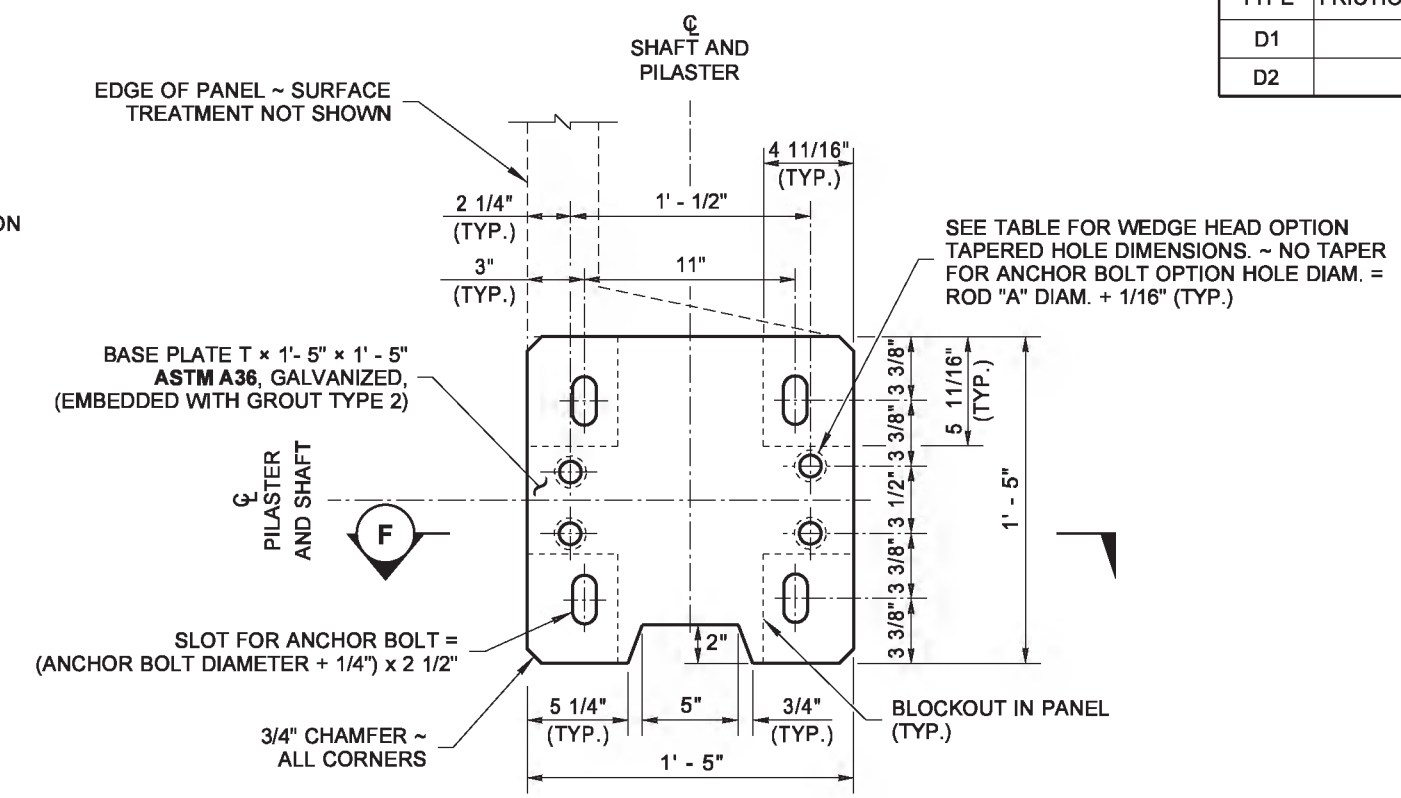

SECTION E

BASE PLATE DETAIL

(SHAFT NOT SHOWN FOR CLARITY)

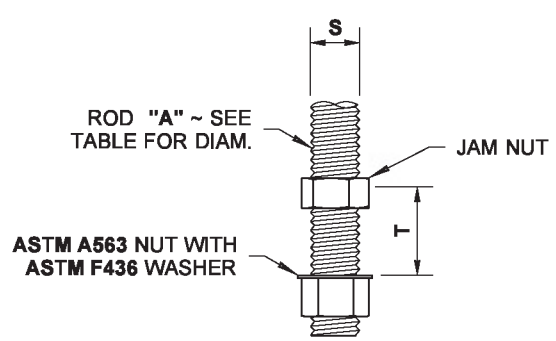

ROD "A"

ANCHOR BOLT OPTION

ASTM F1554 GR 105 FOR ALL HEIGHTS "H"

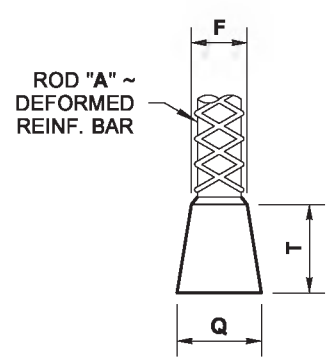

ROD "A"

WEDGE HEAD OPTION

ASTM A706 GR 80 AS ALLOWED PER TABLE, FOR HEIGHTS "H" ≤ 16' IN WESTERN WASHINGTON AND HEIGHT "H" ≤ 20' IN EASTERN WASHINGTON

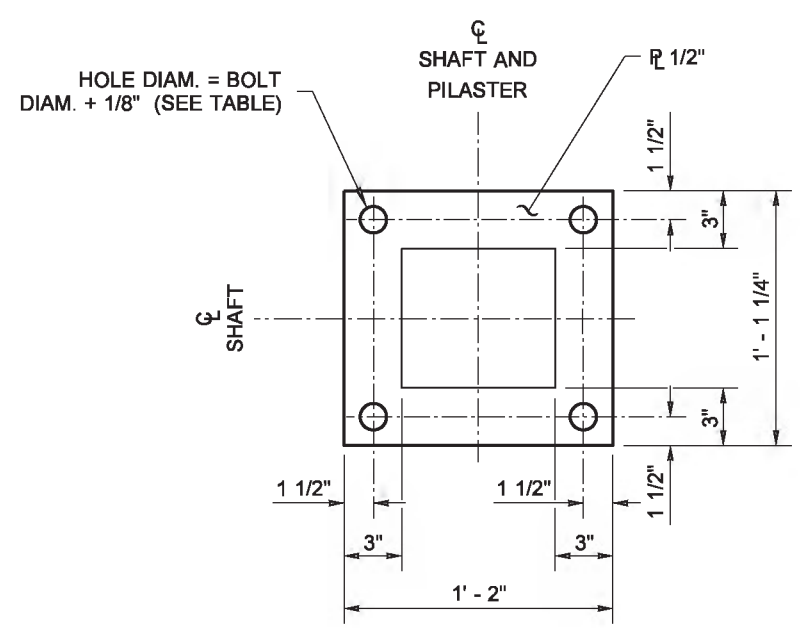

ANCHOR PLATE DETAIL

BENDING DIAGRAM

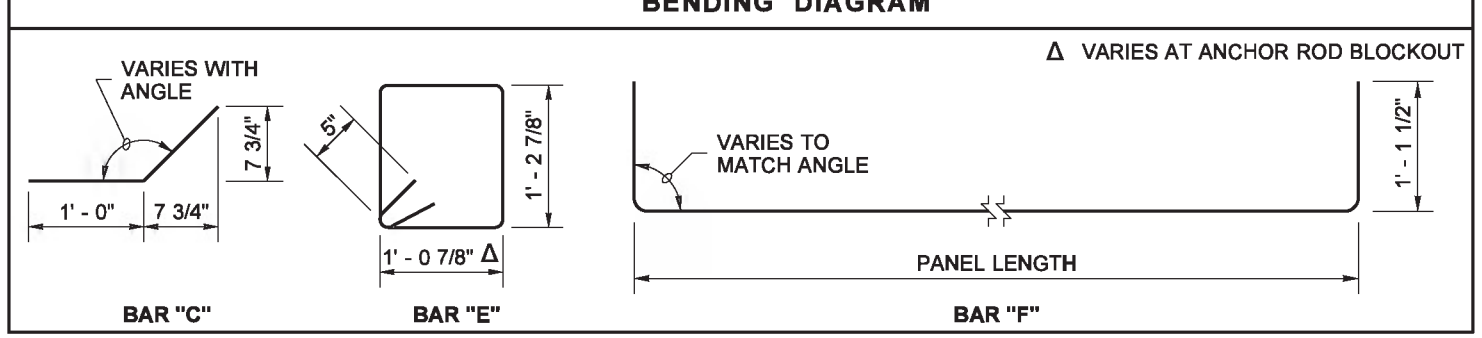

BIJAN KHALEGHI
STATE OF WASHINGTON
27695
STRUCTURAL ENGINEER
PROFESSIONAL ENGINEER

Khaleghi, Bijan
Bijan Khaleghi Apr 30 2014 3:43 PM

NOISE BARRIER WALL TYPE 11

STANDARD PLAN D-2.36-03

SHEET 2 OF 3 SHEETS

APPROVED FOR PUBLICATION
Bakotich, Pasco
Jun 11 2014 1:22 PM
STATE DESIGN ENGINEER
Washington State Department of Transportation

DRAWN BY: FERN LIDDELL

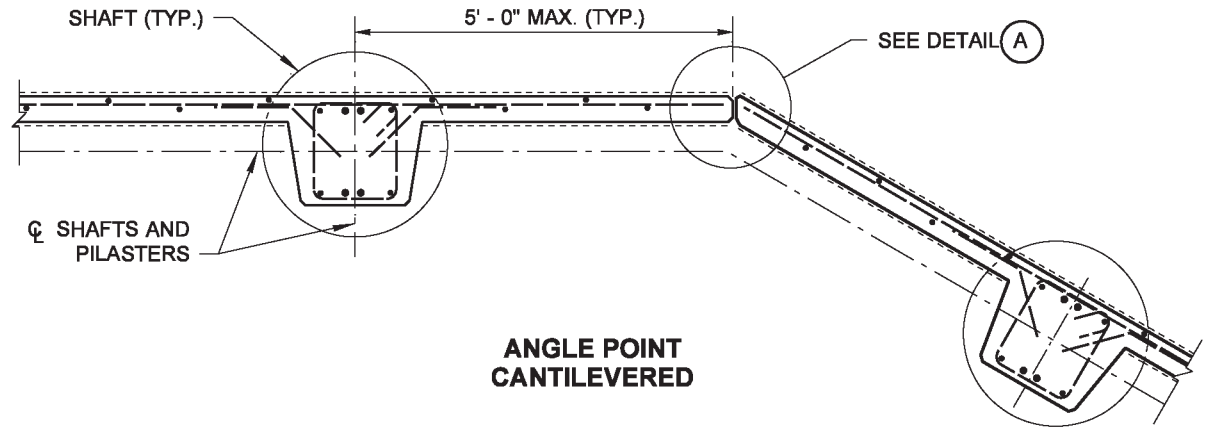

ANGLE POINT CANTILEVERED

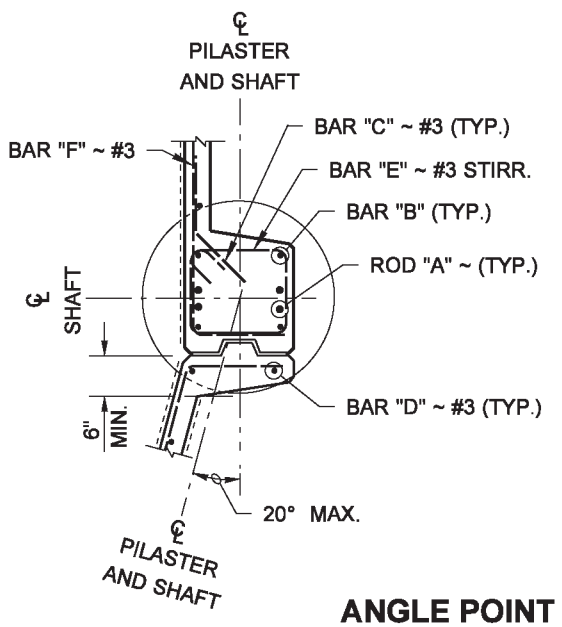

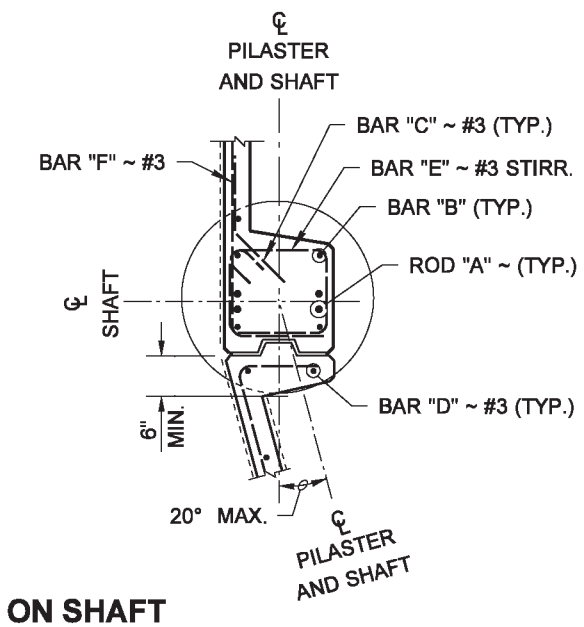

ANGLE POINT ~ ON SHAFT

ANGLE 2.5° TO 20°

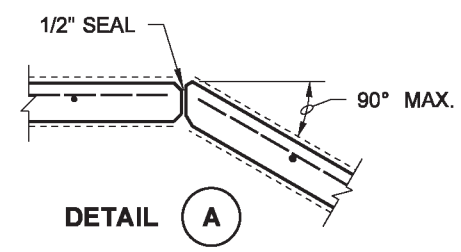

DETAIL A

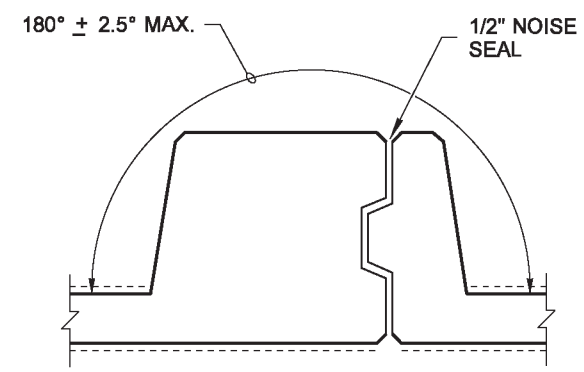

STANDARD PANEL ANGLE TOLERANCE

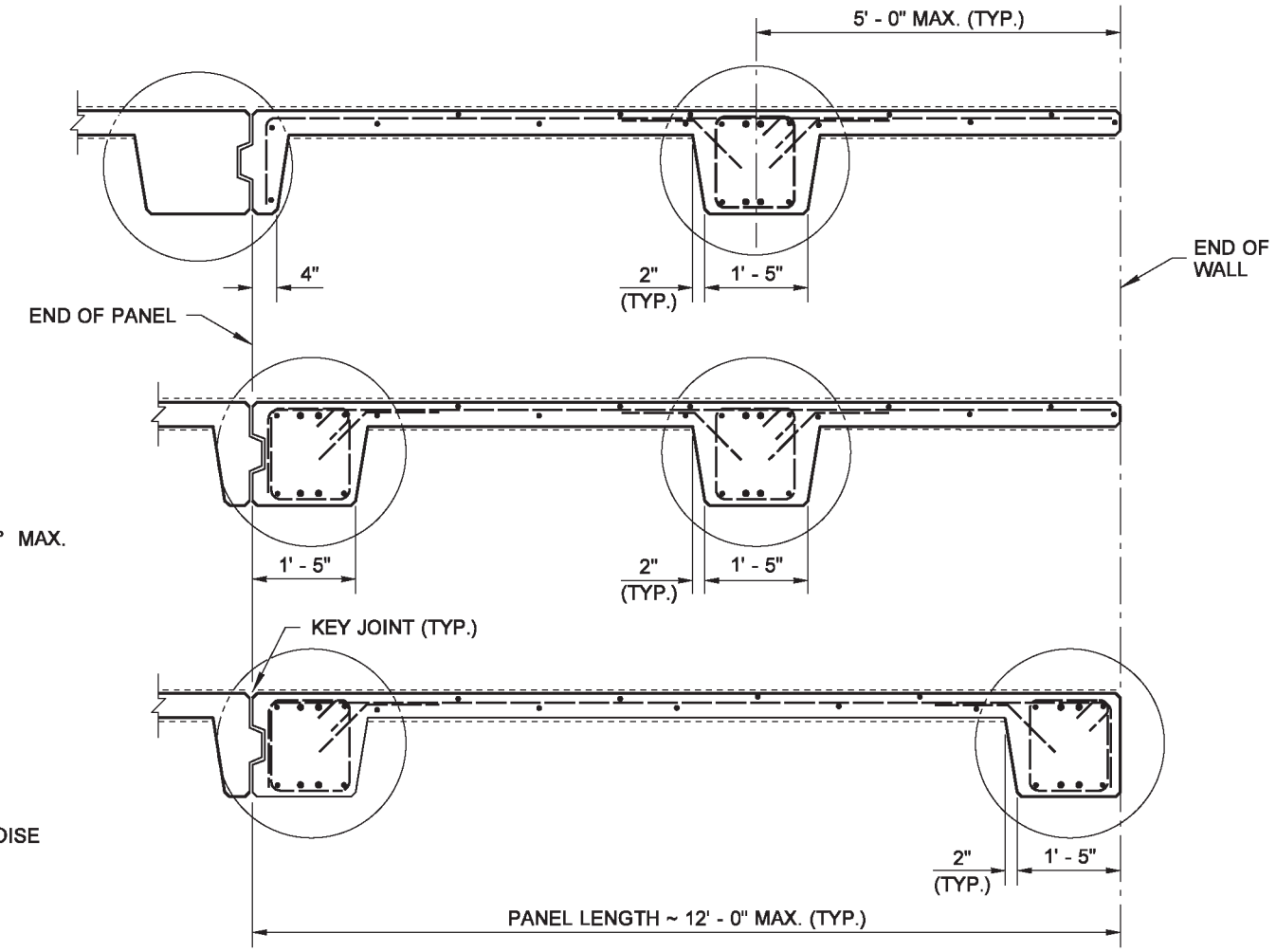

END PANEL OPTIONS

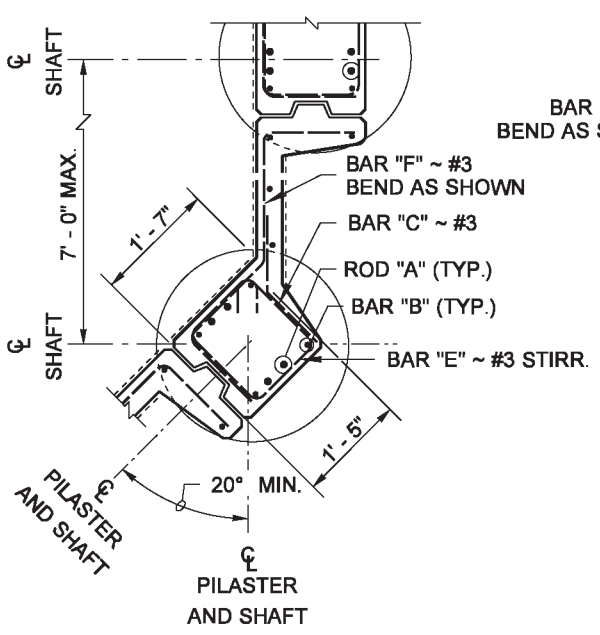

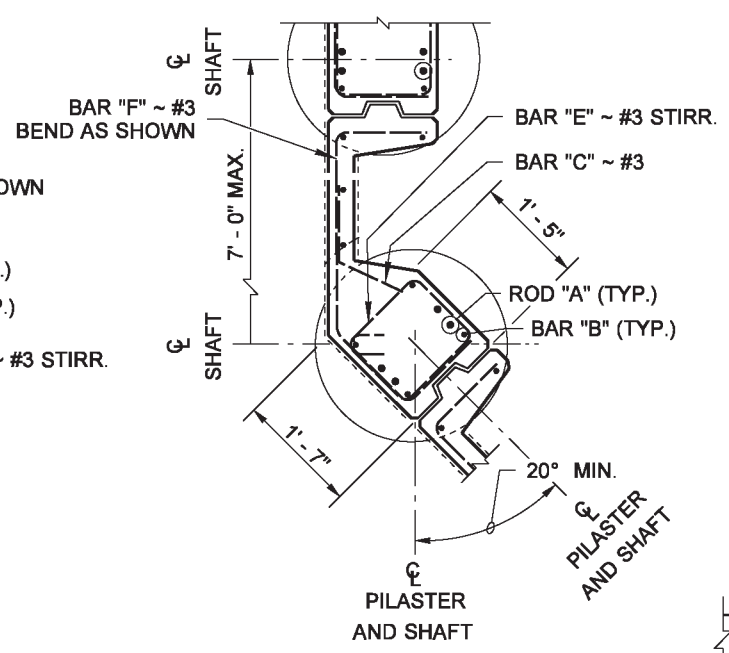

ANGLE POINT ~ ON SHAFT

ANGLE 20° TO 90°

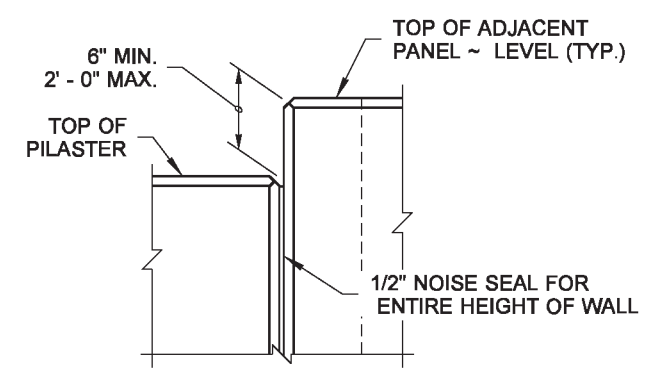

ELEVATION VIEW

STEP DETAIL

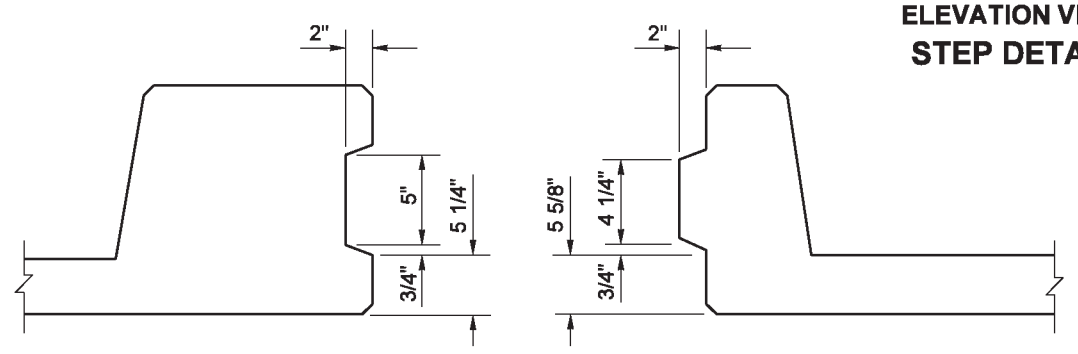

PLAN VIEW

SHEAR-KEY DETAIL

Bijan Khaleghi
Khaleghi, Bijan
Apr 30 2014 3:44 PM

NOISE BARRIER WALL TYPE 11

STANDARD PLAN D-2.36-03

SHEET 3 OF 3 SHEETS

APPROVED FOR PUBLICATION
Bakotich, Pasco
Jun 11 2014 1:23 PM
STATE DESIGN ENGINEER
Washington State Department of Transportation

DRAWN BY: ADAM COCHRAN

WALL HT H	TYPE 13SSA W	X	BARS "B"&"C"	BAR "E"	BAR "D"	BAR "J"	TYPE 13SSB W	X	BARS "B"&"C"	BAR "E"	BAR "D"	BAR "J"	TYPE 13SSC W	X	BARS "B"&"C"	BAR "E"	BAR "D"	BAR "J"	TYPE 13SSD W	X	BARS "B"&"C"	BAR "E"	BAR "D"	BAR "J"	WALL HT H
6' - 0"	5' - 6"	1"	#4 @ 15"	#4 @ 15"	#3 @ 15"	#5 @ 15"	5' - 6"	1"	#4 @ 15"	#4 @ 15"	#3 @ 15"	#5 @ 15"	5' - 6"	1"	#4 @ 15"	#4 @ 15"	#3 @ 15"	#5 @ 15"	5' - 6"	1"	#4 @ 15"	#4 @ 15"	#3 @ 15"	#5 @ 15"	6' - 0"
8' - 0"	5' - 3"	1"	#4 @ 15"	#4 @ 15"	#3 @ 15"	#5 @ 15"	5' - 3"	1"	#4 @ 15"	#4 @ 15"	#3 @ 15"	#5 @ 15"	5' - 3"	1"	#4 @ 15"	#4 @ 15"	#3 @ 15"	#5 @ 15"	5' - 3"	1"	#4 @ 15"	#4 @ 15"	#3 @ 15"	#5 @ 15"	8' - 0"
10' - 0"	5' - 3"	1"	#4 @ 15"	#4 @ 15"	#3 @ 15"	#5 @ 15"	5' - 3"	1"	#4 @ 15"	#4 @ 15"	#3 @ 15"	#5 @ 15"	5' - 3"	1"	#4 @ 15"	#4 @ 15"	#3 @ 15"	#5 @ 15"	5' - 3"	1"	#4 @ 12"	#4 @ 12"	#3 @ 12"	#5 @ 12"	10' - 0"
12' - 0"	5' - 0"	1"	#4 @ 15"	#4 @ 15"	#3 @ 15"	#5 @ 15"	5' - 0"	1"	#4 @ 10"	#4 @ 10"	#3 @ 10"	#5 @ 10"	5' - 0"	1"	#4 @ 12"	#4 @ 12"	#3 @ 12"	#5 @ 15"	5' - 0"	1"	#4 @ 12"	#5 @ 12"	#4 @ 12"	#5 @ 12"	12' - 0"
14' - 0"	4' - 9"	1"	#4 @ 11"	#4 @ 11"	#3 @ 11"	#5 @ 11"	5' - 0"	1"	#4 @ 12"	#5 @ 12"	#4 @ 12"	#5 @ 12"	4' - 9"	1"	#4 @ 12"	#5 @ 12"	#4 @ 12"	#5 @ 11"	5' - 3"	10"	#4 @ 10"	#5 @ 10"	#4 @ 10"	#5 @ 10"	14' - 0"
16' - 0"	5' - 0"	10"	#4 @ 12"	#5 @ 12"	#4 @ 12"	#5 @ 12"	5' - 0"	10"	#4 @ 10"	#5 @ 10"	#4 @ 10"	#5 @ 10"	5' - 0"	10"	#4 @ 10"	#5 @ 10"	#4 @ 10"	#5 @ 12"	5' - 6"	1' - 6"	#4 @ 13"	#5 @ 13"	#5 @ 13"	#5 @ 13"	16' - 0"
18' - 0"	5' - 0"	10"	#4 @ 10"	#5 @ 10"	#4 @ 10"	#5 @ 10"	5' - 3"	1' - 6"	#4 @ 12"	#5 @ 12"	#5 @ 12"	#5 @ 12"	5' - 0"	1' - 0"	#4 @ 10"	#5 @ 10"	#4 @ 10"	#5 @ 10"	5' - 9"	1 - 9"	#4 @ 9"	#5 @ 9"	#5 @ 9"	#5 @ 9"	18' - 0"

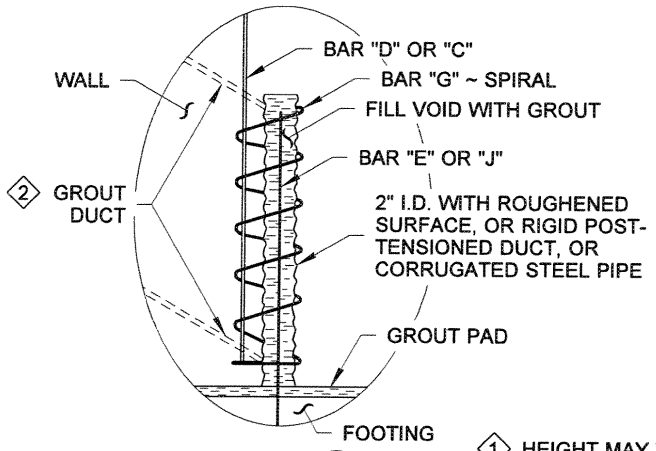

DETAIL (A)

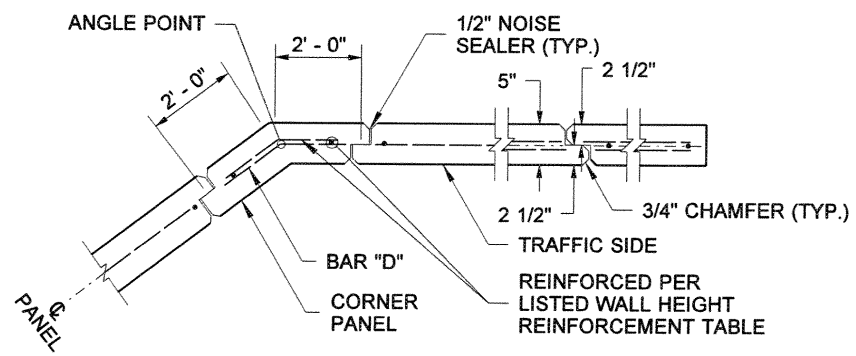

JOINT AND CORNER DETAIL

WIND EXPOSURE & VELOCITY		
NOISE BARRIER TYPE	WIND EXPOSURE	WIND VELOCITY (MPH)
13SSA	B1	80
13SSB	B1	90
13SSC	B2	80
13SSD	B2	90

1 HEIGHT MAY VARY IF REQUIRED TO PROVIDE A SMOOTH PROFILE CONSISTENT WITH THE ROADWAY PROFILE

2 FILL THE JOINT HOLE WITH GROUT USING DUCTS. DUCTS SHALL BE LOCATED ON PANEL FACE OPPOSITE TRAFFIC

NOTES

1. Wall to be designated Noise Barrier Wall Type 13SSA, 13SSB, 13SSC or 13SSD. The Contract specifies actual wall designations.
2. For intermediate wall heights, use the next higher H.
3. Panels shall have at least 3 feet of level ground on each side.
4. Construction joints in the footing shall be spaced at 120 feet maximum.
5. All joints shall be in full contact and sealed.
6. The Contract specifies actual foundation requirements D1 or D2.

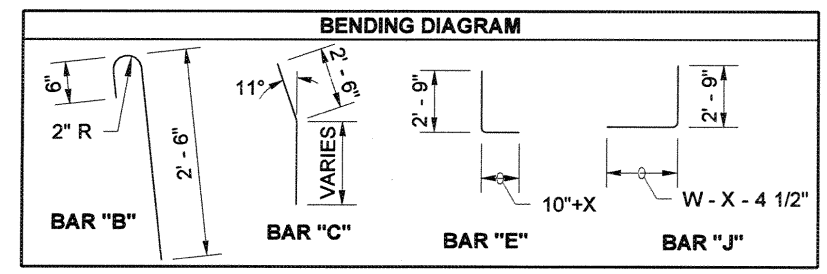

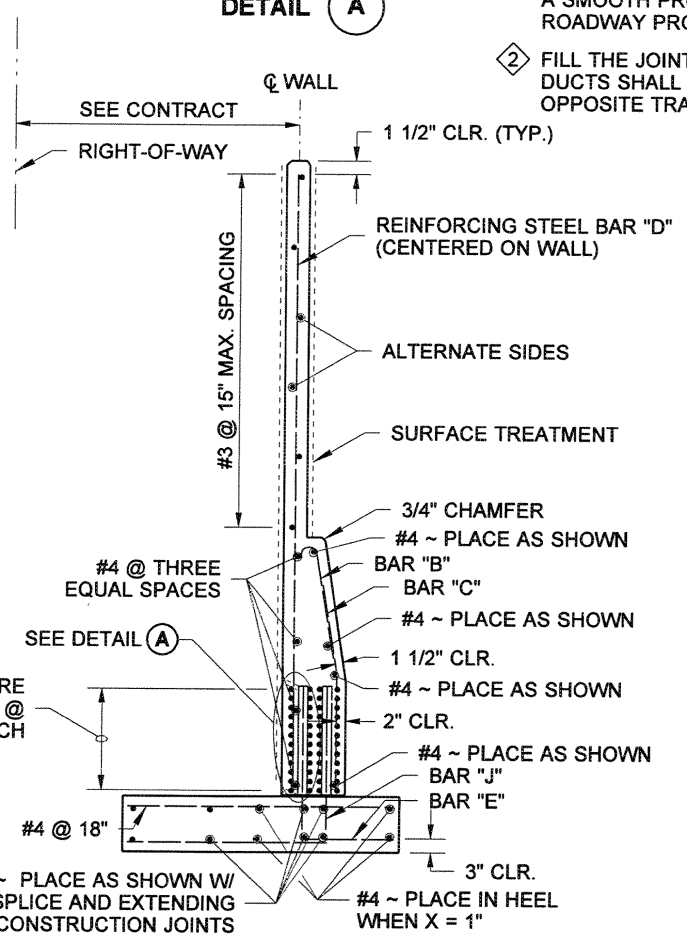

REINFORCEMENT SECTION

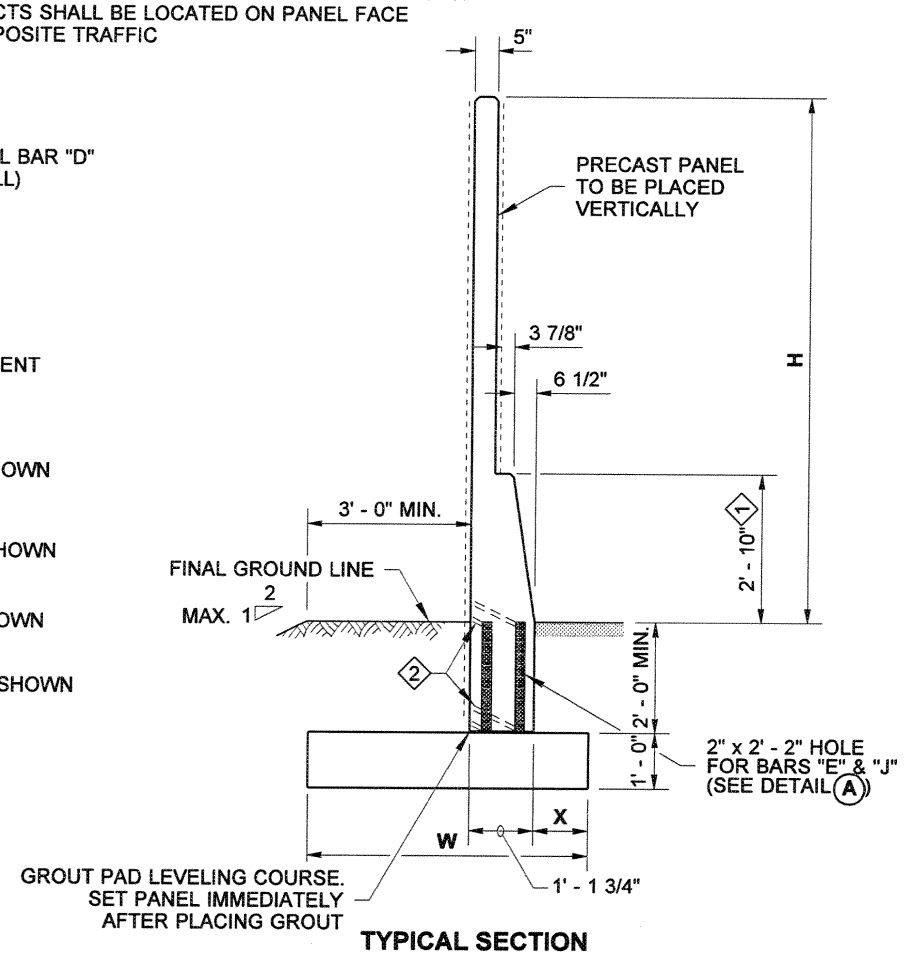

TYPICAL SECTION

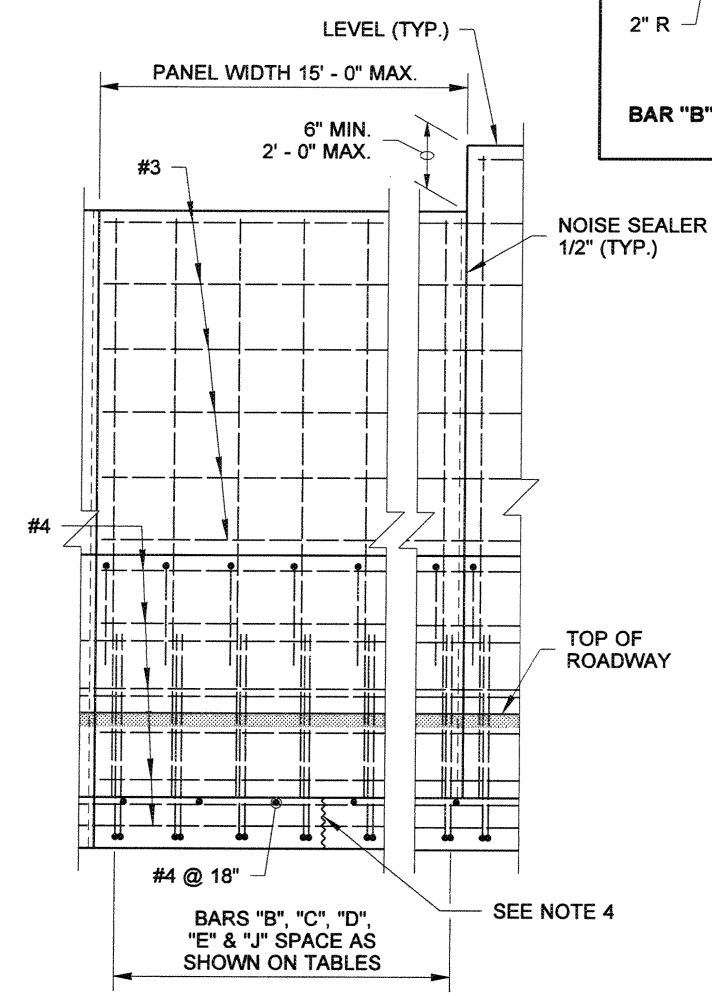

ELEVATION

PRECAST CONCRETE WALL W/ SINGLE SLOPE TRAFFIC BARRIER ON SPREAD FOOTING

NOISE BARRIER WALL TYPE 13SS

STANDARD PLAN D-2.44-00

SHEET 1 OF 1 SHEET

APPROVED FOR PUBLICATION

Harold Petersen 11-10-05

STATE DESIGN ENGINEER DATE

Washington State Department of Transportation

DRAWN BY: FERN LIDDELL

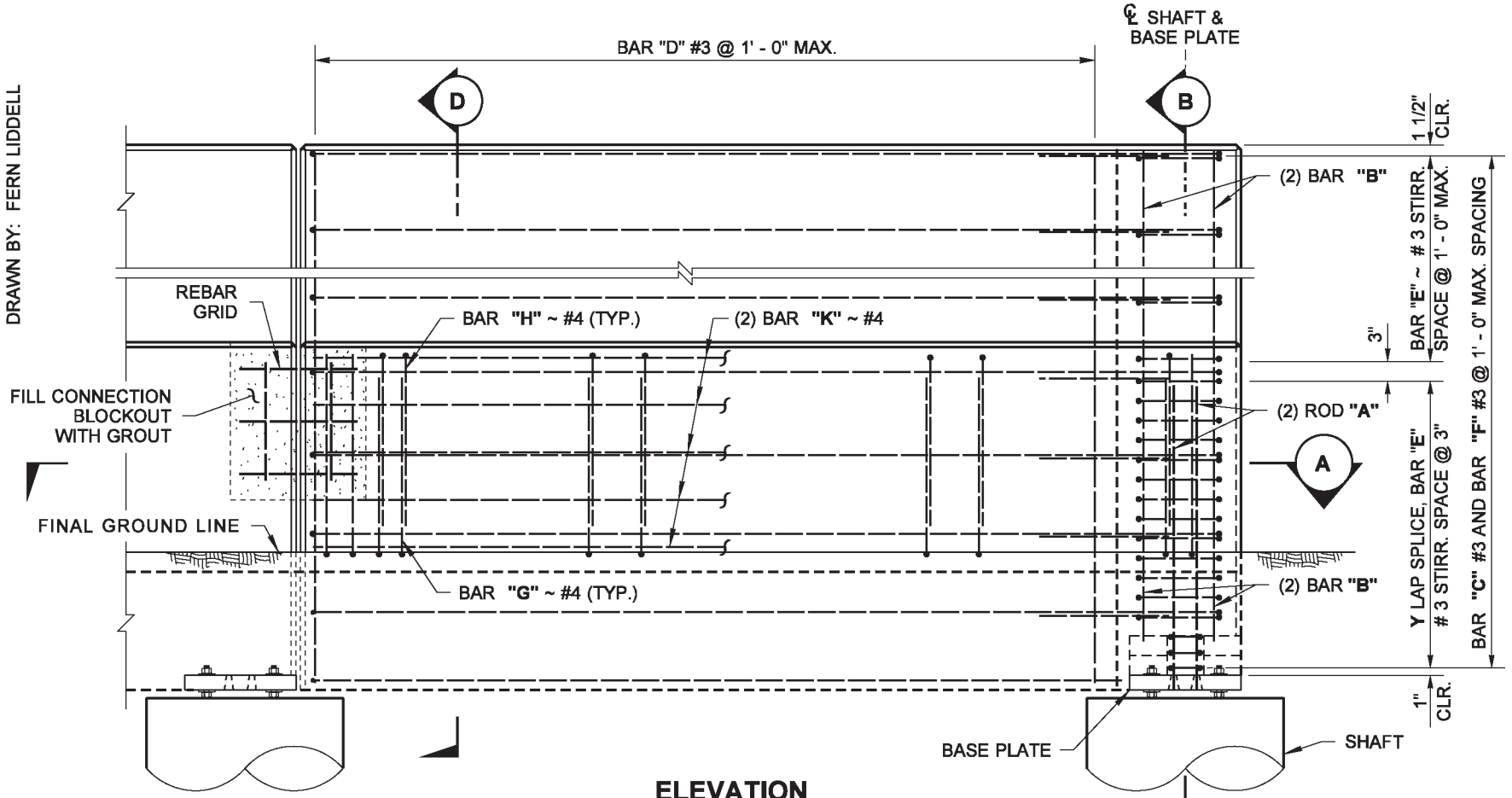

ELEVATION

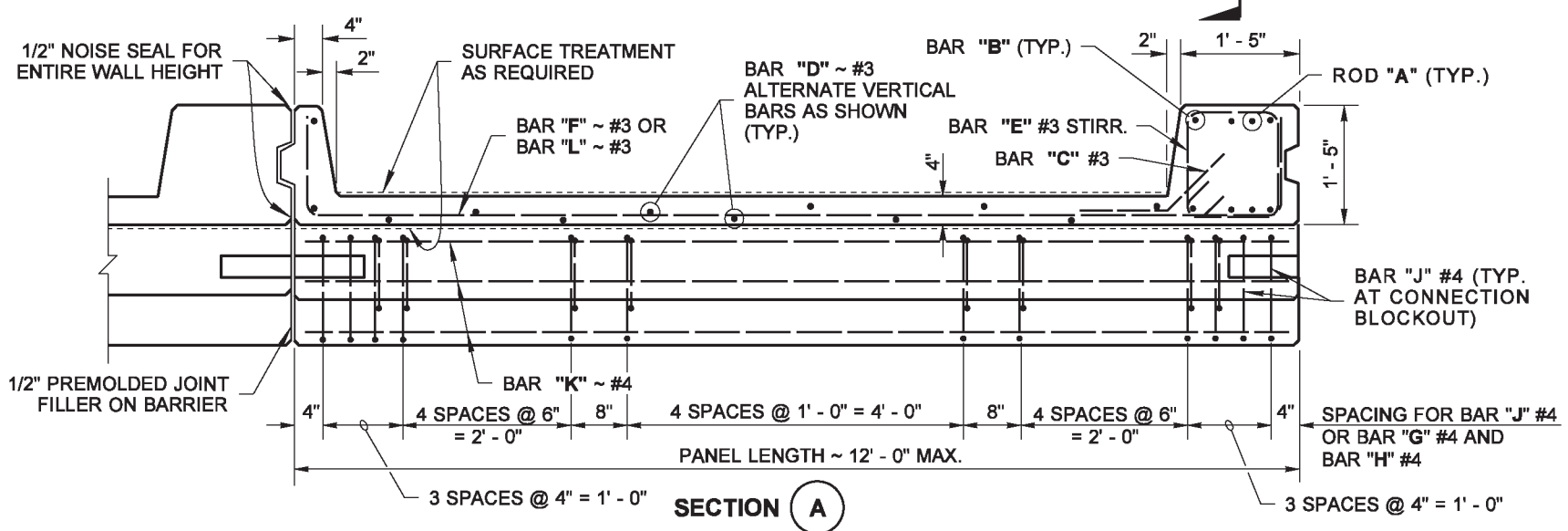

SECTION (A)

PLAN

* ONLY ANCHOR BOLT OPTION FOR ROD "A" ALLOWED ~ WEDGE HEAD OPTION NOT ALLOWED

EXPOSED WALL HT H	WESTERN WASHINGTON								
	SHAFT DEPTH		ROD "A"	BAR "B"	LAP-SPLICE Y	ANCHOR BOLT DIAM.	BASE PLATE		
	D1	D2					F	Q	T
6' - 0"	7' - 9"	6' - 3"	3/4"	4 ~ #4	3' - 0"	3/4"	1 1/8"	1 21/32"	1 1/2"
8' - 0"	7' - 9"	6' - 3"	3/4"	4 ~ #4	3' - 0"	3/4"	1 1/8"	1 21/32"	1 1/2"
10' - 0"	7' - 9"	6' - 3"	3/4"	4 ~ #5	3' - 0"	3/4"	1 1/8"	1 21/32"	1 1/2"
12' - 0"	8' - 0"	6' - 9"	7/8"	4 ~ #6	3' - 9"	7/8"	1 1/8"	1 21/32"	1 1/2"
14' - 0"	9' - 0"	7' - 3"	1"	4 ~ #6	6' - 0"	1"	1 3/8"	2"	2"
16' - 0"	9' - 9"	8' - 0"	1 1/4"	4 ~ #6	8' - 0"	1 1/8"	1 3/8"	2"	2"
18' - 0"	10' - 3"	8' - 6"	1 1/4"*	4 ~ #6	10' - 0"	1 1/4"	*	*	2 1/4"

EXPOSED WALL HT H	EASTERN WASHINGTON								
	SHAFT DEPTH		ROD "A" DIAM.	BAR "B"	LAP-SPLICE Y	ANCHOR BOLT DIAM.	BASE PLATE		
	D1	D2					F	Q	T
6' - 0"	7' - 9"	6' - 3"	3/4"	4 ~ #4	3' - 3"	3/4"	1 1/8"	1 21/32"	1 1/2"
8' - 0"	7' - 9"	6' - 3"	3/4"	4 ~ #4	3' - 3"	3/4"	1 1/8"	1 21/32"	1 1/2"
10' - 0"	7' - 9"	6' - 3"	3/4"	4 ~ #4	4' - 0"	3/4"	1 1/8"	1 21/32"	1 1/2"
12' - 0"	7' - 9"	6' - 3"	3/4"	4 ~ #5	4' - 0"	3/4"	1 1/8"	1 21/32"	1 1/2"
14' - 0"	8' - 0"	6' - 6"	7/8"	4 ~ #6	4' - 0"	7/8"	1 1/8"	1 21/32"	1 1/2"
16' - 0"	8' - 6"	7' - 3"	1"	4 ~ #6	6' - 0"	1"	1 3/8"	2"	2"
18' - 0"	9' - 3"	7' - 9"	1 1/8"	4 ~ #7	6' - 0"	1 1/8"	1 3/8"	2"	2"

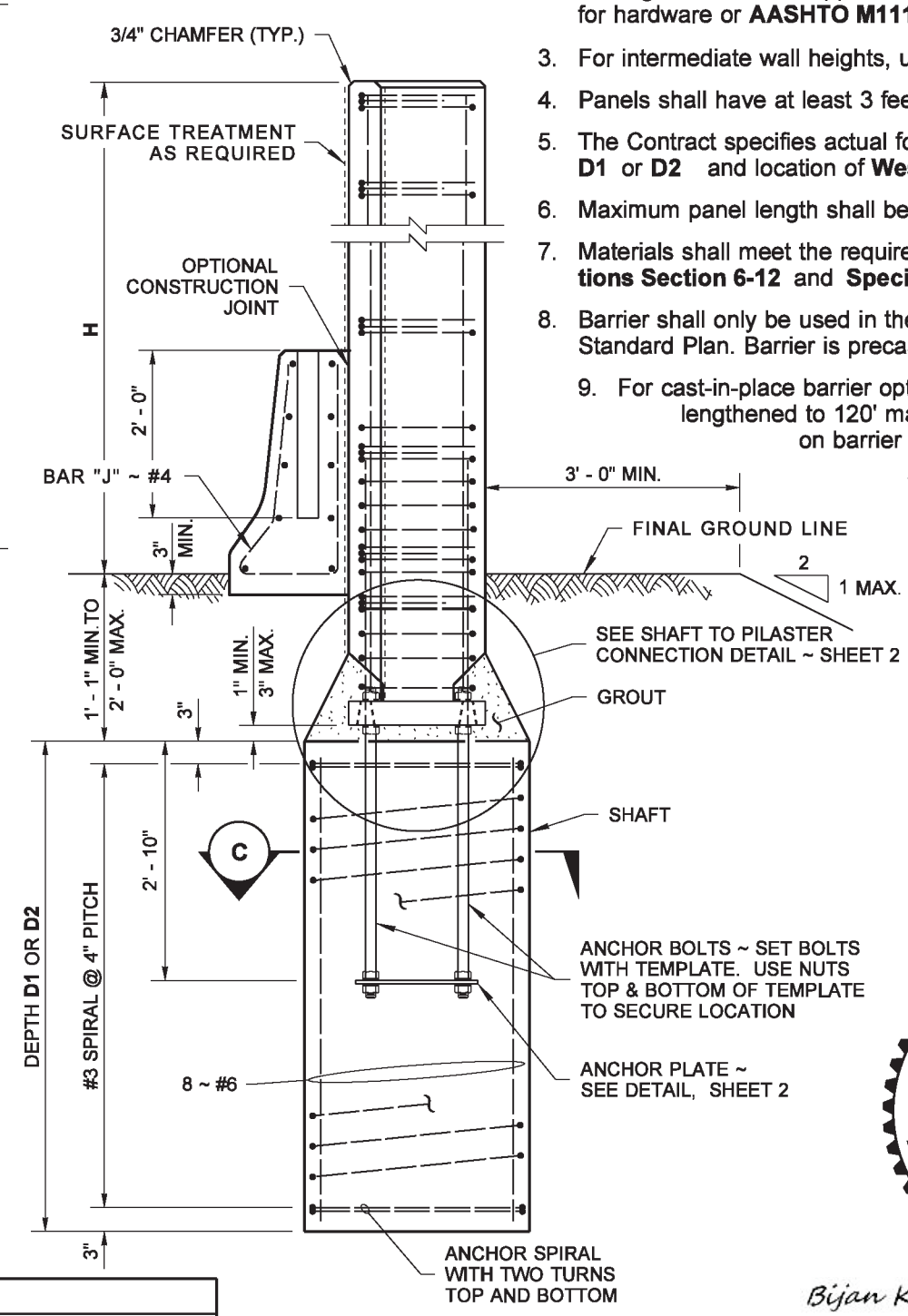

SECTION (B)

TYPICAL SECTION

NOTES

1. All rods "**A**" and Anchor bolts shall be per **ASTM F1554** grade 105.
2. Anchor Bolts, Nuts, Washers and Rod "**A**" shall have a protective coating of either Hot Dipped Galvanizing per **AASHTO M232** for hardware or **AASHTO M111** for Washers and Plates.
3. For intermediate wall heights, use the next higher "**H**".
4. Panels shall have at least 3 feet of level ground on each side.
5. The Contract specifies actual foundation requirements for **D1** or **D2** and location of **Western WA** or **Eastern WA.**
6. Maximum panel length shall be 12 feet.
7. Materials shall meet the requirements of **Standard Specifications Section 6-12** and **Special Provisions Section 6-12.**
8. Barrier shall only be used in the configuration shown in this Standard Plan. Barrier is precast as shown.
9. For cast-in-place barrier option, continuous barrer can be lengthened to 120' max. 1/2" premolded joint filler on barrier shall be replaced with dummy joints adjacent at panel joints.

Khaleghi, Bijan
Bijan Khaleghi Apr 30 2014 3:45 PM

NOISE BARRIER WALL TYPE 14

STANDARD PLAN D-2.46-01

SHEET 1 OF 3 SHEETS

APPROVED FOR PUBLICATION
Bakotich, Pasco
Jun 11 2014 1:23 PM

STATE DESIGN ENGINEER

Washington State Department of Transportation

DRAWN BY: FERN LIDDELL

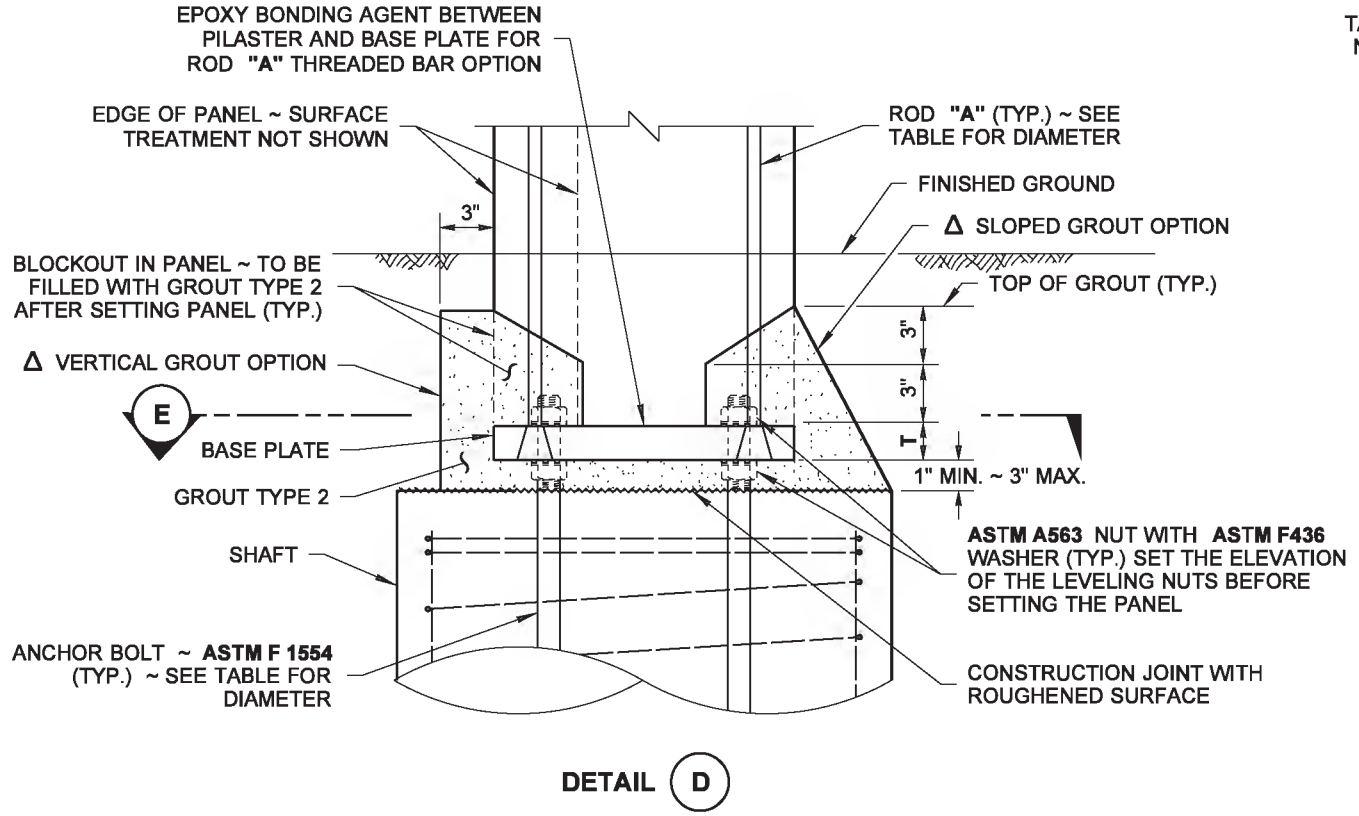

DETAIL D

SHAFT TO PANEL CONNECTION

Δ EITHER OPTION AVAILABLE TO GROUT BLOCKOUTS, ANCHOR BOLTS, BASE PLATE TO LIMITS SHOWN

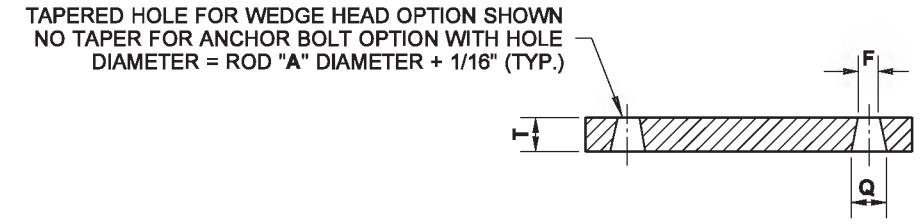

SECTION F

WIND AND SEISMIC LIMITATIONS			
LOCATION	WIND EXPOSURE	WIND VELOCITY (MPH)	PEAK SEISMIC GROUND ACCELERATION COEFFICIENT ON ROCK, SITE CLASS B (g)
WESTERN WASHINGTON	SPARSE SUBURBAN	100	0.45
EASTERN WASHINGTON	SPARSE SUBURBAN	80	0.19

FOUNDATION DESIGN	
SOIL TYPE	ANGLE OF INTERNAL FRICTION, ã (DEGREES)
D1	32
D2	38

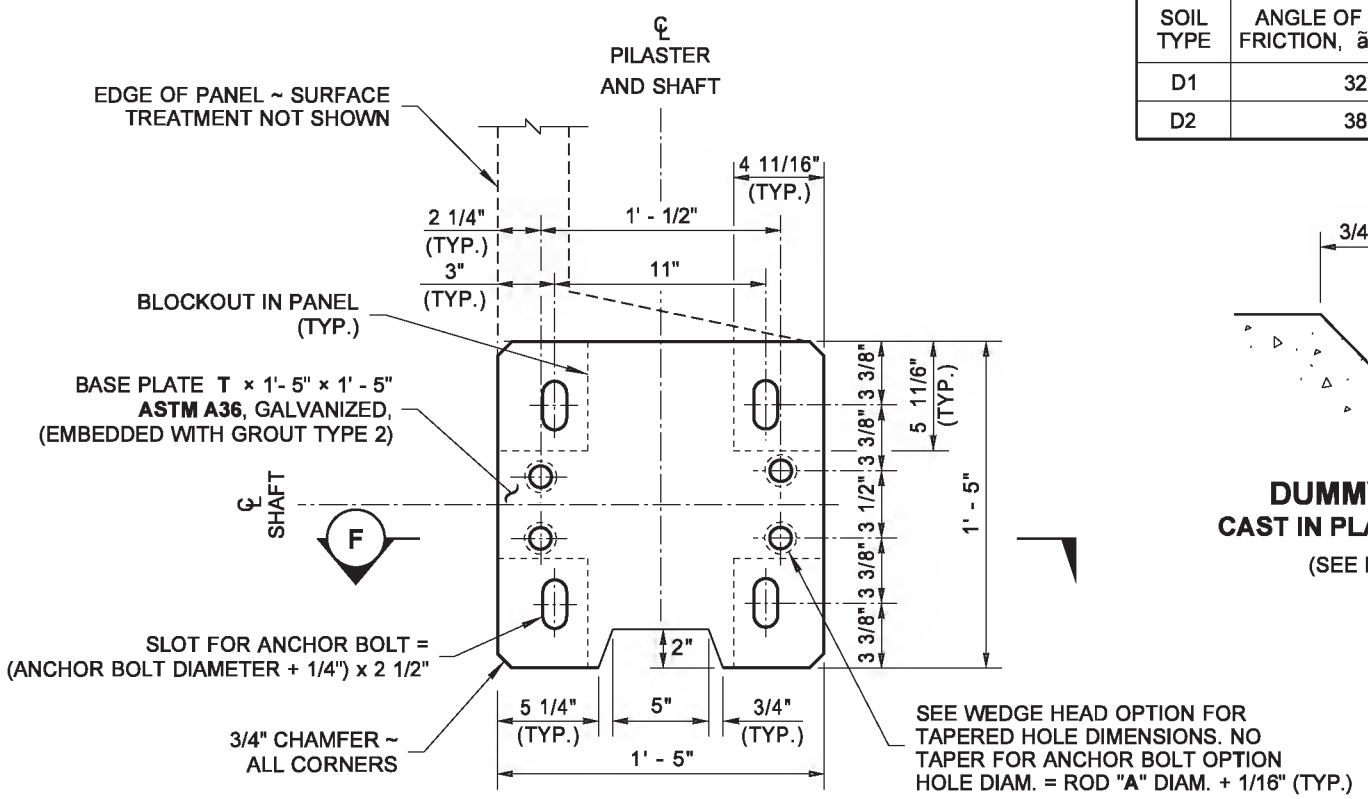

SECTION E

BASE PLATE DETAIL

BASE PLATE, SHAFT AND TRAFFIC BARRIER NOT SHOWN FOR CLARITY

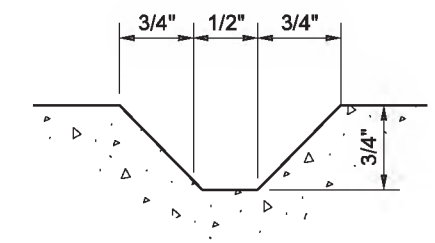

DUMMY JOINT DETAIL

CAST IN PLACE BARRIER OPTION

(SEE NOTE 9 ~ SHEET 1)

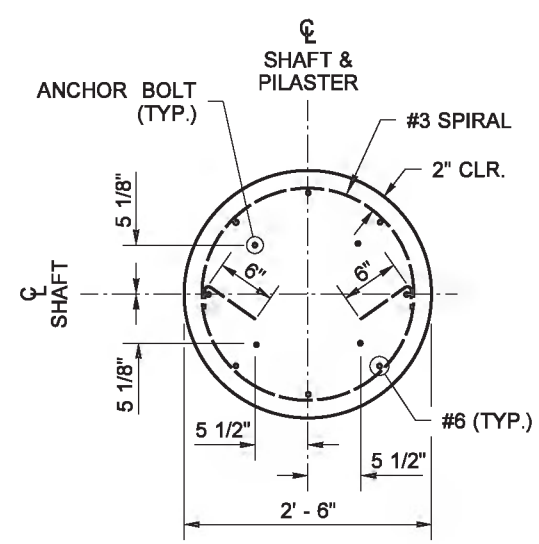

SECTION C

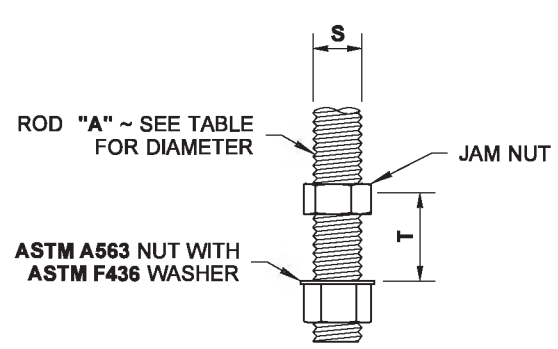

ROD "A"

ANCHOR BOLT OPTION

ASTM A706 GR 105 FOR ALL HEIGHTS "H"

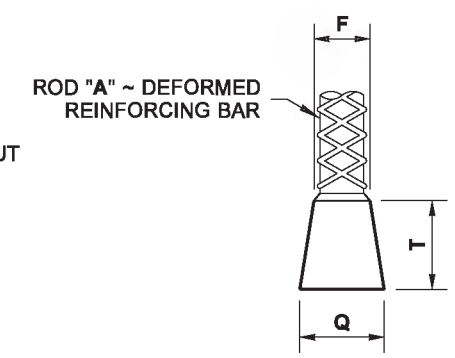

ROD "A"

WEDGE HEAD OPTION

ASTM A706 GR 80 AS ALLOWED PER TABLE, FOR HEIGHTS "H" ≤ 16' IN THE WEST AND HEIGHTS "H" ≤ 18' IN THE EAST

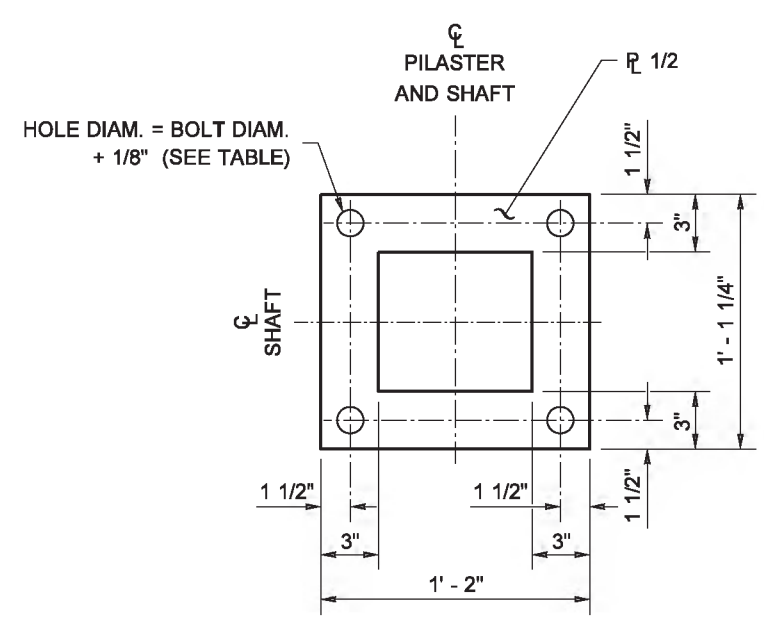

ANCHOR PLATE DETAIL

Khaleghi, Bijan
Bijan Khaleghi Apr 30 2014 3:46 PM

NOISE BARRIER WALL TYPE 14

STANDARD PLAN D-2.46-01

SHEET 2 OF 3 SHEETS

APPROVED FOR PUBLICATION
Bakotich, Pasco
Jun 11 2014 1:23 PM

STATE DESIGN ENGINEER

Washington State Department of Transportation

DRAWN BY: FERN LIDDELL

BENDING DIAGRAM

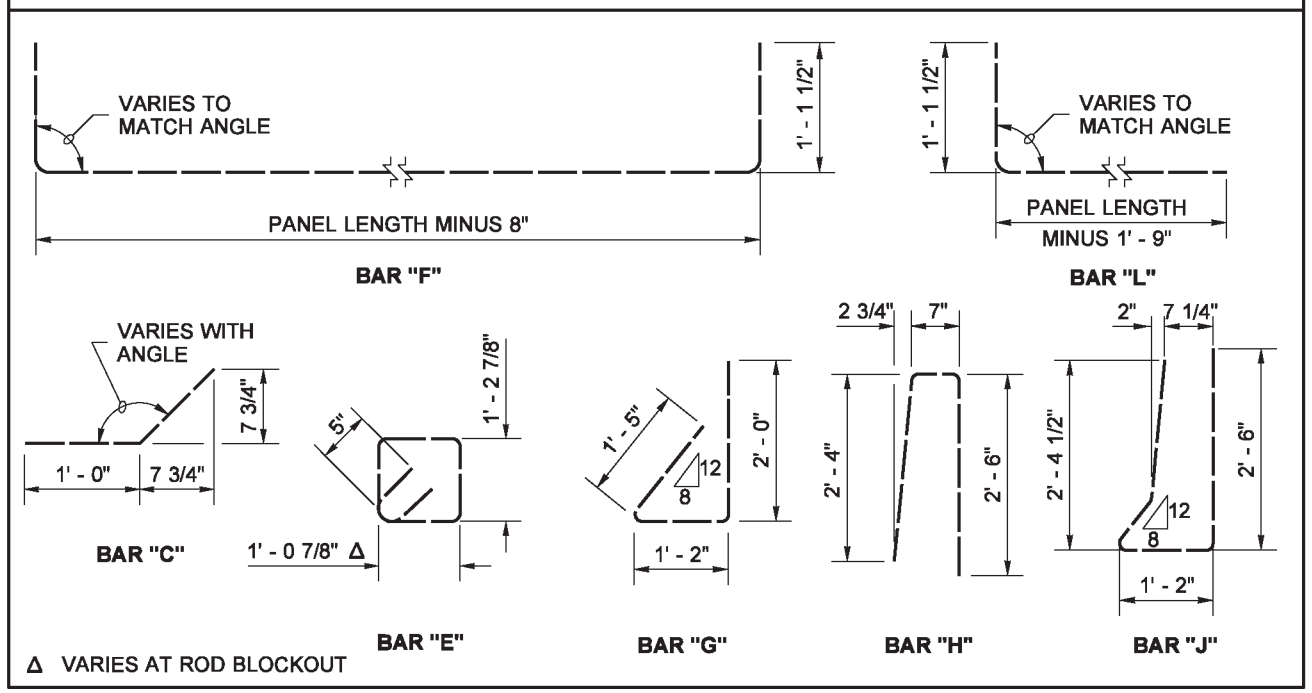

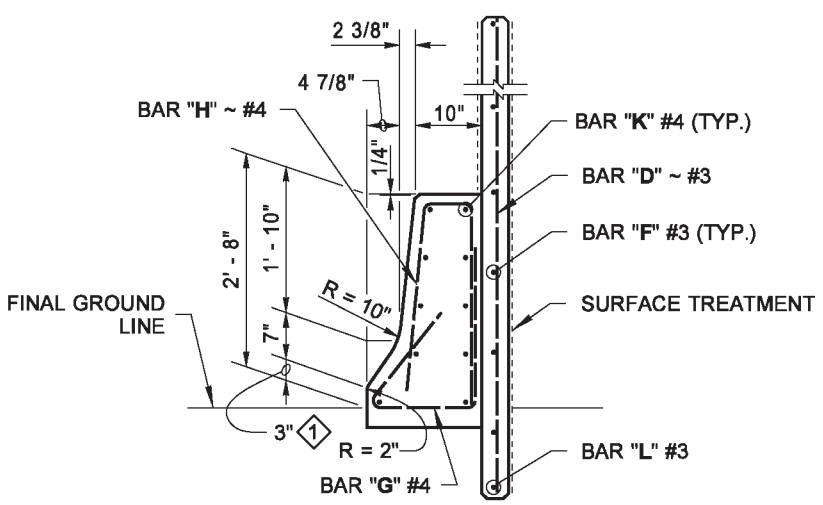

SECTION D

◇1 TOE HEIGHT MAY VARY ~ 2" MIN. TO 6" MAX.

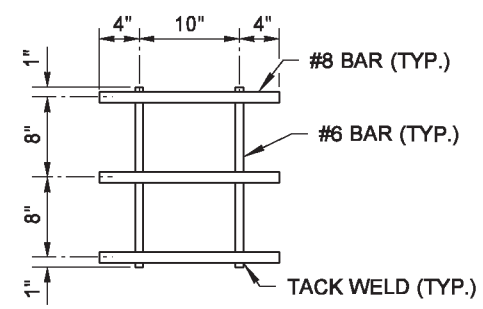

REBAR GRID DETAIL

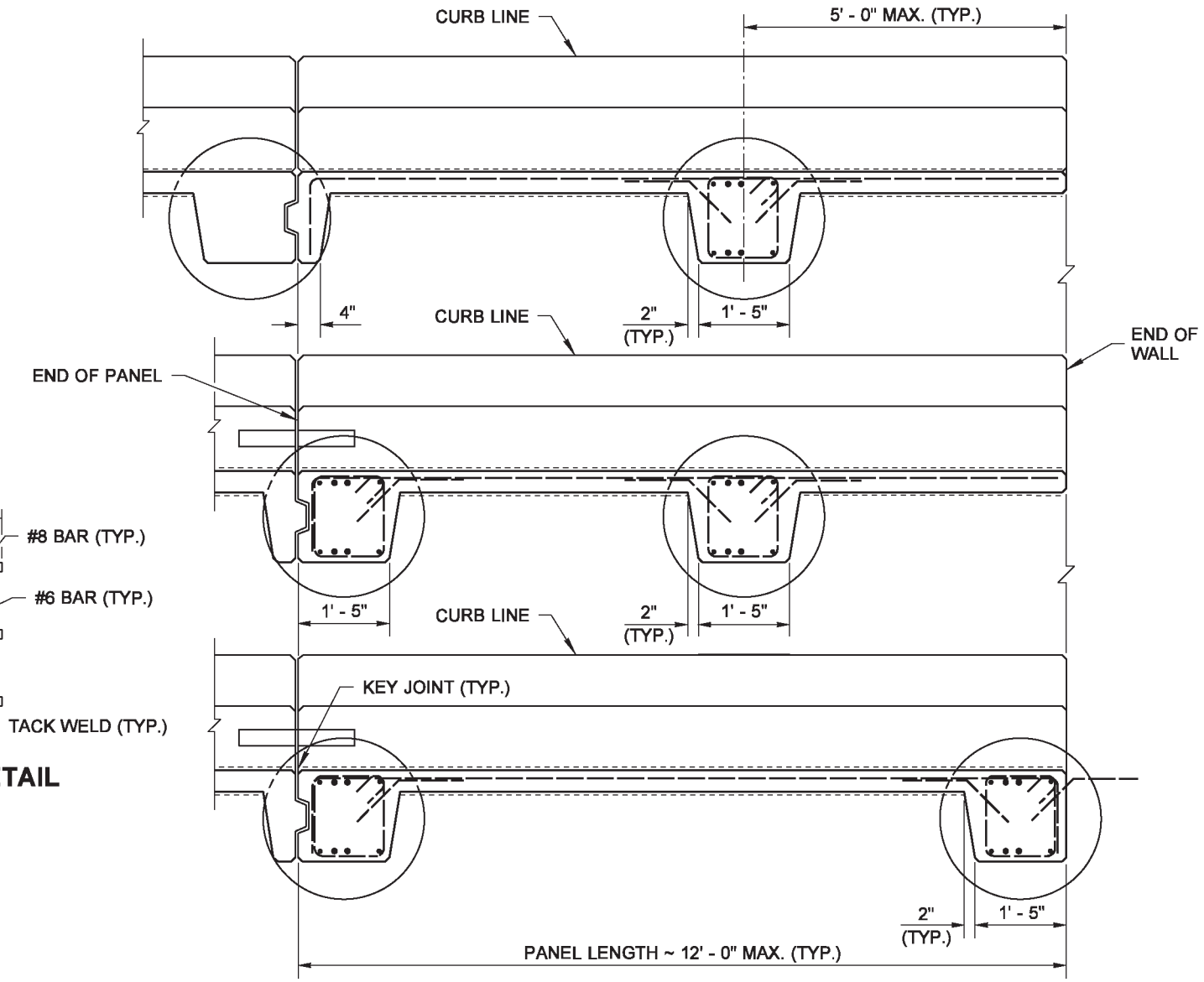

END PANEL OPTIONS

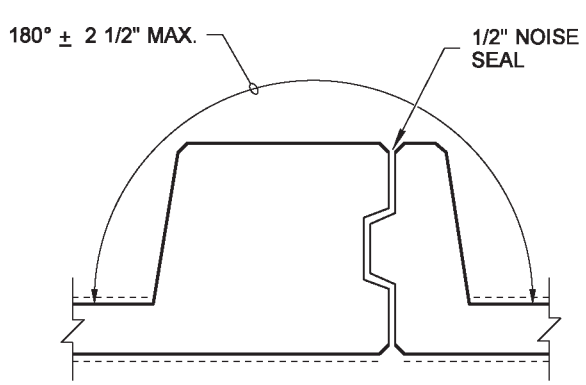

STANDARD PANEL ANGLE TOLERANCE

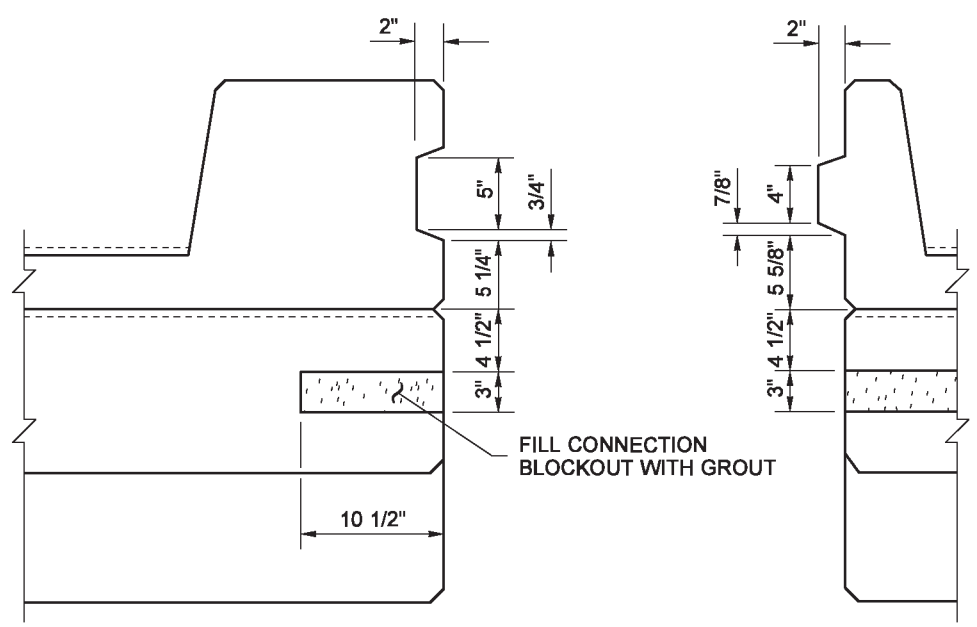

PLAN VIEW
SHEAR-KEY DETAIL

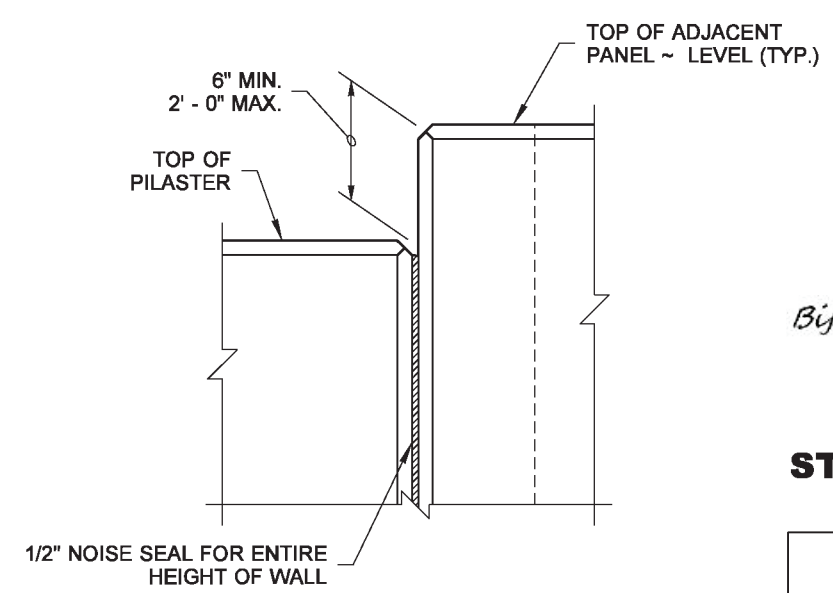

ELEVATION VIEW
STEP DETAIL

BIJAN KHALEGHI
STATE OF WASHINGTON
27695
STRUCTURAL ENGINEER
PROFESSIONAL ENGINEER

Bijan Khaleghi
Khaleghi, Bijan
Apr 30 2014 3:46 PM

NOISE BARRIER WALL TYPE 14

STANDARD PLAN D-2.46-01

SHEET 3 OF 3 SHEETS

APPROVED FOR PUBLICATION
Bakotich, Pasco
Jun 11 2014 1:23 PM
STATE DESIGN ENGINEER
Washington State Department of Transportation

This page left blank intentionally.

DRAWN BY: ADAM COCHRAN

WALL HT H	TYPE 14SSA BAR "A"	TYPE 14SSB BAR "A"	TYPE 14SSC BAR "A"	TYPE 14SSD BAR "A"	WALL HT H
6' - 0"	#4 @ 15"	#4 @ 15"	#4 @ 15"	#4 @ 15"	6' - 0"
8' - 0"	#4 @ 15"	#4 @ 15"	#4 @ 15"	#4 @ 15"	8' - 0"
10' - 0"	#4 @ 15"	#4 @ 15"	#4 @ 15"	#4 @ 15"	10' - 0"
12' - 0"	#4 @ 15"	#4 @ 15"	#4 @ 15"	#4 @ 15"	12' - 0"
14' - 0"	#4 @ 15"	#4 @ 11"	#4 @ 15"	#4 @ 10"	14' - 0"
16' - 0"	#4 @ 10"	#4 @ 10"	#4 @ 10"	#5 @ 12"	16' - 0"
18' - 0"	#4 @ 10"	#5 @ 12"	#4 @ 10"	#5 @ 12"	18' - 0"

BENDING DIAGRAM

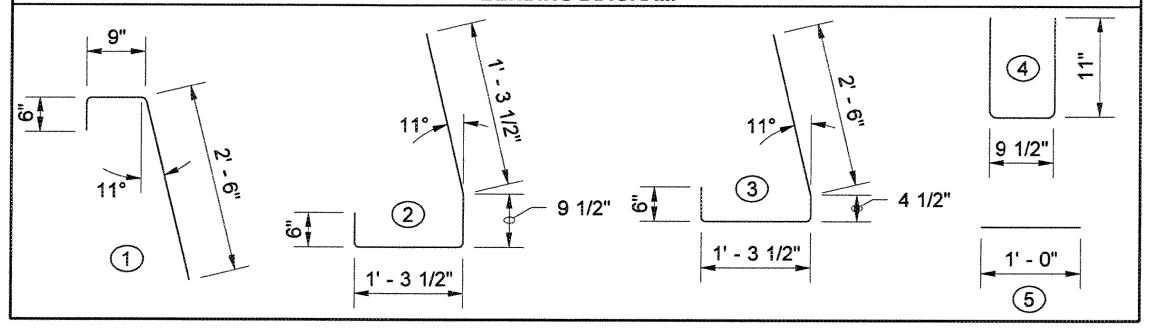

NOTES

1. Wall to be designated Noise Barrier Wall Type 14SSA, 14SSB, 14SSC or 14SSD. The Contract specifies actual wall designations.
2. For intermediate wall heights, use the next higher H.
3. Panels shall have at least 3 feet level ground on each side.
4. All joints shall be in full contact and sealed.
5. Anchor Bolts, Nuts, Washers, Base Plate, and Bar B shall have a Protective Coating of one of the following: Hot Dipped Galvanizing AASHTO M 232 for Hardware; AASHTO M 111 for Washers and Plates: Mechanical Galvanizing AASHTO M 298 CL 55, or Zinc Rich Paint, Paint threads and nuts after installation.
6. The bottom 9" of Bar "B" shall be painted with one coat of Formula A-6-86 Zinc Dust Oxide Primer OR, one coat of Formula A-11-99 Primer.
7. The Contract specifies actual foundation requirements D1 or D2.

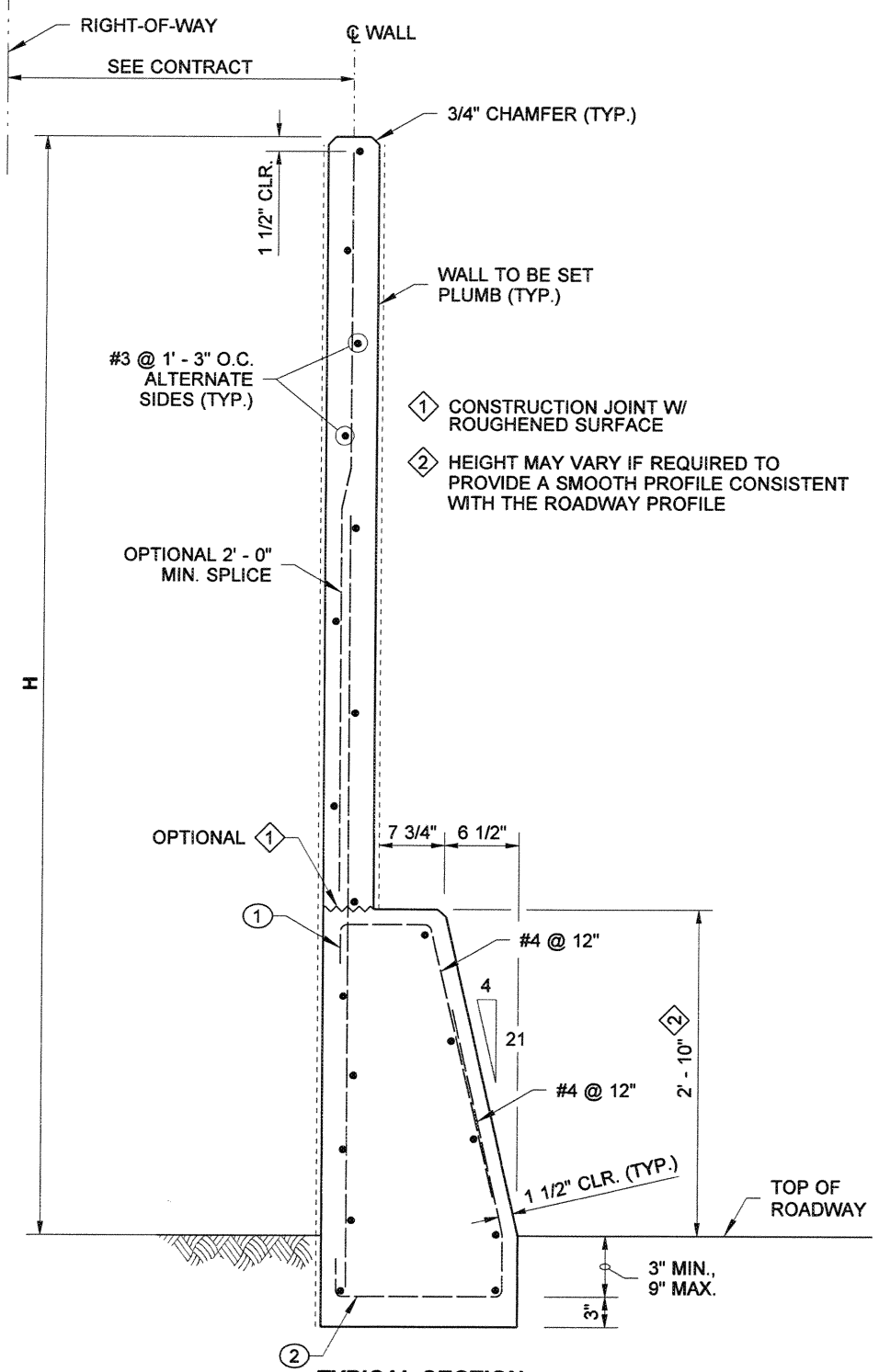

TYPICAL SECTION

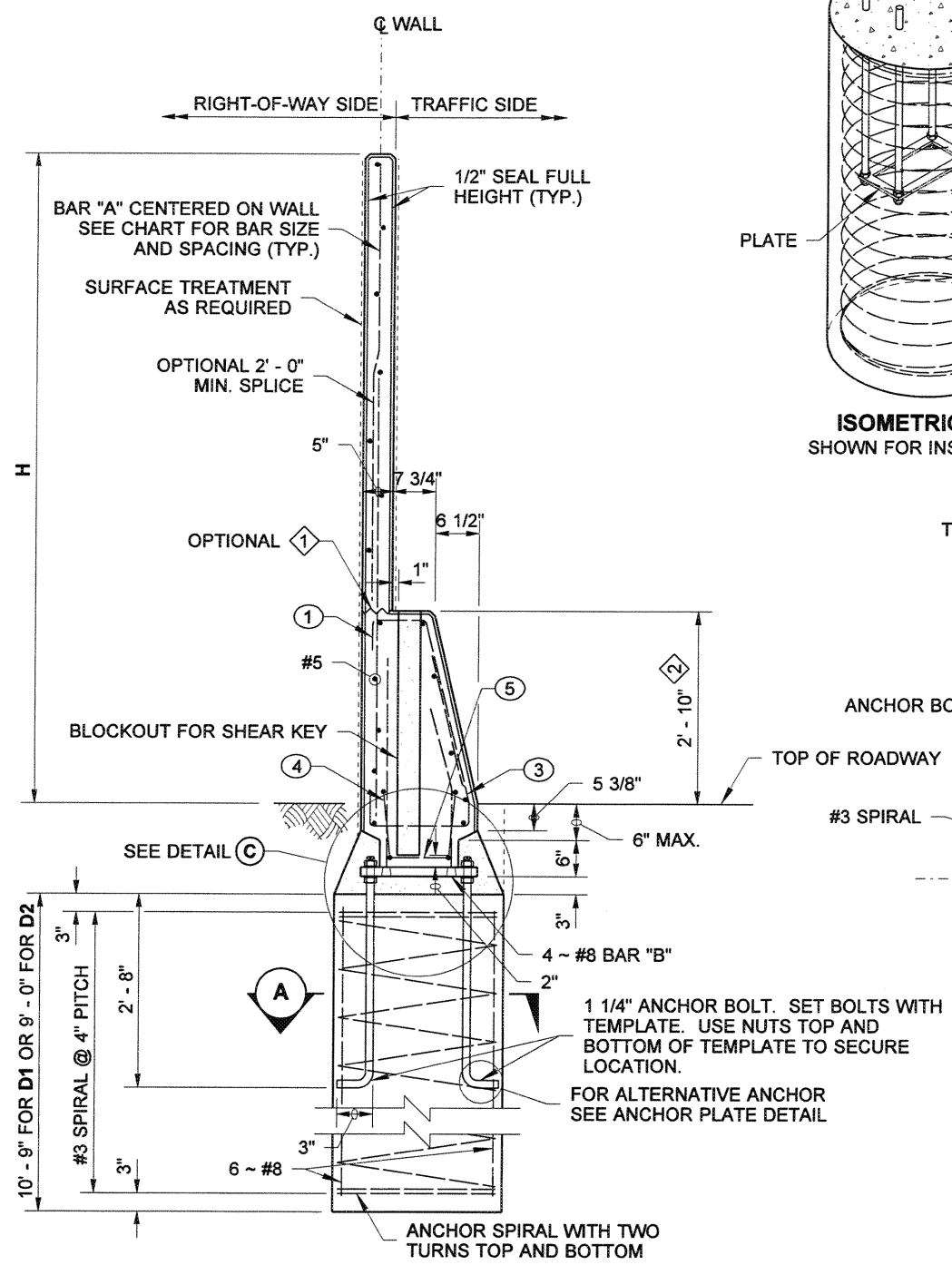

SECTION AT SHAFT SUPPORT

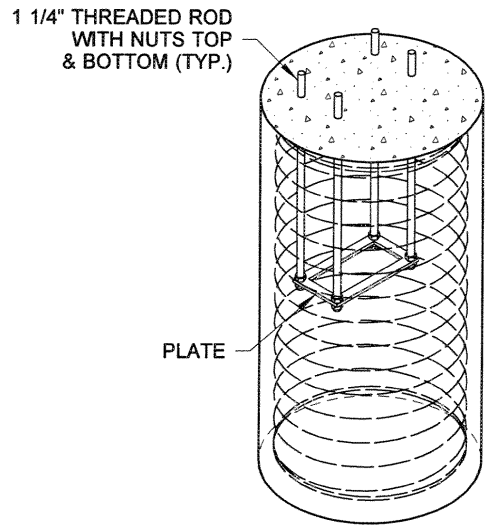

ISOMETRIC VIEW
SHOWN FOR INSTALLATION

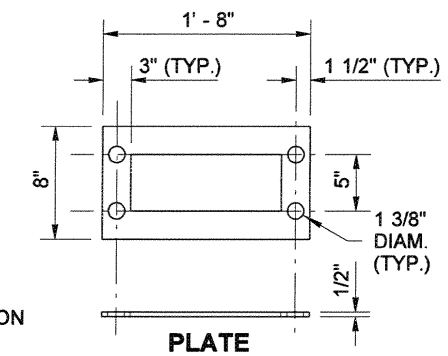

PLATE

ALTERNATE ANCHOR DETAIL
THREADED ROD WITH NUTS TOP AND BOTTOM

WIND EXPOSURE & VELOCITY		
NOISE BARRIER TYPE	WIND EXPOSURE	WIND VELOCITY (MPH)
14SSA	B1	80
14SSB	B1	90
14SSC	B2	80
14SSD	B2	90

PRECAST CONCRETE WALL W/ SINGLE SLOPE TRAFFIC BARRIER ON SHAFT FOUNDATION

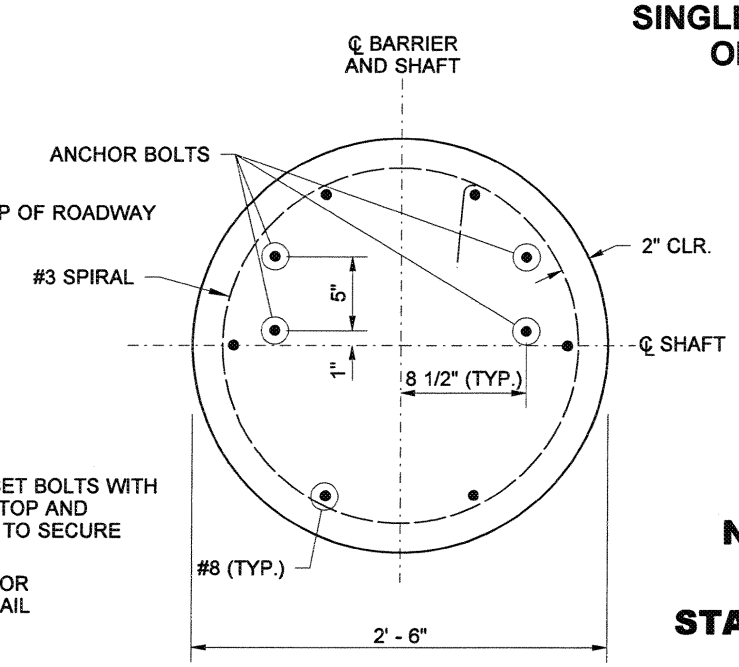

SECTION A

EXPIRES AUGUST 23, 2006

NOISE BARRIER WALL TYPE 14SS

STANDARD PLAN D-2.48-00

SHEET 1 OF 2 SHEETS

APPROVED FOR PUBLICATION

Harold Peterson 11·10·05

STATE DESIGN ENGINEER — DATE

Washington State Department of Transportation

DRAWN BY: BILL BERENS

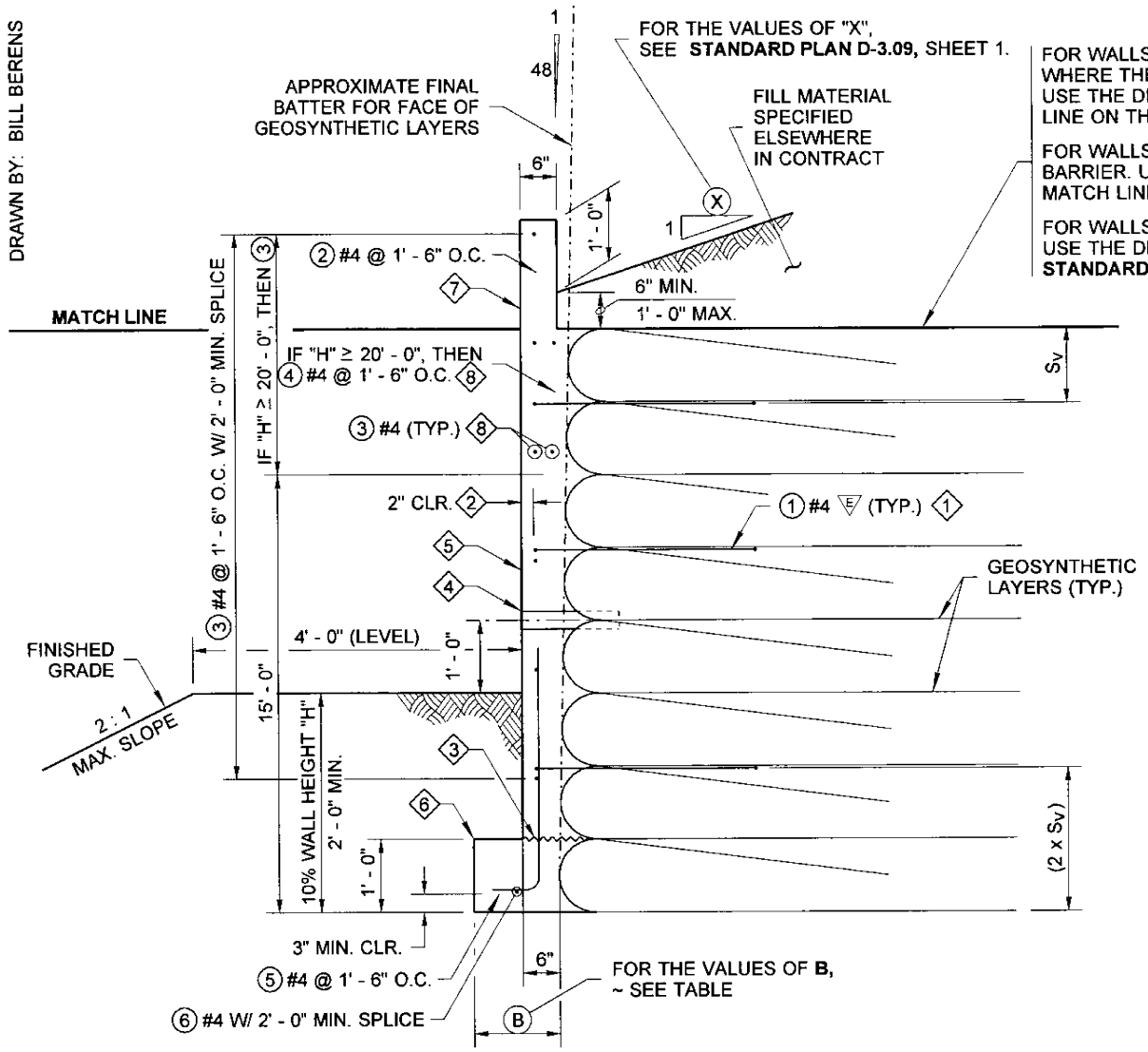

TYPICAL SECTION

PERMANENT GEOSYNTHETIC RETAINING WALL WITH CAST-IN-PLACE CONCRETE FASCIA

KEY NOTES

1. "N" ROWS OF ① #4 (E) DOWEL REINFORCEMENT PLACE BETWEEN GEOSYNTHETIC LAYERS AT 5' - 0" O.C. HORIZONTAL SPACING, SEE TABLE. VERTICAL SPACING BETWEEN ROWS TO BE EQUAL, AS MULTIPLES OF "S_V" ALLOW. ROWS MAY BE STAGGERED. SEE **STD. PLAN D-3.09** FOR "S_V".
2. INCREASE THE COVER AS REQUIRED TO ACCOMMODATE ARCHITECTURAL FEATURES AND FINISH.
3. CONSTRUCTION JOINT WITH ROUGHENED SURFACE.
4. 3" I.D. PVC PIPE FOR WEEP HOLE IN WALL FACING ~ PLACE BETWEEN GEOSYNTHETIC LAYERS APPROX. 9" DEEP AT 12' - 0" HORIZONTAL SPACING. LENGTH TO EXTEND TO OUTER SURFACE OF SPECIFIED WALL. WEEP HOLES SHALL BE KEPT CLEAR OF CONCRETE. SEE **STANDARD PLAN D-3.09,** FOR DETAILS NOT SHOWN.
5. VERTICAL CONSTRUCTION JOINTS IN FASCIA @ 24' - 0" O.C. WITH 1/2 " PREMOLDED JOINT FILLER (SEE **STANDARD PLAN D-10.45**, "SPLIT ELEVATION").
6. VERTICAL CONSTRUCTION JOINTS IN FOOTING @ 120' O.C. MAX. (SEE **STANDARD PLAN D-10.45,** "ELEVATION"). IF THE FOOTING IS STEPPED, PROVIDE 2' - 0" NON-CONTACT LAP SPLICES FOR THE ⑥ #4 BARS AT EACH STEP.
7. COORDINATE WALL FINISH AND CONFIGURATION WITH STATE BRIDGE AND STRUCTURES ARCHITECT PER WSDOT DESIGN MANUAL 730.04(5).
8. THE ④ BARS AND INTERIOR ③ BARS SHALL BE USED ONLY IF THE FACE IS VERTICAL.

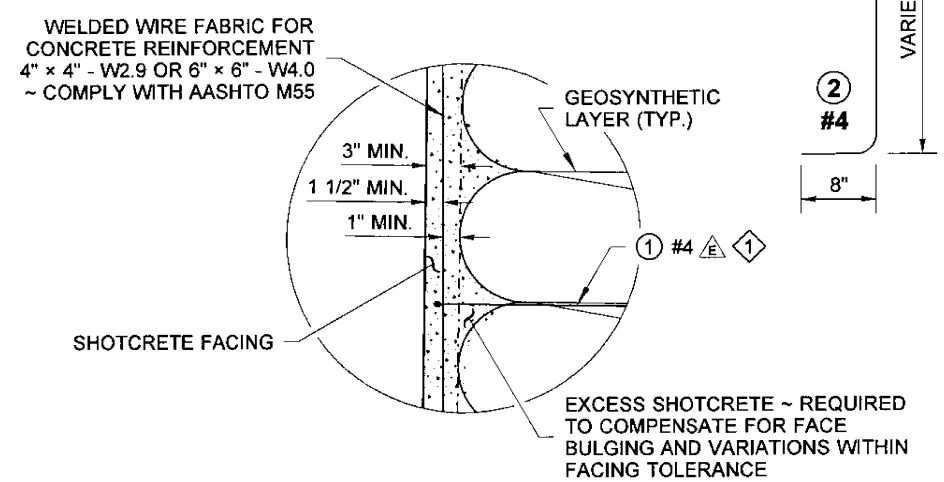

SHOTCRETE DETAIL

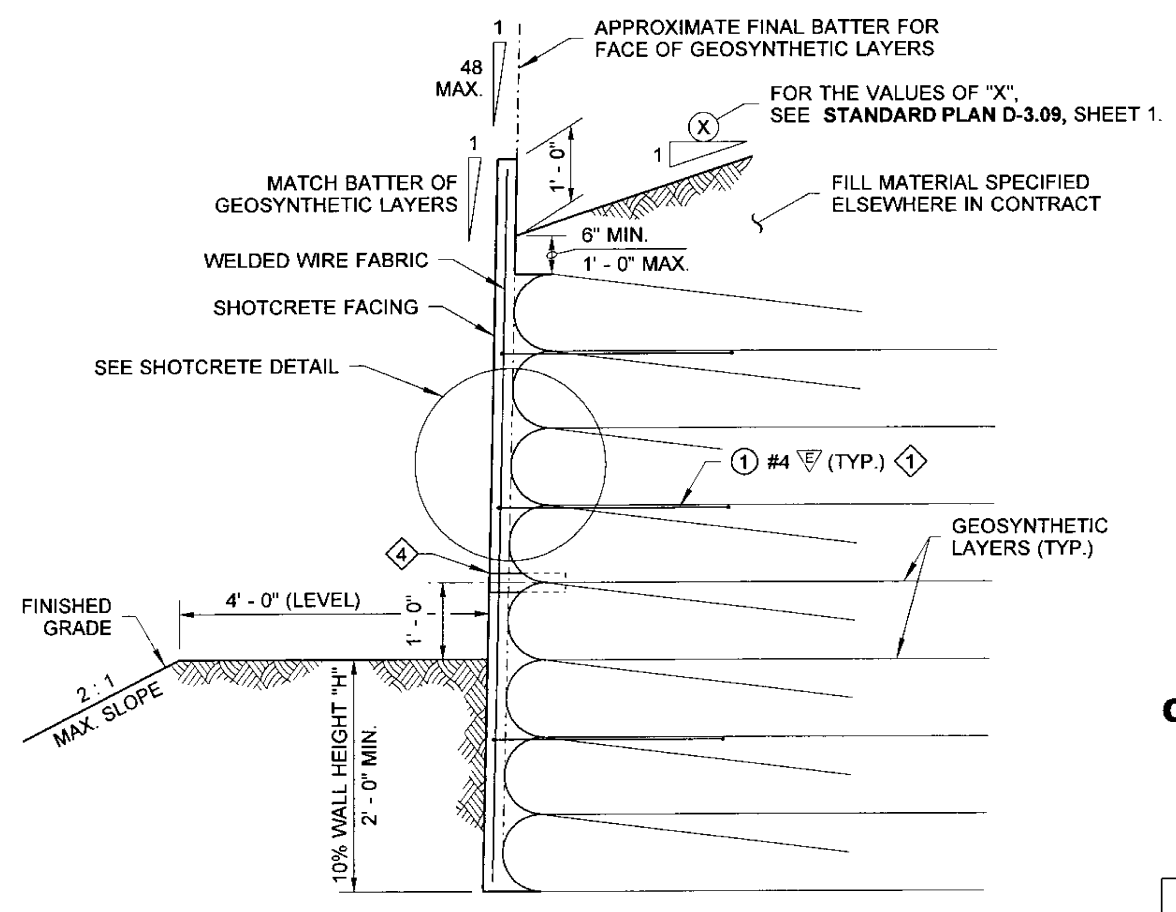

TYPICAL SECTION

PERMANENT GEOSYNTHETIC RETAINING WALL WITH SHOTCRETE FACING

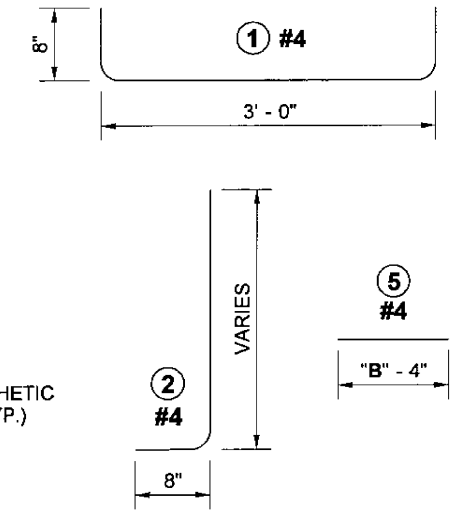

NOTES

1. All bars shown on this plan shall be ASTM A706 unless otherwise specified in the Contract.
2. Safety cable or fence required when "H" ≥ 10' - 0".
3. All cast-in-place concrete shall be class 4000.

(E) = EPOXY COATED

DESIGN HEIGHT "H" (ft.)	ROWS OF #4 (E) DOWEL BARS REQUIRED N (no.)	FASCIA FOOTING WIDTH B (ft. - in.)
UP TO 5	2	1' - 0"
6	3	1' - 0"
7	3	1' - 0"
8	3	1' - 0"
9	3	1' - 0"
10	4	1' - 0"
11	4	1' - 0 1/2"
12	4	1' - 0 1/2"
13	4	1' - 1"
14	4	1' - 1"
15	6	1' - 2"
16	6	1' - 2"
17	8	1' - 2 1/2"
18	8	1' - 2 1/2"
19	8	1' - 3"
20	10	1' - 3"
21	10	1' - 3 1/2"
22	10	1' - 3 1/2"
23	10	1' - 4"
24	10	1' - 4"
25	10	1' - 5"
26	10	1' - 5"
27	10	1' - 5 1/2"
28	10	1' - 5 1/2"
29	10	1' - 6"
30	10	1' - 6"
31	10	1' - 6 1/2"
32	10	1' - 6 1/2"
33	10	1' - 7"
34	10	1' - 7"
35	10	1' - 8"

CAST-IN-PLACE PERMANENT GEOSYNTHETIC WALL FASCIA AND FACING
STANDARD PLAN D-3.10-01

SHEET 1 OF 1 SHEET

APPROVED FOR PUBLICATION

STATE DESIGN ENGINEER — DATE 5/20/13

Washington State Department of Transportation

DRAWN BY: FERN LIDDELL

NOTES

1. Anchor Rods shall be ASTM F1554 GR. 55
2. All cast-in-place concrete shall be Class 4000.
3. Couplers shall conform to the same **ASTM Standard Specification** as that specified for the nut. Couplers shall be capable of developing 100% of the tensile strength of the anchor rod without evidence of any failure.

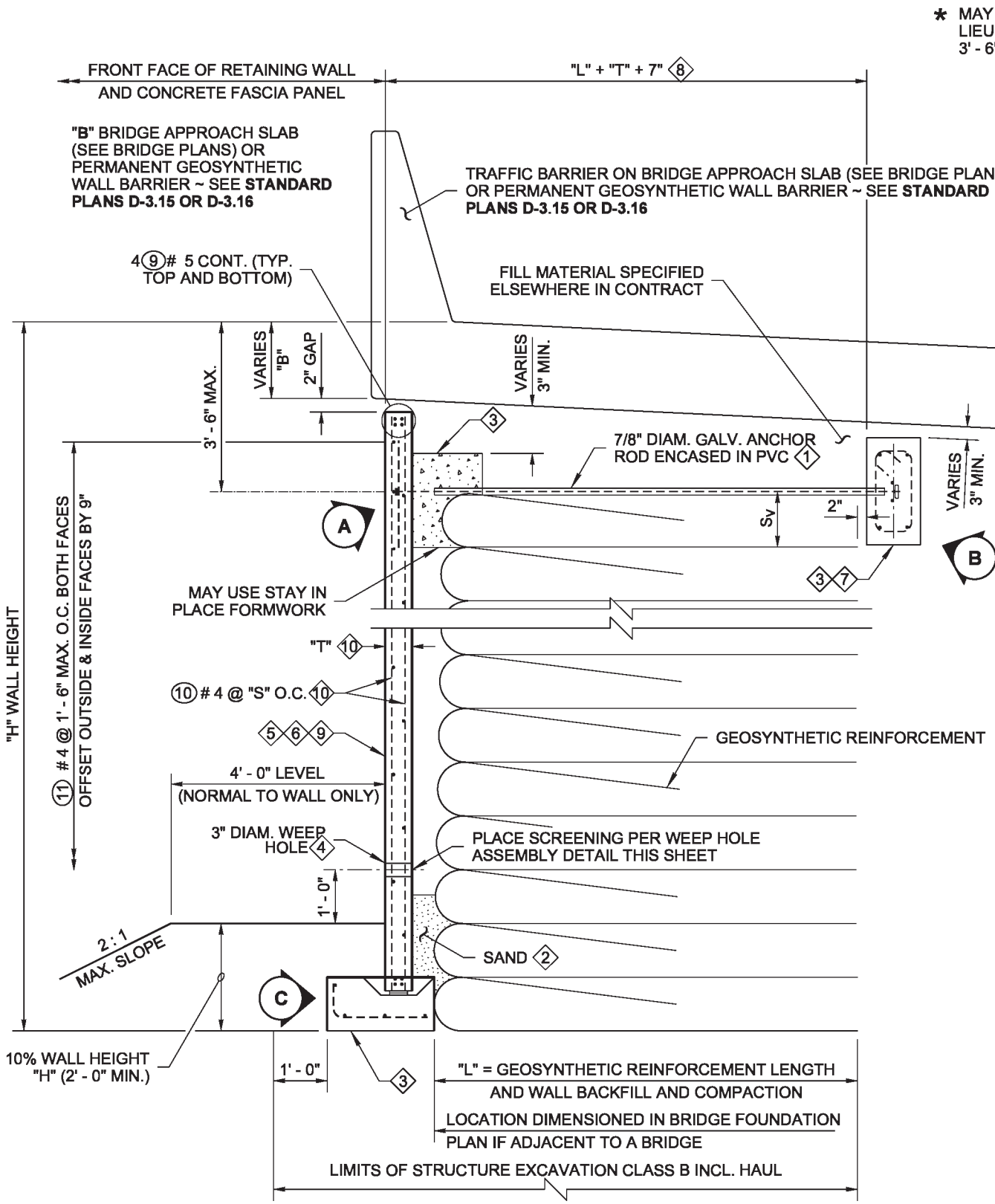

TYPICAL SECTION

PERMANENT GEOSYNTHETIC RETAINING WALL WITH PRECAST CONCRETE FASCIA PANEL AND TRAFFIC BARRIER

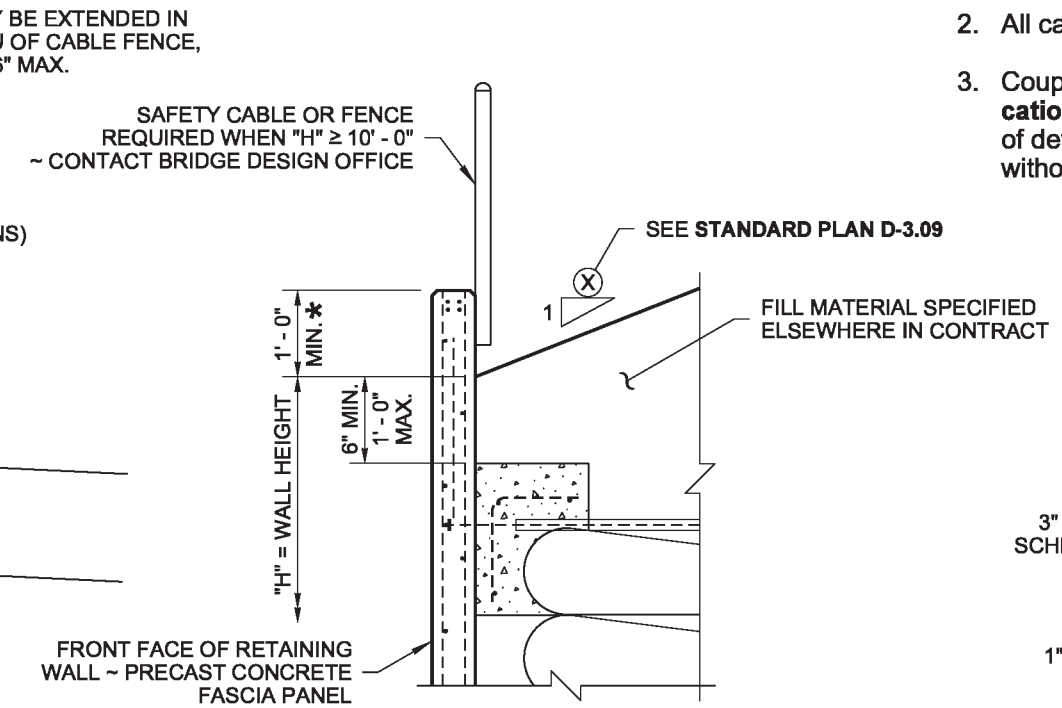

TYPICAL SECTION

PERMANENT GEOSYNTHETIC WALL PRECAST CONCRETE FASCIA PANEL

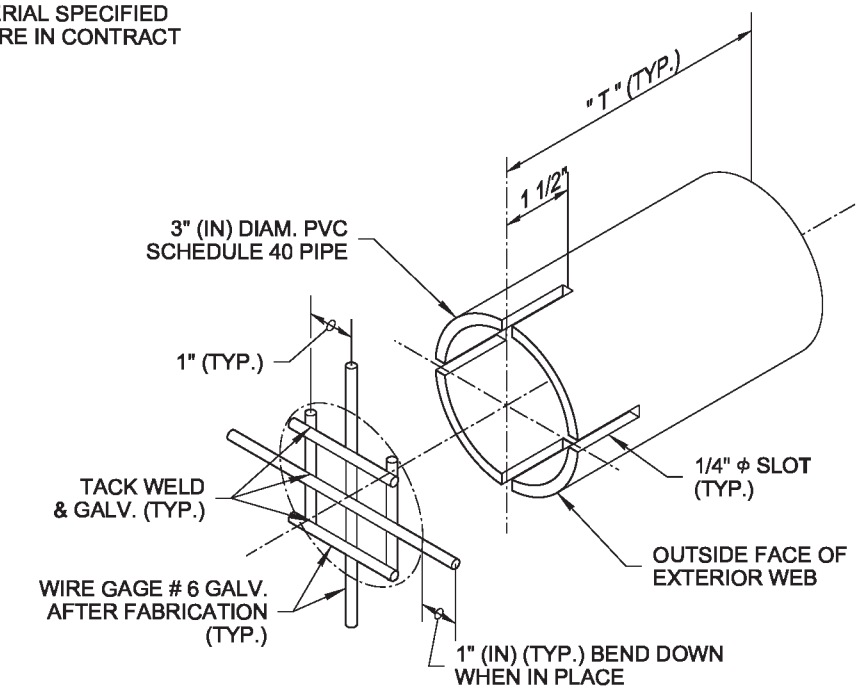

WEEP HOLE ASSEMBLY

KEY NOTES

1. 7/8" (IN) DIAMETER THREADED ANCHOR ROD **(STANDARD SPECIFICATION SECTION 9.06.5 (4)),** GALVANIZED AFTER FABRICATION IN ACCORDANCE WITH AASHTO M232. ANCHOR RODS SHALL BE THREADED A MINIMUM OF 1' - 0" AT ENDS. PLACE LEVEL AND NORMAL TO WALL. ENCASE ANCHOR RODS WITH PVC SLEEVE. EMBED PVC ENDS INTO GRADE BEAM AND EDGE BEAM.
2. BACKFILL VOID BEHIND WALL WITH SAND CONFORMING TO **STANDARD SPECIFICATION SECTION 9-03.13(1)** TO 6" (IN) ABOVE FINISHED GRADE ON FRONT FACE OF WALL.
3. LEVELING PAD, EDGE BEAM, AND GRADE BEAM ARE CAST-IN-PLACE CONCRETE PLACED AT 6H : 1V MAXIMUM SLOPE AND THE VERTICAL CONSTRUCTION JOINTS SHALL BE SPACED AT 120' MAXIMUM.
4. ONE 3" (IN) DIAMETER WEEP HOLE PER FASCIA PANEL. HORIZONTAL LOCATION AT THE CENTERLINE FASCIA PANEL.
5. ALL VERTICAL PANEL JOINTS SHALL BE SEALED FOR FULL CONTACT WITH AN APPROVED JOINT SEALANT. SEE "EXPANSION JOINT DETAIL", SHEET 2.
6. UNLESS OTHERWISE SHOWN, MINIMUM CONCRETE COVER FOR REINFORCEMENT IS 1 1/2". INCREASE COVER AS REQUIRED TO ACCOMMODATE ARCHITECTURAL FEATURES.
7. IF GRADE BEAM IS NEAR CENTERLINE OF ROADWAY, USE ONE GRADE BEAM AT CENTERLINE FOR FASCIA PANEL ON EITHER SIDE.
8. CONTACT BRIDGE OFFICE FOR ROADWAY CROSS SLOPES GREATER THAN 0.08'/FT.
9. COORDINATE WALL FINISH AND CONFIGURATION WITH STATE BRIDGE AND STRUCTURES ARCHITECT PER **WSDOT DESIGN MANUAL 730.04(5)**.
10. SEE PRECAST FASCIA TABLE, SHEET 2 OF 2.

Bijan Khaleghi
Khaleghi, Bijan
Jun 5 2014 11:18 AM

PRECAST PERMANENT GEOSYNTHETIC WALL FASCIA

STANDARD PLAN D-3.11-03

SHEET 1 OF 2 SHEETS

APPROVED FOR PUBLICATION
Bakotich, Pasco
Jun 11 2014 1:24 PM
STATE DESIGN ENGINEER
Washington State Department of Transportation

DRAWN BY: FERN LIDDELL

PRECAST FASCIA TABLE

DESIGN HEIGHT "H" (ft.)	PANEL THICKNESS "T" (in.)	(F 10) BAR SPACING "S" (in.)
5	6.0	18.0
6	6.0	18.0
7	6.0	18.0
8	6.0	18.0
9	6.0	18.0
10	6.0	18.0
11	6.0	18.0
12	6.0	18.0
13	6.0	18.0
14	6.0	18.0
15	6.0	18.0
16	6.0	18.0
17	6.0	18.0
18	6.0	18.0
19	6.0	18.0
20	6.0	18.0
21	6.0	18.0
22	7.0	18.0
23	7.0	18.0
24	7.0	18.0
25	8.0	18.0
26	8.0	18.0
27	8.0	18.0
28	9.0	12.0
29	9.0	12.0
30	9.0	12.0
31	10.0	12.0
32	10.0	12.0
33	11.0	12.0
34	11.0	12.0
35	11.0	12.0

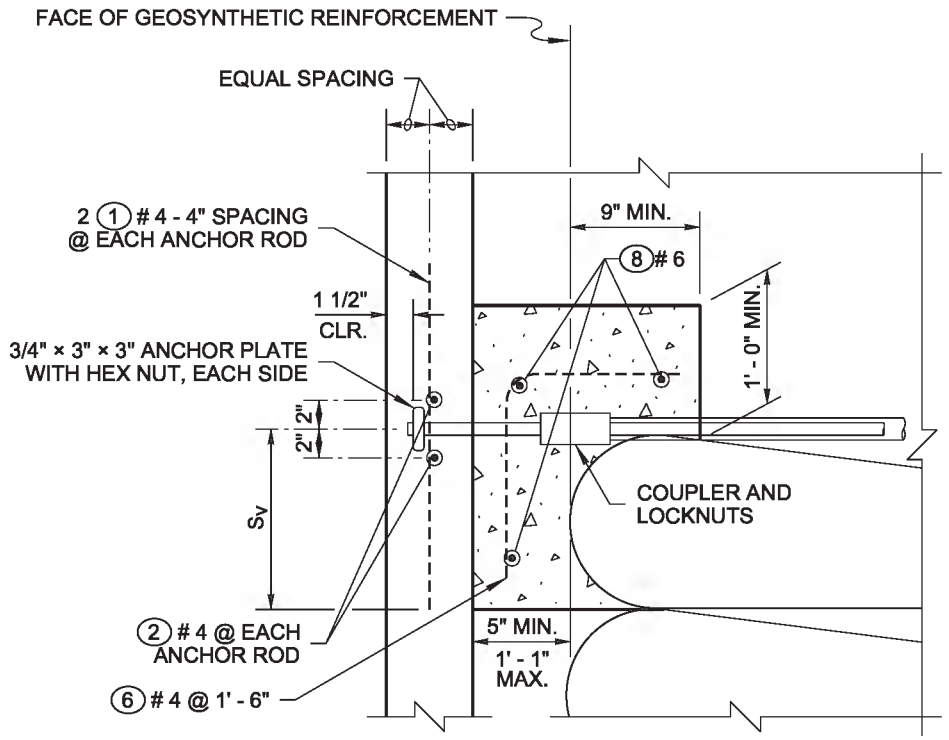

EDGE BEAM

DETAIL (A)

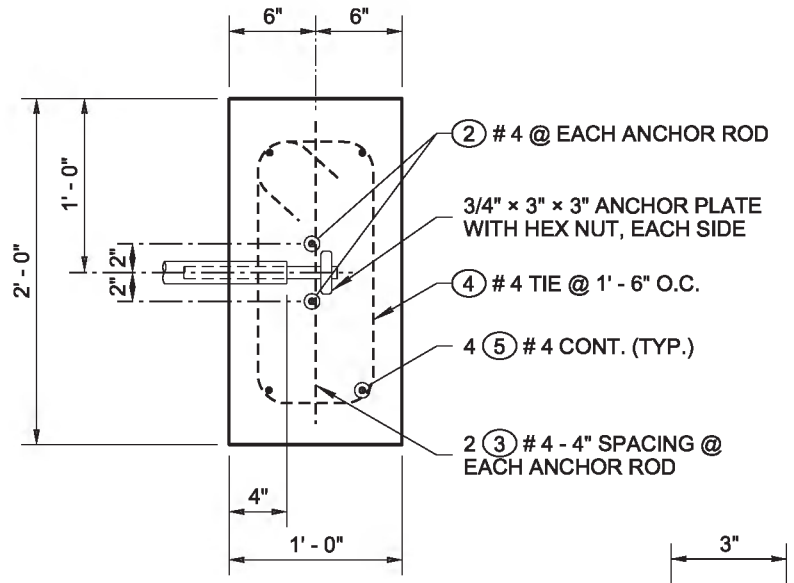

GRADE BEAM

DETAIL (B)

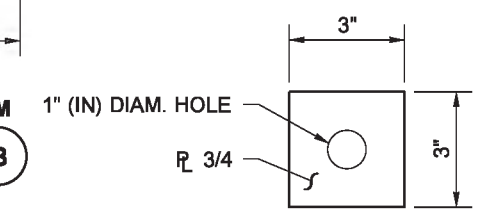

ANCHOR PLATE DETAIL

ASTM A36, A572, OR A588

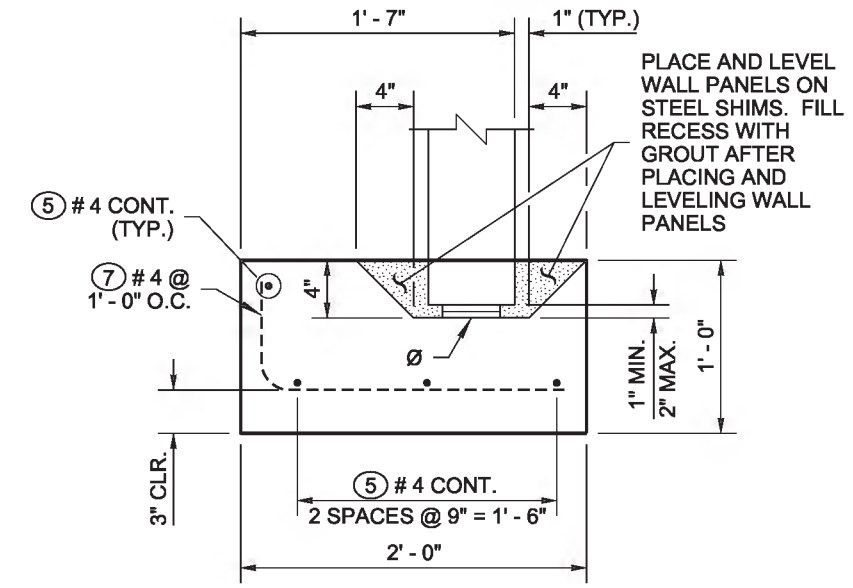

LEVELING PAD

DETAIL (C)

ϕ 4" × 4" SHIM STACK
(2 LOCATIONS PER PANEL)
HEIGHT SHALL BE ADJUSTED SO THAT VERTICAL PANEL JOINTS ARE PLUMB

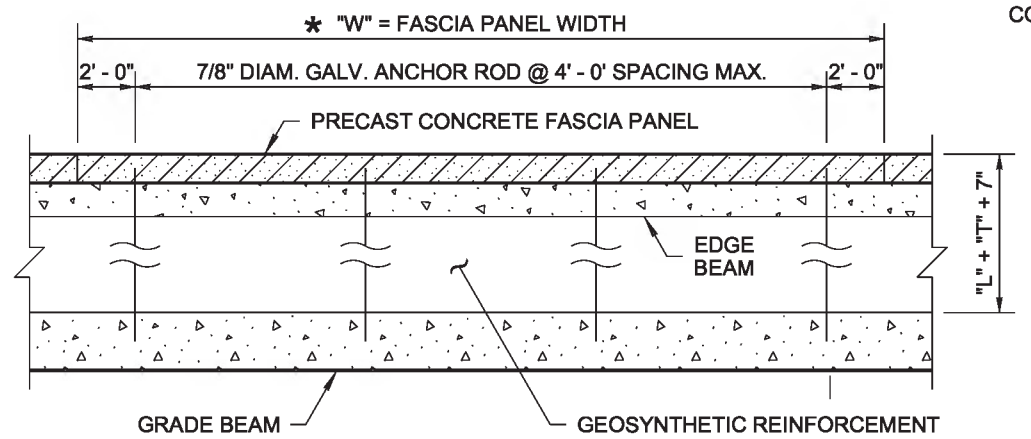

PLAN VIEW

TYPICAL PANEL LAYOUT

* PANEL WIDTH "W" SHOWN IN ELEVATION OF RETAINING WALLS

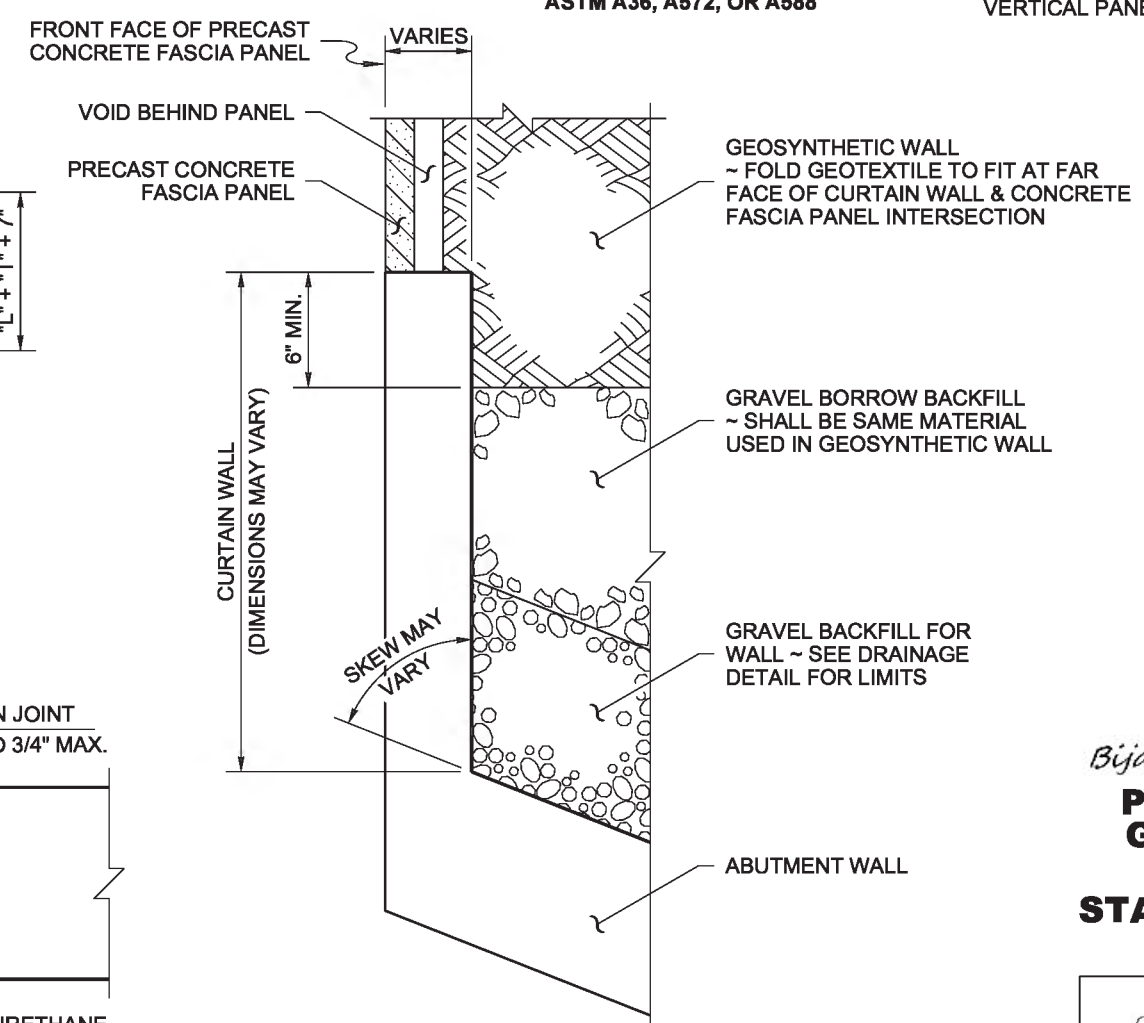

PLAN VIEW

WALL TRANSITION

GEOSYNTHETIC WALL TO CURTAIN WALL TRANSITION AT BRIDGE ~ SEE BRIDGE PLAN SHEETS FOR DETAILS

FASCIA PANEL BENDING DIAGRAM

ALL REINFORCEMENT SHALL BE ASTM A706.

MARK	SIZE	LENGTH	
(1)	4	2' - 0"	STR.
(2)	4	4' - 0"	STR.
(3)	4	1' - 9"	STR.
(4)	4	4' - 11"	
(5)	4	(A)	STR.
(6)	4	2' - 1 3/4"	
(7)	4		
(8)	6	(A)	STR.
(9)	5	(A)	STR.
(10)	4	(A)	STR.
(11)	4	(A)	STR.

(A) DETERMINE FROM PLANS

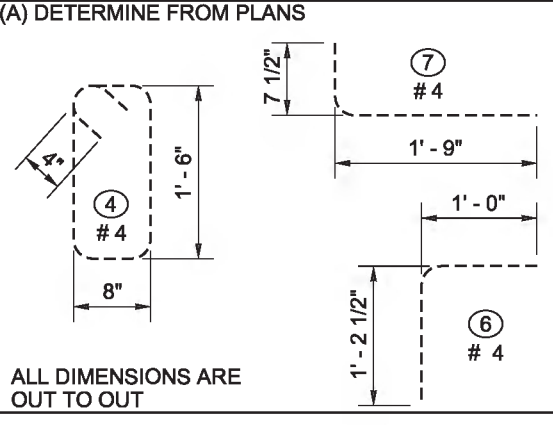

ALL DIMENSIONS ARE OUT TO OUT

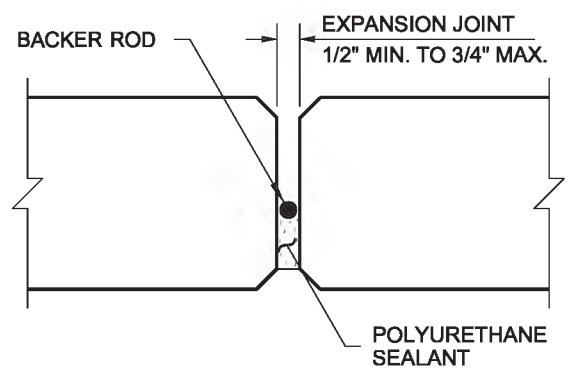

EXPANSION JOINT DETAIL

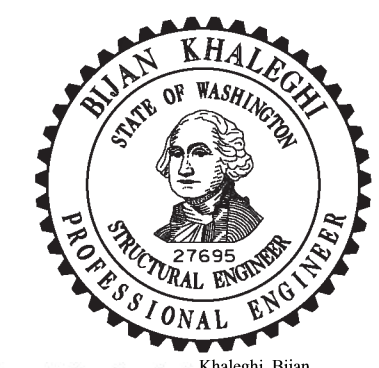

Bijan Khaleghi
Khaleghi, Bijan
Jun 5 2014 11:19 AM

PRECAST PERMANENT GEOSYNTHETIC WALL FASCIA

STANDARD PLAN D-3.11-03

SHEET 2 OF 2 SHEETS

APPROVED FOR PUBLICATION
Bakotich, Pasco
Jun 11 2014 1:24 PM
STATE DESIGN ENGINEER

Washington State Department of Transportation

DRAWN BY: BILL BERENS

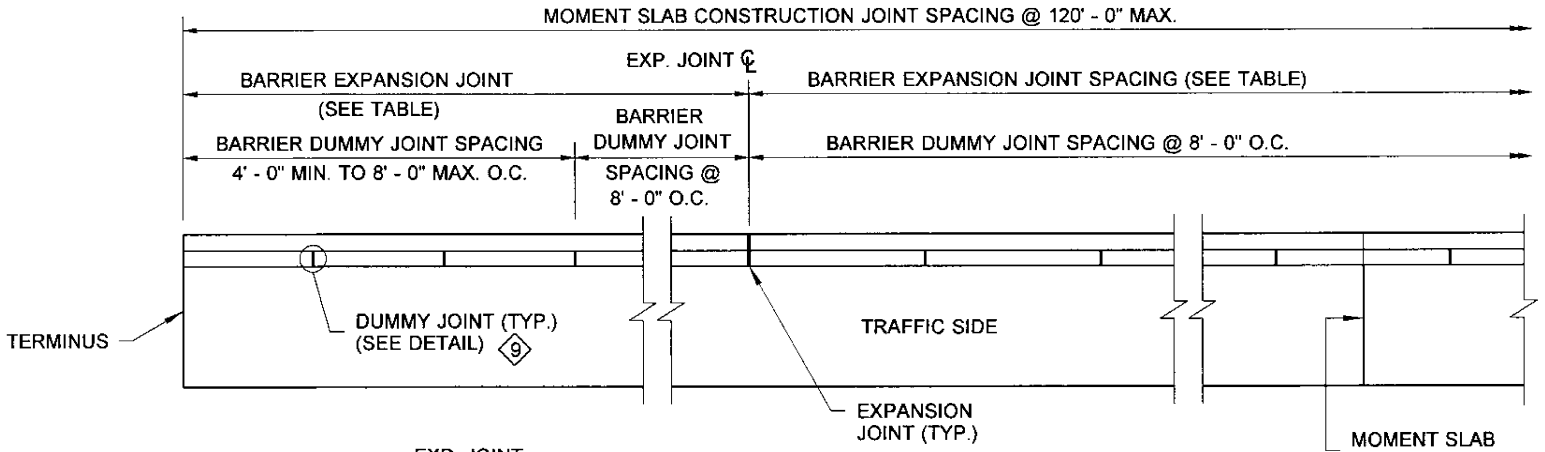

JOINT SCHEME
PLAN VIEW

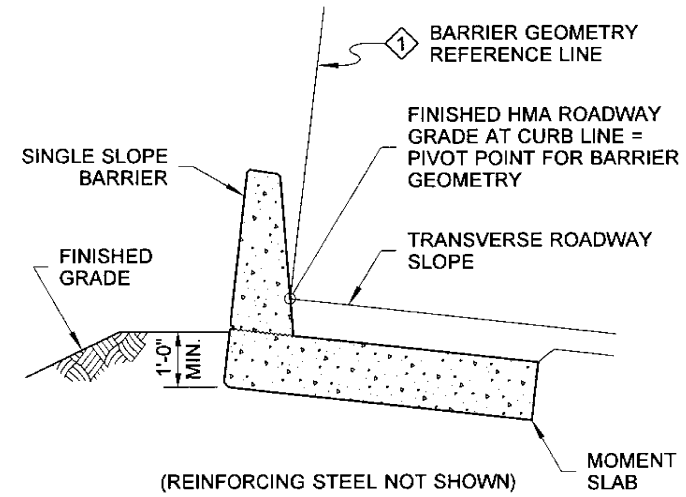

TYPICAL SECTION
SHOWN AT GRADE

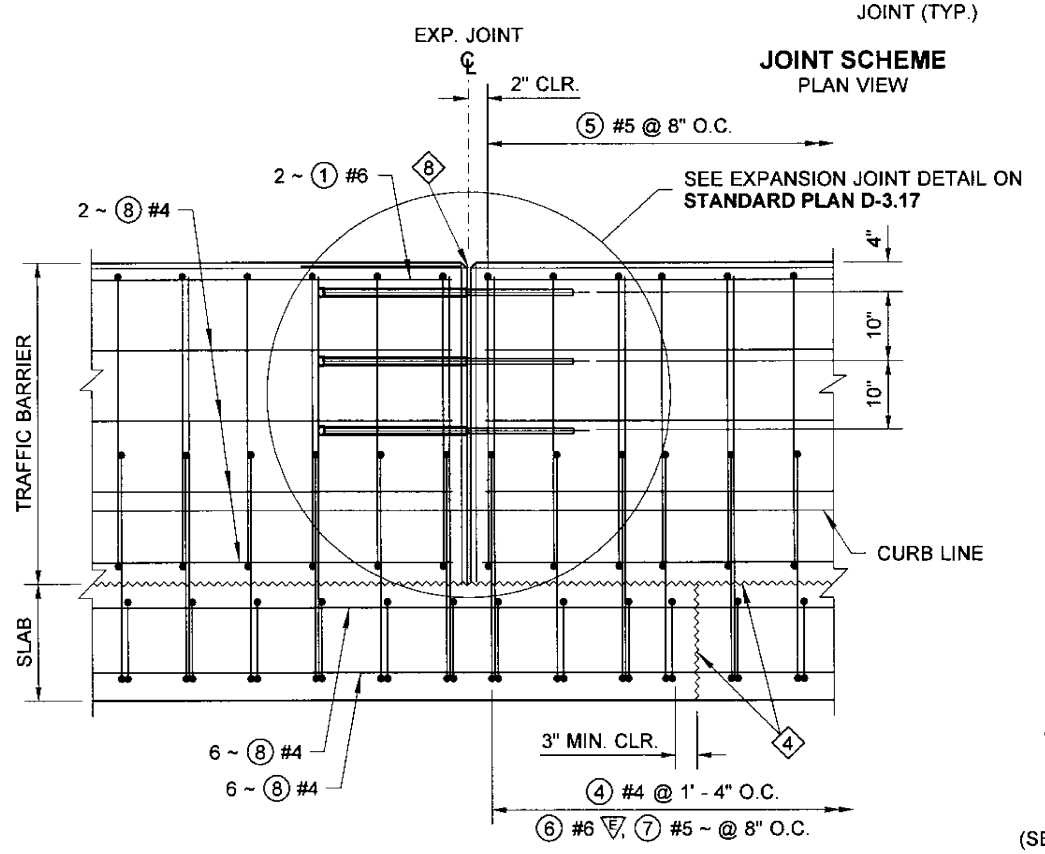

ELEVATION

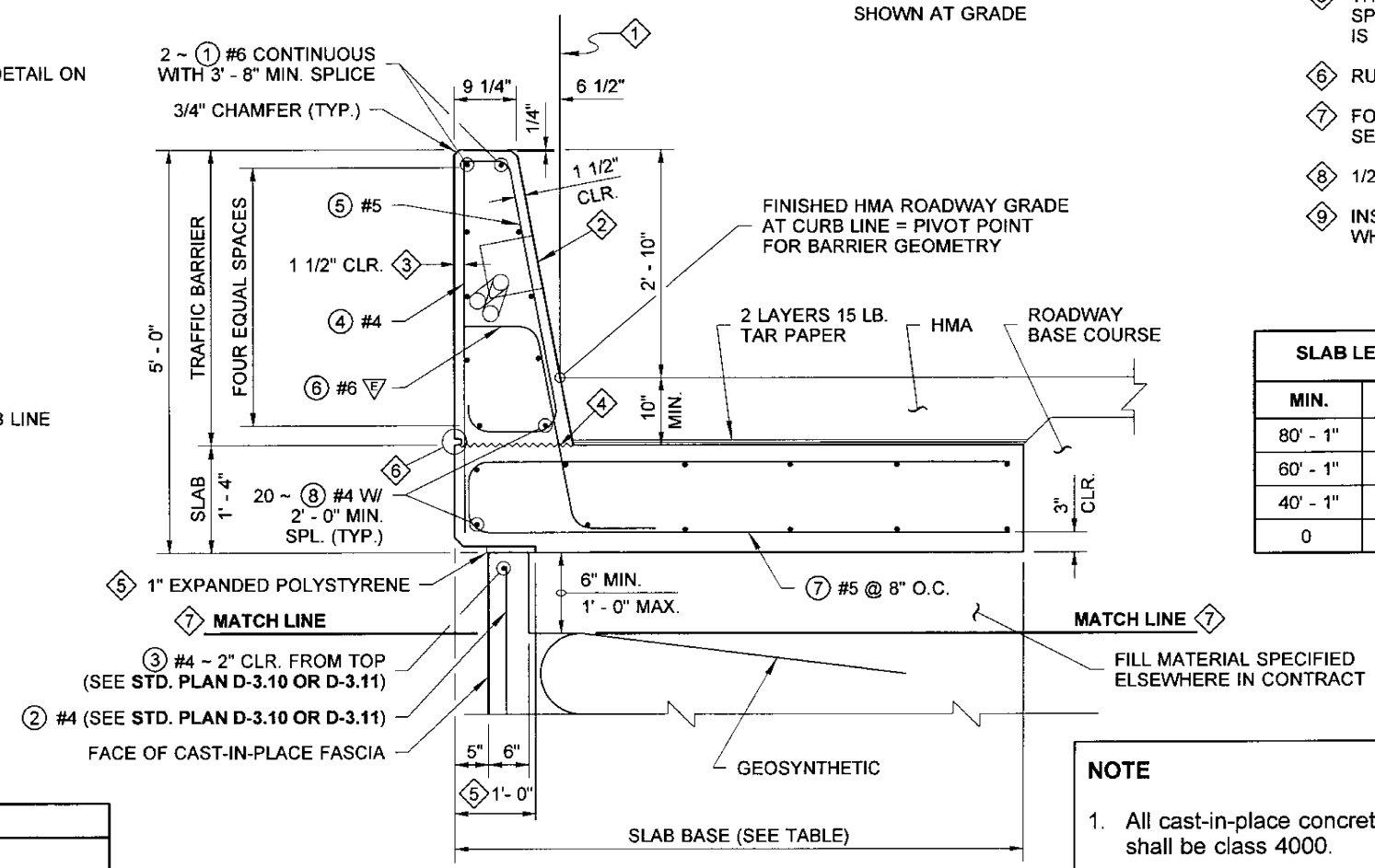

TYPICAL SECTION
SHOWN ON WALL

KEY NOTES

1. THE BARRIER GEOMETRY REFERENCE LINE (B.G.R.L.) IS PERPENDICULAR TO THE TRANSVERSE ROADWAY SLOPE (T.R.S.). FOR SUPERELEVATED TRANSVERSE ROADWAY SLOPES, THE B.G.R.L. ON THE LOW SIDE OF THE ROADWAY SHALL BE PERPENDICULAR TO THE T.R.S. UP TO A MAXIMUM OF 8% SUPERELEVATION; THE B.G.R.L. ON THE HIGH SIDE SHALL ALWAYS BE PERPENDICULAR TO THE T.R.S..
2. JUNCTION BOX (MOUNT BOX SO COVER IS FLUSH WITH THE BARRIER FACE WITH A 0" TOLERANCE PROTRUDING BEYOND THE BARRIER FACE AND 1/8" RECESSED). USE NEMA 4X JUNCTION BOX WITH STATIONARY-FORMS ~ SEE **STANDARD PLAN J-40.36**. USE NEMA 3R JUNCTION BOX WITH SLIP-FORMS ~ SEE **STANDARD PLAN J-40.37**.
3. 1 1/2" MIN. CONCRETE COVER ~ INCREASE THE COVER AS REQUIRED TO ACCOMMODATE ARCHITECTURAL FEATURES AND FINISH.
4. CONSTRUCTION JOINT WITH ROUGHENED SURFACE.
5. THE NOTCH, DETAILED BY THESE DIMENSIONS AND SPECIFICATIONS, IS REQUIRED ONLY IF THE BARRIER IS ON WALL FACING.
6. RUSTICATION ~ SEE RUSTICATION DETAIL
7. FOR STRUCTURAL DETAILS BELOW THE MATCH LINE, SEE **STANDARD PLANS D-3.09, D-3.10 OR D-3.11**.
8. 1/2" EXPANSION JOINT WITH PREMOLDED JOINT FILLER.
9. INSTALL BARRIER DUMMY JOINTS ON TRAFFIC SIDE ONLY WHEN ARCHITECTURAL FEATURES ARE SPECIFIED.

SLAB LENGTH		SLAB BASE		BARRIER EXPANSION JOINT SPACING	
MIN.	MAX.	ON WALL	AT GRADE	MIN.	MAX.
80' - 1"	- -	7' - 0"	5' - 0"	80' - 0"	120' - 0"
60' - 1"	80' - 0"	8' - 0"	6' - 0"	60' - 0"	80' - 0"
40' - 1"	60' - 0"	9' - 0"	7' - 0"	40' - 0"	60' - 0"
0	40' - 0"	CONTACT BRIDGE OFFICE			

REINFORCING STEEL BENDING DIAGRAM

ALL REINFORCING BARS SHOWN ON THIS PLAN SHALL BE AASHTO M 31 UNLESS OTHERWISE NOTED.

ALL DIMENSIONS ARE OUT TO OUT

E = EPOXY COATED

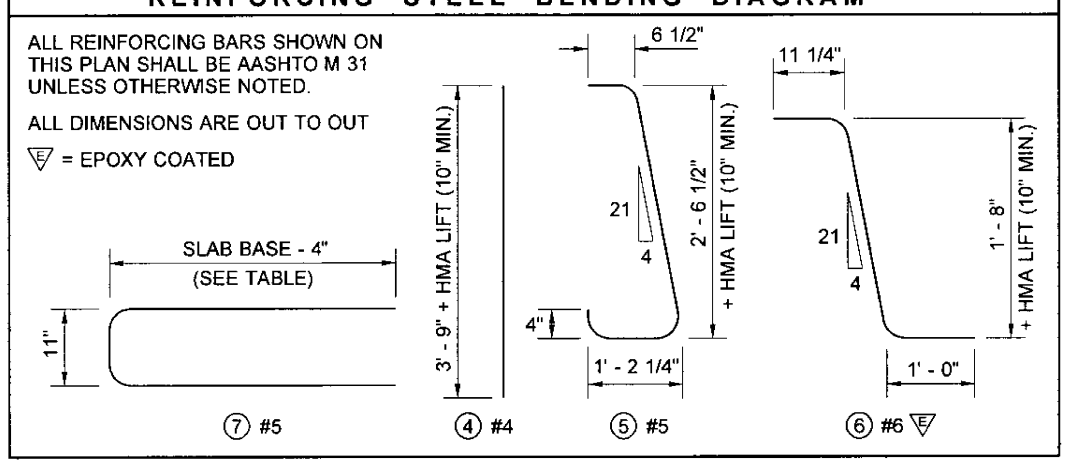

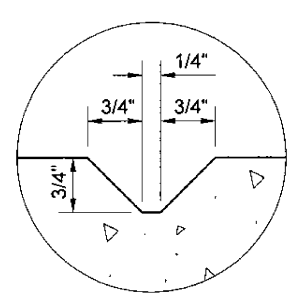

DUMMY JOINT DETAIL

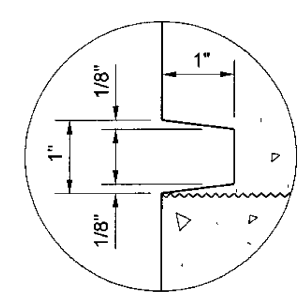

RUSTICATION DETAIL

NOTE

1. All cast-in-place concrete shall be class 4000.

PERMANENT GEOSYNTHETIC WALL SINGLE SLOPE BARRIER STANDARD PLAN D-3.15-02

SHEET 1 OF 1 SHEET

APPROVED FOR PUBLICATION

STATE DESIGN ENGINEER — DATE 6/10/13

Washington State Department of Transportation

This page left blank intentionally.

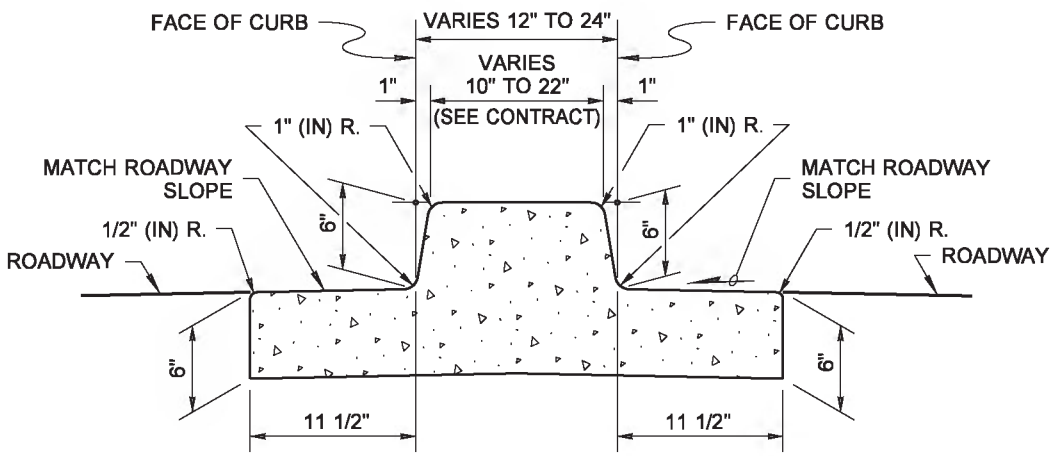

DUAL-FACED CEMENT CONCRETE TRAFFIC CURB AND GUTTER

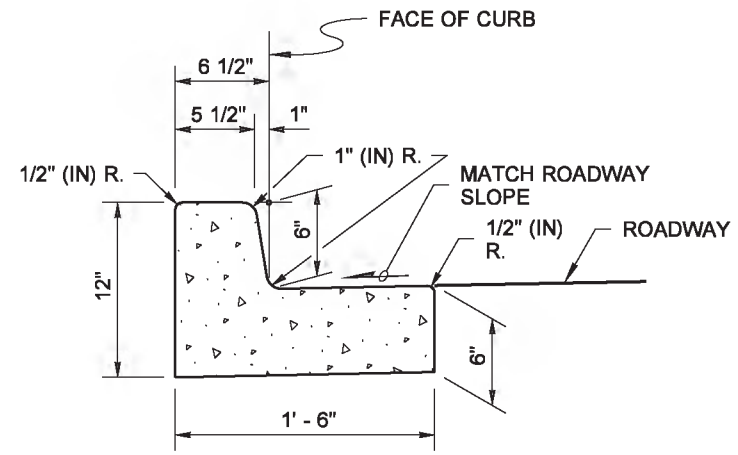

CEMENT CONCRETE TRAFFIC CURB AND GUTTER

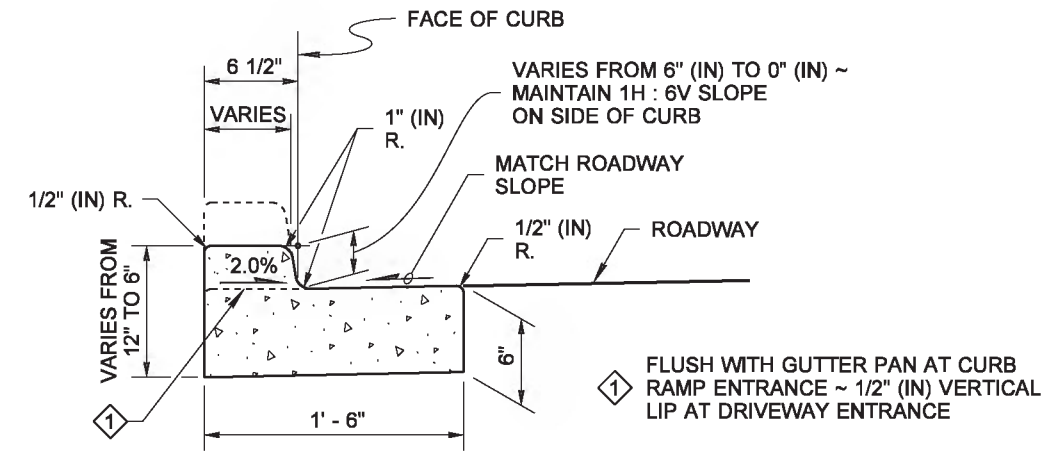

DEPRESSED CURB SECTION

AT CURB RAMPS AND DRIVEWAY ENTRANCES

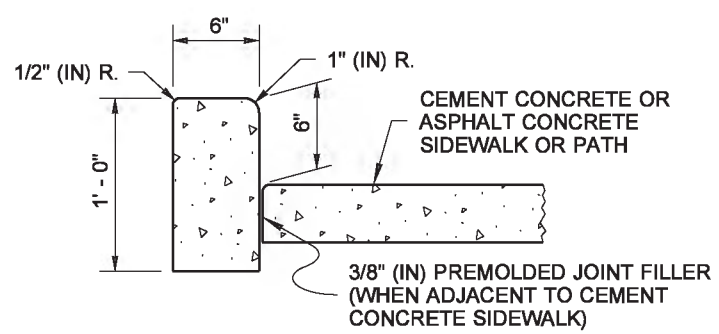

CEMENT CONCRETE PEDESTRIAN CURB

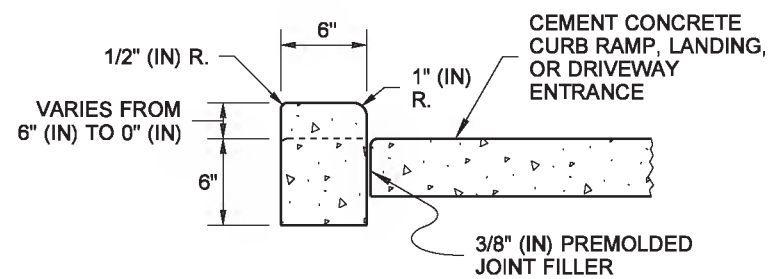

CEMENT CONCRETE PEDESTRIAN CURB

AT CURB RAMPS, LANDINGS, AND DRIVEWAY ENTRANCES

NOTE

1. See **Standard Plan F-30.10** for Curb Expansion and Contraction Joint spacing and see **Standard Specification Sections 8-04 and 9-04** for additional requirements.

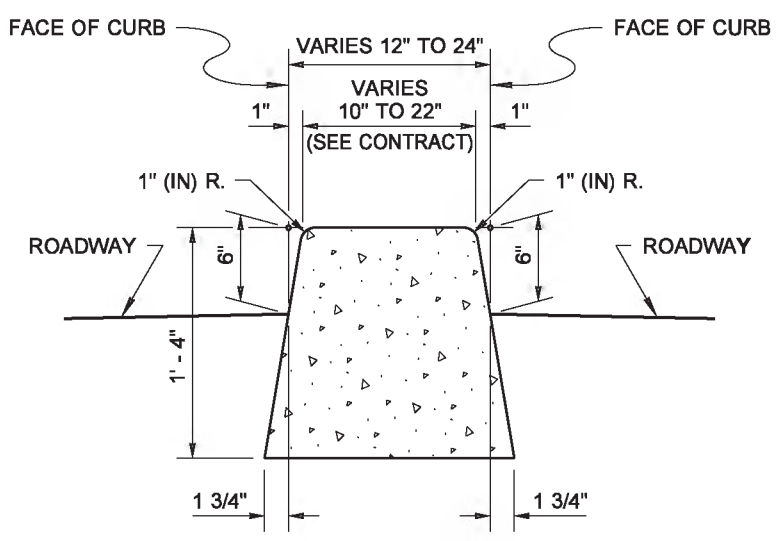

DUAL-FACED CEMENT CONCRETE TRAFFIC CURB

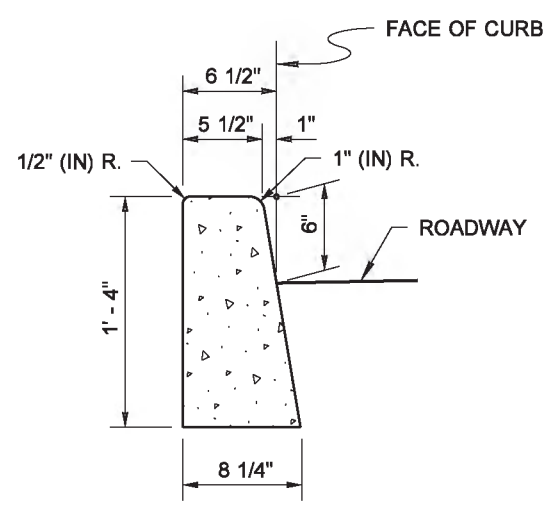

CEMENT CONCRETE TRAFFIC CURB

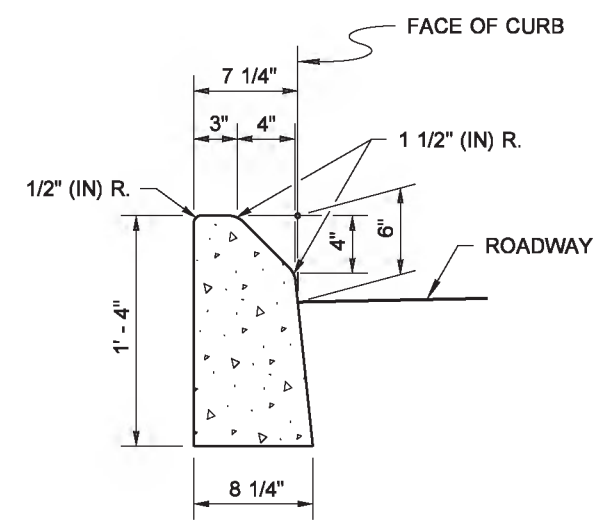

MOUNTABLE CEMENT CONCRETE TRAFFIC CURB

DRAWN BY: FERN LIDDELL

Barry, Ed
May 6 2014 3:31 PM

CEMENT CONCRETE CURBS

STANDARD PLAN F-10.12-03

SHEET 1 OF 1 SHEET

APPROVED FOR PUBLICATION
Bakotich, Pasco
Jun 11 2014 1:25 PM

STATE DESIGN ENGINEER

Washington State Department of Transportation

This page left blank intentionally.

DRAWN BY: BILL BERENS

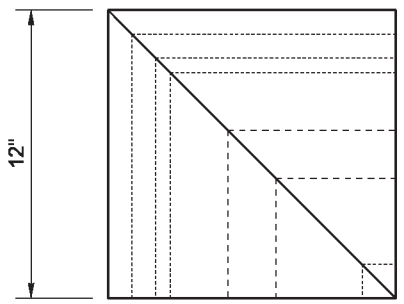

TOP VIEW

INSIDE CORNER BLOCK

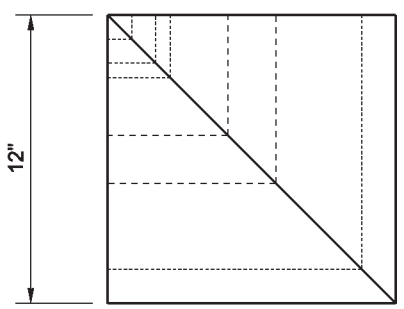

TOP VIEW

OUTSIDE CORNER BLOCK

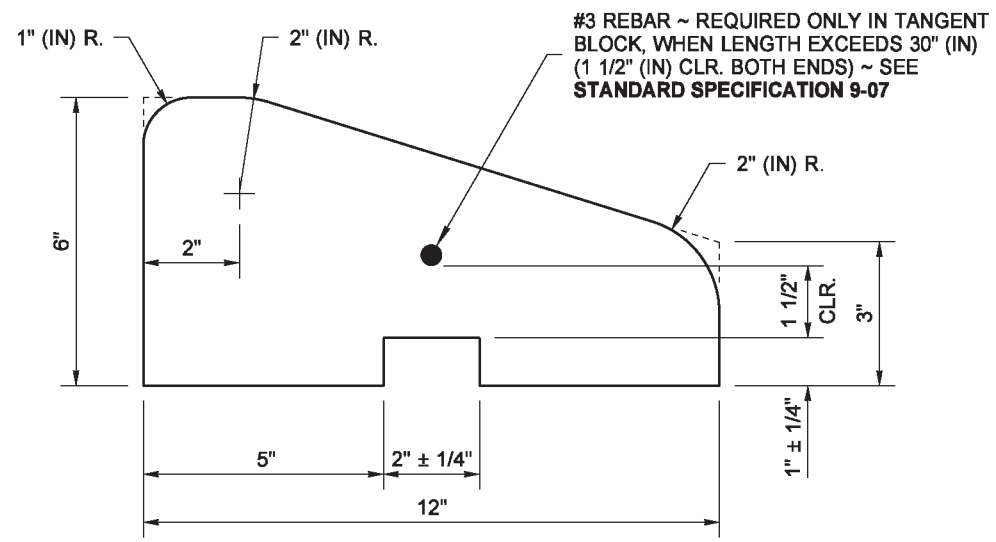

TYPICAL OF ALL

END VIEW

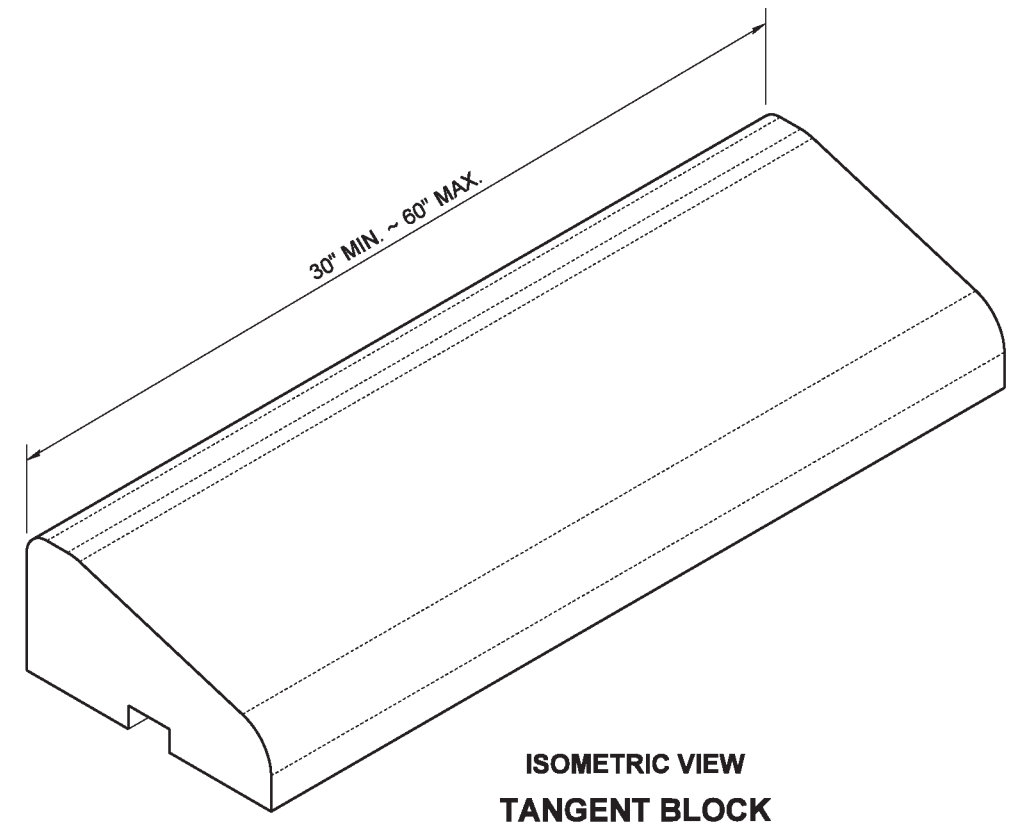

ISOMETRIC VIEW

TANGENT BLOCK

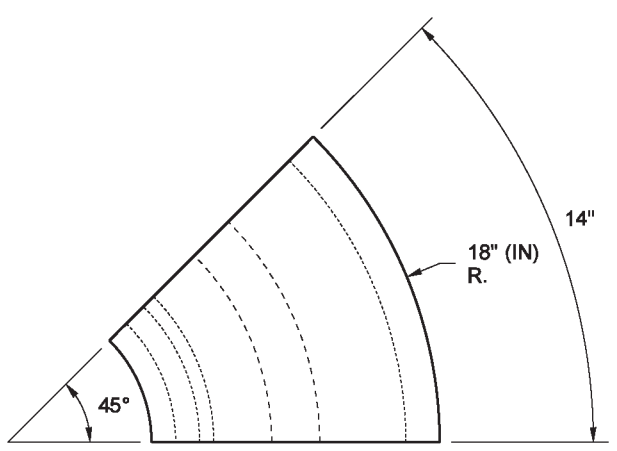

TOP VIEW

18" RADIUS BLOCK

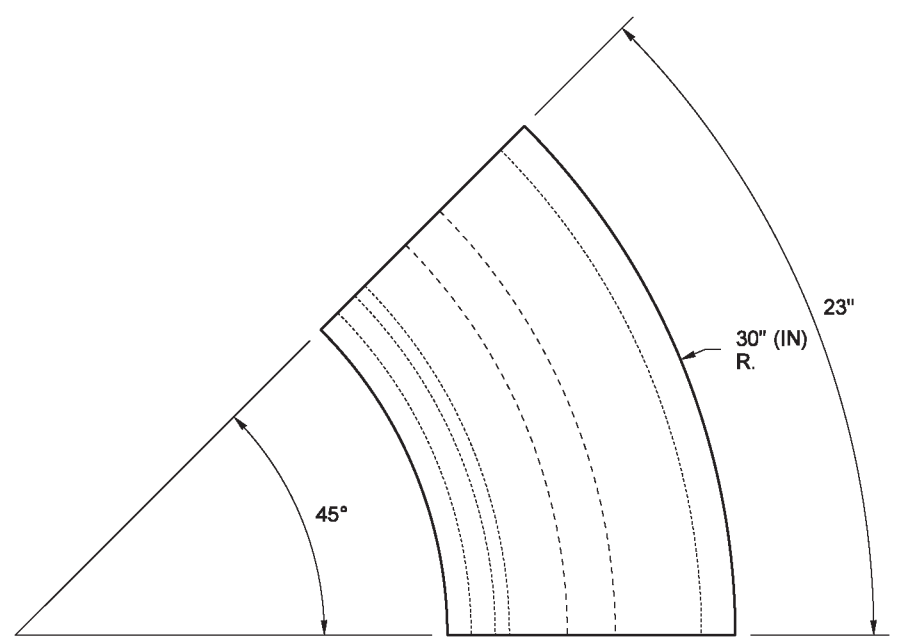

TOP VIEW

30" RADIUS BLOCK

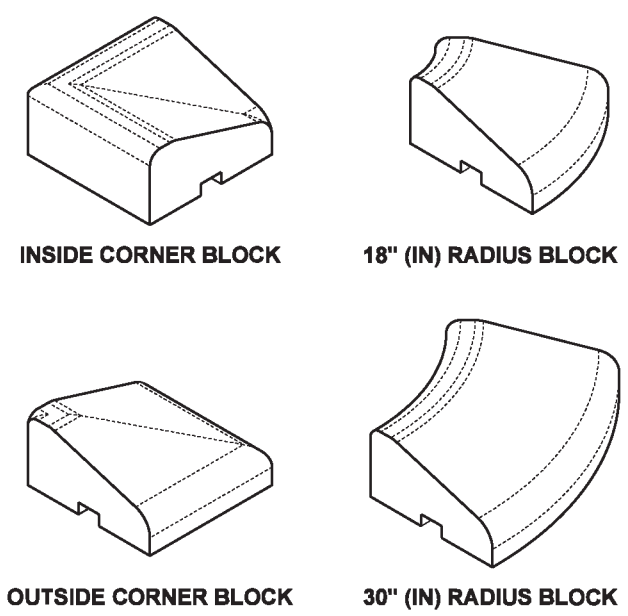

ISOMETRIC VIEWS

BAKOTICH, PASCO III
STATE OF WASHINGTON
24557
REGISTERED
PROFESSIONAL ENGINEER

Bakotich, Pasco
Apr 22 2014 9:18 AM

PRECAST SLOPED MOUNTABLE CURB

STANDARD PLAN F-10.62-02

SHEET 1 OF 2 SHEETS

APPROVED FOR PUBLICATION
Bakotich, Pasco
Apr 22 2014 9:18 AM

STATE DESIGN ENGINEER

Washington State Department of Transportation

DRAWN BY: BILL BERENS

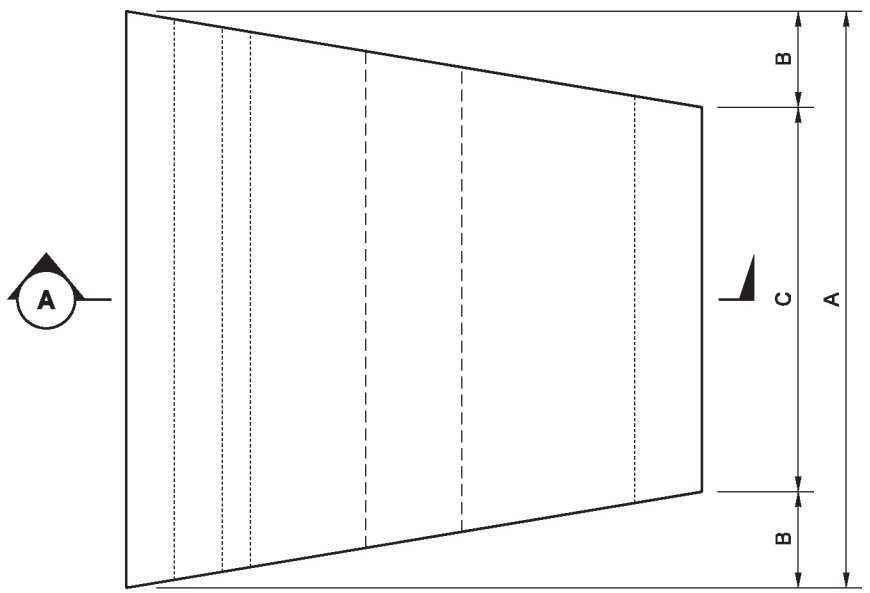

TOP VIEW

INSIDE RADIUS BLOCK

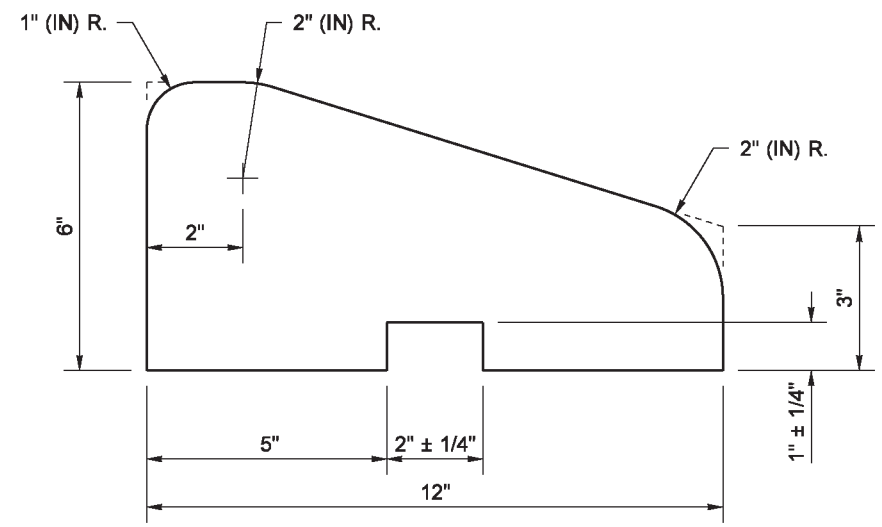

SECTION A

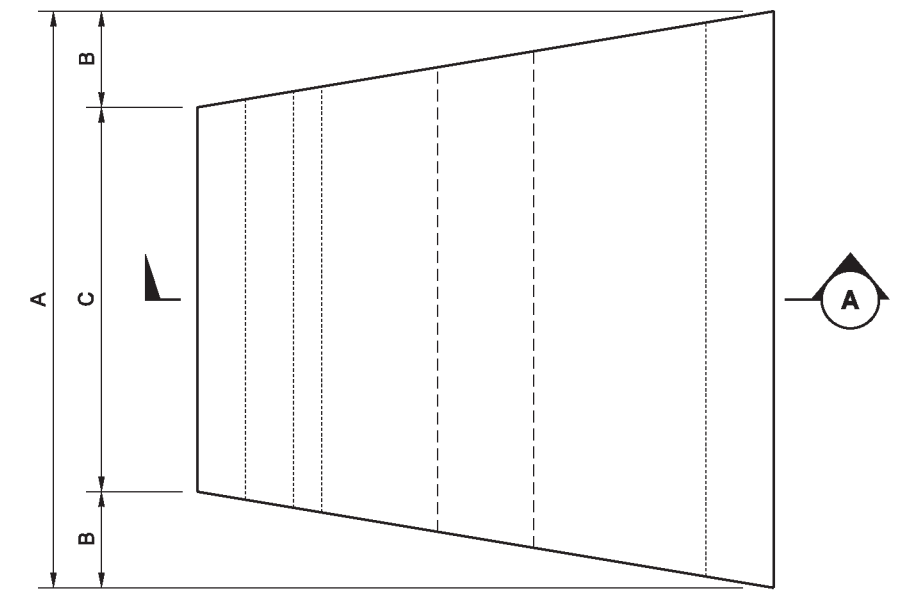

TOP VIEW

OUTSIDE RADIUS BLOCK

CURB RADIUS TABLE

CURB RADIUS	DIMENSION A	DIMENSION B	DIMENSION C
3'	12"	2"	8"
4' TO 5'	12"	1 1/2"	9"
6'	12"	1"	10"
7'	12"	7/8"	10 1/4"
8'	18"	1 1/8"	15 3/4"
9'	18"	1"	16"
10'	18"	7/8"	16 1/4"
11' TO 13'	18"	3/4"	16 1/2"
14' TO 15'	18"	5/8"	16 3/4"
16' TO 17'	24"	3/4"	22 1/2"
18' TO 22'	24"	5/8"	22 3/4"
23' TO 29'	24"	1/2"	23"
30' TO 34'	30"	1/2"	29"
35' TO 48'	30"	3/8"	29 1/4"
49' TO 60'	30"	1/4"	29 1/2"
OVER 60'	USE TANGENT BLOCK, SEE SHEET 1		

THIS TABLE LISTS THE CALCULATED DIMENSIONS FOR CASTING BLOCKS SUITABLE FOR CONSTRUCTING VARIOUS CURB RADII. CURVED BLOCKS, OR BLOCKS WITH DIFFERENT DIMENSIONS MAY BE ACCEPTABLE WITH PRIOR APPROVAL OF THE ENGINEER.

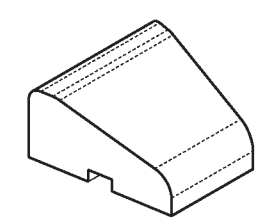

INSIDE RADIUS BLOCK

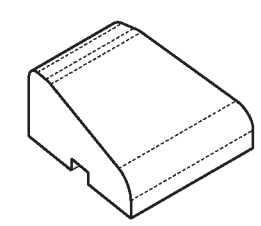

OUTSIDE RADIUS BLOCK

ISOMETRIC VIEWS

Bakotich, Pasco
Apr 22 2014 9:20 AM

PRECAST SLOPED MOUNTABLE CURB

STANDARD PLAN F-10.62-02

SHEET 2 OF 2 SHEETS

APPROVED FOR PUBLICATION
Bakotich, Pasco
Apr 22 2014 9:20 AM

STATE DESIGN ENGINEER

Washington State Department of Transportation

DRAWN BY: BILL BERENS

NOTES

1. The dual faced curb may be constructed by using two precast sloped mountable curbs (longitundinal halves) so long as the installation is consistent with the dimensions shown in the plan.
2. Reinforcing steel shall conform to **Standard Specification 9-07**.

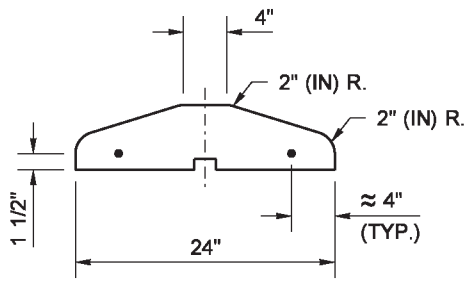

FRONT

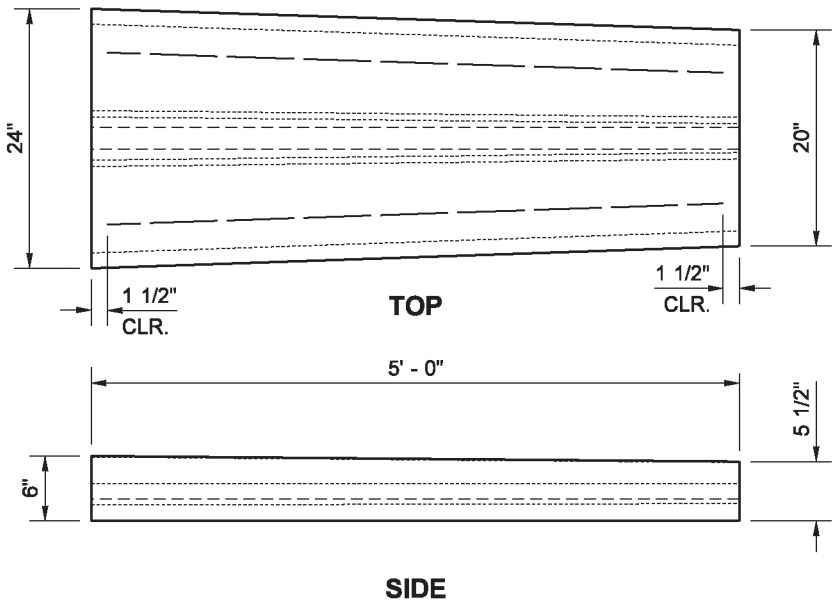

SIDE

24 × 20 TAPER BLOCK

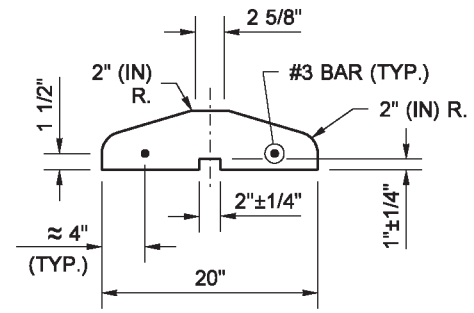

BACK

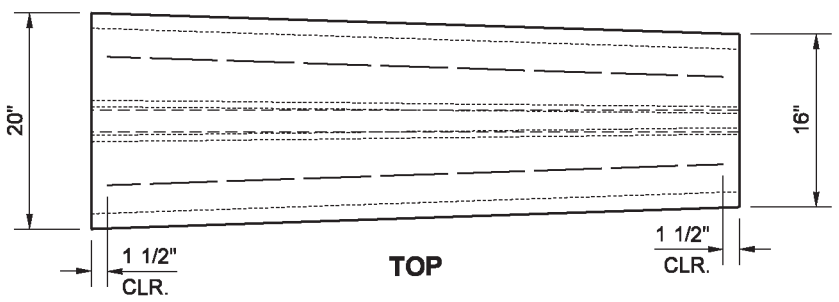

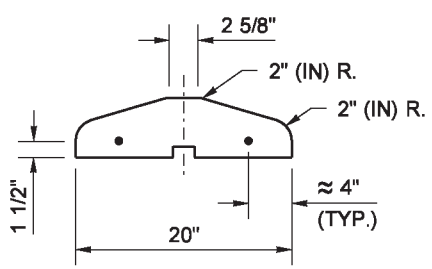

FRONT

SIDE

20 × 16 TAPER BLOCK

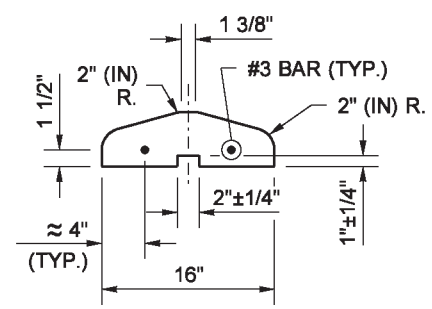

BACK

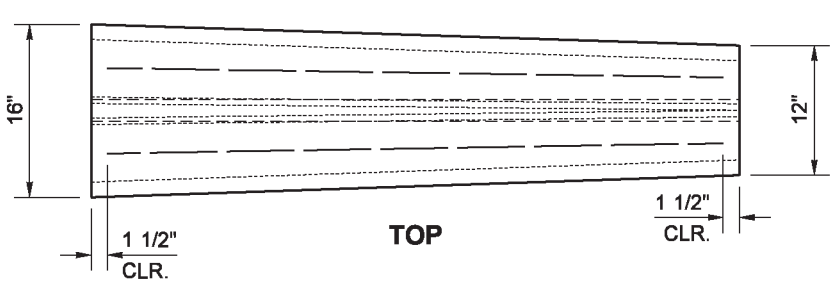

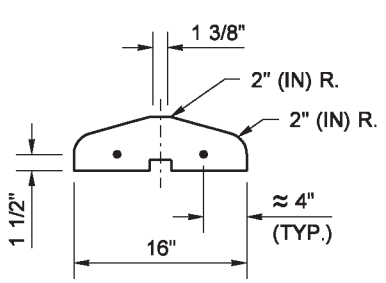

FRONT

SIDE

16 × 12 TAPER BLOCK

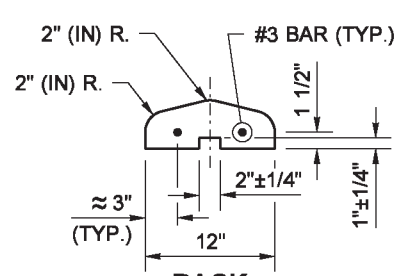

BACK

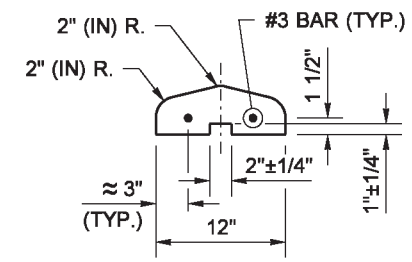

END

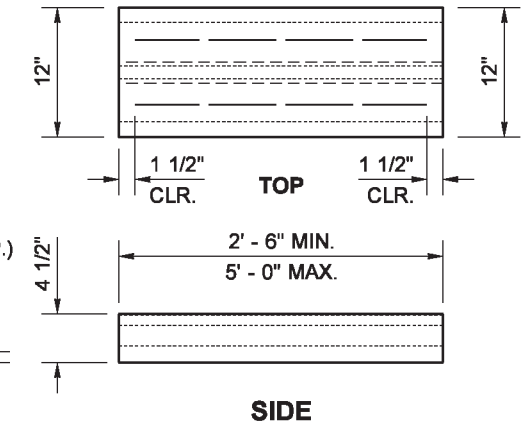

SIDE

DUAL SLOPED BLOCK

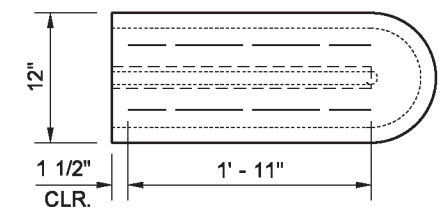

TOP

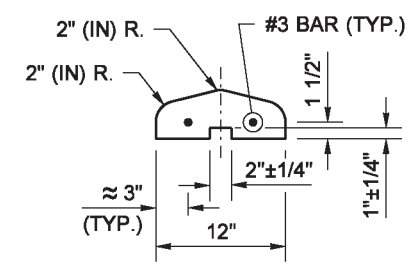

END

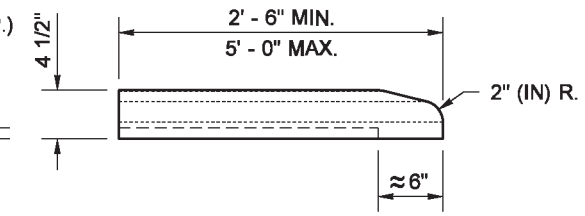

SIDE

NOSING BLOCK

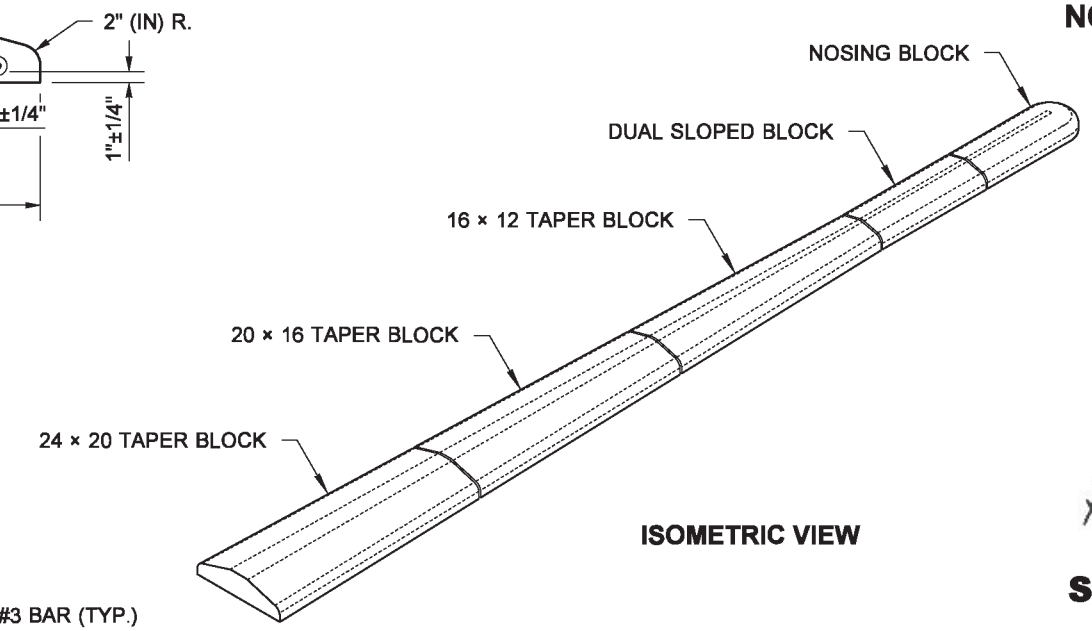

ISOMETRIC VIEW

Bakotich, Pasco
Apr 22 2014 9:21 AM

PRECAST DUAL FACED SLOPED MOUNTABLE CURB

STANDARD PLAN F-10.64-03

SHEET 1 OF 1 SHEET

APPROVED FOR PUBLICATION

Bakotich, Pasco
Apr 22 2014 9:21 AM

STATE DESIGN ENGINEER

Washington State Department of Transportation

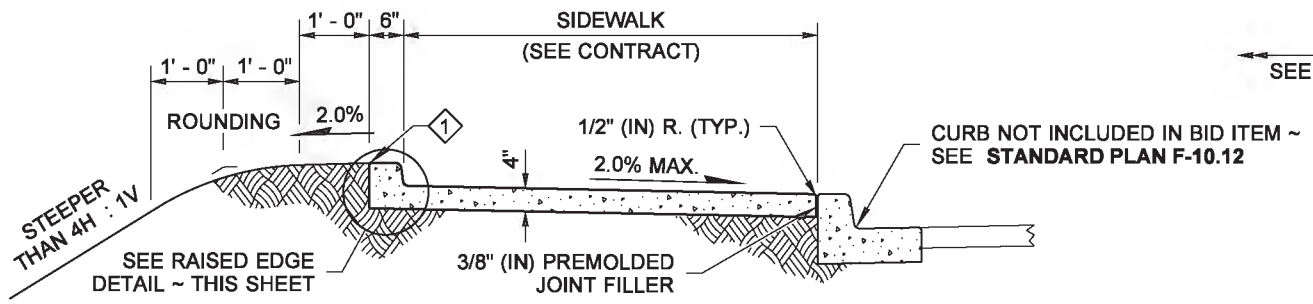

WITH RAISED EDGE

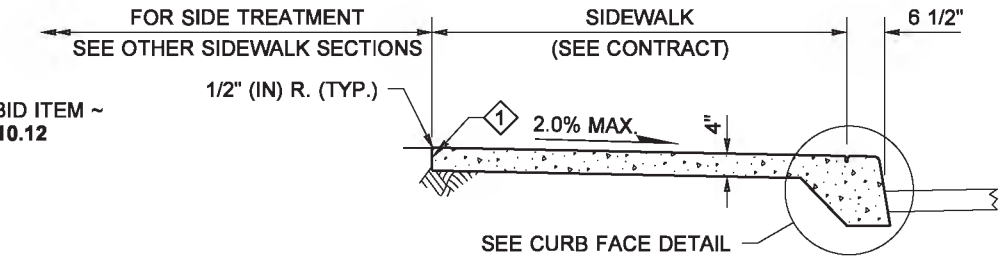

MONOLITHIC CEMENT CONCRETE CURB AND SIDEWALK

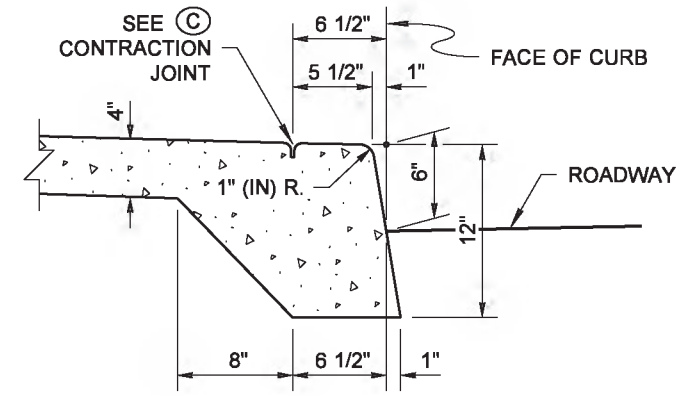

CURB FACE DETAIL

EXTEND SIDEWALK TRANSVERSE EXPANSION JOINTS TO INCLUDE CURB (FULL DEPTH)

1 FINISHED GRADE 1" (IN) BELOW TOP OF CONCRETE SURFACE

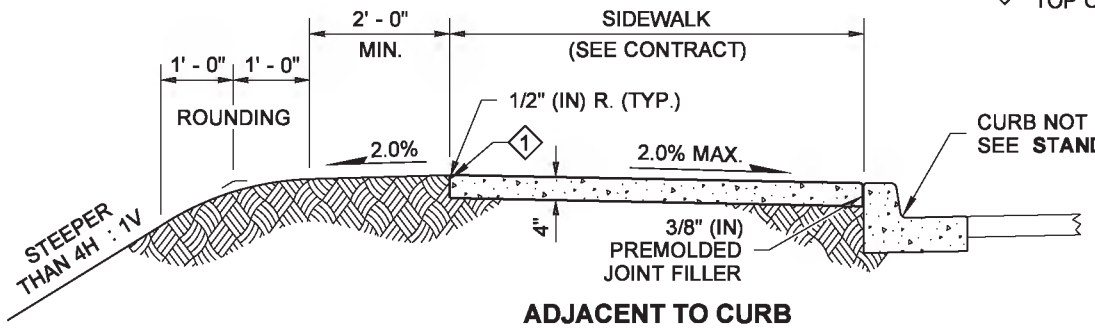

ADJACENT TO CURB
(STEEP FILL SLOPES)

NOTE

1. Four feet of the sidewalk width shall be the minimum pedestrian accessible route free of vertical and horizontal obstructions. Gratings, Access Covers, Junction Boxes, Cable Vaults, Pull Boxes and other appurtenances within the sidewalk must have slip resistant surfaces, be flush with surface, and match grade of the sidewalk.

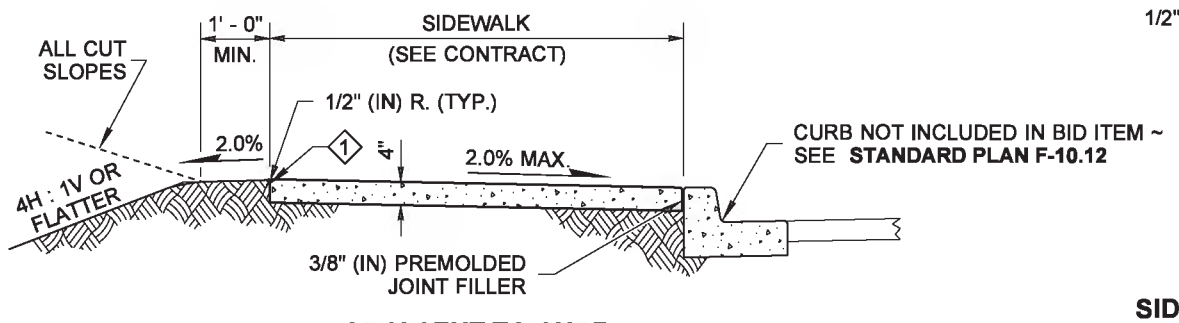

ADJACENT TO CURB

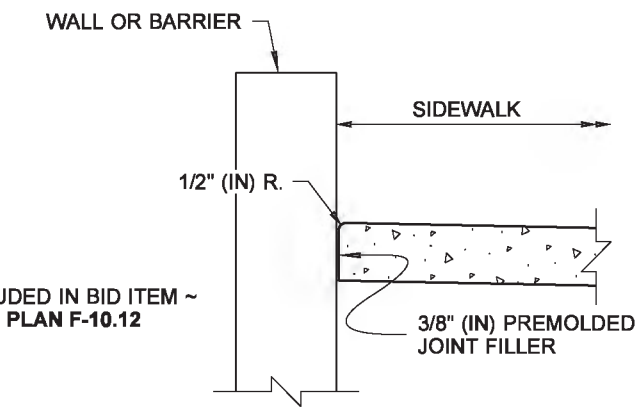

SIDEWALK ADJACENT TO WALL DETAIL

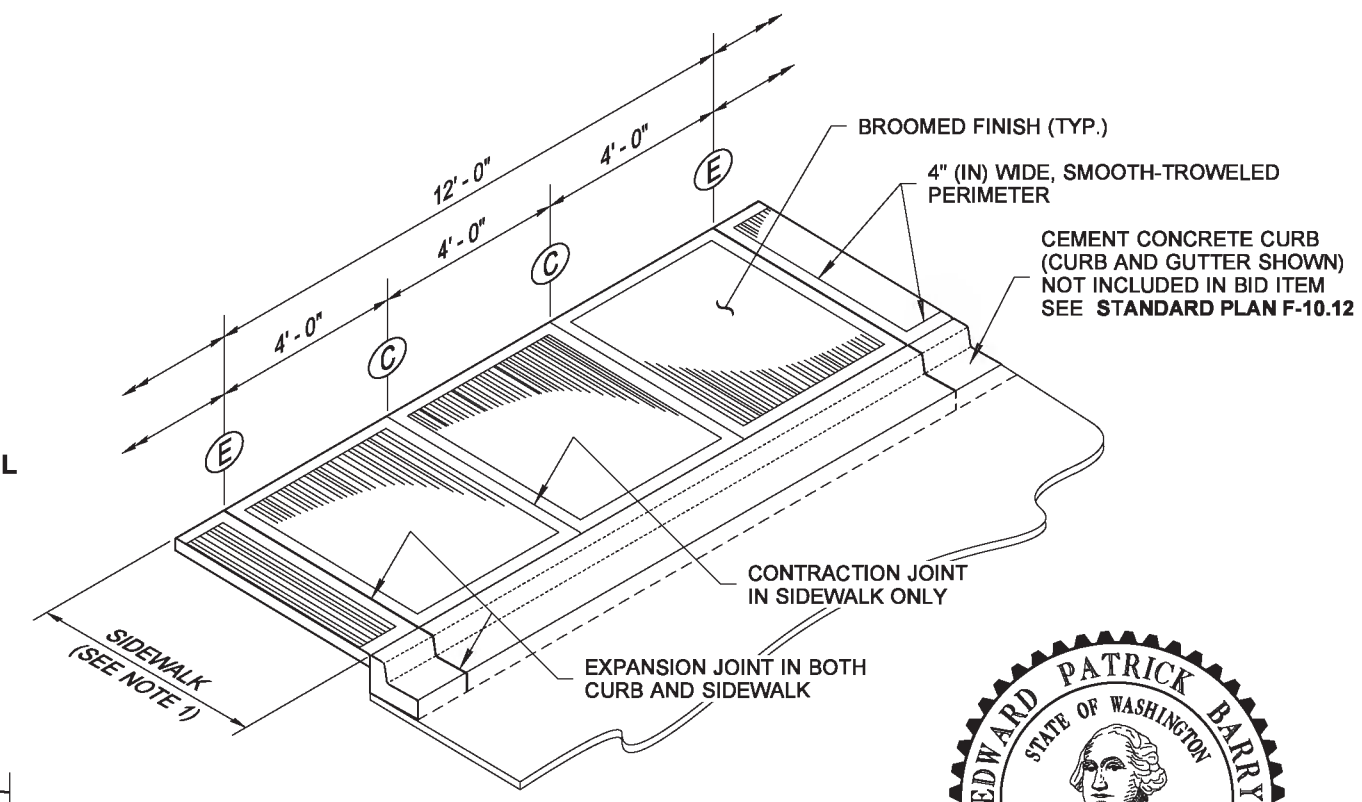

ISOMETRIC VIEW

JOINT AND FINISH DETAIL

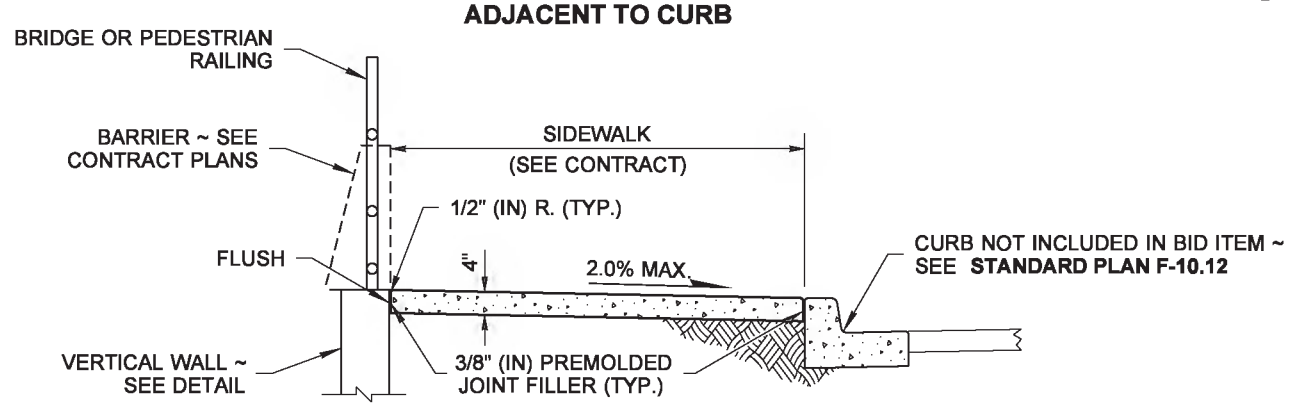

ADJACENT TO CURB AND RAILING OR WALL

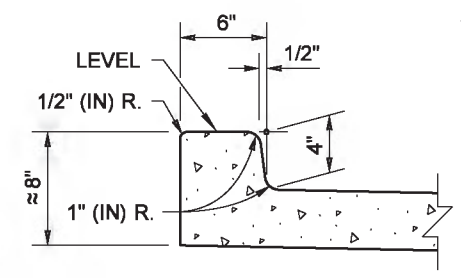

RAISED EDGE DETAIL

EXTEND SIDEWALK TRANSVERSE JOINTS TO INCLUDE RAISED EDGE

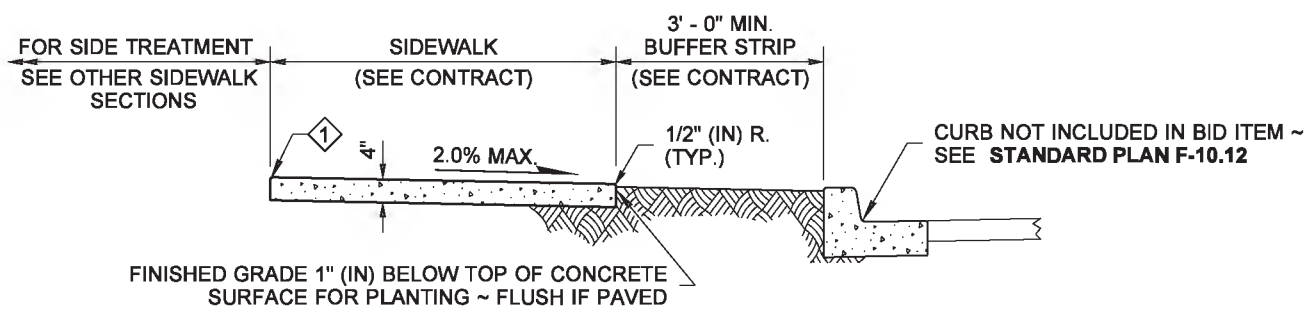

ADJACENT TO BUFFER STRIP

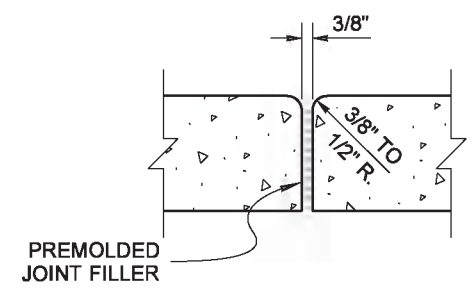

E EXPANSION JOINT

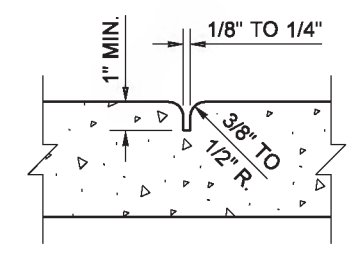

C CONTRACTION JOINT

Barry, Ed
May 6 2014 3:41 PM

CEMENT CONCRETE SIDEWALK

STANDARD PLAN F-30.10-03

SHEET 1 OF 1 SHEET

APPROVED FOR PUBLICATION
Bakotich, Pasco
Jun 11 2014 1:25 PM

STATE DESIGN ENGINEER

Washington State Department of Transportation

DRAWN BY: LISA CYFORD

This page left blank intentionally.

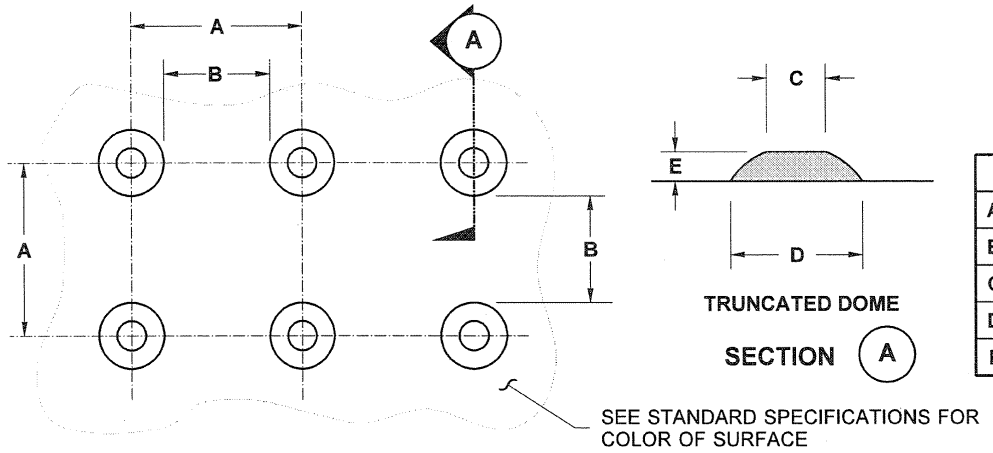

TRUNCATED DOME SPACING
SEE NOTE 3

TRUNCATED DOME
SECTION A

	MIN.	MAX.
A	1.60"	2.40"
B	0.65"	—
C	0.45"	0.90"
D	0.9"	1.40"
E	0.2"	0.2"

TRUNCATED DOME DETAILS

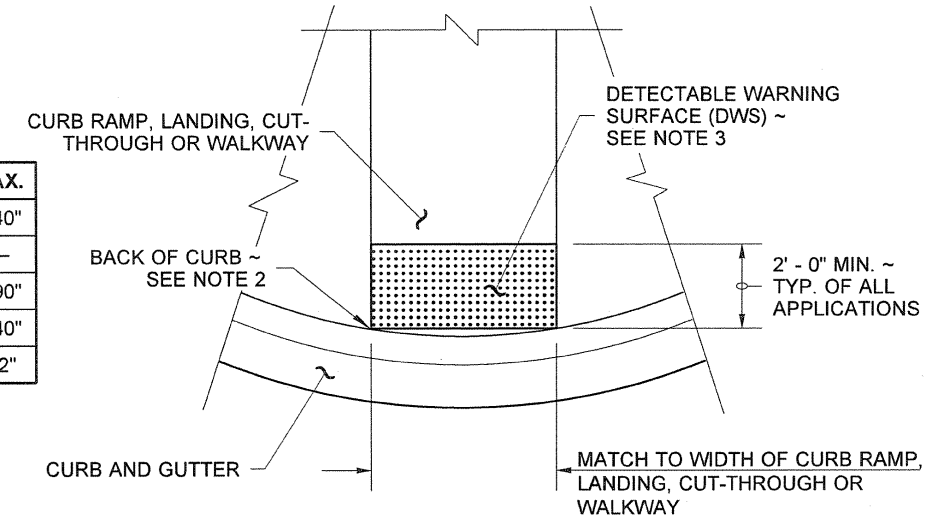

DETECTABLE WARNING SURFACE DETAIL

NOTES

1. The Detectable Warning Surface (DWS) shall extend the full width of the curb ramp (exclusive of flares) or the landing.
2. The Detectable Warning Surface shall be placed at the back of curb, and need not follow the radius.
3. The rows of truncated domes shall be aligned to be perpendicular to the grade break at the back of curb.
4. The rows of truncated domes shall be aligned to be parallel to the direction of travel.
5. If curb and gutter are not present, such as a shared-use path connection, the Detectable Warning Surface shall be placed at the pavement edge.
6. See **Standard Plans** for sidewalk and curb ramp details.
7. If a curb ramp is required, the location of the Detectable Warning Surface must be at the bottom of the ramp and within the required distance from the rail.
8. When the grade break between the curb ramp and the landing is less than or equal to 5 ft. from the back of curb at all points, place the Detectable Warning Surface on the bottom of the curb ramp.

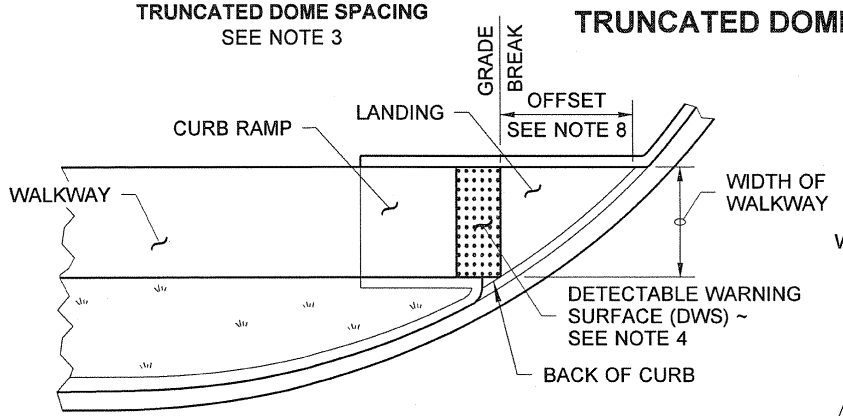

SINGLE DIRECTION CURB RAMP
(GRADE BREAK BETWEEN CURB AND LANDING ≤ 5 FT. FROM BACK OF CURB)
(SEE NOTE 6)

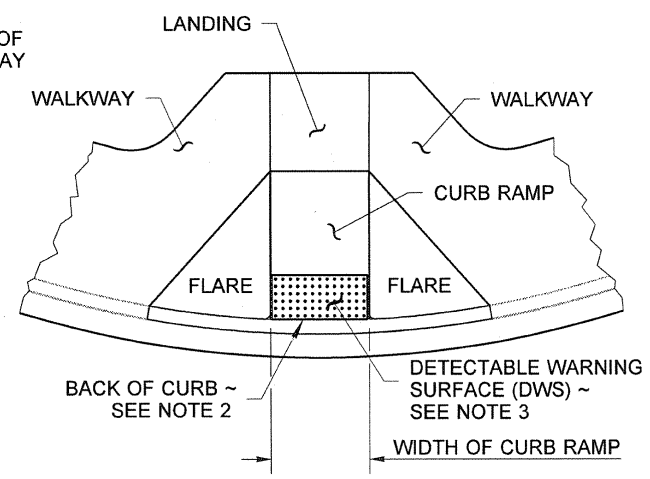

PERPENDICULAR CURB RAMP
(SEE NOTE 6)

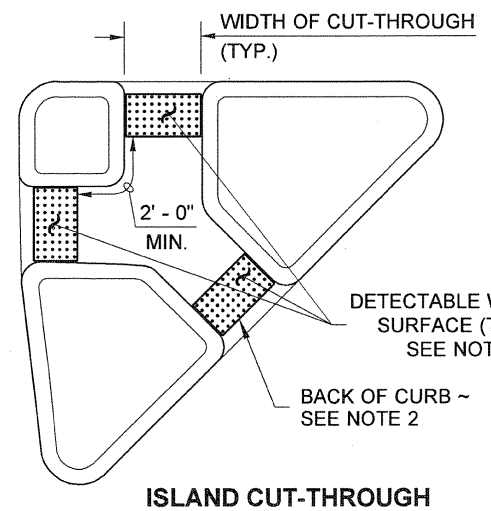

ISLAND CUT-THROUGH

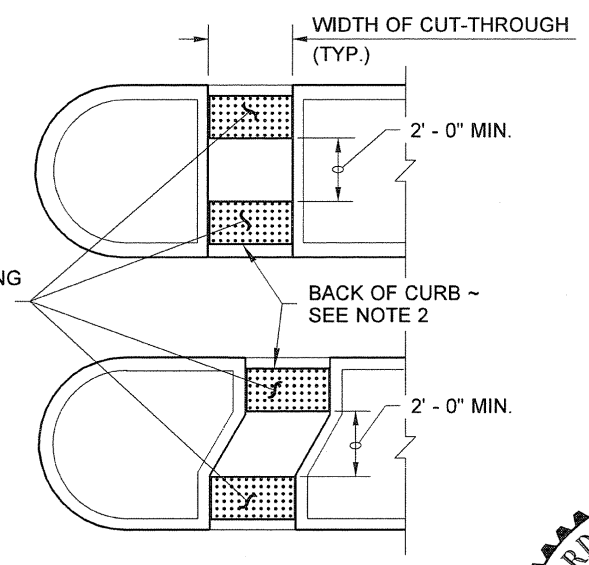

MEDIAN CUT-THROUGH

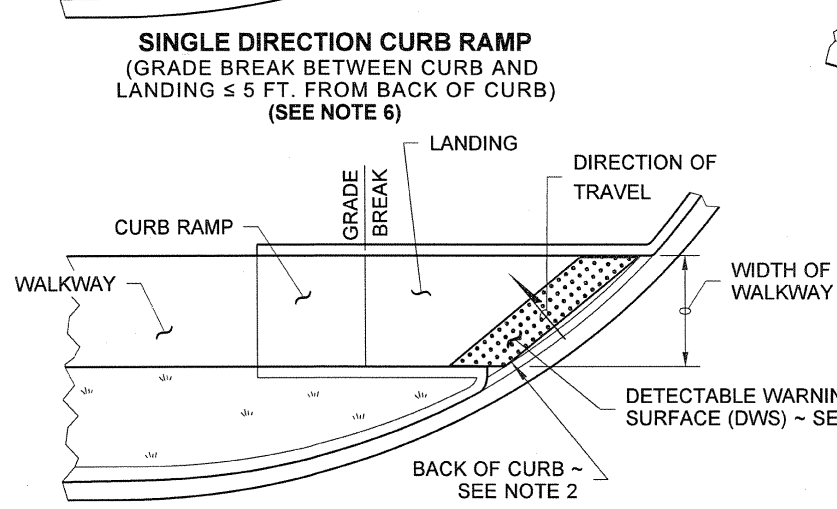

SINGLE DIRECTION CURB RAMP
(GRADE BREAK BETWEEN CURB AND LANDING > 5 FT. FROM BACK OF CURB)
(SEE NOTE 6)

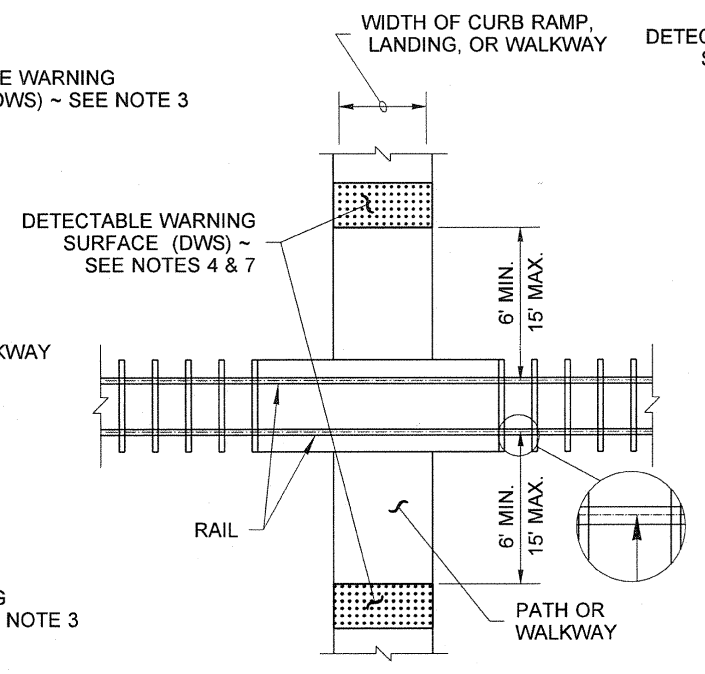

PEDESTRIAN RAILROAD CROSSING

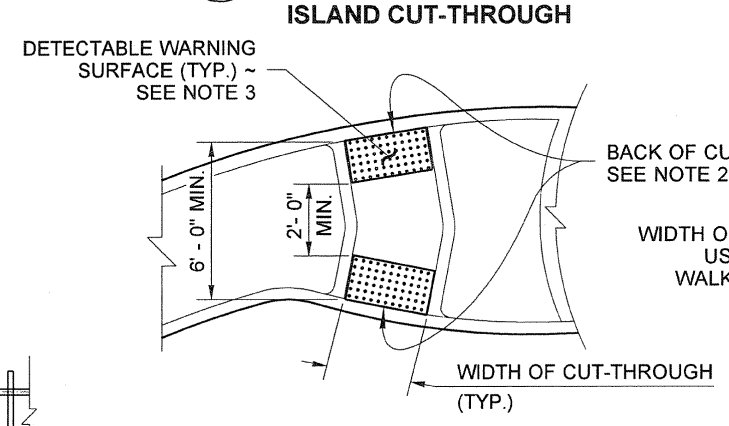

ROUNDABOUT SPLITTER ISLAND

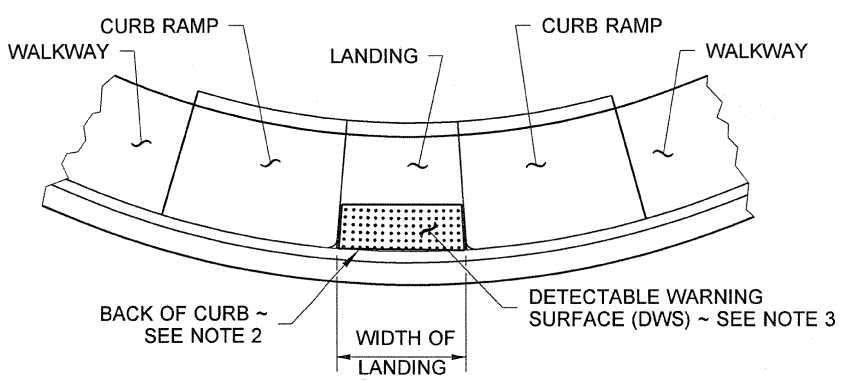

PARALLEL CURB RAMP
(SEE NOTE 6)

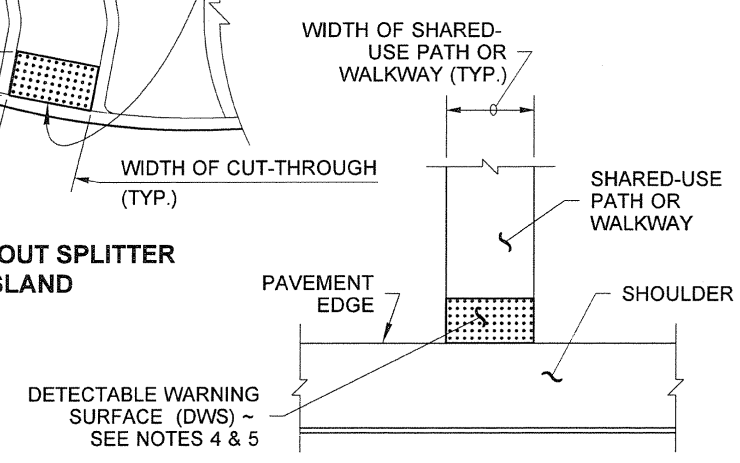

SHARED-USE PATH CONNECTION

PLACEMENT GUIDELINES

6·18·2012

DETECTABLE WARNING SURFACE

STANDARD PLAN F-45.10-01

SHEET 1 OF 1 SHEET

APPROVED FOR PUBLICATION

STATE DESIGN ENGINEER — DATE 6/21/12

Washington State Department of Transportation

DRAWN BY: FERN LIDDELL

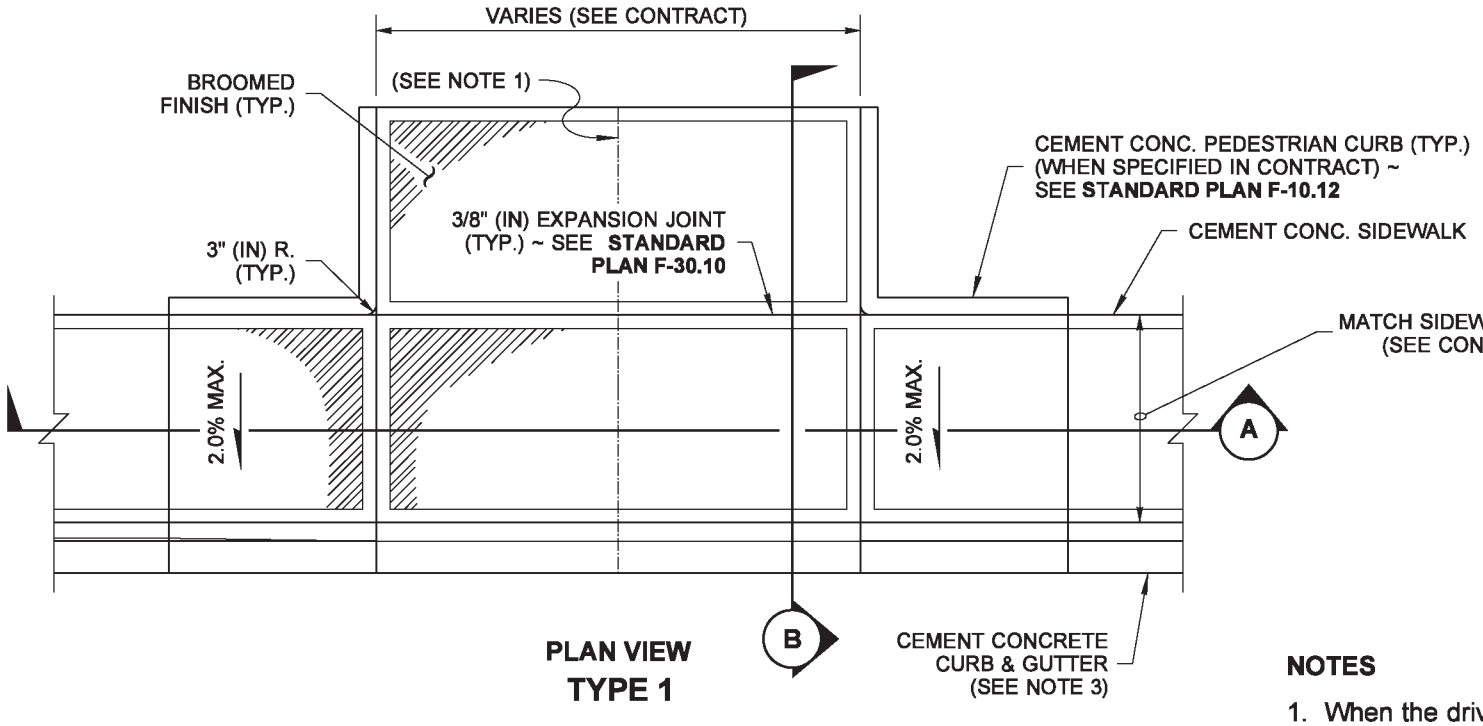

PLAN VIEW
TYPE 1

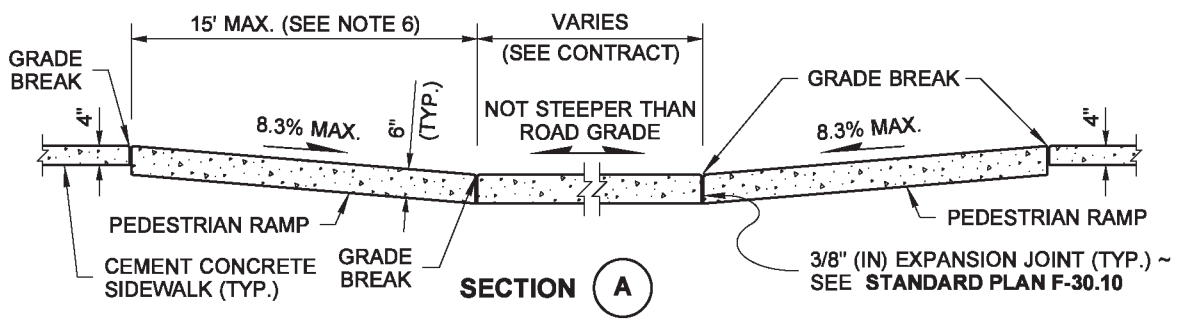

SECTION A

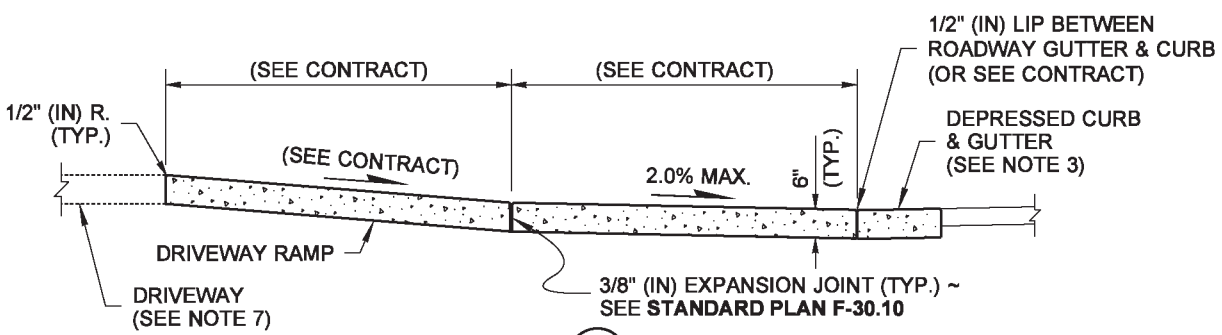

SECTION B

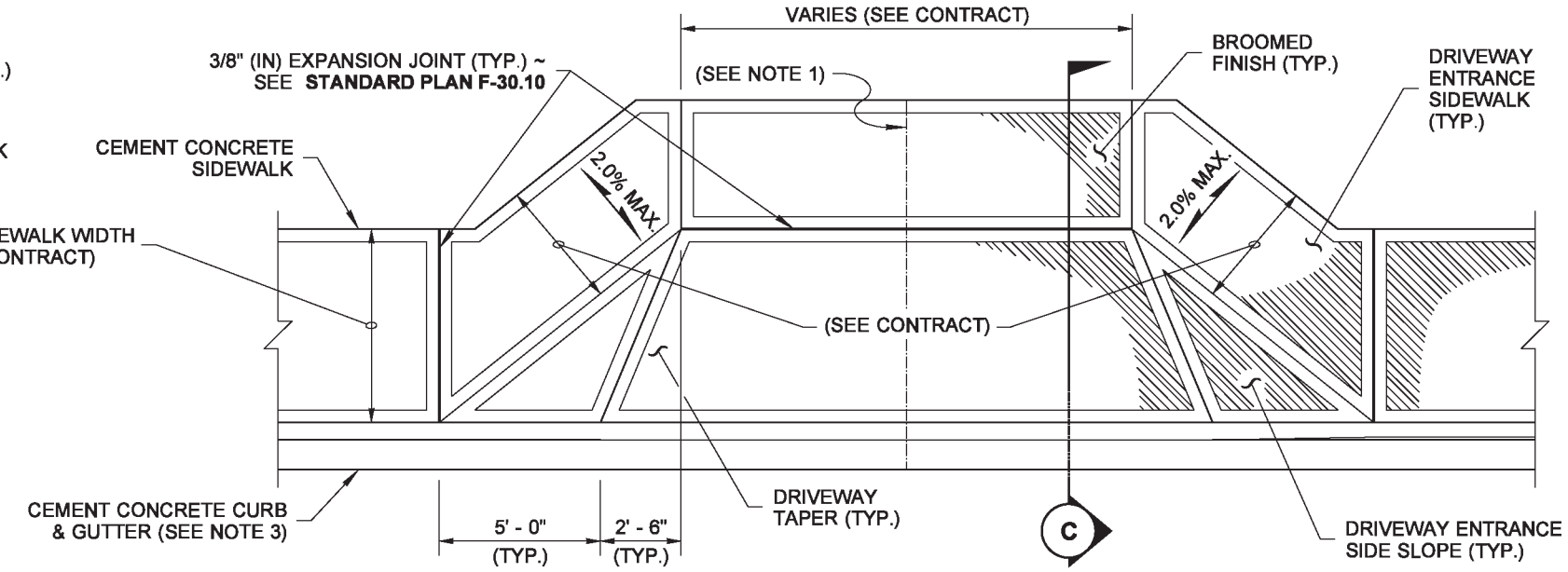

PLAN VIEW
TYPE 2

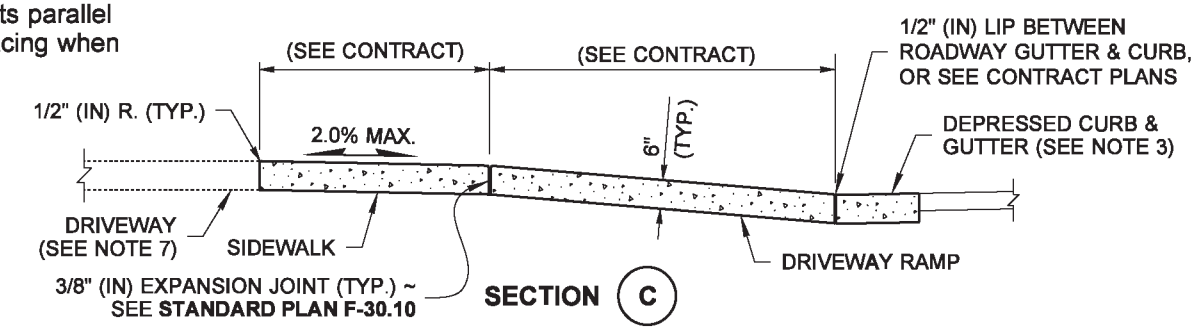

SECTION C

NOTES

1. When the driveway width exceeds 15' (ft), construct a full depth expansion joint with 3/8" (in) joint filler along the driveway centerline. See **Standard Plan F-30.10.** Construct expansion joints parallel with the centerline as required at 15' (ft) maximum spacing when driveway widths exceed 30' (ft).
2. See **Standard Plan F-30.10** for sidewalk details.
3. Curb and gutter shown; see the Contract Plans for the curb design specified. See **Standard Plan F-10.12** for Curb Details.
4. Avoid placing drainage structures, junction boxes or other obstructions in front of driveway entrances.
5. Where "GRADE BREAK" is called out, the entire length of the line between the two adjacent surface planes shall be flush.
6. The curb ramp maximum running slope shall not require the ramp length to exceed 15' (ft) to avoid chasing the slope indefinitely when connecting to steep grades. When applying the 15' (ft) max. length, the running slope of the curb ramp shall be as flat as feasable.
7. Beyond limits shown. Pay item does not include driveway. See Contract Plans.

LEGEND

SLOPE IN EITHER DIRECTION

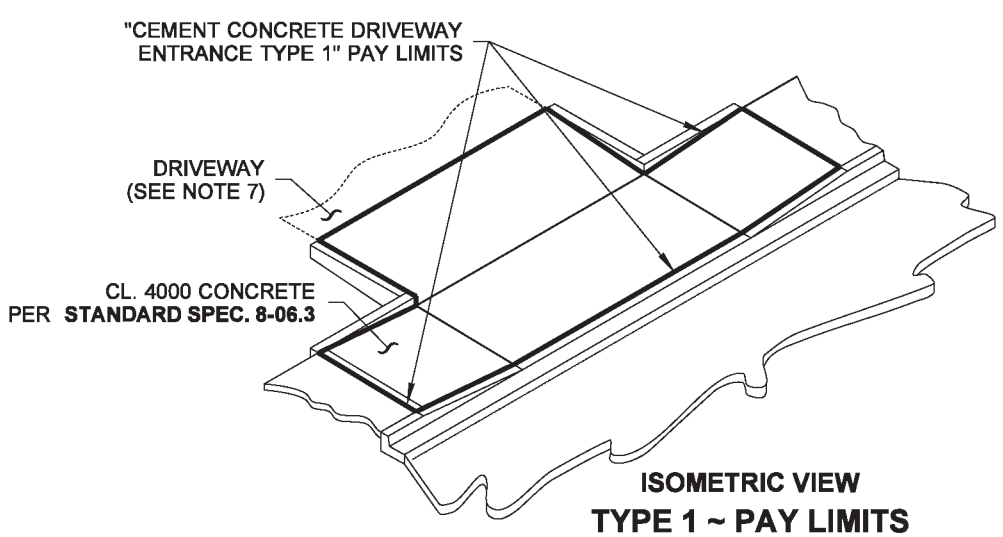

ISOMETRIC VIEW
TYPE 1 ~ PAY LIMITS

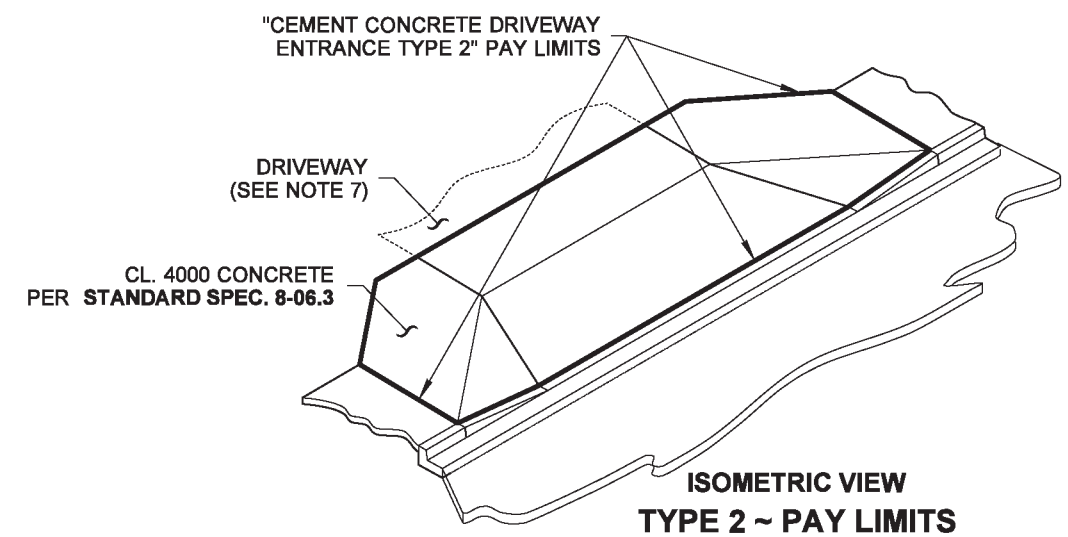

ISOMETRIC VIEW
TYPE 2 ~ PAY LIMITS

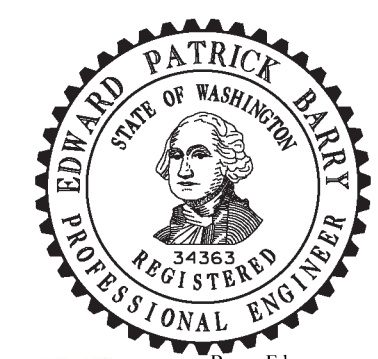

Barry, Ed
May 6 2014 4:02 PM

CEMENT CONCRETE DRIVEWAY ENTRANCE TYPES 1, 2, 3, & 4
STANDARD PLAN F-80.10-03

SHEET 1 OF 2 SHEETS

APPROVED FOR PUBLICATION
Bakotich, Pasco
Jun 11 2014 1:26 PM
STATE DESIGN ENGINEER
Washington State Department of Transportation

DRAWN BY: FERN LIDDELL

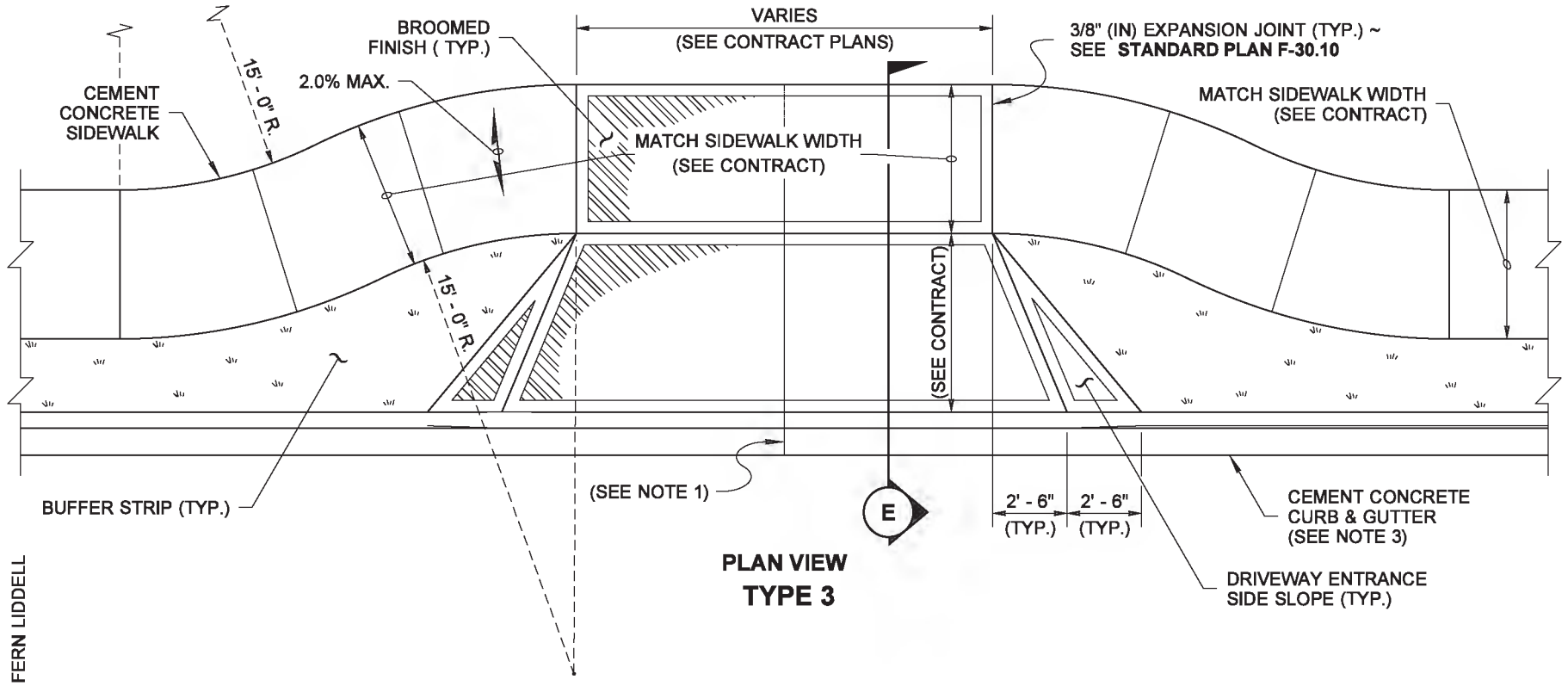

PLAN VIEW
TYPE 3

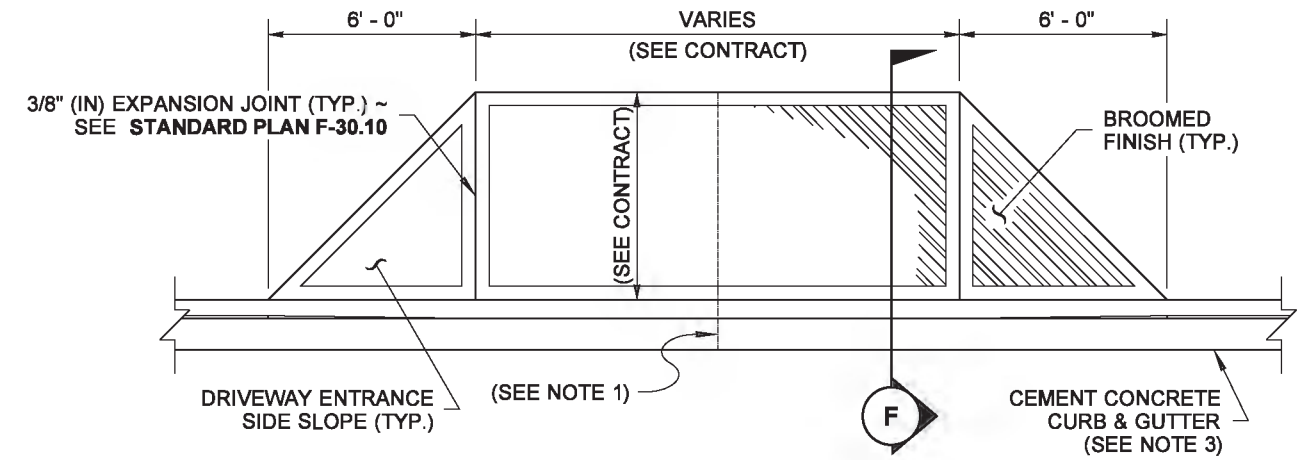

PLAN VIEW
TYPE 4*

*THIS ENTRANCE TYPE SHALL NOT BE USED ALONG A PEDESTRIAN ROUTE

DRAWN BY: FERN LIDDELL

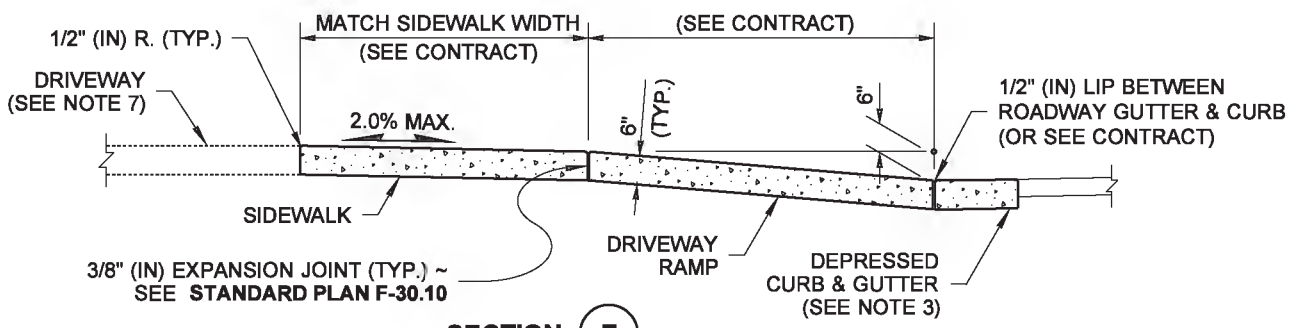

SECTION E

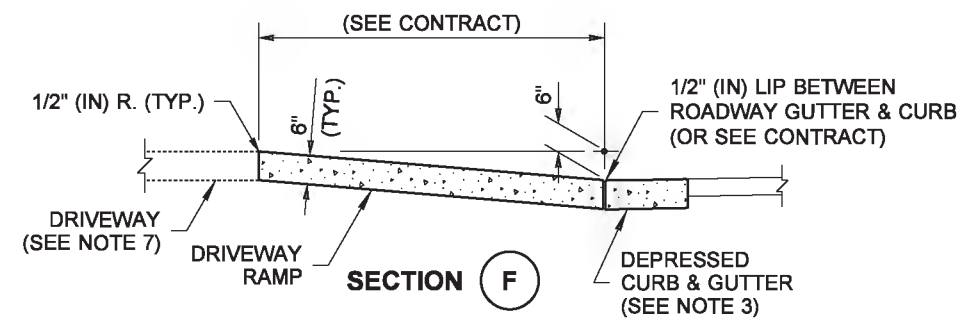

SECTION F

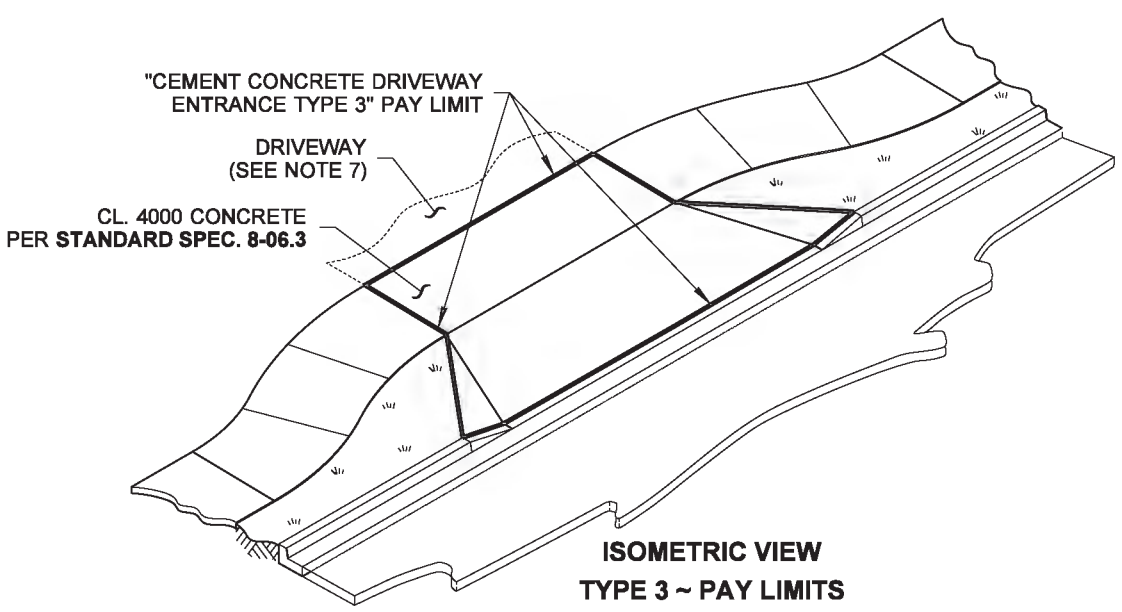

ISOMETRIC VIEW
TYPE 3 ~ PAY LIMITS

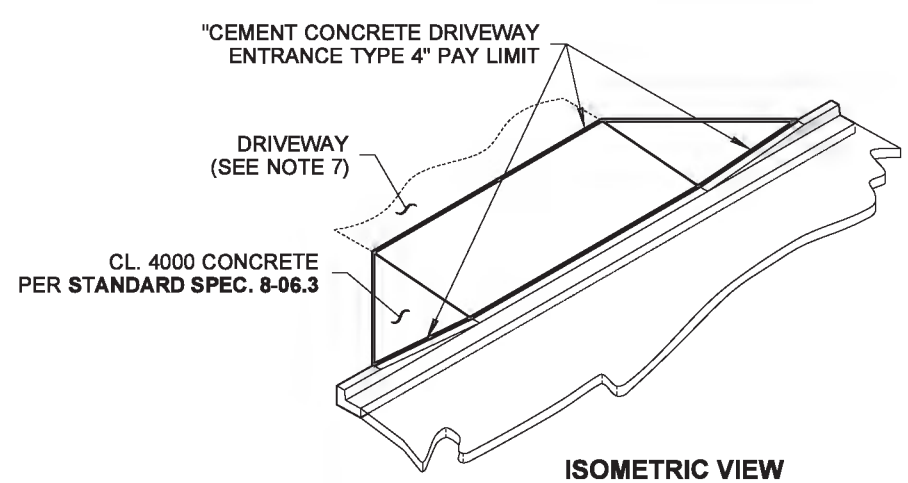

ISOMETRIC VIEW
TYPE 4 ~ PAY LIMITS

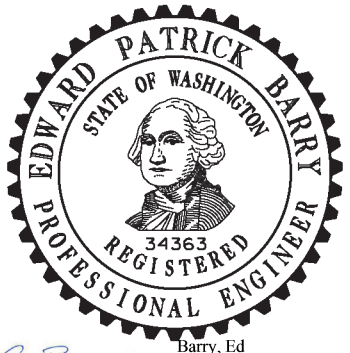

Barry, Ed
May 6 2014 4:03 PM

CEMENT CONCRETE DRIVEWAY ENTRANCE TYPES 1, 2, 3, & 4

STANDARD PLAN F-80.10-03

SHEET 2 OF 2 SHEETS

APPROVED FOR PUBLICATION
Bakotich, Pasco
Jun 11 2014 1:27 PM

STATE DESIGN ENGINEER

Washington State Department of Transportation

This page left blank intentionally.

DRAWN BY: MARK SUJKA

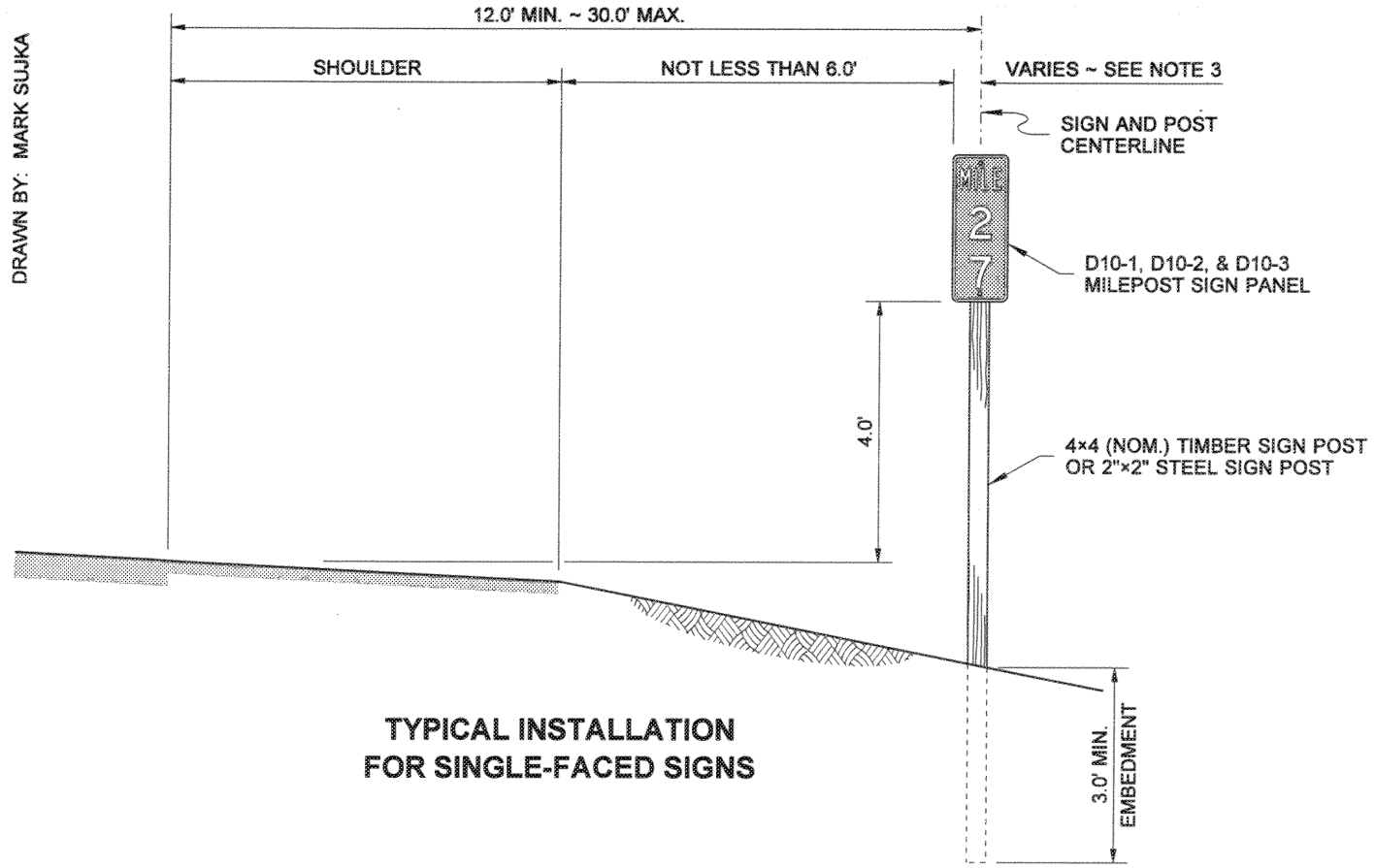

TYPICAL INSTALLATION FOR SINGLE-FACED SIGNS

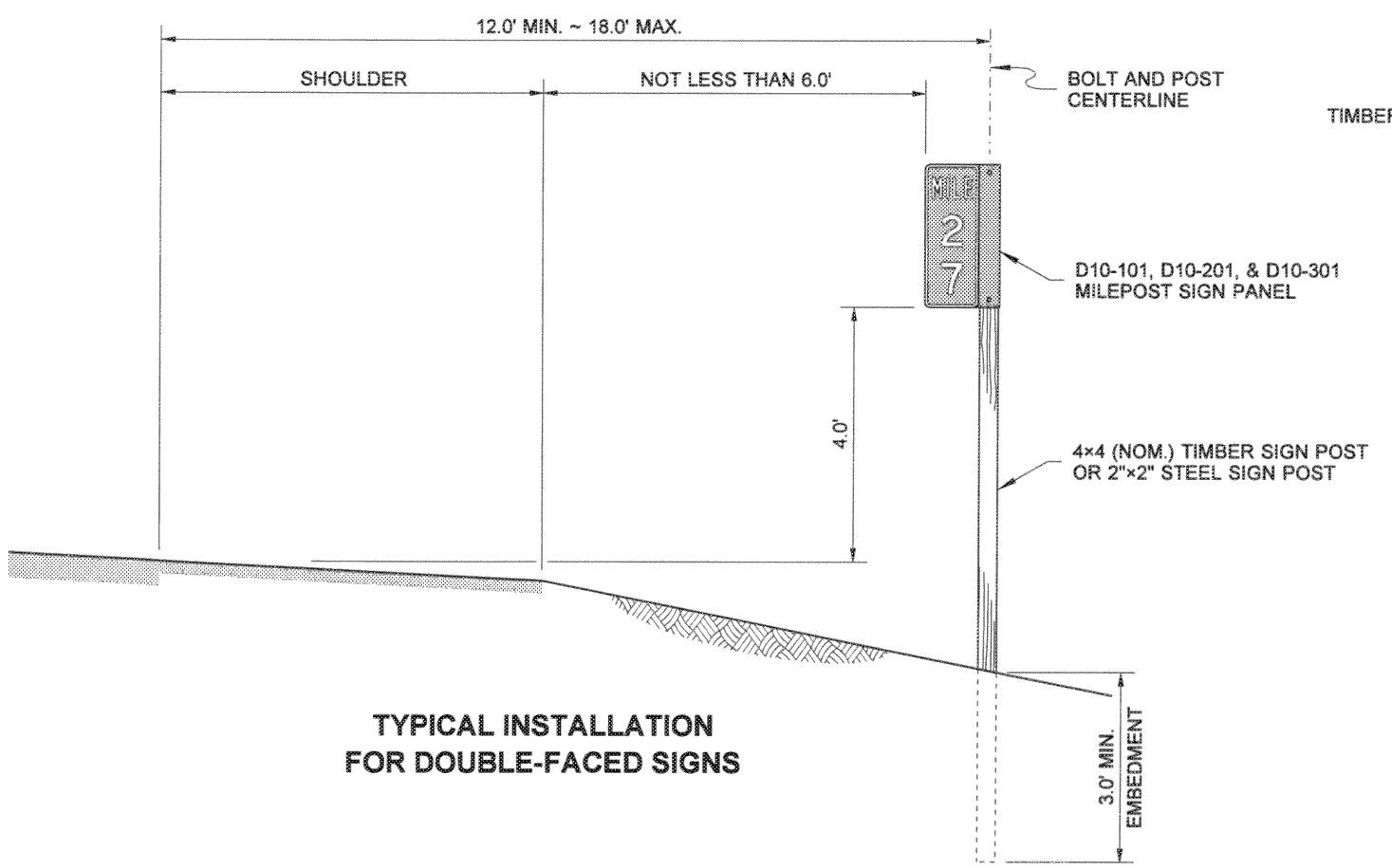

TYPICAL INSTALLATION FOR DOUBLE-FACED SIGNS

NOTES

1. Attach the Milepost Sign Panel to a timber sign post using two 3/8" diameter lag bolts, with washers; see Standard Plan G-22.10. For post and attachment details on steel sign posts, see Standard Plan G-24.50, Type ST-1.
2. Provide Supplemental Plaques and install on Mileposts where indicated in the Contract.
3. See the Contract for the width of the Single-Faced Milepost Signs required (10" or 12").
4. For lateral installations behind traffic barrier, 6" high curbs, and ditches, see Standard Plan G-20.10.
5. Install at the locations shown in the Contract. Installation may be moved 50 feet or less (longitudinally) before or after the contract location if obstructions are encountered, or to utilize the post of another sign. Mileposts that cannot be placed within this degree of accuracy shall be omitted entirely.

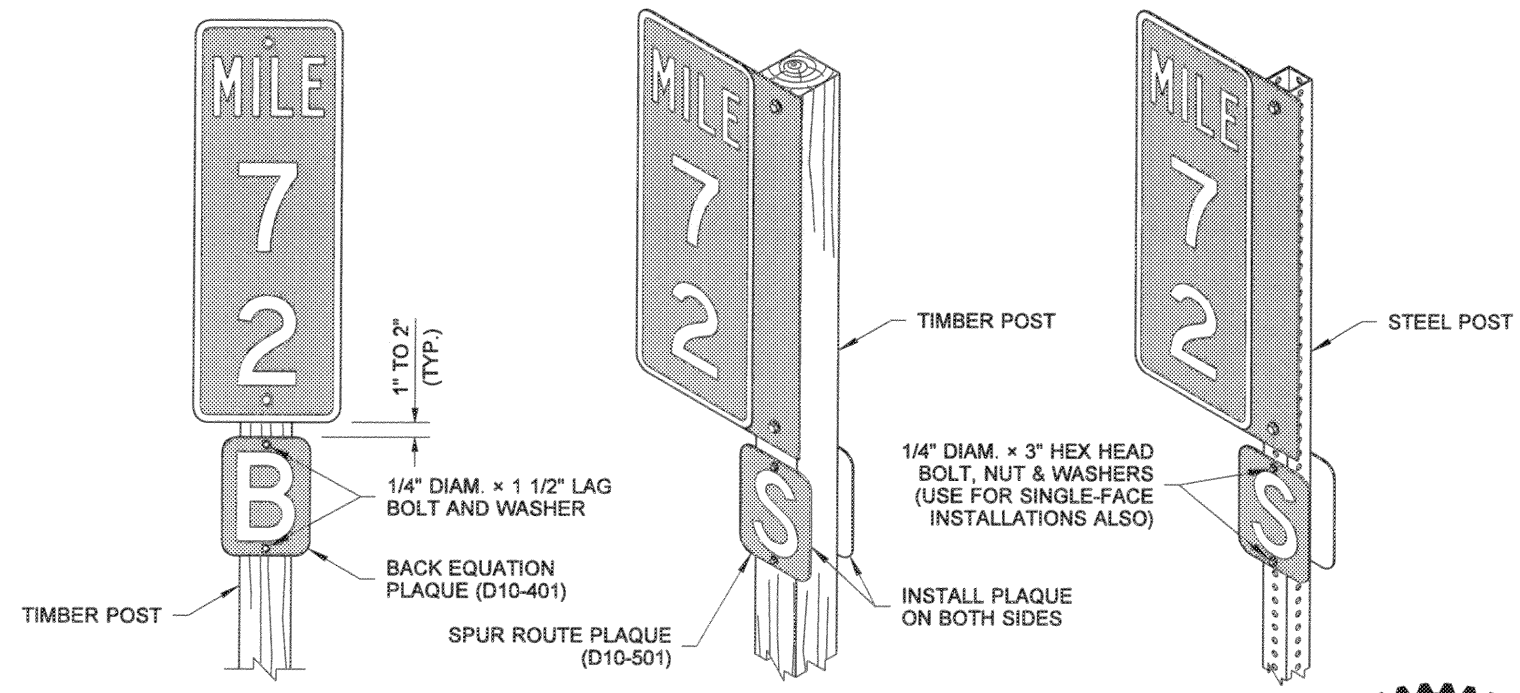

SINGLE-FACED SIGN **DOUBLE-FACED SIGN**

SUPPLEMENTAL PLAQUE ~ MOUNTING DETAIL

SEE NOTE 2

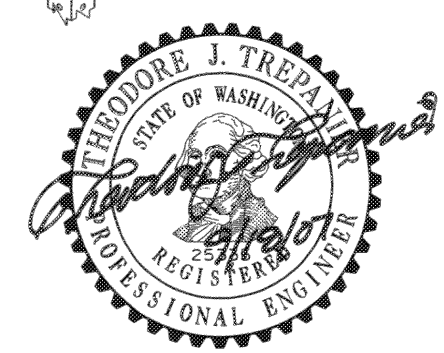

EXPIRES AUGUST 9, 2009

MILEPOST

STANDARD PLAN G-10.10-00

SHEET 1 OF 1 SHEET

APPROVED FOR PUBLICATION

STATE DESIGN ENGINEER 9/20/07 DATE

Washington State Department of Transportation

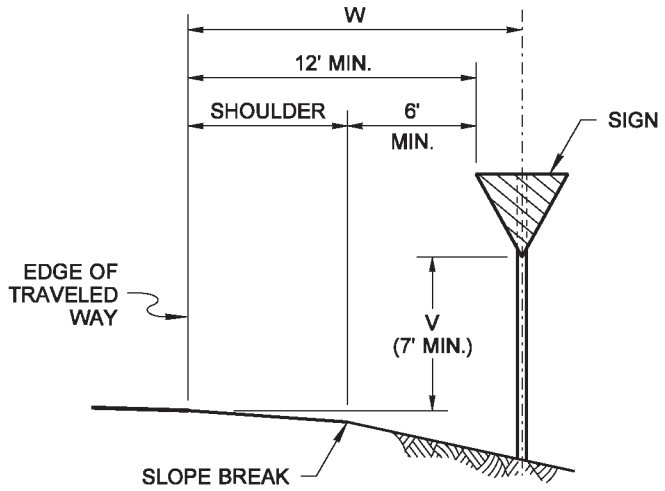

SIGN INSTALLATION IN FILL SECTION

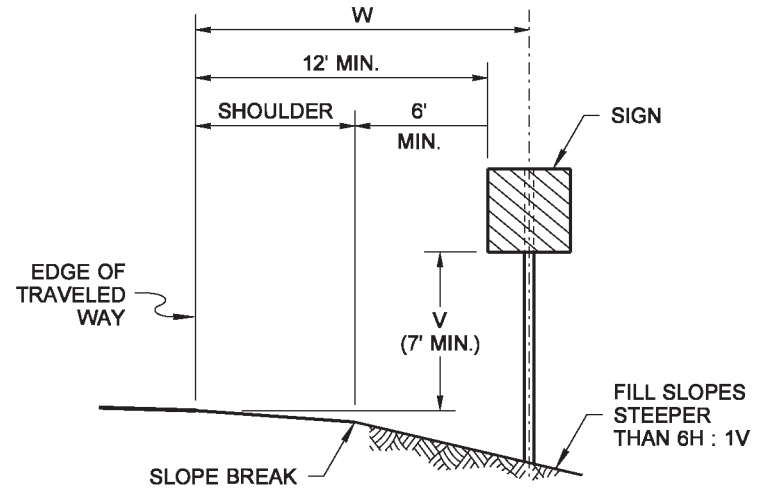

SIGN INSTALLATION ON STEEP FILL SLOPES

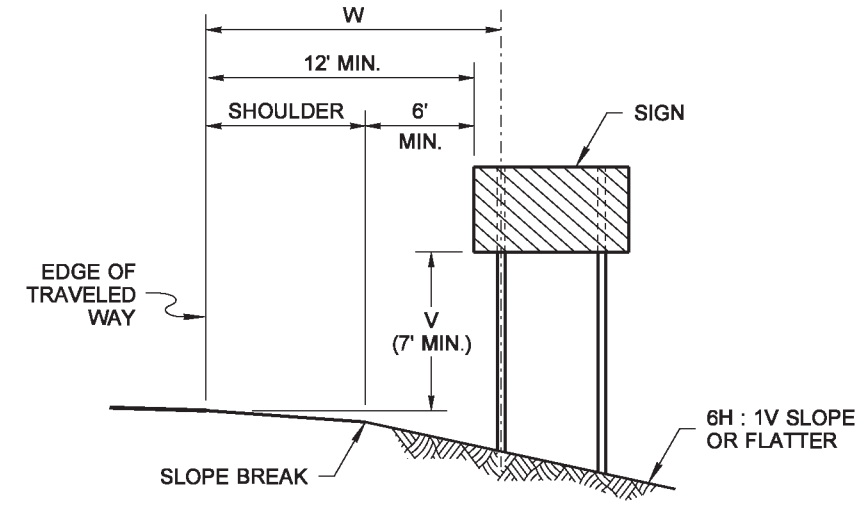

MULTIPLE SIGN POST INSTALLATION IN FILL SECTION

NOTES

1. Refer to the Sign Specification Sheet of the Contract for the 'V' and 'W' distances.
2. The minimum vertical distance from the bottom of the sign to the ground shall not be less than 7' (ft) for signs located within the Design Clear Zone.

DRAWN BY: MARK SUJKA

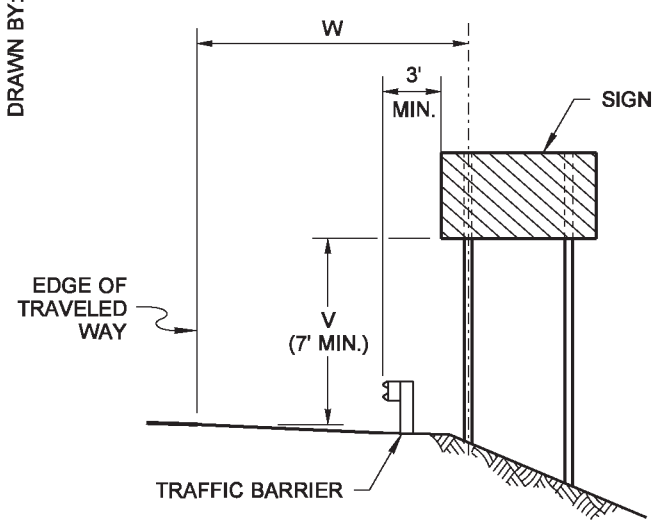

SIGN INSTALLATION BEHIND TRAFFIC BARRIER

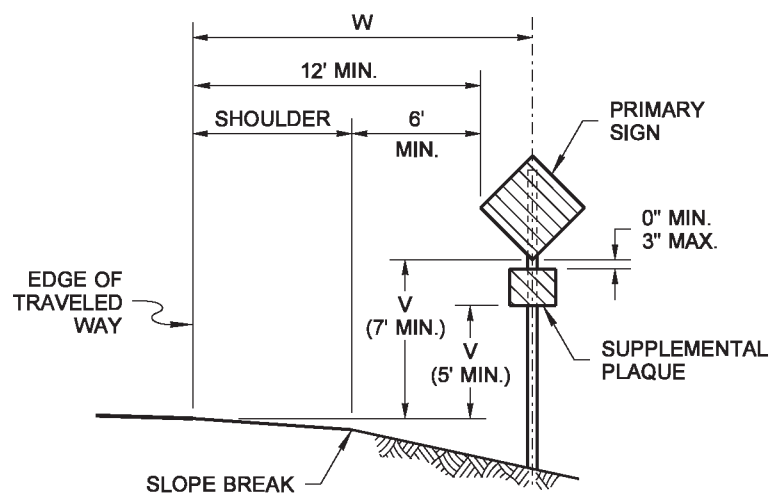

SIGN WITH SUPPLEMENTAL PLAQUE INSTALLATION IN FILL SECTION

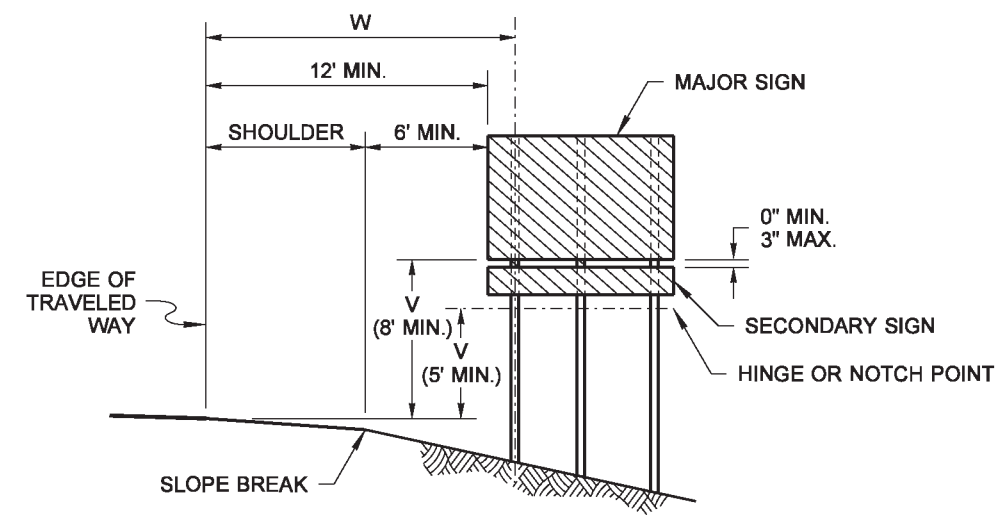

GUIDE OR DIRECTIONAL SIGN WITH SECONDARY SIGN INSTALLATION ON EXPRESSWAYS AND FREEWAYS

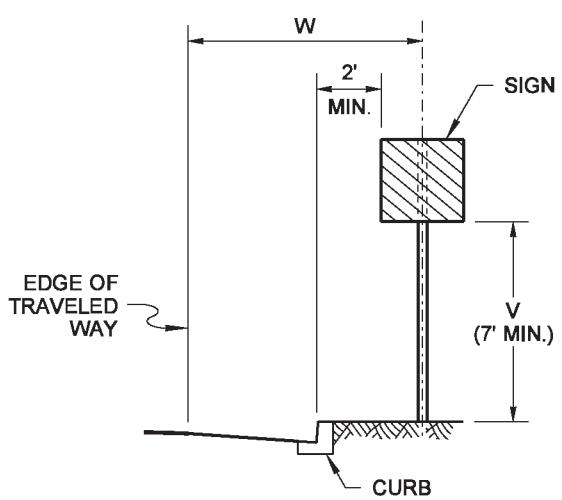

SIGN INSTALLATION IN CURB SECTION

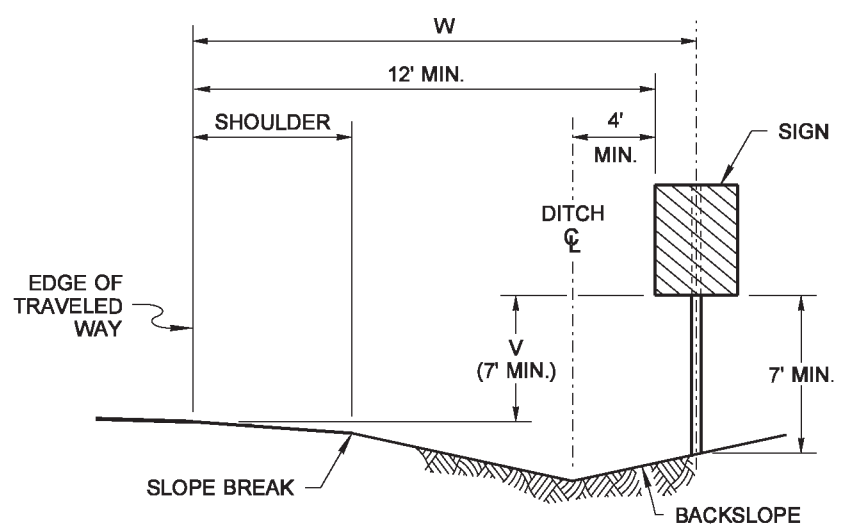

SIGN INSTALLATION IN DITCH SECTION

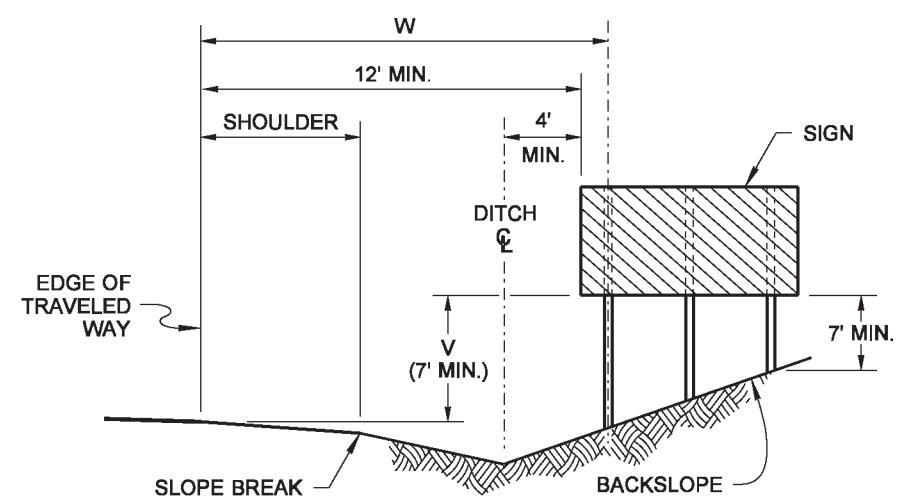

MULTIPLE SIGN POST INSTALLATION IN DITCH SECTION

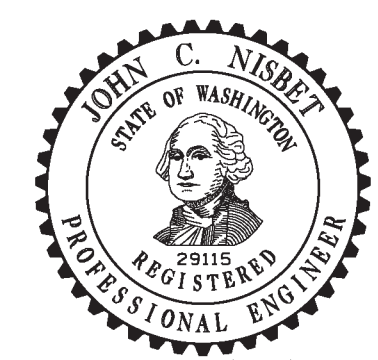

Nisbet, John
Jun 11 2014 8:46 AM

GROUND-MOUNTED SIGN PLACEMENT

STANDARD PLAN G-20.10-01

SHEET 1 OF 1 SHEET

APPROVED FOR PUBLICATION
Bakotich, Pasco
Jun 11 2014 1:02 PM
STATE DESIGN ENGINEER

Washington State Department of Transportation

DRAWN BY: BILL BERENS

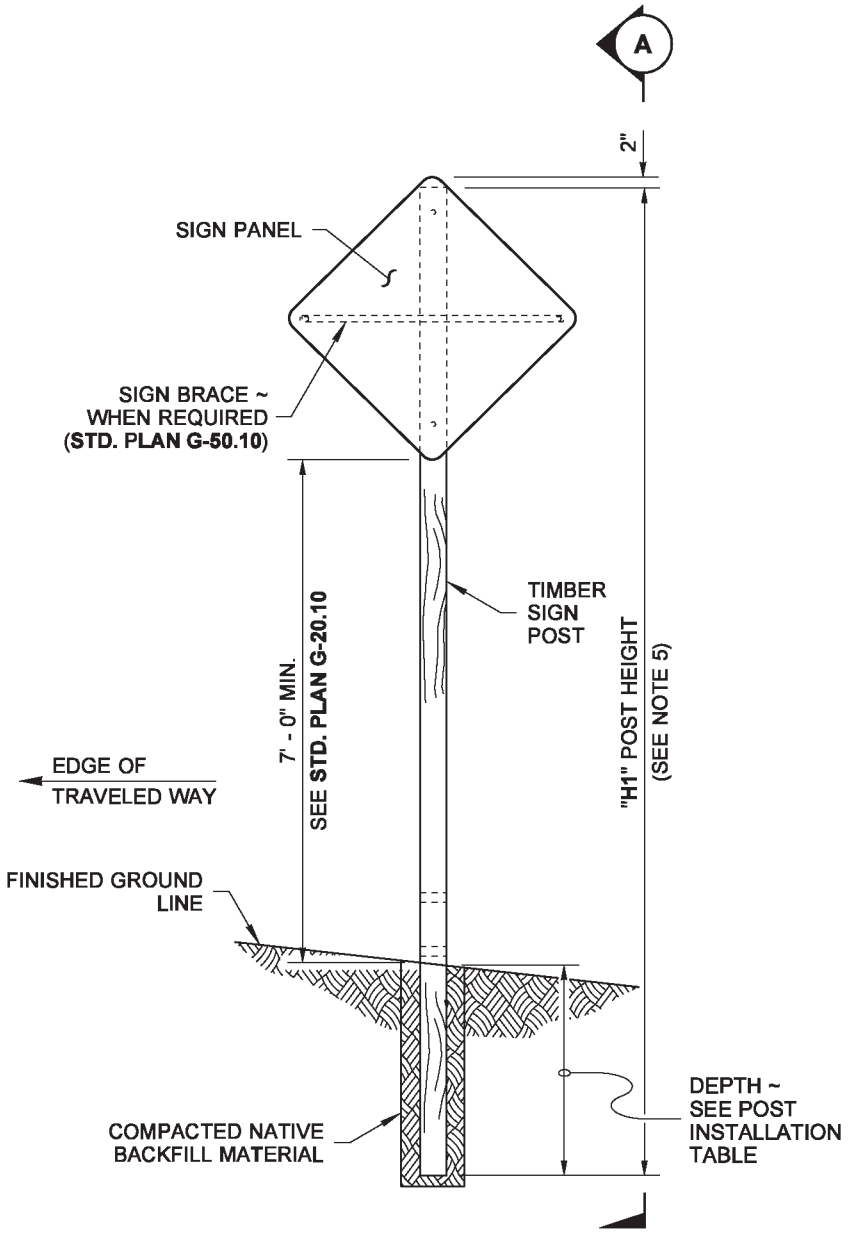

ELEVATION VIEW

SINGLE-POST INSTALLATION

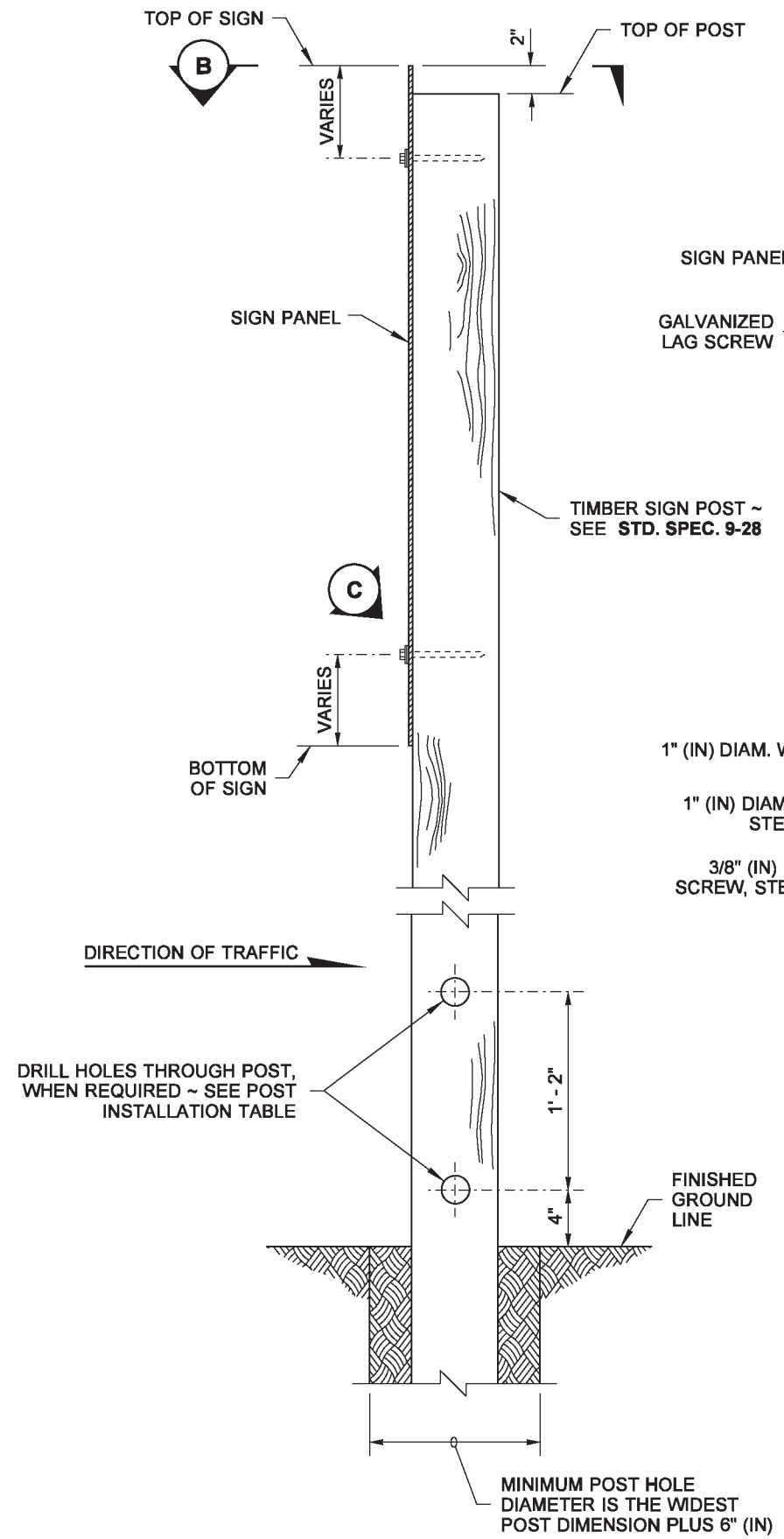

VIEW (A)

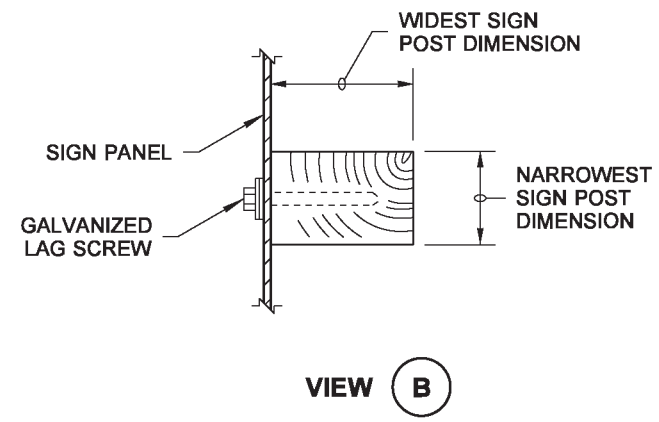

VIEW (B)

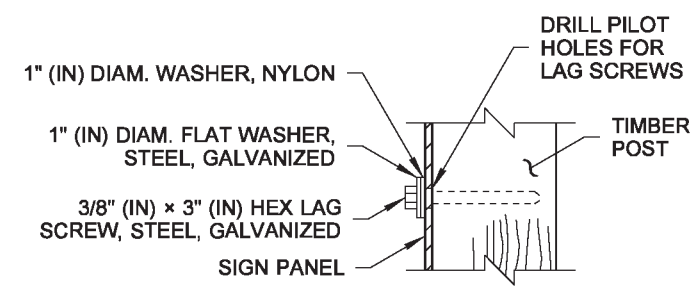

DETAIL (C)

NOTES

1. Notch is only required with multiple post installations.
2. 6×10, 8×10, and 6×12 Timber Sign Posts cannot be made breakaway and do not have holes or notches. These posts shall not be installed within the Design Clear Zone. They may be installed behind traffic barrier.
3. For "**X**", "**Y**", "**H1**", "**H2**", "**H3**", and "**H4**", refer to the Sign Specification Sheet in the Contract.
4. For 6×6 posts and larger, 7' (ft) minimum spacing is required between posts.
5. All materials shall meet the requirements of **Standard Specification 9-28**.

POST INSTALLATION TABLE

POST SIZE (NOM.)	DEPTH	HOLE DIAMETER	NOTCH DEPTH (SEE NOTE 1)
4×4	3' - 0"	NOT REQ'D	NOT REQ'D
4×6	4' - 0"	1 1/2"	1 1/2"
6×6	4' - 0"	2" SEE NOTES 3 & 4	2" SEE NOTES 3 & 4
6×8	5' - 0"	3" SEE NOTES 3 & 4	3" SEE NOTES 3 & 4
6×10	6' - 0"	SEE NOTE 2	SEE NOTE 2
8×10	6' - 0"	SEE NOTE 2	SEE NOTE 2
6×12	7' - 0"	SEE NOTE 2	SEE NOTE 2

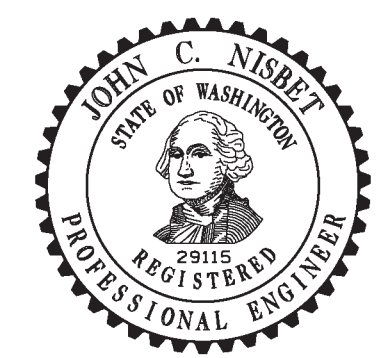

Nisbet, John
Jun 11 2014 9:24 AM

TIMBER SIGN SUPPORT

STANDARD PLAN G-22.10-02

SHEET 1 OF 3 SHEETS

APPROVED FOR PUBLICATION
Bakotich, Pasco
Jun 17 2014 9:36 AM

STATE DESIGN ENGINEER

Washington State Department of Transportation

DRAWN BY: BILL BERENS

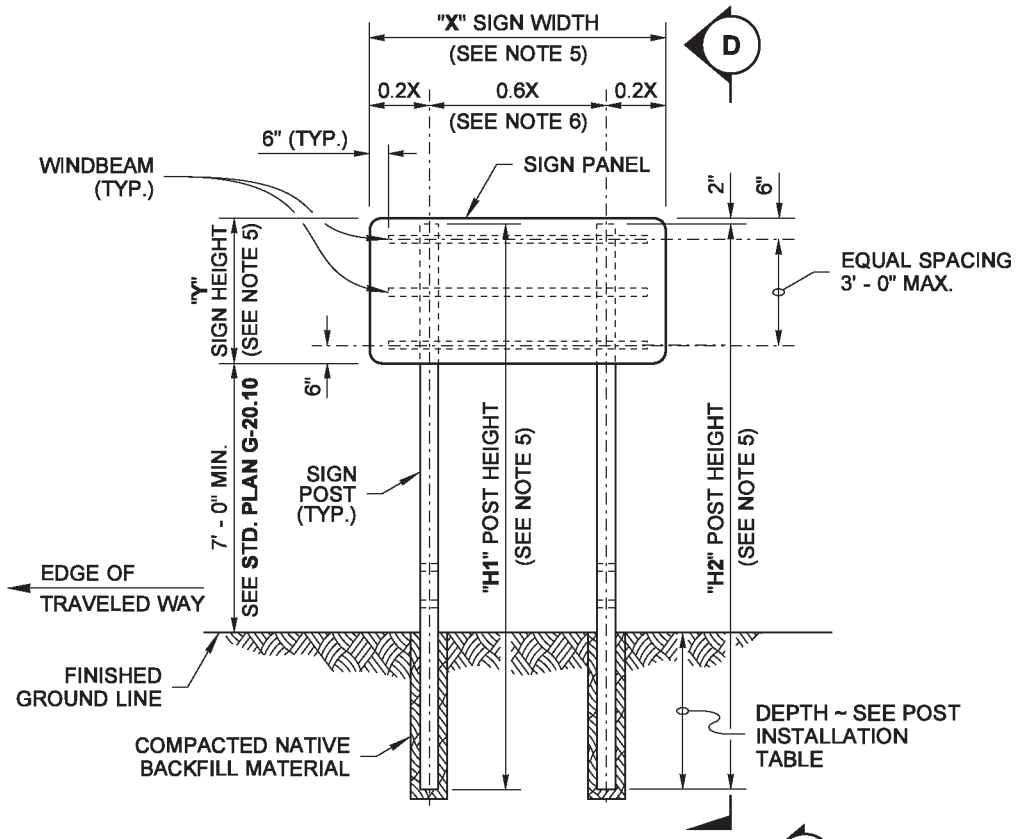

TWO-POST INSTALLATION

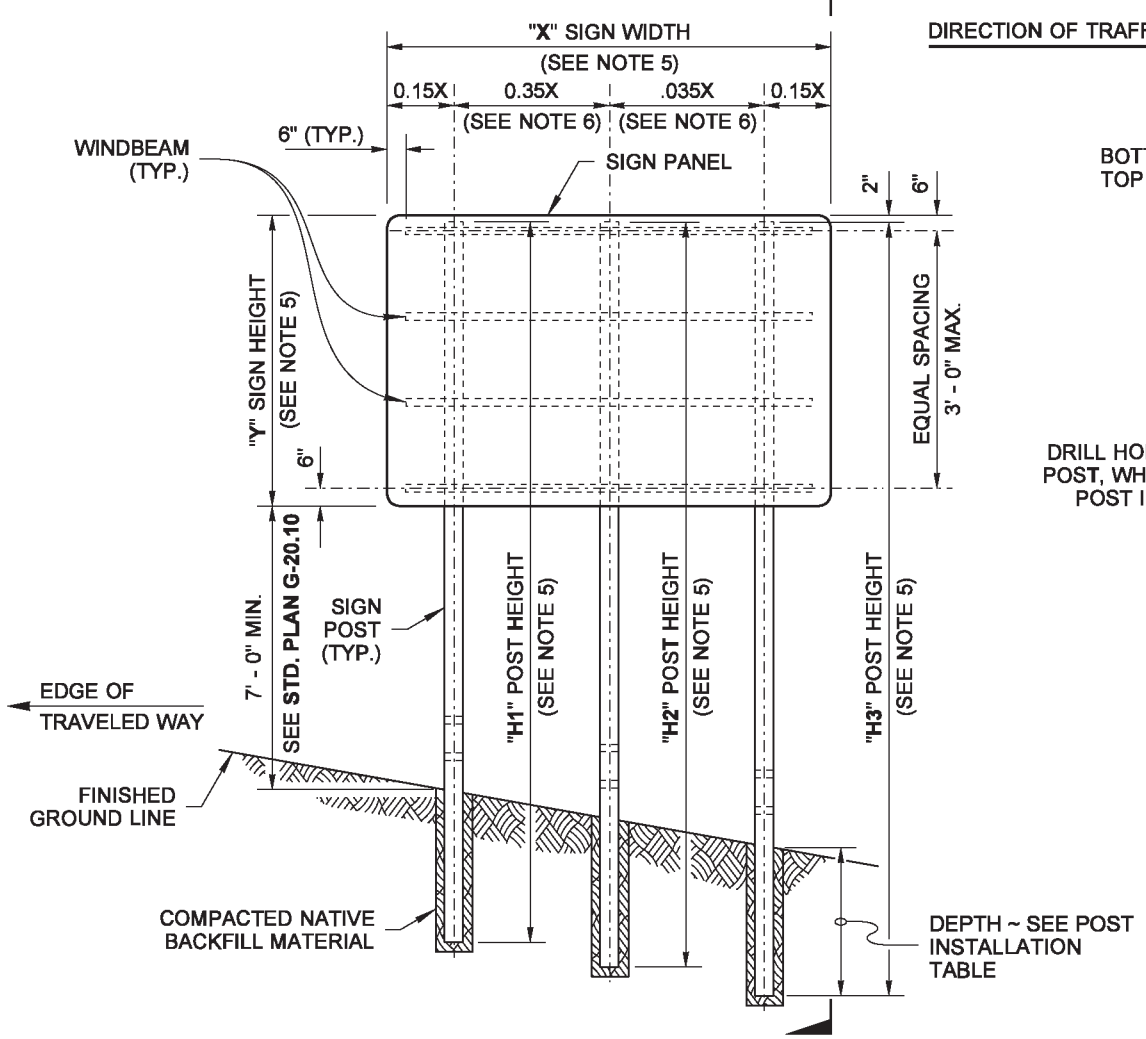

THREE-POST INSTALLATION

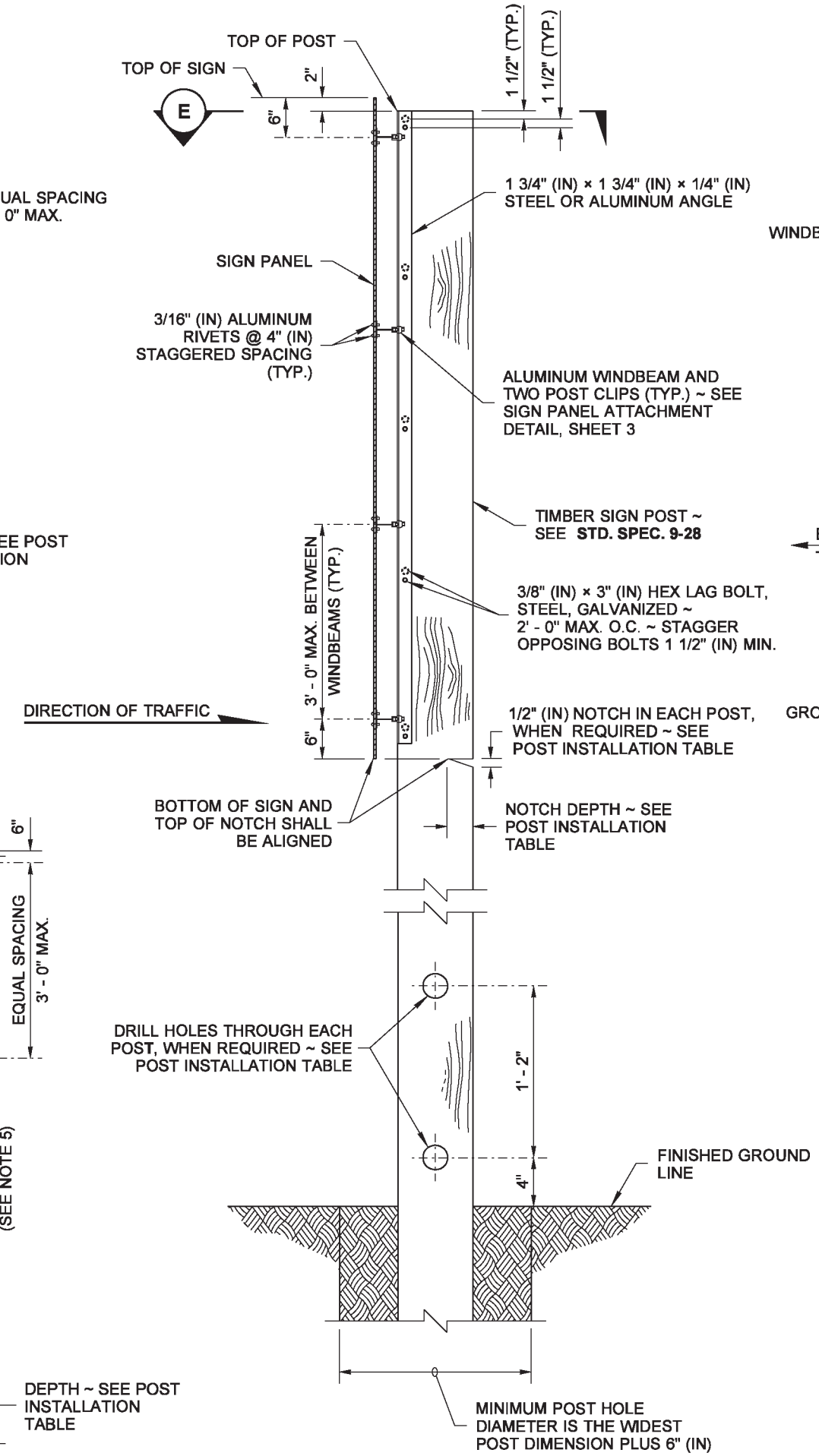

VIEW D

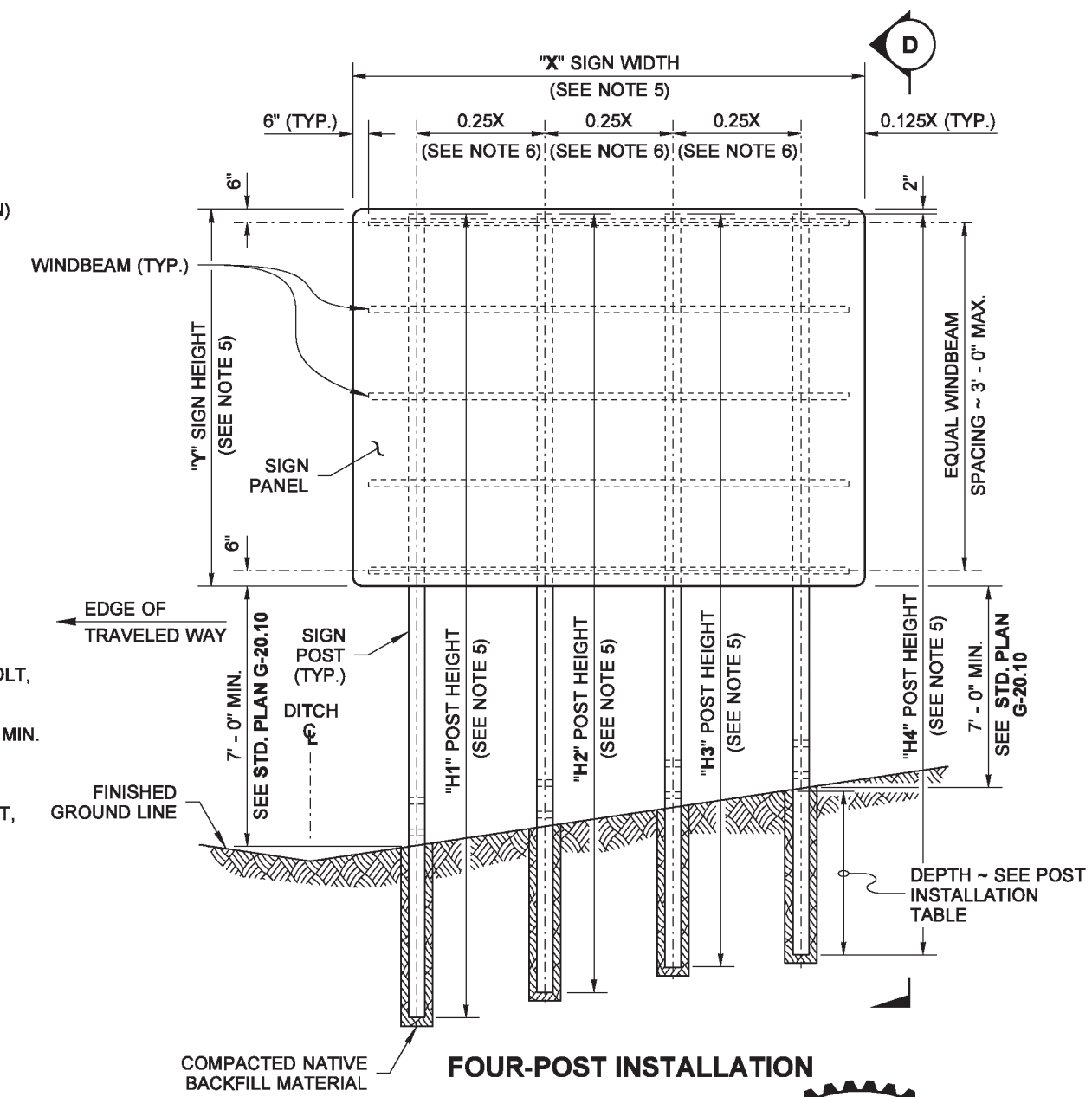

FOUR-POST INSTALLATION

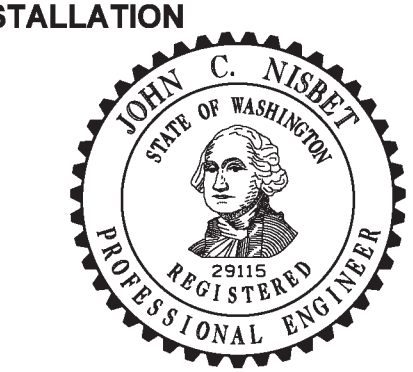

Nisbet, John
Jun 12 2014 7:38 AM

TIMBER SIGN SUPPORT

STANDARD PLAN G-22.10-02

SHEET 2 OF 3 SHEETS

APPROVED FOR PUBLICATION
Bakotich, Pasco
Jun 17 2014 9:36 AM
STATE DESIGN ENGINEER

Washington State Department of Transportation

DRAWN BY: BILL BERENS

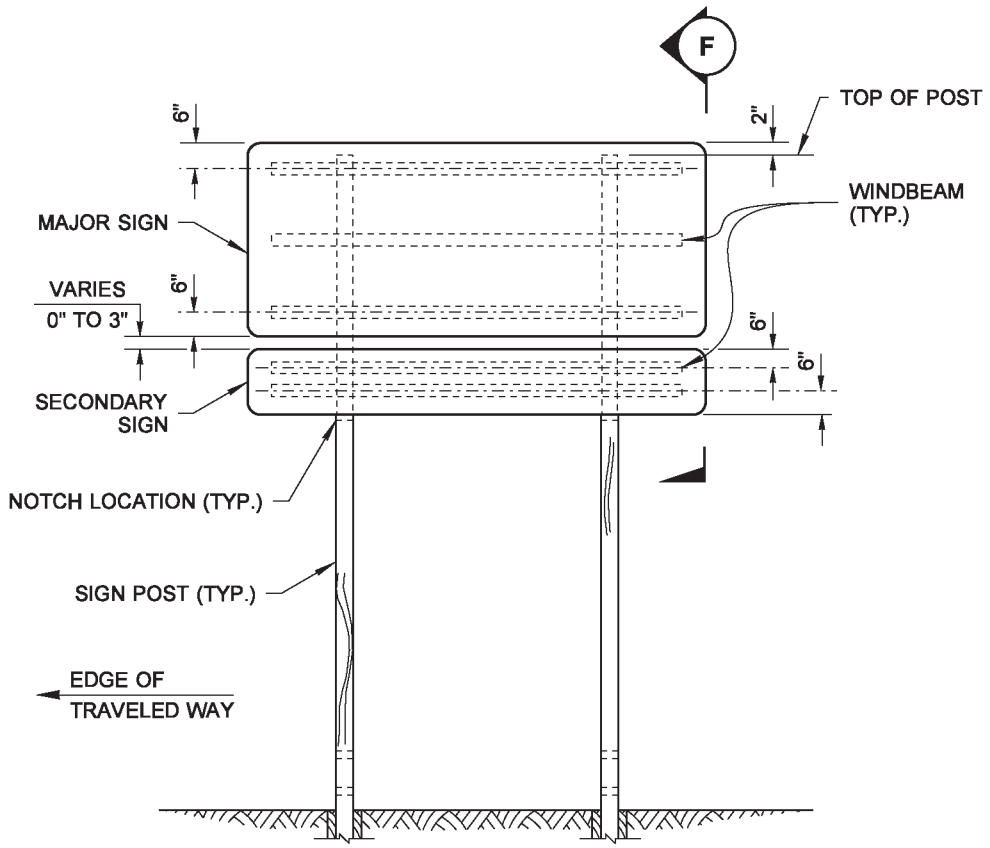

MAJOR AND SECONDARY SIGN INSTALLATION

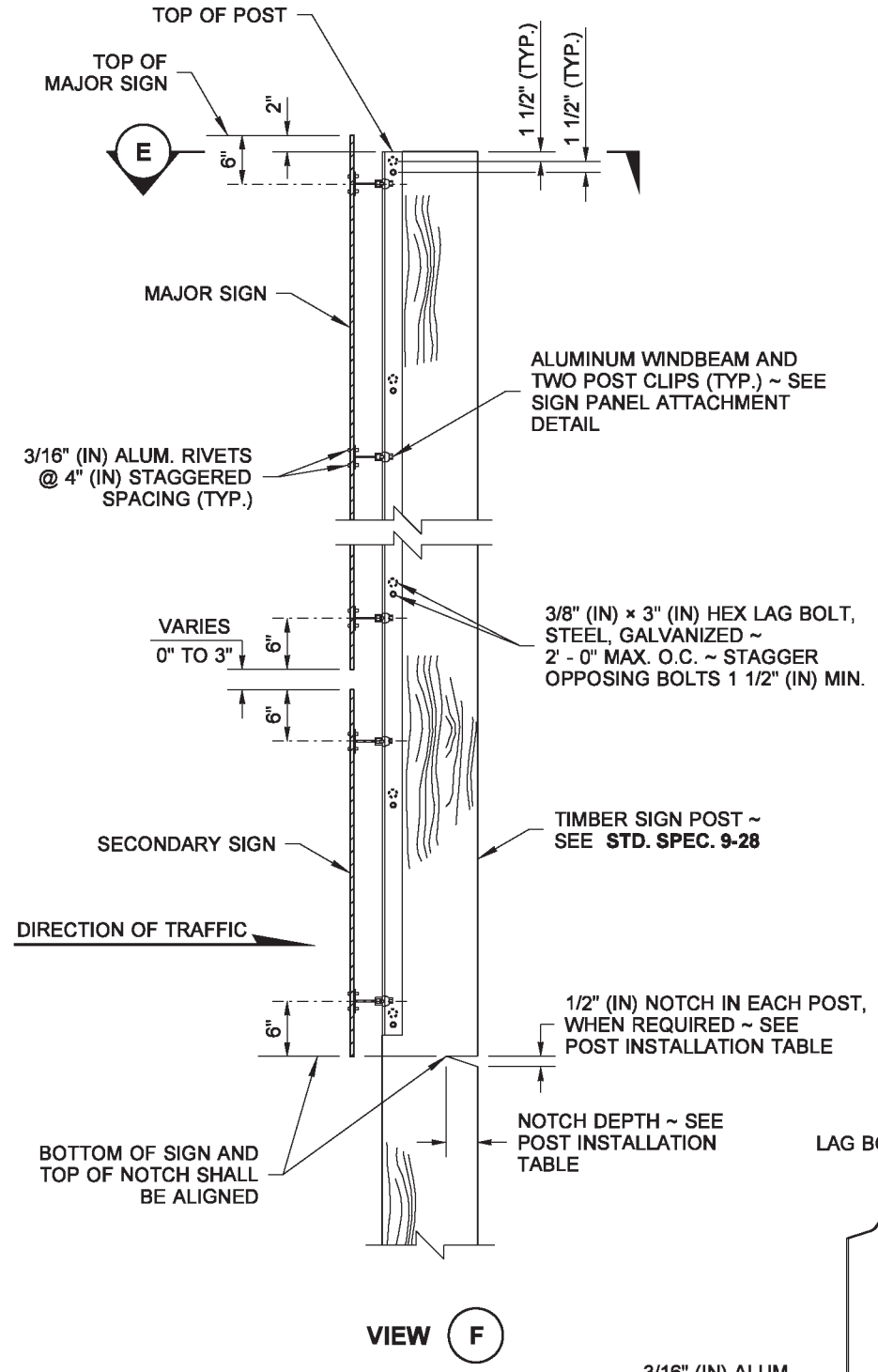

VIEW F

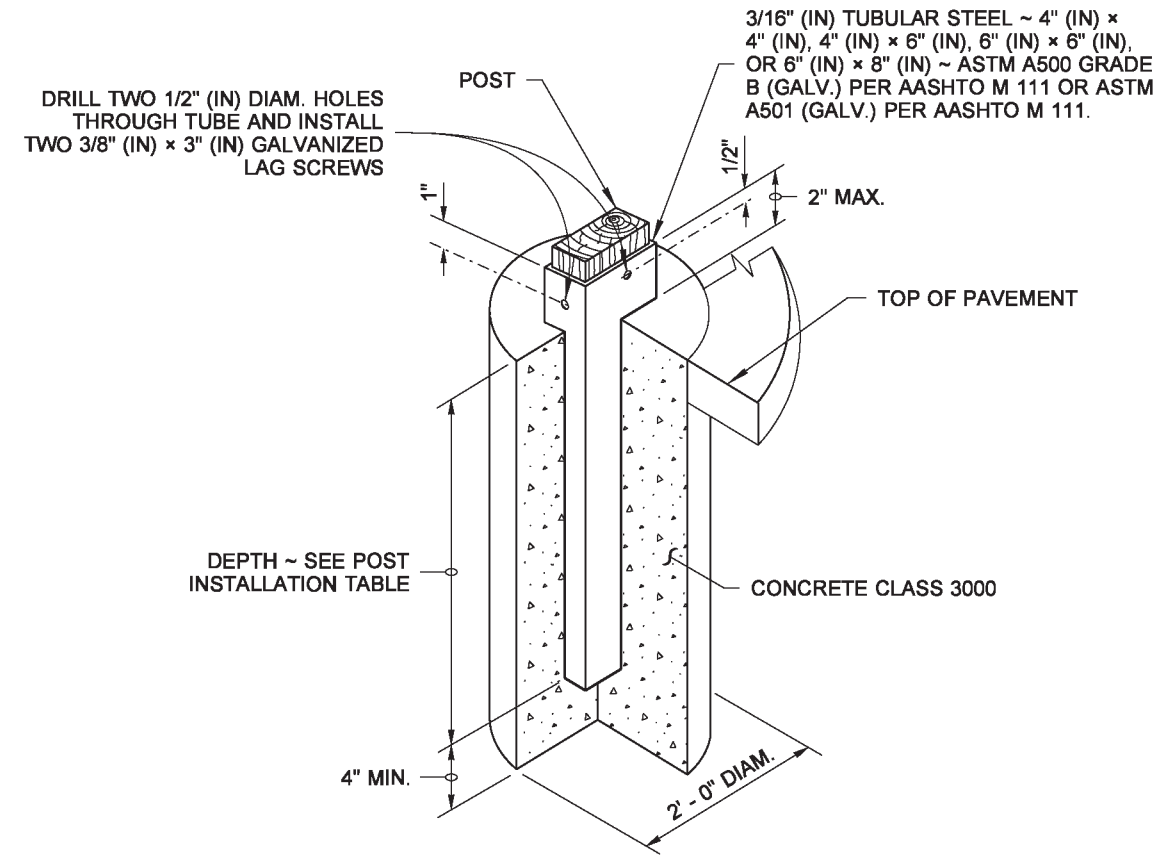

ISOMETRIC VIEW

CONCRETE FOUNDATION SLEEVE DETAIL

TO BE USED WHEN PLACING TIMBER POST IN A PAVED AREA

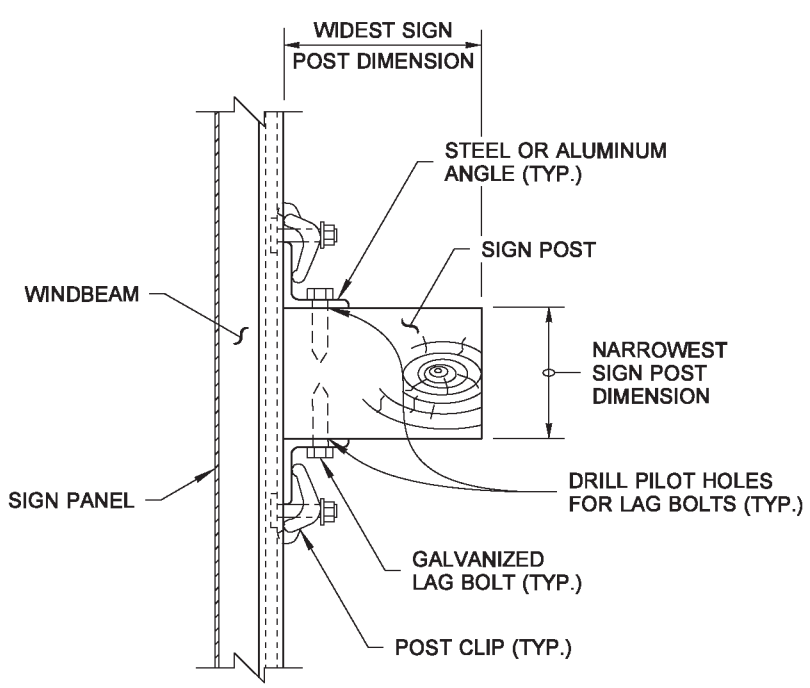

VIEW E

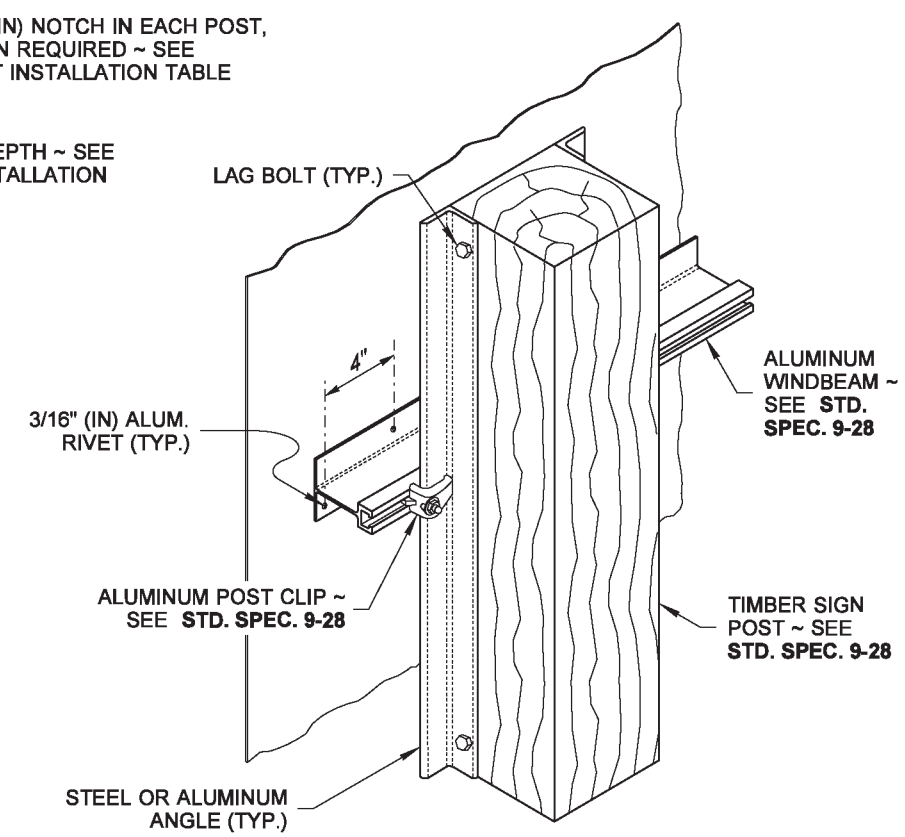

ISOMETRIC VIEW

SIGN PANEL ATTACHMENT DETAIL

JOHN C. NISBET
STATE OF WASHINGTON
29115
REGISTERED
PROFESSIONAL ENGINEER

Nisbet, John
Jun 12 2014 7:39 AM

TIMBER SIGN SUPPORT

STANDARD PLAN G-22.10-02

SHEET 3 OF 3 SHEETS

APPROVED FOR PUBLICATION
Bakotich, Pasco
Jun 17 2014 9:37 AM
STATE DESIGN ENGINEER
Washington State Department of Transportation

DRAWN BY: LISA CYFORD

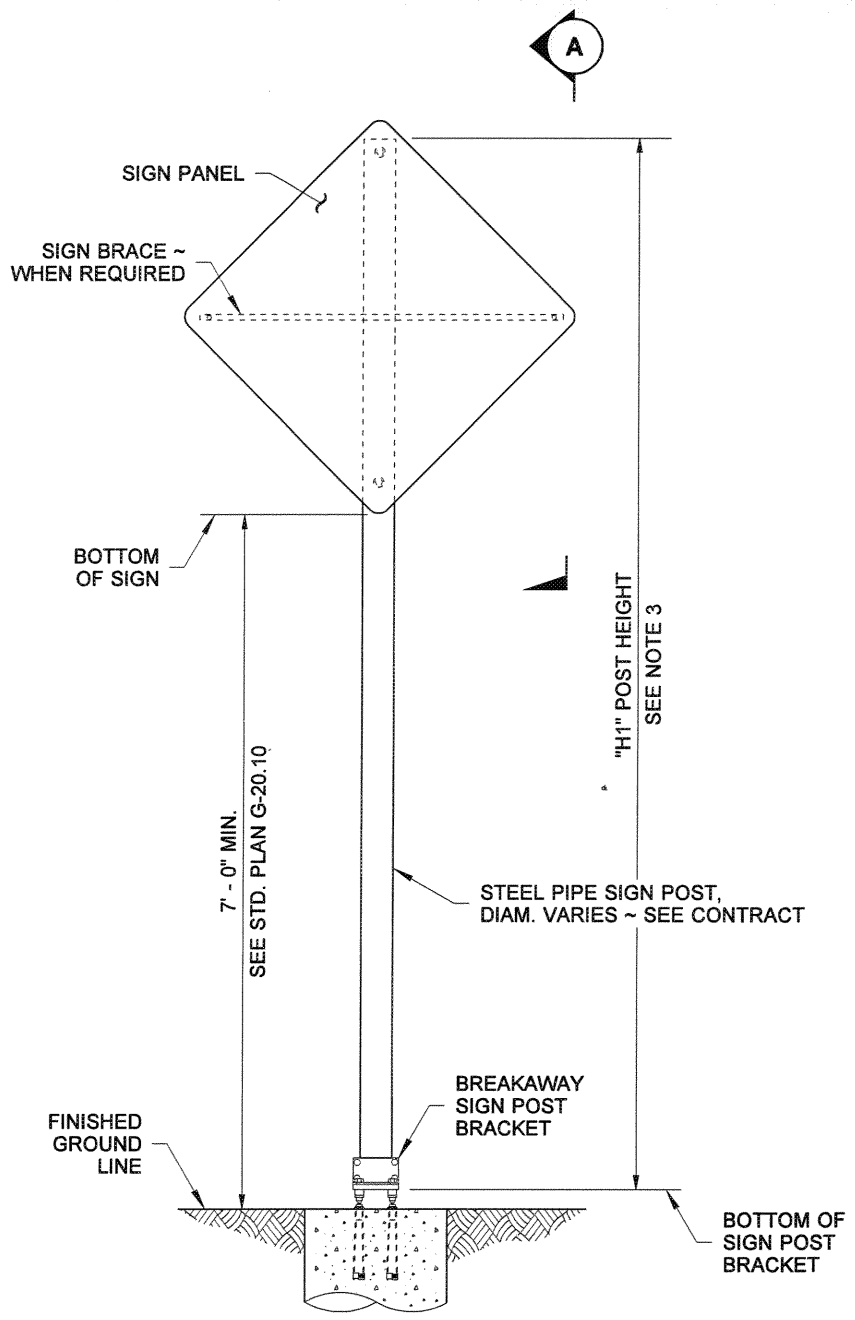

ELEVATION

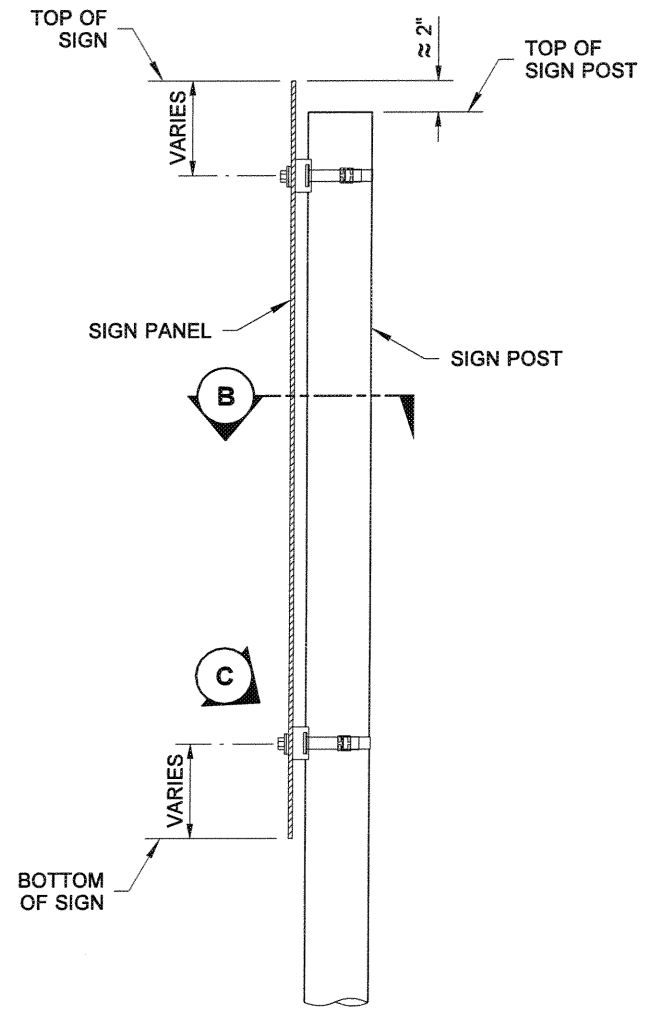

VIEW (A)

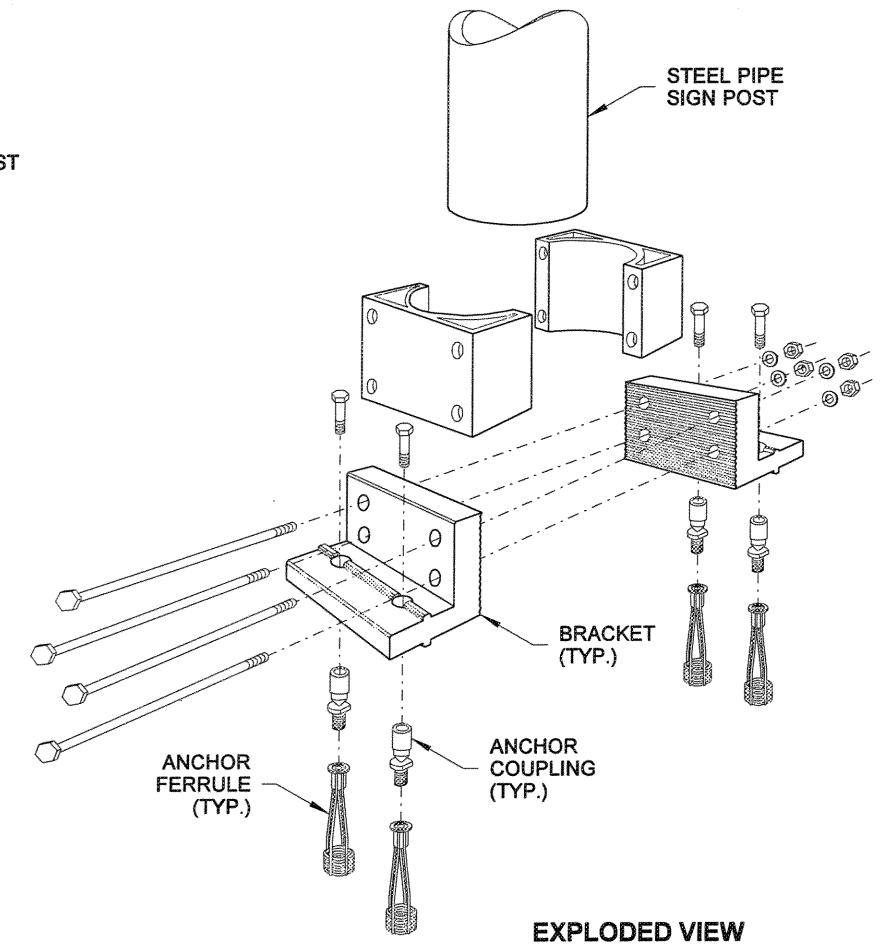

EXPLODED VIEW

BREAKAWAY SIGN BRACKET ASSEMBLY

NOTES

1. Dimensions for the parts used to assemble the base connections are intentionally not shown. Base connections are patented, manufactured products that are in compliance with NCHRP 350 crash test criteria. The base connection details are only shown on this plan to illustrate how the parts are assembled.
2. For Steel Sign Support Foundation, see Standard Plan G-25.10.
3. For "H1" refer to the Sign Specification Sheet in the Contract.
4. Mounting brackets with steel straps shall be the stainless steel one bolt, flared leg bracket and 3/4" wide, 0.030" thick strap "Band-it" products or an approved equal.

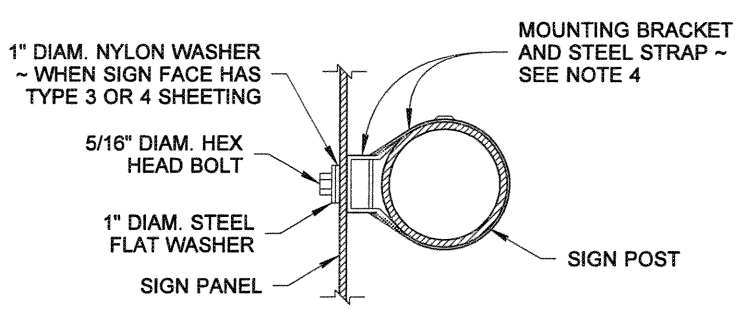

SECTION (B)

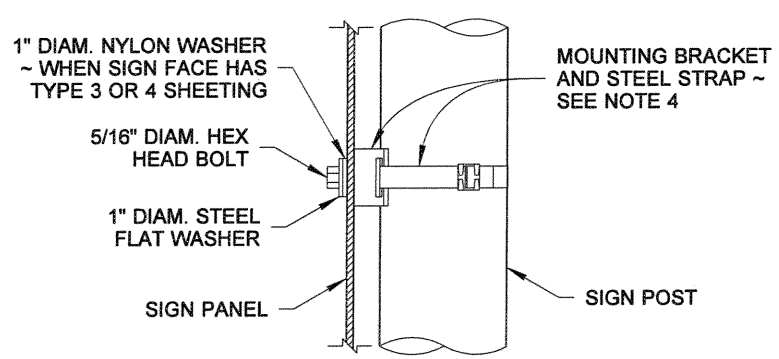

DETAIL (C)

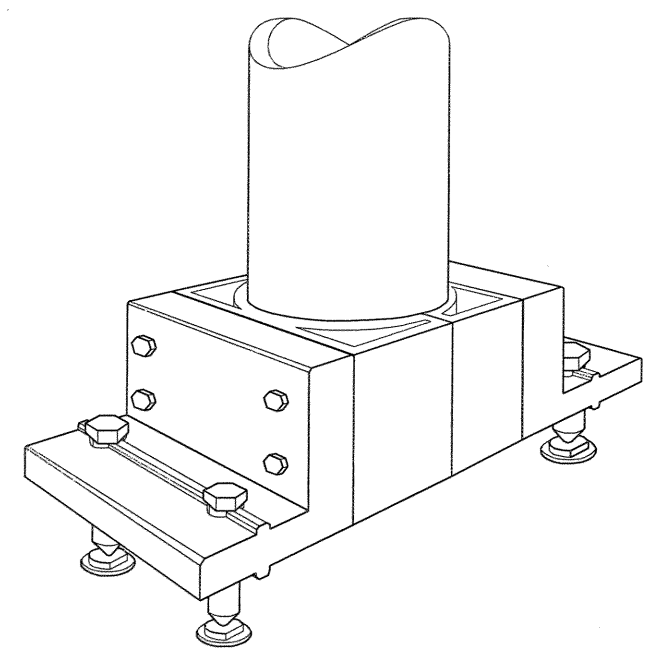

PERSPECTIVE VIEW

BREAKAWAY SIGN BRACKET ASSEMBLY

EXPIRES AUGUST 9, 2009

STEEL SIGN SUPPORT TYPE AP INSTALLATION DETAILS STANDARD PLAN G-24.10-00

SHEET 1 OF 1 SHEET

APPROVED FOR PUBLICATION

STATE DESIGN ENGINEER — DATE 11/8/07

Washington State Department of Transportation

DRAWN BY: LISA CYFORD

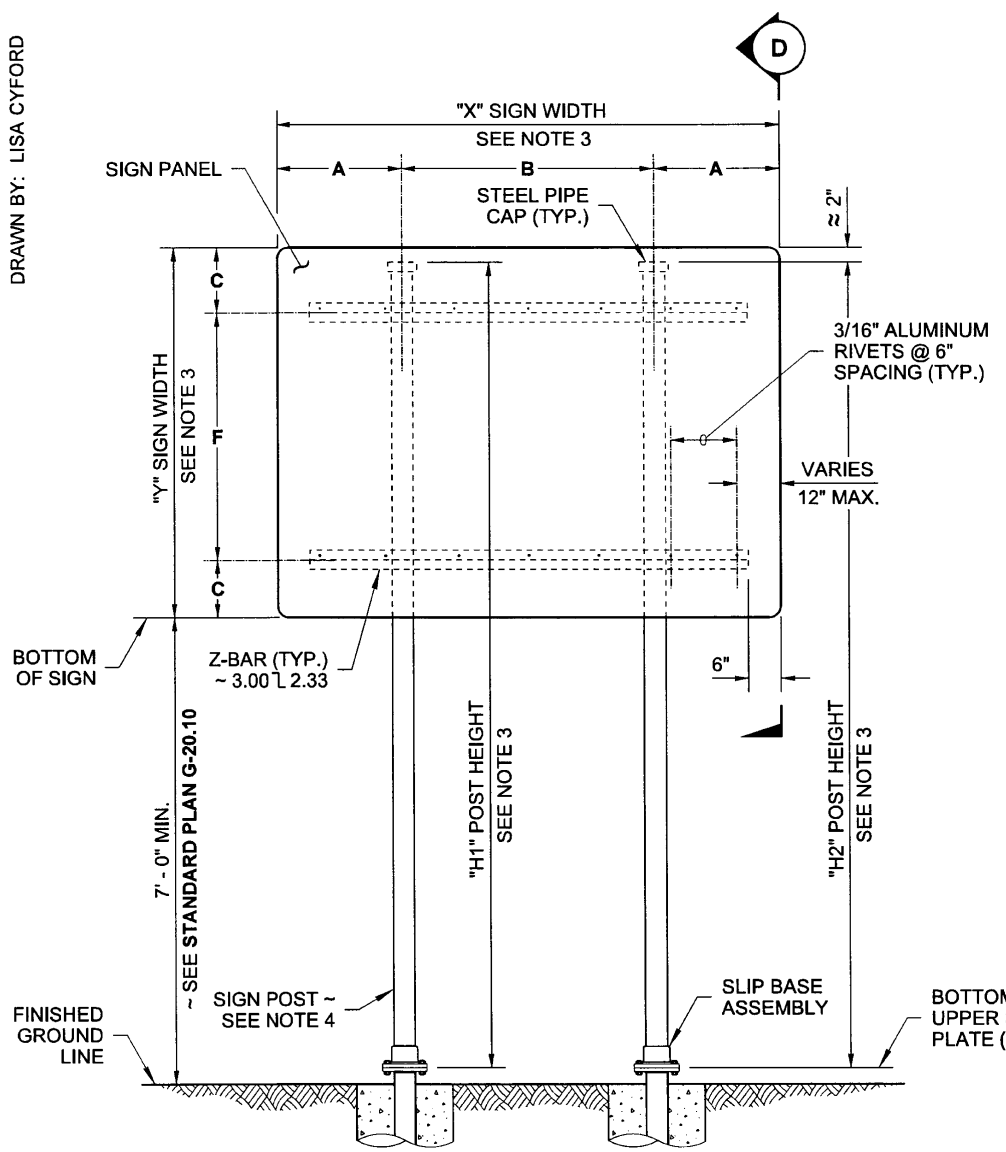

ELEVATION
TYPE PL SIGN SUPPORT
DUAL POST INSTALLATION

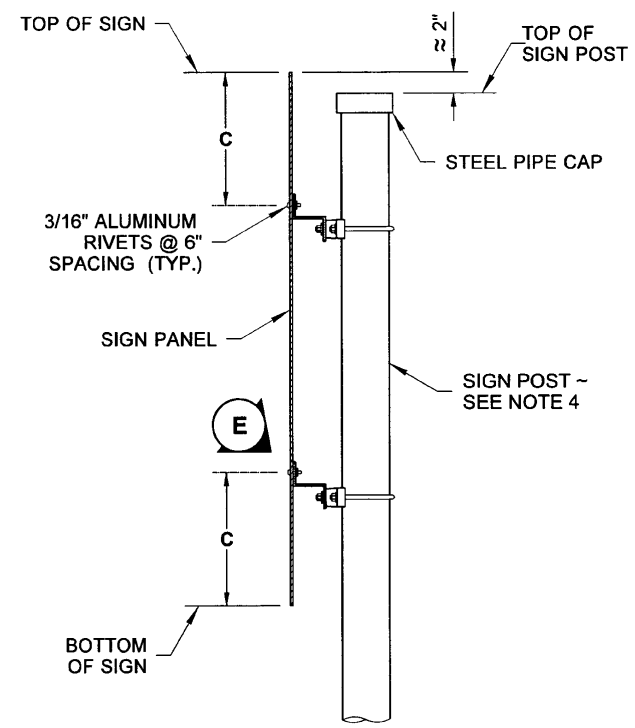

VIEW (D)

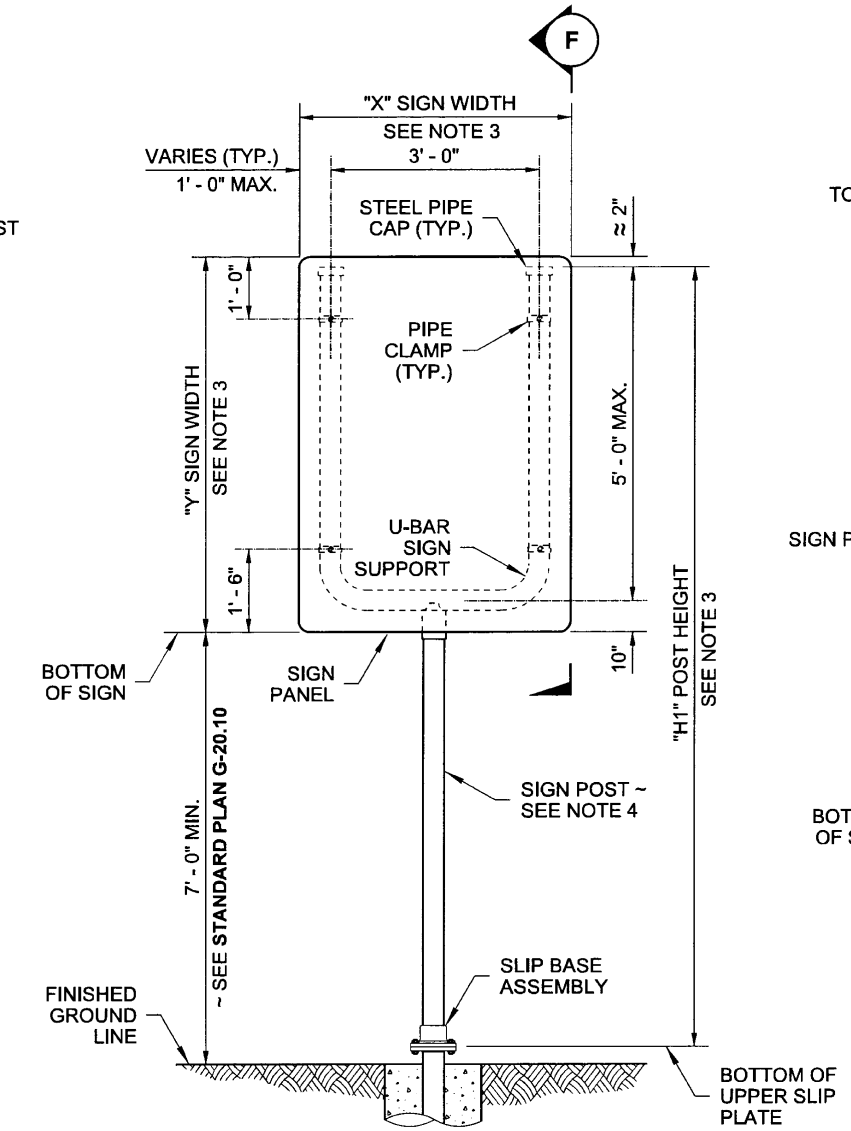

ELEVATION
TYPE PL-U SIGN SUPPORT

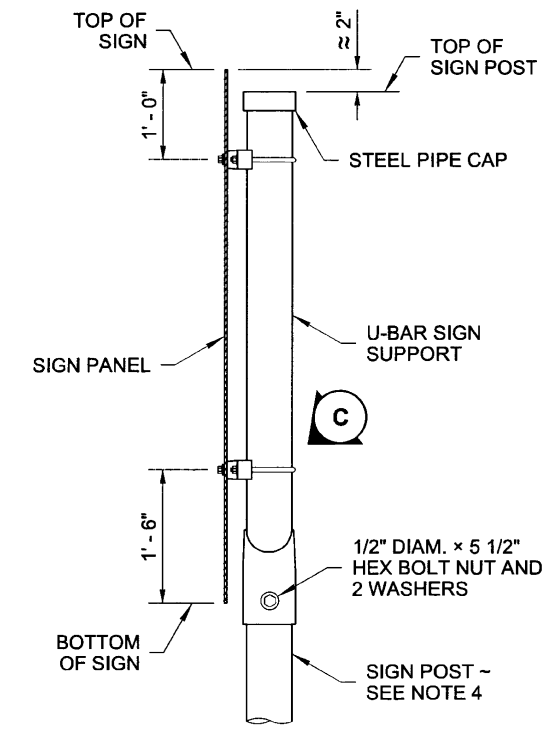

VIEW (F)

	"X" SIGN WIDTH		
	6' - 0"	8' - 0"	10' - 0"
A	1' - 0"	2' - 0"	3' - 0"
B	3' - 0"	4' - 0"	4' - 0"

	"Y" SIGN HEIGHT		
	6' - 0"	8' - 0"	10' - 0"
C	1' - 0"	2' - 0"	3' - 0"
F	4' - 0"	4' - 0"	4' - 0"

A, B, C, & F, MAY BE INTERPOLATED FOR INTERMEDIATE SIGN SIZES

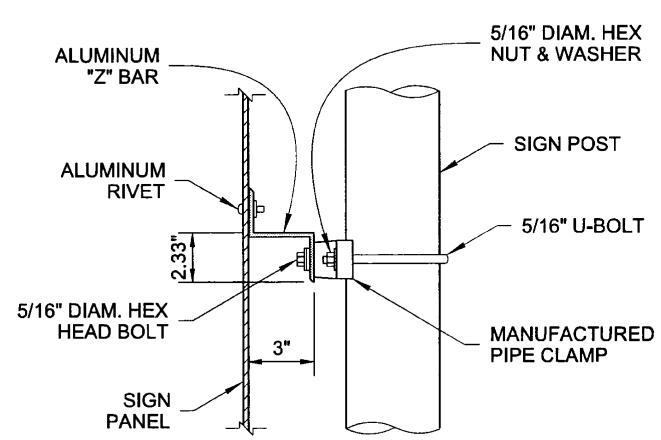

DETAIL (E)

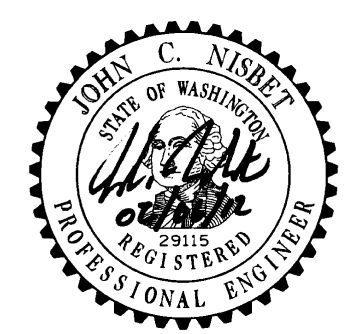

STEEL SIGN SUPPORT
TYPES PL, PL-T, & PL-U
INSTALLATIONS DETAILS
STANDARD PLAN G-24.30-01

SHEET 2 OF 2 SHEETS

APPROVED FOR PUBLICATION

STATE DESIGN ENGINEER — DATE 2/7/12

Washington State Department of Transportation

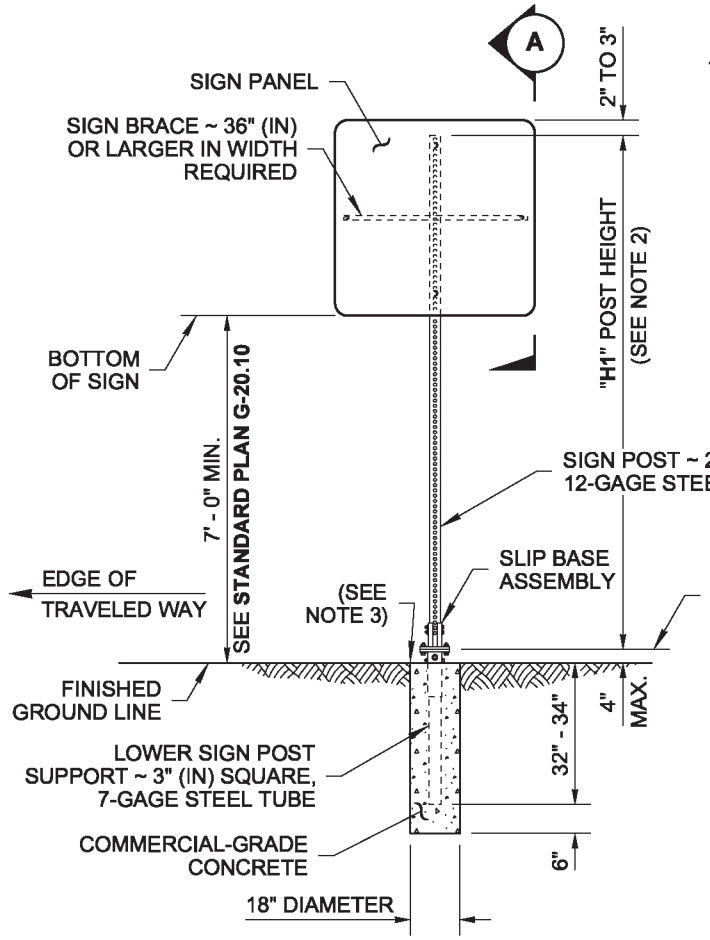

ELEVATION

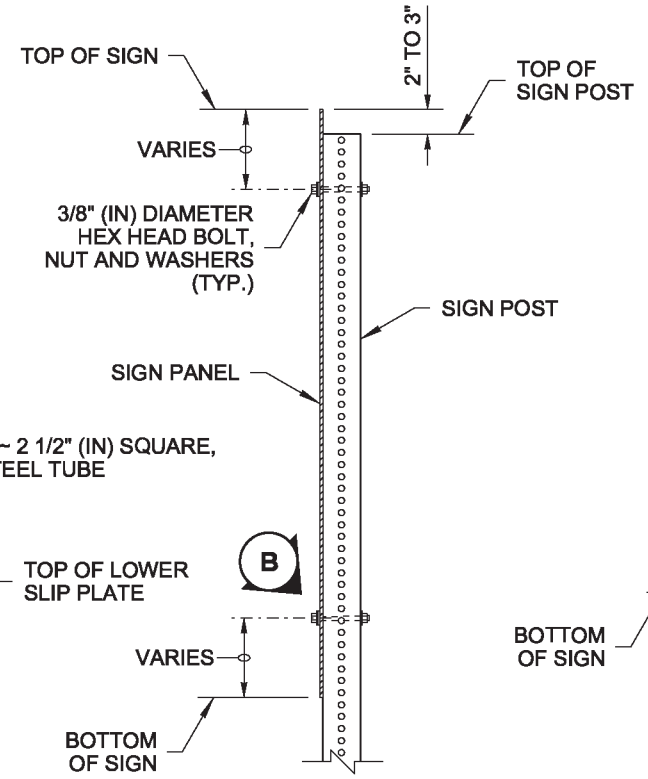

VIEW A

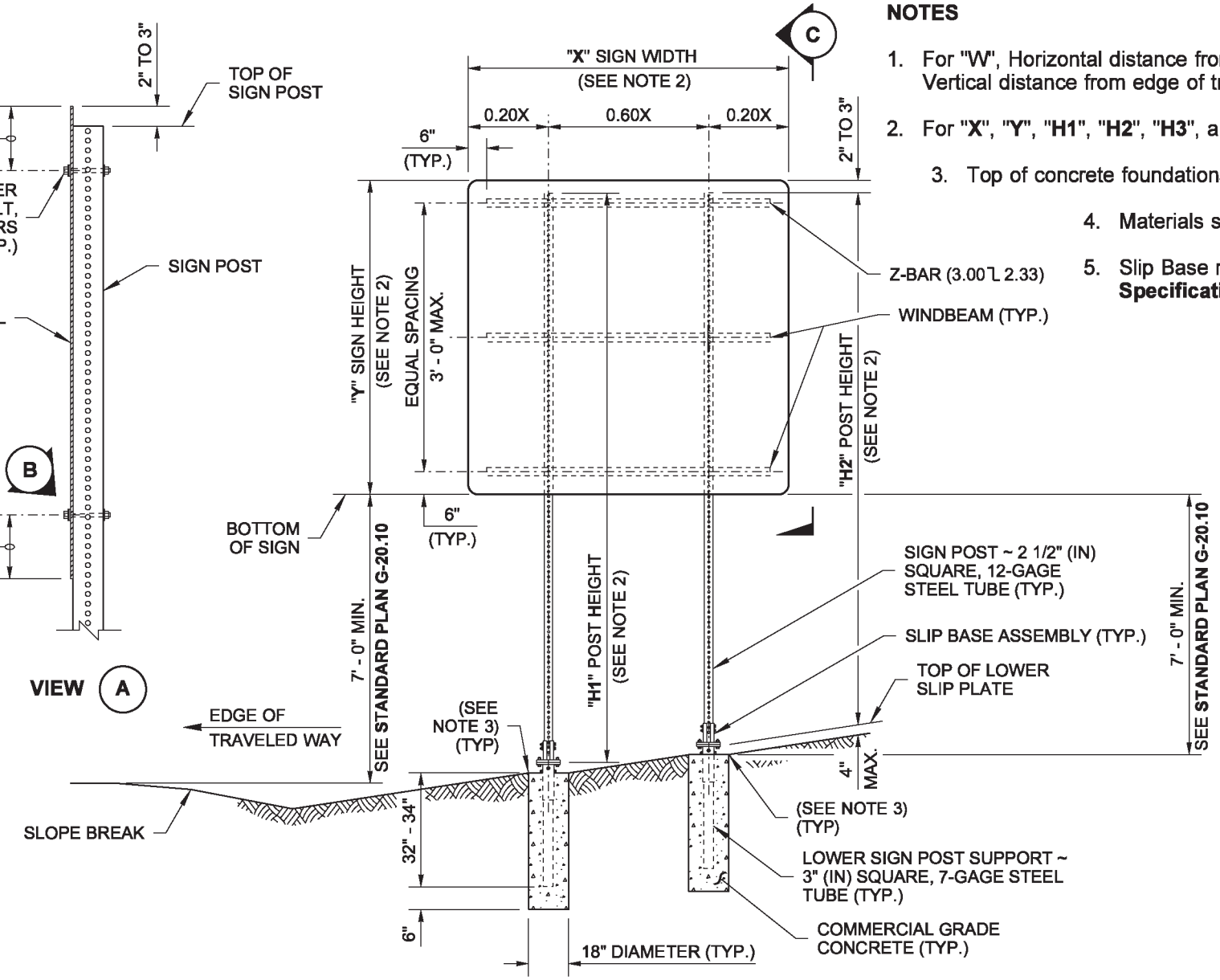

ELEVATION
DUAL-POST INSTALLATION

NOTES

1. For "W", Horizontal distance from edge of traveled way to center of nearest post, and "V", Vertical distance from edge of traveled way to bottom of sign, see **Standard Plan G-20.10**.
2. For "**X**", "**Y**", "**H1**", "**H2**", "**H3**", and "**H4**", refer to the Sign Specification Sheet in the Contract.
3. Top of concrete foundations shall be smooth, dense, and uniform to finished groundline.
4. Materials shall meet the requirements of **Standard Specification 9-28**.
5. Slip Base materials shall meet the requirements of **Standard Specification 9-06**.

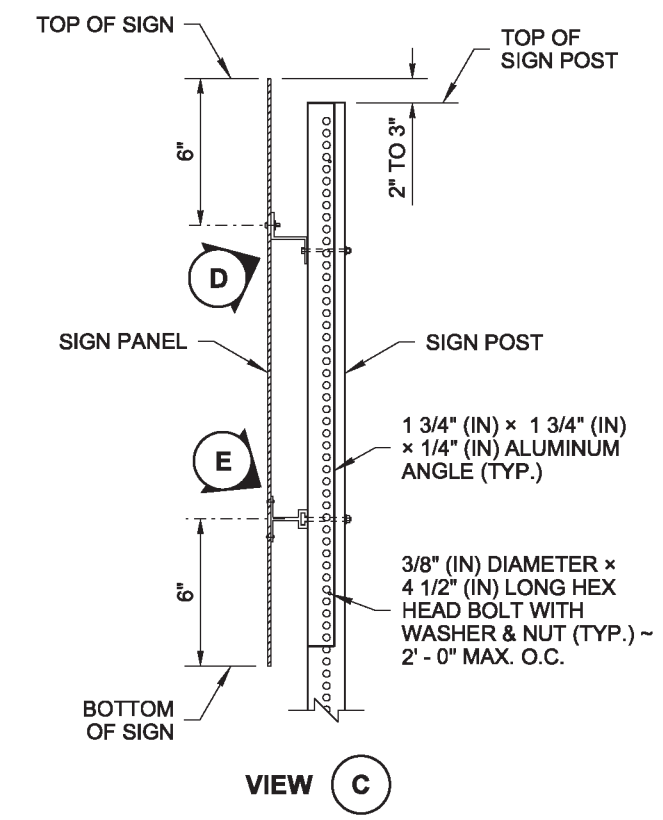

VIEW C

WINDLOAD FOR SQUARE TUBE POSTS AT 90 MPH				
POSTS		MAXIMUM XYZ		
		1-POST	2-POST	3-POST
2 1/2" PSST	12-GAGE	172	344	516
* 2 1/2" PSST with 2 1/4" insert	12-GAGE	309	618	927
* 3" SOLID POST	7-GAGE	471	942	1413
* SLIP BASE REQUIRED (UNLESS BEHIND BARRIER)				
(MAXIMUM 3 SLIP BASES ALLOWED IN 7' SPAN)				

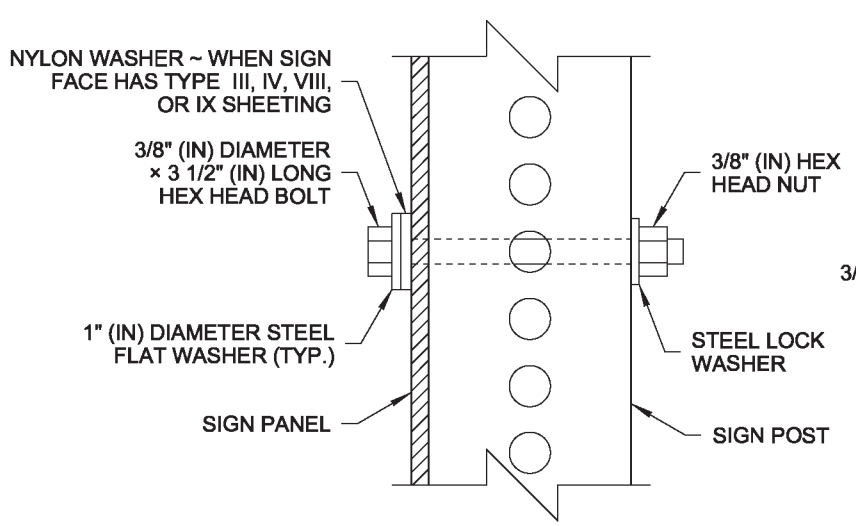

DETAIL B

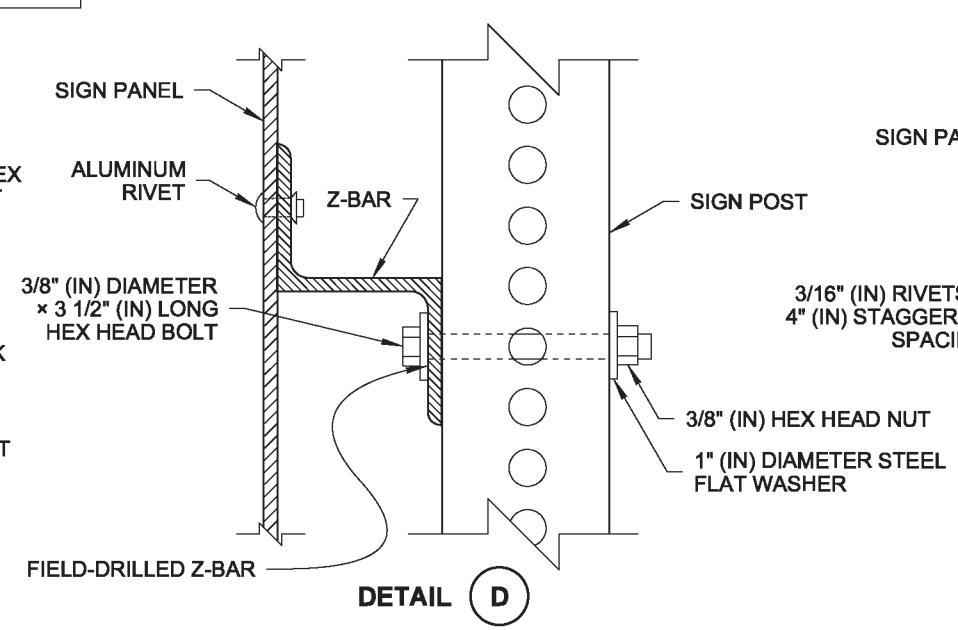

DETAIL D

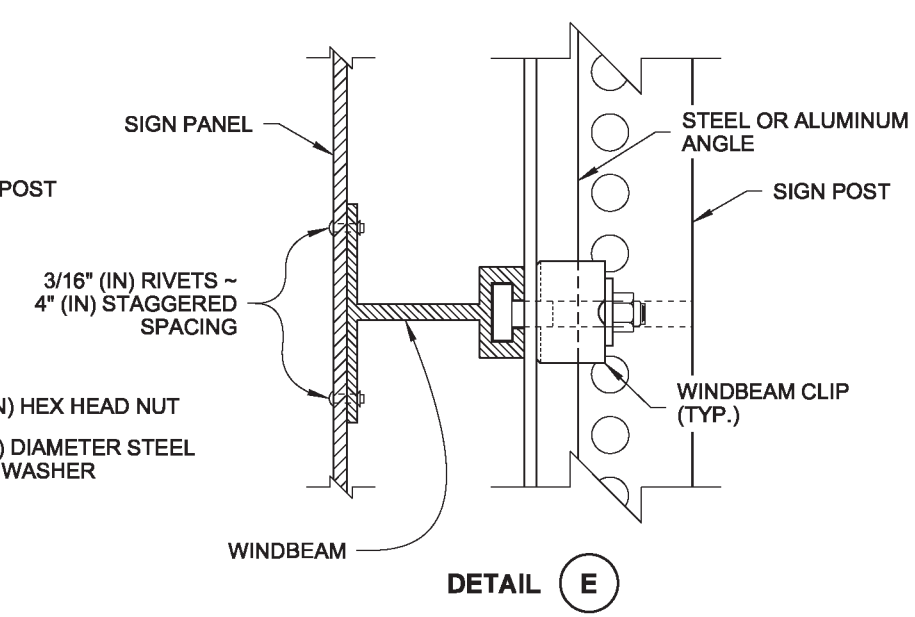

DETAIL E

STEEL SIGN SUPPORT TYPES SB-1, SB-2 & SB-3 ~ 8" (IN)

DRAWN BY: FERN LIDDELL

Nisbet, John
Jun 12 2014 7:40 AM

STEEL SIGN SUPPORT TYPES SB-1, SB-2 & SB-3 INSTALLATION DETAILS STANDARD PLAN G-24.40-04

SHEET 1 OF 4 SHEETS

APPROVED FOR PUBLICATION
Bakotich, Pasco
Jun 17 2014 9:38 AM
STATE DESIGN ENGINEER
Washington State Department of Transportation

DRAWN BY: FERN LIDDELL

ASSEMBLY NOTES

1. Dimensions for the parts used to assemble the base connections are intentionally not shown. Base connections are patented, manufactured products that are in compliance with NCHRP 350 crash test criteria. The base connection details are shown on this plan only to illustrate how the parts are assembled.
2. Do not tighten any single Slip Plate Bolt to the recommended torque before pretightening the other bolts. Progressively tighten the three Slip Plate Bolts in 10 ft-lb increments, alternately, to a final torque of 40 ft-lbs on each.
3. Slip Base assembly materails shall meet the requirements of **Standard Specifications 9-06** and **9-28**.

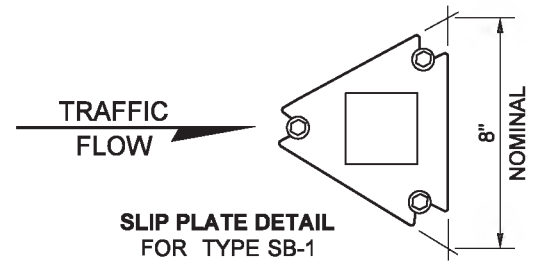

SLIP PLATE DETAIL
FOR TYPE SB-1

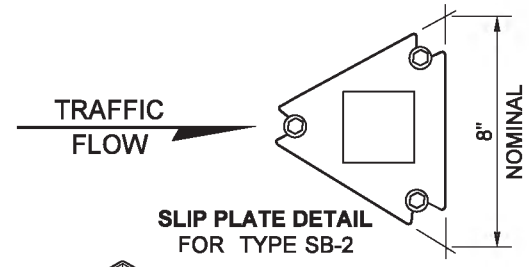

SLIP PLATE DETAIL
FOR TYPE SB-2

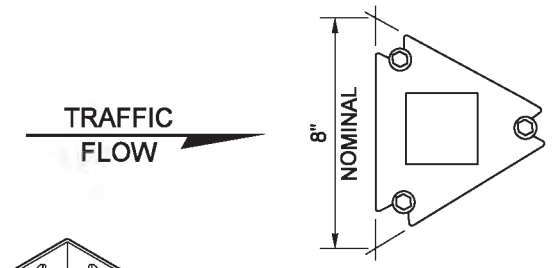

SLIP PLATE DETAIL
FOR TYPE SB-3

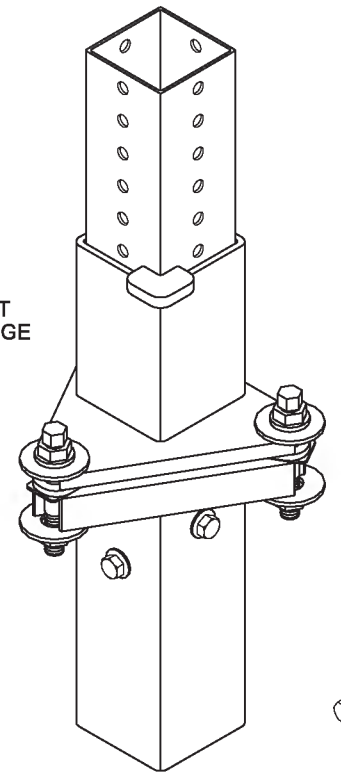

ISOMETRIC VIEW

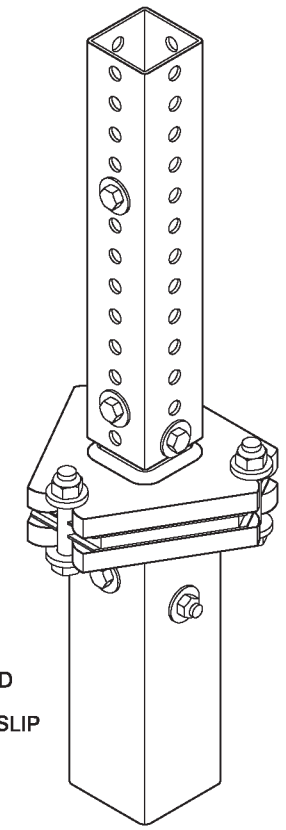

ISOMETRIC VIEW

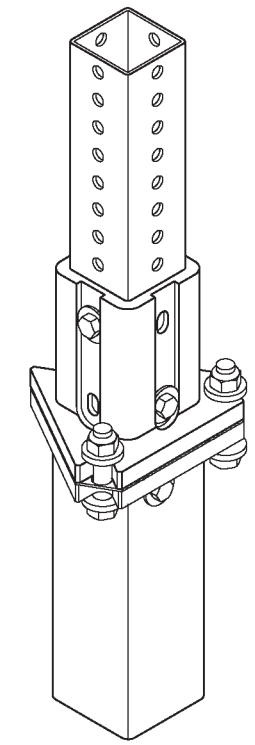

ISOMETRIC VIEW

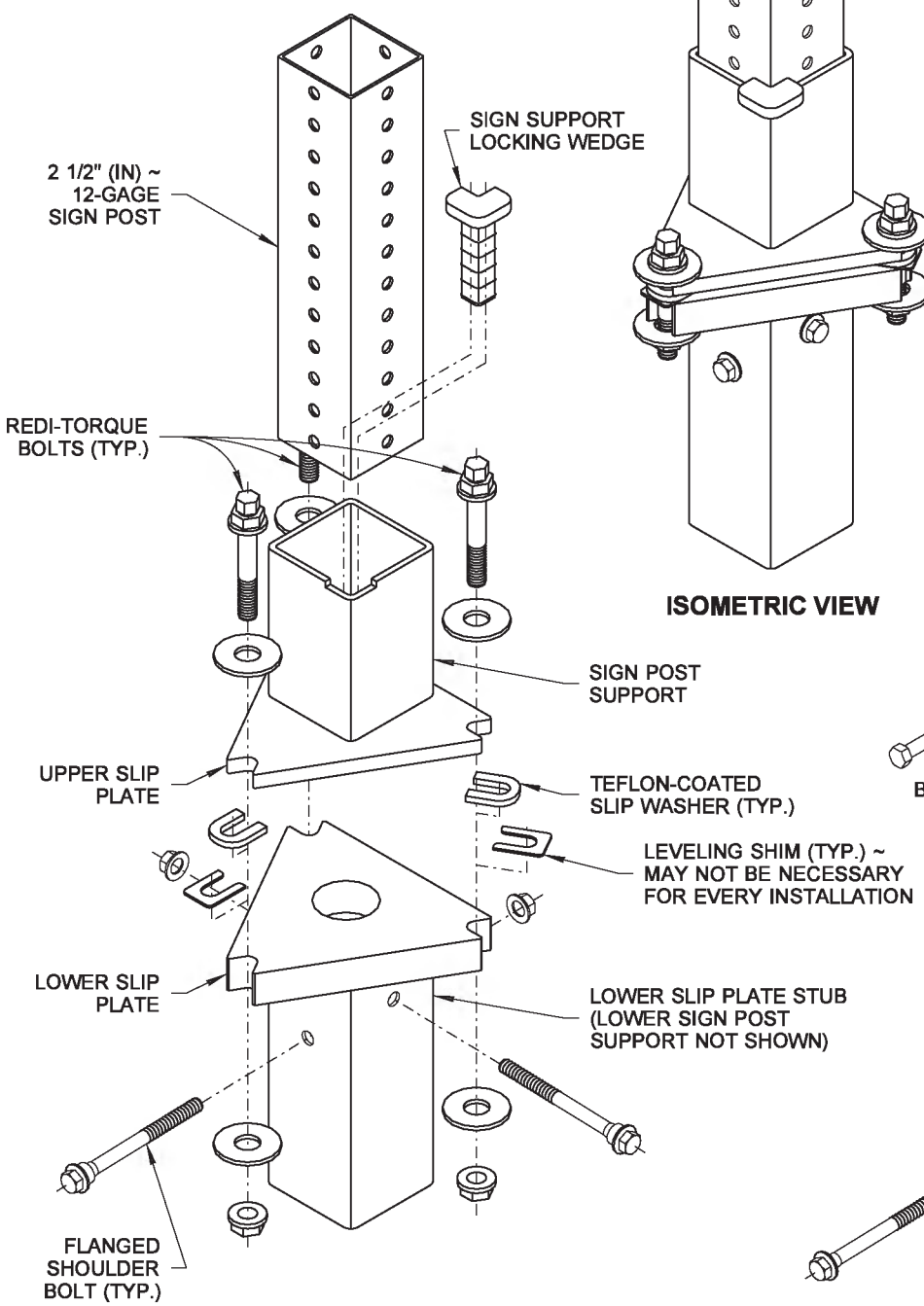

EXPLODED VIEW

TYPE SB-1
SLIP BASE ASSEMBLY

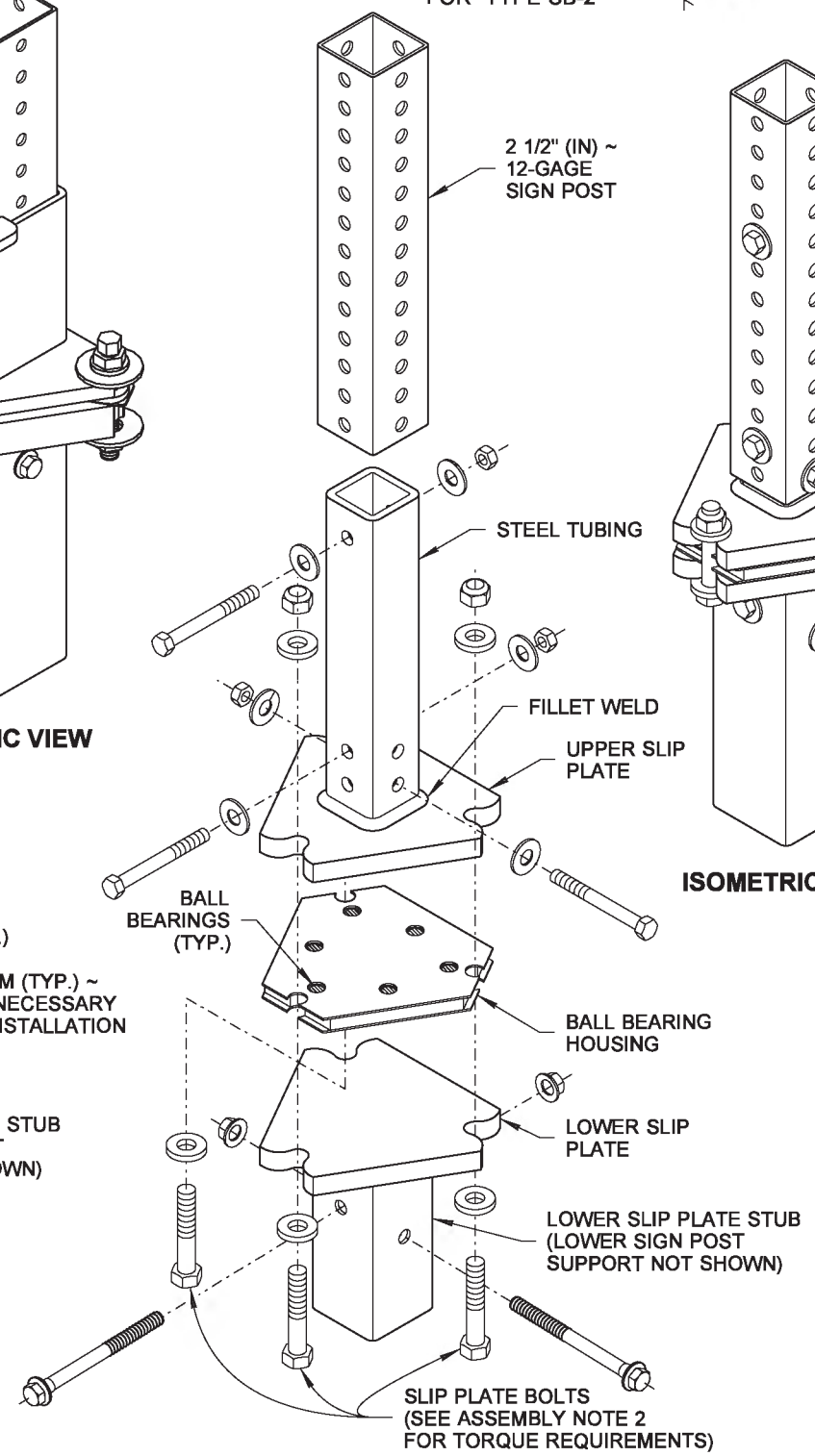

EXPLODED VIEW

TYPE SB-2
SLIP BASE ASSEMBLY

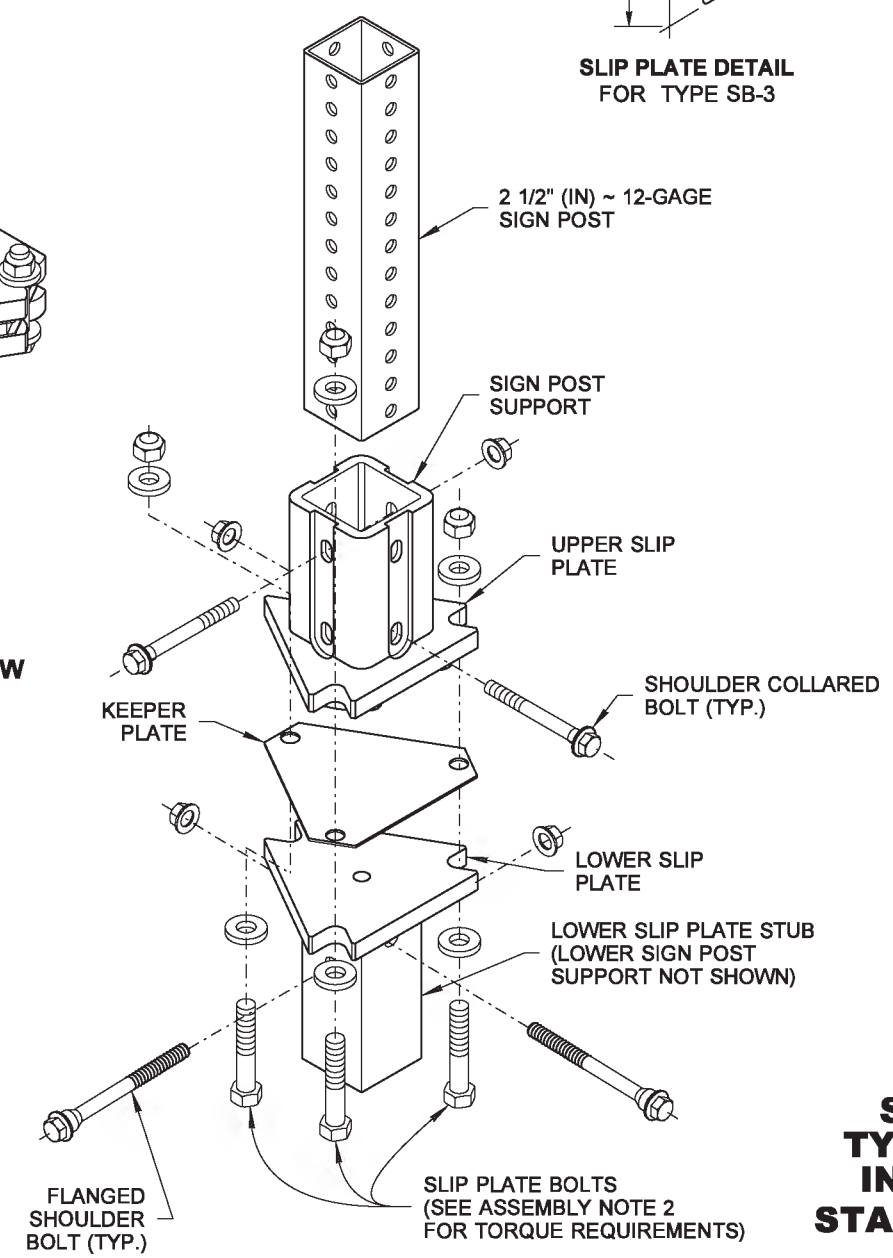

EXPLODED VIEW

TYPE SB-3
SLIP BASE ASSEMBLY

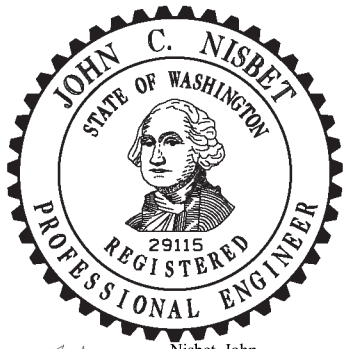

Nisbet, John
Jun 12 2014 7:40 AM

STEEL SIGN SUPPORT TYPES SB-1, SB-2 & SB-3 INSTALLATION DETAILS STANDARD PLAN G-24.40-04

SHEET 2 OF 4 SHEETS

APPROVED FOR PUBLICATION
Bakotich, Pasco
Jun 17 2014 9:38 AM
STATE DESIGN ENGINEER

Washington State Department of Transportation

STEEL SIGN SUPPORT TYPES SB-1, SB-2 & SB-3 ~ 8" (IN)

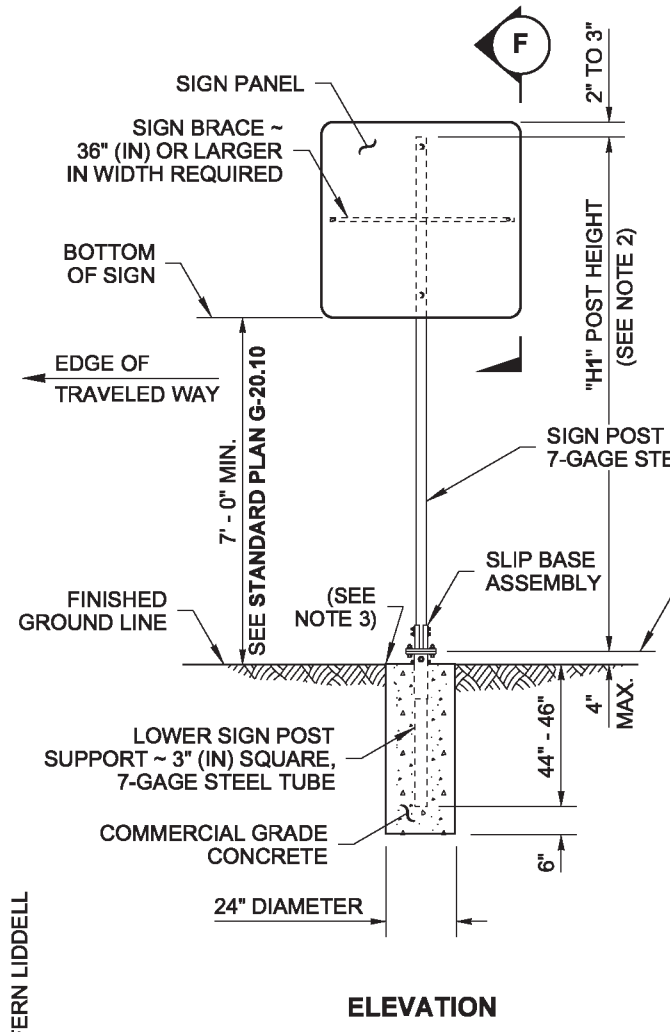

ELEVATION

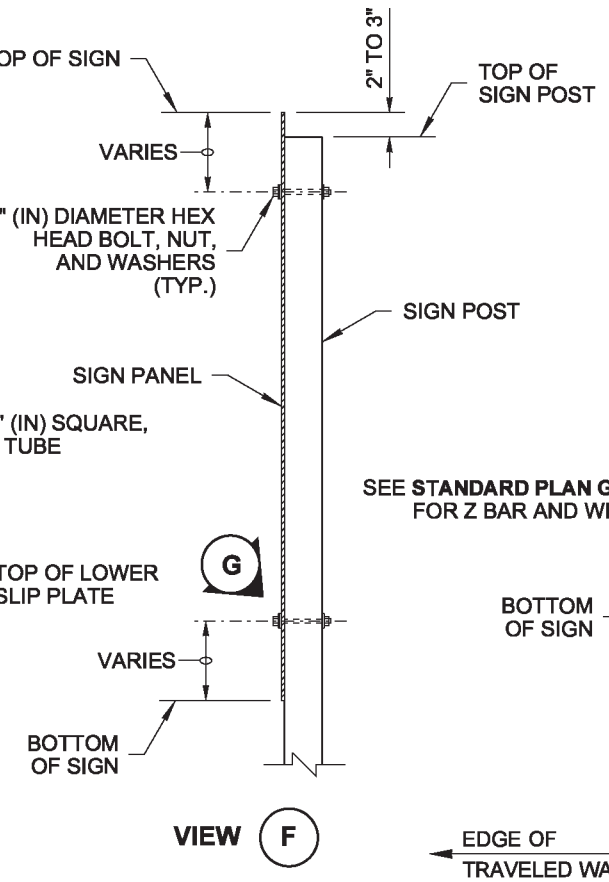

VIEW F

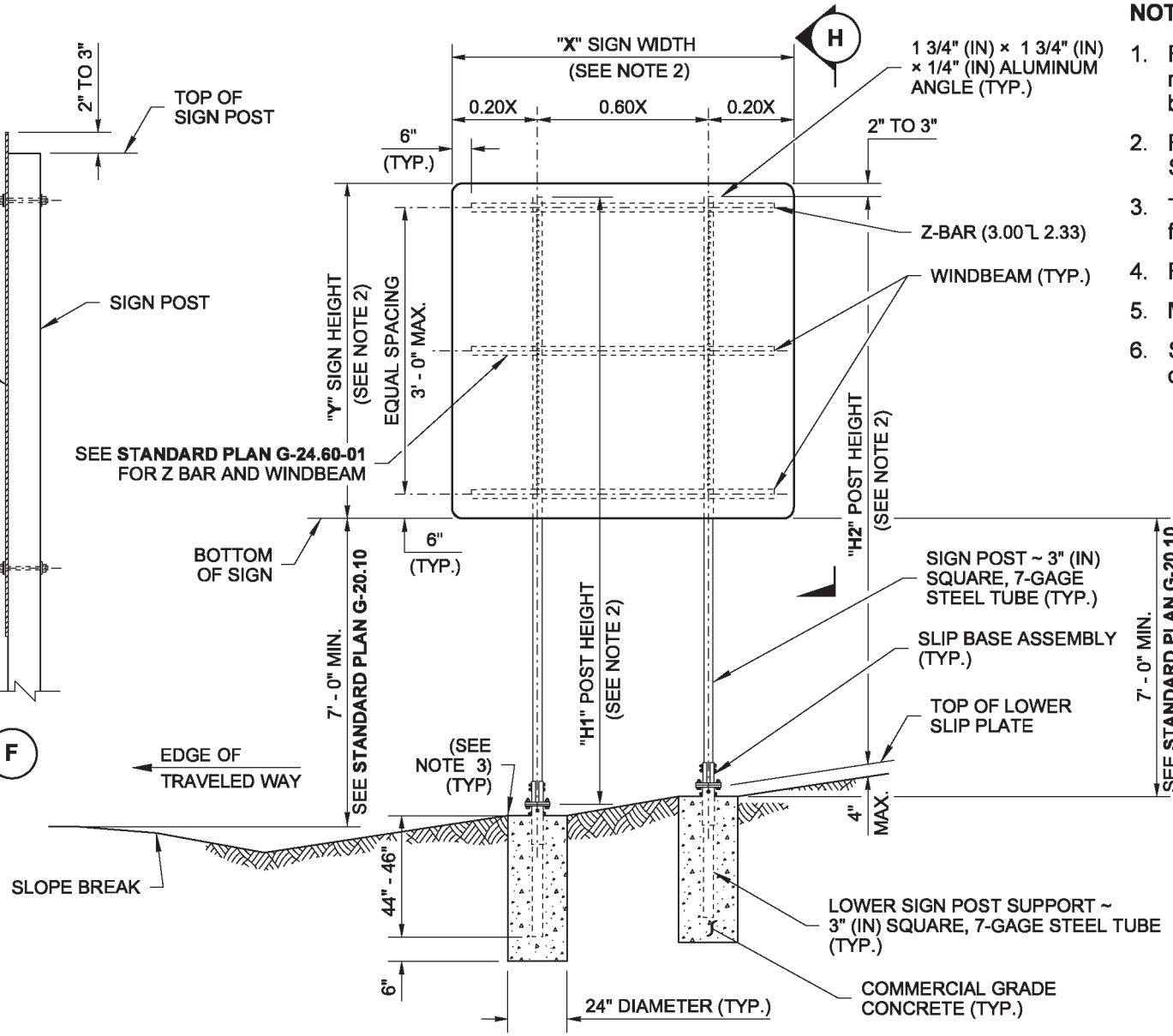

ELEVATION
DUAL-POST INSTALLATION

NOTES

1. For "**W**", Horizontal distance from edge of traveled way to center of nearest post, and "**V**", Vertical distance from edge of traveled way to bottom of sign, see **Standard Plan G-20.10**.
2. For "**X**", "**Y**", "**H1**", "**H2**", "**H3**", and "**H4**", refer to the Sign Specification Sheet in the Contract.
3. Top of concrete foundation shall be smooth, dense, and uniform to finished ground line.
4. Field drill posts to accept angle and cold galvanized holes.
5. Materials shall meet the requirements of **Standard Specification 9-28**.
6. Slip Base assembly materials shall meet the requirements of **Standard Specifications 9-06** and **9-28**.

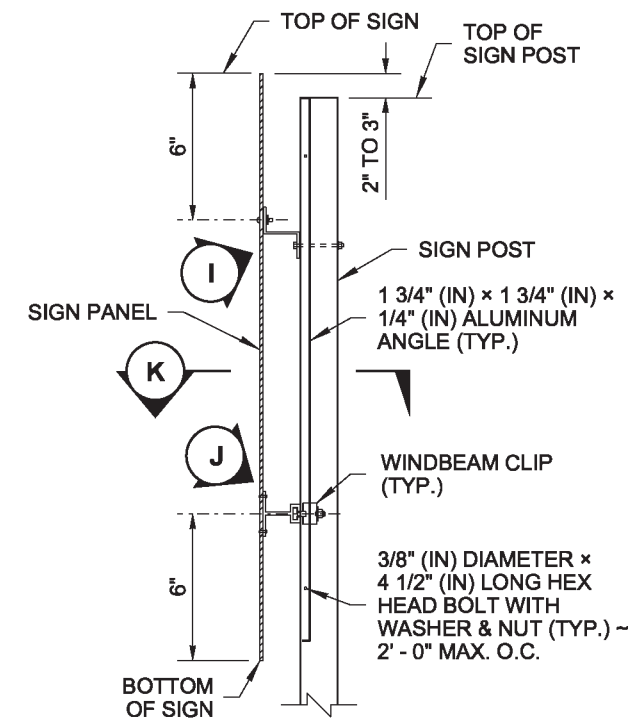

VIEW H

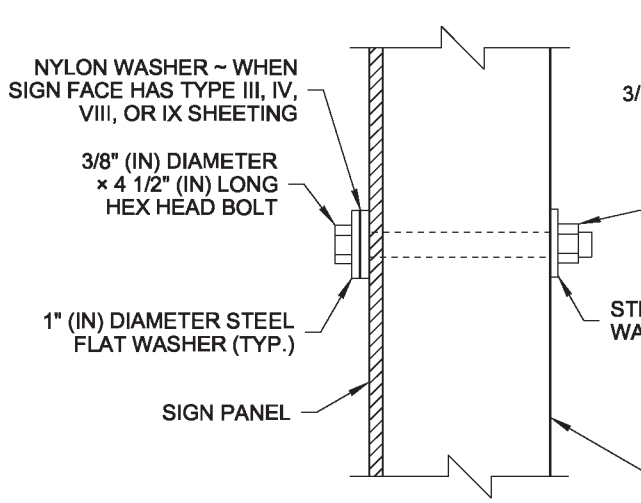

DETAIL G

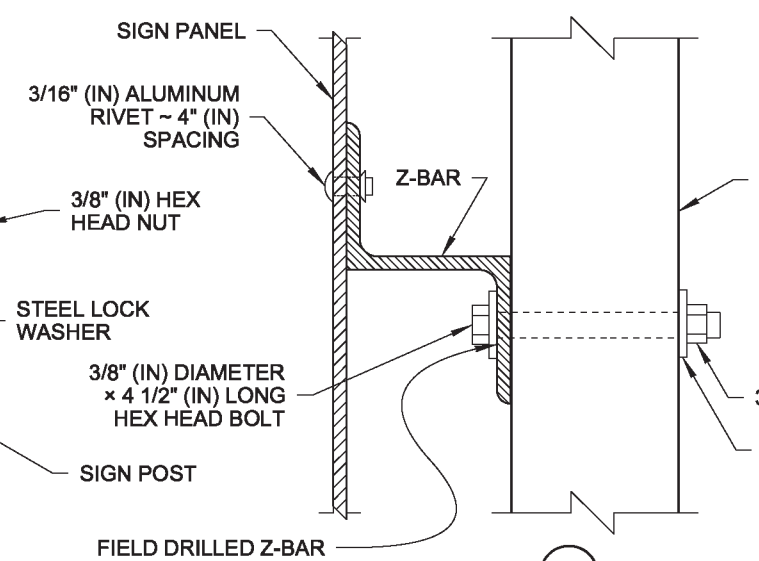

DETAIL I

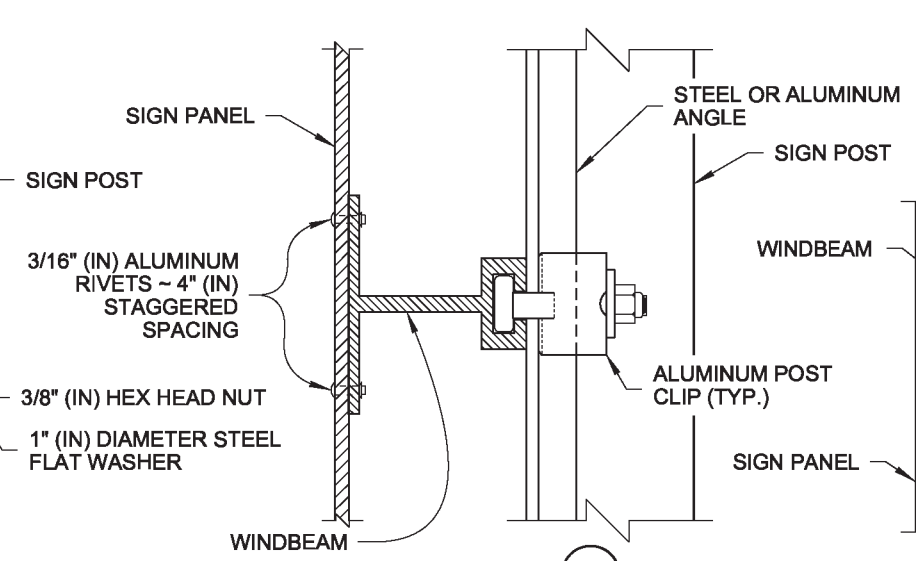

DETAIL J

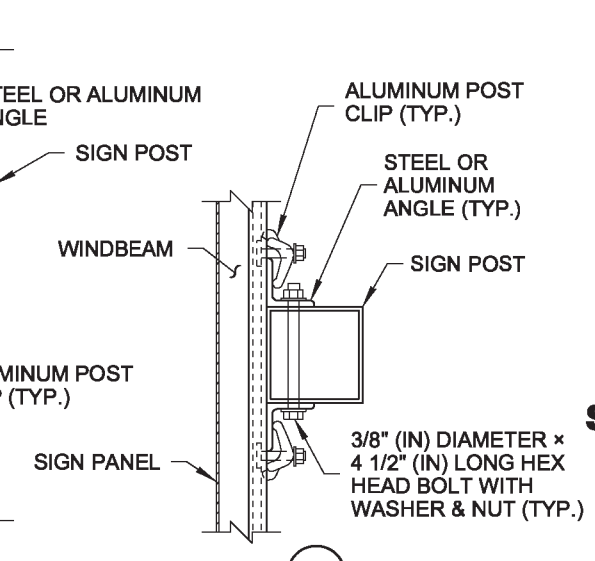

SECTION K

STEEL SIGN SUPPORT TYPES SB-1, SB-2 & SB-3 ~ 10" (IN)

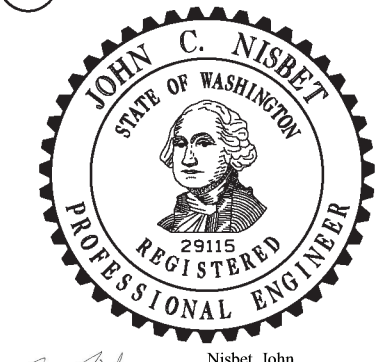

Nisbet, John
Jun 12 2014 7:40 AM

STEEL SIGN SUPPORT TYPES SB-1, SB-2 & SB-3 INSTALLATION DETAILS STANDARD PLAN G-24.40-04

SHEET 3 OF 4 SHEETS

APPROVED FOR PUBLICATION
Bakotich, Pasco
Jun 17 2014 9:38 AM
STATE DESIGN ENGINEER
Washington State Department of Transportation

DRAWN BY: FERN LIDDELL

DRAWN BY: FERN LIDDELL

ASSEMBLY NOTES

1. Dimensions for the parts used to assemble the base connections are intentionally not shown. Base connections are patented, manufactured products that are in compliance with NCHRP 350 crash test criteria. The base connection details are shown on this plan only to illustrate how the parts are assembled.
2. Do not tighten any single Slip Plate Bolt to the recommended torque before pretightening the other bolts. Progressively tighten the three Slip Plate Bolts in 10 ft-lb increments, alternately, to a final torque of 40 ft-lbs on each.
3. Use only Slip Base manufacturer supplied hardware that meets the requirements of **Standard Specifications 9-06** and **9-28**.

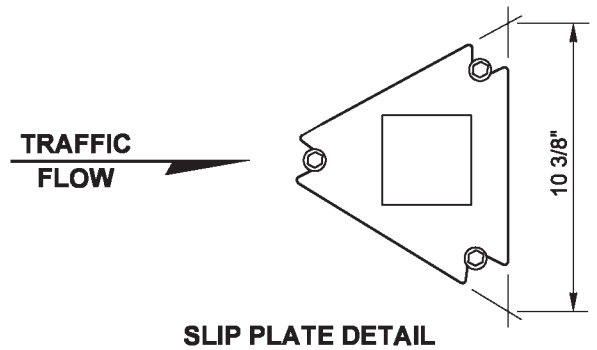

SLIP PLATE DETAIL
FOR TYPE SB-1

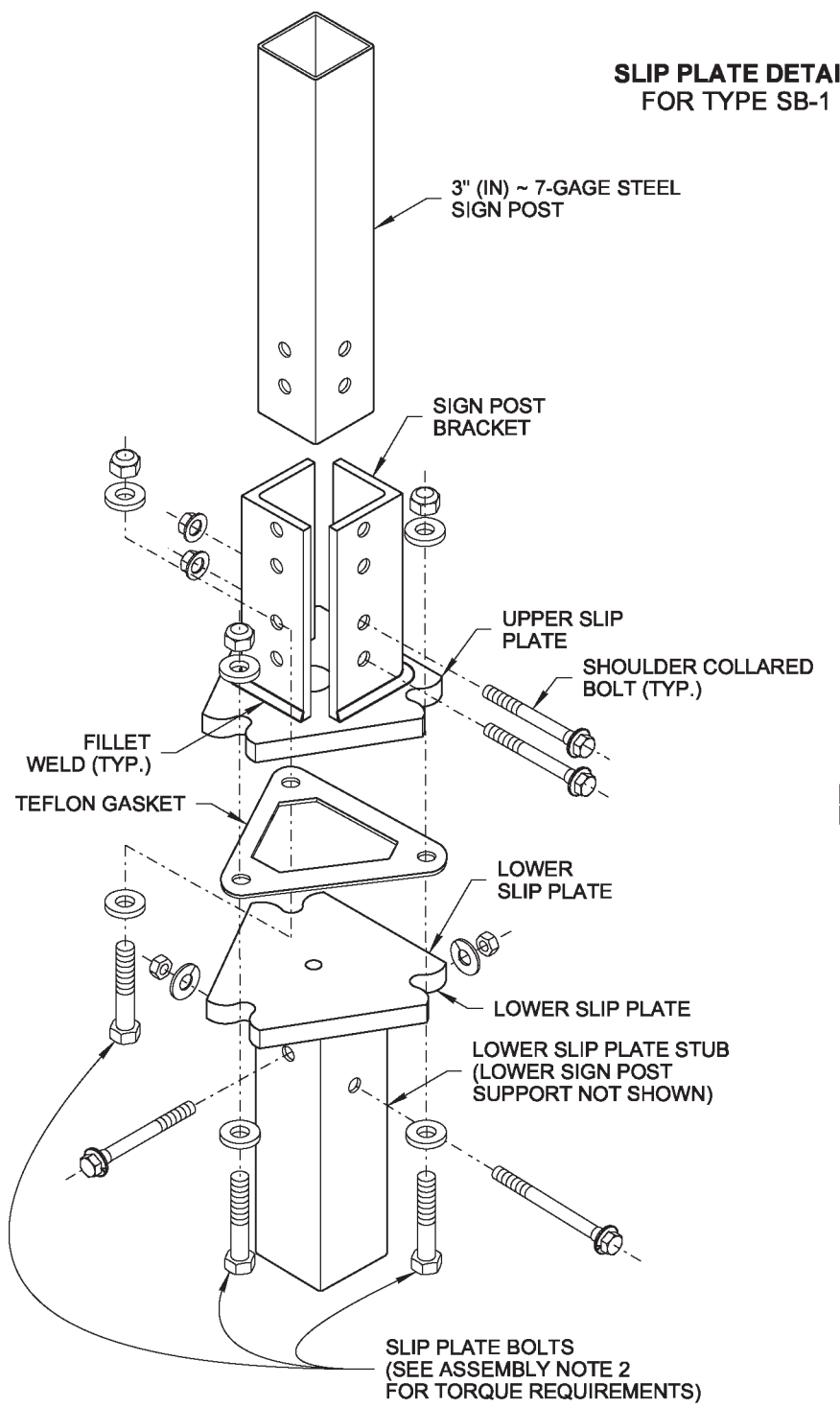

EXPLODED VIEW

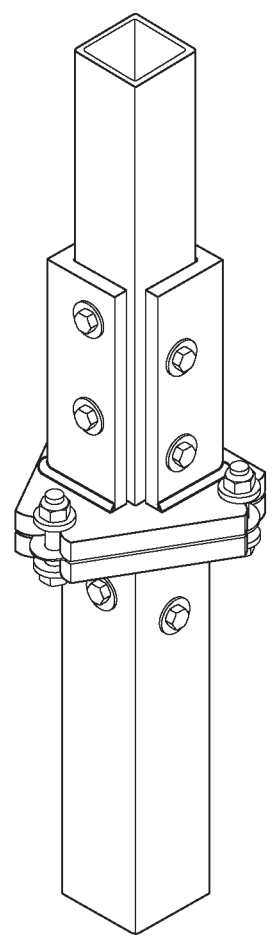

ISOMETRIC VIEW

TYPE SB-1
SLIP BASE ASSEMBLY

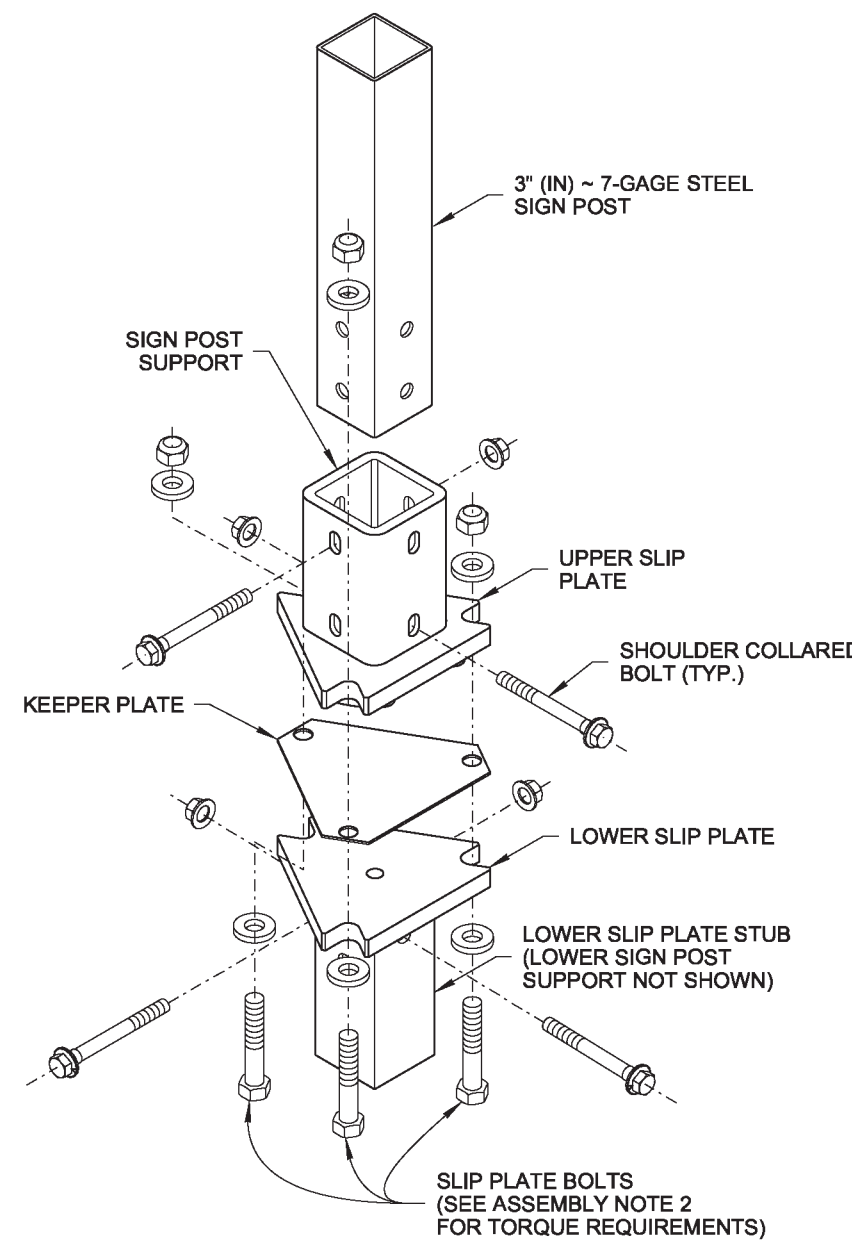

EXPLODED VIEW

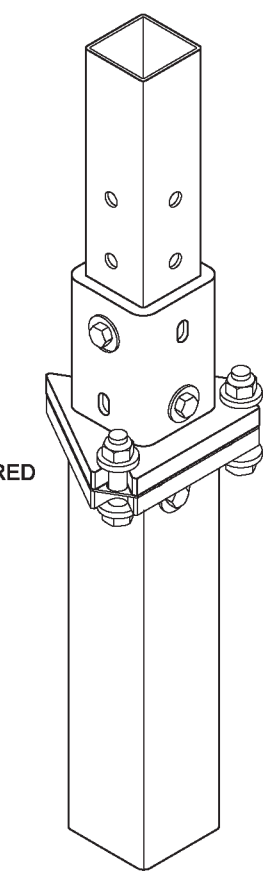

ISOMETRIC VIEW

TYPE SB-3
SLIP BASE ASSEMBLY

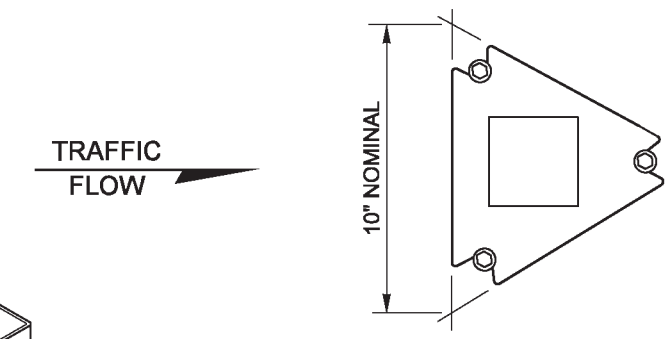

SLIP PLATE DETAIL
FOR TYPE SB-3

Nisbet, John
Jun 12 2014 7:40 AM

STEEL SIGN SUPPORT
TYPES SB-1, SB-2 & SB-3
INSTALLATION DETAILS
STANDARD PLAN G-24.40-04

SHEET 4 OF 4 SHEETS

APPROVED FOR PUBLICATION
Bakotich, Pasco
Jun 17 2014 9:39 AM
STATE DESIGN ENGINEER
Washington State Department of Transportation

STEEL SIGN SUPPORT TYPES SB-1 & SB-3 ~ 10" (IN)

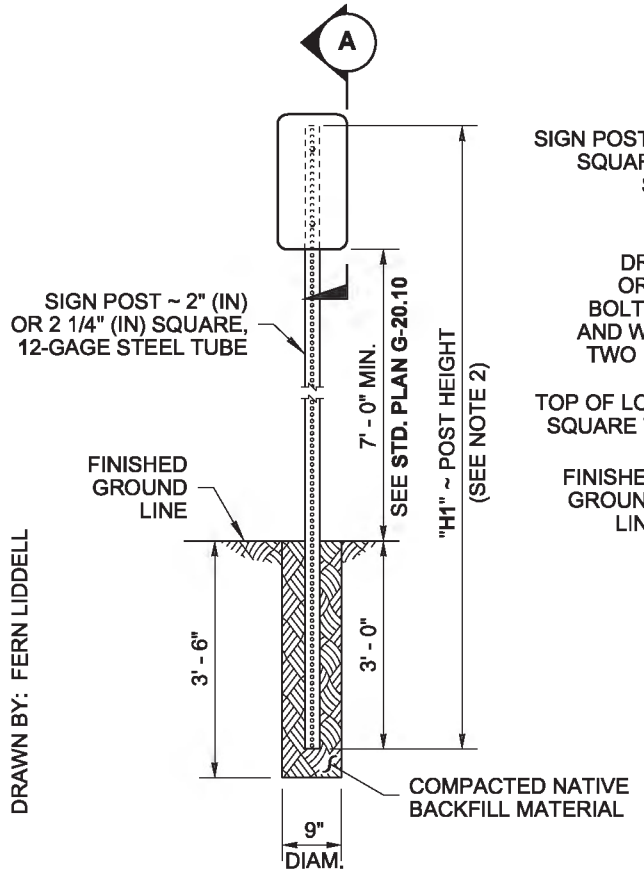

ELEVATION

TYPE ST-1 SIGN SUPPORT

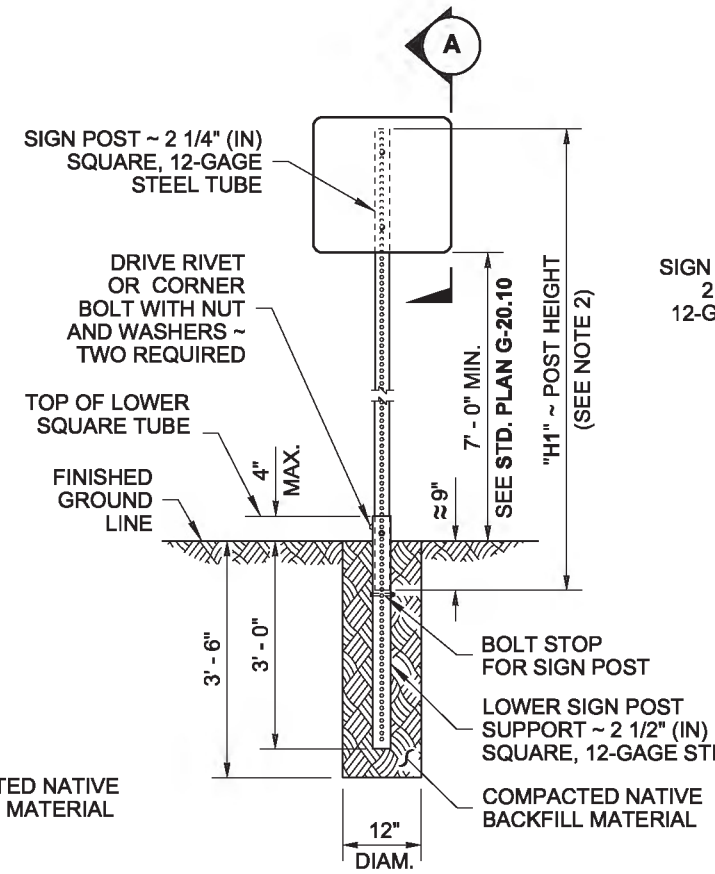

ELEVATION

TYPE ST-2 SIGN SUPPORT

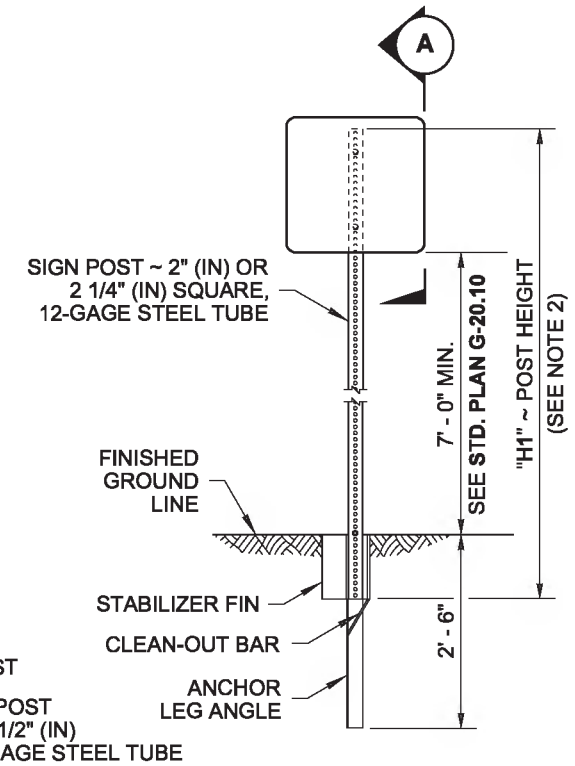

ELEVATION

TYPE ST-3 SIGN SUPPORT

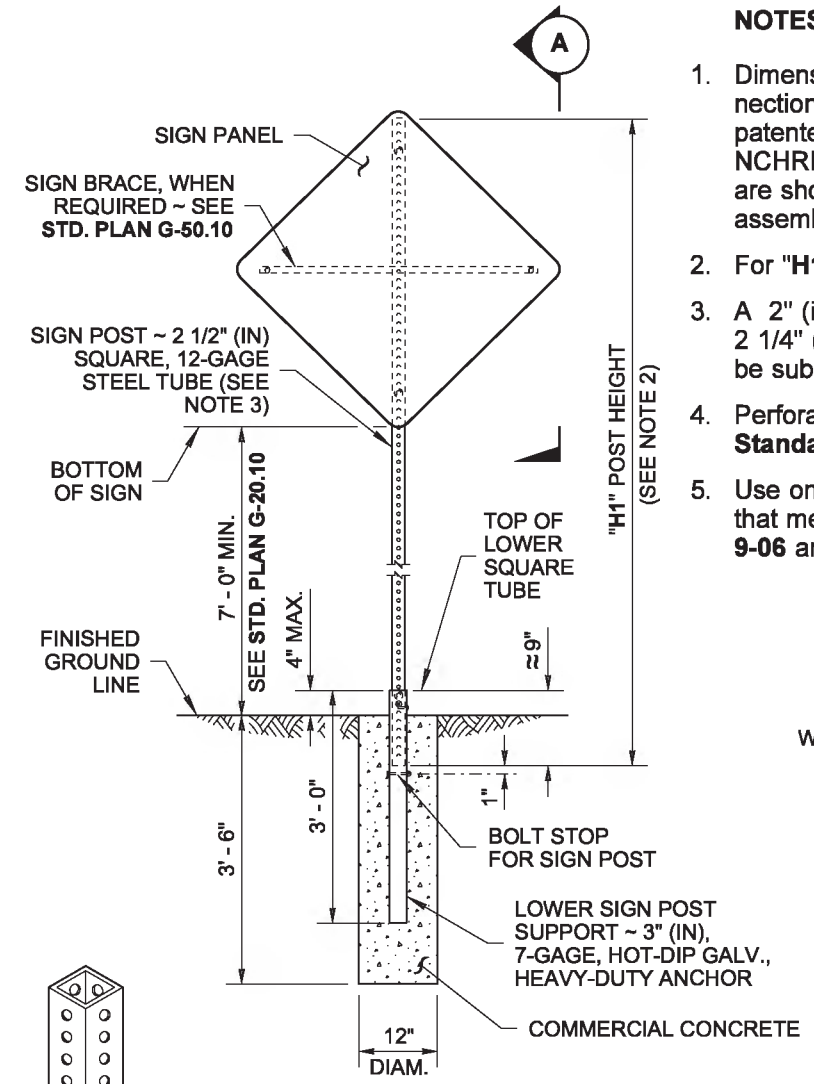

ELEVATION

TYPE ST-4 SIGN SUPPORT

NOTES

1. Dimensions for the parts used to assemble the base connections are intentionally not shown. Base connections are patented, manufactured products that are in compliance with NCHRP 350 crash test criteria. The base connection details are shown on this plan only to illustrate how the parts are assembled.
2. For "**H1**", refer to the Sign Specification Sheet in the Contract.
3. A 2" (in) post with a 2 1/4" (in) PSST anchor or a 2 1/4" (in) post with a 2 1/2" (in) PSST anchor may be substituted. See Contract Plans.
4. Perforated square steel post shall meet the requirements of **Standard Specification 9-06**.
5. Use only base connection manufacturer supplied hardware that meets the requirements of **Standard Specifications 9-06** and **9-28**.

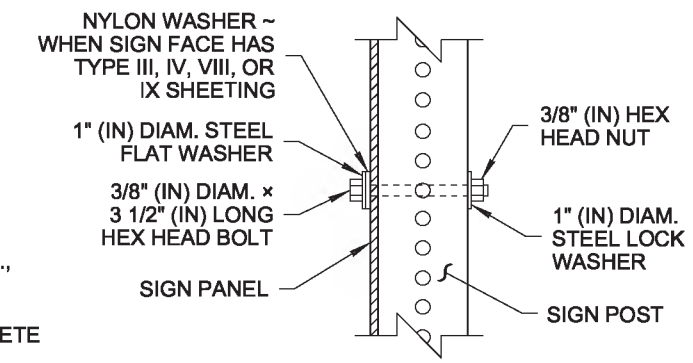

DETAIL B

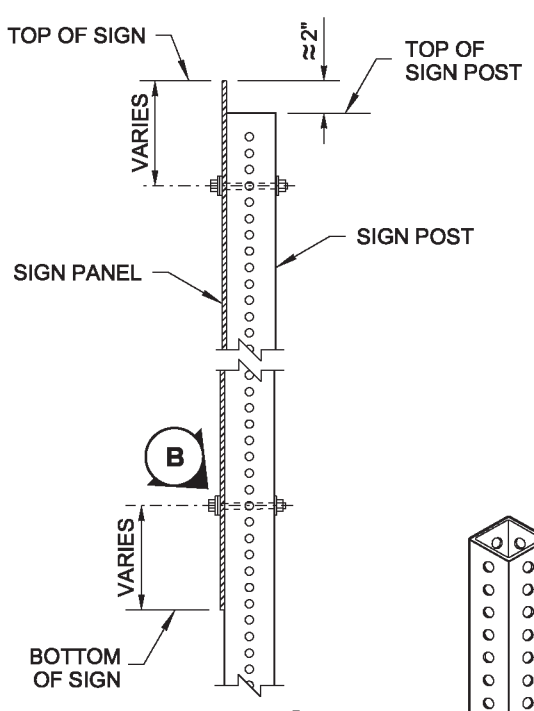

VIEW A

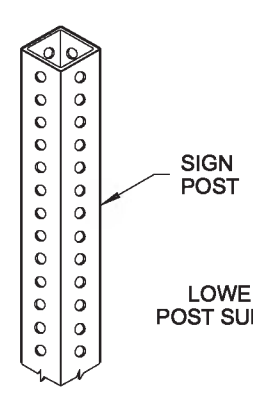

TYPE ST-1

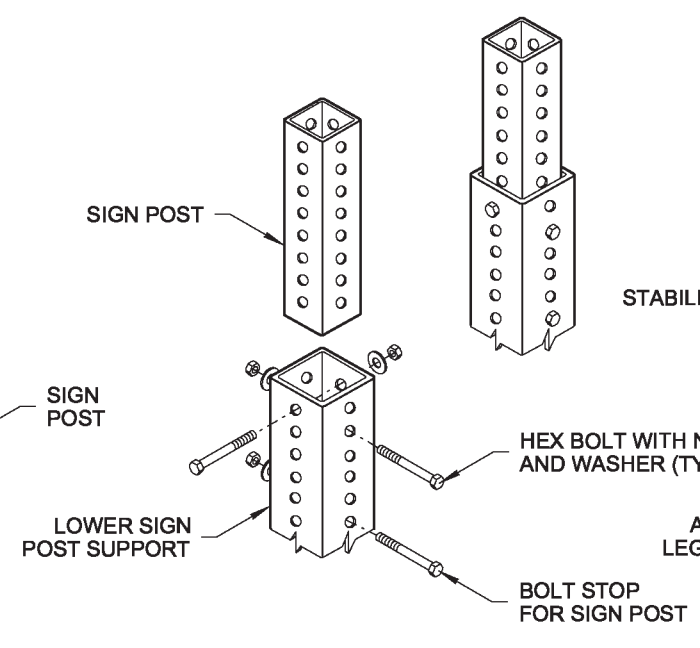

TYPE ST-2

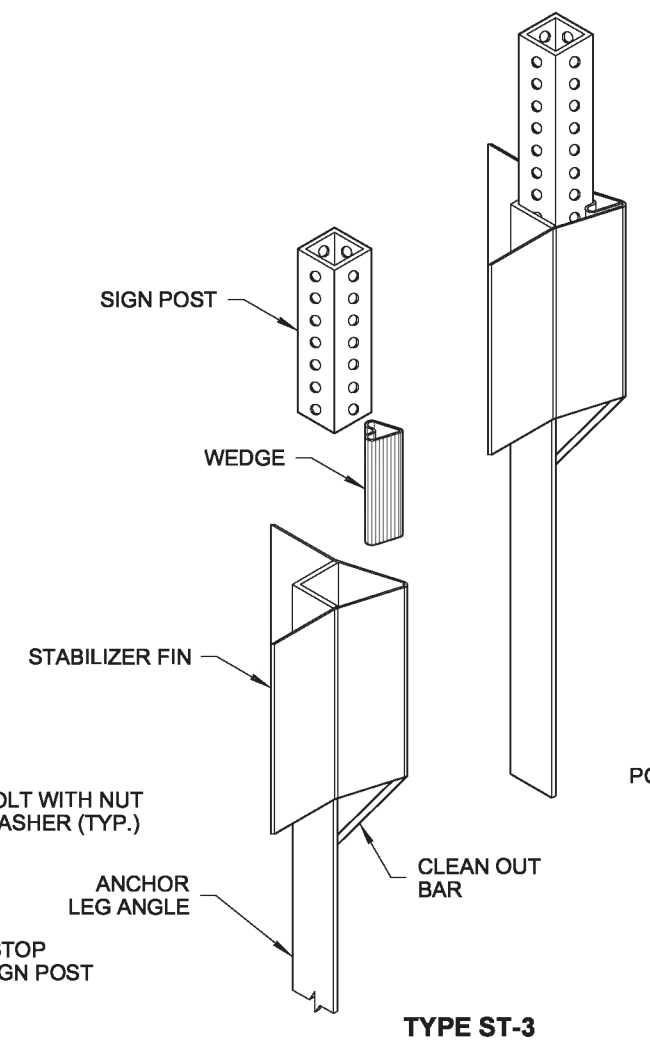

TYPE ST-3

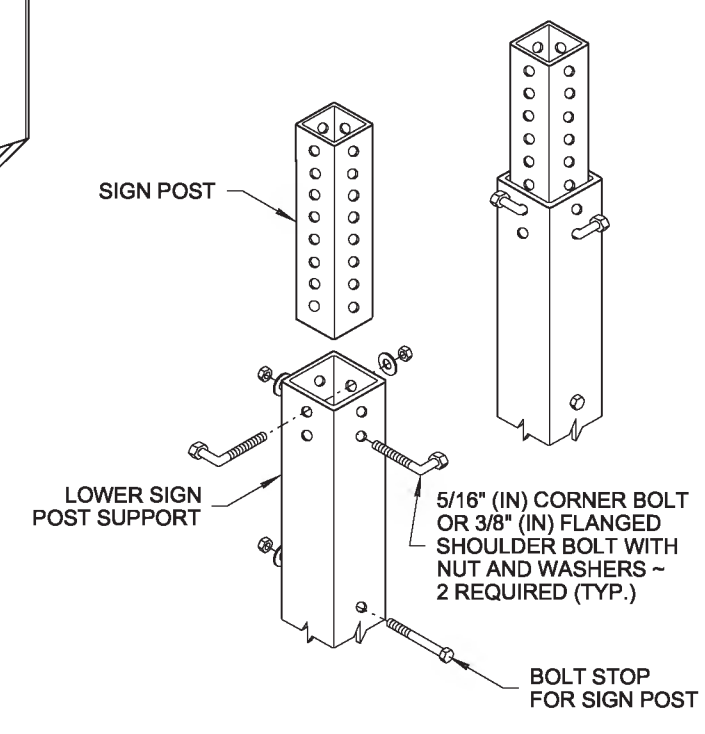

TYPE ST-4

JOHN C. NISBET
STATE OF WASHINGTON
29115
REGISTERED
PROFESSIONAL ENGINEER

Nisbet, John
Jun 12 2014 7:41 AM

STEEL SIGN SUPPORT TYPES ST-1 - ST-4 INSTALLATION DETAILS

STANDARD PLAN G-24.50-03

SHEET 1 OF 1 SHEET

APPROVED FOR PUBLICATION
Bakotich, Pasco
Jun 17 2014 9:39 AM
STATE DESIGN ENGINEER

Washington State Department of Transportation

DRAWN BY: FERN LIDDELL

DRAWN BY: LISA GYFORD

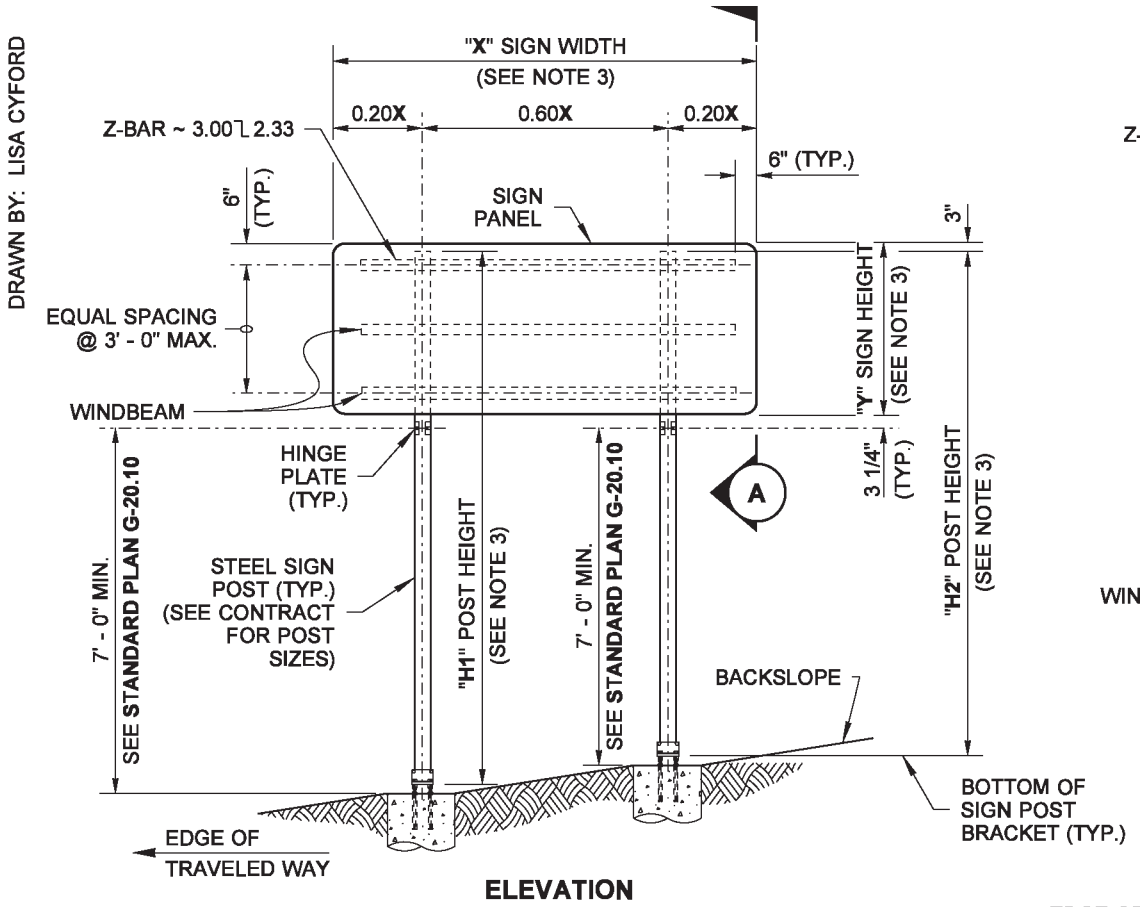

ELEVATION

TYPE TP-A OR TP-B SIGN SUPPORT

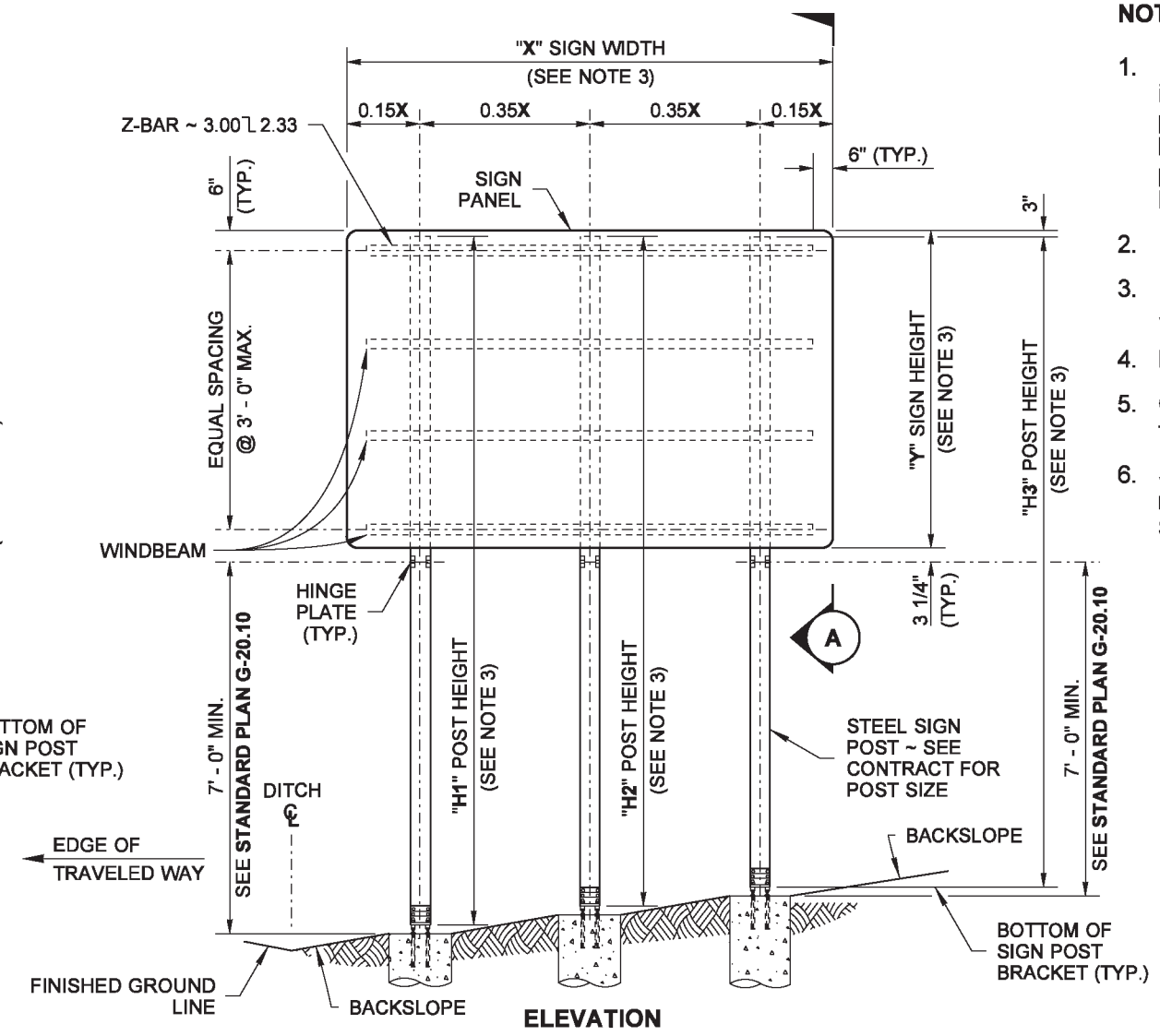

ELEVATION

TYPE TP-A OR TP-B SIGN SUPPORT

NOTES

1. Dimensions for the parts used to assemble the base connections are intentionally not shown. Base connections are patented, manufactured products that are in compliance with NCHRP 350 crash test criteria. The base connection details are shown on this plan only to illustrate how the parts are assembled. Use only base connection manufacturer supplied hardware that meets the requirements of **Standard Specification 9-06**.
2. For Steel Sign Support Foundations, see **Standard Plan G-25.10.**
3. For "**X**", "**Y**", "**H1**", "**H2**", and "**H3**", refer to the Sign Specification Sheet in the Contract.
4. Maximum of 34 lbs/ft in a 7' (ft) wheel path.
5. On fill slopes, the maximum sign height is 9' (ft) for posts closest to the edge of traveled way.
6. Sign mounting materials shall meet the requirements of **Standard Specification 9-28**.

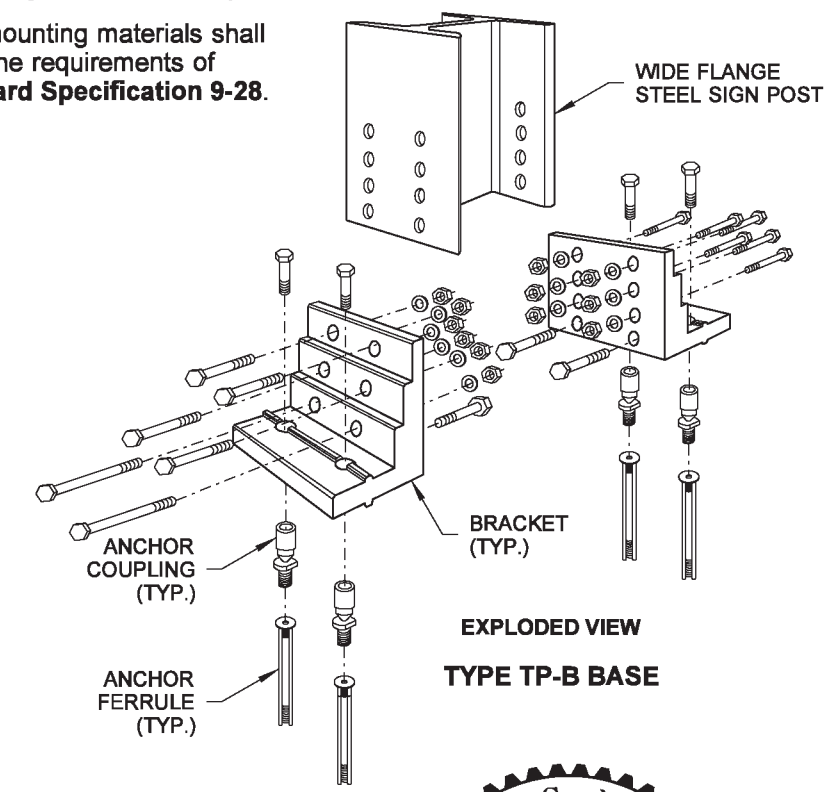

EXPLODED VIEW

TYPE TP-B BASE

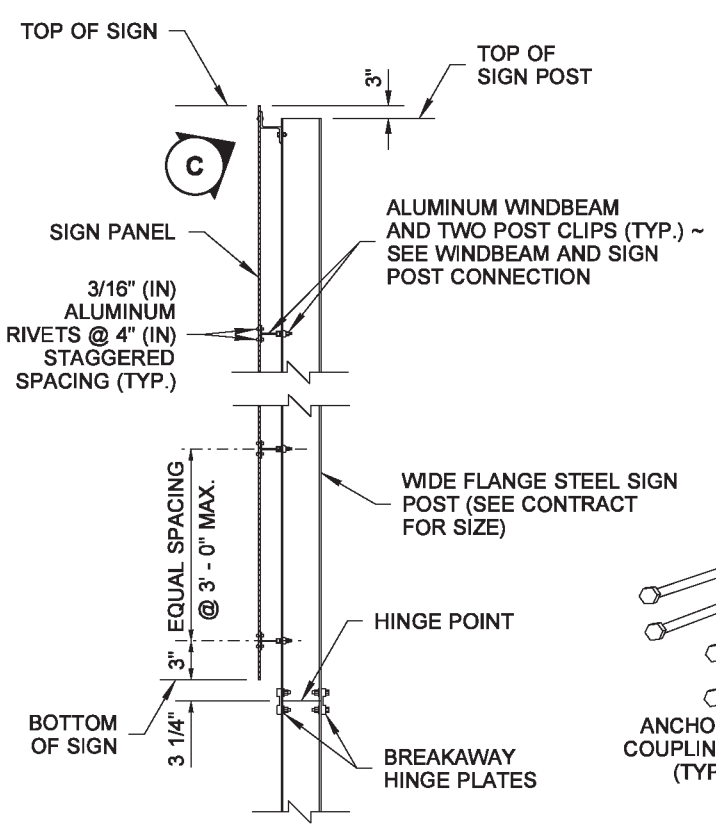

VIEW A

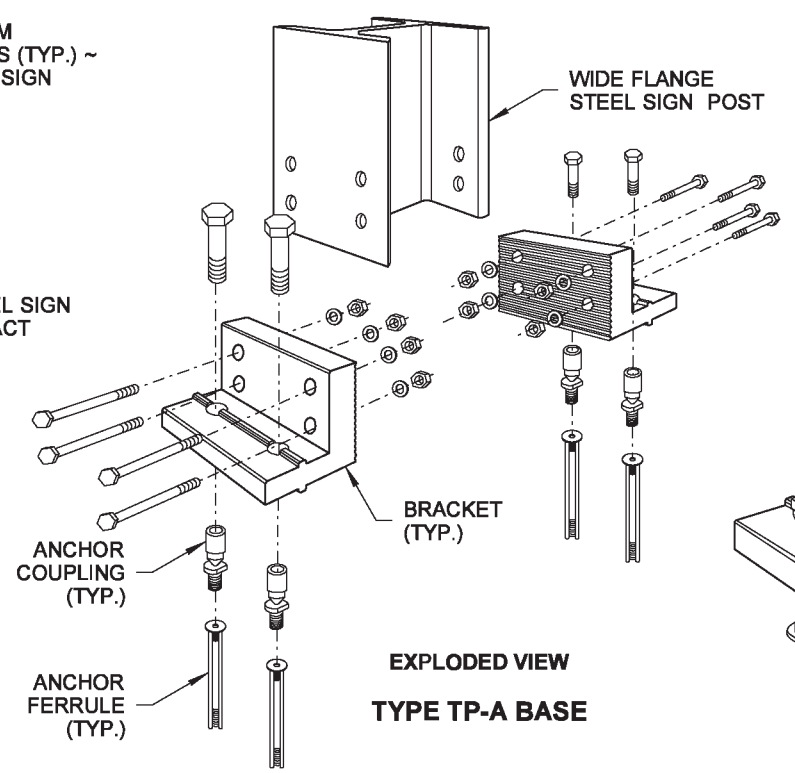

EXPLODED VIEW

TYPE TP-A BASE

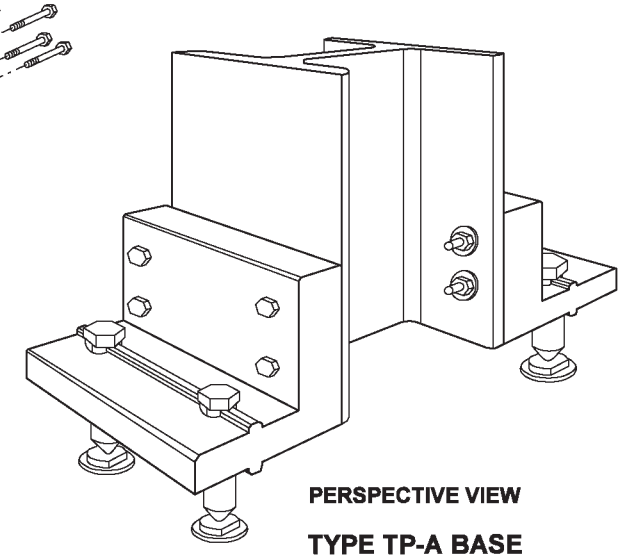

PERSPECTIVE VIEW

TYPE TP-A BASE

(W6×9)

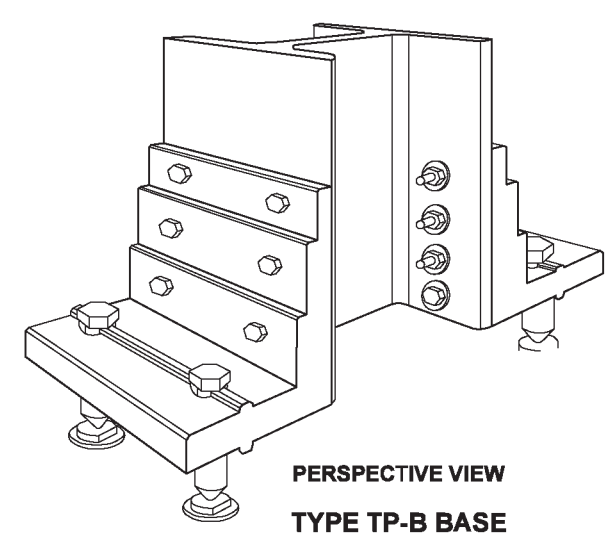

PERSPECTIVE VIEW

TYPE TP-B BASE

(W6×12 OR LARGER)

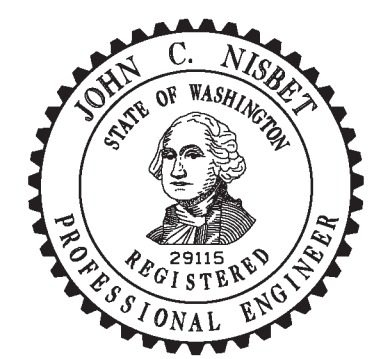

Nisbet, John
Jun 12 2014 7:42 AM

STEEL SIGN SUPPORT TYPES TP-A AND TP-B INSTALLATION DETAILS STANDARD PLAN G-24.60-03

SHEET 1 OF 2 SHEETS

APPROVED FOR PUBLICATION
Bakotich, Pasco
Jun 17 2014 9:40 AM
STATE DESIGN ENGINEER
Washington State Department of Transportation

DRAWN BY: LISA CYFORD

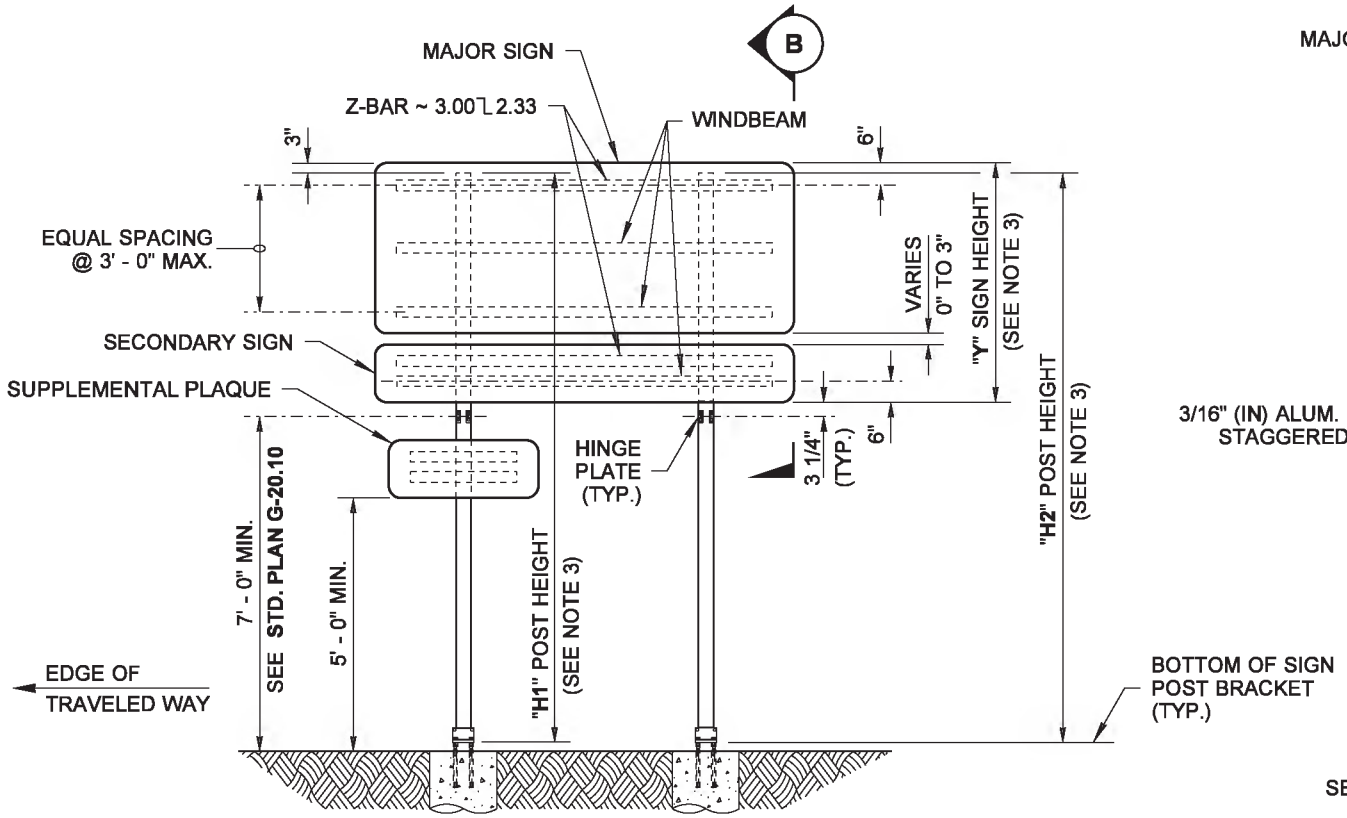

ELEVATION

MAJOR AND SECONDARY SIGN SUPPORT INSTALLATION

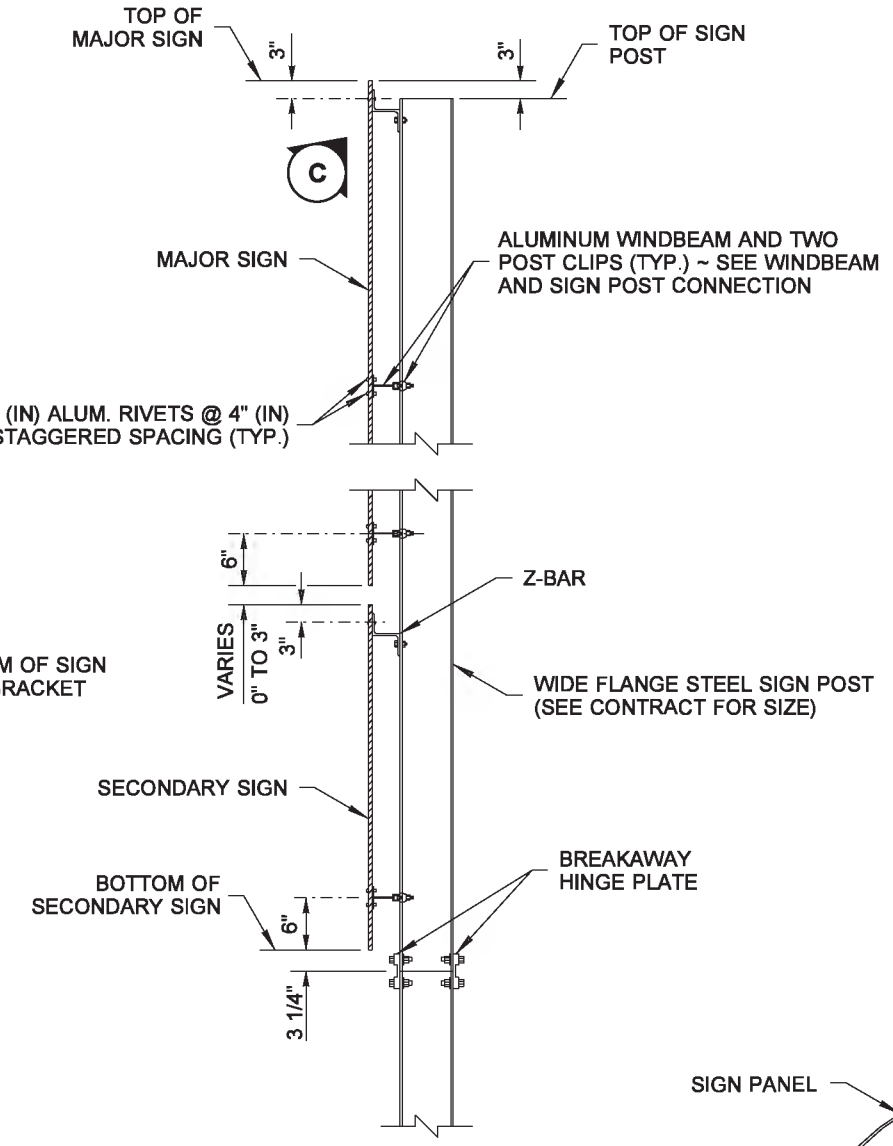

VIEW B

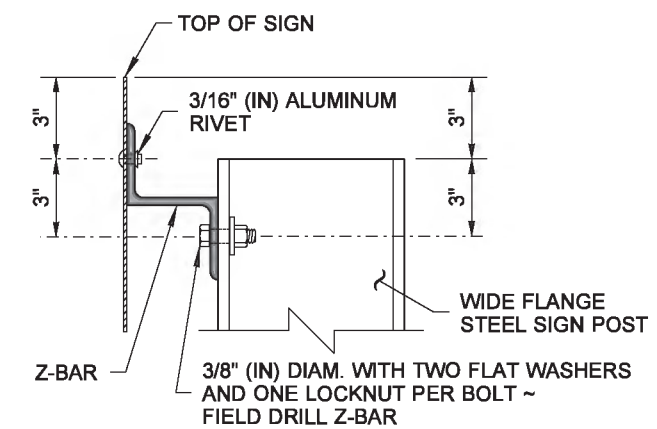

DETAIL C

(BOLT ON ONE SIDE OF EACH WIDE FLANGE STEEL SIGN POST)

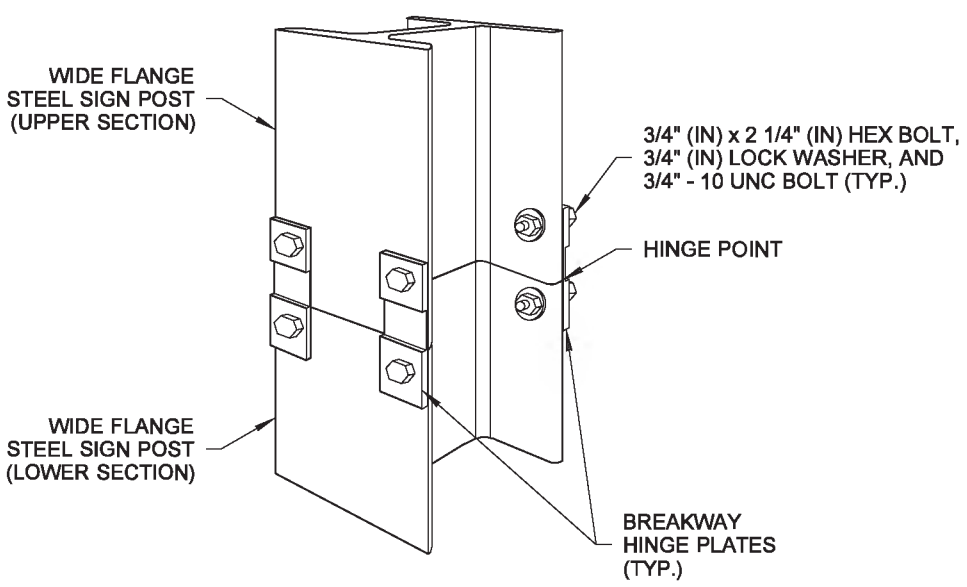

PERSPECTIVE VIEW

BREAKAWAY HINGE PLATE CONNECTION

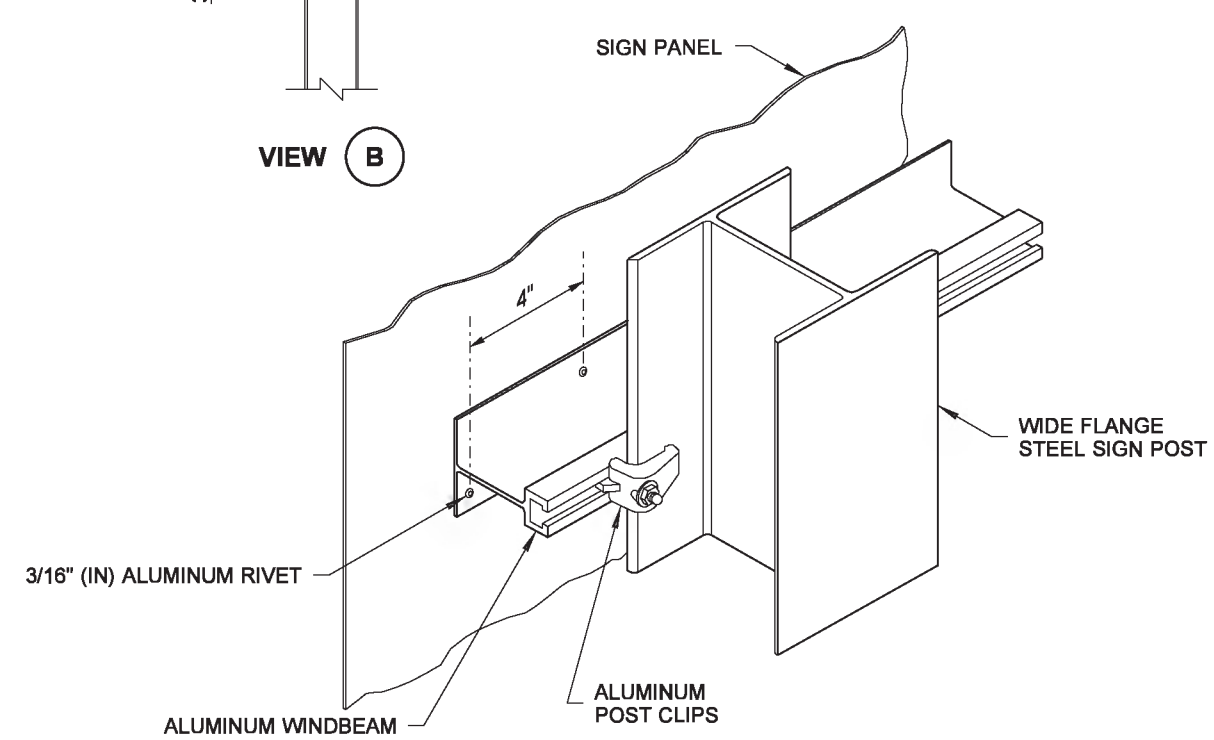

ISOMETRIC VIEW

WINDBEAM AND SIGN POST CONNECTION

(ATTACH POST CLIPS ON BOTH SIDES OF WIDE FLANGE STEEL SIGN POST)

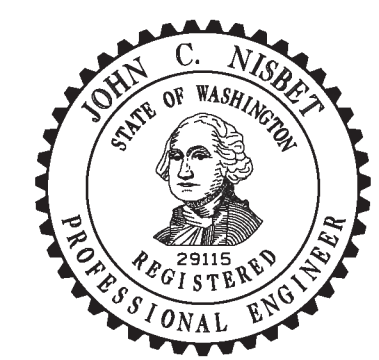

Nisbet, John
Jun 12 2014 7:42 AM

STEEL SIGN SUPPORT TYPES TP-A AND TP-B INSTALLATION DETAILS STANDARD PLAN G-24.60-03

SHEET 2 OF 2 SHEETS

APPROVED FOR PUBLICATION
Bakotich, Pasco
Jun 17 2014 9:40 AM
STATE DESIGN ENGINEER
Washington State Department of Transportation

DRAWN BY: LISA CYFORD

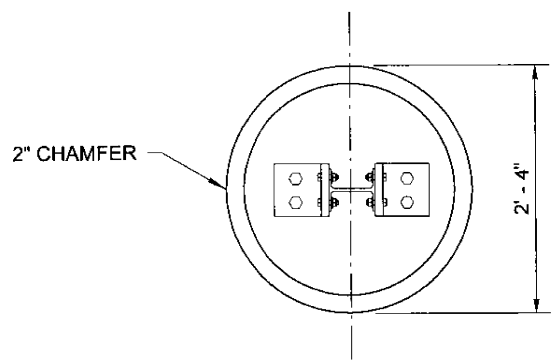

PLAN VIEW

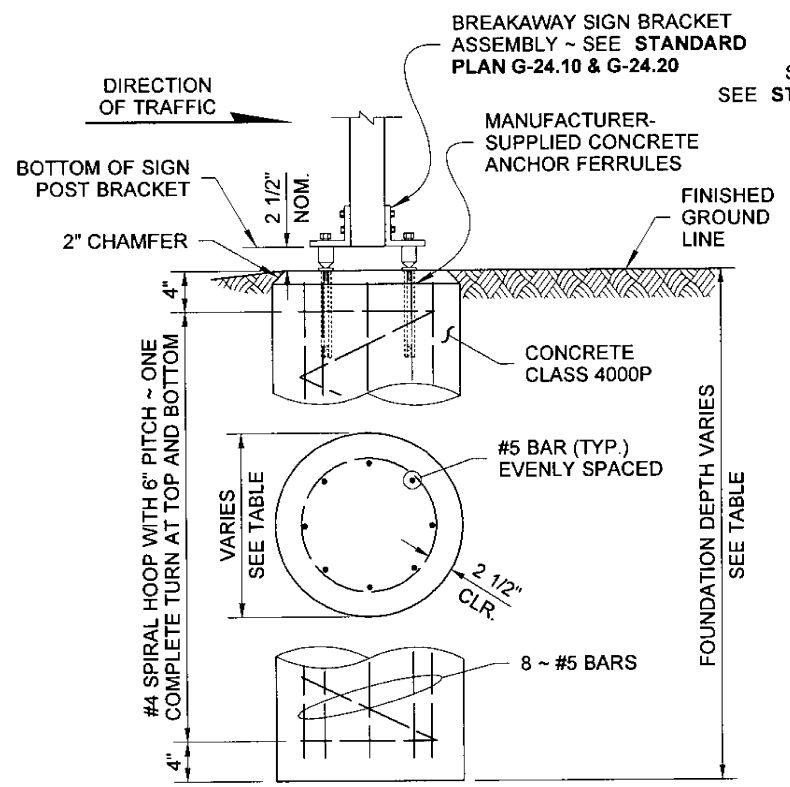

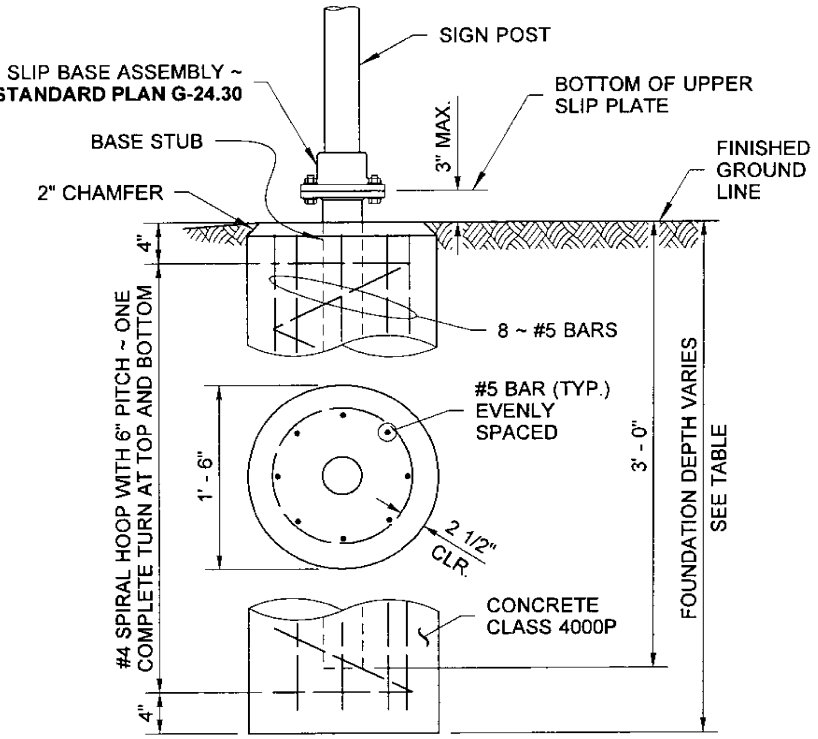

ELEVATION VIEW

NOTES

1. Per TRANSPO: 5" to 8" square steel posts are acceptable and require type TP-B foundations.
2. Install conduit for post-mounted Junction Box in the concrete foundation, when required. See **Standard Plan J-40.35, Sheet 2.**

KEY NOTES

1. Foundation depths based on allowable lateral bearing pressure in excess of 2500 PSF.
2. Two-post installation.
3. Single-post installations require square steel posts. For single-post installations, divide the 2 post MAX. XYZ in half.

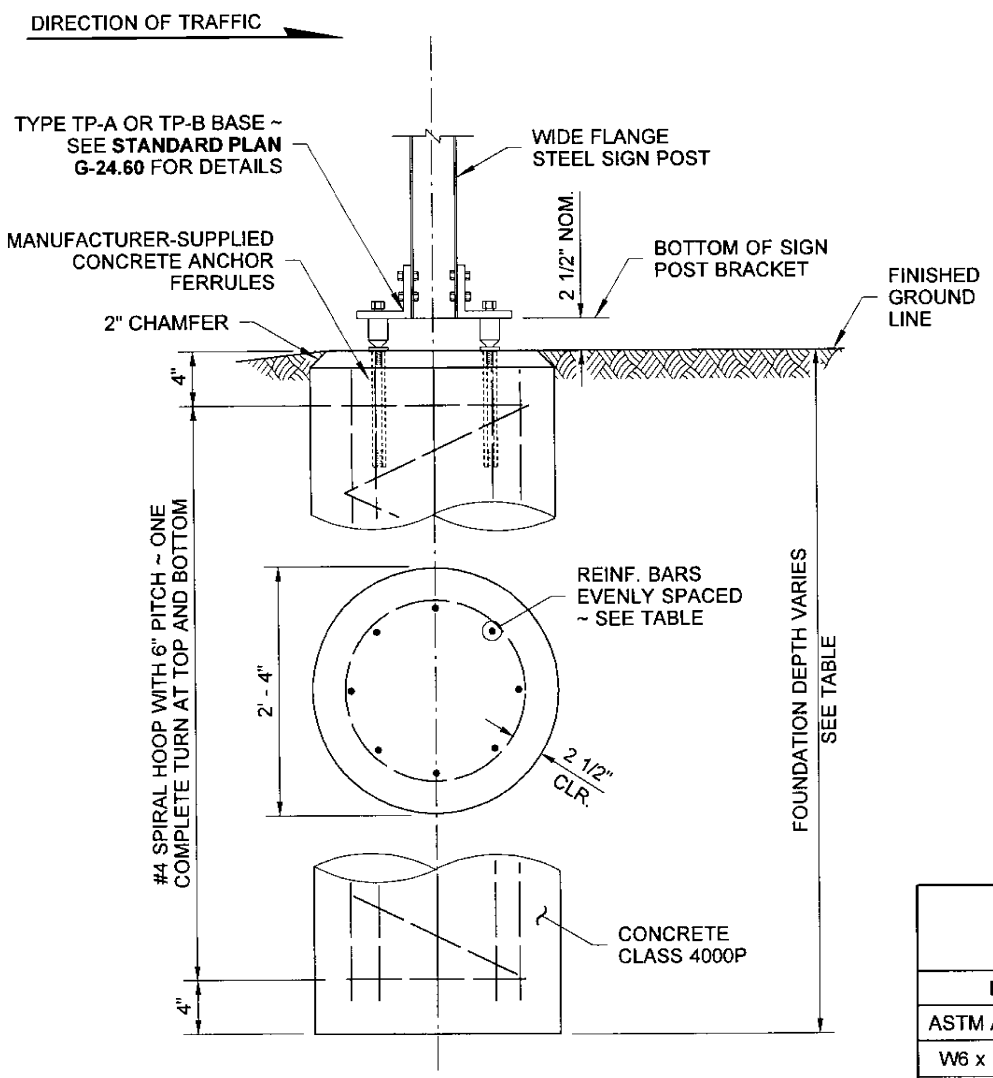

ELEVATION VIEW

TYPE AS & TYPE AP FOUNDATION

TYPE AS FOUNDATION TABLE

POST SIZE	MAX. XYZ	FDN. DIAM.	FDN. DEPTH 1
4" SQ.	250	18"	4' - 0"

TYPE AP FOUNDATION TABLE

POST SIZE	MAX. XYZ	FDN. DIAM.	FDN. DEPTH 1
3" O.D.	225	18"	3' - 6"
3 1/2" O.D.	250	18"	4' - 0"
4" O.D.	275	24"	4' - 0"
4 1/2" O.D.	300	24"	4' - 0"

TYPE TP-A & TYPE TP-B FOUNDATION

TYPE TP-A & TP-B FOUNDATION TABLE
SEE NOTE 1

POST SIZE		MAX. XYZ		VERTICAL REBAR	FDN. DEPTH 1
ASTM A 36	ASTM A 992	2 POST 3	3 POST		
W6 x 12	W6 x 9	1570	2355	8 ~ # 5	4' - 0"
W6 x 16	W6 x 12	2340	3510	8 ~ # 5	5' - 0"
W8 x 21	W8 x 18	4120	6180	8 ~ # 6	7' - 0"
W10 x 26	W10 x 22	6320	9480	8 ~ # 7	8' - 0"
W12 x 30	W12 x 26	8700	----	8 ~ # 7	9' - 0"

TYPE PL, TYPE PL-T & TYPE PL-U FOUNDATION

TYPE PL, TYPE PL-T & TYPE PL-U FOUNDATION TABLE

MAX. XYZ	FDN. DEPTH 1
225	3' - 6"
265	4' - 0"
300	4' - 6"
600 2	4' - 6"

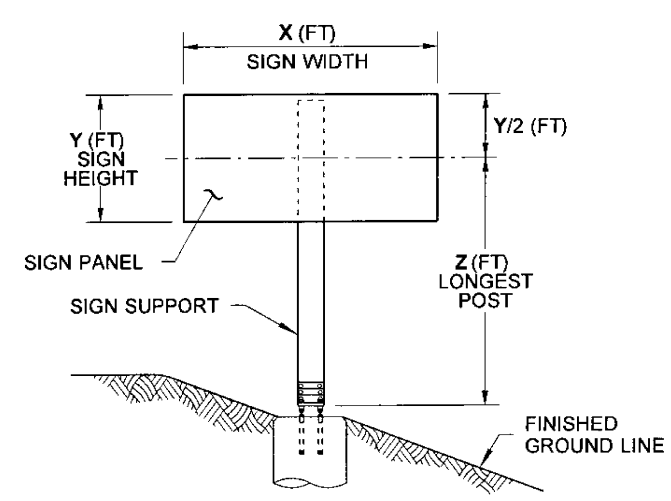

XYZ CALCULATION

XYZ (FT^3) = X × Y × Z
USED TO DETERMINE POST SIZE
~ SEE FOUNDATION TABLES

STEEL SIGN SUPPORT FOUNDATION DETAILS

STANDARD PLAN G-25.10-04

SHEET 1 OF 1 SHEET

APPROVED FOR PUBLICATION

STATE DESIGN ENGINEER — DATE 6/10/13

Washington State Department of Transportation

DRAWN BY: FERN LIDDELL

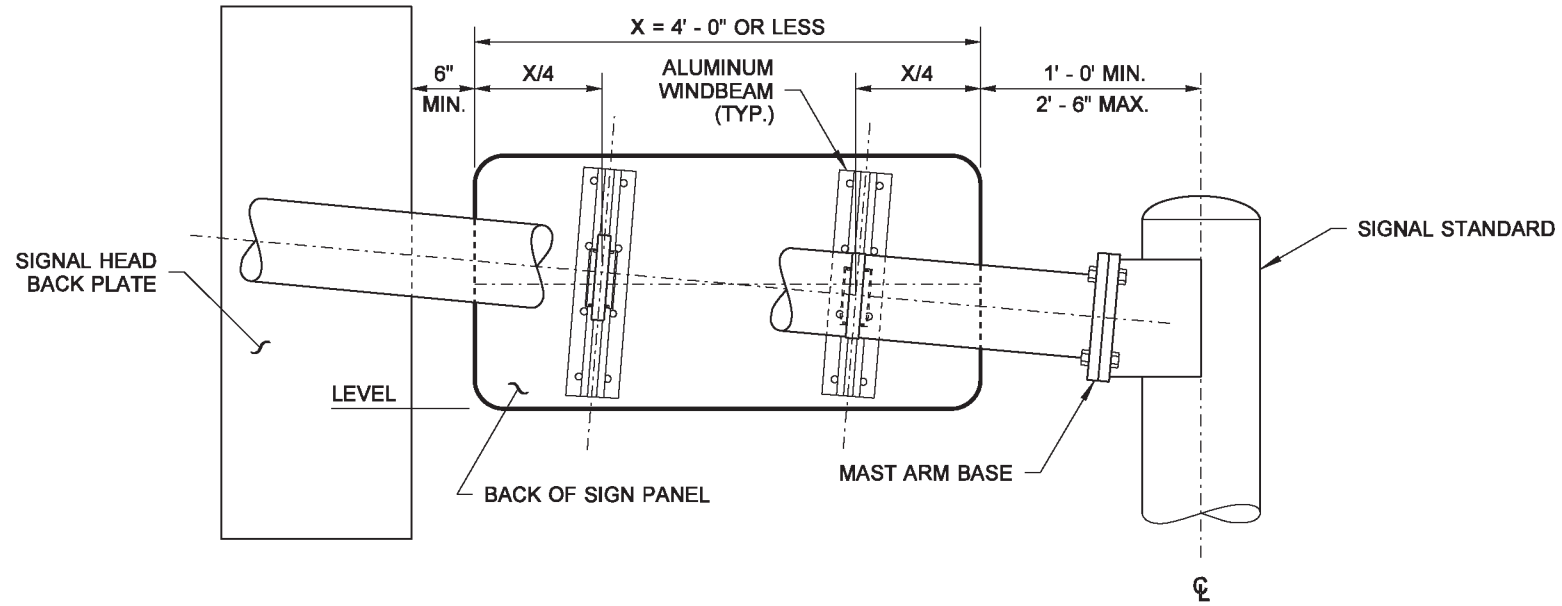

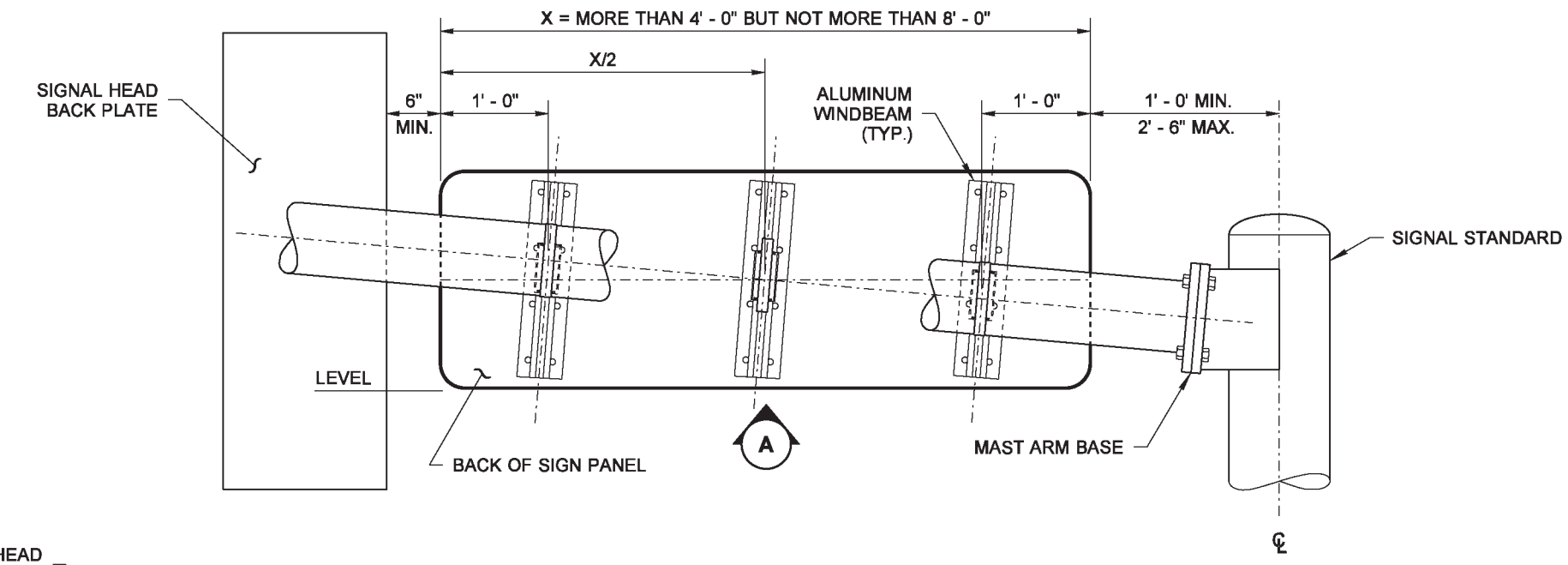

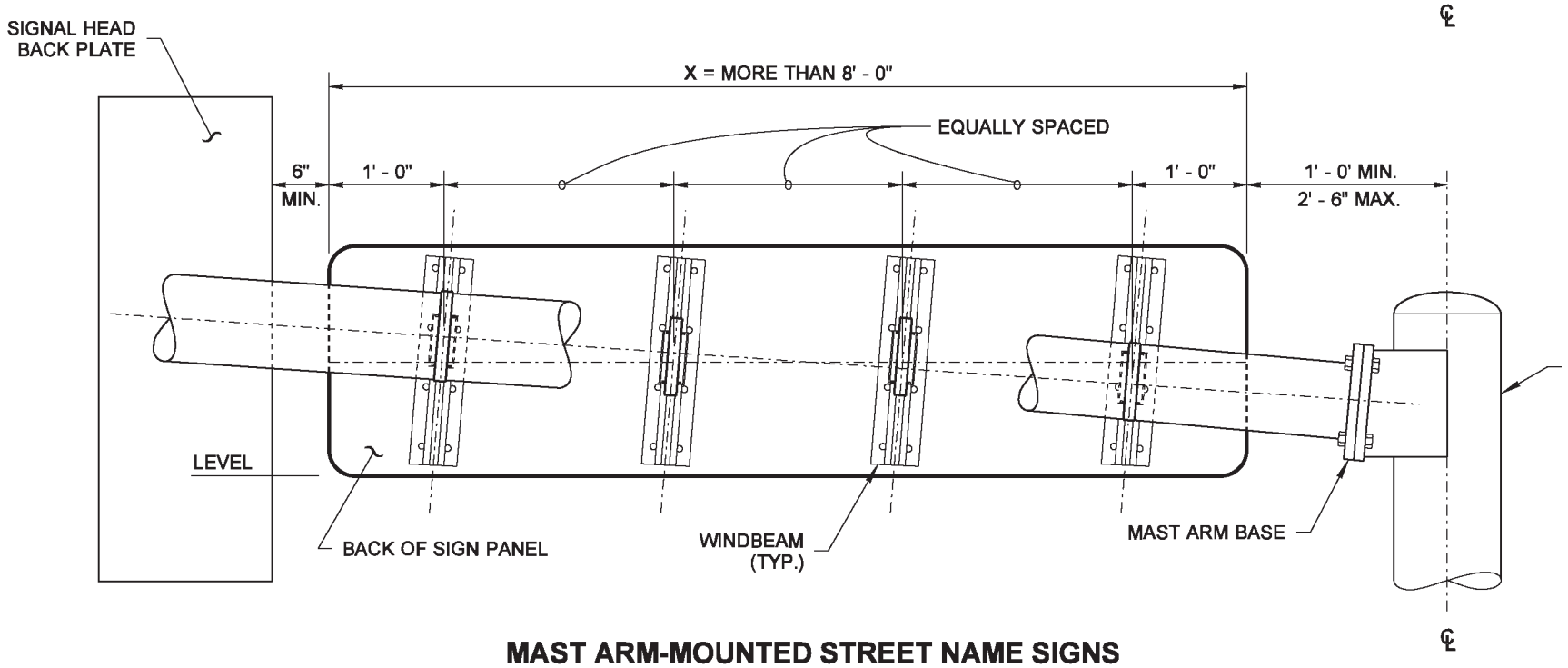

MAST ARM-MOUNTED STREET NAME SIGNS

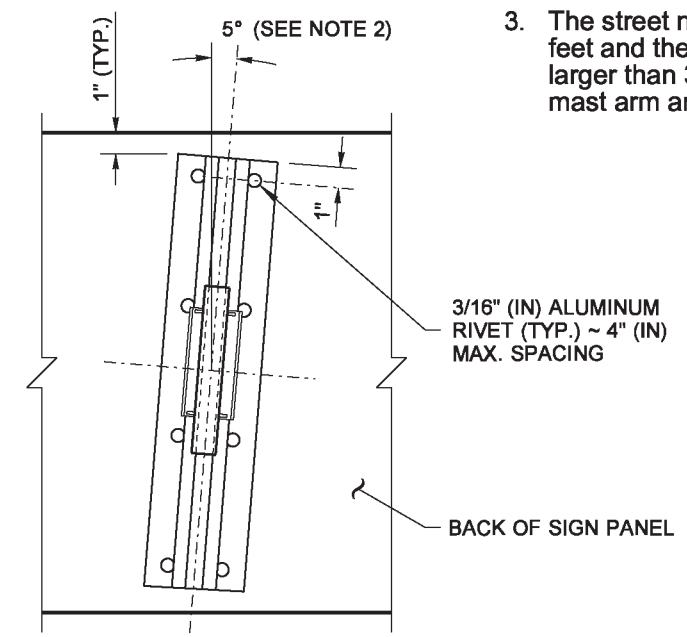

DETAIL A

TYPICAL FOR EACH CONNECTION

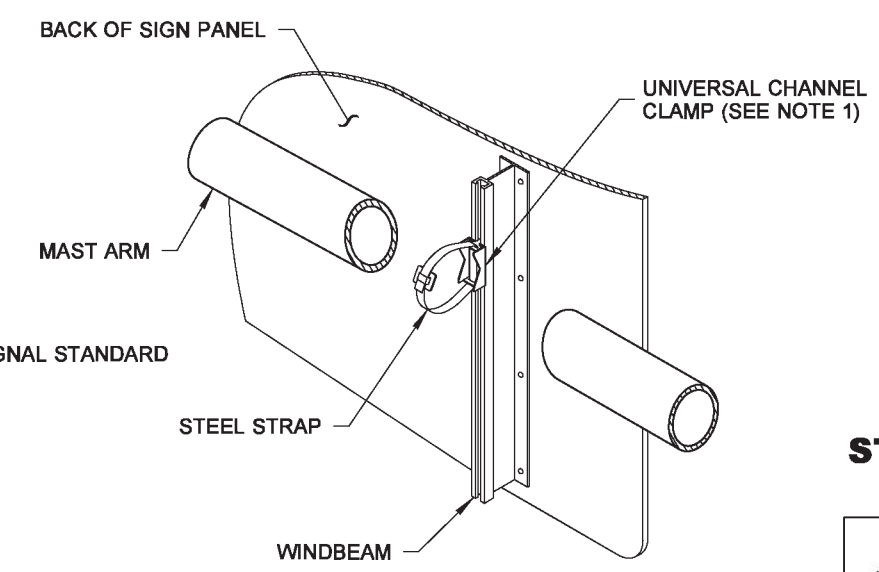

TYPICAL MAST ARM INSTALLATION

NOTES

1. Mounting brackets with steel straps shall be a stainless steel band and buckle system product or an approved equal. Mounting brackets shall be universal channel clamps; steel straps shall be 3/4" (in) wide and 0.030" (in) thick.
2. All signs installed on mast arms or standards (poles) require windbeams. All signs shall be installed with horizontal edges level. A skewed windbeam is required only when the sign is mounted within 12" (in) of the mast arm base (see Detail "A").
3. The street name sign shall be a maximum of 36 square feet and the sign height is a maximum of 3' (ft); signs larger than 36 square feet require a special design mast arm and signal pole.

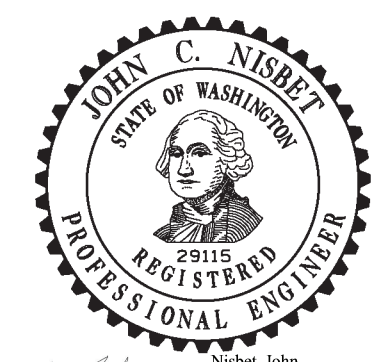

Nisbet, John
Jun 12 2014 7:43 AM

SIGN INSTALLATION ON SIGNAL AND LIGHT STANDARDS STANDARD PLAN G-30.10-03

SHEET 1 OF 2 SHEETS

APPROVED FOR PUBLICATION
Bakotich, Pasco
Jun 17 2014 9:41 AM
STATE DESIGN ENGINEER

Washington State Department of Transportation

DRAWN BY: FERN LIDDELL

DIMENSIONS	
A	B
3' - 0"	9"
4' - 0"	1' - 0"

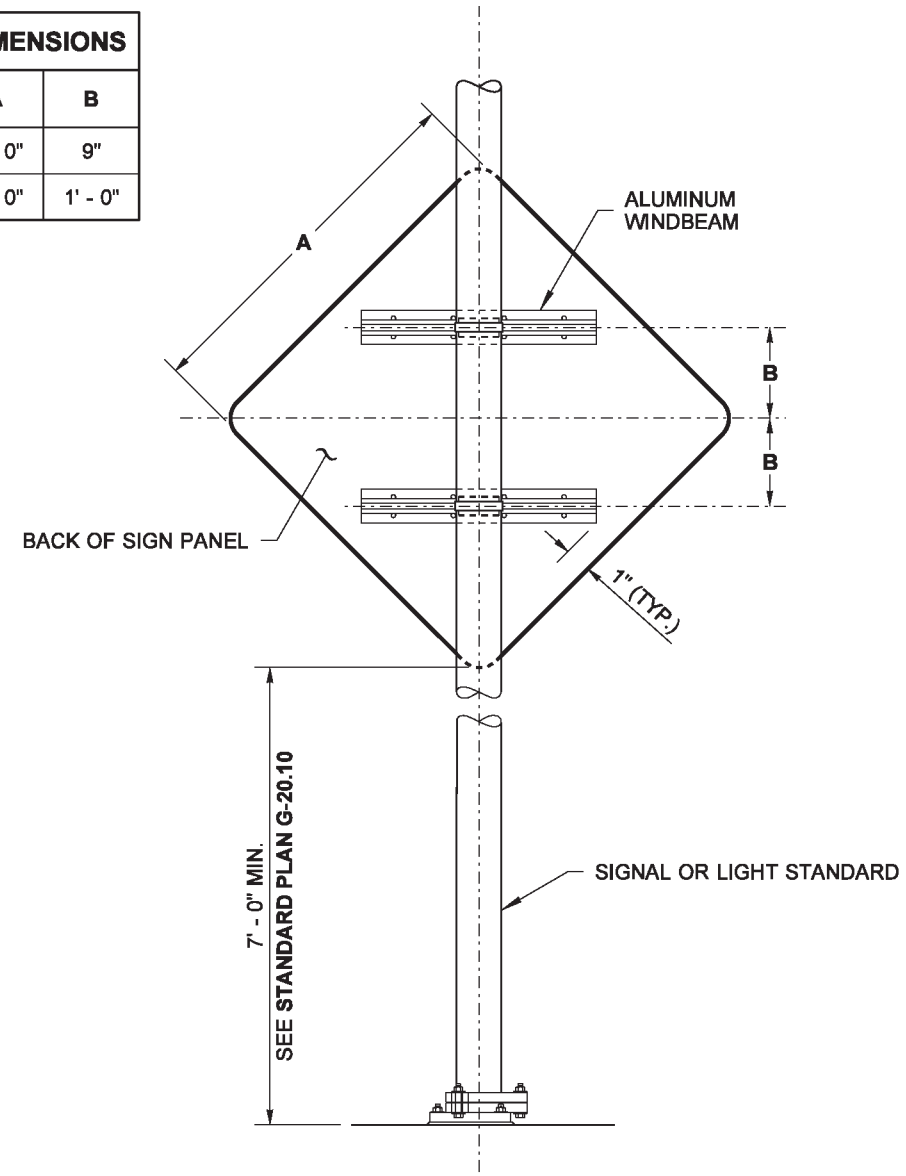

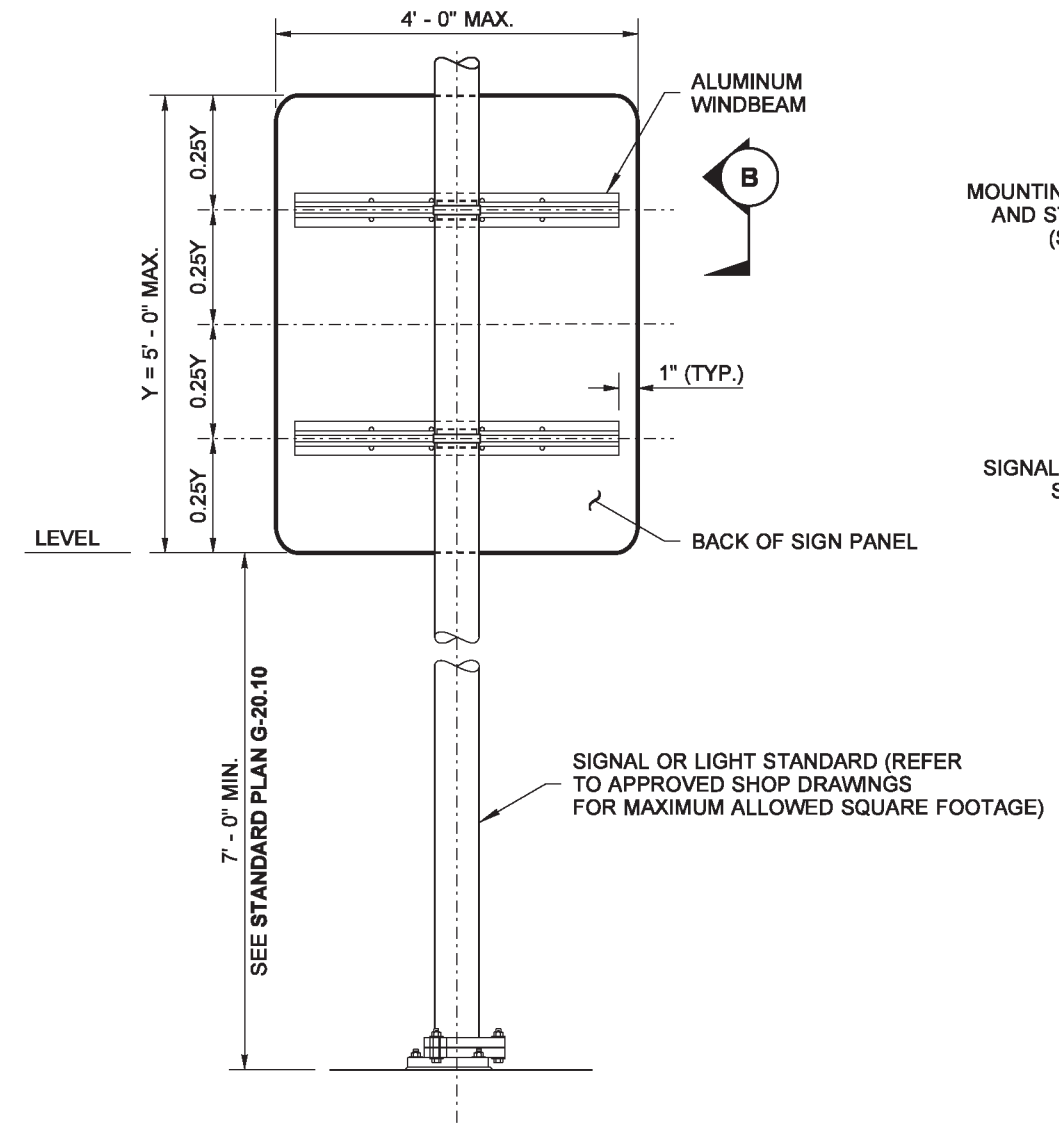

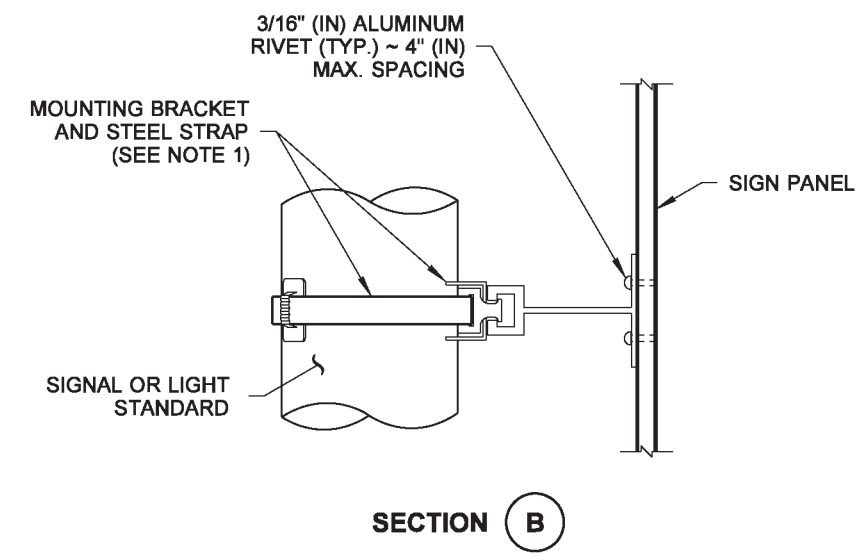

SIGN INSTALLATION ON SIGNAL OR LIGHT STANDARD

DIMENSIONS			
X	Y	C	D
3' - 0"	2' - 6"	1' - 0"	6"
3' - 0"	3' - 0"	1' - 0"	6"
4' - 0"	2' - 6"	1' - 3"	9"

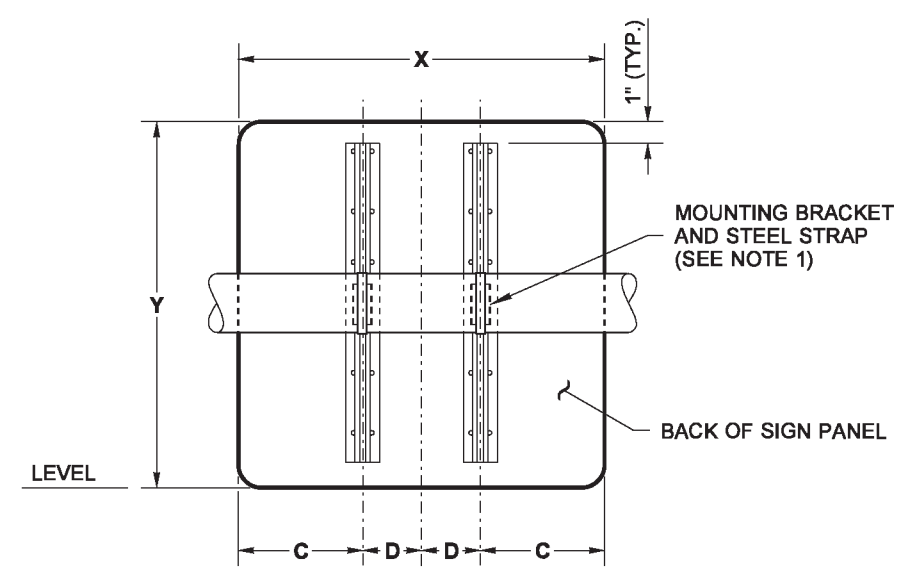

MAST ARM-MOUNTED LANE USE SIGNS

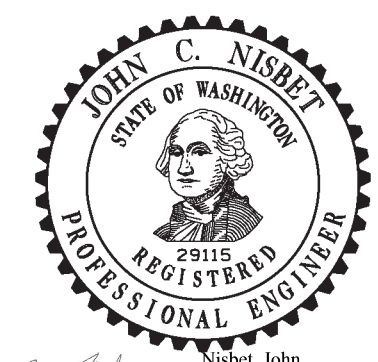

Nisbet, John
Jun 12 2014 7:43 AM

SIGN INSTALLATION ON SIGNAL AND LIGHT STANDARDS STANDARD PLAN G-30.10-03

SHEET 2 OF 2 SHEETS

APPROVED FOR PUBLICATION
Bakotich, Pasco
Jun 17 2014 9:41 AM
STATE DESIGN ENGINEER
Washington State Department of Transportation

DRAWN BY: FERN LIDDELL

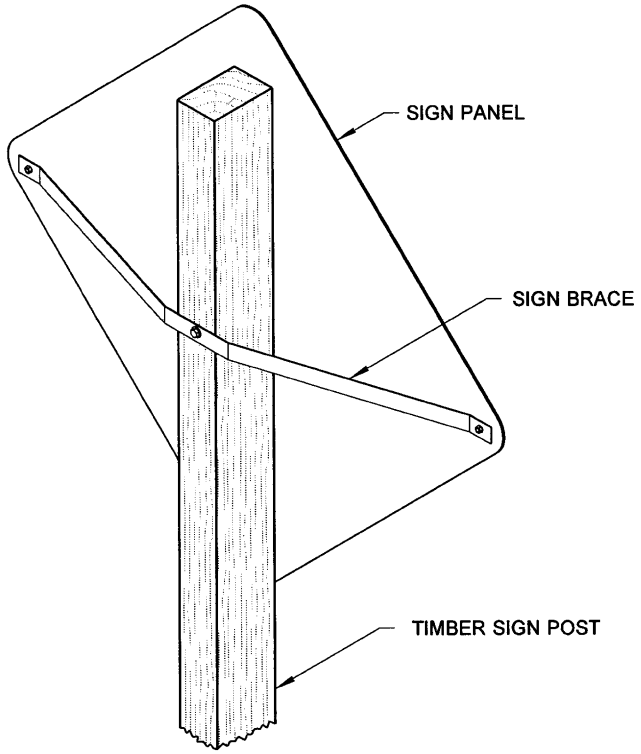

SIGN BRACE ON TIMBER POST

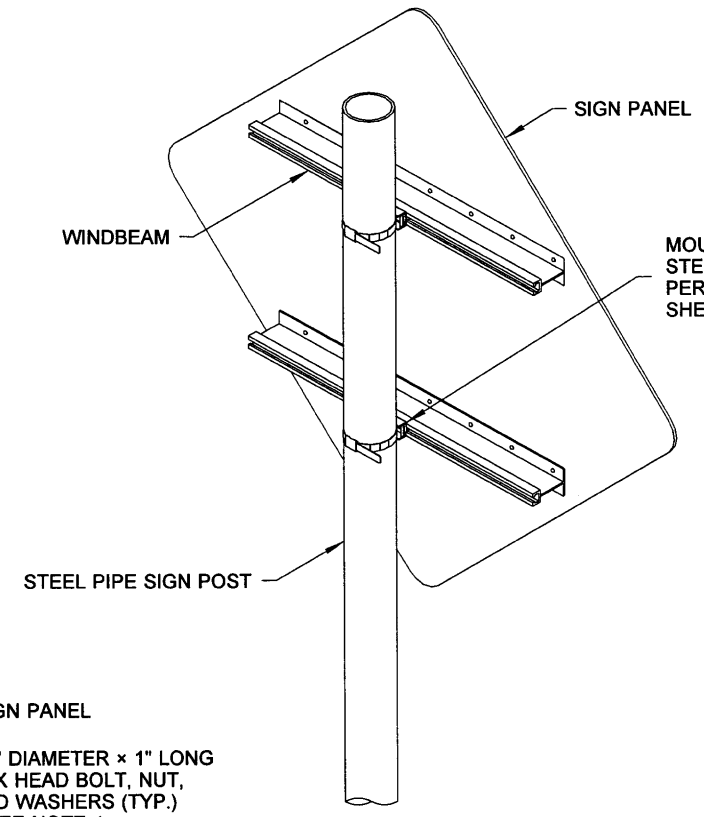

SIGN BRACE ON STEEL PIPE

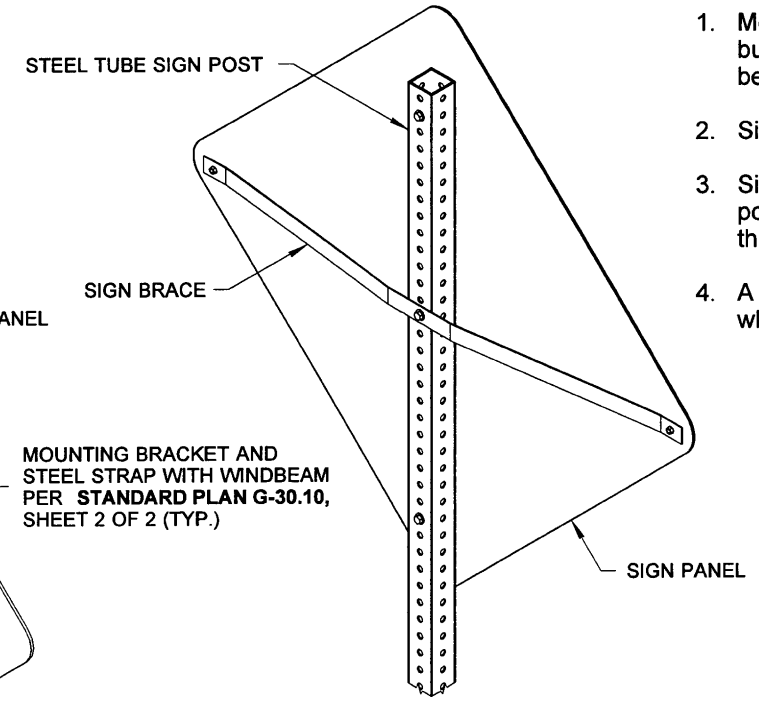

SIGN BRACE ON STEEL TUBE

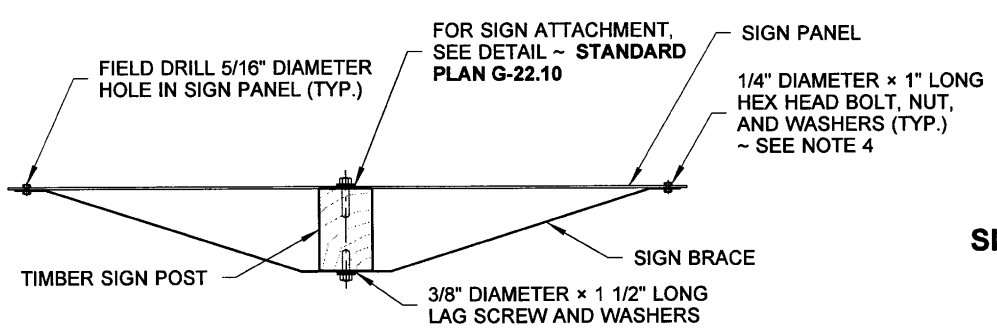

PLAN

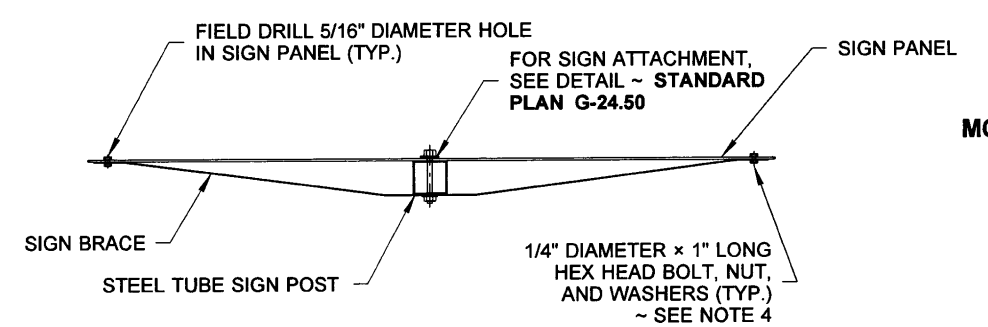

PLAN

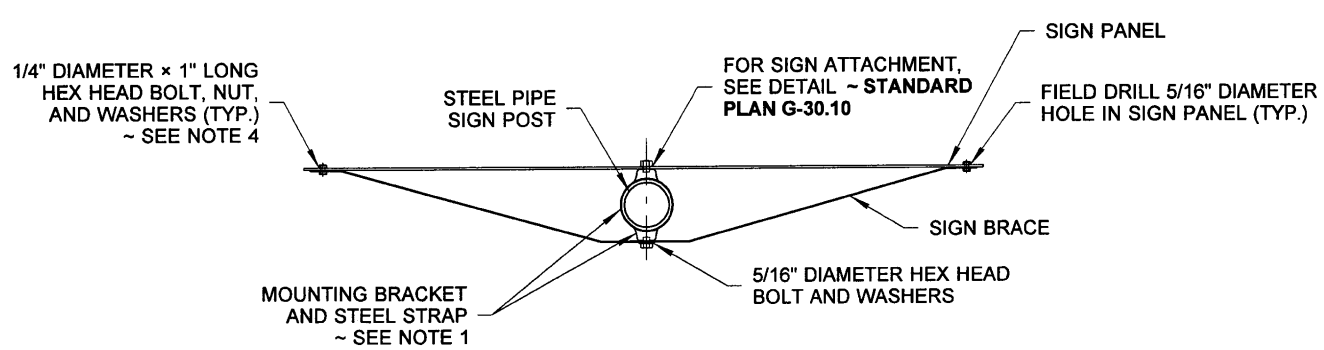

PLAN

NOTES

1. Mounting brackets with steel straps shall be a stainless steel band and buckle system product or an approved equal. Mounting brackets shall be one bolt, flared leg; steel straps shall be 3/4" wide and 0.030" thick.
2. Sign braces are only installed when specified in the contract.
3. Sign braces are typically necessary on large sign panels that are exposed to high winds, traffic generated wind buffeting, or when snow thrown from plows might impact the sign.
4. A nylon washer shall be placed between the sign and the steel washer when the sign face has Type III, IV, VIII or IX sheeting.

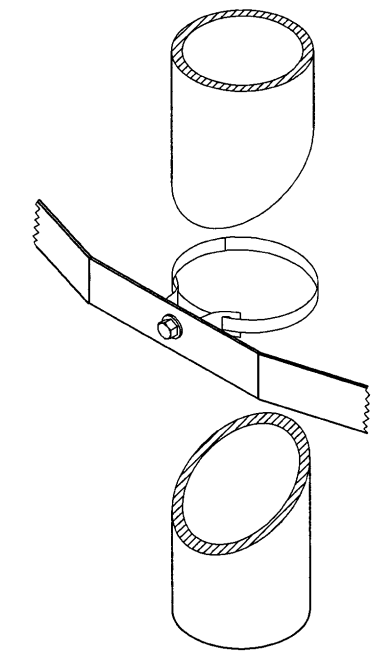

MOUNTING BRACKET AND STEEL STRAP DETAIL

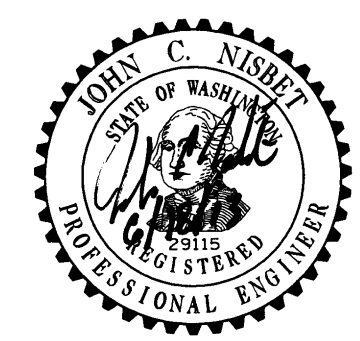

SIGN BRACING

STANDARD PLAN G-50.10-01

SHEET 1 OF 2 SHEETS

APPROVED FOR PUBLICATION

STATE DESIGN ENGINEER — DATE 6/20/13

Washington State Department of Transportation

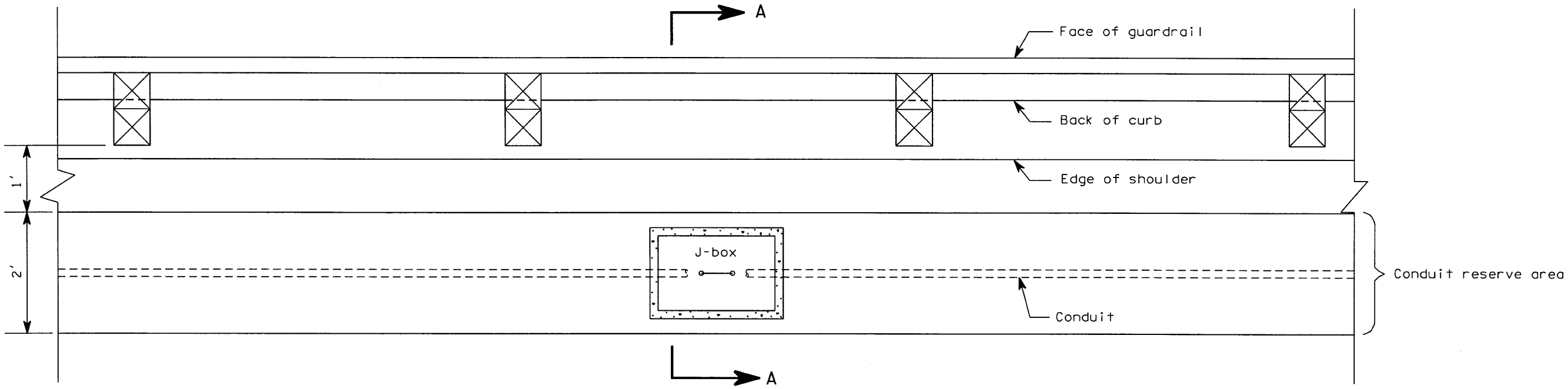

PLAN

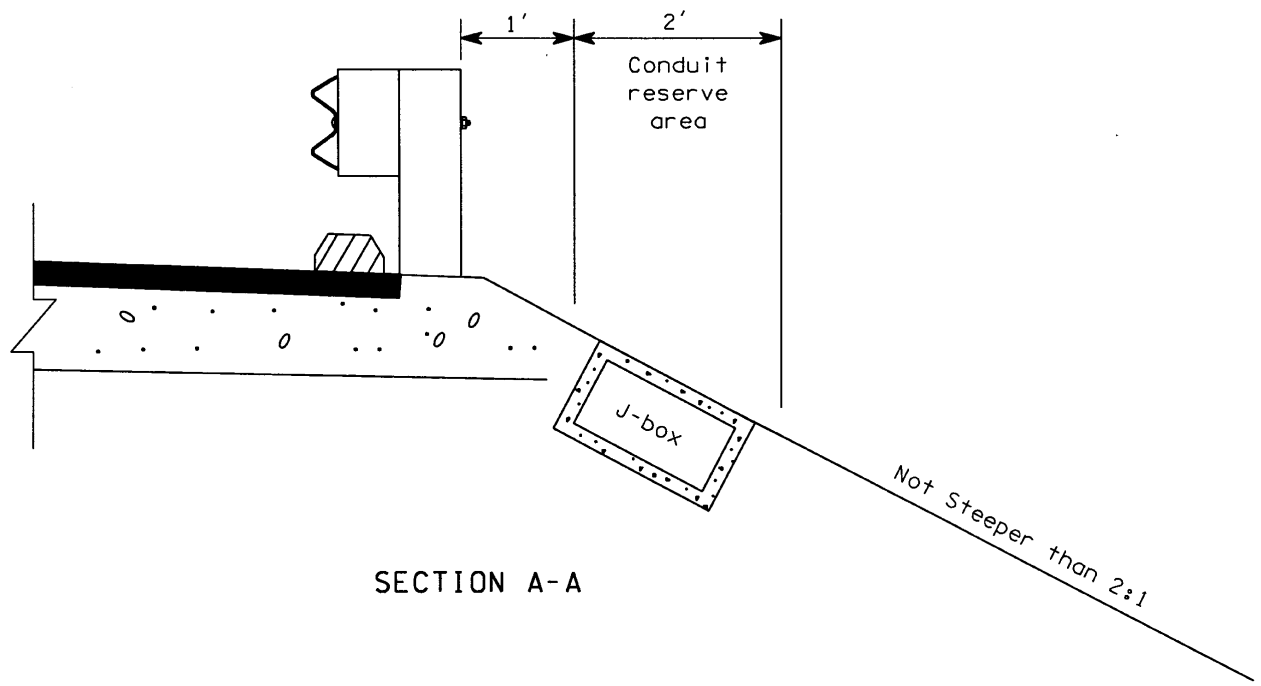

SECTION A-A

ELECTRICAL CONDUIT PLACEMENT

WILLIAM D. BROWN
STATE OF WASHINGTON
00148 12
REGISTERED
PROFESSIONAL ENGINEER

EXPIRES SEPT 10, 1998

STANDARD PLAN J-10

APPROVED FOR PUBLICATION

Clifford E. Mansfield 7/18/97

STATE DESIGN ENGINEER DATE

WASHINGTON STATE DEPARTMENT OF TRANSPORTATION
OLYMPIA, WASHINGTON

DRAWN BY: COLBY FLETCHER

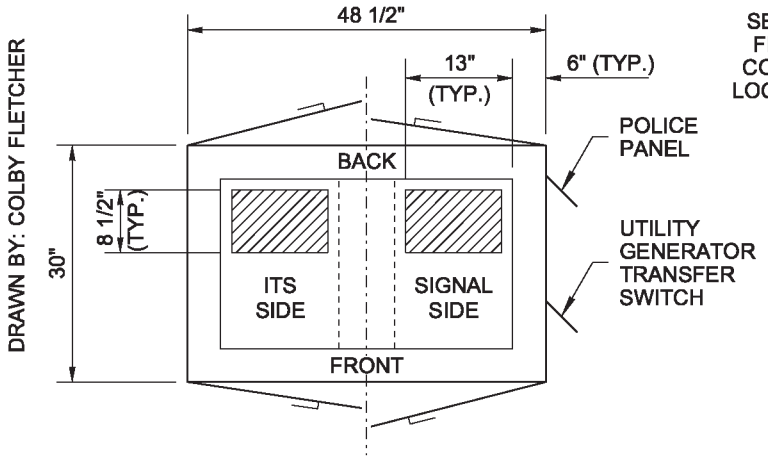

TYPE 332D CONTROLLER CABINET

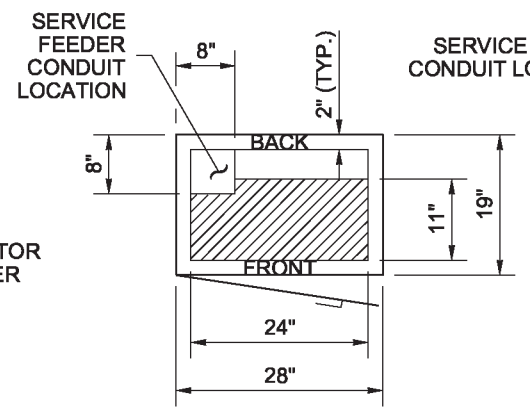

TYPE D SERVICE CABINET

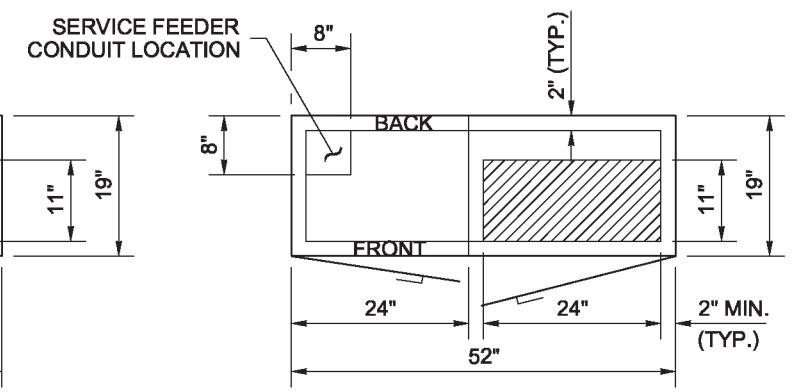

TYPE E SERVICE CABINET

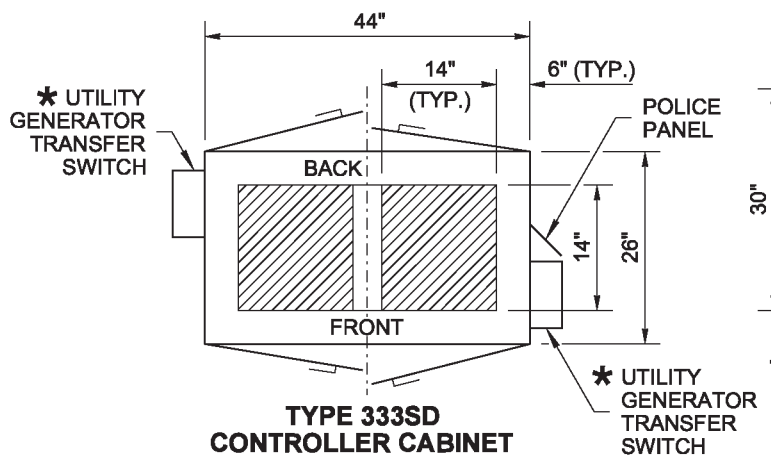

TYPE 333SD CONTROLLER CABINET

* TO BE INSTALLED BY REGION MAINTAINANCE PERSONNEL ~ PROVIDE A 15' (FT) PIGTAIL (SEE NOTE 12)

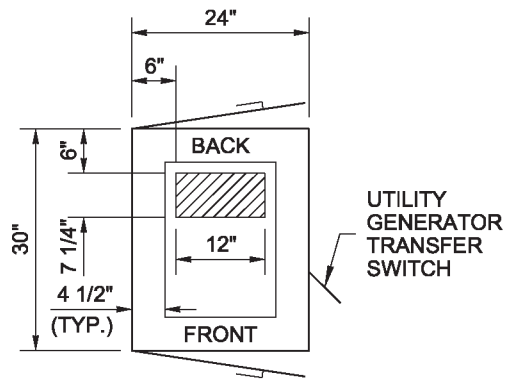

TYPE 332 UNINTERRUPTABLE POWER SUPPLY CABINET

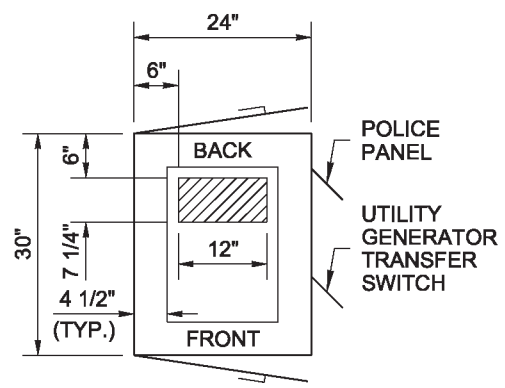

TYPE 332 CONTROLLER CABINET

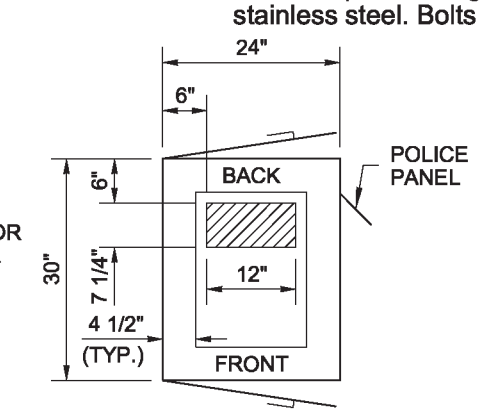

TYPE 334

CONDUIT PLACEMENT LOCATION AREA (OR TRANSFORMER HIGH-VOLTAGE CONDUIT AREA)

LOW-VOLTAGE CONDUIT PLACEMENT LOCATION

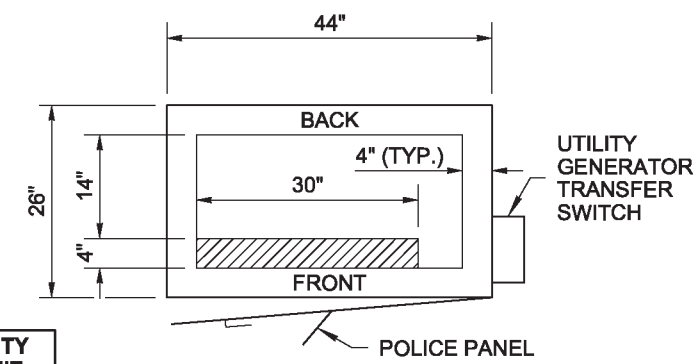

NEMA P44 CONTROLLER CABINET

CONTROLLER OR CABINET BASE	SIZE W × D (IN)	CAPACITY CONDUIT DIAMETER (IN)
TYPE 332	24" × 30"	12"
TYPE 332D	48.5" × 30"	24" ⟨1⟩
NEMA P44	44" × 26"	15"
TYPE 333SD	44" × 26"	48" ⟨2⟩
TYPE 334	24" × 30"	12"
TRANSFORMER	**SIZE W × D (IN)**	
UP TO 3 KVA	18" × 12"	8"
3.1 TO 12.5 KVA	24" × 20"	12"
12.6 TO 35.0 KVA	32" × 30"	15"
UNINTERRUPTABLE POWER SUPPLY	**SIZE W × D (IN)**	
332 CABINET	16" × 16"	12"

⟨1⟩ 12" (IN) OF CONDUIT IN EACH LOCATION SHOWN

⟨2⟩ 24" (IN) OF CONDUIT IN EACH LOCATION SHOWN

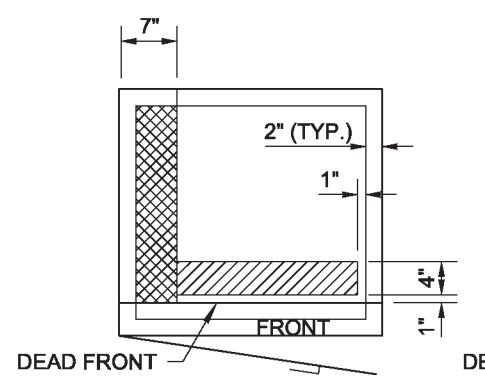

12.6 TO 35.0 KVA TRANSFORMER

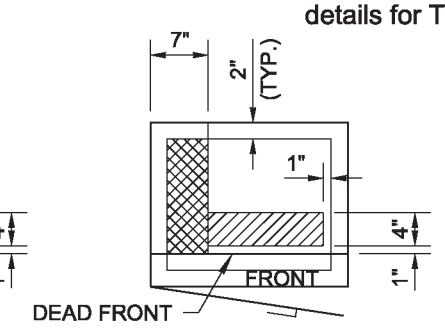

3.1 TO 12.5 KVA TRANSFORMER

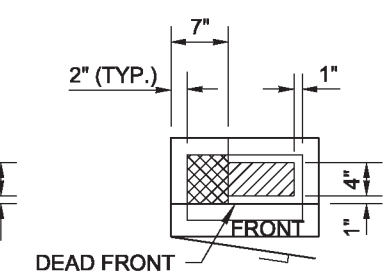

UP TO 3 KVA TRANSFORMER

PLAN VIEWS

CABINET FOOTPRINT AND CONDUIT PLACEMENT LOCATIONS

CONSTRUCTION NOTES

⟨1⟩ Drive ground rods before placing concrete. Move rod(s) and drain tiles with cover(s) as required to achieve full ground penetration. Maintain a 6' (ft) minimum clearance between ground rods and 6" (in) from foundation edge as detailed on **Standard Plan J-60.05.**

⟨2⟩ GRS conduits penetrating all cabinets shall be terminated with grounding end bushing and bonded to the cabinet grounding bus. All PVC conduits penetrating cabinet shall be terminated with end bell bushings.

⟨3⟩ Install conduit couplings on all conduits. Place couplings flush with top of concrete. If PVC conduits are specified, the conduit stub and end bell bushing shall not be glued to the coupling.

⟨4⟩ 4" (in) diam. × 1/2" (in) deep sump. Slope foundation within cabinet footprint toward sump. Drainpipe shall be 3/8" (in) diam. polyethylene or copper tubing.

⟨5⟩ The Type D Service shall not be installed on a raised section. All other cabinets shall be installed on 3 1/2" (in) or 9" (in) cabinet footing.

⟨6⟩ Cabinet power supply conduit.

⟨7⟩ Conduits for service grounding electrodes.

⟨8⟩ When distance detailed in Typical Foundation Plan is greater than 8' (ft), this conduit and conductor shall be deleted.

NOTES

1. The cabinets shown in these details are shown for illustrative purposes only. The Contractor shall verify the plans and substitute those cabinets in place of the cabinets shown in these details. The Contractor shall install each cabinet type in the locations and orientations shown in these details.
2. The Contractor shall install the conduits in the locations shown. Conduits shall extend 2" (in) min. above the coupling. The grounded end bushing on GRS conduit and the end bell bushing on PVC conduit shall extend 3" (in) max. above the coupling. The conduit containing unfused utility conductors shall extend into the utility chase.
3. The ground rods, drain tiles, associated conduits, and #4 rebar (90° with 30" (in) legs), may be omitted if no transformer or service cabinet is to be installed.
4. The cabinets shall be attached to the foundation with 4 each: 1/2" (in) × 12" (in) × 2" (in) × 4" (in) anchor bolts (see Detail on Sheet 4 of 5), washers, and nuts conforming to **Standard Specification 9-06.5(1)** and galvanized after fabrication in accordance with AASHTO M 232. Locate anchor bolts per cabinet manufacturer. Stainless steel epoxy anchors may be used as an alternative, and shall be 1/2" (in) diameter x 9" (in), or 5/8" (in) diameter x 8" (in). All threaded rod (conforming to ASTM F593), washers (conforming to ASTM A240), and nuts (conforming to ASTM F594), shall be Type 304 stainless steel. Bolts shall extend 1-1/2" (in) min to 2" (in) max above the concrete pad.
5. All reinforcing steel shall be embedded 2" (in) below surface of concrete.
6. Place a 1/2" (in) bead of silicone between cabinets and foundation.
7. Two ground rods are required for foundations with a service cabinet or transformer cabinet. See **Standard Plan J-60.05** for details.
8. Concrete shall be class 3000. See **Standard Specification 8-20.3(4).**
9. Verify dead front locations from manufacturer prior to placing conduit in foundation.
10. Foundations installed in, or adjacent to, sidewalks shall be constructed with the top flush with the sidewalk surface and grade, not including concrete risers for cabinets. Omit chamfers where foundation abuts sidewalk.
11. If the slope is 3H : 1V or steeper, special considerations may be necessary for safety reasons. Coordinate with Maintenance and Project Engineer.
12. For Type 333SD Controller Cabinet, the cabinet vendor shall allow the Utility Transfer Switch to be installed on either side of the Cabinet. The Utility Transfer Switch unit shall be shipped inside the cabinet for field installation by Region Maintenance Personnel.
13. Height of cabinet footings shall be adjusted to serve environmental needs. Adjust length of conduits and rebar accordingly.
14. Use (1) #4 hoop for a 3 1/2" (in) cabinet footing and (2) #4 hoops for a 9" (in) cabinet footing.
15. The Police Panel location is set by Industry Standards on all Controller Cabinets.
16. See **Standard Plan J-3b** for Foundation Construction and Conduit Routing for Type B Modified Service Cabinet with Controller Cabinet.
17. Verify pad size and location with Project Engineer prior to placing.
18. Field bend #4 rebar around the Generator Anti-Theft Tie-Down Unit when required.
19. See **Standard Plans J-3c** and **J-10.22** for additional details for Type D and Type E Service Cabinets.

THEODORE JOSEPH BAILEY
STATE OF WASHINGTON
39820
REGISTERED
PROFESSIONAL ENGINEER

Theodore Joseph Bailey
Digitally signed by baileyte@wsdot.wa.gov
DN: cn=baileyte@wsdot.wa.gov
Date: 2014.05.12 13:29:28 -07'00'

CABINET ORIENTATION CONDUIT LAYOUT AND FOUNDATION DETAIL

STANDARD PLAN J-10.10-02

SHEET 1 OF 5 SHEETS

APPROVED FOR PUBLICATION
Bakotich, Pasco
Jun 11 2014 1:27 PM

STATE DESIGN ENGINEER

Washington State Department of Transportation

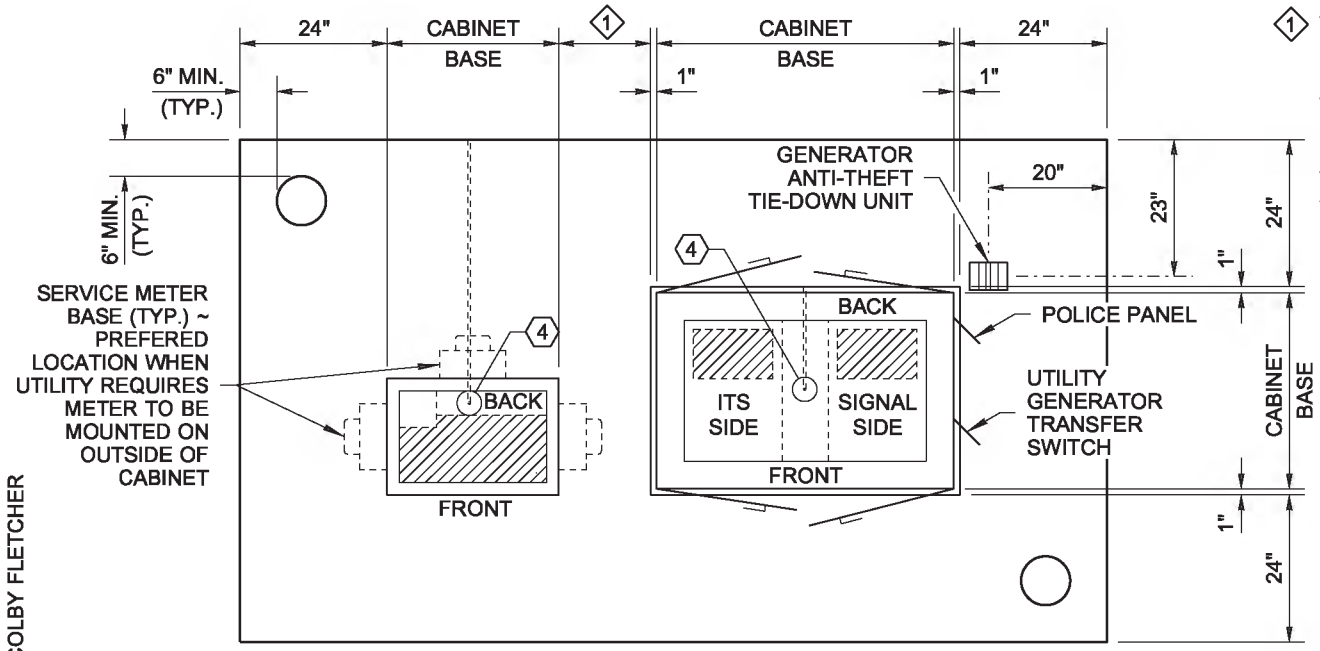

1 With Meter Base mounted on inside of Service Cabinet, allow 6" (in) between Cabinets.

With Meter Base mounted on outside of Service Cabinet, allow 36" (in) from face of meter to adjacent Cabinet. See **Standard Plan J-3c**.

PLAN VIEW

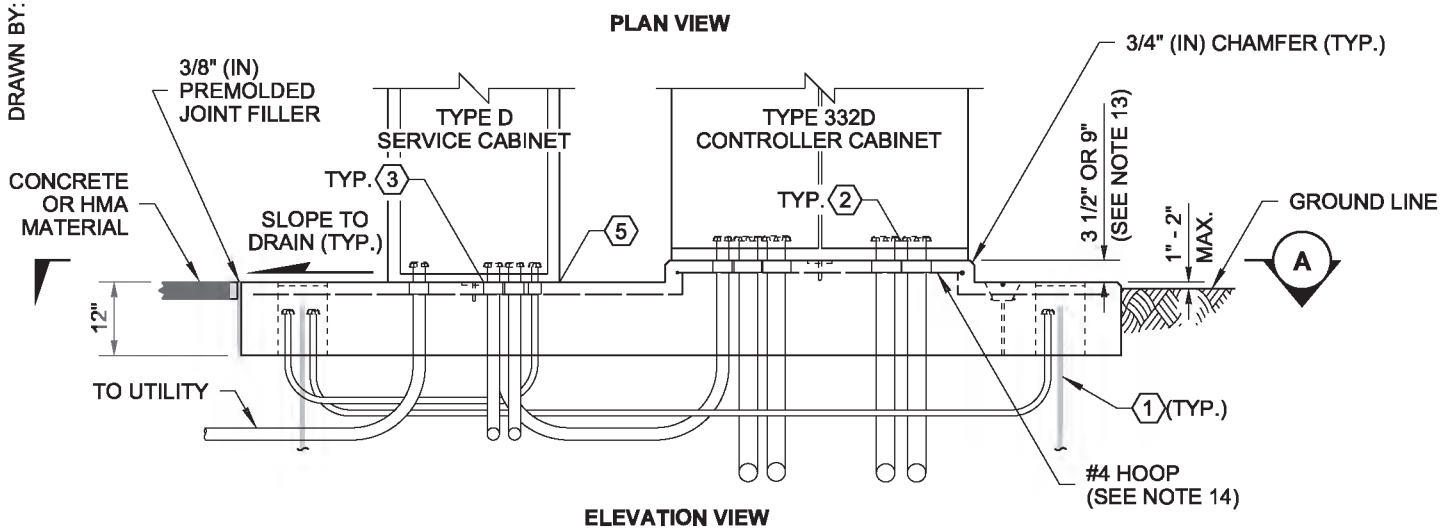

ELEVATION VIEW

TWO-CABINET FOUNDATION

(TYPE D SERVICE AND TYPE 332D CONTROLLER CABINET SHOWN)

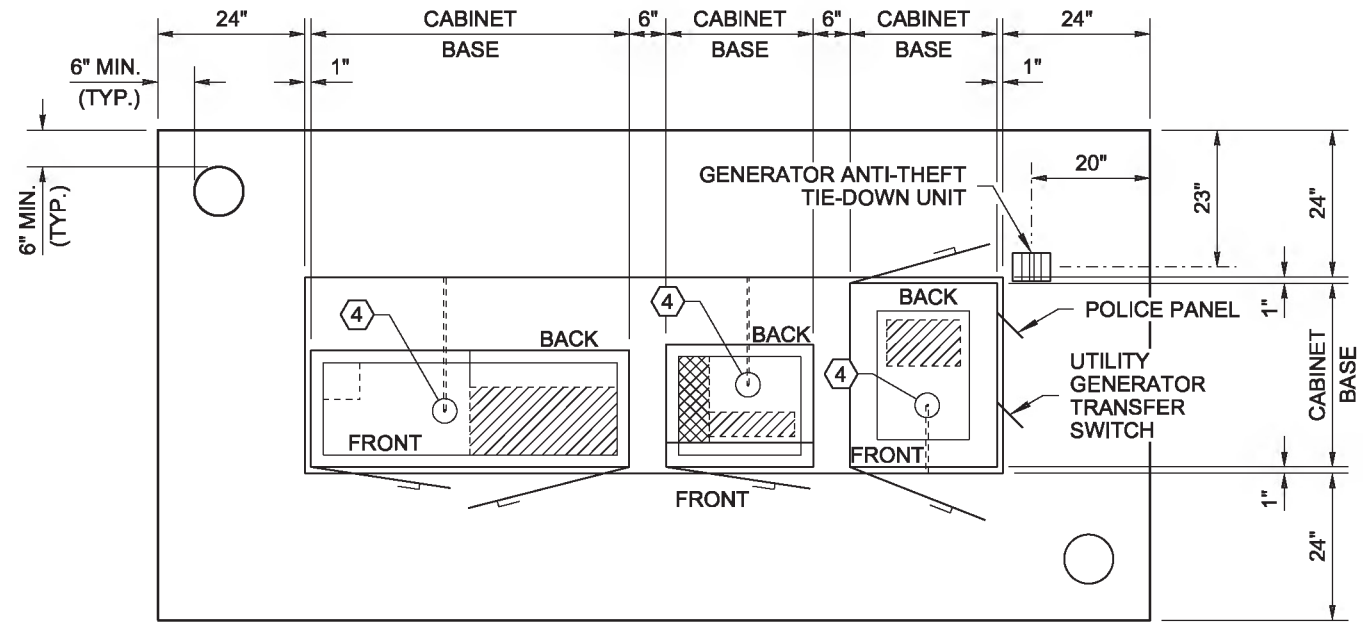

PLAN VIEW

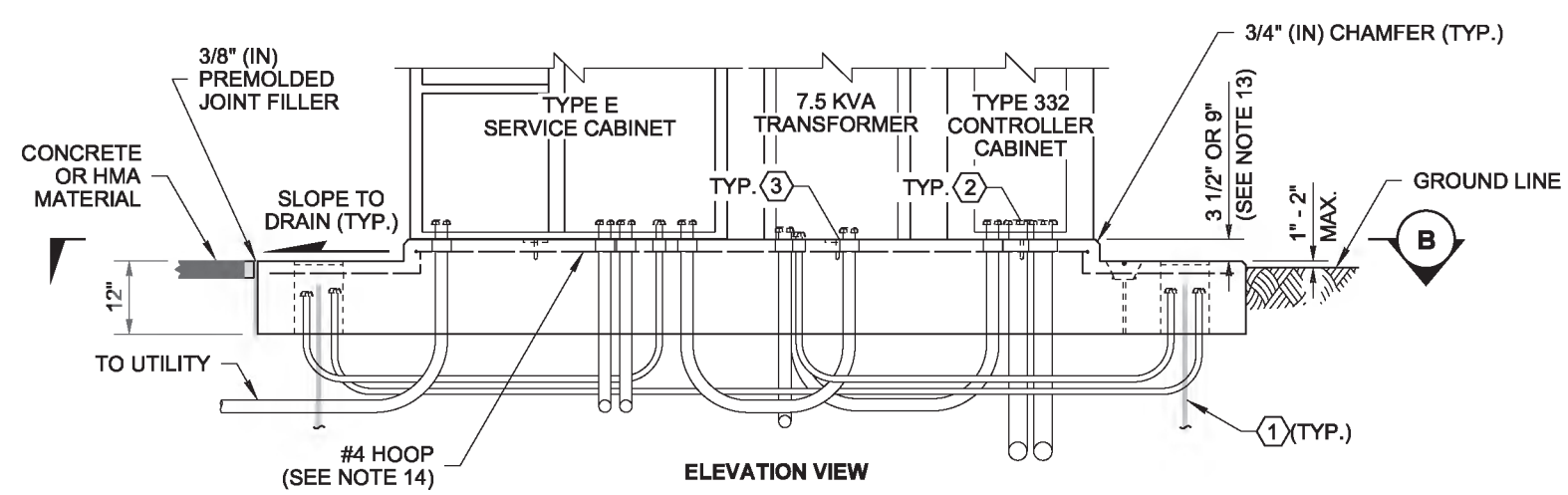

ELEVATION VIEW

THREE-CABINET FOUNDATION

(TYPE E SERVICE, 7.5 KVA TRANSFORMER AND TYPE 332 CONTROLLER CABINET SHOWN)

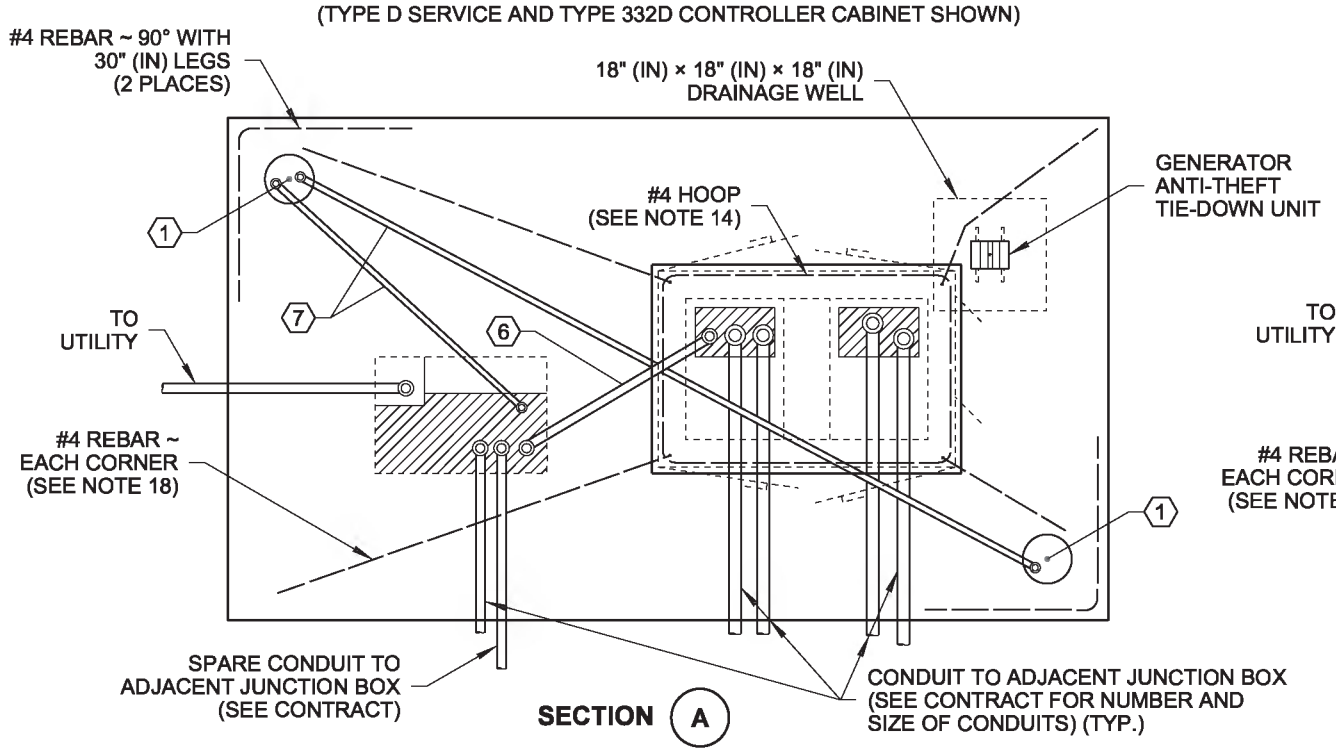

SECTION A

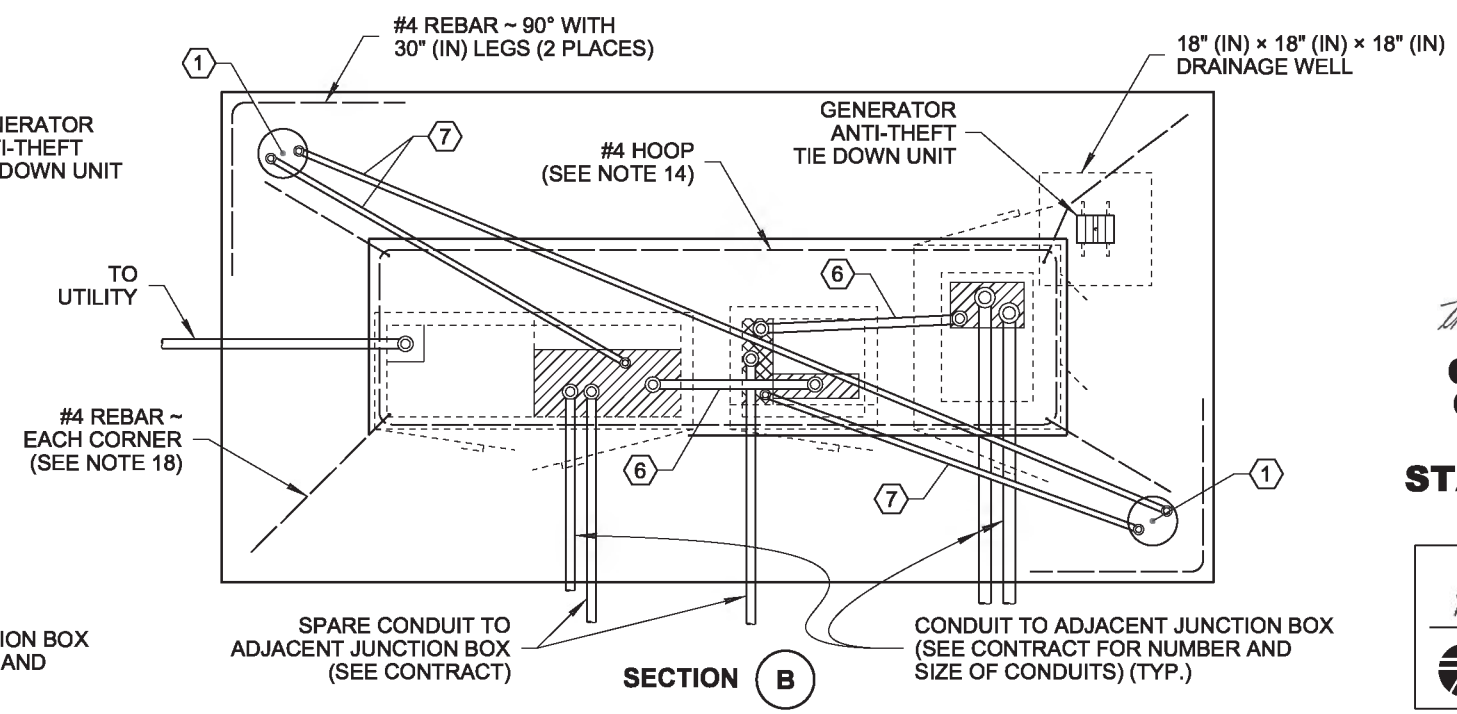

SECTION B

DRAWN BY: COLBY FLETCHER

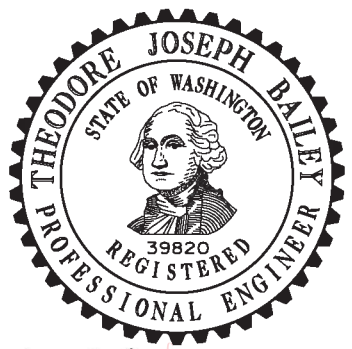

Theodore Joseph Bailey

Digitally signed by baileyte@wsdot.wa.gov
DN: cn=baileyte@wsdot.wa.gov
Date: 2014.05.12 13:29:42 -07'00'

CABINET ORIENTATION CONDUIT LAYOUT AND FOUNDATION DETAIL

STANDARD PLAN J-10.10-02

SHEET 2 OF 5 SHEETS

APPROVED FOR PUBLICATION
Bakotich, Pasco
Jun 11 2014 1:27 PM

STATE DESIGN ENGINEER

Washington State Department of Transportation

DRAWN BY: COLBY FLETCHER

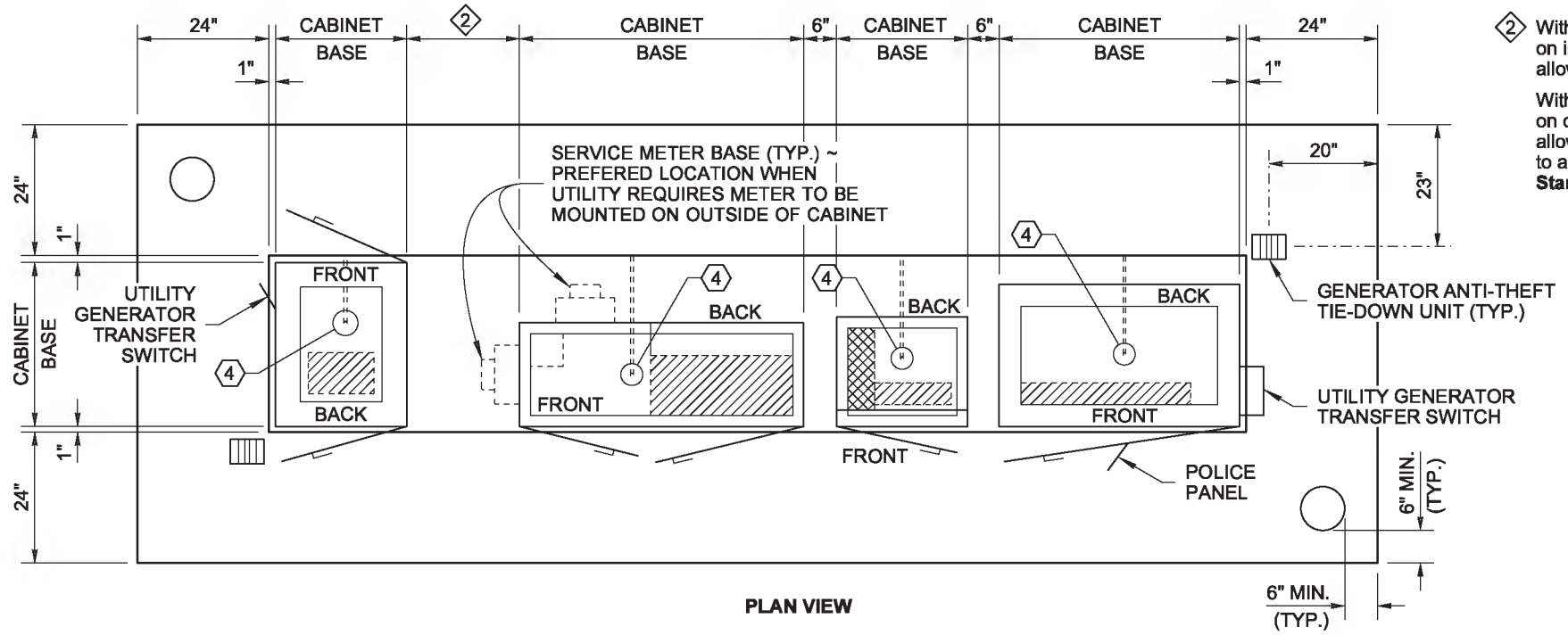

PLAN VIEW

2 With Meter Base mounted on inside of Service Cabinet, allow 6" (in) between cabinets.

With Meter Base mounted on outside of Service Cabinet, allow 36" (in) from face of meter to adjacent Cabinet. See **Standard Plan J-3d**.

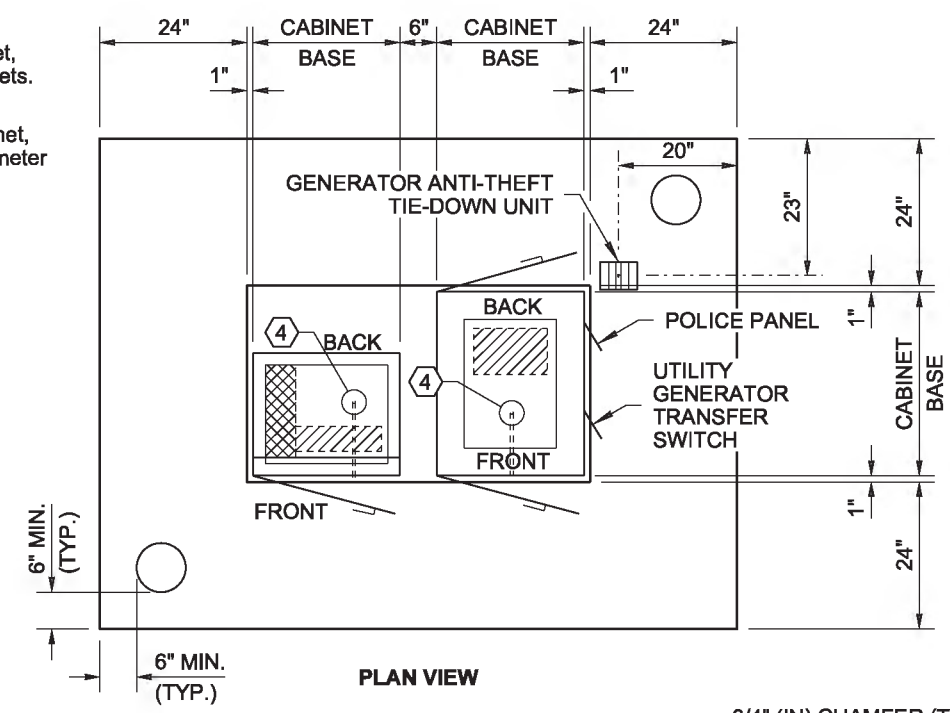

PLAN VIEW

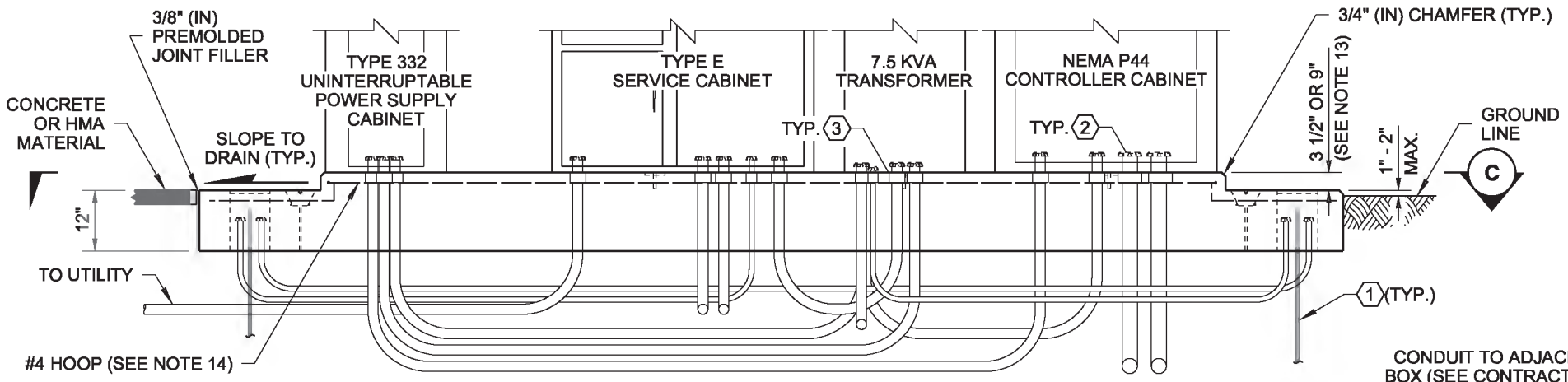

ELEVATION VIEW

FOUR-CABINET FOUNDATION

(TYPE 332 UNINTERRUPTABLE POWER SUPPLY CABINET, TYPE E SERVICE CABINET, 7.5 KVA TRANSFORMER AND NEMA P44 CONTROLLER CABINET SHOWN)

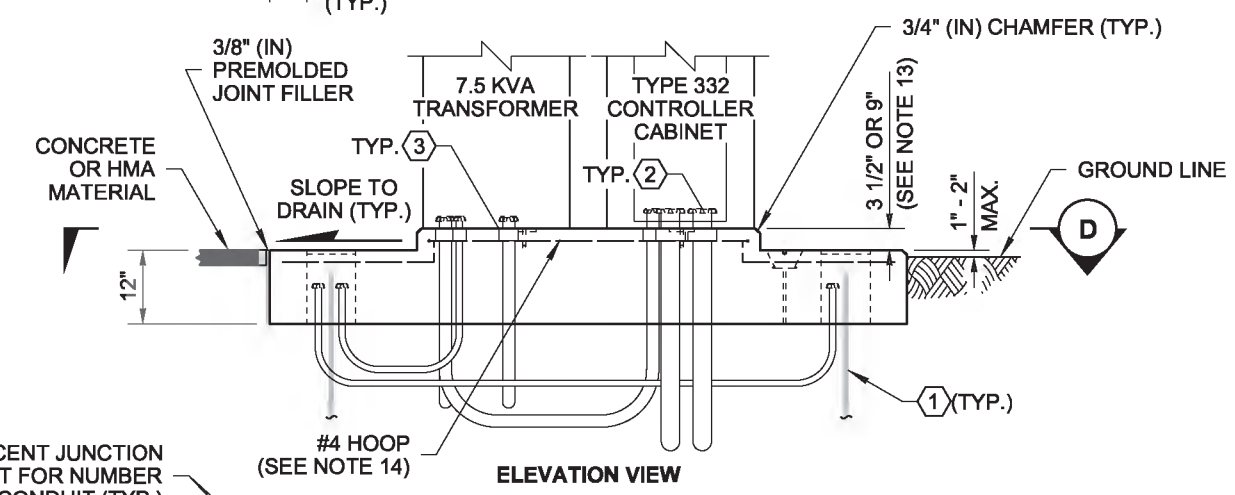

ELEVATION VIEW

TWO-CABINET FOUNDATION

(7.5 KVA TRANSFORMER AND TYPE 332 CONTROLLER CABINET SHOWN)

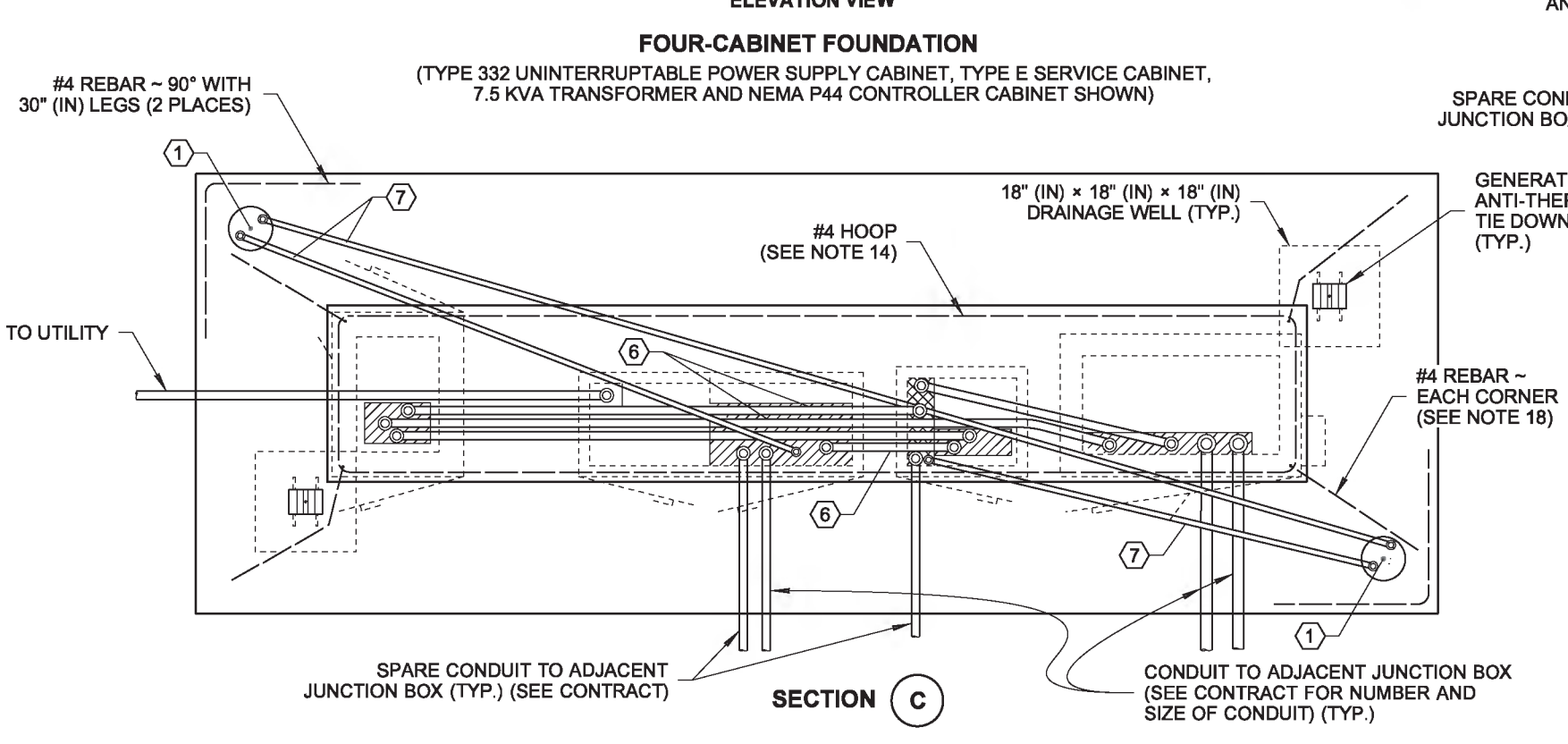

SECTION C

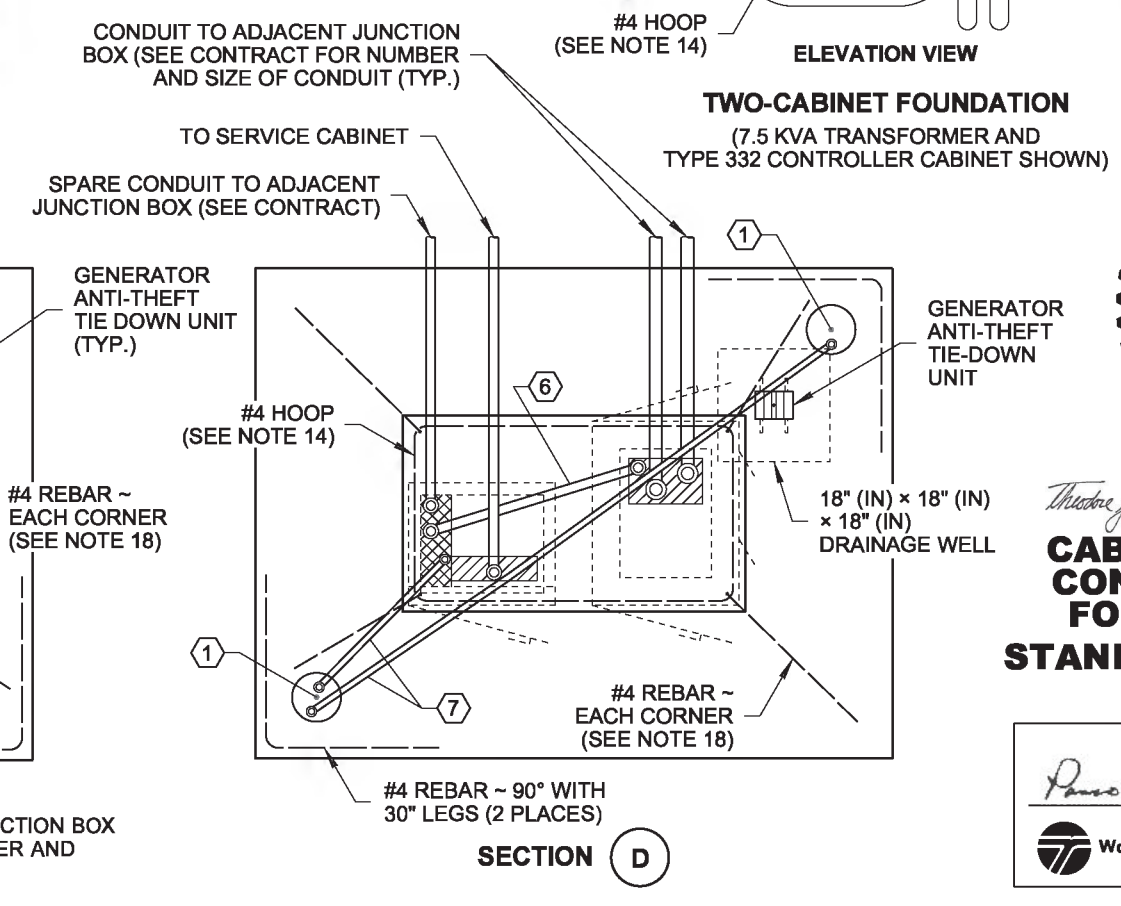

SECTION D

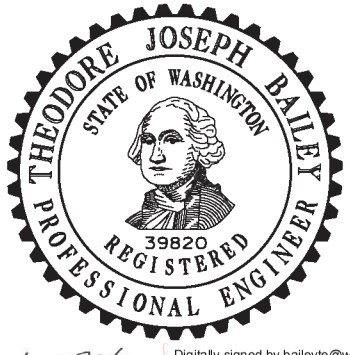

Theodore Joseph Bailey
Digitally signed by baileyte@wsdot.wa.gov
DN: cn=baileyte@wsdot.wa.gov
Date: 2014.05.12 13:29:55 -0700'

CABINET ORIENTATION CONDUIT LAYOUT AND FOUNDATION DETAIL

STANDARD PLAN J-10.10-02

SHEET 3 OF 5 SHEETS

APPROVED FOR PUBLICATION
Bakotich, Pasco
Jun 11 2014 1:28 PM
STATE DESIGN ENGINEER

Washington State Department of Transportation

DRAWN BY: COLBY FLETCHER

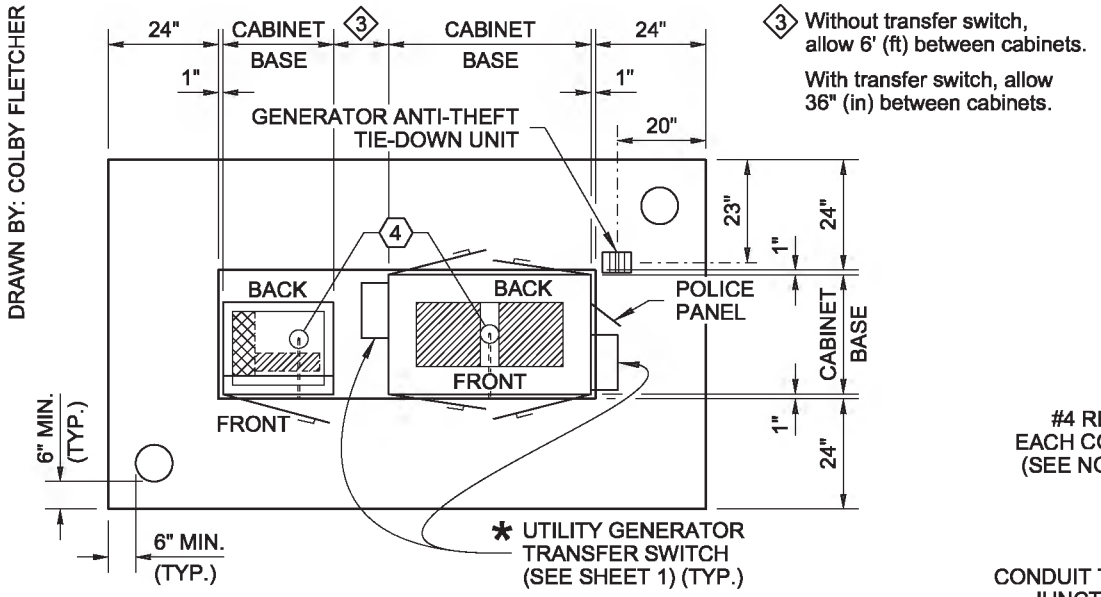

3 Without transfer switch, allow 6' (ft) between cabinets.

With transfer switch, allow 36" (in) between cabinets.

PLAN VIEW

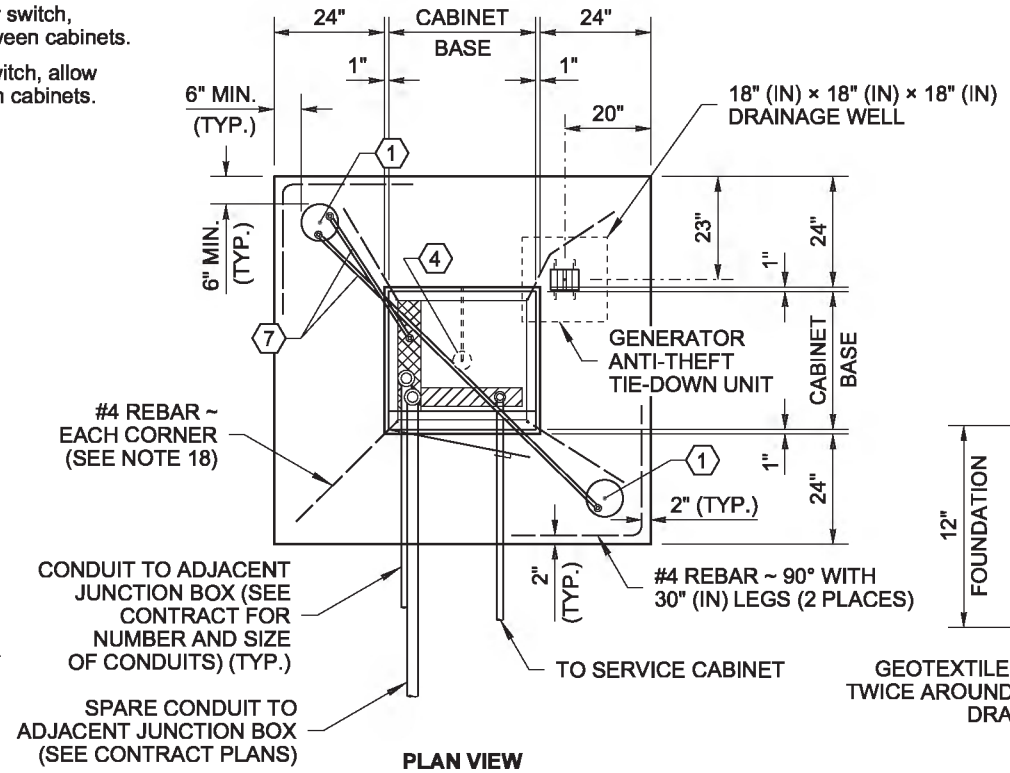

PLAN VIEW

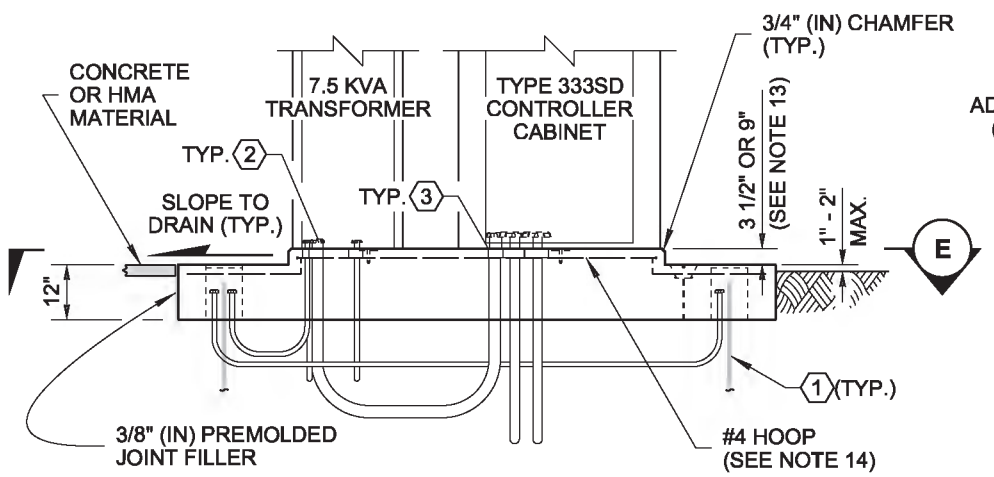

ELEVATION VIEW

TWO CABINET FOUNDATION

(7.5 KVA TRANSFORMER AND TYPE 333SD CONTROLLER CABINET SHOWN)

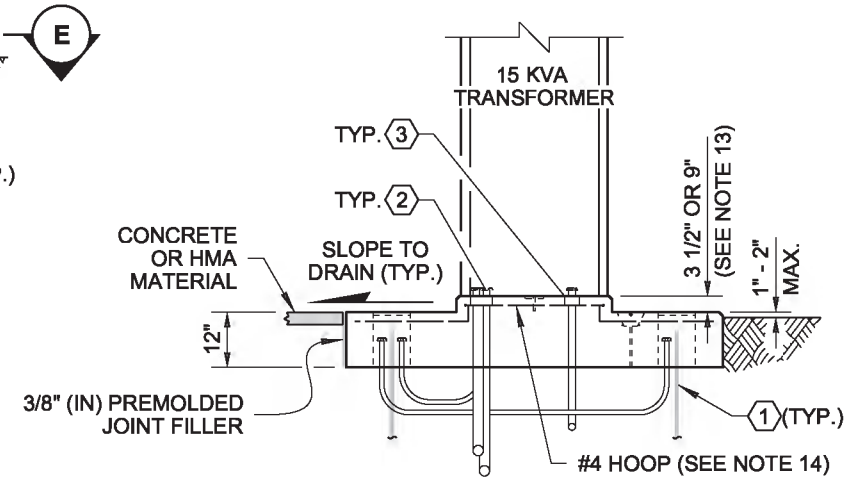

ELEVATION VIEW

SINGLE-CABINET FOUNDATION

(15 KVA TRANSFORMER SHOWN)

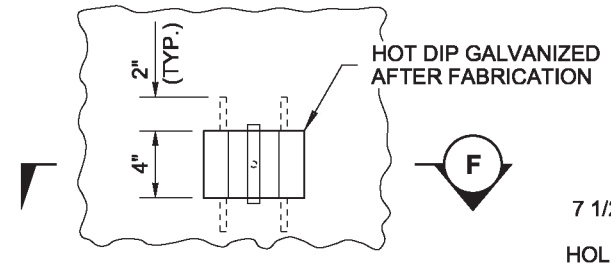

PLAN VIEW

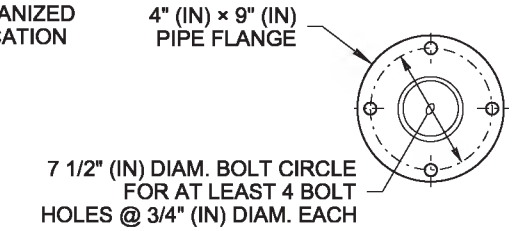

PEDESTAL BASE DETAIL

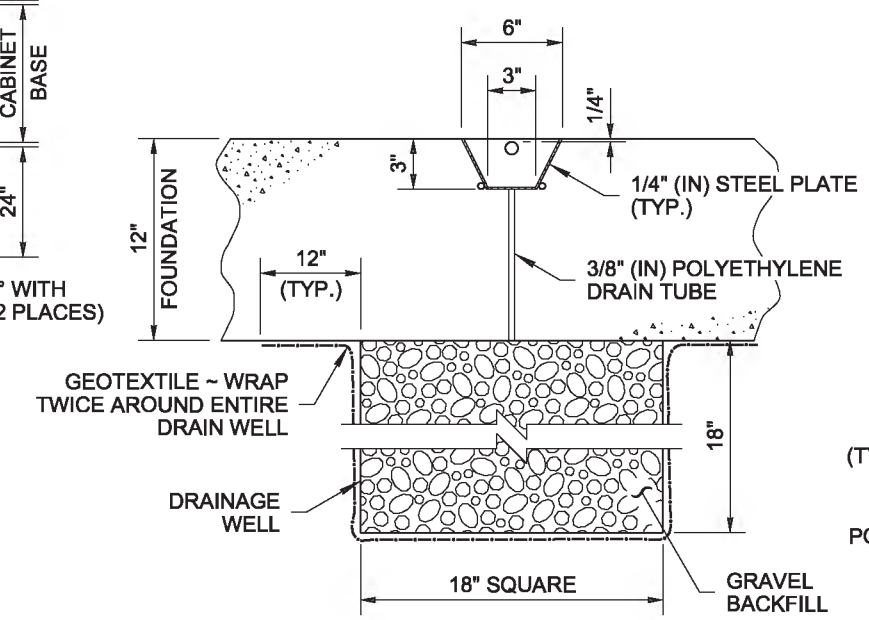

ELEVATION VIEW

SECTION F

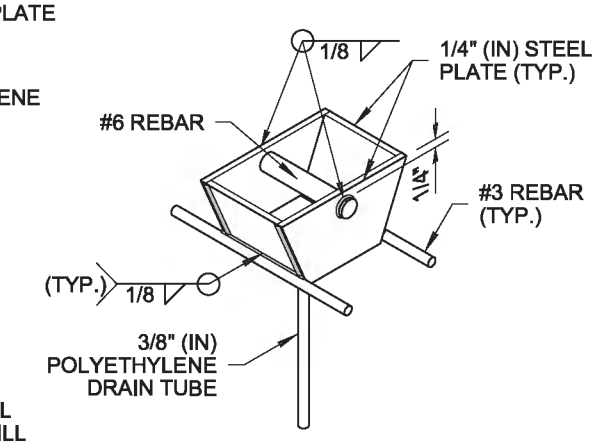

ISOMETRIC VIEW

GENERATOR ANTI-THEFT TIE-DOWN UNIT

(FABRICATE IF NOT AVAILABLE COMMERCIALLY)

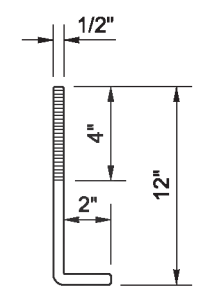

ANCHOR BOLT

(SEE NOTE 4)

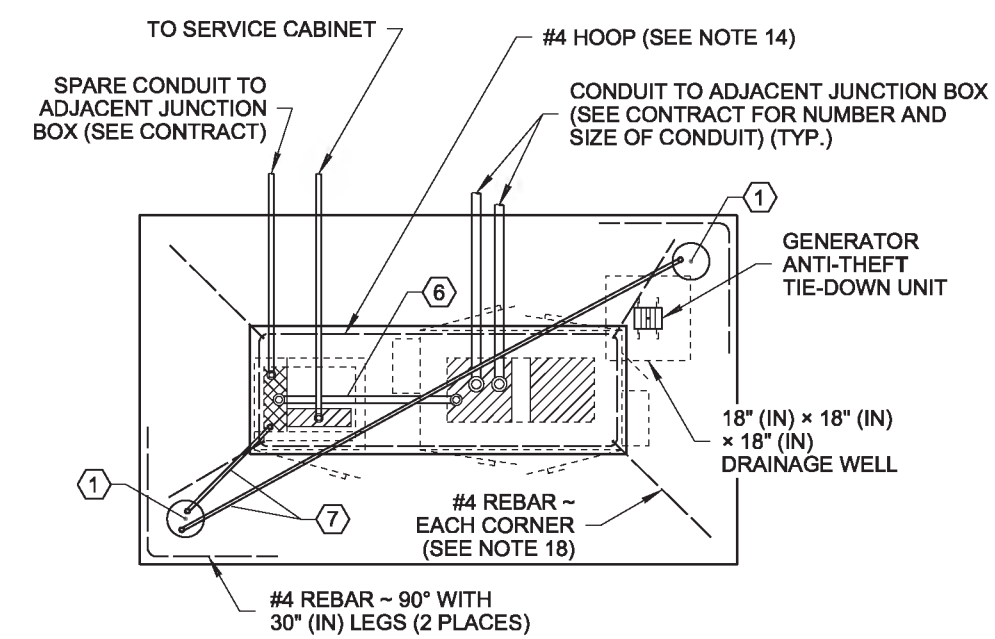

SECTION E

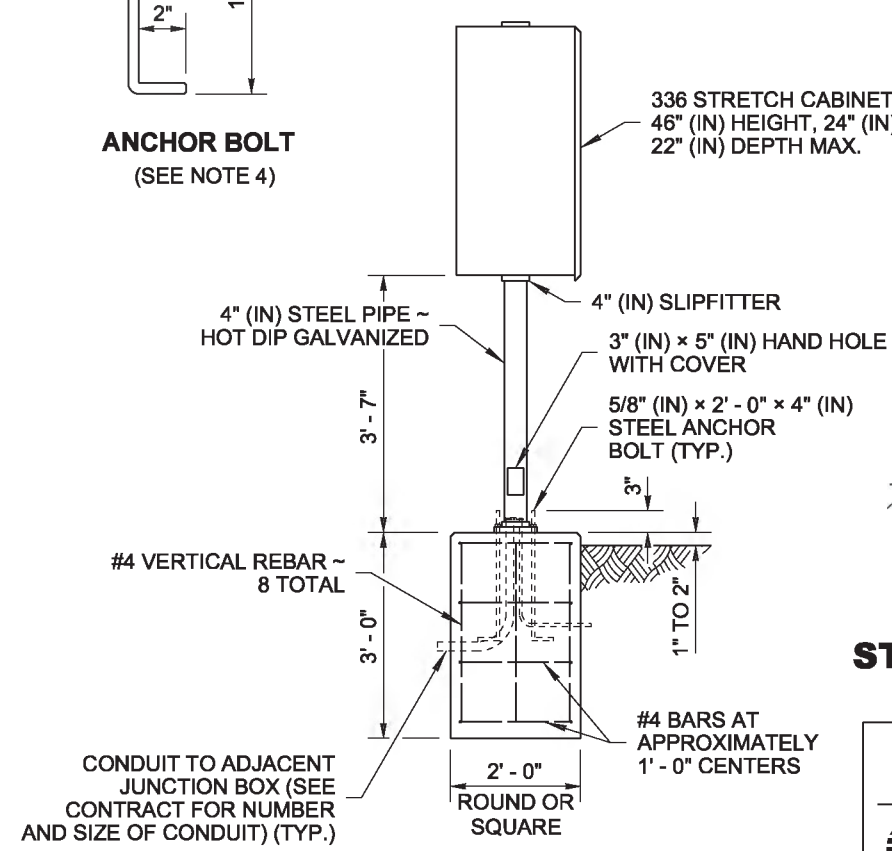

PEDESTAL MOUNT

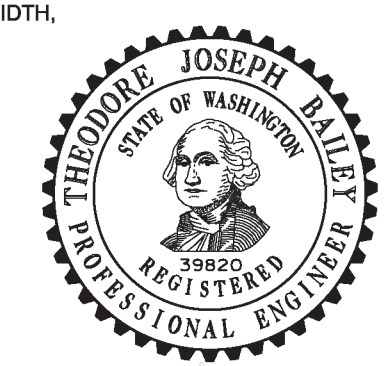

Theodore Joseph Bailey

Digitally signed by baileyte@wsdot.wa.gov
DN: cn=baileyte@wsdot.wa.gov
Date: 2014.05.12 13:30:04 -07'00'

CABINET ORIENTATION CONDUIT LAYOUT AND FOUNDATION DETAIL

STANDARD PLAN J-10.10-02

SHEET 4 OF 5 SHEETS

APPROVED FOR PUBLICATION
Bakotich, Pasco
Jun 11 2014 1:28 PM

STATE DESIGN ENGINEER

Washington State Department of Transportation

DRAWN BY: COLBY FLETCHER

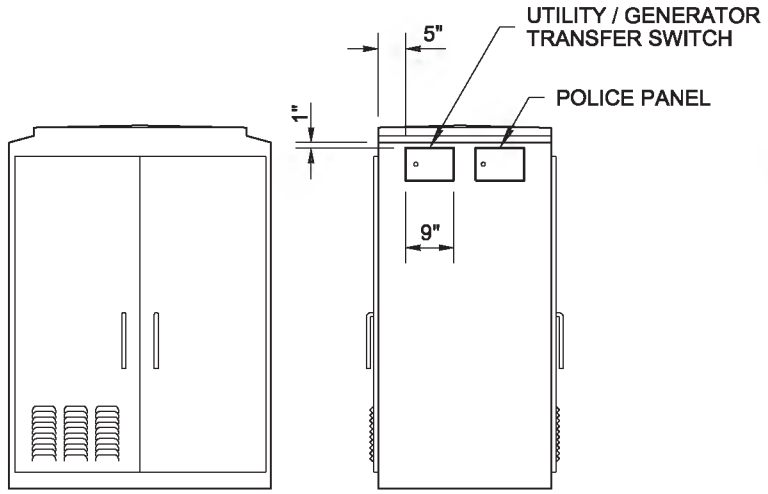

TYPE 332D CONTROLLER CABINET

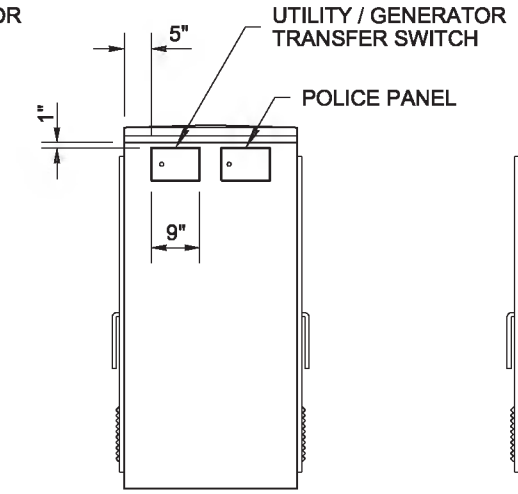

TYPE 332 CONTROLLER CABINET

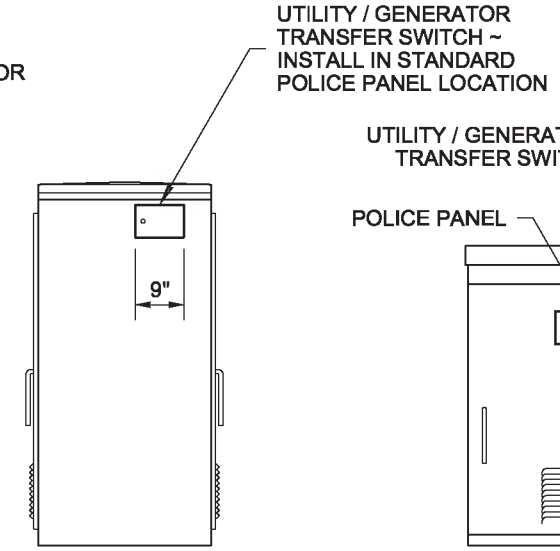

TYPE 332 UNINTERRUPTABLE POWER SUPPLY (UPS) CABINET

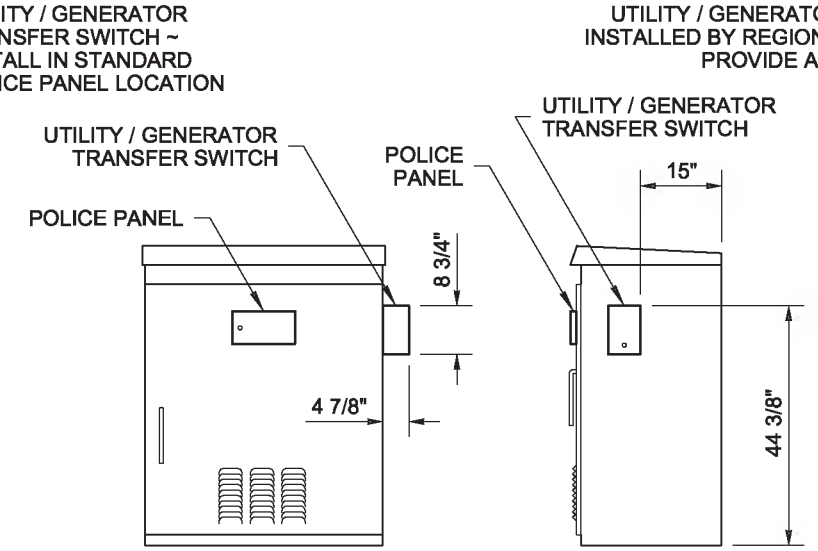

NEMA P44 CONTROLLER CABINET

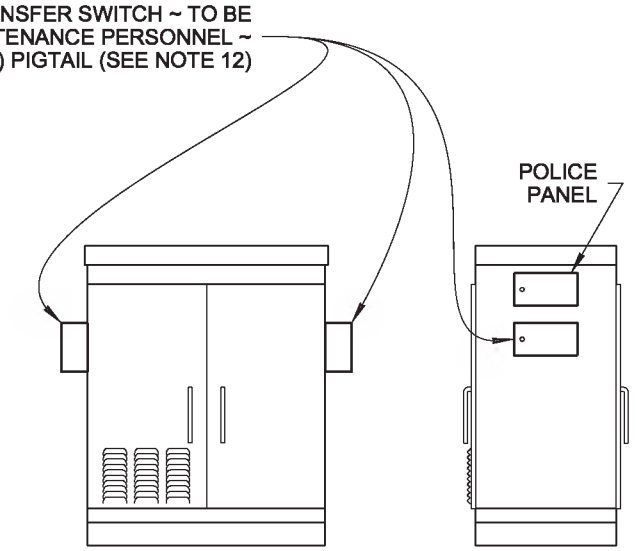

TYPE 333SD CONTROLLER CABINET

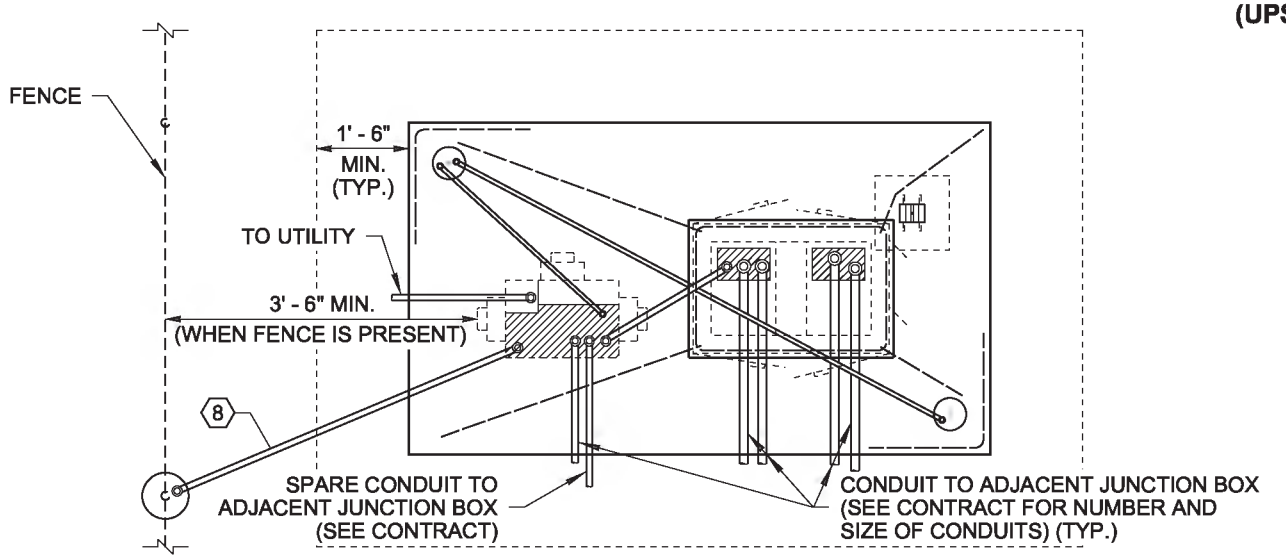

PLAN VIEW

TYPICAL FOUNDATION

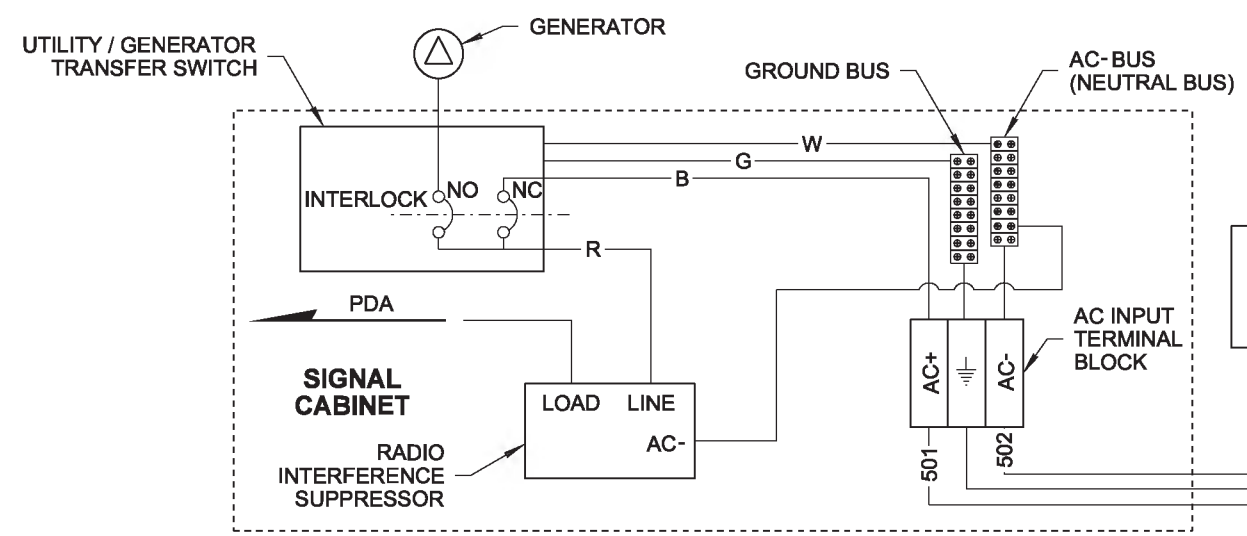

TRANSFER SWITCH CONNECTION TYPICAL WIRING DIAGRAM

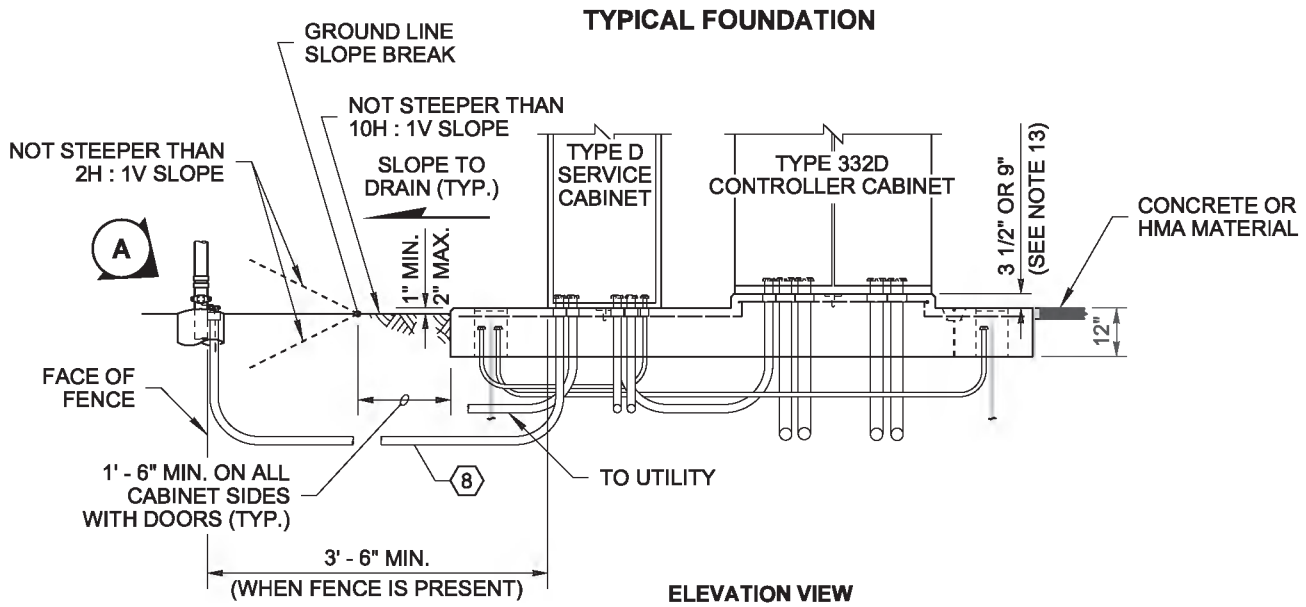

ELEVATION VIEW

TYPICAL FOUNDATION CROSS SECTION

(SEE NOTE 12)

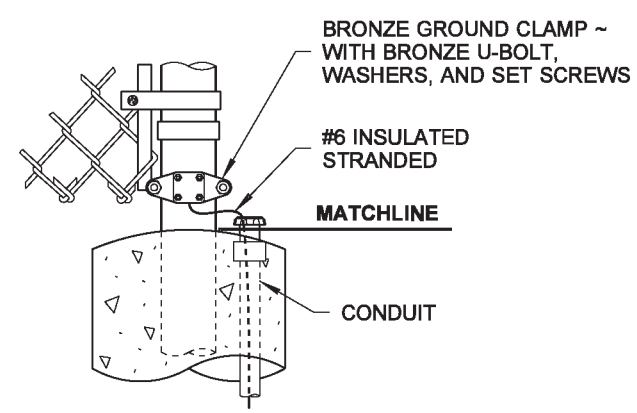

DETAIL A

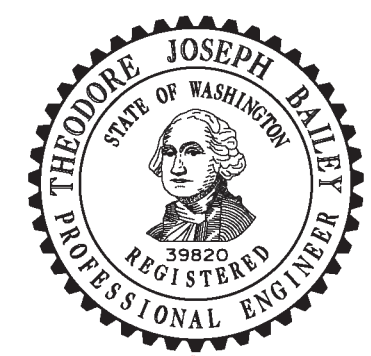

Theodore Joseph Bailey

Digitally signed by baileyte@wsdot.wa.gov
DN: cn=baileyte@wsdot.wa.gov
Date: 2014.05.12 13:30:15 -07'00'

CABINET ORIENTATION CONDUIT LAYOUT AND FOUNDATION DETAIL

STANDARD PLAN J-10.10-02

SHEET 5 OF 5 SHEETS

APPROVED FOR PUBLICATION
Bakotich, Pasco
Jun 11 2014 1:28 PM

STATE DESIGN ENGINEER

Washington State Department of Transportation

DRAWN BY: COLBY FLETCHER

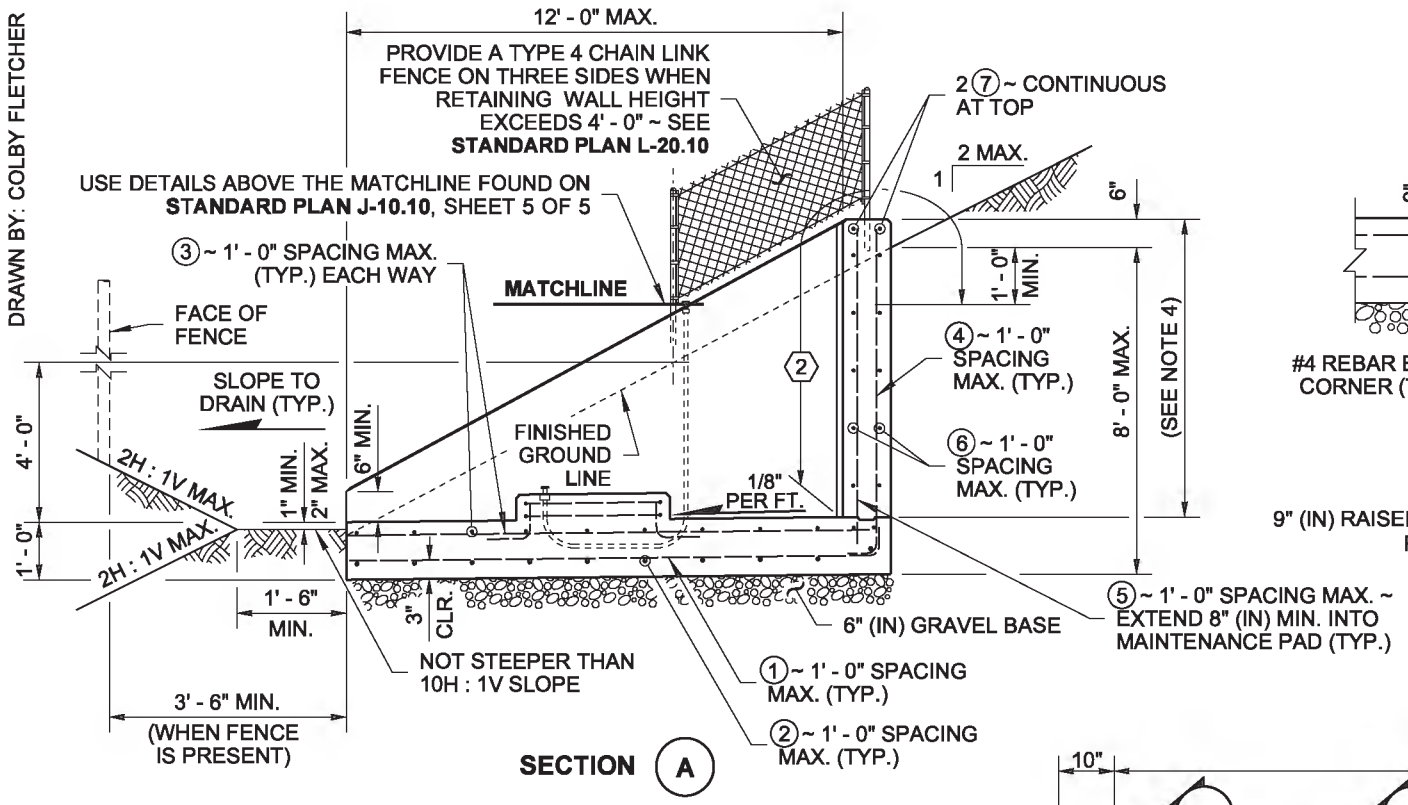

SECTION (A)

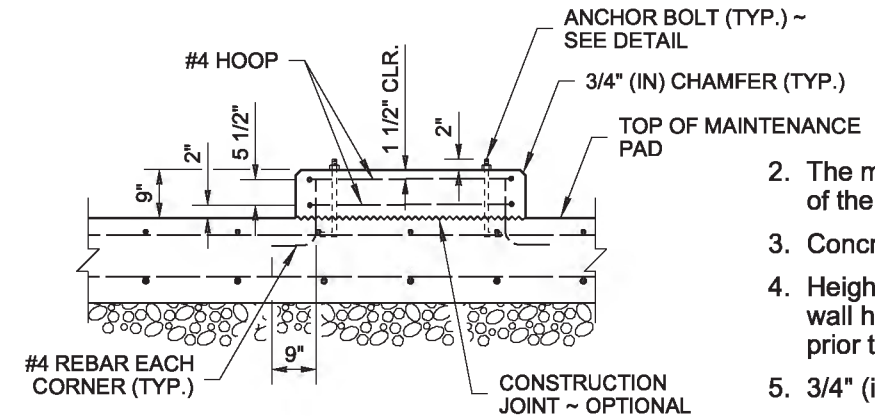

SECTION (B)

9" (IN) RAISED CABINET PAD SHOWN ~ 3 1/2" (IN) RAISED CABINET PAD IS SIMILAR, WITH ONE #4 TOP HOOP

NOTES

1. Contractor shall orient the maintenance pad to align with the direction of natural grade as shown. Obtain Engineer's approval of maintenance pad orientation prior to proceeding with construction.
2. The maintenance pad and retaining walls have been designed to meet the requirements of the AASHTO LRFD Bridge Design Specifications, 6th Edition, 2012.
3. Concrete for walls and bases shall be class 4000.
4. Height of wall varies to match slope of existing grade. Contractor shall field-determine wall height and each maintenance pad location and obtain approval from the Engineer prior to proceeding with construction.
5. 3/4" (in) chamfer for all exposed corners.
6. For grounding details not shown, see **Standard Plan J-60.05.**
7. For cabinet and conduit details not shown, see **Standard Plan J-10.10.**
8. The cabinets shall be attached to the foundation with 4 each: 1/2" (in) × 12" (in) × 2" (in) × 4" (in) anchor bolts (see Detail on this Sheet), washers, and nuts conforming to **Standard Specification 9-06.5(1)** and galvanized after fabrication in accordance with AASHTO M 232. Locate anchor bolts per cabinet manufacturer. Stainless steel epoxy anchors may be used as an alternative, and shall be 1/2" (in) diameter x 9" (in), or 5/8" (in) diameter x 8" (in). All threaded rod (conforming to ASTM F593), washers (conforming to ASTM A240), and nuts (conforming to ASTM F594), shall be Type 304 stainless steel. Bolts shall extend 1 1/2" (in) min to 2" (in) max above the concrete pad.

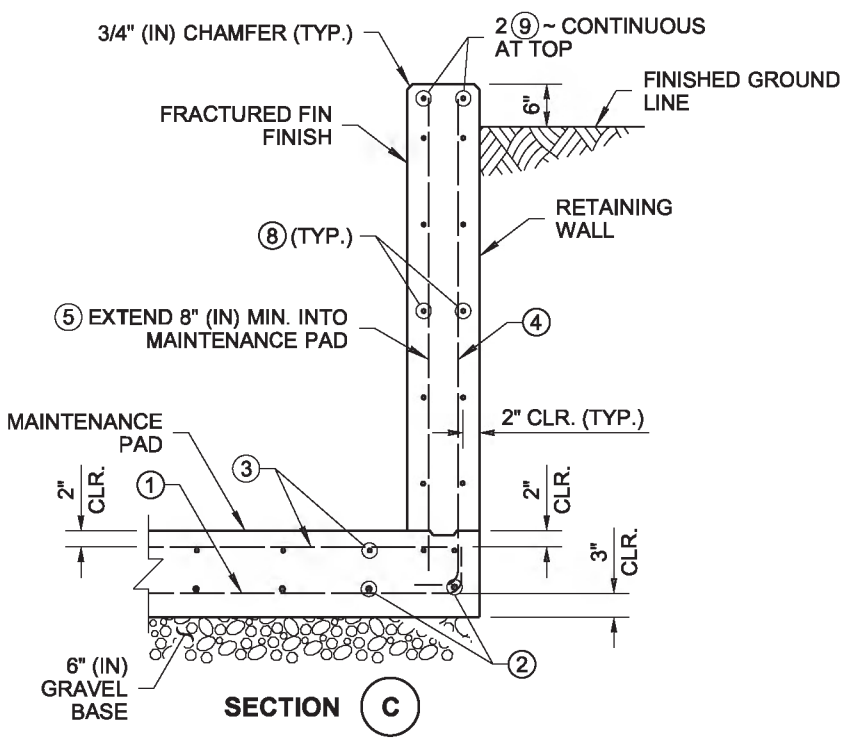

SECTION (C)

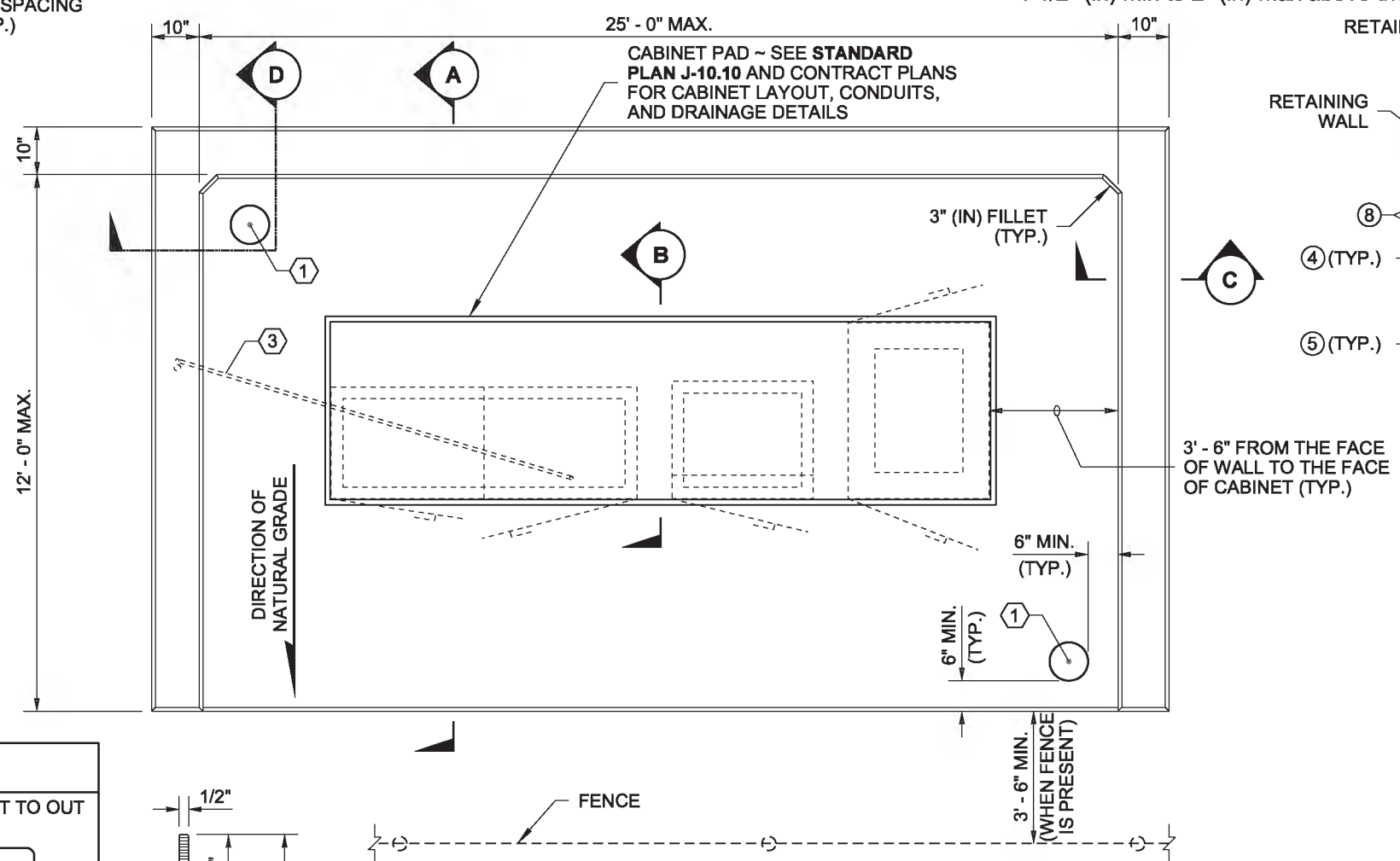

PLAN VIEW

CABINETS SHOWN FOR DISPLAY PURPOSES ONLY (SEE CONTRACT FOR CABINET LAYOUT)

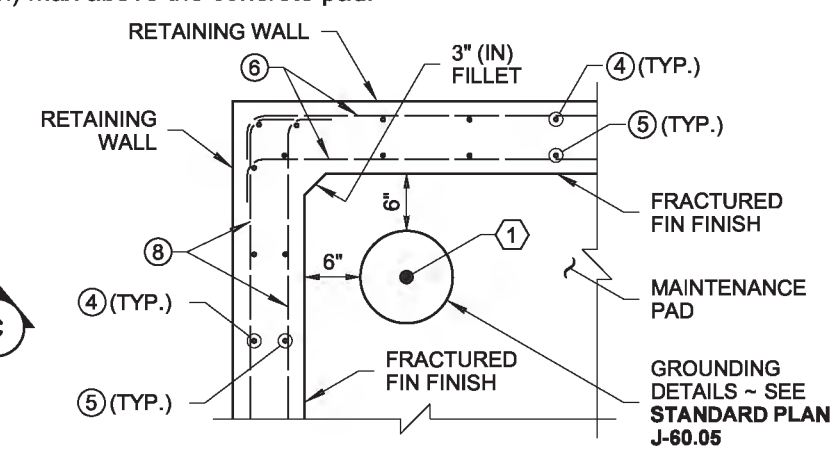

SECTION (D)

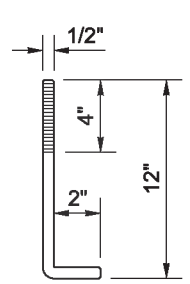

ANCHOR BOLT

SEE NOTE 8

REINFORCING STEEL BENDING DIAGRAM

SEE **STD. SPEC. 9-07.1(2)** FOR BENDING DIAM. ALL DIMENSIONS ARE OUT TO OUT

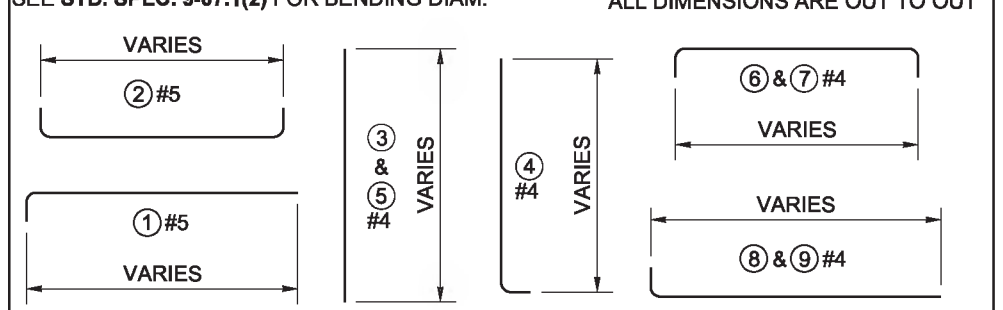

1. Drive ground rods before placing concrete. Move rod(s) and drain tile(s) with cover(s) as required to achieve full ground penetration. Maintain a 6' - 0" minimum clearance between ground rods as detailed on **Standard Plan J-60.05.**
2. Limits of pigmented sealer. Typical for all retaining walls.
3. Delete conduit and conductor when fence is not present.

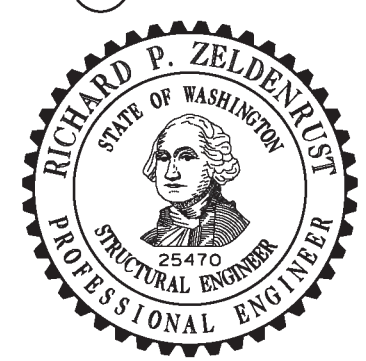

Zeldenrust, Richard
Jun 10 2014 10:44 AM

CABINET ENCLOSURE ON SLOPE

STANDARD PLAN J-10.15-01

SHEET 1 OF 1 SHEET

APPROVED FOR PUBLICATION
Bakotich, Pasco
Jun 11 2014 1:29 PM
STATE DESIGN ENGINEER

Washington State Department of Transportation

DRAWN BY: LISA CYFORD

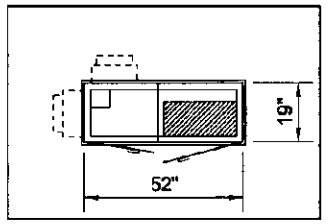

PLAN VIEW

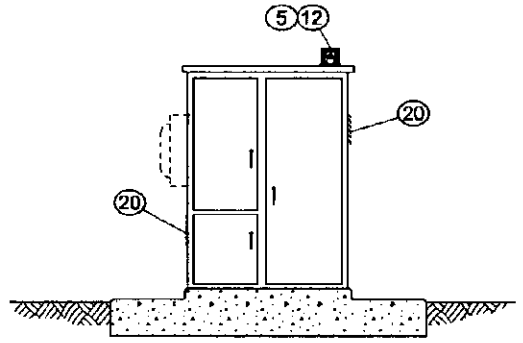

ELEVATION VIEW

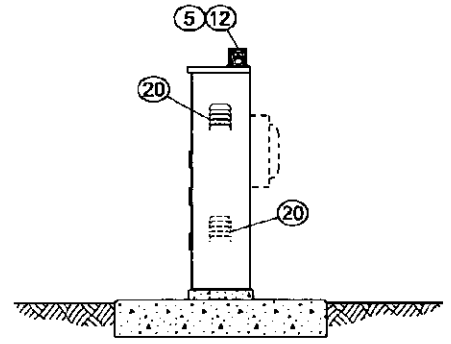

SIDE VIEW

SERVICE CABINET INSIDE RIGHT-OF-WAY

INSTALL FOUNDATION AS SLAB SECTION UNLESS IDENTIFIED
FOR CONSTRUCTION IN FENCE LINE IN CONTRACT PLANS

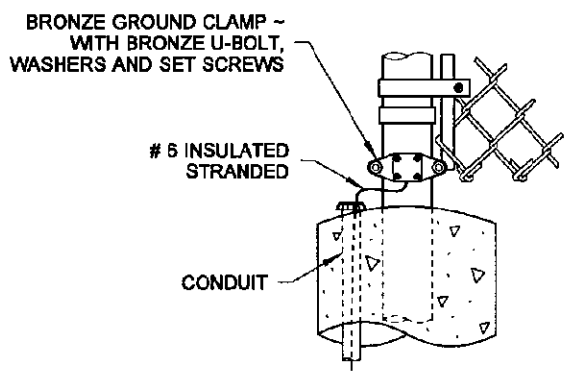

DETAIL (A)

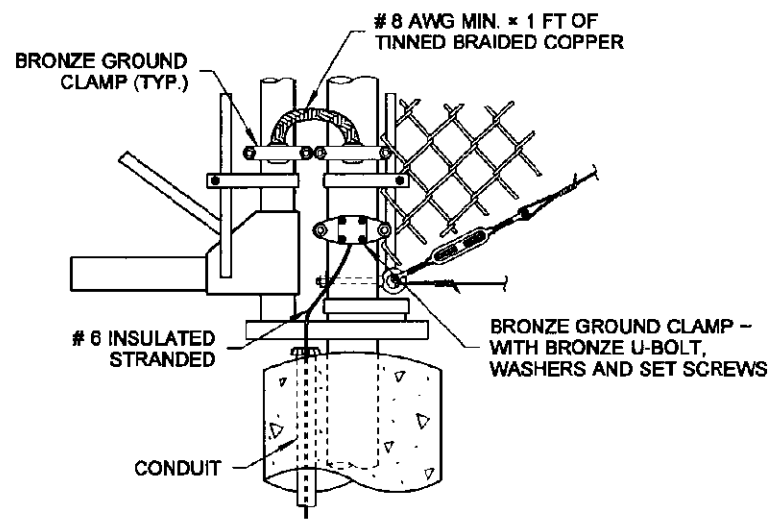

DETAIL (B)

NOTES

1. Metering Arrangements vary with different servicing utilities. The utility may require meter base mounting in the enclosure, on the side, or on the back of the enclosure. The utility may require the dimension between the door and the front of the safety socket box to be less than the 11" shown in the left side safety socket box mounting detail, see **Standard Plan J-3b**. The Contractor shall verify the serving utility's requirements prior to fabrication of and installing the service equipment.
2. The requirement for a disconnect switch ahead of the Meter varies with different serving utilities. The Contractor shall verify the serving utilities requirements prior to fabrication and installing the service equipment.
3. See **Standard Specification 9-29.24,** Service Cabinets.
4. Hinges shall have stainless steel or brass pins.
5. Cabinets shall be rated NEMA 3R and shall include two rain tight vents.
6. Metering equipment doors shall be pad lockable. Each door shall be gasketed. Install best construction core on bottom left and right doors. See door hinge detail, **Standard Plan J-3b**. Concealed heavy duty stainless steel lift off hinges are allowed as an alternative. Upper left door shall have 3 hinges, lower left door shall have 2 hinges, and right door shall have 3 hinges. All doors shall have a two position door stop assembly.
7. The following equipment within the service enclosure shall have an appropriately engraved phenolic name plate attached with screws or rivets: Key number 2, 3, 4, 6, 7, 8, 9, 16, 21 and 24. Key number 4 name plate shall read: "Photocell Bypass Test On" and "Photocell Test Off-Automatic". See Service Cabinet detail.
8. The dimensions shown are minimum and shall be adjusted to accommodate the various sizes of equipment installed.
9. All busswork shall be high grade copper and shall equal or exceed the main breaker rating. All breakers shall bolt onto the busswork. Jumpering of breakers shall not be allowed. Busswork shall accommodate all future equipment as shown in the breaker schedule.
10. The photocell unit shall be centered in the photocell enclosure to permit 360 degree rotation of the photocell without removal of the photocell unit or the photocell enclosure.
11. All internal wire runs shall be identified with "To-From" coded tags labeled with the code letters and/or numbers shown on the schedules. Approved PVC or Polyolefin wire marking sleeves shall be used.
12. All nuts, bolts, and washers used for mounting photocell enclosure shall be stainless steel.
13. A 1% tolerance is allowed for all dimensions.
14. See plans for breaker schedule.
15. Install conduit couplings on all conduits. Place couplings flush with top of concrete foundation.
16. Seal cabinet to foundation with a 1/2" bead of silicone. Apply silicone to dry surface only.
17. The meter base portion of this service was designed to meet metering portion of Euserc Drawing 309 requirements.

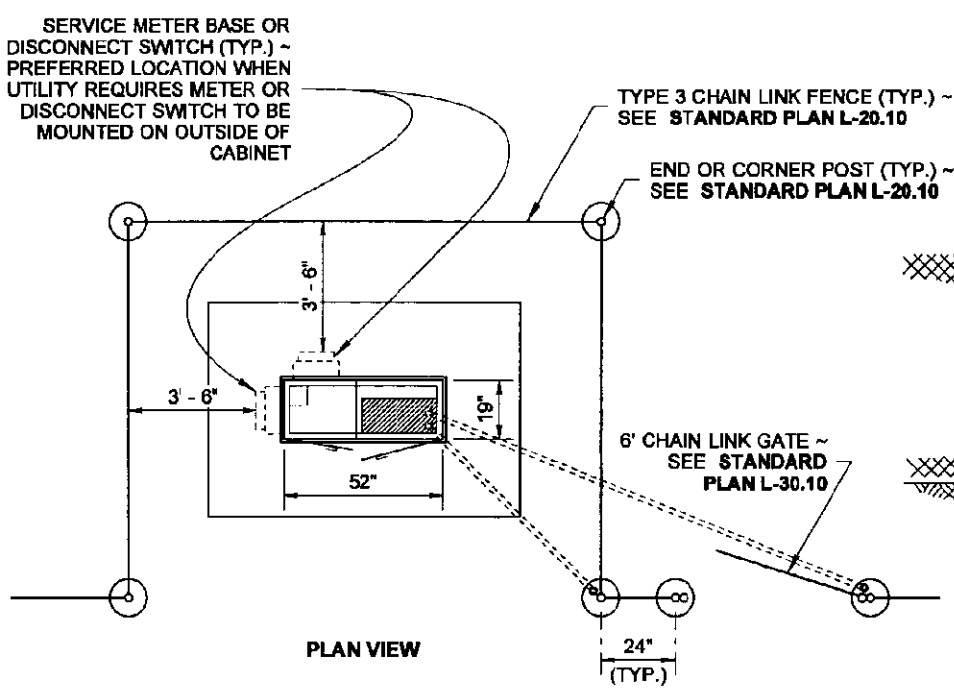

PLAN VIEW

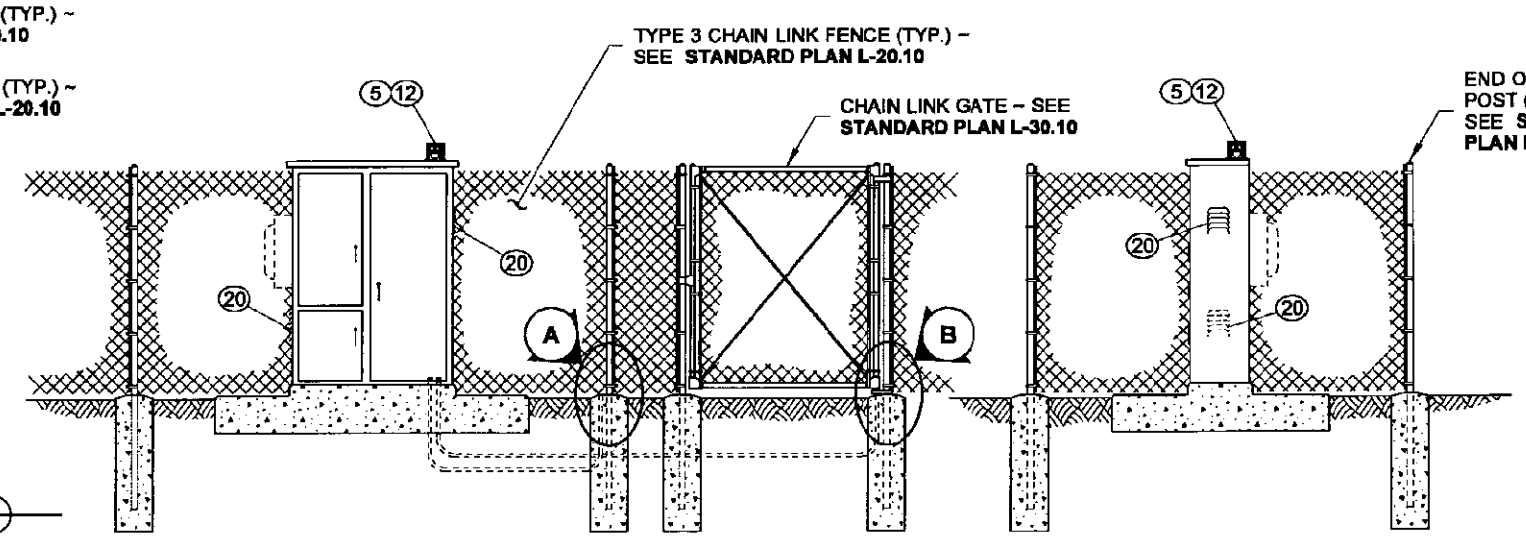

ELEVATION VIEW

SIDE VIEW

SERVICE CABINET WITHIN RIGHT-OF-WAY FENCE

FOR CONDUITS NOT SHOWN, DRAIN TILE FOR GROUNDING, DRAIN TUBES, REINFORCING STEEL, ETC.
OMITTED FOR CLARITY, SEE **STANDARD PLAN J-10.10** FOR DETAILS.

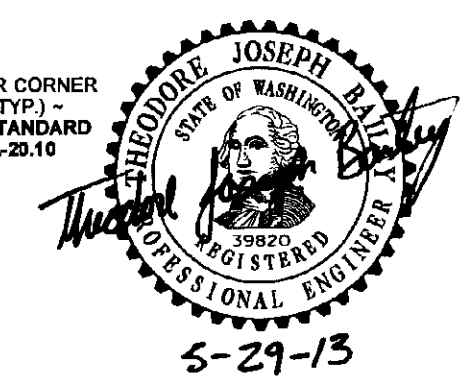

5-29-13

SERVICE CABINET TYPE E (0 - 200 AMP TYPE 240/480 SINGLE PHASE

STANDARD PLAN J-10.22-00

SHEET 1 OF 2 SHEETS

APPROVED FOR PUBLICATION

STATE DESIGN ENGINEER — DATE 5/29/13

Washington State Department of Transportation

DRAWN BY: LISA CYFORD

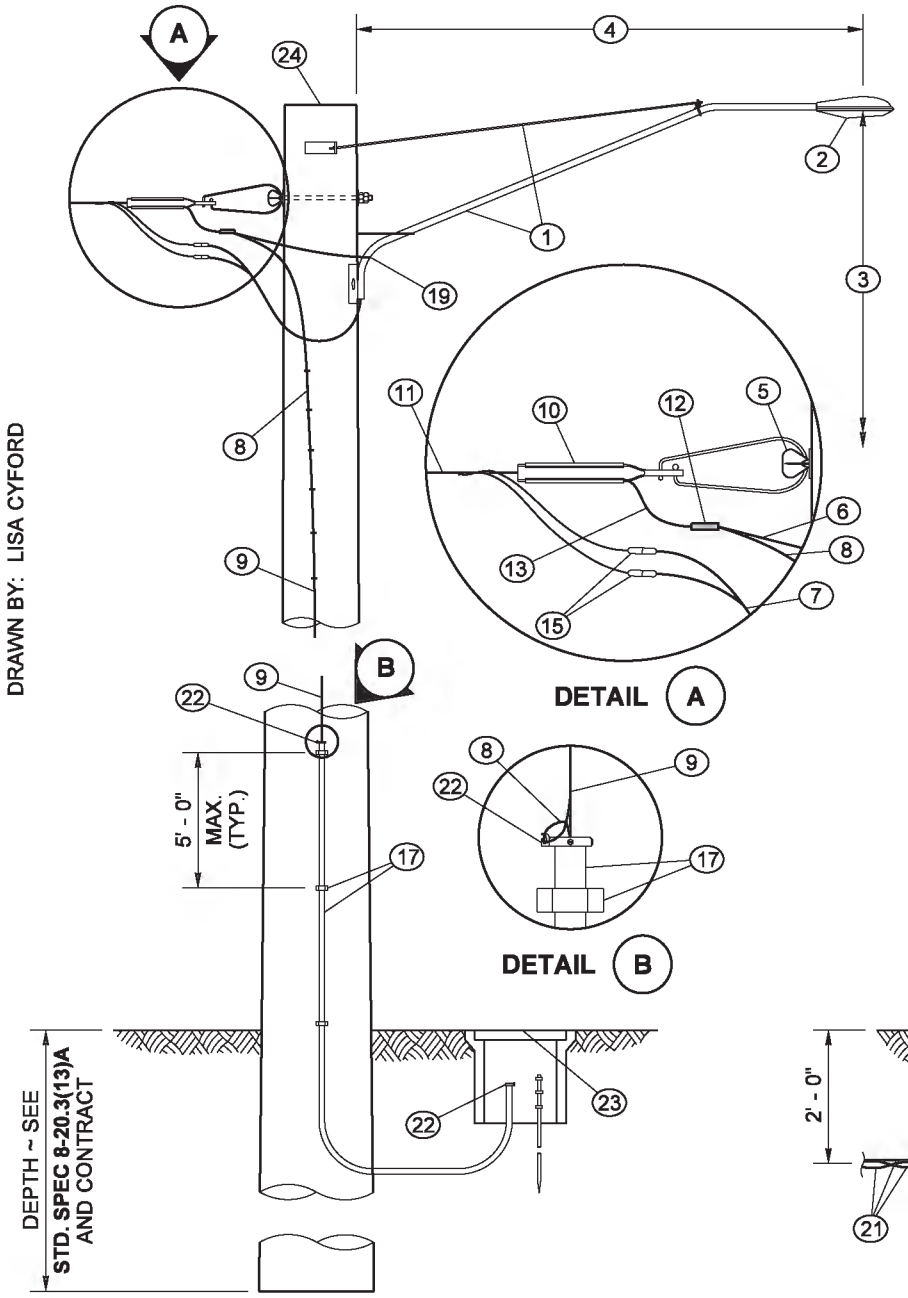

TIMBER LUMINAIRE SUPPORT

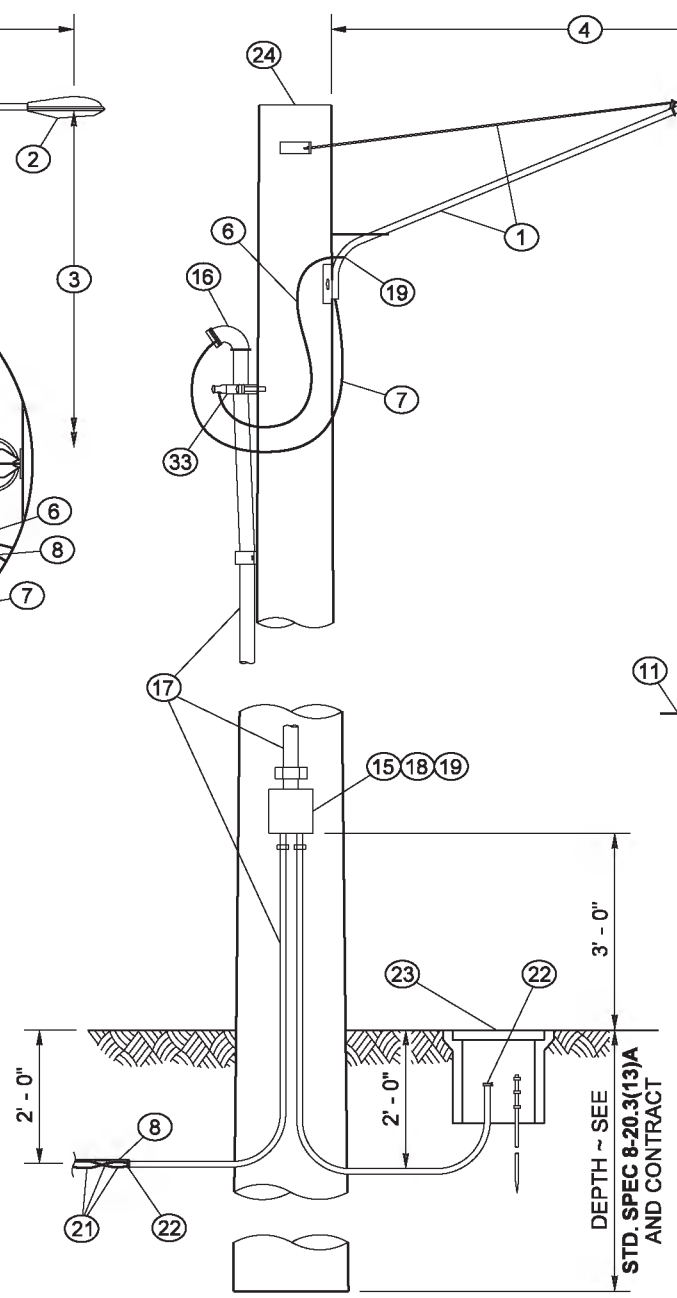

TIMBER LUMINAIRE SUPPORT

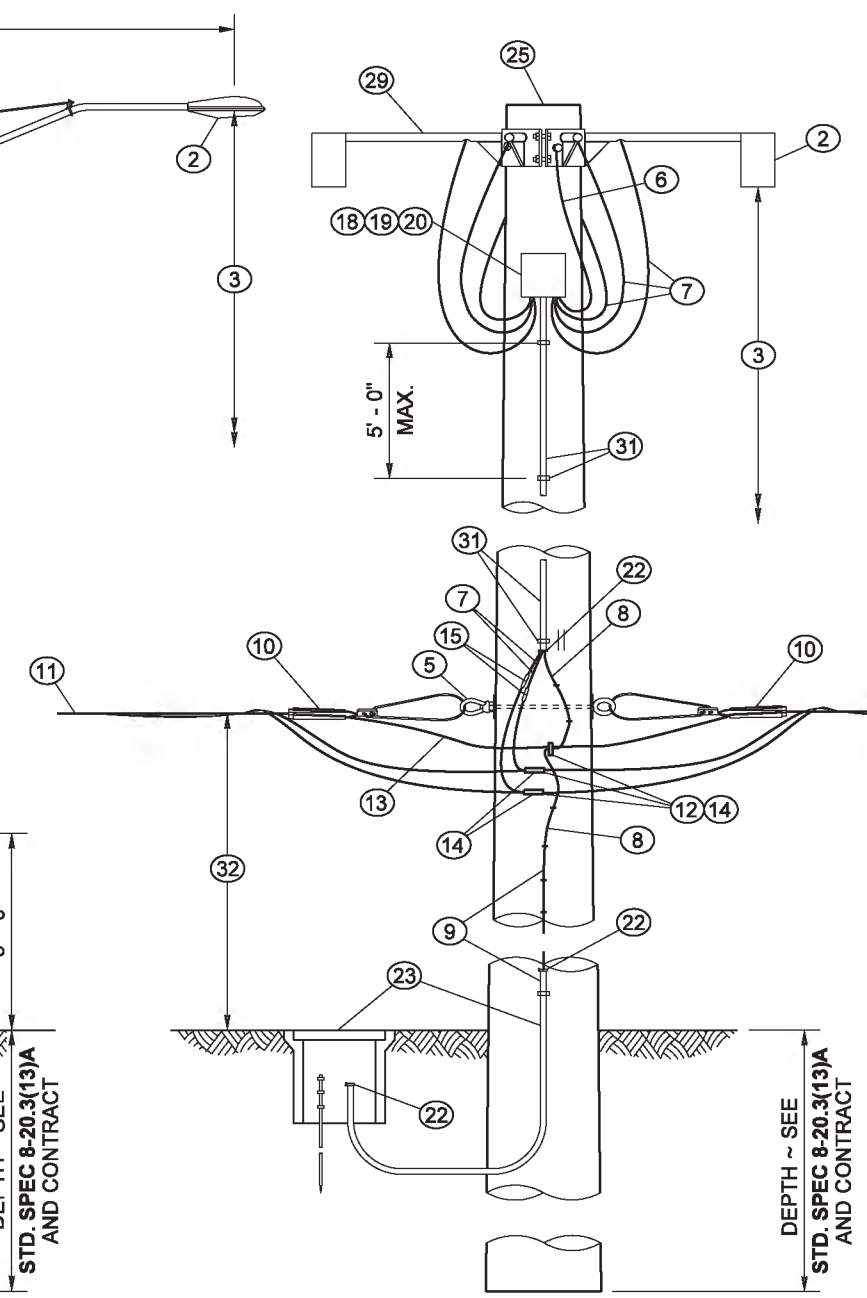

HIGH MAST TIMBER LUMINAIRE SUPPORT

SHOWN FOR 480 VAC POWER FEED ~
INCREASE CONDUCTOR AND FUSE SIZE
AS REQUIRED FOR 240 VAC POWER FEED

NOTES

1. Timber luminaire supports are allowed only for temporary installations where breakaway or Slip Bases are not required.
2. When down guys are required, see **Standard Plan J-15.15.**

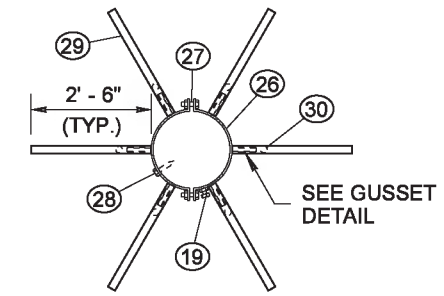

PLAN VIEW
LUMINAIRE SUPPORT BRACKET

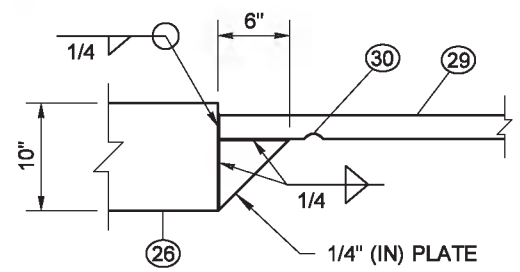

GUSSET DETAIL

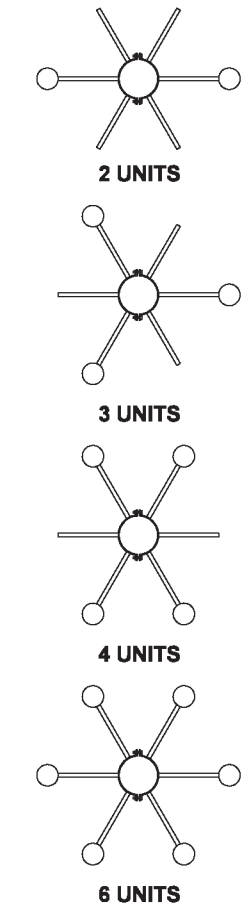

PLAN VIEW
TYPICAL LUMINAIRE MOUNTING CONFIGURATIONS

KEY

1. GALVANIZED STEEL OR ALUMINUM MAST ARM ~ CONFIGURATIONS VARY WITH MANUFACTURER
2. LUMINAIRE ~ SEE CONTRACT FOR TYPE AND NUMBER
3. MOUNTING HEIGHT ~ ROADWAY TO LUMINAIRE ELEVATION DIFFERENCE ± 2% ~ SEE CONTRACT
4. MAST ARM LENGTH ~ SEE CONTRACT
5. 5/8" (IN) GALVANIZED THIMBLE EYE BOLT (SINGLE OR DOUBLE) WITH WASHERS AND NUTS OR EYENUT
6. BONDING JUMPER
7. POLE AND BRACKET CABLE
8. EQUIPMENT GROUNDING CONDUCTOR ~ SEE **STANDARD PLAN J-60.05**
9. FROM GROUND LINE TO 10' (FT) ABOVE GROUND, ENCLOSE EQUIPMENT GROUNDING CONDUCTOR IN GALVANIZED STEEL CONDUIT, CODE SIZED ~ ABOVE 10' (FT) FROM GROUND, STAPLE EQUIPMENT GROUNDING CONDUCTOR TO POLE ~ CONNNECT TO SUPPLEMENTAL GROUND, PER **STANDARD PLAN J-60.05**
10. SERVICE WEDGE CLAMP
11. ACSR TRIPLEX OR FOURPLEX CONDUCTORS ~ SEE CONTRACT
12. CU \ AL SPLIT BOLT CONNECTOR
13. MESSENGER CABLE
14. INSULATING TAPE FOR WATERPROOF CONNECTION
15. FUSED QUICK DISCONNECT, PER **STANDARD SPECIFICATION 9-29.7(2)** ~ USE 30 AMP FUSES FOR HIGH MAST SUPPORTS
16. WEATHERHEAD ~ SIZE AS REQUIRED
17. STEEL CONDUIT ~ STRAPS SPACED MAXIMUM 5' (FT) APART AND NEAR ALL CONDUIT ENDS
18. 8" (IN) × 8" (IN) × 4" (IN) NEMA 3R JUNCTION BOX WITH RAIN-TIGHT HUBS AND REMOVABLE COVER
19. GROUNDING LUG
20. 12-POLE TERMINAL BLOCK
21. DIRECT BURIAL CONDUCTORS OR GALVANIZED STEEL OR PVC CONDUITS WITH CONDUCTORS ~ SEE CONTRACT
22. GROUNDING END BUSHING
23. SUPPLEMENTAL GROUND ~ SEE **STANDARD PLAN J-60.05**
24. CLASS 5 TIMBER POLE ~ LENGTH SUFFICIENT FOR MOUNTING HEIGHT AND BURIAL DEPTH
25. CLASS 2 TIMBER POLE ~ LENGTH SUFFICIENT FOR MOUNTING HEIGHT AND BURIAL DEPTH
26. 1/4" (IN) × 10" (IN) PLATE COLLAR BENT TO FIT POLE DIAMETER (8" (IN) - 10"(IN))
27. 3/8" (IN) × 4" (IN) MACHINE BOLTS (FOUR REQUIRED) WITH WASHERS AND NUTS
28. 1/2" (IN) LAG BOLTS (SIX REQUIRED) ~ DRILL 9/16" (IN) HOLE IN PLATE
29. 2" (IN) PIPE
30. 3/4" (IN) WIRE HOLE 2" (IN) FROM GUSSET PLATE, SMOOTH HOLE EDGES
31. 1" (IN) NON-METALLIC CONDUIT WITH 1" (IN) STRAPS SPACED MAXIMUM 5' (FT) APART AND NEAR ALL CONDUIT ENDS
32. DISTANCE VARIES, 35' (FT) MIN. TO 50' (FT) MAX. DEPENDING ON LINE CLEARANCE REQUIREMENTS
33. CONDUIT GROUND CLAMP

Theodore Joseph Bailey
Digitally signed by baileyte@wsdot.wa.gov
DN: cn=baileyte@wsdot.wa.gov
Date: 2014.05.12 13:31:25 -07'00'

TIMBER LIGHT STANDARD

STANDARD PLAN J-15.10-01

SHEET 1 OF 1 SHEET

APPROVED FOR PUBLICATION
Bakotich, Pasco
Jun 11 2014 1:29 PM
STATE DESIGN ENGINEER
Washington State Department of Transportation

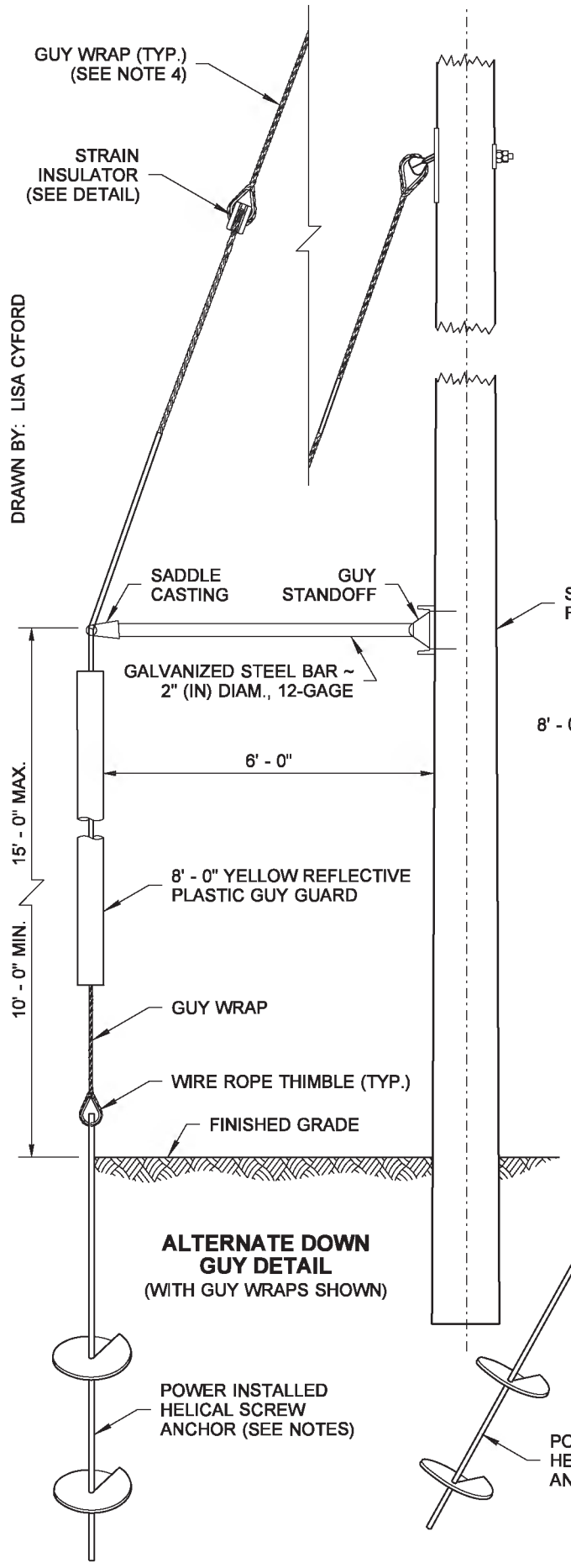

ALTERNATE DOWN GUY DETAIL
(WITH GUY WRAPS SHOWN)

ANCHOR ASSEMBLIES
(SEE **STANDARD SPECIFICATION 9-29.4**)

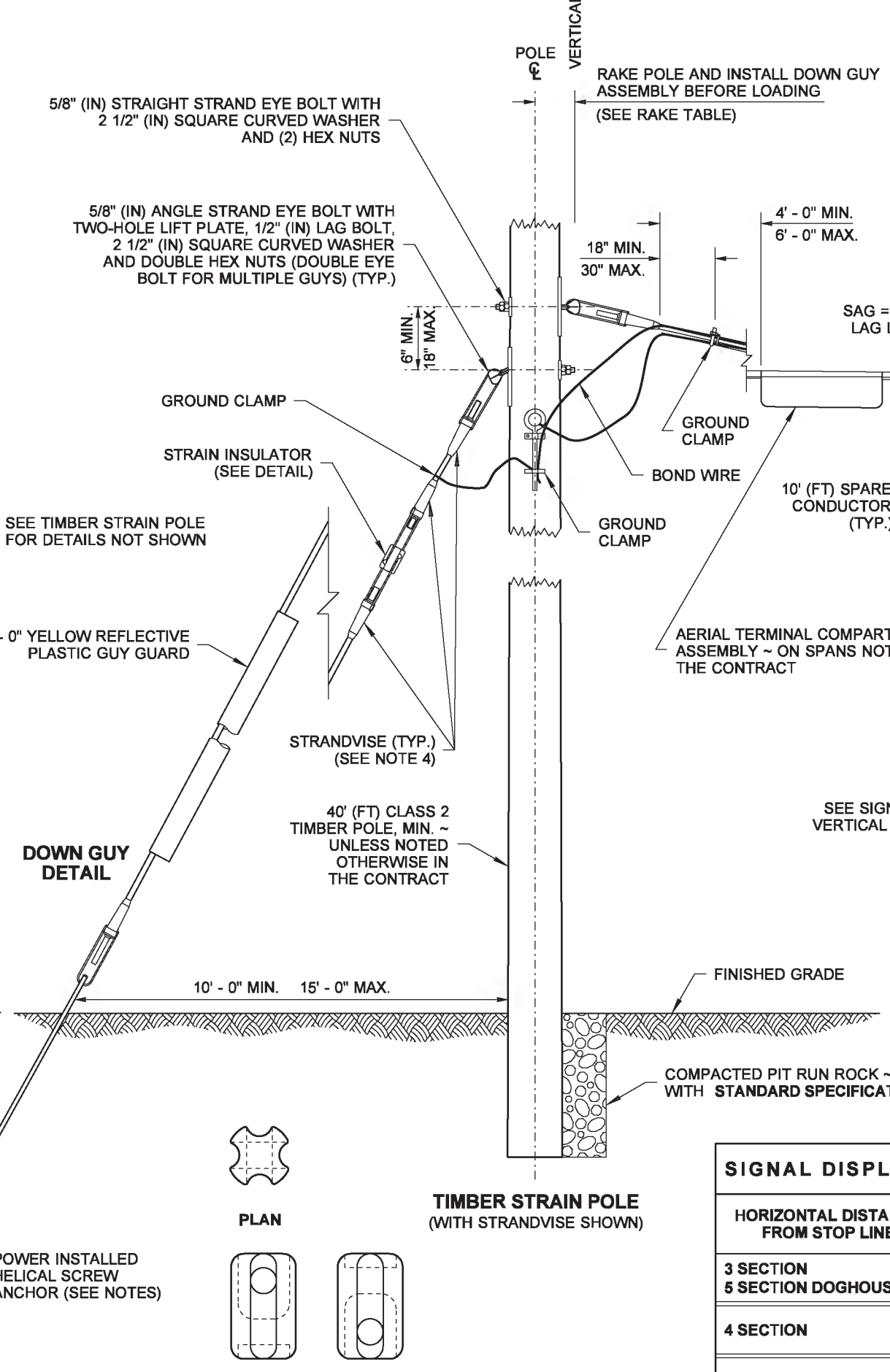

DOWN GUY DETAIL

TIMBER STRAIN POLE
(WITH STRANDVISE SHOWN)

STRAIN INSULATOR DETAIL

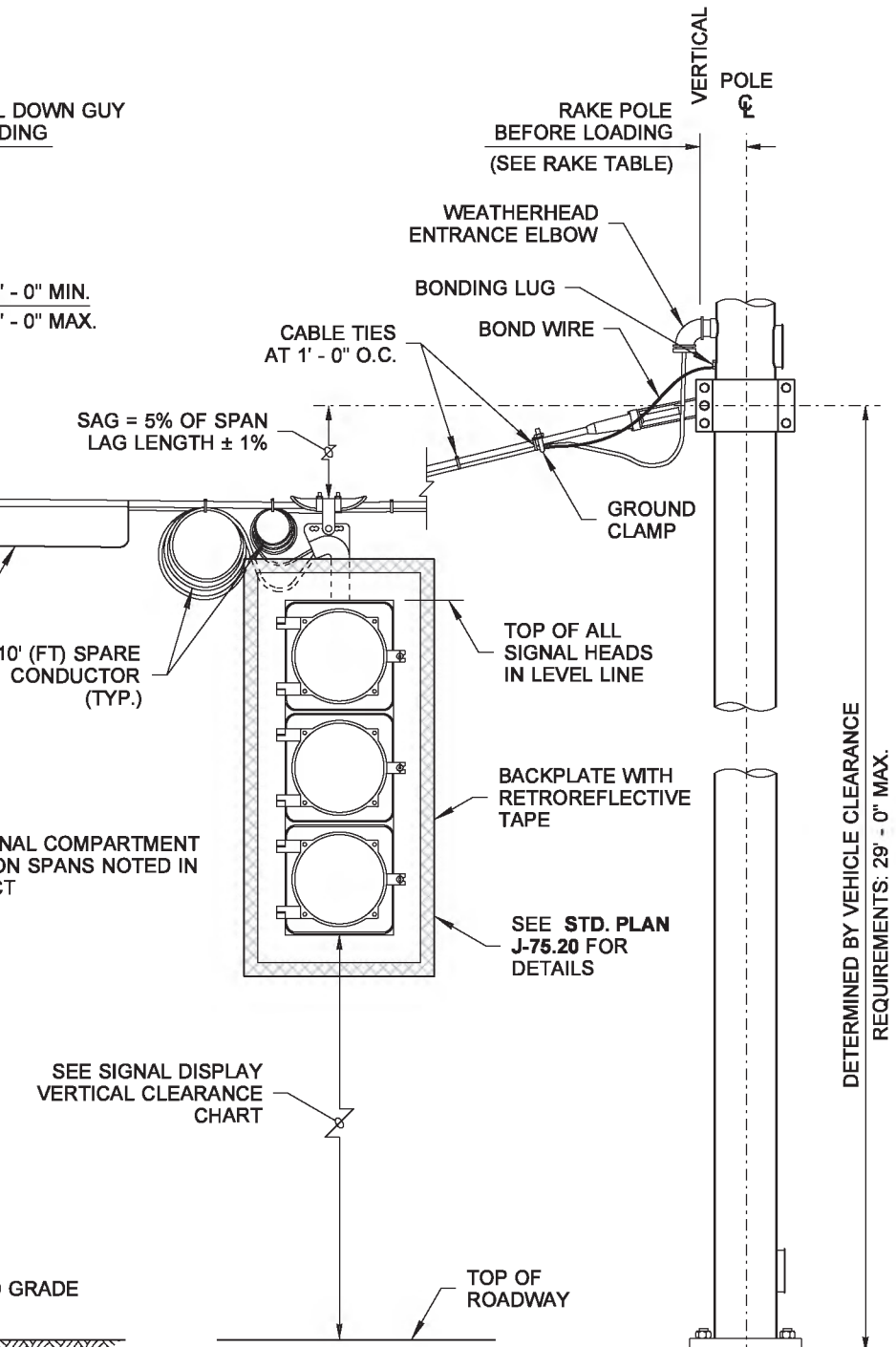

TYPE IV OR TYPE V STRAIN POLE STANDARD
(SEE NOTE 3)

NOTES

1. An eight-way expanding anchor may be used as an acceptable alternate to power installed helical screw anchor.
2. If anchor hole diameter is greater than nominal diameter of folded anchors, a 5' (ft) cover of 6" (in) to 12" (in) size rock shall be tamped in to replace the disturbed soil immediately above the anchor.
3. See **Standard Plans J-27.10** and **J-27.15** for Type IV or Type V Strain Pole details not shown.
4. Strandvise or Guy Wrap may be used.

RAKE TABLE

POLE CLASS	RAKE
1900#	7"
2700#	6"
3700#	5"
4800#	5"
5400#	4"
4300#	4"
7200#	4"
ALL TIMBER	6"

SIGNAL DISPLAY VERTICAL CLEARANCE TO ROADWAY

HORIZONTAL DISTANCE FROM STOP LINE	40'		45'		50'		53' - 180'	
	MIN.	MAX.	MIN.	MAX.	MIN.	MAX.	MIN.	MAX.
3 SECTION 5 SECTION DOGHOUSE	16.5'	17.5'	16.5'	19.2'	16.5'	20.9'	16.5'	22.0'
4 SECTION	16.5'	17.0'	16.5'	18.0'	16.5'	19.7'	16.5'	20.8'
5 SECTION	16.5'	17.0'	16.5'	17.5"	16.5'	18.5'	16.5'	19.6'

MEASURED FROM BOTTOM OF
SIGNAL HEAD HOUSING TO ROADWAY

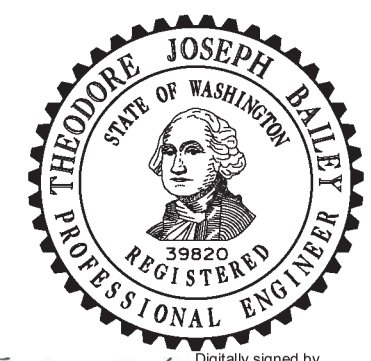

Theodore Joseph Bailey
Digitally signed by baileyte@wsdot.wa.gov
DN: cn=baileyte@wsdot.wa.gov
Date: 2014.05.16 09:35:00 -07'00'

SPAN WIRE INSTALLATION

STANDARD PLAN J-15.15-01

SHEET 1 OF 1 SHEET

APPROVED FOR PUBLICATION
Bakotich, Pasco
Jun 11 2014 1:30 PM
STATE DESIGN ENGINEER
Washington State Department of Transportation

DRAWN BY: LISA CYFORD

DRAWN BY: FERN LIDDELL

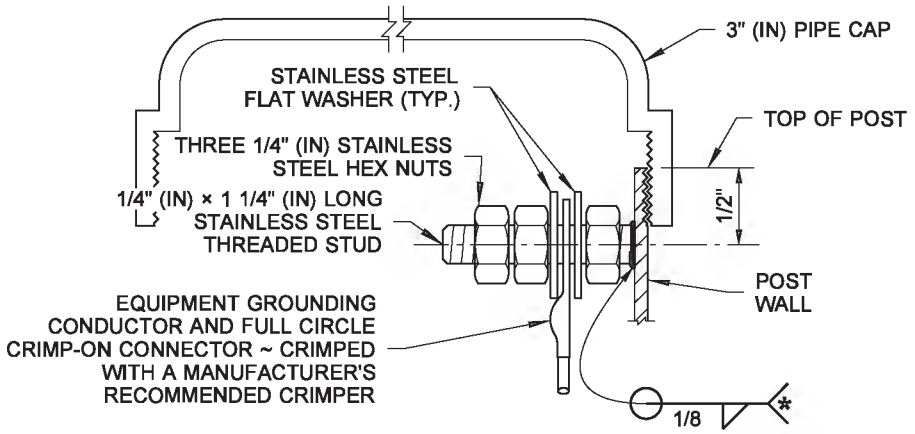

GROUNDING CONNECTION DETAIL

* WELD STUD TO POLE WALL TO MAXIMUM EXTENT POSSIBLE (1/2" (IN) MINIMUM WELD)

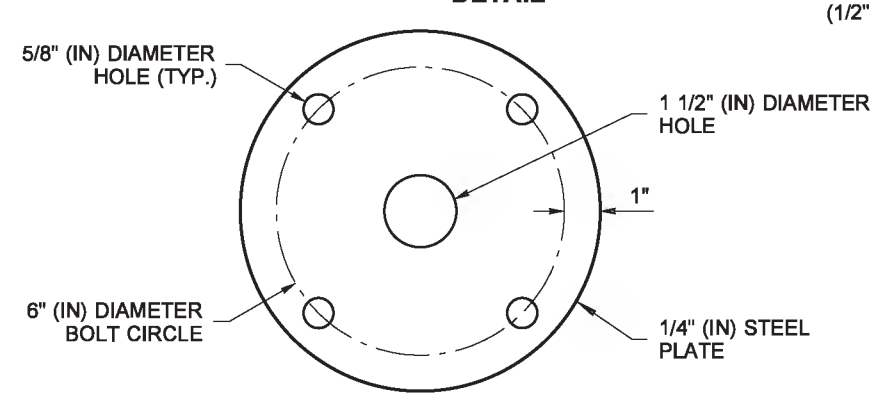

ANCHOR BOLT TEMPLATE

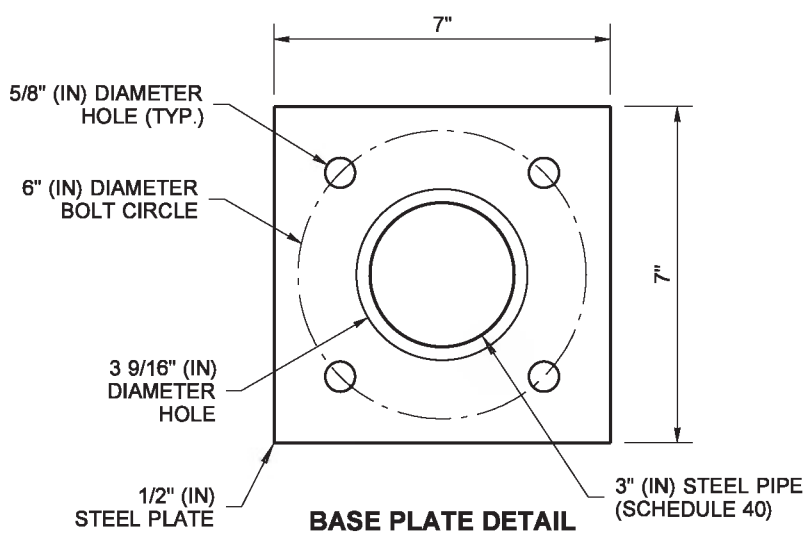

BASE PLATE DETAIL

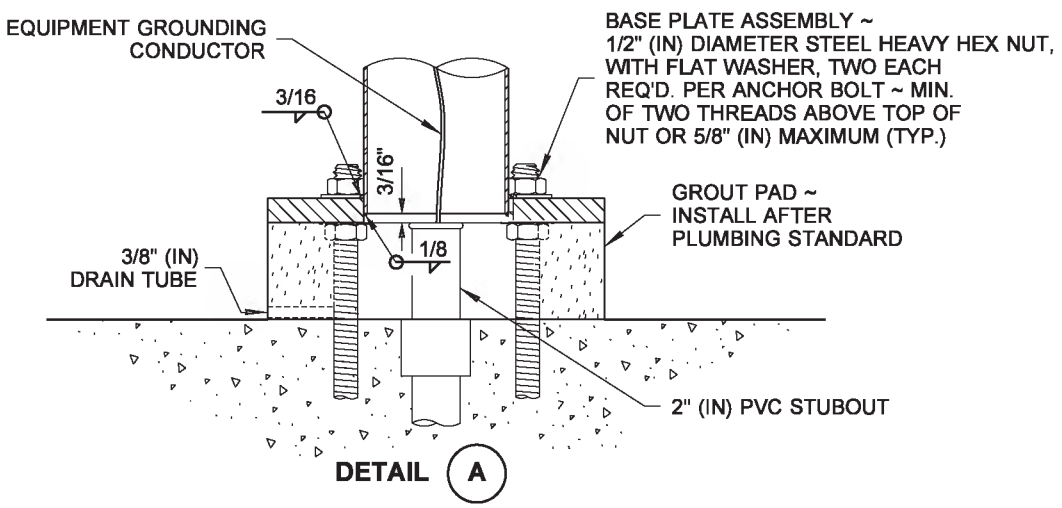

DETAIL A

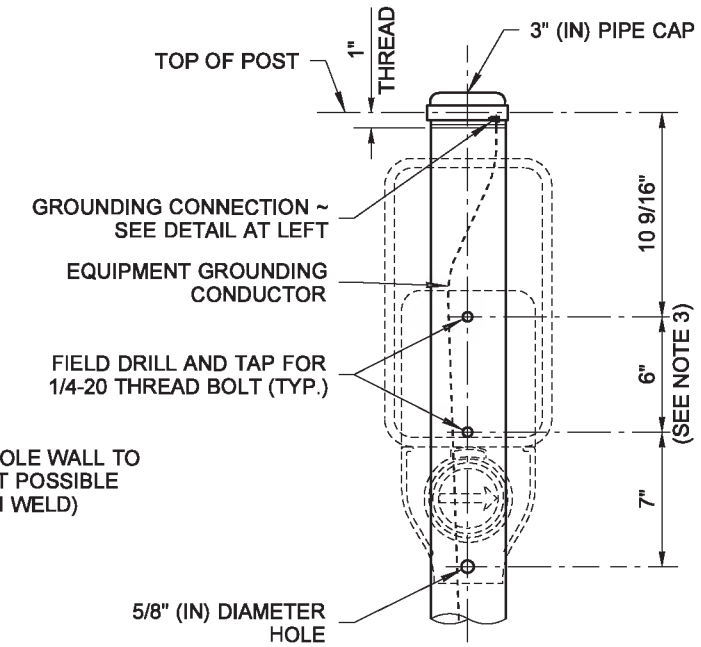

POST DETAIL

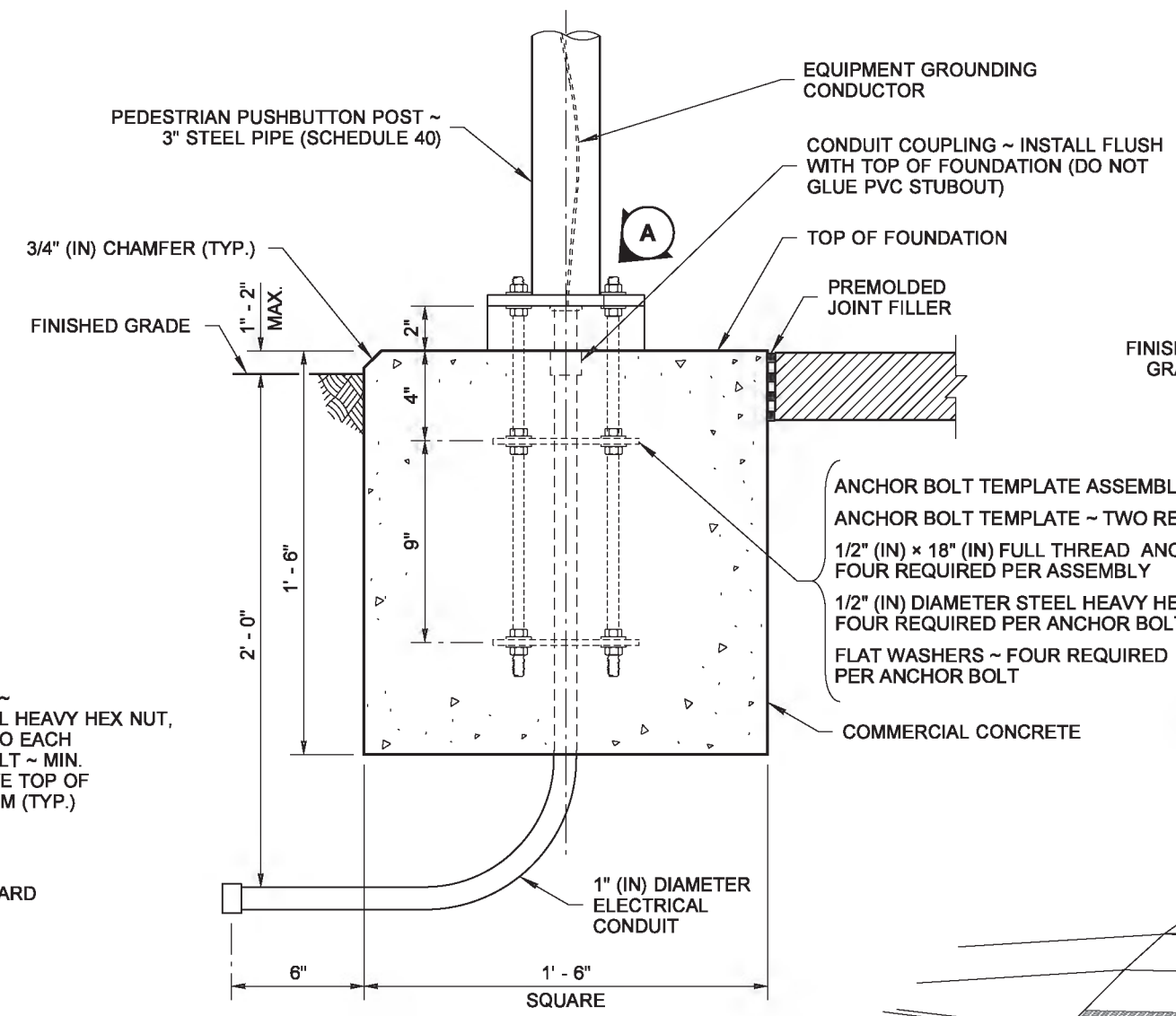

FOUNDATION DETAIL

NOTES

1. See **Standard Plan J-20.26** for Accessible Pedestrian Pushbutton details.
2. Where shown in the plans, install plaque (R10-32P) "PUSH BUTTON FOR 2 SECONDS FOR EXTRA CROSSING TIME" above the Accessible Pedestrian Signal (APS) assembly. Add 14" (in) to post height to accommodate plaque and leave a 2" (in) space between signs.
3. Mounting distances vary between manufacturers. See manufacturers recommendations for mounting information.
4. Junction Box serving the Standard shall preferably be located 5' - 0" (10' - 0" Max.) from the Standard.

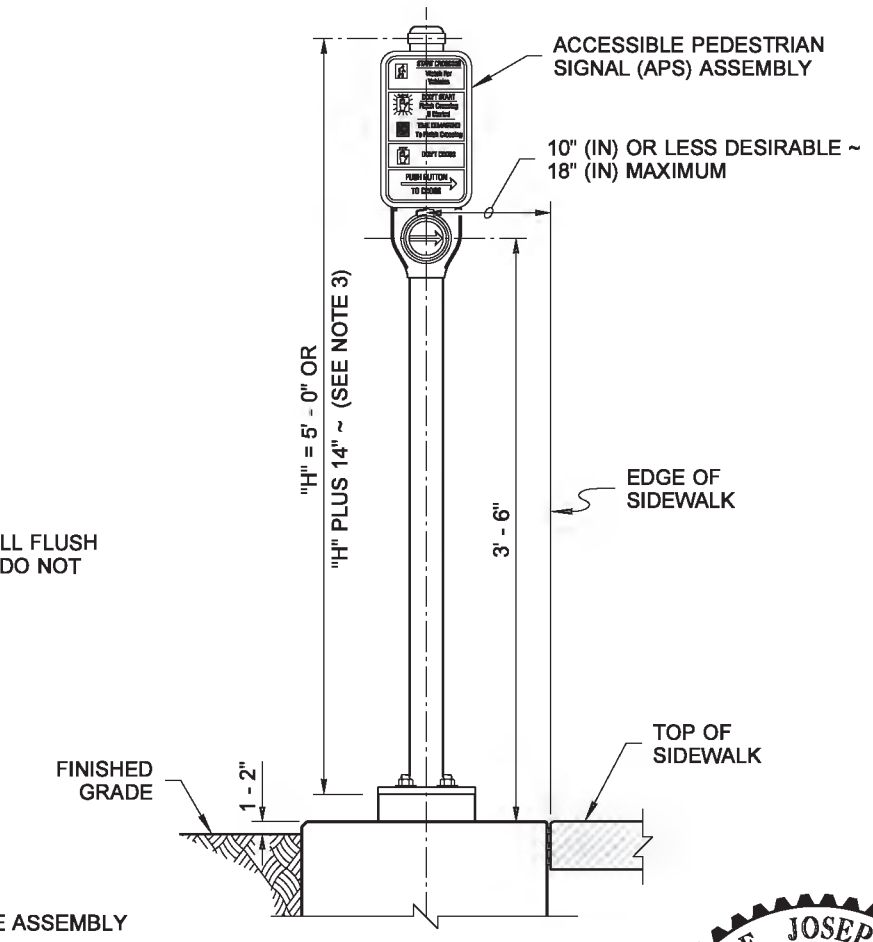

ELEVATION

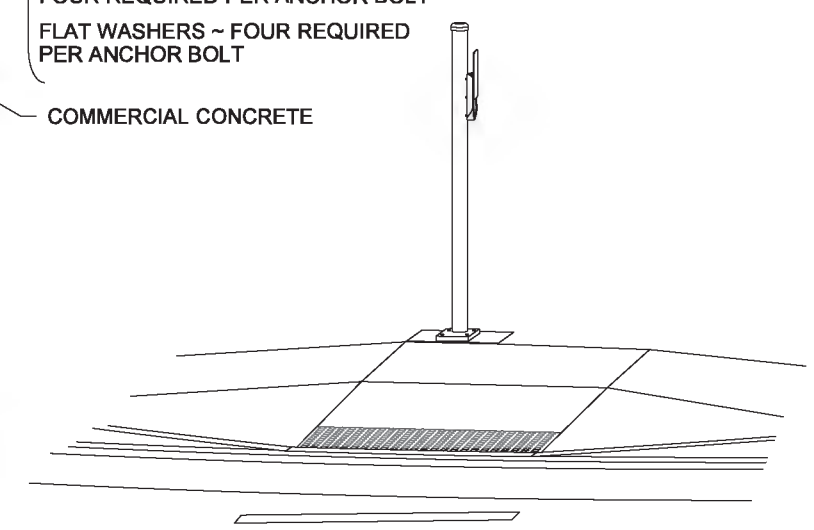

PERSPECTIVE VIEW

THEODORE JOSEPH BAILEY
STATE OF WASHINGTON
39820
REGISTERED
PROFESSIONAL ENGINEER

Theodore Joseph Bailey
Bailey, Ted
Jun 26 2014 4:20 PM

ACCESSIBLE PEDESTRIAN PUSHBUTTON POST (PPB) AND FOUNDATION

STANDARD PLAN J-20.10-03

SHEET 1 OF 1 SHEET

APPROVED FOR PUBLICATION
Bakotich, Pasco
Jun 30 2014 3:09 PM
STATE DESIGN ENGINEER

Washington State Department of Transportation

DRAWN BY: FERN LIDDELL

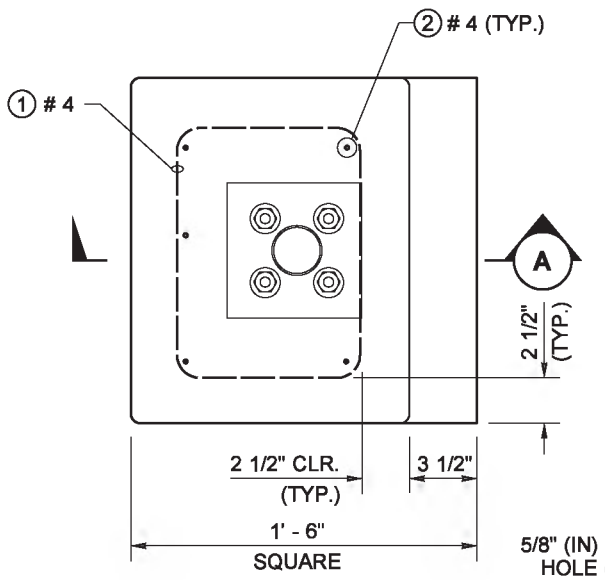

PLAN VIEW

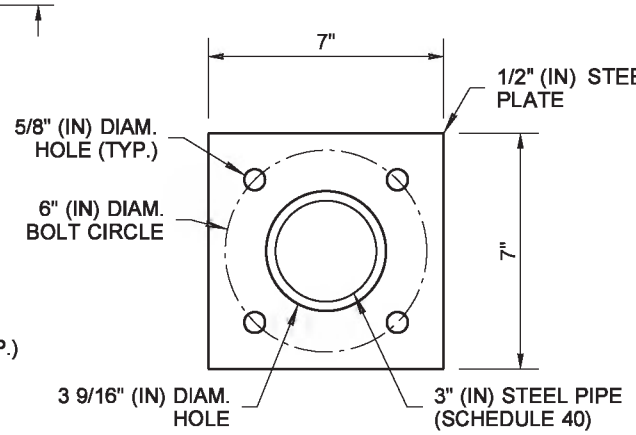

BASE PLATE DETAIL

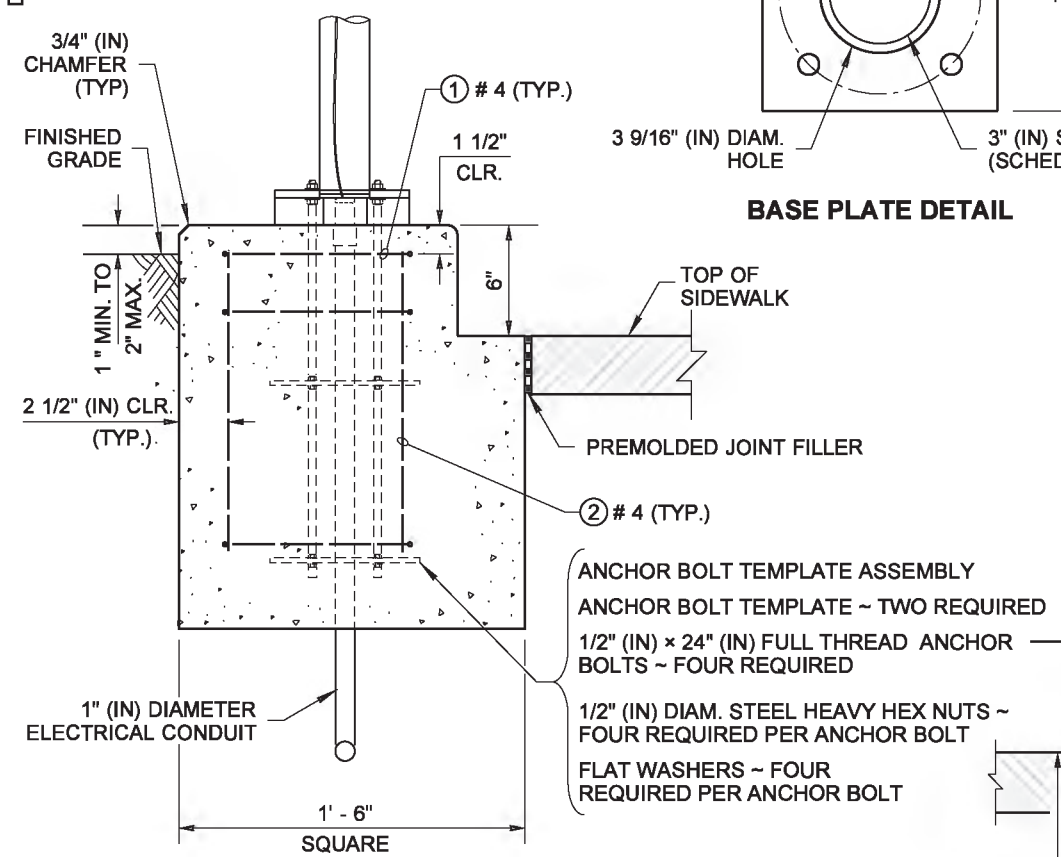

SECTION A

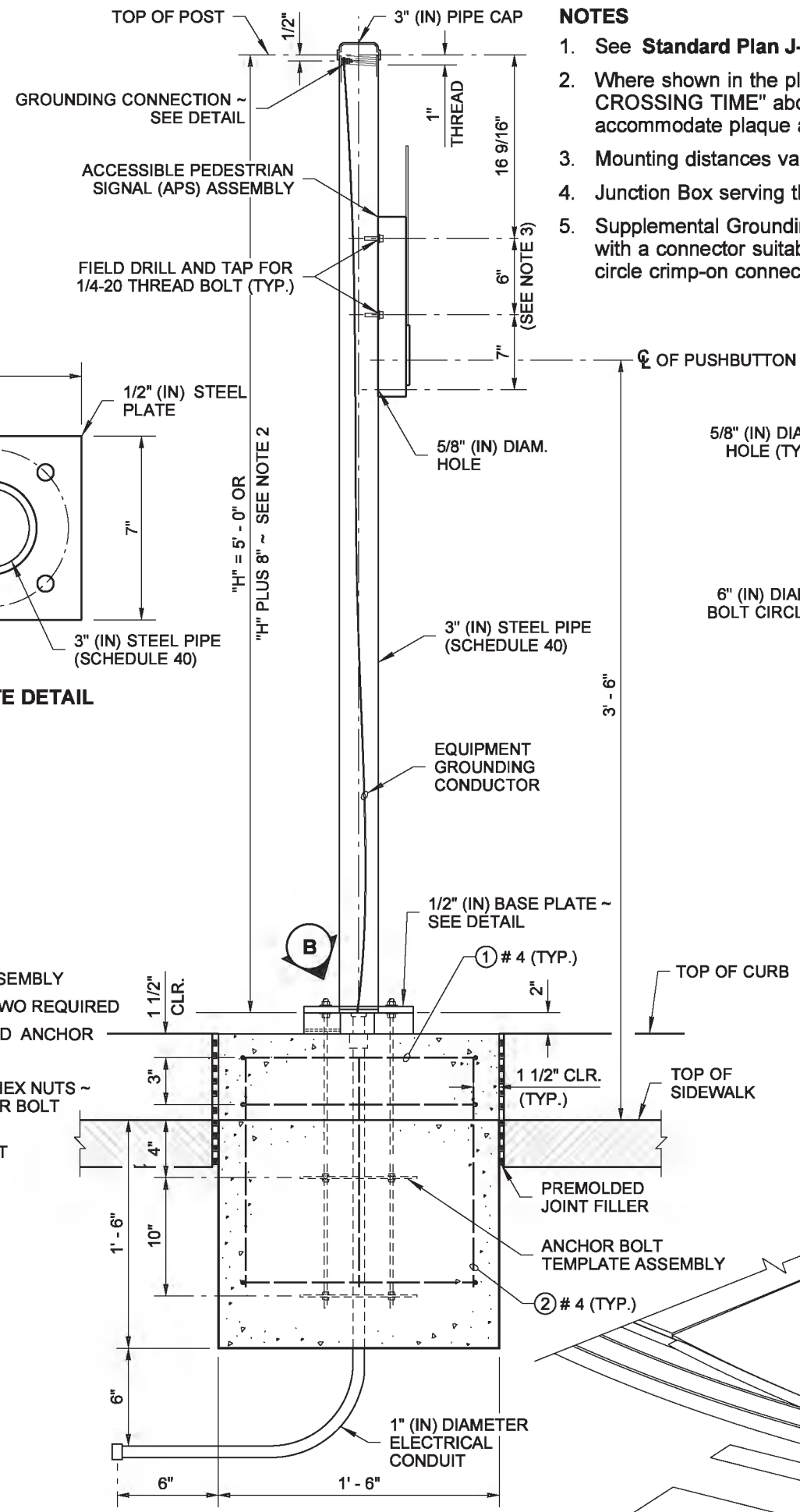

ELEVATION

NOTES

1. See **Standard Plan J-20.26** for Accessible Pedestrian Pushbutton details.
2. Where shown in the plans, install plaque (R10-32P) "PUSH BUTTON FOR 2 SECONDS FOR EXTRA CROSSING TIME" above the Accessible Pedestrian Signal (APS) assembly. Add 14" (in) to the PPB post height to accommodate plaque and leave a 2" (in) space between signs.
3. Mounting distances vary between manufacturers. See manufacturers recommendations for mounting information.
4. Junction Box serving the Standard shall preferably be located 5' - 0" (10' - 0" Max.) from the Standard.
5. Supplemental Grounding Conductor shall be non-insulated #4 AWG stranded copper and shall be clamped to vertical rebar with a connector suitable for use embedded in concrete: Provide 3' - 0" min. slack. Attach to pole grounding stud with a full circle crimp-on connector (crimped with a manufacturer recommended crimper).

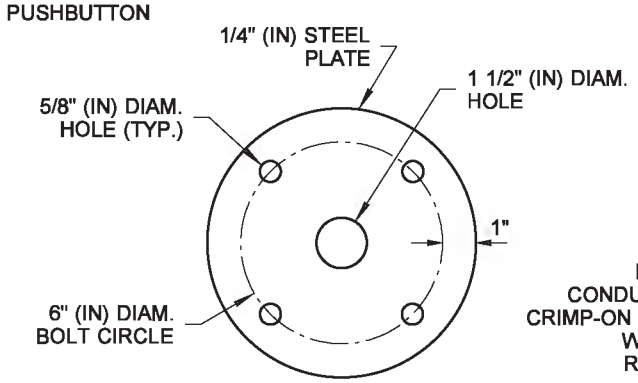

ANCHOR BOLT TEMPLATE

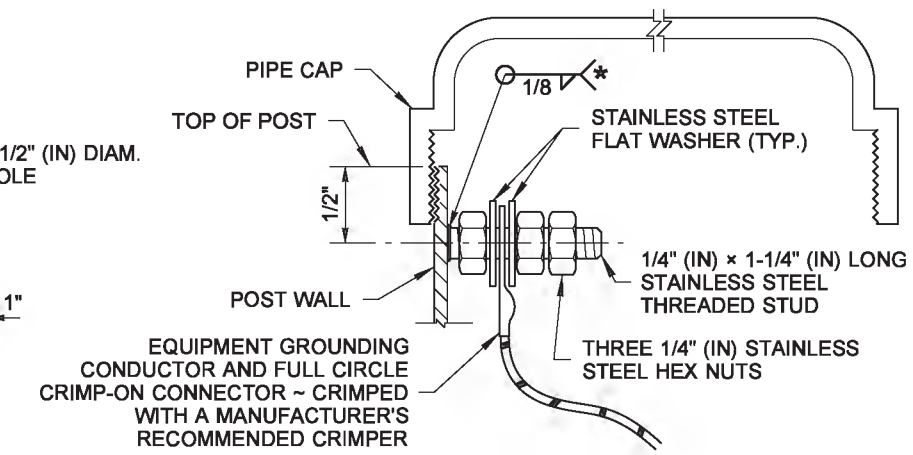

GROUNDING CONNECTION DETAIL

* WELD STUD TO POLE WALL TO MAXIMUM EXTENT POSSIBLE ~ 1/2" (IN) MINIMUM WELD

CONFIGURATIONS VARY AMONG DIFFERENT MANUFACTURERS

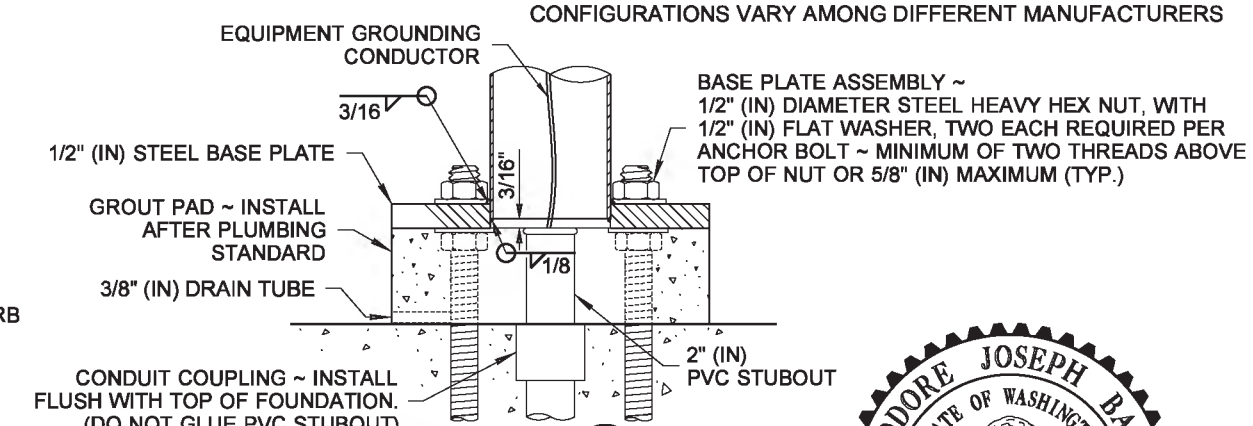

SECTION B

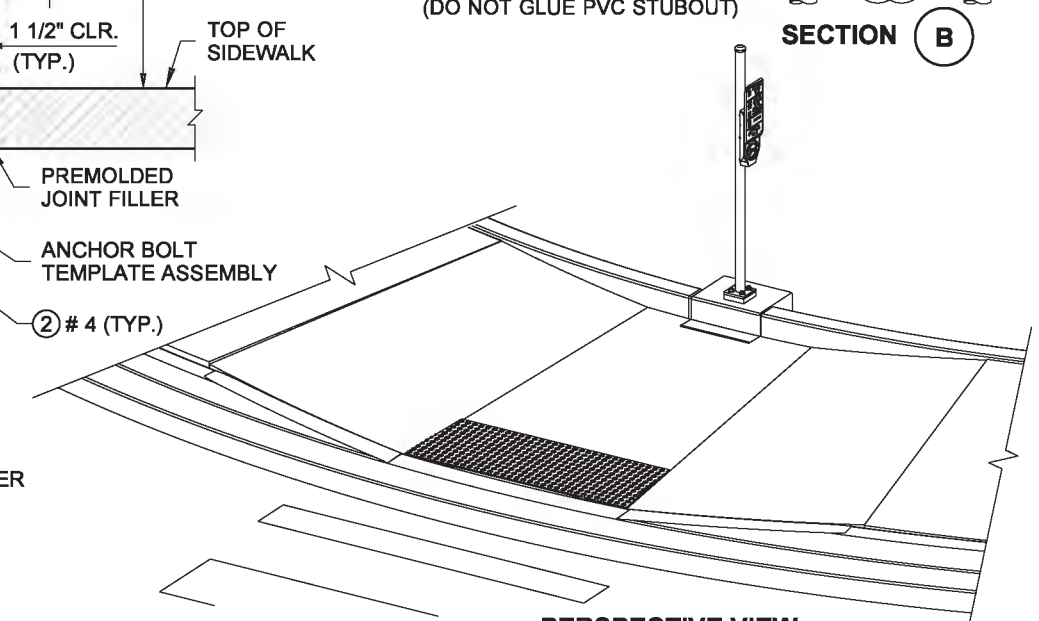

PERSPECTIVE VIEW

REINFORCING STEEL BENDING DIAGRAM

SEE **STD. SPEC. 9-07.1(2)** FOR BENDING DIAMETERS

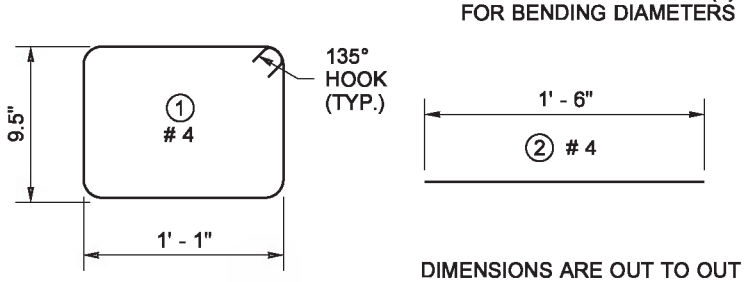

DIMENSIONS ARE OUT TO OUT

TYPE PPB STANDARD DETAILS

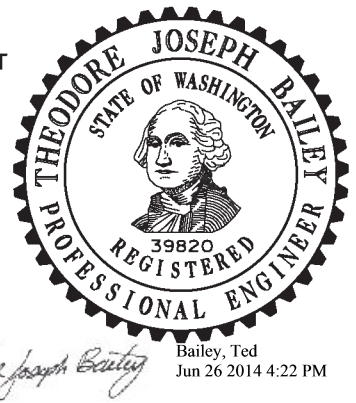

Bailey, Ted
Jun 26 2014 4:22 PM

ACCESSIBLE PEDESTRIAN PUSHBUTTON WITH CURB BASE

STANDARD PLAN J-20.11-02

SHEET 1 OF 2 SHEETS

APPROVED FOR PUBLICATION
Bakotich, Pasco
Jun 30 2014 3:10 PM
STATE DESIGN ENGINEER

Washington State Department of Transportation

DRAWN BY: FERN LIDDELL

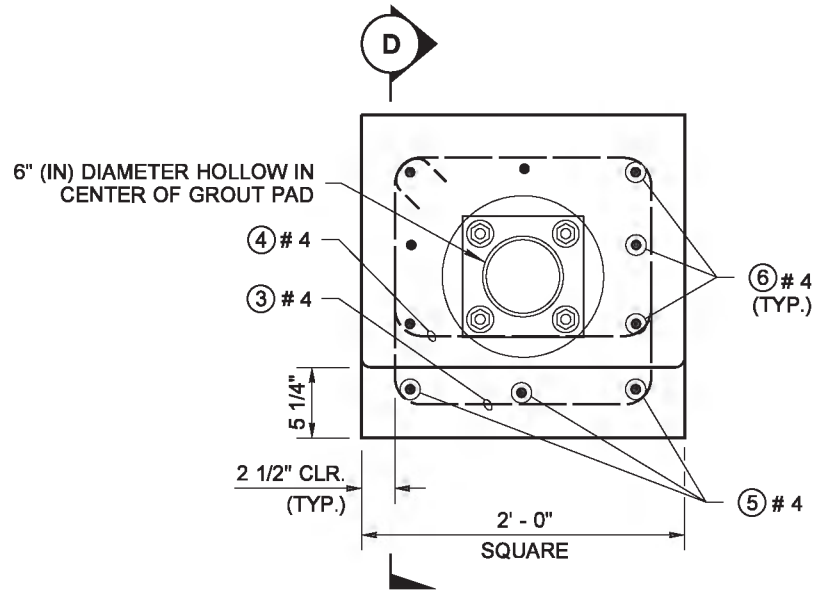

PLAN VIEW

FOUNDATION DETAILS

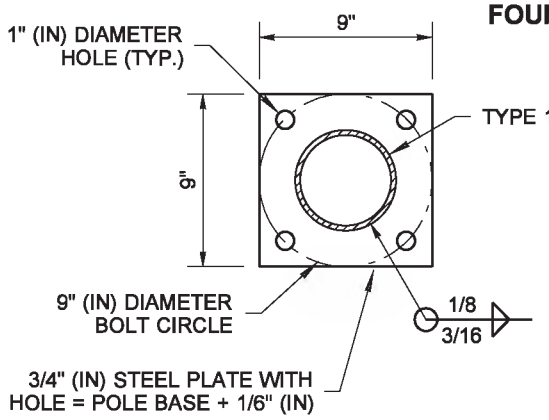

BASE PLATE DETAIL

REINFORCING STEEL QUANTITIES LIST				
MARK	③	④	⑤	⑥
QTY.	3	2	3	7

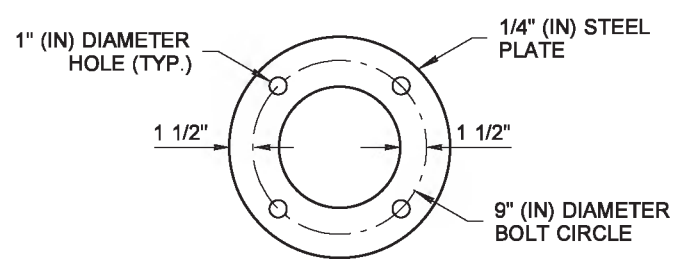

ANCHOR BOLT TEMPLATE

REINFORCING STEEL BENDING DIAGRAM

SEE **STD. SPEC. 9-07.1(2)** FOR BENDING DIAMETER

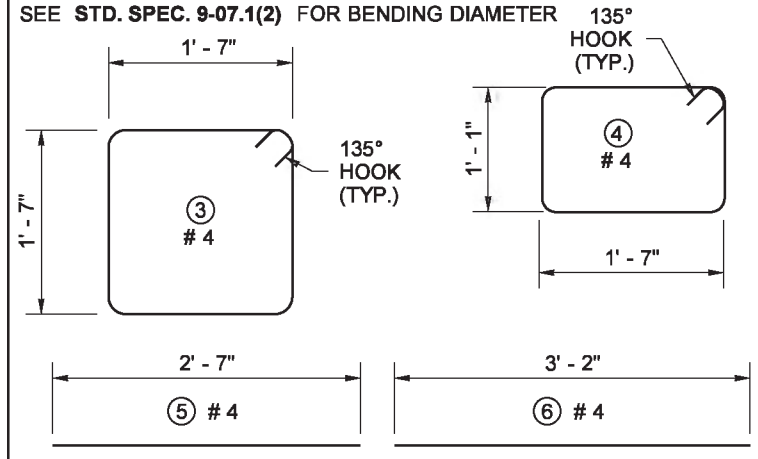

DIMENSIONS ARE OUT TO OUT

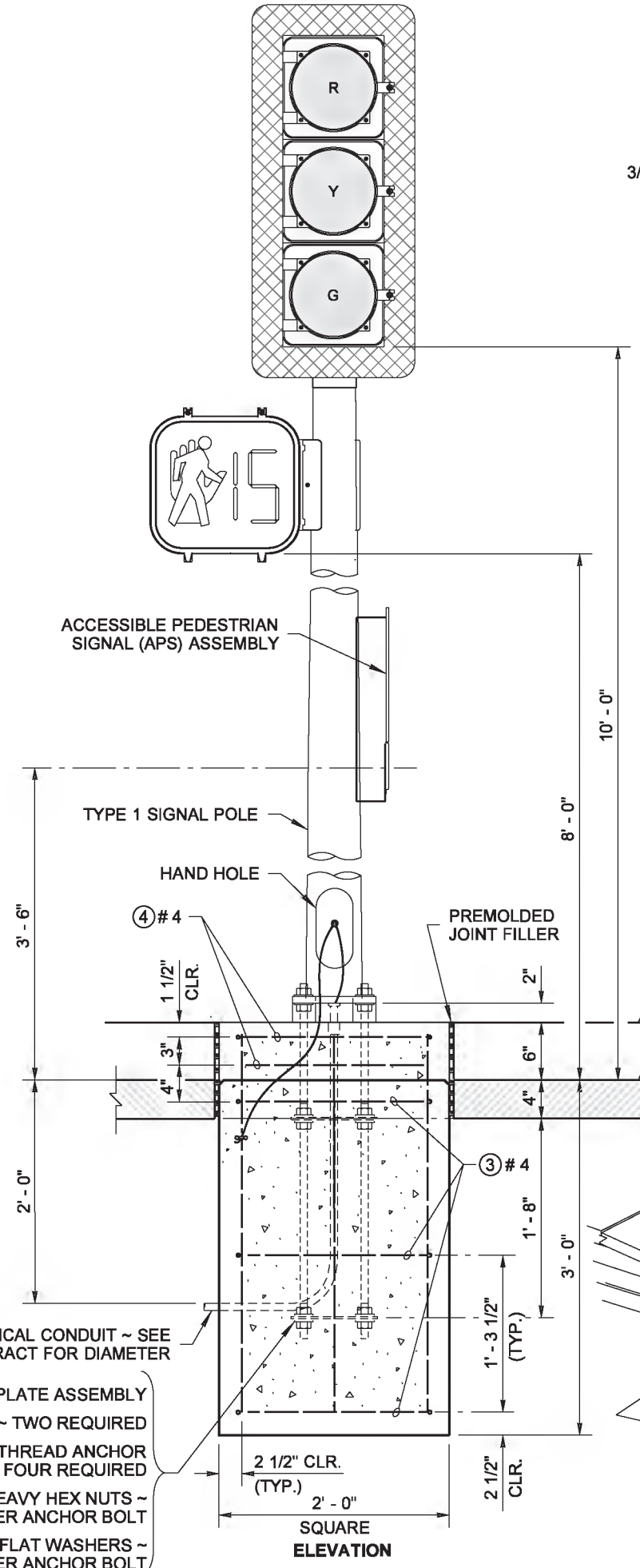

ELEVATION

FOUNDATION DETAIL

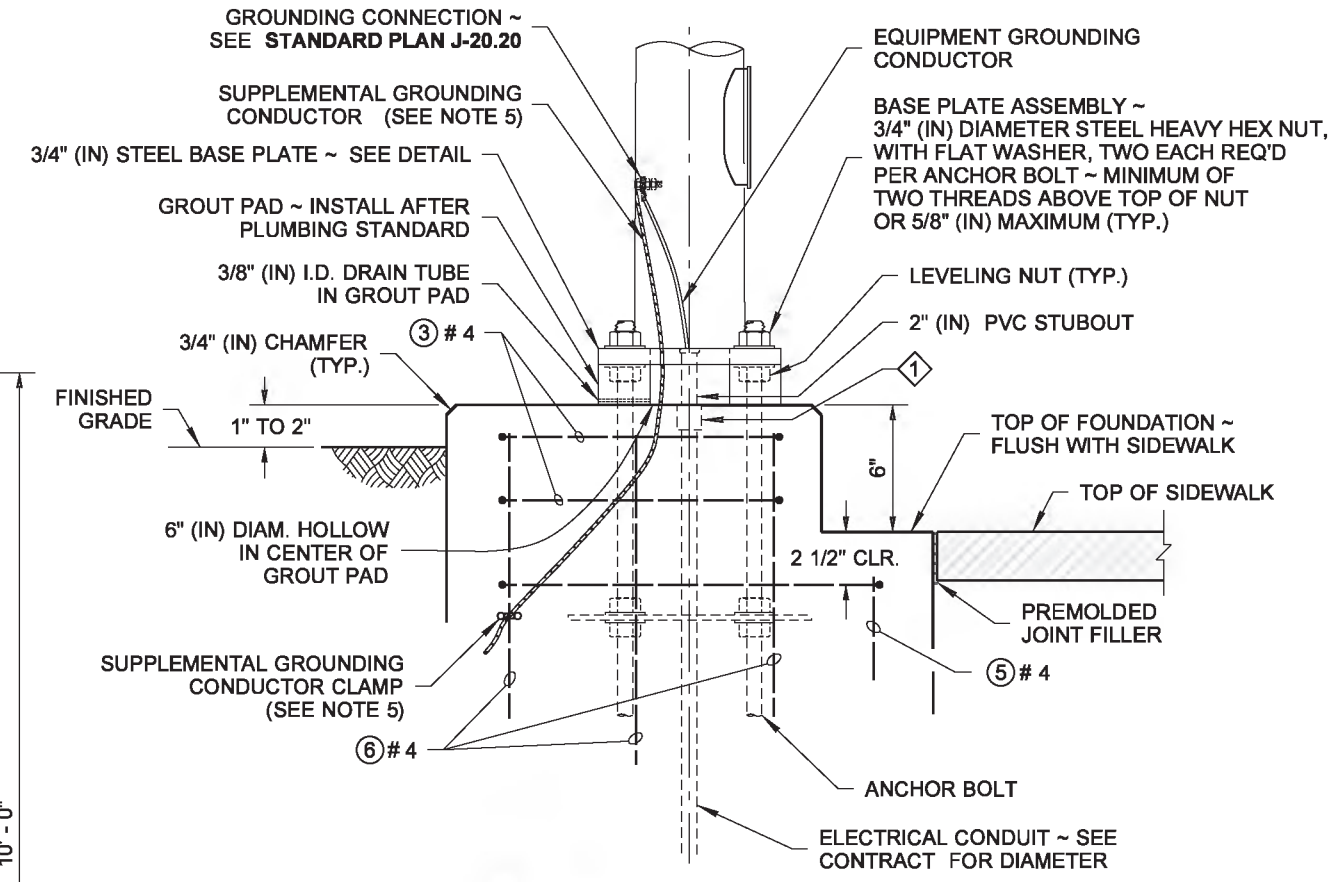

SECTION D

KEY NOTE

1. CONDUIT COUPLING ~ INSTALL FLUSH WITH TOP OF FOUNDATION. (DO NOT GLUE PVC STUBOUT)

PERSPECTIVE VIEW

TYPE 1 SIGNAL STANDARD DETAILS

THEODORE JOSEPH BAILEY
STATE OF WASHINGTON
39820
REGISTERED
PROFESSIONAL ENGINEER

Theodore Joseph Bailey
Bailey, Ted
Jun 26 2014 4:23 PM

ACCESSIBLE PEDESTRIAN PUSHBUTTON WITH CURB BASE

STANDARD PLAN J-20.11-02

SHEET 2 OF 2 SHEETS

APPROVED FOR PUBLICATION
Bakotich, Pasco
Jun 30 2014 3:10 PM
STATE DESIGN ENGINEER
Washington State Department of Transportation

DRAWN BY: FERN LIDDELL

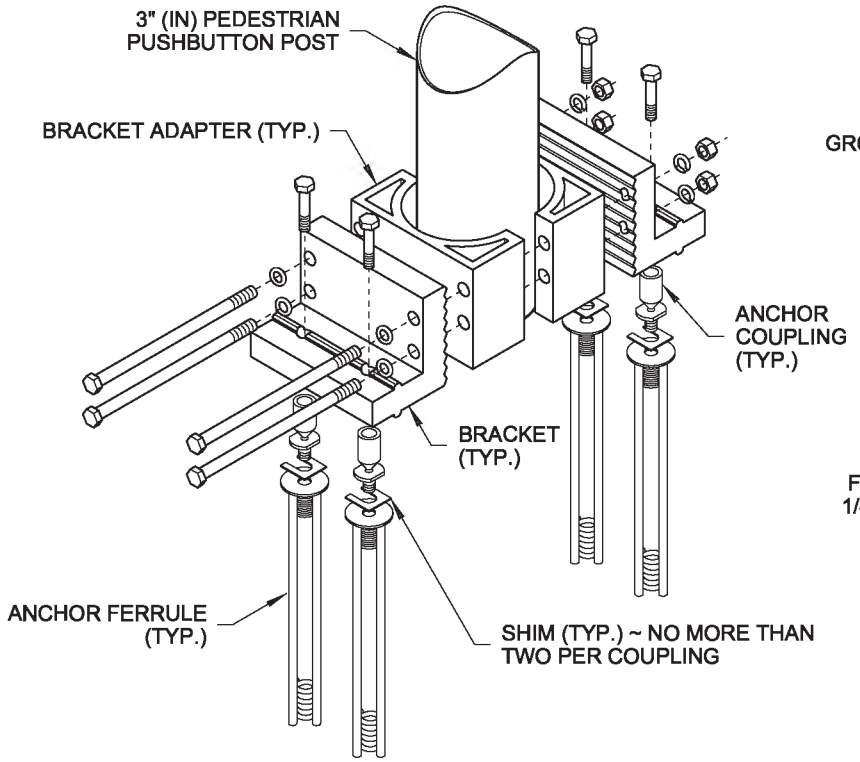

EXPLODED VIEW

BREAKAWAY BASE CONNECTOR

(SEE NOTE 1)

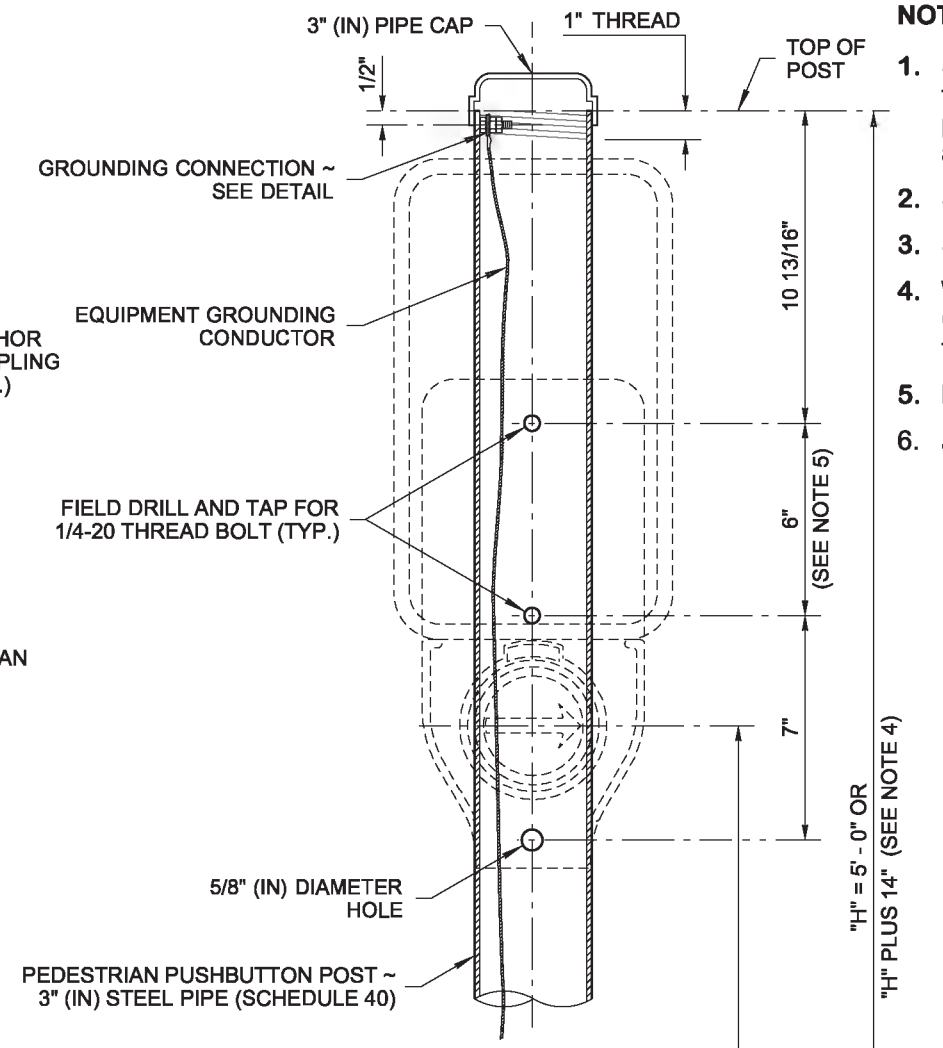

POST DETAIL

NOTES

1. See **Standard Specification 9-06.16** for Breakaway Base Connection details. Dimensions for the parts used to assemble the base connections are intentionally not shown. Base connections are patented manufactured products that are in compliance with NCHRP 350 crash test criteria. The Breakaway Base Connection details are only shown on this plan to illustrate how parts are assembled.
2. See **Standard Plan J-20.26** for Accessible Pedestrian Pushbutton details.
3. Secure conductor in adjacent Junction Box per detail in **Standard Plan J-28.70**.
4. Where shown in the plans, install plaque (R10-32P) "PUSH BUTTON FOR 2 SECONDS FOR EXTRA CROSSING TIME" above the Accessible Pedestrian Signal (APS) assembly. Add 14" (in) to post height to accommodate plaque and leave a 2" (in) space between signs.
5. Mounting distances vary between manufacturers. See manufacturer's recommendations for mounting information.
6. Junction Box serving the Standard shall preferably be located 5' - 0" (10' - 0" Max.) from the Standard.

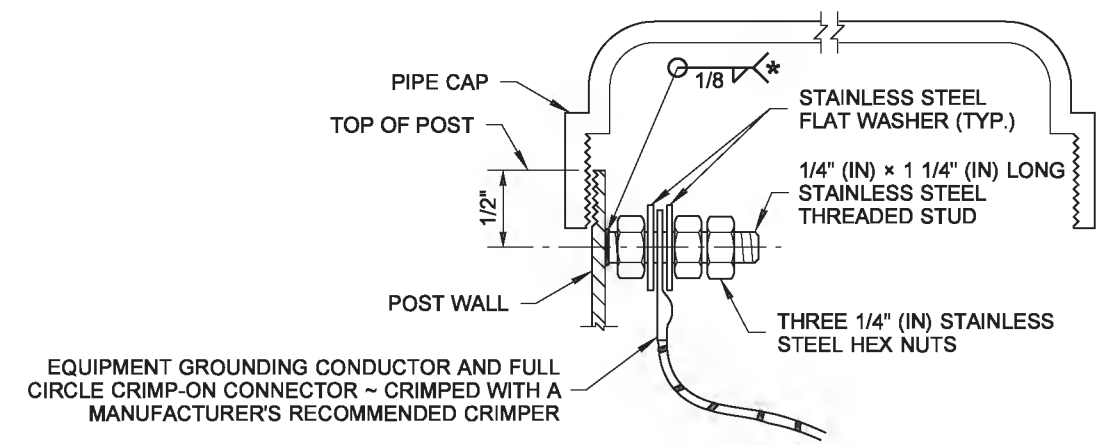

GROUNDING CONNECTION DETAIL

* WELD STUD TO POLE WALL TO MAXIMUM EXTENT POSSIBLE ~ 1/2" (IN) MINIMUM WELD

CONFIGURATIONS VARY AMONG DIFFERENT MANUFACTURERS (SHOWN EXPLODED FOR CLARITY)

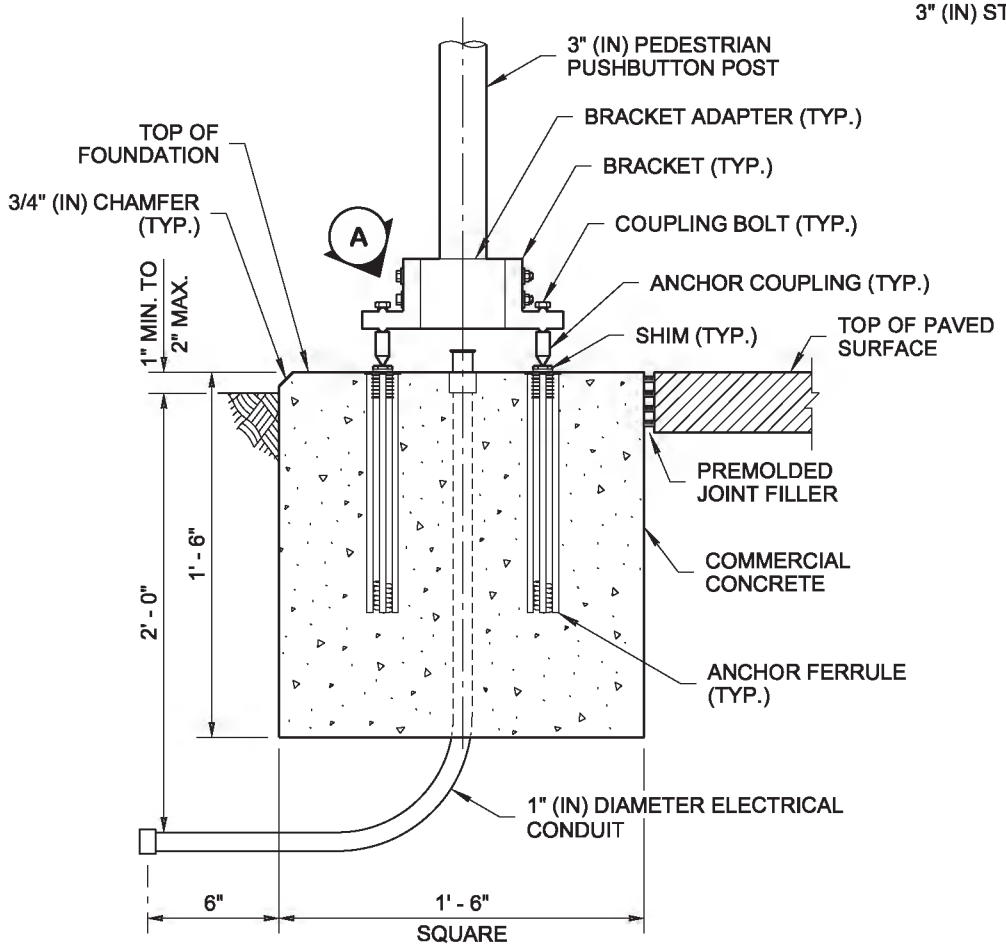

FOUNDATION DETAIL

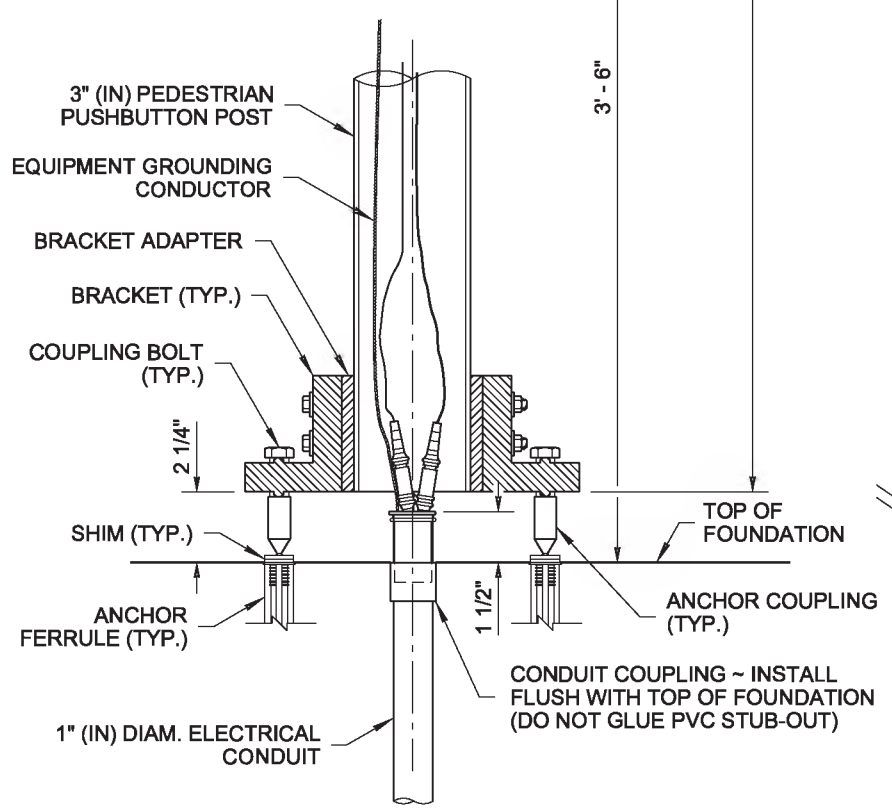

DETAIL A

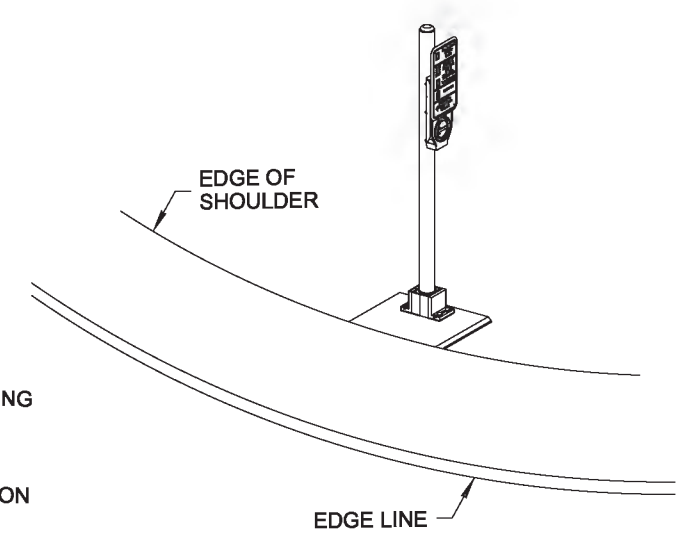

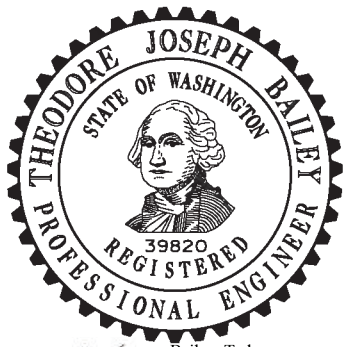

Bailey, Ted
Jun 26 2014 4:25 PM

ACCESSIBLE BREAKAWAY PEDESTRIAN PUSHBUTTON (PPB) POST

STANDARD PLAN J-20.15-03

SHEET 1 OF 1 SHEET

APPROVED FOR PUBLICATION

Jun 30 2014 3:11 PM

STATE DESIGN ENGINEER

Washington State Department of Transportation

DRAWN BY: FERN LIDDELL

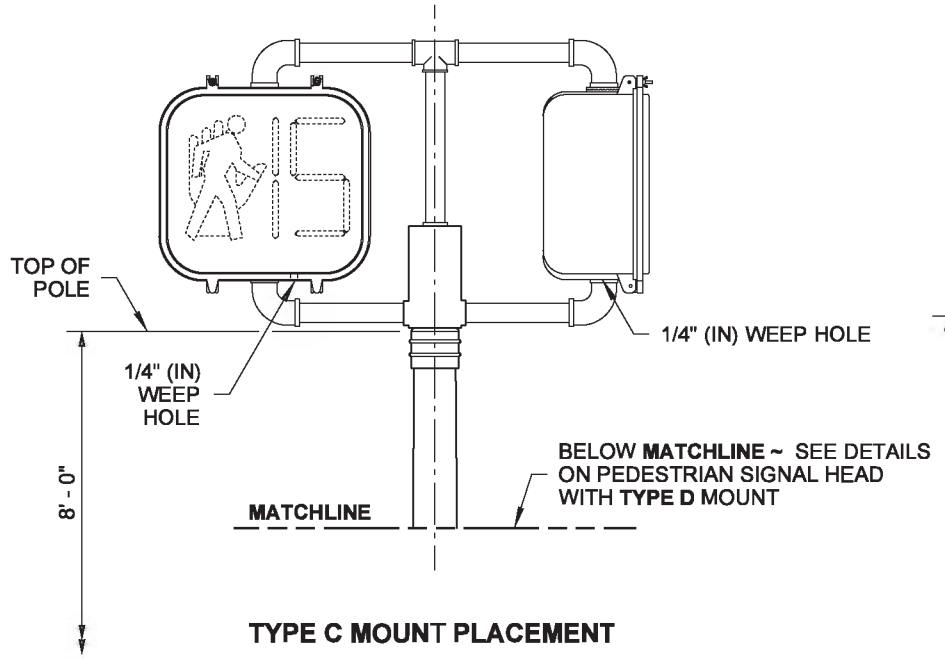

TYPE C MOUNT PLACEMENT

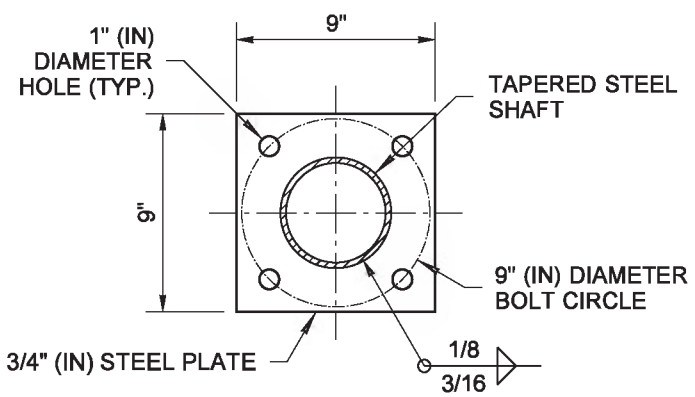

BASE PLATE DETAIL

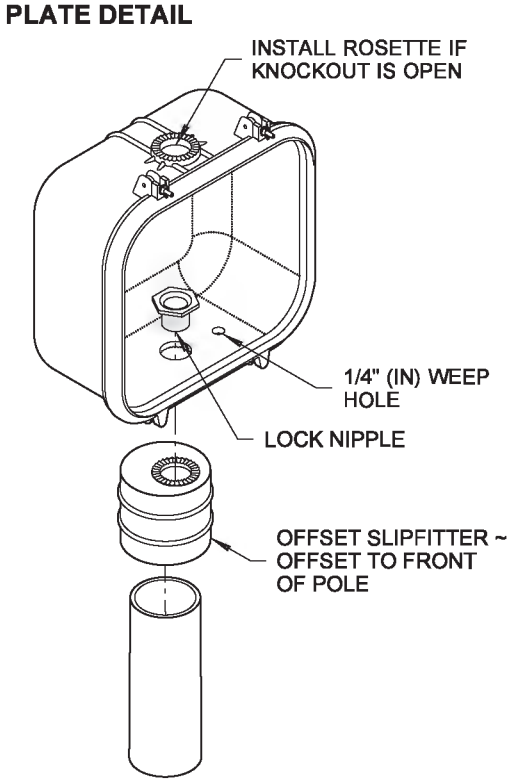

VIEW (A)

TYPE D MOUNTING DETAIL

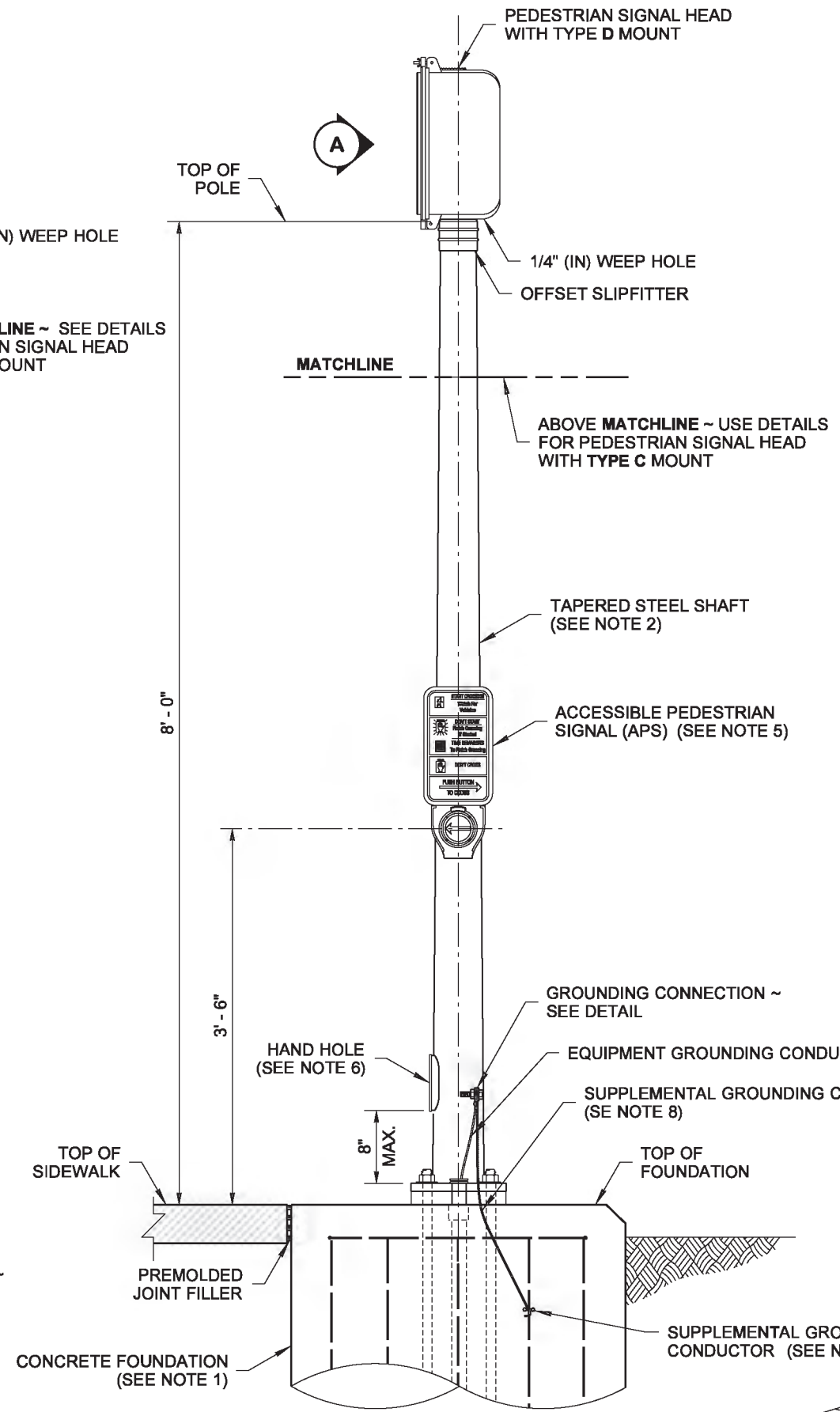

TYPE D MOUNT

PEDESTRIAN SIGNAL STANDARD

(FIXED BASE SHOWN)

NOTES

1. See **Standard Plan J-21.10** for Signal Standard Foundation with Fixed Base and Slip Base details.
2. Steel shaft shall be tapered either round or dodecagon (12-sided), 11 gage, 4 1/2" (in) O.D. at slipfitter weld. Taper shall be 0.14" (in) per foot.
3. Welding of structures shall be in accordance with the latest edition of the AWS D1.1 Structural Welding Code - Steel. All butt welds shall be ground flush with base metal.
4. See **Standard Plan J-20.26** for Accessible Pedestrian Pushbutton details.
5. See **Standard Plan J-20.20** for Accessible Pedestrian Signal Standard Electrical details.
6. Hand holes shall include a removable, rain-tight cover and gasket, fastened with two stainless steel screws (ASTM 593).
7. Supplemental grounding conductor shall be non-insulated #4 AWG stranded copper and shall be clamped to vertical rebar with a connector suitable for use embedded in concrete. Provide 3' - 0" min. slack. Attach to pole grounding stud with a full circle crimp-on connector (crimped with a manufacturer recommended crimper).
8. The junction box serving the standard shall preferably be located 5' - 0" (10' - 0" max.) from the standard.
9. Where shown in the plans, install plaque (R10 - 32P) "PUSH BUTTON FOR 2 SECONDS FOR EXTRA CROSSING TIME" two inches above the Accessible Pedestrian Signal (APS) Assembly.

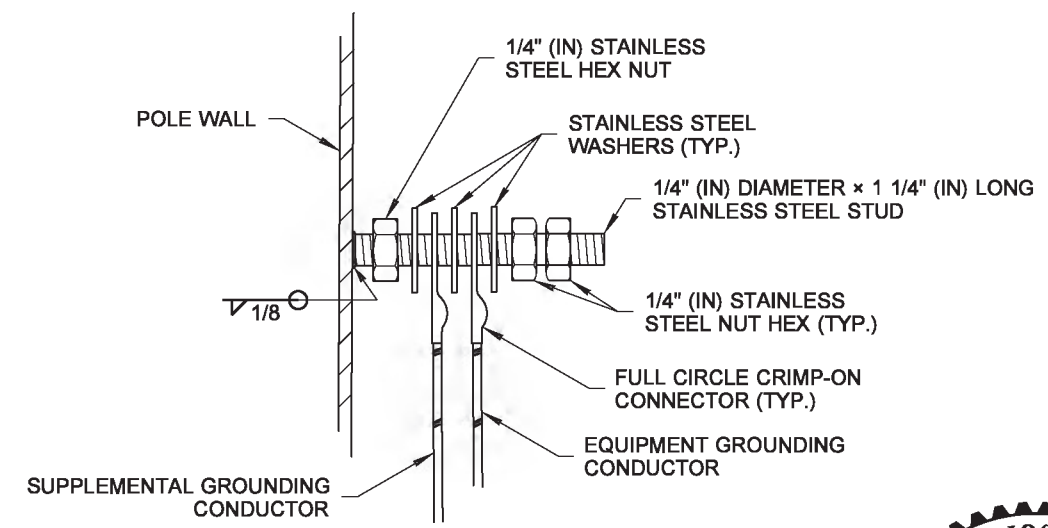

GROUNDING CONNECTION DETAIL

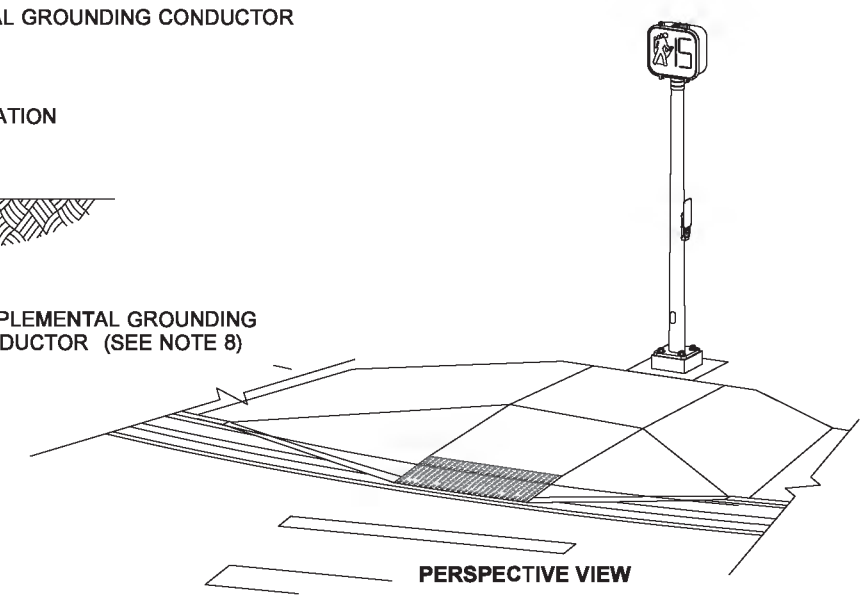

PERSPECTIVE VIEW

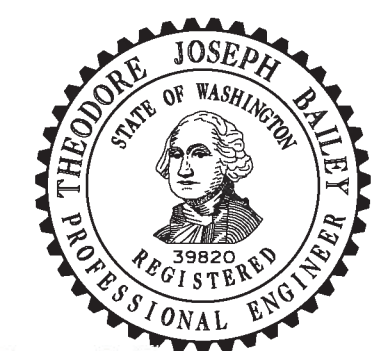

Bailey, Ted
Jun 26 2014 4:26 PM

PEDESTRIAN SIGNAL STANDARD (TYPE PS) DETAILS

STANDARD PLAN J-20.16-02

SHEET 1 OF 1 SHEET

APPROVED FOR PUBLICATION
Bakotich, Pasco
Jun 30 2014 3:12 PM
STATE DESIGN ENGINEER
Washington State Department of Transportation

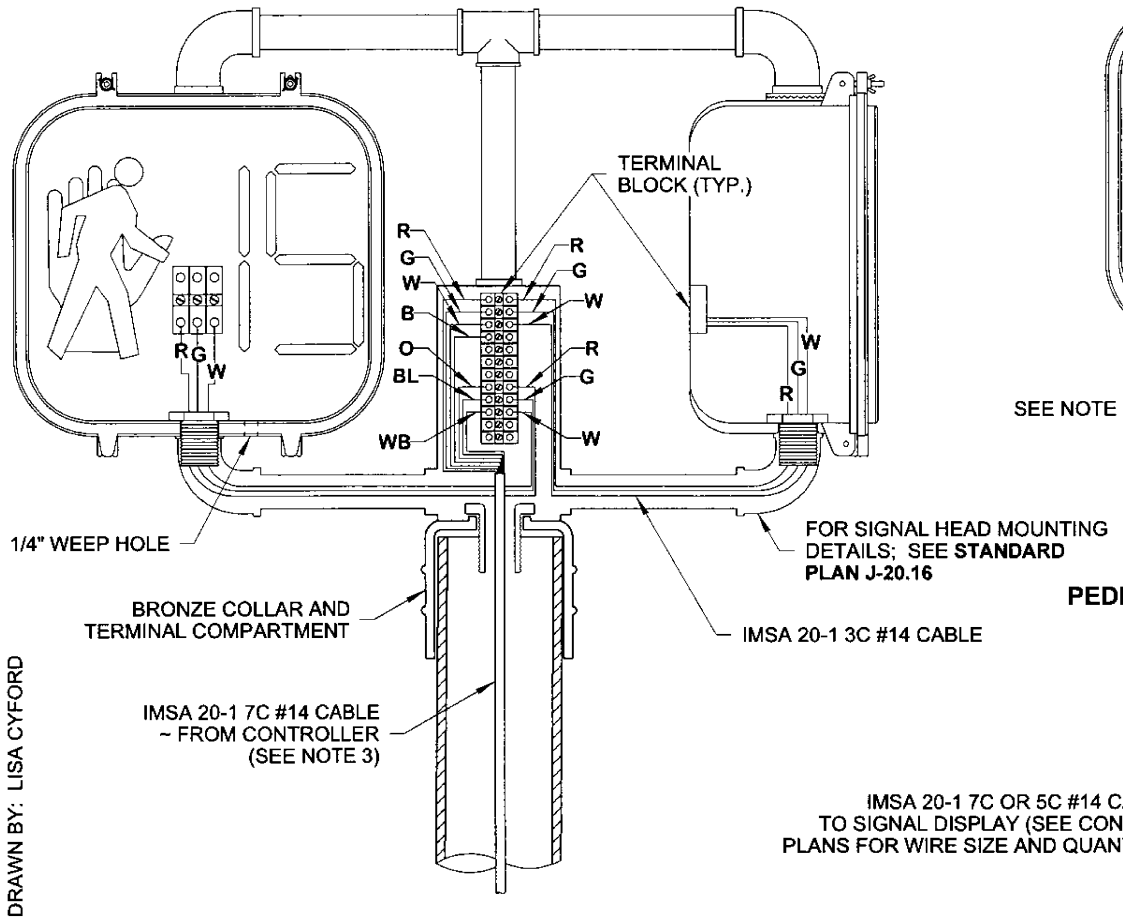

DOUBLE PEDESTRIAN SIGNAL WIRING DETAIL

(TYPE C MOUNTING SHOWN)

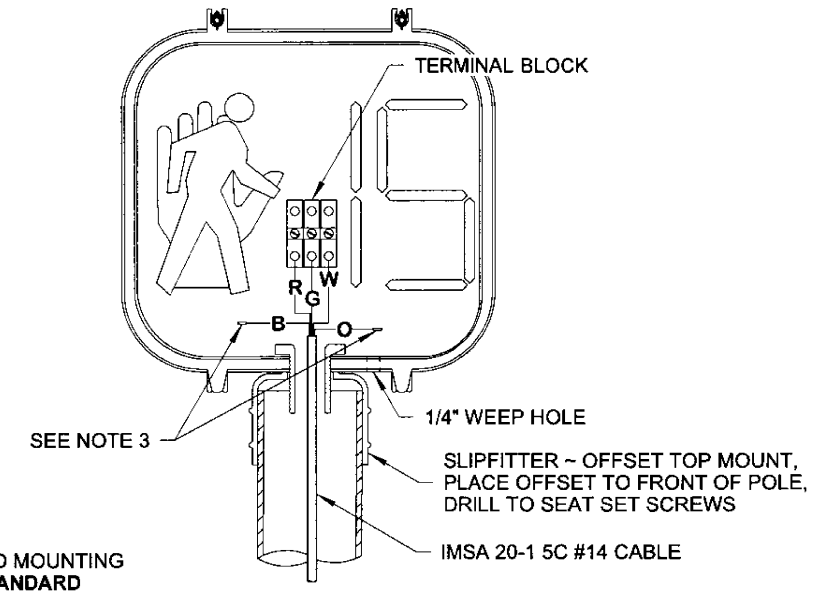

PEDESTRIAN SIGNAL WIRING DETAIL

(TYPE D MOUNTING SHOWN)

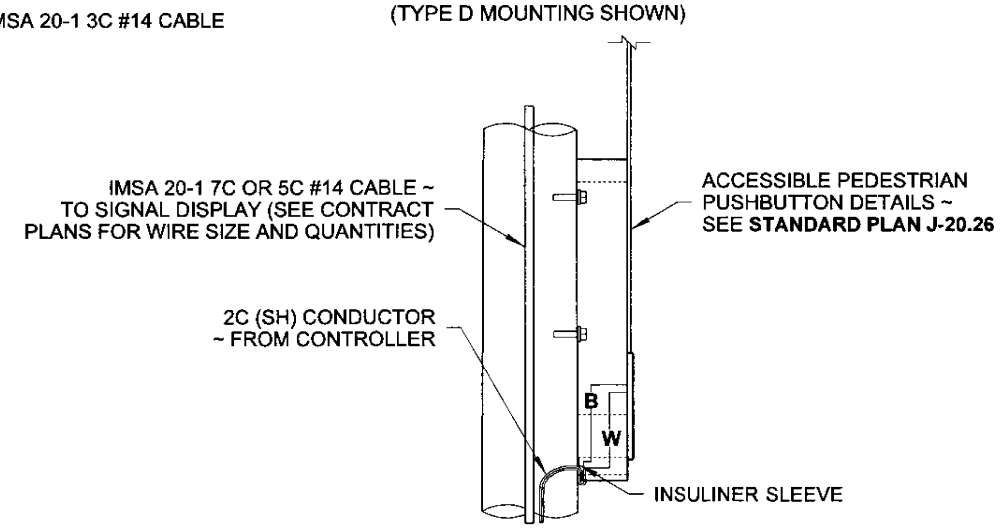

ACCESSIBLE PEDESTRIAN PUSHBUTTON WIRING DETAIL

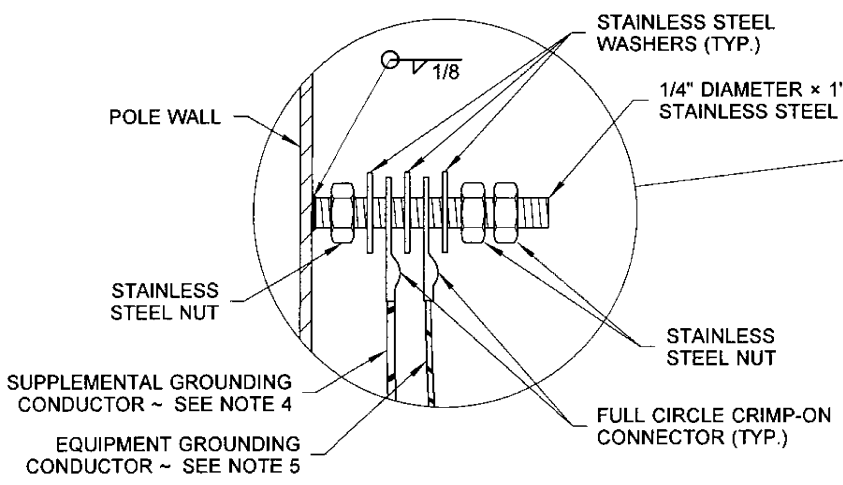

GROUNDING CONNECTION DETAIL

CONFIGURATIONS VARY AMONG DIFFERENT MANUFACTURERS (SHOWN EXPLODED FOR CLARITY)

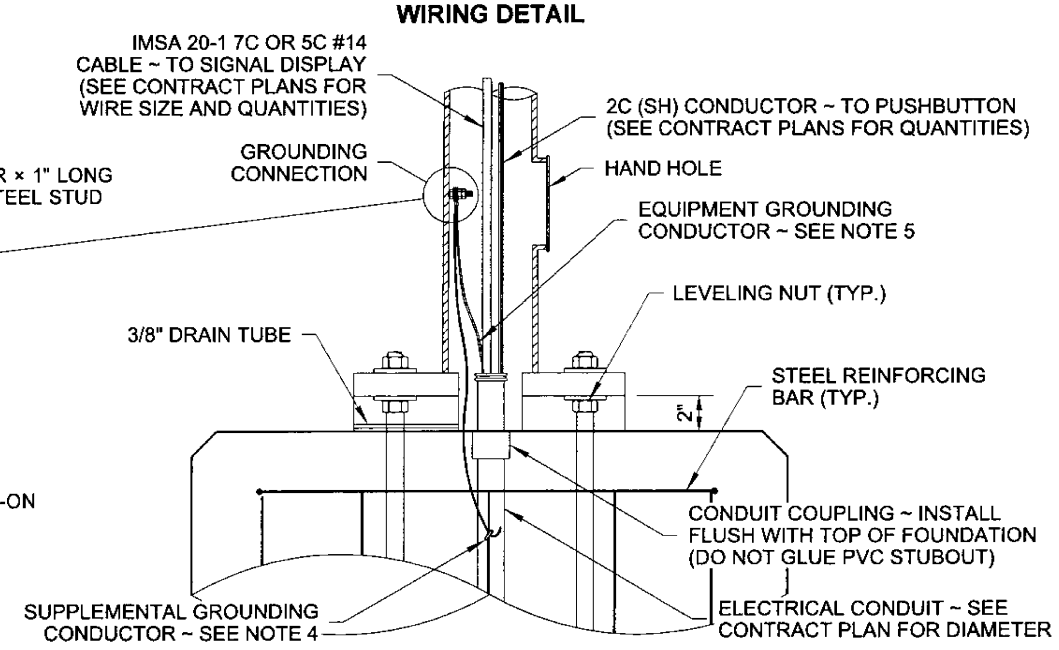

FOUNDATION WIRING DETAIL

DRAWN BY: LISA CYFORD

NOTES

1. See **Standard Plan J-21.10** for Signal Standard Foundation with Fixed Base and Slip Base details.
2. See **Standard Specification 9-29.3** for Cable Conductor requirements.
3. Install heat shrink caps on all spare conductors not terminated on a terminal strip.
4. Supplemental grounding conductor shall be non-insulated #4 AWG stranded copper and shall be clamped to vertical rebar with a connector suitable for use embedded in concrete: provide 3' - 0" min. slack. Attach to pole grounding stud with a full circle crimp-on connector (crimped with manufacturer's recommended crimper).
5. Equipment grounding conductor shall attach to grounding stud with a full circle crimp-on connector (crimped with a manufacurer's recommended crimper).

5C PEDESTRIAN HEAD TERMINATIONS

TERMINAL NUMBER	COLOR CODE	USE
7 * 1	R	DON'T WALK DISPLAY
7 * 2	G	WALK DISPLAY
7 * 3	W	NEUTRAL CONDUCTOR
7 * 6	B	SPARE CONDUCTOR
7 * 7	O	SPARE CONDUCTOR

* ASSOCIATED PHASE NUMBER

7C PEDESTRIAN HEAD TERMINATIONS

TERMINAL NUMBER	COLOR CODE	USE
7 * 1	R	DON'T WALK DISPLAY
7 * 2	G	WALK DISPLAY
7 * 3	W	NEUTRAL CONDUCTOR
7 * 6	B	SPARE CONDUCTOR
7 * 1	O	DON'T WALK DISPLAY
7 * 2	BL	WALK DISPLAY
7 * 3	WB	NEUTRAL CONDUCTOR

* ASSOCIATED PHASE NUMBER

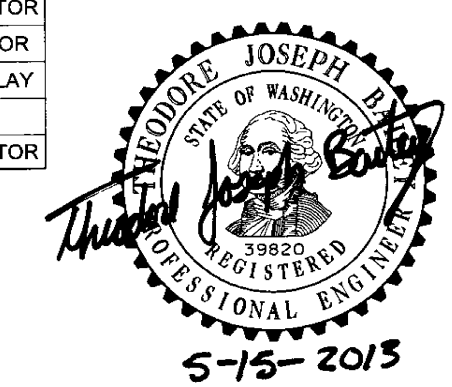

PEDESTRIAN SIGNAL STANDARD (TYPE PS) ELECTRICAL DETAIL

STANDARD PLAN J-20.20-02

SHEET 1 OF 1 SHEET

APPROVED FOR PUBLICATION

STATE DESIGN ENGINEER — DATE 5/20/13

Washington State Department of Transportation

DRAWN BY: LISA CYFORD

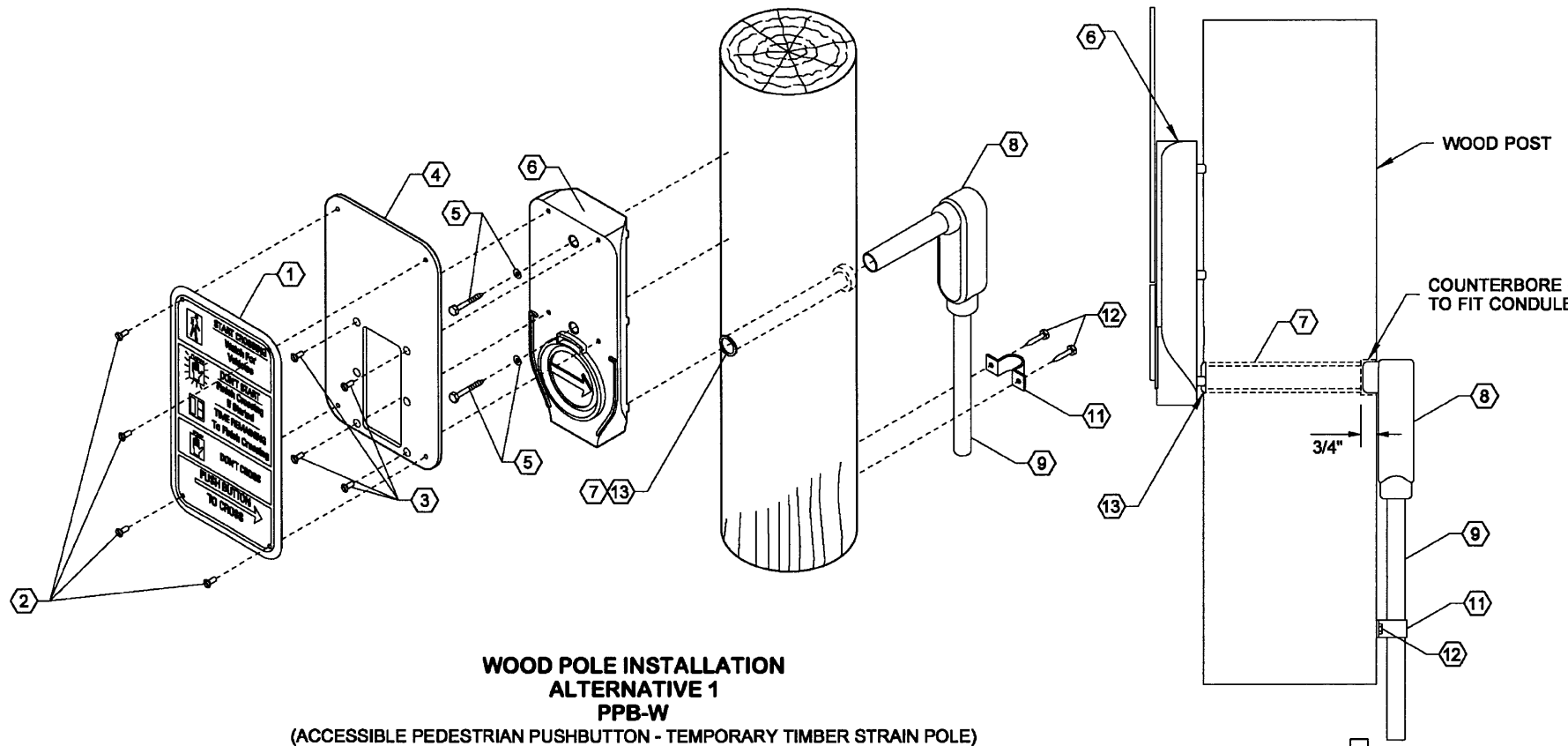

WOOD POLE INSTALLATION
ALTERNATIVE 1
PPB-W
(ACCESSIBLE PEDESTRIAN PUSHBUTTON - TEMPORARY TIMBER STRAIN POLE)

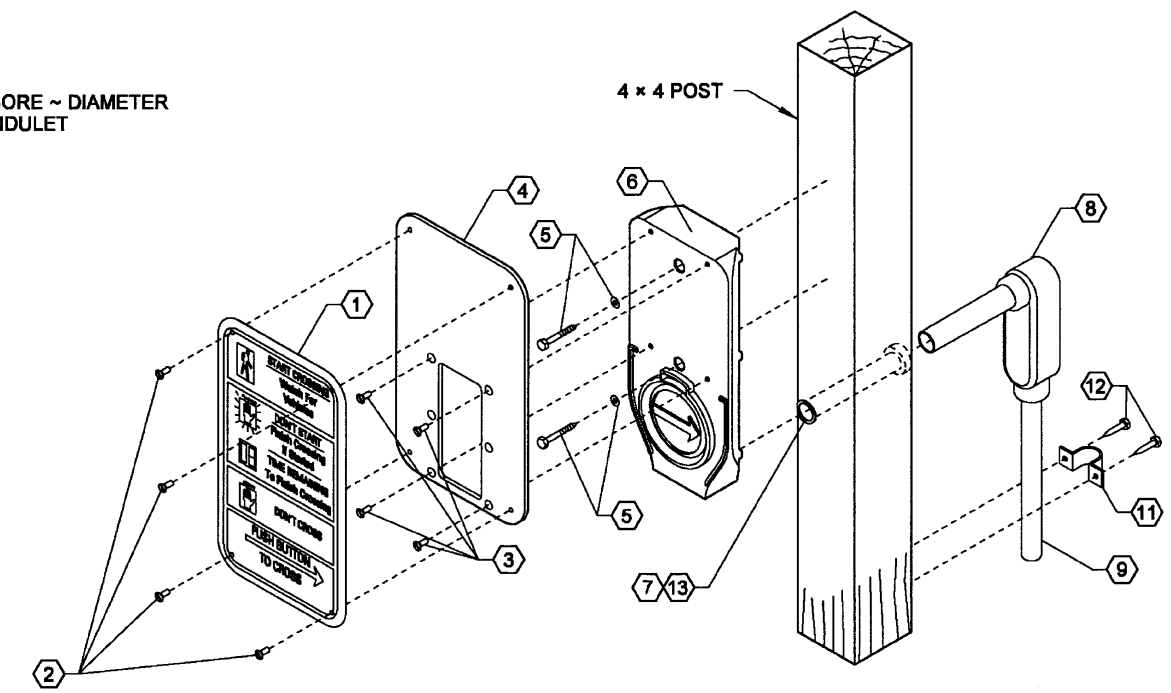

WOOD POLE INSTALLATION
ALTERNATIVE 3
PPB-W
(ACCESSIBLE PEDESTRIAN PUSHBUTTON - TEMPORARY TIMBER POLE)

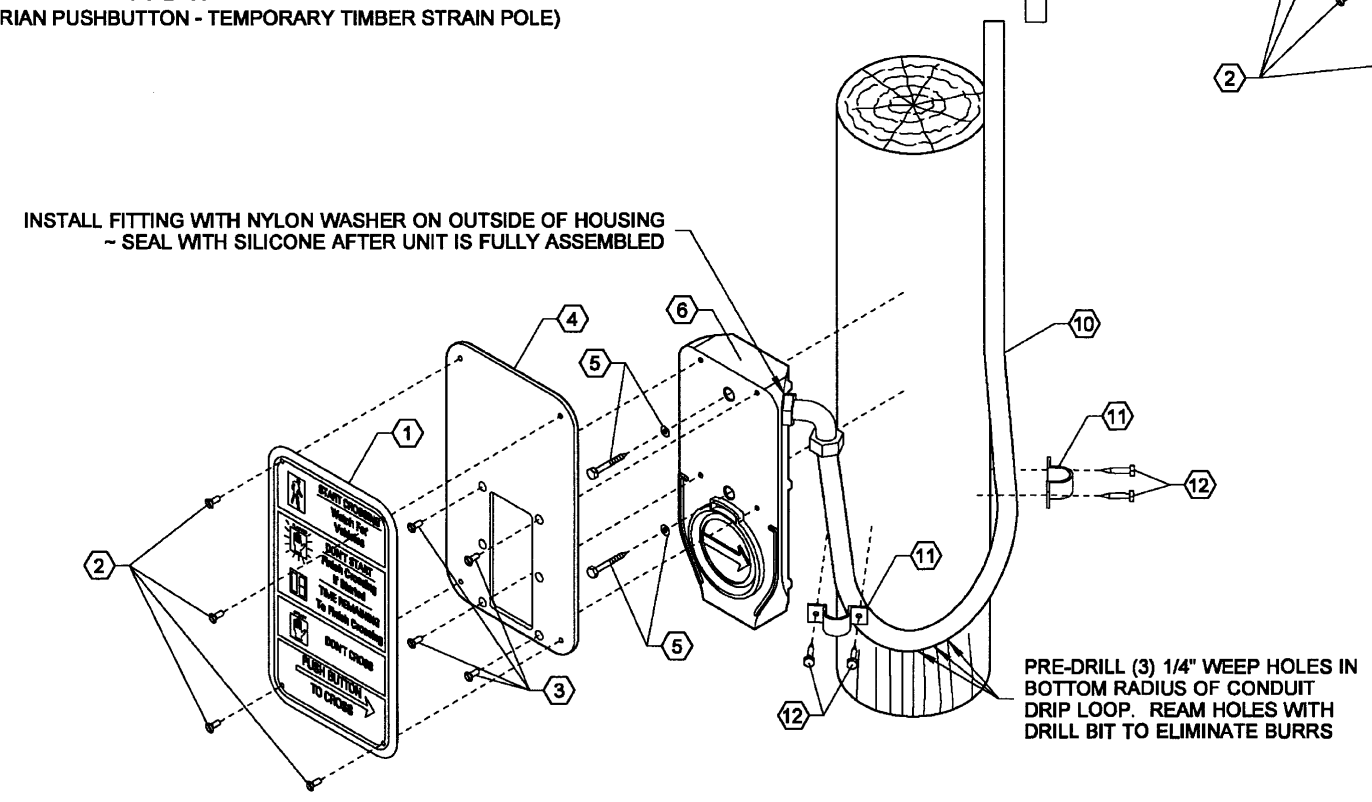

ACCESSIBLE PEDESTRIAN SIGNAL (ASP) ASSEMBLY

WOOD POLE INSTALLATION
ALTERNATIVE 2
PPB-W
(ACCESSIBLE PEDESTRIAN PUSHBUTTON - TEMPORARY TIMBER STRAIN POLE)

TEMPORARY TIMBER POLE

KEY

1. FACE PLATE
2. 1/4-20 × 3/8" LONG STAINLESS STEEL SCREW
3. 1/4-20 STAINLESS STEEL SCREWS
4. PUSHBUTTON FRAME ADAPTER
5. LAG BOLT WITH WASHER
6. PUSHBUTTON STATION
7. CONDUIT DIAMETER + 1/8" HOLE THRU POLE
8. CONDULET
9. 3/4" CONDUIT
10. LIQUID-TITE FLEX CONDUIT
11. ONE PIECE TWO HOLE CLAMP
12. LAG BOLT
13. INSULINER SLEEVE

7/10/2012

ACCESSIBLE PEDESTRIAN PUSHBUTTON (PPB) DETAILS

STANDARD PLAN J-20.26-01

SHEET 2 OF 2 SHEETS

APPROVED FOR PUBLICATION

STATE DESIGN ENGINEER — DATE 7/12/12

Washington State Department of Transportation

REINFORCING STEEL BENDING DIAGRAM

SEE **STD. SPEC. 9-07.1(2)** FOR BENDING DIAM.

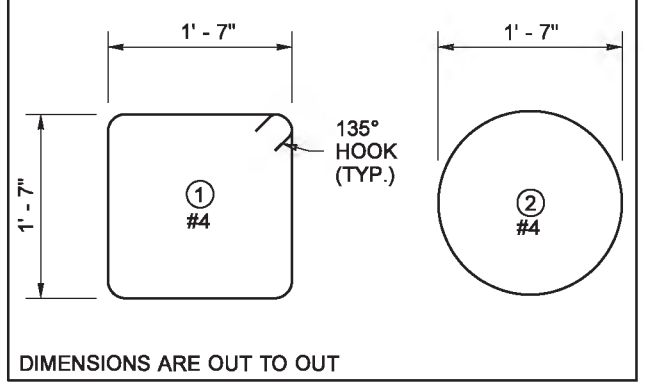

DIMENSIONS ARE OUT TO OUT

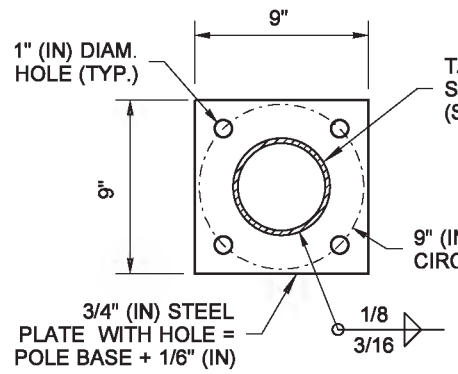

BASE PLATE DETAIL

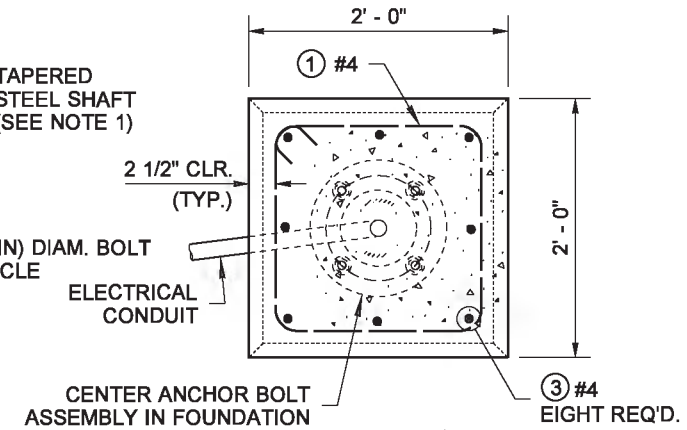

SECTION (B)

NOTES

1. Clamping bolts shall be tightened to 50 ft-lbs max. torque. After state inspection, burr threads to prevent nut rotation. DO NOT OVERTIGHTEN.
2. The final height of the Anchor Bolts shall be below the top of the slip plate assembly to ensure proper function of the slip base.
3. Supplemental grounding conductor shall be non-insulated #4 AWG stranded copper and shall be clamped to vertical rebar with a connector suitable for use embedded in concrete: Provide 3' - 0" min. slack. Attach to pole grounding stud with a full circle crimp-on connector (crimped with a manufacturer recommended crimper).
4. Junction box serving the Standard shall preferably be located 5' - 0" (10' - 0" Max.) from the Standard.
5. Provide cable tie at wiring entering the junction box (for slip base installations only) ~ See **Detail A, Standard Plan J-28.70**.
6. Keeper Plate shall not extend beyond the edges of the pole base plate.

DRAWN BY: FERN LIDDELL

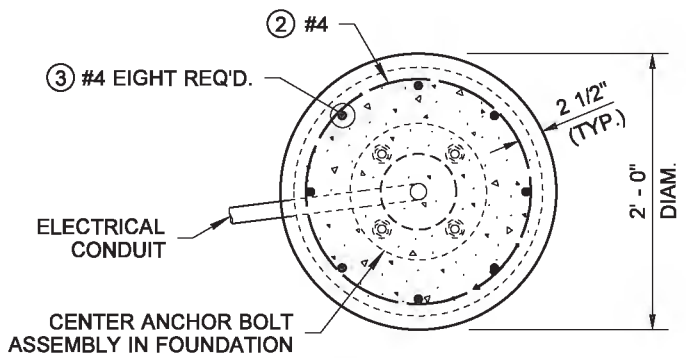

SECTION (A)

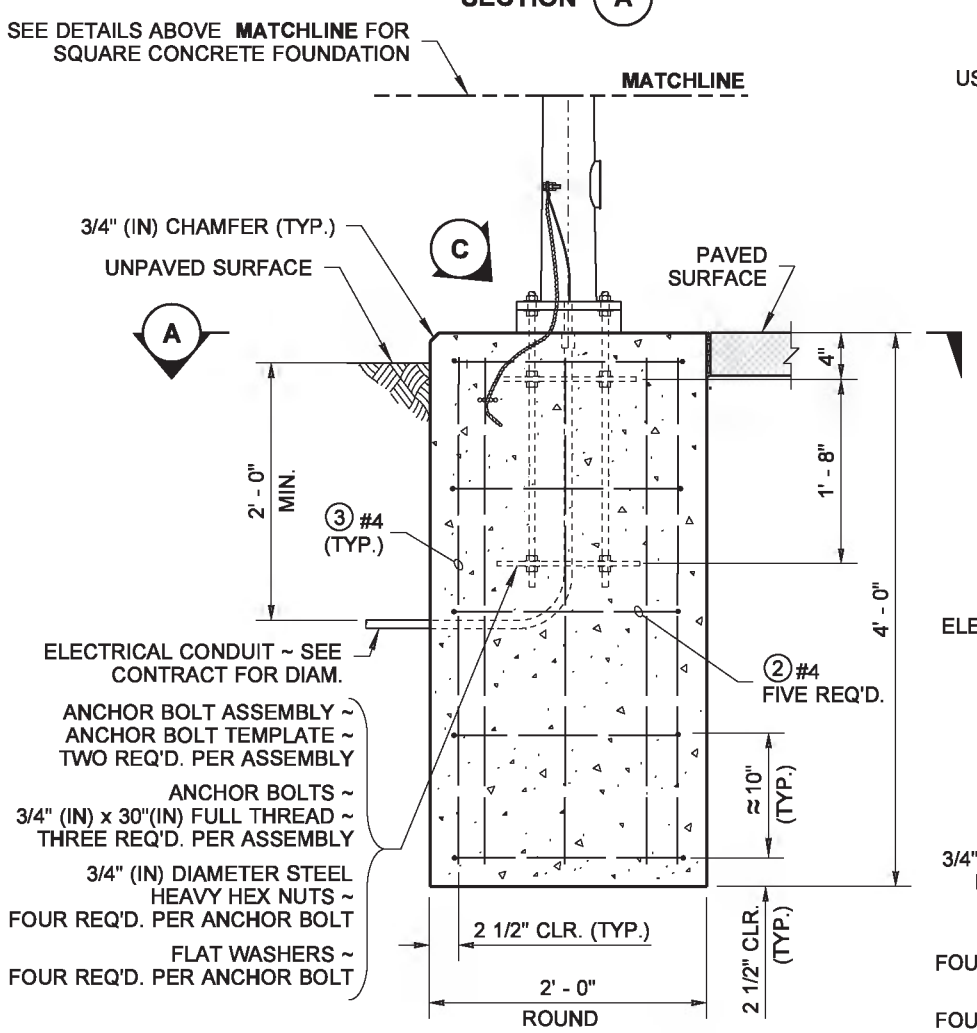

ELEVATION

ROUND CONCRETE FOUNDATION DETAIL

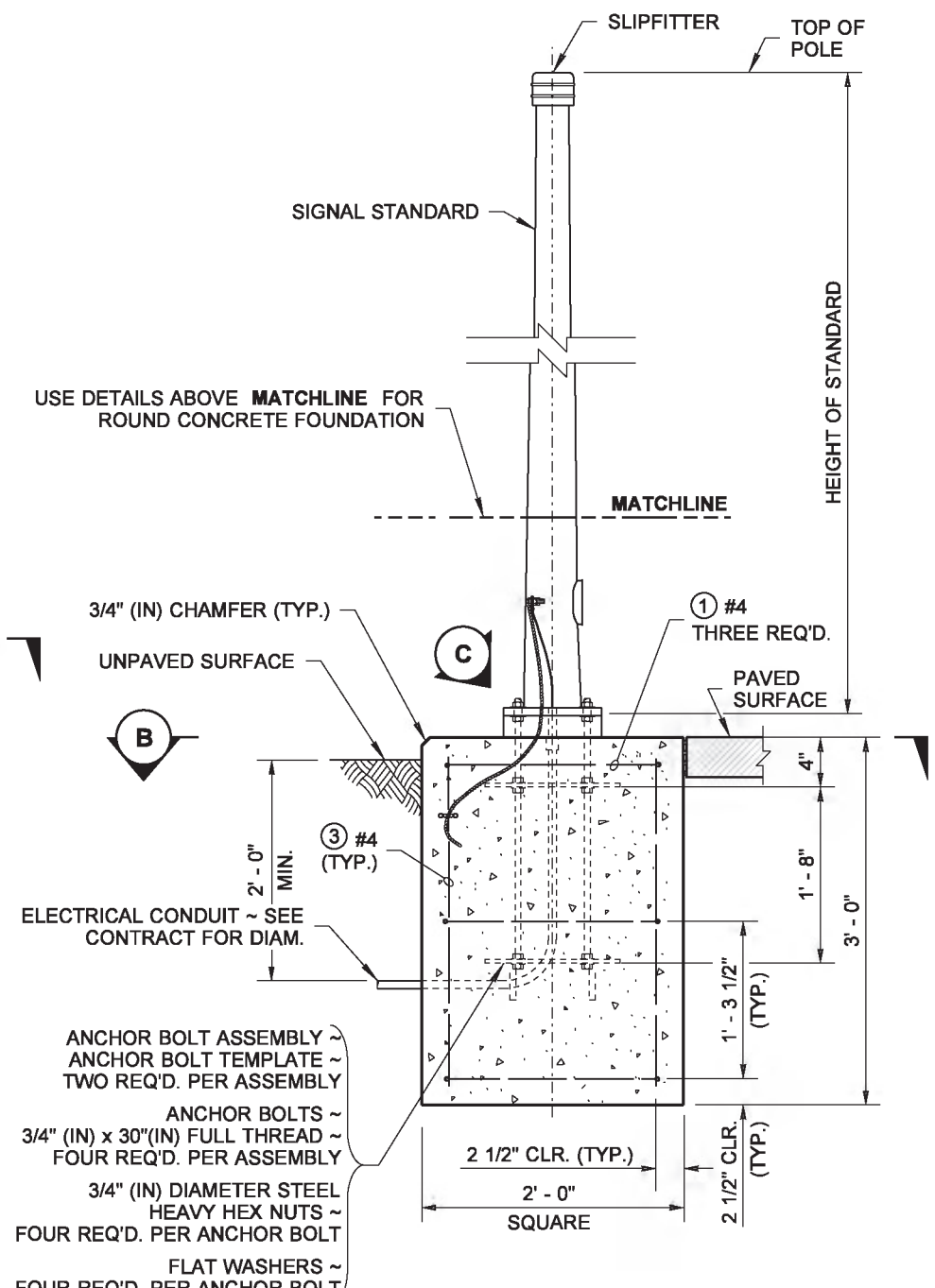

ELEVATION

FIXED BASE **SQUARE CONCRETE FOUNDATION DETAIL**

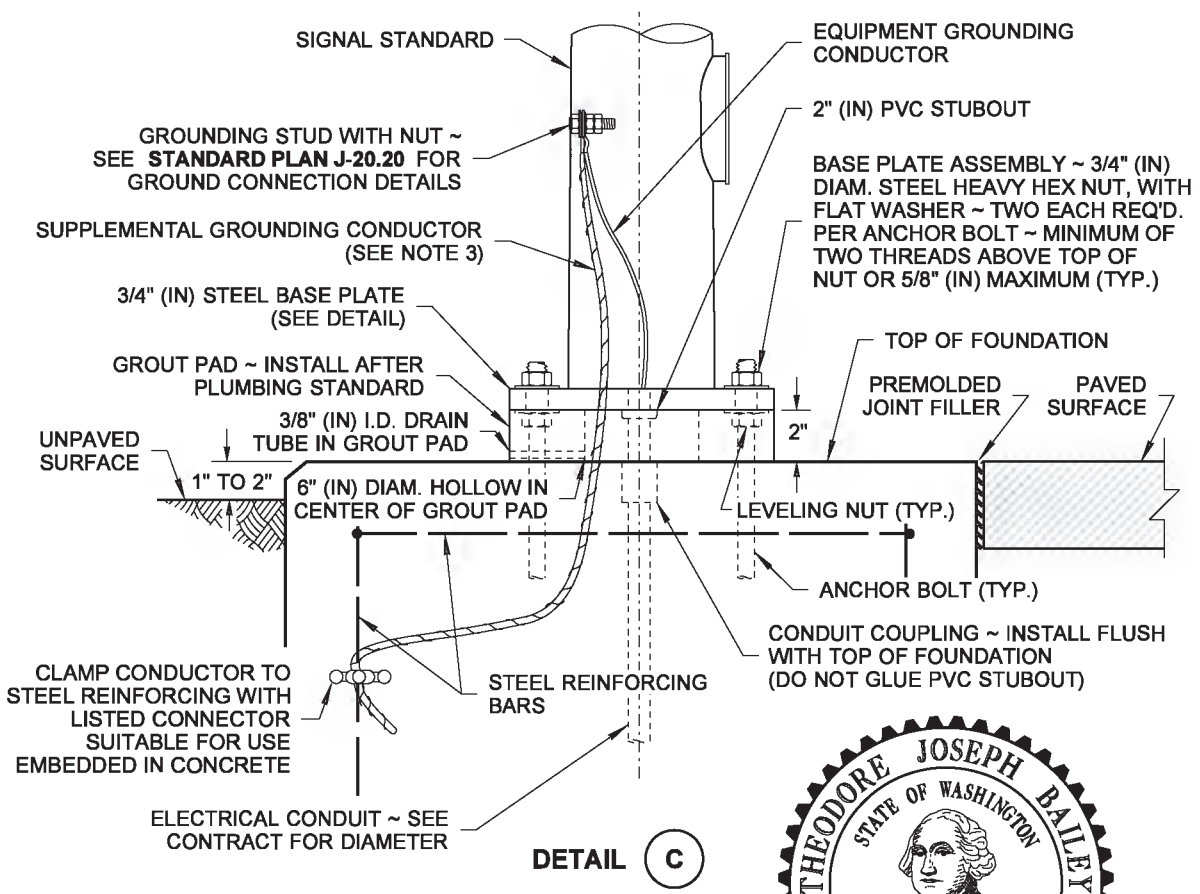

DETAIL (C)

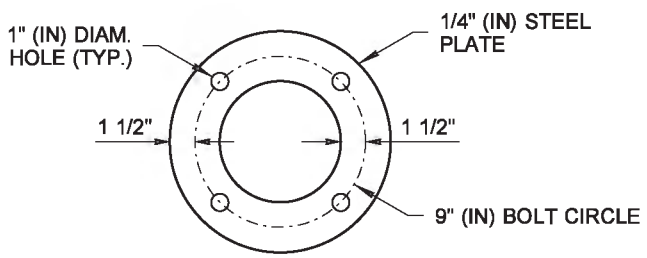

ANCHOR BOLT TEMPLATE

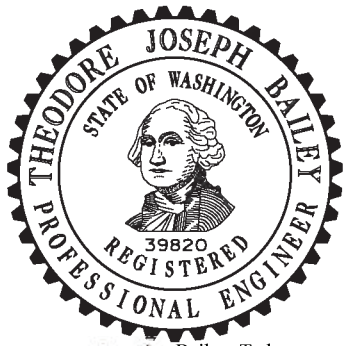

Bailey, Ted
Jun 26 2014 4:29 PM

TYPE PS, TYPE 1, RM & FB SIGNAL STANDARD FOUNDATION DETAILS

STANDARD PLAN J-21.10-04

SHEET 1 OF 2 SHEETS

APPROVED FOR PUBLICATION
Bakotich, Pasco
Jun 30 2014 3:12 PM

STATE DESIGN ENGINEER

Washington State Department of Transportation

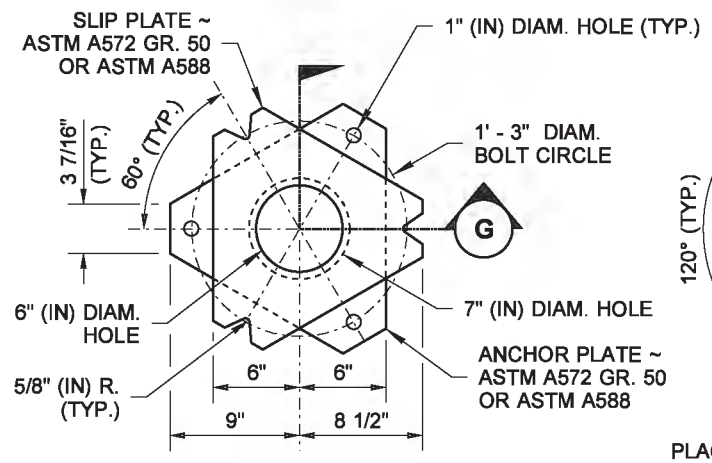

SLIP AND ANCHOR PLATES DETAIL

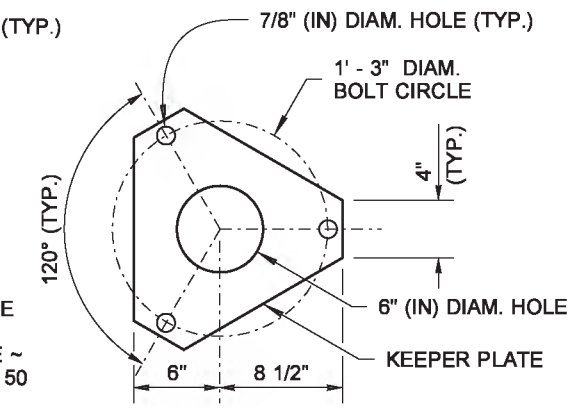

(28 GAGE SHEET METAL)
PLACE BETWEEN POLE BASE PLATE AND SLIP PLATE ON TOP OF MIDDLE WASHERS ~ SEE **STANDARD PLAN J-28.42**

KEEPER PLATE DETAIL

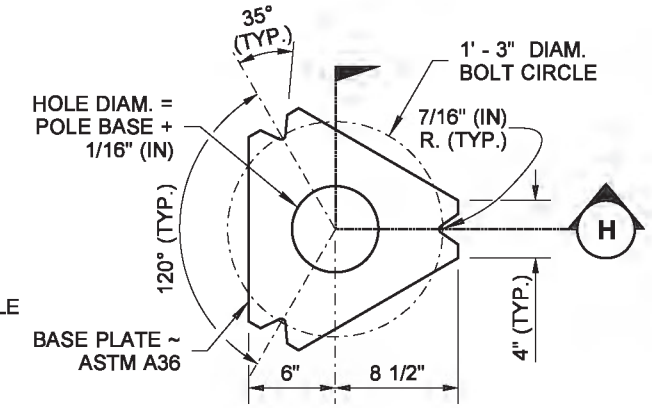

FOR DIMENSIONS NOT SHOWN, SEE SLIP AND ANCHOR PLATES DETAIL

BASE PLATE DETAIL

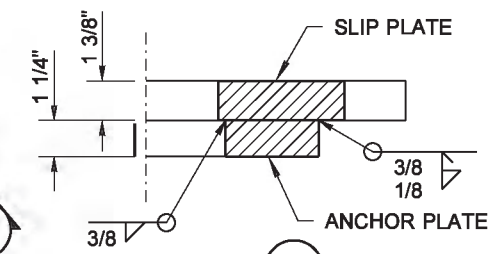

SECTION G

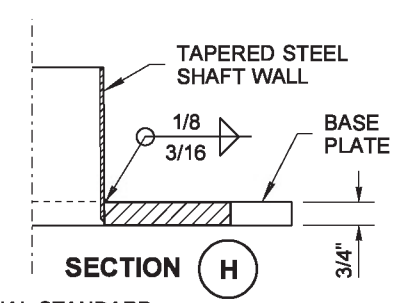

SECTION H

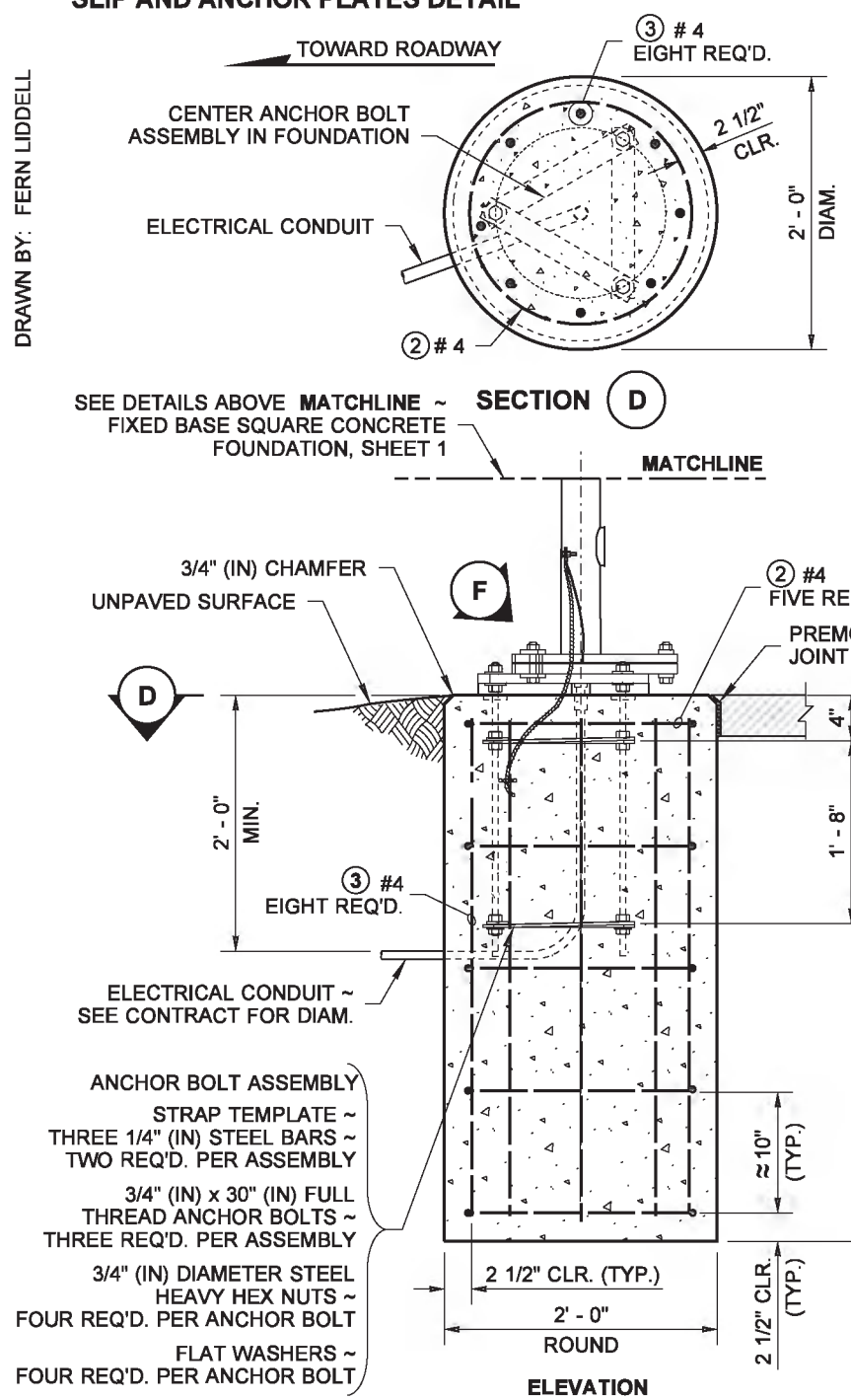

SECTION D

ELEVATION

ROUND CONCRETE FOUNDATION DETAIL

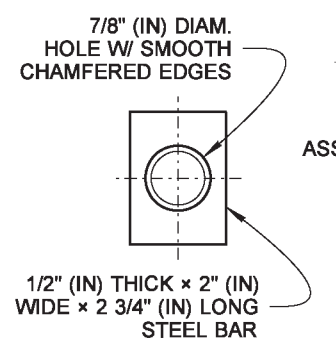

PLATE WASHER DETAIL

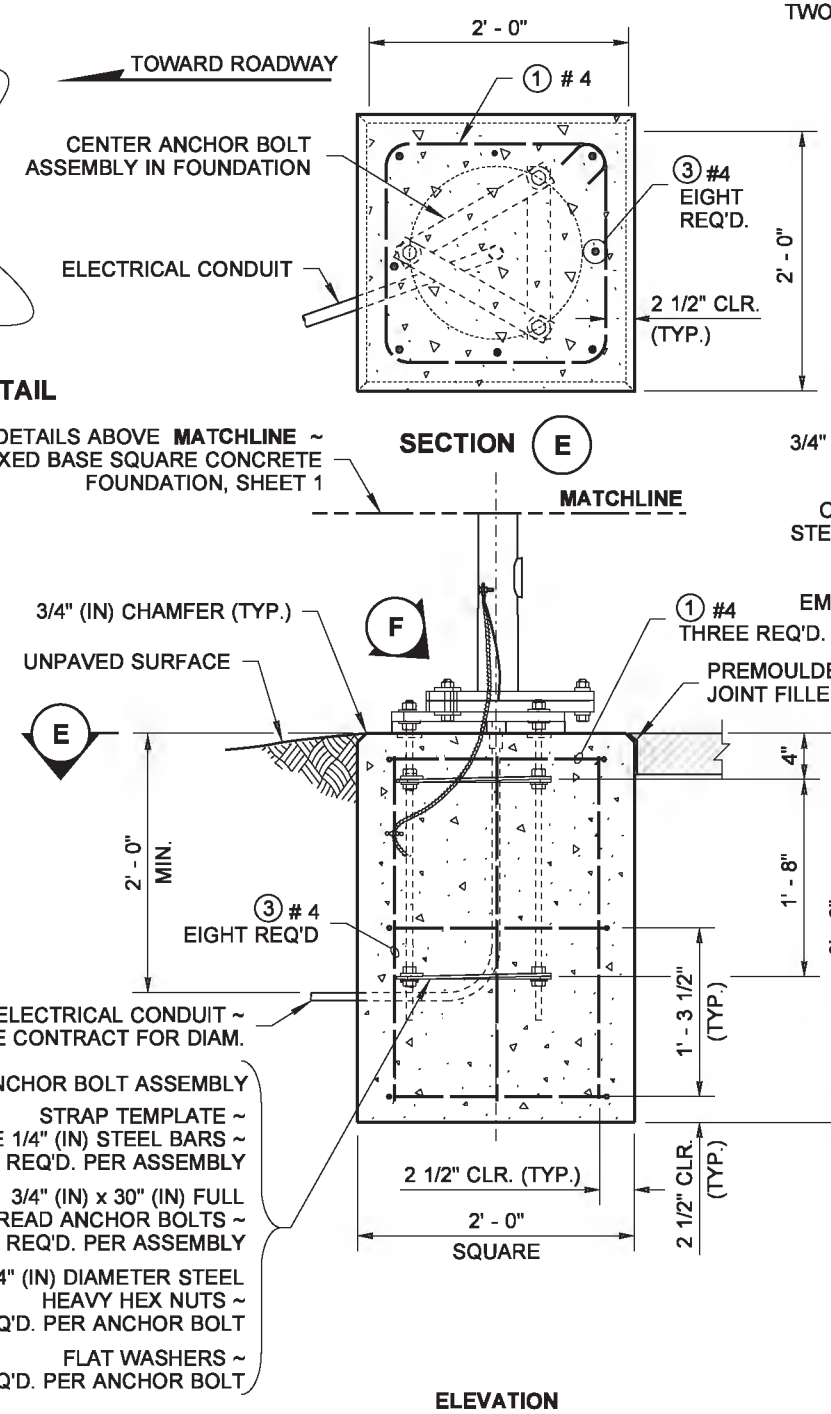

SECTION E

ELEVATION

SQUARE CONCRETE FOUNDATION DETAIL

SLIP BASE

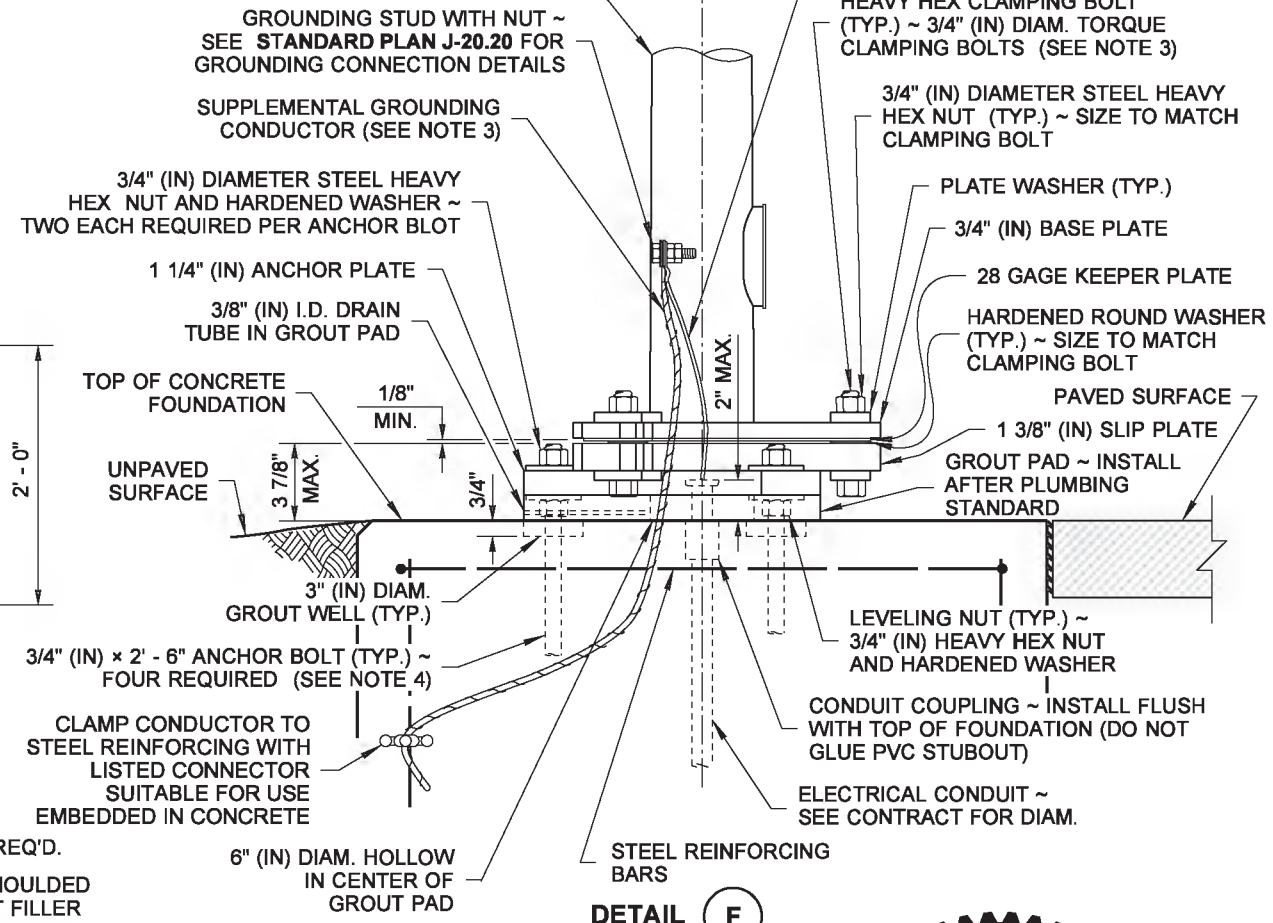

DETAIL F

SQUARE FOUNDATION SHOWN

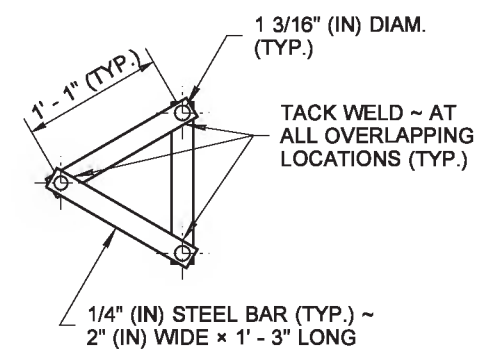

STRAP TEMPLATE DETAIL

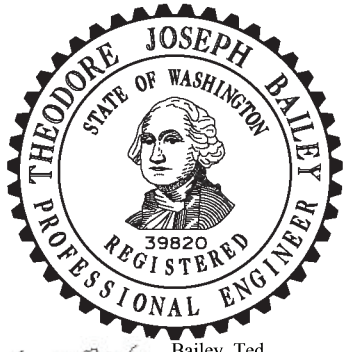

Bailey, Ted
Jun 26 2014 4:29 PM

TYPE PS, TYPE 1, RM & FB SIGNAL STANDARD FOUNDATION DETAILS

STANDARD PLAN J-21.10-04

SHEET 2 OF 2 SHEETS

APPROVED FOR PUBLICATION
Bakotich, Pasco
Jun 30 2014 3:13 PM
STATE DESIGN ENGINEER

Washington State Department of Transportation

DRAWN BY: FERN LIDDELL

DRAWN BY: FERN LIDDELL

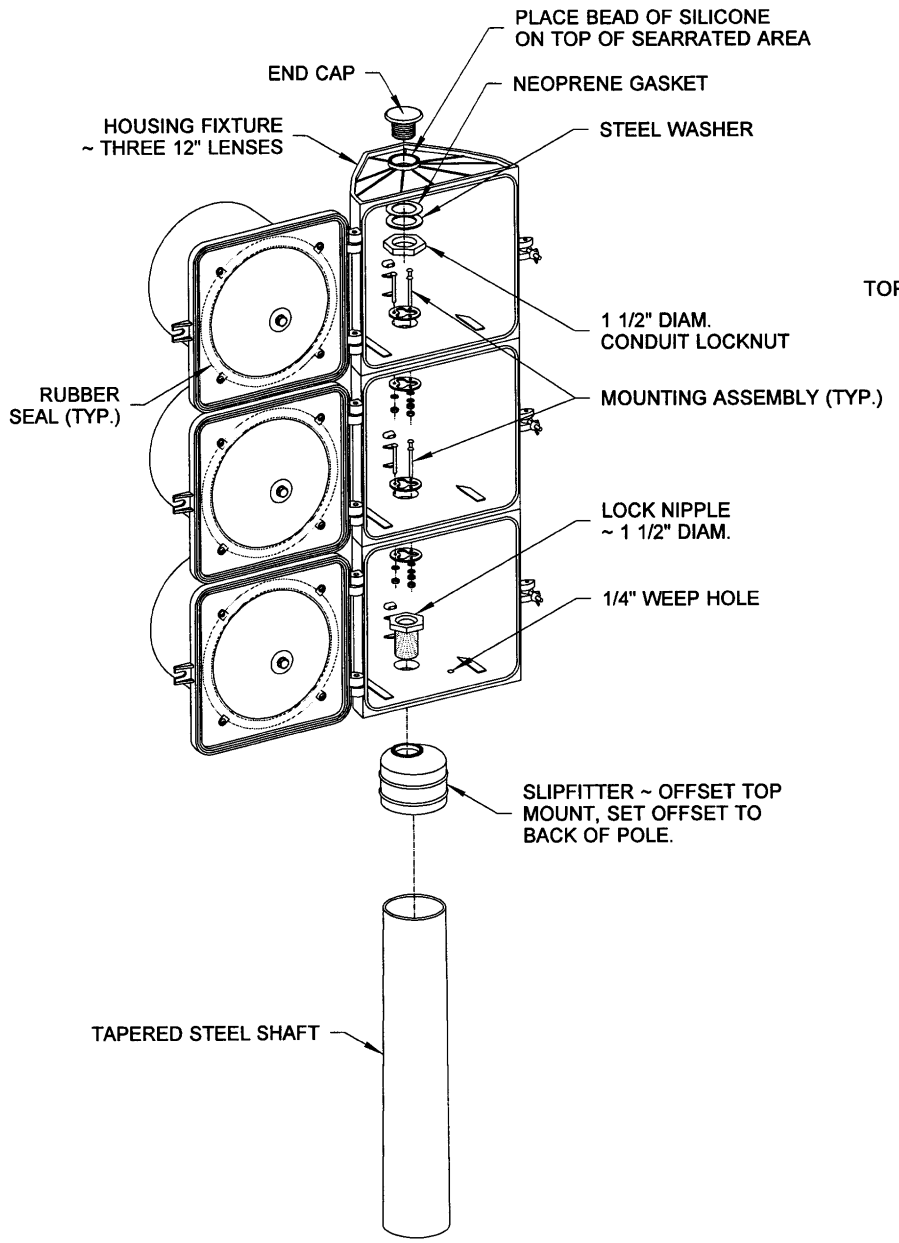

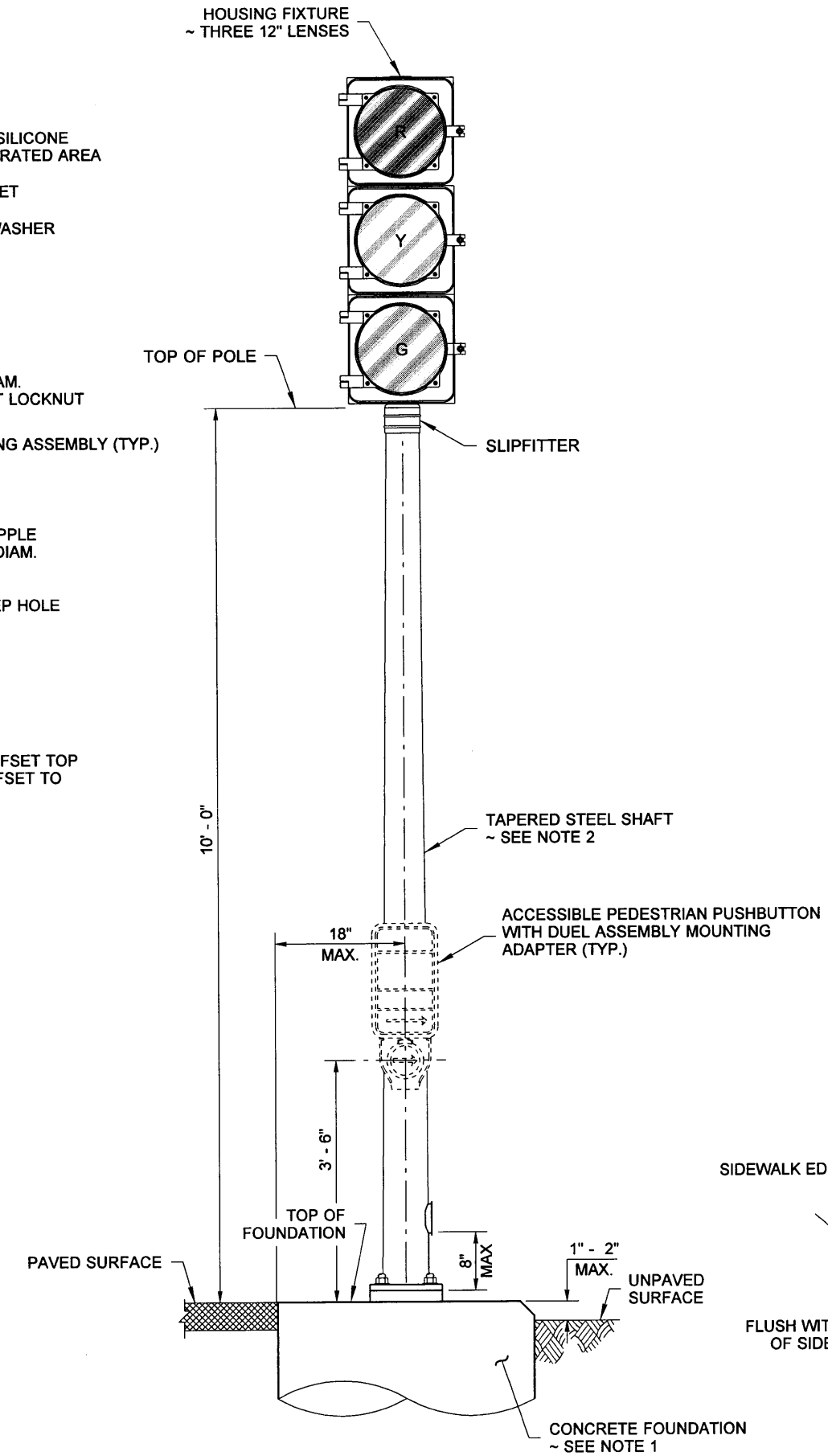

TYPE 1 SIGNAL STANDARD

FIXED BASE SHOWN

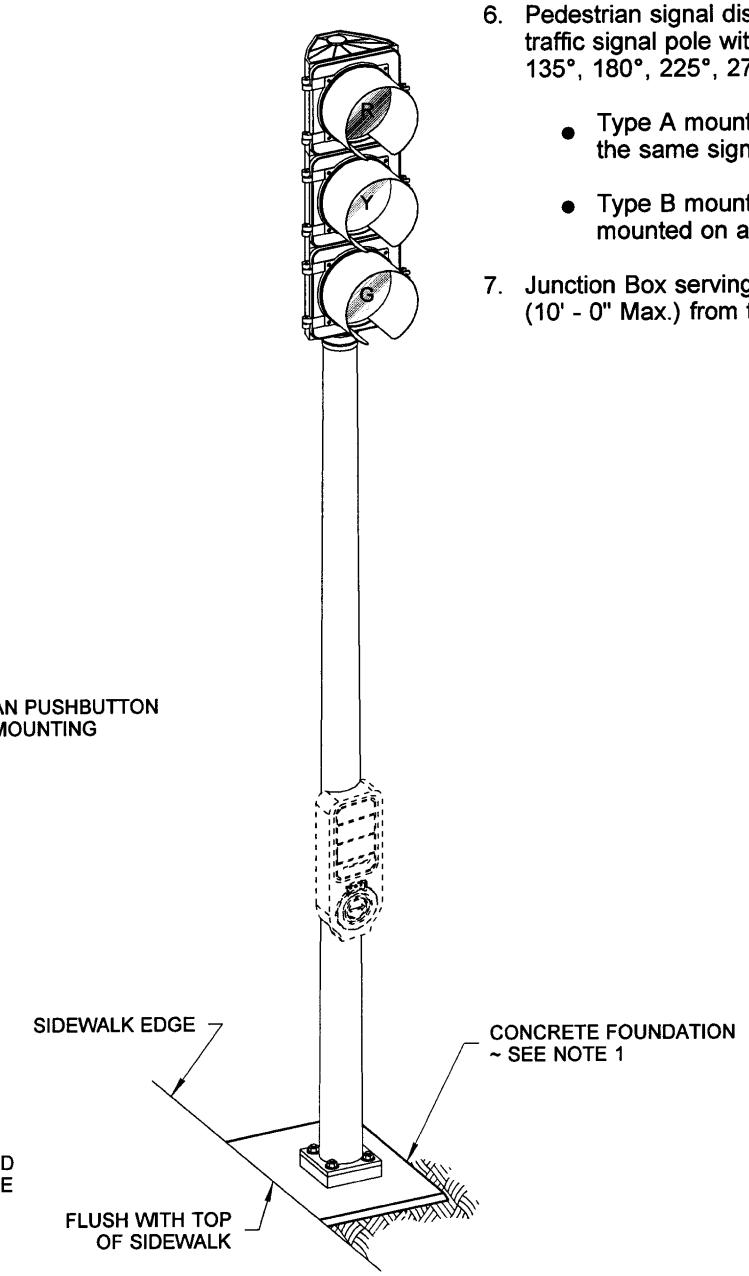

ISOMETRIC VIEW

NOTES

1. See **Standard Plan J-21.10** for Signal Standard Foundation with Fixed Base and Slip Base details.
2. Steel shaft shall be tapered either round or dodecagon (12 sided), 11 gage, 4 1/2" O.D. at slipfitter. Taper shall be 0.14 inches per foot.
3. All poles shall be hot dip galvanized per AASHTO M111.
4. Welding of structures shall be in accordance with the latest edition of the AWS D1.1 Structural Welding Code - Steel. All butt welds shall be ground flush with base metal.
5. See **Standard Plan J-21.20** for Electrical details.
6. Pedestrian signal displays mounted on the side of an octagonal (8 sided) traffic signal pole with a pole attachment angle other than 0°, 45°, 90°, 135°, 180°, 225°, 270°, or 315° shall utilize:
   - Type A mounting when two pedestrian heads are installed on the same signal pole.
   - Type B mounting when only one pedestrian signal head is mounted on a signal pole.
7. Junction Box serving the Standard shall preferably be located 5' - 0" (10' - 0" Max.) from the Standard.

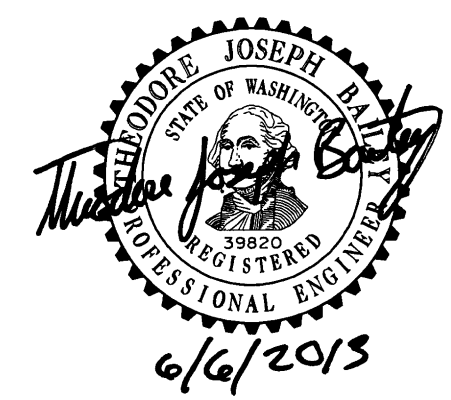

6/6/2013

TYPE 1 SIGNAL STANDARD DETAILS

STANDARD PLAN J-21.15-01

SHEET 1 OF 1 SHEET

APPROVED FOR PUBLICATION

STATE DESIGN ENGINEER — DATE 6/10/13

Washington State Department of Transportation

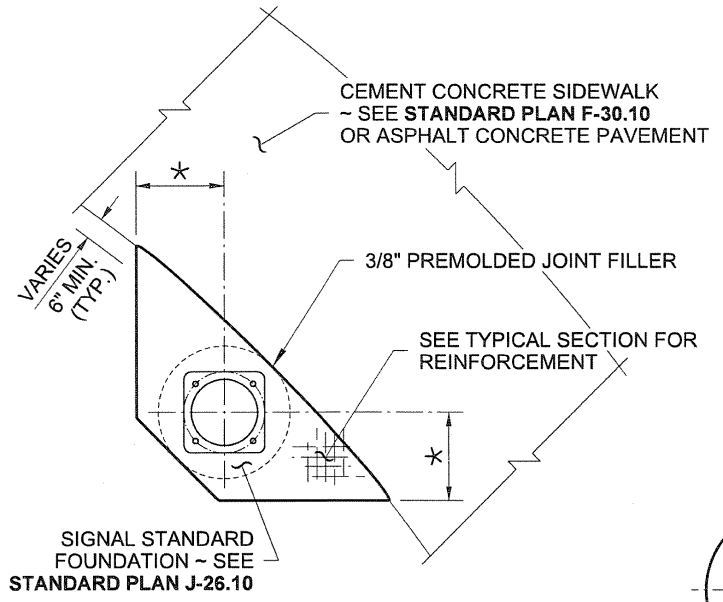

DUAL PEDESTRIAN PUSH BUTTON

NOTE

* = 2' - 0" FOR 3' - 0" DIAM. FOUNDATION
2' - 6" FOR 4' - 0" DIAM. FOUNDATION
2' - 6" FOR 3' - 0" SQUARE FOUNDATION

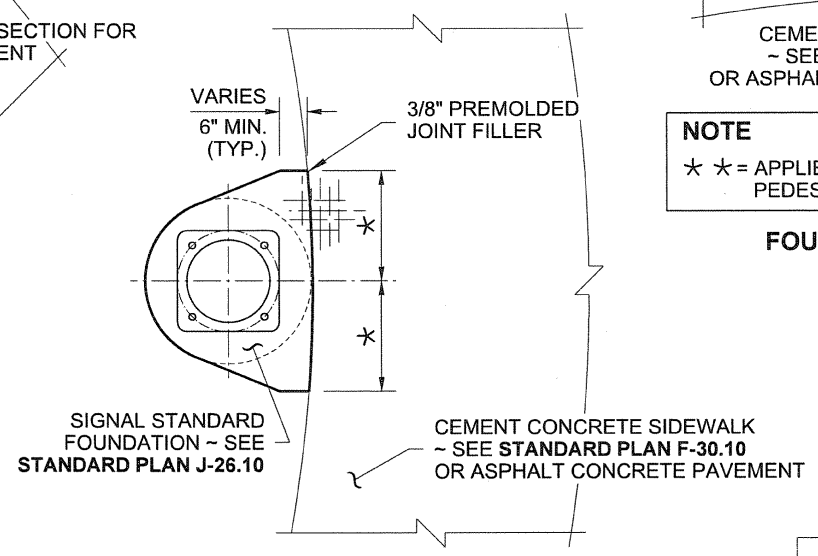

SINGLE PEDESTRIAN PUSH BUTTON

FOUNDATION OUTSIDE THE SIDEWALK SECTION

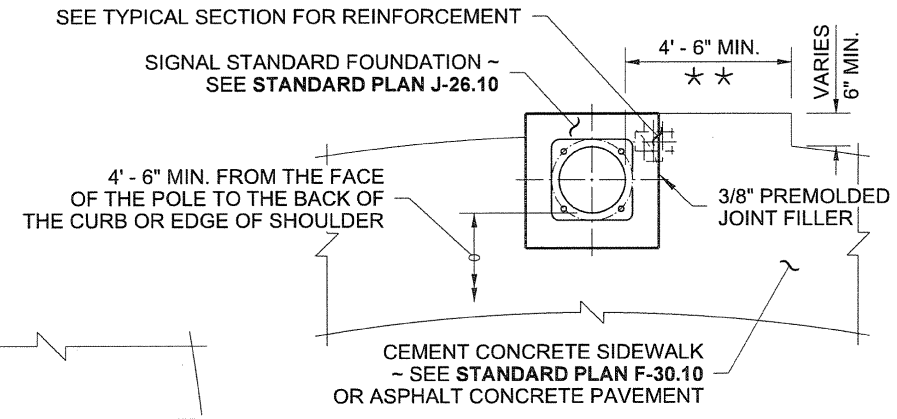

NOTE

* * = APPLIES TO THE SIDE OF THE FOUNDATION WHEN PEDESTRIAN PUSH BUTTON IS TO BE INSTALLED.

FOUNDATION PARTIALLY WITHIN SIDEWALK SECTION

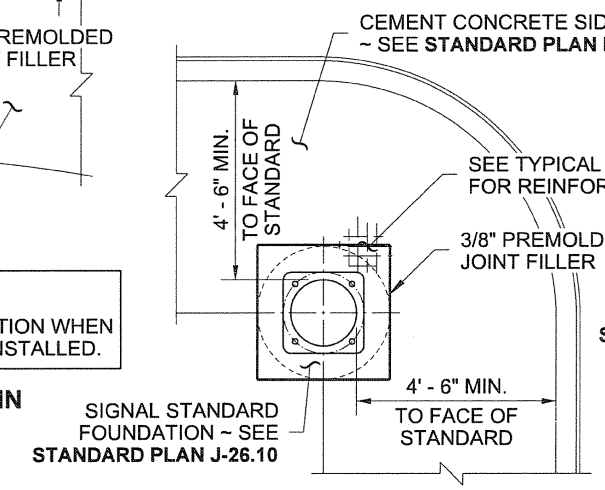

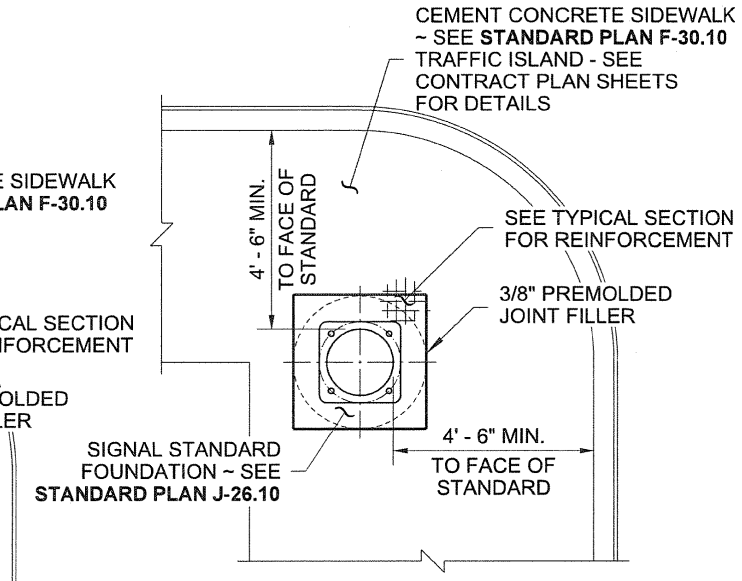

FOUNDATION WITHIN SIDEWALK OR TRAFFIC ISLAND SECTION

NOTE

REFER TO CONTRACT DOCUMENTS FOR PROJECT SPECIFIC INTERSECTION LAYOUTS & TRAFFIC ISLAND MATERIAL TYPE

FOUNDATION PARTIALLY WITHIN SIDEWALK SECTION

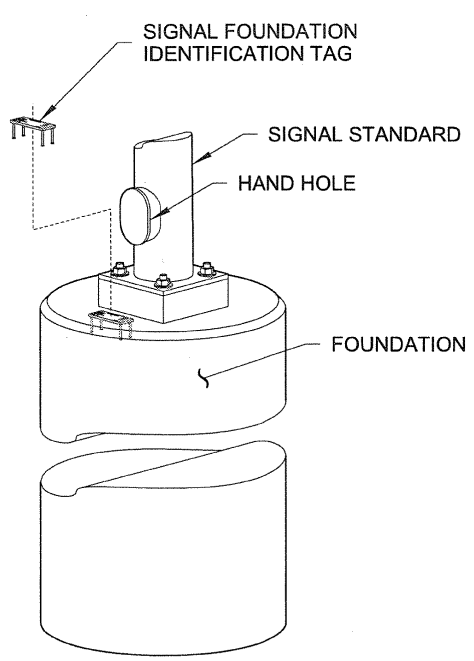

OBLIQUE VIEW

REINFORCING AND ANCHOR BOLTS NOT SHOWN FOR CLARITY (GROUT PAD OPTION SHOWN)

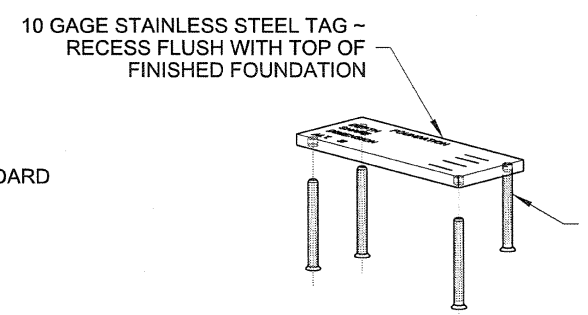

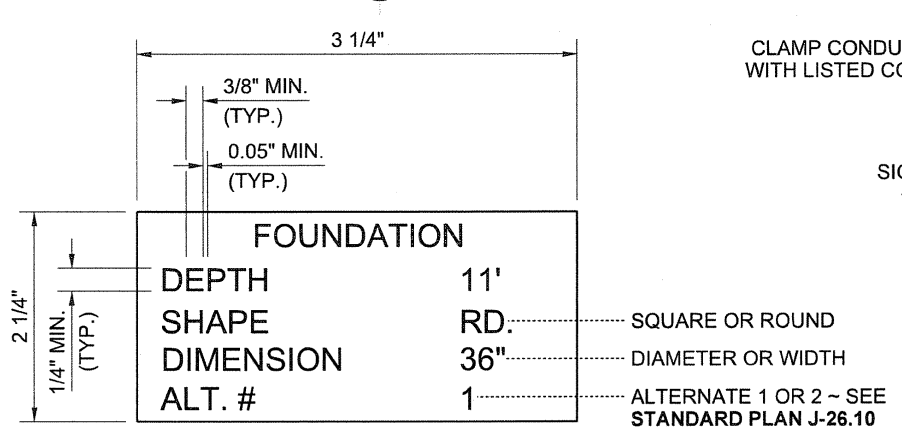

SIGNAL FOUNDATION IDENTIFICATION TAG DETAIL

TEXT SHALL BE ENGRAVED 0.014" DEEP

APPLY GROUT EVEN WITH THE BOTTOM OF THE ANCHOR PLATE AFTER PLUMBING THE STANDARD

PROVIDE 3/8" DIAMETER DRAIN TUBE IN THE GROUT PAD

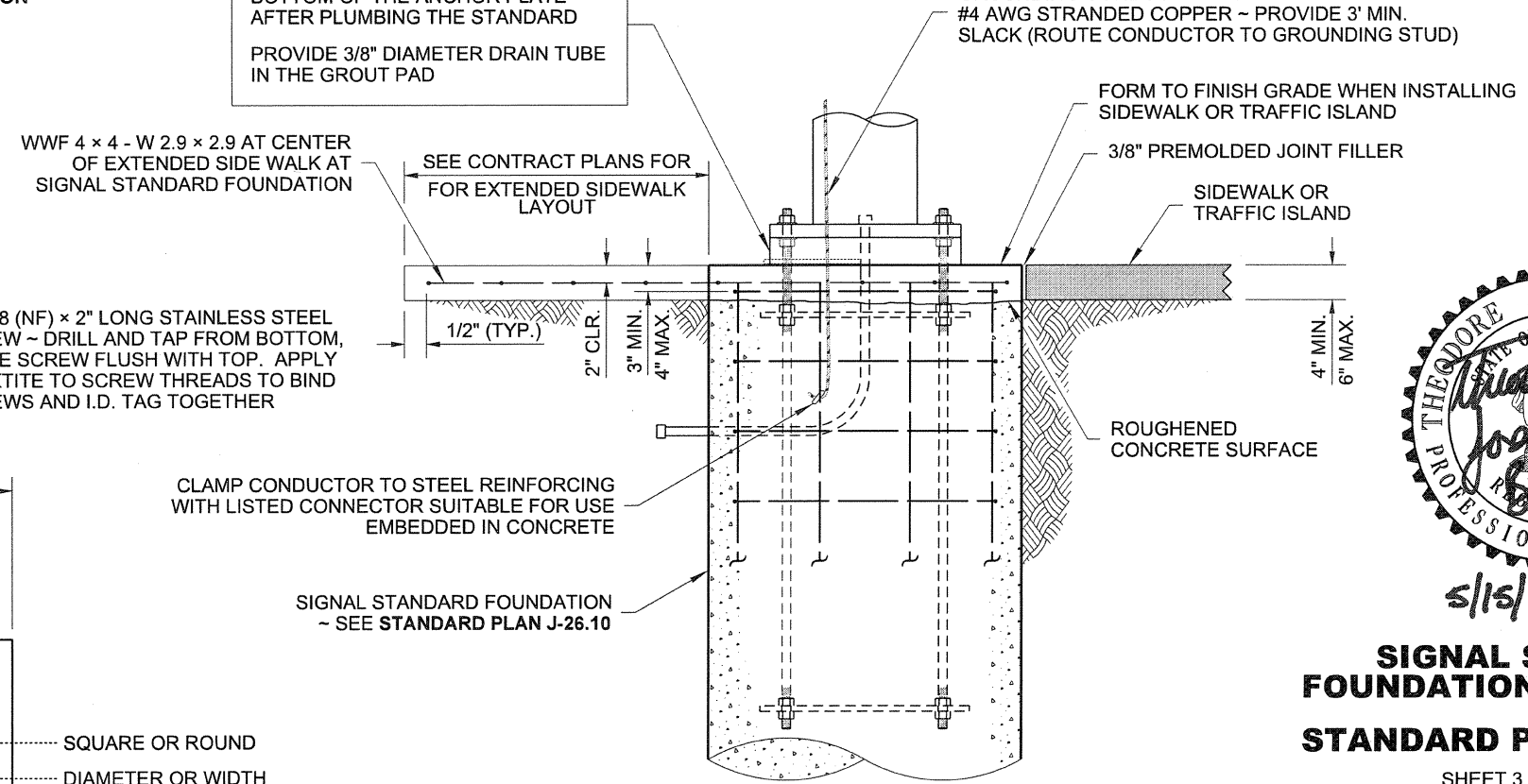

NOTE

FOUNDATION REINFORCING ONLY PARTIALLY SHOWN FOR CLARITY.
~ SEE **STANDARD PLAN J-26.10** FOR DETAILS NOT SHOWN.

TYPICAL SECTION

SIGNAL STANDARD FOUNDATION PLACEMENTS

STANDARD PLAN J-26.15-01

SHEET 3 OF 3 SHEETS

APPROVED FOR PUBLICATION

STATE DESIGN ENGINEER — DATE 5/17/12

Washington State Department of Transportation

DRAWN BY: LISA CYFORD

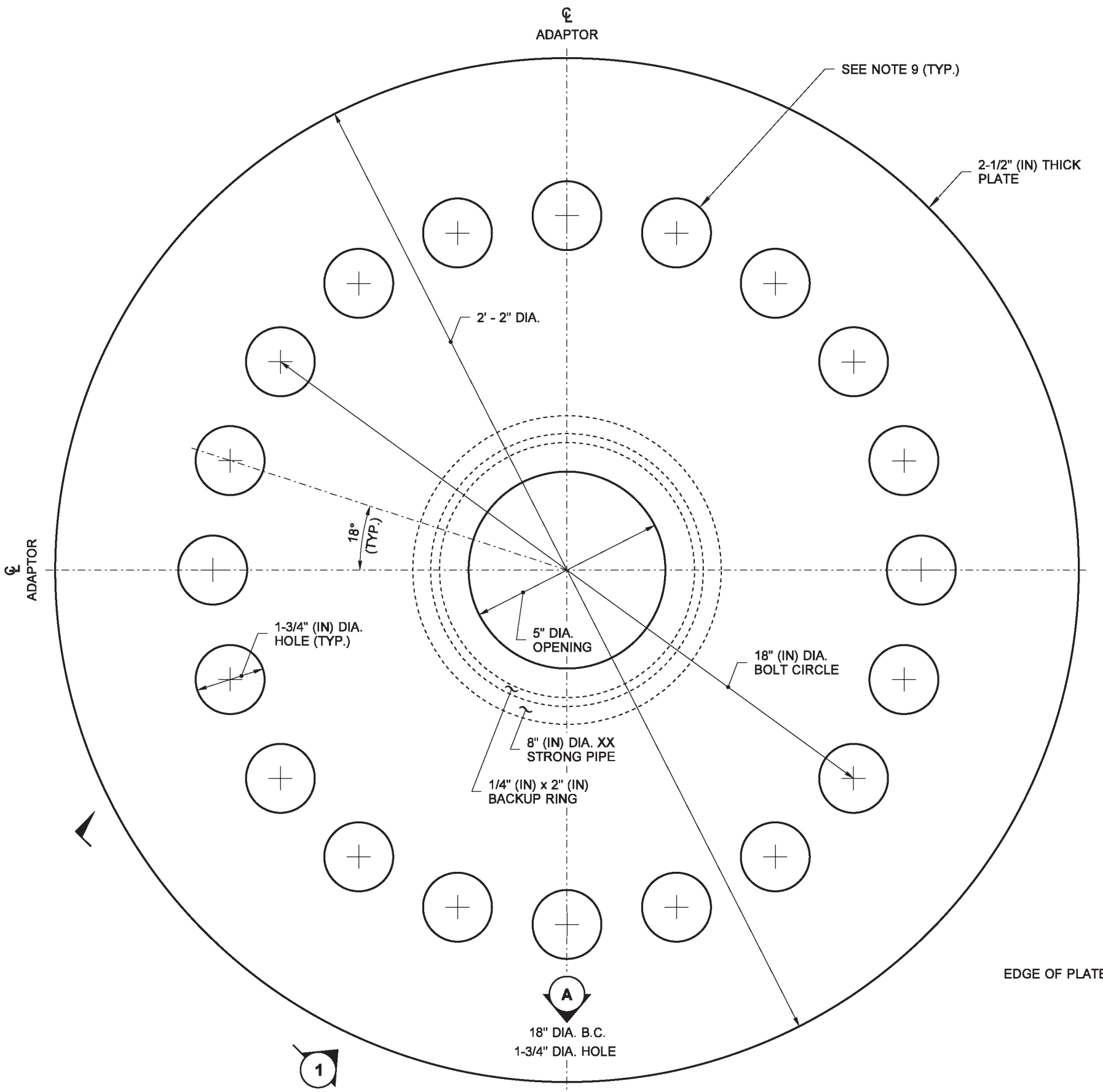

TOP VIEW
ADAPTOR 1 TOP PLATE

NOTES

1. All material and workmanship shall be in accordance with the requirements of the Washington State Department of Transportation Standard Specifications for Road, Bridge, and Municipal Construction.
2. The analysis and design for Adaptors 1 and 2 have been done in accordance with AASHTO Standard Specifications for Structural Supports for Highway Signs, Luminaires and Traffic Signals - Fifth Edition - Dated 2009, and Interims, using basic wind speed of 90 MPH and 50 years of design life.
3. Adaptors' parameters are based on field data and existing signal standard anchor bolts and bolt circles. Adaptor 1 shall be used for 15' (ft) thru 45' (ft) mast arm signal standards and Adaptor 2 for 46' (ft) thru 65' (ft).
4. **Adaptors shall only be used for temporary installation of knocked down signal standards.**
5. Materials specifications:

All structural steel, except	**ASTM A572 GR. 50 OR**
as otherwise noted	**ASTM A588**
Pipes	**ASTM A53 GR. B OR A500 GR. B**
Connecting/clamping bolts	**AASHTO M 164 (ASTM A325)**
Nuts	**AASHTO M 291 (ASTM A263) GRADE DH**
Washers	**AASHTO M 293 (ASTM F436)**

6. All bolts, rods, and related hardware shall be galvanized after fabrication per ASTM F2329.
7. Steel surfaces shall be galvanized after fabrication in accordance with AASHTO M 111.
8. Install and secure adaptor to existing support anchor bolts. Then install signal standard on adaptor top plate. Rake to be plumb after all load has been placed.
9. All holes in top and bottom plates of Adaptor 1 and Adaptor 2 are thru holes. See engraved or stamped text for bolt hole diameter.

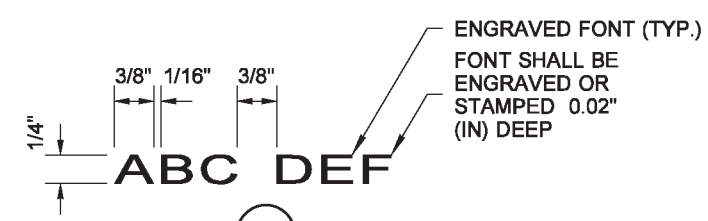

DETAIL A

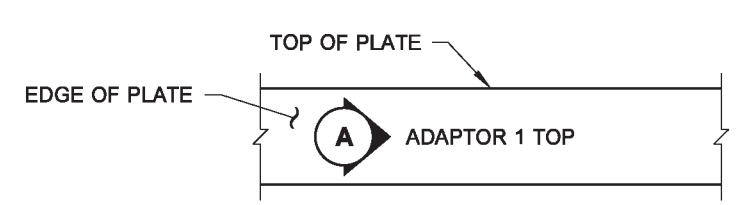

SECTION 1

ADAPTOR 1 TOP SHOWN
(ADAPTOR 1 BOTTOM, ADAPTOR 2 TOP, AND ADAPTOR 2 BOTTOM SIMILAR)

ALL FONTS MARKED A SHALL BE ENGRAVED OR STAMPED

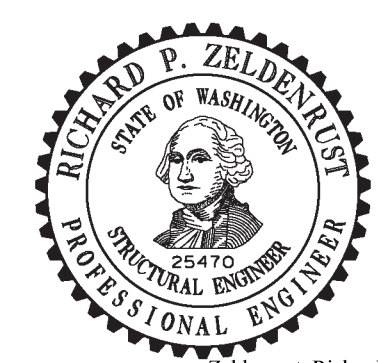

Zeldenrust, Richard
Jun 10 2014 10:32 AM

TEMPORARY SIGNAL STANDARD ADAPTOR

STANDARD PLAN J-26.20-00

SHEET 1 OF 5 SHEETS

APPROVED FOR PUBLICATION
Bakotich, Pasco
Jun 11 2014 1:31 PM
STATE DESIGN ENGINEER
Washington State Department of Transportation

DRAWN BY: COLBY FLETCHER

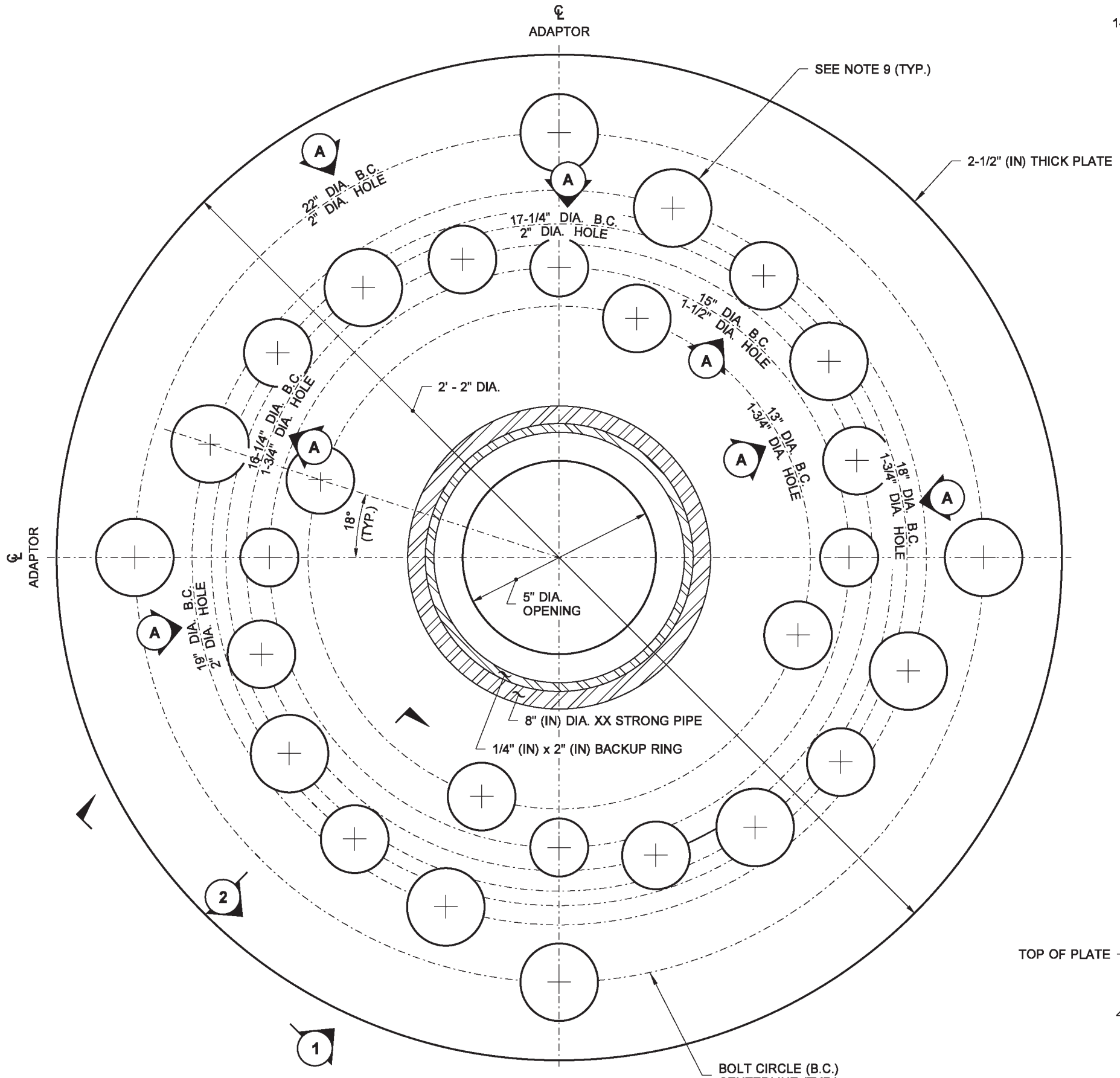

TOP VIEW
ADAPTOR 1 BOTTOM PLATE

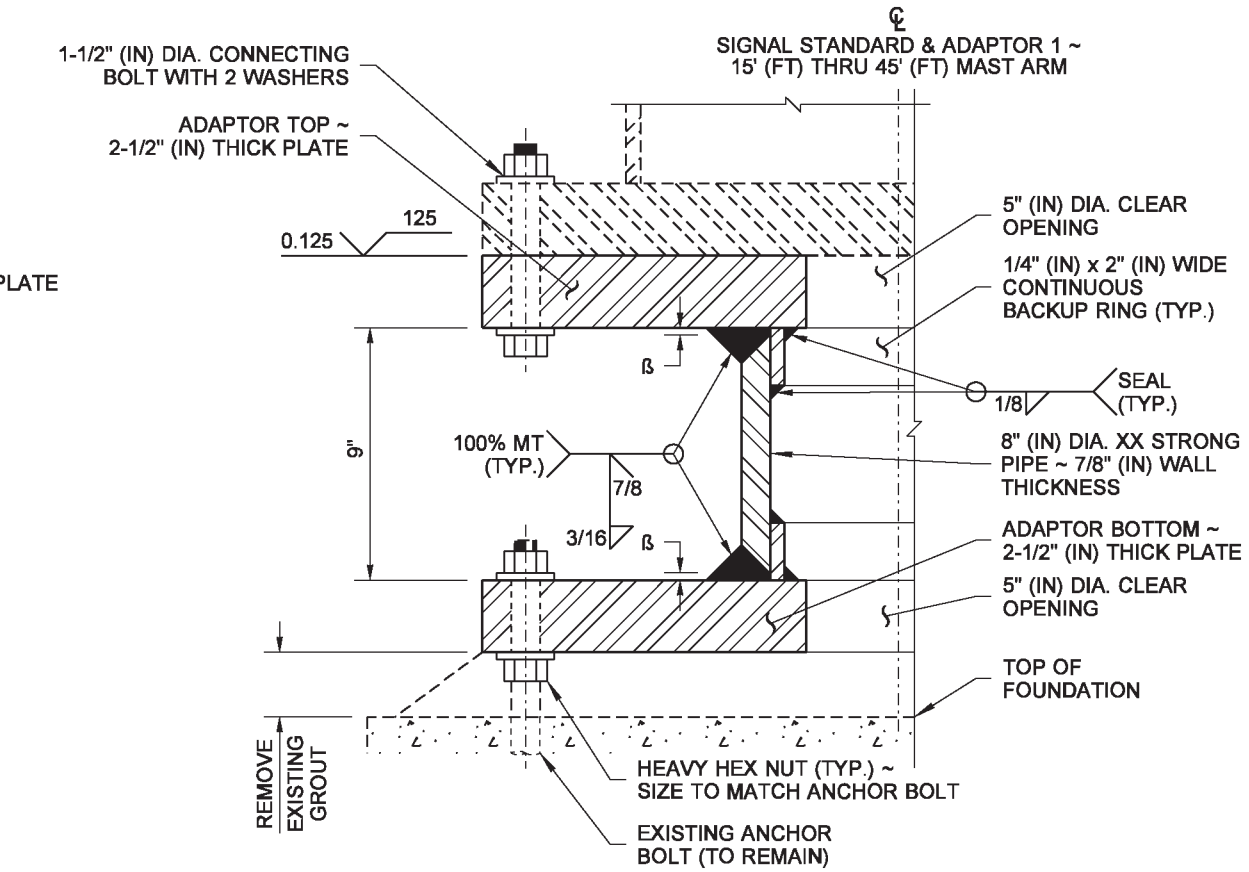

TYPICAL SECTION
ß - 3/16" (IN) MAX. GAP BEFORE WELDING

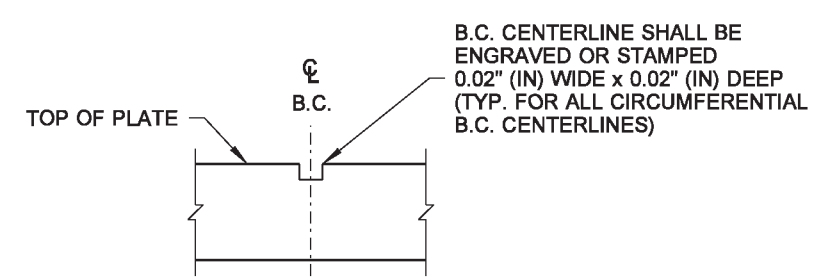

SECTION 2

ONE BOLT CIRCLE CENTERLINE SHOWN (ALL BOLT CIRCLE CENTERLINES SIMILAR)

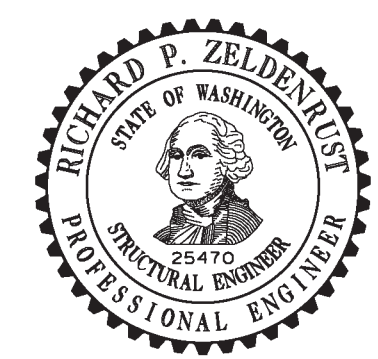

Zeldenrust, Richard
Jun 10 2014 10:33 AM

TEMPORARY SIGNAL STANDARD ADAPTOR

STANDARD PLAN J-26.20-00

SHEET 2 OF 5 SHEETS

APPROVED FOR PUBLICATION
Bakotich, Pasco
Jun 11 2014 1:32 PM

STATE DESIGN ENGINEER

Washington State Department of Transportation

DRAWN BY: COLBY FLETCHER

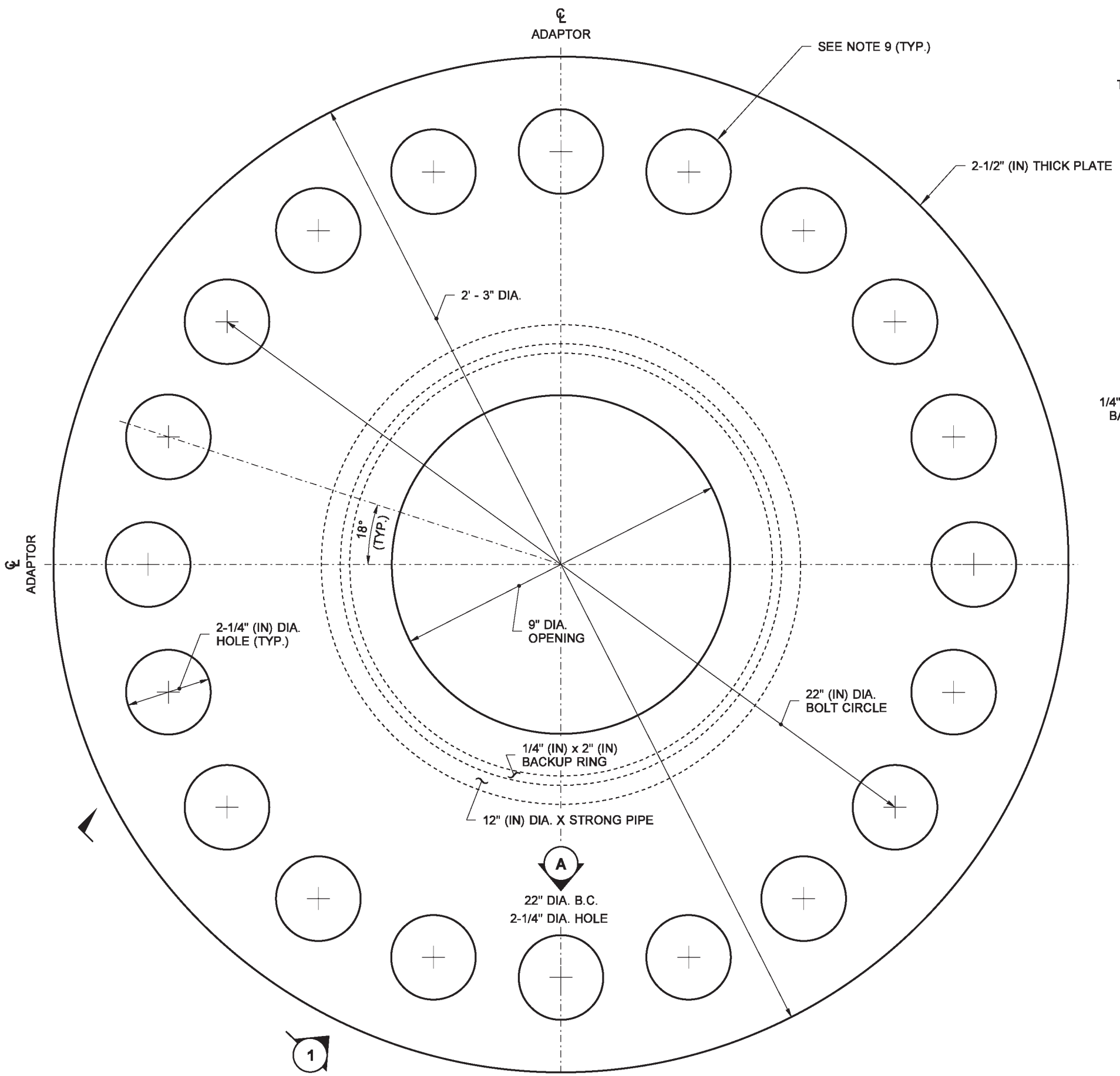

TOP VIEW
ADAPTOR 2 TOP PLATE

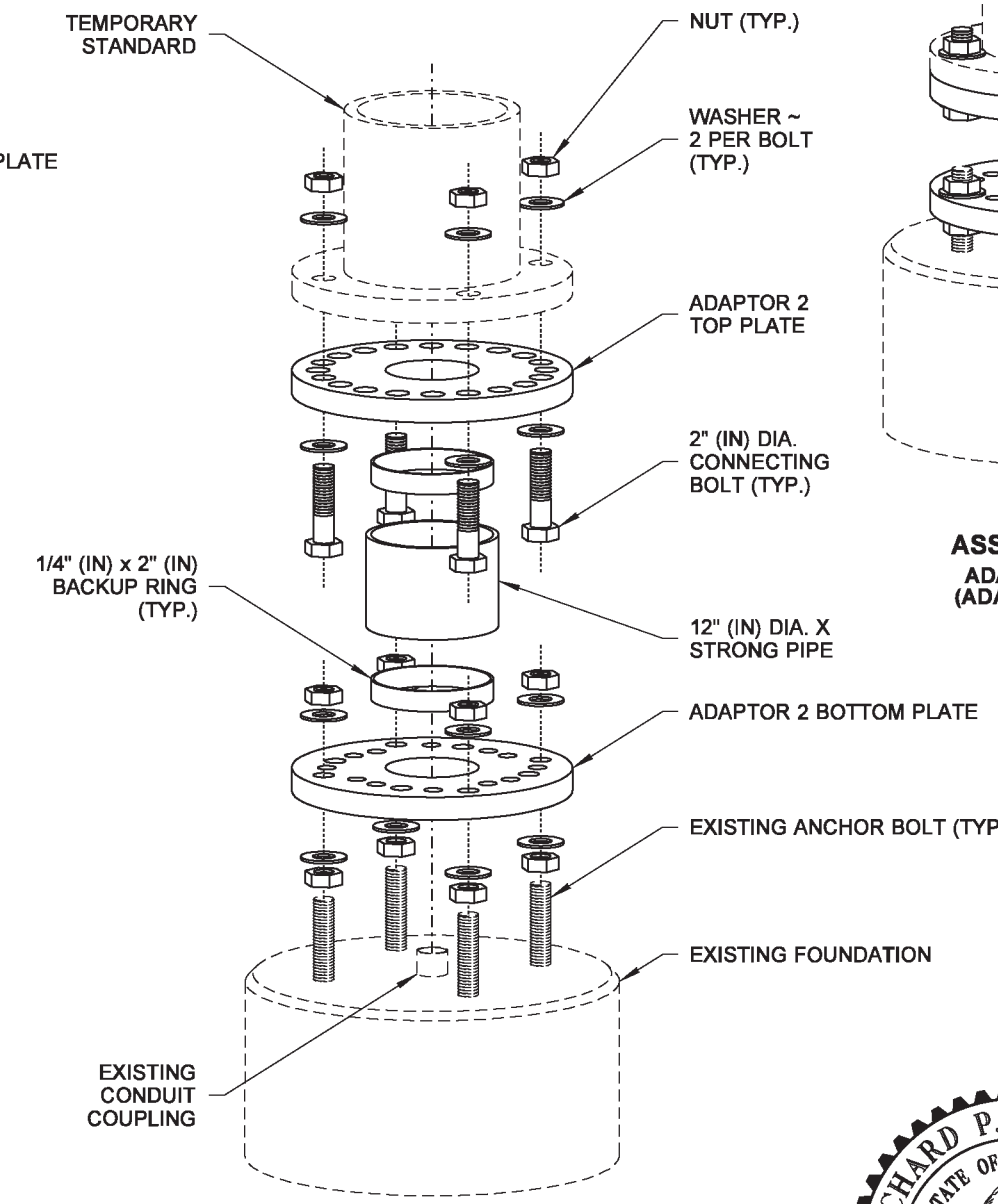

EXPLODED VIEW
ADAPTOR 2 SHOWN
(ADAPTOR 1 SIMILAR)

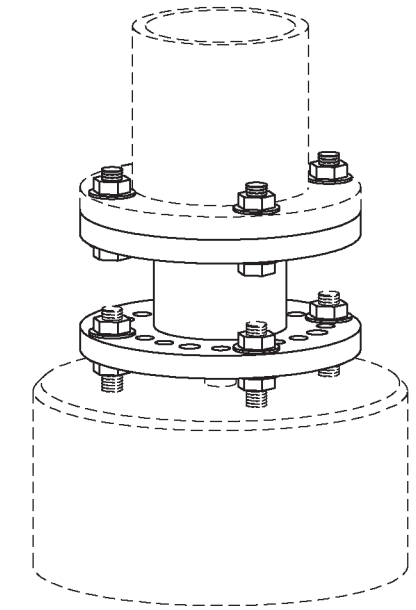

ASSEMBLED VIEW
ADAPTOR 2 SHOWN
(ADAPTOR 1 SIMILAR)

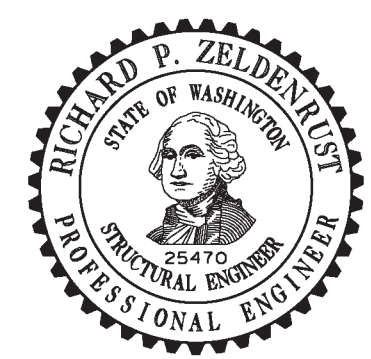

Zeldenrust, Richard
Jun 10 2014 10:33 AM

TEMPORARY SIGNAL STANDARD ADAPTOR

STANDARD PLAN J-26.20-00

SHEET 3 OF 5 SHEETS

APPROVED FOR PUBLICATION
Bakotich, Pasco
Jun 11 2014 1:32 PM
STATE DESIGN ENGINEER
Washington State Department of Transportation

DRAWN BY: COLBY FLETCHER

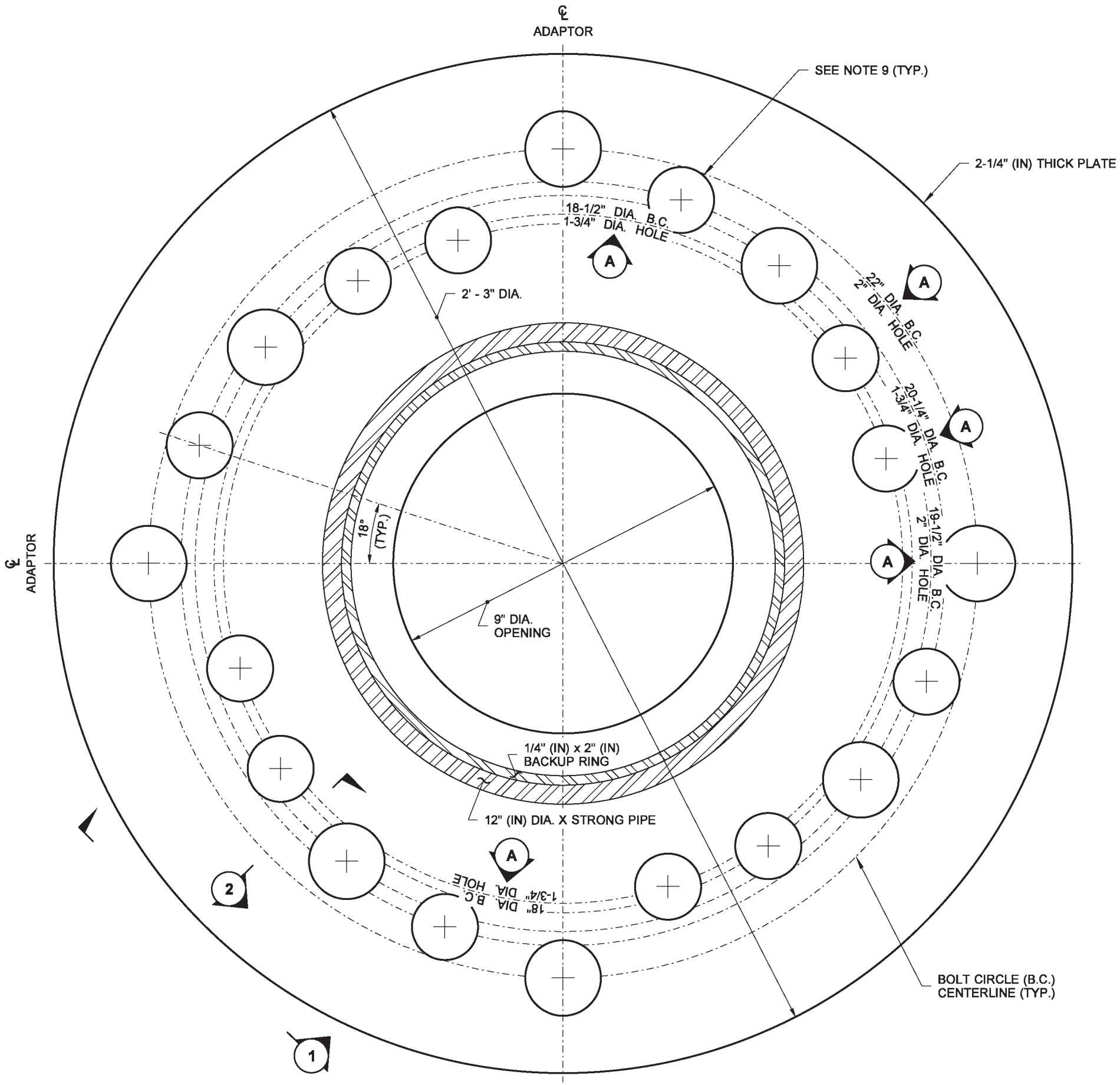

TOP VIEW
ADAPTOR 2 BOTTOM PLATE

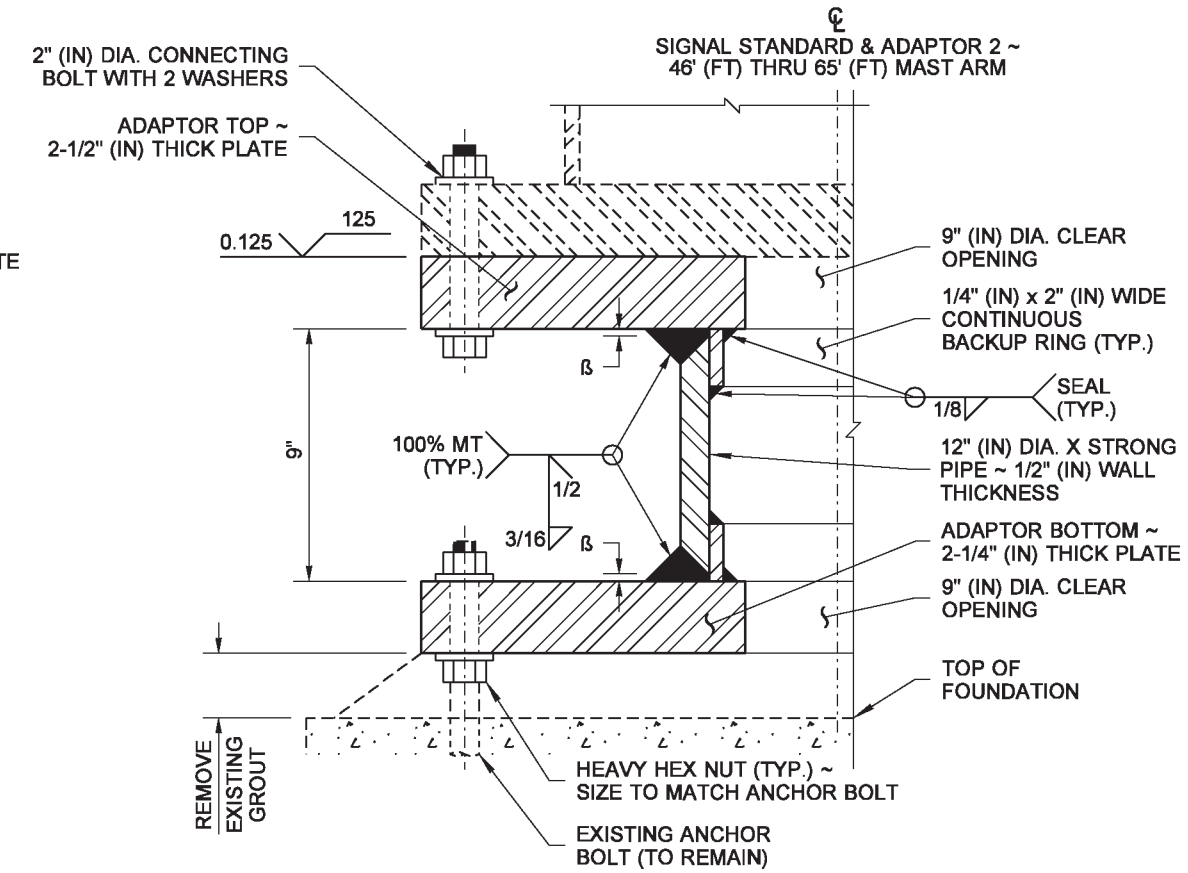

TYPICAL SECTION
ß - 3/16" (IN) MAX. GAP BEFORE WELDING

DRAWN BY: COLBY FLETCHER

RICHARD P. ZELDENRUST
STATE OF WASHINGTON
25470
STRUCTURAL ENGINEER
PROFESSIONAL ENGINEER

Zeldenrust, Richard
Jun 10 2014 10:34 AM

TEMPORARY SIGNAL STANDARD ADAPTOR

STANDARD PLAN J-26.20-00

SHEET 4 OF 5 SHEETS

APPROVED FOR PUBLICATION
Bakotich, Pasco
Jun 11 2014 1:32 PM

STATE DESIGN ENGINEER

Washington State Department of Transportation

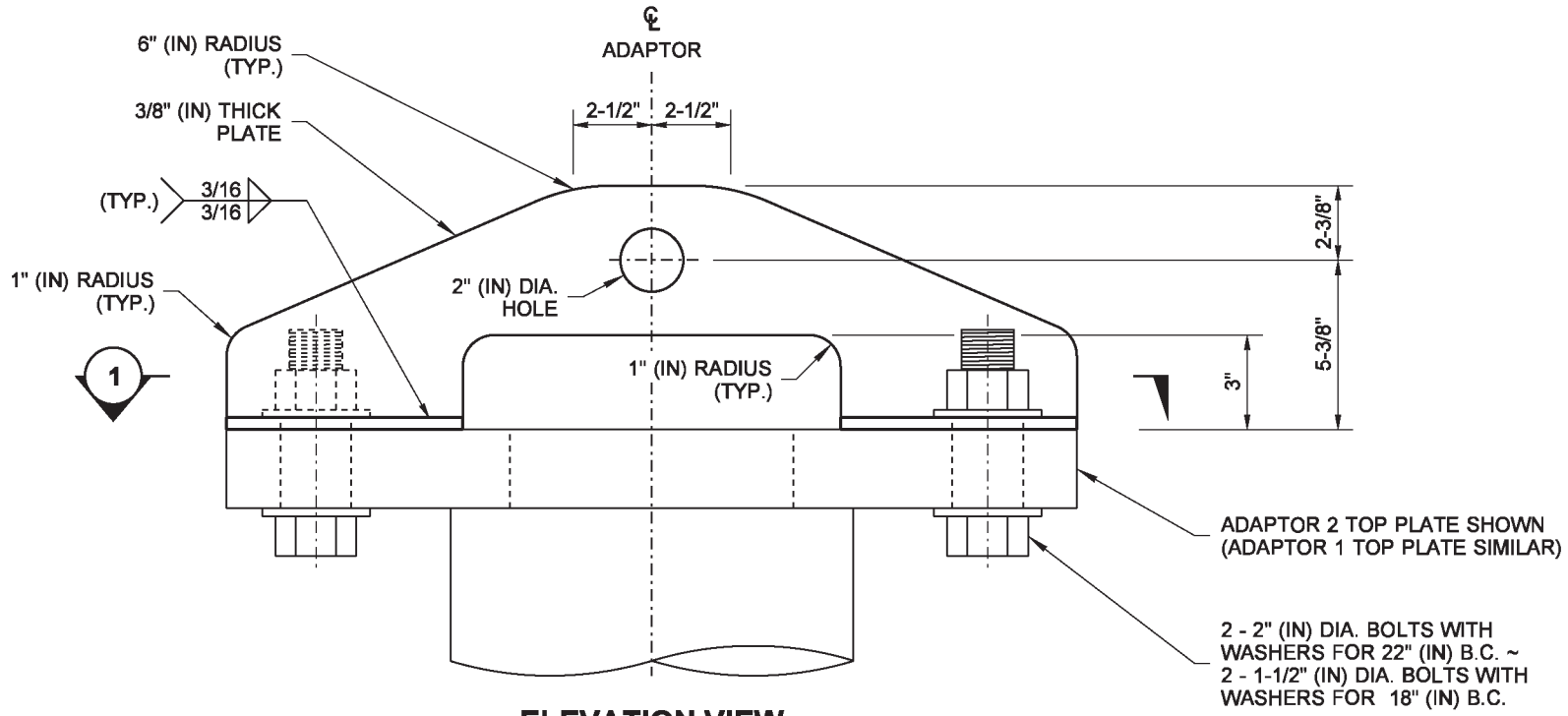

ELEVATION VIEW
ADAPTOR LIFTING TOOL
REMOVE ALL BURRS AND SHARP EDGES

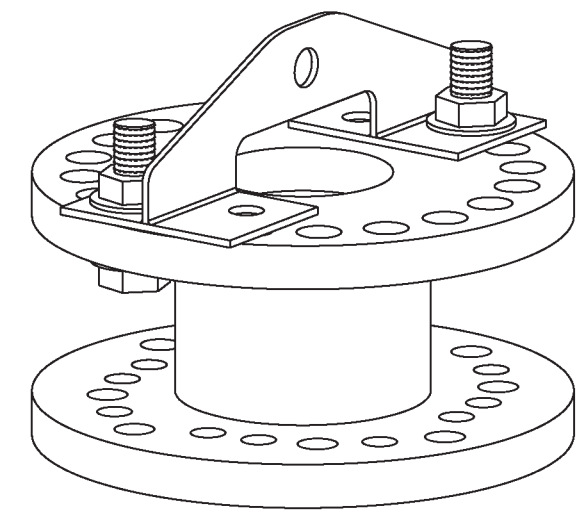

ASSEMBLED VIEW
ADAPTOR LIFTING TOOL
WITH ADAPTOR 2 SHOWN
(ADAPTOR 1 SIMILAR)

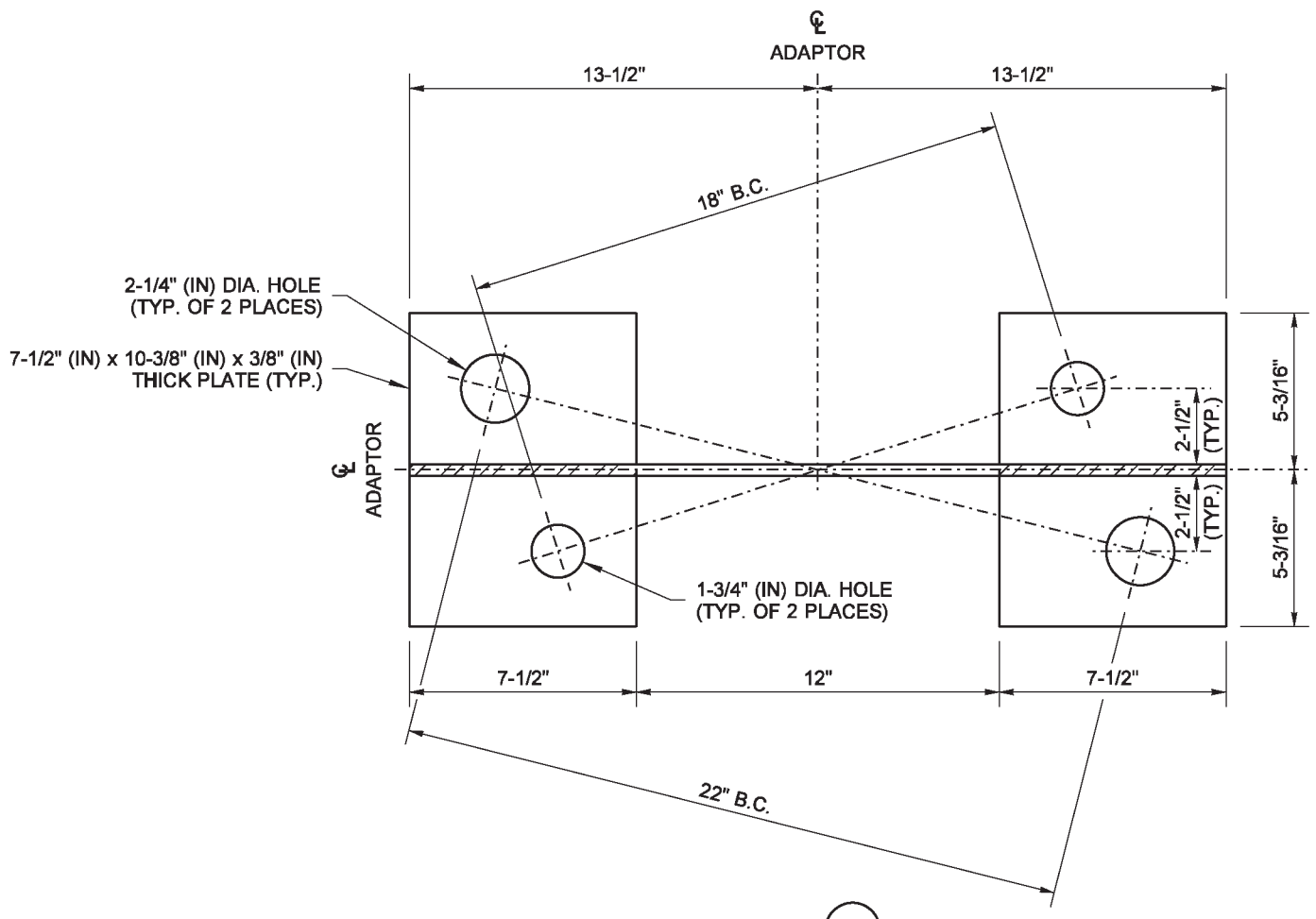

SECTION 1

DRAWN BY: COLBY FLETCHER

Zeldenrust, Richard
Jun 10 2014 10:34 AM

TEMPORARY SIGNAL STANDARD ADAPTOR

STANDARD PLAN J-26.20-00

SHEET 5 OF 5 SHEETS

APPROVED FOR PUBLICATION
Bakotich, Pasco
Jun 11 2014 1:32 PM

STATE DESIGN ENGINEER

Washington State Department of Transportation

This page left blank intentionally.

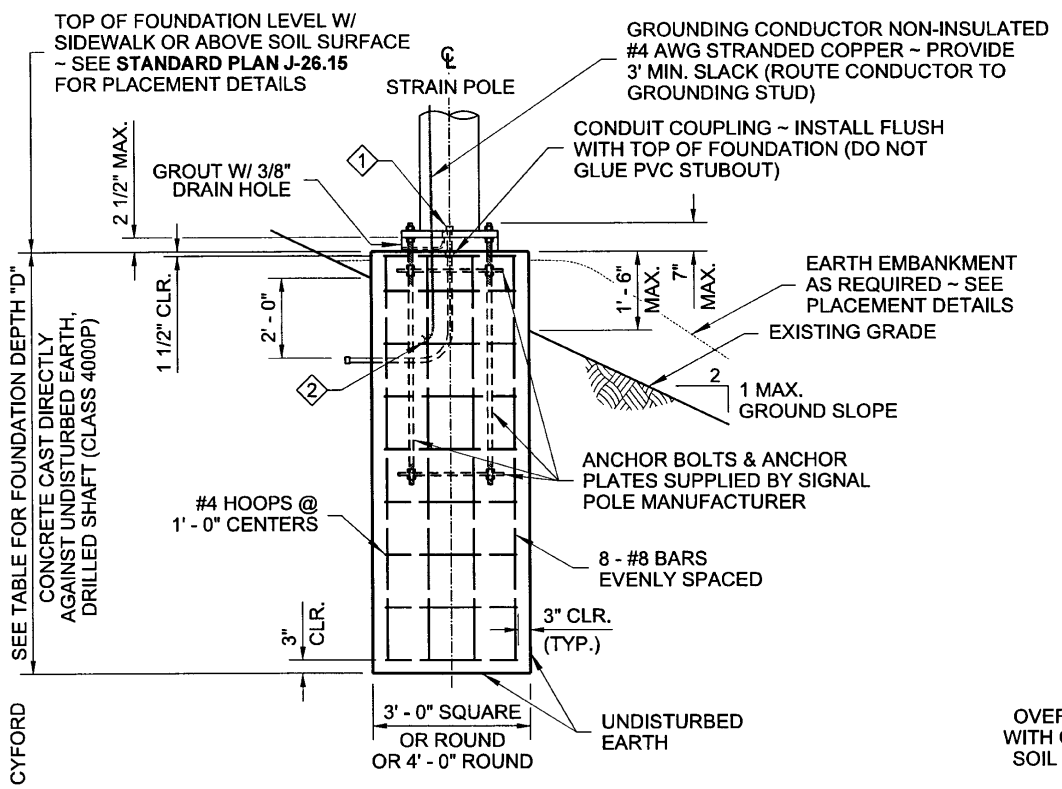

FOUNDATION REINFORCEMENT DETAIL

CONCRETE CAST DIRECTLY AGAINST UNDISTURBED EARTH, DRILLED SHAFT

ALTERNATE #1

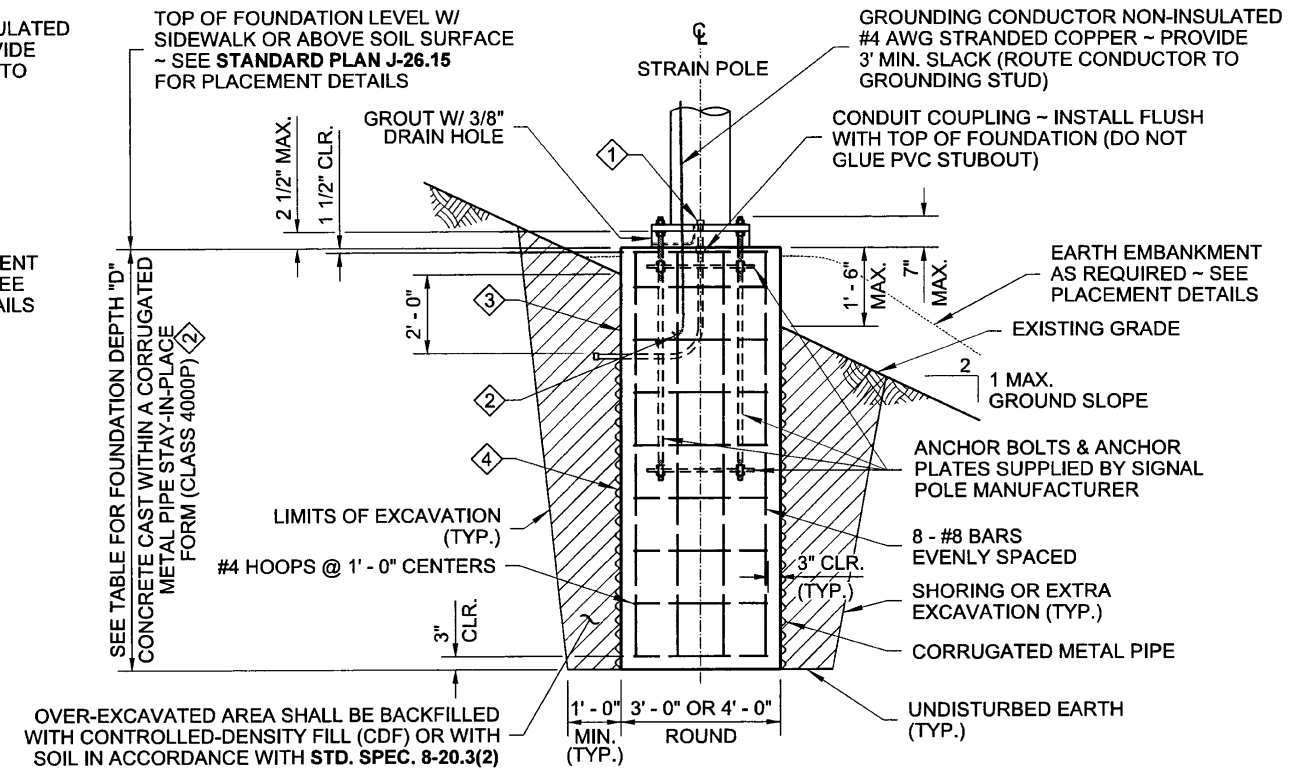

FOUNDATION REINFORCEMENT AND BACKFILL DETAIL

4 CONCRETE CAST WITHIN A CORRUGATED METAL PIPE STAY-IN-PLACE FORM

ALTERNATE #2

DRAWN BY: LISA CYFORD

1 CONDUIT SIZE AND QUANTITY AS SHOWN IN THE CONTRACT; CAP BOTH ENDS

2 CLAMP CONDUCTOR TO STEEL REINFORCING WITH LISTED CONNECTOR SUITABLE FOR USE EMBEDDED IN CONCRETE

3 PAPER OR CARDBOARD FORM SHALL NOT STAY-IN-PLACE

ALTERNATE # 1 DRILLED SHAFT-TYPE CONSTRUCTION - DEPTH "D"
FOR LATERAL BEARING PRESSURE = 2500 PSF & Ø = 34°, 1500 PSF & Ø = 28°, 1000 PSF & Ø = 26°

GROUND SLOPE = 3H : 1V OR FLATTER

ALLOWABLE LATERAL BEARING PRESSURE	FOUNDATION TYPE	POLE CLASS - RESULTANT HORIZONTAL TENSION (LBS)						
		1900	2700	3700	4800	5600	6300	7200
1000 PSF	3' - 0" ROUND	11' - 0"	13' - 0"	15' - 0"	16' - 0"	18' - 0"	19' - 0"	20' - 0"
	3' - 0" SQUARE	11' - 0"	13' - 0"	15' - 0"	16' - 0"	18' - 0"	19' - 0"	20' - 0"
	4' - 0" ROUND	10' - 0"	11' - 0"	13' - 0"	15' - 0"	15' - 0"	16' - 0"	18' - 0"
1500 PSF	3' - 0" ROUND	9' - 0"	11' - 0"	12' - 0"	14' - 0"	15' - 0"	15' - 0"	16' - 0"
	3' - 0" SQUARE	9' - 0"	11' - 0"	12' - 0"	14' - 0"	15' - 0"	15' - 0"	16' - 0"
	4' - 0" ROUND	8' - 0"	9' - 0"	10' - 0"	12' - 0"	13' - 0"	13' - 0"	14' - 0"
2500 PSF OR GREATER	3' - 0" ROUND	7' - 0"	8' - 0"	9' - 0"	10' - 0"	11' - 0"	12' - 0"	13' - 0"
	3' - 0" SQUARE	7' - 0"	8' - 0"	9' - 0"	10' - 0"	11' - 0"	12' - 0"	13' - 0"
	4' - 0" ROUND	6' - 0"	7' - 0"	8' - 0"	9' - 0"	10' - 0"	10' - 0"	11' - 0"

GROUND SLOPE = 3H : 1V TO 2H : 1V

ALLOWABLE LATERAL BEARING PRESSURE	FOUNDATION TYPE	POLE CLASS - RESULTANT HORIZONTAL TENSION (LBS)						
		1900	2700	3700	4800	5600	6300	7200
1000 PSF	3' - 0" ROUND	SPECIAL FOUNDATION TYPE						
	3' - 0" SQUARE	SPECIAL FOUNDATION TYPE						
	4' - 0" ROUND	SPECIAL FOUNDATION TYPE						
1500 PSF	3' - 0" ROUND	10' - 0"	12' - 0"	13' - 0"	15' - 0"	16' - 0"	16' - 0"	17' - 0"
	3' - 0" SQUARE	10' - 0"	12' - 0"	13' - 0"	15' - 0"	16' - 0"	16' - 0"	17' - 0"
	4' - 0" ROUND	9' - 0"	10' - 0"	11' - 0"	13' - 0"	14' - 0"	14' - 0"	15' - 0"
2500 PSF OR GREATER	3' - 0" ROUND	8' - 0"	9' - 0"	10' - 0"	11' - 0"	12' - 0"	13' - 0"	14' - 0"
	3' - 0" SQUARE	8' - 0"	9' - 0"	10' - 0"	11' - 0"	12' - 0"	13' - 0"	14' - 0"
	4' - 0" ROUND	7' - 0"	8' - 0"	9' - 0"	10' - 0"	11' - 0"	11' - 0"	12' - 0"

ALTERNATE # 2 CORRUGATED METAL PIPE TYPE CONSTRUCTION - DEPTH "D"
FOR LATERAL BEARING PRESSURE = 2500 PSF & Ø = 23°, 1500 PSF & Ø = 18°, 1000 PSF & Ø = 17°

GROUND SLOPE = 3H : 1V OR FLATTER

ALLOWABLE LATERAL BEARING PRESSURE	FOUNDATION TYPE	POLE CLASS - RESULTANT HORIZONTAL TENSION (LBS)						
		1900	2700	3700	4800	5600	6300	7200
1000 PSF	3' - 0" ROUND	11' - 0"	13' - 0"	15' - 0"	16' - 0"	18' - 0"	19' - 0"	20' - 0"
	4' - 0" ROUND	10' - 0"	11' - 0"	13' - 0"	15' - 0"	15' - 0"	16' - 0"	18' - 0"
1500 PSF	3' - 0" ROUND	9' - 0"	11' - 0"	12' - 0"	14' - 0"	15' - 0"	15' - 0"	16' - 0"
	4' - 0" ROUND	8' - 0"	9' - 0"	10' - 0"	12' - 0"	13' - 0"	13' - 0"	14' - 0"
2500 PSF OR GREATER	3' - 0" ROUND	7' - 0"	8' - 0"	9' - 0"	10' - 0"	11' - 0"	12' - 0"	13' - 0"
	4' - 0" ROUND	6' - 0"	7' - 0"	8' - 0"	9' - 0"	10' - 0"	10' - 0"	11' - 0"

GROUND SLOPE = 3H : 1V TO 2H : 1V

ALLOWABLE LATERAL BEARING PRESSURE	FOUNDATION TYPE	POLE CLASS - RESULTANT HORIZONTAL TENSION (LBS)						
		1900	2700	3700	4800	5600	6300	7200
1000 PSF	3' - 0" ROUND	SPECIAL FOUNDATION TYPE						
	4' - 0" ROUND	SPECIAL FOUNDATION TYPE						
1500 PSF	3' - 0" ROUND	10' - 0"	12' - 0"	13' - 0"	15' - 0"	16' - 0"	16' - 0"	17' - 0"
	4' - 0" ROUND	9' - 0"	10' - 0"	11' - 0"	13' - 0"	14' - 0"	14' - 0"	15' - 0"
2500 PSF OR GREATER	3' - 0" ROUND	8' - 0"	9' - 0"	10' - 0"	11' - 0"	12' - 0"	13' - 0"	14' - 0"
	4' - 0" ROUND	7' - 0"	8' - 0"	9' - 0"	10' - 0"	11' - 0"	11' - 0"	12' - 0"

NOTES

1. This structure has been designed according to the Fifth Edition 2009 AASHTO Standard Specifications for Structural Supports for Highway Signs, Luminaires, and Traffic Signals: Basic wind velocity 90 mph, Design Life/Recurrence Interval 50 years, and Fatigue Category III.
2. Foundations are designed for Type IV and V Strain Pole Standards with a maximum mast arm length of 16' - 0".
3. Foundations not within the parameters of this standard require Special Design. Contact the WSDOT Bridge and Structures Office through the Engineer for Special Foundation Designs.
4. Foundations constructed within Ecology Embankments shall be increased in depth by the depth of the Ecology Embankment.
5. The top 2 feet of the foundation shall use a smooth form (such as paper or cardboard). After the concrete has cured, this entire form shall be removed.
6. See **Standard Plan J-27.15** for Strain Pole Standards Type IV and V details.
7. Install Signal Foundation Identification Tag. See **Standard Plan J-26.15** for details.

ALTERNATE #2 - CONSTRUCTION METHOD

METAL (SUBSURFACE) FORM REQUIRED

When the existing soil will not retain a vertical face, over-excavate the foundation area and install a 36" or 48" diameter corrugated metal (pipe) form. The top of the corrugated metal form shall terminate 1 foot below final grade. Continue forming to full height using a paper or cardboard form to achieve a smooth finish on final exposed cement concrete. Support the form as necessary to remain plumb.

Place the concrete foundation.

After concrete has cured, remove the entire paper or cardboard form portion.

Backfill with controlled-density fill or compacted borrow in accordance with **Standard Specification 8-20.3(2).**

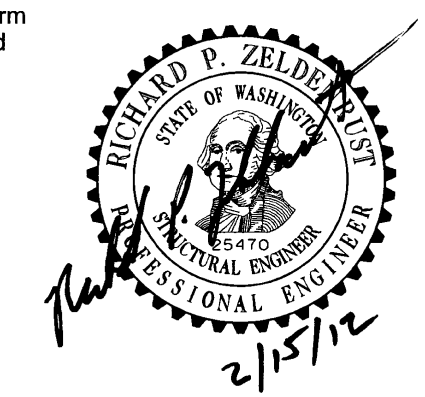

TYPE IV AND V STRAIN POLE FOUNDATION

STANDARD PLAN J-27.10-00

SHEET 1 OF 1 SHEET

APPROVED FOR PUBLICATION

STATE DESIGN ENGINEER — DATE 3/13/12

Washington State Department of Transportation

DRAWN BY: BILL BERENS

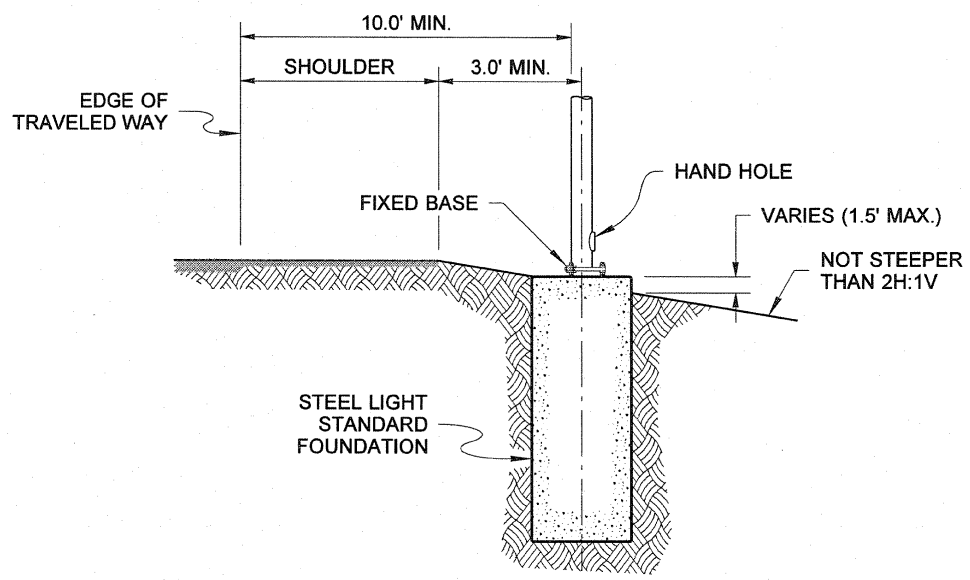

SECTION VIEW

CASE I

POSTED SPEED LIMIT LESS THAN 35 MPH

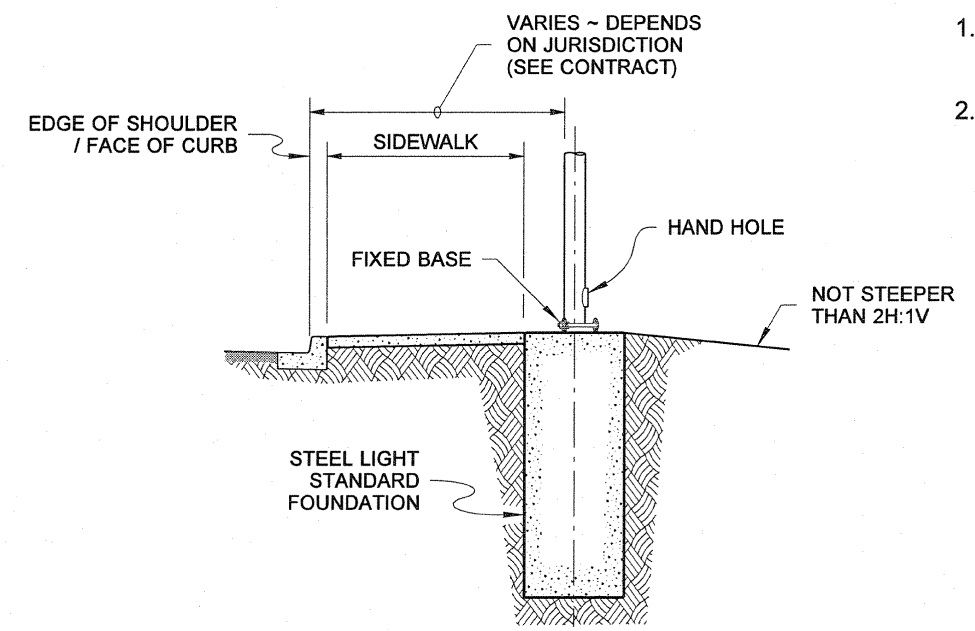

SECTION VIEW

CASE J

POSTED SPEED LIMIT LESS THAN 35 MPH

NOTES

1. See **Standard Plan J-28.30** for foundation details and construction methods.
2. See **Standard Plan J-28.50** for pole base and hand hole details.

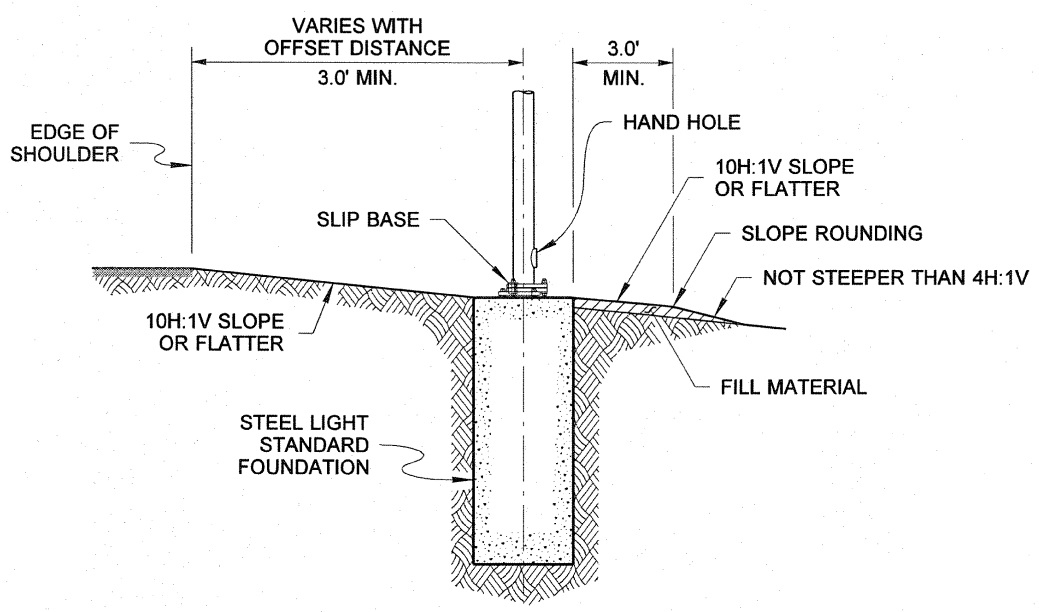

SECTION VIEW

CASE K

ROADWAYS WITH 10H:1V OR FLATTER SIDE SLOPES

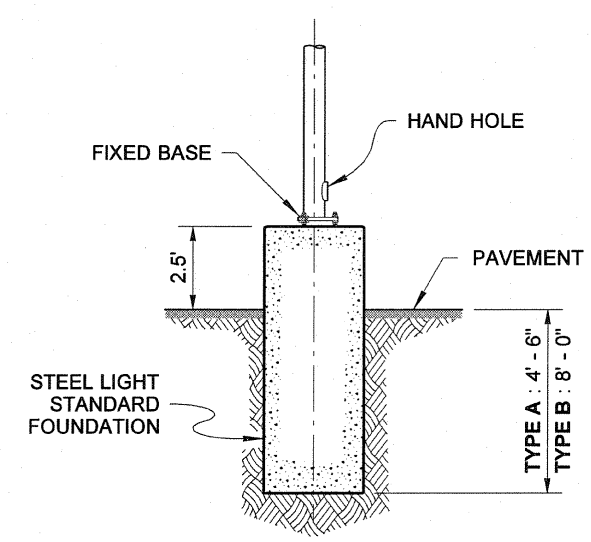

SECTION VIEW

CASE L

PARKING LOTS

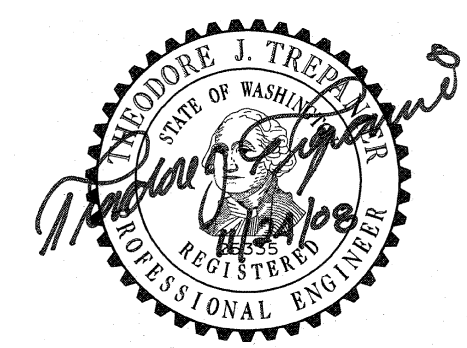

STEEL LIGHT STANDARD PLACEMENT MISCELLANEOUS

STANDARD PLAN J-28.26-01

SHEET 1 OF 1 SHEET

APPROVED FOR PUBLICATION

STATE DESIGN ENGINEER — DATE 12/2/08

Washington State Department of Transportation

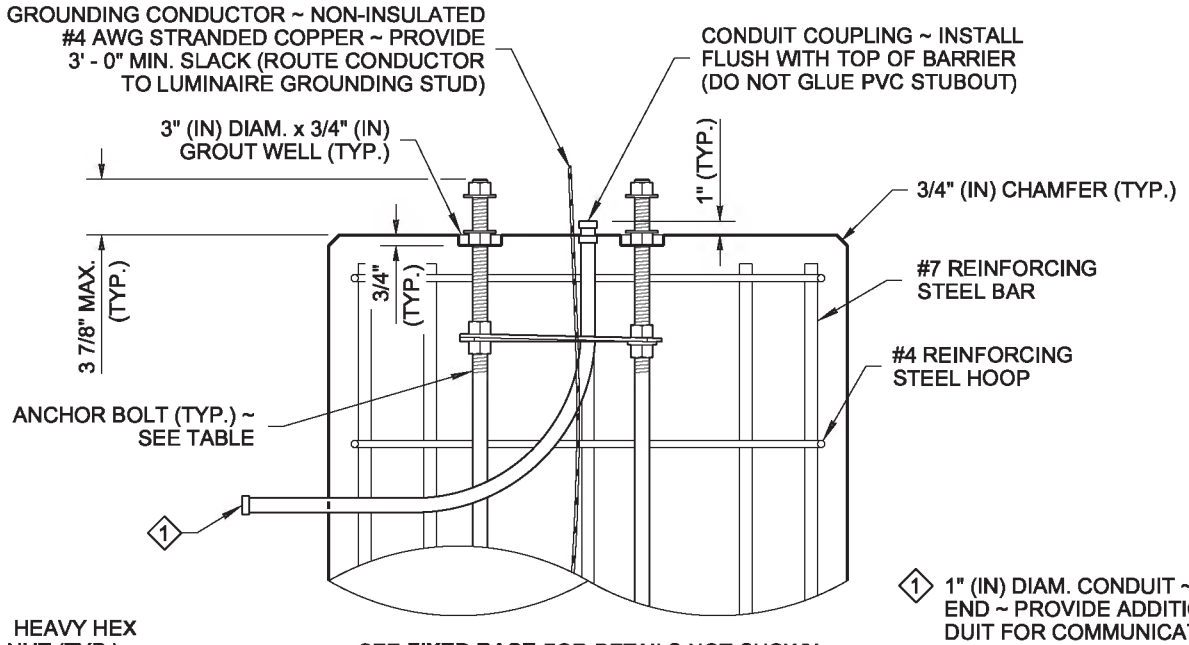

SEE **FIXED BASE** FOR DETAILS NOT SHOWN

PARTIAL ELEVATION VIEW

1 1" (IN) DIAM. CONDUIT ~ CAP EACH END ~ PROVIDE ADDITIONAL CONDUIT FOR COMMUNICATION OR SIGNAL CABLE WHERE SHOWN IN THE CONTRACT

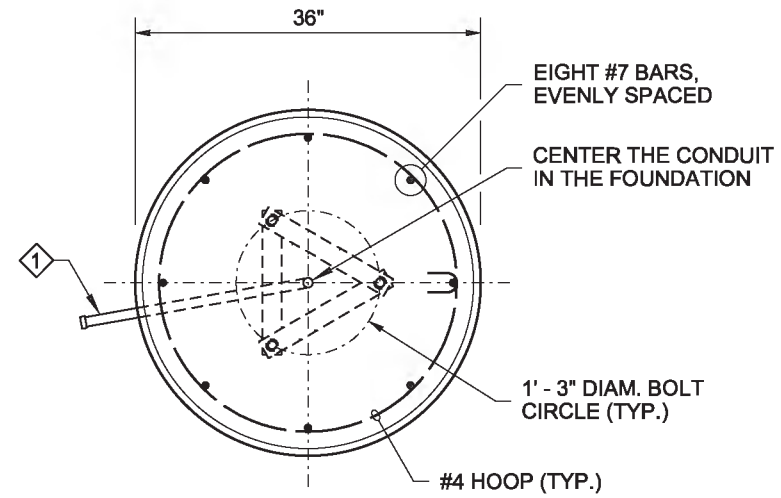

TOP VIEW

FIXED BASE

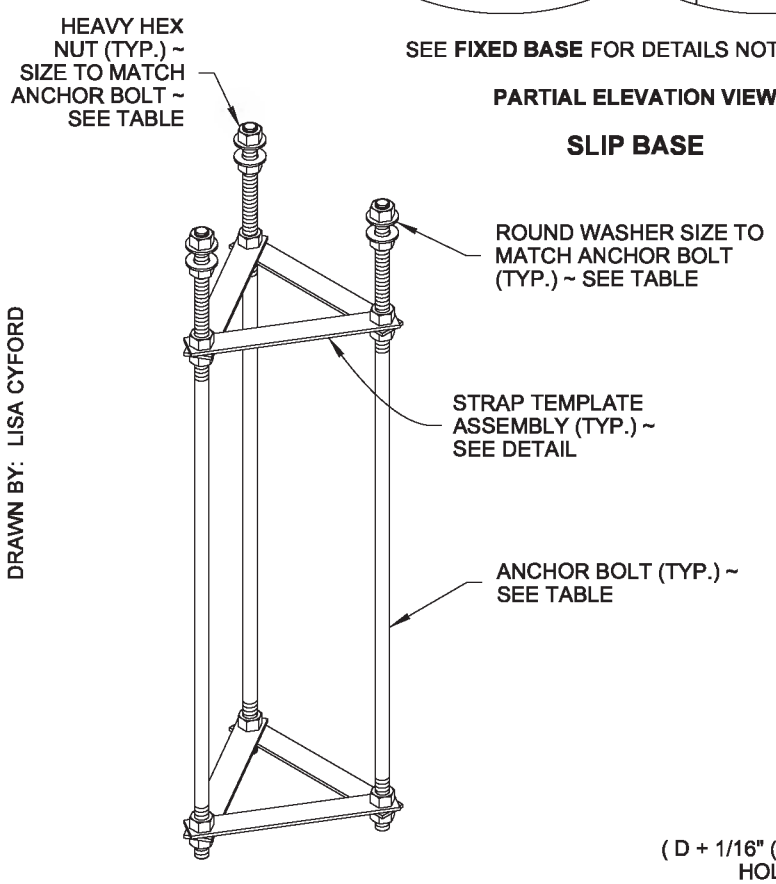

ISOMETRIC VIEW

ANCHOR BOLT ASSEMBLY

(SLIP BASE SHOWN)

ANCHOR BOLT TABLE			
LUMINAIRE HEIGHT (FT) (H1)	MAST ARM TYPE	MAST ARM LENGTH (FT)	ANCHOR BOLT DIAMETER (IN) "D"
20' TO 50'	SINGLE	6' TO 16'	1"
20' TO 50'	DOUBLE	6' TO 8'	1"
20' TO 45'	DOUBLE	10' TO 16'	1"
46' TO 50'	DOUBLE	10' TO 16'	1 1/8"

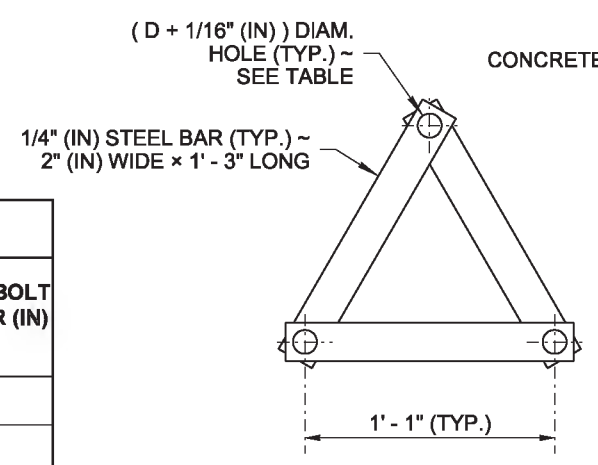

TOP VIEW

STRAP TEMPLATE ASSEMBLY

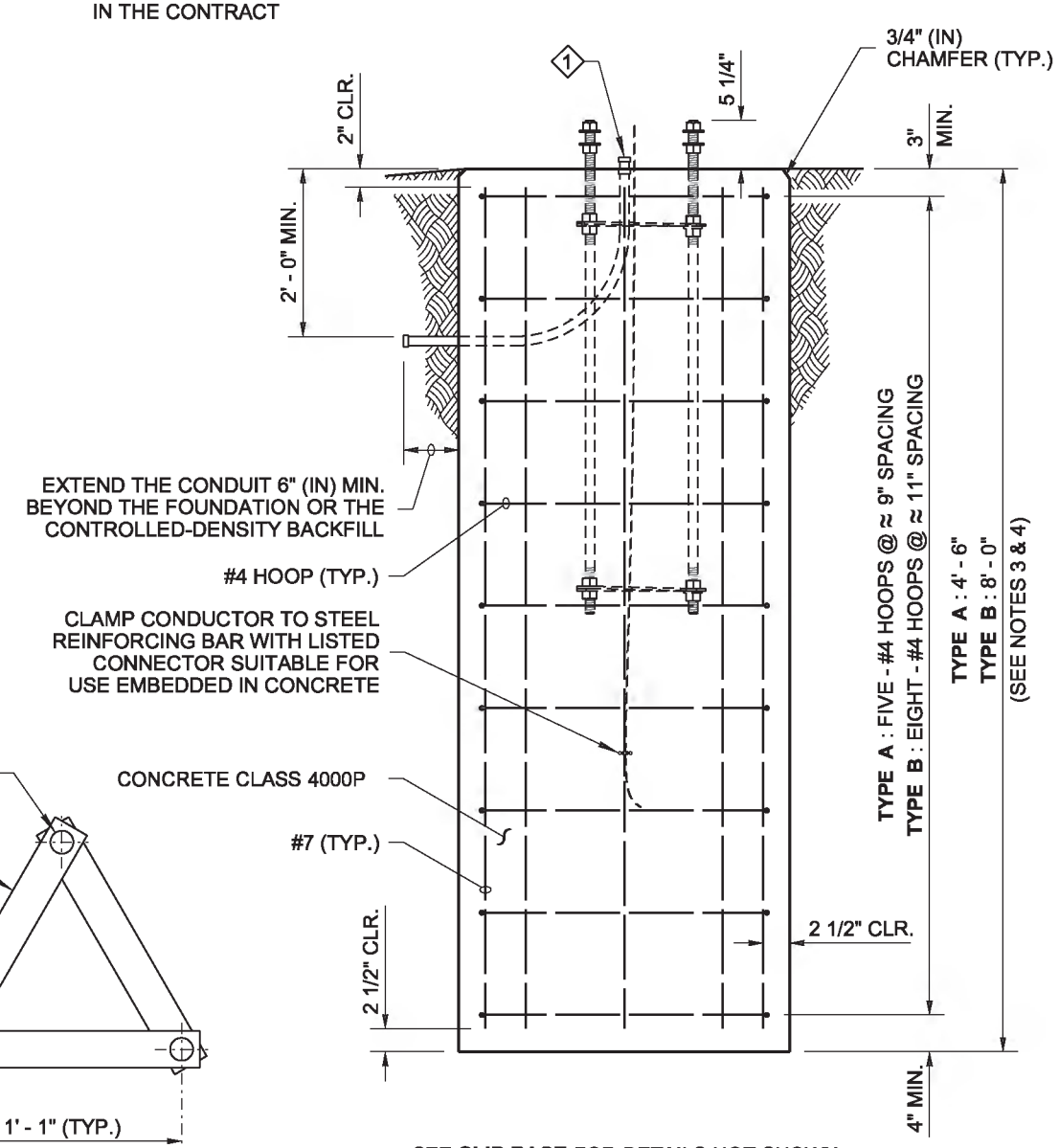

SEE **SLIP BASE** FOR DETAILS NOT SHOWN

ELEVATION VIEW

FIXED BASE

NOTES

1. See **Standard Plan J-28.40** for Luminaire Pole base mounting details.
2. The Strap Templates shall be held in place by nuts, 6" (in) from the top of the foundation and 3" (in) from the bottom of the anchor bolts. Eighteen heavy duty hex nuts and six round washers are required for a slip base assembly. Eighteen heavy duty hex nuts and six plate washers are required for a fixed base assembly.
3. Use Steel Light Standard Foundation **Type A** on level ground or slopes not exceeding 4H : 1V. Use **Type B** for slopes steeper than 4H : 1V, but not exceeding 2H : 1V. Slopes steeper than 2H : 1V shall require a special design.
4. These foundations are designed for a minimum of 2000 PSF **(TYPE A)** or 1500 PSF **(TYPE B)** allowable lateral bearing pressure for the soil. A special foundation shall be required for soil with allowable lateral bearing pressure lower than 1500 PSF.
5. The Luminaire Pole height shall not exceed 50' (ft) (**H1**).
6. Slip bases shall not be installed on 50' (ft) (**H1**) poles with Double Mast Arms, nor on poles weighing more than 1000 lbs.
7. Slip bases are required on poles installed inside the Design Clear Zone, and on poles installed behind traffic barrier that are within the traffic barrier deflection zone.
8. Foundations constructed within Media Filter Drains shall be increased in depth by the depth of the Media Filter Drain.
9. Exposed portions of the foundation shall be formed to create a Class 2 surface finish. All forming shall be removed upon completion of foundation construction.
10. For excavation, concrete placement, and backfill options, see METHOD 1 and METHOD 2 on Sheet 2 of 2.
11. The anchor bolts shall be high-strength steel, manufactured from ASTM F1554 Grade 105, with heavy hex nuts and hardened washers. Galvanize the anchor bolts according to ASTM F2329.
12. The foundation shall be grounded in accordance with the requirements of **Standard Specification 8-20.3(4).**
13. See **Standard Plans C-8b** and **C-85.14** for steel light standards on traffic barrier.

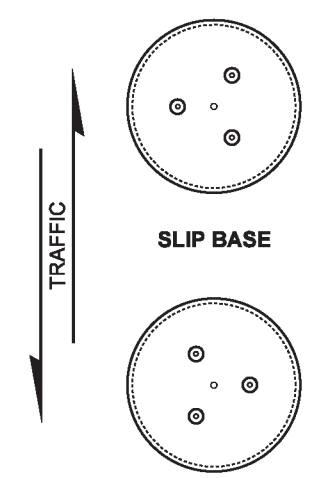

SLIP BASE

FIXED BASE

ANCHOR BOLT LAYOUT

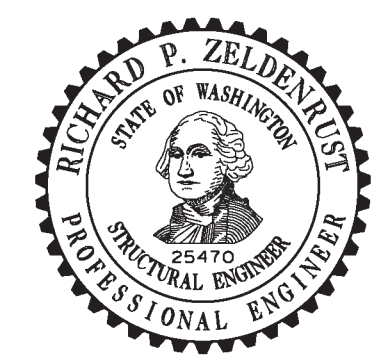

Zeldenrust, Richard
Jun 10 2014 10:37 AM

STEEL LIGHT STANDARD FOUNDATION TYPES A & B

STANDARD PLAN J-28.30-03

SHEET 1 OF 2 SHEETS

APPROVED FOR PUBLICATION
Bakotich, Pasco
Jun 11 2014 1:33 PM
STATE DESIGN ENGINEER

Washington State Department of Transportation

DRAWN BY: LISA CYFORD

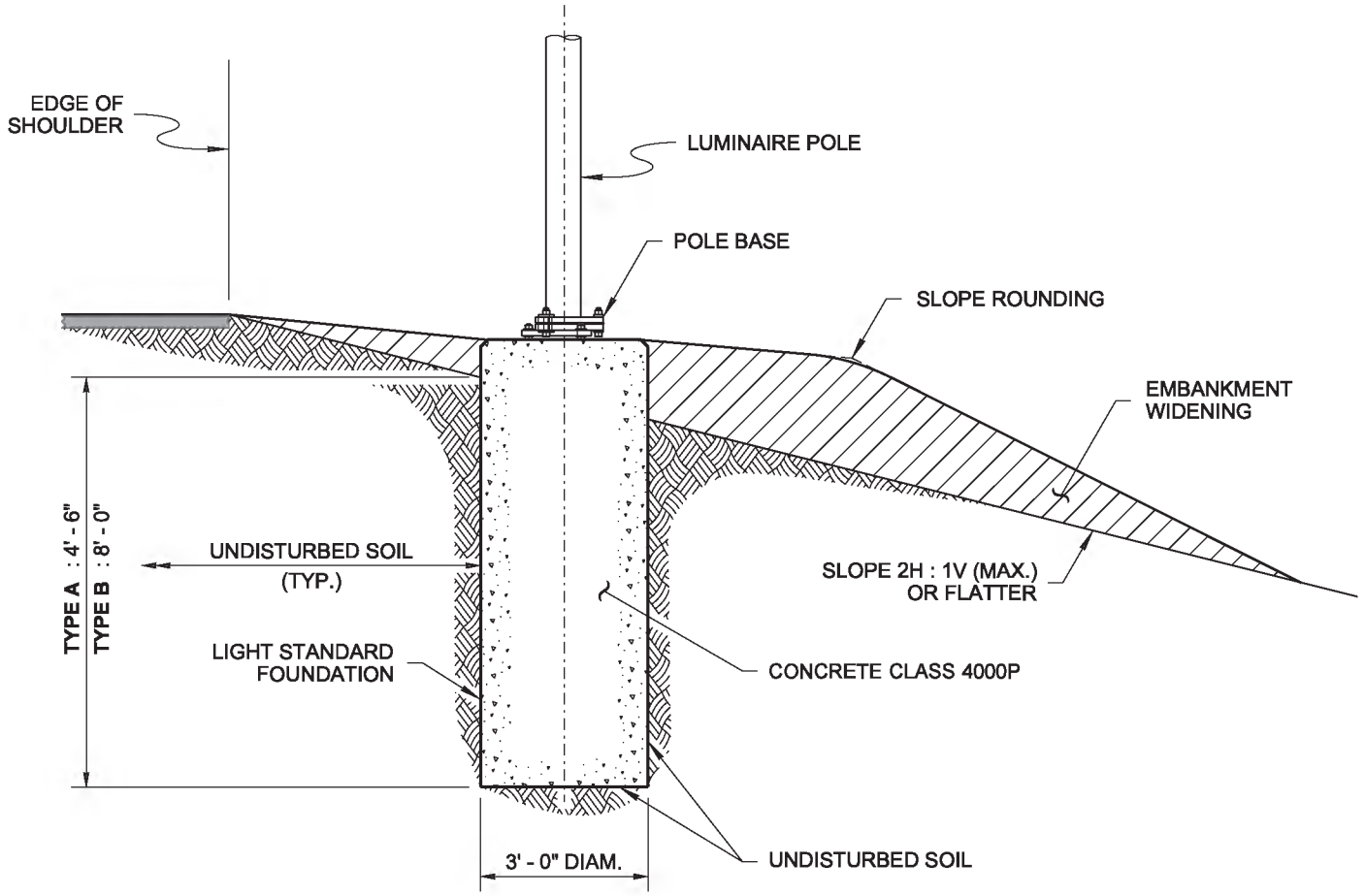

(CASE A SHOWN)

METHOD 1

NO SUBSURFACE FORM

This option is used only when the existing soil in the hole will remain standing and the cement concrete can be placed without causing the soil to collapse. Concrete shall be cast directly against undisturbed soil.

Auger the hole for the foundation. Use a paper or cardboard form to achieve a smooth finish on the final exposed cement concrete. Support the form as necessary to remain plumb.

See **Standard Plans J-28.24** and **J-28.26** for maximum heights of exposed foundation when no embankment widening is to be installed.

Place the concrete foundation.

After concrete has cured, remove the paper or cardboard form portion.

Construct the embankment widening (if required).

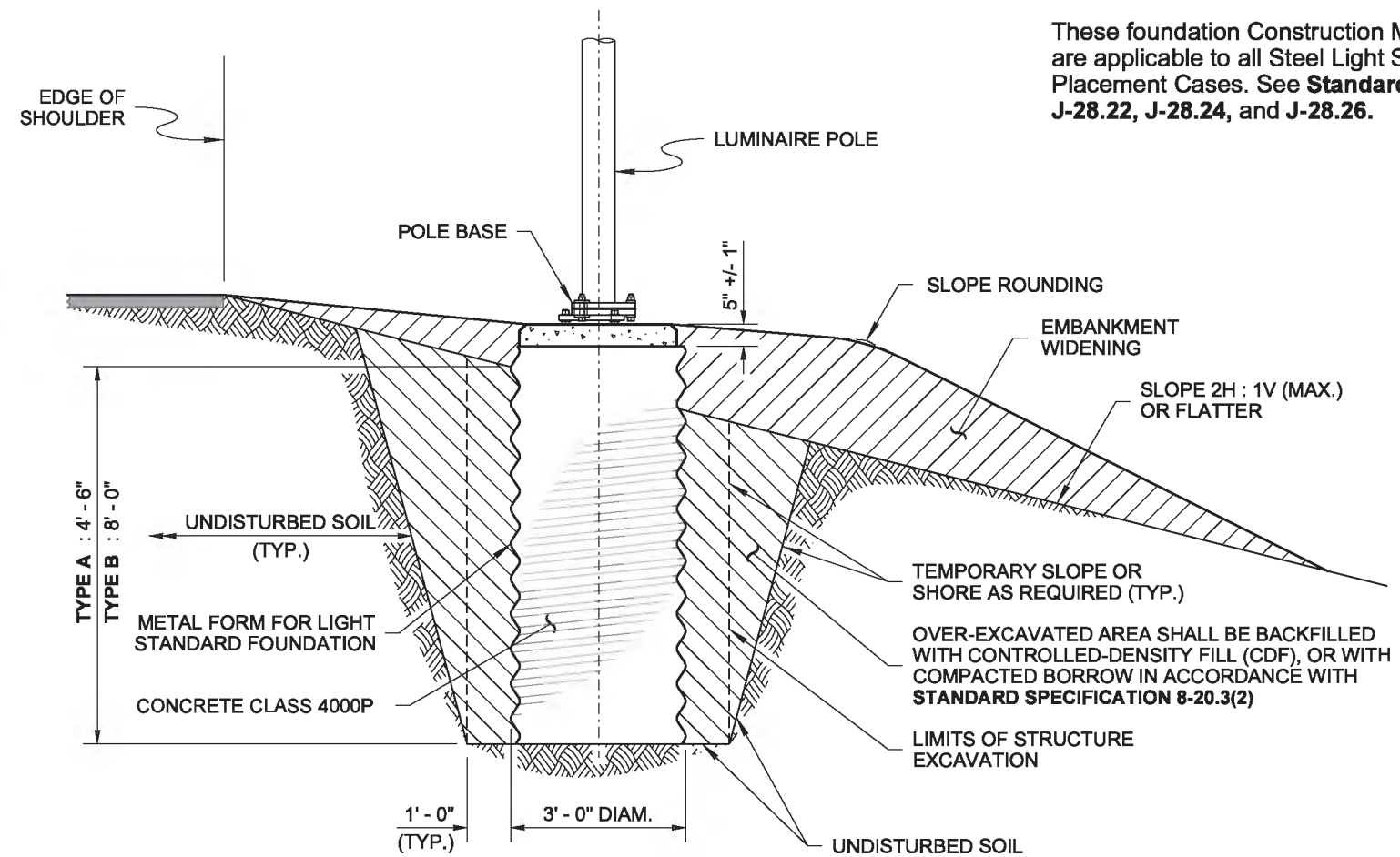

(CASE A SHOWN)

METHOD 2

METAL (SUBSURFACE) FORM REQUIRED

When the existing soil will not retain a vertical face, over-excavate the foundation area and install a 36" (in) diameter corrugated metal (pipe) form. The corrugated metal form shall not extend more than 5" (in) +/- 1" (in) below any portion of the foundation that will remain exposed upon final grading. Continue forming to full height using a paper or cardboard form to achieve a smooth finish on final exposed cement concrete. Support the form as necessary to remain plumb.

See **Standard Plans J-28.24** and **J-28.26** for maximum heights of exposed foundation when no embankment widening is to be installed.

Place the concrete foundation.

After concrete has cured, remove the paper or cardboard form portion.

Backfill with controlled-density fill or compacted borrow in accordance with **Standard Specification 8-20.3(2).**

Construct the embankment widening (if required).

NOTE

These foundation Construction Methods are applicable to all Steel Light Standard Placement Cases. See **Standard Plans J-28.22, J-28.24,** and **J-28.26.**

CONSTRUCTION METHODS

Zeldenrust, Richard
Jun 10 2014 10:38 AM

STEEL LIGHT STANDARD FOUNDATION TYPES A & B

STANDARD PLAN J-28.30-03

SHEET 2 OF 2 SHEETS

APPROVED FOR PUBLICATION
Bakotich, Pasco
Jun 11 2014 1:33 PM
STATE DESIGN ENGINEER

Washington State Department of Transportation

DRAWN BY: LISA CYFORD

DRAWN BY: FERN LIDDELL

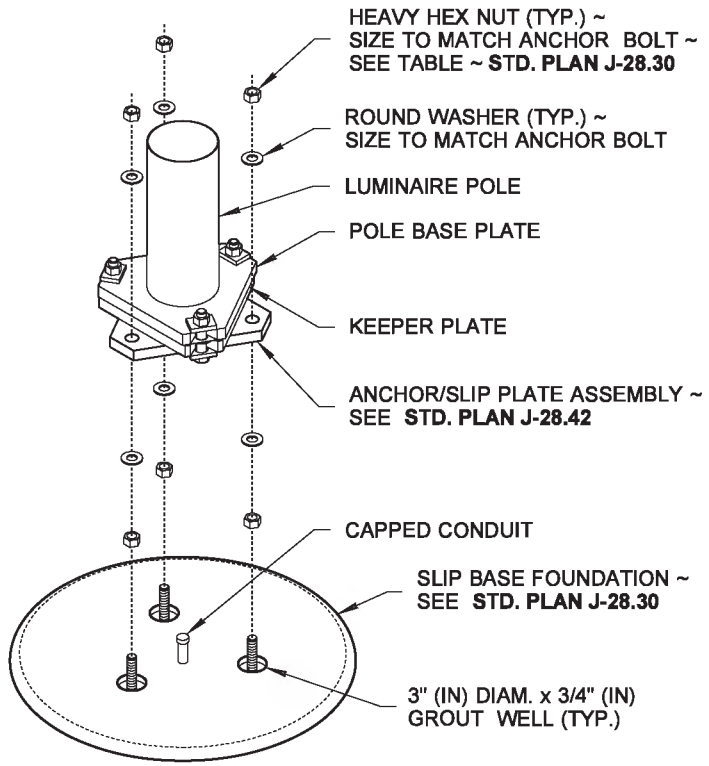

EXPLODED VIEW

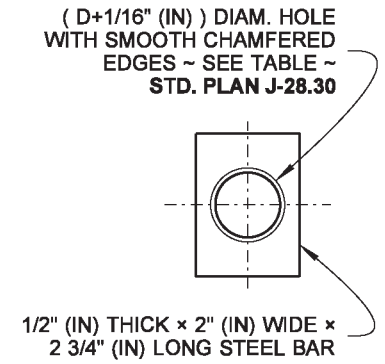

PLATE WASHER DETAIL

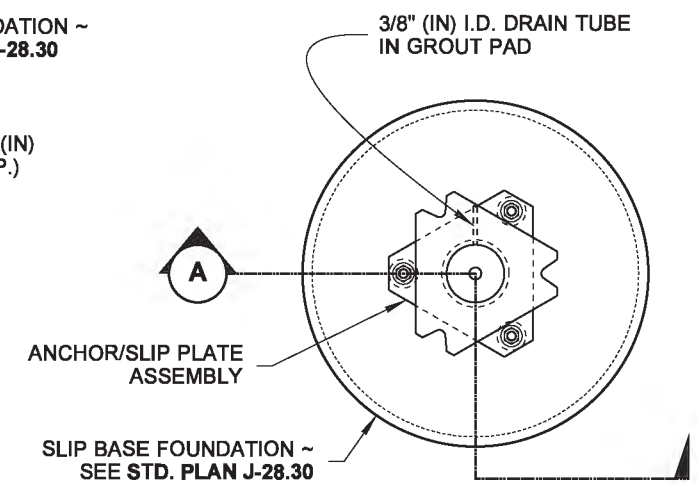

PLAN VIEW

SLIP BASE

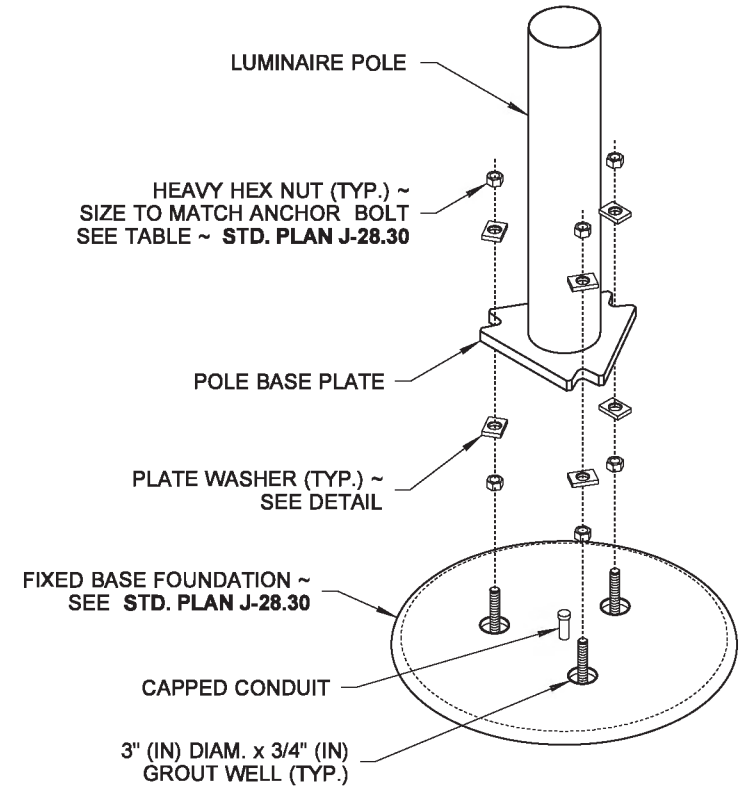

EXPLODED VIEW

NOTES

1. 50' (ft) (**H1**) poles with double mast arms or poles weighing in excess of 1000 LBS shall not be installed on a slip base.
2. Galvanizing shall be in accordance with AASHTO M 111.
3. See **Standard Plans C-8b, C-85.15,** and **J-28.60** for foundation and base plate requirements when light standards are mounted on cement concrete traffic barrier.
4. See **Standard Specification Sections 6-03.3(33)** and **8-20.3 (4)** for the torque requirements for all of the anchor bolt installations. Install 1" (in) diameter clamping bolts in all slip bases to **a torque of 95 Foot-Pounds -** See **Standard Specification Section 8-20.3 (13)A. DO NOT OVERTIGHTEN.** After state inspection, burr threads to prevent nut rotation.
5. For anchor bolt Diameter " **D** ", see table, **Standard Plan J-28.30**.

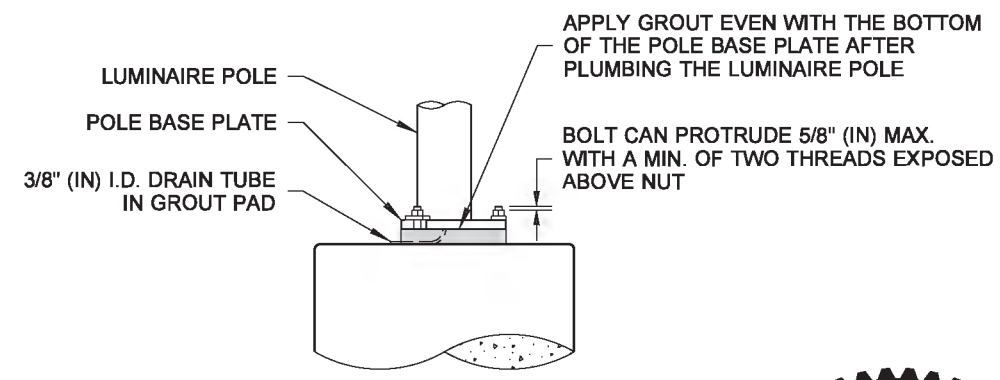

ASSEMBLED AND GROUTED

ELEVATION VIEW

FIXED BASE

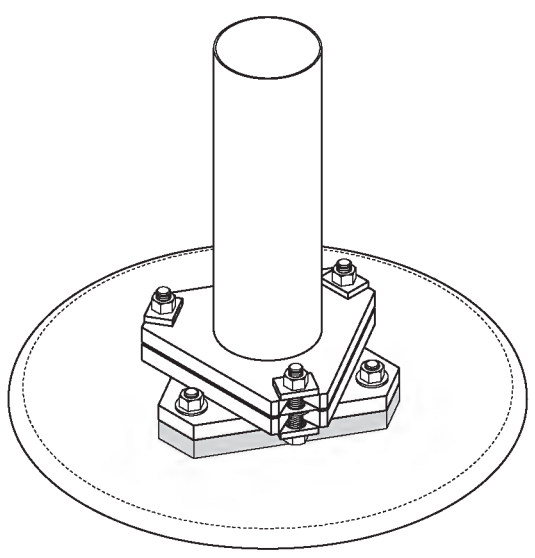

ASSEMBLED

ISOMETRIC VIEW

SLIP BASE

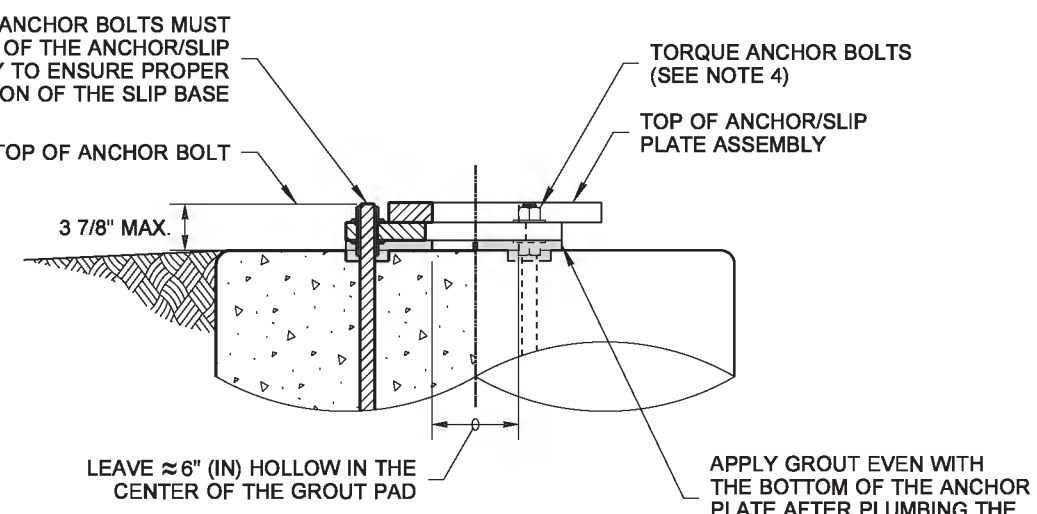

SECTION (A)

(CONDUIT NOT SHOWN)

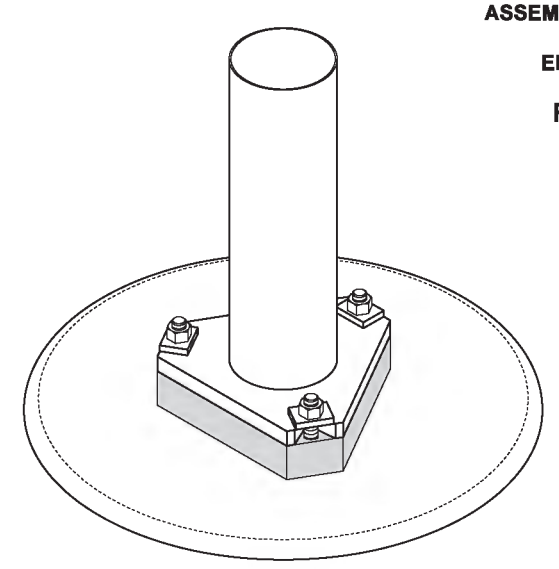

ASSEMBLED

ISOMETRIC VIEW

FIXED BASE

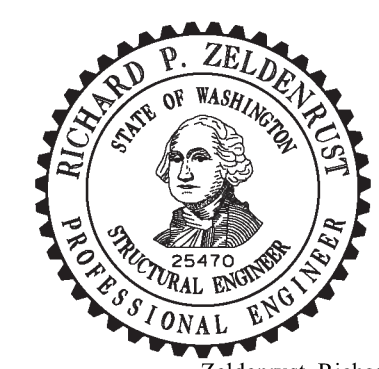

Zeldenrust, Richard
Jun 10 2014 10:39 AM

STEEL LIGHT STANDARD BASE MOUNTING

STANDARD PLAN J-28.40-02

SHEET 1 OF 1 SHEET

APPROVED FOR PUBLICATION
Bakotich, Pasco
Jun 11 2014 1:33 PM
STATE DESIGN ENGINEER
Washington State Department of Transportation

DRAWN BY: BILL BERENS

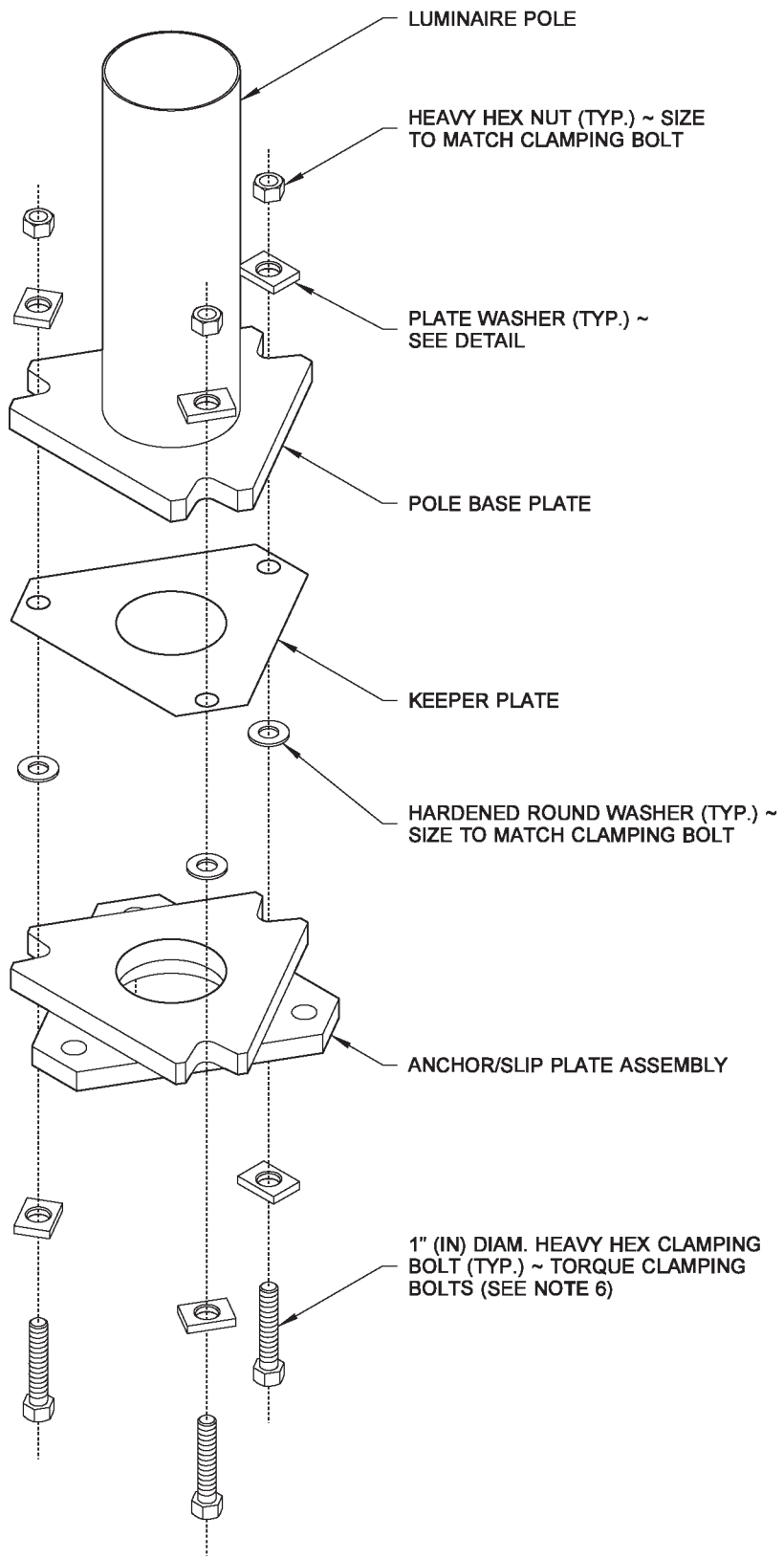

EXPLODED

ISOMETRIC VIEW

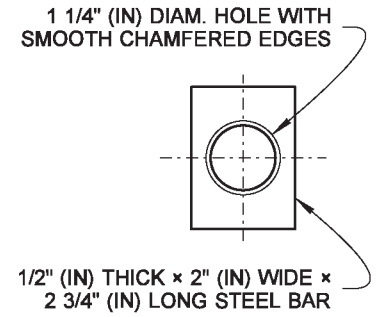

PLATE WASHER DETAIL

CLAMPING BOLT TABLE			
LUMINAIRE HEIGHT (FT) (H1)	MAST ARM TYPE	MAST ARM LENGTH (FT)	CLAMPING BOLT DIAMETER (IN) " D "
20' TO 50'	SINGLE	6' TO 16'	1"
20' TO 45'	DOUBLE	6' TO 8'	1"
46' TO 50'	DOUBLE	6' TO 8'	◇1
20' TO 45'	DOUBLE	10' TO 16'	◇1
46' TO 50'	DOUBLE	10' TO 16'	◇1

◇1 SLIP BASE NOT ALLOWED

NOTES

1. 50' (ft) (**H1**) poles with double mast arms or poles weighing in excess of 1000 lbs. shall not be installed on a slip base.
2. The Slip and Anchor Plates shall be manufactured from ASTM A572 GR.50 or ASTM A588. All Slip Plate notched surfaces shall be finished smooth.
3. The clamping bolts shall be high-strength steel, manufactured from AASHTO M 164, with heavy hex nut and hardened washer. Galvanize the Clamping Bolts according to AASHTO M 232.
4. Round and smooth all edges along wire-way to protect the conductors. See **Standard Plan J-28.70** for wiring details.
5. Galvanize the Anchor/Slip Plate after fabrication according to AASHTO M 111.
6. Clamping Bolt diameters may vary on existing installations. Replace them with the same size as the originals when repairing or reusing a luminaire pole.
   For 1" (in) clamping bolts, tighten to 95 ft-lbs.
   For 1 1/4" (in) clamping bolts, tighten to 104 ft-lbs.
   DO NOT OVERTIGHTEN. After state inspection, burr threads to prevent nut rotation.

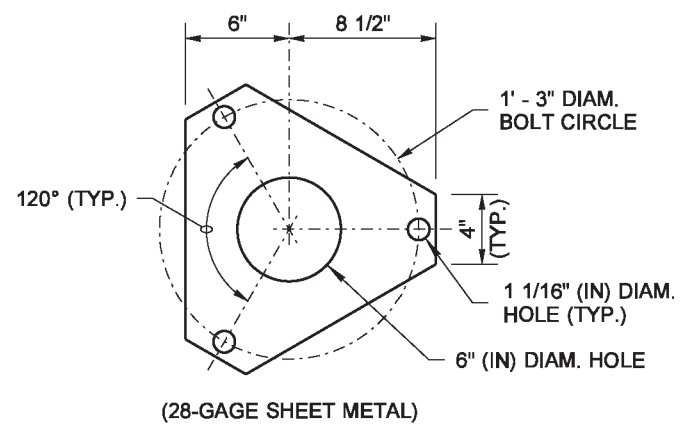

(28-GAGE SHEET METAL)

TOP VIEW

KEEPER PLATE

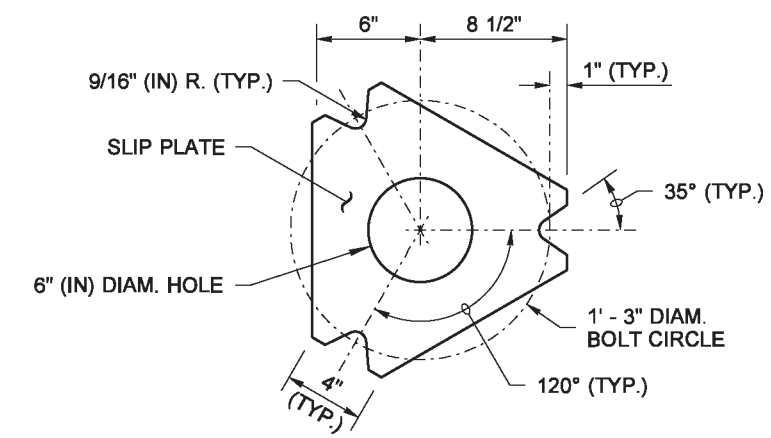

TOP VIEW

SLIP PLATE

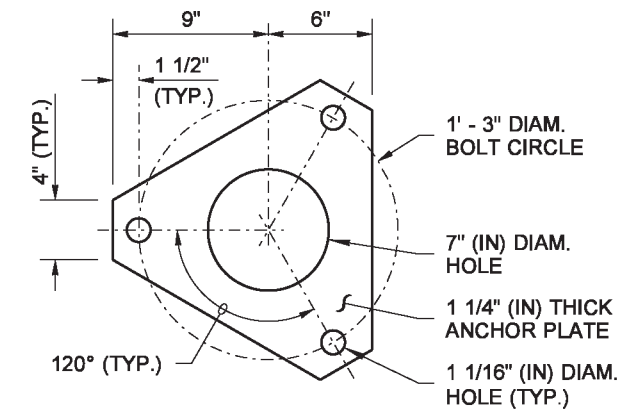

TOP VIEW

ANCHOR PLATE

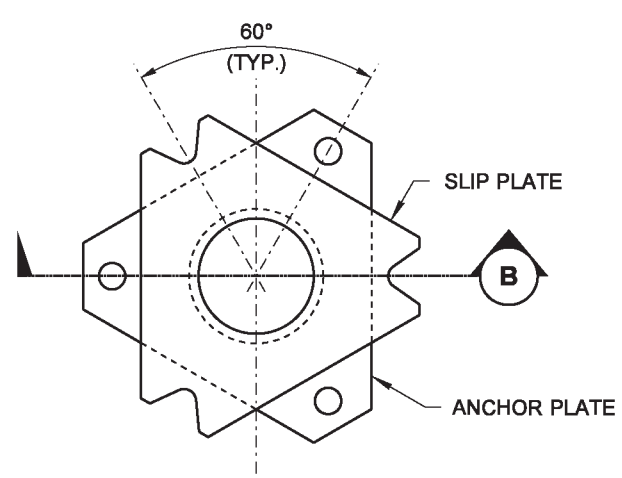

TOP VIEW

ANCHOR/SLIP PLATE ASSEMBLY

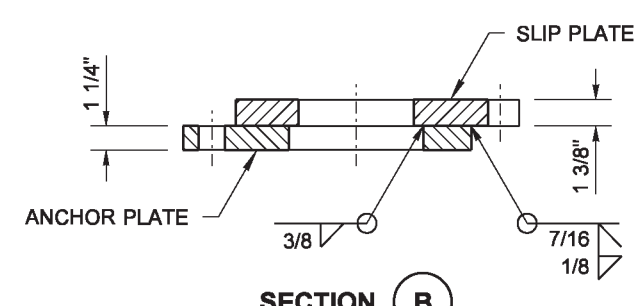

SECTION B

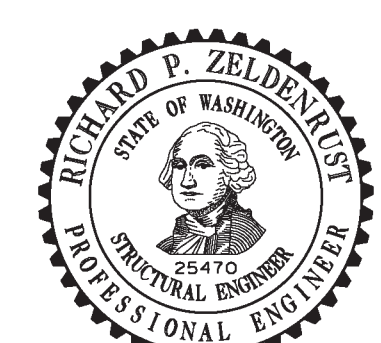

Zeldenrust, Richard
Jun 10 2014 10:40 AM

STEEL LIGHT STANDARD ANCHOR/SLIP PLATE FOR SLIP BASE

STANDARD PLAN J-28.42-01

SHEET 1 OF 1 SHEET

APPROVED FOR PUBLICATION

Bakotich, Pasco
Jun 11 2014 1:34 PM

STATE DESIGN ENGINEER

Washington State Department of Transportation

This page left blank intentionally.

BASE TABLE				
ADAPTOR TYPE	ANCHOR BOLT (IN) ⟨1⟩	BOLT CIRCLE DIAMETER (IN) "BC" ⟨2⟩	EXISTING BASE TYPE	LUMINAIRE HEIGHT (± 2' - 6")
A-1	1"	11"	WELDED PLATE	⟨3⟩
A-2	1"	12 1/4"	CAST ALUMINUM	⟨3⟩
A-3	1"	12 3/4"	STEEL TRANSFORMER	⟨3⟩
A-4	1 1/8"	14 1/8"	2-PC. ALUM. CLAMP	⟨4⟩
A-5	1 1/4"	14 1/8"	2-PC. ALUM. CLAMP	40'

⟨1⟩ USE MATCHING DIAMETER FOR THREADED STUDS.

⟨2⟩ CONTRACTOR SHALL VERIFY BOLT CIRCLE "BC" IN THE FIELD BEFORE ORDERING. IF "BC" OR ANCHOR BOLT SIZES DIFFER FROM THOSE LISTED, CONTACT HQ BRIDGE AND STRUCTURES OFFICE.

⟨3⟩ 40' (FT) LUMINAIRE W/ 1 x 16' (FT) (MAX.) MAST ARM OR 35' (FT) LUMINAIRE W/ 2 x 16' (FT) MAST ARMS.

⟨4⟩ 50' (FT) LUMINAIRE W/ 1 x 16' (FT) (MAX.) MAST ARM OR 40' (FT) LUMINAIRE W/ 2 x 16' (FT) MAST ARMS - TOTAL WEIGHT 1000 LBS (MAX.).

DRAWN BY: COLBY FLETCHER

CONSTRUCTION NOTES

⟨1⟩ Wire brush existing threads.

⟨2⟩ Apply two coats of galvanizing paint (per **Standard Specification 9-08.1(2)B**).

⟨3⟩ Tighten bolt by "Turn of Nut" method (per **Standard Specification 6-03.3(33)**).

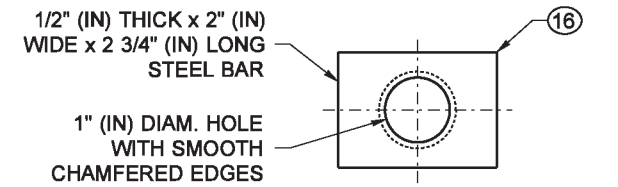

PLATE WASHER DETAIL ⟨16⟩
(ASTM A36 OR A572 ~ GRADE 50)

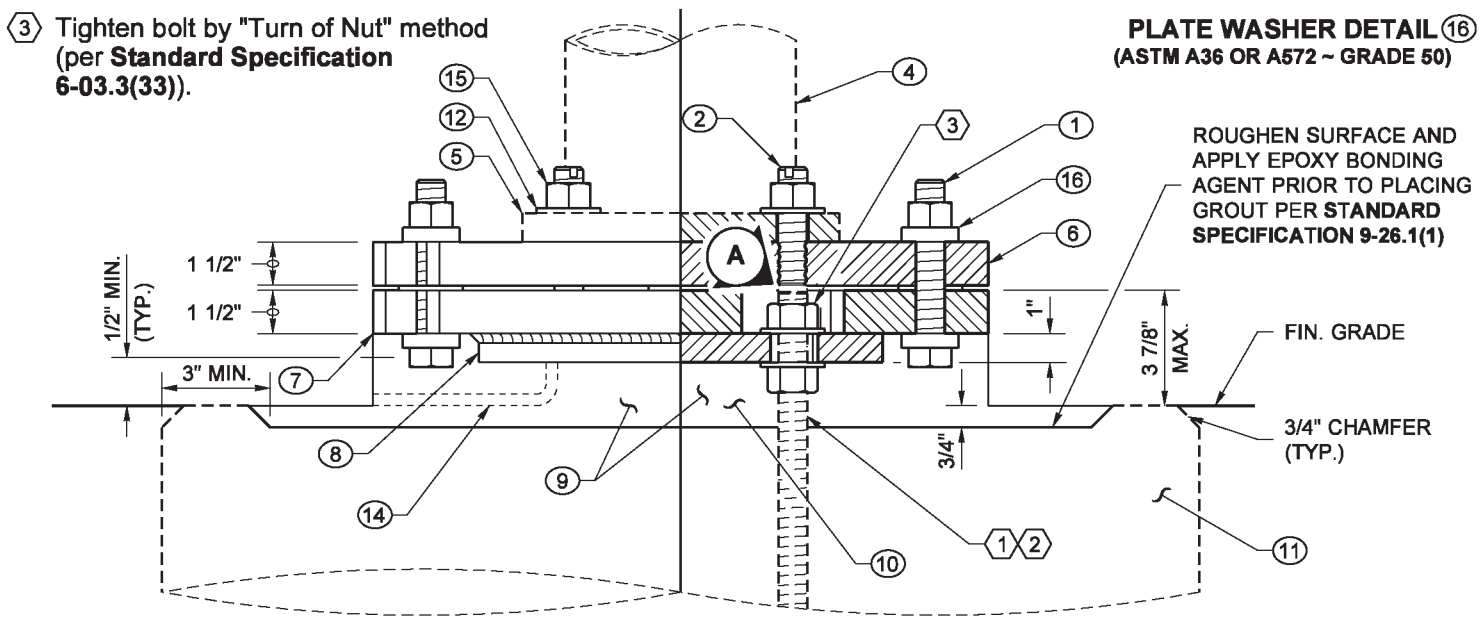

SECTION ⟨1⟩

NOTES

1. The purpose of this plan is to provide the details for retrofitting a 4-bolt frangible base with a slip base assembly.
2. Existing anchor bolts shall be inspected for corrosion, thread damage, and galvanizing. To minimize galvanic corrosion between dissimilar metals, ensure galvanizing remains intact while installing aluminum luminaire.
3. After bolting the bottom slip plate assembly to the foundation, fill the slotted bolt holes with mastic per **Standard Specification 9-08.7**.
4. Grade around the foundation to ensure the stub height does not exceed 3 7/8" (in). For grading requirements, see **Standard Plan J-28.22**.
5. Removal of the frangible base from the existing base plate is required.
6. Misaligned anchor bolts shall be removed and replaced.
7. This adaptor shall be used only on luminaire poles that contain a handhole. Replace standards and foundation when the handhole is located in the frangible base.
8. Galvanize the anchor plate, bottom slip plate, and top slip plate after fabrication according to **ASTM A123**.
9. Galvanize all hardware according to **ASTM F2329**.

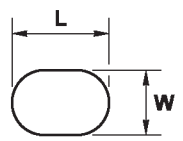

ANCHOR PLATE SLOT DETAIL

ANCHOR PLATE SLOT TABLE		
ANCHOR BOLT DIAMETER (IN)	SIZE W (IN)	SIZE L (IN)
1"	1 1/4"	2"
1 1/8"	1 1/4"	2"
1 1/4"	1 1/2"	2 1/4"

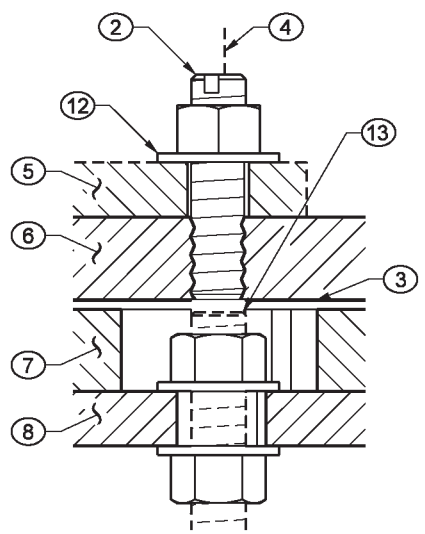

DETAIL ⟨A⟩
(TYP. OF FOUR PLACES)

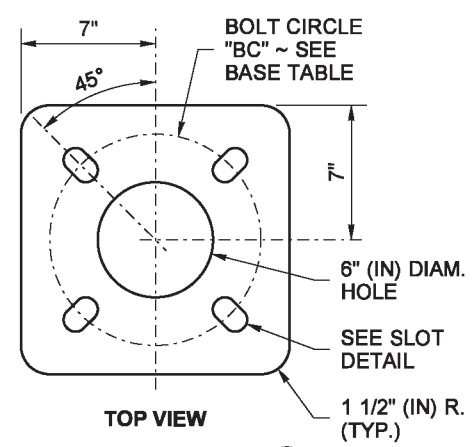

TOP VIEW

ANCHOR PLATE ⟨8⟩

KEY

⟨1⟩ CLAMPING BOLTS, 7/8" (IN) DIAM. HEX HEAD BOLT AND NUT, TWO PLATE WASHERS, ONE HARDENED ROUND WASHER, 87 FT-LBS TORQUE (THREE CLAMPING BOLT ASSEMBLIES PER SLIP BASE) (**PER ASTM A325**)

⟨2⟩ THREADED SLOTTED STUD ~ SEE BASE TABLE FOR DIAMETER, HARDENED WASHER, AND HEAVY HEX NUT (FOUR PER BASE PLATE) ~ INSERT STUD AND CENTER PUNCH AT BOTTOM PERIPHERY TO LOCK TAPPED STUD IN PLACE PRIOR TO GALVANIZING (**PER ASTM F1554 ~ GRADE 105**)

⟨3⟩ KEEPER PLATE ~ 0.0149" (IN) 28 GAGE PLATE (**PER ASTM A653 ~ COATING DESIGNATION G90**)

⟨4⟩ POLE WALL (EXISTING)

⟨5⟩ POLE BASE PLATE (EXISTING)

⟨6⟩ TOP SLIP PLATE (**PER ASTM A36**)

⟨7⟩ BOTTOM SLIP PLATE (**PER ASTM A36**)

⟨8⟩ ANCHOR PLATE (**PER ASTM A36**)

⟨9⟩ REMOVE GROUT (EXISTING WITH DRAIN)

⟨10⟩ NEW GROUT PAD WITH DRAIN

⟨11⟩ FOUNDATION (EXISTING)

⟨12⟩ HARDENED WASHER (**PER ASTM F436**)

⟨13⟩ ANCHOR BOLT (EXISTING) ~ TRIM TO CLEAR SLIP PLATE BY 1/8" (IN) MIN.

⟨14⟩ 3/8" (IN) DIAM DRAIN TUBE (PER **STANDARD SPECIFICATION 9-29.2(3)**)

⟨15⟩ HEAVY HEX NUT (TYP.) (**PER ASTM A563 ~ GRADE DH**)

⟨16⟩ PLATE WASHER

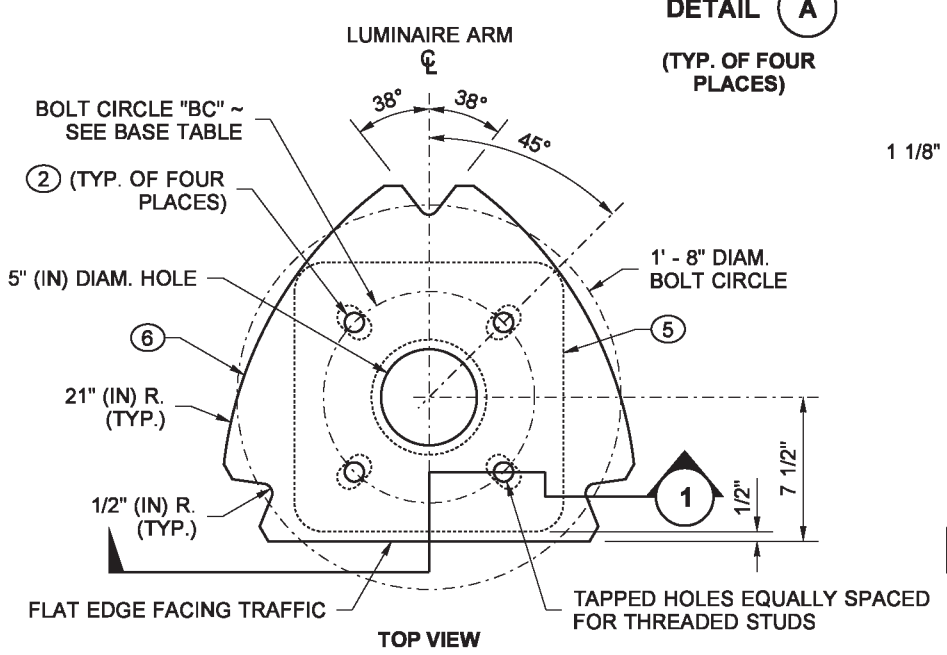

TOP VIEW

TOP SLIP PLATE ⟨6⟩

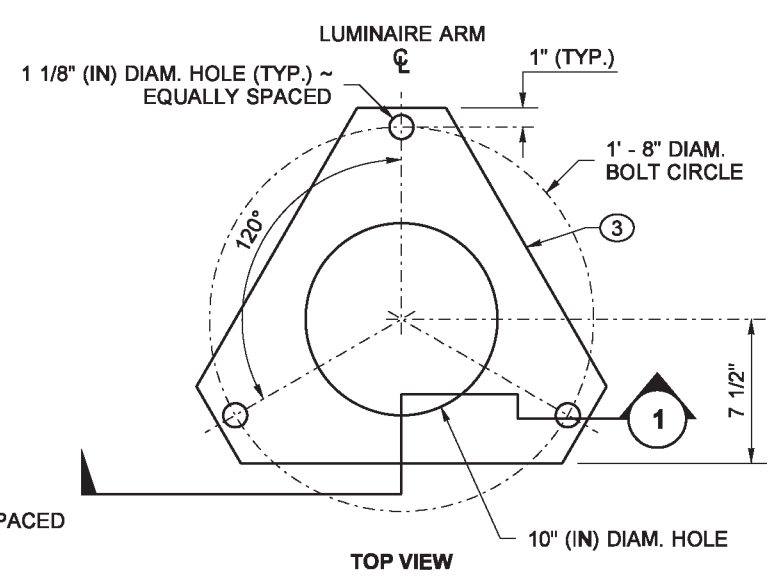

TOP VIEW

KEEPER PLATE ⟨3⟩

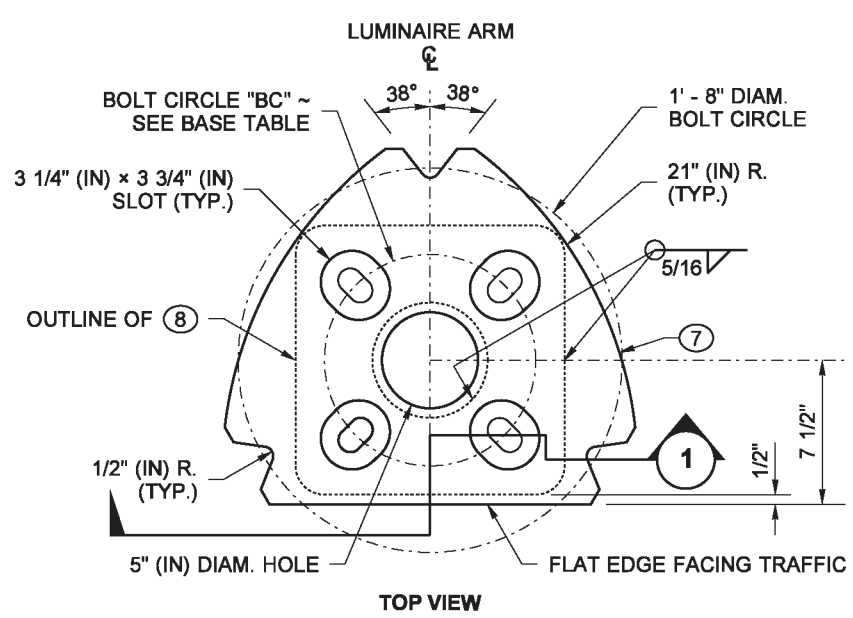

TOP VIEW

BOTTOM SLIP PLATE ⟨7⟩

RICHARD P. ZELDENRUST
STATE OF WASHINGTON
25470
STRUCTURAL ENGINEER
PROFESSIONAL ENGINEER

Zeldenrust, Richard
Jun 10 2014 1:02 PM

SLIP BASE ADAPTOR FOR 4-BOLT LIGHT STANDARD BASE STANDARD PLAN J-28.43-00

SHEET 1 OF 1 SHEET

APPROVED FOR PUBLICATION
Bakotich, Pasco
Jun 11 2014 1:35 PM
STATE DESIGN ENGINEER
Washington State Department of Transportation

DRAWN BY: LISA CYFORD

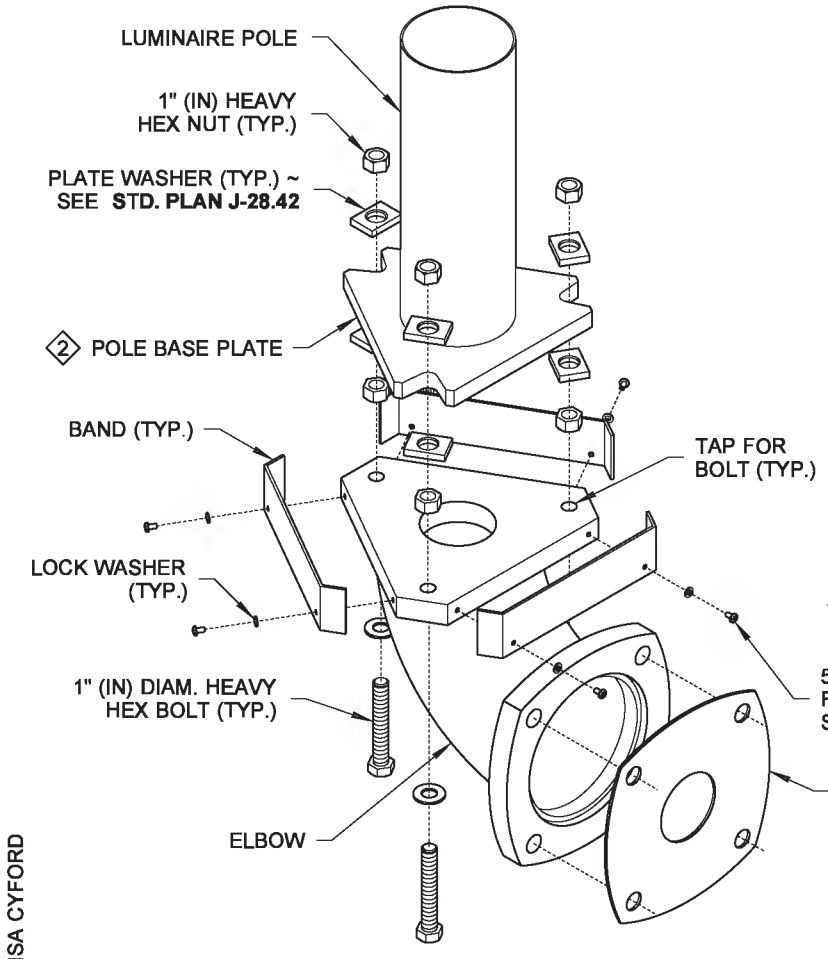

EXPLODED ISOMETRIC VIEW

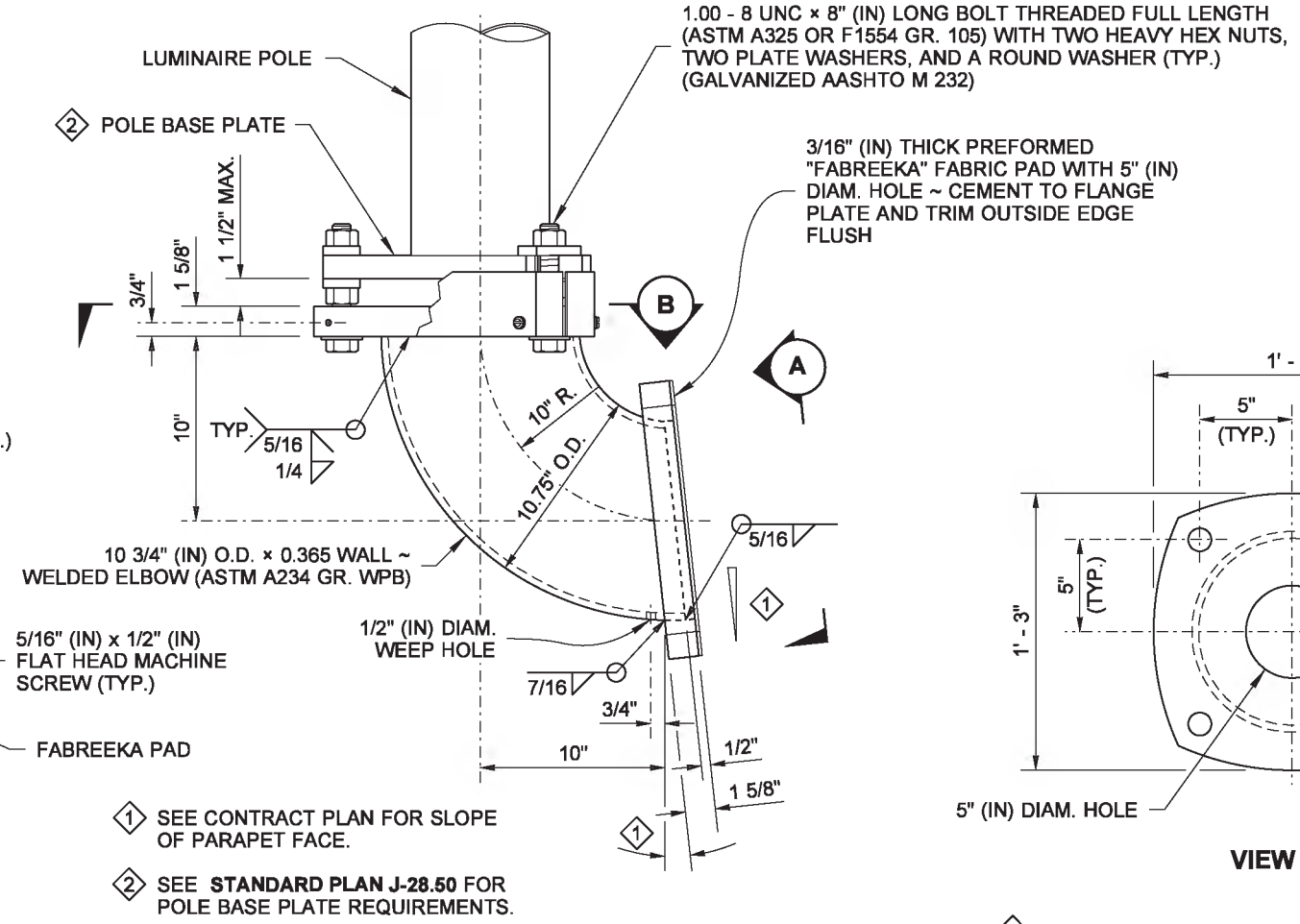

NOTES

1. Galvanize the Elbow Assembly after fabrication according to AASHTO M 111.
2. See **Standard Plan J-28.50** for Pole Base and Hand Hole details.
3. The presence of pedestrian railing shall be verified prior to light standard fabrication. When pedestrian railing is present or to be installed, locate hand hole as detailed in the Bridge Pedestrian Barrier details.

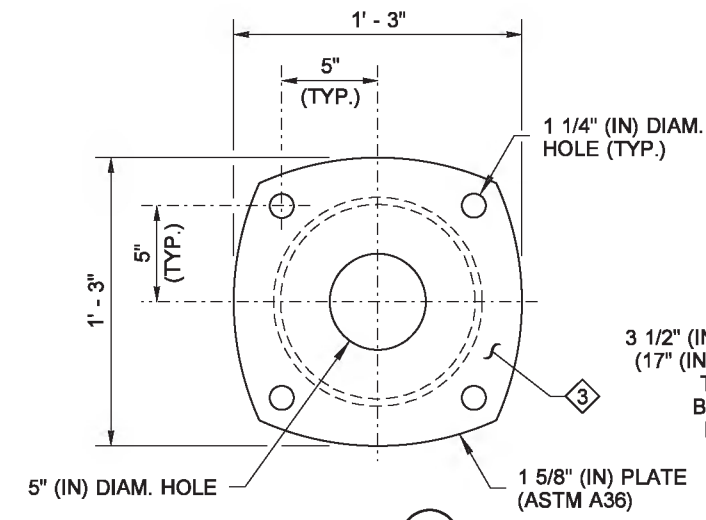

VIEW A

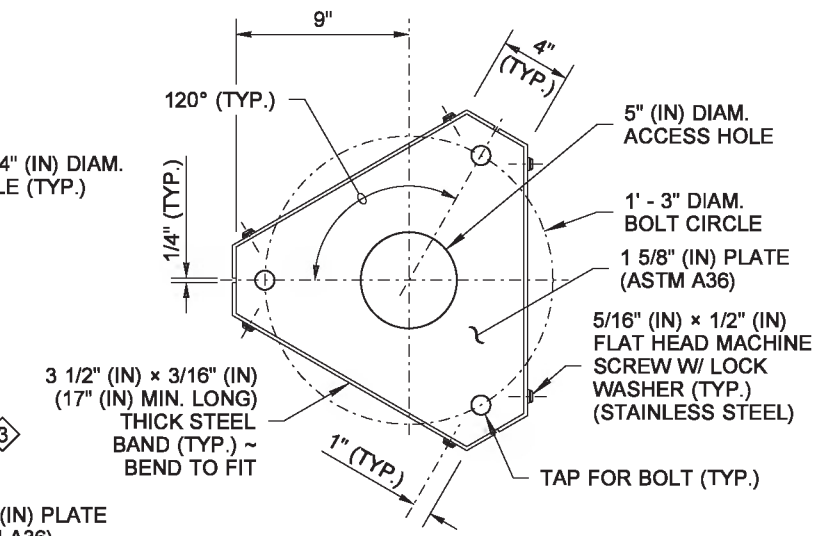

SECTION B

3 THE FACE SHALL BE PLANE AFTER FABRICATION, TO PROVIDE A SEAL BETWEEN THE BARRIER AND THE ELBOW.

STEEL LIGHT STANDARD ELBOW DETAIL

FOR LUMINAIRE POLES WITH SINGLE MAST ARM 12' - 0" OR LESS AND DOUBLE MAST ARMS 8' - 0" OR LESS, MOUNTED ON BRIDGE OR RETAINING WALLS.

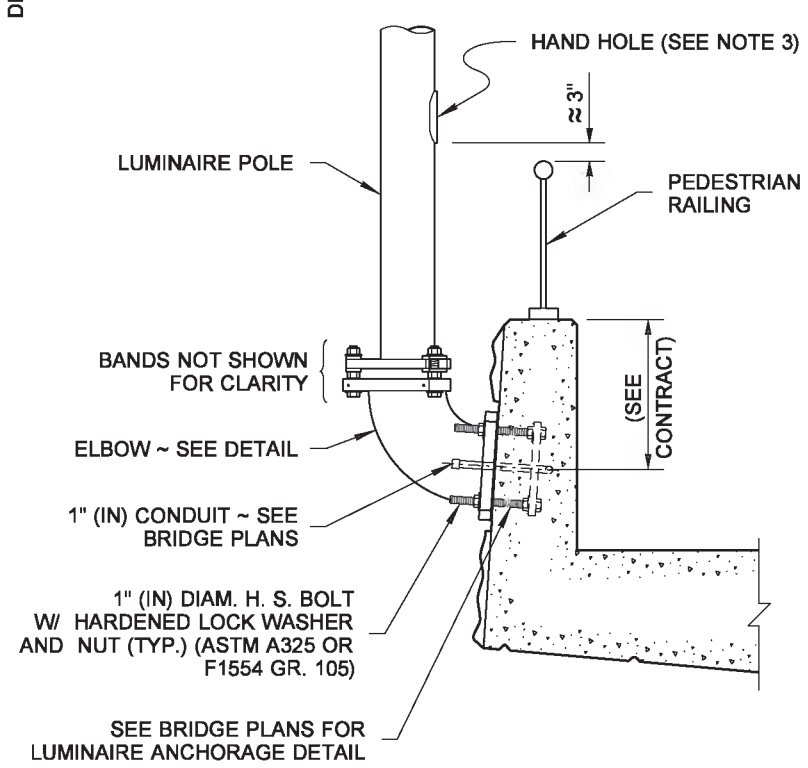

BRIDGE PEDESTRIAN BARRIER

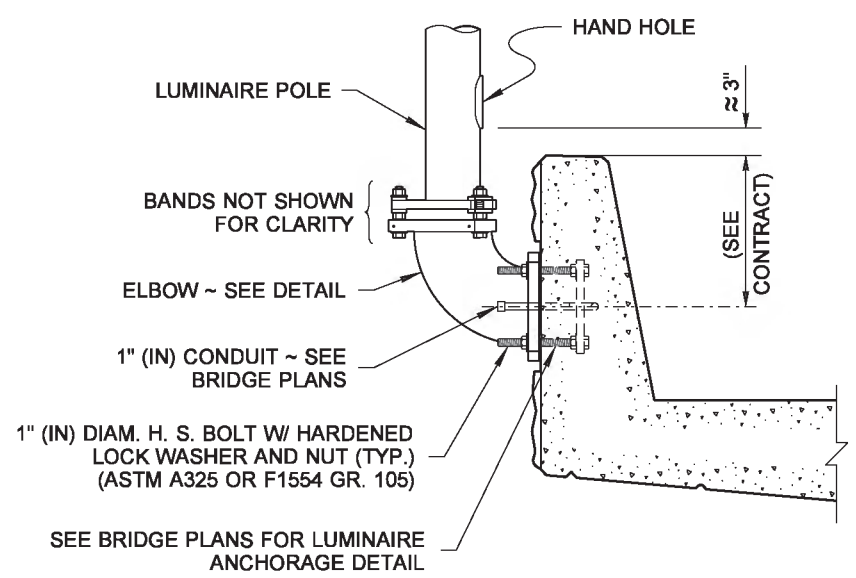

SINGLE-SLOPE BRIDGE TRAFFIC BARRIER

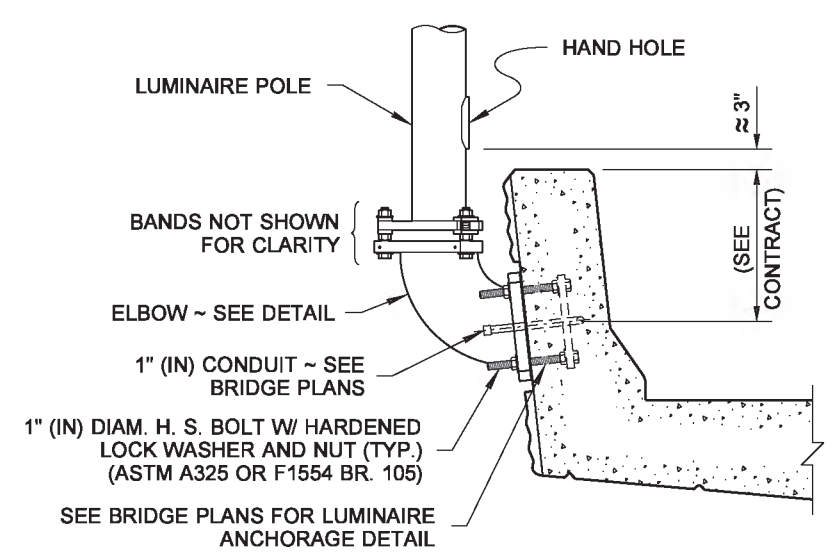

F-SHAPE BRIDGE TRAFFIC BARRIER

WHEN TRAFFIC BARRIER HEIGHT IS 42" (IN), MAINTAIN APPROX. HEIGHT FROM TOP OF BARRIER TO HAND HOLE SHOWN.

TYPICAL SECTIONS

Zeldenrust, Richard
Jun 10 2014 10:42 AM

STEEL LIGHT STANDARD ELBOW MOUNTING ON BRIDGE & RETAINING WALL

STANDARD PLAN J-28.45-02

SHEET 1 OF 1 SHEET

APPROVED FOR PUBLICATION
Bakotich, Pasco
Jun 11 2014 1:35 PM
STATE DESIGN ENGINEER
Washington State Department of Transportation

DRAWN BY: LISA CYFORD

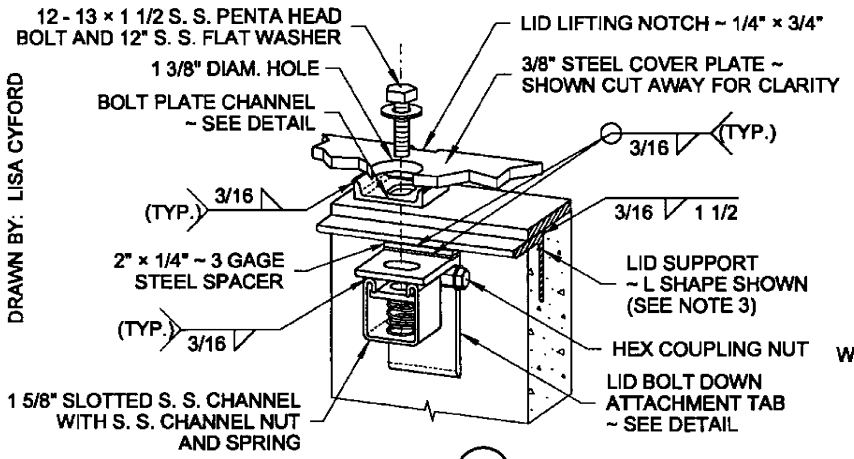

DETAIL (F)

ALTERNATIVE 1 SHOWN PERSPECTIVE VIEW

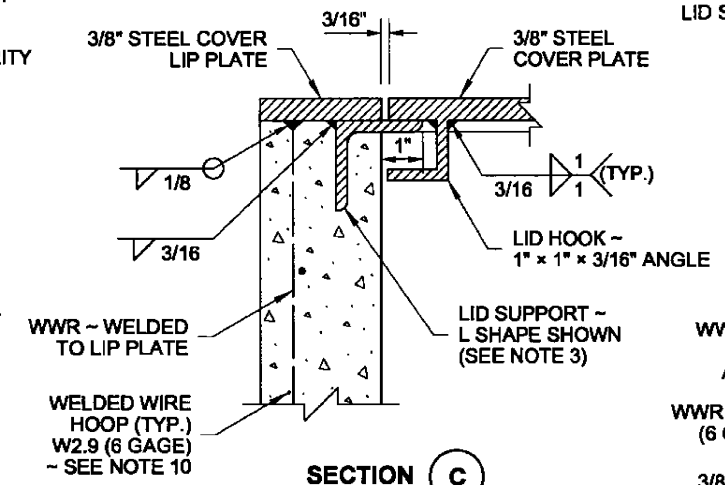

SECTION (C)

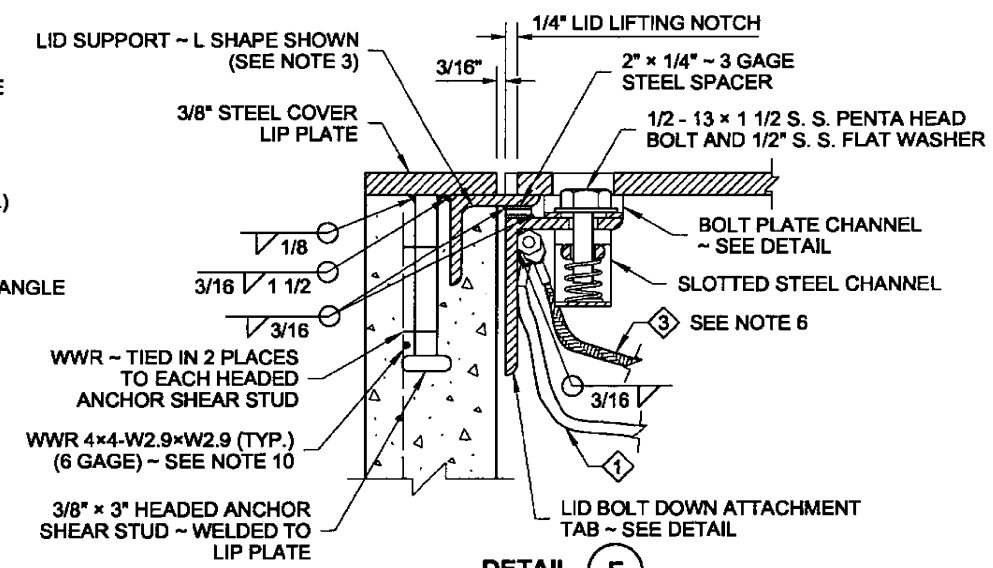

DETAIL (E)

ALTERNATIVE 1 SHOWN

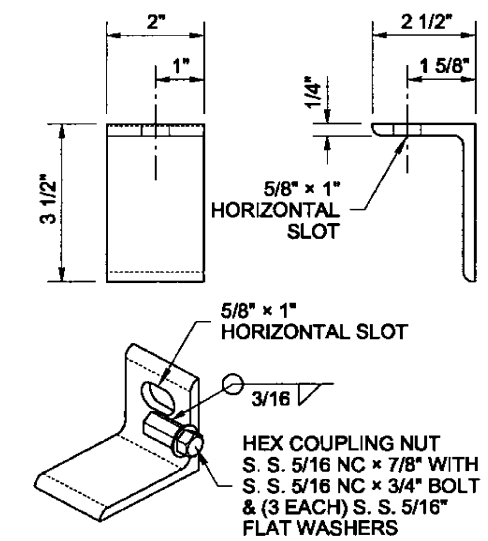

ALTERNATIVE 1
LID BOLT DOWN ATTACHMENT TAB
(SEE NOTE 12)

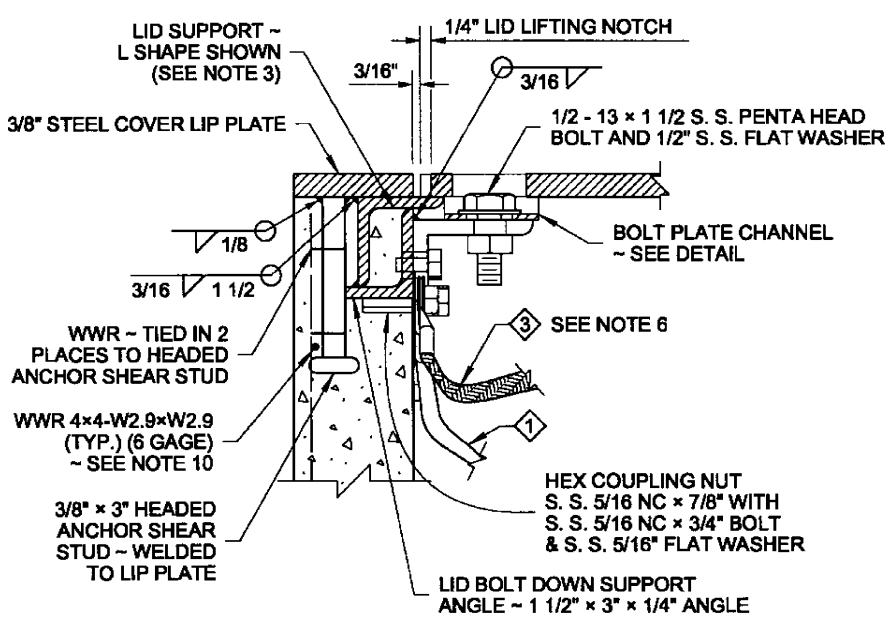

DETAIL (E)

ALTERNATIVE 2 SHOWN

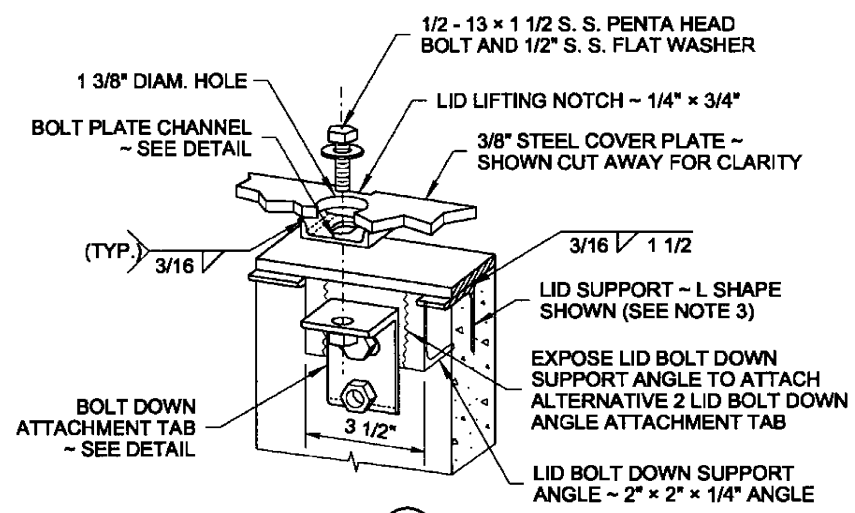

DETAIL (F)

ALTERNATIVE 2 SHOWN PERSPECTIVE VIEW

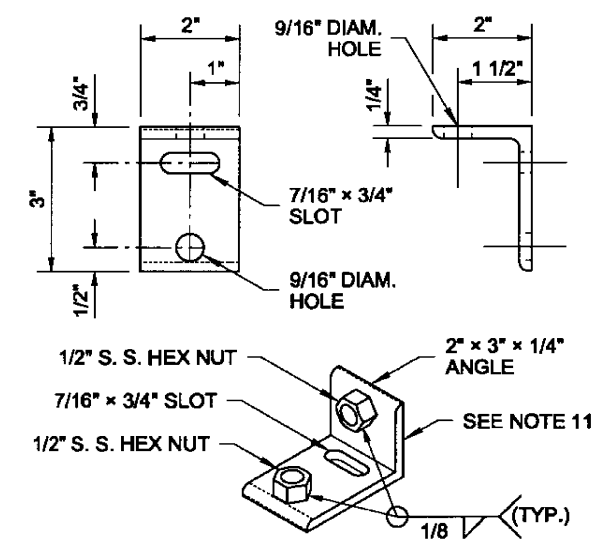

ALTERNATIVE 2
LID BOLT DOWN ATTACHMENT TAB
(SEE NOTE 12)

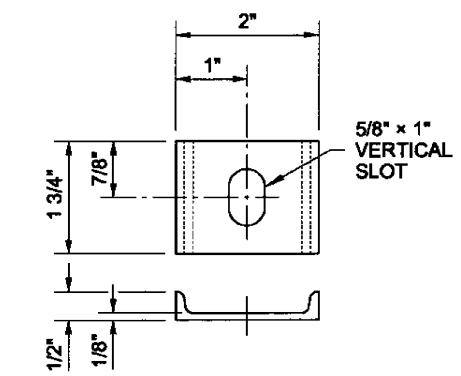

BOLT PLATE CHANNEL

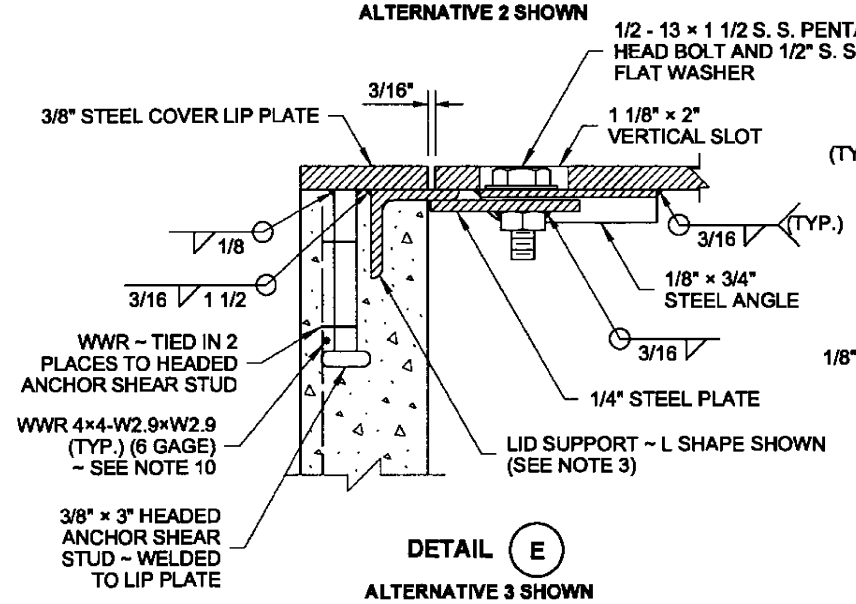

DETAIL (E)

ALTERNATIVE 3 SHOWN

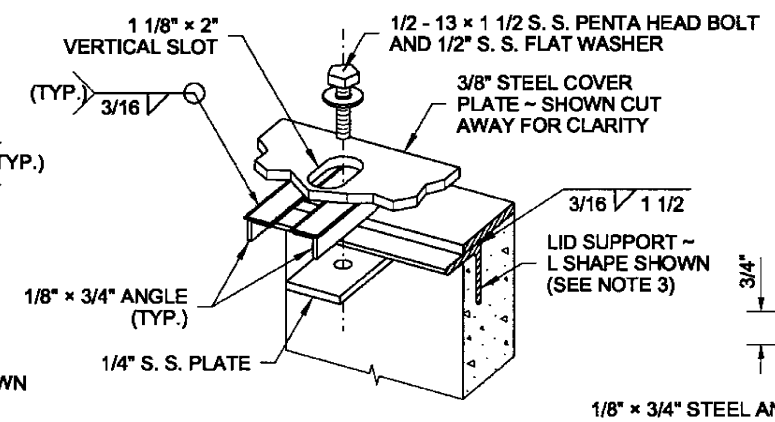

DETAIL (F)

ALTERNATIVE 3 SHOWN PERSPECTIVE VIEW

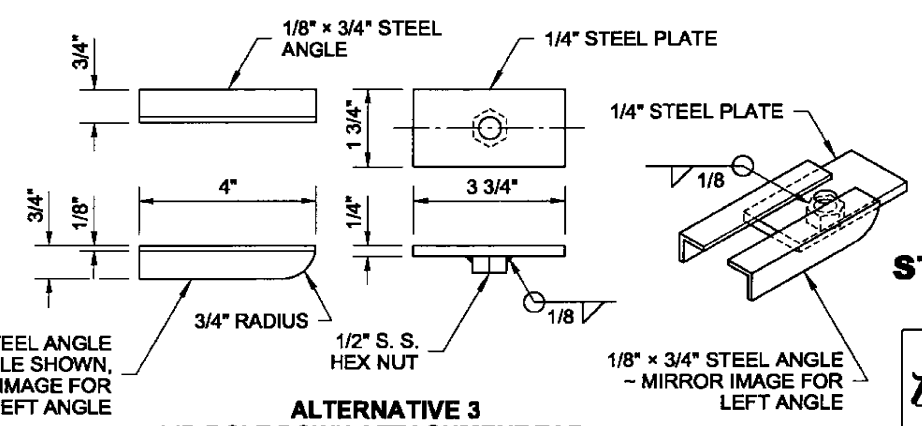

ALTERNATIVE 3
LID BOLT DOWN ATTACHMENT TAB
(SEE NOTE 12)

5-15-13

LOCKING LID STANDARD DUTY JUNCTION BOX TYPES 1 & 2

STANDARD PLAN J-40.10-03

SHEET 2 OF 2 SHEETS

APPROVED FOR PUBLICATION

STATE DESIGN ENGINEER — DATE 5/20/13

Washington State Department of Transportation

DRAWN BY: LISA CYFORD

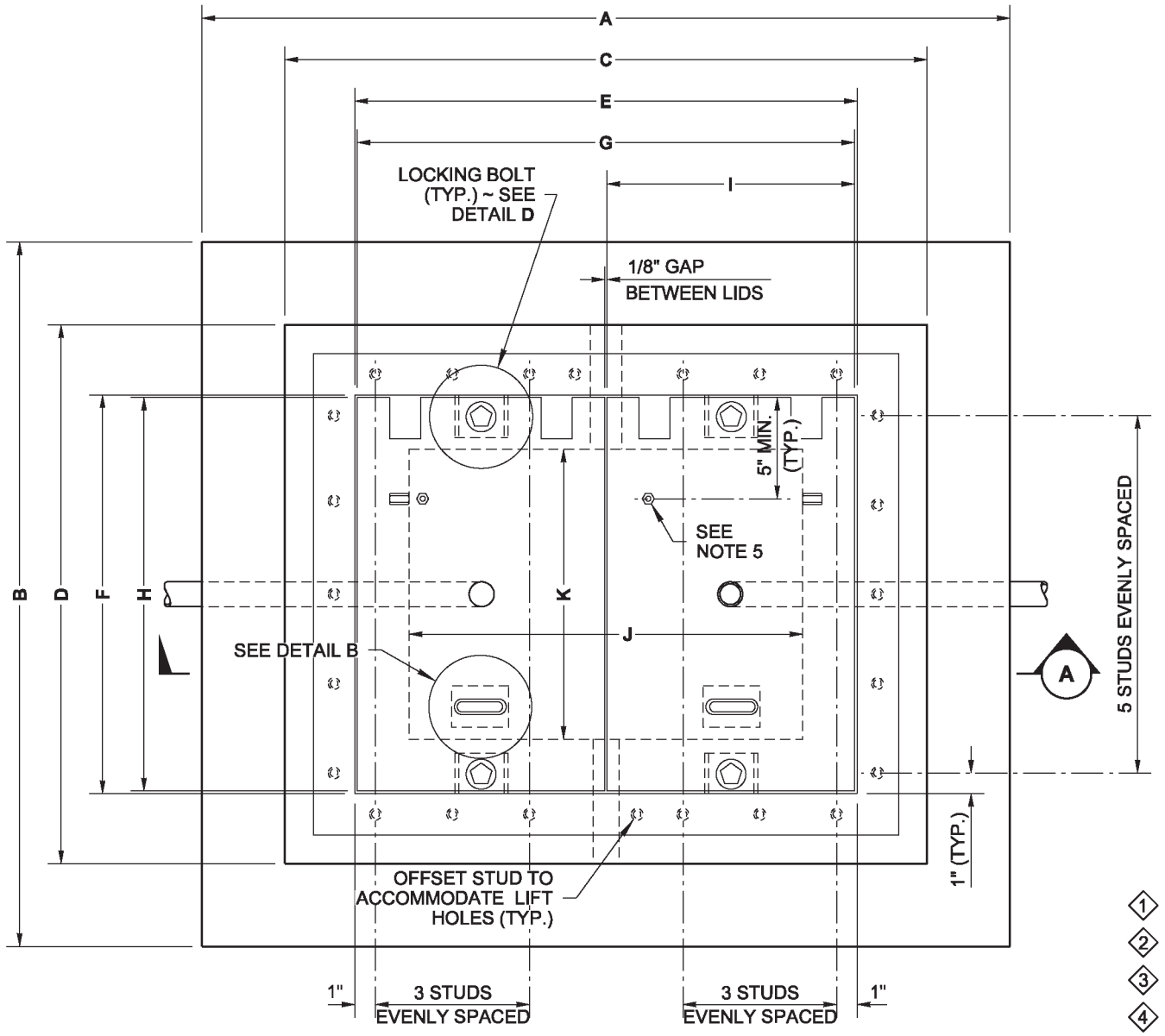

TOP VIEW

JUNCTION BOX DIMENSION TABLE				
MARK	ITEM	BOX TYPE		
		TYPE 4	TYPE 5	TYPE 6
A	OVERALL LENGTH	39"	48 7/16"	56"
B	OVERALL WIDTH	34"	37 7/16"	44"
C	JUNCTION BOX LENGTH	31"	40 7/16"	48"
D	JUNCTION BOX WIDTH	26"	29 7/16"	36"
E	LID OPENING LENGTH	24"	33 1/4"	41 1/8"
F	LID OPENING WIDTH	19"	22 1/4"	29 1/4"
G	TYPE 4 LID LENGTH	24"	——	——
H	TYPE 4, 5 & 6 LID WIDTH	19"	22"	29"
I	TYPE 5 & 6 LID LENGTH	——	16 7/16"	20 3/8"
J	INSIDE BOX LENGTH	19"	28 7/16"	36"
K	INSIDE BOX WIDTH	14"	17 7/16"	24"
X	STIFFENER SPACING	VARIES	VARIES	VARIES
Y	STIFFENER SPACING	VARIES	VARIES	VARIES
Z	STIFFENER LENGTH	18 1/4"	20 1/4"	28 1/8"
CAPACITY ~ CONDUIT DIAM.		6"	12"	24"

1. Equipment Grounding Conductor
2. Copper Solderless Crimp Connector
3. Equipment Bonding Jumper ~ see note 8
4. See Contract Plans and Special Provisions for conduit size and number

NOTES

1. All box dimensions are approximate. Exact configurations vary among manufacturers.
2. All lid thicknesses are minimum. The diamond pattern shall be 3/32" minimum thickness.
3. Lid perimeter shall bear on frame. Mill to bearing seat and lid perimeter for full even contact after fabrication of frame and lid. Lid and frame units with uneven bearing will be rejected.
4. The installed lid and frame shall fit with full even contact around the perimeter of a junction box after installation. Care shall be taken to prevent debris accumulation on the contact surfaces.
5. A 1/4-20 NC × 1" S. S. ground stud shall be welded to the bottom of each lid: include (2) each S. S. nuts and (3) each S. S. flat washers.
6. The hinges shall allow the lids to open 180°.
7. Bolts and nuts shall be liberally coated with anti-seize compound.
8. Connect Equipment Bonding Jumper to ground stud on lid. As an alternative to ground stud connection, the Equipment Bonding Jumper shall be attached to the front face of the hinge pocket with a 5/16-20 NC × 1" S. S. bolt, (2) each S. S. nuts, and (3) each S. S. flat washers. Equipment bonding jumper shall be #8 AWG min. × 4' of tinned braided copper.
9. The System Identification letters shall be 1/8" line thickness formed by a S. S. weld bead. See Cover Marking details. Grind off diamond pattern before forming letters. Ductile iron lid lettering shall be recessed , 1/8" line thickness. See **Standard Specification 9-29.2(4)** for details.
10. See **Standard Specification 9-29.2(1)B** for class of concrete.
11. Unless otherwise noted in the plans or approved by the Engineer, Junction Boxes, Cable Vaults, and Pull Boxes shall not be placed within the traveled way or paved shoulders. All Junction Boxes, Cable Vaults, and Pull Boxes placed within the traveled way or paved shoulders shall be Heavy-Duty. Heavy-Duty Junction Boxes shall not be installed in sidewalks, walkways, and shared use paths.
12. Distance between the top of the conduit and the bottom of the Junction Box lid shall be 6" min. to 8" max., for final grade of new construction only. See **Standard Specification 8-20.3(5).** Where adjustments are to be made to existing Junction Boxes, or for interim construction stages during the contract, the limits shall be from 6" min. to 10" max. See **Standard Specification 8-20.3(6).**
13. Junction Box Types 4, 5, or 6 may be equipped with Ductile Iron (Alternative) Lid(s) and a Cast Iron (Alternative) Frame. Junction box shall meet the requirements of **Std. Spec. 9-29.2** and shall be in accordance with approved shop drawings.

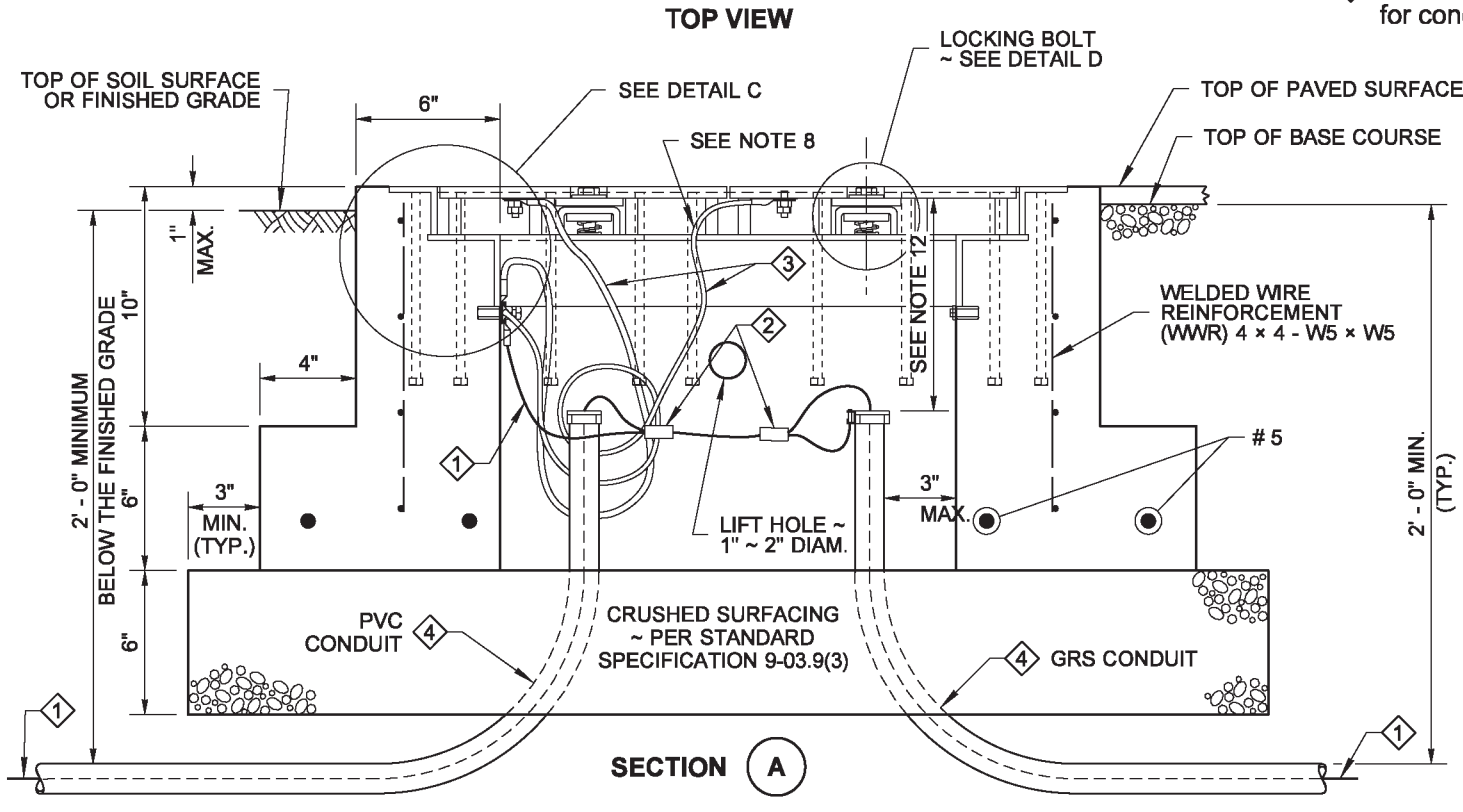

SECTION A

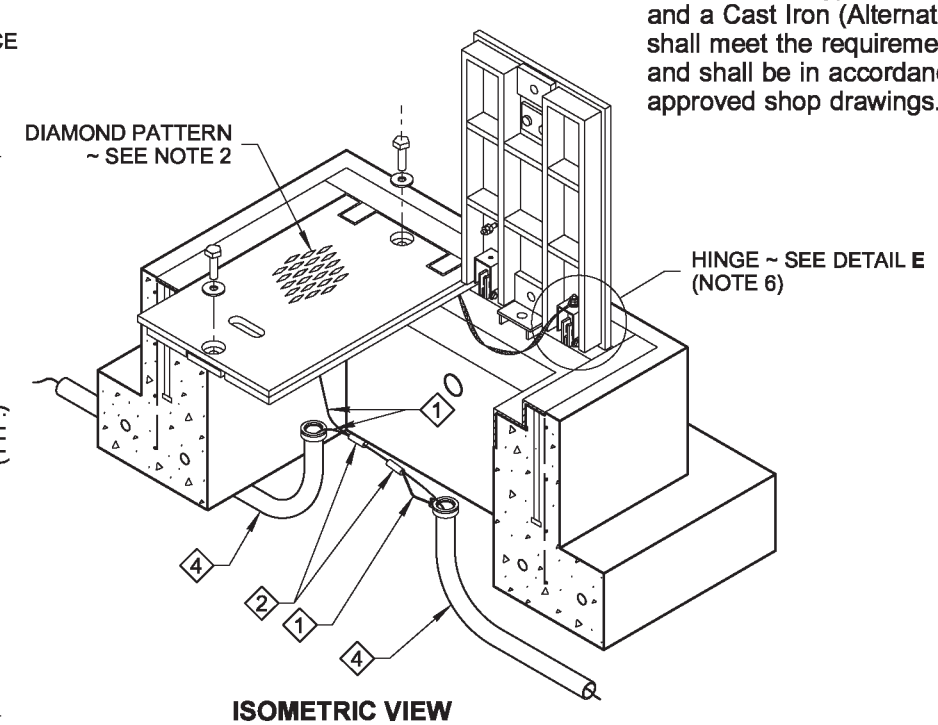

ISOMETRIC VIEW
TYPE 5 AND 6 SHOWN

THEODORE JOSEPH BAILEY
STATE OF WASHINGTON
39820
REGISTERED
PROFESSIONAL ENGINEER

Theodore Joseph Bailey
Digitally signed by baileyte@wsdot.wa.gov
DN: cn=baileyte@wsdot.wa.gov
Date: 2014.04.16 14:51:21 -07'00'

HEAVY-DUTY JUNCTION BOX TYPES 4, 5, & 6

STANDARD PLAN J-40.20-02

SHEET 1 OF 2 SHEETS

APPROVED FOR PUBLICATION
Bakotich, Pasco
Jun 11 2014 1:36 PM
STATE DESIGN ENGINEER
Washington State Department of Transportation

DRAWN BY: LISA CYFORD

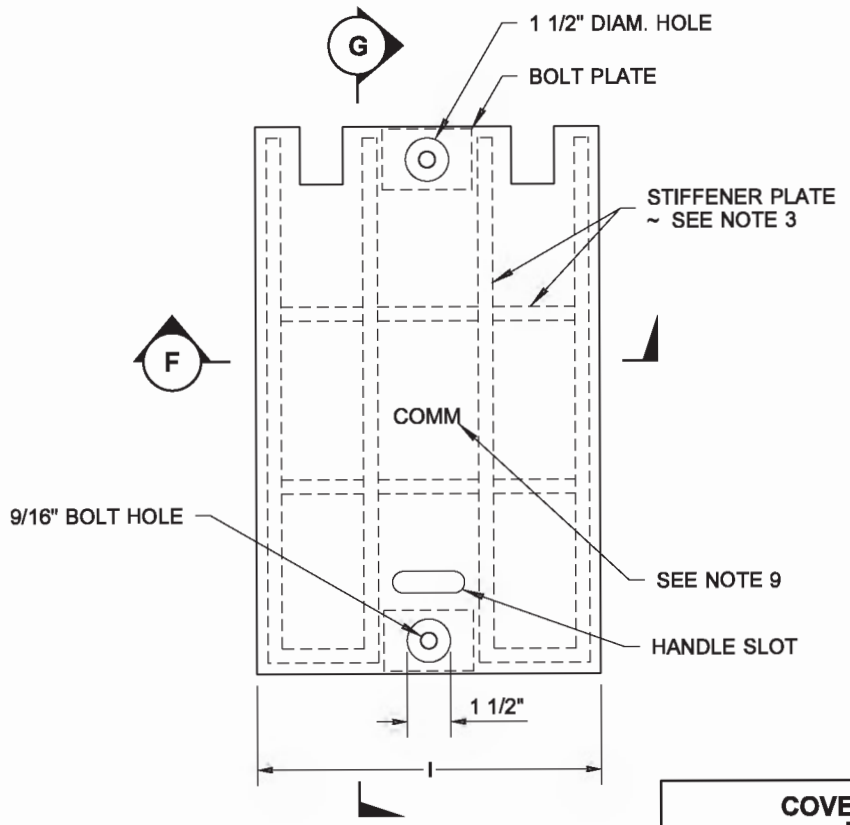

PLAN VIEW
LID

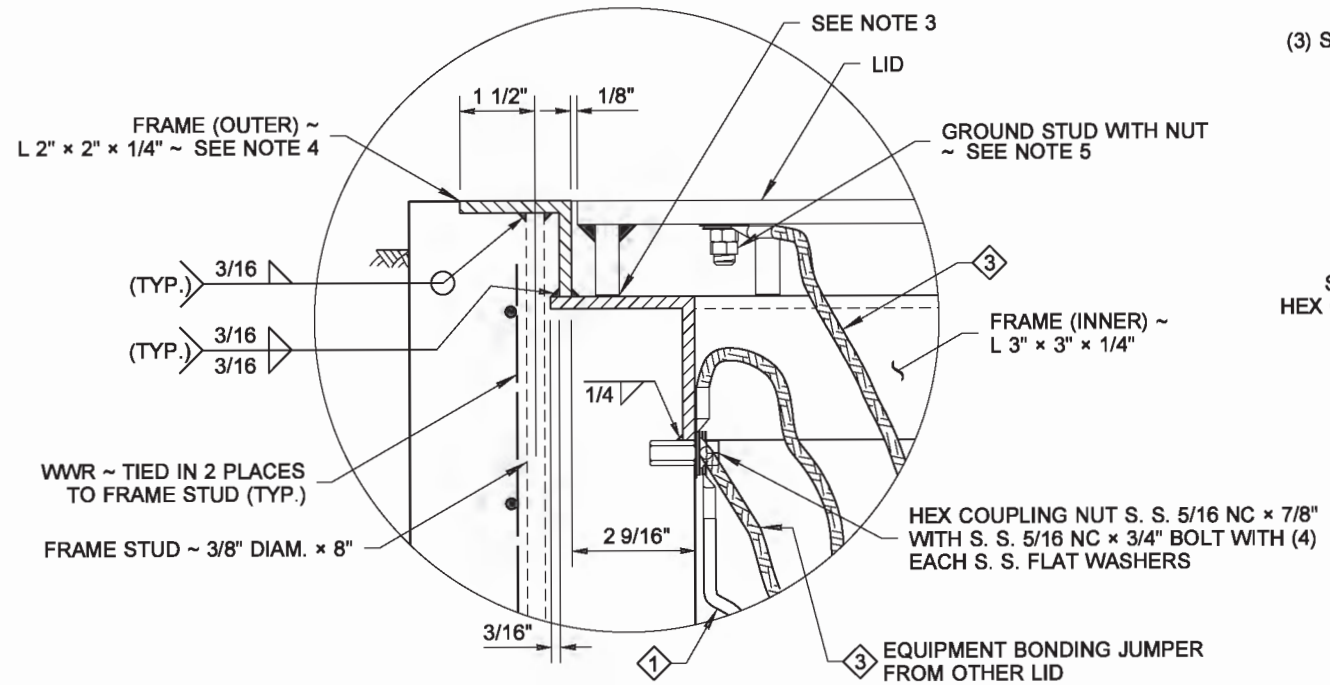

DETAIL C

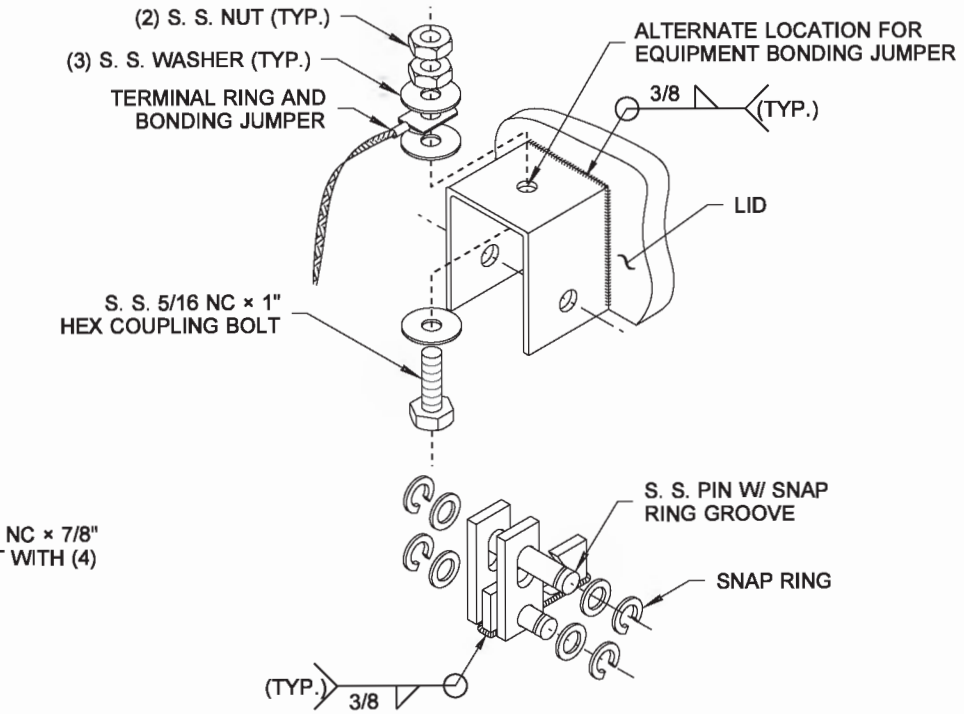

DETAIL E
HINGE

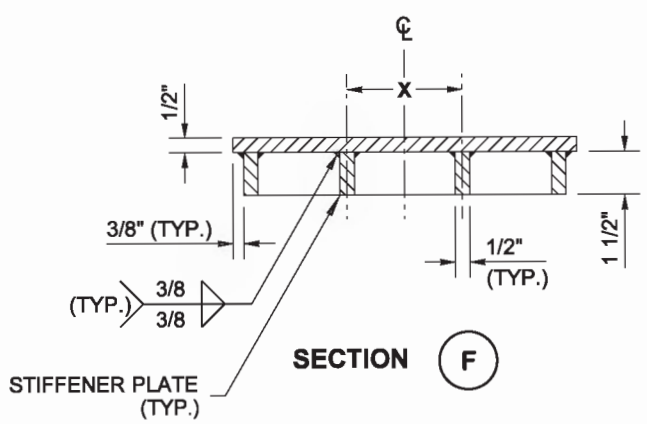

SECTION F

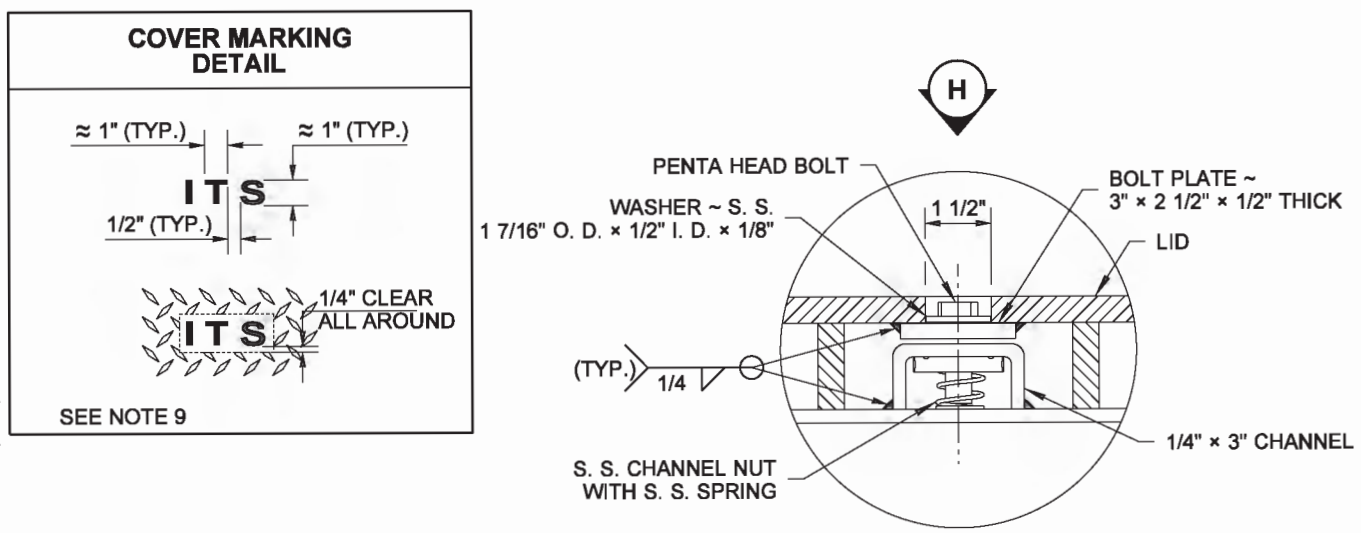

DETAIL D
LOCKING BOLT

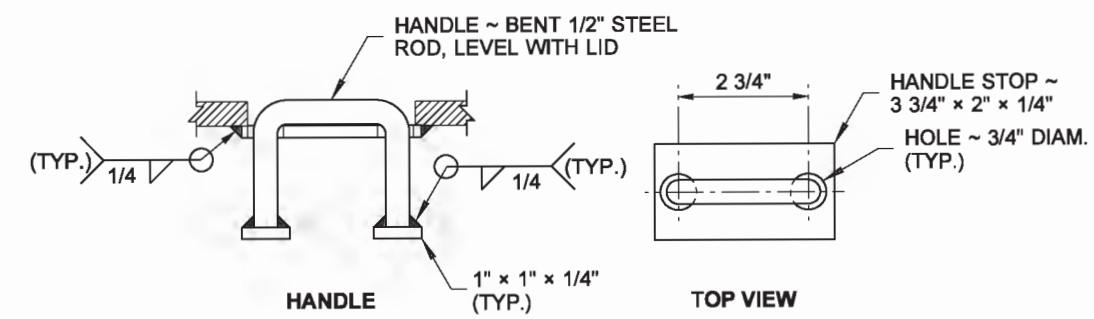

DETAIL B

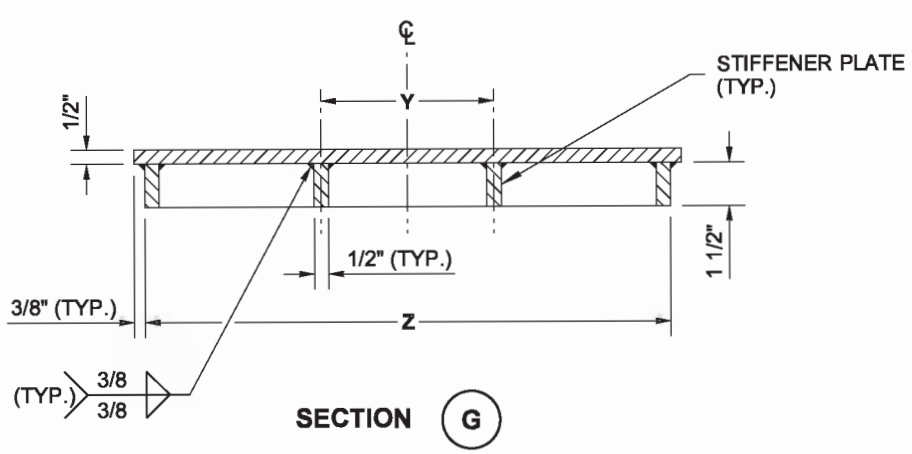

SECTION G

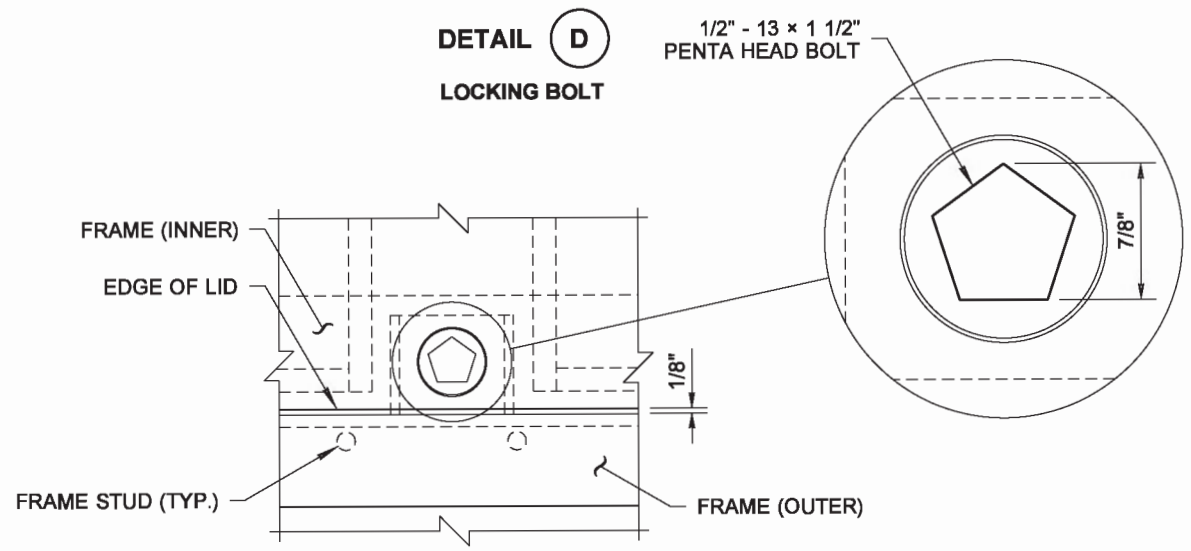

VIEW H

Theodore Joseph Bailey
Digitally signed by baileyte@wsdot.wa.gov
DN: cn=baileyte@wsdot.wa.gov
Date: 2014.04.16 14:51:38 -07'00'

HEAVY-DUTY JUNCTION BOX TYPES 4, 5, & 6

STANDARD PLAN J-40.20-02

SHEET 2 OF 2 SHEETS

APPROVED FOR PUBLICATION
Bakotich, Pasco
Jun 11 2014 1:36 PM
STATE DESIGN ENGINEER
Washington State Department of Transportation

DRAWN BY: LISA CYFORD

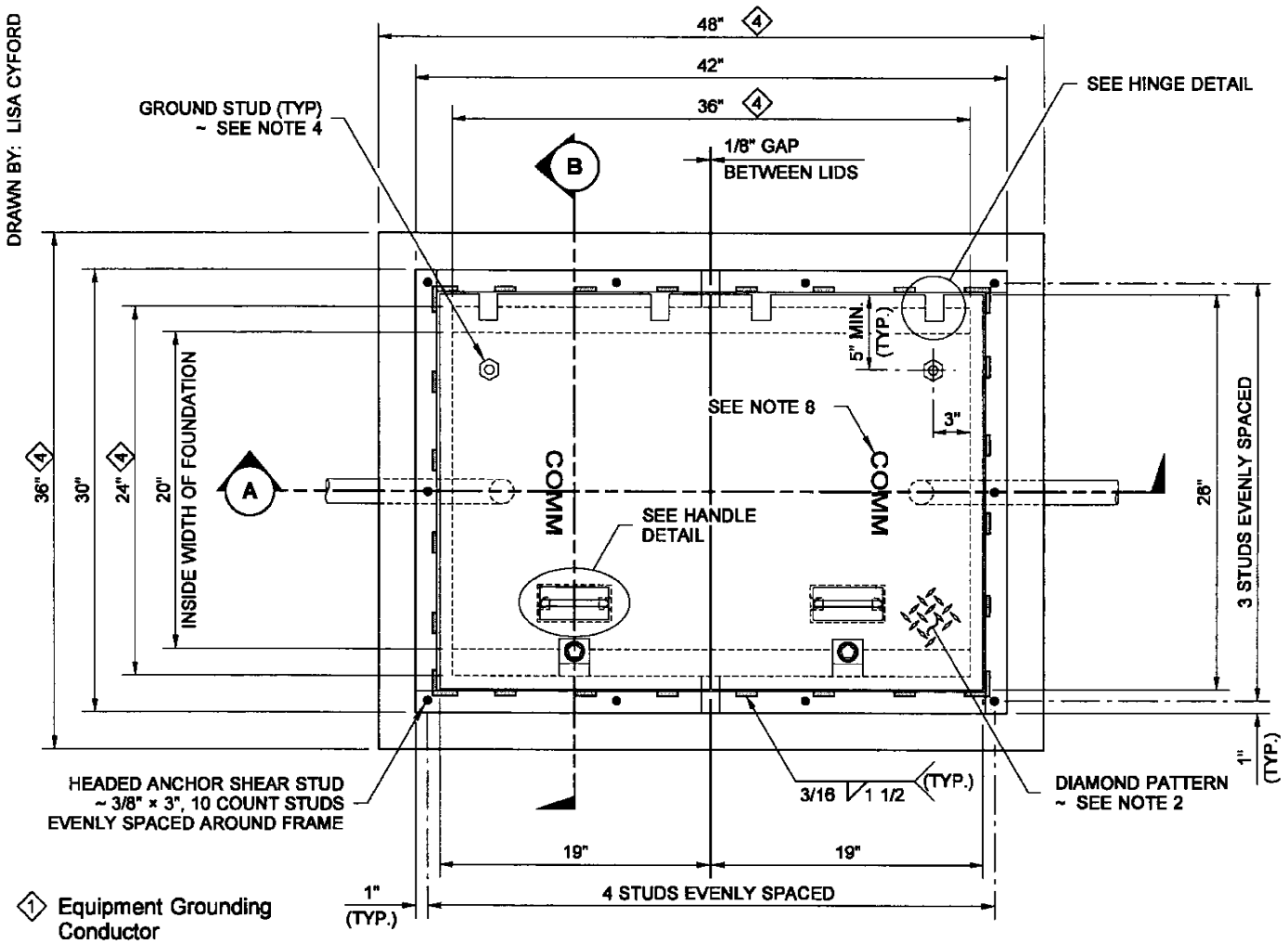

① Equipment Grounding Conductor

② Copper Solderless Crimp Connector

③ Equipment Bonding Jumper

④ Foundation

⑤ See Contract for conduit size and number

PLAN VIEW

LOCKING LID STANDARD DUTY JUNCTION BOX

COVER MARKING DETAIL

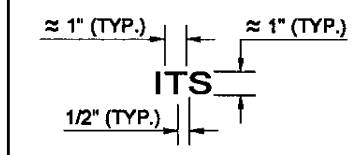

SEE NOTE 8

NOTES

1. All box dimensions are approximate. Exact configurations vary among manufacturers.
2. Minimum lid thicknesses are shown. The diamond pattern shall be a minimum of 28% of the overall thickness. Junction Boxes installed in sidewalks, walkways, and shared-use paths shall have a slip-resistant coating on the lid and lip cover plate and shall be installed with the surface flush with and matched to the grade of the sidewalk, walkway, or shared-use path. The non-slip lid shall be identified with permanent markings on the underside, indicating the type of surface treatment (see Contract Documents for details) and the year of manufacture. The permanent marking shall be 1/8" inch line thickness formed with a stainless steel weld bead and shall be placed prior to hot-dip galvanizing.
3. Lid support members shall be 3/16" min. thick steel C, L, or T shape, welded to the frame. Exact configurations vary among manufacturers.
4. A 1/4-20 NC × 3/4" S. S. ground stud shall be welded to the bottom of each lid; include (2) S. S. nuts and (2) S. S. flat washers.
5. The hinges shall allow the lids to open 180°.
6. Bolts and nuts shall be liberally coated with anti-seize compound.
7. Connect Equipment Bonding Jumper to ground stud on lid. As an alternative to the ground stud connection, the Equipment Bonding Jumper shall be attached to the front face of the hinge pocket with a 5/16-20 NC × 3/4" S. S. bolt, (2) each S. S. nuts, and (2) each S. S. flat washers. Equipment Bonding Jumper shall be #8 AWG min. × 4' of tinned braided copper.
8. The System Identification letters shall be 1/8" line thickness formed by engraving, stamping, or with a S. S. weld bead. See Cover Marking detail. Grind off diamond pattern before forming letters. See **Standard Specification 9-29.2(4)** for details.
9. See the Standard Specifications for alternative reinforcement and class of concrete.
10. See **Standard Plan J-40.10** for Welded Wire Reinforcement and Headed Anchor Shear Stud attachment details.
11. Capacity ~ conduit diameter = 24"
12. Lid Bolt Down Attachment Tab provides a method of retrofitting by using a mechanical process in lieu of welding. Attachment Tab shown depicts a typical component arrangement; actual configurations of assembly will vary among manufacturers. See approved manufacturers' shop drawing for specifics.
13. Unless otherwise noted in the plans or approved by the Engineer, Junction Boxes, Cable Vaults and Pull Boxes shall not be placed within the sidewalk, walkway, shared use path, traveled way or paved shoulders. All Junction Boxes, Cable Vaults, and Pull Boxes placed within the traveled way or paved shoulders shall be Heavy-Duty.
14. Distance between the top of the conduit and the bottom of the Junction Box lid shall be 6" min. to 8" max. for final grade of new construction only. See **Standard Specification 8-20.3(5).** Where adjustments are to be made to existing Junction Boxes, or for interim construction stages during the contract, the limits shall be from 6" min. to 10" max. See **Standard Specification 8-20.3(6).**

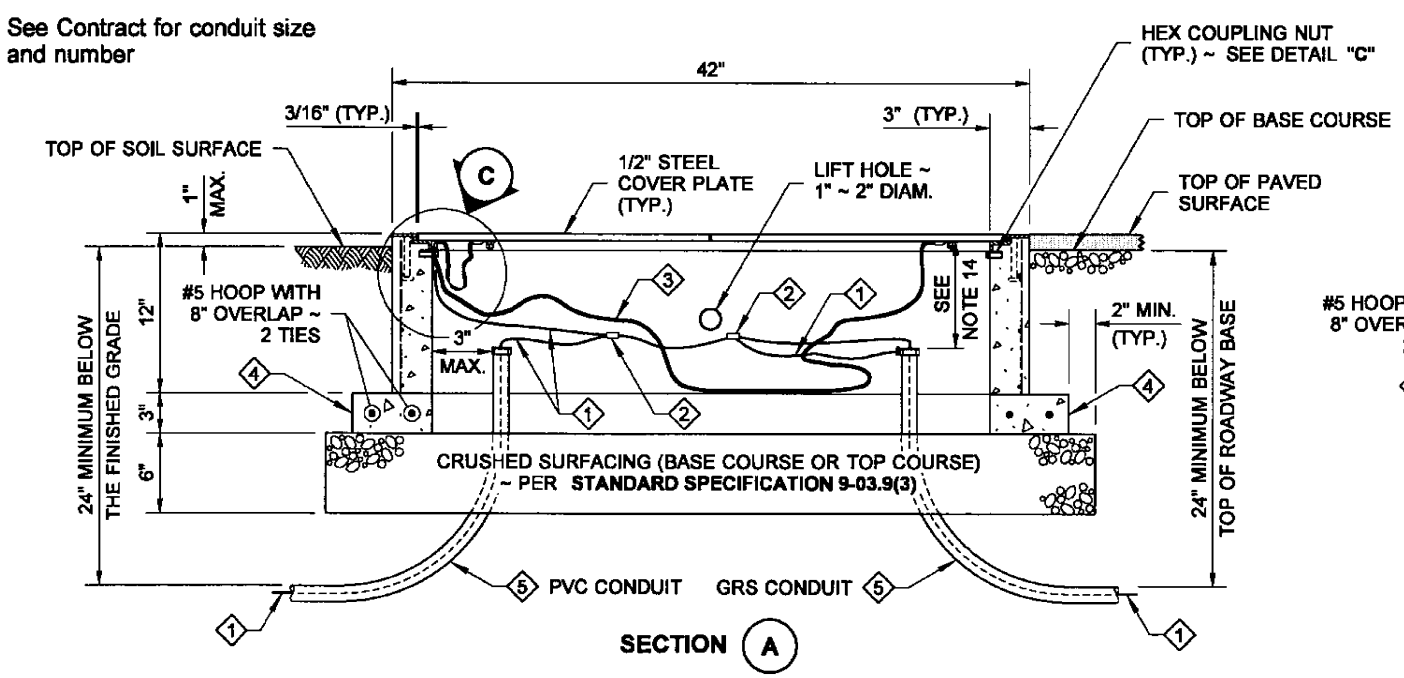

SECTION (A)

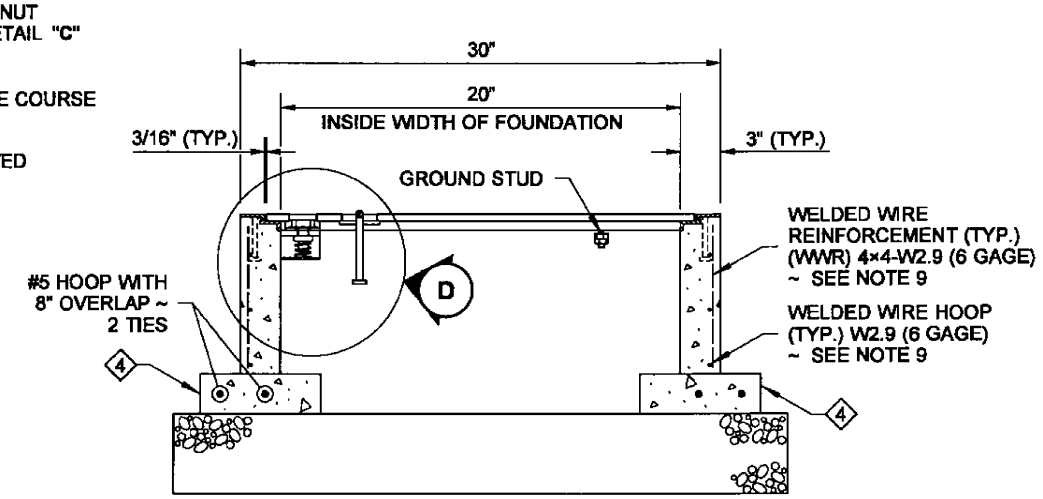

SECTION (B)

CONDUITS NOT SHOWN

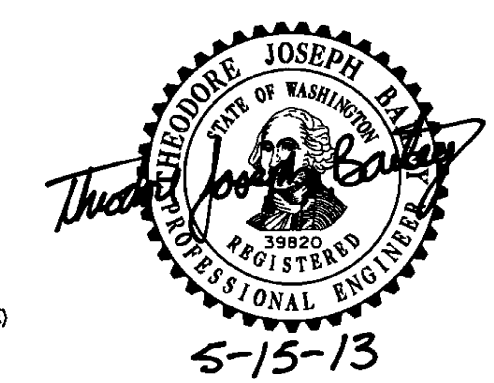

5-15-13

LOCKING LID STANDARD DUTY JUNCTION BOX TYPE 8

STANDARD PLAN J-40.30-03

SHEET 1 OF 2 SHEETS

APPROVED FOR PUBLICATION

STATE DESIGN ENGINEER — DATE 5/20/13

Washington State Department of Transportation

This page left blank intentionally.

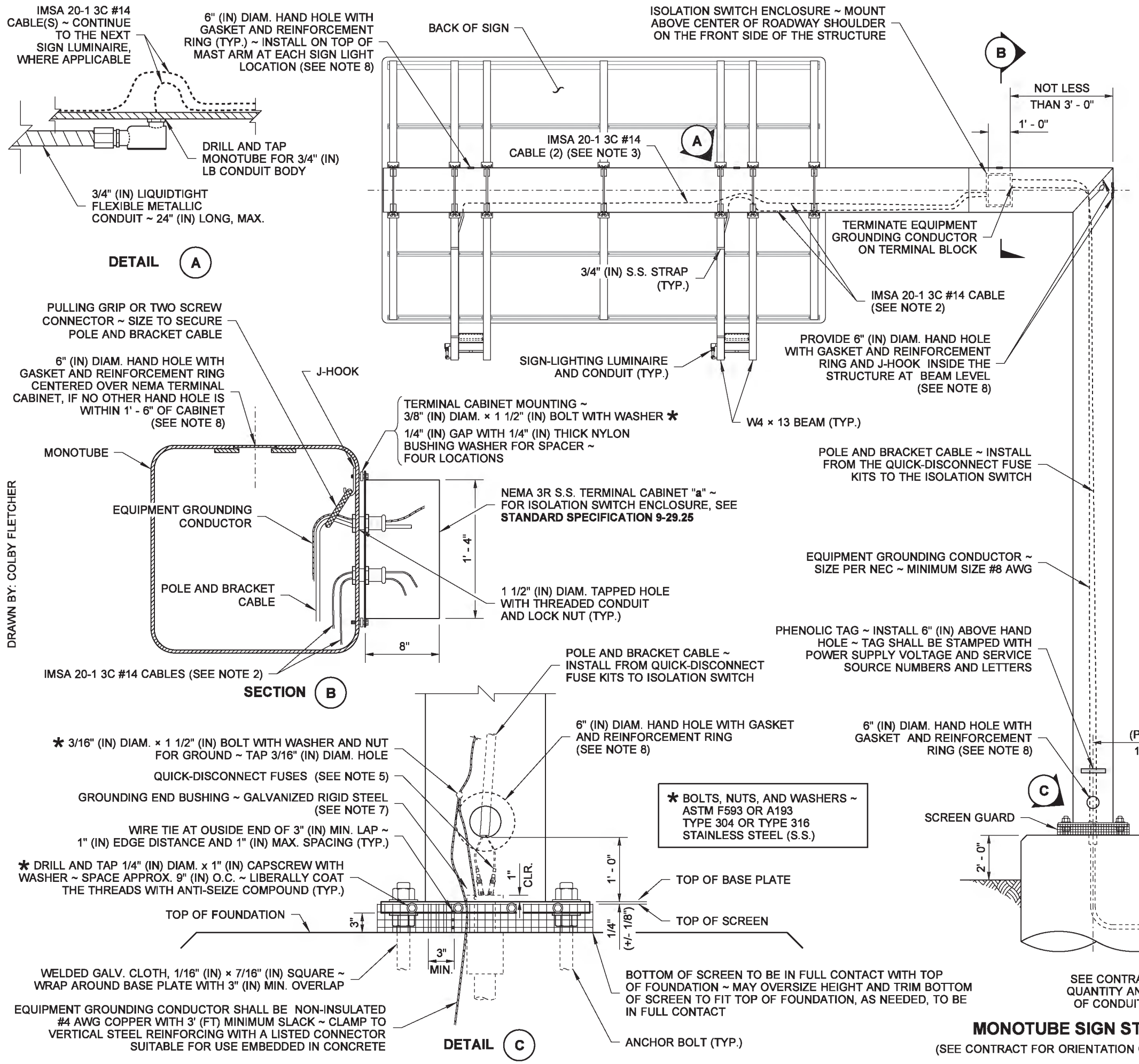

DRAWN BY: COLBY FLETCHER

MONOTUBE SIGN STRUCTURE

(SEE CONTRACT FOR ORIENTATION OF SIGN STRUCTURE)

NOTES

1. Typical view shown. Verify power source location, quantities, location of signs, and sign structure fixtures in Contract Plans.
2. Route IMSA 20-1 3C #14 cable(s) from isolation switch along inside bottom of the Monotube Mast Arm to the liquidtight conduit connector(s) at hand hole(s).
3. Route separate IMSA 20-1 3C #14 cable from load side of terminal strip to each additional light fixture (where applicable) and provide sufficient slack wire per **Standard Specification 8-20.3(8).**
4. Label all conductors with sign light and circuit number at isolation switch, hand hole(s), and ballast enclosure(s). Labels shall be a PVC or Polyolefin wire marking sleeve per **Standard Specification 9-29.**
5. Install quick-disconnect fuse kits between the power supply wires and the pole and bracket cable per **Standard Specification 9-29.7.** Fuse size shall be 200% larger than load size.
6. The conductors in the IMSA 20-1 3C #14 cable shall be black, red, and white. The white conductor shall be permanently identified as an equipment grounding conductor per the NEC.
7. All GRS conduits embedded in foundation shall be terminated with Grounding End Bushing and bonded to the Foundation Grounding Bus. All PVC conduits embedded in foundations shall be terminated with End Bell Bushing.
8. Hand holes shall be installed at the time of fabrication. Only additional conduits for lighting accommodations to previously non-illuminated structures may be installed in field as long as the proper repairs are made to the structure. For hand hole details, see **Standard Plan J-75.41**.
9. For details not shown, see **Standard Plan G-90.40**.
10. All holes shall be drilled and tapped.
11. Use the Retrofit Details only when the following conditions apply:
    A. Existing W4 × 13 Luminaire Brackets are to be reused for a new Sign-Lighting Luminaire.
    B. The span between the existing Luminaire Brackets is too wide to attach a new Sign-Lighting Luminaire and Luminaire Mounting Plate.
12. If the sign structure includes a maintenance walkway, the Luminaire Mounting Plate shall be bolted to the walkway grating.

THEODORE JOSEPH BAILEY
STATE OF WASHINGTON
39820
REGISTERED
PROFESSIONAL ENGINEER

Bailey, Ted
Jun 11 2014 9:56 AM

OVERHEAD SIGN ELECTRICAL DETAILS (MONOTUBE STRUCTURE) STANDARD PLAN J-75.40-01

SHEET 1 OF 2 SHEETS

APPROVED FOR PUBLICATION
Bakotich, Pasco
Jun 11 2014 1:37 PM
STATE DESIGN ENGINEER
Washington State Department of Transportation

DRAWN BY: COLBY FLETCHER

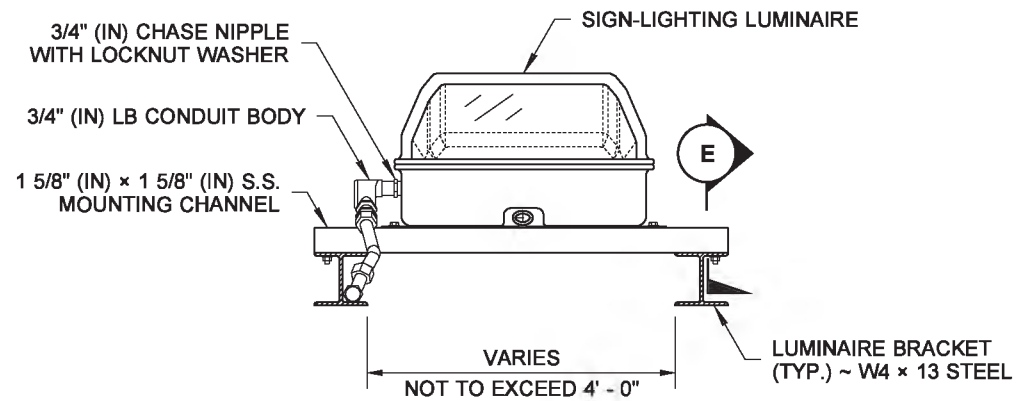

SECTION D

SIGN-LIGHTING FIXTURE WITH RETROFIT

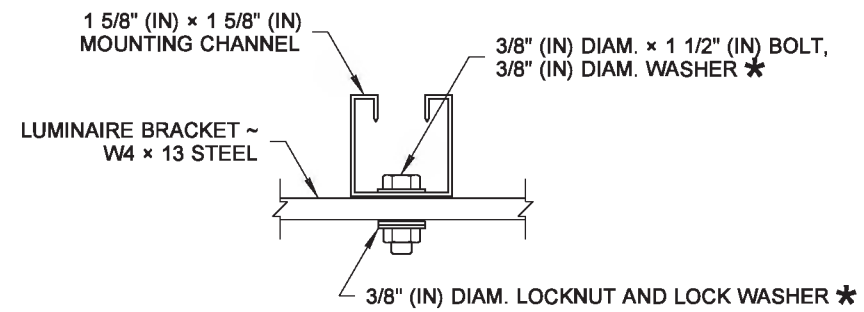

SECTION E

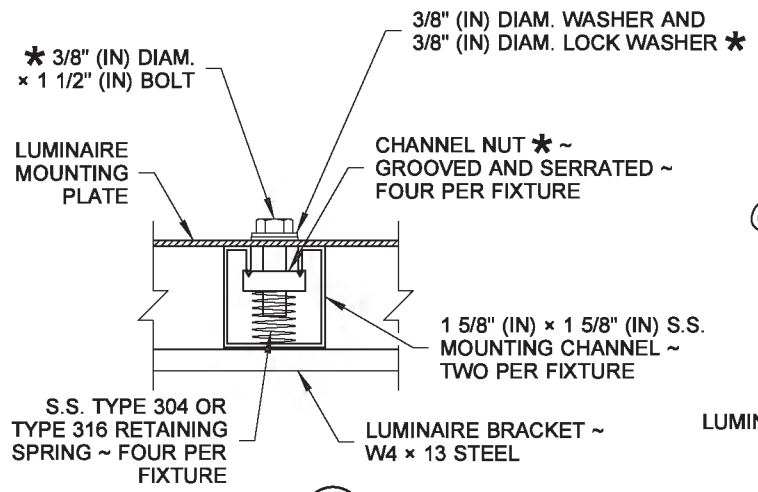

DETAIL F

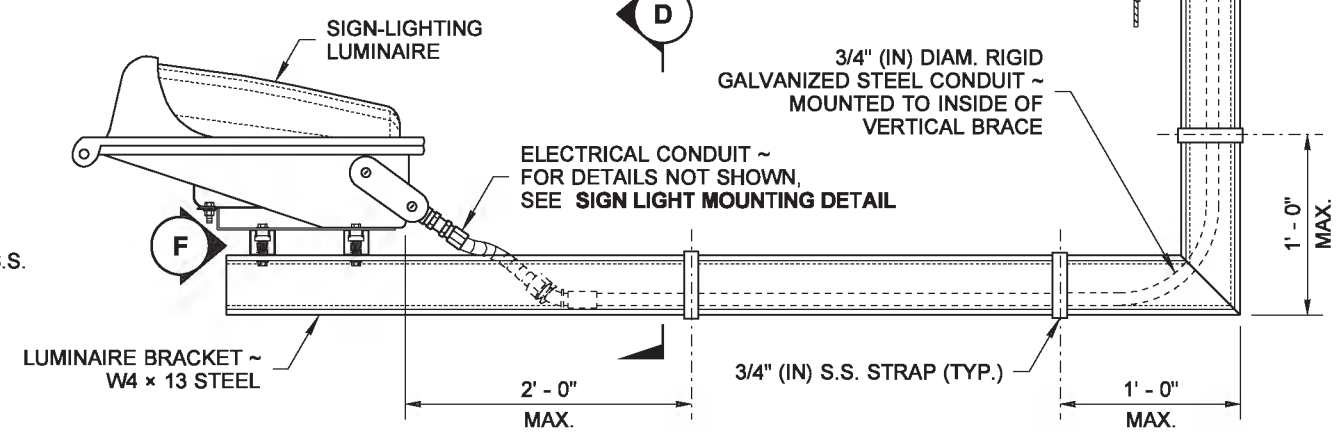

RETROFIT MOUNTING DETAIL

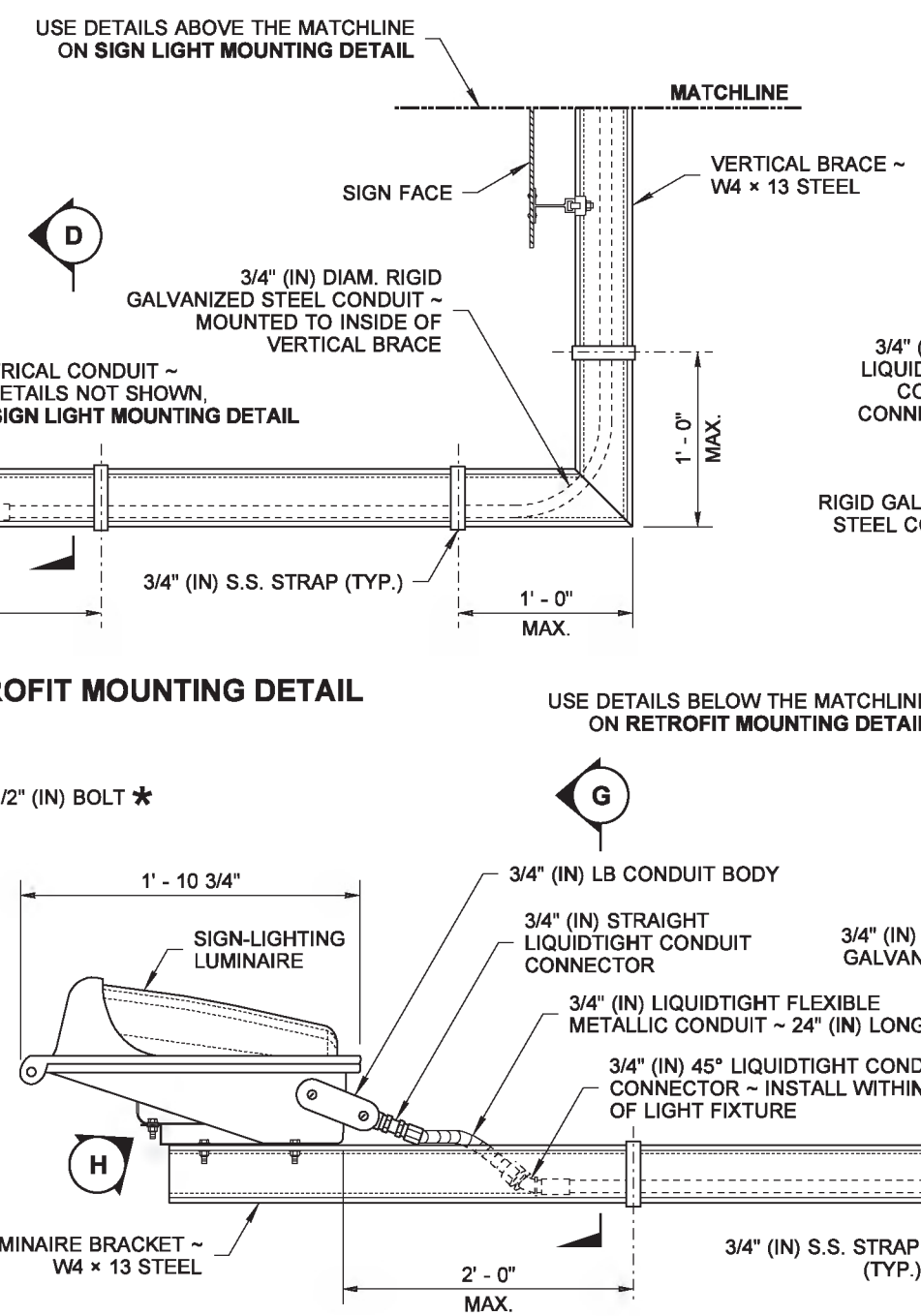

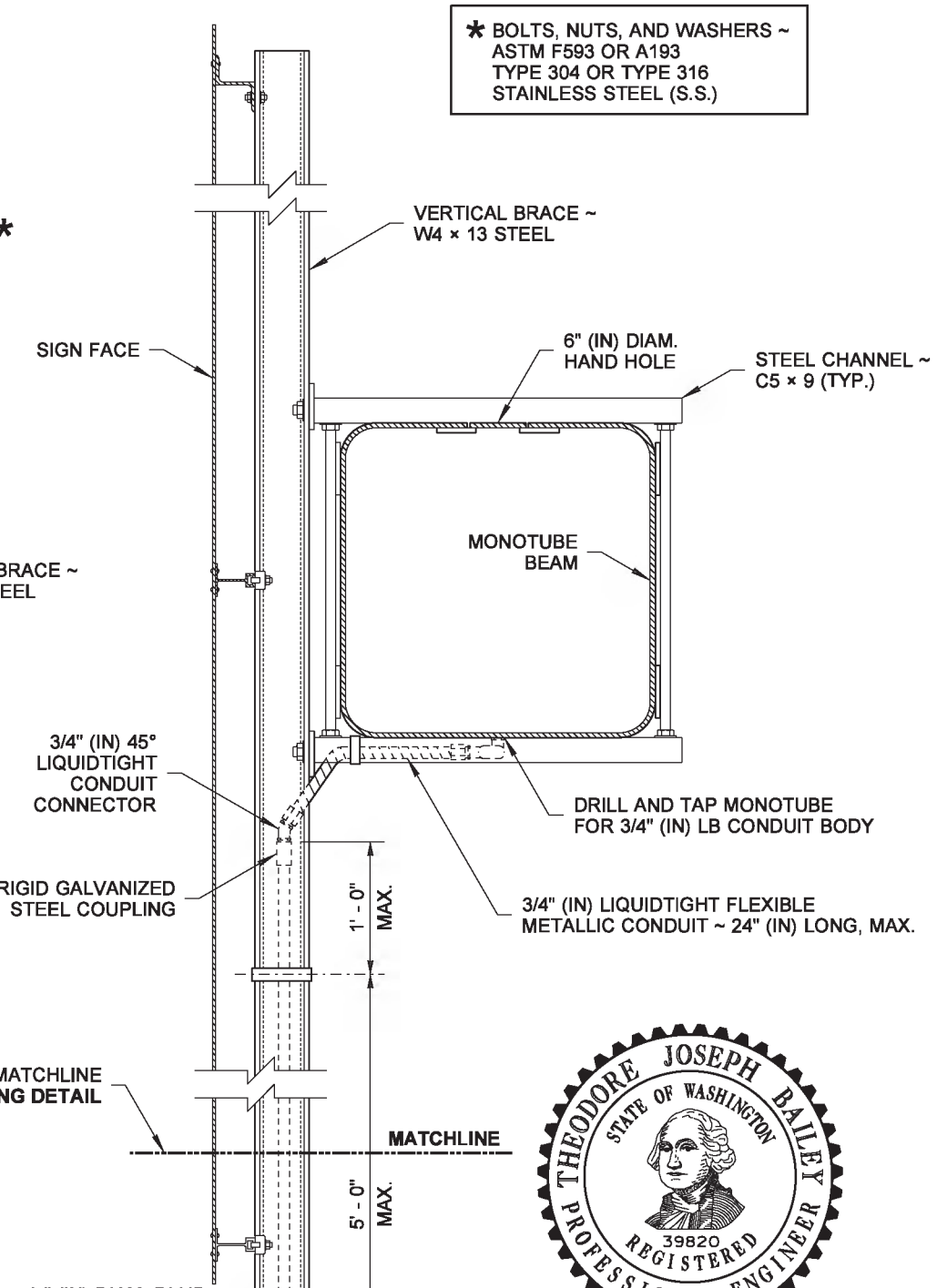

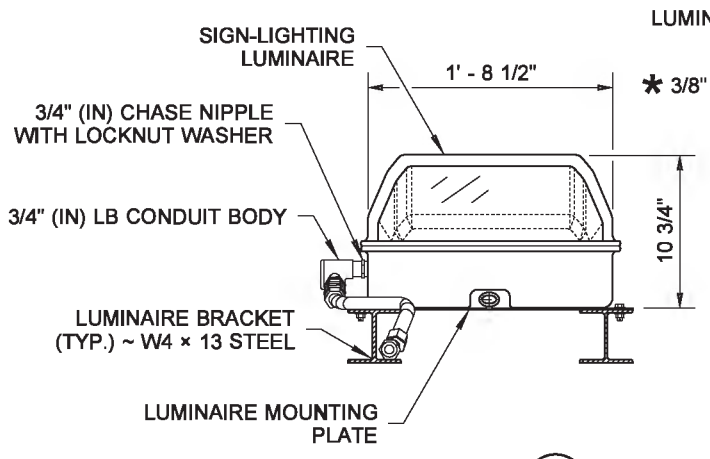

SECTION G

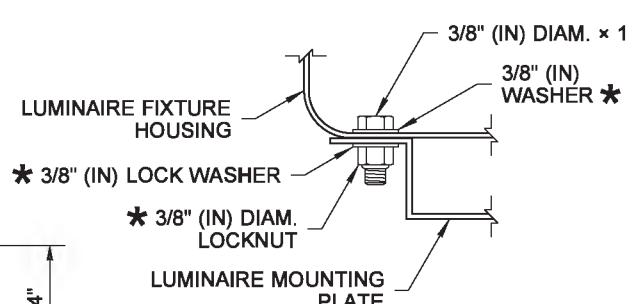

DETAIL H

Bailey, Ted
Jun 11 2014 9:57 AM

OVERHEAD SIGN ELECTRICAL DETAILS (MONOTUBE STRUCTURE) STANDARD PLAN J-75.40-01

SHEET 2 OF 2 SHEETS

APPROVED FOR PUBLICATION
Bakotich, Pasco
Jun 11 2014 1:37 PM
STATE DESIGN ENGINEER
Washington State Department of Transportation

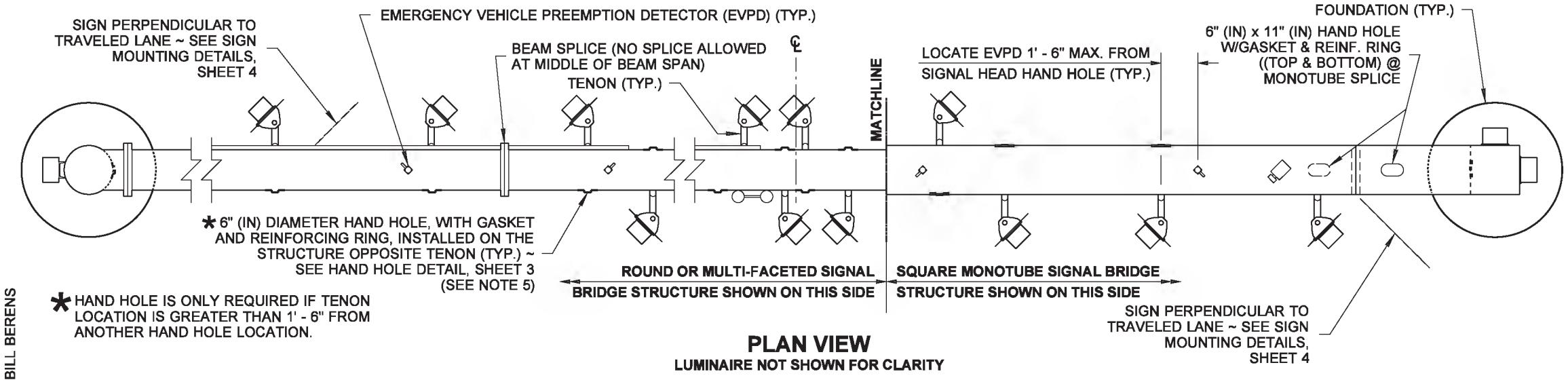

PLAN VIEW

LUMINAIRE NOT SHOWN FOR CLARITY

DRAWN BY: BILL BERENS

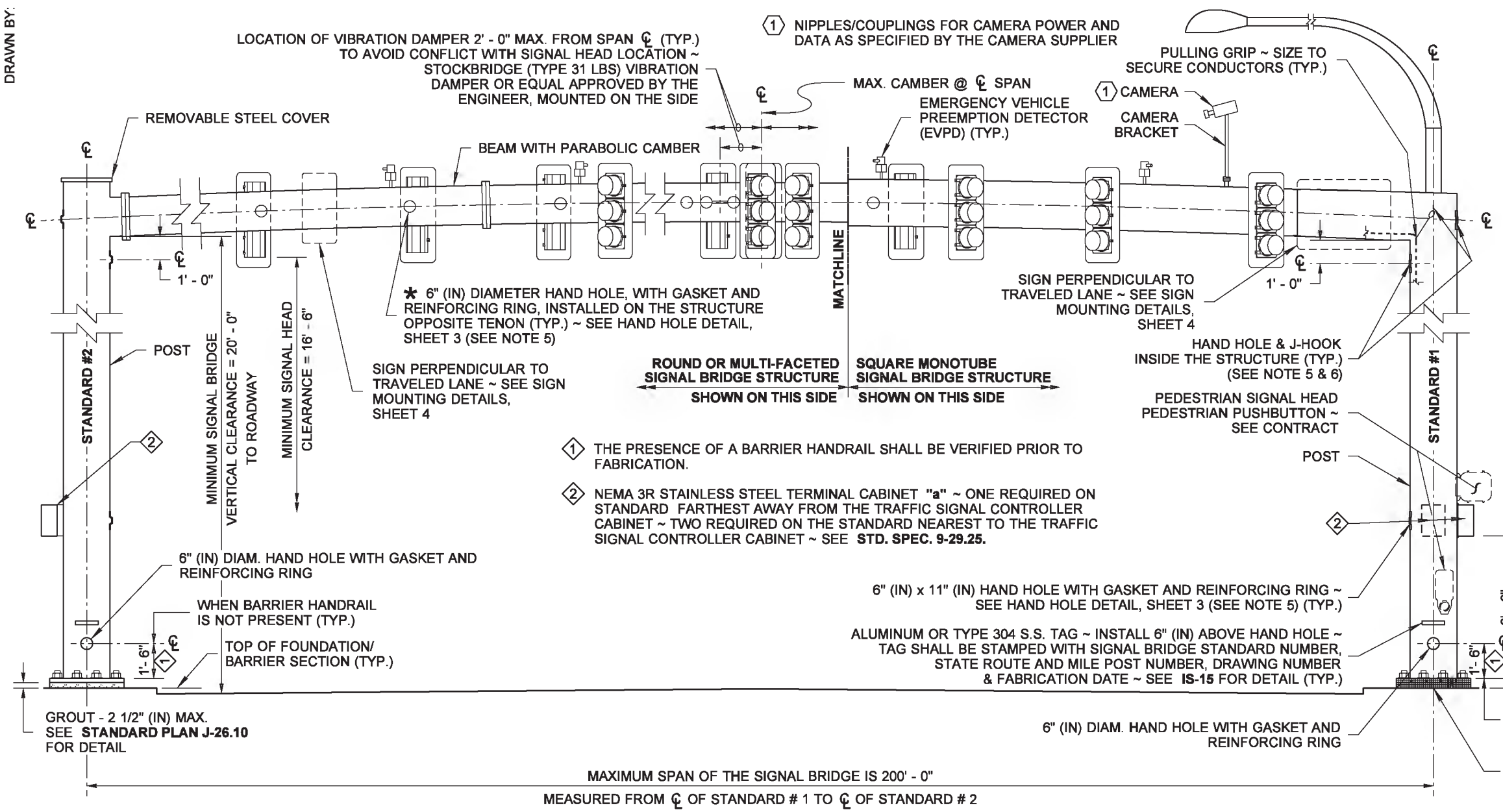

ELEVATION VIEW

DESIGN CRITERIA

SIGNAL BRIDGE SHALL BE DESIGNED AND ANALYZED IN ACCORDANCE WITH **AASHTO STANDARD SPECIFICATION FOR STRUCTURAL SUPPORTS FOR HIGHWAY SIGNS, LUMINAIRE AND TRAFFIC SIGNAL - FIFTH EDITION - DATED 2009** AND INTERIMS. USING BASIC WIND SPEED OF **90 MPH** AND **50 YEARS** OF DESIGN LIFE. FATIGUE DESIGN OF THE STRUCTURE CONFORMS TO **FATIGUE CATEGORY I** OF THE SPECIFIED AASHTO STANDARD SPECIFICATION.

NOTES

1. Typical view shown. See Contract Plans for quantities and locations of signal heads, EVP detectors, cameras, and signs.
2. Route signal cable(s) from terminal cabinet along inside bottom of the Signal Bridge to the Tenon(s) connector(s) at hand hole(s). Provide sufficient slack wire to allow the conductor or cable to be pulled a minimum of 18" (in) outside the Signal Bridge at the nearest hand hole to the equipment connection point.
3. All conductors shall be labeled in accordance with **Standard Specification 8-20.3(8)**. Labels shall be provided at the terminal cabinet (at the terminal board and conduits), equipment terminals, and at the hand hole nearest equipment connection point.
4. All RMC conduits embedded in foundation shall be terminated with a grounding end bushing and bonded to the structure grounding terminal. All PVC conduits embedded in foundations shall be terminated with end bell bushing.
5. Hand holes shall be installed at the time of fabrication.
6. Install hand hole on outside of the post at beam level when foundation is cast at grade. Install hand hole on traffic side of post when signal bridge is mounted on bridge, retaining wall or other structure.
7. Grounding conductor shall be non-insulated # 4 AWG copper with 3' (ft) minimum slack. Clamp to horizontal steel reinforcing with a listed connector suitable for use embedded in concrete. For details, see Elevation View Signal Bridge Hand Hole Placement on Standard, Sheet 2. Or see Foundation Detail in Bridge Deck or Bridge Deck Island, Sheet 2.
8. Grounding conductor shall be non-insulated #4 AWG copper with 3' (ft) minimum slack. Clamp to vertical steel reinforcing with a listed connector suitable for use embedded in concrete. For Detail, see Partial Foundation Detail, Sheet 2.
9. Signal bridge foundation shall be designed by the Engineer of Record for all installations (at grade, mounted on a bridge structure or on a wall structure).
10. Variable Message Signs (VMS) shall not be installed on signal bridge.
11. No sign larger than 12' (ft) long x 4' (ft) tall shall be installed on signal bridge.

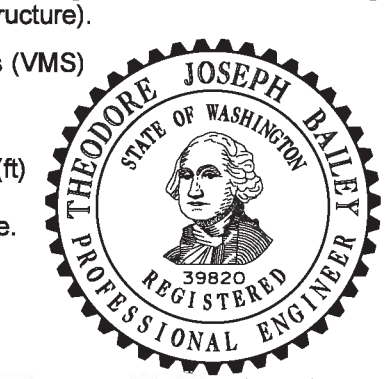

Bailey, Ted
Jun 11 2014 9:58 AM

SIGNAL BRIDGE STANDARD ELECTRICAL DETAILS

STANDARD PLAN J-75.41-00

SHEET 1 OF 4 SHEETS

APPROVED FOR PUBLICATION
Bakotich, Pasco
Jun 11 2014 1:38 PM

STATE DESIGN ENGINEER DATE

Washington State Department of Transportation

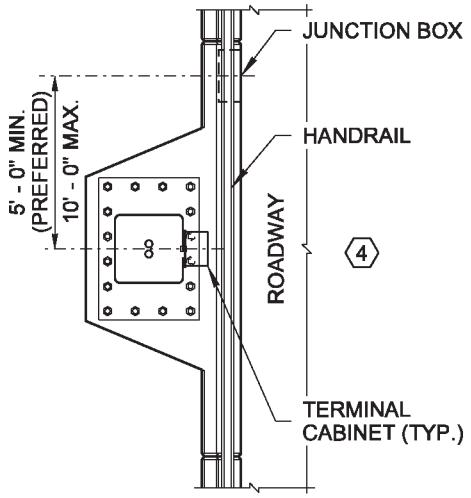

PLAN VIEW

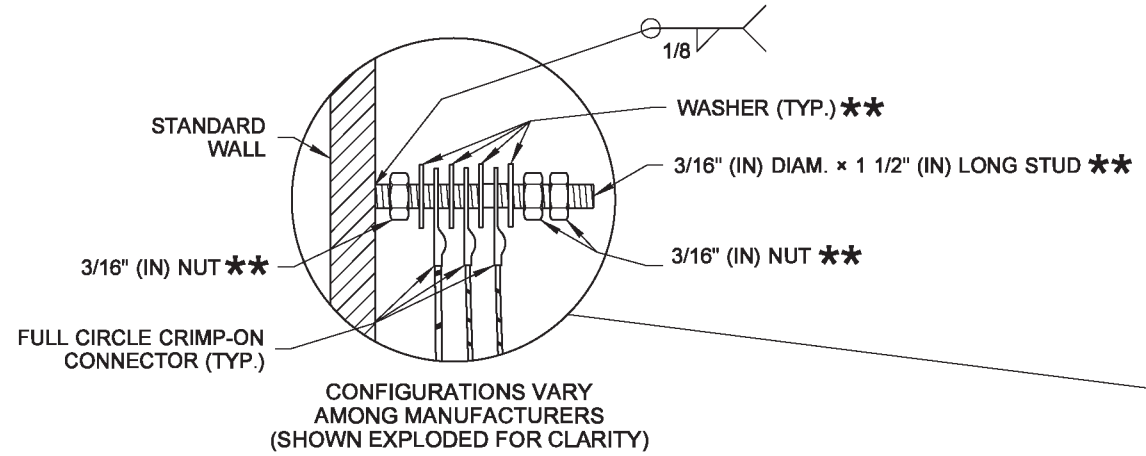

CONFIGURATIONS VARY AMONG MANUFACTURERS (SHOWN EXPLODED FOR CLARITY)

** BOLTS, NUTS, AND WASHERS ~ ASTM F593 OR A193 TYPE 304 OR TYPE 316 STAINLESS STEEL (S.S.)

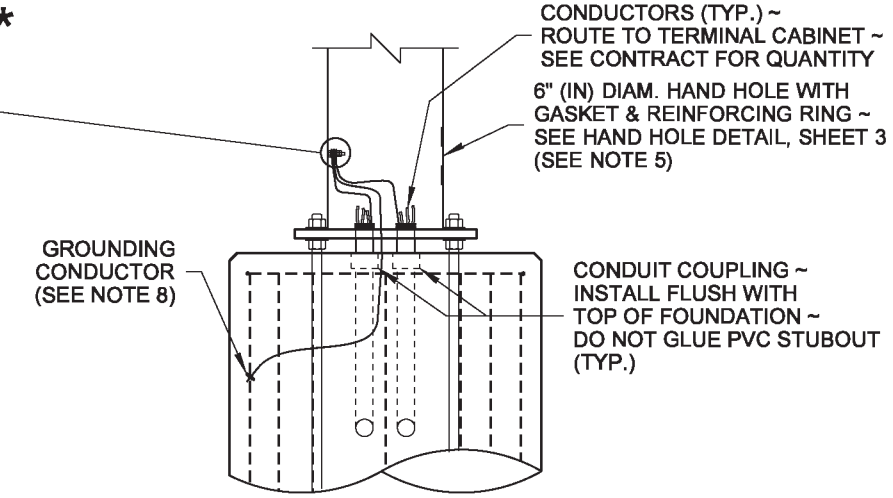

PARTIAL FOUNDATION DETAIL

(GROUT PAD/SCREEN NOT SHOWN FOR CLARITY)

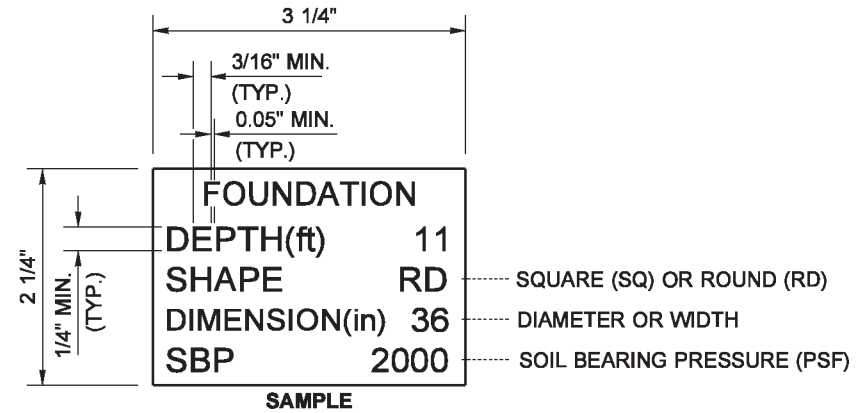

SIGNAL FOUNDATION IDENTIFICATION TAG DETAIL

TEXT SHALL BE ENGRAVED 0.014" (IN) DEEP

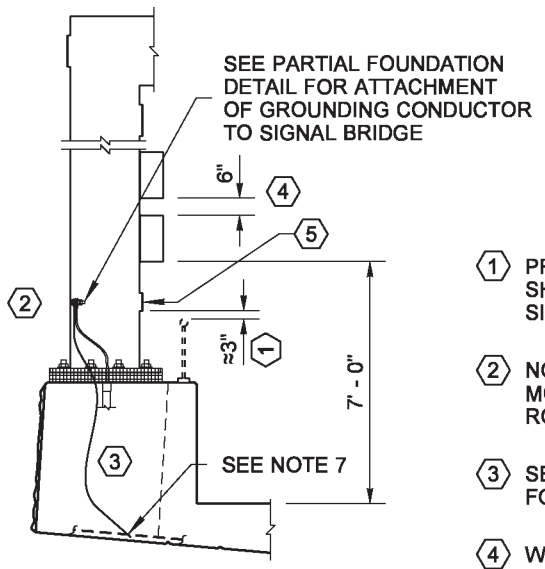

ELEVATION VIEW

WITH HANDRAIL (SQUARE MONOTUBE SHOWN ~ ROUND OR MULTI-FACETED SIMILAR)

1. PRESENCE OF A BARRIER HANDRAIL SHALL BE VERIFIED PRIOR TO SIGNAL BRIDGE FABRICATION
2. NO TERMINAL CABINET SHALL BE MOUNTED ON SIDE OPPOSITE THE ROADWAY
3. SEE BRIDGE SHEETS FOR FOUNDATION DESIGN
4. WHEN SIGNAL BRIDGE IS MOUNTED ON A STRUCTURE TERMINAL CABINETS SHALL BE MOUNTED ON THE TRAFFIC SIDE OF THE POST AS SHOWN
5. 6" (IN) DIAM. HAND HOLE WITH GASKET AND REINFORCING RING

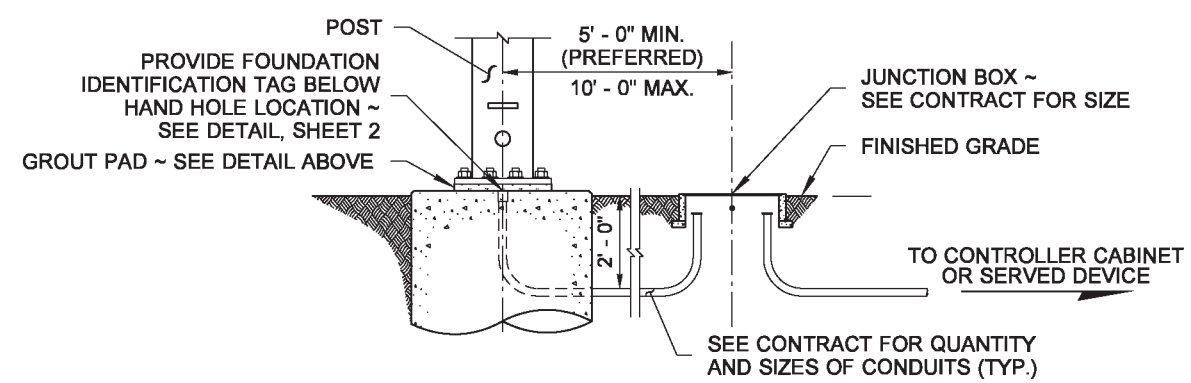

SEE **STANDARD PLAN J-26.15** FOR FOUNDATION PLACEMENT DETAILS

PARTIAL FOUNDATION TO JUNCTION BOX DETAIL

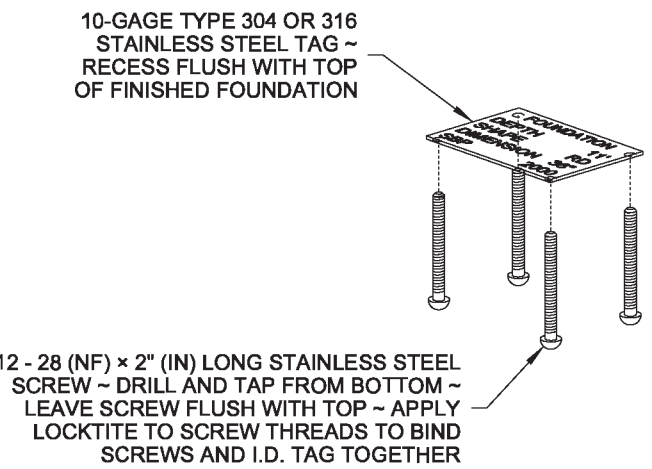

IDENTIFICATION TAG DETAIL

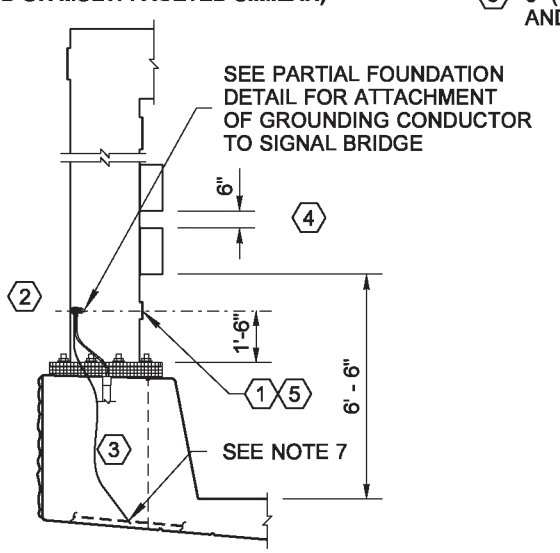

ELEVATION VIEW

WITHOUT HANDRAIL (SQUARE MONOTUBE SHOWN ~ ROUND OR MULTI-FACETED SIMILAR)

SIGNAL BRIDGE HAND HOLE PLACEMENT ON STANDARD

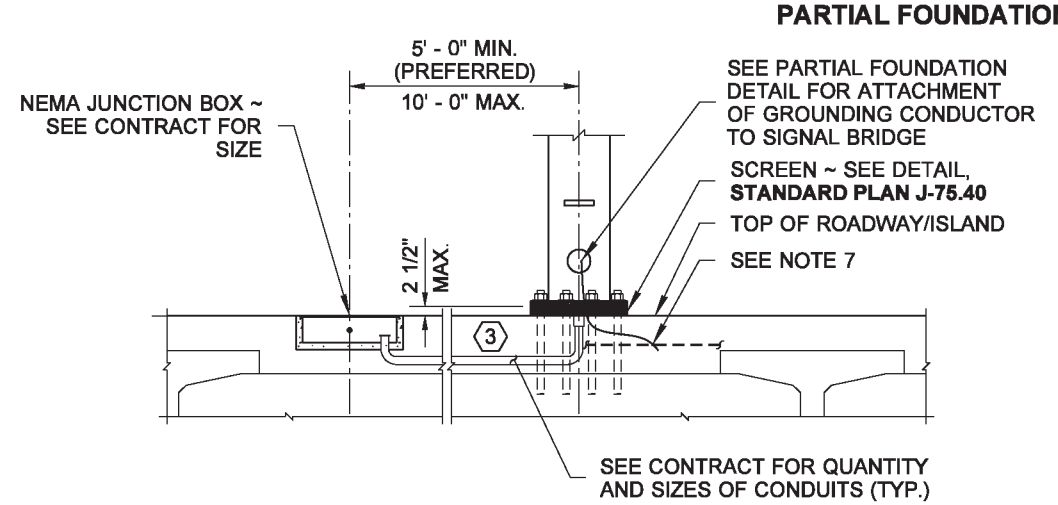

FOUNDATION DETAIL ON BRIDGE - CROSS BEAM

(NO FOUNDATION ALLOWED ON BRIDGE DECK)

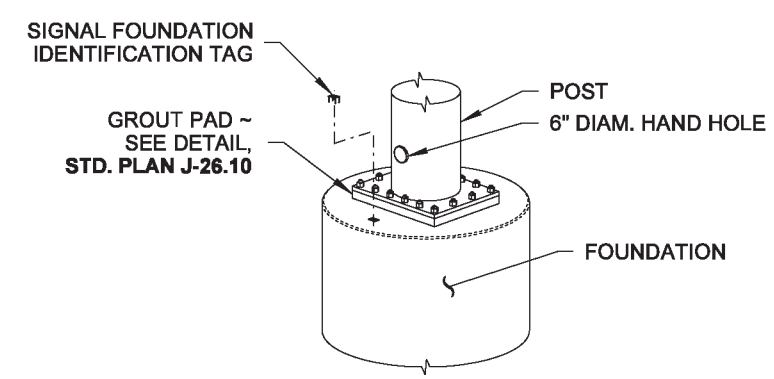

PARTIAL SIGNAL FOUNDATION DETAIL

(ROUND OR MULTI-FACETED SHOWN ~ SQUARE MONOTUBE SIMILAR)

Bailey, Ted
Jun 11 2014 9:59 AM

SIGNAL BRIDGE STANDARD ELECTRICAL DETAILS

STANDARD PLAN J-75.41-00

SHEET 2 OF 4 SHEETS

APPROVED FOR PUBLICATION
Bakotich, Pasco
Jun 11 2014 1:38 PM

STATE DESIGN ENGINEER DATE

Washington State Department of Transportation

DRAWN BY: BILL BERENS

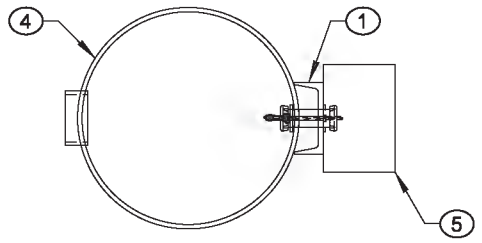

PLAN VIEW

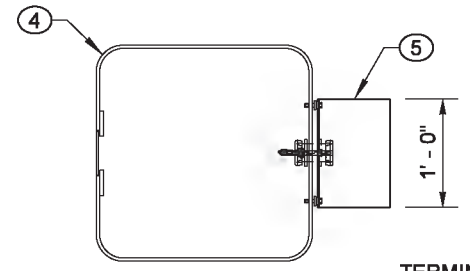

PLAN VIEW

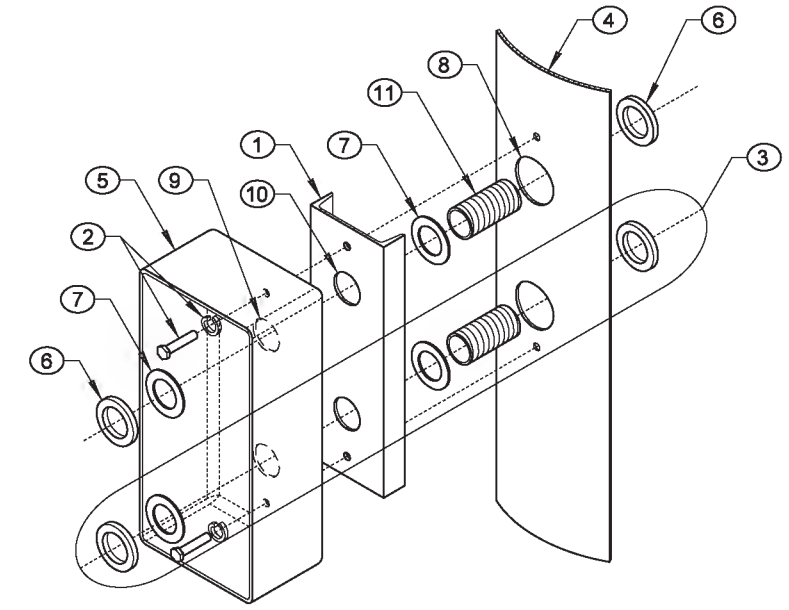

WIREWAY DETAIL
ISOMETRIC VIEW

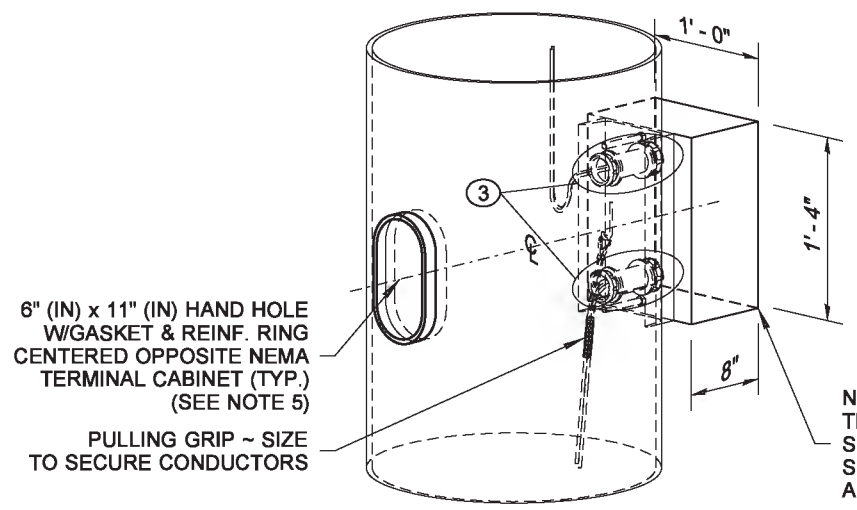

MULTI-SIDED (ROUND) TERMINAL CABINET MOUNTING DETAIL

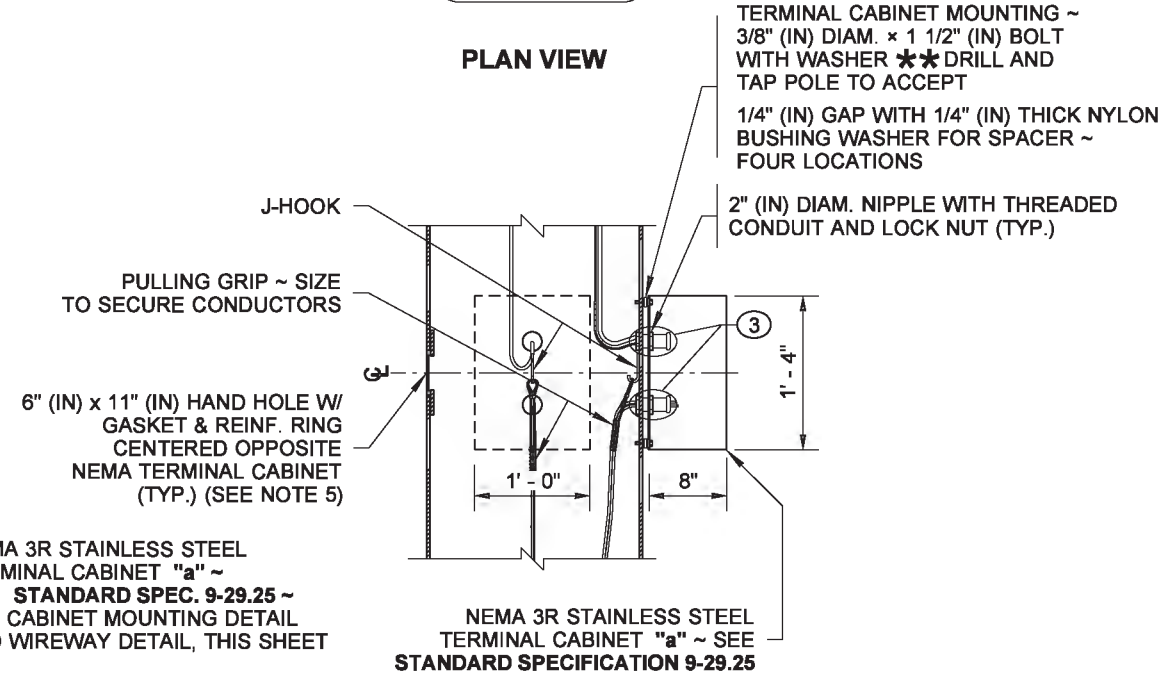

SQUARE TUBE SHOWN.
FOR MULTI-SIDED (ROUND) MONOTUBE STRUCTURE ~
ATTACH TERMINAL CABINET AS DETAILED
PER MULTI-SIDED (ROUND) TERMINAL CABINET MOUNTING DETAIL

SECTION @ TERMINAL CABINET

SQUARE MONOTUBE CABINET MOUNTING DETAIL

KEY NOTES

1. 6 × 8.2 LB/FT CHANNEL ~ HOT-DIP GALVANIZED
2. TWO EACH:
   - 1/2-13 NC × 2 1/2" (IN) HEX HEAD BOLT **
   - LOCK WASHERS (DRILL AND TAP POLE TO ACCEPT) **
3. WIREWAY (SEE DETAIL THIS SHEET)
4. METAL POST
5. CABINET
6. END BUSHING (TYP.)
7. SEALING LOCKNUT (TYP.)
8. POLE WALL DRILLED SO BUSHING WILL PASS THROUGH (TYP.)
9. CABINET WITH BACK WALL DRILLED 1/8" (IN) OVERSIZE OF NIPPLE (TYP.)
10. CHANNEL DRILLED 1/8" (IN) OVERSIZE OF NIPPLE (TYP.)
11. 2" (IN) DIAM. × 4" (IN) NIPPLE (UNLESS OTHERWISE NOTED) (TYP.)

" t " = MATCH REINFORCEMENT RING OR WELD SIZE TO MEMBER THICKNESS

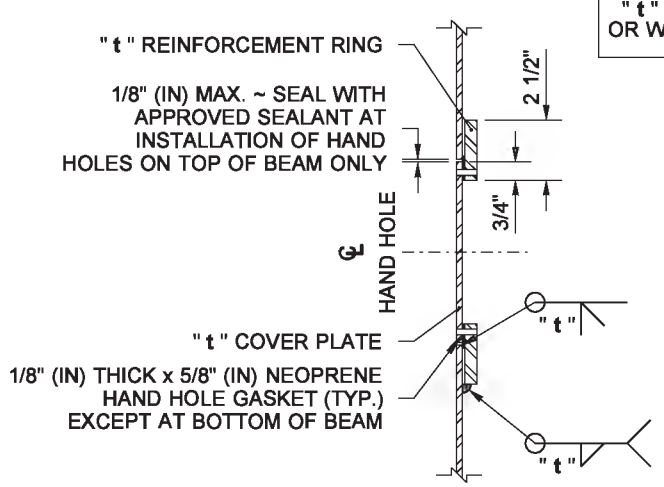

SECTION (A)

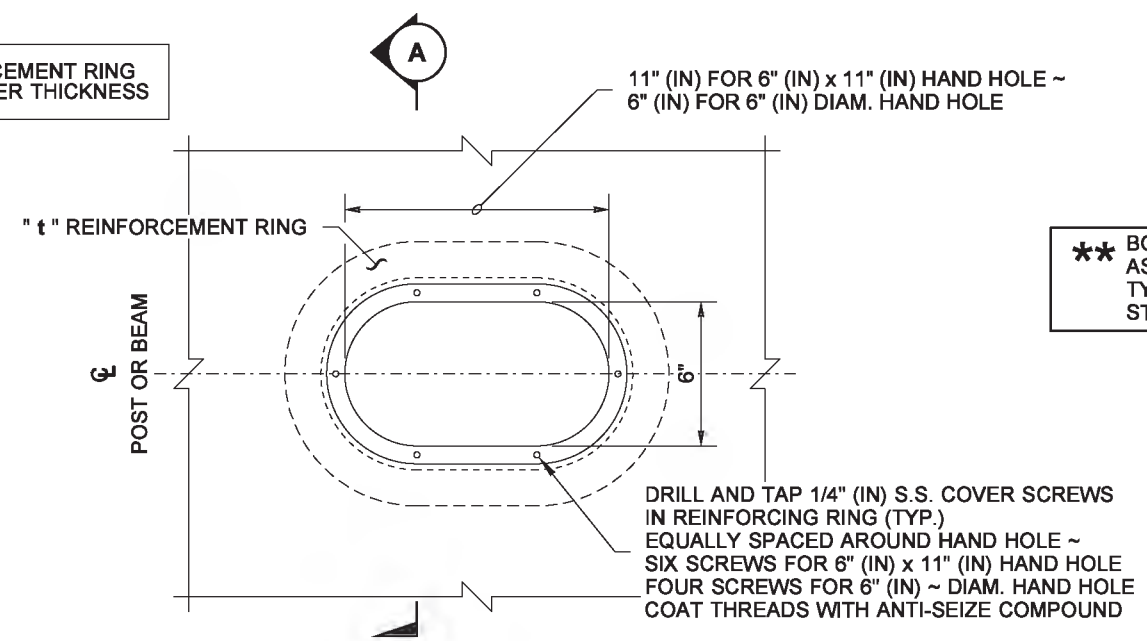

6" (IN) x 11" (IN) HAND HOLE SHOWN
6" (IN) DIAM. HAND HOLE SIMILAR
EXCEPT AS SHOWN

BEAM HAND HOLE DETAIL

** BOLTS, NUTS, AND WASHERS ~ ASTM F593 OR A193 TYPE 304 OR TYPE 316 STAINLESS STEEL (S.S.)

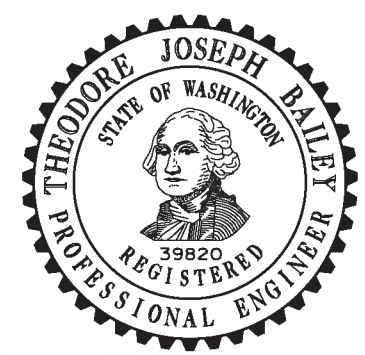

Bailey, Ted
Jun 11 2014 9:58 AM

SIGNAL BRIDGE STANDARD ELECTRICAL DETAILS

STANDARD PLAN J-75.41-00

SHEET 3 OF 4 SHEETS

APPROVED FOR PUBLICATION
Bakotich, Pasco
Jun 11 2014 1:38 PM
STATE DESIGN ENGINEER DATE

Washington State Department of Transportation

DRAWN BY: BILL BERENS

SIGN MOUNTING NOTES

1. An acceptable alternative to a Locknut w/nylon insert shall be as follows:
   - Nylock Blue Nylon Torque-Patch
   - Nylock Precote 30
   - ND Patch 360 Ring Patch

   All products shall be applied the full length of the bolt threads with 360° coverage.
2. Hot dip galvinize all non-stainless parts.
3. For sign lighting details, See **Standard Plans J-75.40** (for Monotube) and **J-75.45** (for Round or Multi-sided) structures.

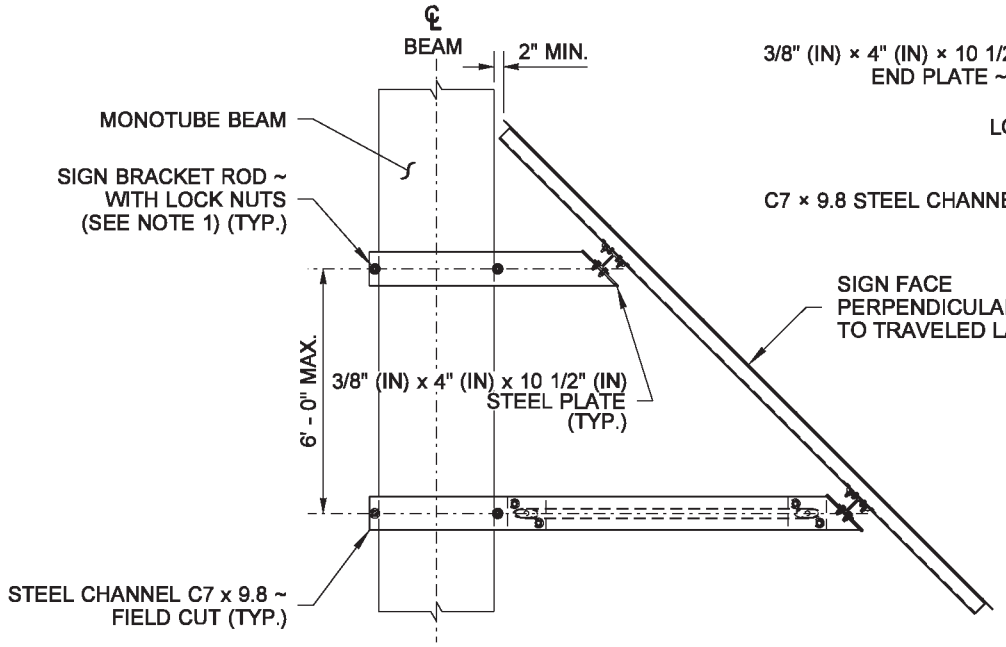

PLAN VIEW

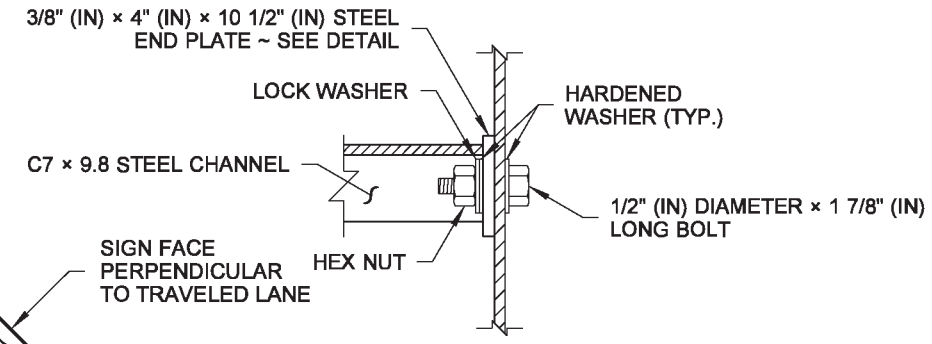

BOLT DETAIL

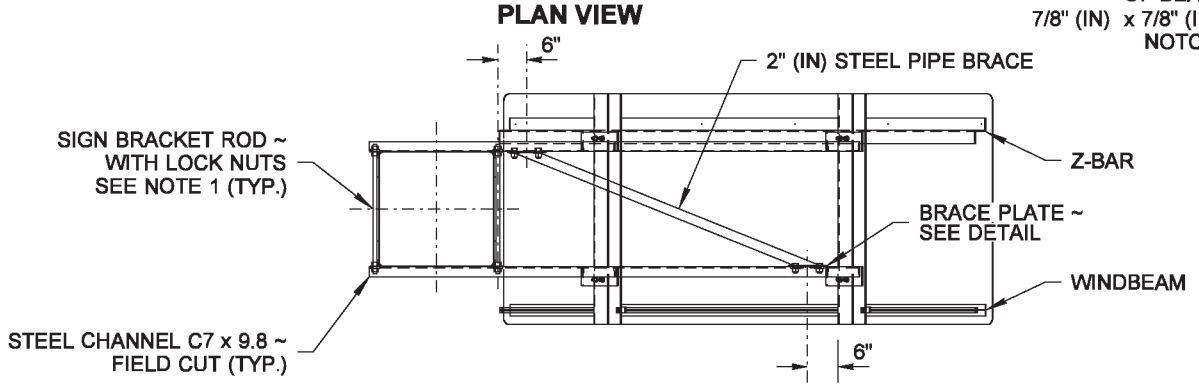

ELEVATION VIEW

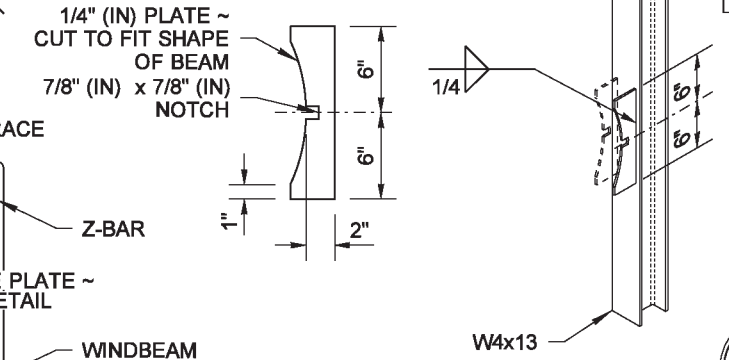

STIFFENER PLATE DETAIL

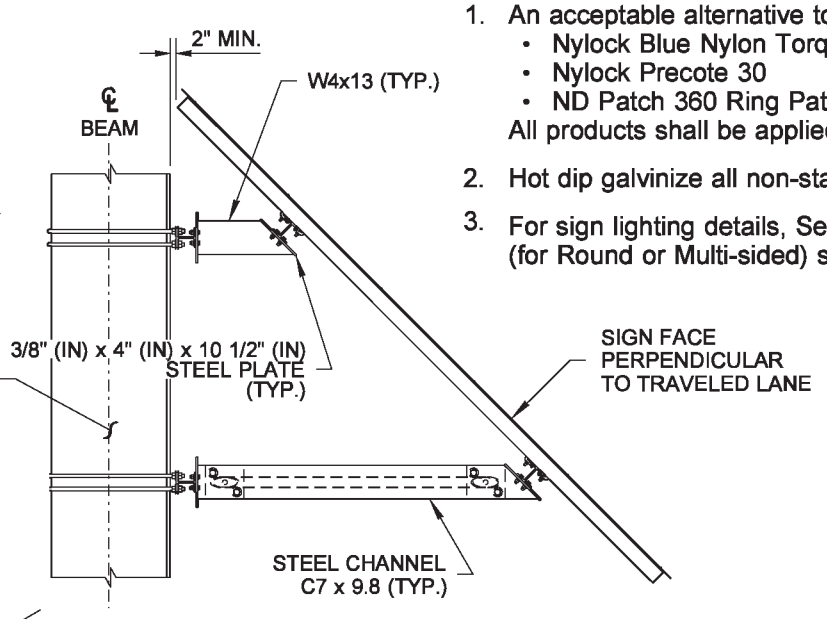

PLAN VIEW

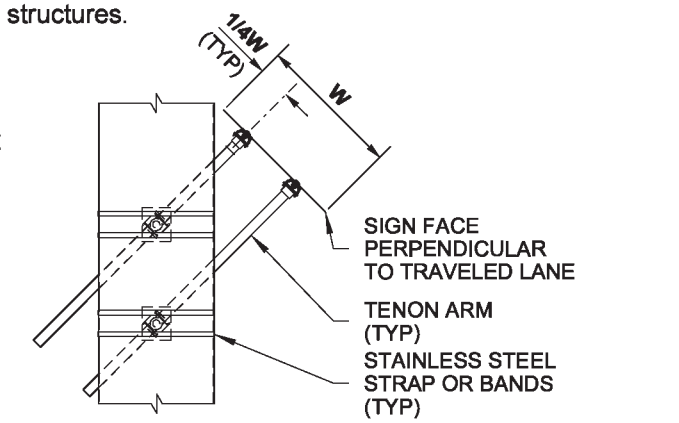

PLAN VIEW

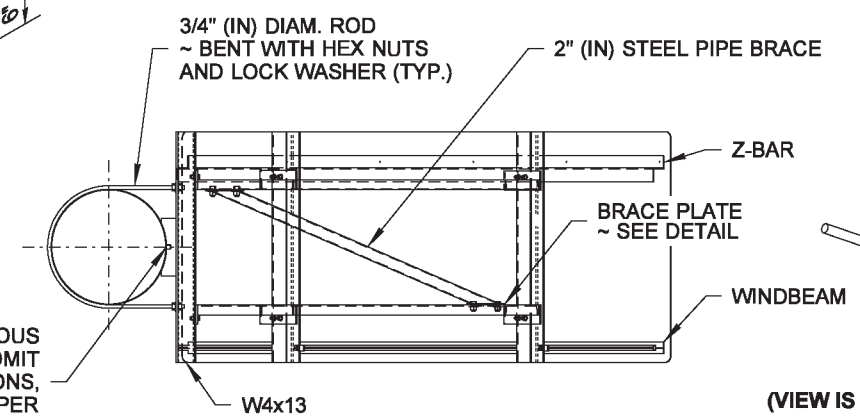

ELEVATION VIEW

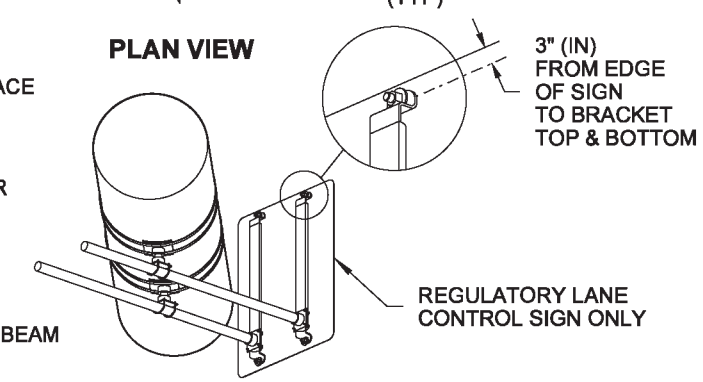

OBLIQUE VIEW
(VIEW IS FROM BELOW LOOKING UP)

ROUND OR MULTI-SIDED SIGNAL BRIDGE SIGN MOUNTING DETAILS FOR SMALL SIGN
(FOR SIGNS - 36" (IN) x 36" (IN) OR LESS)

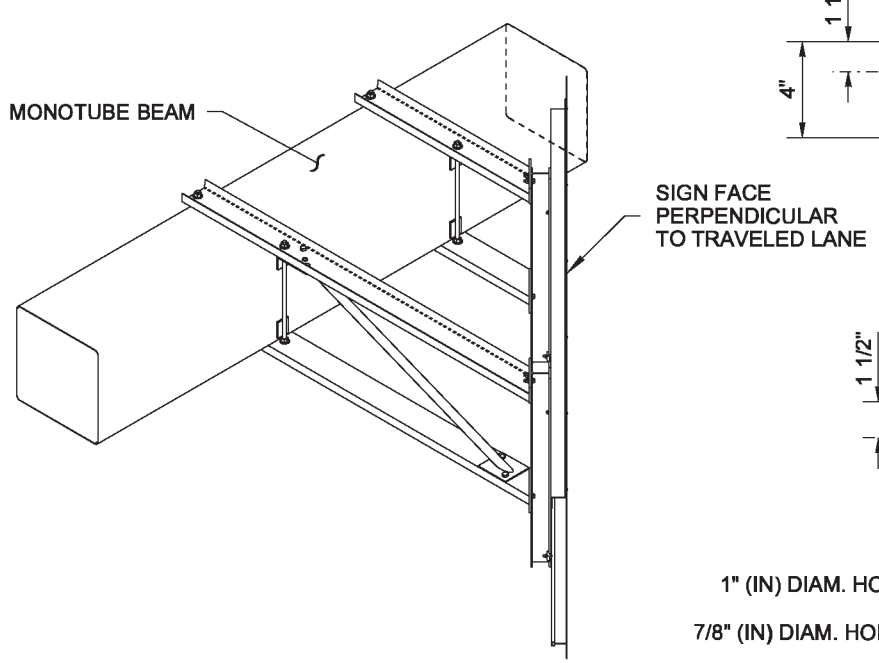

ISOMETRIC VIEW
MONOTUBE SIGNAL BRIDGE SIGN MOUNTING DETAILS (SKEWED SIGN DETAIL)

REFER TO STANDARD PLAN G-90.20 FOR ADDITIONAL DETAILING NOT SHOWN

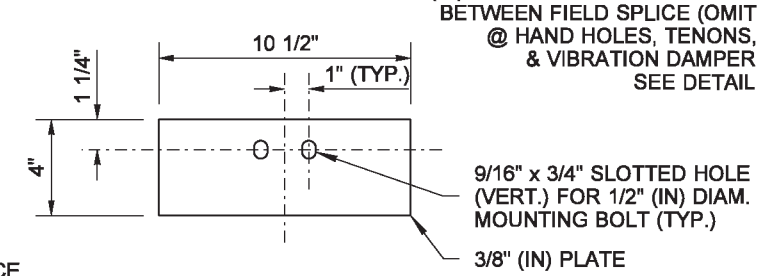

END PLATE DETAIL

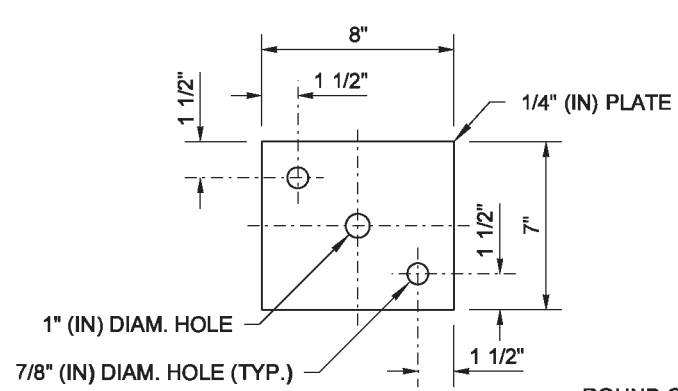

BRACE PLATE DETAIL

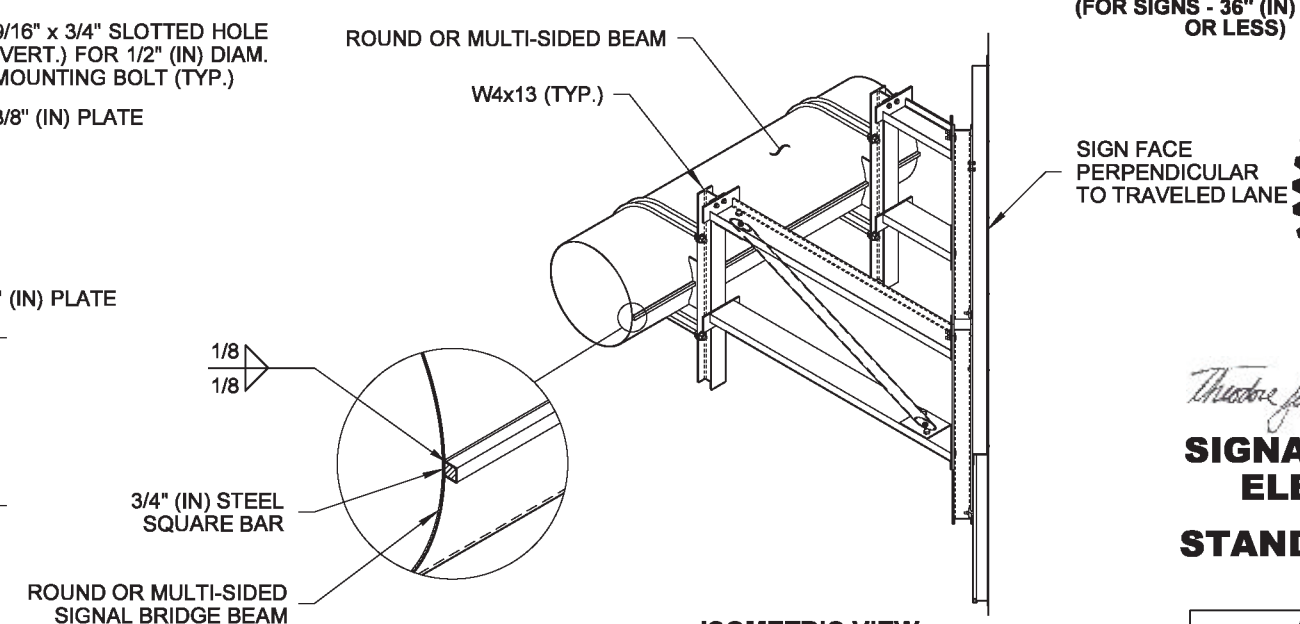

ISOMETRIC VIEW

ROUND OR MULTI-SIDED SIGNAL BRIDGE SIGN MOUNTING DETAILS FOR LARGE SIGN
(FOR SIGNS - 4' (FT) x 12' (FT) OR LESS)

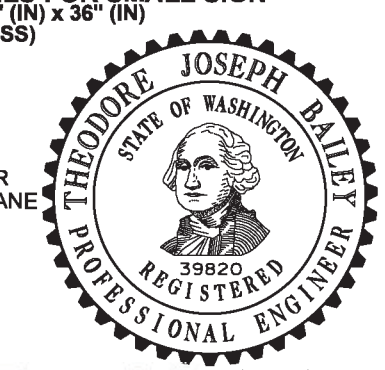

Bailey, Ted
Jun 11 2014 9:58 AM

SIGNAL BRIDGE STANDARD ELECTRICAL DETAILS

STANDARD PLAN J-75.41-00

SHEET 4 OF 4 SHEETS

APPROVED FOR PUBLICATION
Bakotich, Pasco
Jun 11 2014 1:38 PM
STATE DESIGN ENGINEER DATE

Washington State Department of Transportation

DRAWN BY: BILL BERENS

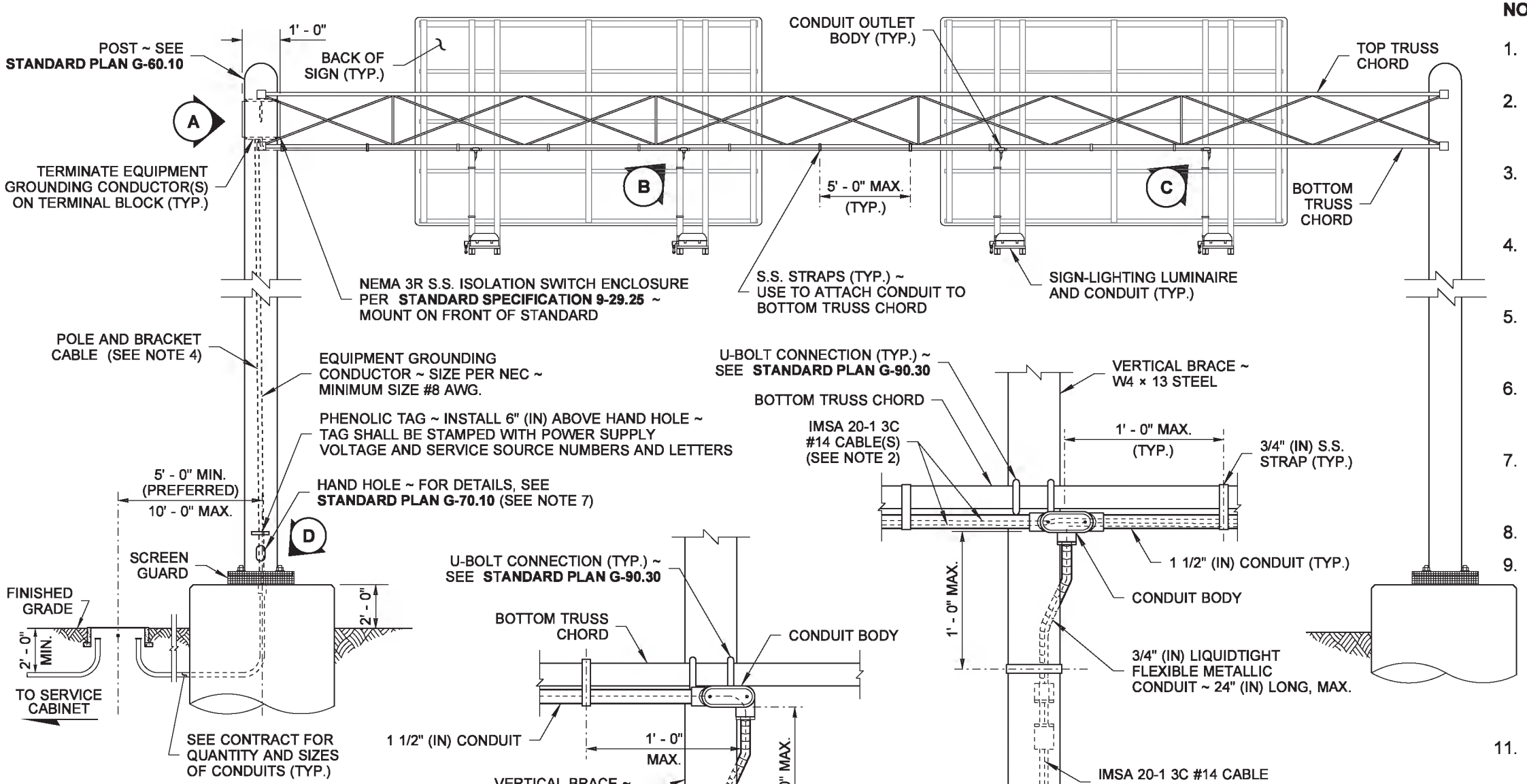

NOTES

1. Typical view shown. Verify power source location, quantities, and location of signs and sign structure fixtures in Contract Plans.
2. Route separate IMSA 20-1 3C #14 cables from load side of terminal strip to each additional Sign-Lighting Luminaire (where applicable) and provide sufficient slack wire per **Standard Specification 8-20.3(8).**
3. Label all conductors with sign light and circuit number at isolation switch, handhole, and ballast enclosure. Label shall be a PVC or Polyolefin wire marking sleeve per **Standard Specification 9-29.**
4. Install quick-disconnect fuse kits between the power supply wires and pole and bracket cable per **Standard Specification 9-29.7.** Fuse size shall be 200% larger than load size.
5. The conductors in the IMSA 20-1 3C #14 cable shall be black, red, and white. The white conductor shall be permanently identified as an equipment grounding conductor per the NEC.
6. All GRS conduits embedded in foundation shall be terminated with grounding end bushing and bonded to the ground terminal in the base of pole. All PVC conduits embedded in foundations shall be terminated with end bell bushing.
7. Hand holes shall be installed at the time of fabrication. Only additional conduits for lighting accommodations to previously non-illuminated structures may be installed in field as long as the proper repairs are made to structure.
8. For details not shown, see **Standard Plan G-90.40**.
9. All holes shall be drilled and tapped.
10. Use the Retrofit details only when the following conditions apply:
    A. Existing W4 × 13 Steel Beam sign brackets are to be reused for a new Sign-Lighting Luminaire.
    B. The span between the existing Luminaire Brackets is too wide to attach the new Sign-Lighting Luminaire and Luminaire Mounting Plate.
11. If the sign structure includes a maintenance walkway, the Luminaire Mounting Plate shall be bolted to the walkway grating.

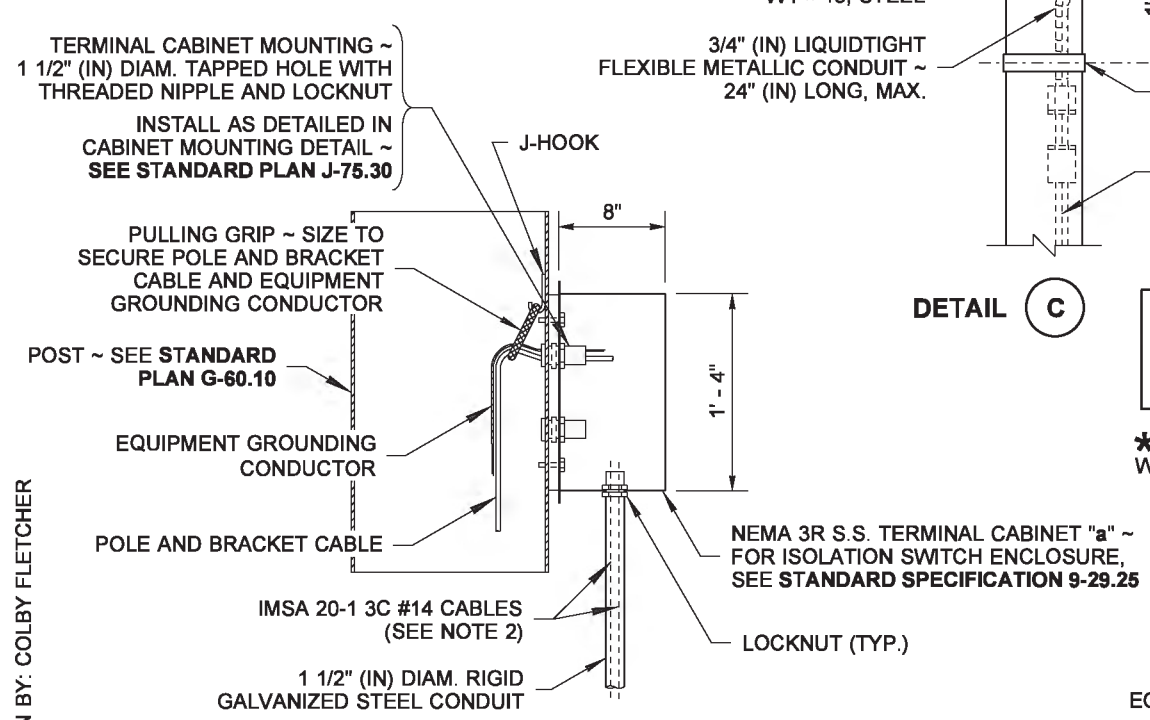

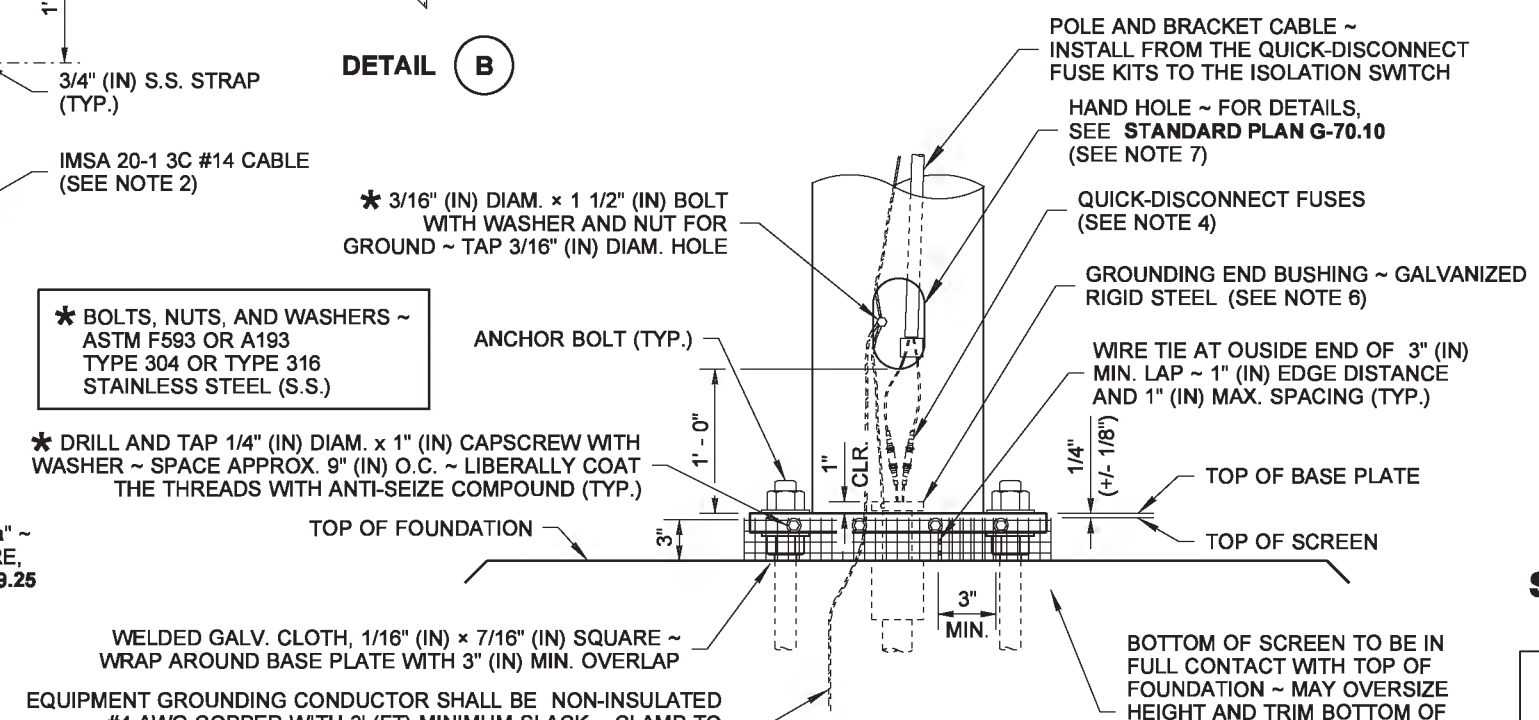

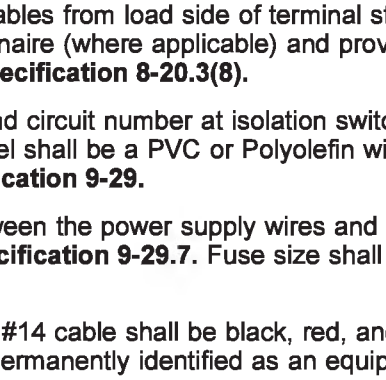

Bailey, Ted
Jun 11 2014 10:12 AM

OVERHEAD SIGN ELECTRICAL DETAILS (TRUSS STRUCTURE) STANDARD PLAN J-75.45-01

SHEET 1 OF 2 SHEETS

APPROVED FOR PUBLICATION
Bakotich, Pasco
Jun 11 2014 1:39 PM
STATE DESIGN ENGINEER
Washington State Department of Transportation

DRAWN BY: COLBY FLETCHER

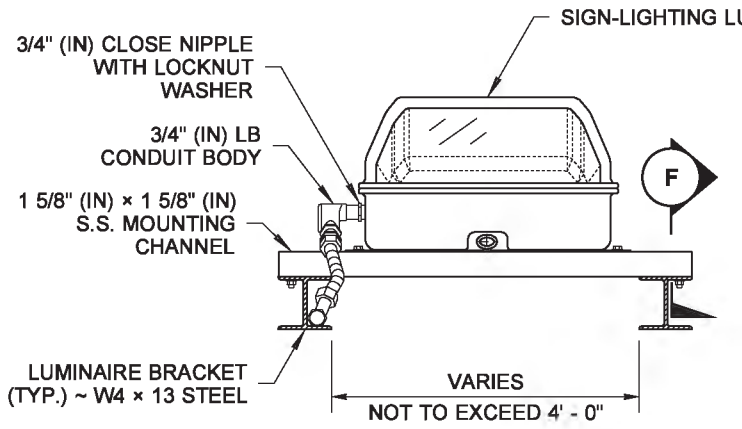

SECTION E

SIGN-LIGHTING FIXTURE WITH RETROFIT

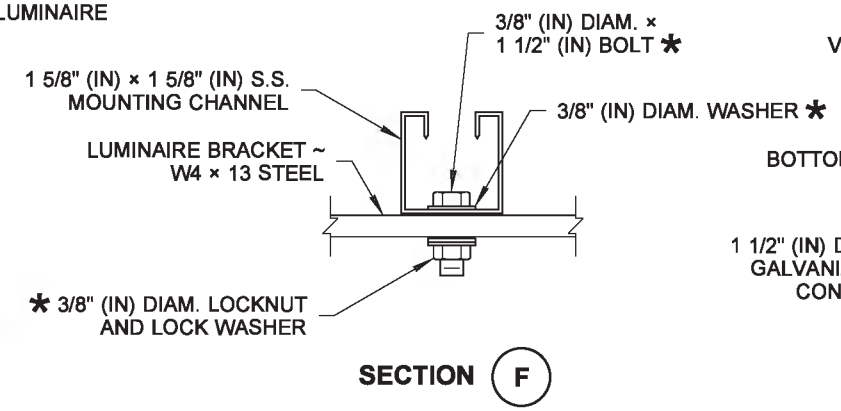

SECTION F

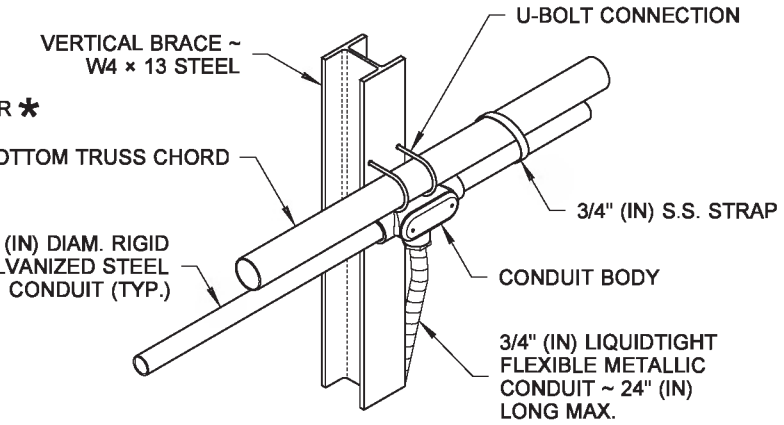

DETAIL J

* BOLTS, NUTS, AND WASHERS ~ ASTM F593 OR A193 TYPE 304 OR TYPE 316 STAINLESS STEEL (S.S.)

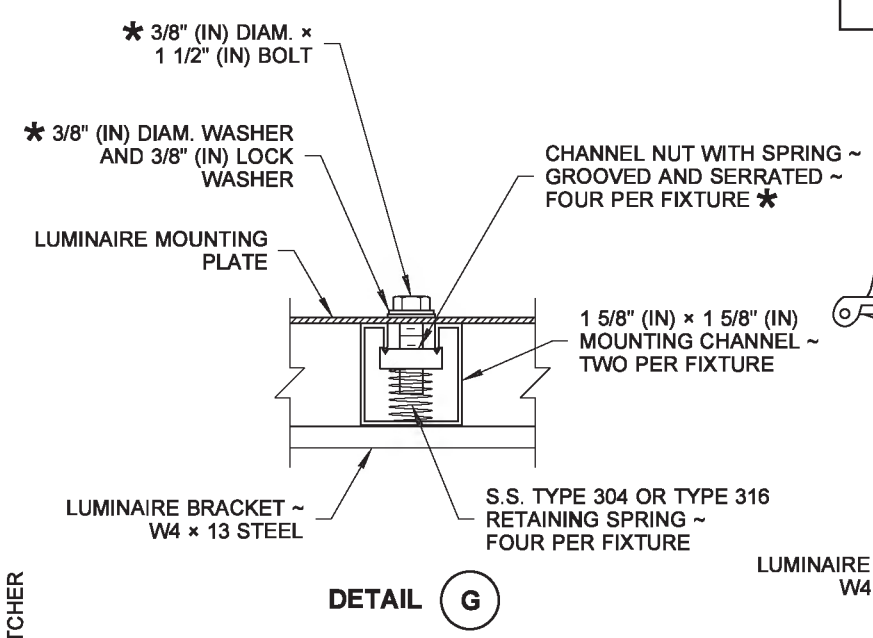

DETAIL G

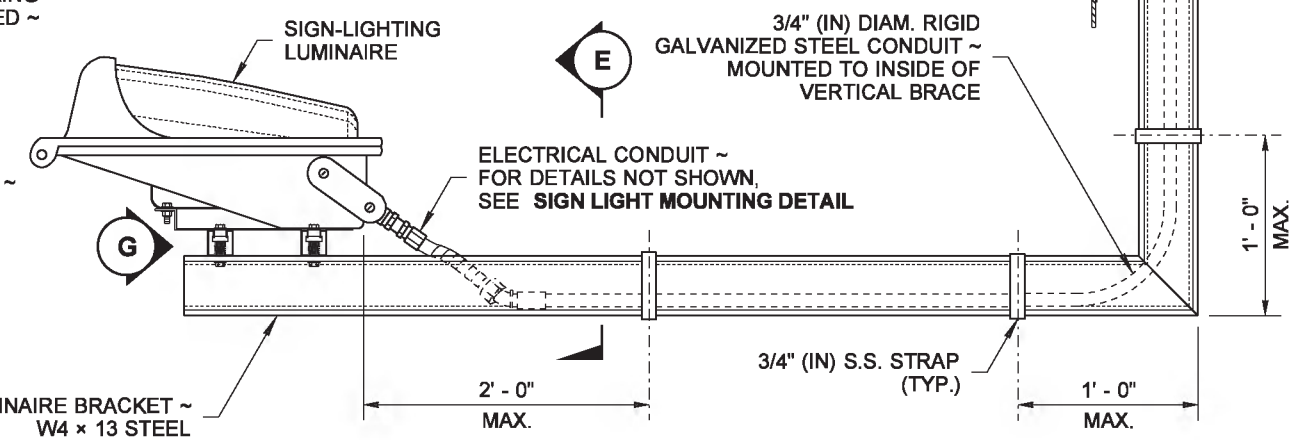

RETROFIT MOUNTING DETAIL

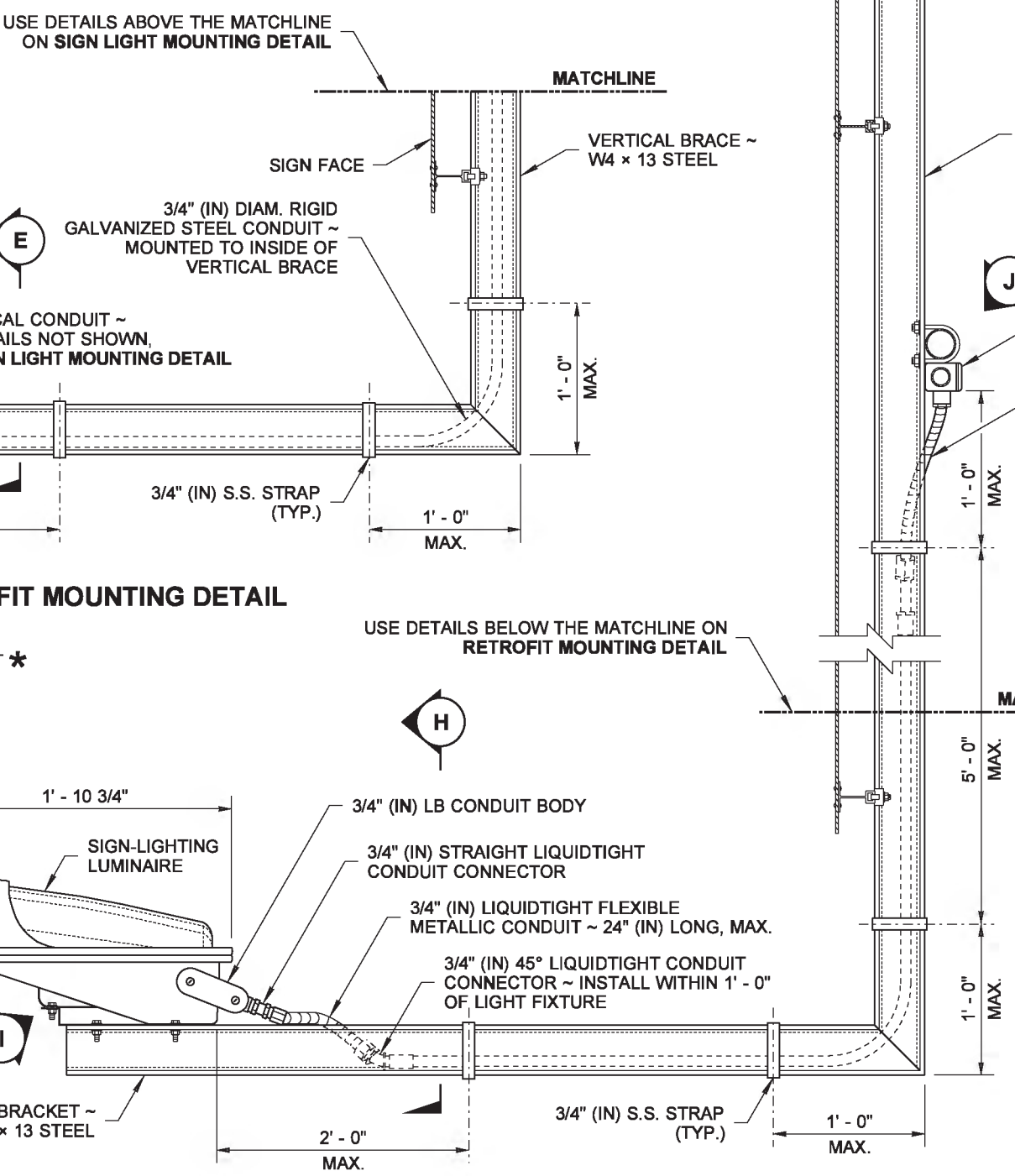

SIGN LIGHT MOUNTING DETAIL

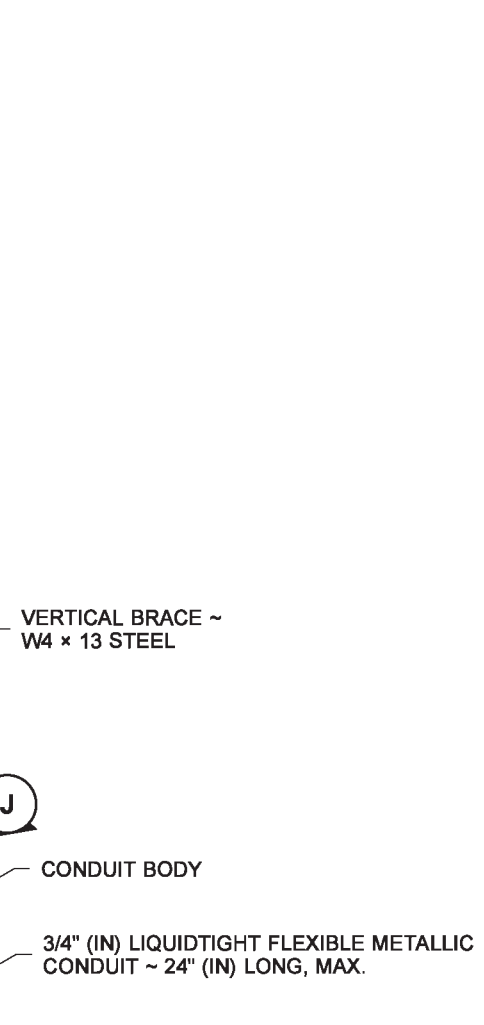

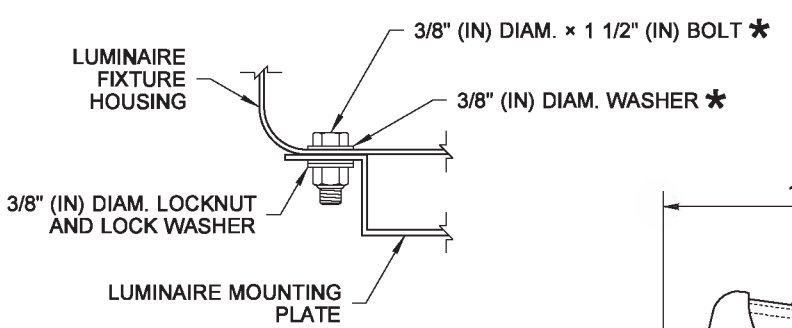

DETAIL I

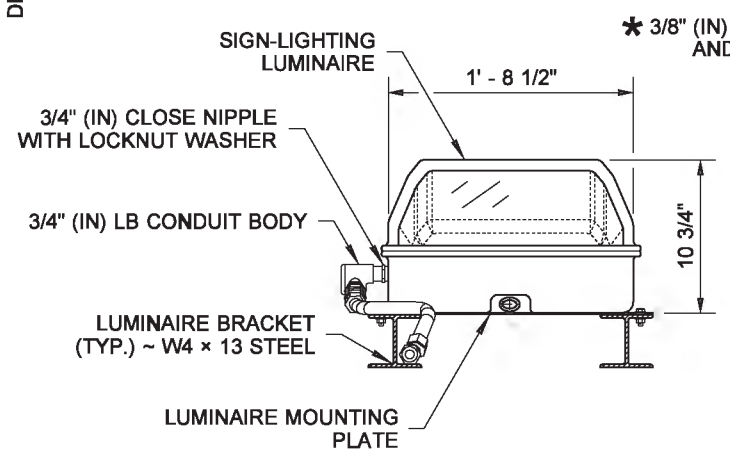

SECTION H

DRAWN BY: COLBY FLETCHER

Bailey, Ted
Jun 11 2014 10:13 AM

OVERHEAD SIGN ELECTRICAL DETAILS (TRUSS STRUCTURE) STANDARD PLAN J-75.45-01

SHEET 2 OF 2 SHEETS

APPROVED FOR PUBLICATION
Bakotich, Pasco
Jun 11 2014 1:39 PM
STATE DESIGN ENGINEER

Washington State Department of Transportation

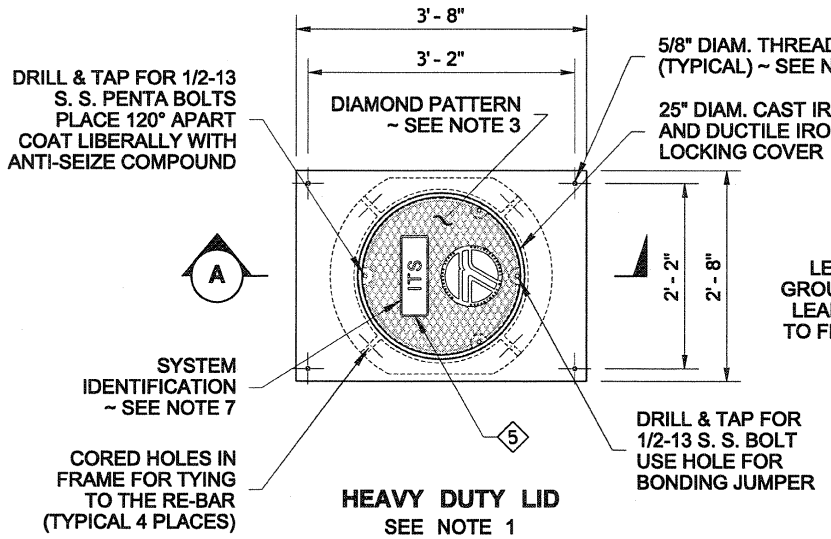

HEAVY DUTY LID
SEE NOTE 1

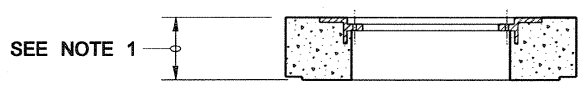

SECTION (A)
(LID NOT SHOWN)

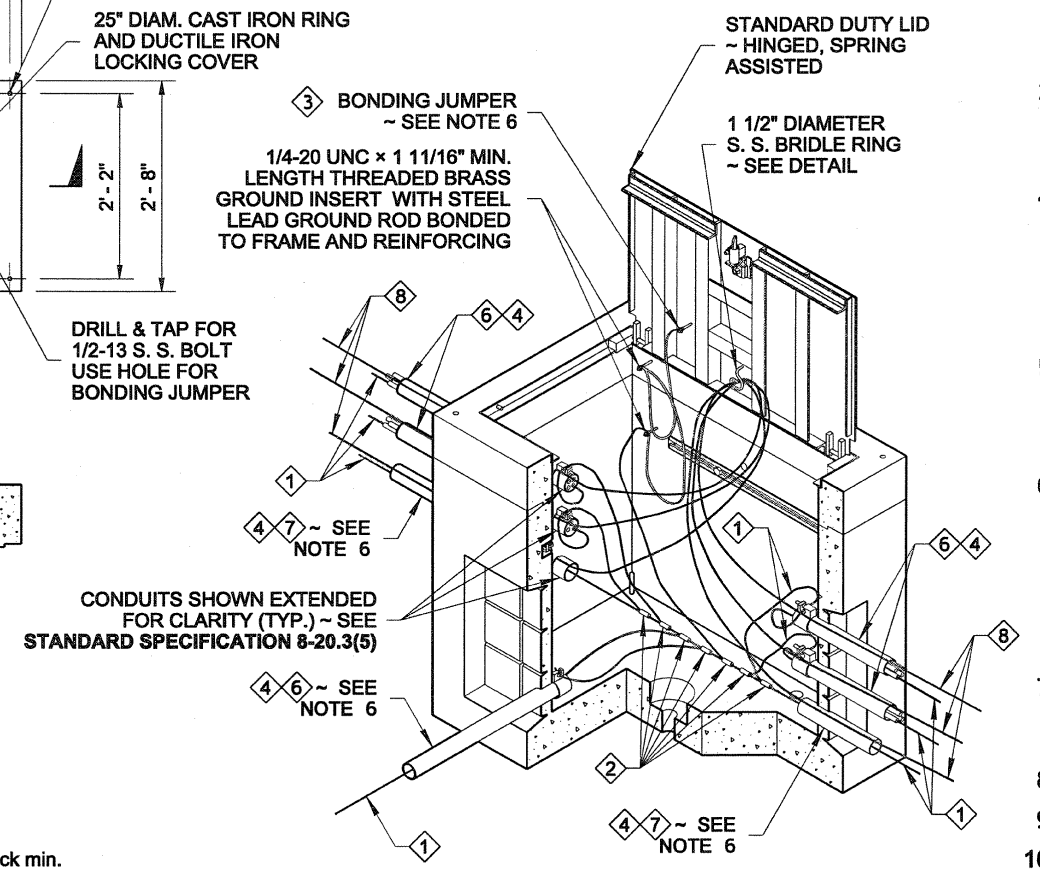

ISOMETRIC CUTAWAY

1 Equipment Grounding Conductor
2 Copper Solderless Crimp Connector
3 Equipment Bonding Jumper ~ See Note 5
4 See Contract for conduit size and number
5 Provide a 1 1/2" wide × 3 1/2" high × 3/16" thick min. flat area for lifting purposes (for Ductile Iron Lid only)
6 GRS Shown ~ See Contract for conduit type
7 PVC Shown ~ See Contract for conduit type
8 Location Wire

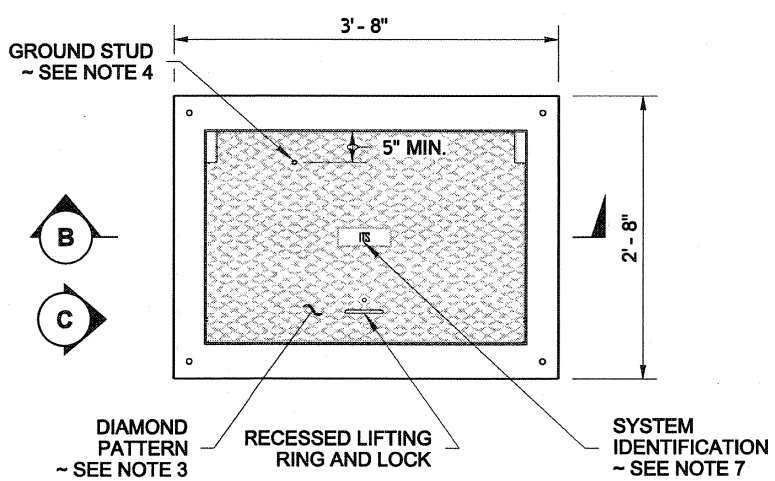

TOP

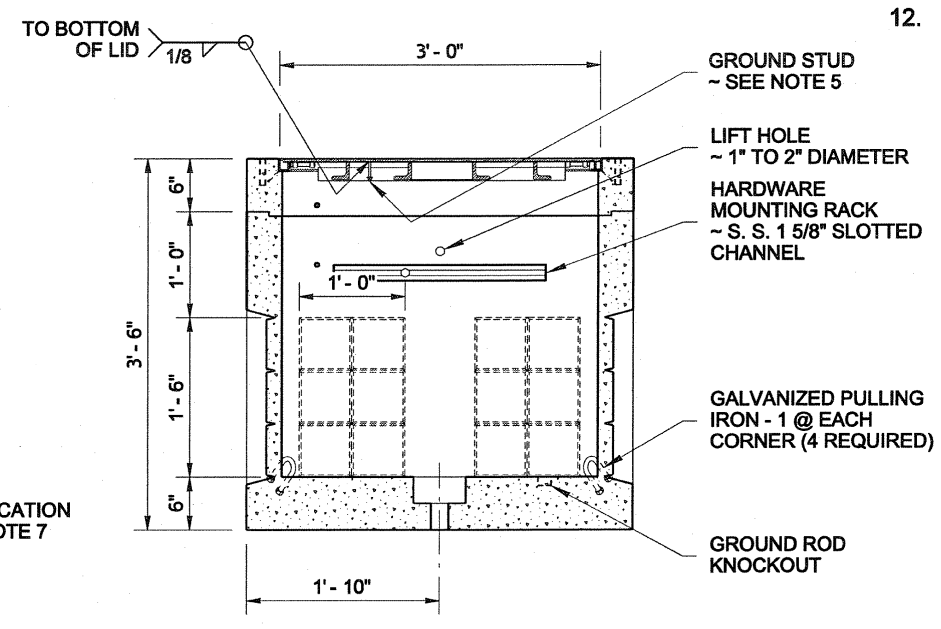

SECTION (B)

PULL BOX ASSEMBLY
(SHOWN WITH STANDARD DUTY LID)

NOTES

1. The Heavy Duty Lid shall be used when a Pull Box is placed in the paved shoulder or the traveled way. Use a 9" thick lid for new Pull Box installations. Use a 6" thick Heavy Duty Lid when converting a Standard Duty Pull Box into a Heavy Duty Pull Box in the paved shoulder or the traveled way and no overlay is called for in the Contract. Otherwise, see Contract Plans for overlay depth and fabricate lid thickness to match overlay depth.
2. Use Standard Duty Pull Box and Lid when placed in unpaved areas. Use Standard Duty Pull Box in sidewalks, walkways, and shared-use paths.
3. Minimum lid thickness shown. The diamond pattern shall be a minimum of 3/32" thick.
4. Standard Duty Pull Boxes installed in sidewalks, walkways, and shared-use paths shall have a slip-resistant coating on lid and shall be installed with the surface flush with and matched to the grade of the sidewalk, walkway, and shared-use paths. The non-slip lid shall be identified with permanent marking on the underside indicating the type of surface treatment (see Contract Documents for details) and the year of manufacture. The permanent marking shall be 1/8" inch line thickness formed with a stainless steel weld bead and shall be placed prior to hot-dip galvanizing.
5. A 1/4-20 UNC × 3/4" S. S. ground stud with (2) S. S. nuts and (2) S. S. flat washers shall be attached to the Standard Duty Lid and coated with anti-seize compound. Provide a 5/8" diameter cored hole in the ductile iron lid gusset (Heavy Duty Lid) with 1/2-13 UNC × 1 1/4" S. S. bolt, (3) S. S. flat washers, and (2) S. S. nuts for the Bonding Jumper.
6. Connect a Bonding Jumper to the steel conduit bushing for GRS conduit and connect the steel conduit bushing jumper to the equipment ground at the threaded brass ground insert. Connect the equipment grounding conductors in the PVC and/or GRS conduits to the brass ground insert. The Bonding Jumper shall be #8 min. x 4' (ft.) of tinned braided copper between the lid and the frame of the Heavy Duty tops and from the Heavy Duty top to the threaded brass ground insert. The Bonding Jumper shall be #8 min. x 4' (ft.) of tinned braided copper between the lid on a Standard Duty Pull Box and the threaded brass ground insert. See Contract Plan Sheets and **Standard Plan J-60.05** for Bonding Jumper requirements.
7. The system identification letters shall be 1/8" line thickness formed by engraving, casting, stamping, or with a S. S. weld bead. See COVER MARKING DETAIL. See **Standard Specification 9-29.2(4).** Ductile iron lid lettering shall be recessed.
8. Cement concrete shall be Class 4000.
9. Plastic plugs shall be put into the lid inserts after fabrication and the lid installation.
10. Capacity - conduit diameter = 40" (in.).
11. Excavate material, place 6" crushed surfacing pad per **Standard Specification Section 8-20.3(6).** Field bend #3 reinforcing bar to allow conduit into the Pull Box. Field bend reinforcing bar back into place, wire tie in (2) places, and cast in commercial concrete (commercial concrete only allowed for box bottom/wall completion).
12. This drawing depicts a typical Pull Box assembly. Reinforcing not shown. Each manufacturer's Pull Box assembly will vary. Refer to the approved manufacturer's shop drawings for all dimensions and the actual arrangement.

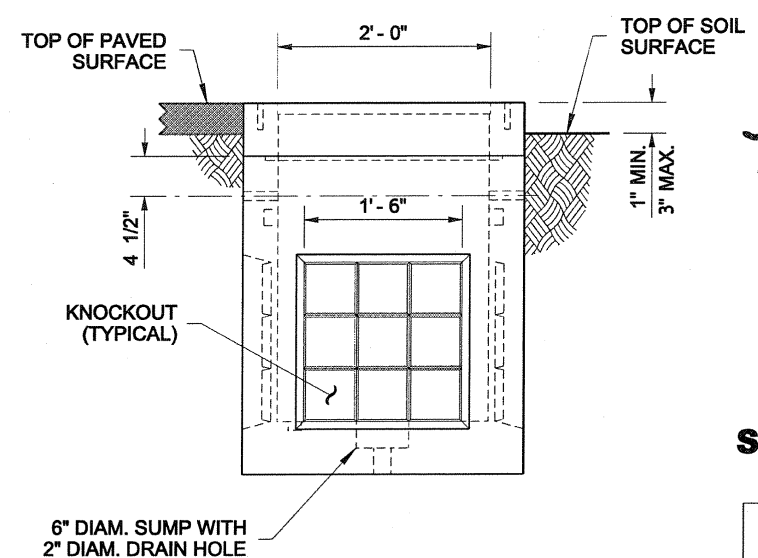

VIEW (C)

PULL BOX

STANDARD PLAN J-90.10-01

SHEET 1 OF 2 SHEETS

APPROVED FOR PUBLICATION
Pasco Bakotich III 6/22/11
STATE DESIGN ENGINEER DATE
Washington State Department of Transportation

DRAWN BY: LISA CYFORD

DRAWN BY: LISA CYFORD

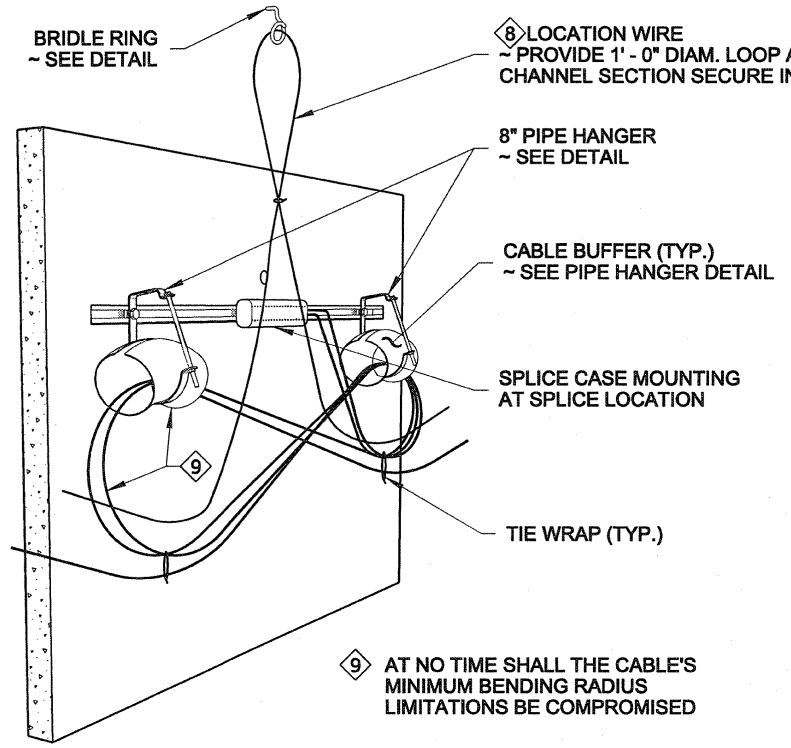

INTERNAL OBLIQUE VIEW

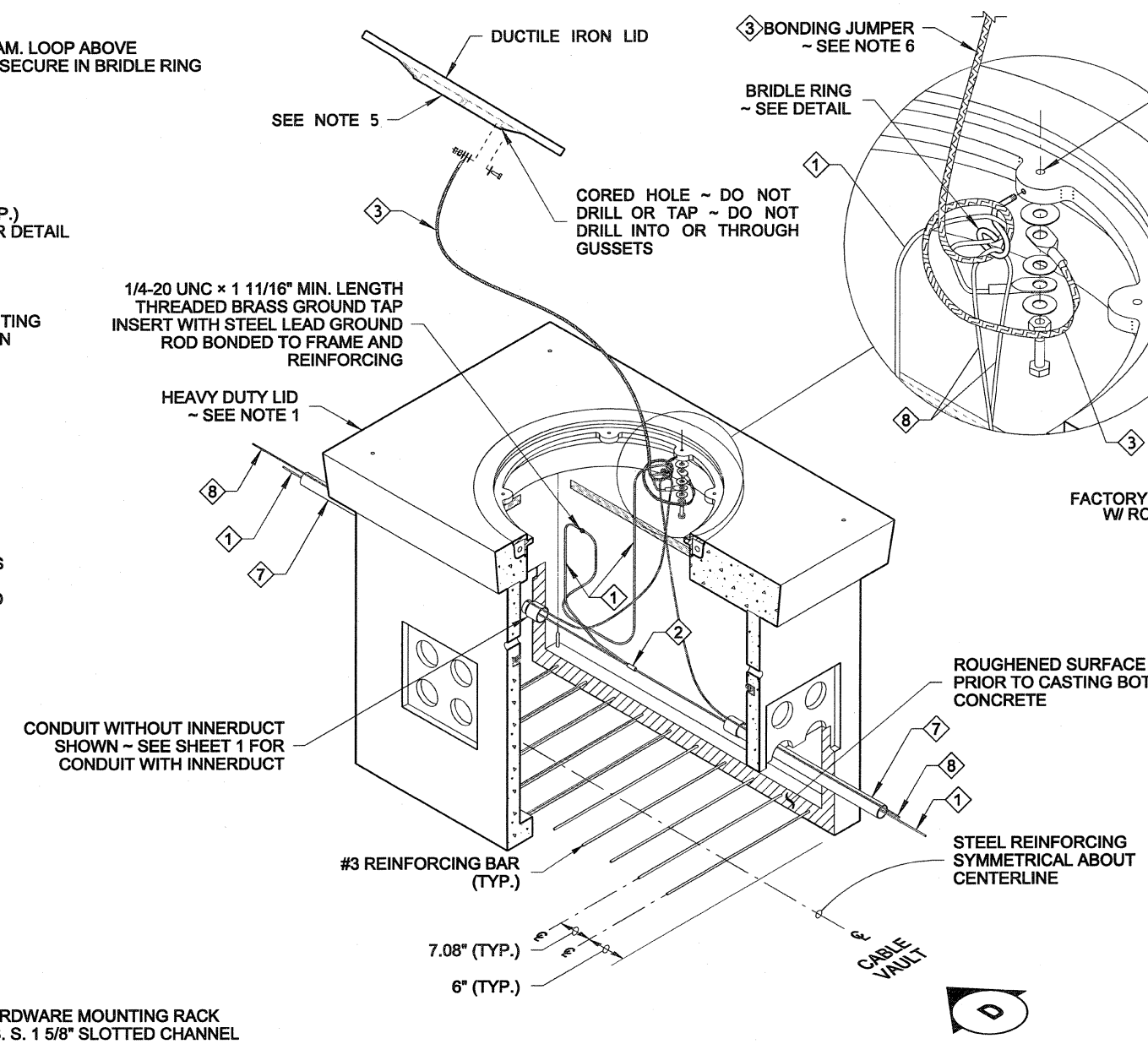

ISOMETRIC CUTAWAY

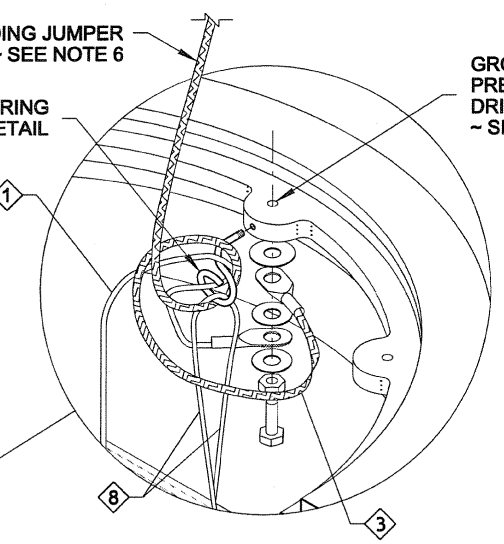

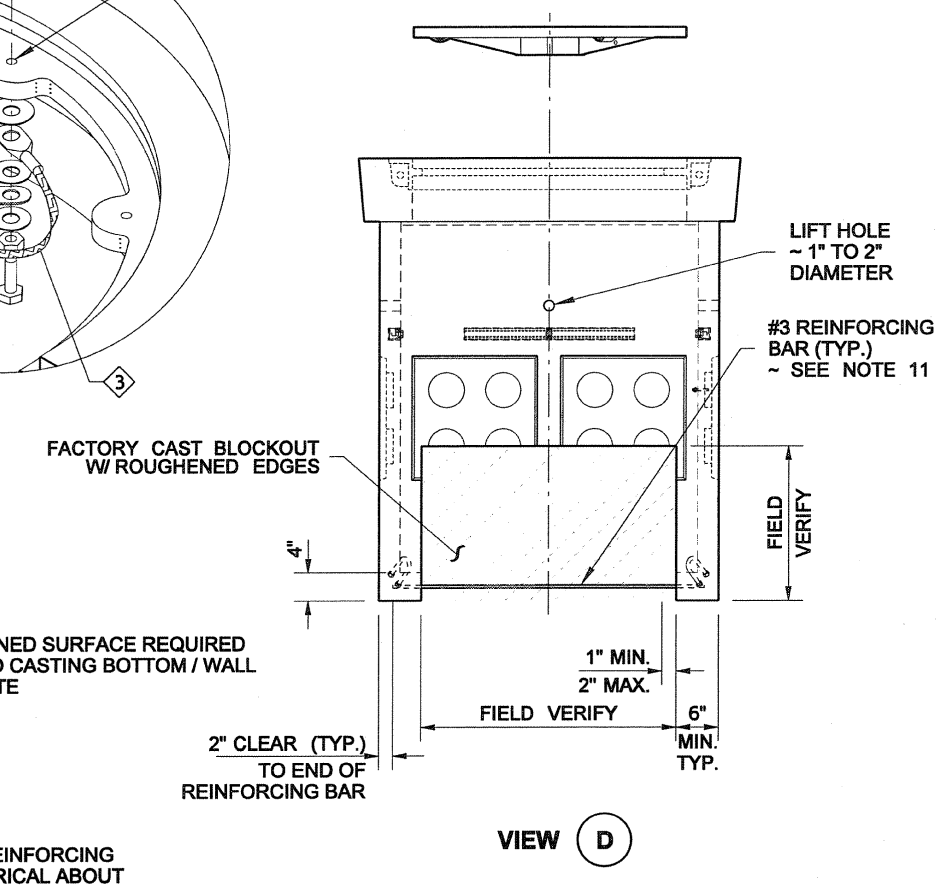

VIEW D

COVER MARKING DETAIL

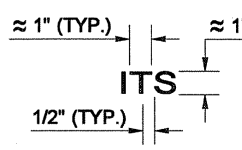

SEE NOTE 7

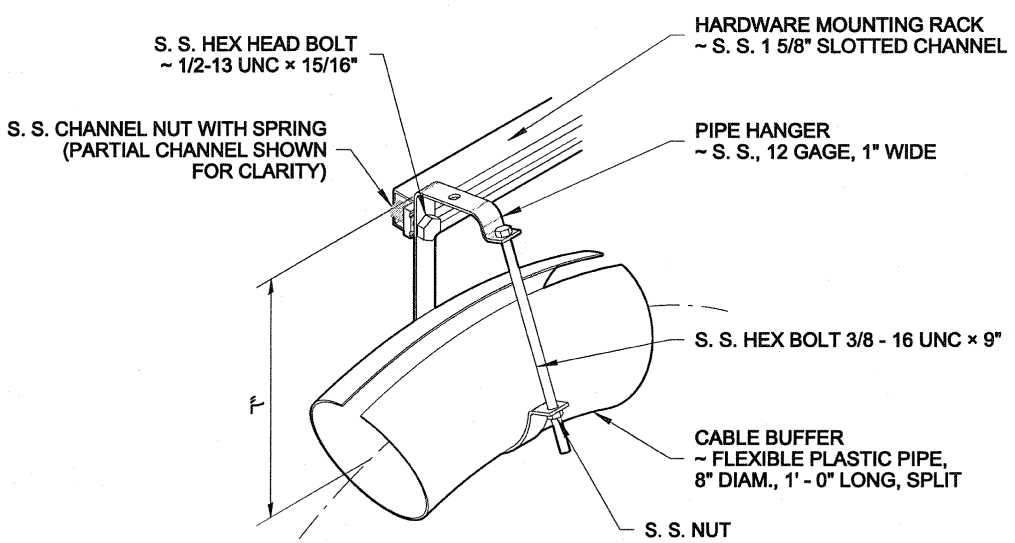

PIPE HANGER DETAIL
FABRICATE IF NOT AVAILABLE COMMERCIALLY

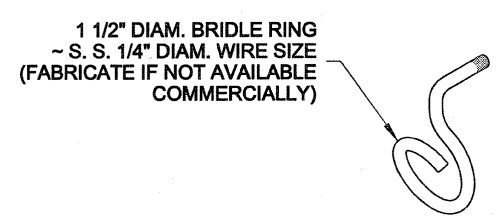

BRIDLE RING DETAIL

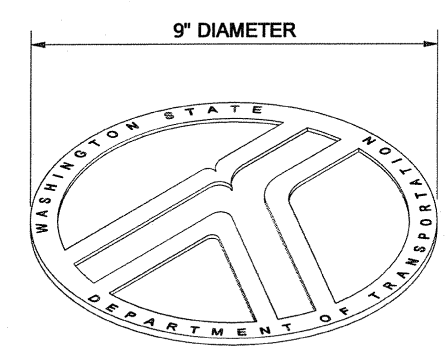

LOGO DETAIL

CABLE VAULT

STANDARD PLAN J-90.20-01

SHEET 2 OF 2 SHEETS

APPROVED FOR PUBLICATION

STATE DESIGN ENGINEER — DATE

Washington State Department of Transportation

SPLIT CABLE VAULT
(SHOWN WITH HEAVY DUTY LID)
SEE **CABLE VAULT**, SHEET 1, FOR DIMENSIONS NOT SHOWN

DRAWN BY: FERN LIDDELL

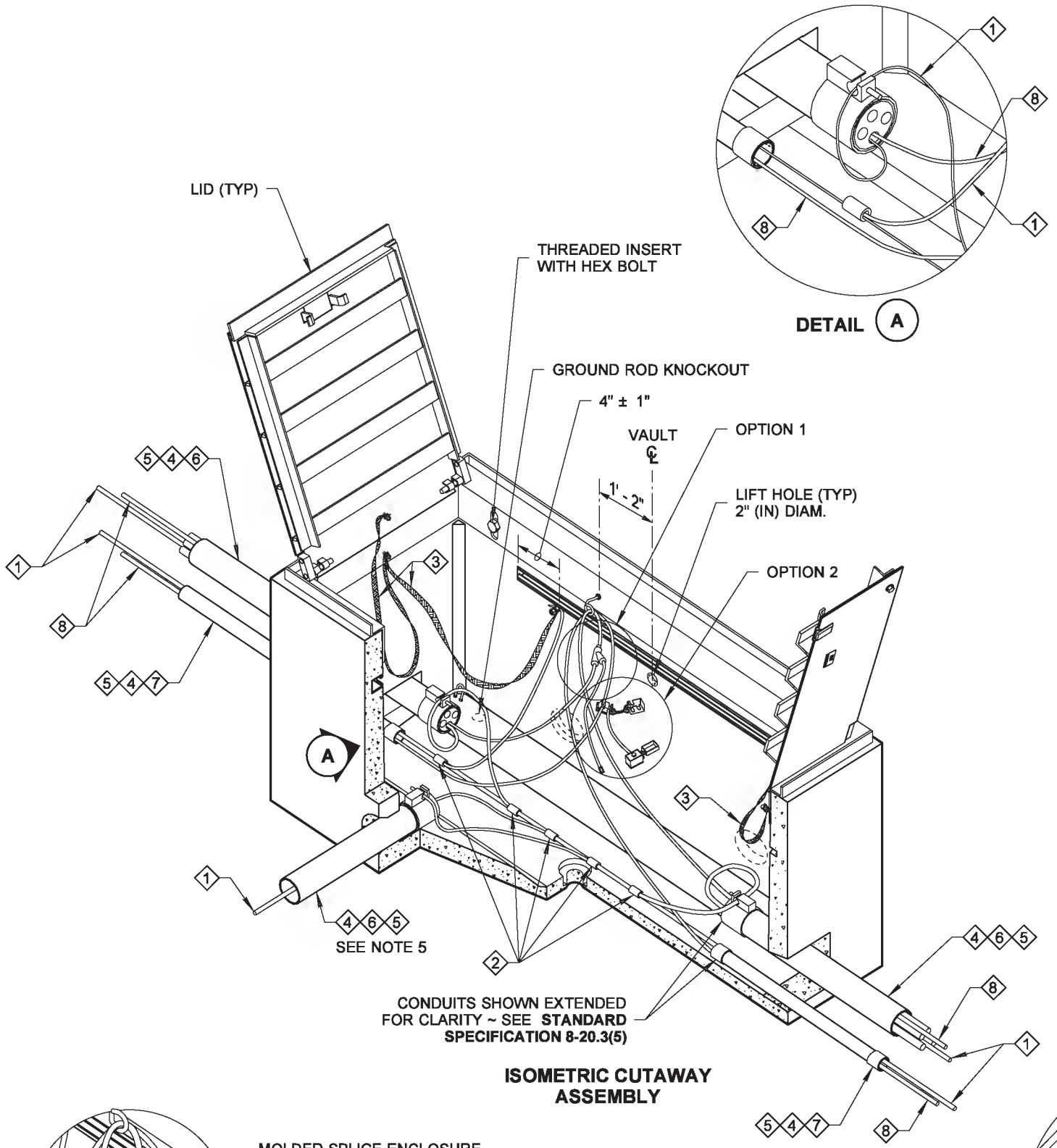

ISOMETRIC CUTAWAY ASSEMBLY

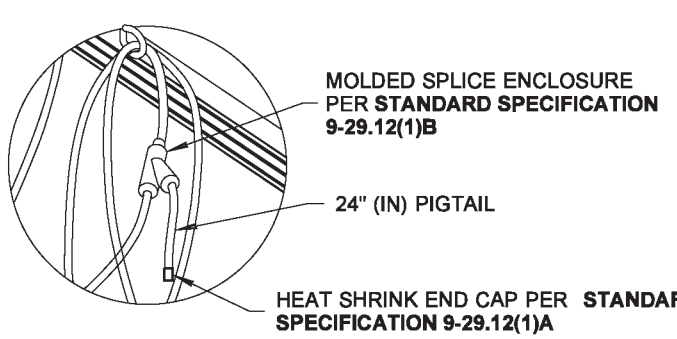

OPTION 1

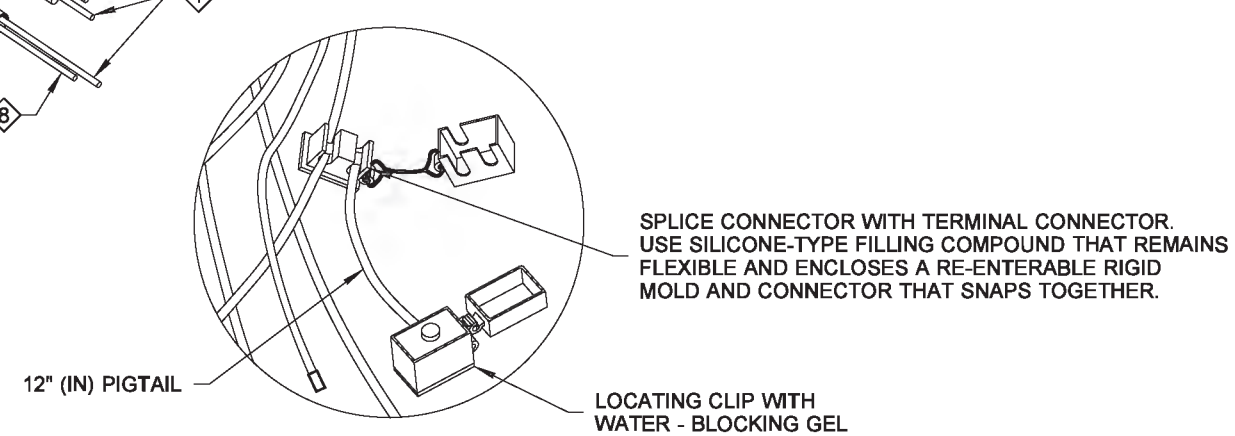

OPTION 2

NOTES

1. The Small Cable Vault shall be used in unpaved areas, and shall not be installed in the paved shoulders or traveled way. Use Small Cable Vault in sidewalks, walkways, and shared-use paths. Heavy Duty Cable Vault shall be used when installed in the paved shoulder or the traveled way.
2. The diamond pattern shall be a minimum of 3/32" (in) thick.
3. Small Cable Vaults installed in sidewalks, walkways, and shared-use paths shall have a slip-resistant coating on the lid and shall be installed with the surface flush with and matched to the grade of the sidewalk, walkway, and shared-use paths. The non-slip lid shall be identified with permanent marking on the underside indicating the type of surface treatment (see Contract Documents for details) and the year of manufacture. The permanent marking shall be 1/8" (in) line thickness formed with a stainless steel weld bead and shall be placed prior to hot-dip galvanizing.
4. A 1/4 - 20 UNC × 3/4" (IN) ground stud with two nuts and two flat washers shall be welded to each lid and coated with anti-seize compound. A 1/4 - 20 UNC × 3/4" (IN) ground stud with two nuts and three flat washers shall be welded to the frame and coated with anti-seize compound.
5. Connect a bonding jumper to the steel conduit bushing for RMC conduit and connect the steel conduit bushing jumper to the equipment ground at the hex coupling nut welded to the stainless steel channel. Connect the equipment grounding connectors in the PVC and/or RMC conduits to the hex coupling nut. The bonding jumper shall be #8 min. x 1' (ft) of tinned braided copper between the lid and the frame and shall be #8 min. x 4' (ft) of tinned braided copper from the frame to the hex coupling nut. See Contract Plans and **Standard Plan J-60.05** for bonding jumper requirements.
6. The system identification letters shall be 1/8" (in) line thickness formed by engraving, stamping, or with a stainless steel weld bead. See COVER MARKING DETAIL, **Standard Specification 9-29.2(4)**.
7. Cement concrete shall be Class 4000.
8. Capacity - conduit diameter = 40" (in).
9. Vault shall be installed on 6" (in) crushed surfacing pad in accordance with **Standard Specification 8-20.3(6).**
10. Typical Small Cable Vault features and arrangement shown. Reinforcing not shown. Dimensions and arrangements will vary slightly by manufacturer ~ See Approved shop drawings.
12. Small Cable Vaults for WSDOT Projects shall only be installed with the lid frame bearing on the concrete portion of cable vault.
13. Location wire splice shall be molded splice enclosure or splice connector with terminal connection.

* BOLTS, NUTS AND WASHERS ~ **ASTM F593 OR A193, TYPE 304 OR TYPE 316** STAINLESS STEEL (S.S.)

1. Equipment Grounding Conductor
2. Copper Solderless Crimp Connector
3. Equipment Bonding Jumper ~ See Note 5
4. See Contract for Conduit Size and Number
5. Identified to contain future Fiber Optic Cable
6. RMC Shown ~ See Contract for Conduit Type
7. PVC Shown ~ See Contract for Conduit Type
8. Location Wire

Bailey, Ted
Jun 26 2014 4:31 PM

SMALL CABLE VAULT

STANDARD PLAN J-90.21-00

SHEET 1 OF 2 SHEETS

APPROVED FOR PUBLICATION
Bakotich, Pasco
Jun 30 2014 3:14 PM

STATE DESIGN ENGINEER

Washington State Department of Transportation

DRAWN BY: FERN LIDDELL

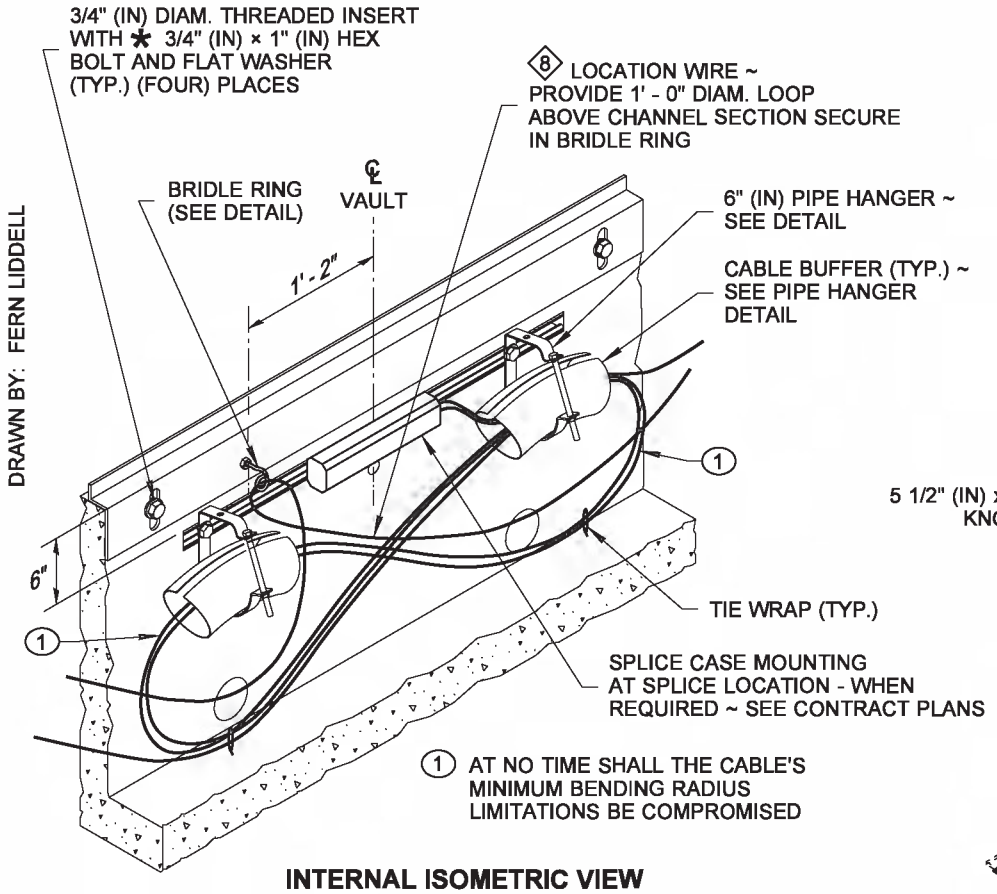

INTERNAL ISOMETRIC VIEW

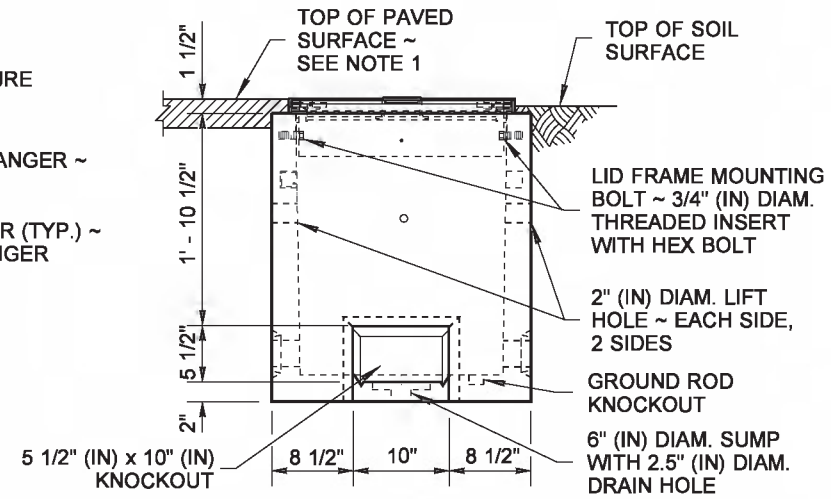

END VIEW

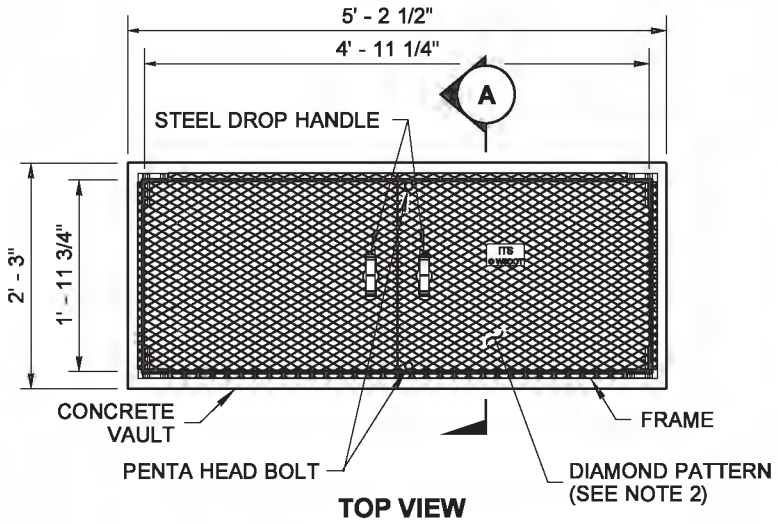

TOP VIEW

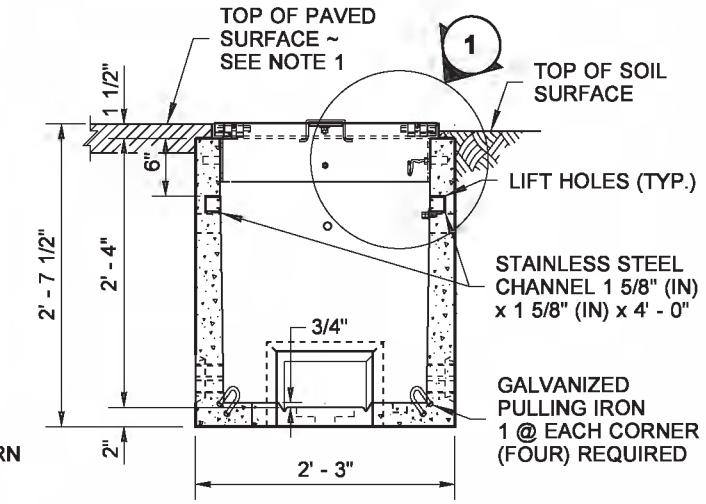

SECTION A

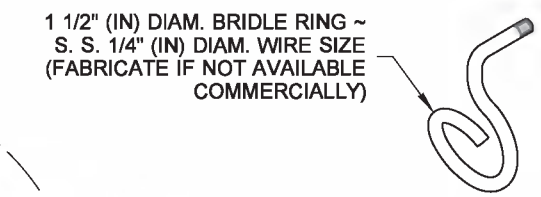

BRIDLE RING DETAIL

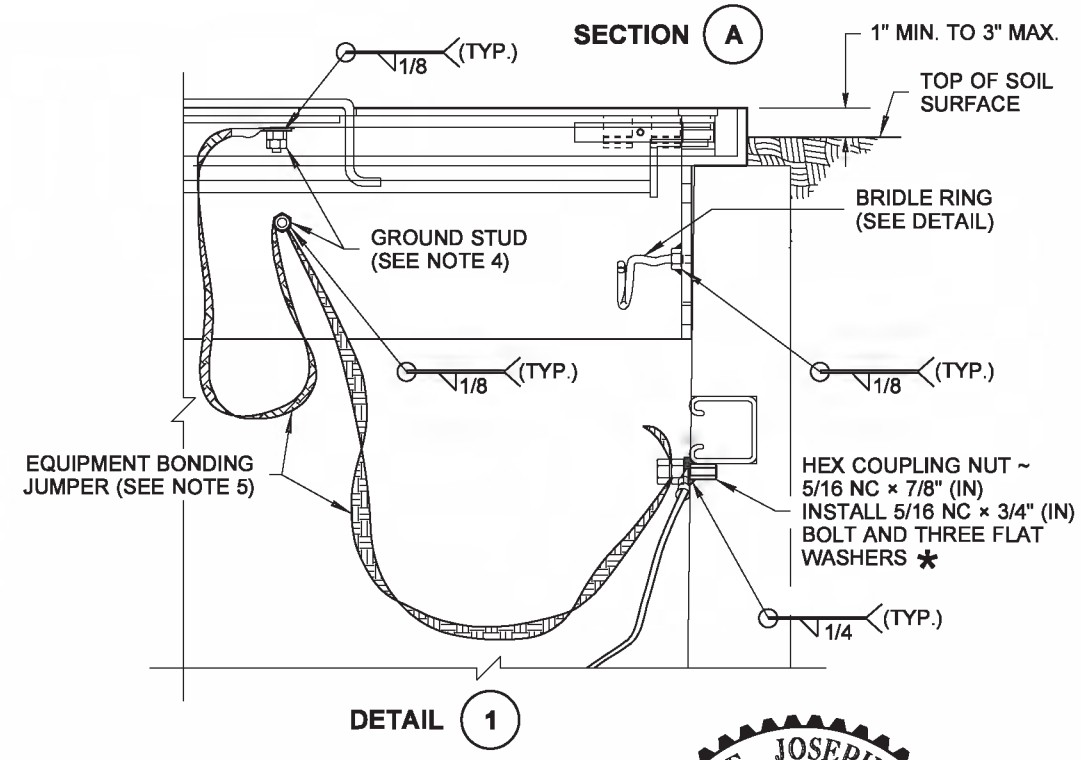

DETAIL 1

COVER MARKING DETAIL

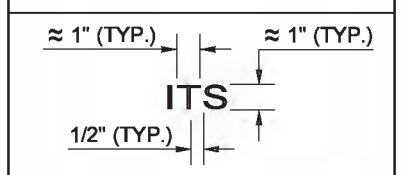

SEE NOTE 6

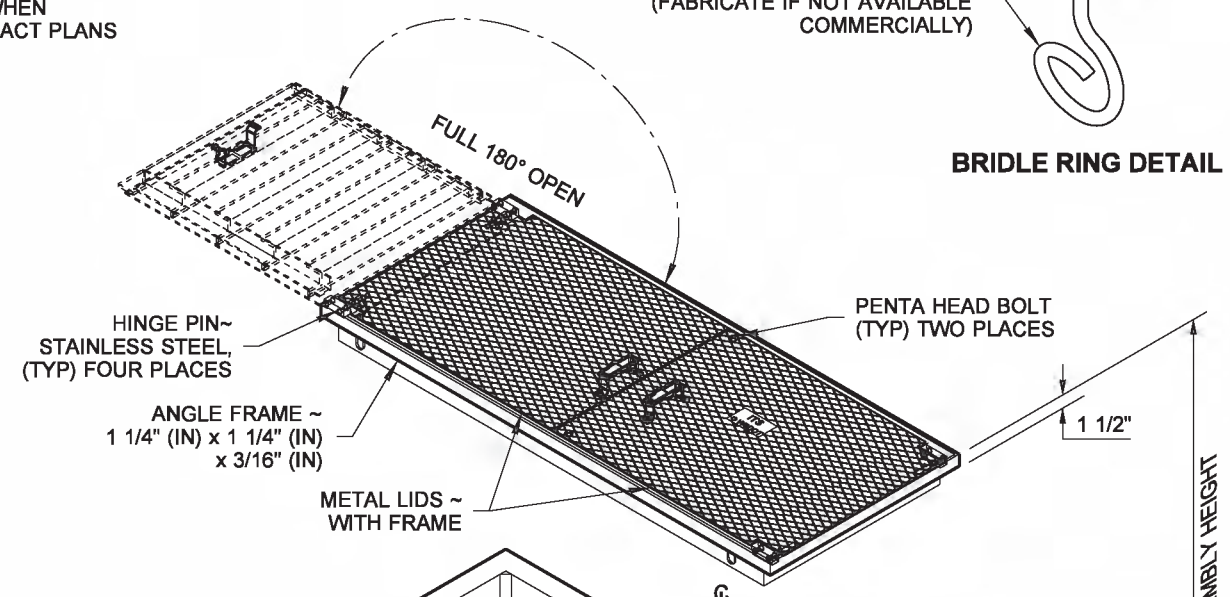

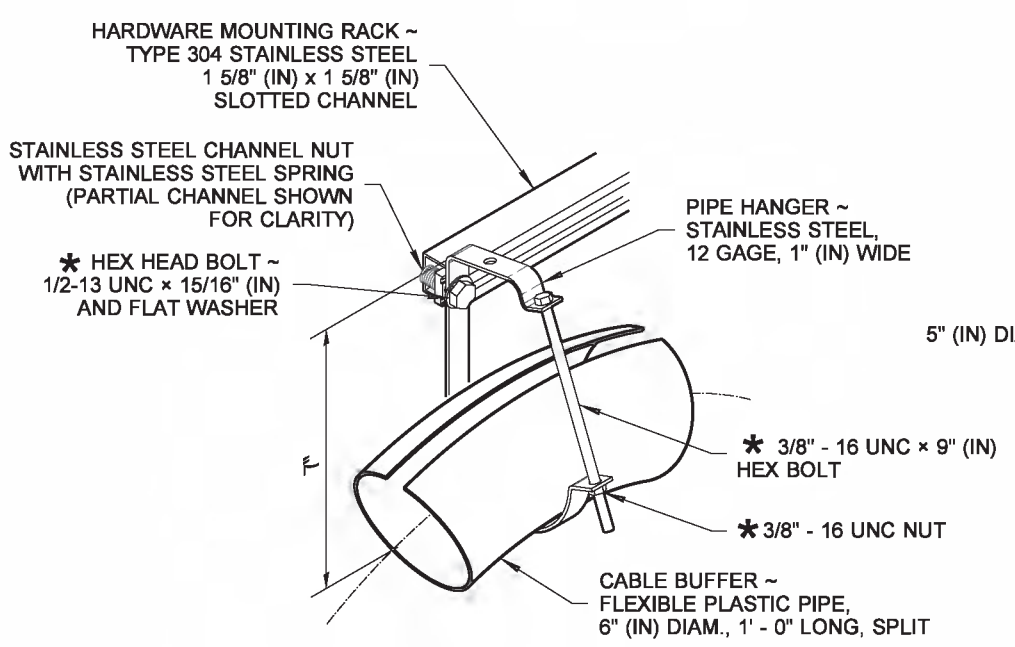

PIPE HANGER DETAIL

FABRICATE IF NOT AVAILABLE COMMERCIALLY

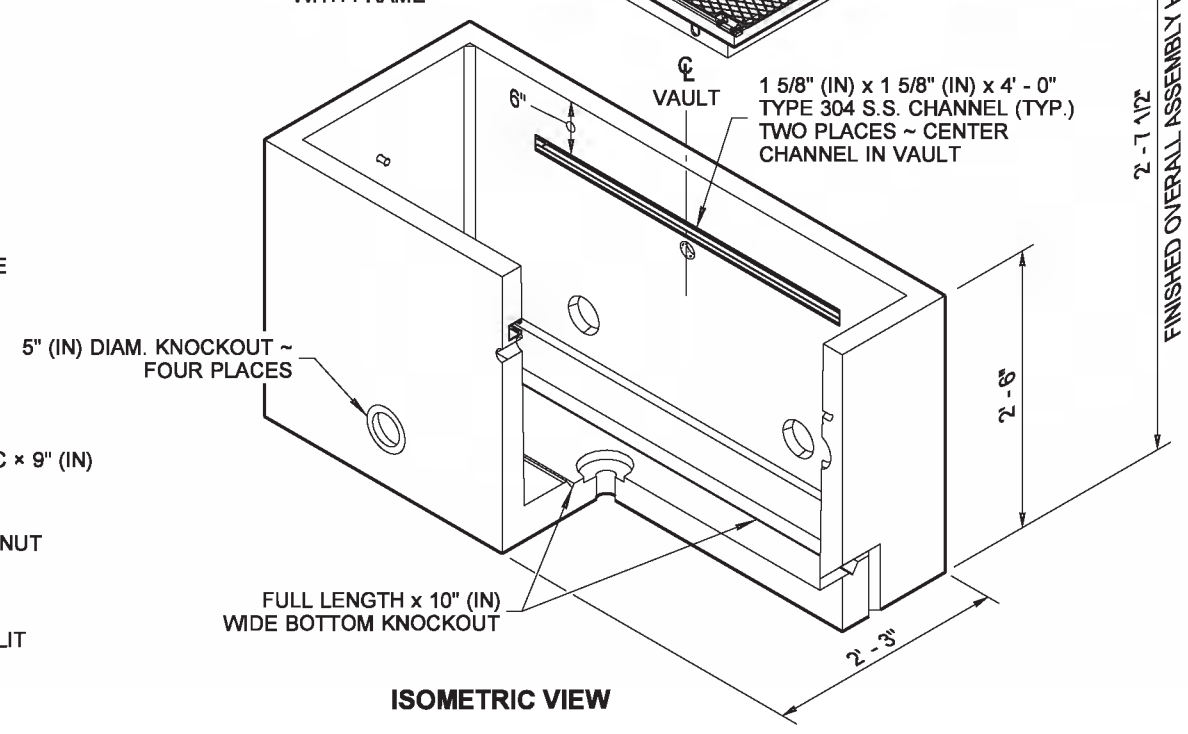

ISOMETRIC VIEW

SEE ISOMETRIC CUTAWAY ASSEMBLY ~ SHEET 1, FOR DIMENSIONS NOT SHOWN

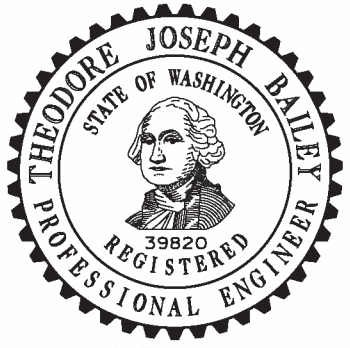

Bailey, Ted
Jun 26 2014 4:31 PM

SMALL CABLE VAULT

STANDARD PLAN J-90.21-00

SHEET 2 OF 2 SHEETS

APPROVED FOR PUBLICATION
Bakotich, Pasco
Jun 30 2014 3:14 PM

STATE DESIGN ENGINEER

Washington State Department of Transportation

This page left blank intentionally.

DRAWN BY: LISA CYFORD

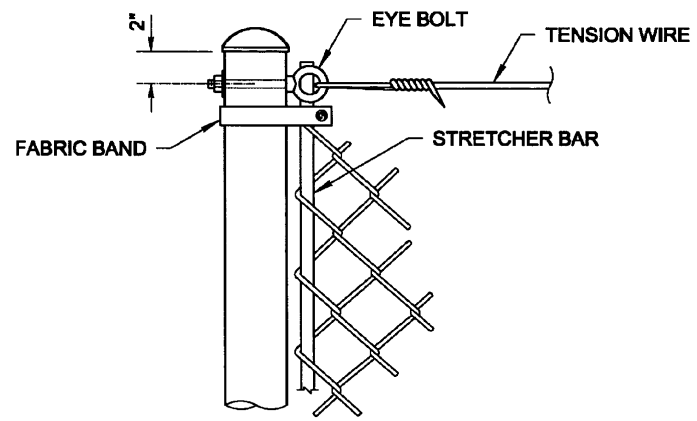

END OR CORNER (BRACE) POST

DETAIL (A)

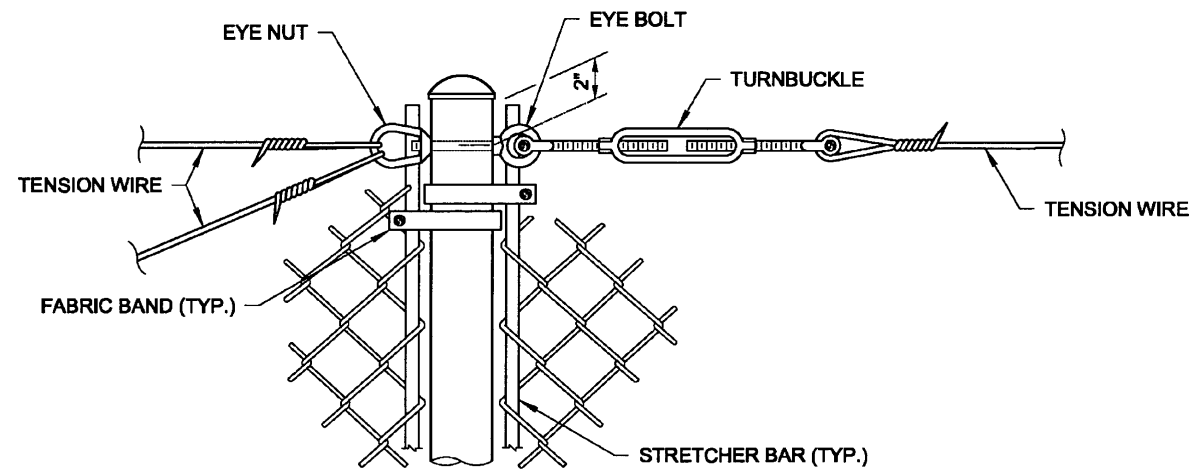

PULL POST (AT END OR CORNER)

DETAIL (B)

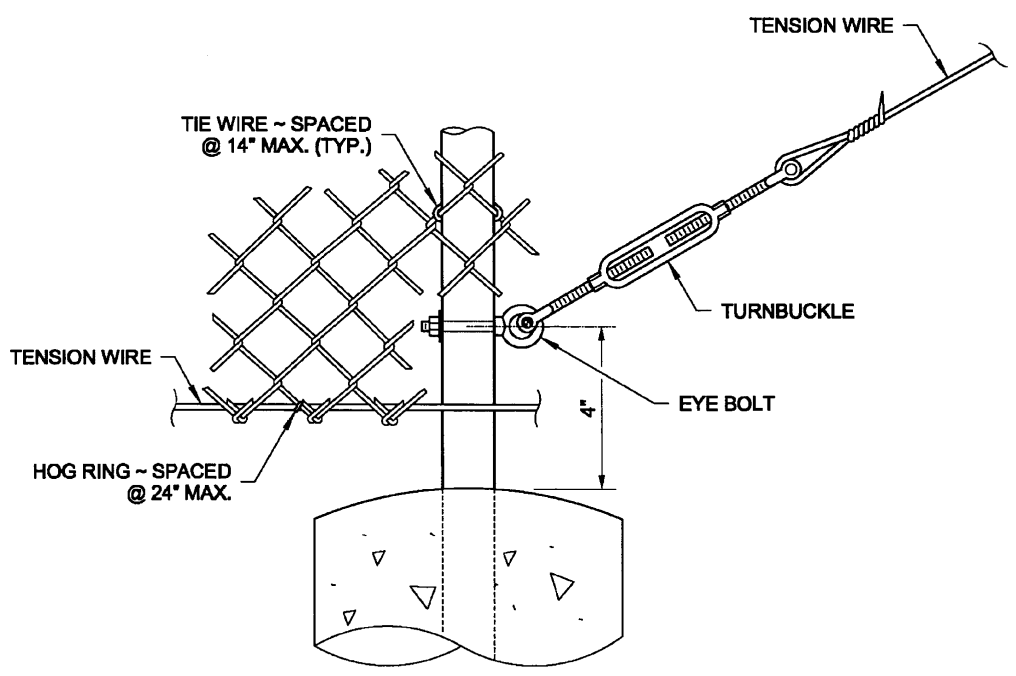

BRACE POST

DETAIL (C)

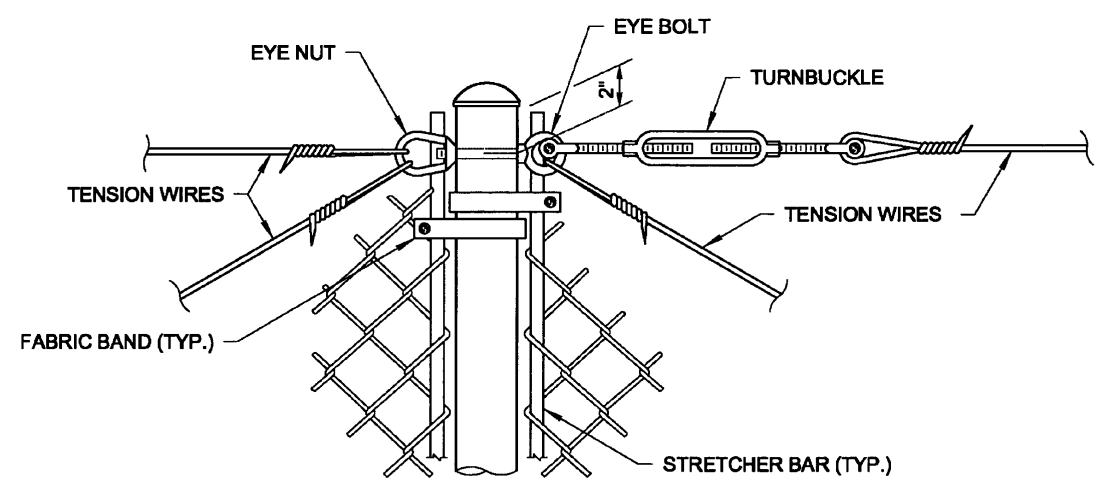

PULL POST (WITHIN RUN)

DETAIL (D)

5·21·2012

CHAIN LINK FENCE
TYPES 3 AND 4

STANDARD PLAN L-20.10-02

SHEET 2 OF 2 SHEETS

APPROVED FOR PUBLICATION

STATE DESIGN ENGINEER — DATE 6/21/12

Washington State Department of Transportation

NOTES

1. Materials shall meet the requirements of **Standard Specification 9-16**.

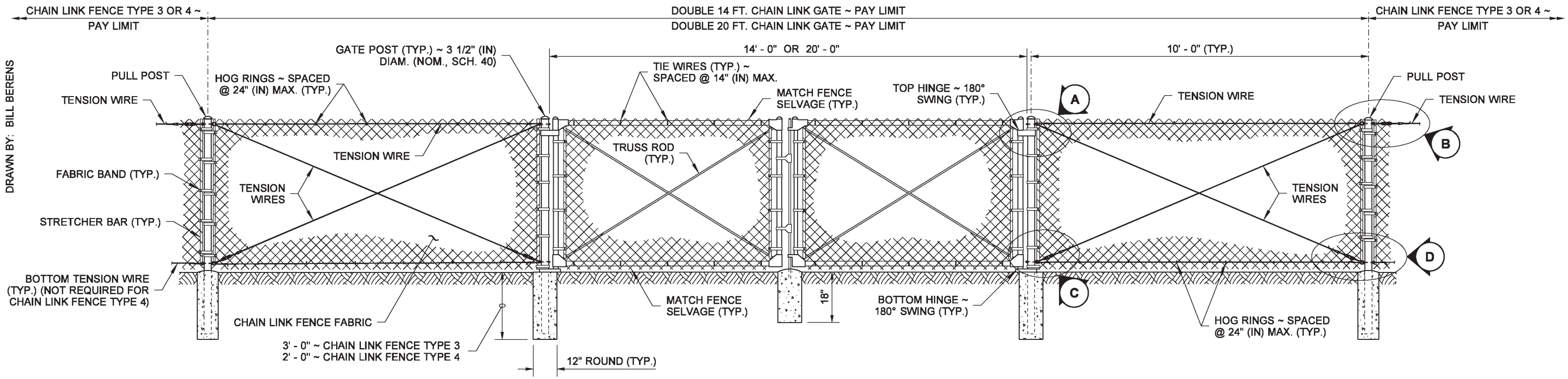

DOUBLE GATE

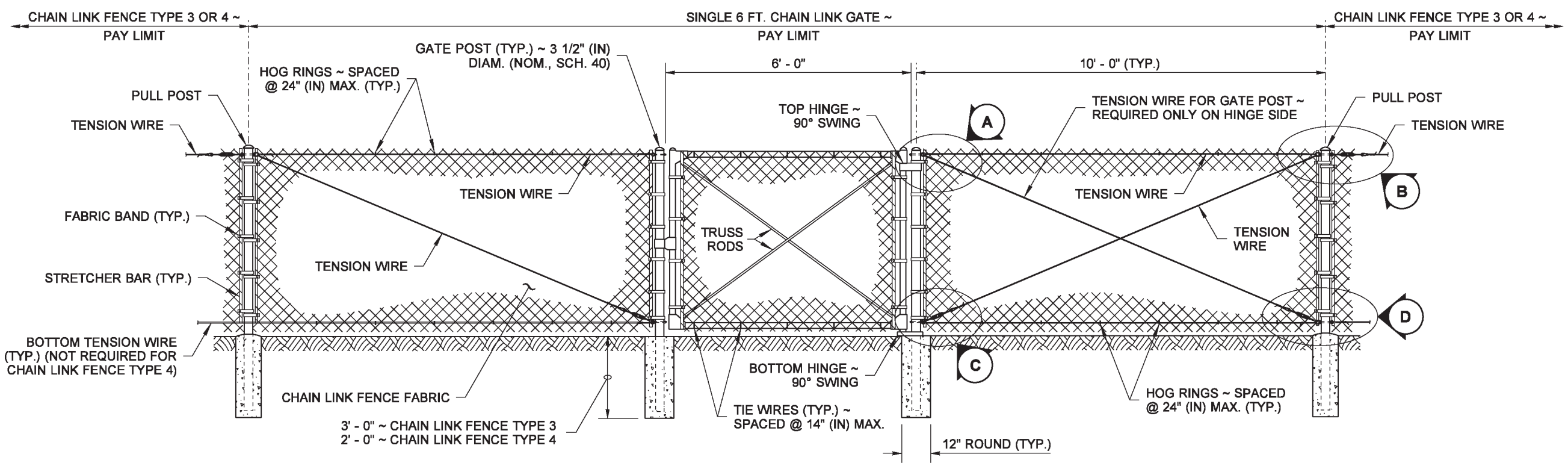

SINGLE GATE

Barry, Ed
May 6 2014 3:57 PM

CHAIN LINK GATE

STANDARD PLAN L-30.10-02

SHEET 1 OF 2 SHEETS

APPROVED FOR PUBLICATION
Bakotich, Pasco
Jun 11 2014 1:40 PM

STATE DESIGN ENGINEER

Washington State Department of Transportation

DRAWN BY: BILL BERENS

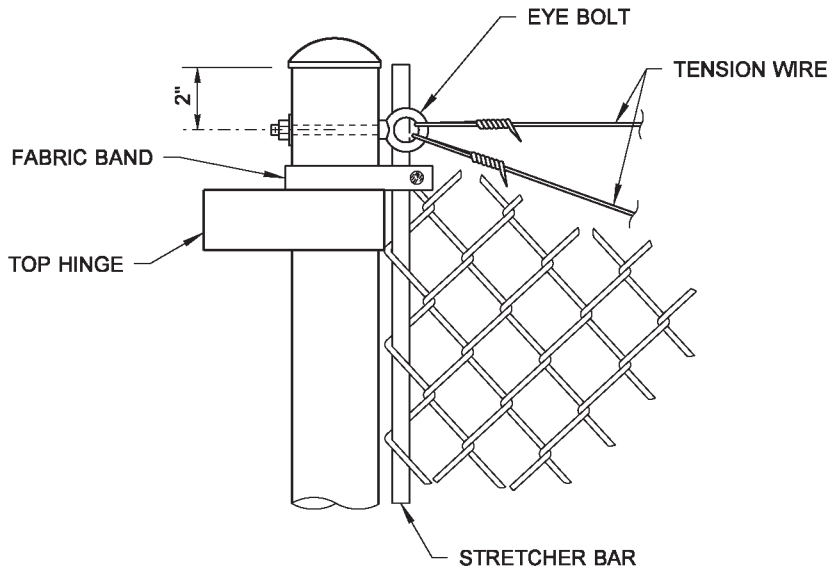

GATE POST

DETAIL A

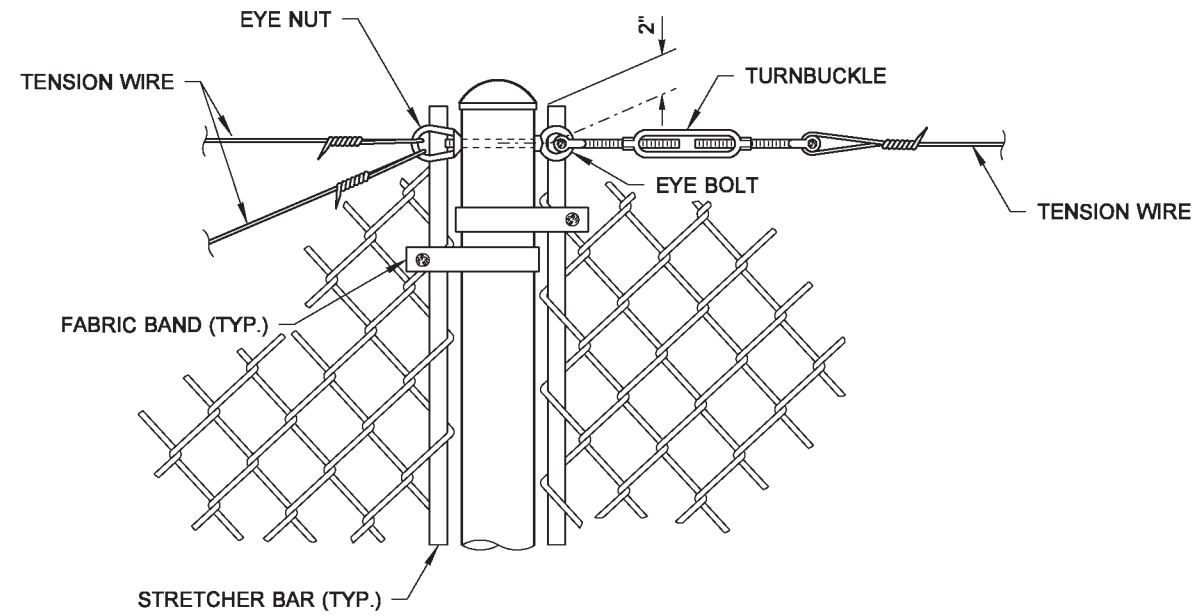

PULL POST

DETAIL B

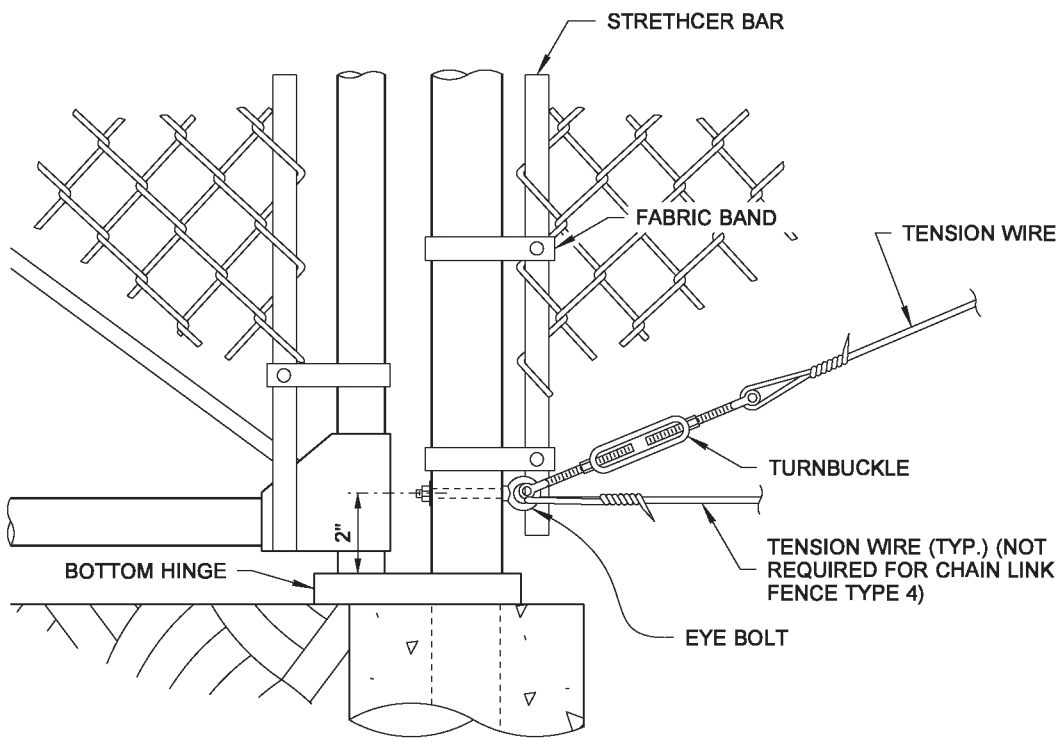

GATE POST

DETAIL C

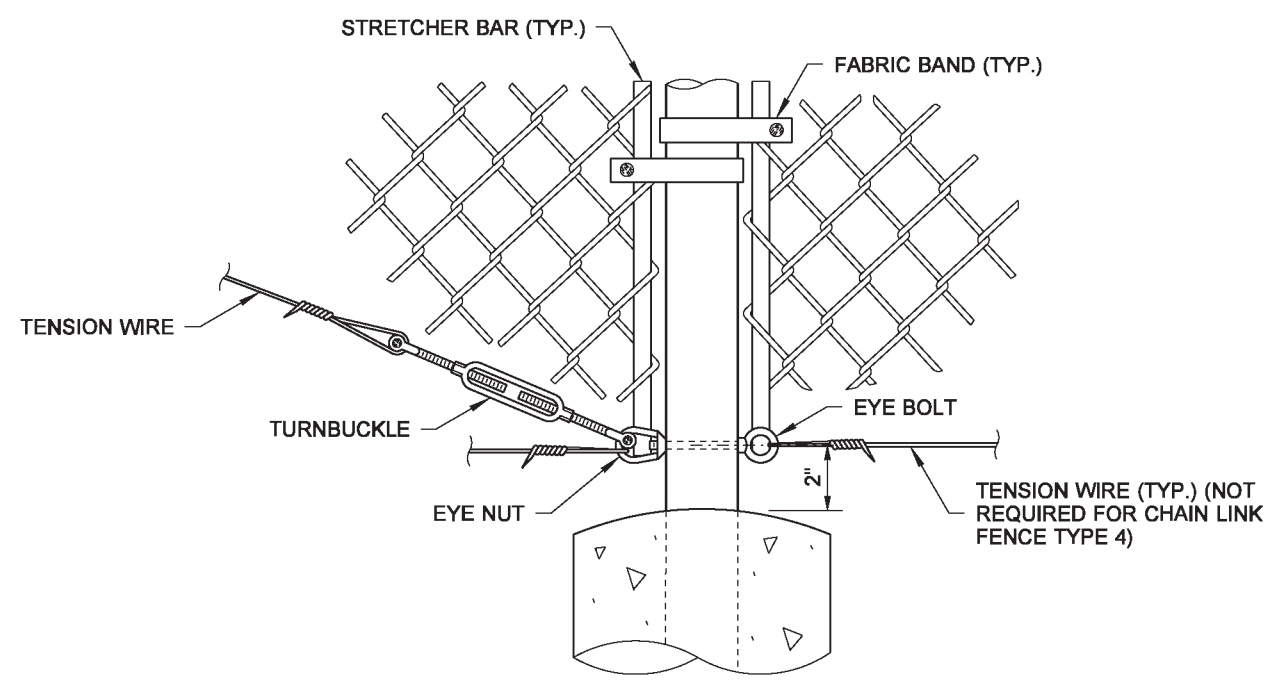

PULL POST

DETAIL D

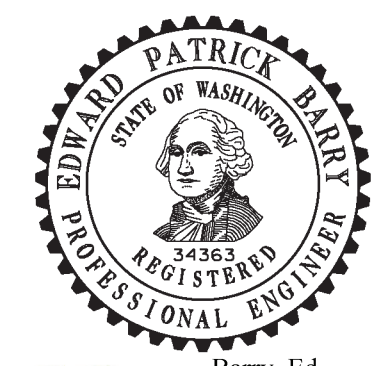

Barry, Ed
May 6 2014 3:58 PM

CHAIN LINK GATE

STANDARD PLAN L-30.10-02

SHEET 2 OF 2 SHEETS

APPROVED FOR PUBLICATION
Bakotich, Pasco
Jun 11 2014 1:41 PM

STATE DESIGN ENGINEER

Washington State Department of Transportation

DRAWN BY: LISA CYFORD

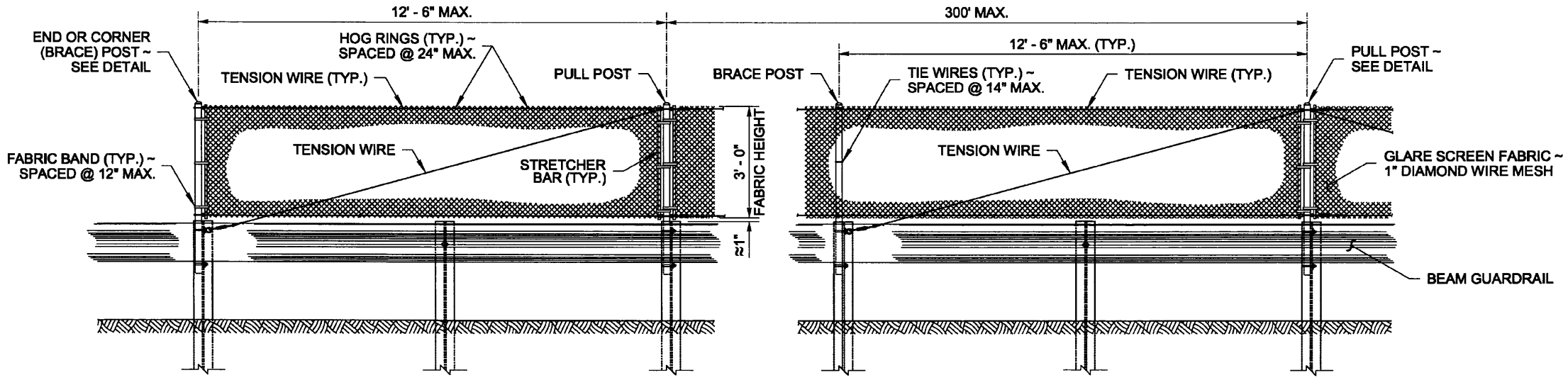

ELEVATION VIEW

NOTES

1. All glare screen posts shall be 2 1/2" I.D. galvanized steel.
2. Wood blocks shown. Blocks of alternate material may be used. Wood blocks shall be toe-nailed to post with 16d galvanized nails to prevent block rotation. See **Standard Specification 9-16.3(2).**
3. Attach blocks to steel posts using bolt holes on approaching traffic side of post web.
4. See **Standard Plan C-1b** for posts and wood block details.

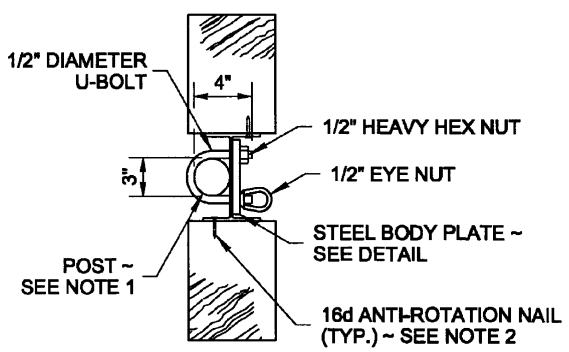

VIEW (B)

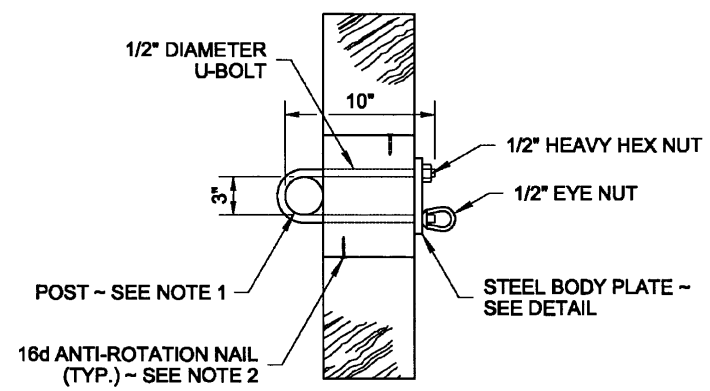

VIEW (B)

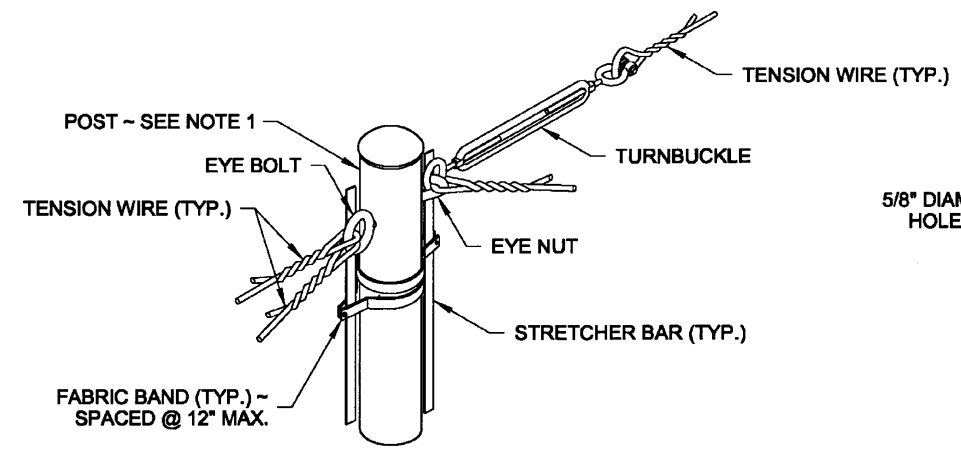

PULL POST (WITHIN RUN)

DETAIL (C)

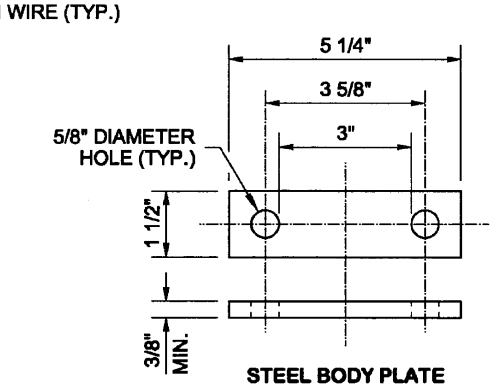

STEEL BODY PLATE

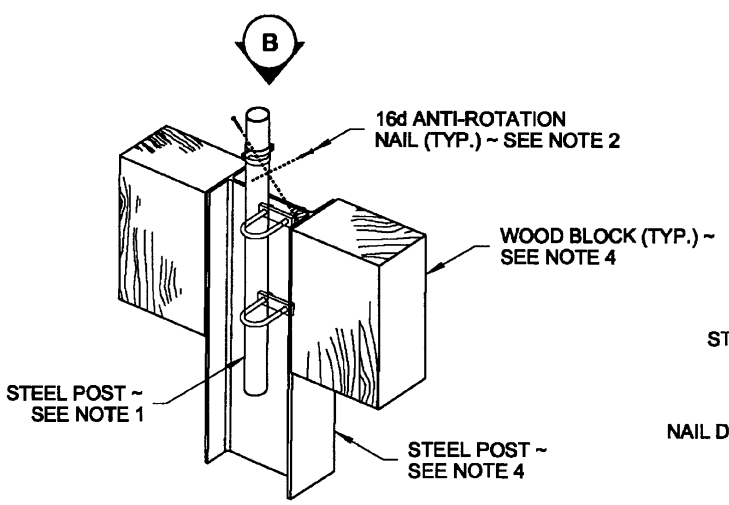

END OR CORNER (BRACE) POST WITH STEEL POST

DETAIL (A)

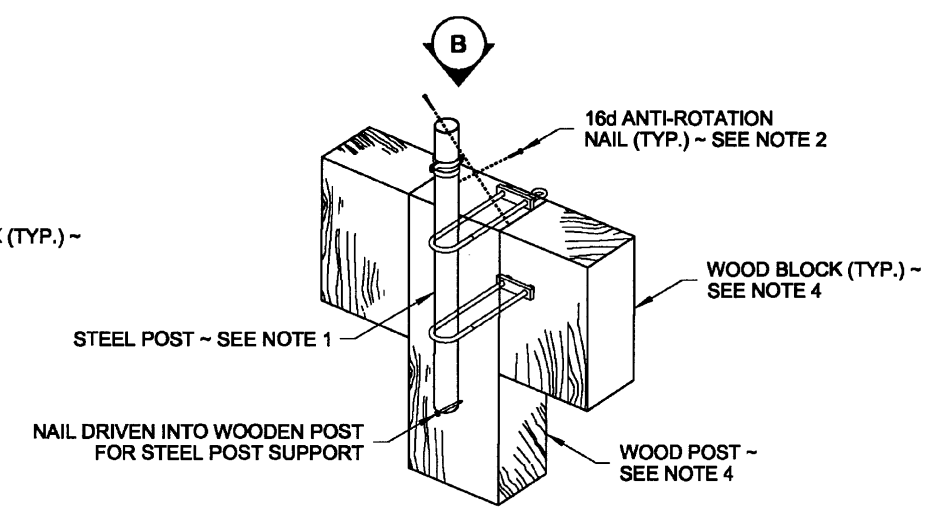

END OR CORNER (BRACE) POST WITH EXISTING WOOD POST

DETAIL (A)

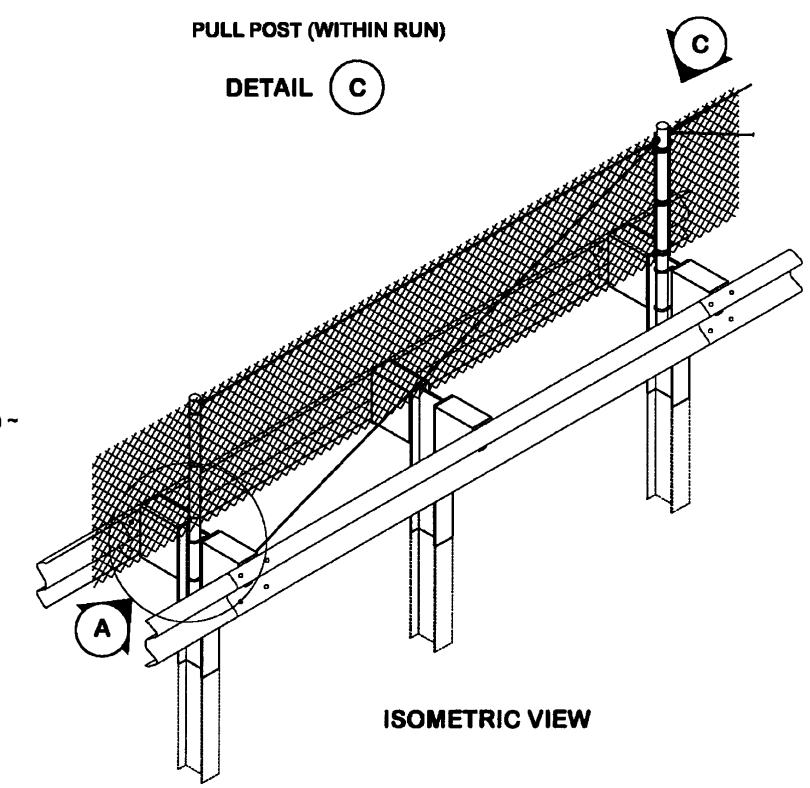

ISOMETRIC VIEW

GLARE SCREEN TYPE 1 DESIGN A

STANDARD PLAN L-40.10-02

SHEET 1 OF 2 SHEETS

APPROVED FOR PUBLICATION

STATE DESIGN ENGINEER — DATE 6/21/12

Washington State Department of Transportation

DRAWN BY: LISA CYFORD

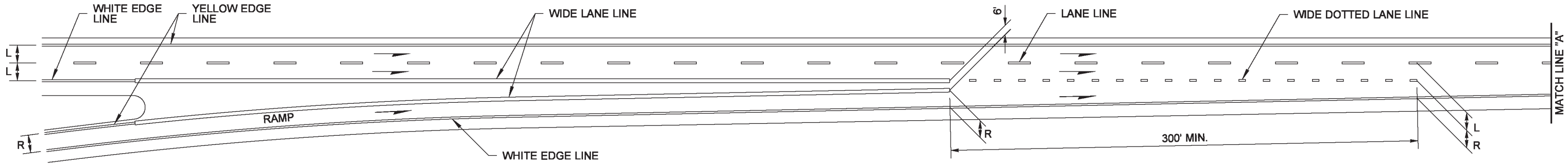

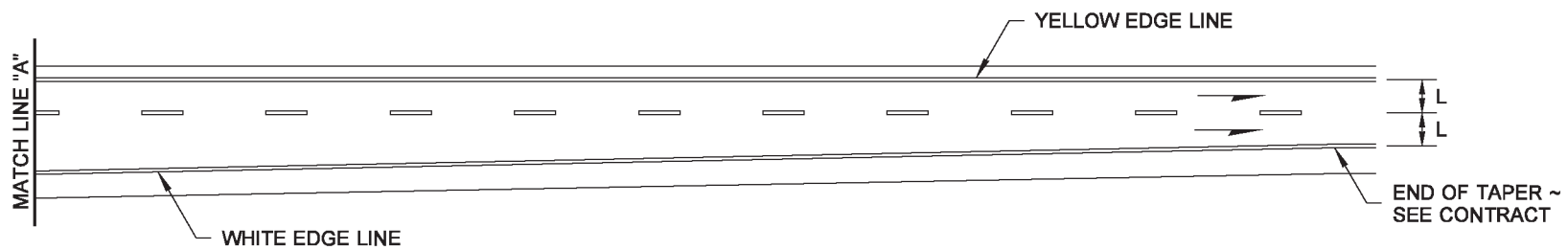

SINGLE-LANE ON-CONNECTION

NOTES

1. Where shown on the Plans or specified in the Special Provisions, raised pavement markers shall be used to supplement or substitute for the painted pavement markings shown hereon. See the Standard Plans for RPM supplement and substitution patterns.
2. The channelization shown on this plan assumes optimal roadway geometric design. The dimensions may vary to fit existing conditions. See Contract.

LEGEND

R = RAMP LANE WIDTH
L = LANE WIDTH

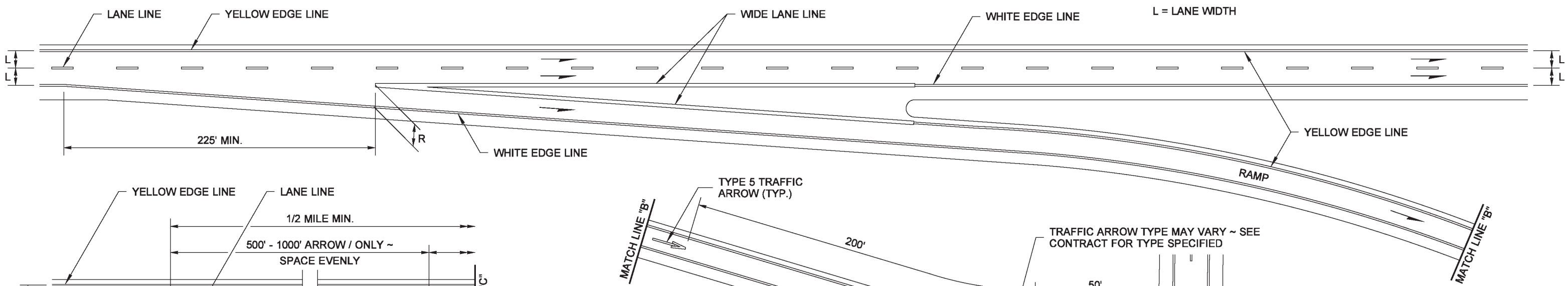

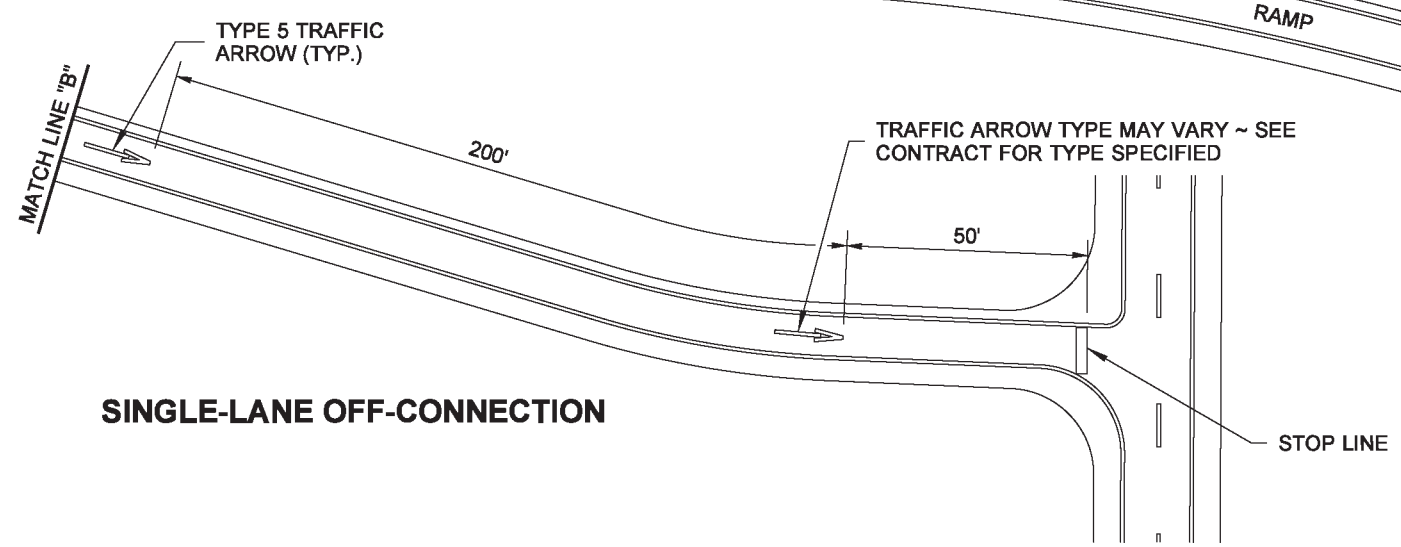

SINGLE-LANE OFF-CONNECTION

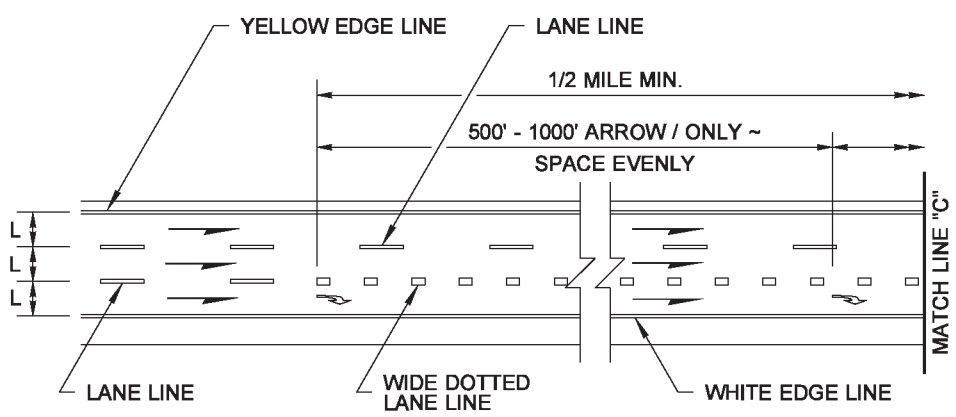

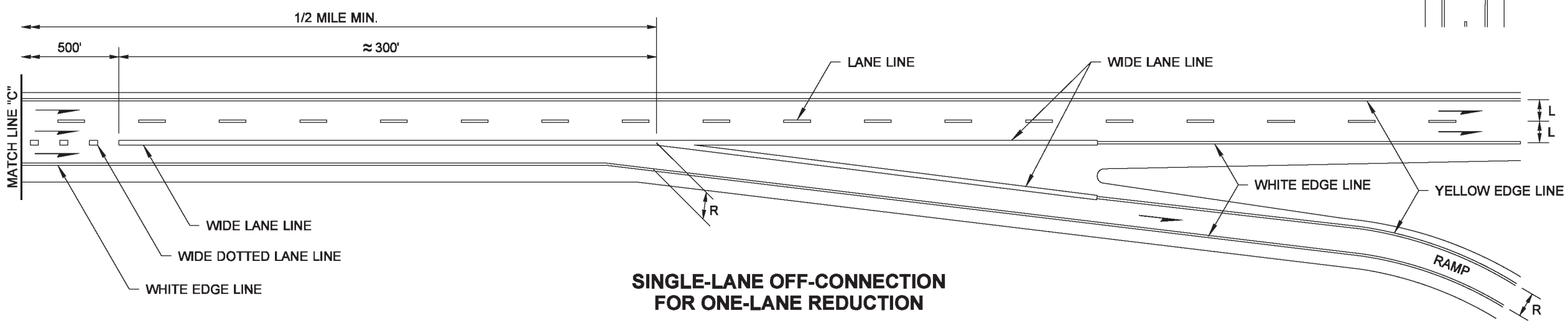

SINGLE-LANE OFF-CONNECTION FOR ONE-LANE REDUCTION

Walsh, Brian
Jun 24 2014 12:40 PM

RAMP CHANNELIZATION SINGLE LANE

STANDARD PLAN M-1.20-03

SHEET 1 OF 1 SHEET

APPROVED FOR PUBLICATION
Bakotich, Pasco
Jun 24 2014 4:41 PM
STATE DESIGN ENGINEER

Washington State Department of Transportation

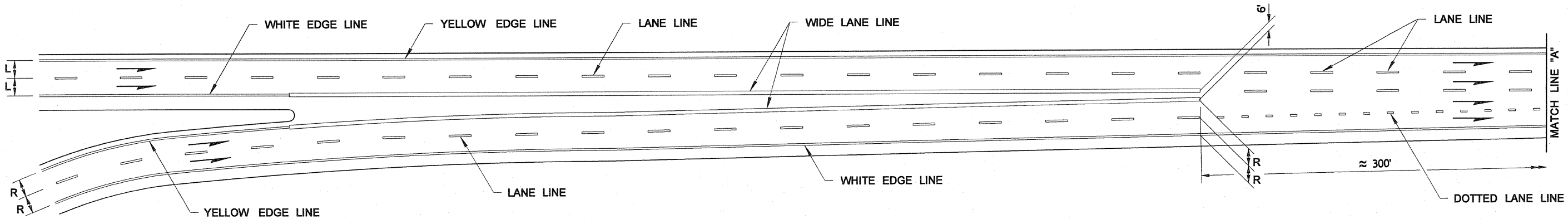

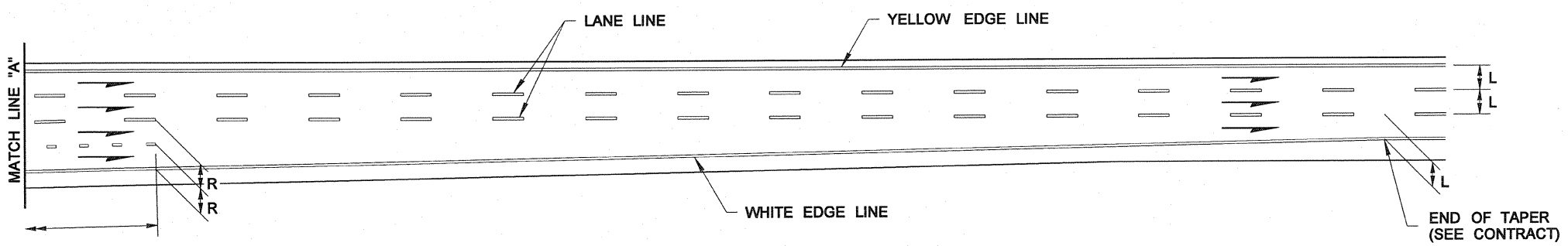

TWO-LANE ON-CONNECTION

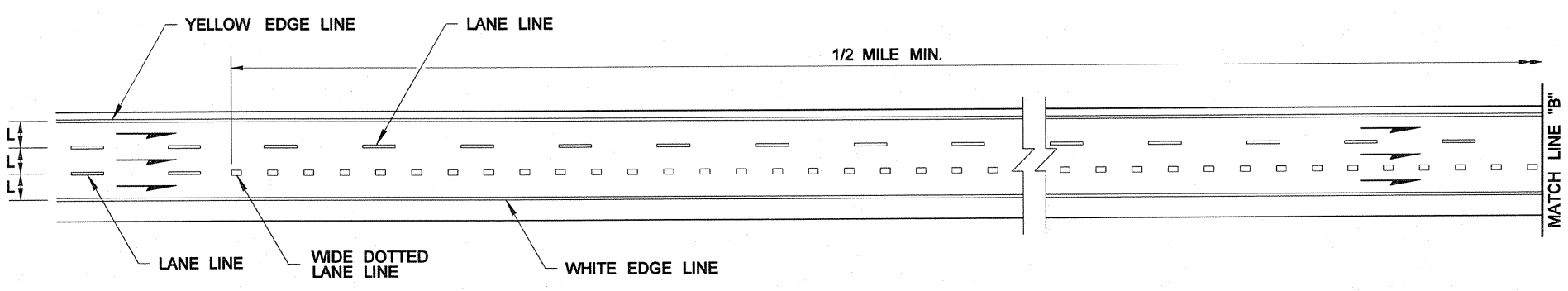

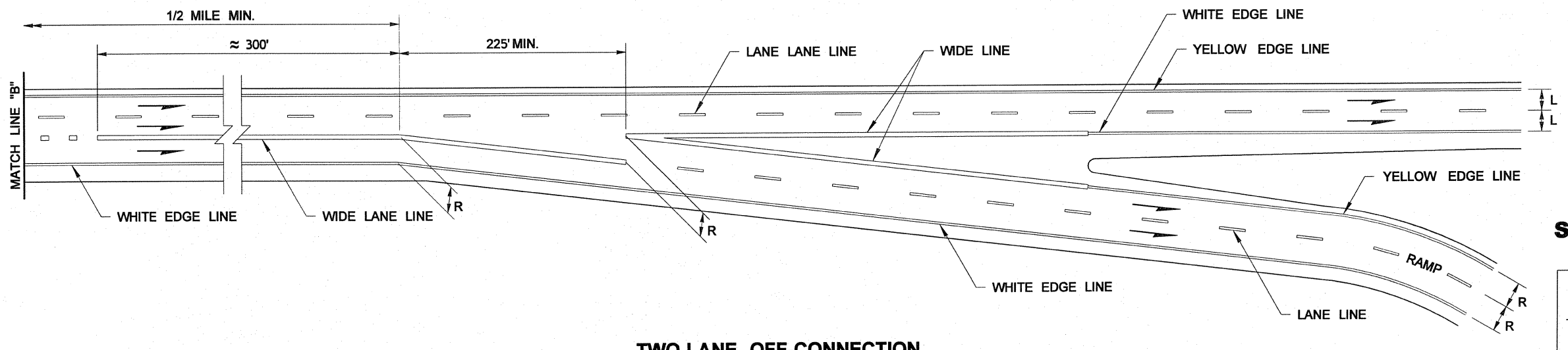

TWO-LANE OFF-CONNECTION

DRAWN BY: LISA CYFORD

NOTES

1. Where shown on the plans or specified in the Special Provisions, raised pavement markers shall be used to supplement or substitute for the painted pavement markings shown hereon. See the Standard Plans for RPM supplement and substitution patterns.

2. The channelization shown on this plan assumes optimal roadway geometric design. The dimensions may vary to fit existing conditions. See Contract.

LEGEND

R = RAMP LANE WIDTH

L = LANE WIDTH

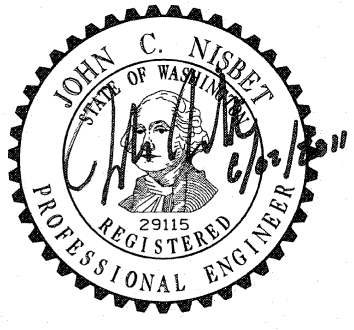

RAMP CHANNELIZATION TWO LANE

STANDARD PLAN M-1.40-02

SHEET 1 OF 1 SHEET

APPROVED FOR PUBLICATION

STATE DESIGN ENGINEER — DATE 6/3/11

Washington State Department of Transportation

DRAWN BY: MARK SUJKA

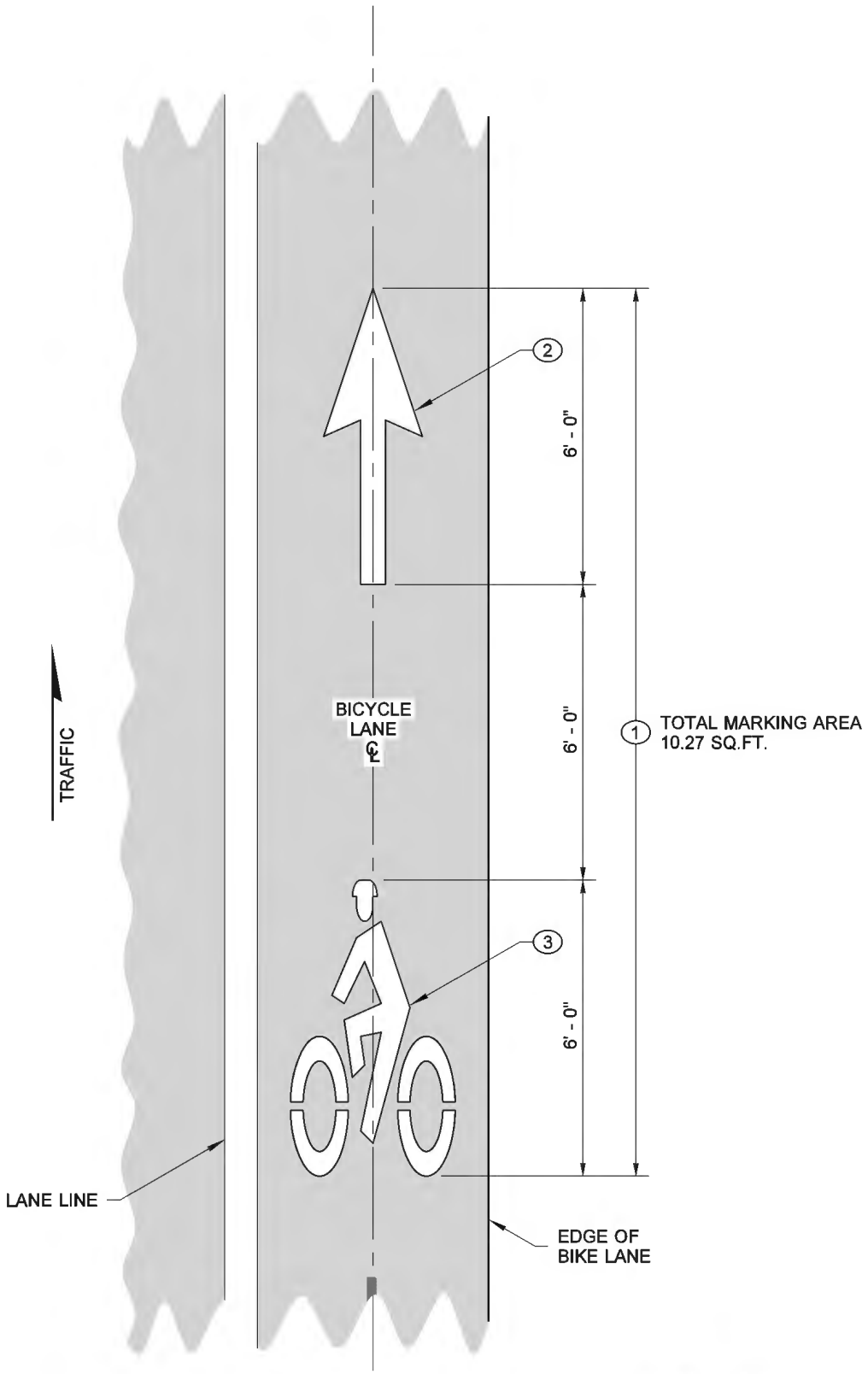

BICYCLE LANE SYMBOL LAYOUT

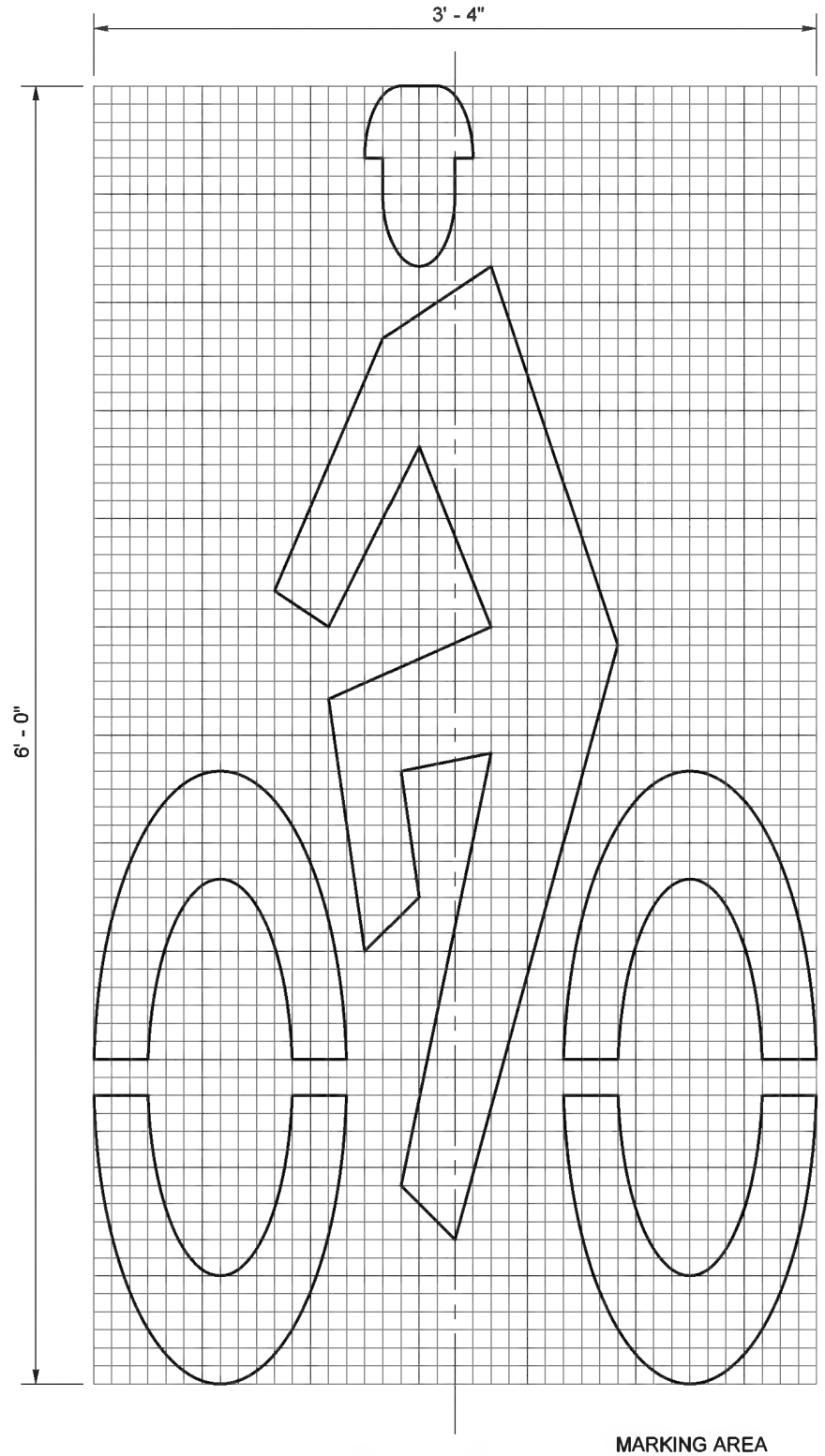

BIKE RIDER SYMBOL DETAIL

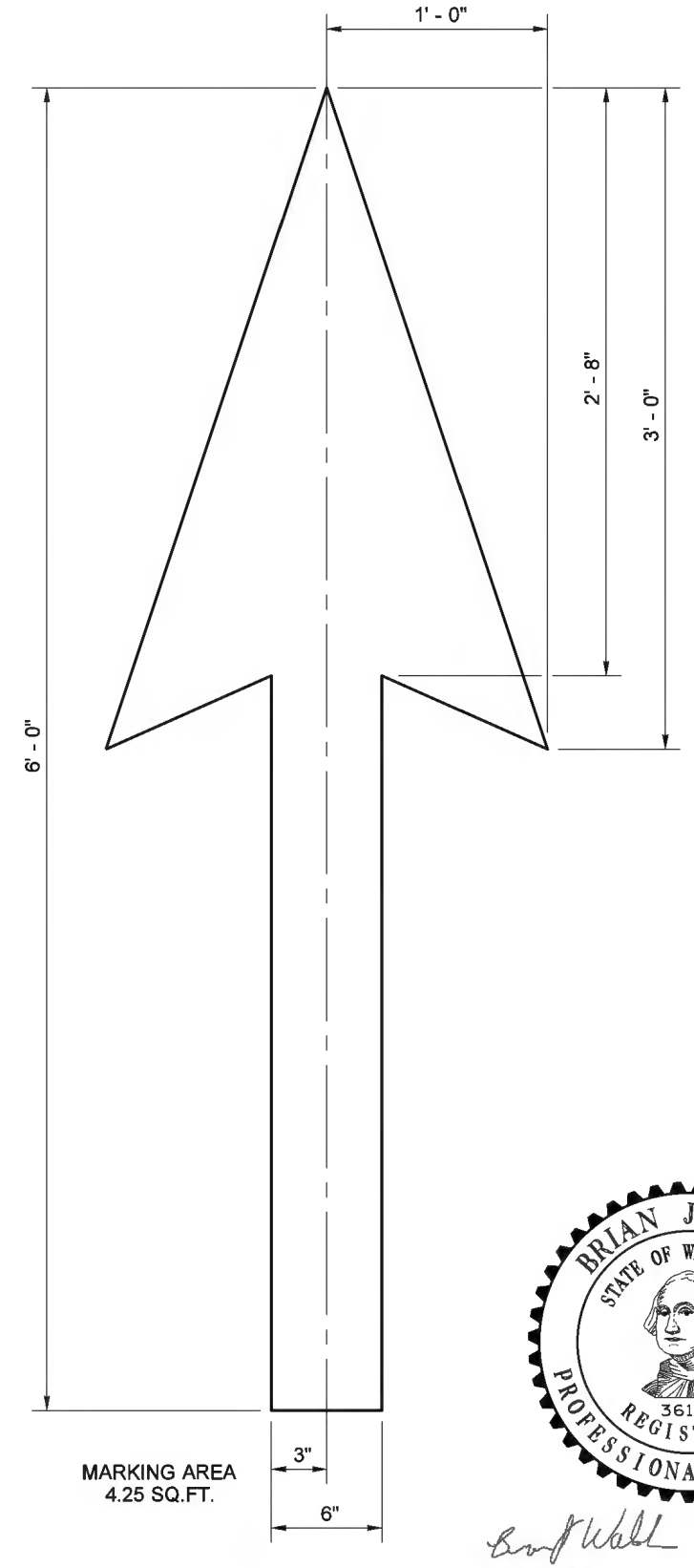

BIKE LANE ARROW DETAIL

KEY NOTES

1. Bid Item "Bicycle Lane Symbol" includes Bike Lane Arrow and Bike Rider Symbol.
2. 2' (ft) x 6' (ft) White Bike Lane Arrow.
3. Bike Rider Symbol.

GENERAL NOTE

See Contract for location and material requirements.

BRIAN J. WALSH
STATE OF WASHINGTON
36103
REGISTERED
PROFESSIONAL ENGINEER

Walsh, Brian
Jun 24 2014 1:53 PM

BICYCLE LANE SYMBOL LAYOUT

STANDARD PLAN M-9.50-02

SHEET 1 OF 1 SHEET

APPROVED FOR PUBLICATION
Bakotich, Pasco
Jun 24 2014 4:42 PM
STATE DESIGN ENGINEER

Washington State Department of Transportation

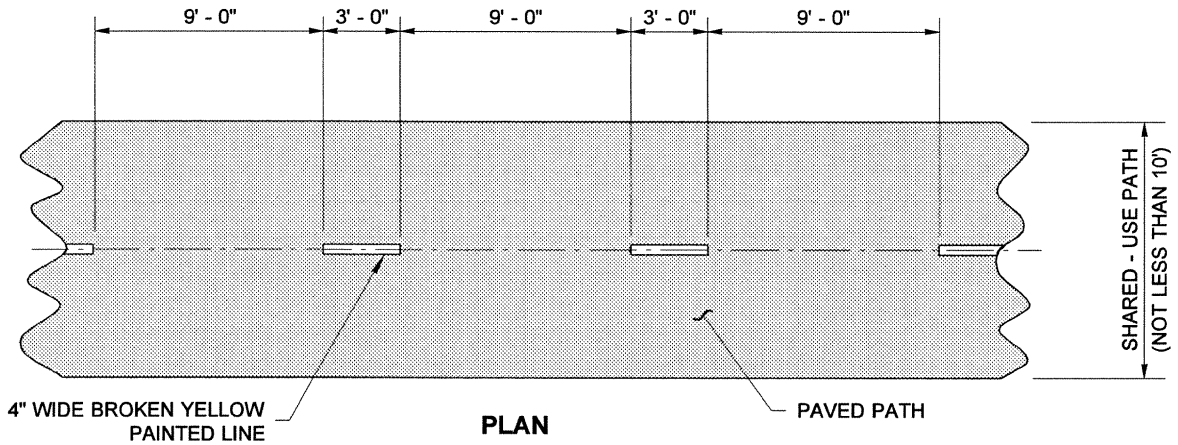

PLAN
CENTERLINE MARKING

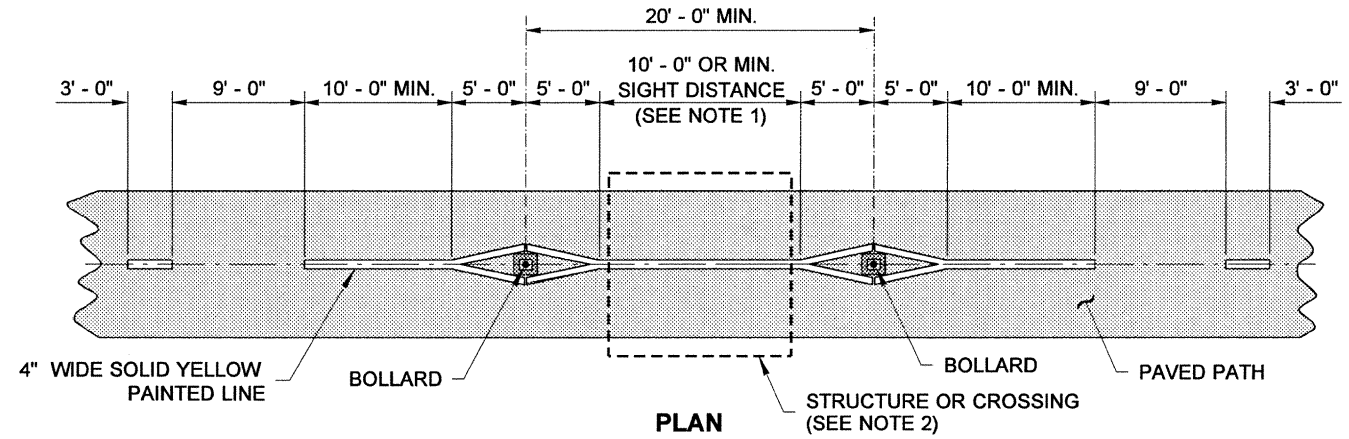

PLAN
MARKING AROUND MULTIPLE BOLLARDS
SHOWN AT REDUCED DRAWING SCALE

NOTE:

1. In cases where the bollard location is not visible to an approaching bicyclist, use the minimum sight distance for the Solid Yellow Painted Line (taper portion), to extend the Solid Yellow Painted Line as needed to provide advanced warning of the upcoming obstruction.
2. In cases where there is a crossing, bridge or other structure on the path that does not support or accomodate a vehicle. (See Contract).
3. Provide Breakaway Bollards within the Roadway Design Clear Zone.

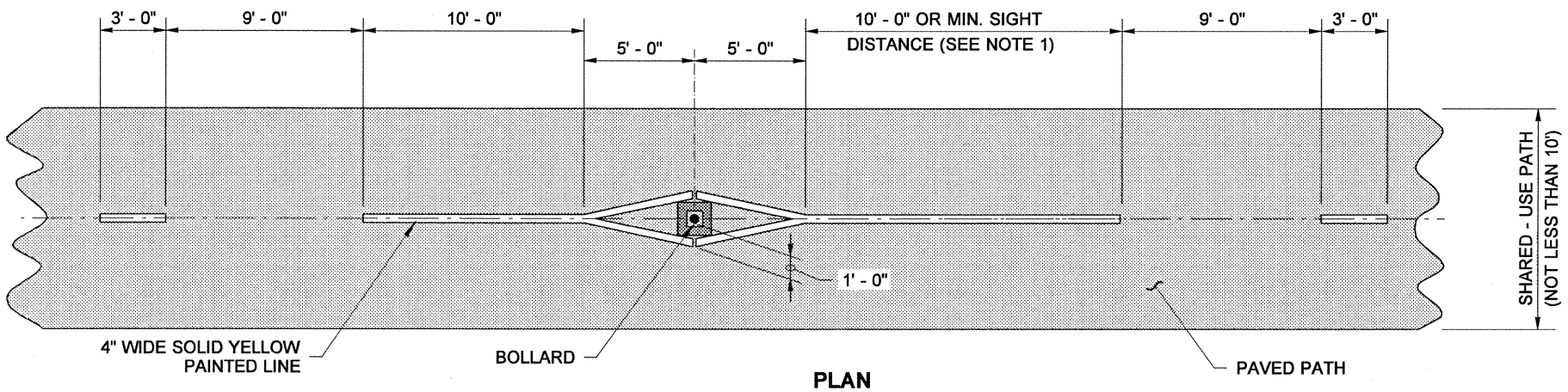

PLAN
MARKING AROUND BOLLARD

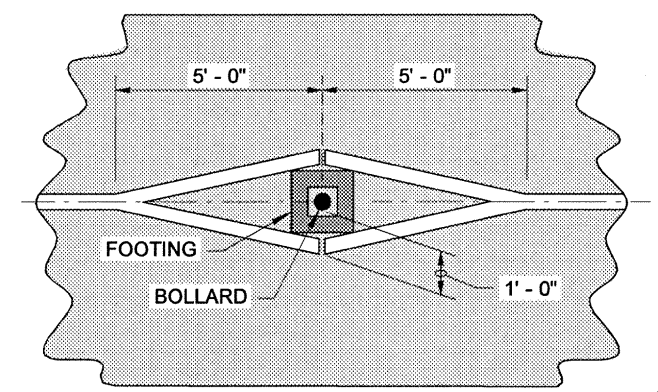

DETAIL

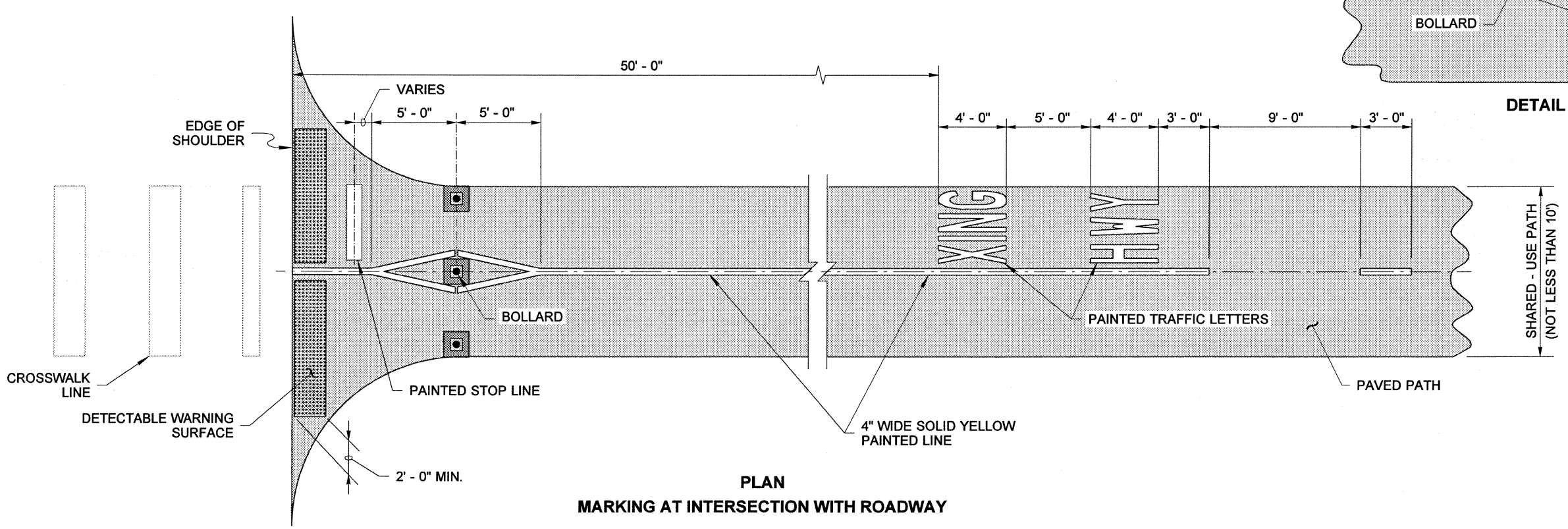

PLAN
MARKING AT INTERSECTION WITH ROADWAY

SHARED - USE PATH MARKINGS

STANDARD PLAN M-9.60-00

SHEET 1 OF 1 SHEET

APPROVED FOR PUBLICATION

STATE DESIGN ENGINEER — DATE 2/12/09

Washington State Department of Transportation

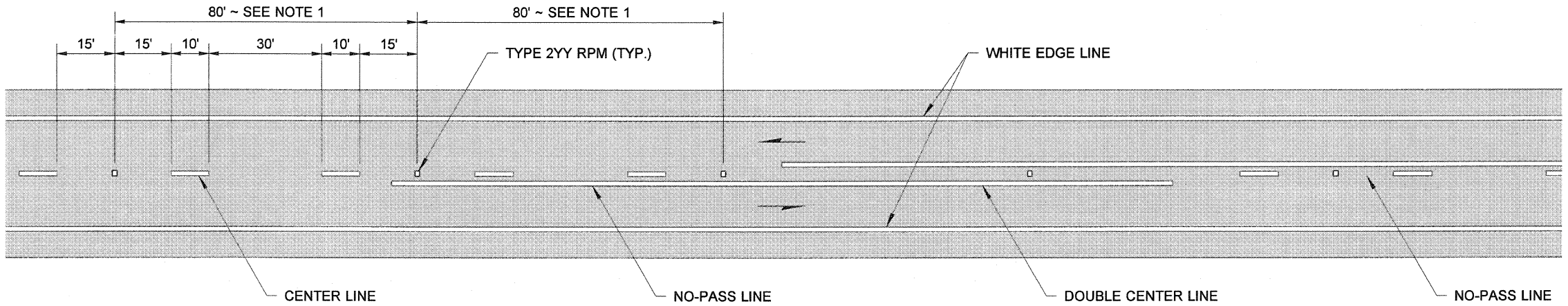

TWO LANE TWO-WAY TRAFFIC

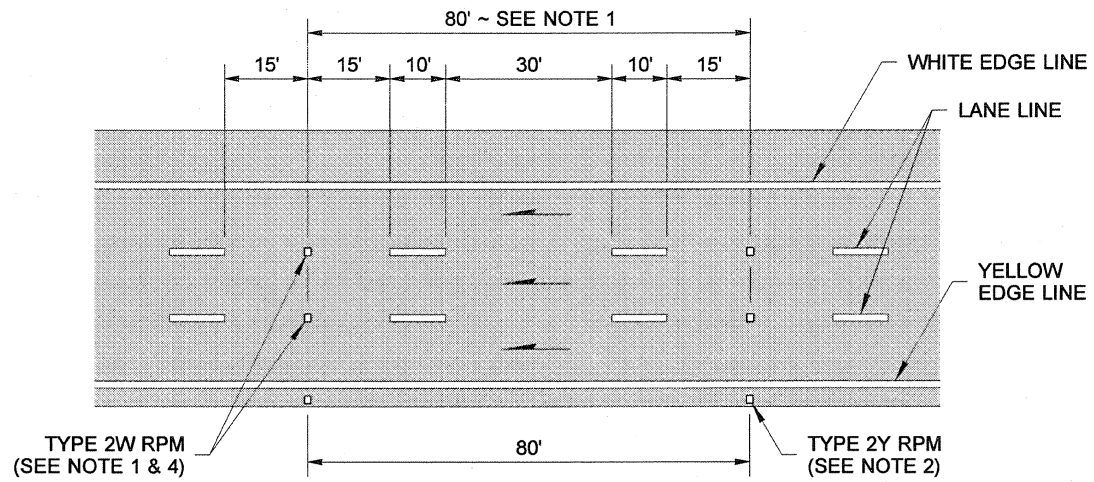

MULTILANE ONE-WAY TRAFFIC

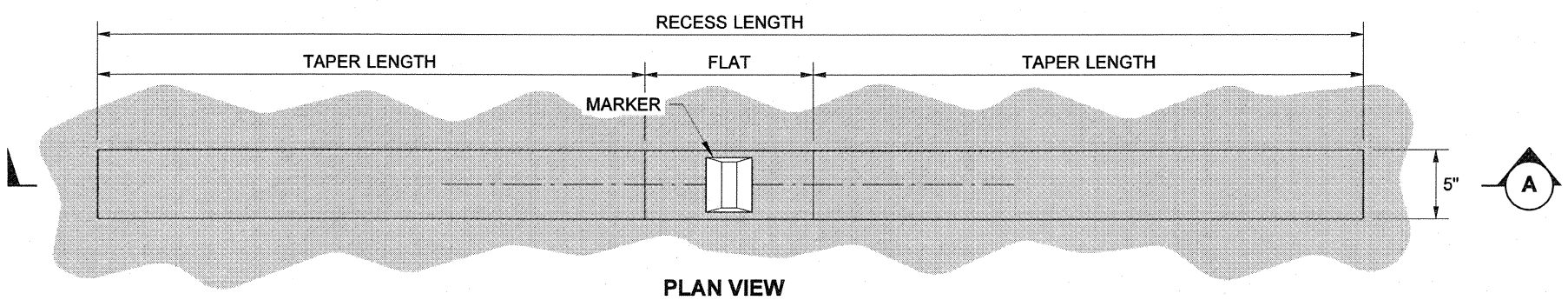

PLAN VIEW

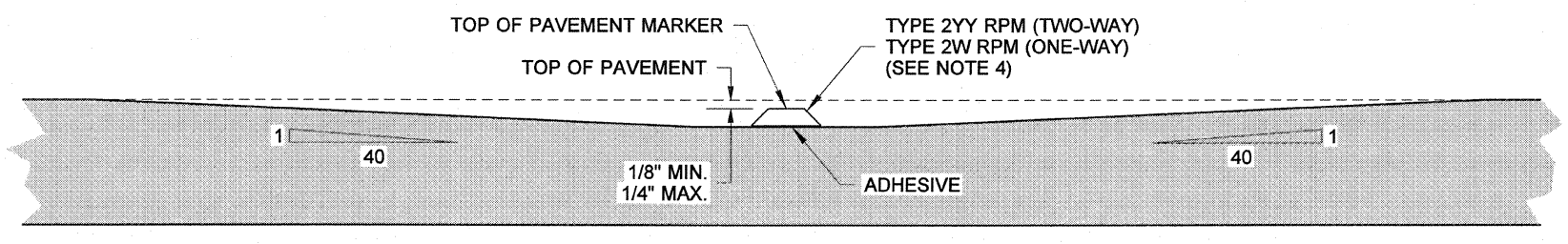

SECTION (A)

RECESSED PAVEMENT MARKER DETAILS

FOR USE WHERE SPECIFIED IN CONTRACT

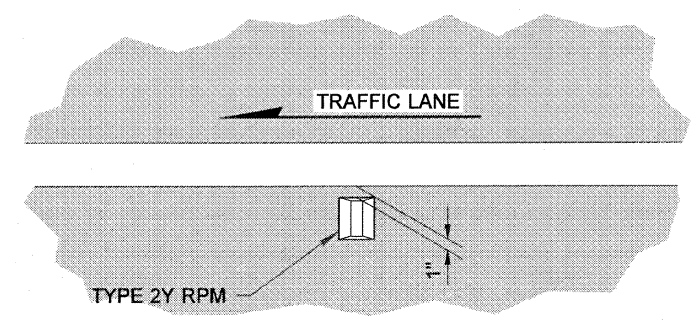

LEFT EDGE OF LANE PLACEMENT DETAIL

SEE NOTE 2

NOTES

1. Raised Pavement Markers Types 2YY and 2W shall be spaced at 80' intervals on tangents and on horizontal curves with a radius of 5000' or more, and at 40' intervals on horizontal curves having radii of less than 5000'. Center the RPM's in the gaps between the pavement marking lines.
2. Type 2Y RPM's, when specified, shall be placed outside the left Edge Line at 80' intervals. See "LEFT EDGE OF LANE PLACEMENT DETAIL".
3. Recessed pavement markers, when specified, shall be installed at the locations shown for Type 2W RPM's on multilane one-way roadways, and Type 2YY RPM's on two lane two-way roadways.
4. The Type 2W RPM's placed on multilane one-way roadways and all RPM's set in recesses shall have an abrasion resistant coating.

TYPE 2 RPM RAISED FACE COLORS	
TYPE 2YY	YELLOW AND YELLOW
TYPE 2W	WHITE ~ ONE SIDE ONLY
TYPE 2Y	YELLOW ~ ONE SIDE ONLY

DRAWN BY: MARK SUJKA

LONGITUDINAL MARKING SUPPLEMENT WITH RAISED PAVEMENT MARKERS
STANDARD PLAN M-20.30-02

SHEET 1 OF 1 SHEET

APPROVED FOR PUBLICATION

STATE DESIGN ENGINEER — DATE 10/4/07

Washington State Department of Transportation

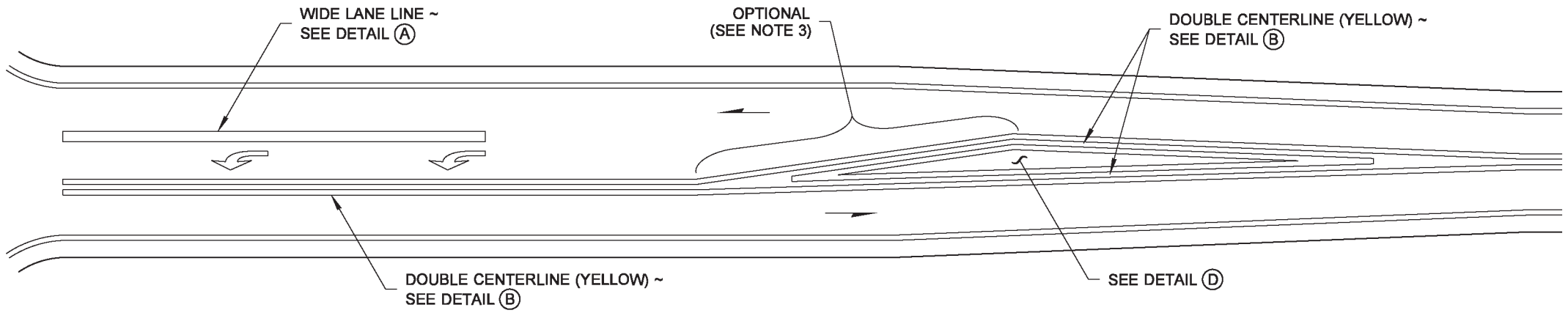

LEFT-TURN LANE

(SEE NOTE 3)

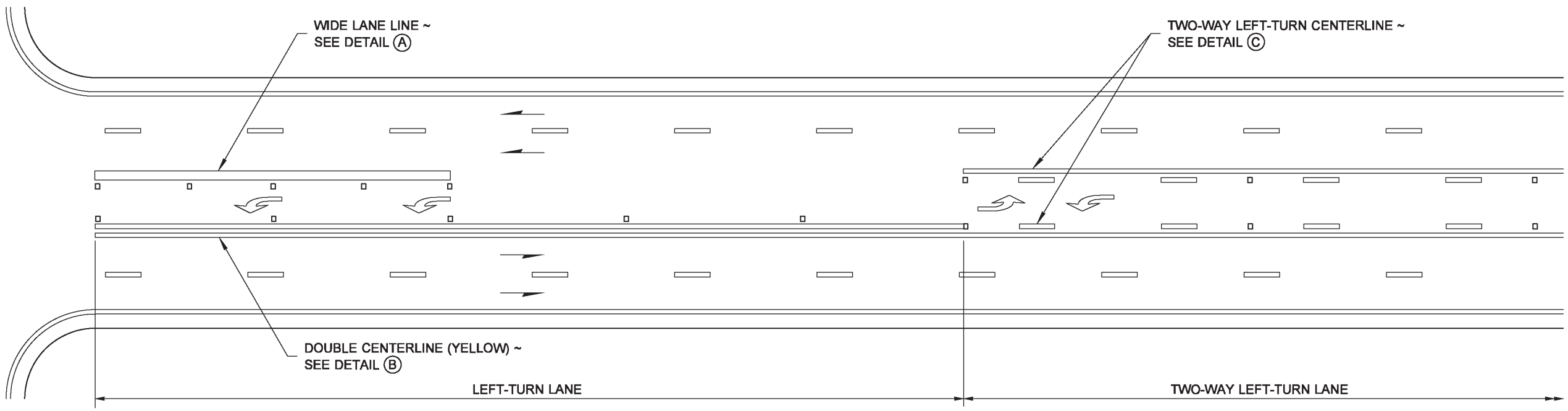

TWO-WAY LEFT-TURN LANE

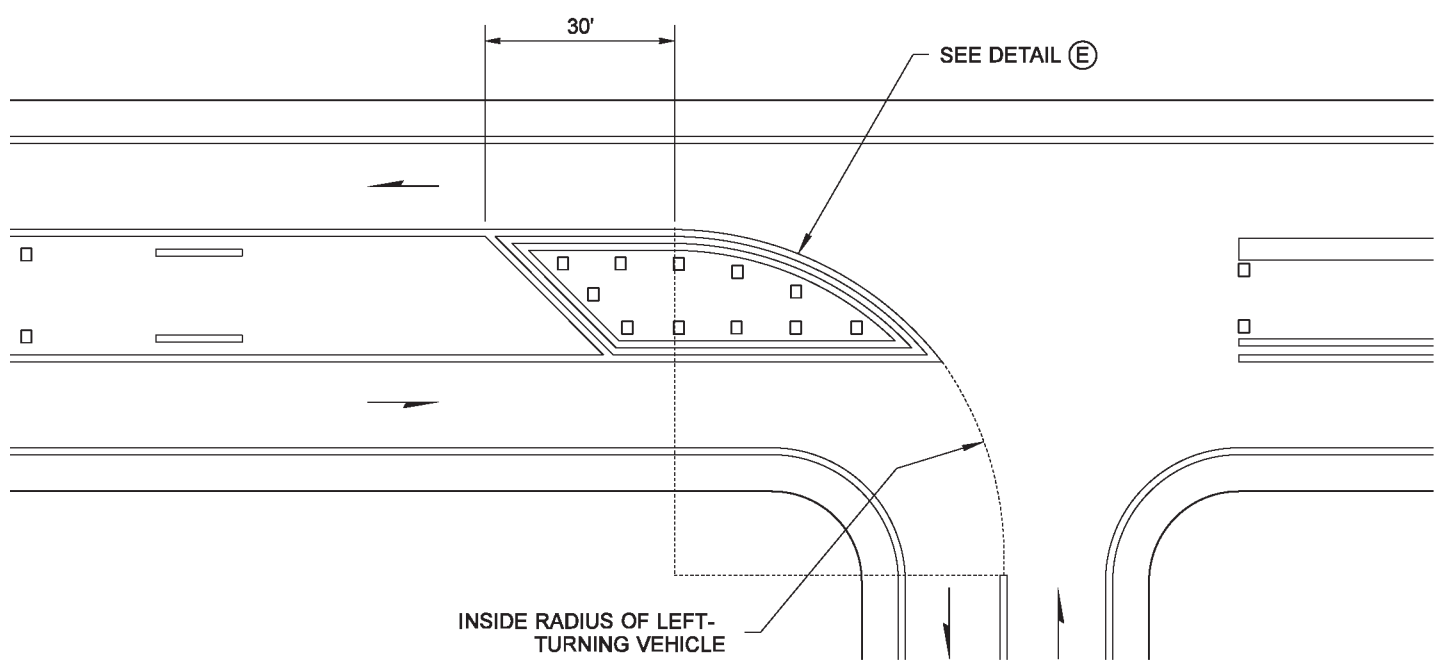

END TWO-WAY LEFT-TURN LANE

NOTES

1. Raised pavement markers shall be installed only when specified in the Contract Plans.
2. See the Standard Plans for marker designation.
3. The portion labeled "OPTIONAL" is used only when the Optional Marked Deceleration Taper (see **Standard Plans M-3.10 and M-3.20)** is specified in the Contract Plans.

Type 2L (SL) Traffic Arrow

DRAWN BY: LISA CYFORD

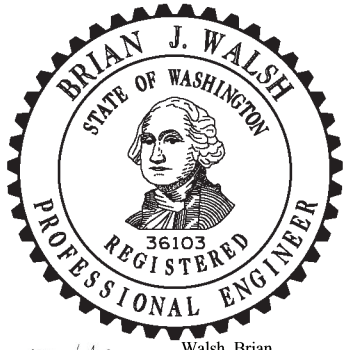

Walsh, Brian
Jun 24 2014 2:33 PM

LONGITUDINAL MARKING SUPPLEMENT WITH RPMs ~ TURN LANES STANDARD PLAN M-20.40-03

SHEET 1 OF 2 SHEETS

APPROVED FOR PUBLICATION
Bakotich, Pasco
Jun 24 2014 4:42 PM
STATE DESIGN ENGINEER

Washington State Department of Transportation

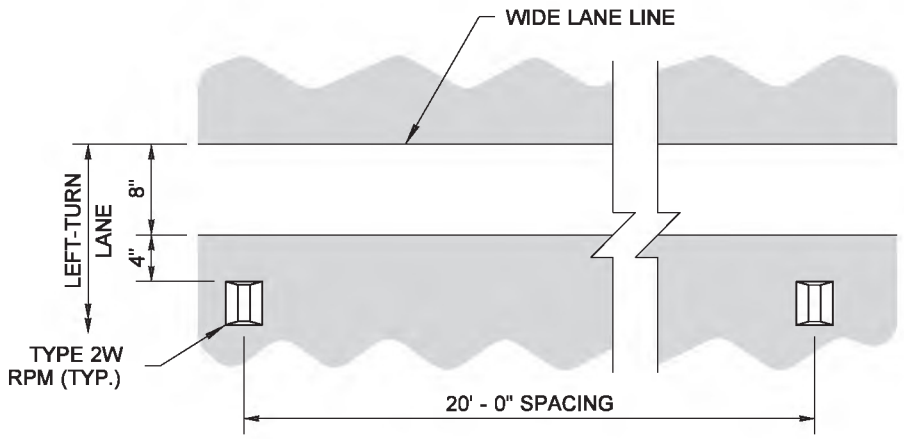

DETAIL (A)

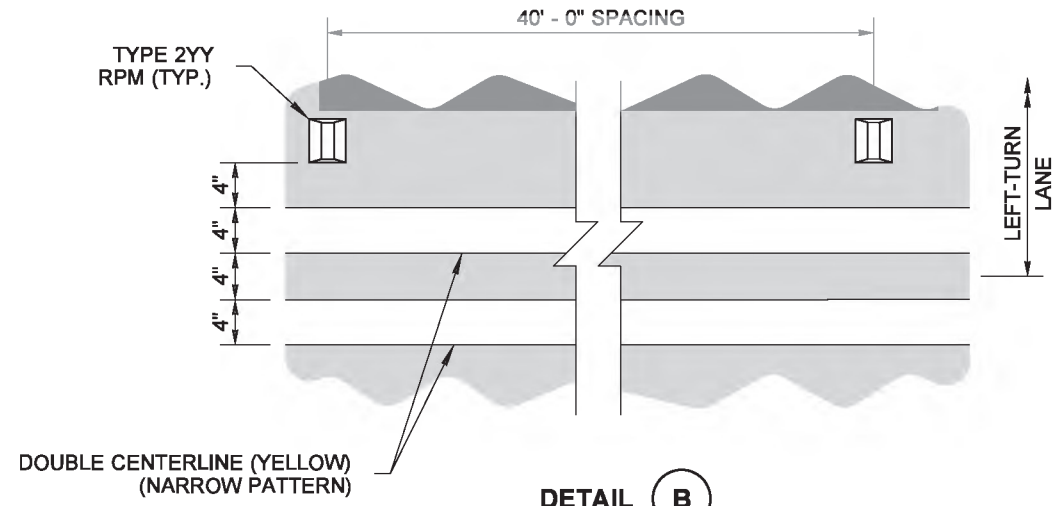

DETAIL (B)

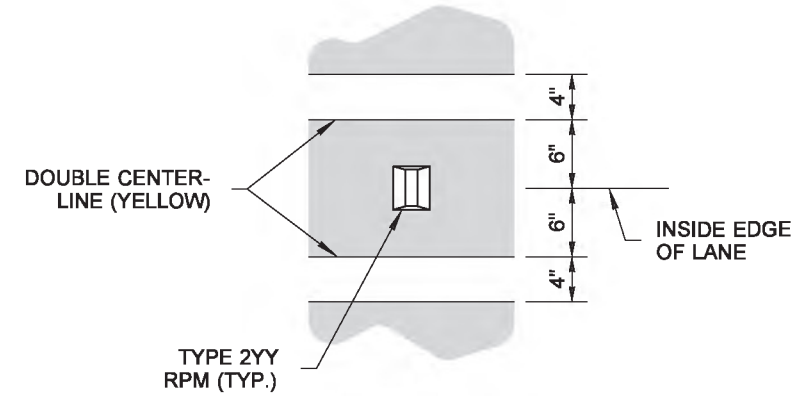

ALTERNATIVE LINE DETAIL

DRAWN BY: LISA CYFORD

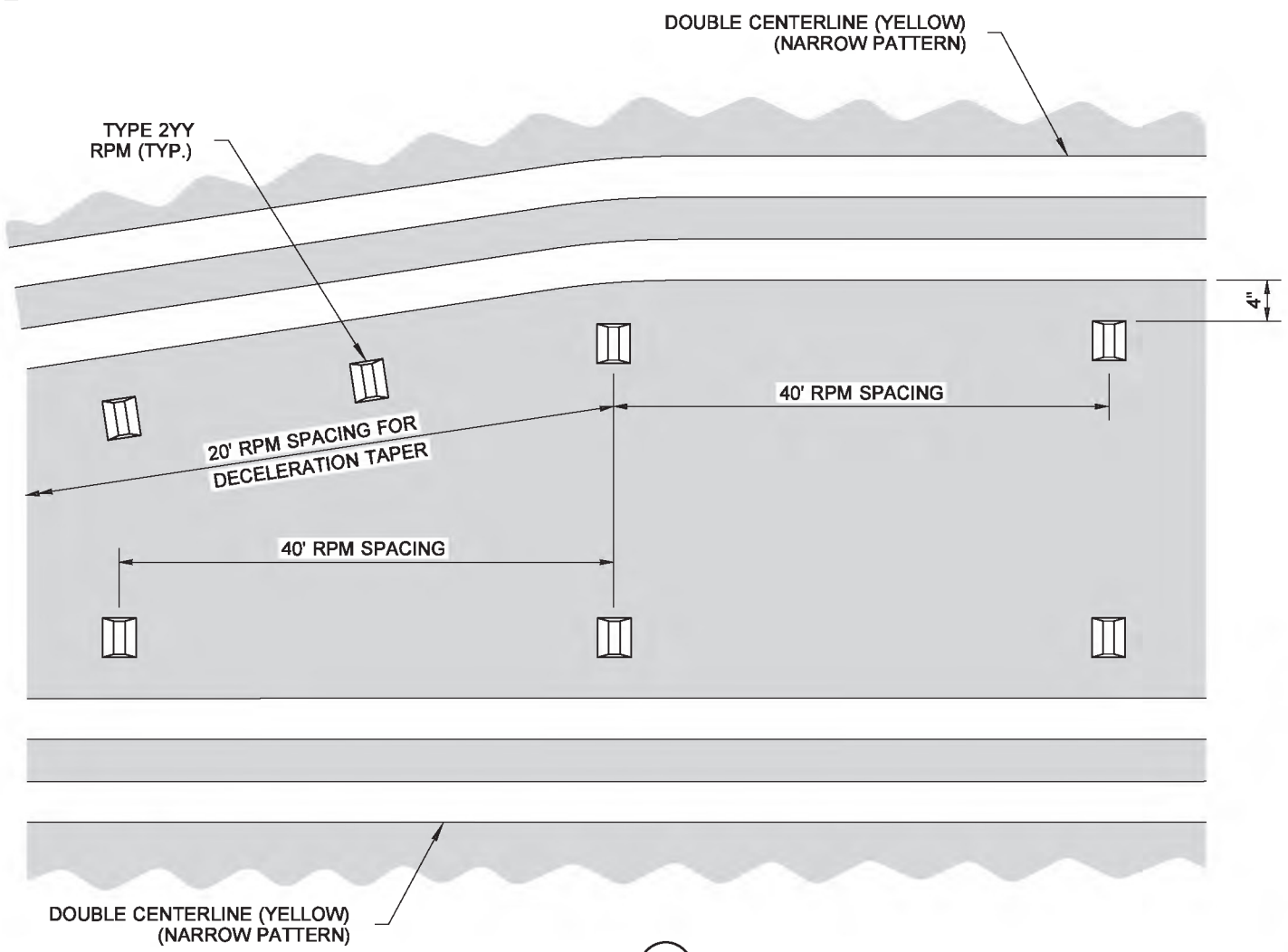

DETAIL (D)

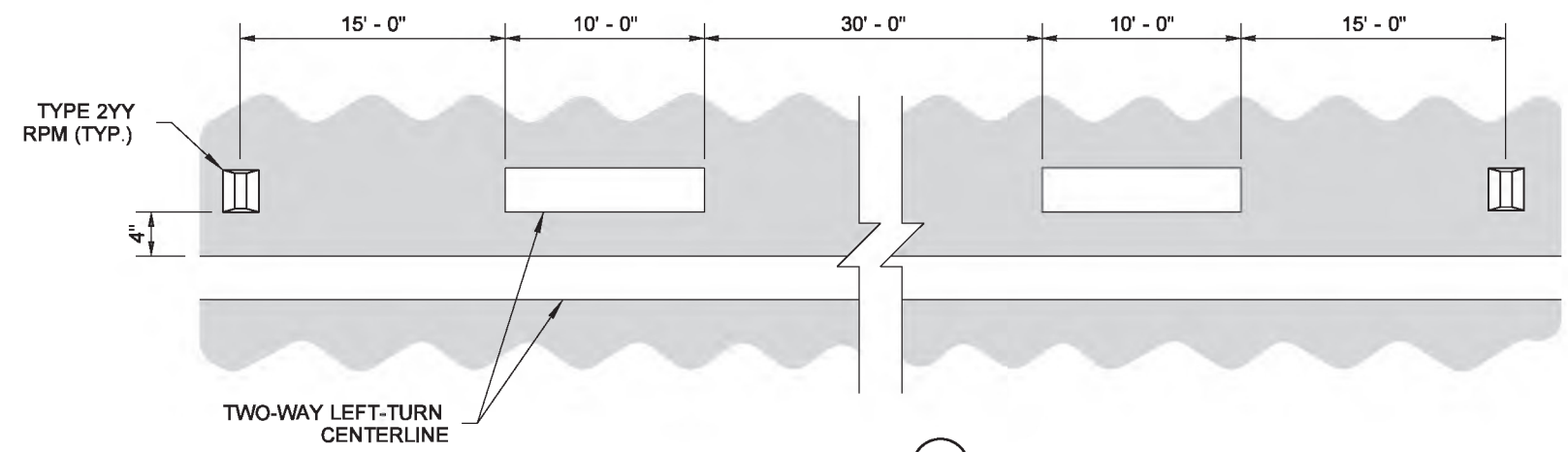

DETAIL (C)

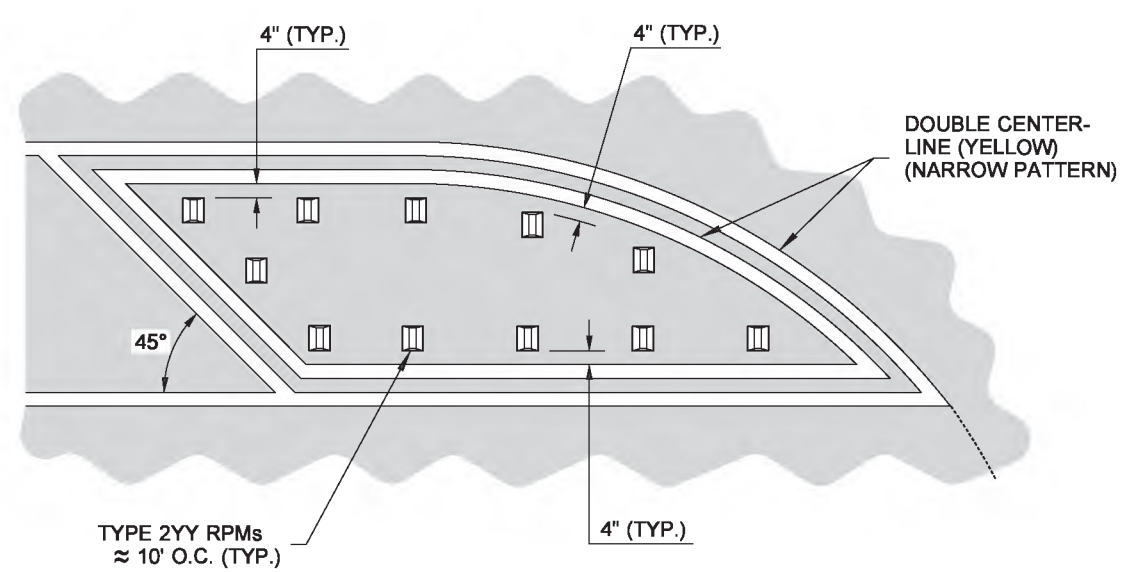

DETAIL (E)

Walsh, Brian
Jun 24 2014 2:33 PM

LONGITUDINAL MARKING SUPPLEMENT WITH RPMs ~ TURN LANES STANDARD PLAN M-20.40-03

SHEET 2 OF 2 SHEETS

APPROVED FOR PUBLICATION
Bakotich, Pasco
Jun 24 2014 4:43 PM

STATE DESIGN ENGINEER

Washington State Department of Transportation

DRAWN BY: LISA CYFORD

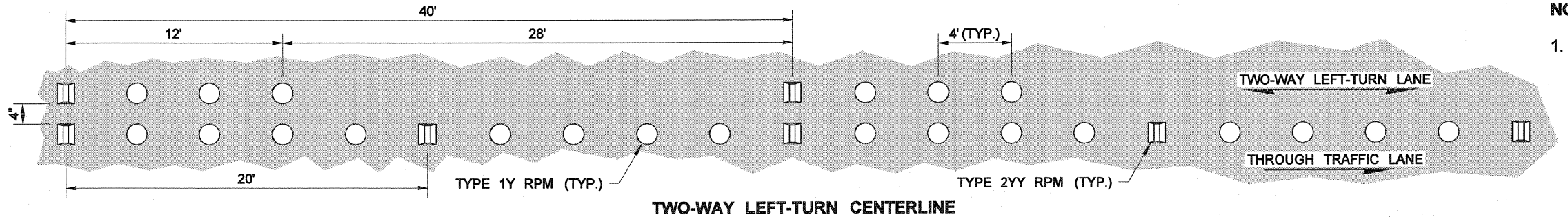

TWO-WAY LEFT-TURN CENTERLINE

NOTE

1. The NO PASS LINE (when required) is applied parallel to the CENTERLINE, 4" away, with the Type 2YY RPM's aligned (similar to TWO-WAY LEFT-TURN LINE).

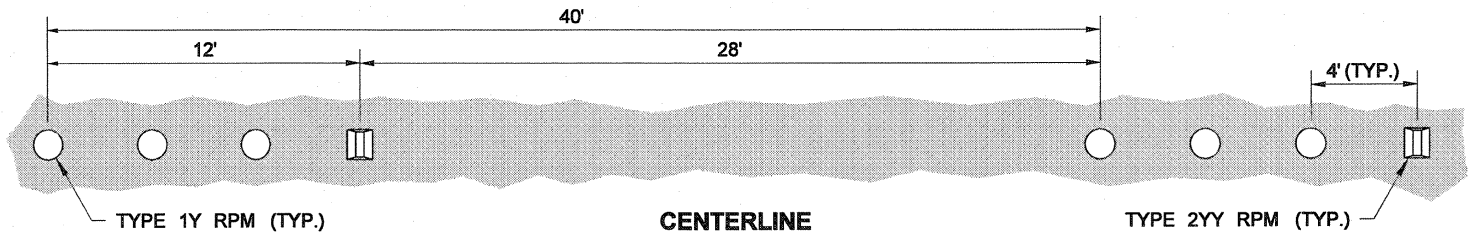

CENTERLINE

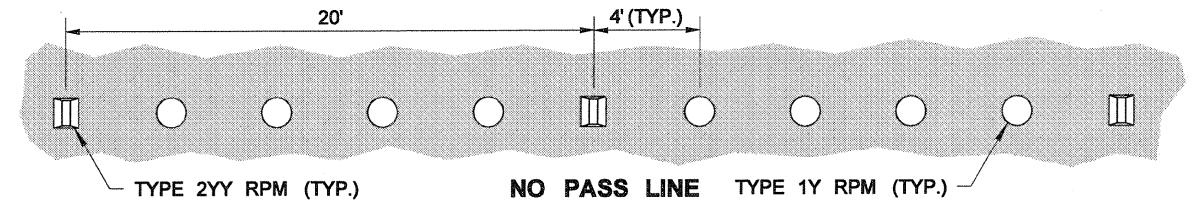

NO PASS LINE
SEE NOTE 1

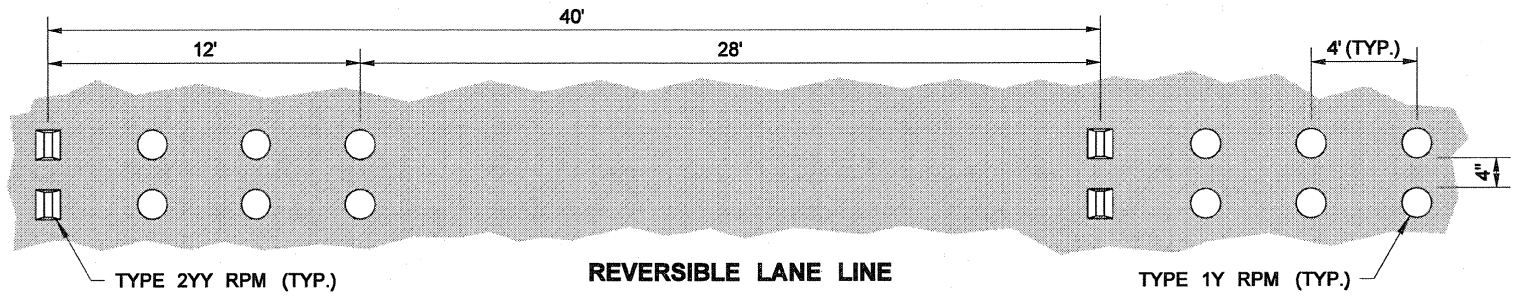

REVERSIBLE LANE LINE

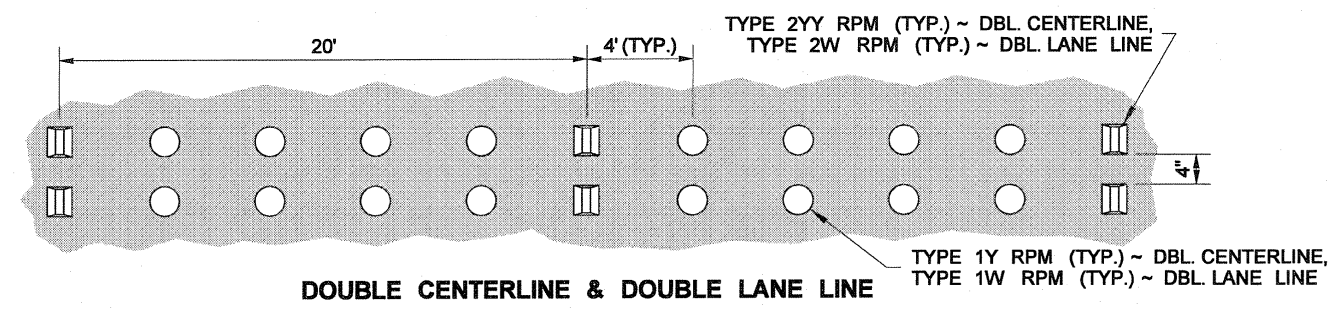

DOUBLE CENTERLINE & DOUBLE LANE LINE

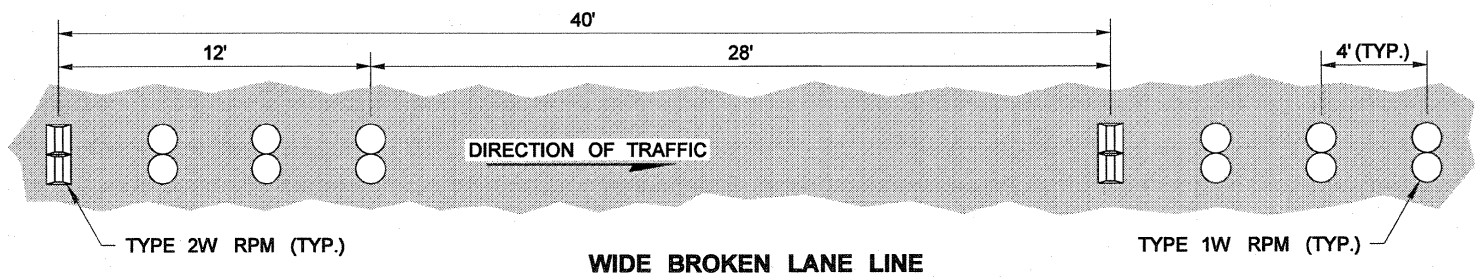

WIDE BROKEN LANE LINE

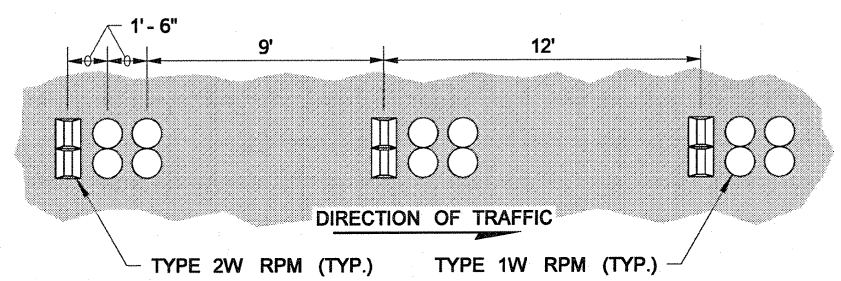

WIDE DOTTED LANE LINE

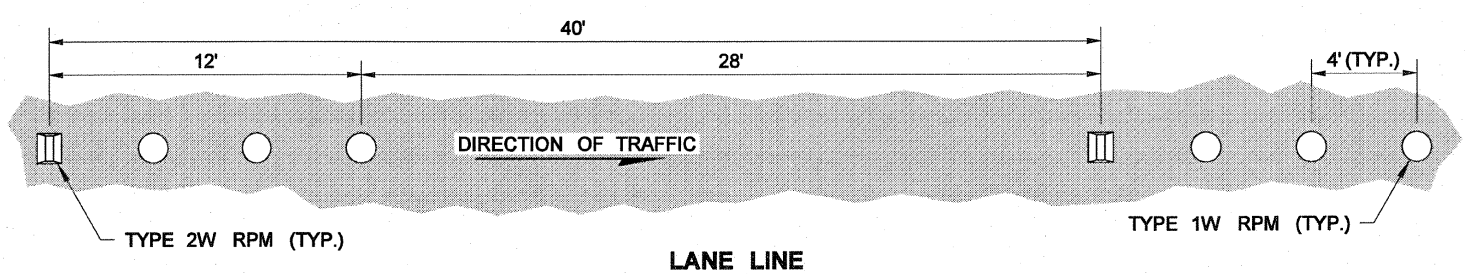

LANE LINE

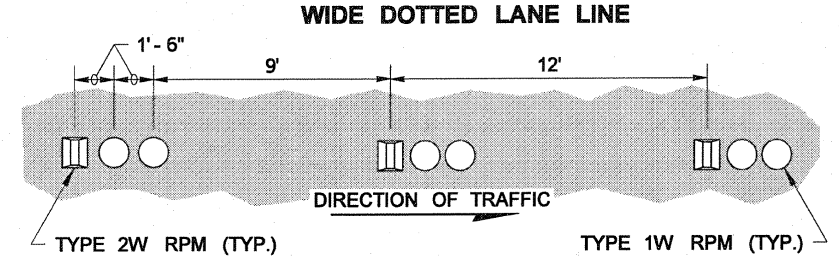

DOTTED LANE LINE

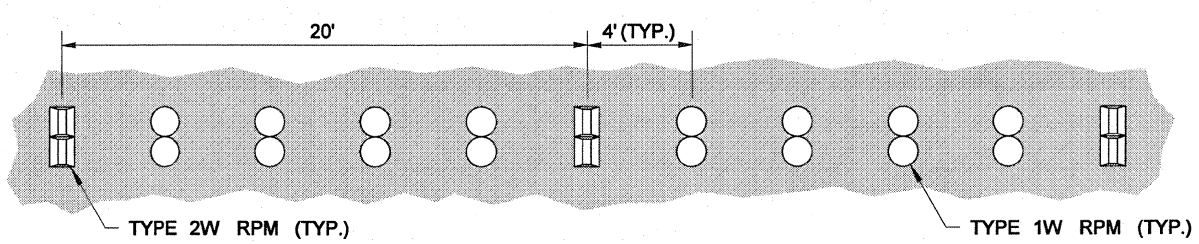

WIDE LANE LINE

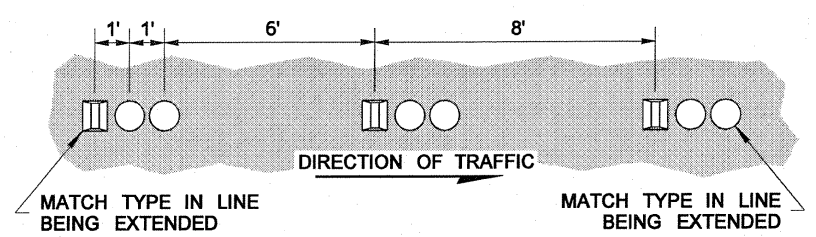

DOTTED EXTENSION LINE

LONGITUDINAL MARKING SUBSTITUTION W/RAISED PAVEMENT MARKERS

STANDARD PLAN M-20.50-02

SHEET 1 OF 1 SHEET

APPROVED FOR PUBLICATION

Pasco Bakotich III 6/3/11

STATE DESIGN ENGINEER DATE

Washington State Department of Transportation

This page left blank intentionally.

DRAWN BY: LISA CYFORD

NOTE

1. If Rumble Strips are present, install marking outside of the Rumble Strip.

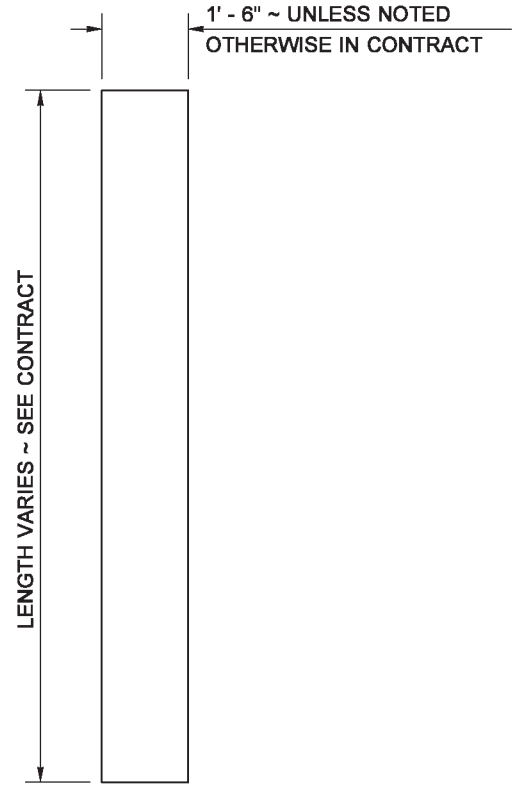

STOP LINE

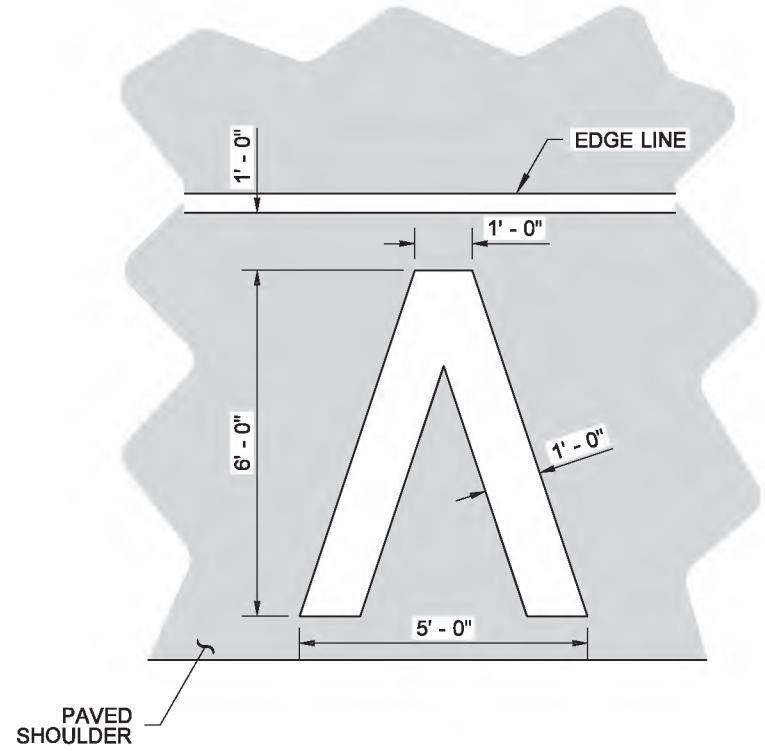

MARKING AREA = 11.73 SQ.FT.

HALF-MILE MARKER

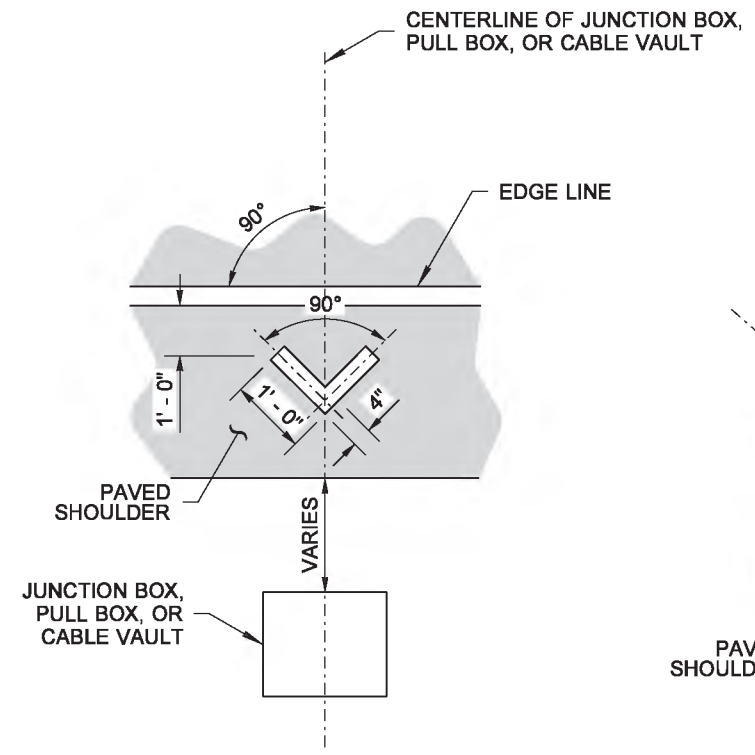

MARKING AREA = 0.56 SQ. FT.

JUNCTION BOX, PULL BOX, OR CABLE VAULT MARKINGS

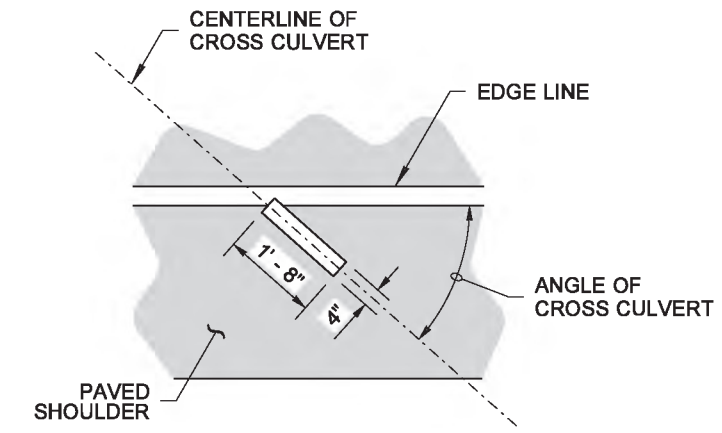

MARKING AREA = 0.56 SQ.FT.

CROSS CULVERT

DRAINAGE MARKING

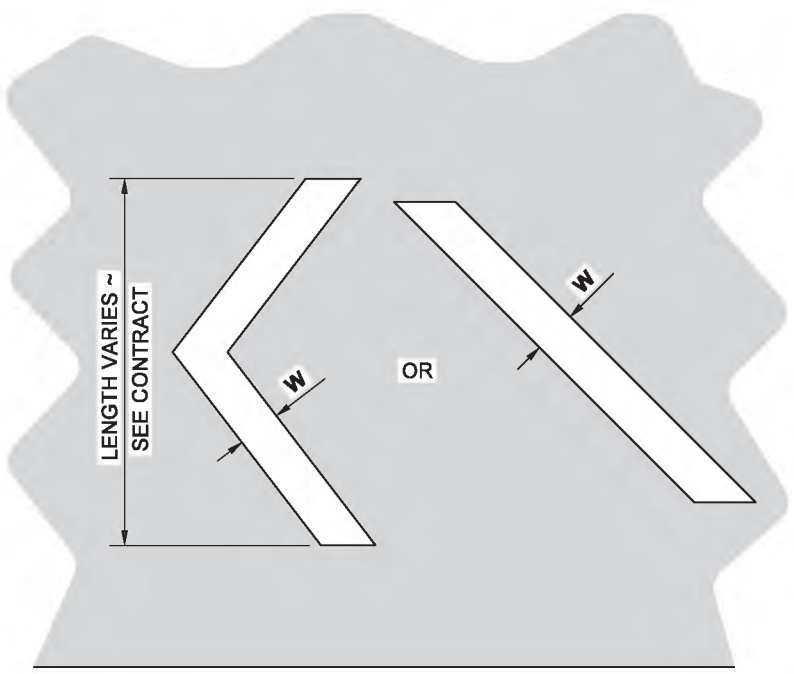

WHITE OR YELLOW ~ SEE CONTRACT

CHEVRON OR DIAGONAL

CROSSHATCH MARKING

W = 8" (IN) FOR POSTED SPEED LIMIT OF 40 MPH OR LOWER
W = 12" (IN) FOR POSTED SPEED LIMIT OF 45 MPH OR HIGHER

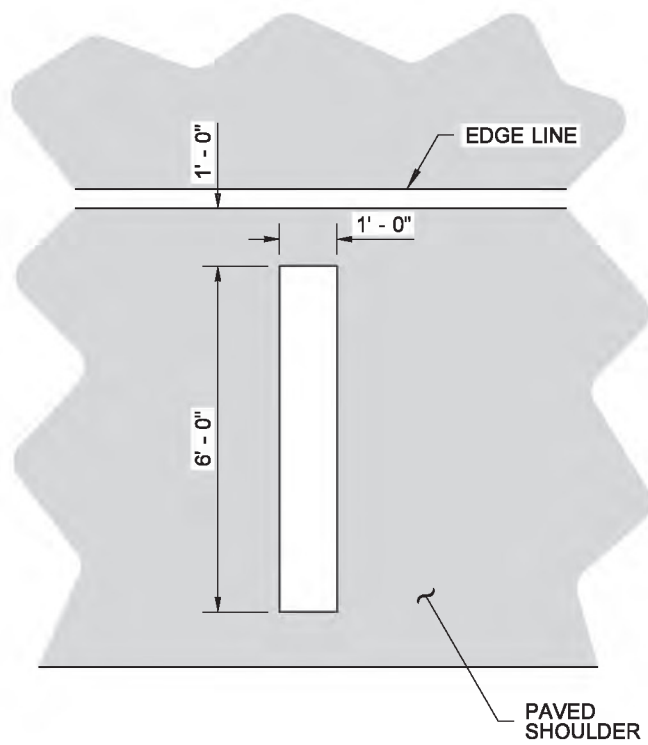

MARKING AREA = 6.00 SQ.FT.

FULL MILE MARKER

AERIAL SURVEILLANCE MARKERS

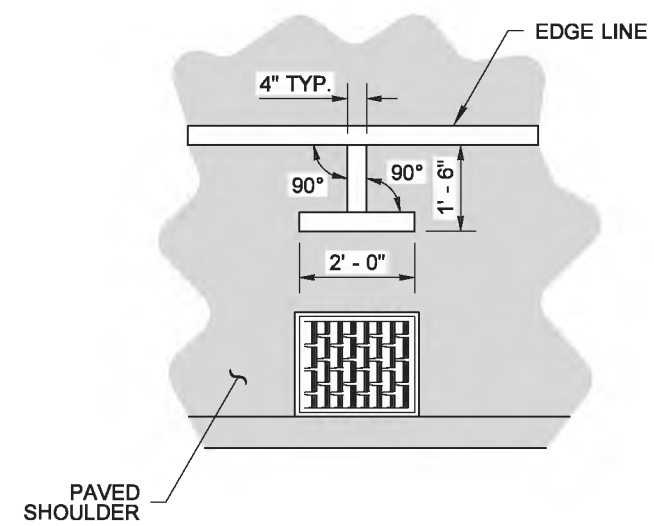

MARKING AREA = 1.06 SQ.FT.

DRAINAGE STRUCTURE INLET

DRAINAGE MARKING

BRIAN J. WALSH
STATE OF WASHINGTON
36103
REGISTERED
PROFESSIONAL ENGINEER

Walsh, Brian
Jun 24 2014 2:35 PM

SYMBOL MARKINGS MISCELLANEOUS

STANDARD PLAN M-24.60-04

SHEET 1 OF 2 SHEETS

APPROVED FOR PUBLICATION
Bakotich, Pasco
Jun 24 2014 4:43 PM
STATE DESIGN ENGINEER

Washington State Department of Transportation

DRAWN BY: LISA CYFORD

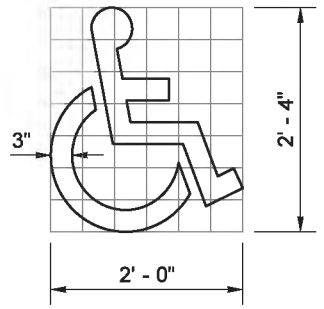

GRID IS 4" (IN) SQUARE MARKING AREA = 1.41 SQ.FT.

ACCESS PARKING SPACE SYMBOL (MINIMUM)

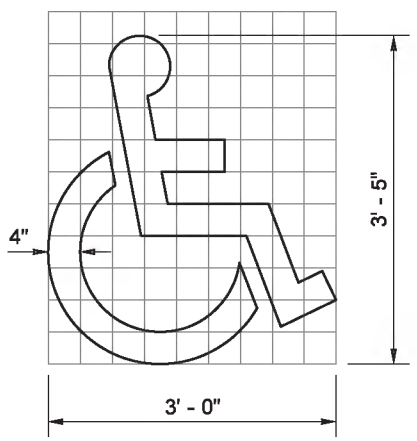

GRID IS 4" (IN) SQUARE MARKING AREA = 3.09 SQ.FT.

ACCESS PARKING SPACE SYMBOL (STANDARD)

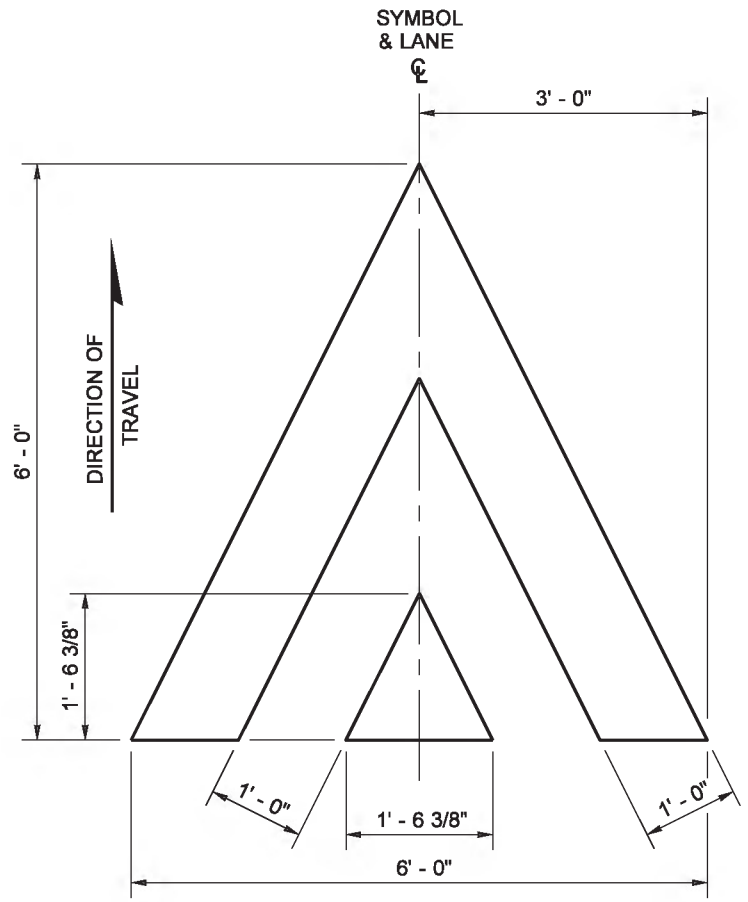

MARKING AREA = 12.08 SQ.FT.

SPEED BUMP SYMBOL

SYMBOL MARKING		A	B	C	D	USE	MARKING AREA
YIELD AHEAD SYMBOL	TYPE 1	6' - 0"	2' - 6"	13' - 0"	N/A	LESS THAN 45 MPH	25.90 SQ.FT.
	TYPE 2	6' - 0"	3' - 0"	20' - 0"	N/A	45 MPH OR GREATER	36.54 SQ.FT.
YIELD LINE SYMBOL	TYPE 1	1' - 0"	6"	1' - 6"	6"	LESS THAN 45 MPH	0.75 SQ.FT.
	TYPE 2	2' - 0"	1' - 0"	3' - 0"	1' - 0"	45 MPH OR GREATER	3.00 SQ.FT.
	TYPE 2	2' - 0"	1' - 0"	3' - 0"	1' - 0"	ROUNDABOUT ENTRY *	3.00 SQ.FT.

* MINIMUM OF 4 IN LANE

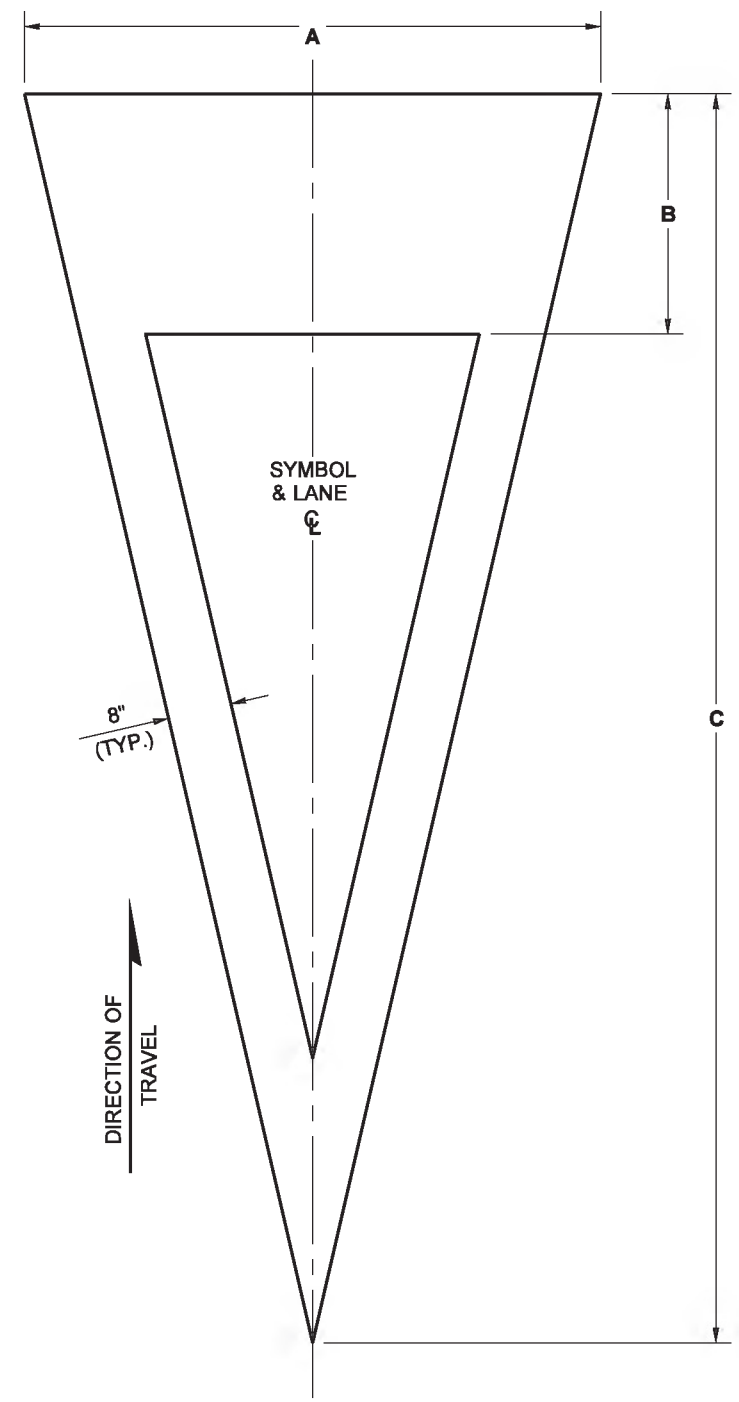

YIELD AHEAD SYMBOL

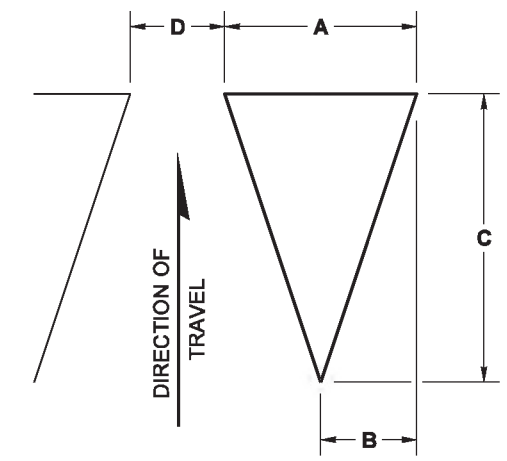

YIELD LINE SYMBOL
(MULTIPLE SYMBOLS REQUIRED FOR TRANSVERSE YIELD LINE ~ SEE CONTRACT)

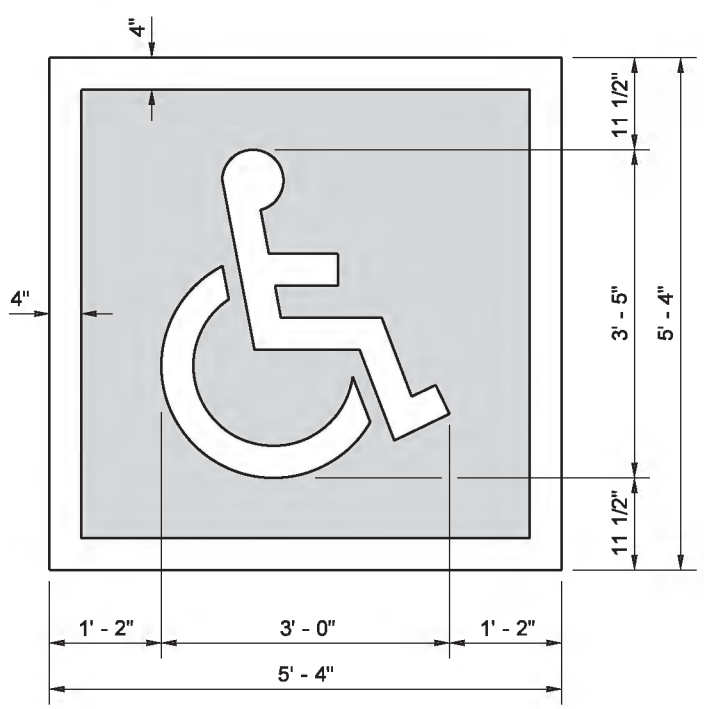

TOTAL MARKING AREA = 28.44 SQ.FT.
WHITE = 9.76 SQ.FT. BLUE = 18.69 SQ.FT.

ACCESS PARKING SPACE SYMBOL (STANDARD)
WITH BLUE BACKGROUND AND WHITE BORDER
(REQUIRED FOR CEMENT CONCRETE SURFACES)

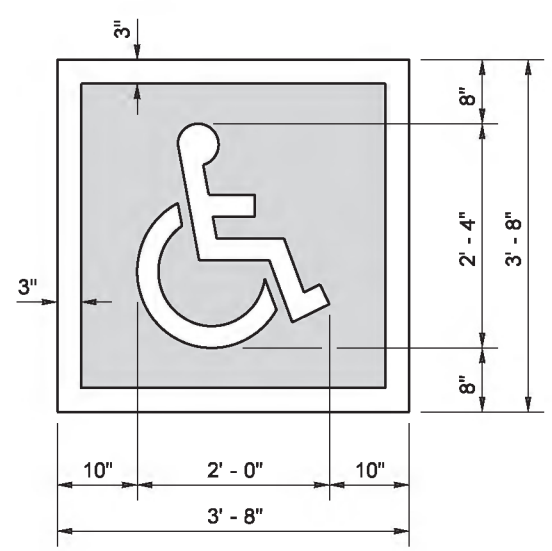

TOTAL MARKING AREA = 13.44 SQ.FT.
WHITE = 4.82 SQ.FT. BLUE = 8.62 SQ.FT.

ACCESS PARKING SPACE SYMBOL (MINIMUM)
WITH BLUE BACKGROUND AND WHITE BORDER
(REQUIRED FOR CEMENT CONCRETE SURFACES)

BRIAN J. WALSH
STATE OF WASHINGTON
36103
REGISTERED
PROFESSIONAL ENGINEER

Walsh, Brian
Jun 24 2014 2:37 PM

SYMBOL MARKINGS MISCELLANEOUS

STANDARD PLAN M-24.60-04

SHEET 2 OF 2 SHEETS

APPROVED FOR PUBLICATION
Bakotich, Pasco
Jun 24 2014 4:43 PM
STATE DESIGN ENGINEER
Washington State Department of Transportation

DRAWN BY: LISA GYFORD

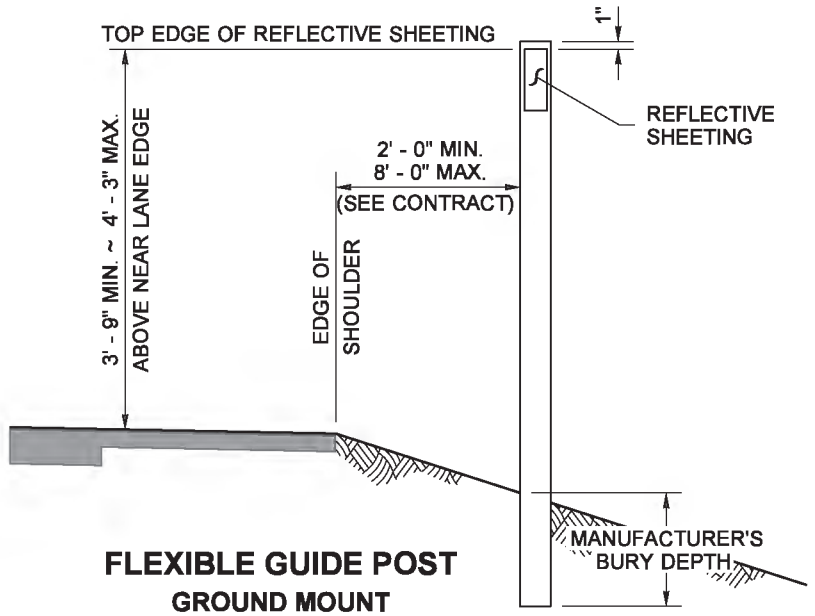

FLEXIBLE GUIDE POST
GROUND MOUNT

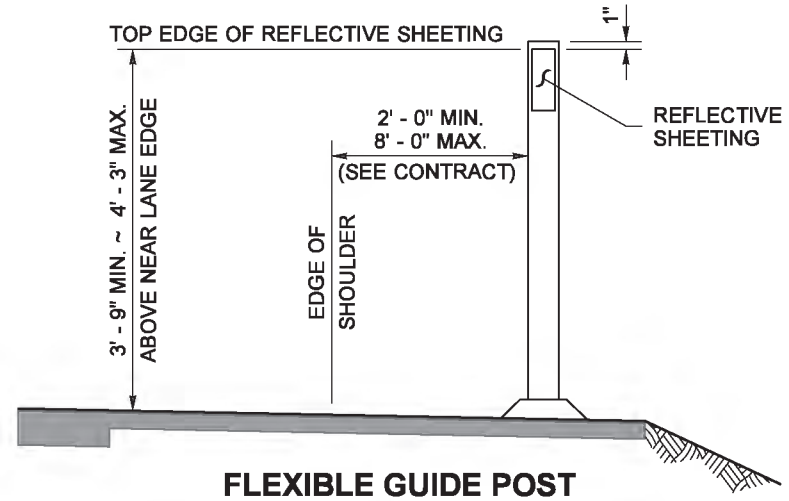

FLEXIBLE GUIDE POST
SURFACE MOUNT

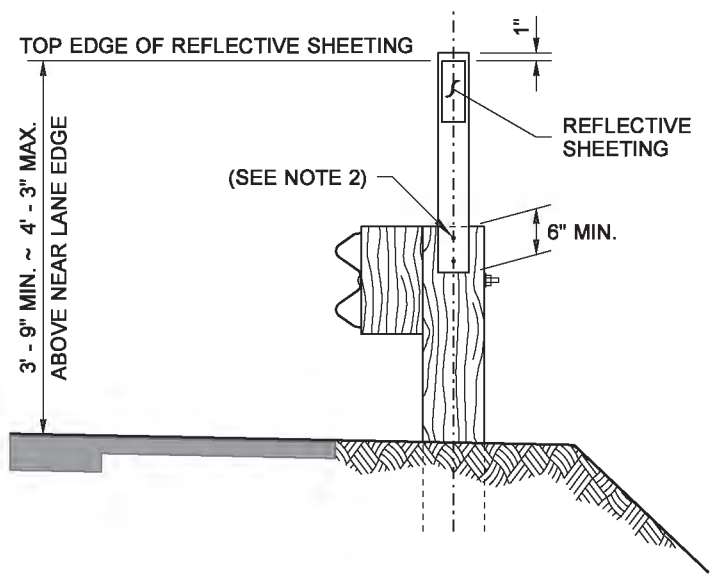

FLEXIBLE GUIDE POST
GUARDRAIL MOUNT
(USE FOR WOODEN GUARDRAIL POSTS)

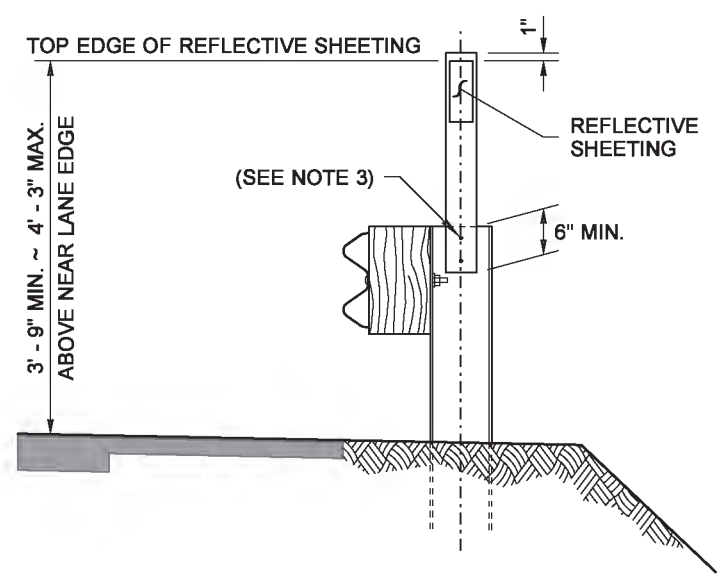

FLEXIBLE GUIDE POST
GUARDRAIL MOUNT
(USE FOR STEEL GUARDRAIL POSTS)

NOTES

1. When the Contract Plans requires a guide post with concurrent guardrail runs, the Contractor shall either:
   - **A.** Drive the flexible guide post in line with the guardrail posts, or
   - **B.** Mount the shorter flexible guide post onto the guardrail post.
2. Guide posts shall be fastened to the wooden guardrail post using two 2" (in) × 3/8" (in) lag screws with washers, along centerline of post. Also acceptable is any approved attachment method submitted by the guide post manufacturer.
3. Guide posts shall be fastened to the steel guardrail posts using two galvanized 2" (in) × 3/8" (in) bolts with a washer on both sides, a lock washer, and nut. The nut shall be tightened to properly compress the lock washer. The drilled holes in the guardrail post web shall be painted with galvanizing repair paint as described in **Standard Specification Section 8-11.3(1)B**. Also acceptable is any approved attachment method submitted by the guide post manufacturer.
4. When concrete barrier runs concurrent, the Contractor shall mount Barrier Delineators where guide posts are required.

GUIDE POST TYPE DEFINITIONS ~ REFLECTIVE SHEETING APPLICATIONS

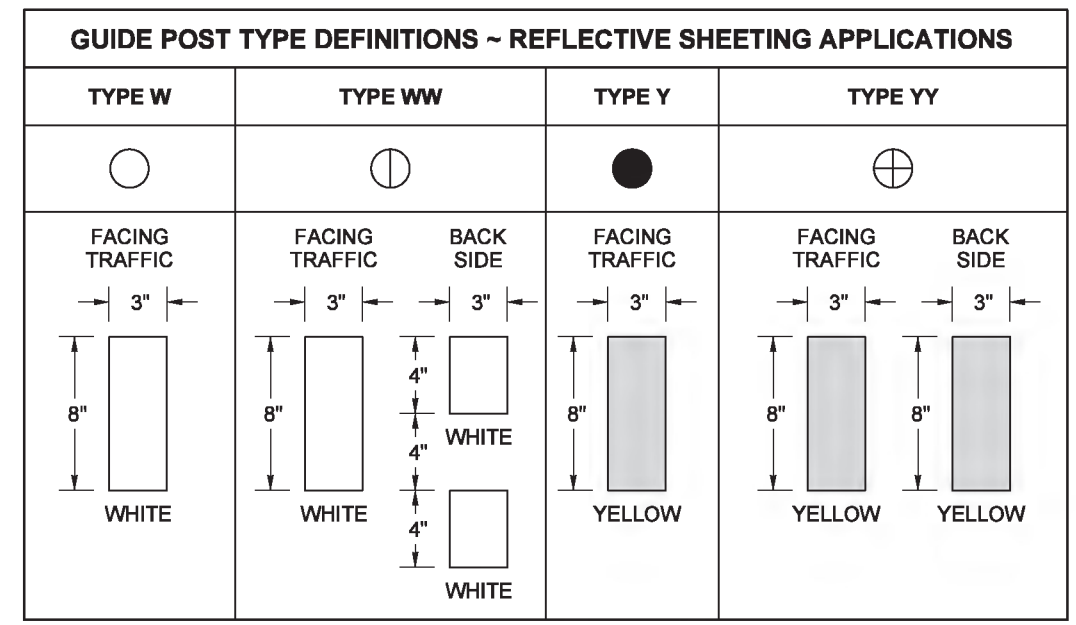

BARRIER DELINEATOR REQUIREMENTS

- Spacing of Barrier Delineators shall be as shown in the Plans.
- The housing or bracket can be flexible or rigid, molded from a durable plastic or other durable material approved by the Engineer, and shall be attached to the barrier with an adhesive recommended by the manufacturer. The attachment point on the barrier surface shall be free of dirt, curing compound, moisture, paint, or any other matter that would adversely affect the adhesive bond.
- Barrier Delineators shall be one-sided for single direction traffic, or two-sided for bi-directional traffic.
- Color shall be white on the right of traffic, and yellow on the left of traffic.
- The reflective surface shall be rectangular or trapezoidal.
- Reflective Sheeting: 12 square inches minimum surface area; Type III, IV, V, or VI, selected from approved materials listed in the Qualified Products List.
- Plastic Reflector: 9 square inches minimum surface area; acrylic or polycarbonate conforming to AASHTO M 290. Reflectors shall equal or exceed the following minimum values of Specific Intensity:

OBSERVATION ANGLE	ENTRANCE ANGLE	SPECIFIC INTENSITY (cd/ft-c)	
		WHITE	YELLOW
0.1°	0°	126	75
0.1°	20°	50	30

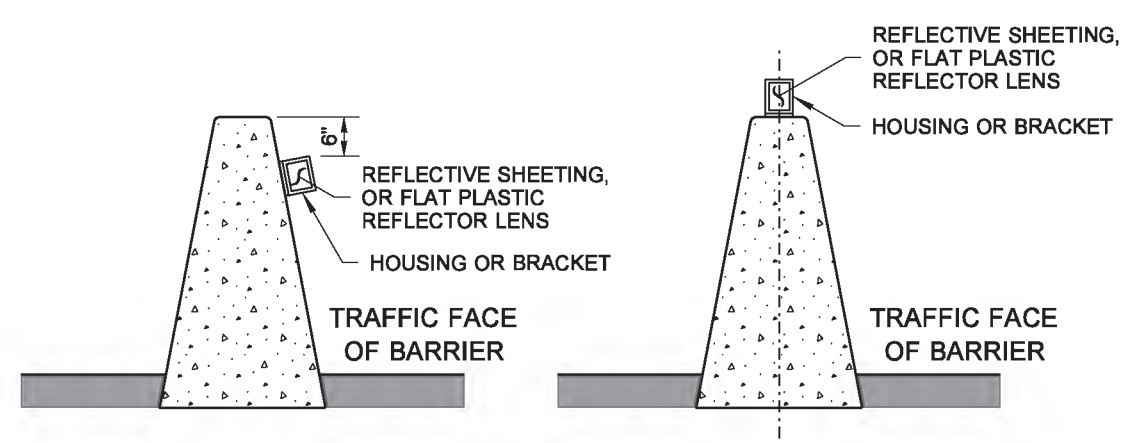

SIDE MOUNT
PER CONTRACT

TOP MOUNT
PER CONTRACT

BARRIER DELINEATORS

(CONCRETE BARRIER TYPES AND LOCATIONS VARY, SINGLE SLOPE IN MEDIAN SHOWN)

Walsh, Brian
Jun 24 2014 2:07 PM

GUIDE POSTS AND BARRIER DELINEATORS

STANDARD PLAN M-40.10-03

SHEET 1 OF 1 SHEET

APPROVED FOR PUBLICATION
Bakotich, Pasco
Jun 24 2014 4:44 PM
STATE DESIGN ENGINEER
Washington State Department of Transportation