Washington State Department of Transportation

Publications Transmittal

Transmittal Number	Date
PT 12-050	August 6, 2012
Publication Title / Publication Number	
Standard Plans M 21-01	
Originating Organization	
Design Office, Engineering and Regional Operations	

Remarks and Instructions

The complete manual and revision packages can be accessed at www.wsdot.wa.gov/design/standards/plans.htm.

Please contact Bill Berens at 360-705-7256 or berensb@wsdot.wa.gov with comments, questions, or suggestions for improvement to the manual.

Instructions:

- Replace Cover page with **new Cover page** provided.
- Replace Foreward page with **new Foreward page** provided.
- Remove **pages 3 ~ 13** from your current manual.
- Insert **pages 3 ~ 13**.
- Refer to ***REMOVE & INSERT INSTRUCTIONS ~ Standard Plans Revision 8-6-2012***

To get the latest information, please sign up for email updates for individual publications at www.wsdot.wa.gov/publications/manuals.

Washington State Department of Transportation
Engineering and Regional Operations
Design Office
PO Box 47329
Olympia, WA 98504-7329

Email: designstandards@wsdot.wa.gov
www.wsdot.wa.gov/design/standards/plans.htm

David Olson
Approved By

David K. Olson
Signature

REMOVE AND INSERT INSTRUCTIONS - Standard Plans Revision 8-6-2012

REMOVE				INSERT			
A-40.20-00	9/20/07			A-40.20-01	2/7/12		Revised
A-40.50-01	6/2/11	Sheet 1 of 2		A-40.50-01	6/2/11	Sheet 1 of 2	Reprinted
B-5.60-01	6/16/11			B-5.60-01	6/16/11		Reprinted
B-10.20-00	6/1/06			B-10.20-01	2/7/12		Revised
B-15.20-00	6/1/06			B-15.20-01	2/7/12		Revised
B-15.40-00	6/1/06			B-15.40-01	2/7/12		Revised
B-15.60-00	6/1/06			B-15.60-01	2/7/12		Revised
B-20.20-01	11/21/06			B-20.20-02	3/16/12		Revised
B-20.40-02	6/10/08			B-20.40-03	3/16/12		Revised
B-20.60-02	6/10/08			B-20.60-03	3/15/12		Revised
B-25.20-00	6/8/06			B-25.20-01	3/15/12		Revised
B-25.60-00	6/1/06			B-25.60-00	6/1/06		Reprinted
B-30.10-00	6/8/06			B-30.10-01	4/26/12		Revised
B-30.20-01	11/21/06			B-30.20-02	4/26/12		Revised
B-30.30-00	6/1/06			B-30.30-01	4/26/12		Revised
B-30.40-00	6/1/06			B-30.40-01	4/26/12		Revised
B-30.50-00	6/1/06			B-30.50-01	4/26/12		Revised
B-30.70-02	6/16/11			B-30.70-03	4/26/12		Revised
B-60.40-00	6/1/06			B-60.40-00	6/1/06		Reprinted
B-65.20-00	6/1/06			B-65.20-01	4/26/12		Revised
C-2p	10/31/03			C-2p	10/31/03		Reprinted
C-3	6/27/11			C-3	7/2/12		Revised
C-4f	6/16/11	Sheet 1 of 4		C-4f	7/2/12	Sheet 1 of 4	Revised
C-4f	6/16/11	Sheet 2 of 4		C-4f	7/2/12	Sheet 2 of 4	Revised
C-4f	6/16/11	Sheet 3 of 4		C-4f	7/2/12	Sheet 3 of 4	Revised
C-4f	6/16/11	Sheet 4 of 4		C-4f	7/2/12	Sheet 4 of 4	Revised
C-5	6/16/11		Deleted	Blank			
C-6	5/30/97	Sheet 1 of 2		C-6	5/30/97	Sheet 1 of 2	Reprinted
C-13	7/3/08	Sheet 1 of 3	Deleted				
C-13	7/3/08	Sheet 2 of 3	Deleted				
C-13	7/3/08	Sheet 3 of 3	Deleted				
C-13a	7/3/08		Deleted				
C-13b	7/3/08		Deleted				
C-13c	7/3/08		Deleted				
C-14a	7/3/08	Sheet 1 of 3	Deleted				
C-14a	7/3/08	Sheet 2 of 3	Deleted				
C-14a	7/3/08	Sheet 3 of 3	Deleted				
C-14b	7/26/02		Deleted				
C-14c	7/3/08		Deleted				
C-14d	7/3/08		Deleted				
C-14e	7/3/08		Deleted				
Blank							
C-15a	7/3/08		Deleted				
C-15b	7/3/08		Deleted				
C-20.14-01	10/14/09			C-20.10-00	7/2/12		New Plan
C-20.15-00	10/14/09			C-20.14-02	7/2/12		Revised
C-20.18-00	10/14/09			C-20.15-01	7/2/12		Revised
C-20.19-00	10/14/09			C-20.18-01	7/2/12		Revised
C-20.40-02	6/16/11			C-20.19-01	7/2/12		Revised
C-20.42-02	6/16/11			C-20.40-03	7/2/12		Revised
C-20.45-00	6/16/11			C-20.42-03	7/2/12		Revised
Blank				C-20.45-01	7/2/12		Revised
C-22.14-02	6/16/11			C-22.14-02	6/16/11		Reprinted
C-22.16-02	6/16/11			C-22.16-03	4/18/12		Revised
C-23.60-01	10/14/09			C-23.60-02	6/21/12		Revised
Blank				C-24.10-00	7/2/12		New Plan
C-25-18-02	6/16/11			C-25.18-03	7/2/12		Revised
C-25.20-04	10/14/09			C-25.20-05	7/2/12		Revised
C-25.22-03	10/14/09			C-25.22-04	7/2/12		Revised
C-25.26-01	10/14/09			C-25.26-02	7/2/12		Revised
C-25.80-01	7/3/08			C-25.80-02	7/2/12		Revised
C-28.40-01	6/16/11		Deleted	C-40.14-02	7/2/12		Revised

REMOVE AND INSERT INSTRUCTIONS - Standard Plans Revision 8-6-2012

REMOVE				INSERT			
C-40.14-01	6/3/10			C-40.16-02	7/2/12		Revised
C-40.16-01	6/3/10			C-40.18-02	7/2/12		Revised
C-40.18-01	10/14/09			C-70.10-00	4/18/12	Sheet 1 of 3	New Plan
C-85.14-00	6/16/11			C-70.10-00	4/18/12	Sheet 2 of 3	New Plan
				C-70.10-00	4/18/12	Sheet 3 of 3	New Plan
				C-75.10-00	4/18/12		New Plan
				C-75.20-00	4/18/12		New Plan
				C-75.30-00	4/18/12		New Plan
				C-80.10-00	4/18/12	Sheet 1 of 3	New Plan
				C-80.10-00	4/18/12	Sheet 2 of 3	New Plan
				C-80.10-00	4/18/12	Sheet 3 of 3	New Plan
				C-80.20-00	4/18/12		New Plan
				C-80.30-00	4/18/12		New Plan
				C-80.40-00	4/18/12		New Plan
				C-80.50-00	4/18/12		New Plan
				C-85.10-00	4/18/12		New Plan
				C-85.11-00	4/18/12		New Plan
				C-85.14-00	6/16/11		Reprinted
D-2.92-00	11/10/05	Sheet 2 of 2		D-2.92-00	11/10/05	Sheet 2 of 2	Reprinted
D-3	6/2/11	Sheet 1 of 4	Deleted	Blank			
D-3	6/2/11	Sheet 2 of 4	Deleted	D-3.09-00	5/17/12	Sheet 1 of 4	New Plan
D-3	6/2/11	Sheet 3 of 4	Deleted	D-3.09-00	5/17/12	Sheet 2 of 4	New Plan
D-3	6/2/11	Sheet 4 of 4	Deleted	D-3.09-00	5/17/12	Sheet 3 of 4	New Plan
D-3.10-00	6/16/10			D-3.09-00	5/17/12	Sheet 4 of 4	New Plan
Blank				D-3.10-00	6/16/10		Reprinted
D-3.11-00	6/16/10	Sheet 1 of 2		D-3.11-01	3/15/12	Sheet 1 of 2	Revised
D-3.11-00	6/16/10	Sheet 2 of 2		D-3.11-01	3/15/12	Sheet 2 of 2	Revised
D-3.15-00	6/16/11			D-3.15-01	5/17/12		Revised
D-3.16-00	6/16/11			D-3.16-01	5/17/12		Revised
D-3.17-00	6/16/11			D-3.17-01	5/17/12		Revised
F-10.40-01	7/3/08			F-10.40-02	6/21/12		Revised
F-10.42-00	1/23/07			F-10.42-00	1/23/07		Reprinted
F-45.10-00	6/3/10			F-45.10-01	6/21/12		Revised
F-80.10-01	6/3/10	Sheet 1 of 2		F-80.10-02	3/15/12	Sheet 1 of 2	Revised
F-80.10-01	6/3/10	Sheet 2 of 2		F-80.10-02	3/15/12	Sheet 2 of 2	Revised
Blank				Blank			
G-24.20-00	11/8/07			G-24.20-01	2/7/12		Revised
G-24.30-00	11/8/07	Sheet 1 of 2		G-24.30-01	2/7/12	Sheet 1 of 2	Revised
G-24.30-00	11/8/07	Sheet 2 of 2		G-24.30-01	2/7/12	Sheet 2 of 2	Revised
G-24.40-01	12/2/08	Sheet 1 of 2		G-24.40-02	2/7/12	Sheet 1 of 2	Revised
G-24.40-01	12/2/08	Sheet 2 of 2		G-24.40-02	2/7/12	Sheet 2 of 2	Revised
G-24.50-00	11/8/07			G-24.50-01	2/7/12		Revised
G-25.10-02	6/27/11			G-25.10-03	3/15/12		Revised
G-30.10-01	6/16/11	Sheet 1 of 2		G-30.10-01	6/16/11	Sheet 1 of 2	Reprinted
H-60.20-01	7/3/08			H-60.20-01	7/3/08		Reprinted
H-70.10-00	9/5/07	Sheet 1 of 2		H-70.10-01	2/7/12	Sheet 1 of 2	Revised
H-70.10-00	9/5/07	Sheet 2 of 2		H-70.10-01	2/7/12	Sheet 2 of 2	Revised
H-70.20-00	9/5/07	Sheet 1 of 2		H-70.20-01	2/16/12	Sheet 1 of 2	Revised
H-70.20-00	9/5/07	Sheet 2 of 2		H-70.20-01	2/16/12	Sheet 2 of 2	Revised
H-70.30-01	11/17/08	Sheet 1 of 2		H-70.30-02	2/7/12	Sheet 1 of 2	Revised
H-70.30-01	11/17/08	Sheet 2 of 2		H-70.30-02	2/7/12	Sheet 2 of 2	Revised
Blank				Blank			
I-30.15-00	8/11/09			I-30.15-01	2/7/12		Revised
Blank				I-30.20-00	9/20/07		Reprinted
I-30.20-00	9/20/07			I-30.30-00	9/20/07		Reprinted
I-30.30-00	9/20/07			I-30.40-00	10/12/07		Reprinted
I-30.40-00	10/12/07						
I-30.50-00	11/14/07		Deleted				

REMOVE AND INSERT INSTRUCTIONS - Standard Plans Revision 8-6-2012

REMOVE				INSERT			
J-1f	6/23/00		Deleted	Blank			
J-3	8/1/97	Sheet 1 of 2		J-3	8/1/97	Sheet 1 of 2	Reprinted
J-3d	11/5/03			J-3d	11/5/03		Reprinted
J-7c	6/19/98		Deleted	J-10	7/18/97		Reprinted
Blank							
J-10	7/18/97						
J-10.10-01	5/11/11	Sheet 5 of 5		J-10.10-01	5/11/11	Sheet 5 of 5	Reprinted
J-12	2/10/09	Sheet 1 of 2	Deleted	J-10.15-00	7/2/12		New Plan
J-12	2/10/09	Sheet 2 of 2	Deleted	J-15.10-00	5/18/12		New Plan
J-15.15-00	6/16/10			J-15.15-00	6/16/10		Reprinted
Blank				J-20.10-01	7/12/12		Revised
J-20.10-00	10/14/09	Sheet 1 of 2		J-20.11-00	7/12/12	Sheet 1 of 2	New Plan
J-20.10-00	10/14/09	Sheet 2 of 2		J-20.11-00	7/12/12	Sheet 2 of 2	New Plan
J-20.15-00	10/14/09			J-20.15-01	7/12/12		Revised
J-20.16-00	10/14/09			J-20.16-01	7/12/12		Revised
J-20.20-00	10/14/09			J-20.20-01	7/12/12		Revised
J-20.26-00	10/14/09			Blank			
J-21.10-02	6/27/11	Sheet 1 of 2		J-20.26-01	7/12/12	Sheet 1 of 2	Revised
				J-20.26-01	7/12/12	Sheet 2 of 2	Revised
				J-21.10-02	6/27/11	Sheet 1 of 2	Reprinted
J-22.16-01	6/3/10			J-22.16-01	6/3/10		Reprinted
J-26.10-01	6/27/11			J-26.10-02	3/15/12		Revised
J-26.15-00	6/16/10	Sheet 1 of 3		J-26.15-01	5/17/12	Sheet 1 of 3	Revised
J-26.15-00	6/16/10	Sheet 2 of 3		J-26.15-01	5/17/12	Sheet 2 of 3	Revised
J-26.15-00	6/16/10	Sheet 3 of 3		J-26.15-01	5/17/12	Sheet 3 of 3	Revised
J-28.10-01	5/11/11	Sheet 1 of 2		J-27.10-00	3/15/12		New Plan
				J-27.15-00	3/15/12		New Plan
				J-28.10-01	5/11/11	Sheet 1 of 2	Reprinted
J-40.10-02	5/11/11	Sheet 2 of 2		J-40.10-02	5/11/11	Sheet 2 of 2	Reprinted
J-40.20-00	5/11/11	Sheet 1 of 2		J-40.20-01	5/17/12	Sheet 1 of 2	Revised
J-40.20-00	5/11/11	Sheet 2 of 2		J-40.20-01	5/17/12	Sheet 2 of 2	Revised
J-40.30-02	5/11/11	Sheet 1 of 2		J-40.30-02	5/11/11	Sheet 1 of 2	Reprinted
J-40.30-02	5/11/11	Sheet 2 of 2		J-40.30-02	5/11/11	Sheet 2 of 2	Reprinted
J-40.36-00	6/3/10			J-40.35-00	3/15/12	Sheet 1 of 3	New Plan
				J-40.35-00	3/15/12	Sheet 2 of 3	New Plan
				J-40.35-00	3/15/12	Sheet 3 of 3	New Plan
Blank				J-40.36-00	6/3/10		Reprinted
J-40.37-00	6/3/10	Sheet 1 of 2		J-40.37-00	6/3/10	Sheet 1 of 2	Reprinted
J-50.15-00	6/3/11	Sheet 3 of 3		J-50.15-00	6/3/11	Sheet 3 of 3	Reprinted
J-50.16-00	6/3/11		Deleted	Blank			
Blank				Blank			
L-10.10-01	6/16/11	Sheet 1 of 2		L-10.10-02	6/21/12	Sheet 1 of 2	Revised
L-10.10-01	6/16/11	Sheet 2 of 2		L-10.10-02	6/21/12	Sheet 2 of 2	Revised
L-20.10-01	6/16/11	Sheet 1 of 2		L-20.10-02	6/21/12	Sheet 1 of 2	Revised
L-20.10-01	6/16/11	Sheet 2 of 2		L-20.10-02	6/21/12	Sheet 2 of 2	Revised
L-30.10-01	6/16/11	Sheet 1 of 2		L-30.10-01	6/16/11	Sheet 1 of 2	Reprinted
L-30.10-01	6/16/11	Sheet 2 of 2		L-30.10-01	6/16/11	Sheet 2 of 2	Reprinted
L-40.10-01	6/16/11	Sheet 1 of 2		L-40.10-02	6/21/12	Sheet 1 of 2	Revised
L-40.10-01	6/16/11	Sheet 2 of 2		L-40.10-02	6/21/12	Sheet 2 of 2	Revised
L-40.15-01	6/16/11			L-40.15-01	6/16/11		Reprinted
L-40.20-01	6/16/11			L-40.20-02	6/21/12		Revised
L-70.10-01	5/21/08			L-70.10-01	5/21/08		Reprinted

Washington State
Department of Transportation

Standard Plans

M 21-01

August 6, 2012

Engineering and Regional Operations
Development Division, Design Office

Americans with Disabilities Act (ADA) Information

Materials can be provided in alternative formats by calling the ADA Compliance Manager at 360-705-7097. Persons who are deaf or hard of hearing may contact that number via the Washington Relay Service at 7-1-1.

Title VI Notice to the Public

It is Washington State Department of Transportation (WSDOT) policy to ensure no person shall, on the grounds of race, color, national origin, or sex, as provided by Title VI of the Civil Rights Act of 1964, be excluded from participation in, be denied the benefits of, or be otherwise discriminated against under any of its federally funded programs and activities. Any person who believes his/her Title VI protection has been violated may file a complaint with WSDOT's Office of Equal Opportunity (OEO). For Title VI complaint forms and advice, please contact OEO's Title VI Coordinator at 360-705-7082 or 509-324-6018.

To get the latest information on WSDOT publications, sign up for individual email updates at www.wsdot.wa.gov/publications/manuals.

Washington State Department of Transportation
Engineering and Regional Operations
Development Division, Design Office
PO Box 47329
Olympia, WA 98504-7329

Email: designstandards@wsdot.wa.gov
www.wsdot.wa.gov/design/standards/plans.htm

Foreword

This manual contains standard engineering drawings used for road, bridge, and municipal construction. These drawings have been prepared under the direct supervision of a Washington State licensed professional engineer, who is knowledgeable in the specialized field of civil engineering depicted in each drawing. This manual standardizes fabrication, installation, and construction methods for specific items of work, and complements the contract documents and the *Standard Specifications for Road, Bridge, and Municipal Construction.*

Updating the manual is a continual process and revisions are issued periodically. Questions, comments, and recommendations for changes are welcome.

Contact the Design Standards Team at:

(360) 705-7256

designstandards@wsdot.wa.gov

Download the current electronic WSDOT *Standard Plans for Road, Bridge, and Municipal Construction*, the latest revision package, and separate plans at:

www.wsdot.wa.gov/publications/manuals/m22-01.htm

Further information, as well as Bentley MicroStation (.dgn) CAD files, Adobe Acrobat (.pdf) files, and some AutoCAD (.dwg) CAD files, can be found on the Design Standards website at:

http://www.wsdot.wa.gov/eesc/design/designstandards

For contact via conventional mail, the *Comment Request Form* on the reverse side of this page is provided to facilitate routing and prompt delivery. Attach a copy of the form as a cover sheet when sending comments or sketches made on other documents, such as marked copies of specific Standard Plans. Your questions, comments, and/or recommendations should be sent to:

Design Standards
Transportation Building
Olympia, WA 98504-7329

/s/ Pasco Bakotich III

Pasco Bakotich III, P.E.
Director & State Design Engineer,
Development Division

Comments

From: _____ Date: _____

_____ Phone: _____

_____

_____

To: Design Standards
Washington State Department of Transportation
Transportation Building
PO Box 47329
Olympia, WA 98504-7329

Subject: Standard Plans Manual Comment

Comment: ☐ See attached

Preserve this original for future use • Submit copies only

Contents

Plan No.	Plan Title	Publication Approval Date	
Section A	**Roadway Construction**		
A-10.10-00	Survey Stakes	8/7/07	*2 Sheets*
A-10.20-00	Survey Monument Types 1 and 2	10/5/07	
A-10.30-00	Monument and Cover	10/5/07	
A-20.10-00	Slope Treatment	8/31/07	
A-30.10-00	Concrete Slope Protection	11/8/07	
A-30.15-00	Semi-open Concrete Masonry Slope Protection	11/8/07	
A-30.30-01	Wire Mesh Slope Protection	6/16/11	
A-30.35-00	Slope Protection Anchors	10/12/07	
A-40.00-00	Dowel Bar Baskets	8/11/09	
A-40.10-02	Cement Concrete Pavement Joints	6/2/11	
A-40.15-00	PCC Pavement Isolation Joints	8/11/09	*2 Sheets*
A-40.20-01	Bridge Transverse Joint Seals for HMA	2/7/12	
A-40.50-01	Bridge Approach Slab	6/2/11	*2 Sheets*
A-50.10-00	Embankment Widening at Bridge End with Wing Wall	11/17/08	*2 Sheets*
A-50.20-01	Embankment Widening at Bridge End with Curtain Wall	9/22/09	*2 Sheets*
A-50.30-00	Embankment Widening at Bridge End with "L" Shaped Abutment	11/17/08	*2 Sheets*
A-50.40-00	Embankment Widening at Bridge End with Sidewalk	11/17/08	
A-60.10-01	Cement Concrete Pavement Repair	10/14/09	*2 Sheets*
A-60.20-02	Dowel Bar Retrofit for Cement Concrete Pavement	6/2/11	*2 Sheets*
A-60.30-00	Bridge Deck Transition for HMA Overlay	11/8/07	
A-60.40-00	HMA Overlay: Further Deck Preparation	8/31/07	
Section B	**Drainage Structures and Hydraulics**		
B-5.20-01	Catch Basin Type 1	6/16/11	
B-5.40-01	Catch Basin Type 1L	6/16/11	
B-5.60-01	Catch Basin Type 1P (for Parking Lot)	6/16/11	
B-10.20-01	Catch Basin Type 2	2/7/12	
B-10.40-00	Catch Basin Type 2 with Flow Restrictor	6/1/06	
B-10.60-00	Catch Basin Type 2 with Baffle Type Flow Restrictor	6/8/06	
B-15.20-01	Manhole Type 1	2/7/12	
B-15.40-01	Manhole Type 2	2/7/12	
B-15.60-01	Manhole Type 3	2/7/12	
B-20.20-02	Drywell Type 1 (for Swale)	3/16/12	
B-20.40-03	Drywell Type 2 (with Pipe Inlet)	3/16/12	
B-20.60-03	Drywell Type 3 (with At-Grade Inlet)	3/15/12	
B-25.20-01	Combination Inlet	3/15/12	
B-25.60-00	Concrete Inlet	6/1/06	
B-30.10-01	Rectangular Frame (Reversible)	4/26/12	
B-30.20-02	Rectangular Solid Metal Cover	4/26/12	
B-30.30-01	Rectangular Vaned Grate	4/26/12	
B-30.40-01	Rectangular Bi-Directional Vaned Grate	4/26/12	
B-30.50-01	Rectangular Herringbone Grate	4/26/12	
B-30.70-03	Circular Frame (Ring) and Cover	4/26/12	
B-30.80-00	Circular Grate	6/8/06	
B-30.90-01	Miscellaneous Details for Drainage Structures	9/20/07	

Contents

Plan No.	Plan Title	Publication Approval Date	
B-35.20-00	Grate Inlet Type 1 (Cast-In-Place)	6/8/06	
B-35.40-00	Grate Inlet Type 2	6/8/06	*2 Sheets*
B-40.20-00	Welded Grates for Grate Inlet	6/1/06	
B-40.40-01	Frame and Dual Vaned Grates for Grate Inlet	6/16/10	
B-45.20-00	Drop Inlet Type 1	6/1/06	
B-45.40-00	Drop Inlet Type 2	6/1/06	
B-50.20-00	Grates for Drop Inlet	6/1/06	
B-55.20-00	Pipe Zone Bedding and Backfill	6/1/06	
B-60.20-00	Connection Details for Dissimilar Culvert Pipe	6/8/06	
B-60.40-00	Coupling Bands for Corrugated Metal Pipe	6/1/06	
B-65.20-01	Animal Underpass	4/26/12	
B-65.40-00	Equipment Underpass	6/1/06	
B-70.20-00	Beveled End Sections (for Culverts 30" Diameter or Less)	6/1/06	
B-70.60-00	Flared End Sections	6/1/06	
B-75.20-01	Headwalls for Culvert Pipe and Underpass	6/10/08	
B-75.50-01	Type 1 Safety Bars for Stepped Culvert Pipe or Pipe Arch	6/10/08	
B-75.60-00	Type 2 Safety Bars for Culvert Pipe or Pipe Arch (On Cross Road)	6/8/06	
B-80.20-00	Tapered End Section with Type 3 Safety Bars	6/8/06	
B-80.40-00	Tapered End Section with Type 4 Safety Bars (On Cross Road)	6/1/06	
B-82.20-00	Residential Storm Drain, Under Sidewalk	6/1/06	
B-85.10-01	Vertical Connection (for Sanitary Sewer Use)	6/10/08	
B-85.20-00	Side Sewer Connection (for Sanitary Sewer Use)	6/1/06	
B-85.30-00	Standing Side Sewer Connection (for Sanitary Sewer Use)	6/1/06	
B-85.40-00	8 Inch Sewer Clean-Out (for Sanitary Sewer Use)	6/8/06	
B-85.50-01	Drop Connections (for Sanitary Sewer Use)	6/10/08	
B-90.10-00	Hydrant Setting Types A and B	6/8/06	
B-90.20-00	2 Inch Blowoff Assembly	6/8/06	
B-90.30-00	Combination Air Release / Air Vacuum Valve Assembly	6/8/06	
B-90.40-00	Concrete Thrust Block	6/8/06	
B-90.50-00	Concrete Thrust Block for Convex Vertical Bends	6/8/06	
B-95.20-01	Median Barrier Drainage Installation	2/3/09	
B-95.40-00	Inlet Placement at Bridge End	6/8/06	

Section C Traffic Barrier

C-1	Beam Guardrail Types 1 ~ 4 (W-Beam)	6/16/11	*2 Sheets*
C-1a	Beam Guardrail (Thrie Beam)	10/14/09	
C-1b	Beam Guardrail Posts and Blocks	6/16/11	*2 Sheets*
C-1c	Beam Guardrail	5/30/97	
C-1d	Thrie Beam Guardrail Reducer Section	10/31/03	
C-2	Guardrail Placement (Cases 1, 2 & 3)	1/6/00	
C-2a	Guardrail Placement (Cases 4, 5 & 6)	6/21/06	
C-2b	Guardrail Placement (Cases 7 & 8)	6/21/06	
C-2c	Guardrail Placement, Median Bull Nose (Cases 9A, 9B & 9C)	6/21/06	
C-2d	Guardrail Placement (Cases 10A, 10B & 10C)	6/21/06	

Plan No.	Plan Title	Publication Approval Date	
C-2e	Guardrail Placement (Cases 11A, 11B & 11C)	6/21/06	
C-2f	Guardrail Placement, Weak Post Intersection Design (8' - 6" Max. Radius) (Cases 12AC, 12AD, 12BC & 12BD)	3/14/97	
C-2g	Guardrail Placement, Weak Post Intersection Design (35' Max. Radius) (Cases 13AC, 13AD, 13BC & 13BD)	7/27/01	
C-2h	Guardrail Placement (Case 14)	3/28/97	
C-2i	Guardrail Placement (Case 15)	3/28/97	
C-2j	Guardrail Placement (Cases 16, 17 & 18)	6/12/98	
C-2k	Guardrail Placement 12' - 6" Span (Cases 19A & 19B)	7/27/01	
C-2n	Guardrail Placement 18' - 9" Span (Case 20)	7/27/01	
C-2o	Guardrail Placement 25' Span (Case 21)	7/13/01	
C-2p	Guardrail Placement, Strong Post Intersection Design (Cases 22AC, 22AD, 22BC & 22BD)	10/31/03	
C-3	Beam Guardrail Transition Sections (Types 1, 1A, & 1B)	7/2/12	
C-3a	Beam Guardrail Transition Sections (Types 2, 4, 5, & 6)	10/4/05	
C-3b	Beam Guardrail Transition Sections (Types 10 ~ 15)	6/27/11	*2 Sheets*
C-3c	Beam Guardrail Transition Sections (Types 16, 17, & 18)	6/27/11	
C-4b	Beam Guardrail Flared Terminal	6/8/06	
C-4e	Beam Guardrail Non-Flared Terminal	2/20/03	
C-4f	Beam Guardrail Bull Nose Terminal	7/2/12	*4 Sheets*
C-6	Beam Guardrail Anchor Type 1	5/30/97	*2 Sheets*
C-6a	Beam Guardrail Anchor Type 2	10/14/09	
C-6c	Beam Guardrail Anchor Type 4	1/6/00	
C-6d	Beam Guardrail Anchor Type 5	5/30/97	
C-6f	Beam Guardrail Anchor Type 7	7/25/97	
C-7	Beam Guardrail End Sections	6/16/11	
C-7a	Thrie Beam End Sections	6/16/11	
C-8	Concrete Barrier Type 2	2/10/09	*2 Sheets*
C-8a	Concrete Barrier Type 4 and Transition Section	7/25/97	
C-8b	Concrete Barrier Light Standard Section	6/27/11	2 Sheets
C-8e	Precast Concrete Barrier Anchor ~ Type 3 (Permanent)	2/21/07	
C-8f	Concrete Barrier Transition, Type 2 to Bridge F-Shape	6/30/04	
C-10	Box Culvert Guardrail Steel Post	6/3/10	*2 Sheets*
C-16a	Traffic Barrier Shoulder Widening ~ for Shoulders 8.0' and Wider	6/3/10	
C-16b	Traffic Barrier Shoulder Widening ~ for Shoulders Less Than 8.0' Wide	6/3/10	
C-20.10-00	Beam Guardrail Type 31	7/2/12	
C-20.14-02	Beam Guardrail Type 31: Placement (Cases 1-31, 2-31, & 3-31)	7/2/12	
C-20.15-01	Beam Guardrail Type 31: Placement (Cases 4-31 & 5-31)	7/2/12	
C-20.18-01	Beam Guardrail Type 31 Placement (Cases 10A-31, 10B-31 and 10C-31)	7/2/12	
C-20.19-01	Beam Guardrail Type 31 Placement (Cases 11A-31, 11B-31 and 11C-31)	7/2/12	
C-20.40-03	Beam Guardrail Type 31: Placement ~ 12'-6", 18'-9", or 25'-0" Span	7/2/12	

Contents

Plan No.	Plan Title	Publication Approval Date	
C-20.42-03	Guardrail Placement Strong Post ~ Type 31 Intersection Design	7/2/12	
C-20.45-01	Beam Guardrail Type 31 - DS (W-Beam)	7/2/12	
C-22.14-02	Beam Guardrail Type 1 Buried Terminal Type 2	6/16/11	
C-22.16-03	Beam Guardrail Type 31 Buried Terminal Type 2	4/18/12	
C-22.40-02	Beam Guardrail Type 31: Non-Flared Terminal	6/16/10	
C-22.45-00	Beam Guardrail Type 31 Non-Flared Terminal Steel Posts (40 mph/Below)	6/16/11	
C-23.60-02	Beam Guardrail (Type 31) Anchor Type 10	6/21/12	
C-24.10-00	Guardrail Connections to Bridge Rail or Concrete Barrier	7/2/12	
C-25.18-03	Beam Guardrail (Type 31) Transition Section Type 20	7/2/12	
C-25.20-05	Beam Guardrail (Type 31) Transition Section Type 21	7/2/12	
C-25.22-04	Beam Guardrail (Type 31) Transition Section Type 22	7/2/12	
C-25.26-02	Beam Guardrail (Type 31) Transition Section Type 23	7/2/12	
C-25.80-02	Beam Guardrail Type 31 to Beam Guardrail Type 1 Adapter	7/2/12	
C-40.14-02	Barrier Placement Cable to Thrie Beam Bull Nose Connection	7/2/12	
C-40.16-02	Barrier Placement ~ Cable to W-Beam Shielding for Redirectional Landform	7/2/12	
C-40.18-02	Barrier Placement ~ Cable Barrier Shielding for Redirectional Landform	7/2/12	
C-70.10-00	Single Slope Concrete Barrier (Pre-Cast)	4/18/12	*3 Sheets*
C-75.10-00	Single Slope Concrete Barrier (Pre-Cast)Transition Section	4/18/12	
C-75.20-00	Single Slope Concrete Barrier (Pre-Cast) Vertical Back	4/18/12	
C-75.30-00	Single Slope Concrete Barrier (Pre-Cast) Terminal	4/18/12	
C-80.10-00	Single Slope Concrete Barrier (Cast-in-Place) Dual Faced	4/18/12	*3 Sheets*
C-80.20-00	Single Slope Concrete Barrier (Cast-in-Place) Terminal	4/18/12	
C-80.30-00	Single Slope Concrete Barrier (Cast-in-Place) Trans. Section	4/18/12	
C-80.40-00	Single Slope Concrete Barrier (Cast-in-Place) Vertical Back	4/18/12	
C-80.50-00	Concrete Barrier Transition, Type 2 to Single Slope	4/18/12	
C-85.10-00	Single Slope Concrete Barrier Placement (Split)	4/18/12	
C-85.11-00	Single Slope Concrete Barrier Placement (Wrap)	4/18/12	
C-85.14-00	Single Slope Concrete Barrier Light Standard Foundation	6/16/11	
C-85.15-00	Single Slope Concrete Barrier (42") Light Standard Foundation	6/16/11	
C-85.16-00	Single Slope Concrete Barrier Sign Bridge Foundation	6/16/11	*2 Sheets*
C-85.18-00	Single Slope Concrete Barrier Transition for Monotube Support	6/16/11	
C-85.20-00	Single Slope Concrete Barrier Truss-Type Sign Foundation	6/16/11	*2 Sheets*
C-90.10-00	Impact Attenuator Inertial Barrier Configurations	7/3/08	

Plan No.	Plan Title	Publication Approval Date	
Section D	**Retaining, Noise Barrier, and Geosynthetic Walls**		
D-2.04-00	Noise Barrier Wall Type 2 (CIP Conc. on Spread Footing)	11/10/05	*2 Sheets*
D-2.06-01	Noise Barrier Wall Type 3 (… on Offset Spread Footing)	1/6/09	*2 Sheets*
D-2.08-00	Noise Barrier Wall Type 4 (CIP Conc. on Shaft Foundation)	11/10/05	*2 Sheets*
D-2.14-00	Noise Barrier Wall Type 6 (CIP Conc. with Traffic Barrier on Spread Footing)	11/10/05	
D-2.16-00	Noise Barrier Wall Type 6SS (CIP Conc. w/ Single Slope Traffic Barrier on Spread Footing)	11/10/05	
D-2.18-00	Noise Barrier Wall Type 7 (CIP Conc. with Traffic Barrier on Shaft Foundation)	11/10/05	
D-2.20-00	Noise Barrier Wall Type 7SS (CIP Conc. w/ Single Slope Traffic Barrier on Shaft Fdn.)	11/10/05	
D-2.32-00	Noise Barrier Wall Type 9 (Precast Conc. on Spread Footing)	11/10/05	*2 Sheets*
D-2.34-01	Noise Barrier Wall Type 10 (… on Offset Spread Footing)	1/6/09	*2 Sheets*
D-2.36-02	Noise Barrier Wall Type 11 (... on Shaft Foundation)	1/6/09	*3 Sheets*
D-2.42-00	Noise Barrier Wall Type 13 (Precast Conc. with Traffic Barrier on Spread Footing)	11/10/05	
D-2.44-00	Noise Barrier Wall Type 13SS (Precast w/ Single Slope Traffic Barrier on Spread Footing)	11/10/05	
D-2.46-00	Noise Barrier Wall Type 14 (Precast Conc. w/ Traffic Barrier on Shaft Foundation)	11/10/05	*2 Sheets*
D-2.48-00	Noise Barrier Wall Type 14SS (Precast Conc. w/ Single Slope Traffic Barrier on Shaft Fdn.)	11/10/05	*2 Sheets*
D-2.60-00	Noise Barrier Wall Type 16 (Masonry on Trench Footing)	11/10/05	*2 Sheets*
D-2-62-00	Noise Barrier Wall Type 17 (Masonry on Spread Footing)	11/10/05	*2 Sheets*
D-2.64-01	Noise Barrier Wall Type 18 (Masonry on Offset Spread Ftg.)	1/6/09	*2 Sheets*
D-2.66-00	Noise Barrier Wall Type 19 (Masonry on Shaft with Grade Beam Foundation)	11/10/05	*2 Sheets*
D-2.68-00	Noise Barrier Wall Type 20 (Masonry on Shaft Foundation)	11/10/05	*2 Sheets*
D-2.80-00	Noise Barrier Wall Access Door Type 1 (Cast-In-Place)	11/10/05	
D-2.82-00	Noise Barrier Wall Access Door Type 2 (Cast-In-Place)	11/10/05	*2 Sheets*
D-2.84-00	Noise Barrier Wall Access Door Type 3 (Precast)	11/10/05	
D-2.86-00	Noise Barrier Wall Access Door Type 4 (Precast)	11/10/05	*2 Sheets*
D-2.88-00	Noise Barrier Wall Access Door Type 5 (Masonry)	11/10/05	
D-2.92-00	Noise Barrier Wall Access Door & Frame	11/10/05	*2 Sheets*
D-3.09-00	Permanent Geosynthetic Wall	5/17/12	*4 Sheets*
D-3.10-00	Cast-In-Place Permanent Geosynthetic Wall Fascia and Facing	6/16/10	
D-3.11-01	Precast Permanent Geosynthetic Wall Fascia	3/15/12	*2 Sheets*
D-3.15-01	Permanent Geosynthetic Wall: Single Slope Barrier	5/17/12	
D-3.16-01	Permanent Geosynthetic Wall: F-Shape Barrier	5/17/12	
D-3.17-01	Permanent Geosynthetic Wall Expansion Joint Details	5/17/12	
D-4	Backfill and Drainage for Retaining Walls	12/11/98	
D-6	Gabions	6/19/98	
D-10.10-01	Reinforced Concrete Retaining Wall Type 1 and 1 SW	12/2/08	*2 Sheets*
D-10.15-01	Reinforced Concrete Retaining Wall Type 2 and 2 SW	12/2/08	*2 Sheets*

Contents

Plan No.	Plan Title	Publication Approval Date	
D-10.20-00	Reinforced Concrete Retaining Wall Type 3 and 3 SW	7/8/08	*2 Sheets*
D-10.25-00	Reinforced Concrete Retaining Wall Type 4 and 4 SW	7/8/08	*2 Sheets*
D-10.30-00	Reinforced Concrete Retaining Wall Type 5	7/8/08	*2 Sheets*
D-10.35-00	Reinforced Concrete Retaining Wall Type 6	7/8/08	*2 Sheets*
D-10.40-01	Reinforced Concrete Retaining Wall Type 7	12/2/08	*2 Sheets*
D-10.45-01	Reinforced Concrete Retaining Wall Type 8	12/2/08	*2 Sheets*
D-15.10-01	Traffic Barrier Details for Reinforced Concrete Retaining Walls	12/2/08	*2 Sheets*
D-15.20-02	Traffic Barrier Details for Reinforced Concrete Retaining Walls	6/2/11	*2 Sheets*
D-15.30-01	Traffic Barrier Details for Reinforced Concrete Retaining Walls	12/2/08	*2 Sheets*

Section E Bridges and Trestles

E-1	Date Numeral Placement on Bridge Traffic Barrier	2/21/07	
E-2	Pile or Frame Detour Bridge with Asphalt Overlay	5/29/98	*2 Sheets*
E-4	Precast Prestressed Concrete Piles	8/27/03	
E-4a	Precast Prestressed Concrete Piles: Handling & Capping	8/27/03	

Section F Curbs, Sidewalks, and Driveways

F-10.12-02	Cement Concrete Curbs	6/16/11	
F-10.16-00	Cement Concrete Curb and Gutter Pan	12/20/06	
F-10.18-00	Roundabout Cement Concrete Curbs	6/27/11	
F-10.40-02	Extruded Curb Placement	6/21/12	
F-10.42-00	Extruded Curb	1/23/07	
F-10.62-01	Precast Concrete Sloped Mountable Curb	9/5/07	*2 Sheets*
F-10.64-02	Precast Concrete Dual Faced Sloped Mountable Curb	7/3/08	
F-30.10-01	Cement Concrete Sidewalk	6/3/10	
F-40.12-01	Parallel Curb Ramp	6/3/10	
F-40.14-01	Combination Curb Ramps	6/3/10	
F-40.15-01	Perpendicular Curb Ramps	6/3/10	
F-40.16-01	Single Direction Curb Ramps	6/3/10	
F-45.10-01	Detectable Warning Surface	6/21/12	
F-80.10-02	Cement Concrete Driveway Entrance: Types 1, 2, 3, & 4	3/15/12	*2 Sheets*

Section G Signs and Sign Supports

G-10.10-00	Milepost	9/20/07	
G-20.10-00	Ground Mounted Sign Placement	9/20/07	
G-22.10-01	Timber Sign Support	7/3/08	*3 Sheets*
G-24.10-00	Steel Sign Support Type AP, Installation Details	11/8/07	
G-24.20-01	Steel Sign Support Type AS, Installation Details	2/7/12	
G-24.30-01	Steel Sign Support, Types PL, PL-T, & PL-U, Inst. Det.	2/7/12	*2 Sheets*
G-24.40-02	Steel Sign Support, Types SB-1, SB-2 & SB-3 Installation Details	2/7/12	*2 Sheets*
G-24.50-01	Steel Sign Support, Types ST-1 ~ ST-4, Installation Details	2/7/12	
G-24.60-01	Steel Sign Support, Types TP-A & TP-B, Installation Details	6/16/11	*2 Sheets*

Plan No.	Plan Title	Publication Approval Date	
G-25.10-03	Steel Sign Support Foundation Details	3/15/12	
G-30.10-01	Sign Installation on Signal and Light Standards	6/16/11	*2 Sheets*
G-50.10-00	Sign Bracing	11/8/07	*2 Sheets*
G-60.10-01	Cantilever Sign Structure (Truss-Type)	6/27/11	*4 Sheets*
G-60.20-01	Cantilever Sign Structure (Truss-Type) Foundation Type 1	6/27/11	*2 Sheets*
G-60.30-01	Cantilever Sign Structure (Truss-Type) Fdn., Types 2 & 3	6/27/11	*2 Sheets*
G-70.10-01	Sign Bridge (Truss-Type)	6/27/11	*4 Sheets*
G-70.20-01	Sign Bridge (Truss-Type) Foundation Type1	6/27/11	
G-70.30-01	Sign Bridge (Truss-Type) Foundation Types 2 & 3	6/27/11	
G-90.10-01	Overhead Sign Bracing and Lighting Placement	5/11/11	
G-90.20-01	Overhead Sign Mounting (Monotube Structure)	6/27/11	
G-90.30-01	Overhead Sign Mounting (Truss Structure)	6/2/11	
G-90.40-01	Overhead Sign Lighting Details	10/14/09	
G-95.10-01	Maintenance Walkway for Sign Bridges	6/2/11	*3 Sheets*
G-95.20-02	Maintenance Walkway Mounting for Monotube Sign Bridge	6/2/11	*3 Sheets*
G-95.30-02	Maintenance Walkway Mounting for Truss-Type Sign Bridge	6/2/11	*2 Sheets*

Section H Roadside and Site Development

H-10.10-00	Tree and Shrub Planting Details	7/3/08	
H-10.15-00	Live Stake Installations	7/3/08	
H-30.10-00	Crest Gage	10/12/07	
H-32.10-00	Automated Ground Water Monitoring Well	9/20/07	
H-60.10-01	Bollard Type 1	7/3/08	
H-60.20-01	Bollard Type 2	7/3/08	
H-70.10-01	Mailbox Support Type 1	2/7/12	*2 Sheets*
H-70.20-01	Mailbox Support Type 2	2/16/12	*2 Sheets*
H-70.30-02	Mailbox Support Type 3	2/7/12	*2 Sheets*

Section I Site Preservation and Erosion Control

I-10.10-01	High Visibility Fence	8/11/09	
I-30.10-01	Silt Fence with Backup Support	8/11/09	
I-30.15-01	Silt Fence	2/7/12	
I-30.20-00	Erosion Control At Culvert Ends	9/20/07	
I-30.30-00	Wattle Installation On Slope	9/20/07	
I-30.40-00	Compost Sock	10/12/07	
I-40.10-00	Temporary Silt Fence for Inlet Protection In Unpaved Areas	9/20/07	
I-40.20-00	Storm Drain Inlet Protection	9/20/07	
I-50.10-00	Geotextile Encased Check Dam Installation	9/20/07	
I-50.20-00	Check Dams	8/31/07	
I-60.10-00	Erosion Control Blanket Placement On Slope	8/31/07	
I-60.20-00	Erosion Control Blanket Placement In Channel	8/31/07	
I-80.10-01	Miscellaneous Erosion Control Details	8/11/09	

Contents

Plan No.	Plan Title	Publication Approval Date	
Section J	**Illumination, Signals, and ITS**		
J-3	Type A, B, and C Service Lighting Details	8/1/97	*2 Sheets*
J-3b	Service Cabinet Type B Modified (0 - 200 Amp Type, 120/240 Single Phase)	3/4/05	*2 Sheets*
J-3c	Service Cabinet Type D (0 - 200 Amp Type, 120/240 Single Phase)	6/24/02	
J-3d	Service Cabinet Type E (0 - 200 Amp Type, 240/480 Single Phase)	11/5/03	
J-10	Electrical Conduit Placement	7/18/97	
J-10.10-01	Cabinet Orientation, Conduit Layout and Foundation Detail	5/11/11	*5 Sheets*
J-10.15-00	Cabinet Enclosure on Slope	7/2/12	
J-15.10-00	Timber Light Standard	5/18/12	
J-15.15-00	Span Wire Installation	6/16/10	
J-16b	Conduit Installation in Traffic Barrier on Retaining Wall	2/10/09	
J-16c	Conduit Installation in Single Slope Conc. Barrier (Dual Face)	2/10/09	
J-20.10-01	Accessible Pedestrian PushButton Post (PPB) and Foundation	7/12/12	*2 Sheets*
J-20.11-00	Accessible Pedestrian PushButton with Curb Base	7/12/12	*2 Sheets*
J-20.15-01	Accessible Breakaway Pedestrian PushButton (PPB) Post	7/12/12	
J-20.16-01	Pedestrian Signal Standard (Type PS) Details	7/12/12	
J-20.20-01	Pedestrian Signal Standard (Type PS) Electrical Details	7/12/12	
J-20.26-01	Accessible Pedestrian PushButton (PPB) Details	7/12/12	
J-21.10-02	Type PS, Type 1 RM and FB Signal Standard Foundation Details	6/27/11	*2 Sheets*
J-21.15-00	Type 1 Signal Standard Details	10/14/09	
J-21.16-00	Flashing Beacon Type 1 Signal Standard Details	10/14/09	
J-21.17-00	Flashing Beacon Type 1 Signal Standard Electrical Details	10/14/09	
J-21.20-00	Type 1 Signal Standard Electrical Details	10/14/09	
J-22.15-00	Ramp Meter Signal Standard Details	10/14/09	
J-22.16-01	Ramp Meter Signal Standard Electrical Details	6/3/10	
J-26.10-02	Signal Standard Foundation Plan	3/15/12	
J-26.15-01	Signal Standard Foundation Placements	5/17/12	*3 Sheets*
J-27.10-00	Type 4 and 5 Strain Pole Standard Foundation	3/15/12	
J-27.15-00	Type 4 and 5 Strain Pole Standard	3/15/12	
J-28.10-01	Steel Light Standard	5/11/11	*2 Sheets*
J-28.22-00	Steel Light Standard: Placement (Slip Base)	8/7/07	*2 Sheets*
J-28.24-00	Steel Light Standard: Placement (Fixed Base)	8/7/07	
J-28.26-01	Steel Light Standard: Placement ~ Miscellaneous	12/2/08	
J-28.30-02	Steel Light Standard: Foundation Types A & B	6/27/11	*2 Sheets*
J-28.40-01	Steel Light Standard: Base Mounting	10/14/09	
J-28.42-00	Steel Light Standard: Anchor/Slip Plate for Slip Base	8/7/07	
J-28.45-01	Steel Light Std.: Elbow Mounting on Bridge & Retaining Wall	6/27/11	
J-28.50-02	Steel Light Standard: Pole Base and Hand Hole Details	6/2/11	
J-28.60-01	Steel Light Standard: Barrier Mounted Base	6/2/11	
J-28.70-01	Steel Light Standard: Wiring Details	5/11/11	
J-29.10-00	Camera Pole Foundation Details	6/27/11	
J-29.15-00	Camera Pole Standard Details	6/27/11	*2 Sheets*
J-29.16-00	Camera Pole Details	6/27/11	
J-40.10-02	Locking Lid Standard Junction Box Types 1 & 2	5/11/11	*2 Sheets*
J-40.20-01	Heavy Duty Junction Box, Types 4, 5 & 6	5/17/12	*2 Sheets*
J-40.30-02	Locking Lid Standard Duty Junction Box Type 8	5/11/11	*2 Sheets*
J-40.35-00	Sign post mounted Junction Box	3/15/12	

Plan No.	Plan Title	Publication Approval Date	
J-40.36-00	Nema 4X Non-Adjustable Junction Box	6/3/10	
J-40.37-00	Nema 3R Adjustable Junction Box	6/3/10	*2 Sheets*
J-40.38-00	Surface Mounted Junction Box	6/16/11	
J-50.10-00	Type 1 Induction Loop	6/3/11	
J-50.11-00	Type 2 Induction Loop	6/3/11	*2 Sheets*
J-50.12-00	Type 3 Induction Loop	6/3/11	*3 Sheets*
J-50.15-00	Induction Loop Details	6/3/11	*3 Sheets*
J-50.20-00	Permanent Traffic Recorder Site Installations	6/3/11	*3 Sheets*
J-50.25-00	Weigh-In Motion Site Installation	6/3/11	*2 Sheets*
J-50.30-00	Permanent Traffic Recorder & Weigh-In Motion Details	6/3/11	*3 Sheets*
J-60.05-00	Typical Grounding Details	6/16/11	*4 Sheets*
J-60.13-00	Stainless Steel Channel	6/16/10	
J-60.14-00	Stainless Steel Channel Mounting Details on Column or Pole	6/16/10	
J-75.10-01	Signal Head Mounting Details Pole and Post Top Mountings	5/11/11	
J-75.20-00	Signal Head Mounting Details Mast Arm and Span Wire Mountings	2/10/09	
J-75.30-01	Miscellaneous Signal Details	5/11/11	
J-75.40-00	Overhead Sign Electrical Details (Monotube Structure)	10/14/09	
J-75.45-00	Overhead Sign Electrical Details (Truss Structure)	10/14/09	
J-90.10-01	Pull Box	6/27/11	*2 Sheets*
J-90.20-01	Cable Vault	6/27/11	*2 Sheets*

Section K Work Zone Traffic Control

K-10.20-01	Road Closure, with Diversion	10/12/07
K-10.40-00	Road Closure, with Off-Site Detour	2/15/07
K-20.20-01	Lane Closure, without Flaggers ~ Low Volume Road	10/12/07
K-20.40-00	Lane Closure, with Flagger Control	2/15/07
K-20.60-00	Lane Closure, with Pilot Car	2/15/07
K-22.20-01	Lane Shift, onto Passing Lane	10/12/07
K-24.20-00	Single Lane Closure, with Encroachment	2/15/07
K-24.40-01	Double Lane Closure, on Multilane Roadway	10/12/07
K-24.60-00	Single Lane Closure, on Multilane Roadway	2/15/07
K-24.80-01	Single Lane Closure, with Temporary Concrete Barrier	10/12/07
K-26.20-00	Lane Shift, onto Two-way Left Turn Lane	2/15/07
K-26.40-01	Left and Center Lane Closure ~ Two-Way Left Turn Lane	10/12/07
K-30.20-00	Intersection ~ Lane Shift on 3 Lane Two-Way Left Turn Lane	2/15/07
K-30.40-01	Intersection ~ Lane Shift on 5 Lane Two-Way Left Turn Lane	10/12/07
K-32.20-00	Intersection ~ Right Lane Closure, Far Side	2/15/07
K-32.40-00	Intersection ~ Left Lane Closure, Far Side	2/15/07
K-32.60-00	Intersection ~ Multiple Lane Closure	2/15/07
K-32.80-00	Intersection ~ Half Road Closure with Lane Shift	2/15/07
K-34.20-00	Intersection ~ Pedestrian Detour	2/15/07
K-36.20-00	Intersection ~ Shoulder Work	2/15/07
K-40.20-00	Shoulder Closure ~ High Speed Roadway (45 MPH or Higher)	2/15/07

Contents

Plan No.	Plan Title	Publication Approval Date	
K-40.40-00	Shoulder Closure ~ Low Speed Roadway (40 MPH or Lower)	2/15/07	
K-40.60-00	Shoulder Closure ~ Short Duration	2/15/07	
K-40.80-00	Work Beyond the Shoulder	2/15/07	
K-55.20-00	Emergency ~ Passable Hazard	2/15/07	
K-60.20-02	Speed Zone, Supplemental Signing ~ Chip Seal Project	7/3/08	
K-60.40-00	Motorcycle, Supplemental Signing	2/15/07	
K-70.20-00	Temporary Channelization	2/15/07	
K-80.10-00	Class A Construction Signing Installation	2/21/07	
K-80.20-00	Type 3 Barricade	12/20/06	*2 Sheets*
K-80.30-00	Alternative Temporary Conc. Barrier (F-Shape)	2/21/07	
K-80.35-00	Temporary Conc. Barrier Anchoring	2/21/07	
K-80.37-00	Temporary Conc. Barrier Anchoring ~ Narrow	2/21/07	

Section L Fence and Glare Screen

L-10.10-02	Wire Fence Types 1 & 2, and Wire Gates	6/21/12	*2 Sheets*
L-20.10-02	Chain Link Fence, Types 3 and 4	6/21/12	*2 Sheets*
L-30.10-01	Chain Link Gate	6/16/11	*2 Sheets*
L-40.10-02	Glare Screen Type 1, Design A	6/21/12	*2 Sheets*
L-40.15-01	Glare Screen Type 1, Design B	6/16/11	
L-40.20-02	Glare Screen Type 2 (Chain Link with Slats)	6/21/12	
L-70.10-01	Access Control Gate	5/21/08	
L-70.20-01	Access Control Double Gate	5/21/08	

Section M Roadway Delineation

M-1.20-02	Ramp Channelization: Single Lane	6/3/11
M-1.40-02	Ramp Channelization: Two Lane	6/3/11
M-1.60-02	Ramp Channelization: Collector Distributor Road	6/3/11
M-1.80-03	Ramp Channelization: Parallel On & Weaving Section	6/3/11
M-2.20-02	Gore Area Marking Layouts	6/3/11
M-3.10-03	Left Turn Channelization	6/3/11
M-3.20-02	Left Turn Channelization: Reduced Tapers	6/3/11
M-3.30-03	Left Turn Channelization: Tee Intersection and Back-to-back Turn Lanes	6/3/11
M-3.40-03	Two-way Left-Turn and Median Channelization	6/3/11
M-3.50-02	Double Left Turn Channelization	6/3/11
M-5.10-02	Right Turn Channelization	6/3/11
M-7.50-01	High Occupancy Vehicle (HOV) Lane Symbol Layout	1/30/07
M-9.50-01	Bicycle Lane Symbol Layout	1/30/07
M-9.60-01	Shared - Use Path Markings	2/10/09
M-11.10-01	Railroad Crossing Layout	1/30/07
M-15.10-01	Crosswalk Layout	2/6/07
M-17.10-02	Parking Space Layouts	7/3/08
M-20.10-02	Longitudinal Marking Patterns	6/3/11
M-20.20-01	Profiled and Embossed Plastic Lines	1/30/07
M-20.30-02	Longitudinal Marking Supplement with Raised Pavement Markers (RPM's)	10/14/09

Plan No.	Plan Title	Publication Approval Date	
M-20.40-02	Longitudinal Marking Supplement with RPM's ~ Turn Lanes	6/3/11	*2 Sheets*
M-20.50-02	Longitudinal Marking Substitution with RPM's	6/3/11	
M-24.20-01	Symbol Markings: Traffic Arrows for High Speed Roadways	5/31/06	*3 Sheets*
M-24.40-01	Symbol Markings: Traffic Arrows for Low Speed Roadways	5/31/06	*2 Sheets*
M-24.50-00	Roundabout Traffic Arrows	6/16/11	
M-24.60-03	Symbol Markings: Miscellaneous	5/11/11	*2 Sheets*
M-40.10-02	Guide Posts and Barrier Delineators	5/11/11	
M-40.20-00	Guide Post Placement: Interchanges	10/12/07	
M-40.30-00	Guide Post Placement: Grade Intersections	9/20/07	
M-40.40-00	Guide Post Placement: Horizontal Curves	9/20/07	
M-40.50-00	Guide Post Placement: Bridges	9/20/07	
M-40.60-00	Guide Post Placement: Miscellaneous	9/20/07	
M-60.10-01	Shoulder Rumble Strip Type 1, for Divided Highways	6/3/11	*4 Sheets*
M-60.20-02	Shoulder Rumble Strip, Types 2, 3, and 4, for Undivided Highways	6/27/11	*2 Sheets*
M-65.10-02	Center Line Rumble Strip	5/11/11	*2 Sheets*
M-80.10-01	Traffic Letter and Numeral Applications	6/3/11	*2 Sheets*
M-80.20-00	Traffic Letters and Numerals (High Speed Roadways)	6/10/08	
M-80.30-00	Traffic Letters and Numerals (Low Speed Roadways)	6/10/08	

This page left blank intentionally.

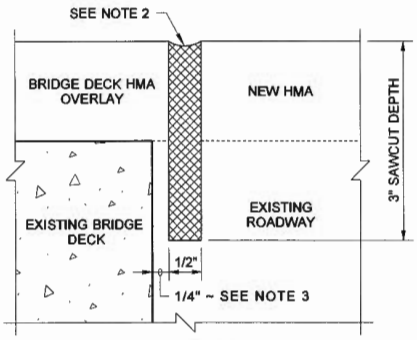

DETAIL 1
1/2" JOINT SEAL
BRIDGE DECK WITH HMA OVERLAY

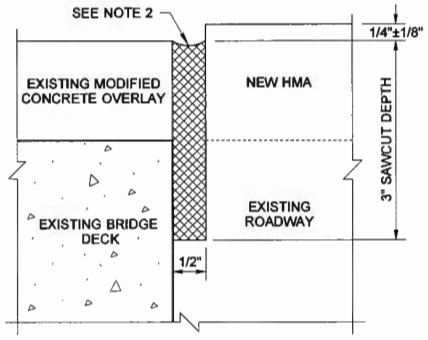

DETAIL 2
1/2" JOINT SEAL
BRIDGE DECK WITH CONCRETE OVERLAY

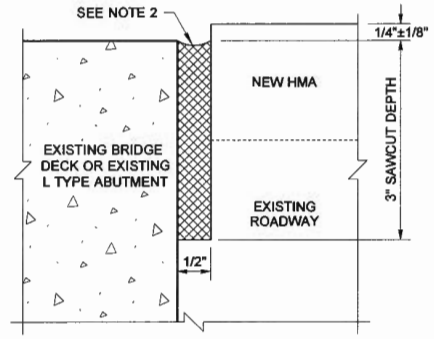

DETAIL 3
1/2" JOINT SEAL
BRIDGE DECK OR L TYPE ABUTMENT

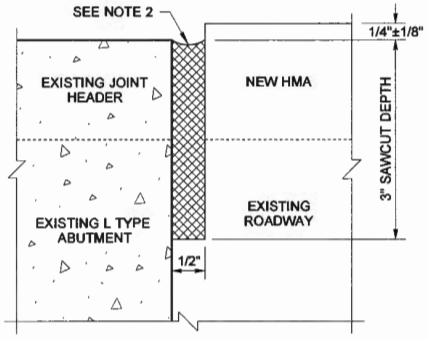

DETAIL 4
1/2" JOINT SEAL
L TYPE ABUTMENT WITH HEADER

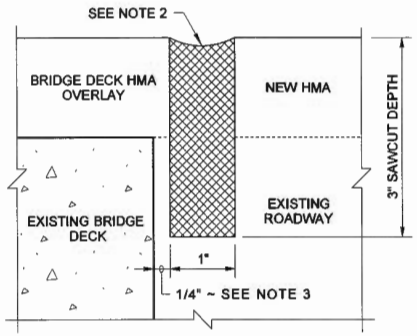

DETAIL 5
1" JOINT SEAL
BRIDGE DECK WITH HMA OVERLAY

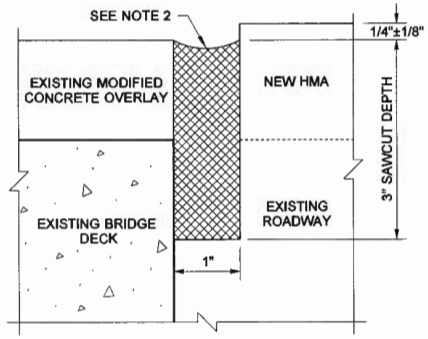

DETAIL 6
1" JOINT SEAL
BRIDGE DECK WITH CONCRETE OVERLAY

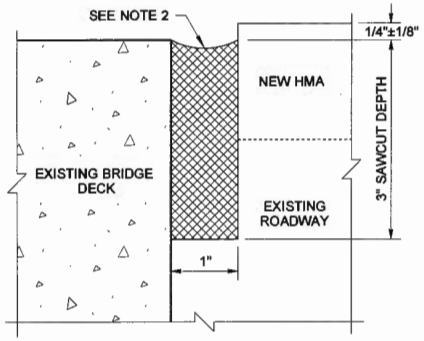

DETAIL 7
1" JOINT SEAL
BRIDGE DECK

NOTES

1. Use the 1/2" joint details for bridges with a length less than 100' and for bridges with L type abutments. Use the 1" joint details for other applications. Use DETAIL 8 on steel trusses and timber bridges with concrete deck panels.
2. Sawcut shall be filled with hot-poured compound in accordance with **Standard Specification 9-04.2(1)** and sealed in accordance with **Standard Specification 5-05.3(8)B**.
3. The contractor shall avoid sawing existing concrete. The construction tolerance to locate the saw cut is ±1/4" (0 min. to 1/2" max.) from the existing concrete (DETAILs 1 and 5).

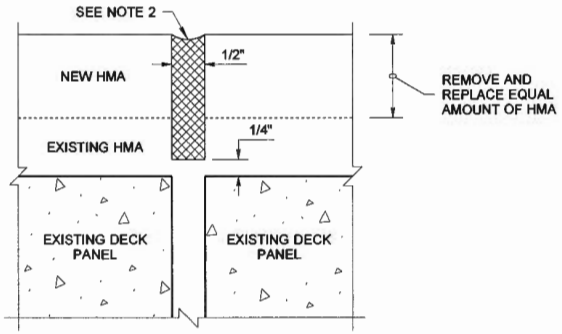

DETAIL 8
1/2" JOINT SEAL
BRIDGE DECK PANELS WITH HMA OVERLAY

BRIDGE TRANSVERSE JOINT SEALS FOR HMA

STANDARD PLAN A-40.20-01

SHEET 1 OF 1 SHEET

APPROVED FOR PUBLICATION

STATE DESIGN ENGINEER — DATE 2/7/12

Washington State Department of Transportation

DRAWN BY: BILL BERENS

DRAWN BY: FERN LIDDELL

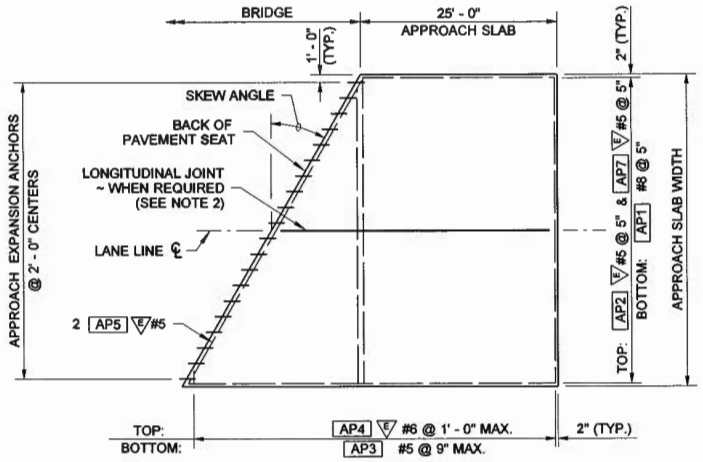

PLAN

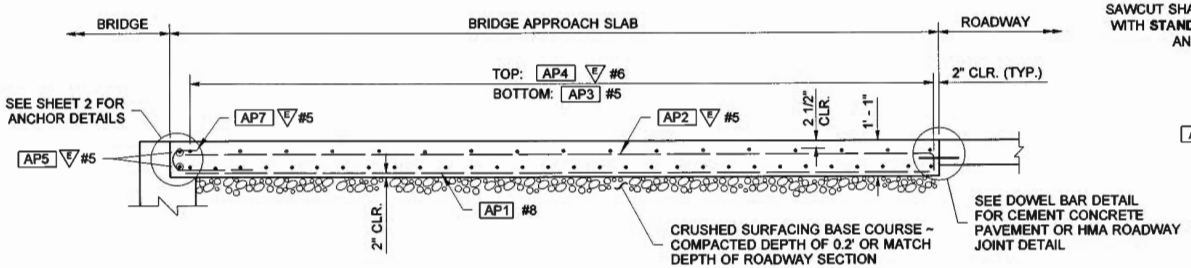

LONGITUDINAL SECTION

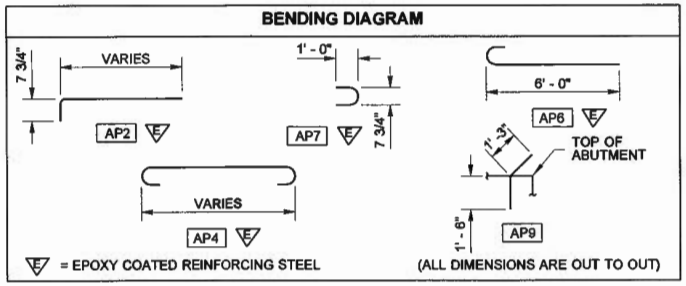

NOTES

1. All edges of the approach slab shall have 1/2" radii except the longitudinal edge of the preceeding placement of a LONGITUDINAL CONSTRUCTION JOINT.
2. Longitudinal joints shall be placed on lane lines and shall be constructed and sealed in accordance with **Standard Specification Section 5-05.3(8).** Joints may be either a sawcut crack control joint or a construction joint. Sawcut joints shall terminate 1' - 0" before reaching edge of slab and must be saw cut as soon as possible after placement of concrete.
   (A) Approach slabs less than 40' wide – no joint is required.
   (B) Approach slabs wider than 40' – one or more joints are required to divide the slab into approximately 24' wide sections.
3. The minimum lap splice of #5 is 2' - 0". E #5 is 2' - 6". E #6 is 3' - 0". And #8 is 3' - 3". All lap splices shall be stagged so that no more than 50% of rebar is spliced at the same location. Lap splices shall be located within the middle half of the bridge approach slab. Optional splices are allowed for AP4 E #6.

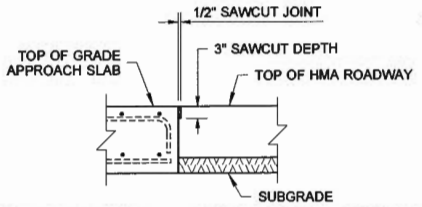

SAWCUT SHALL BE FILLED WITH HOT- POURED COMPONENT IN ACCORDANCE WITH **STANDARD SPECIFICATION SECTION 9-04.2(1)** AND SEALED IN ACCORDANCE WITH **STANDARD SPECIFICATION SECTION 5-05.3(8)B**

HMA ROADWAY JOINT DETAIL

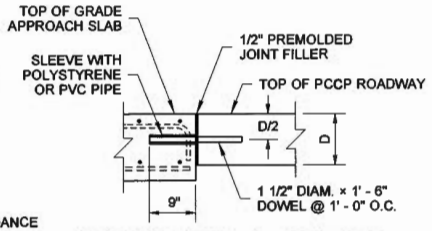

INSERT DOWELS PARALLEL TO CENTER LINE ALONG TRANSVERSE CONSTRUCTION JOINT

DOWEL BAR DETAIL FOR CEMENT CONCRETE PAVEMENT

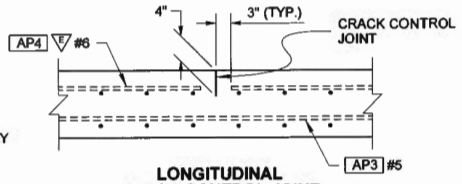

LONGITUDINAL CRACK CONTROL JOINT

SEE NOTE 2

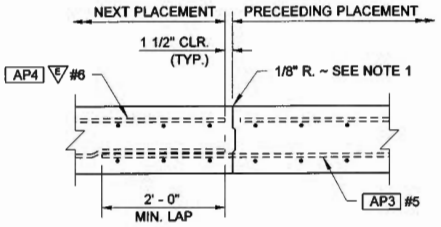

EDGE PRECEEDING PLACEMENT ONLY WITH 1/8" RADIUS

ALTERNATE LONGITUDINAL JOINT DETAIL

SEE NOTE 2

FOR LOCAL AGENCY USE ONLY

BRIDGE APPROACH SLAB

STANDARD PLAN A-40.50-01

SHEET 1 OF 2 SHEETS

APPROVED FOR PUBLICATION

STATE DESIGN ENGINEER — DATE 6/2/11

Washington State Department of Transportation

DRAWN BY: LISA CYFORD

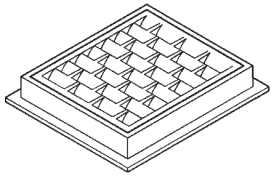

FRAME AND VANED GRATE

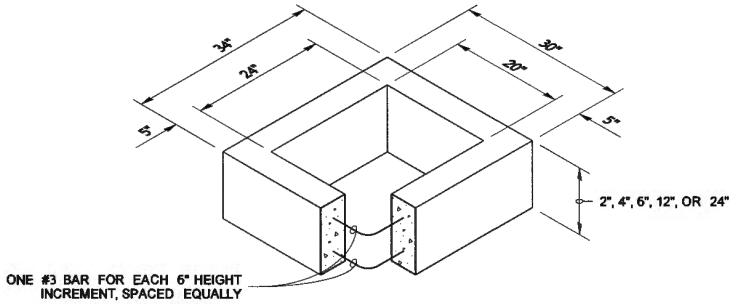

RECTANGULAR ADJUSTMENT SECTION

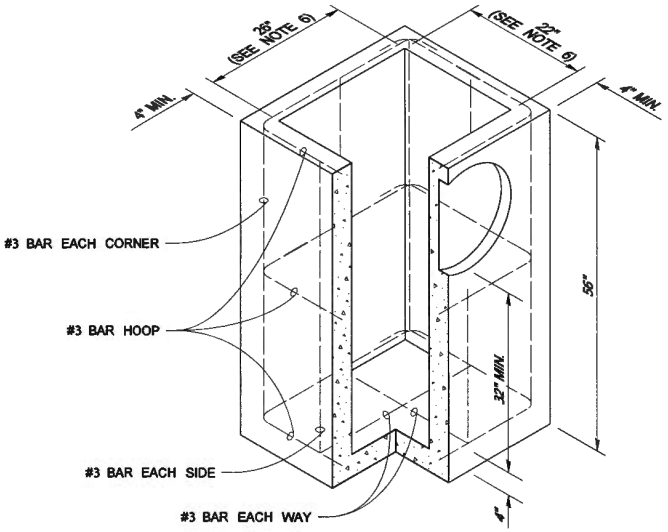

PRECAST BASE SECTION

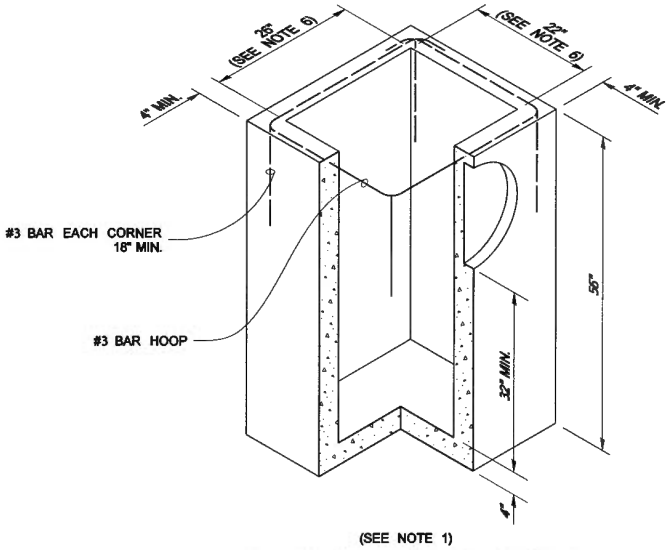

(SEE NOTE 1)

ALTERNATIVE PRECAST BASE SECTION

NOTES

1. As acceptable alternatives to the rebar shown in the **PRECAST BASE SECTION,** fibers (placed according to the Standard Specifications), or wire mesh having a minimum area of 0.12 square inches per foot, shall be used with the minimum required rebar shown in the ALTERNATIVE **PRECAST BASE SECTION.** Wire mesh shall not be placed in the knockouts.
2. The knockout diameter shall not be greater than 18". Knockouts shall have a wall thickness of 2" minimum to 2.5" maximum. Provide a 1.5" minimum gap between the knockout wall and the outside of the pipe. After the pipe is installed, fill the gap with joint mortar in accordance with **Standard Specification 9-04.3.**
3. The maximum depth from the finished grade to the lowest pipe invert shall be 5'.
4. The frame and grate may be installed with the flange down, or integrally cast into the adjustment section with flange up.
5. The Precast Base Section may have a rounded floor, and the walls may be sloped at a rate of 1:24 or steeper.
6. The opening shall be measured at the top of the Precast Base Section.
7. All pickup holes shall be grouted full after the basin has been placed.

CATCH BASIN TYPE 1P (FOR PARKING LOT)

STANDARD PLAN B-5.60-01

SHEET 1 OF 1 SHEET

APPROVED FOR PUBLICATION

STATE DESIGN ENGINEER — DATE 6/16/11

Washington State Department of Transportation

DRAWN BY: LISA CYFORD

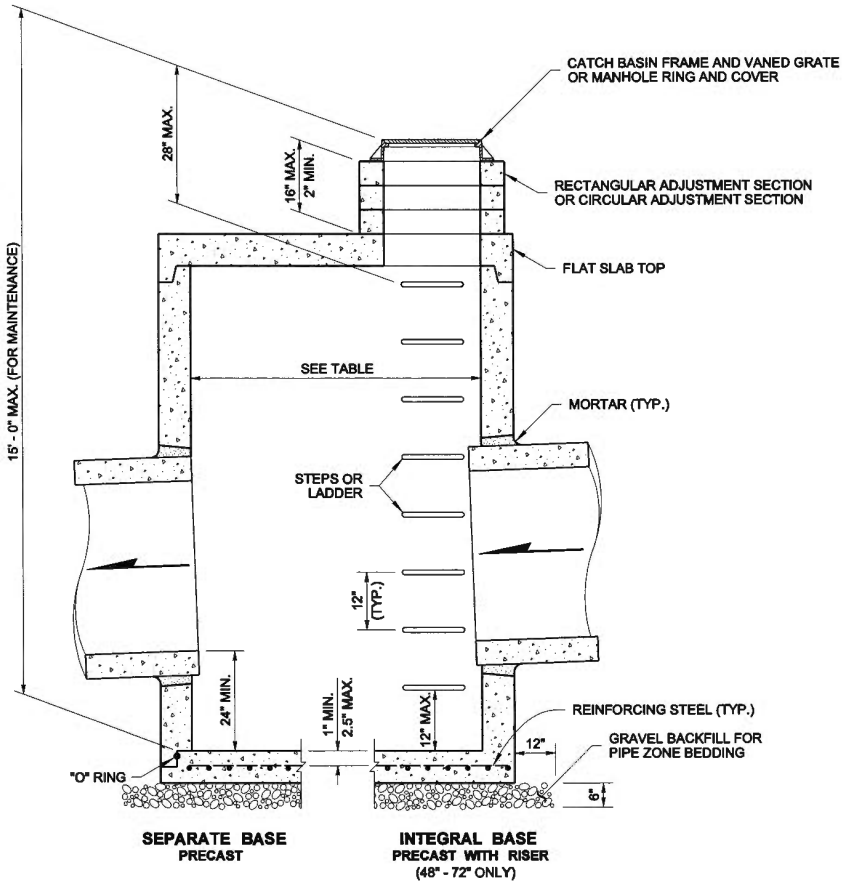

NOTES

1. No steps are required when height is 4' or less.
2. The bottom of the precast catch basin may be sloped to facilitate cleaning.
3. The rectangular frame and grate may be installed with the flange up or down. The frame may be cast into the adjustment section.
4. Knockouts shall have a wall thickness of 2" minimum to 2.5" maximum. Provide a 1.5" minimum gap between the knockout wall and the outside of the pipe. After the pipe is installed, fill the gap with joint mortar in accordance with **Standard Specification 9-04.3.**

CATCH BASIN DIMENSIONS

CATCH BASIN DIAMETER	MIN. WALL THICKNESS	MIN. BASE THICKNESS	MAXIMUM KNOCKOUT SIZE	MINIMUM DISTANCE BETWEEN KNOCKOUTS
48"	4"	6"	36"	8"
54"	4.5"	8"	42"	8"
60"	5"	8"	48"	8"
72"	6"	8"	60"	12"
84"	8"	12"	72"	12"
96"	8"	12"	84"	12"
120"	10"	12"	96"	12"
144"	12"	12"	108"	12"

PIPE ALLOWANCES

CATCH BASIN DIAMETER	PIPE MATERIAL WITH MAXIMUM INSIDE DIAMETER				
	CONCRETE	ALL METAL	CPSSP ①	SOLID WALL PVC ②	PROFILE WALL PVC ③
48"	24"	30"	24"	30"	30"
54"	30"	36"	30"	36"	36"
60"	36"	42"	36"	42"	42"
72"	42"	54"	42"	48"	48"
84"	54"	60"	54"	48"	48"
96"	60"	72"	60"	48"	48"
120"	66"	84"	60"	48"	48"
144"	78"	96"	60"	48"	48"

① Corrugated Polyethylene Storm Sewer Pipe **(Standard Specification 9-05.20)**
② **(Standard Specification 9-05.12(1))**
③ **(Standard Specification 9-05.12(2))**

CASEY M. KRAMER
STATE OF WASHINGTON
44535
REGISTERED
PROFESSIONAL ENGINEER
1-3-12

CATCH BASIN TYPE 2

STANDARD PLAN B-10.20-01

SHEET 1 OF 1 SHEET

APPROVED FOR PUBLICATION
STATE DESIGN ENGINEER — DATE 2/7/12
Washington State Department of Transportation

DRAWN BY: LISA CYFORD

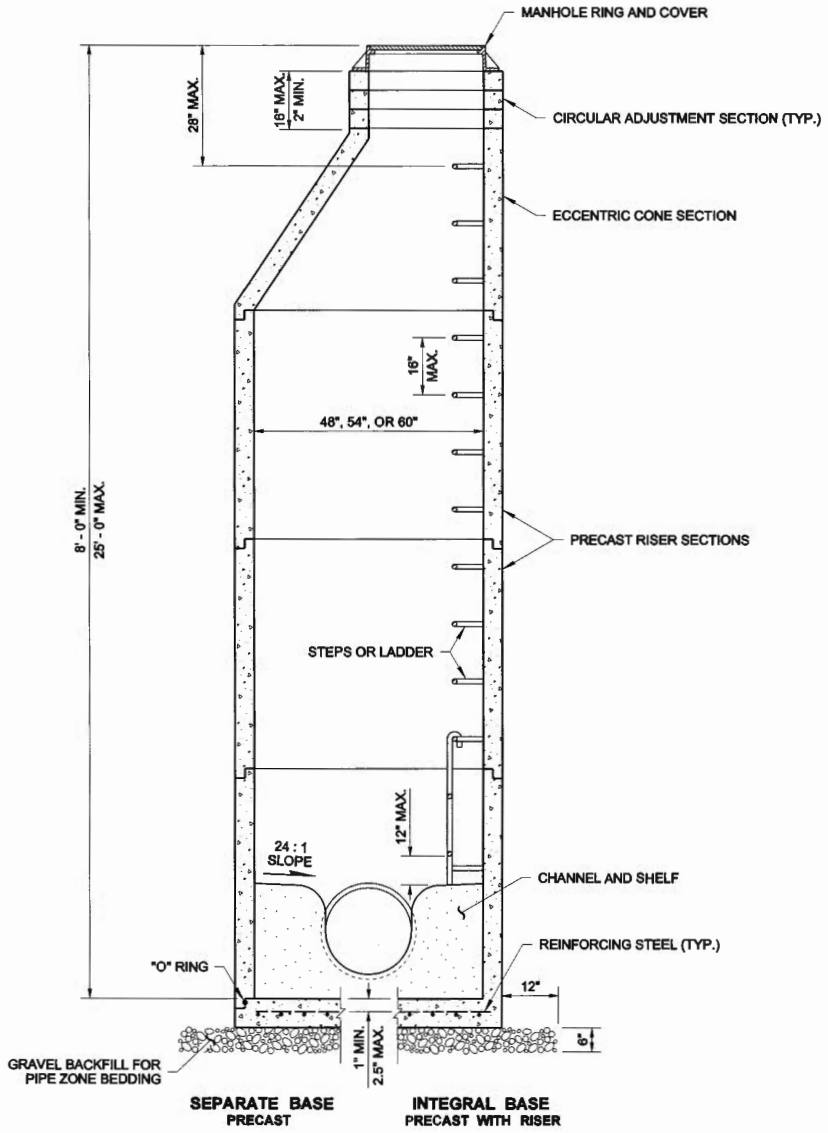

NOTES

1. Knockouts shall have a wall thickness of 2" minimum to 2.5" maximum.
2. For pipe allowances, see **Standard Plan B-10.20.**

MANHOLE DIMENSION TABLE				
DIAM.	MIN. WALL THICKNESS	MIN. BASE THICKNESS	MAXIMUM KNOCKOUT SIZE	MINIMUM DISTANCE BETWEEN KNOCKOUTS
48"	4"	6"	36"	8"
54"	4.5"	8"	42"	8"
60"	5"	8"	48"	8"

1-3-12

MANHOLE TYPE 1

STANDARD PLAN B-15.20-01

SHEET 1 OF 1 SHEET

APPROVED FOR PUBLICATION

STATE DESIGN ENGINEER — DATE 2/7/12

Washington State Department of Transportation

DRAWN BY: LISA CYFORD

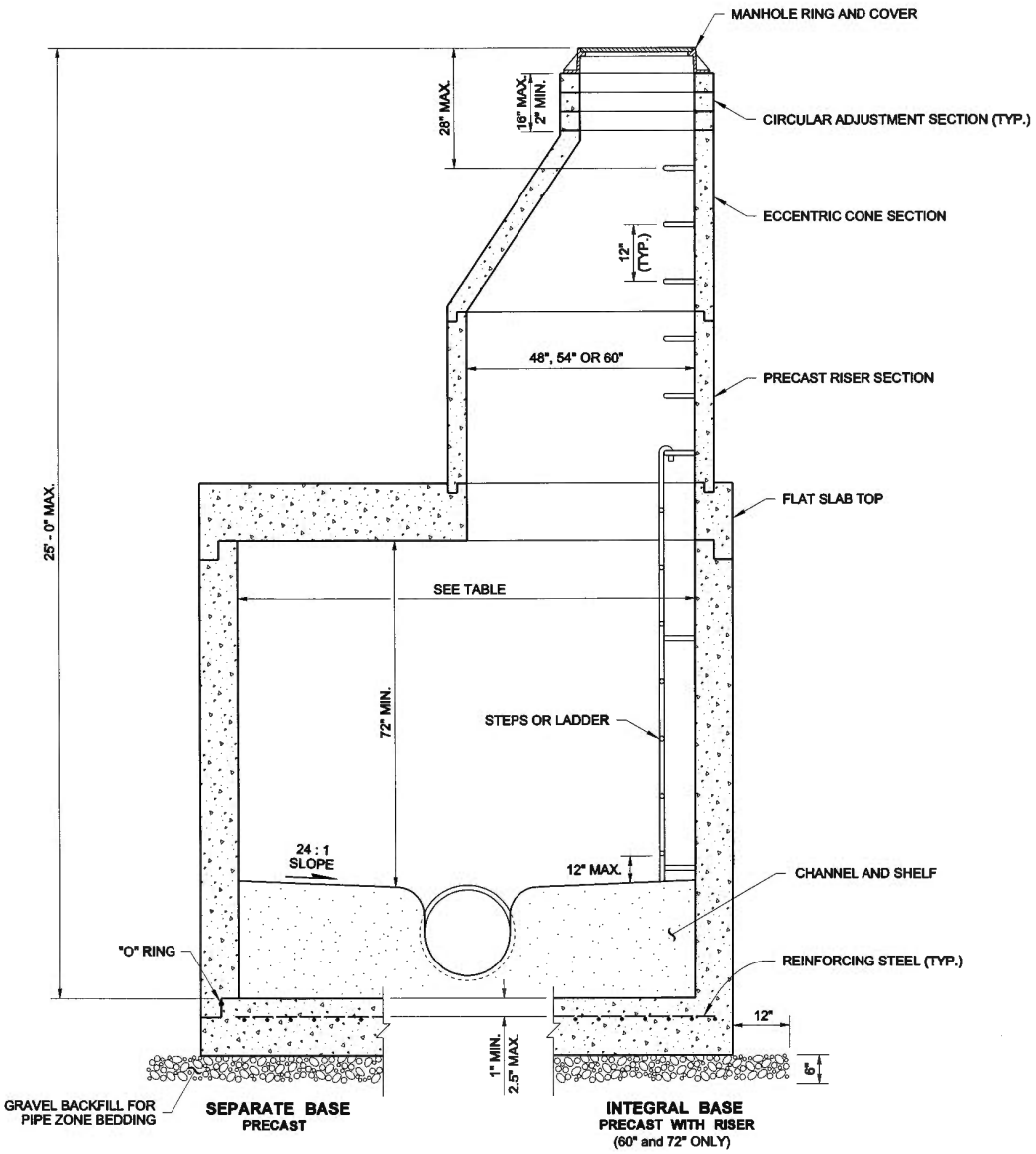

NOTES

1. Knockouts shall have a wall thickness of 2" minimum to 2.5" maximum.
2. For pipe allowances, see **Standard Plan B-10.20.**

MANHOLE DIMENSION TABLE				
DIAM.	MIN. WALL THICKNESS	MIN. BASE THICKNESS	MAXIMUM KNOCKOUT SIZE	MINIMUM DISTANCE BETWEEN KNOCKOUTS
60"	5"	8"	48"	8"
72"	6"	8"	60"	12"
84"	8"	12"	72"	12"
96"	8"	12"	84"	12"
120"	10"	12"	96"	12"
144"	12"	12"	108"	12"

CASEY M. KRAMER
STATE OF WASHINGTON
44535
REGISTERED
PROFESSIONAL ENGINEER

1-3-12

MANHOLE TYPE 2

STANDARD PLAN B-15.40-01

SHEET 1 OF 1 SHEET

APPROVED FOR PUBLICATION

STATE DESIGN ENGINEER — DATE 2/7/12

Washington State Department of Transportation

DRAWN BY: LISA CYFORD

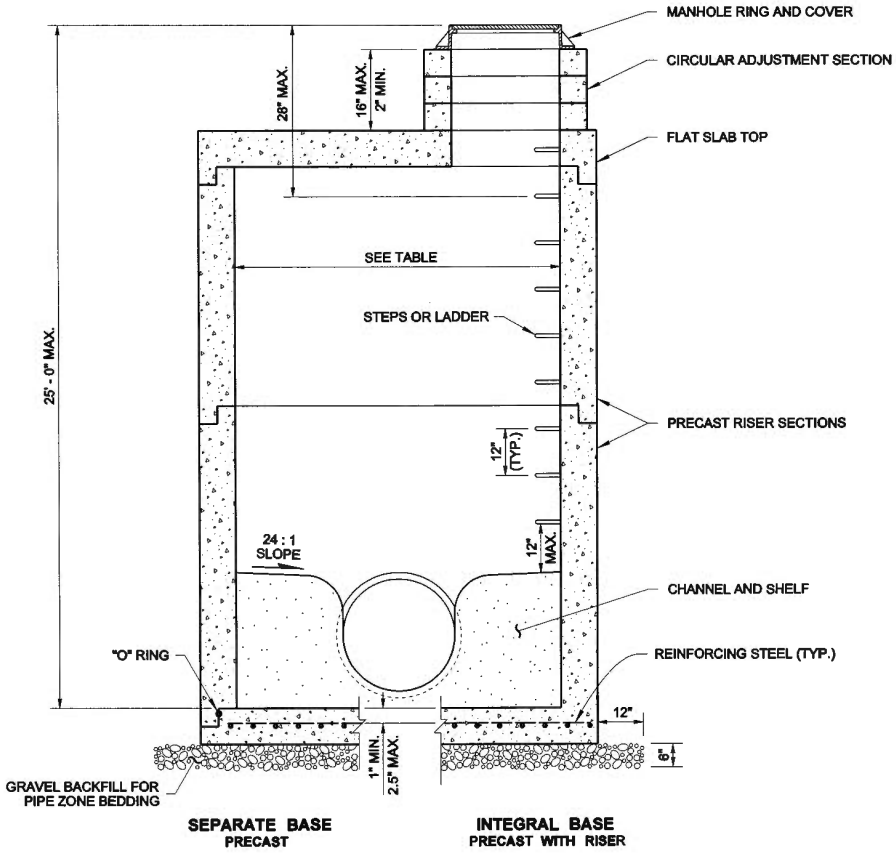

NOTES

1. Knockouts shall have a wall thickness of 2" minimum to 2.5" maximum.
2. For pipe allowances, see **Standard Plan B-10.20.**
3. No steps are required when height is 4' or less.

MANHOLE DIMENSION TABLE

DIAM.	MIN. WALL THICKNESS	MIN. BASE THICKNESS	MAXIMUM KNOCKOUT SIZE	MINIMUM DISTANCE BETWEEN KNOCKOUTS
48"	4"	6"	36"	8"
54"	4.5"	8"	42"	8"
60"	5"	8"	48"	8"
72"	6"	8"	60"	12"
84"	8"	12"	72"	12"
96"	8"	12"	84"	12"
120"	10"	12"	42"	12"
144"	12"	12"	108"	12"

1-3-12

MANHOLE TYPE 3

STANDARD PLAN B-15.60-01

SHEET 1 OF 1 SHEET

APPROVED FOR PUBLICATION

STATE DESIGN ENGINEER 2/7/12 DATE

Washington State Department of Transportation

DRAWN BY: FERN LIDDELL

NOTES

1. Precast concrete cone sections may be eccentric or concentric.
2. Seepage port orientation varies among manufacturers.
3. When necessary, knockouts on precast cone, drywell base and riser sections shall have a wall thickness of 1 1/2" minimum and 2" maximum.

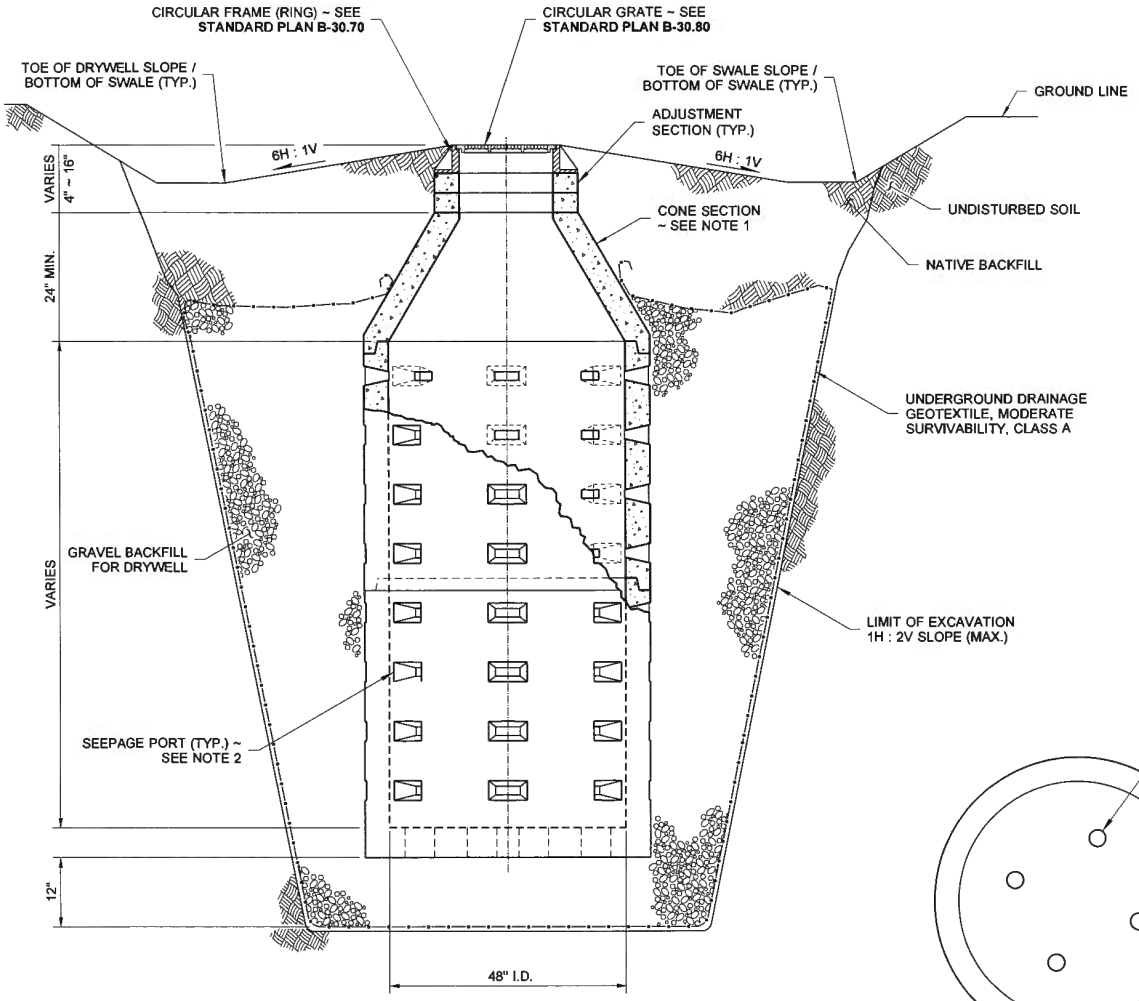

CUTAWAY ELEVATION VIEW

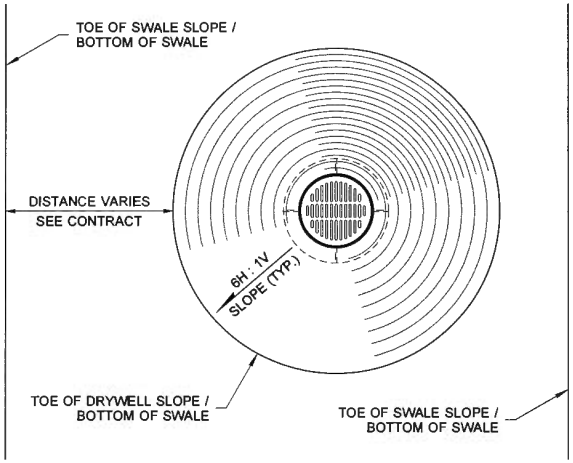

PLAN VIEW

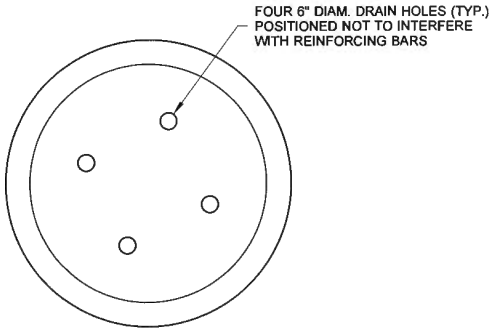

INTEGRAL BASE DETAIL

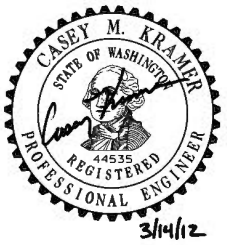

DRYWELL TYPE 1 (FOR SWALE)

STANDARD PLAN B-20.20-02

SHEET 1 OF 1 SHEET

APPROVED FOR PUBLICATION

STATE DESIGN ENGINEER — DATE 3/16/12

Washington State Department of Transportation

DRAWN BY: FERN LIDDELL

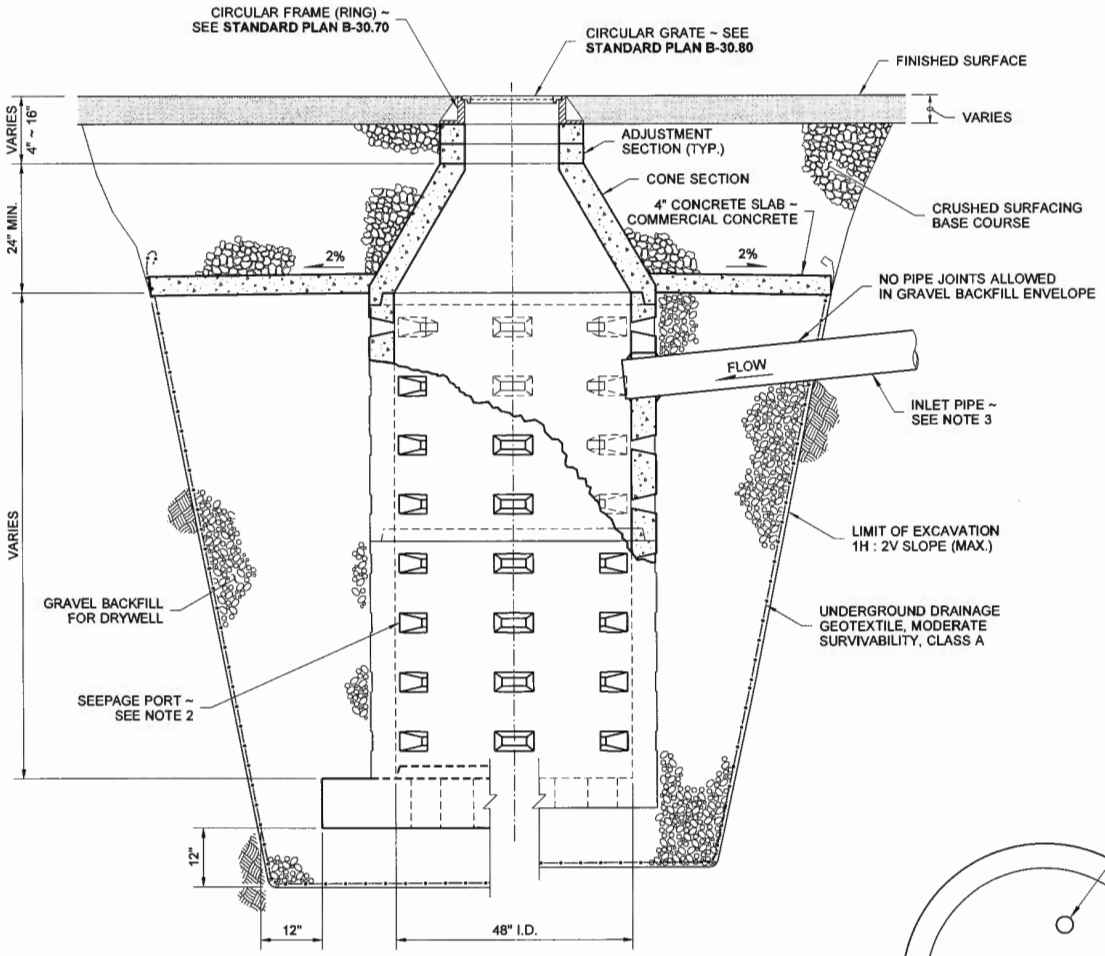

ALTERNATIVE FOOTING
PRECAST

INTEGRAL BASE
PRECAST WITH RISER

CUTAWAY ELEVATION VIEW

NOTES

1. Precast concrete cone sections may be eccentric or concentric.
2. Seepage port orientation varies among manufacturers.
3. Connect inlet pipe to structure using precast hole or core drilled hole.
4. For depths over 16' - 2" use 72" x 8" Alternative Precast Footing.
5. When necesssary, knockouts on precast cone, drywell base and riser sections shall have a wall thickness of 1 1/2" minimum and 2" maximum.

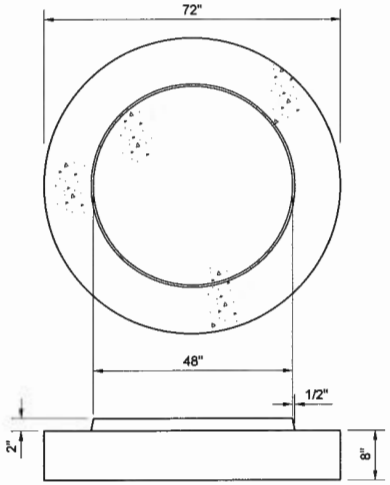

ALTERNATIVE PRECAST FOOTING DETAIL

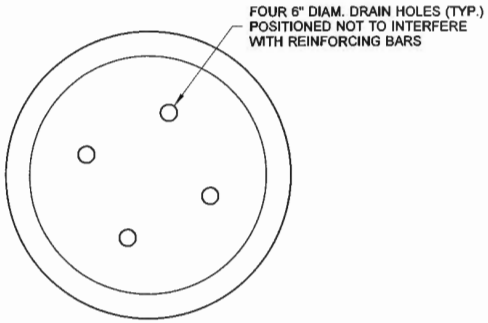

INTEGRAL BASE DETAIL

CASEY M. KRAMER
STATE OF WASHINGTON
44535
REGISTERED
PROFESSIONAL ENGINEER
3/14/12

DRYWELL TYPE 2
(WITH PIPE INLET)

STANDARD PLAN B-20.40-03

SHEET 1 OF 1 SHEET

APPROVED FOR PUBLICATION

STATE DESIGN ENGINEER — DATE 3/16/12

Washington State Department of Transportation

DRAWN BY: FERN LIDDELL

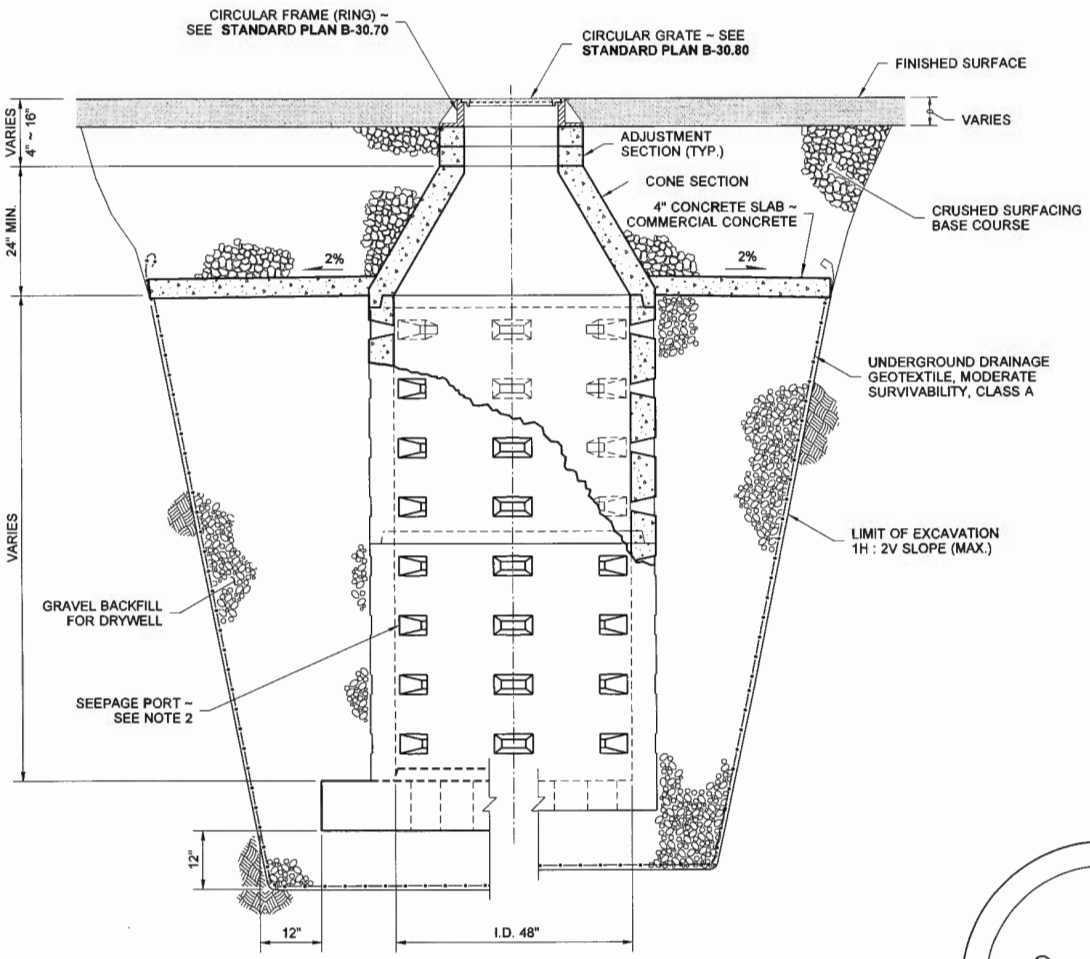

ALTERNATIVE FOOTING
PRECAST

INTEGRAL BASE
PRECAST WITH RISER

CUTAWAY ELEVATION VIEW

NOTES

1. Precast concrete cone sections may be eccentric or concentric.
2. Seepage port orientation varies among manufacturers.
3. For depths over 16' - 2" use 72" x 8" Alternative Precast Footing.
4. When necessary, knockouts on precast cone, drywell base and riser sections shall have a wall thickness of 1 1/2" minimum and 2" maximum.

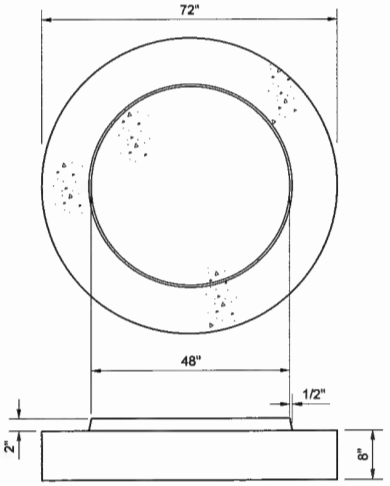

ALTERNATIVE PRECAST FOOTING DETAIL

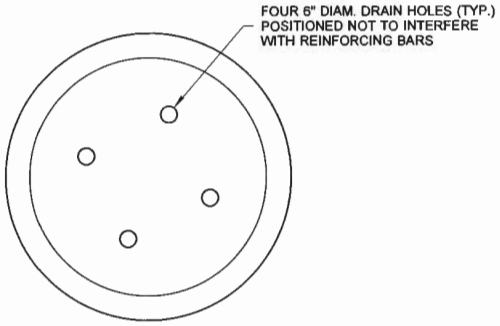

INTEGRAL BASE DETAIL

CASEY M. KRAMER
STATE OF WASHINGTON
44535
REGISTERED
PROFESSIONAL ENGINEER
3/14/12

DRYWELL TYPE 3
(WITH AT-GRADE INLET)

STANDARD PLAN B-20.60-03

SHEET 1 OF 1 SHEET

APPROVED FOR PUBLICATION

STATE DESIGN ENGINEER — DATE 3/15/12

Washington State Department of Transportation

DRAWN BY: FERN LIDDELL

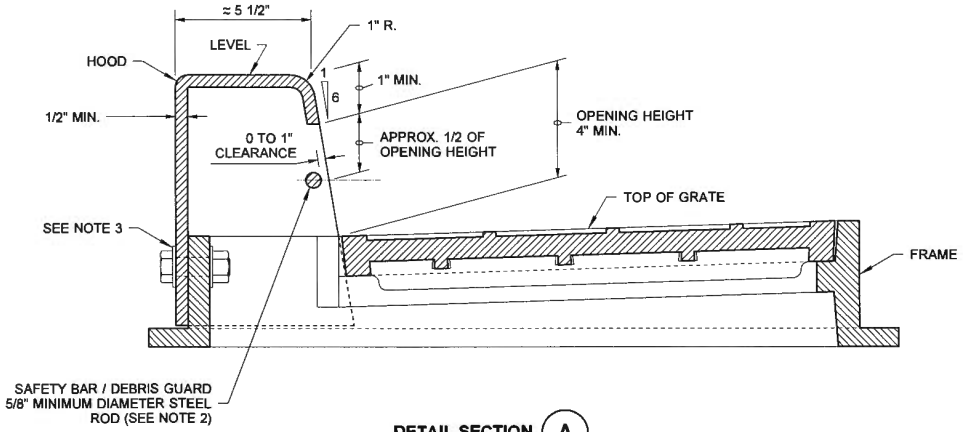

DETAIL SECTION (A)

NOTES

1. This inlet requires the precast catch basin unit to be rotated 90 degrees so that the narrow side is parallel to the curb line. When calculating offsets from curb to CL of the precast catch basin, please note that the CL of the grate is not the CL of the precast catch basin. See **Section A**
2. The dimensions of the frame and hood may vary slightly among different manufacturers. The Frame may have cast features intended to support a debris guard. Hood units may be mounted inside or outside of the frame. The methods for fastening the safety bar / debris guard rod to the hood may vary. The hood may include casting lugs. The top of the hood may be cast with a pattern.
3. Attach the hood to the frame with two 3/4" × 2" hex head bolts, nuts, and oversize washers. The washers shall have diameters adequate to ensure full bearing across the slots.
4. Bolt-down capability is required on all frames, grates and covers, unless specified in the Contract. Provide two holes in the Frame that are vertically aligned with the grate slots. The frame shall accept the 5/8" × 11 NC × 2" allen head cap screw by being tapped, or other approved mechanism. The location of bolt-down holes varies among manufacturers. See BOLT-DOWN DETAIL, **Standard Plan B-30.10.**
5. Only ductile iron Vaned Grates shall be used. See **Standard Plans B-30.30 and B-30.40** for grate details. Refer to **Standard Specification 9-05.15(2)** for additional requirements.
6. This plan is intended to show the installation details of a manufactured product. This plan is not intended to show the specific details necessary to fabricate the castings depicted in this drawing.

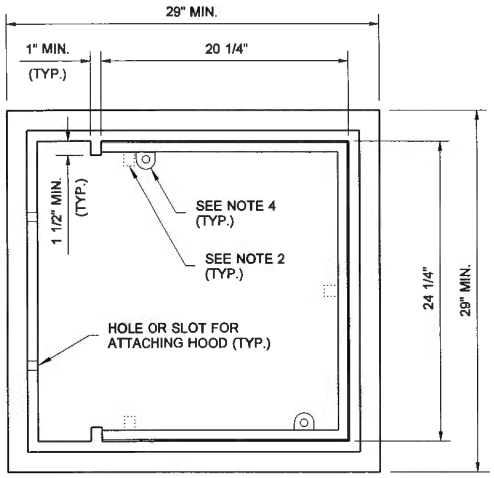

TOP VIEW

FRAME DETAIL

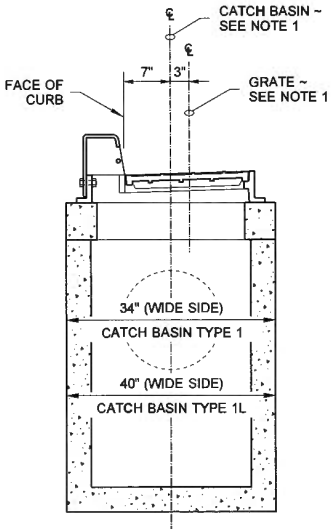

SECTION (A)

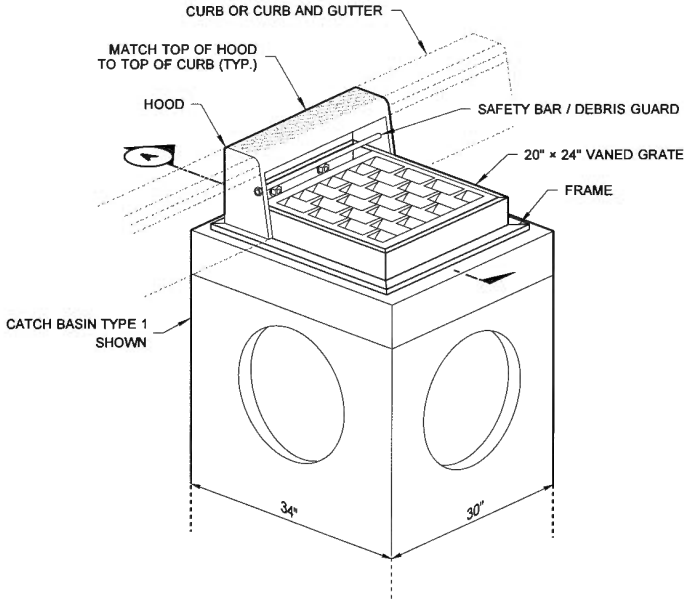

ISOMETRIC VIEW

COMBINATION INLET

FRAME, HOOD, AND VANED GRATE

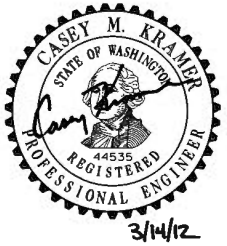

COMBINATION INLET

STANDARD PLAN B-25.20-01

SHEET 1 OF 1 SHEET

APPROVED FOR PUBLICATION

STATE DESIGN ENGINEER — DATE 3/15/12

Washington State Department of Transportation

DRAWN BY: MARK SUJKA

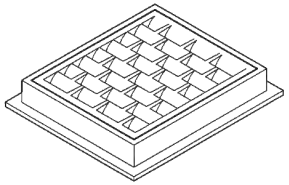

FRAME AND VANED GRATE

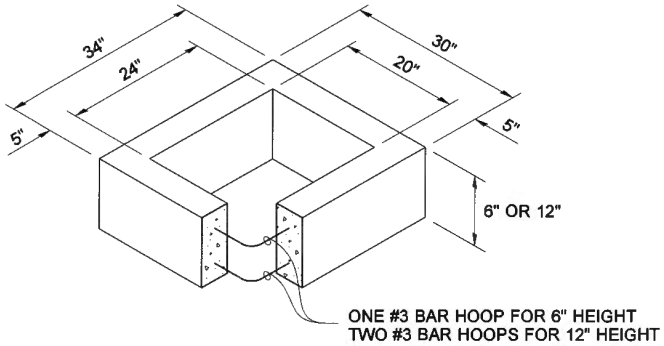

RECTANGULAR ADJUSTMENT SECTION

PIPE ALLOWANCES	
PIPE MATERIAL	**MAXIMUM INSIDE DIAMETER**
REINFORCED OR PLAIN CONCRETE	12"
ALL METAL PIPE	15"
CPSSP * (STD. SPEC. 9-05.20)	12"
SOLID WALL PVC (STD. SPEC. 9-05.12(1))	15"
PROFILE WALL PVC (STD. SPEC. 9-05.12(2))	15"

* CORRUGATED POLYETHYLENE STORM SEWER PIPE

NOTES

1. As acceptable alternatives to the rebar shown in the **PRECAST BASE SECTION**, fibers (placed according to the Standard Specifications), or wire mesh having a minimum area of 0.12 square inches per foot shall be used with the minimum required rebar shown in the **ALTERNATIVE PRECAST BASE SECTION**. Wire mesh shall not be placed in the knockouts.
2. The knockout diameter shall not be greater than 18". Knockouts shall have a wall thickness of 2" minimum to 2.5" maximum. Provide a 1.5" minimum gap between the knockout wall and the outside of the pipe. After the pipe is installed, fill the gap with joint mortar in accordance with Standard Specification 9-04.3.
3. The maximum depth from the finished grade to the lowest pipe invert shall be 5'.
4. The frame and grate may be installed with the flange up or down. The frame may be cast into the adjustment section.
5. The Precast Base Section may have a rounded floor, and the walls may be sloped at a rate of 1:24 or steeper.
6. The opening shall be measured at the top of the precast base section.
7. All pickup holes shall be grouted full after the inlet has been placed.

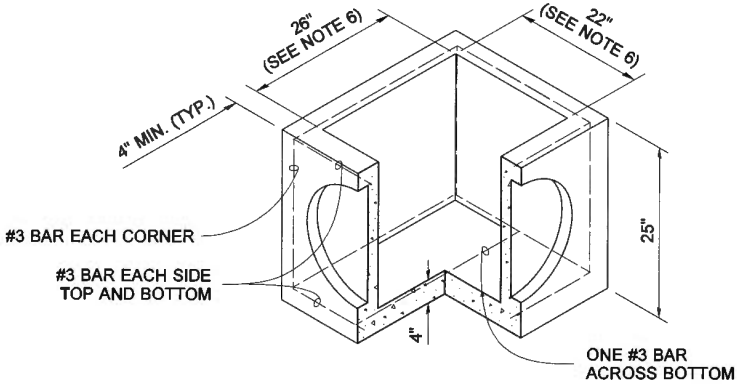

PRECAST BASE SECTION

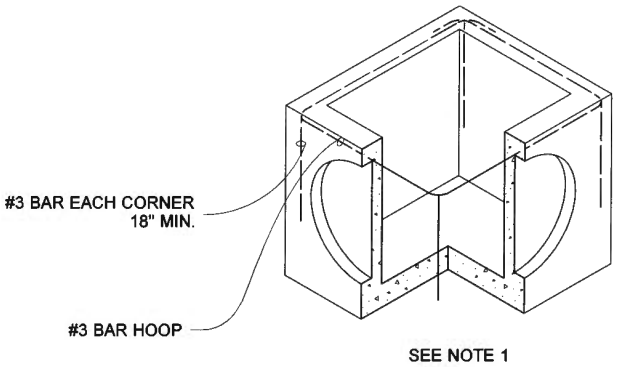

ALTERNATIVE PRECAST BASE SECTION

MATTHEW J. WITECKI
STATE OF WASHINGTON
15558
REGISTERED PROFESSIONAL ENGINEER
6/1/06
EXPIRES JULY 1, 2007

CONCRETE INLET

STANDARD PLAN B-25.60-00

SHEET 1 OF 1 SHEET

APPROVED FOR PUBLICATION

6-1-06

STATE DESIGN ENGINEER — DATE

Washington State Department of Transportation

DRAWN BY: LISA CYFORD

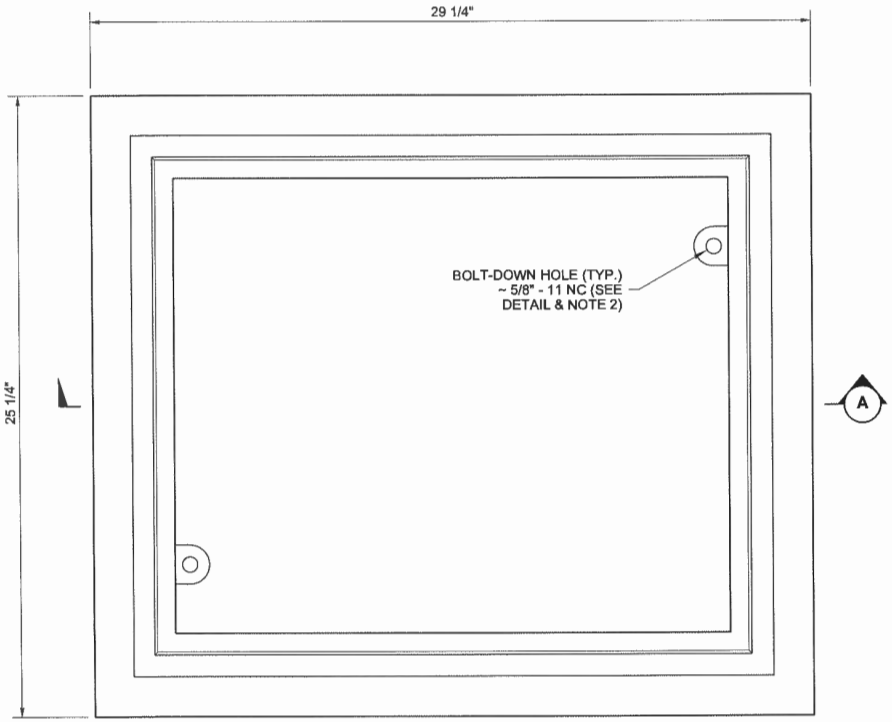

TOP

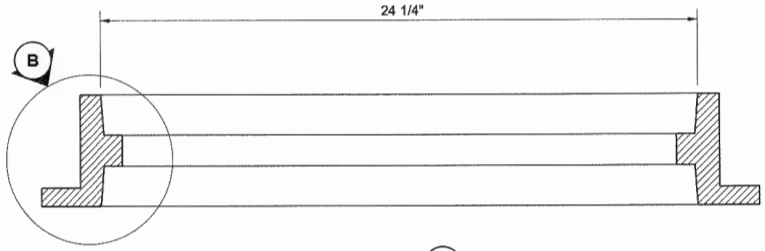

SECTION (A)

NOTES

1. This frame is designed to accommodate 20" × 24" grates or covers as shown on Standard Plans **B-30.20, B-30.30, B-30.40,** and **B-30.50**.
2. Bolt-down capability is required on all frames, grates, and covers, unless specified otherwise in the Contract. Provide 2 holes in the frame that are vertically aligned with the grate or cover slots. The frame shall accept the 5/8" - 11 NC × 2" Allen head cap screw by being tapped, or other approved mechanism. Location of bolt-down holes varies by manufacturer.
3. Refer to **Standard Specification 9-05.15(2)** for additional requirements.

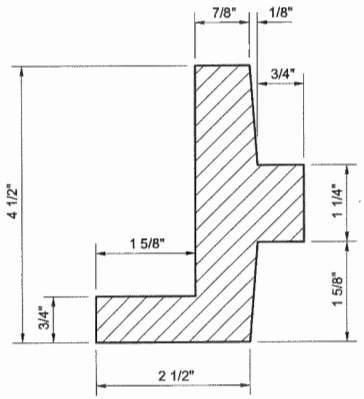

DETAIL (B)

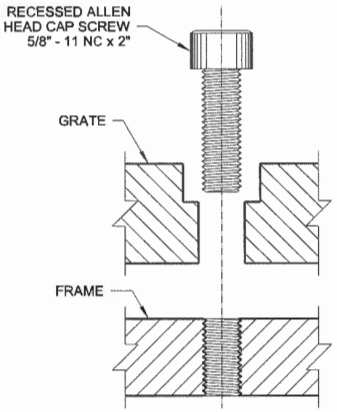

SECTION

BOLT-DOWN DETAIL
SEE NOTE 2

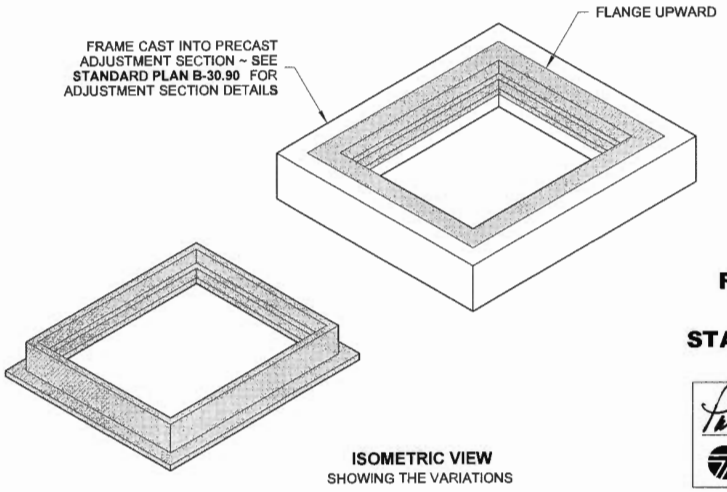

ISOMETRIC VIEW
SHOWING THE VARIATIONS

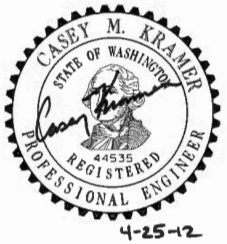

RECTANGULAR FRAME (REVERSIBLE)

STANDARD PLAN B-30.10-01

SHEET 1 OF 1 SHEET

APPROVED FOR PUBLICATION

STATE DESIGN ENGINEER — DATE 4/26/12

Washington State Department of Transportation

DRAWN BY: LISA CYFORD

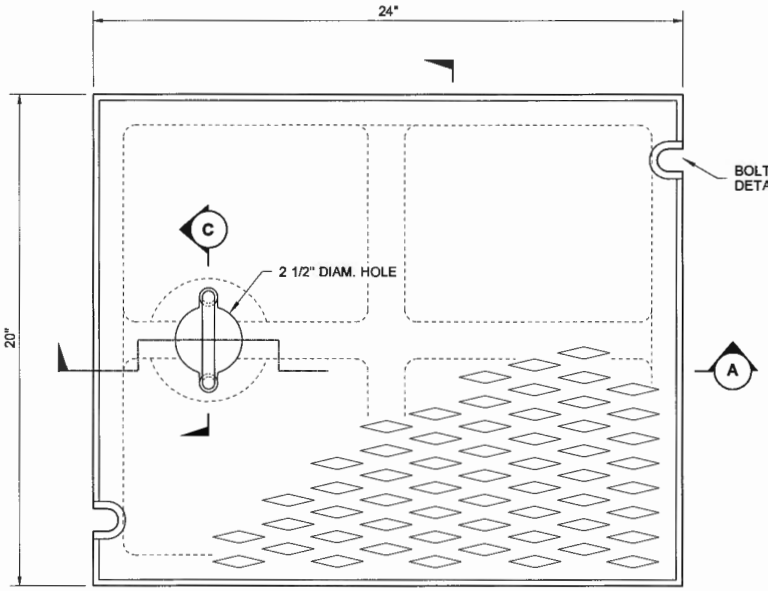

TOP

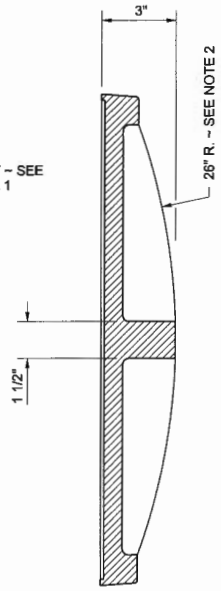

SECTION B

NOTES

1. Bolt-down capability is required on all frames, grates, and covers, unless specified otherwise in the Contract. Provide 2 holes in the frame that are vertically aligned with the grate or cover slots. The frame shall accept the 5/8" - 11 NC × 2" Allen head cap screw by being tapped, or other approved mechanism. Location of bolt-down holes varies by manufacturer.
2. Alternative reinforcing designs are acceptable in lieu of the rib design.
3. Refer to **Standard Specification 9-05.15(2)** for additional requirements.
4. For frame details, see **Standard Plan B-30.10.**

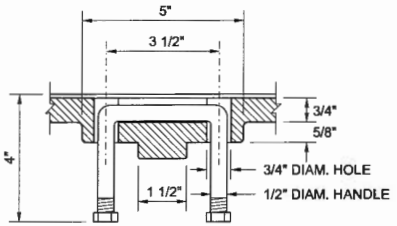

SECTION C

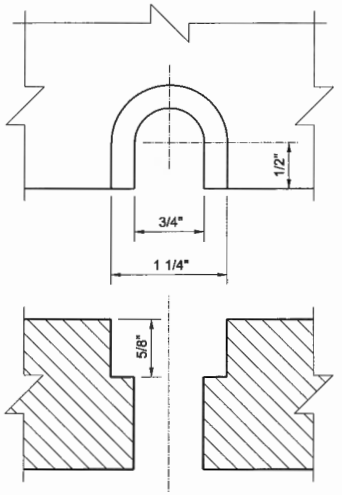

BOLT-DOWN SLOT DETAIL
SEE NOTE 1

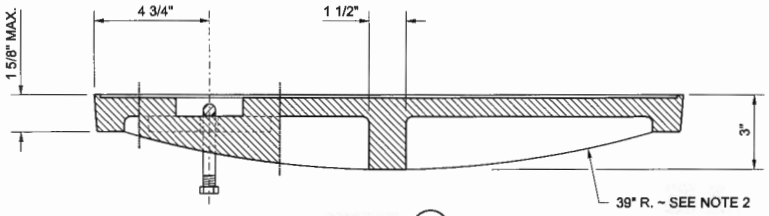

SECTION A

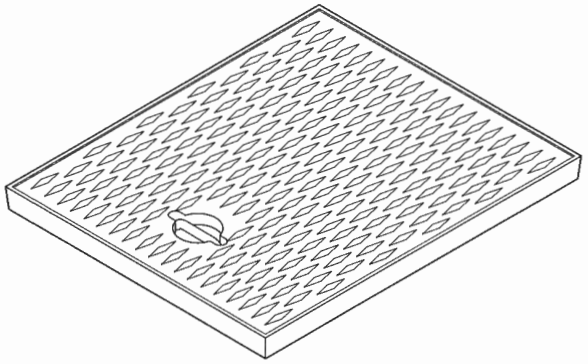

ISOMETRIC

4-25-12

RECTANGULAR SOLID METAL COVER

STANDARD PLAN B-30.20-02

SHEET 1 OF 1 SHEET

APPROVED FOR PUBLICATION

STATE DESIGN ENGINEER — DATE 4/26/12

Washington State Department of Transportation

DRAWN BY: LISA CYFORD

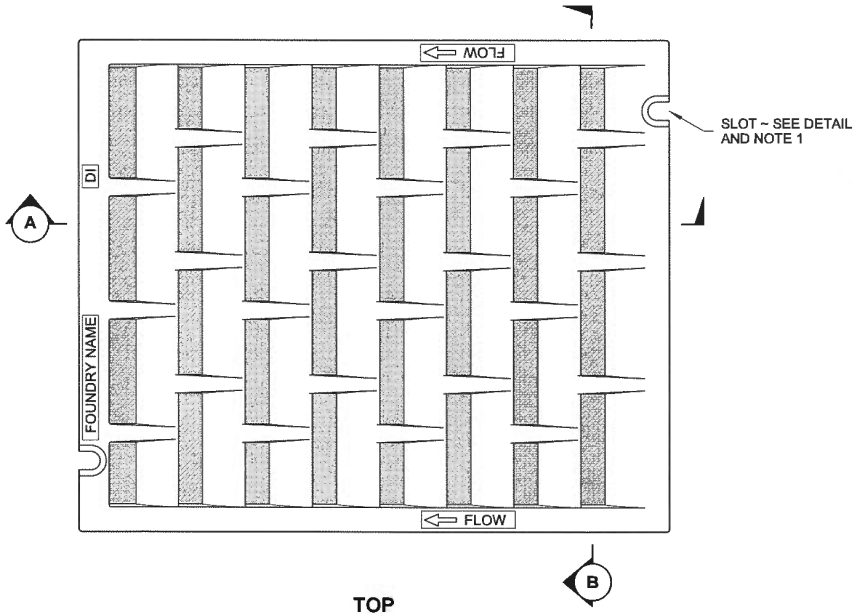

TOP

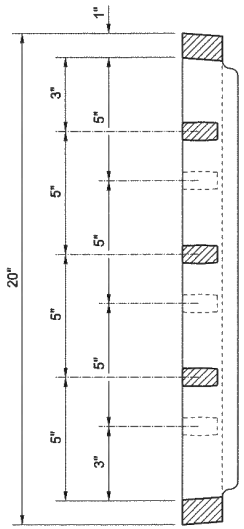

SECTION B

NOTES

1. Bolt-down capability is required on all frames, grates, and covers, unless specified otherwise in the Contract. Provide 2 holes in the frame that are vertically aligned with the grate or cover slots. The frame shall accept the 5/8" - 11 NC × 2" Allen head cap screw by being tapped, or other approved mechanism. Location of bolt-down holes varies by manufacturer.
2. For frame details, see **Standard Plan B-30.10.**
3. Refer to **Standard Specification 9-05.15(2)** for additional requirements.

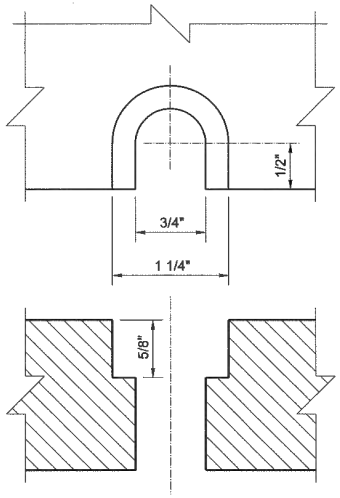

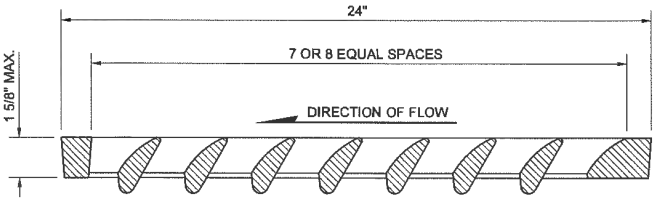

SECTION A

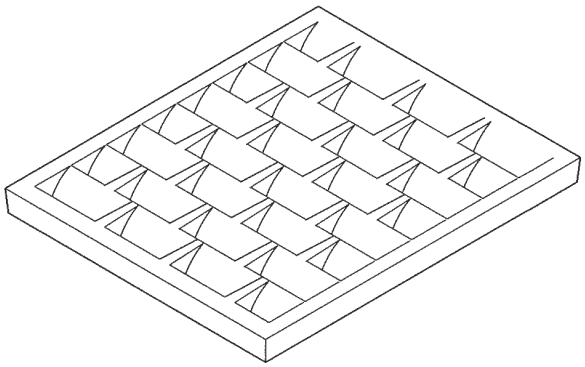

ISOMETRIC

4-25-12

RECTANGULAR VANED GRATE

STANDARD PLAN B-30.30-01

SHEET 1 OF 1 SHEET

APPROVED FOR PUBLICATION

4/26/12

STATE DESIGN ENGINEER — DATE

Washington State Department of Transportation

DRAWN BY: LISA CYFORD

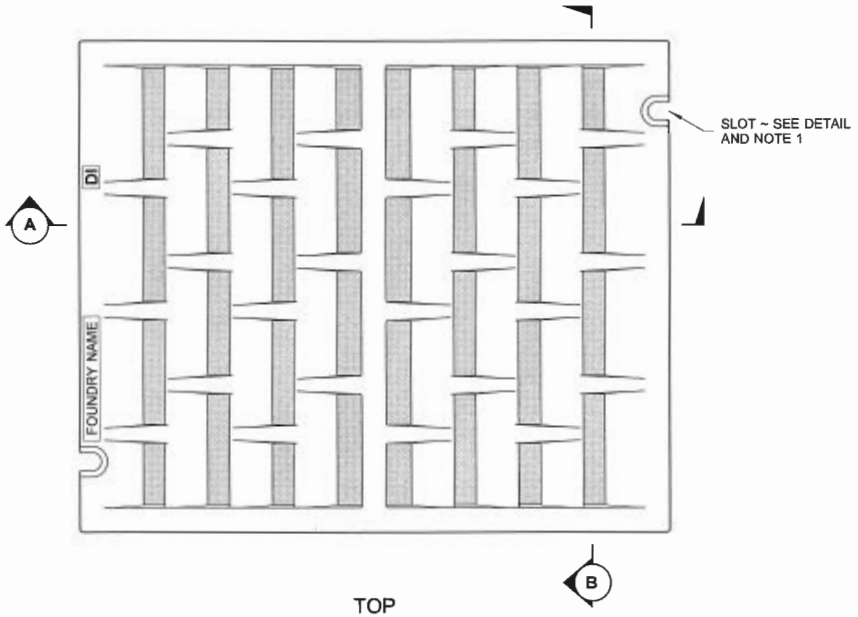

TOP

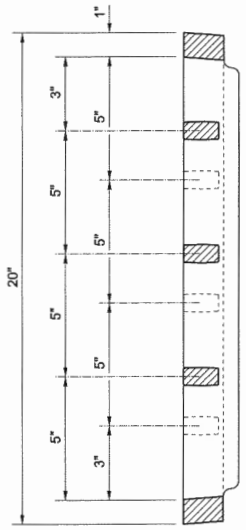

SECTION (B)

NOTES

1. Bolt-down capability is required on all frames, grates, and covers, unless specified otherwise in the Contract. Provide 2 holes in the frame that are vertically aligned with the grate or cover slots. The frame shall accept the 5/8" - 11 NC × 2" Allen head cap screw by being tapped, or other approved mechanism. Location of bolt-down holes varies by manufacturer.
2. Refer to **Standard Specification 9-05.15(2)** for additional requirements.
3. For frame details, see **Standard Plan B-30.10.**

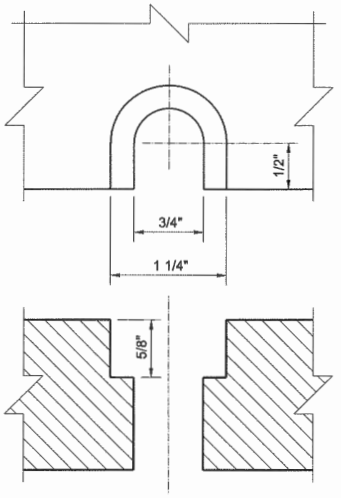

BOLT-DOWN SLOT DETAIL
SEE NOTE 1

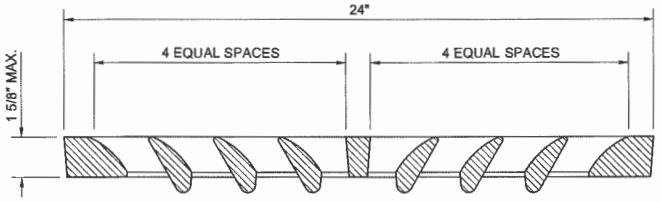

SECTION (A)

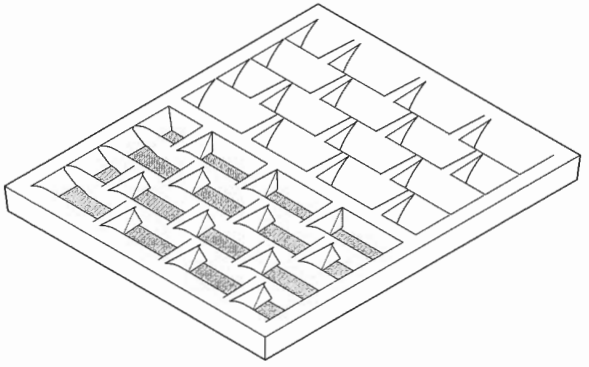

ISOMETRIC

4-25-12

RECTANGULAR BI-DIRECTIONAL VANED GRATE

STANDARD PLAN B-30.40-01

SHEET 1 OF 1 SHEET

APPROVED FOR PUBLICATION

STATE DESIGN ENGINEER — DATE 4/26/12

Washington State Department of Transportation

DRAWN BY: LISA CYFORD

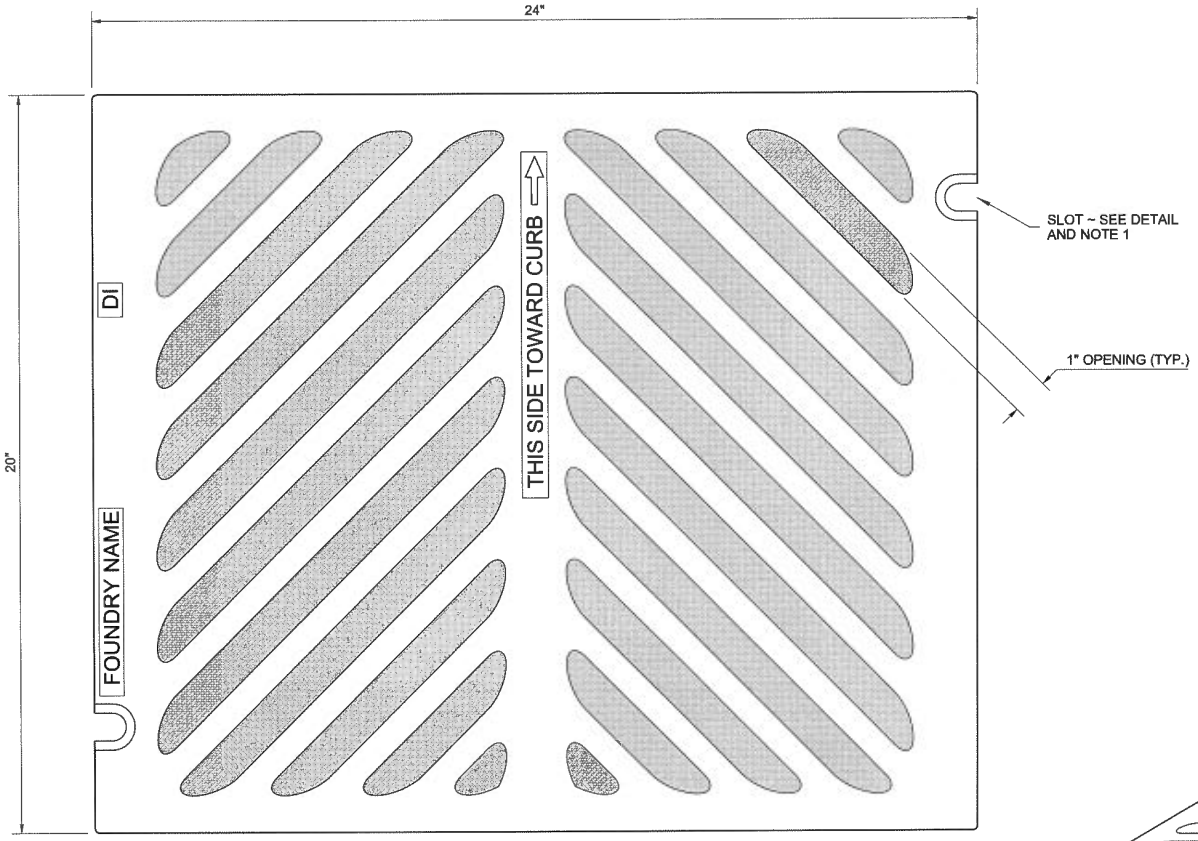

TOP

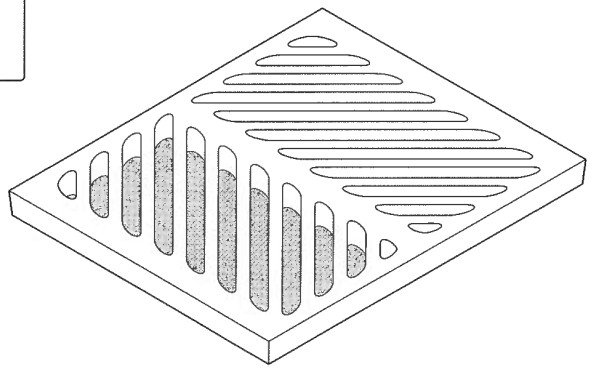

ISOMETRIC

NOTES

1. Bolt-down capability is required on all frames, grates, and covers, unless specified otherwise in the Contract. Provide 2 holes in the frame that are vertically aligned with the grate or cover slots. The frame shall accept the 5/8" - 11 NC × 2" Allen head cap screw by being tapped, or other approved mechanism. Location of bolt-down holes varies by manufacturer.
2. Refer to **Standard Specification 9-05.15(2)** for additional requirements.
3. For frame details, see **Standard Plan B-30.10**.
4. The thickness of the grate shall not exceed 1 5/8".

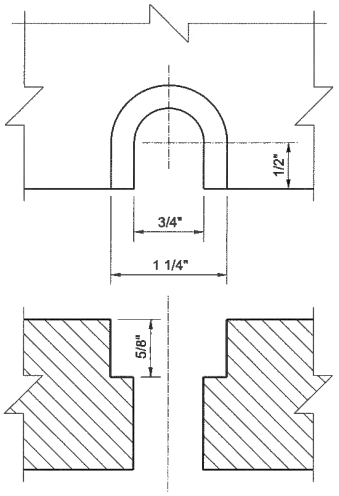

BOLT-DOWN SLOT DETAIL
SEE NOTE 1

4-25-12

RECTANGULAR HERRINGBONE GRATE

STANDARD PLAN B-30.50-01

SHEET 1 OF 1 SHEET

APPROVED FOR PUBLICATION

STATE DESIGN ENGINEER — DATE

Washington State Department of Transportation

DRAWN BY: LISA CYFORD

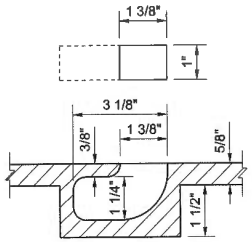

BLIND PICK NOTCH
DETAIL "A"

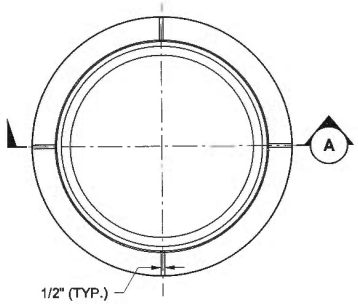

RING PLAN

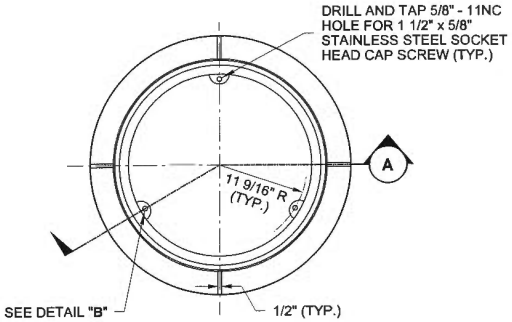

RING PLAN

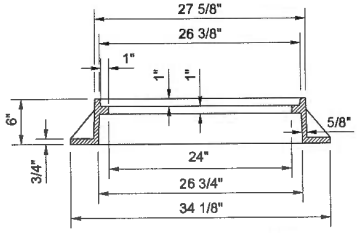

RING SECTION (A)

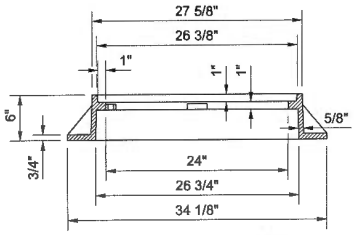

RING SECTION (A)

NOTES

1. The gasket and groove may be in the seat (frame) or in the underside of the cover. The gasket may be "T" shaped in section. The groove may be cast or machined.
2. Bolt-down capability is required on all frames, grates, and covers, unless specified otherwise in the Contract. Provide 3 holes in the frame that are vertically aligned with the grate or cover slots. The frame shall accept the 5/8" - 1 NC × 2" Allen head cap screw by being tapped, or other approved mechanism. Location of bolt down holes varies by manufacturer.
3. For bolt-down manhole ring and covers that are not designated "Watertight," the neoprene gasket, groove, and washer are not required.
4. Washer shall be neoprene (Detail "B").
5. In lieu of blind pick notch for manhole covers, a single 1" pick hole is acceptable. Hole location and number of holes may vary by manufacturer.
6. Alternative reinforcing designs are acceptable in lieu of the rib design.
7. For clarity, the vertical scale of the Cover Section has been exaggerated, it is 1.5 times the horizontal scale (1H:1.5V).

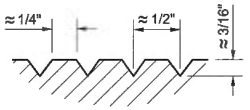

SKID GROOVE PATTERN
DETAIL

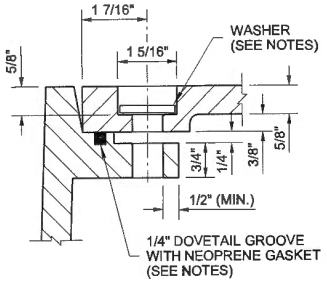

BOLT-DOWN / WATERTIGHT
DETAIL "B"

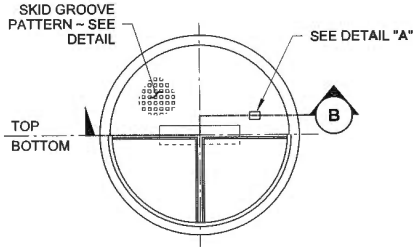

COVER PLAN

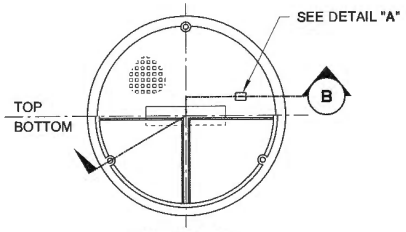

COVER PLAN

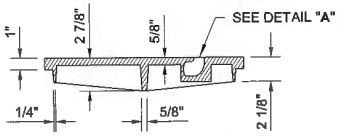

COVER SECTION (B)
(SEE NOTE 7)
STANDARD
TYPE 1

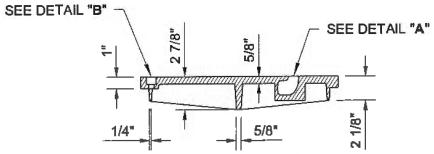

COVER SECTION (B)
(SEE NOTE 7)
BOLT-DOWN / WATERTIGHT
TYPE 2

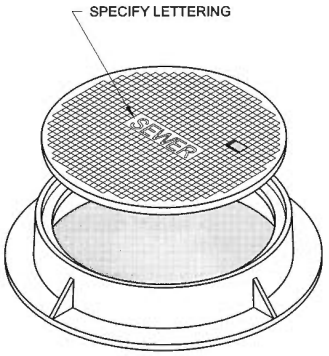

ISOMETRIC VIEW

4-25-12

CIRCULAR FRAME (RING) AND COVER

STANDARD PLAN B-30.70-03

SHEET 1 OF 1 SHEET

APPROVED FOR PUBLICATION

STATE DESIGN ENGINEER — DATE 4/26/12

Washington State Department of Transportation

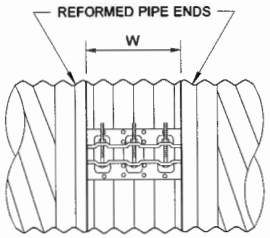

TYPE D
ANNULAR CORRUGATED BAND

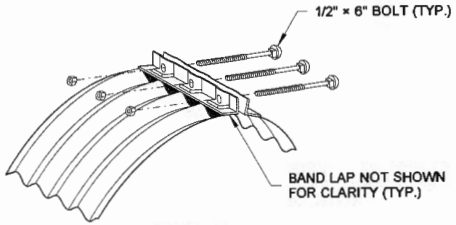

TYPE D
BAND ANGLE CONNECTOR DETAIL

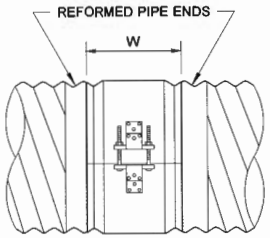

TYPE F
SEMI-CORRUGATED BAND

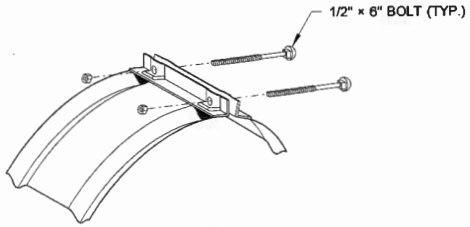

TYPE F
BAND ANGLE CONNECTOR DETAIL

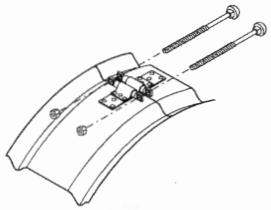

TYPE F
BAR & STRAP CONNECTOR DETAIL

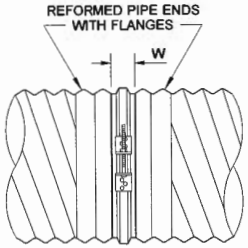

TYPE J
FLANGE BAND

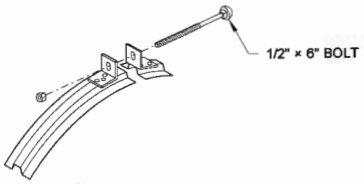

TYPE J
BAND ANGLE CONNECTOR DETAIL

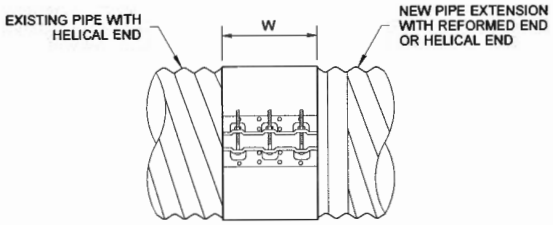

TYPE K
FLAT BAND OR DIMPLE BAND

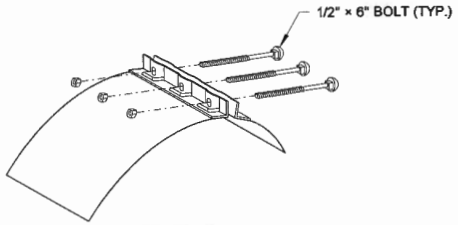

TYPE K
BAND ANGLE CONNECTOR DETAIL

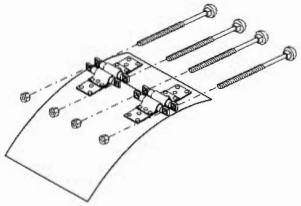

TYPE K
DOUBLE BAR & STRAP CONNECTOR DETAIL

COUPLING BAND DIMENSION TABLE
(ALL DIMENSIONS ARE IN INCHES)

BAND TYPE		CORRUGATION PITCH × DEPTH	PIPE DIAM.	MIN. W	GASKET TYPE
STEEL	D	2 2/3 × 1/2 OR 3 × 1 REFORMED TO 2 2/3 × 1/2	12 ~ 84	12	SLEEVE
		3 × 1 REFORMED TO 2 2/3 × 1/2	90 ~ 144	24	SLEEVE
	F	2 2/3 × 1/2 OR 3 × 1 REFORMED TO 2 2/3 × 1/2	12 ~ 84	10 1/2	O-RING
	J	2 2/3 × 1/2	12 ~ 48	2 3/4	BUTYL
	K	2 2/3 × 1/2	12 ~ 48	12	SLEEVE
			54 ~ 84	24	
		* 3 × 1	54 ~ 144	24	
ALUMINUM	D	2 2/3 × 1/2	12 ~ 72	12	SLEEVE
		3 × 1	36 ~ 60	12	
		REFORMED TO 2 2/3 × 1/2	66 ~ 108	24	
	F	2 2/3 x 1/2	12 ~ 48	10 1/2	O-RING
	K	2 2/3 x 1/2	12 ~ 48	12	SLEEVE
			54 ~ 84	24	
		* 3 × 1	54 ~ 96	24	

* PIPE ARCH ONLY

MATTHEW J. WITECKI
STATE OF WASHINGTON
REGISTERED PROFESSIONAL ENGINEER
6/1/06
EXPIRES JULY 1, 2007

COUPLING BANDS FOR CORRUGATED METAL PIPE

STANDARD PLAN B-60.40-00

SHEET 1 OF 1 SHEET

APPROVED FOR PUBLICATION
STATE DESIGN ENGINEER 6-1-06 DATE
Washington State Department of Transportation

DRAWN BY: BILL BERENS

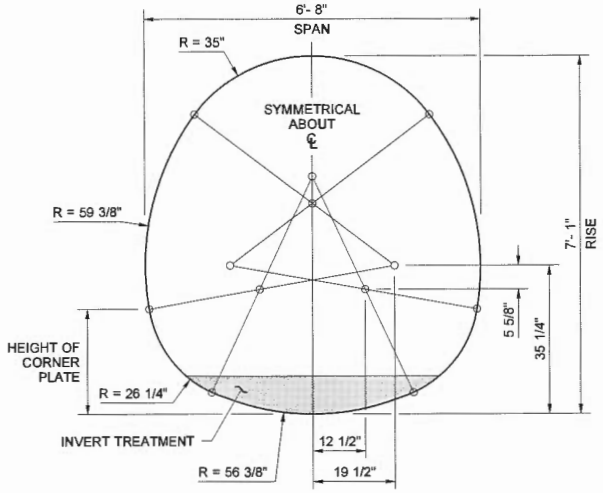

SECTION

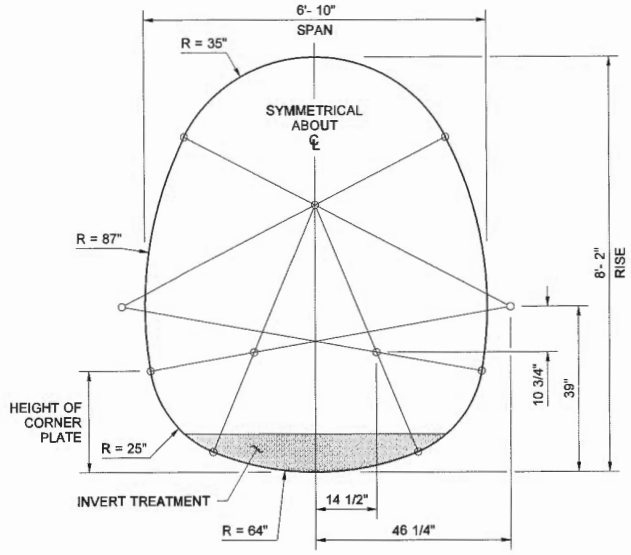

SECTION

NOTES

1. Span and rise dimensions are nominal and are measured to the inside crests of corrugations.
2. Allowable heights of cover shall be within the limits indicated in the table included hereon. Minimums and maximums are shown.
3. Unless indicated otherwise a 10" depth (over the inside crests of corrugatons) of earth shall be placed in the invert of the Structural Plate Underpass, Design 1, for its full width and length. The earth shall consist of naturally occurring materials available in the vicinity of the structural plate underpass installation. See **Standard Specification 7-03.3(4).**
4. Designed for H-20 live load and maximum allowable soil pressure of 6 Kips per square foot.

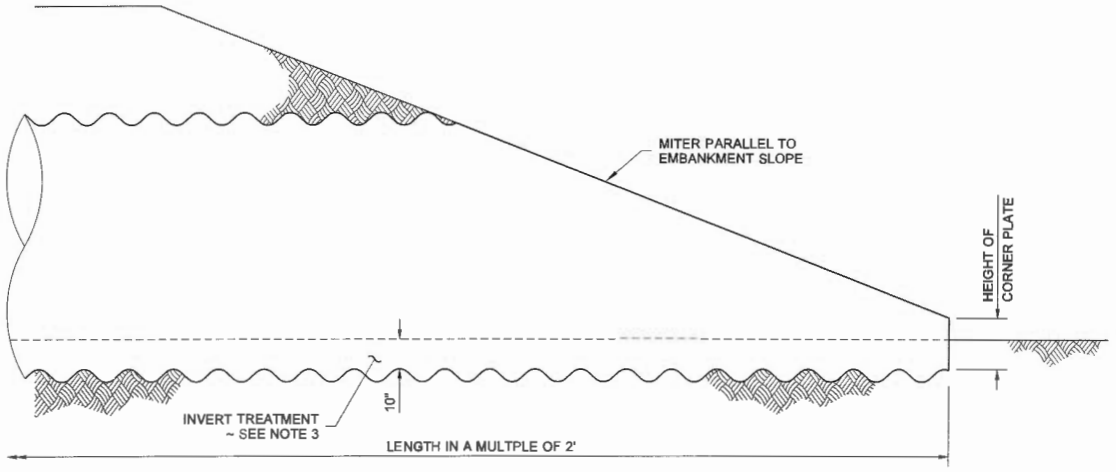

SIDE VIEW ~ PLACEMENT

ALLOWABLE HEIGHTS OF COVER			
SPAN	RISE	12 GAGE THICK CORRUGATED METAL	
		COVER	
		MIN.	MAX.
6' - 8"	7' - 1"	4'	26'
6' - 10"	8' - 2"	5'	25'

4-25-12

ANIMAL UNDERPASS

STANDARD PLAN B-65.20-01

SHEET 1 OF 1 SHEET

APPROVED FOR PUBLICATION

STATE DESIGN ENGINEER — DATE 1/26/12

Washington State Department of Transportation

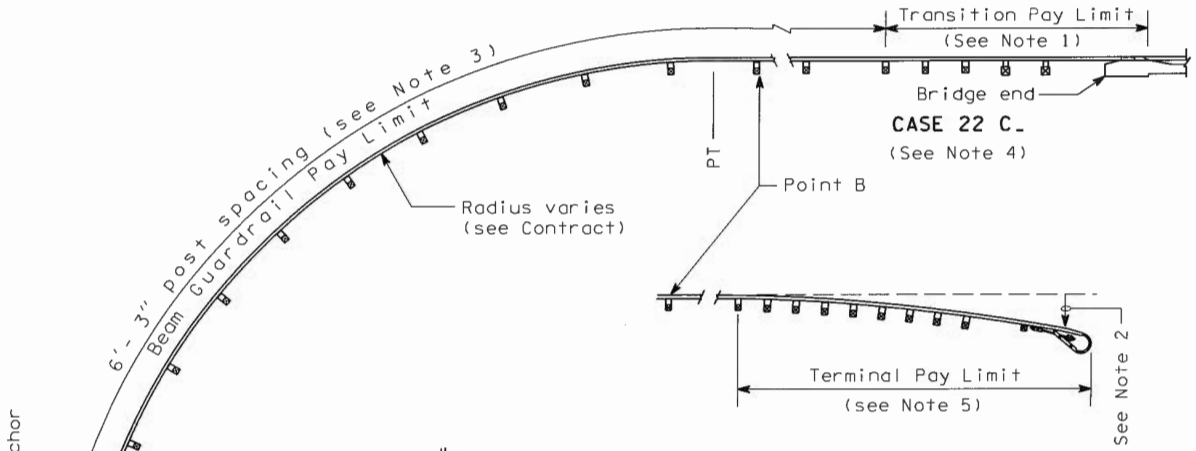

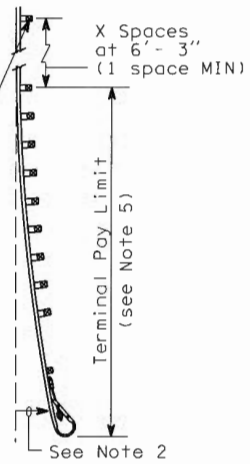

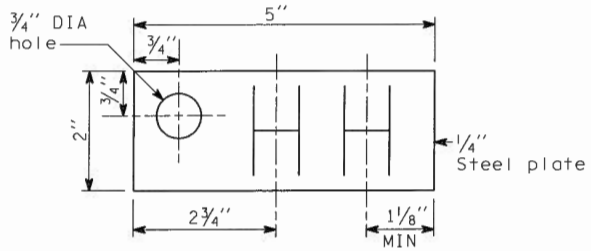

IDENTIFICATION PLATE DETAIL
(See Note 6)

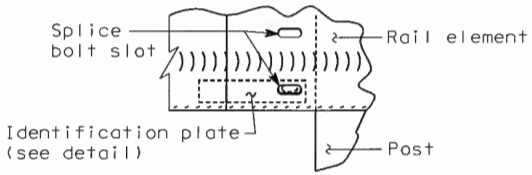

IDENTIFICATION PLATE MOUNTING DETAIL
(See Note 7)

NOTES

1. See Contract for transition and connection type.
2. The slope from the edge of the shoulder into the face of the guardrail should not be steeper than 10:1.
3. Guardrail installation shall be Beam Guardrail Type 1 with standard post and block.
4. First letter of case designation indicates end treatment on side road. Second letter indicates end treatment on main road. For instance a terminal on the side road and a bridge connection on the main road would be Case 22 BC.
5. For terminal type and details, see Contract and applicable Standard Plan(s).
6. Radius dimensions shall be etched into plate replacing the letters "HH" shown on the Identification Plate Detail. Digits shall be 1½" MIN height and ¾" MAX width. Plate shall be galvanized after etching.
7. The guardrail Identification Plate shall be mounted at the lower splice bolt on the back side of the rail element at the PC of the guardrail radius.

RICHARD BARSTOW ALBIN
STATE OF WASHINGTON
34042
REGISTERED
PROFESSIONAL ENGINEER
10/30/03
EXPIRES JULY 24, 2004

GUARDRAIL PLACEMENT
STRONG POST
INTERSECTION DESIGN
STANDARD PLAN C-2p

SHEET 1 OF 1 SHEET

APPROVED FOR PUBLICATION
STATE DESIGN ENGINEER 10-31-03 DATE
Washington State Department of Transportation

DATE	REVISION	BY
09/2003	CORRECTED REFERENCES TO NOTES.	MHG

DRAWN BY: FERN LIDDELL

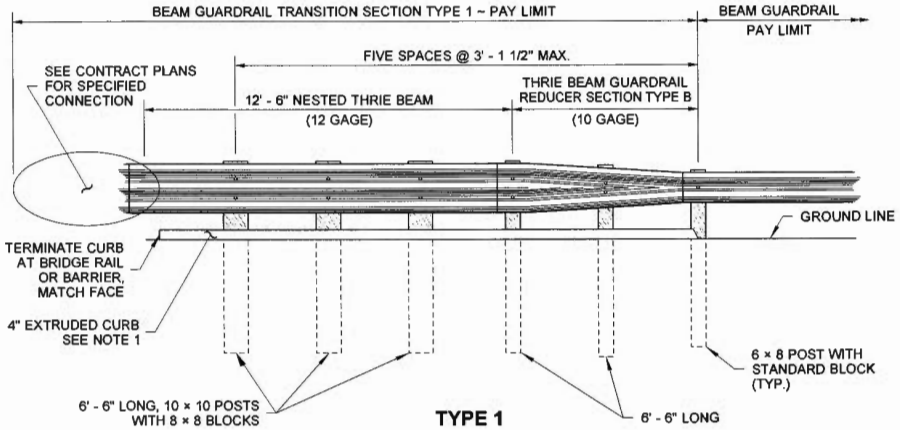

TYPE 1

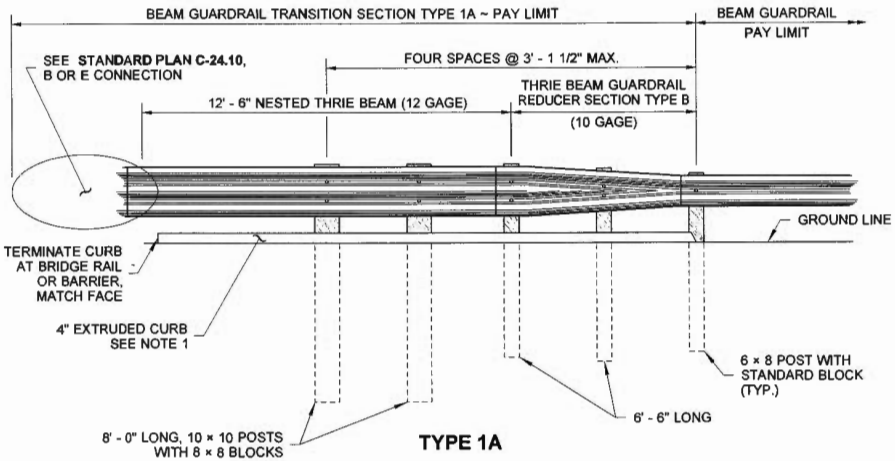

TYPE 1A

NOTE

1. Install Extruded Curb at face of Guardrail. See **Standard Plan F-10.40** for details.

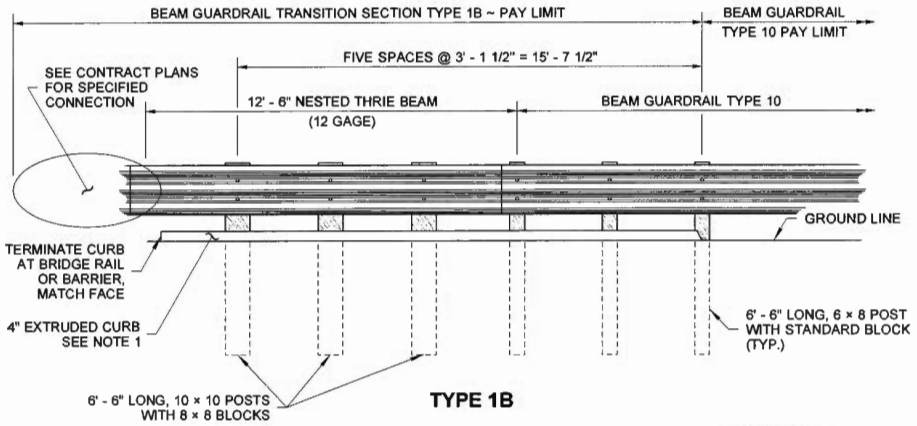

TYPE 1B

7. 2. 2012

BEAM GUARDRAIL TRANSITION SECTIONS

STANDARD PLAN C-3

SHEET 1 OF 1 SHEET

APPROVED FOR PUBLICATION

STATE DESIGN ENGINEER — DATE

Washington State Department of Transportation

DRAWN BY: FERN LIDDELL

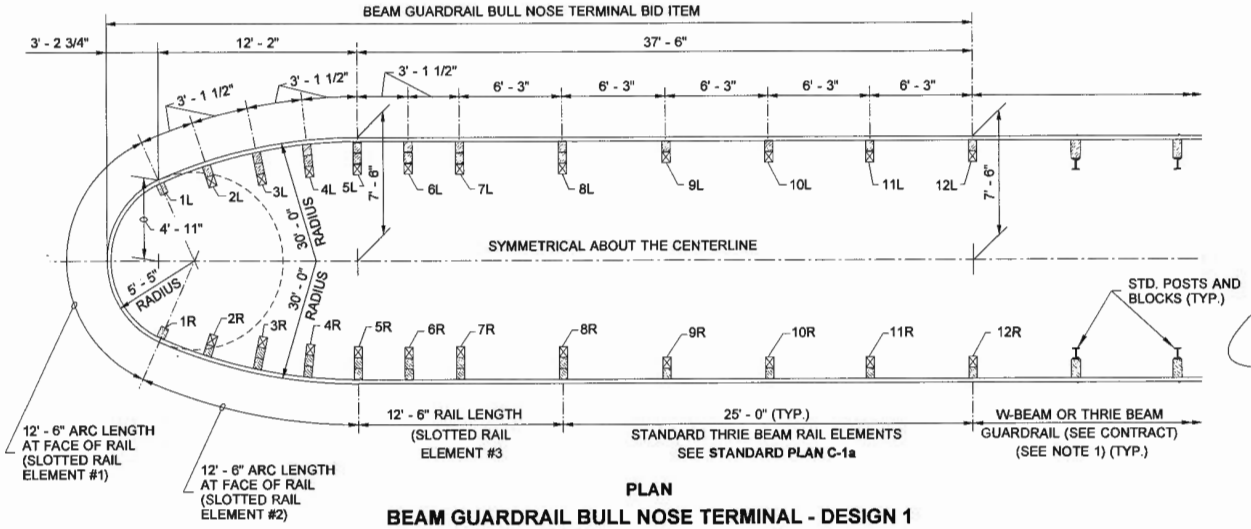

PLAN

BEAM GUARDRAIL BULL NOSE TERMINAL - DESIGN 1

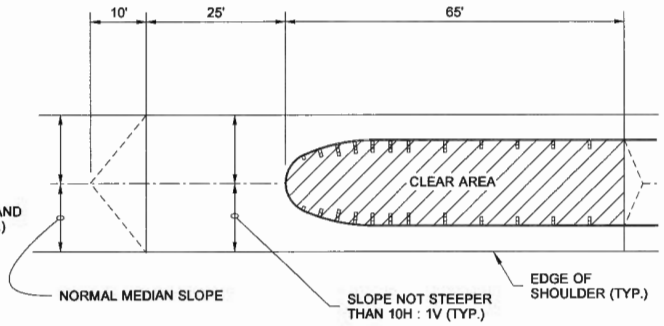

BULL NOSE GRADING PLAN

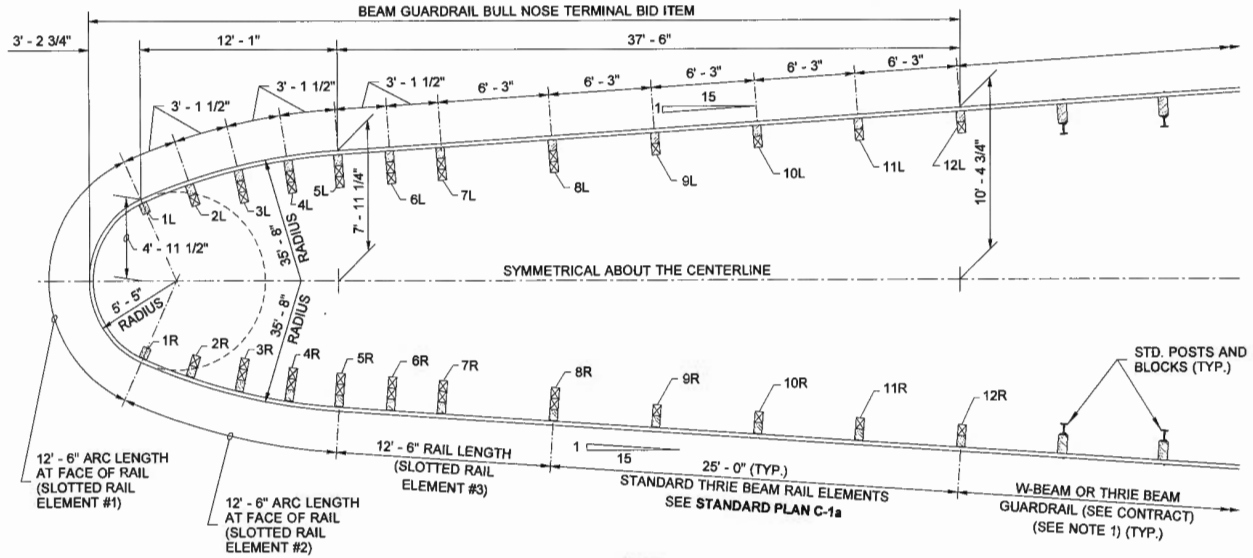

PLAN

BEAM GUARDRAIL BULL NOSE TERMINAL - DESIGN 2

NOTE

1. For W-Beam applications extend the rail from the bullnose terminal by using a "Reducer Element Type C" followed by a standard Post and Block, spaced at 3' - 1 1/2". Continue runs with standard 6' - 3" post spacing. For additional Details see **Standard Plans C-20.10 and C-25.20.**

7-2-2012

BEAM GUARDRAIL BULL NOSE TERMINAL

STANDARD PLAN C-4f

SHEET 1 OF 4 SHEETS

APPROVED FOR PUBLICATION

STATE DESIGN ENGINEER — DATE 7/2/12

Washington State Department of Transportation

DRAWN BY: FERN LIDDELL

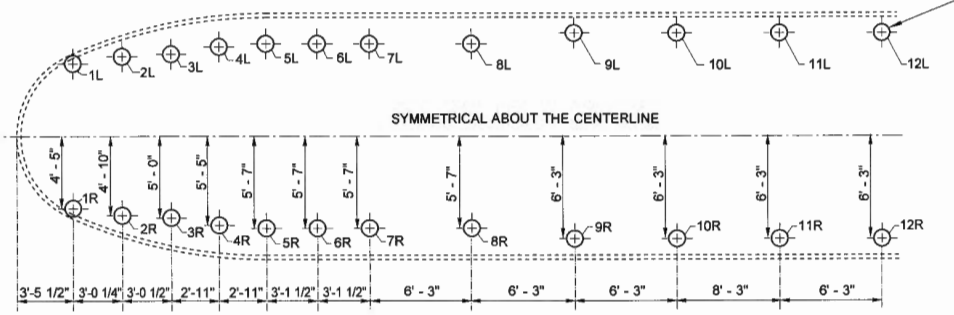

PLAN
GUARDRAIL POST LAYOUT - DESIGN 1

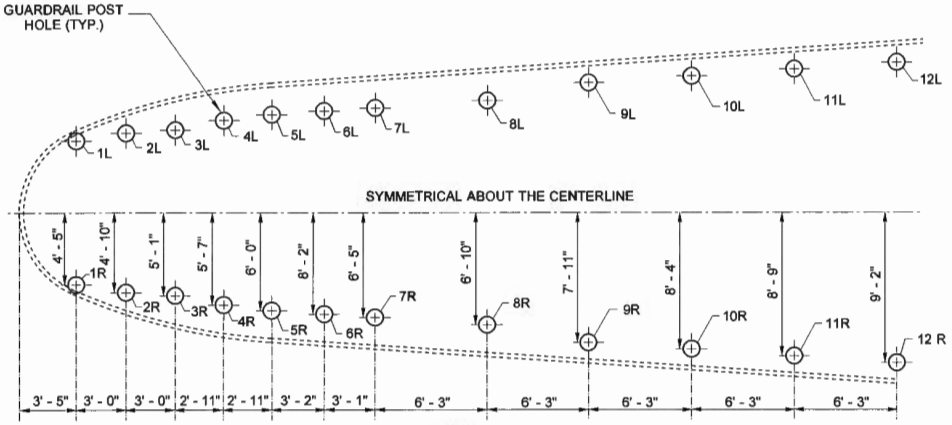

PLAN
GUARDRAIL POST LAYOUT - DESIGN 2

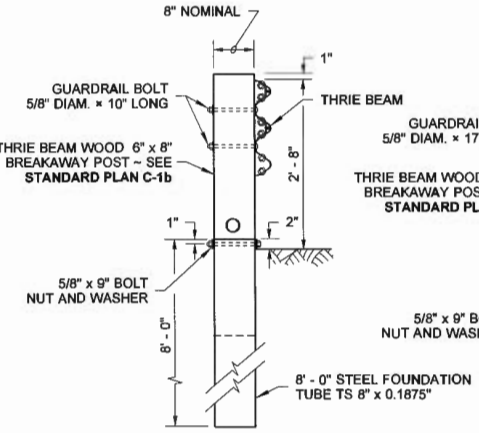

POST
1R & 1L

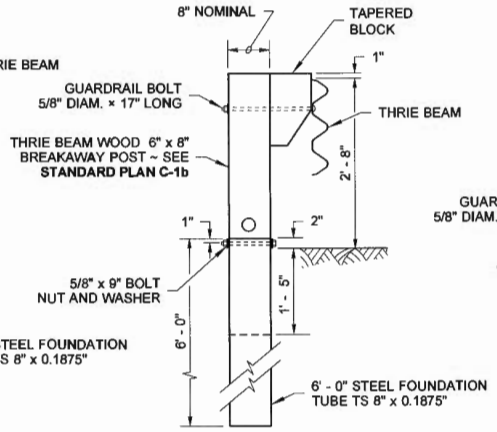

POST
2R & 2L

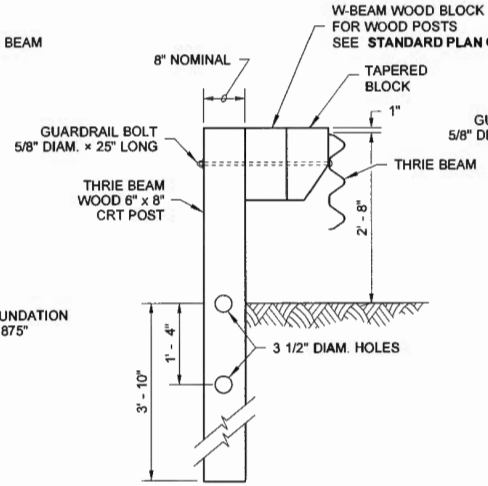

POST
3R TO 8R
3L TO 8L

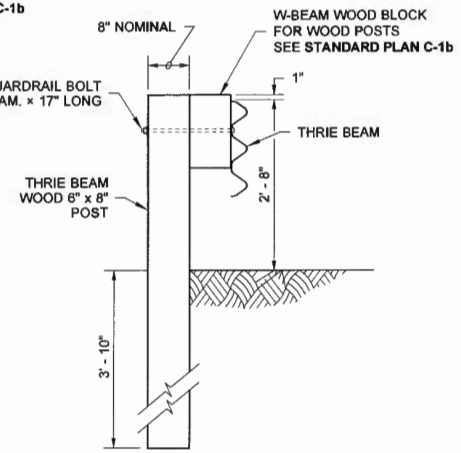

POST
9R TO 12R
9L TO 12L

NOTE : CABLE BEARING
PLATE NOT SHOWN

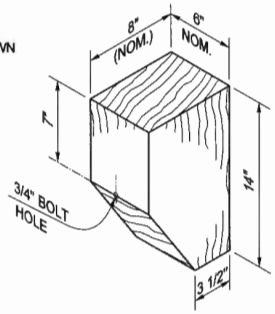

TAPERED BLOCK

7-2-2012

BEAM GUARDRAIL
BULL NOSE TERMINAL

STANDARD PLAN C-4f

SHEET 2 OF 4 SHEETS

APPROVED FOR PUBLICATION

7/2/12

STATE DESIGN ENGINEER — DATE

Washington State Department of Transportation

DRAWN BY: FERN LIDDELL

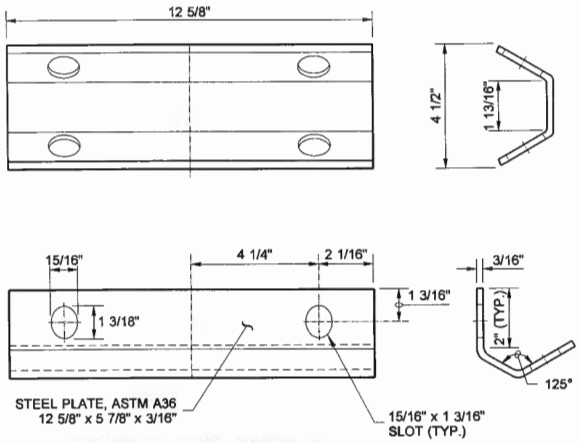

NOSE CABLE ANCHOR PLATE

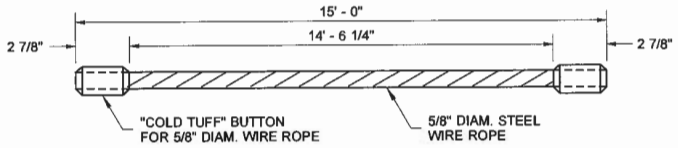

NOSE CABLE

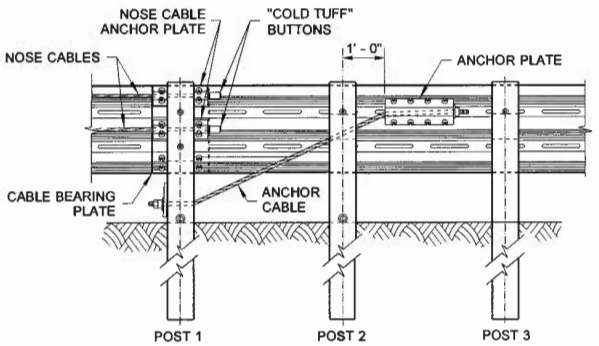

CABLE ANCHOR & BRACKET ASSEMBLY

FOR ANCHOR PLATE, CABLE END PLATE, AND ANCHOR CABLE ~ SEE **STANDARD PLAN C-6f**

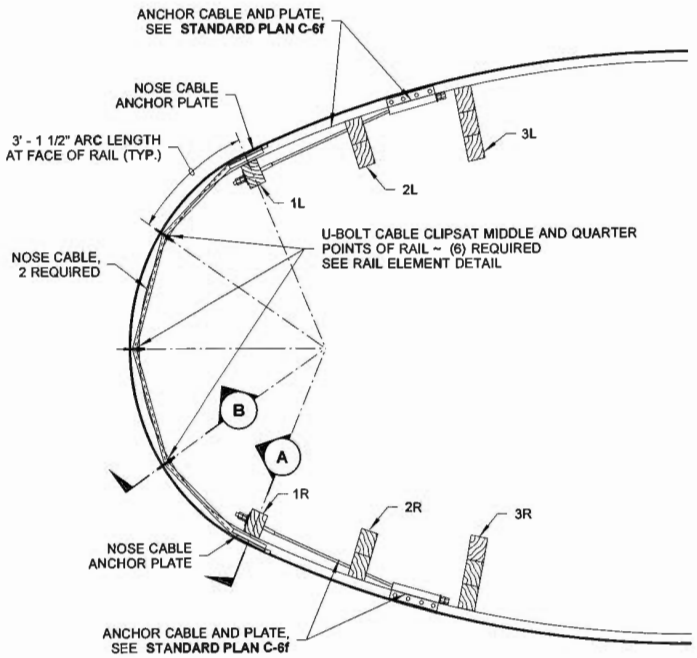

PLAN - THRIE BEAM NOSE

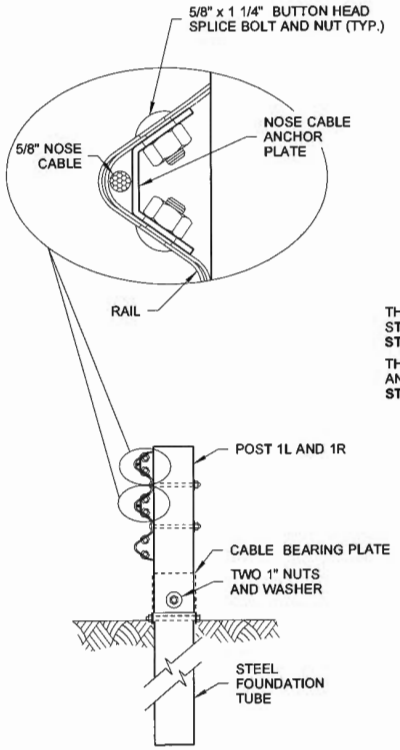

NOSE CABLE ASSEMBLY

SECTION (A)

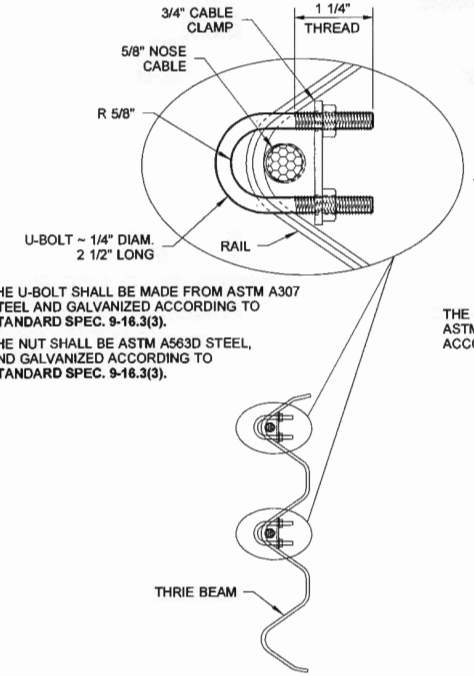

THE U-BOLT SHALL BE MADE FROM ASTM A307 STEEL AND GALVANIZED ACCORDING TO **STANDARD SPEC. 9-16.3(3).**

THE NUT SHALL BE ASTM A563D STEEL, AND GALVANIZED ACCORDING TO **STANDARD SPEC. 9-16.3(3).**

U-BOLT CABLE CLIP ASSEMBLY

SECTION (B)

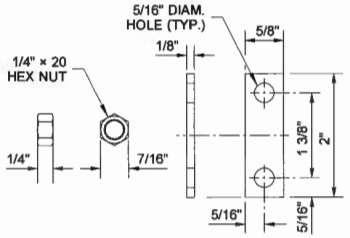

U-BOLT PLATE WASHER

THE U-BOLT PLATE WASHER SHALL BE MADE FROM ASTM A36 OR A36M PLATE STEEL, AND GALVANIZED ACCORDING TO **STANDARD SPEC. 9-16.3(3).**

7·2·2012

BEAM GUARDRAIL
BULL NOSE TERMINAL

STANDARD PLAN C-4f

SHEET 3 OF 4 SHEETS

APPROVED FOR PUBLICATION

STATE DESIGN ENGINEER — DATE 7/2/12

Washington State Department of Transportation

DRAWN BY: FERN LIDDELL

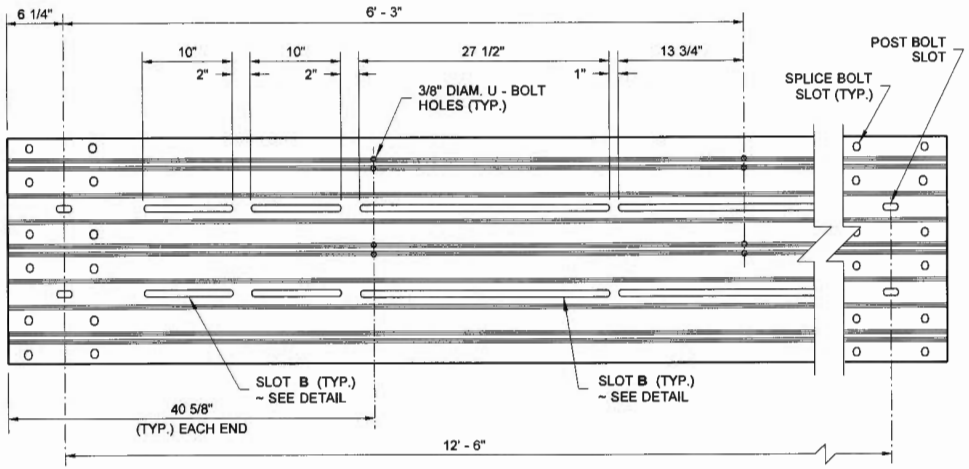

SLOTTED THRIE BEAM RAIL ELEMENT #1

SEE **STANDARD PLAN C-1a** FOR RAIL ELEMENT DETAILS

(RAIL DIMENSIONS SHOWN ARE BEFORE BENDING TO RADIUS SHOWN IN PLAN)

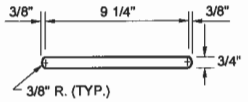

SLOT A DETAIL

SLOT B DETAIL

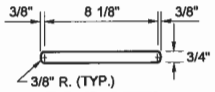

SLOT C DETAIL

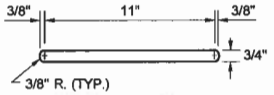

SLOT D DETAIL

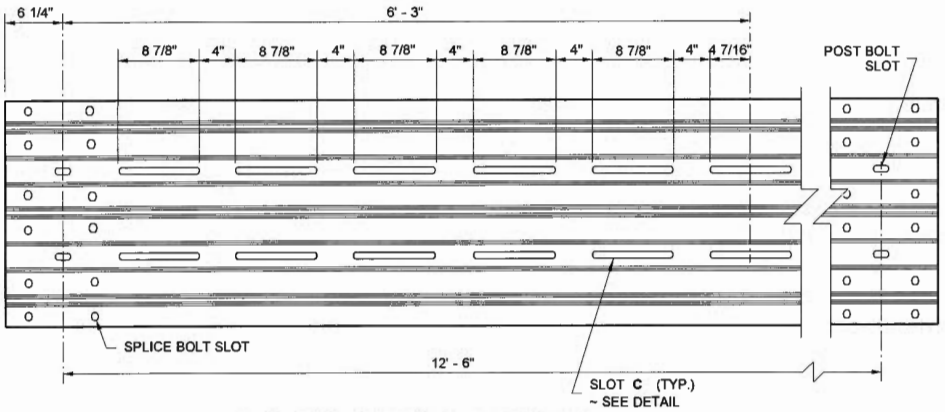

SLOTTED THRIE BEAM RAIL ELEMENT #2

SEE **STANDARD PLAN C-1a** FOR RAIL ELEMENT DETAILS

(RAIL DIMENSIONS SHOWN ARE BEFORE BENDING TO RADIUS SHOWN IN PLAN)

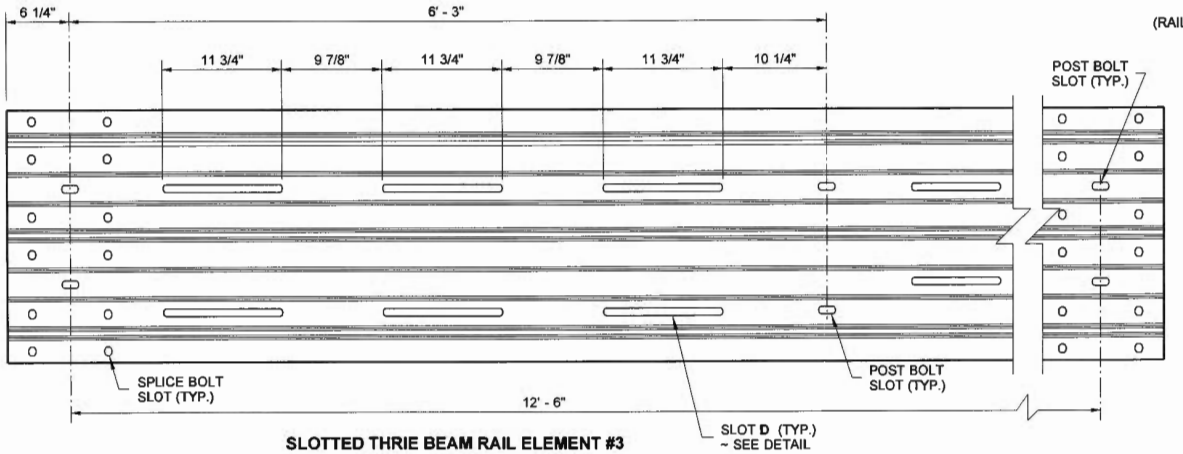

SLOTTED THRIE BEAM RAIL ELEMENT #3

SEE **STANDARD PLAN C-1a** FOR RAIL ELEMENT DETAILS

7-2-2012

BEAM GUARDRAIL
BULL NOSE TERMINAL

STANDARD PLAN C-4f

SHEET 4 OF 4 SHEETS

APPROVED FOR PUBLICATION

STATE DESIGN ENGINEER — DATE 7/2/12

Washington State Department of Transportation

This page left blank intentionally.

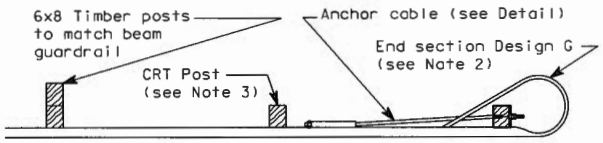

PLAN

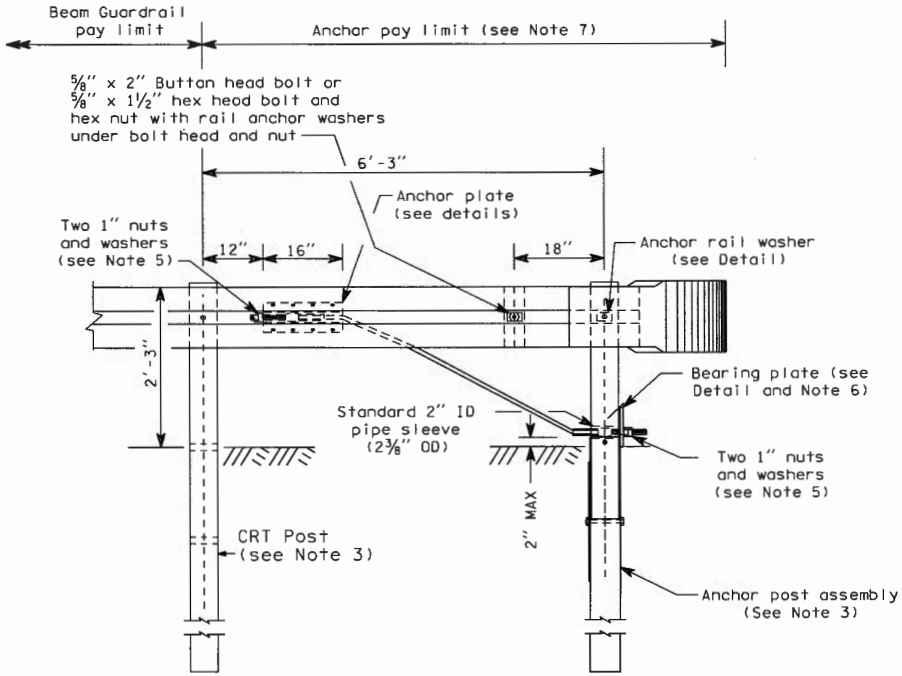

TYPE 1 ANCHOR

NOTES

1. Anchor plate may be constructed from 1/4" plates welded to equal strength and dimensions as shown.
2. For end section details see Standard Plan "Beam Guardrail End Sections".
3. For post details, see Standard Plan "Beam Guardrail Posts and Blocks".
4. Eight 5/8" x 1 1/2" machine bolts with hex nut and washer. Place washer on face side of rail.
5. Outside nut shall be torqued against inside nut a minimum of 100 ft-lbs.
6. Toenail bearing plate with 10d nail at corners to prevent turning.
7. Anchor pay limit does not apply when anchor is included in a Beam Guardrail Terminal.

BEAM GUARDRAIL ANCHOR TYPE 1

CLIFFORD B. MANSFIELD STATE OF WASHINGTON 15224 REGISTERED PROFESSIONAL ENGINEER
EXPIRES MAY 3, 1998

STANDARD PLAN C-6

APPROVED FOR PUBLICATION

STATE DESIGN ENGINEER — DATE 5/30/97

WASHINGTON STATE DEPARTMENT OF TRANSPORTATION
OLYMPIA, WASHINGTON

Sheet 1 of 2 Sheets

DRAWN BY: FERN LIDDELL

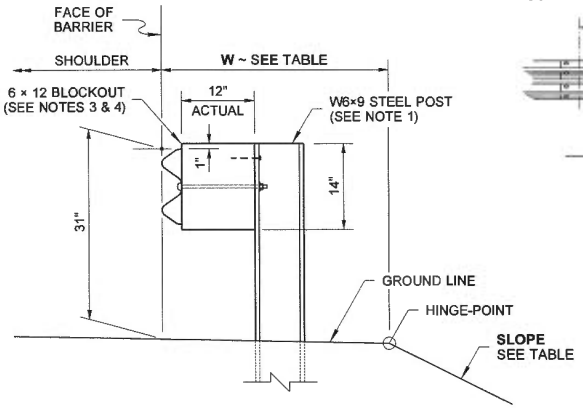

TYPICAL SECTION ~ WITHOUT CURB
(6' - 0" LONG POSTS)

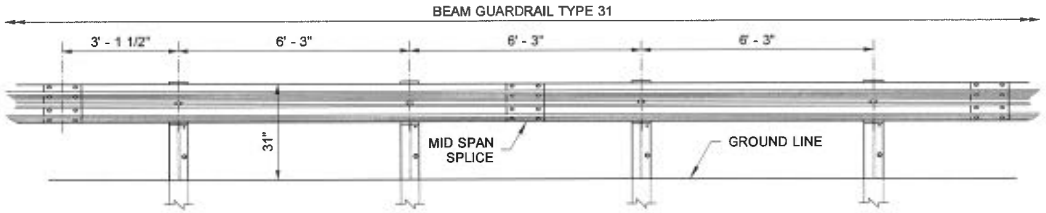

TYPICAL ELEVATION

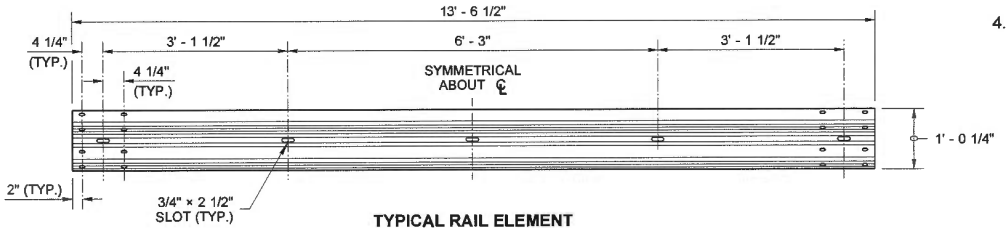

TYPICAL RAIL ELEMENT

NOTES

1. Refer to **Standard Plan C-1** and **C-1b** for additional details not shown on this plan.
2. Extend shoulder pavement to provide a base for the extruded curb. See Contract Plans for exceptions to distances shown.
3. Use a single combination of blocks (no more than 2) to achieve the actual 12" offset. See **Standard Specification 9-16.3(2)**. Wood blocks shall be toe-nailed to post and blocks, (if block combinations are utilized) with a 16d galvanized nail to prevent block rotation.
4. Wood blocks are shown. Blocks of an approved alternative material may be used. **See Standard Specification 9-16.3(2).**

SLOPE \ EMBANKMENT TABLE	
SLOPE	W
2H : 1V OR FLATTER	2.5' MIN.
STEEPER THAN 2H : 1V BUT NOT STEEPER THAN 1H : 1V	4.0' MIN.

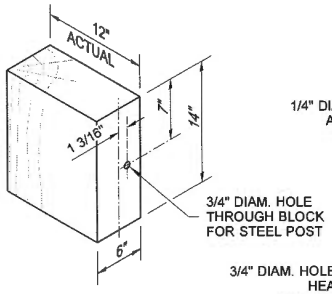

WOOD BLOCK

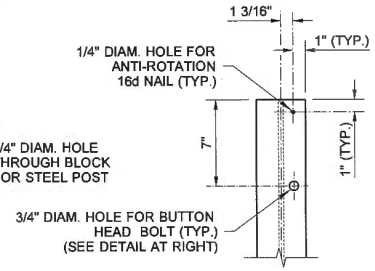

STEEL POST

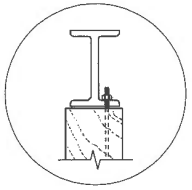

DETAIL

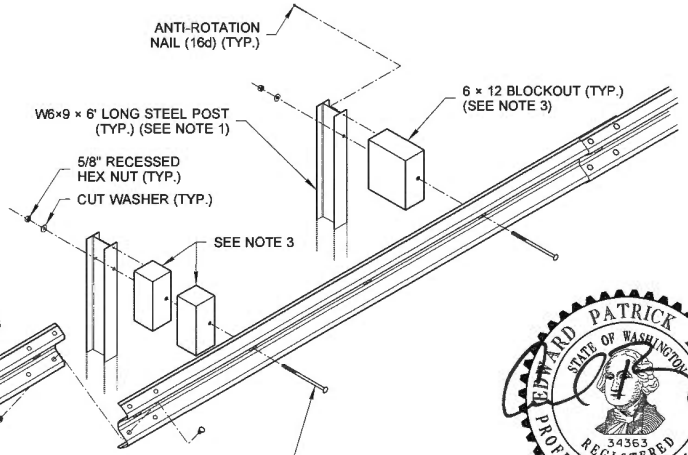

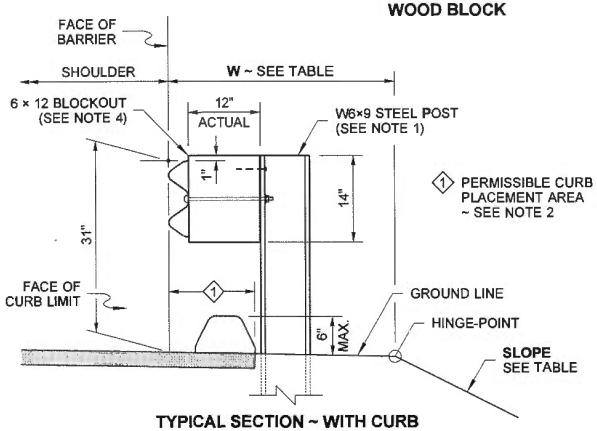

TYPICAL SECTION ~ WITH CURB
(6' - 0" LONG POSTS)

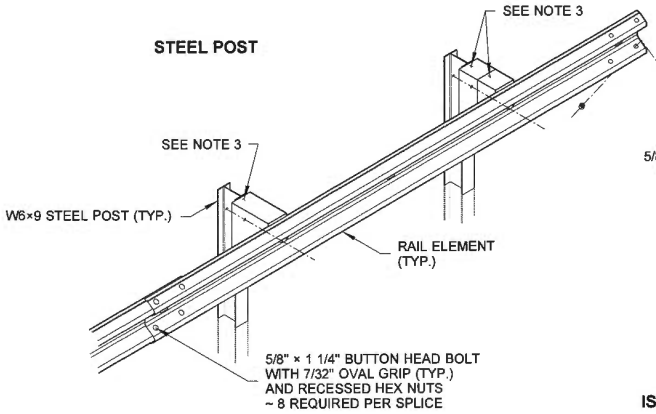

ISOMETRIC VIEW

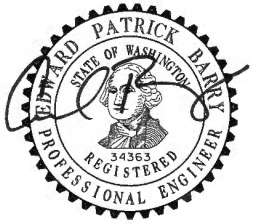

7. 2. 2012

BEAM GUARDRAIL TYPE 31

STANDARD PLAN C-20.10-00

SHEET 1 OF 1 SHEET

APPROVED FOR PUBLICATION

STATE DESIGN ENGINEER — DATE 7/2/12

Washington State Department of Transportation

DRAWN BY: FERN LIDDELL

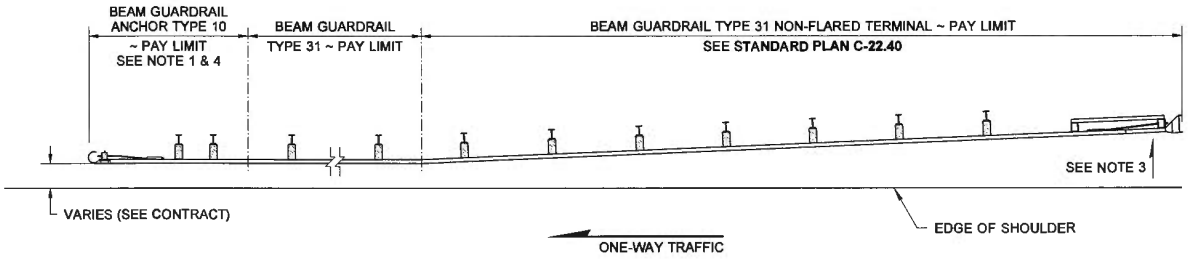

CASE 1-31

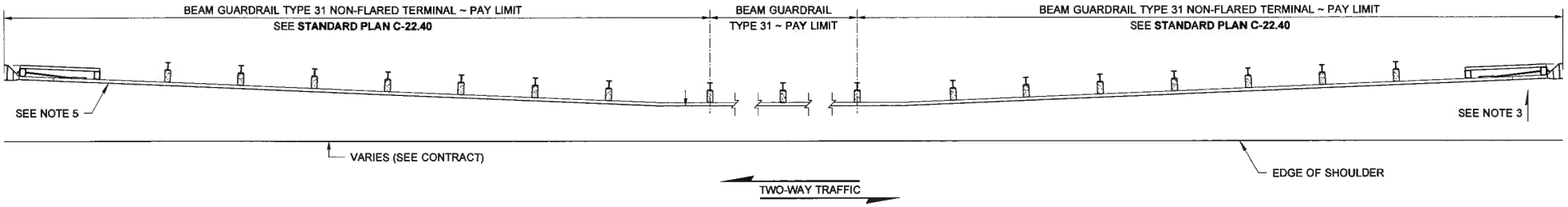

CASE 2-31

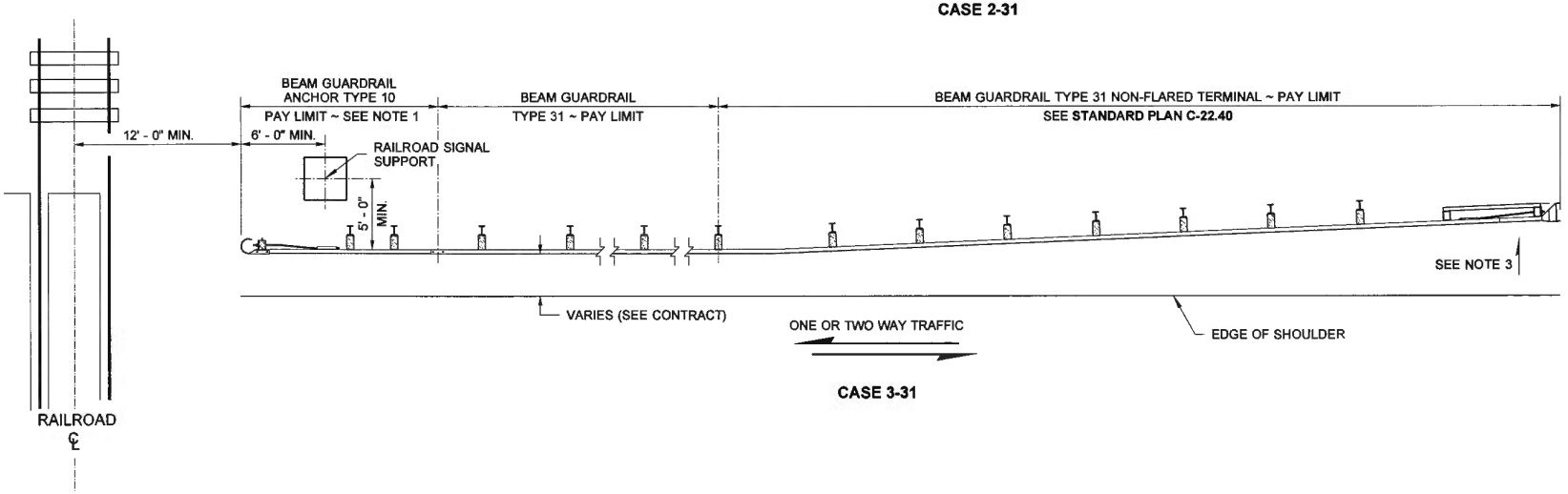

CASE 3-31

NOTES

1. For component details, see **Standard Plan C-23.60**.
2. For terminal type and details, see Contract Plans and applicable drawings.
3. The slope from the edge of the shoulder into the face of the guardrail cannot exceed 10H : 1V when the face of the guardrail is less than 12' - 0" from the edge of the shoulder.
4. For one-way traffic and where a crashworthy terminal is not required, use the Beam Guardrail Anchor Type 10, see **Standard Plan C-23.60**.
5. Where a crashworthy terminal is required use a Beam Guardrail Type 31 Non-Flared Terminal, see **Standard Plan C-22.40**.

7-2-2012

BEAM GUARDRAIL TYPE 31 PLACEMENT (CASES 1-31, 2-31, & 3-31) STANDARD PLAN C-20.14-02

SHEET 1 OF 1 SHEET

APPROVED FOR PUBLICATION

STATE DESIGN ENGINEER — DATE

Washington State Department of Transportation

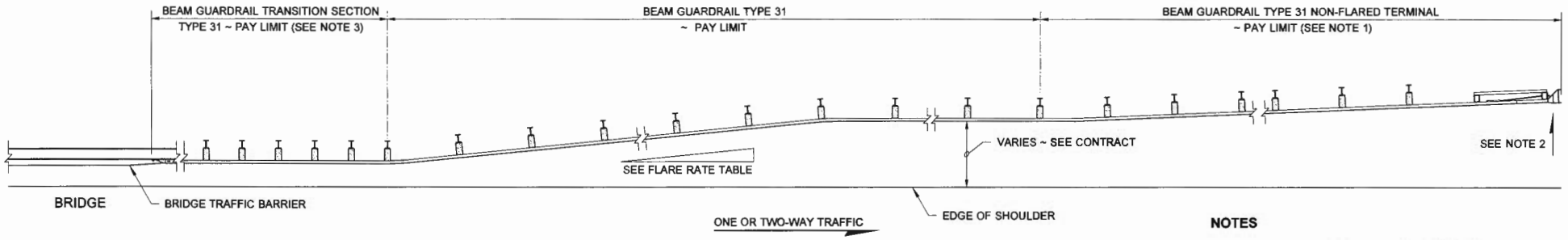

CASE 4 - 31

DRAWN BY: FERN LIDDELL

NOTES

1. For details, see **Standard Plan C-22.40**.
2. The slope from the edge of the shoulder into the face of the guardrail should not be steeper than 10H : 1V when the guardrail is within 12' - 0" from the edge of the shoulder.
3. See Contract for Beam Guardrail Transition Section type and Connection to Bridge Traffic Barrier or Concrete Barrier. See **Standard Plan C-24.10** for connection details.

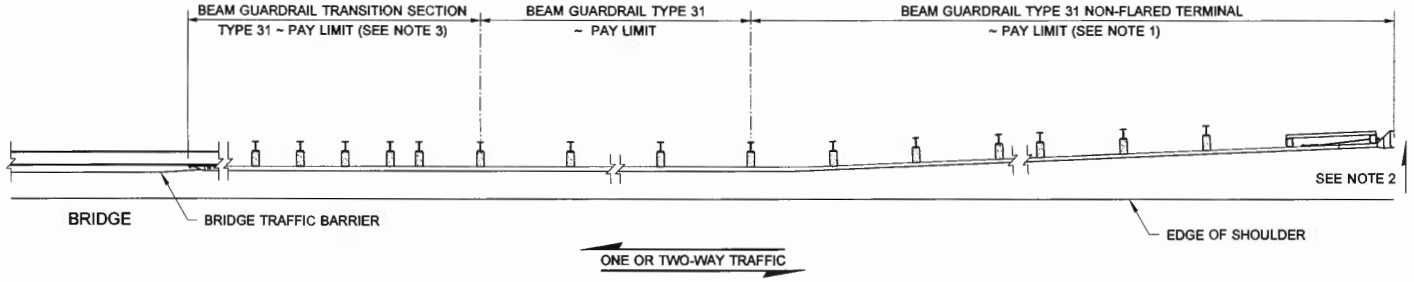

CASE 5 - 31

FLARE RATE TABLE	
POSTED SPEED (MPH)	RATE
70	15 : 1
60	14 : 1
55	12 : 1
50	11 : 1
45	10 : 1
40 OR LESS	9 : 1

EDWARD PATRICK BARRY
STATE OF WASHINGTON
34363
REGISTERED
PROFESSIONAL ENGINEER

7·2·2012

BEAM GUARDRAIL TYPE 31 PLACEMENT (CASES 4-31 & 5-31)

STANDARD PLAN C-20.15-01

SHEET 1 OF 1 SHEET

APPROVED FOR PUBLICATION

STATE DESIGN ENGINEER — DATE

Washington State Department of Transportation

DRAWN BY: FERN LIDDELL

NOTES

1. The slope from the edge of the shoulder into the face of the guardrail should not exceed 10H : 1V when the guardrail is within 12' - 0" from the edge of the shoulder.
2. For details, See **Standard Plan C-23.60**.
3. For details, See **Standard Plan C-22.40**.

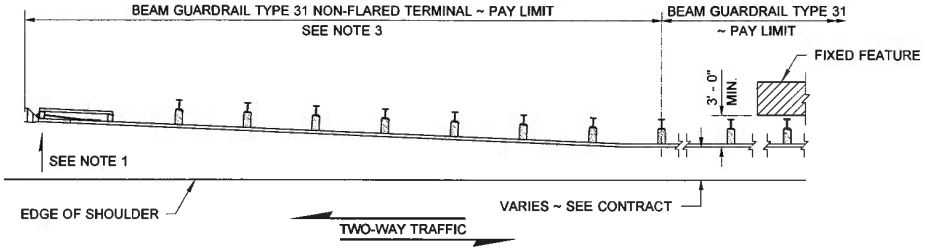

CASE 10A - 31
(TRAILING END)

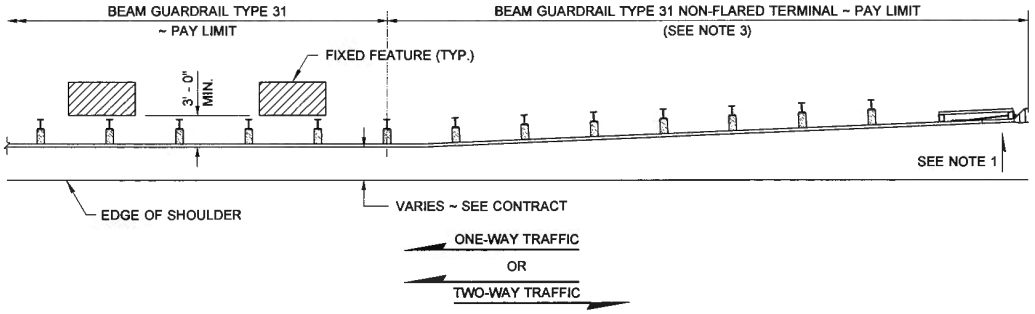

CASE 10A-31, 10B-31, OR 10C-31
(APPROACH END)

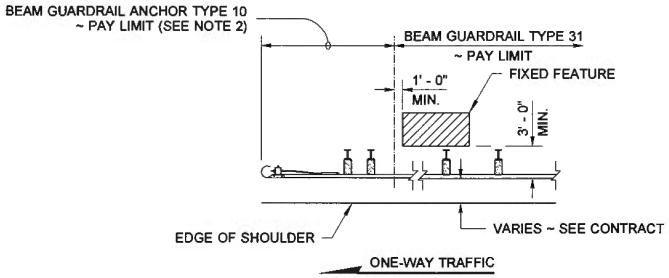

CASE 10B-31
(TRAILING END)

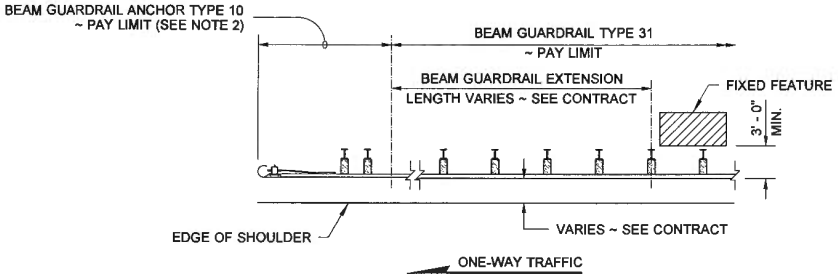

CASE 10C-31
(TRAILING END)

7.2.2012

BEAM GUARDRAIL TYPE 31 PLACEMENT (CASES 10A-31, 10B-31 & 10C-31)
STANDARD PLAN C-20.18-01

APPROVED FOR PUBLICATION

STATE DESIGN ENGINEER — DATE 7/2/12

Washington State Department of Transportation

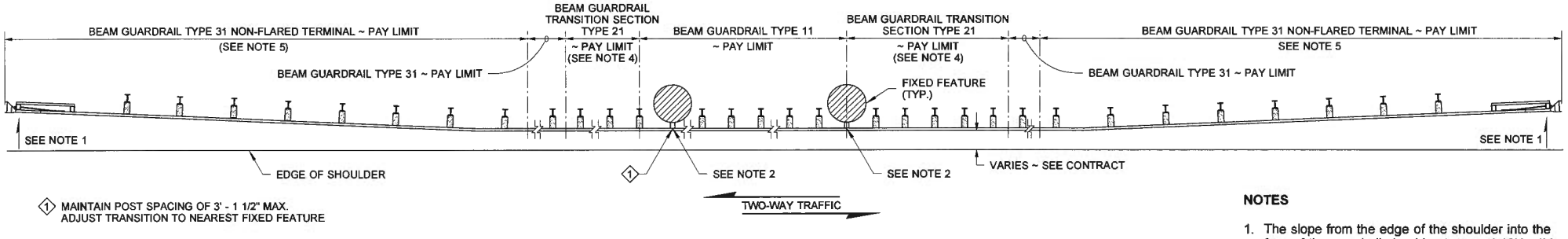

1 MAINTAIN POST SPACING OF 3' - 1 1/2" MAX.
ADJUST TRANSITION TO NEAREST FIXED FEATURE

CASE 11A-31

DRAWN BY: FERN LIDDELL

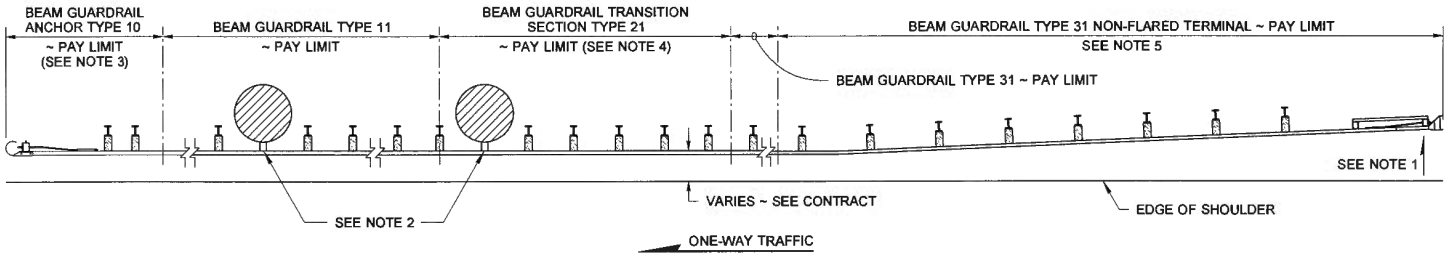

CASE 11B-31

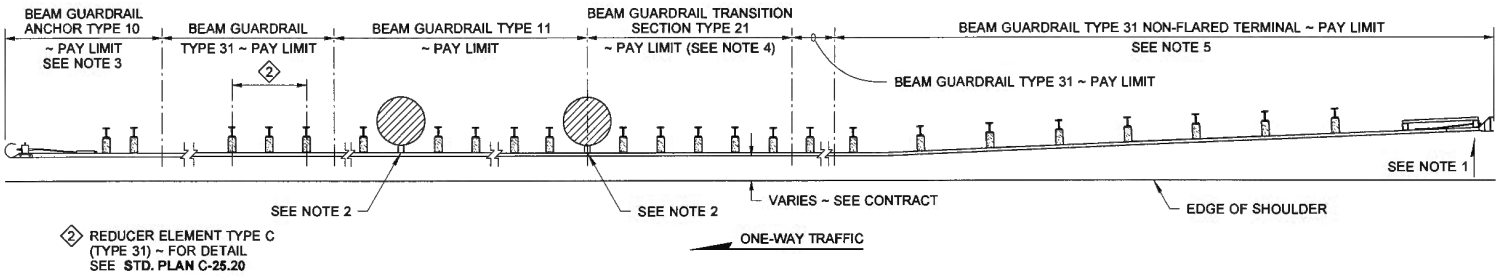

2 REDUCER ELEMENT TYPE C (TYPE 31) ~ FOR DETAIL SEE **STD. PLAN C-25.20**

CASE 11C-31

NOTES

1. The slope from the edge of the shoulder into the face of the guardrail should not exceed 10H : 1V when the guardrail is within 12' - 0" from the edge of the shoulder.
2. Attach the standard wood block to the rail using two 5/8" × 4" lag bolts.
3. Beam Guardrail Anchor Type 10 (W-Beam) or Type 10 (Thrie Beam) required. For details, see **Standard Plan C-23.60**.
4. For details, see **Standard Plan C-25.20**.
5. For details, see **Standard Plan C-22.40**.

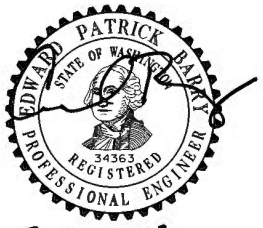

7. 2. 2012

BEAM GUARDRAIL TYPE 31 PLACEMENT (CASES 11A-31, 11B-31 & 11C-31)
STANDARD PLAN C-20.19-01

SHEET 1 OF 1 SHEET

APPROVED FOR PUBLICATION

STATE DESIGN ENGINEER — DATE 7/2/12

Washington State Department of Transportation

DRAWN BY: FERN LIDDELL

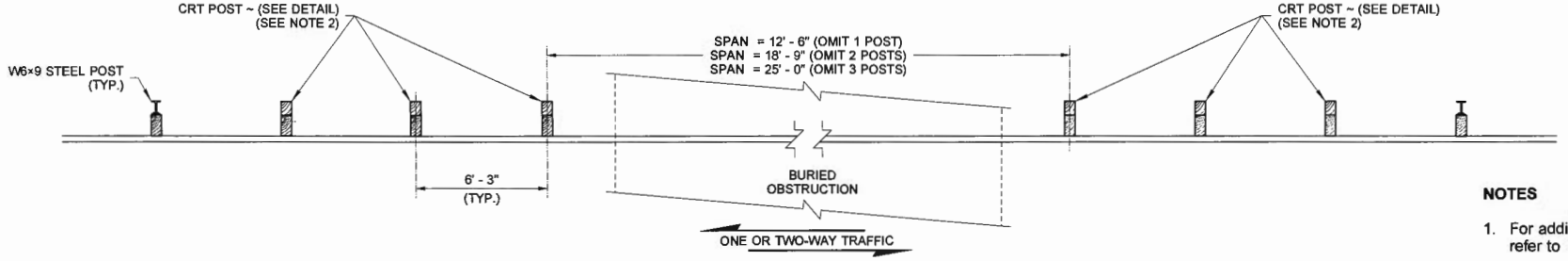

PLAN VIEW

NOTES

1. For additional details not shown on this plan, refer to **Standard Plan C-20.10.**
2. CRT post to be wood only.

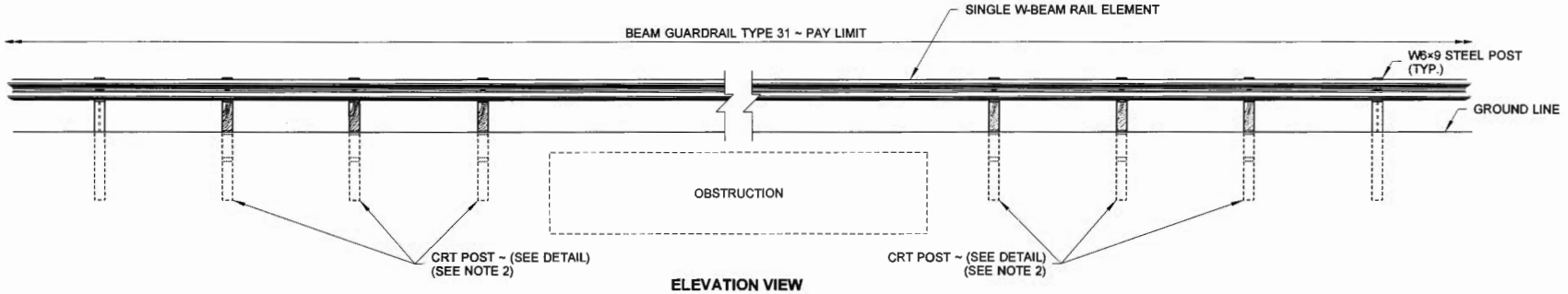

ELEVATION VIEW

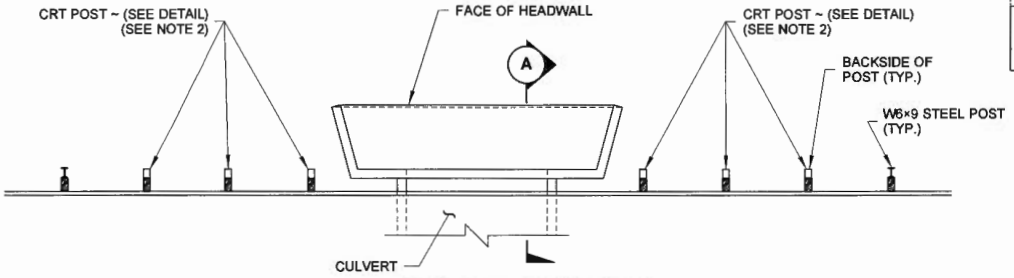

SPAN WITH HEADWALL DETAIL

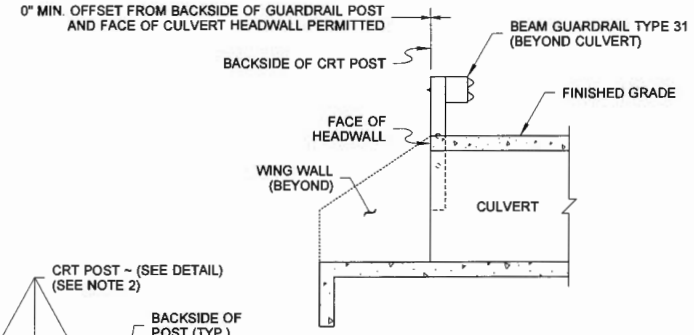

SECTION (A)

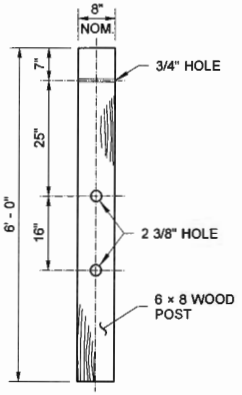

CONTROLLED RELEASING TERMINAL (CRT) POST DETAIL

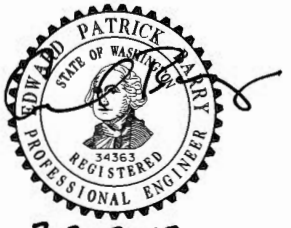

7·2·2012

BEAM GUARDRAIL TYPE 31
PLACEMENT 12' - 6", 18' - 9"
OR 25' - 0" SPAN

STANDARD PLAN C-20.40-03

SHEET 1 OF 1 SHEET

APPROVED FOR PUBLICATION

STATE DESIGN ENGINEER — DATE 7/2/12

Washington State Department of Transportation

DRAWN BY: BILL BERENS

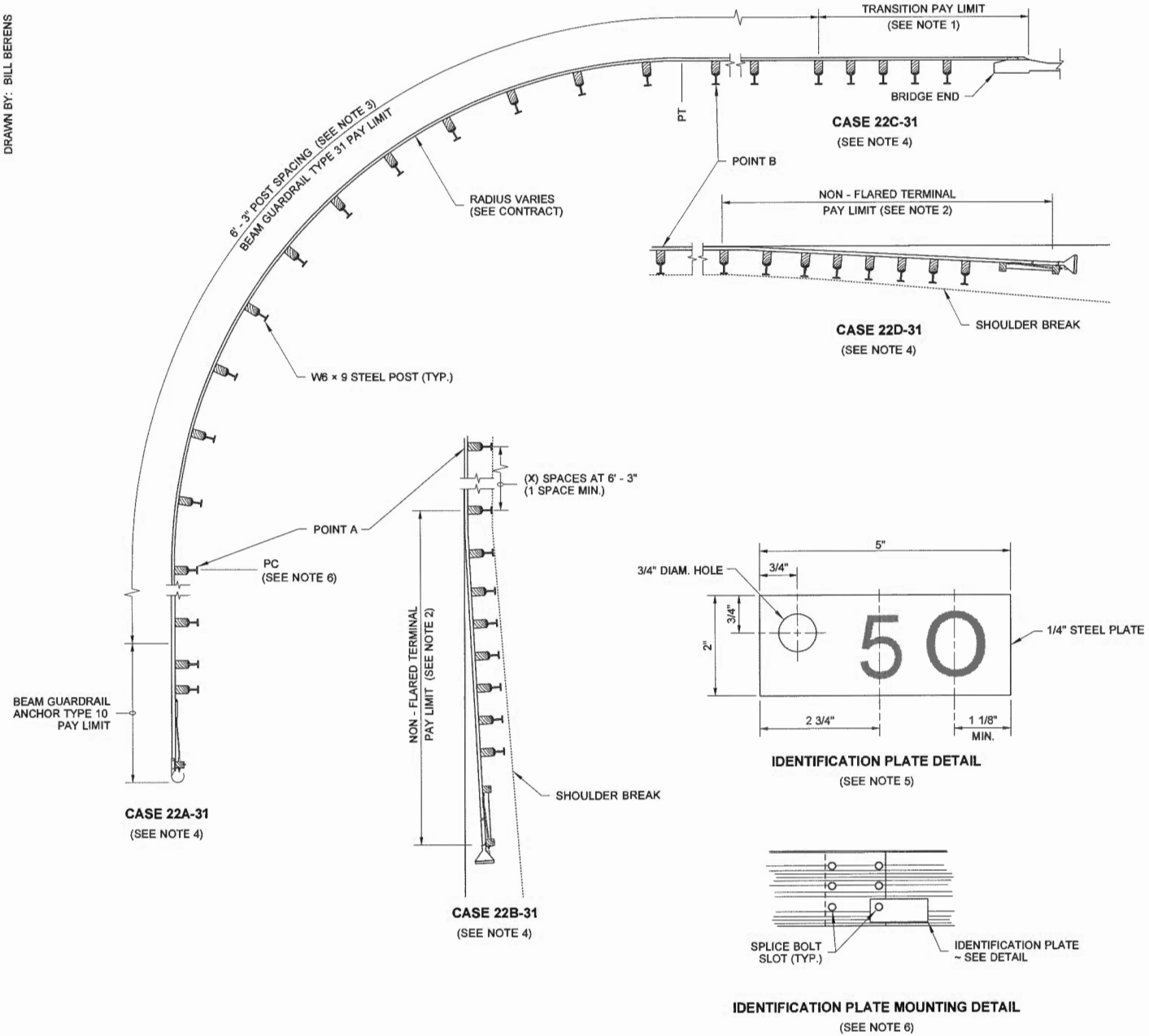

NOTES

1. See Contract for transition and connection type.
2. For additional installation requirements for Non-Flared Terminal placement see **Standard Plan C-22.40.**
3. Guardrail installation shall be Beam Guardrail Type 31 with standard post and block. See **Standard Plan C-20.10** for additional details.
4. The first letter of case designation indicates the end treatment on the side road. The second letter indicates the end treatment on the main road. For instance, a terminal on a side road and a bridge connection on the main road would be Case 22BC-31.
5. The radius dimension shall be etched into the plate as shown in the example on the Identification Plate Detail. Numerals shall be 1 1/2" high minimum, and 3/4" wide maximum. Plate shall be galvanized after etching and the letter shall remain permanently legible.
6. The guardrail Identification Plate shall be mounted at the lower splice bolt on the back side of the rail element at the PC of the guardrail radius.

7-2-2012

GUARDRAIL PLACEMENT
STRONG POST ~ TYPE 31
INTERSECTION DESIGN
STANDARD PLAN C-20.42-03

SHEET 1 OF 1 SHEET

APPROVED FOR PUBLICATION

STATE DESIGN ENGINEER — DATE 7/2/12

Washington State Department of Transportation

DRAWN BY: FERN LIDDELL

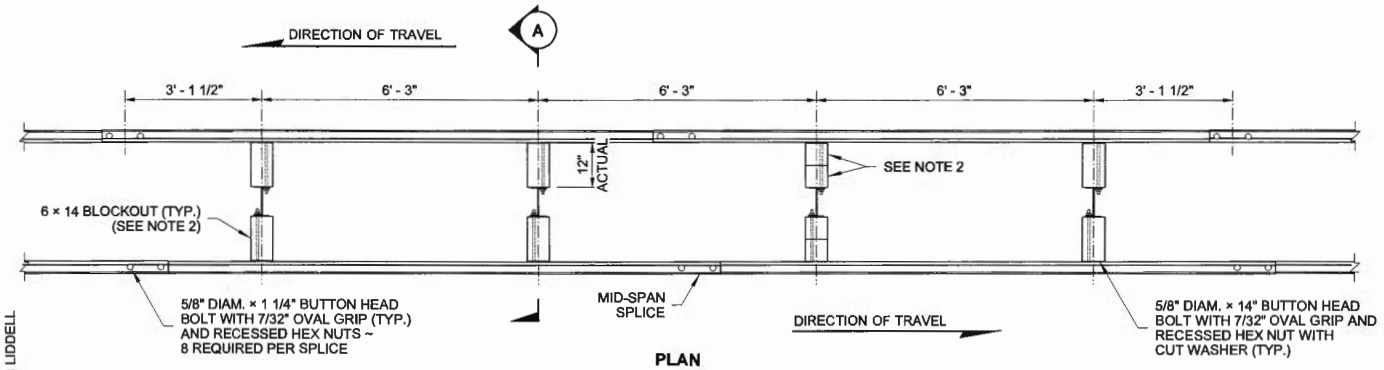

PLAN

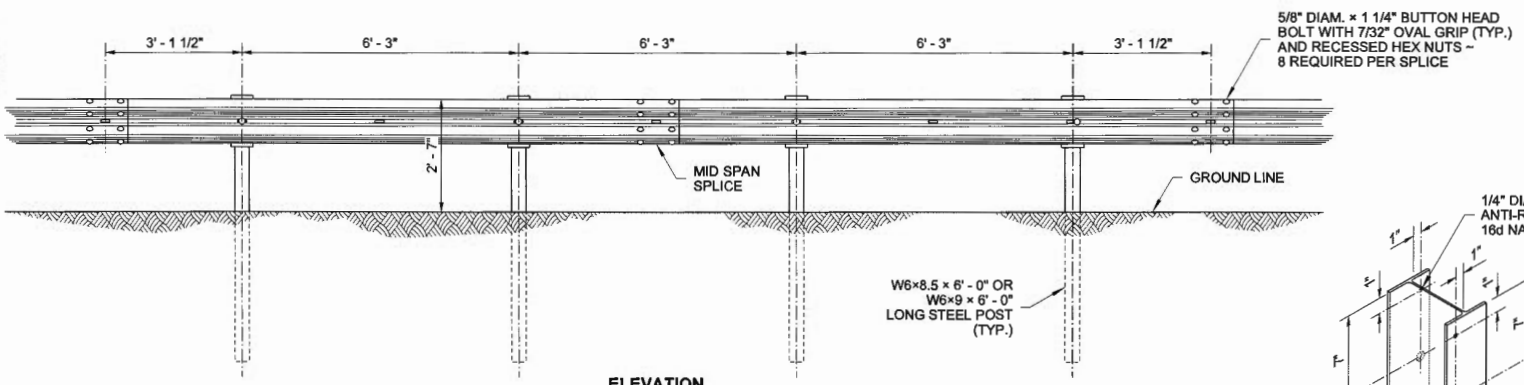

ELEVATION

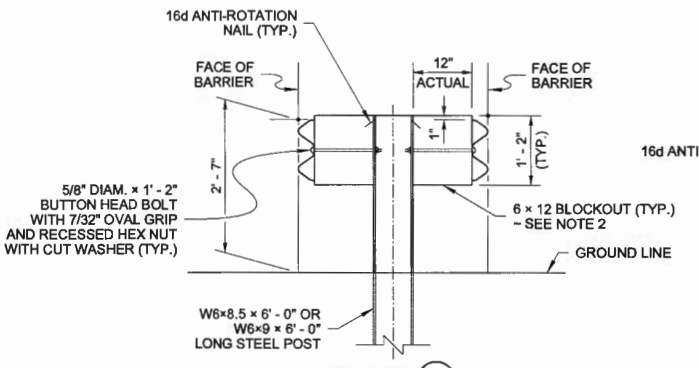

SECTION A

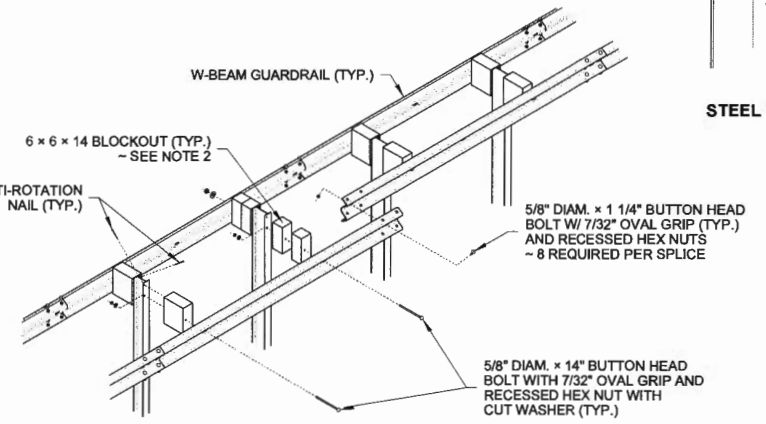

ISOMETRIC

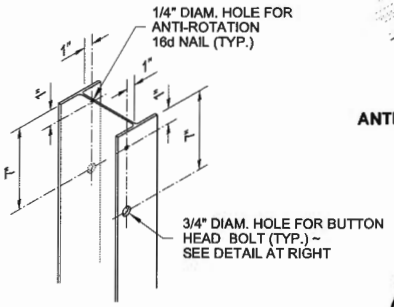

STEEL POST

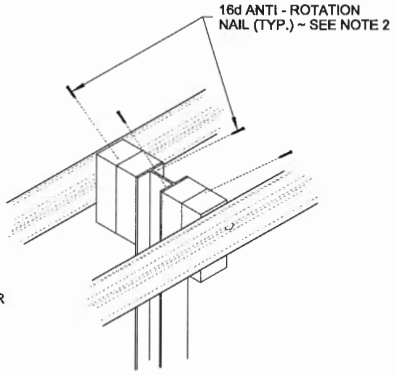

ANTI-ROTATION NAIL DETAIL

NOTES

1. Beam Guardrail post spacing shall be 6' - 3" on centers.
2. Use a single or combination of blocks to achieve the actual 12" offset. See **Standard Specification 9-16.3(2)**. Wood blocks shall be toe-nailed to post (and blocks, if block combinations are used) with 16d galvanized nails to prevent block rotation.
3. Attach blockouts to steel posts using bolt holes on approaching traffic side of post web.
4. For details not shown, see **Standard Plan C-20.10.**
5. Wood blocks shown. Blocks of alternate material may be used. See **Standard Specification 9-16.3(2).**

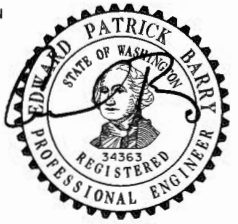

7-2-2012

BEAM GUARDRAIL TYPE 31 DS (DOUBLE SIDED) (W-BEAM)

STANDARD PLAN C-20.45-01

SHEET 1 OF 1 SHEET

APPROVED FOR PUBLICATION

STATE DESIGN ENGINEER — DATE 7/2/12

Washington State Department of Transportation

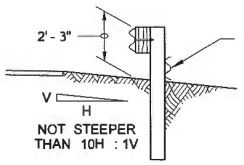

SECTION (A)

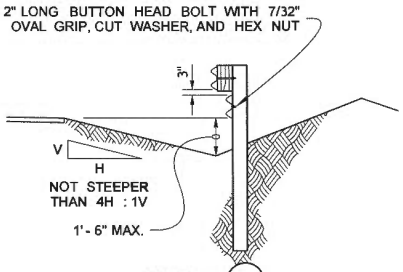

SECTION (B)

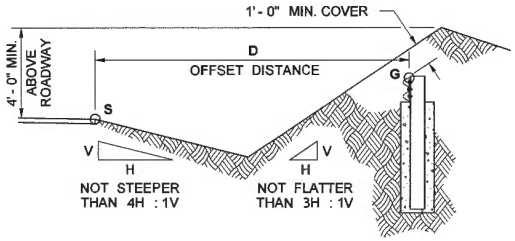

SECTION (C)

SEE NOTE 3

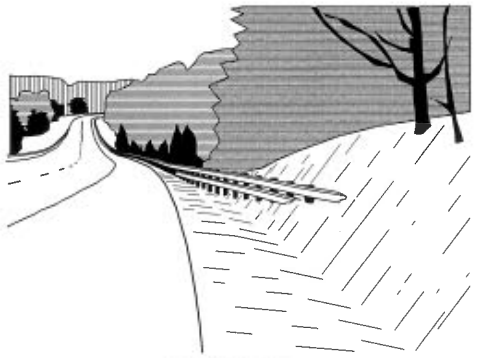

PERSPECTIVE

DRAWN BY: LISA CYFORD

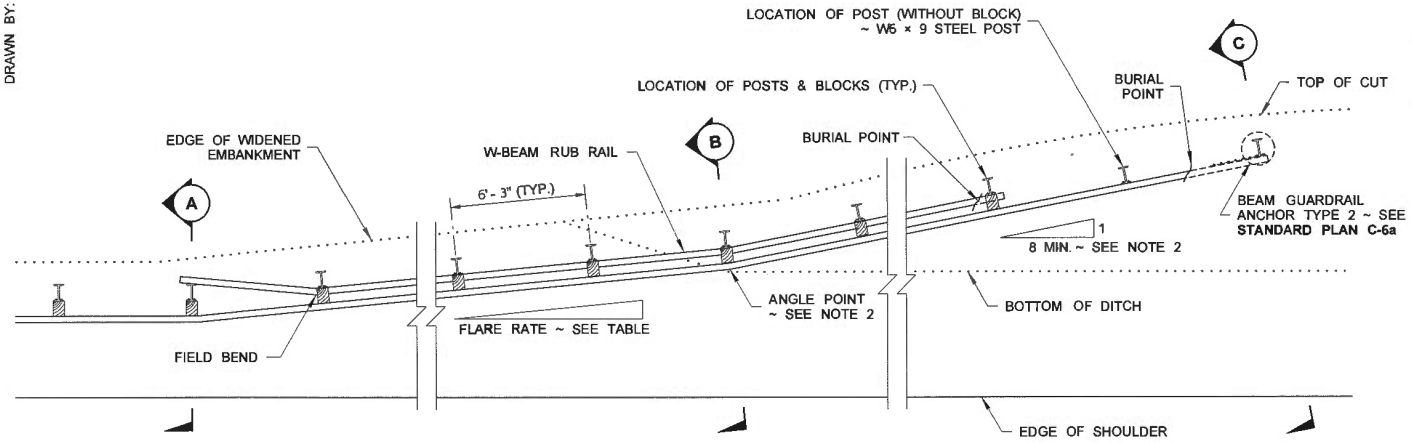

PLAN

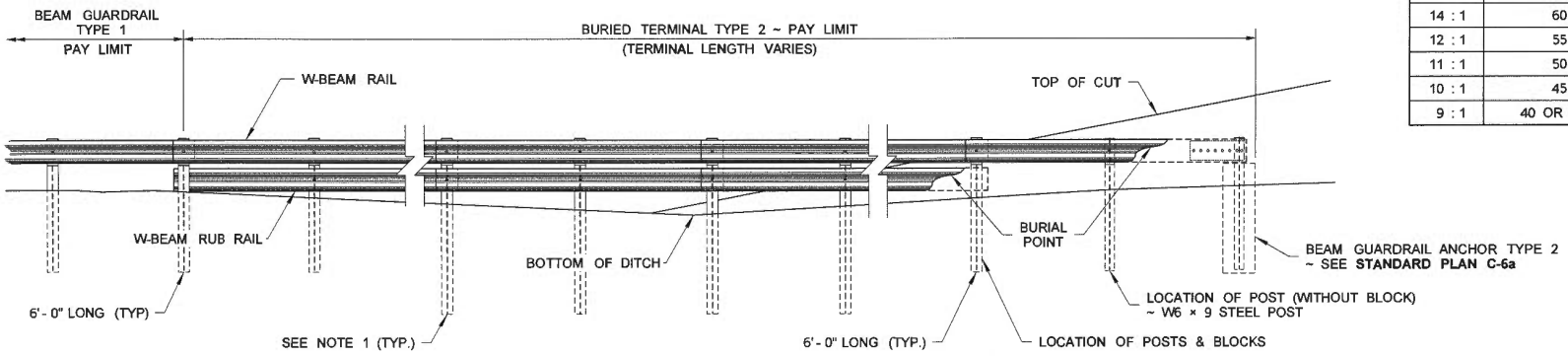

ELEVATION
(PROFILE ALONG RAIL)

NOTES

1. Posts installed on shoulder slopes steeper than 10H : 1V shall be 8' long.
2. The flare rate of the guardrail may be increased after crossing the ditch bottom to shorten the length of the terminal.
3. Determine the height of the W-Beam at the Anchor (**G**) by first calculating the perpendicular offset distance (**D**) from the edge of shoulder (**S**) to the Anchor (on station). Multiply that distance by 0.1, then subtract the product from the elevation of the same point (**S**) on the edge of shoulder used to obtain the offset distance (at the same station). Add Beam Guardrail design height (27") to that remainder for a sum that equals the elevation of the top of the W-Beam at the Anchor.

   Refer to SECTION "C":

   $$\text{Elevation}_{G} = (\text{Elevation}_{S} - D\ (0.1)) + 27$$

FLARE RATE TABLE	
RATE	POSTED SPEED (mph)
15 : 1	70
14 : 1	60
12 : 1	55
11 : 1	50
10 : 1	45
9 : 1	40 OR LESS

BEAM GUARDRAIL TYPE 1
BURIED TERMINAL TYPE 2

STANDARD PLAN C-22.14-02

SHEET 1 OF 1 SHEET

APPROVED FOR PUBLICATION

STATE DESIGN ENGINEER — DATE 6/16/11

Washington State Department of Transportation

DRAWN BY: BILL BERENS

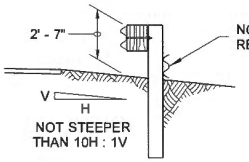

SECTION (A)

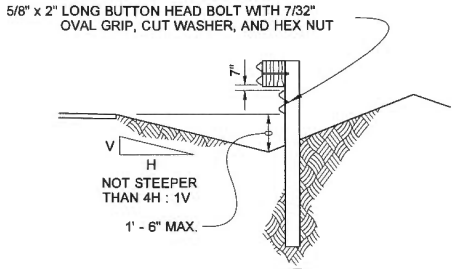

SECTION (B)

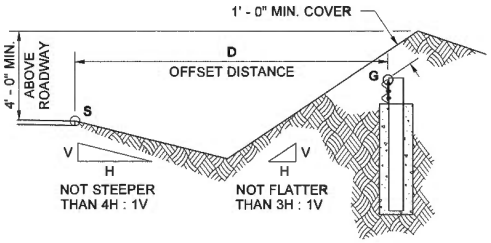

SECTION (C)

SEE NOTE 3

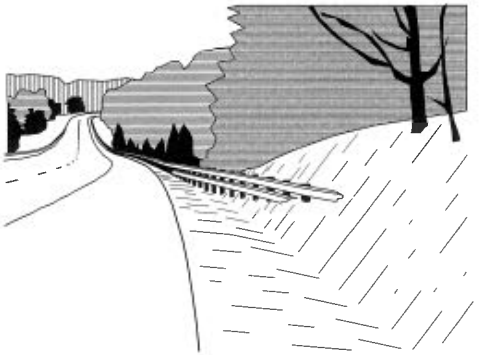

PERSPECTIVE

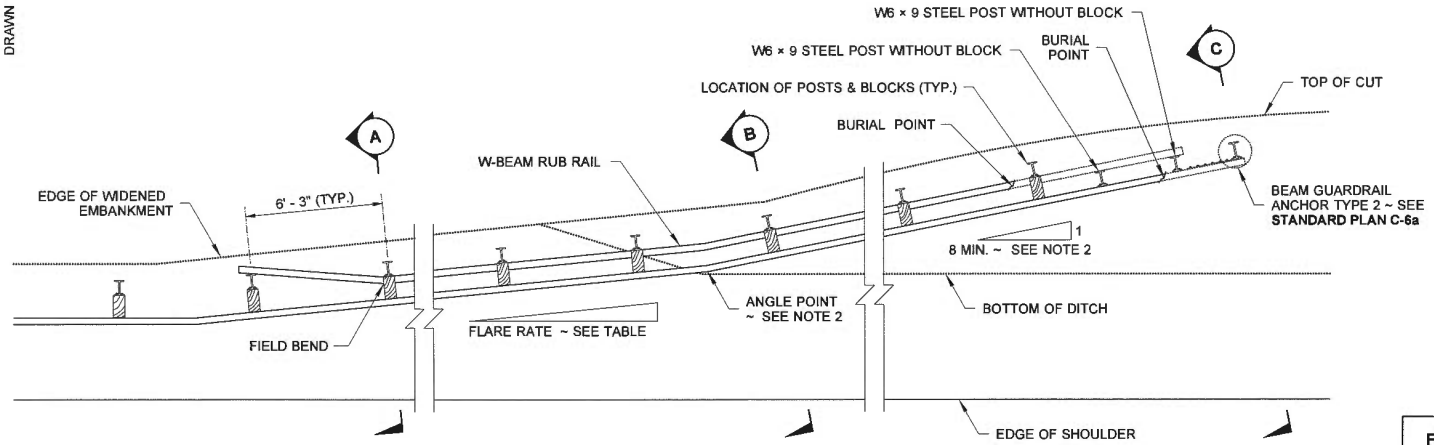

PLAN

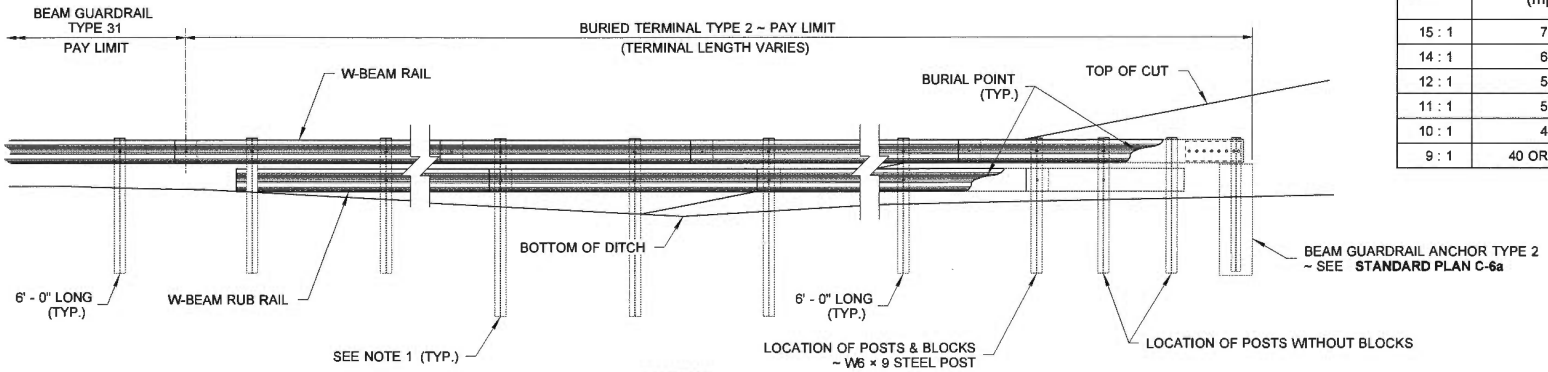

ELEVATION
(PROFILE ALONG RAIL)

NOTES

1. Posts installed on shoulder slopes steeper than 10H : 1V shall be 8' long.
2. The flare rate of the guardrail may be increased after crossing the ditch bottom to shorten the length of the terminal.
3. Determine the height of the W-Beam at the Anchor (**G**) by first calculating the perpendicular offset distance (**D**) from the edge of shoulder (**S**) to the Anchor (on station). Multiply that distance by 0.1, then subtract the product from the elevation of the same point (**S**) on the edge of shoulder used to obtain the offset distance (at the same station). Add Beam Guardrail design height (31") to that remainder for a sum that equals the elevation of the top of the W-Beam at the Anchor.

   Refer to SECTION "C":

   $$\text{Elevation}_G = (\text{Elevation}_S - D(0.1)) + 31$$

FLARE RATE TABLE	
RATE	POSTED SPEED (mph)
15 : 1	70
14 : 1	60
12 : 1	55
11 : 1	50
10 : 1	45
9 : 1	40 OR LESS

TERRY L. BERENDS
STATE OF WASHINGTON
52350
REGISTERED
PROFESSIONAL ENGINEER
4/3/12

BEAM GUARDRAIL TYPE 31 BURIED TERMINAL TYPE 2

STANDARD PLAN C-22.16-03

SHEET 1 OF 1 SHEET

APPROVED FOR PUBLICATION

STATE DESIGN ENGINEER — DATE 4/3/12

Washington State Department of Transportation

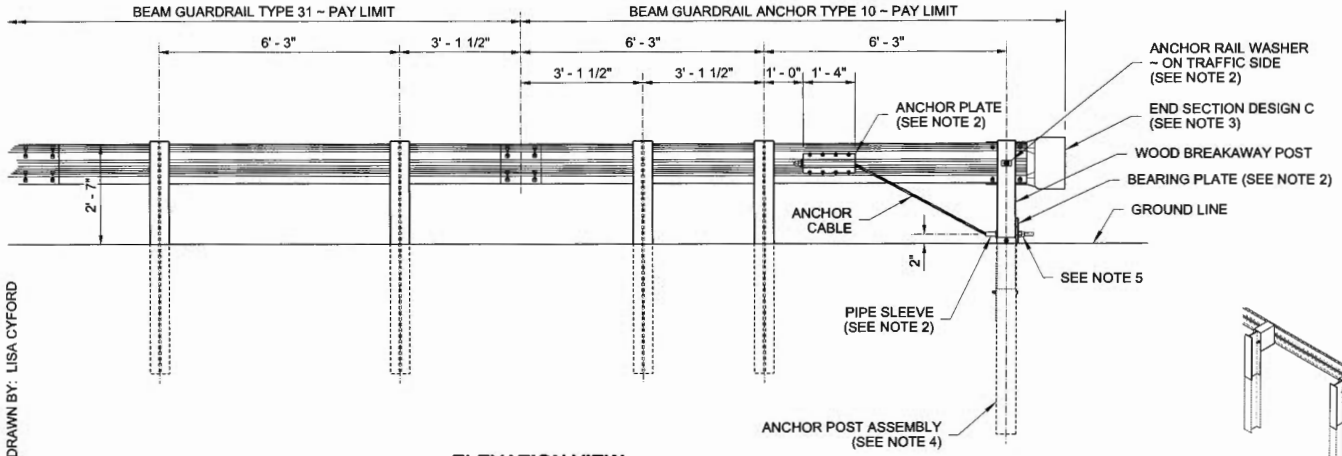

ELEVATION VIEW
W-BEAM

DRAWN BY: LISA CYFORD

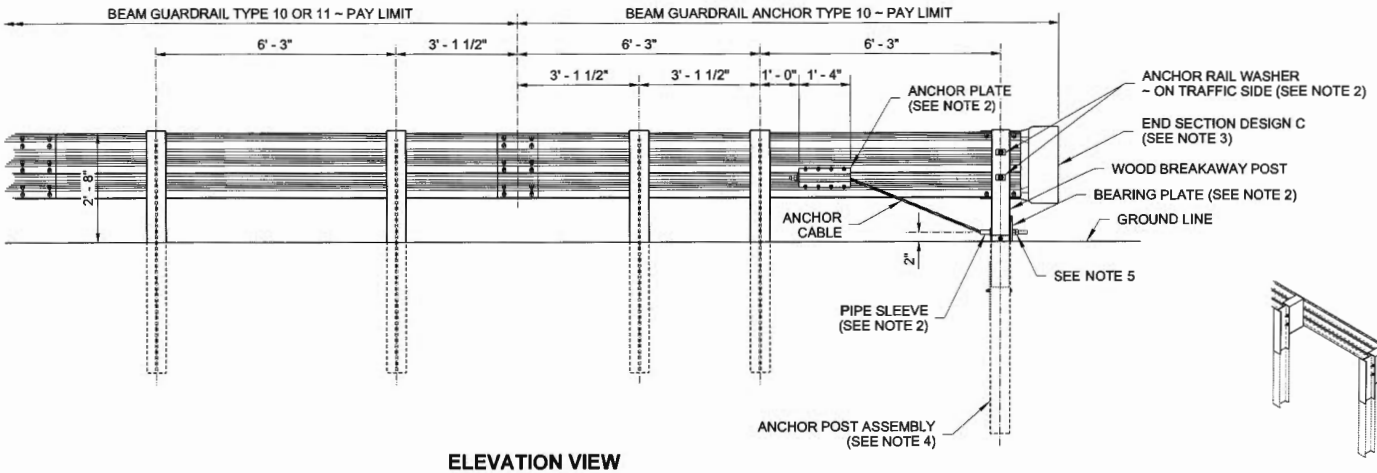

ELEVATION VIEW
THRIE BEAM

NOTES

1. For use on the end of guardrail runs when a crashworthy terminal is not required.
2. For additional details not shown, see **Standard Plan C-6c**.
3. For end section details, see **Standard Plans C-7** and **C-7a**.
4. Use details for Wood Breakaway post shown on this plan and components shown on **Standard Plan C-1b**.
5. Fasten the Anchor Cable using two 1" nuts and washer, at both ends of cable. Outside nut shall be torqued against inside nut a minimum of 100 ft.-lbs.
6. Wood blocks shown. Blocks of alternate material may be used. See **Standard Specification 9-16.3(2)**.

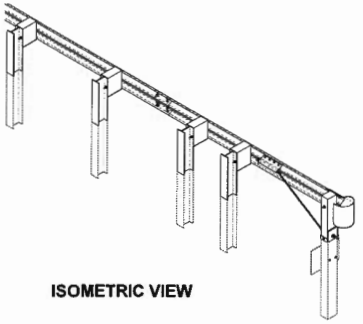

ISOMETRIC VIEW

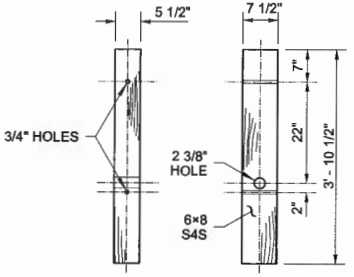

WOOD BREAKAWAY POST DETAIL

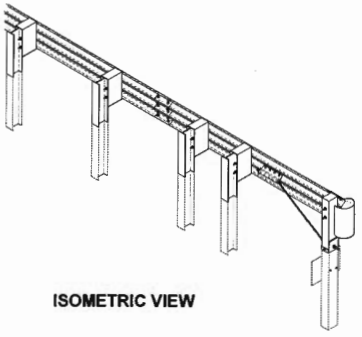

ISOMETRIC VIEW

EDWARD PATRICK BAUER
STATE OF WASHINGTON
34363
REGISTERED
PROFESSIONAL ENGINEER

5·21·2012

BEAM GUARDRAIL (TYPE 31)
ANCHOR TYPE 10

STANDARD PLAN C-23.60-02

SHEET 1 OF 1 SHEET

APPROVED FOR PUBLICATION

STATE DESIGN ENGINEER — DATE 6/21/12

Washington State Department of Transportation

DRAWN BY: FERN LIDDELL

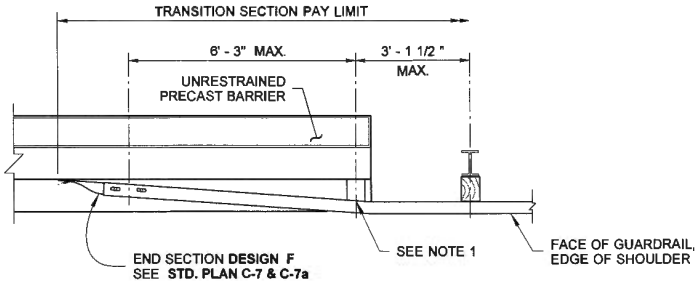

PLAN

A CONNECTION

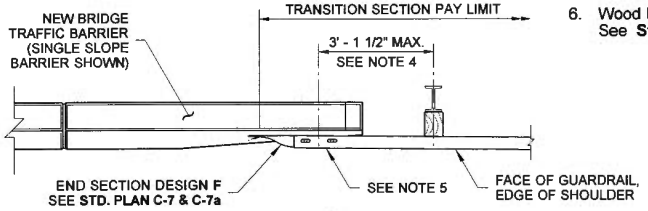

PLAN

D CONNECTION

(SEE NOTE 3)

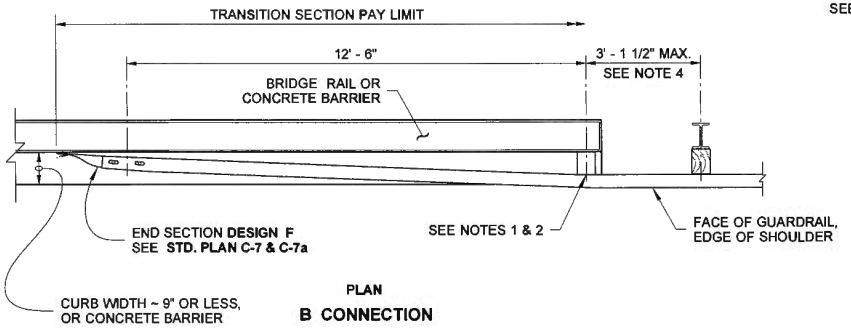

PLAN

B CONNECTION

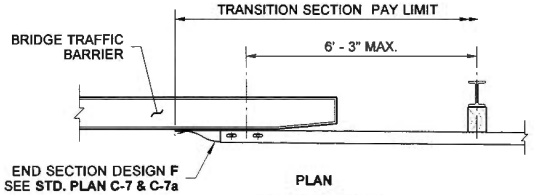

PLAN

E CONNECTION

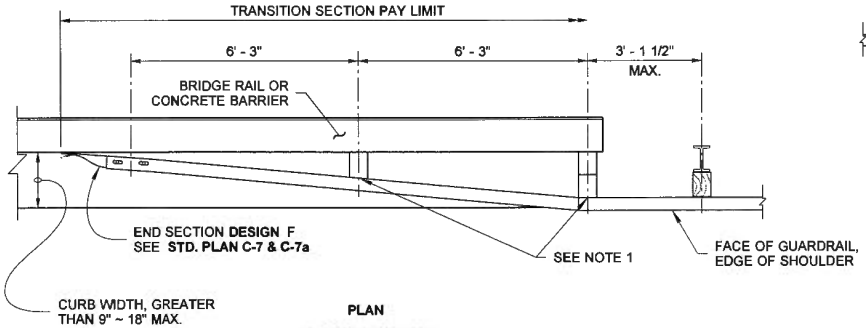

PLAN

C CONNECTION

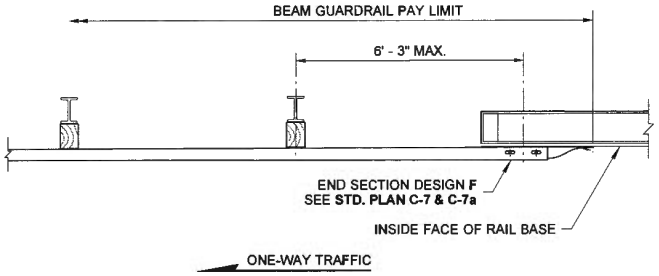

PLAN

F CONNECTION

NOTES

1. Attach guardrail to bridge rail or concrete barrier with 7/8" diameter bolts in accordance with **Standard Spec. 9-06.5(4),** with thin slab ferrule inserts or resin bonded anchors. See Contract Plans.
2. If the last guardrail post is 3" or less from the end of the bridge barrier, this attachment and blockout is not necessary.
3. This case is also applicable for F-shape and vertical faces with no curbs.
4. When B connection is used with Type 1A Transition, the maximum spacing between bolts is 6' - 3".
5. See Bridge Plans for additional connection details.
6. Wood blocks shown. Blocks of alternate material may be used. See **Standard Specification 9-16.3 (2).**

7-2-2012

GUARDRAIL CONNECTION TO BRIDGE RAIL OR CONCRETE BARRIER STANDARD PLAN C-24.10-00

SHEET 1 OF 1 SHEET

APPROVED FOR PUBLICATION

STATE DESIGN ENGINEER — DATE 7/2/12

Washington State Department of Transportation

DRAWN BY: FERN LIDDELL

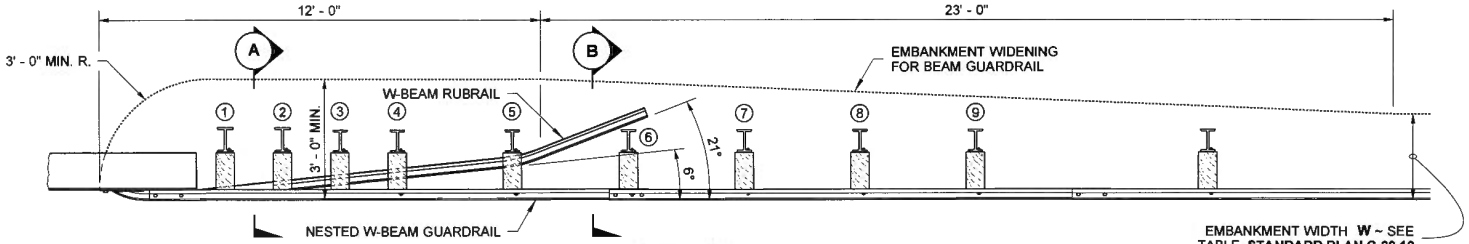

PLAN VIEW

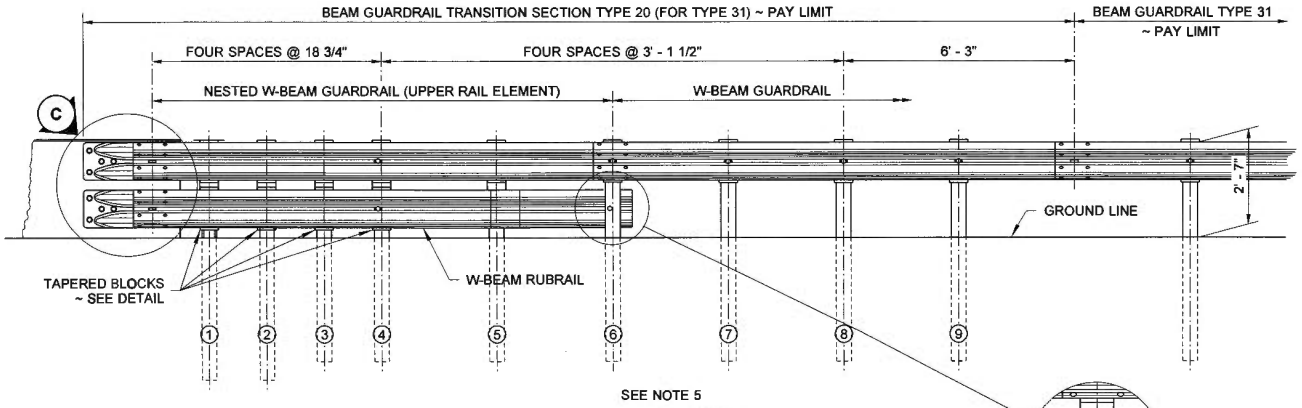

SEE NOTE 5

ELEVATION VIEW

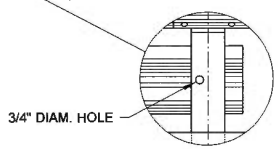

BOLT LOCATION DETAIL FOR STEEL POST

NOTES

1. For additional details not shown in this plan, refer to **Standard Plan C-20.10.**
2. This guardrail transition is for connection to a vertical concrete shape or single slope barrier and cannot be connected directly to a concrete safety shape.
3. Do not bolt nested W-Beam or rubrail W-Beam to posts and blocks on posts 1,2,3 and 5. Bolt tapered blocks directly to posts.
4. The rubrail W-Beam can be shop bent to facilitate installation.
5. Posts 1,2,3,4 and 6 require an additional hole to attach tapered blocks and/or rubrail.
6. Posts 1 and 2 are W6×15 steel posts ~ 7' - 6" long. Posts 3 through 9 are W6 × 9 steel posts ~ 6' - 0" long.
7. Wood blocks shown. Blocks of alternate material may be used. See **Standard Specificdation 9-16.3(2).**

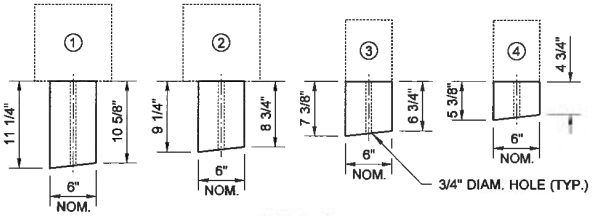

PLAN VIEW
TAPERED BLOCKS FOR RUBRAIL DETAIL
14" LONG (TYP.)

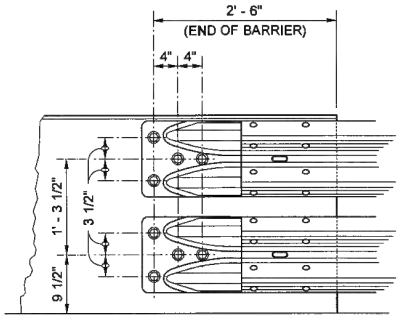

DETAIL C

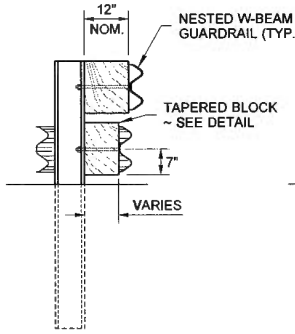

SECTION A
(STEEL POST)

(OR)

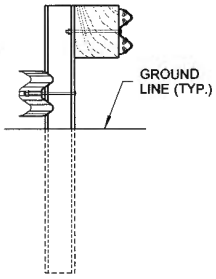

SECTION B
(STEEL POST)

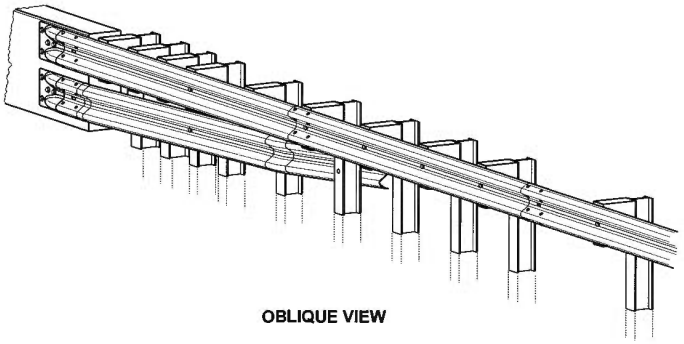

OBLIQUE VIEW

7-2-2012

BEAM GUARDRAIL (TYPE 31) TRANSITION SECTION TYPE 20
STANDARD PLAN C-25.18-03

SHEET 1 OF 1 SHEET

APPROVED FOR PUBLICATION

STATE DESIGN ENGINEER — DATE 7/2/12

Washington State Department of Transportation

DRAWN BY: FERN LIDDELL

NOTES

1. This guardrail transition is for connection to a vertical concrete shape, a single slope, or a safety shape barrier. The toe of the single slope and the safety shaped barrier shall be tapered or the barrier blocked out so that the toe of the barrier does not project past the face of the approach guardrail.
2. See **Standard Plan C-24.10** for details regarding connection to Bridge rail or traffic barrier.
3. For details of typical components, see **Standard Plans C-1b** and **C-20.10**.

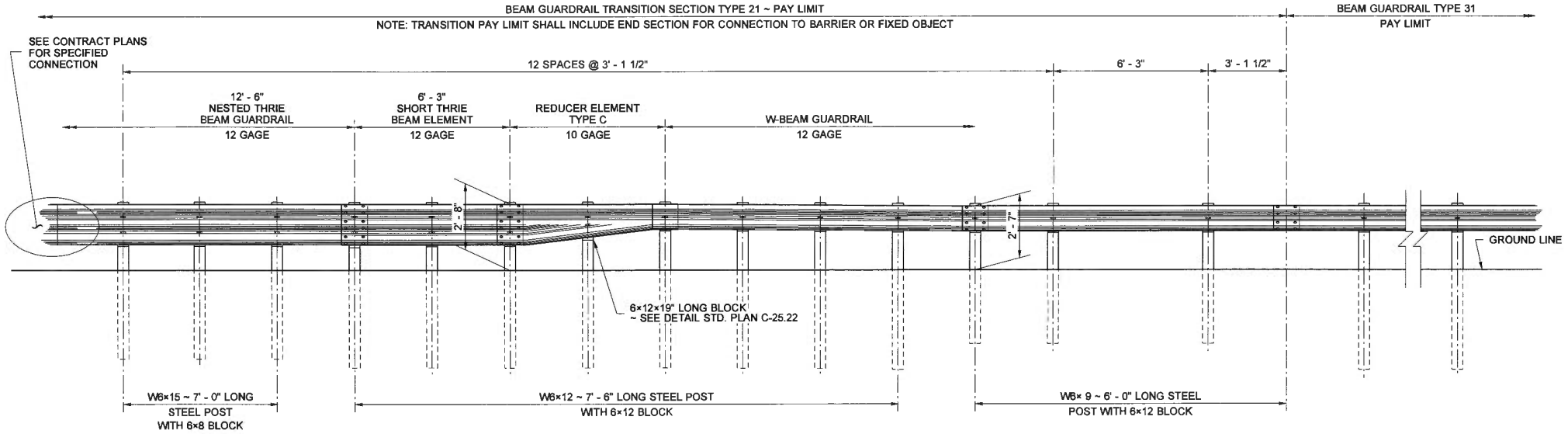

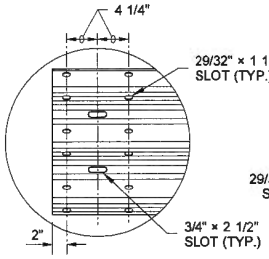

DETAIL (A)

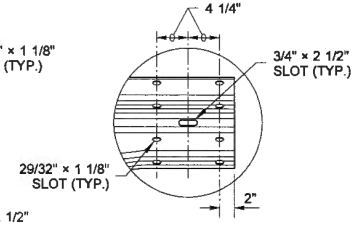

DETAIL (B)

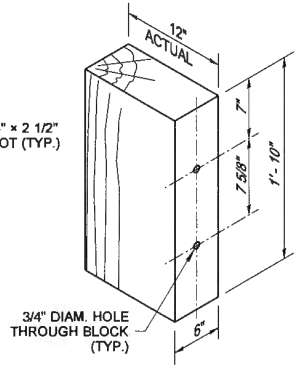

THRIE BEAM WOOD BLOCK

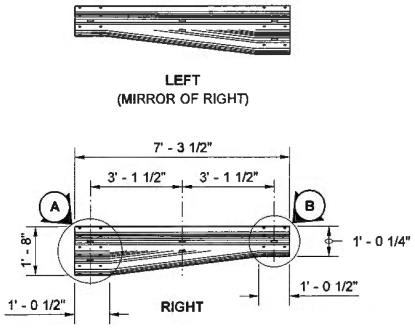

REDUCER ELEMENT TYPE C

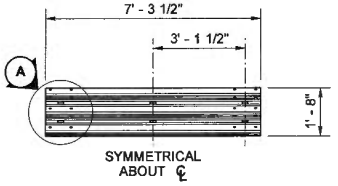

SHORT THRIE BEAM ELEMENT

7-2-2012

BEAM GUARDRAIL (TYPE 31) TRANSITION SECTION TYPE 21

STANDARD PLAN C-25.20-05

SHEET 1 OF 1 SHEET

APPROVED FOR PUBLICATION

STATE DESIGN ENGINEER — DATE 7/2/12

Washington State Department of Transportation

DRAWN BY: BILL BERENS

NOTES

1. See **Standard Plans C-1b, C-1d, C-20.10** and **C-25.20** for rail elements and thrie beam block details.
2. When a transition is required on the trailing end of the bridge, use a mirror image of this plan.

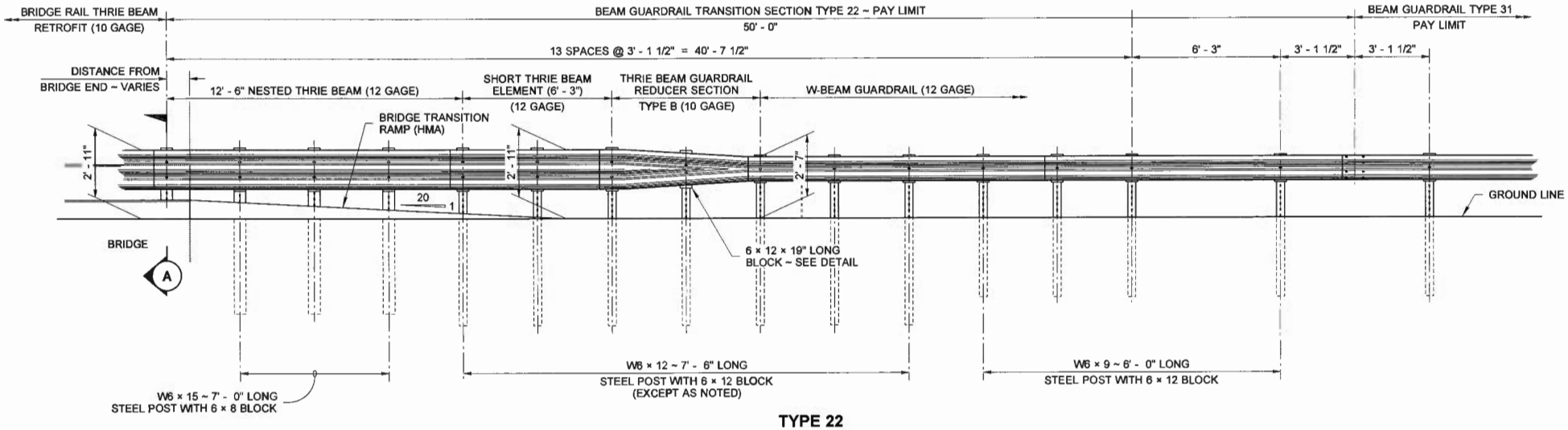

TYPE 22

APPROACH END (SHOWN - SEE NOTE 2)

THRIE BEAM INSTALLED AT FACE OF BRIDGE RAIL

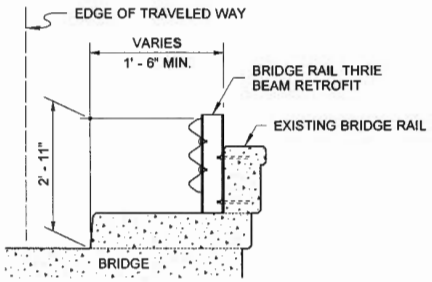

SECTION (A)

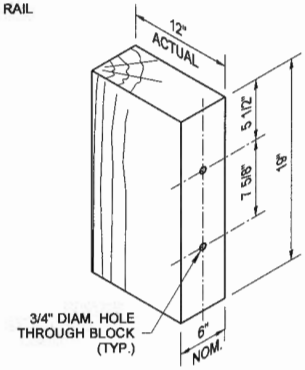

THRIE BEAM REDUCER WOOD BLOCK

7·2·2012

BEAM GUARDRAIL (TYPE 31) TRANSITION SECTION TYPE 22

STANDARD PLAN C-25.22-04

SHEET 1 OF 1 SHEET

APPROVED FOR PUBLICATION

STATE DESIGN ENGINEER — DATE 7/2/12

Washington State Department of Transportation

DRAWN BY: FERN LIDDELL

NOTES

1. See **Standard Plan C-1b, C-20.10** and **C-25.20** for rail elements and thrie beam block details.
2. When a transition is required on the trailing end of the bridge, use a mirror image of this plan.
3. For additional alternatives not shown, see Contract Plans.

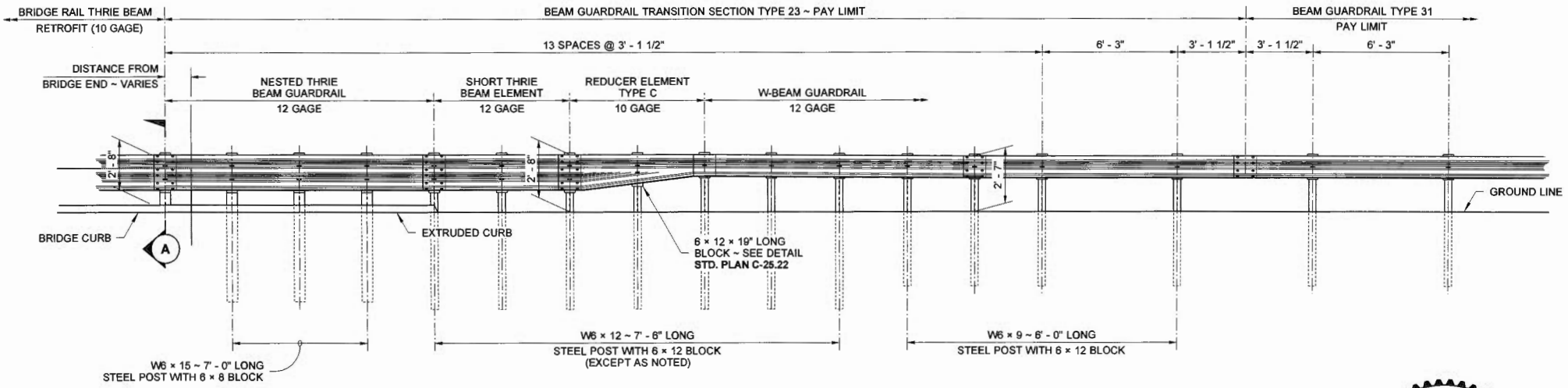

TYPE 23

APPROACH END (SHOWN - SEE NOTE 2)

THRIE BEAM INSTALLED AT FACE OF CURB

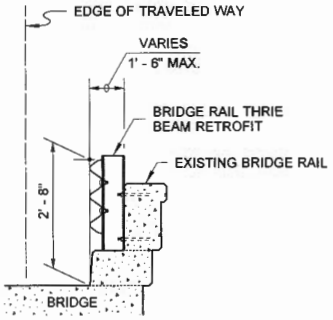

SECTION (A)

ALTERNATIVE 1

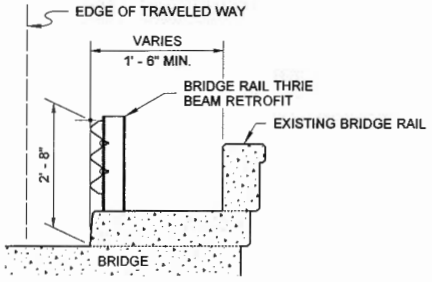

SECTION (A)

ALTERNATIVE 2

7-2-2012

BEAM GUARDRAIL (TYPE 31) TRANSITION SECTION TYPE 23

STANDARD PLAN C-25.26-02

SHEET 1 OF 1 SHEET

APPROVED FOR PUBLICATION

STATE DESIGN ENGINEER — DATE 7/2/12

Washington State Department of Transportation

DRAWN BY: FERN LIDDELL

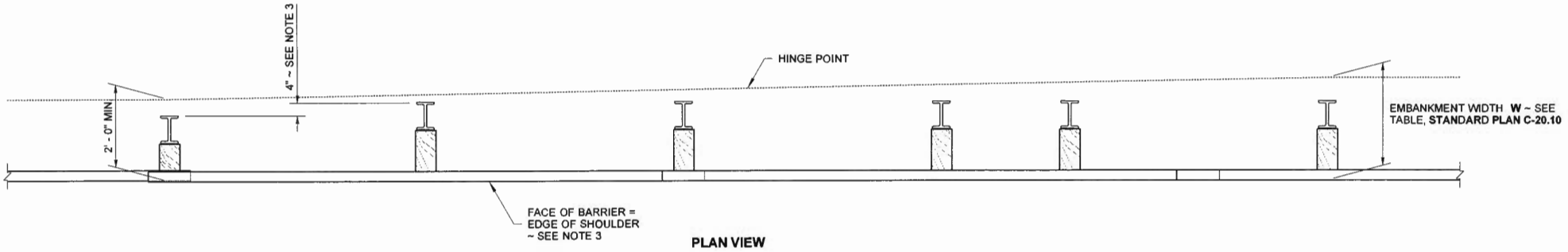

PLAN VIEW

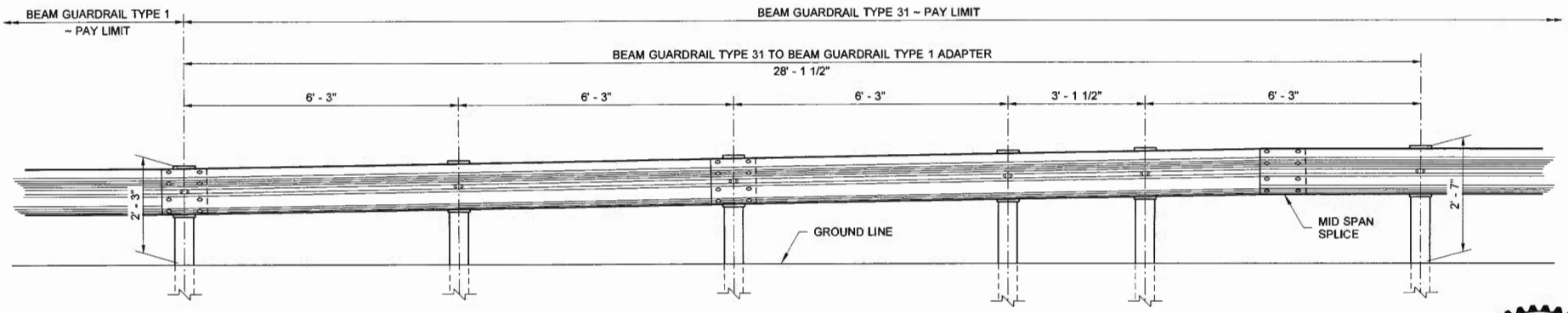

ELEVATION VIEW ~ PROFILE TAPER

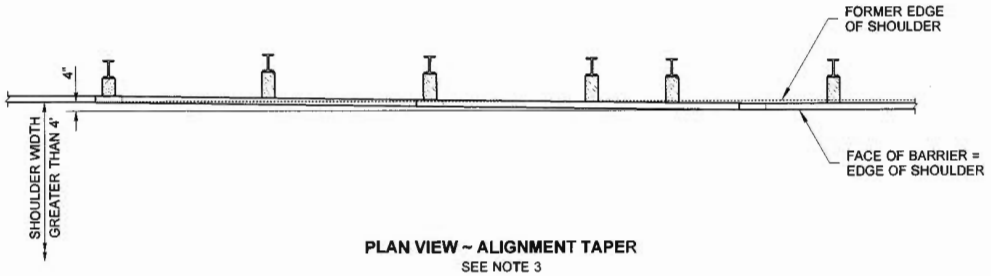

PLAN VIEW ~ ALIGNMENT TAPER

SEE NOTE 3

NOTES

1. Refer to **Standard Plan C-1** and **C-1b** for component details for Beam Guardrail Type 1 not shown on this plan.
2. Refer to **Standard Plan C-20.10** for component details for Beam Guardrail Type 31 not shown on this plan.
3. Where post off-set is constrained, and when the existing shoulder will not be widened and is wider than 4 feet, the existing shoulder may be reduced up to 4" to accomodate the 12" blockouts of the Beam Guardrail Type 31. See **PLAN VIEW ~ ALIGNMENT TAPER**.
4. Wood blocks shown. Blocks of alternate material may be used. See **Standard Specification 9-16.3(2).**

7-2-2012

BEAM GUARDRAIL TYPE 31 TO BEAM GUARDRAIL TYPE 1 ADAPTER

STANDARD PLAN C-25.80-02

SHEET 1 OF 1 SHEET

APPROVED FOR PUBLICATION

STATE DESIGN ENGINEER — DATE 7/2/12

Washington State Department of Transportation

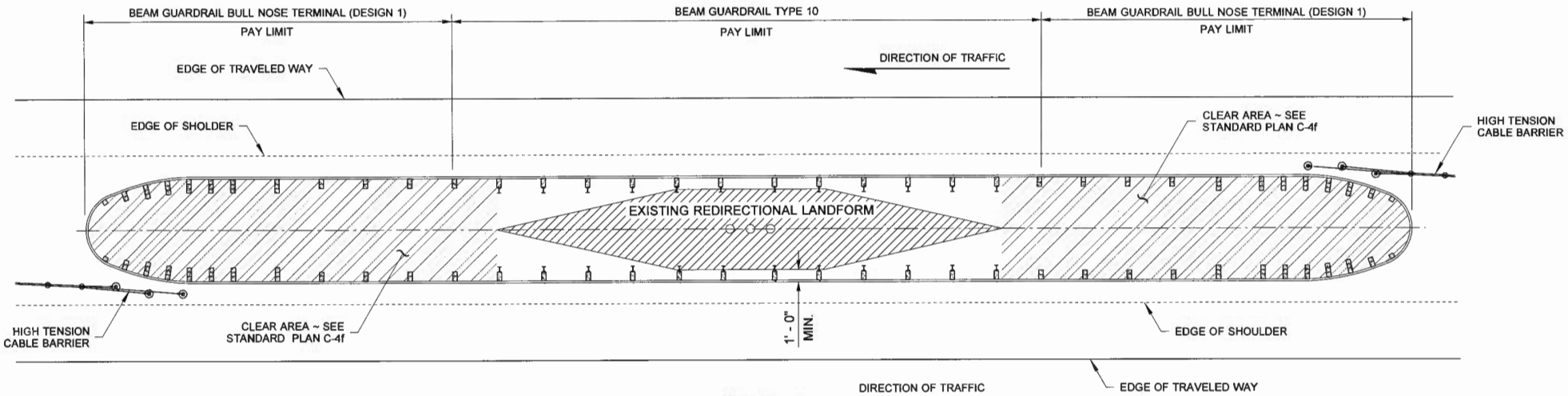

PLAN VIEW

CASE 9A

DRAWN BY: FERN LIDDELL

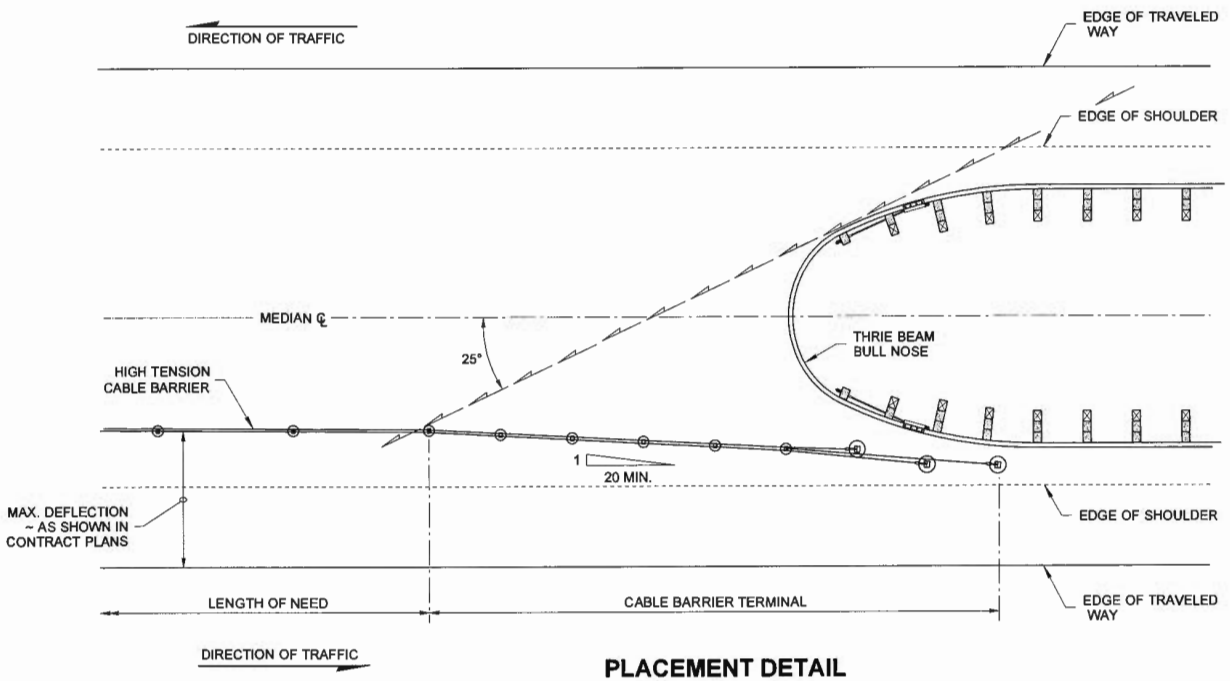

PLACEMENT DETAIL

LEGEND

Design Layout Line

7-2-2012

BARRIER PLACEMENT CABLE TO THRIE BEAM BULL NOSE CONNECTION STANDARD PLAN C-40.14-02

SHEET 1 OF 1 SHEET

APPROVED FOR PUBLICATION

STATE DESIGN ENGINEER — DATE 7/2/12

Washington State Department of Transportation

DRAWN BY: FERN LIDDELL

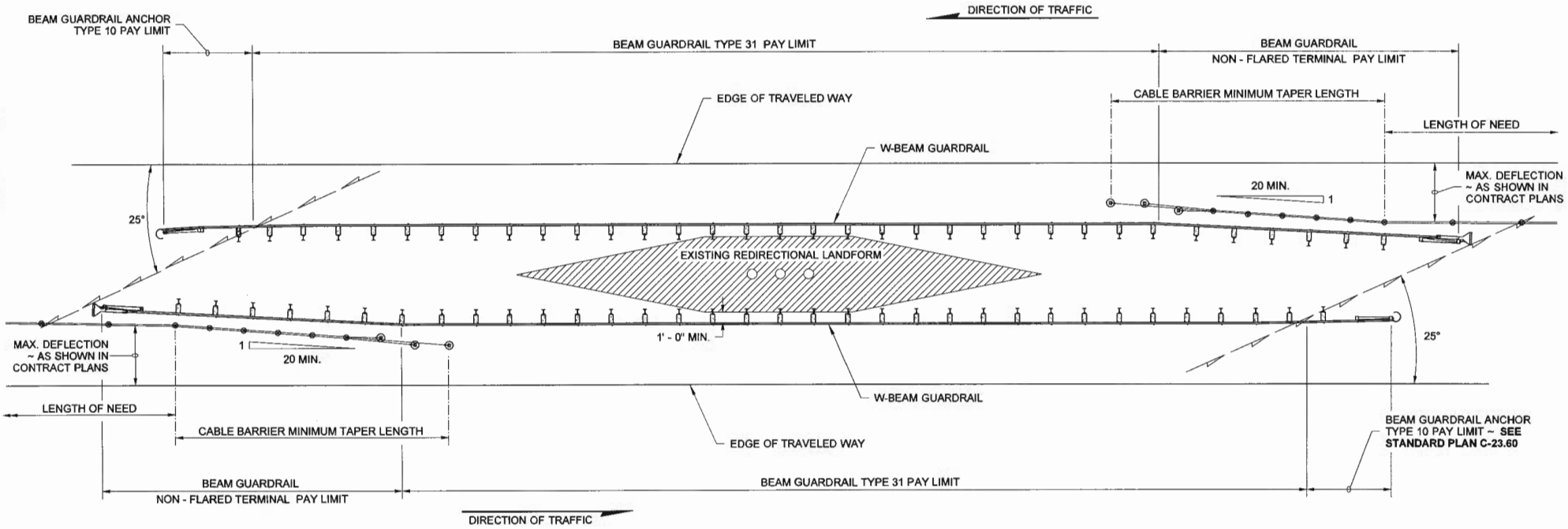

PLAN VIEW

LEGEND

Design Layout Line

7-2-2012

BARRIER PLACEMENT ~ CABLE TO W-BEAM SHIELDING FOR REDIRECTIONAL LANDFORM

STANDARD PLAN C-40.16-02

SHEET 1 OF 1 SHEET

APPROVED FOR PUBLICATION

STATE DESIGN ENGINEER — DATE 7/2/12

Washington State Department of Transportation

LEGEND

Design Layout Line

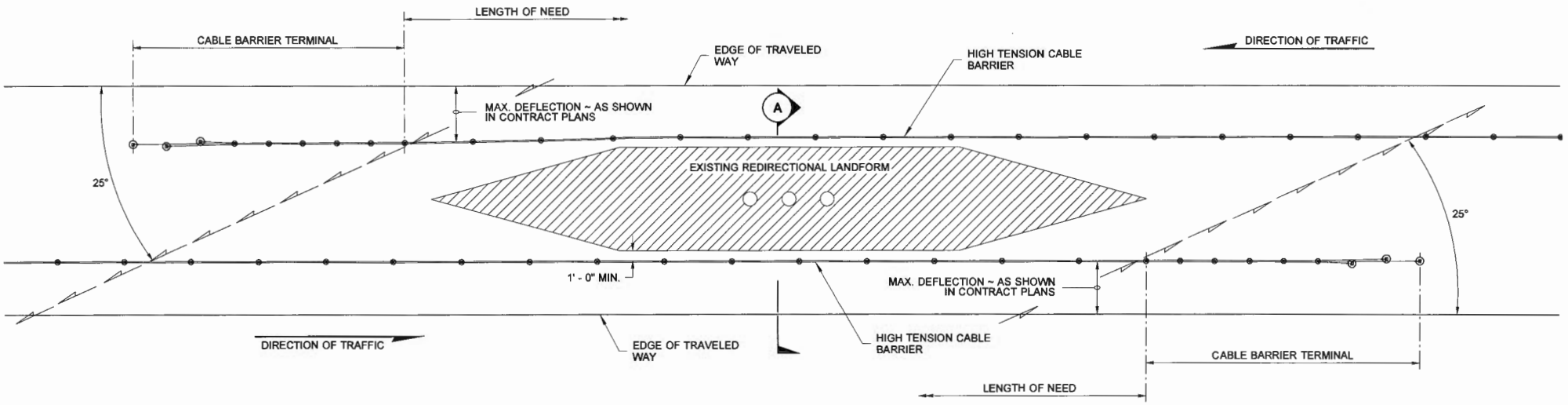

PLAN VIEW

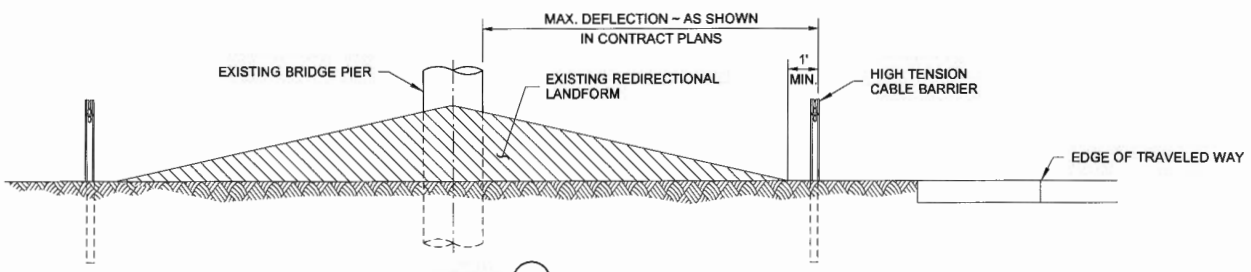

SECTION A

7·2·2012

BARRIER PLACEMENT ~ CABLE BARRIER SHIELDING FOR REDIRECTIONAL LANDFORM
STANDARD PLAN C-40.18-02

SHEET 1 OF 1 SHEET

APPROVED FOR PUBLICATION

STATE DESIGN ENGINEER — DATE 7/2/12

Washington State Department of Transportation

DRAWN BY: LISA CYFORD

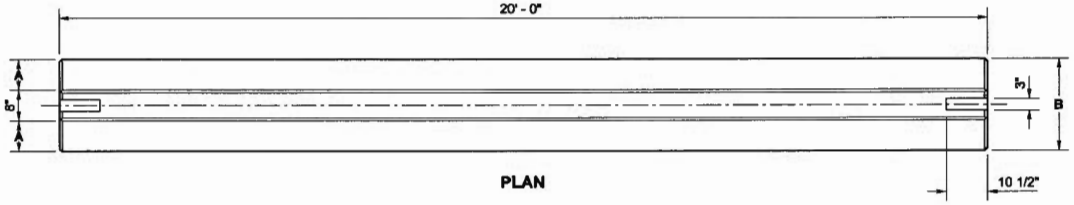

PLAN

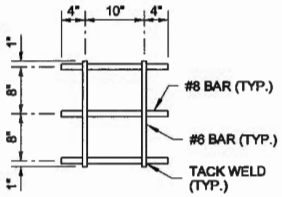

REBAR GRID DETAIL
FOR PERMANENT INSTALLATION

NOTES

1. PERMANENT INSTALLATION requirements: Embed barrier 3" minimum, install 1/4" Premolded Joint Filler between segments, fill the Connection Blockout with grout, centering the Rebar Grid in the blockout before adding grout.
2. TEMPORARY INSTALLATION requirement: Place a Rebar Grid in the Connection Blockout between barrier segments.
3. Installation on a horizontal curve with a radius less than 2000' requires a modified end design.
4. For Barrier with a 2' - 10" reveal, see sheet 2. For High-Performance Barrier with a 3' - 6" reveal, see sheet 3.

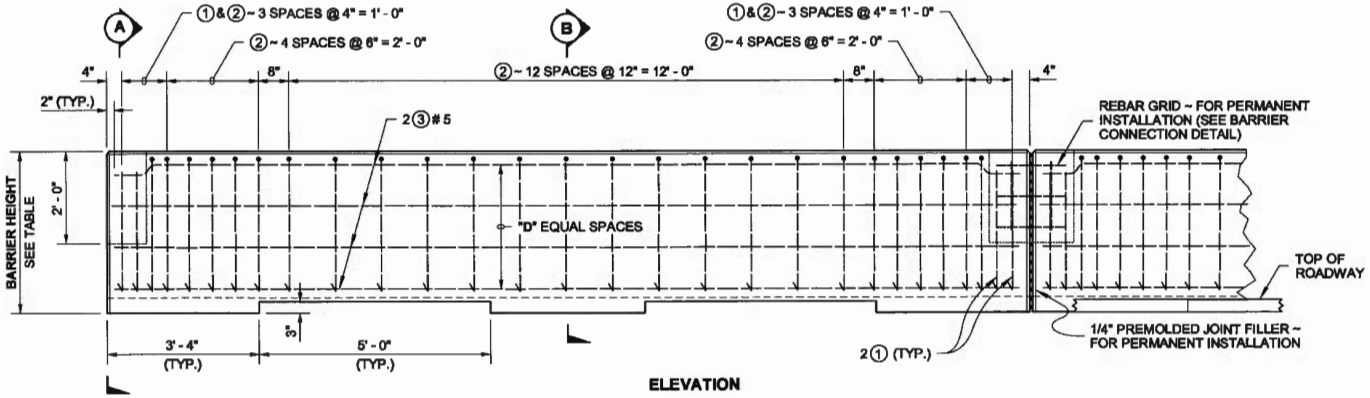

ELEVATION

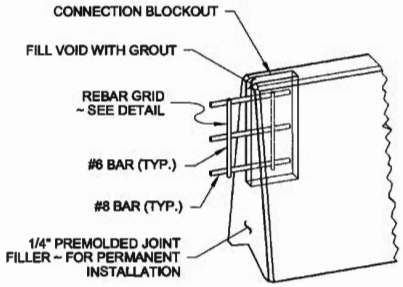

BARRIER CONNECTION DETAIL
FOR PERMANENT INSTALLATION

*** WELDED WIRE REINFORCING SUBSTITUTION OPTION TABLE**

MARK	REINFORCING SIZE	WELDED WIRE REINFORCING
①	#4	D - 20
②	#4	D - 20
③	#5	D - 31

* WELDED WIRE REINFORCMENTS SHALL CONFORM TO **STANDARD SPECIFICATION SECTIONS 6-10 and 9-07**

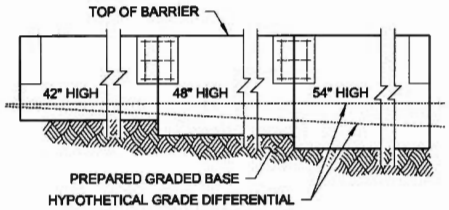

BARRIER TRANSITION DETAIL

REINFORCING STEEL BENDING DIAGRAM

SEE STD. SPEC. 9-07.1(2) FOR BENDING DIAMETERS

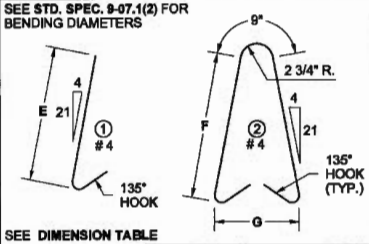

SEE DIMENSION TABLE

DIMENSION TABLE

BARRIER HEIGHT	A	B	D	E	F	G	HORIZONTAL BARS (QTY.)
3' - 6"	6"	2' - 0"	3	2' - 8"	2' - 10"	1' - 7"	8
4' - 0"	9 1/8"	2' - 2 1/4"	4	3' - 2"	3' - 4"	1' - 9"	10
4' - 6"	10 1/4"	2' - 4 1/2"	5	3' - 6"	3' - 10"	1' - 11"	12

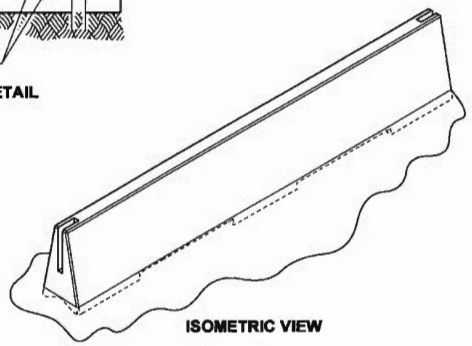

ISOMETRIC VIEW

TERRY L. BEREND
STATE OF WASHINGTON
32350
REGISTERED
PROFESSIONAL ENGINEER
4/16/12

SINGLE-SLOPE CONCRETE BARRIER (PRECAST)

STANDARD PLAN C-70.10-00

SHEET 1 OF 3 SHEETS

APPROVED FOR PUBLICATION
STATE DESIGN ENGINEER — DATE 4/18/12
Washington State Department of Transportation

DRAWN BY: LISA CYFORD

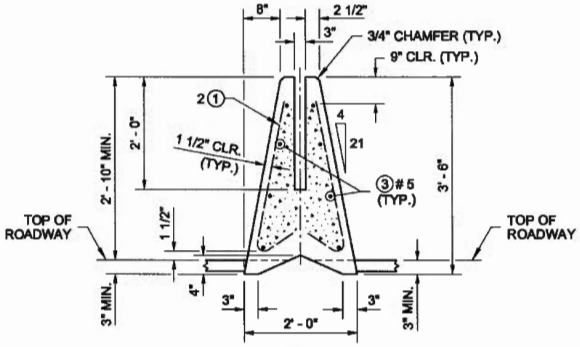

SECTION (A)

3' - 6" BARRIER SHOWN LEVEL

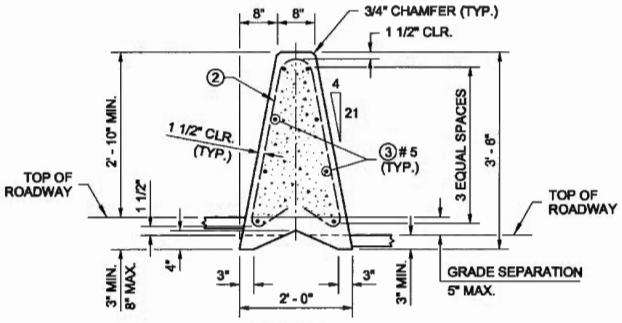

SECTION (B)

3' - 6" BARRIER FOR USE WITH A 0" TO 5" MAX. GRADE SEPARATION

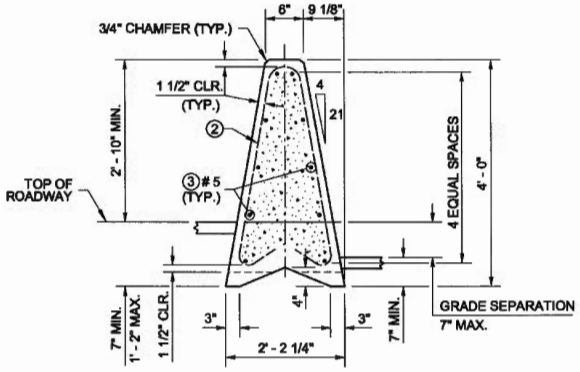

SECTION (B)

4' - 0" BARRIER FOR USE WITH A GREATER THAN 5" TO 7" MAX. GRADE SEPARATION

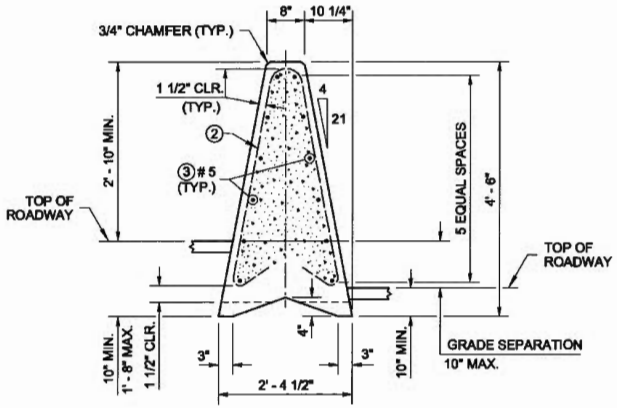

SECTION (B)

4' - 6" BARRIER FOR USE WITH A GREATER THAN 7" TO 10" MAX. GRADE SEPARATION

STANDARD MOUNTING HEIGHT

4/16/12

SINGLE-SLOPE CONCRETE BARRIER (PRECAST)

STANDARD PLAN C-70.10-00

SHEET 2 OF 3 SHEETS

APPROVED FOR PUBLICATION

STATE DESIGN ENGINEER — DATE 4/16/12

Washington State Department of Transportation

DRAWN BY: LISA CYFORD

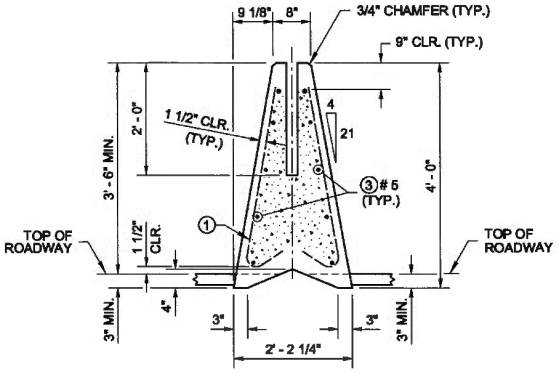

SECTION (A)

4' - 0" BARRIER SHOWN LEVEL

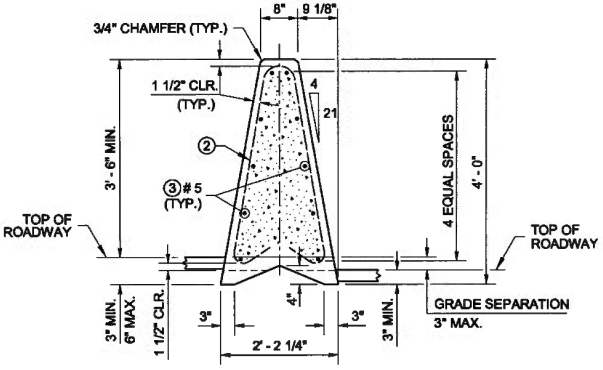

SECTION (B)

4' - 0" BARRIER FOR USE WITH A 0" TO 3" MAX. GRADE SEPARATION

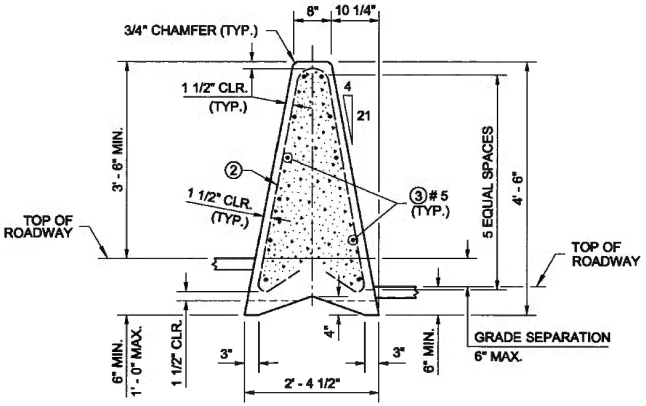

SECTION (B)

4' - 6" BARRIER FOR USE WITH A GREATER THAN 3" TO 6" MAX. GRADE SEPARATION

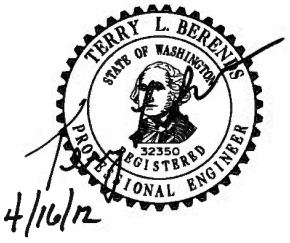

SINGLE-SLOPE CONCRETE BARRIER (PRECAST)

STANDARD PLAN C-70.10-00

SHEET 3 OF 3 SHEETS

APPROVED FOR PUBLICATION

STATE DESIGN ENGINEER — DATE 4/18/12

Washington State Department of Transportation

HIGH-PERFORMANCE BARRIER

DRAWN BY: LISA CYFORD

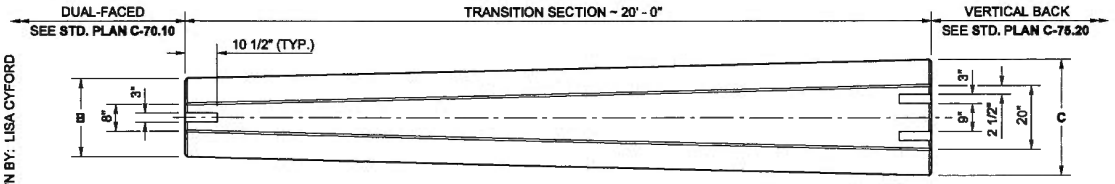

PLAN

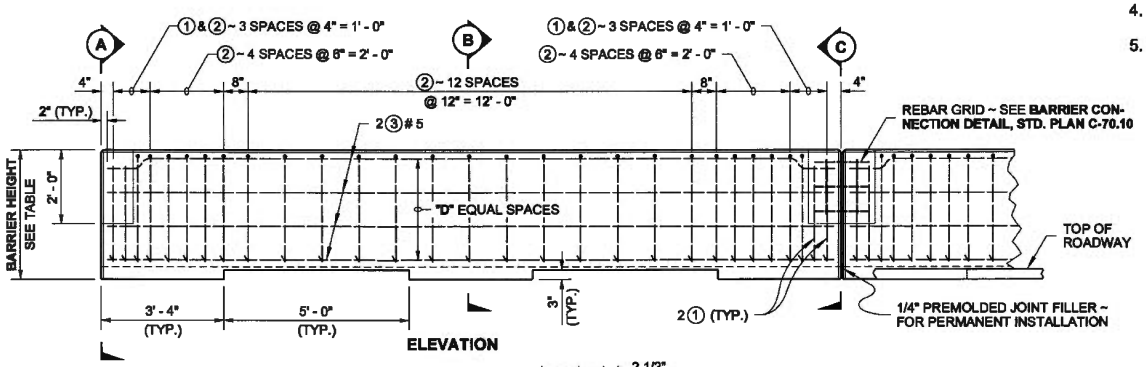

ELEVATION

NOTES

1. PERMANENT INSTALLATION requirements: Embed barrier 3" minimum, install 1/4" Pre-molded Joint Filler between segments, fill the Connection Blockout with grout, centering the Rebar Grid in the blockout before adding grout.
2. TEMPORARY INSTALLATION requirement: Place a Rebar Grid in the Connection Blockout between barrier segments.
3. See **Standard Plan C-70.10** for REBAR GRID DETAIL and BARRIER CONNECTION DETAIL.
4. This plan is for transitions to precast concrete barriers only.
5. When **High-Performance Concrete Barrier** is specified in the Contract, use the dimensions given in the H/P row in the DIMENSION TABLE, with a minimum height above roadway of 3' - 6" and a minimum imbedment of 3".

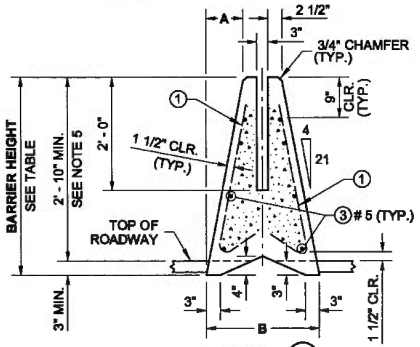

SECTION (A)

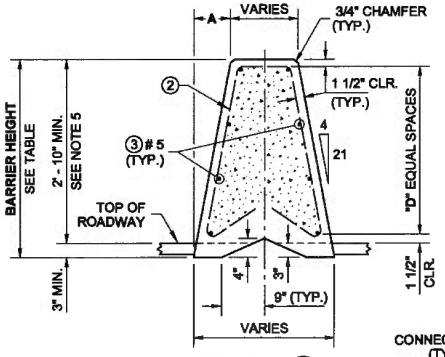

SECTION (B)

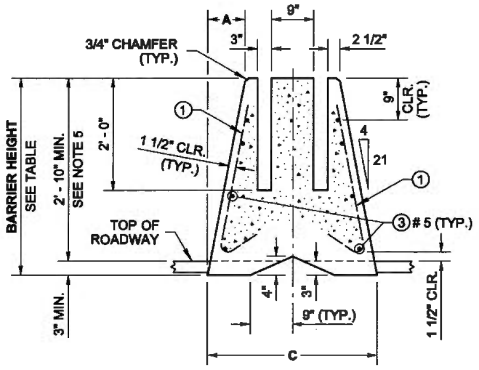

SECTION (C)

* WELDED WIRE REINFORCING SUBSTITUTION OPTION TABLE		
MARK	REINFORCING SIZE	WELDED WIRE REINFORCING
①	#4	D - 20
②	#4	D - 20
③	#5	D - 31

* WELDED WIRE REINFORCMENTS SHALL CONFORM TO STANDARD SPECIFICATION SECTIONS 6-10 and 9-07

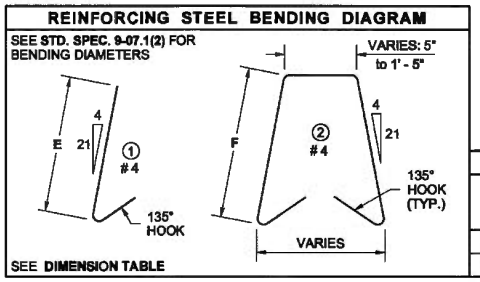

DIMENSION TABLE								SEE NOTE 5
	BARRIER HEIGHT	A	B	C	D	E	F	HORIZONTAL BARS (QTY.)
STD.	3' - 6"	8"	2' - 0"	3' - 0"	3	2' - 8"	2' - 9"	8
H/P	4' - 0"	9 1/8"	2' - 2 1/4"	3' - 2 1/4"	4	3' - 2"	3' - 3"	10

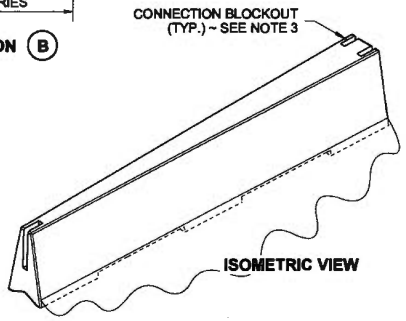

ISOMETRIC VIEW

4/16/12

SINGLE-SLOPE CONCRETE BARRIER (PRECAST) TRANSITION SECTION

STANDARD PLAN C-75.10-00

SHEET 1 OF 1 SHEET

APPROVED FOR PUBLICATION

STATE DESIGN ENGINEER — DATE 4/16/12

Washington State Department of Transportation

DRAWN BY: LISA CYFORD

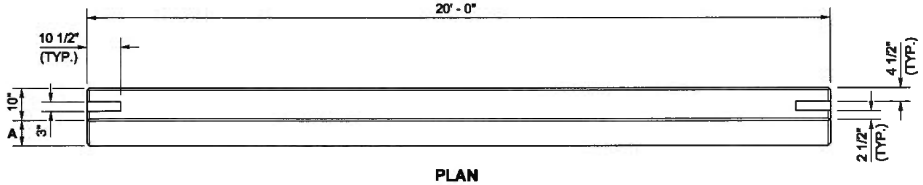

PLAN

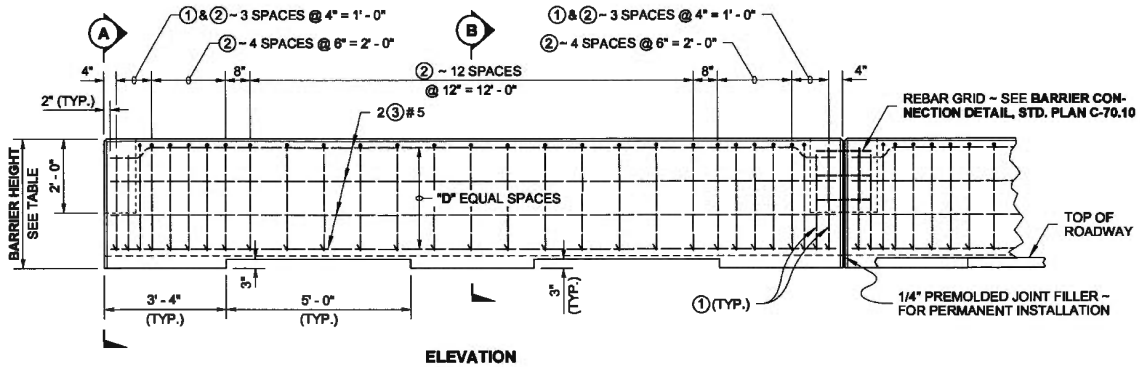

ELEVATION

NOTES

1. PERMANENT INSTALLATION requirements: Embed barrier 3" minimum, install 1/4" Pre-molded Joint Filler between segments, fill the Connection Blockout with grout, centering the Rebar Grid in the blockout before adding grout.
2. TEMPORARY INSTALLATION requirement: Place a Rebar Grid in the Connection Blockout between barrier segments.
3. See **Standard Plan C-70.10** for REBAR GRID DETAIL and BARRIER CONNECTION DETAIL.
4. Vertical Back barrier is used only in the configurations shown in **Standard Plans C-85.10** and **C-85.20**, and when placed against a retaining wall.
5. When **High-Performance Concrete Barrier** is specified in the Contract, use the dimensions given in the H/P row in the DIMENSION TABLE, with a minimum height above roadway of 3' - 6", and a minimum embedment of 3".

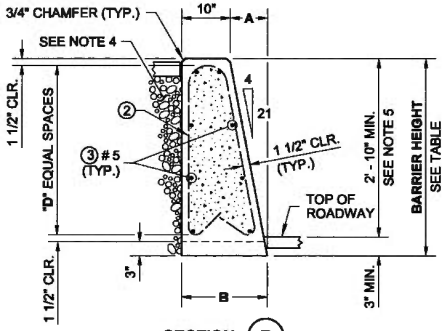

SECTION (B)

* WELDED WIRE REINFORCING SUBSTITUTION OPTION TABLE		
MARK	REINFORCING SIZE	WELDED WIRE REINFORCING
①	#4	D - 20
②	#4	D - 20
③	#5	D - 31

* WELDED WIRE REINFORCMENTS SHALL CONFORM TO **STANDARD SPECIFICATION SECTIONS 6-10** and **9-07**

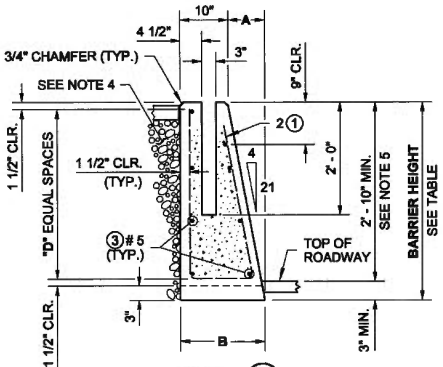

SECTION (A)

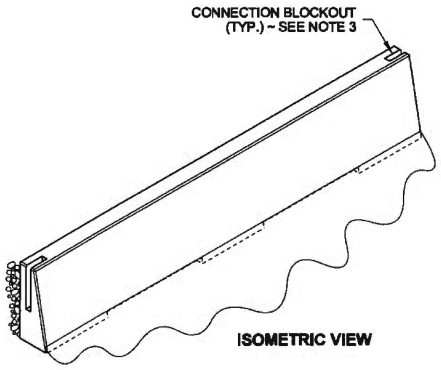

ISOMETRIC VIEW

REINFORCING STEEL BENDING DIAGRAM

SEE **STD. SPEC. 9-07.1(2)** FOR BENDING DIAMETERS

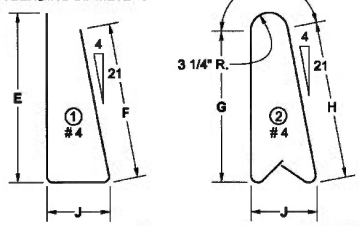

DIMENSION TABLE										SEE NOTE 5
	BARRIER HEIGHT	A	B	D	E	F	G	H	J	HORIZONTAL BARS (QTY.)
STD.	3' - 6"	8"	1' - 8"	3	3' - 0"	2' - 8 1/2"	2' - 8"	2' - 9 1/2"	1' - 2"	8
H/P	4' - 0"	9 1/8"	1' - 7 1/8"	4	3' - 6"	3' - 2 1/2"	3' - 2"	3' - 3 1/2"	1' - 3"	10

TERRY L. BERENTS
STATE OF WASHINGTON
12350
REGISTERED PROFESSIONAL ENGINEER
4/16/12

SINGLE-SLOPE CONCRETE BARRIER (PRECAST) VERTICAL BACK

STANDARD PLAN C-75.20-00

SHEET 1 OF 1 SHEET

APPROVED FOR PUBLICATION

STATE DESIGN ENGINEER — DATE 4/18/12

Washington State Department of Transportation

DRAWN BY: LISA CYFORD

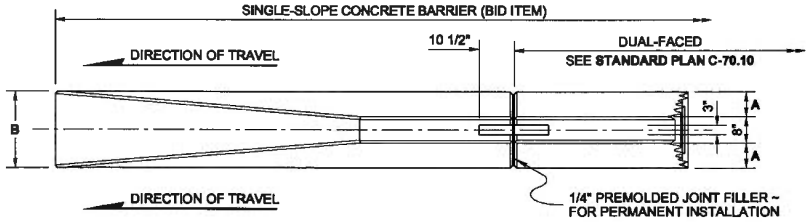

PLAN

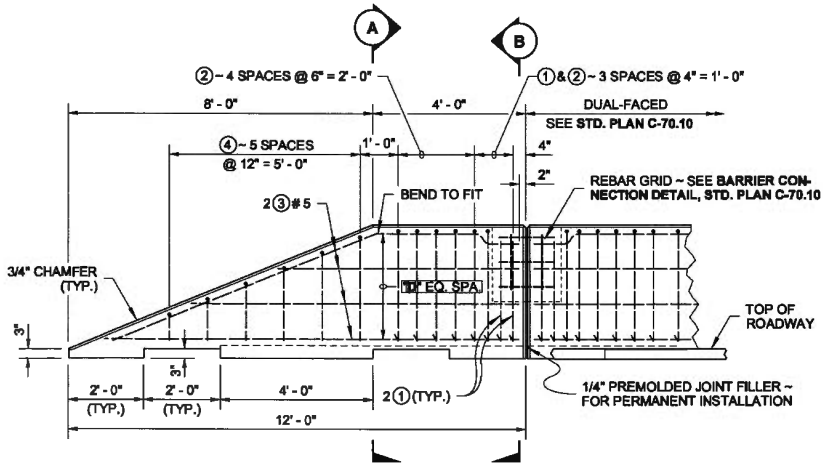

ELEVATION

NOTES

1. PERMANENT INSTALLATION requirements: Embed barrier 3" minimum, install 1/4" Premolded Joint Filler between segments, fill the Connection Blockout with grout, centering the Rebar Grid in the blockout before adding grout.
2. TEMPORARY INSTALLATION requirement: Place a Rebar Grid in the Connection Blockout between barrier segments.
3. See **Standard Plan C-70.10** for REBAR GRID DETAIL and BARRIER CONNECTION DETAIL.
4. The Terminal is used only on the trailing end of a barrier, unless otherwise shown in the Contract.
5. When **High-Performance Concrete Barrier** is specified in the Contract, use the dimensions given in the H/P row in the DIMENSION TABLE, with a minimum height above roadway of 3' - 6", and a minimum embedment of 3".

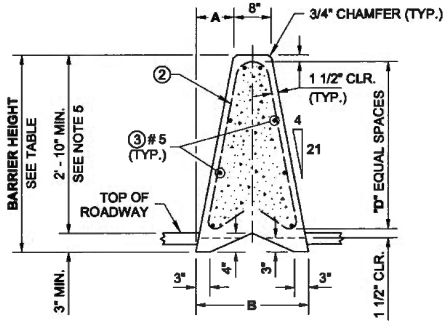

SECTION (A)

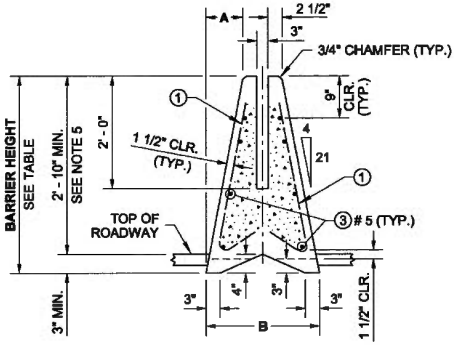

SECTION (B)

* WELDED WIRE REINFORCING SUBSTITUTION OPTION TABLE		
MARK	REINFORCING SIZE	WELDED WIRE REINFORCING
①	#4	D - 20
②	#4	D - 20
③	#5	D - 31

* WELDED WIRE REINFORCMENTS SHALL CONFORM TO STANDARD SPECIFICATION SECTIONS 6-10 and 9-07

REINFORCING STEEL BENDING DIAGRAM

SEE **STD. SPEC. 9-07.1(2)** FOR BENDING DIAMETERS

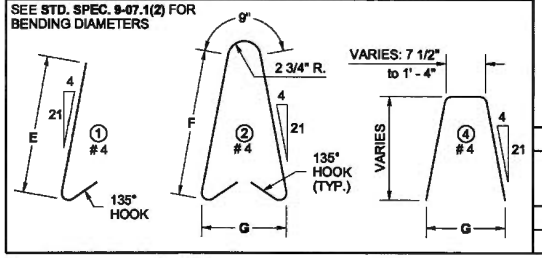

DIMENSION TABLE								SEE NOTE 5
	BARRIER HEIGHT	A	B	D	E	F	G	HORIZONTAL BARS (QTY.)
STD.	3' - 6"	8"	2' - 0"	3	2' - 8"	2' - 9"	1' - 7"	8
H/P	4' - 0"	9 1/8"	2' - 2 1/4"	4	3' - 2"	3' - 3"	1' - 9"	10

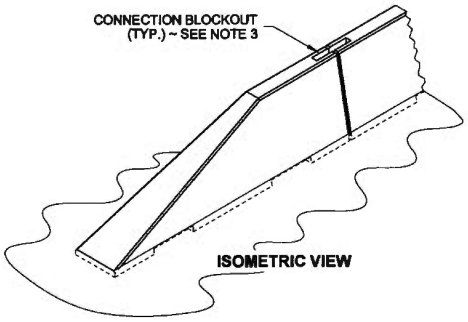

ISOMETRIC VIEW

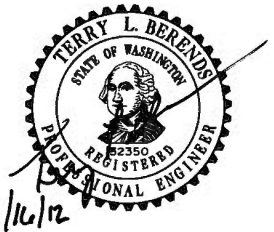

4/16/12

SINGLE-SLOPE CONCRETE BARRIER (PRECAST) TERMINAL

STANDARD PLAN C-75.30-00

SHEET 1 OF 1 SHEET

APPROVED FOR PUBLICATION

STATE DESIGN ENGINEER — DATE 4/16/12

Washington State Department of Transportation

DRAWN BY: LISA CYFORD

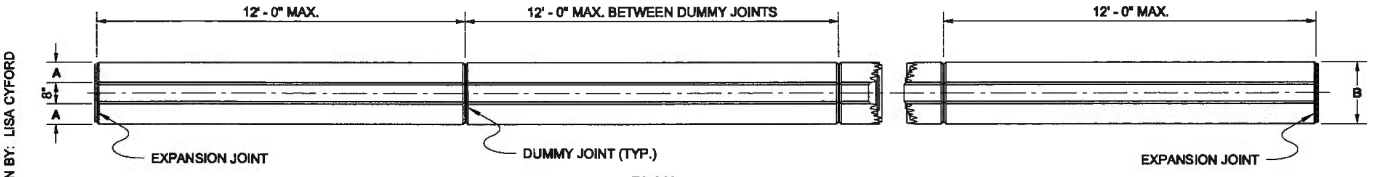

PLAN

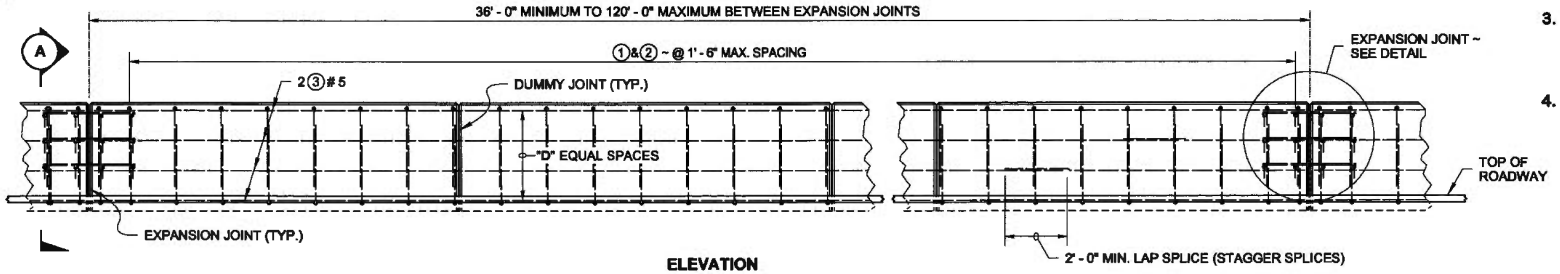

ELEVATION

NOTES

1. Reinforcing steel dimensions and clearances are shown for stationary form construction. When slipform construction is used, increase reinforcing steel clearances to the outside surfaces of the barrier to 2 1/2" and adjust the rebar dimensions as required.
2. When connecting between cast-in-place and pre-cast single-slope barrier, provide a Blockout, Rebar Grid, and added rebar, as shown in **Standard Plan C-70.10.**
3. The actual dimensions will vary as the grades change and the barrier transitions in height and width. The dimensions may be interpolated for intermediate barrier heights.
4. For Barrier with a 2' - 10" reveal, see Sheet 2. For High-Performance Barrier with a 3' - 6" reveal, see Sheet 3.

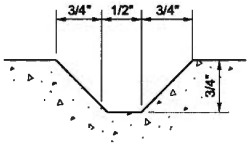

TYPICAL SECTION

DUMMY JOINT DETAIL

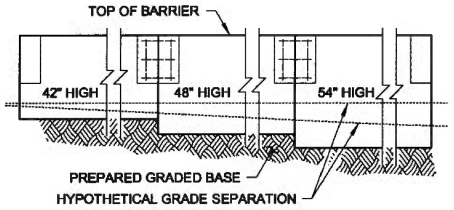

BARRIER TRANSITION DETAIL

★ WELDED WIRE REINFORCING SUBSTITUTION OPTION TABLE		
MARK	REINFORCING SIZE	WELDED WIRE REINFORCING
①	#4	D - 20
②	#4	D - 20
③	#5	D - 31

★ WELDED WIRE REINFORCMENTS SHALL CONFORM TO STANDARD SPECIFICATION SECTIONS 6-10 and 9-07

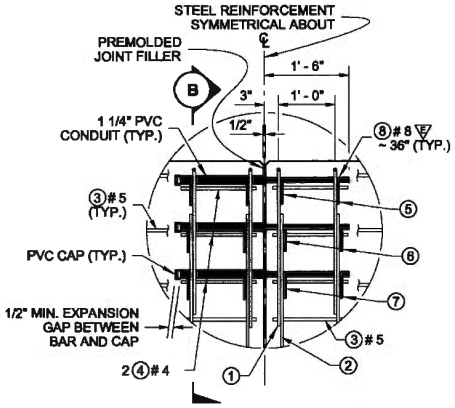

ENSURE THAT NO CEMENT CONCRETE ENTERS THE PVC CONDUIT WHEN POURING

▽ = EPOXY COATED

EXPANSION JOINT DETAIL

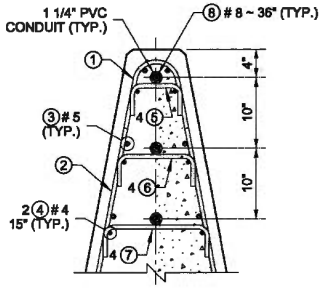

SECTION (B)

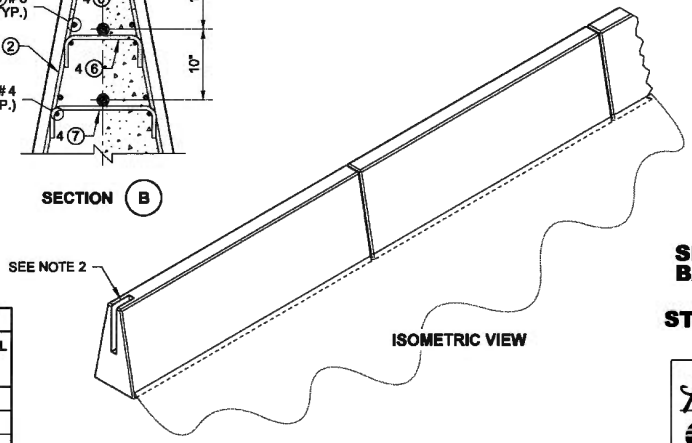

ISOMETRIC VIEW

4/16/12

REINFORCING STEEL BENDING DIAGRAM

SEE STD. SPEC. 9-07.1(2) FOR BENDING DIAMETERS

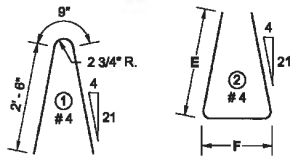

⑤ 7 1/4"
⑥ 11"
⑦ 15"

⑤ #4
⑥ #4
⑦ #4
SEE NOTE 3

DIMENSION TABLE						SEE NOTE 3
BARRIER HEIGHT	A	B	D	E	F	HORIZONTAL BARS (QTY.)
3' - 6"	8"	2' - 0"	3	2' - 6"	1' - 8"	8
4' - 0"	9 1/8"	2' - 2 1/4"	4	3' - 0"	1' - 10"	10
4' - 6"	10 1/4"	2' - 4 1/2"	5	3' - 6 1/2"	2' - 0"	12

SINGLE-SLOPE CONCRETE BARRIER (CAST-IN-PLACE) DUAL-FACED

STANDARD PLAN C-80.10-00

SHEET 1 OF 3 SHEETS

APPROVED FOR PUBLICATION

STATE DESIGN ENGINEER — DATE 4/18/12

Washington State Department of Transportation

DRAWN BY: LISA CYFORD

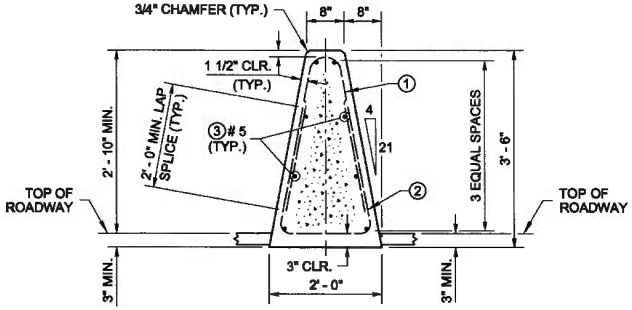

SECTION (A)

3' - 6" BARRIER SHOWN LEVEL

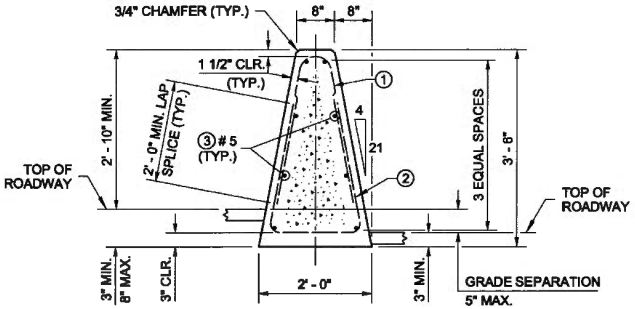

SECTION (A)

3' - 6" BARRIER FOR USE WITH A 0" TO 5" MAX. GRADE SEPARATION (SEE NOTE 3)

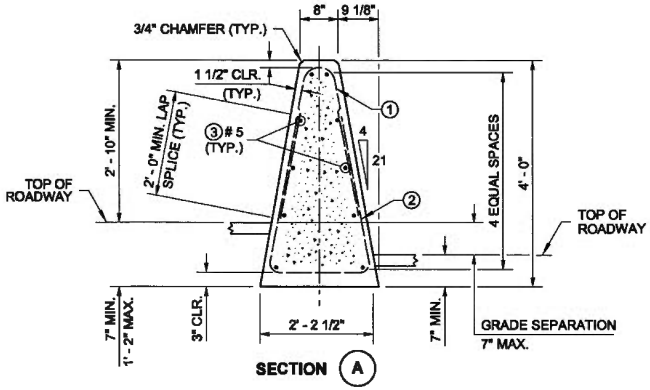

SECTION (A)

4' - 0" BARRIER FOR USE WITH A GREATER THAN 5" TO 7" MAX. GRADE SEPARATION (SEE NOTE 3)

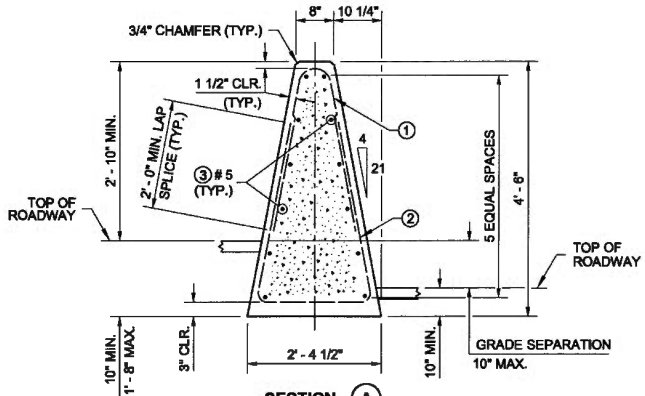

SECTION (A)

4' - 6" BARRIER FOR USE WITH A GREATER THAN 7" TO 10" MAX. GRADE SEPARATION (SEE NOTE 3)

STANDARD MOUNTING HEIGHT

4/16/12

SINGLE-SLOPE CONCRETE BARRIER (CAST-IN-PLACE) DUAL-FACED

STANDARD PLAN C-80.10-00

SHEET 2 OF 3 SHEETS

APPROVED FOR PUBLICATION

STATE DESIGN ENGINEER — DATE 4/16/12

Washington State Department of Transportation

DRAWN BY: LISA CYFORD

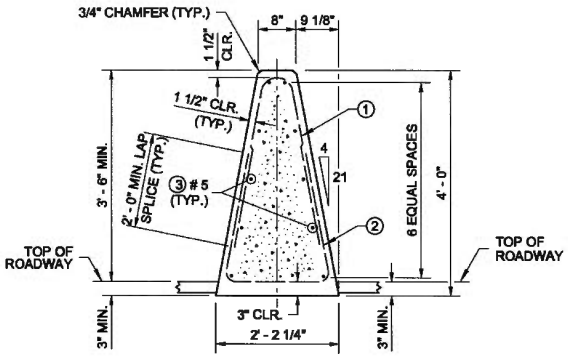

SECTION (A)

4' - 0" BARRIER SHOWN LEVEL

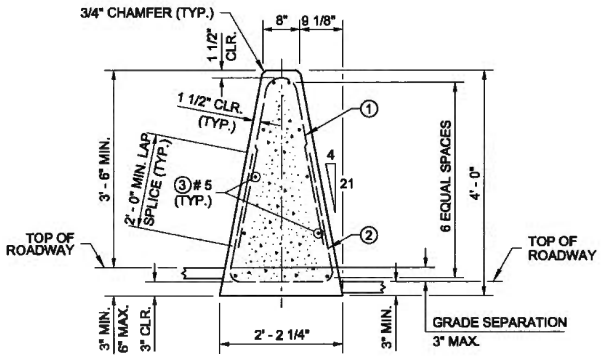

SECTION (A)

4' - 0" BARRIER FOR USE WITH A 0" TO 3" MAX. GRADE SEPARATION (SEE NOTE 3)

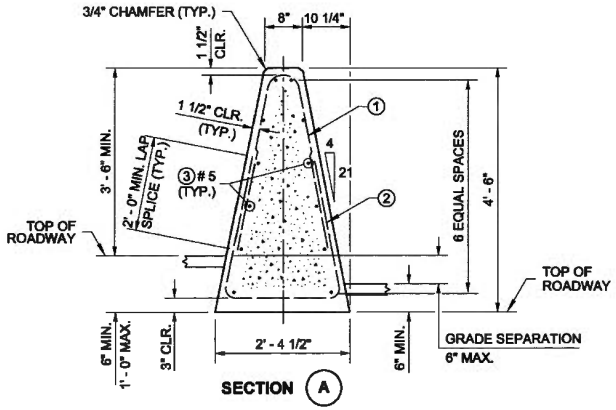

SECTION (A)

4' - 6" BARRIER FOR USE WITH A GREATER THAN 3" TO 6" MAX. GRADE SEPARATION (SEE NOTE 3)

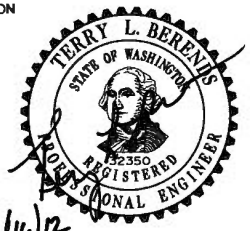

4/16/12

SINGLE-SLOPE CONCRETE BARRIER (CAST-IN-PLACE) DUAL-FACED

STANDARD PLAN C-80.10-00

SHEET 3 OF 3 SHEETS

APPROVED FOR PUBLICATION

STATE DESIGN ENGINEER — DATE 4/16/12

Washington State Department of Transportation

HIGH-PERFORMANCE BARRIER

DRAWN BY: LISA CYFORD

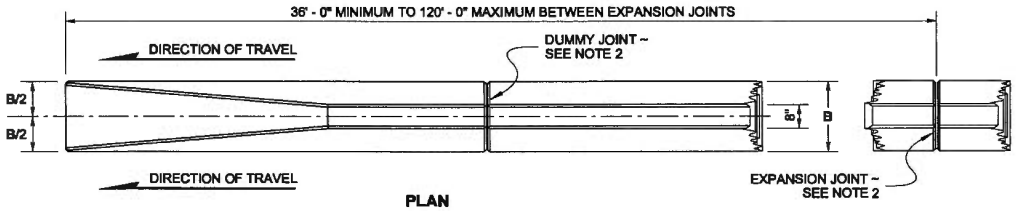

PLAN

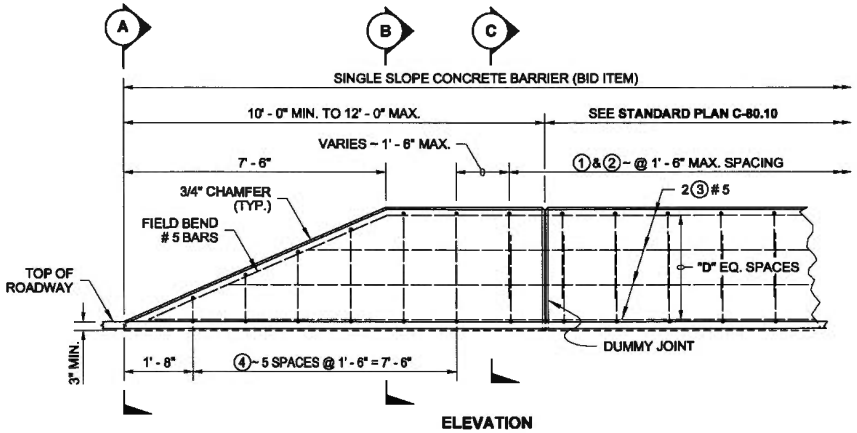

ELEVATION

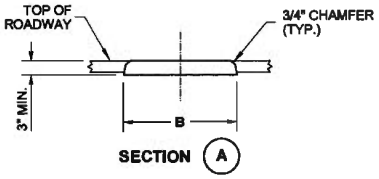

SECTION (A)

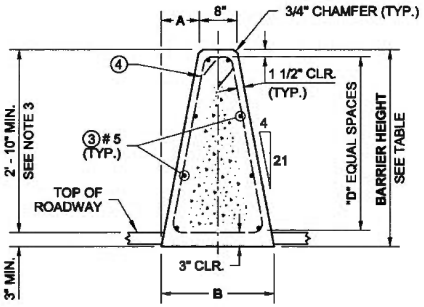

SECTION (B)

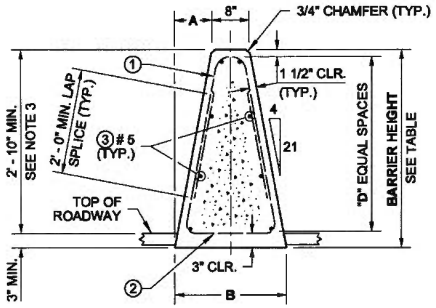

SECTION (C)

NOTES

1. The Terminal is used only on the trailing end of a barrier, unless otherwise shown in the Contract.
2. See **Standard Plan C-80.10**, Sheet 1, for EXPANSION JOINT and DUMMY JOINT details.
3. When **High-Performance Concrete Barrier** is specified in the Contract, use the dimensions given in the H/P row in the DIMENSION TABLE, with a minimum height above roadway of 3' - 6", and a minimum embedment of 3".

★ WELDED WIRE REINFORCING SUBSTITUTION OPTION TABLE		
MARK	REINFORCING SIZE	WELDED WIRE REINFORCING
①	#4	D - 20
②	#4	D - 20
③	#5	D - 31

★ WELDED WIRE REINFORCMENTS SHALL CONFORM TO STANDARD SPECIFICATION SECTIONS 6-10 and 9-07

REINFORCING STEEL BENDING DIAGRAM

SEE **STD. SPEC. 9-07.1(2)** FOR BENDING DIAMETERS

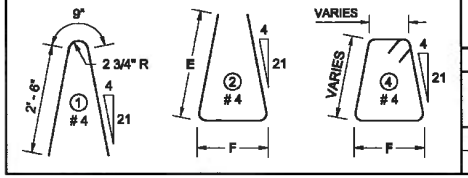

DIMENSION TABLE							SEE NOTE 3
	BARRIER HEIGHT	A	B	D	E	F	HORIZONTAL BARS (QTY.)
STD.	3' - 6"	8"	2' - 0"	3	2' - 6"	1' - 8"	8
H/P	4' - 0"	9 1/8"	2' - 2 1/4"	4	3' - 0"	1' - 10"	10

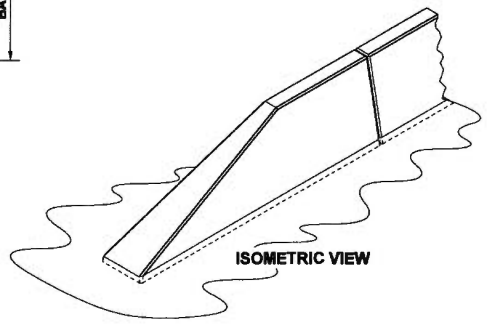

ISOMETRIC VIEW

SINGLE-SLOPE CONCRETE BARRIER (CAST-IN-PLACE) TERMINAL

STANDARD PLAN C-80.20-00

SHEET 1 OF 1 SHEET

APPROVED FOR PUBLICATION

STATE DESIGN ENGINEER — DATE 4/18/12

Washington State Department of Transportation

DRAWN BY: LISA CYFORD

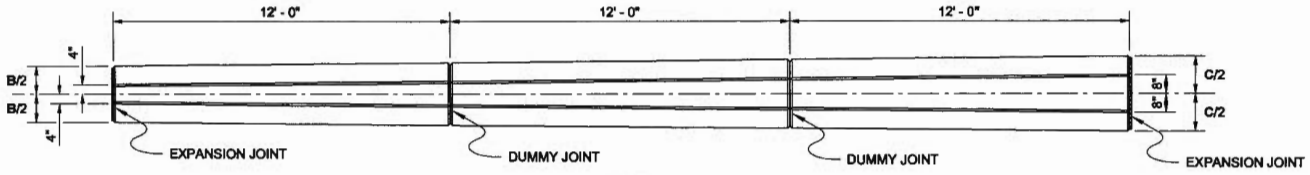

PLAN

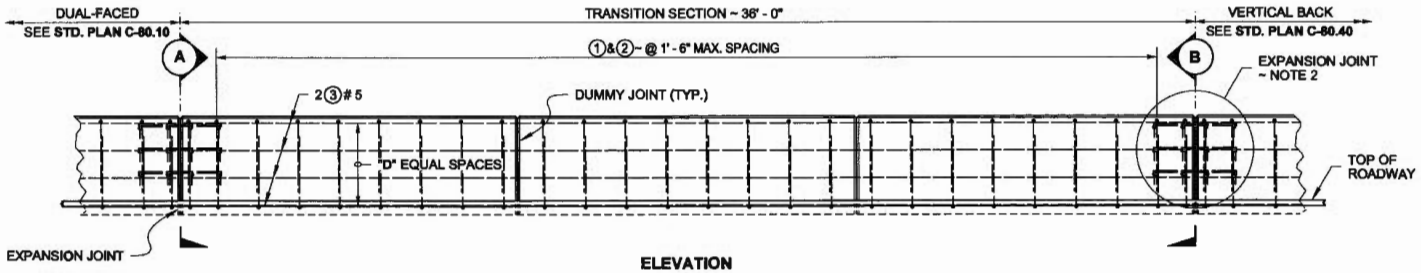

ELEVATION

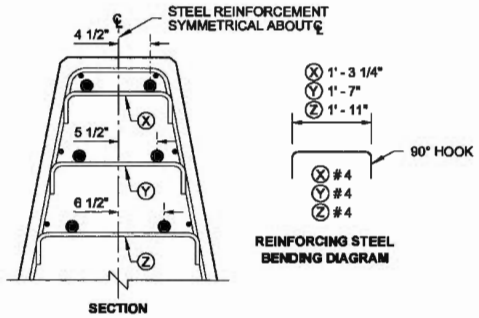

EXPANSION JOINT MODIFICATION
SEE NOTE 2

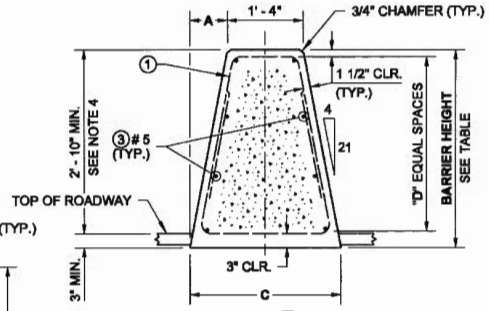

SECTION (B)

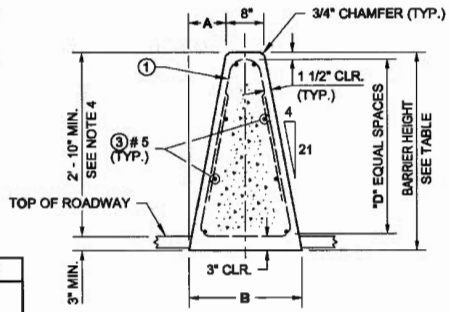

SECTION (A)

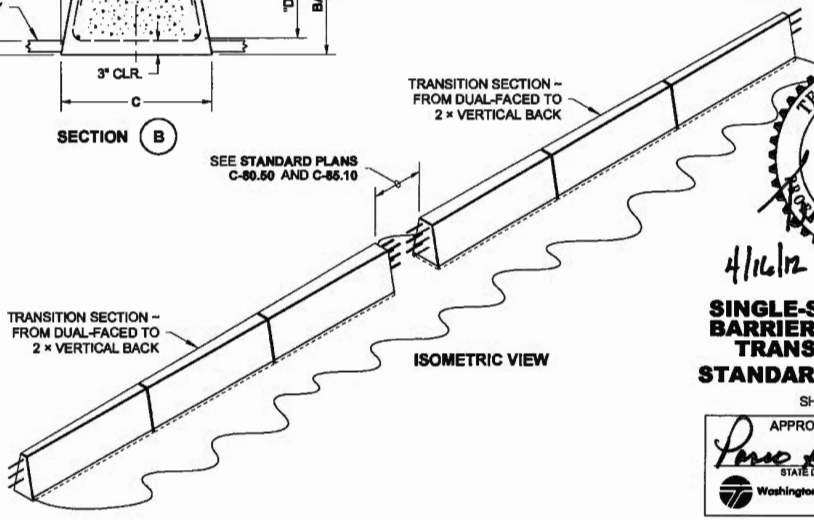

ISOMETRIC VIEW

NOTES

1. The Transition Section is used in the configurations shown in **Standard Plans C-85.10** and **C-85.11.**
2. See **Standard Plan C-80.10,** Sheet 1, for EXPANSION JOINT and DUMMY JOINT details. Modify rebar on wider end as shown in EXPANSION JOINT MODIFICATION.
3. Reinforcing steel dimensions and clearances are shown for stationary form construction. When slip-form construction is used, increase reinforcing steel clearances to the outside surfaces of the barrier to 2 1/2" and adjust steel dimensions as required.
4. When **High-Performance Concrete Barrier** is specified in the Contract, use the dimensions given in the H/P row in the DIMENSION TABLE, with a minimum height above roadway of 3' - 6" and a minimum embedment of 3".

*** WELDED WIRE REINFORCING SUBSTITUTION OPTION TABLE**

MARK	REINFORCING SIZE	WELDED WIRE REINFORCING
①	#4	D - 20
②	#4	D - 20
③	#5	D - 31

* WELDED WIRE REINFORCMENTS SHALL CONFORM TO **STANDARD SPECIFICATION SECTIONS 6-10 and 9-07**

REINFORCING STEEL BENDING DIAGRAM

SEE **STD. SPEC. 9-07.1(2)** FOR BENDING DIAMETERS

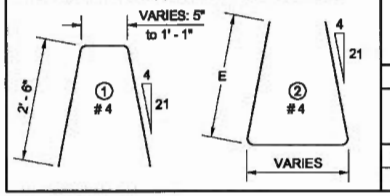

DIMENSION TABLE SEE NOTE 4

	BARRIER HEIGHT	A	B	C	D	E	HORIZONTAL BARS (QTY.)
STD.	3' - 6"	8"	2' - 0"	2' - 6"	3	2' - 6"	8
H/P	4' - 0"	9 1/8"	2' - 2 1/4"	2' - 10 1/4"	4	3' - 0"	10

TERRY L. BERENDS
STATE OF WASHINGTON
12350
REGISTERED
PROFESSIONAL ENGINEER
4/16/12

SINGLE-SLOPE CONCRETE BARRIER (CAST-IN-PLACE) TRANSITION SECTION

STANDARD PLAN C-80.30-00

SHEET 1 OF 1 SHEET

APPROVED FOR PUBLICATION
STATE DESIGN ENGINEER — DATE 4/16/12
Washington State Department of Transportation

DRAWN BY: LISA CYFORD

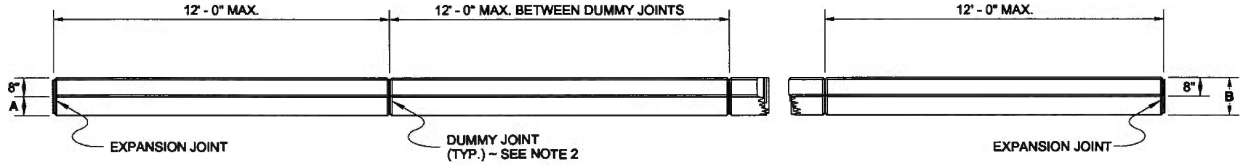

PLAN

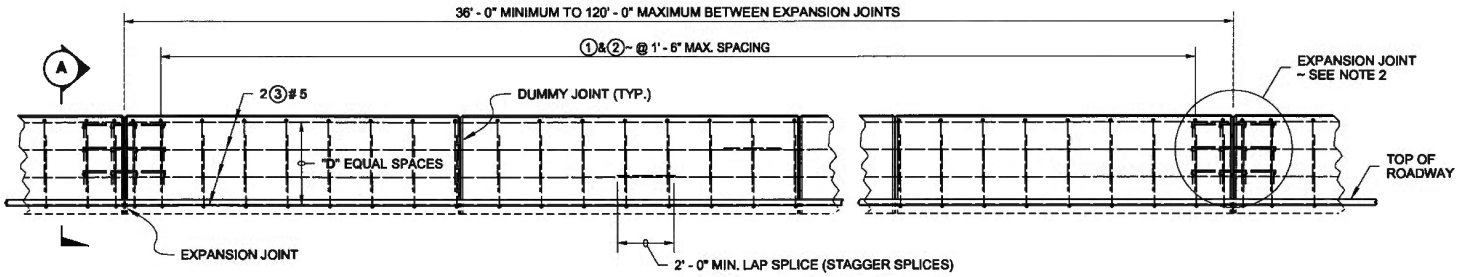

ELEVATION

NOTES

1. The Vertical Back barrier is used only in the configurations shown in **Standard Plans C-85.10** and **C-85.11,** and when placed against a retaining wall.
2. See **Standard Plan C-80.10,** Sheet 1, for EXPANSION JOINT and DUMMY JOINT details. Modify rebar as shown in EXPANSION JOINT MODIFICATION.
3. Reinforcing steel dimensions and clearances are shown for stationary form construction. When slip-form construction is used, increase reinforcing steel clearances to the outside surfaces of the barrier to 2 1/2" and adjust steel dimensions as required.
4. When **High-Performance Concrete Barrier** is specified in the Contract, use the dimensions given in the H/P row in the DIMENSION TABLE, with a minimum height above roadway of 3' - 6" and a minimum embedment of 3".

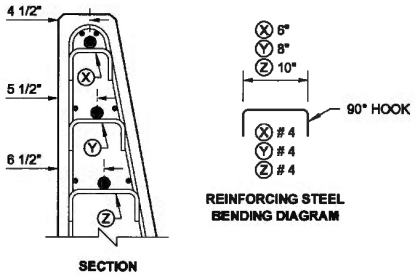

EXPANSION JOINT MODIFICATION

SEE NOTE 2

* WELDED WIRE REINFORCING SUBSTITUTION OPTION TABLE		
MARK	REINFORCING SIZE	WELDED WIRE REINFORCING
①	# 4	D - 20
②	# 4	D - 20
③	# 5	D - 31

* WELDED WIRE REINFORCMENTS SHALL CONFORM TO STANDARD SPECIFICATION SECTIONS 6-10 and 9-07

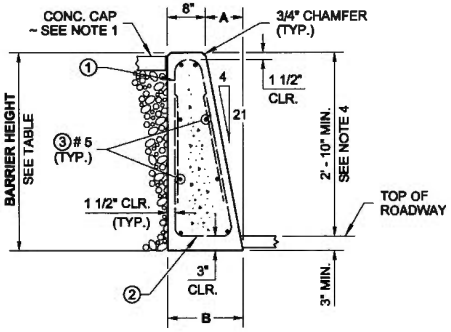

SECTION Ⓐ

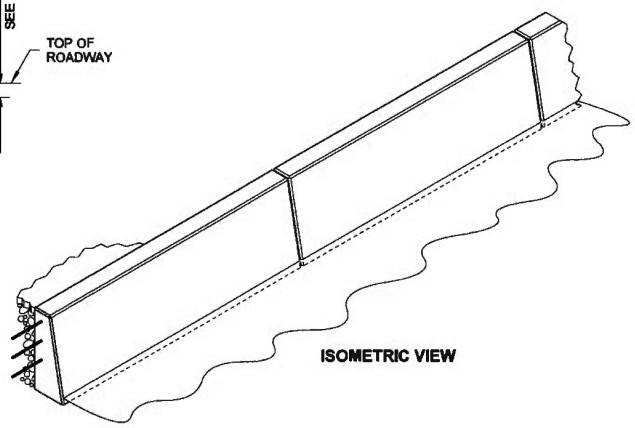

ISOMETRIC VIEW

REINFORCING STEEL BENDING DIAGRAM
SEE STD. SPEC. 9-07.1(2) FOR BENDING DIAMETERS

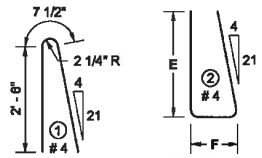

DIMENSION TABLE							SEE NOTE 4
	BARRIER HEIGHT	A	B	D	E	F	HORIZONTAL BARS (QTY.)
STD.	3' - 6"	8"	1' - 4"	3	2' - 6"	1' - 0 1/4"	8
H/P	4' - 0"	9 1/8"	1' - 5 1/8"	4	3' - 0"	1' - 1 1/2"	10

TERRY L. BERENDS
STATE OF WASHINGTON
12350
REGISTERED
PROFESSIONAL ENGINEER
4/16/12

SINGLE-SLOPE CONCRETE BARRIER (CAST-IN-PLACE) VERTICAL BACK

STANDARD PLAN C-80.40-00

SHEET 1 OF 1 SHEET

APPROVED FOR PUBLICATION

STATE DESIGN ENGINEER — DATE 4/16/12

Washington State Department of Transportation

DRAWN BY: LISA CYFORD

NOTE

This plan is for transitions to Precast Concrete Barrier Type 2 only. See contract for transitions to other barrier shapes and bridge rails.

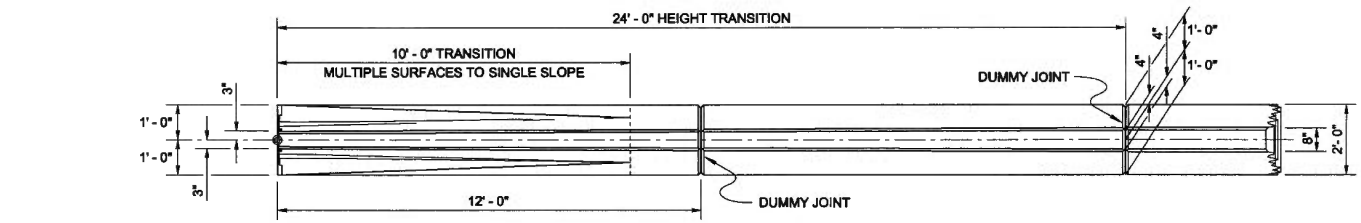

PLAN

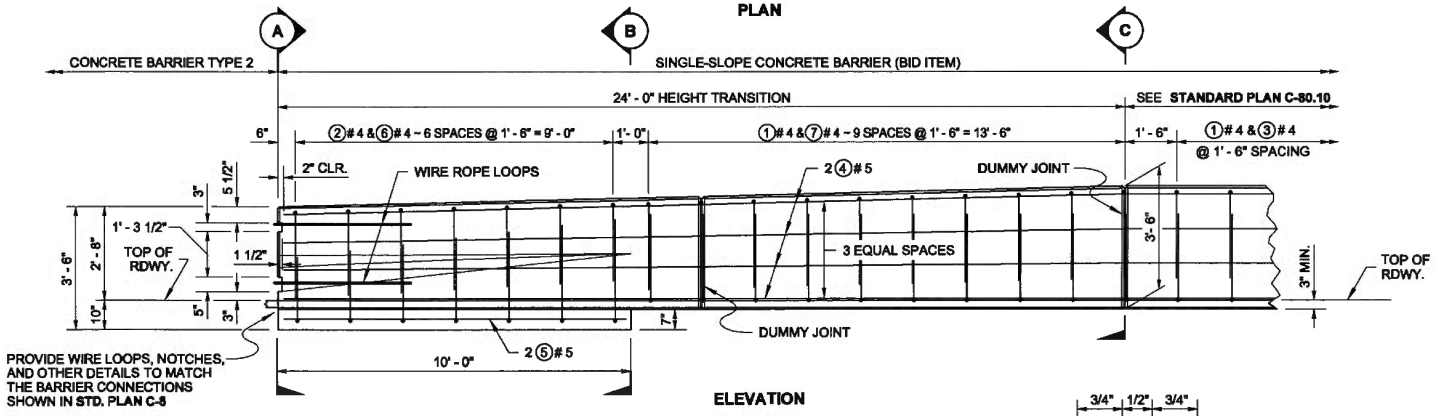

ELEVATION

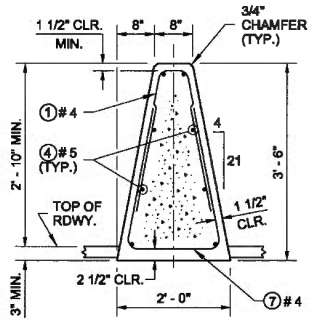

SECTION (C)

DUMMY JOINT

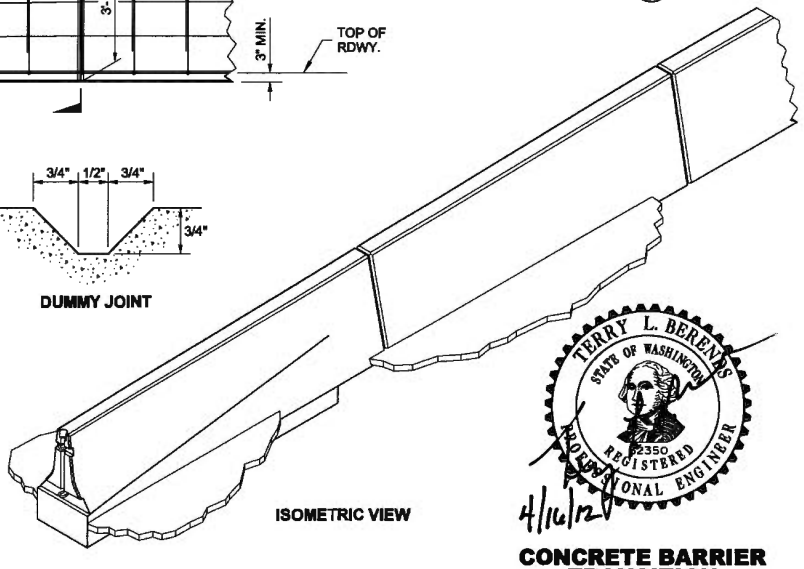

ISOMETRIC VIEW

REINFORCING STEEL BENDING DIAGRAM

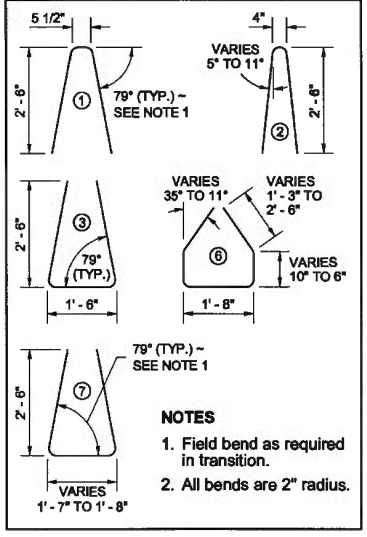

NOTES

1. Field bend as required in transition.
2. All bends are 2" radius.

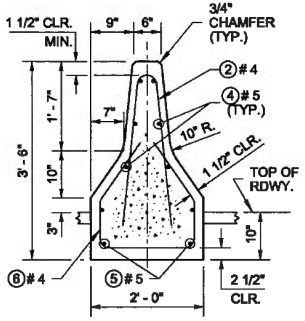

SECTION (A)

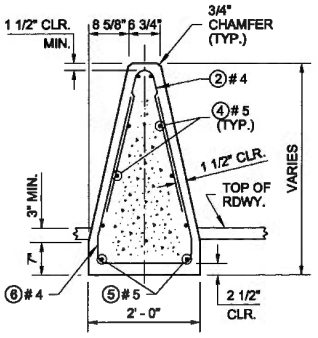

SECTION (B)

TERRY L. BERENTS
STATE OF WASHINGTON
12350
REGISTERED PROFESSIONAL ENGINEER
4/16/12

CONCRETE BARRIER TRANSITION
TYPE 2 TO SINGLE-SLOPE
STANDARD PLAN C-80.50-00

SHEET 1 OF 1 SHEET

APPROVED FOR PUBLICATION
STATE DESIGN ENGINEER — DATE 4/18/12
Washington State Department of Transportation

DRAWN BY: LISA CYFORD

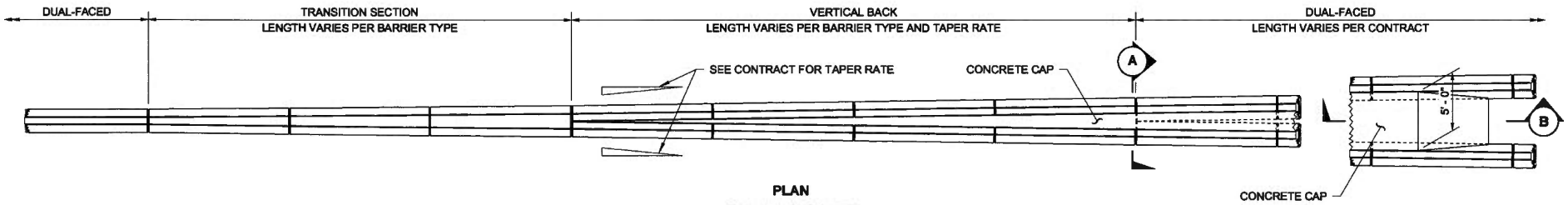

PLAN
(CAST-IN-PLACE SHOWN)

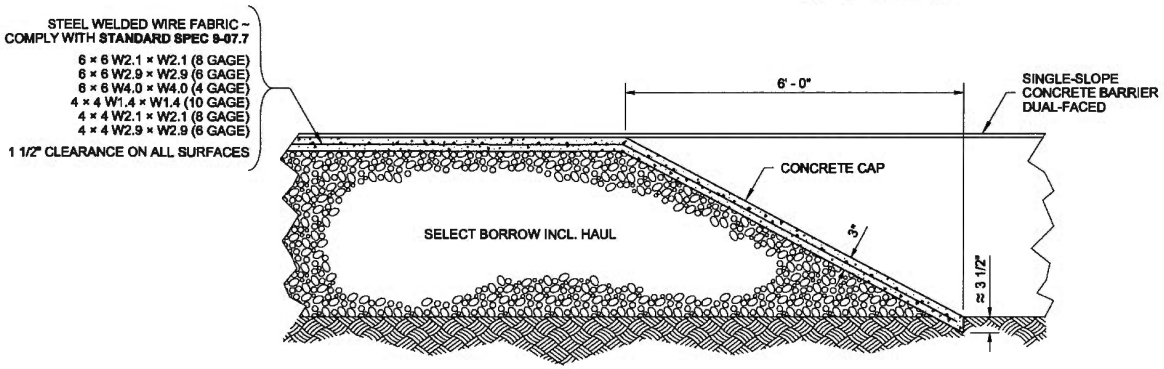

SECTION (B)

NOTES

1. Use the barrier type, precast or cast-in-place, as specified in the Contract.
2. For Single-Slope Concrete Barrier details, see **Standard Plan series C-70's** (precast) or **C-80's** (cast-in-place).

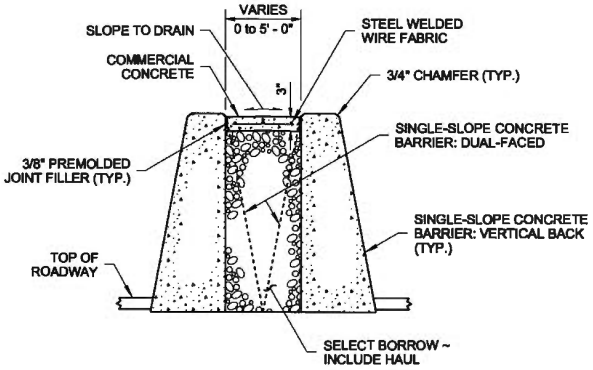

SECTION (A)

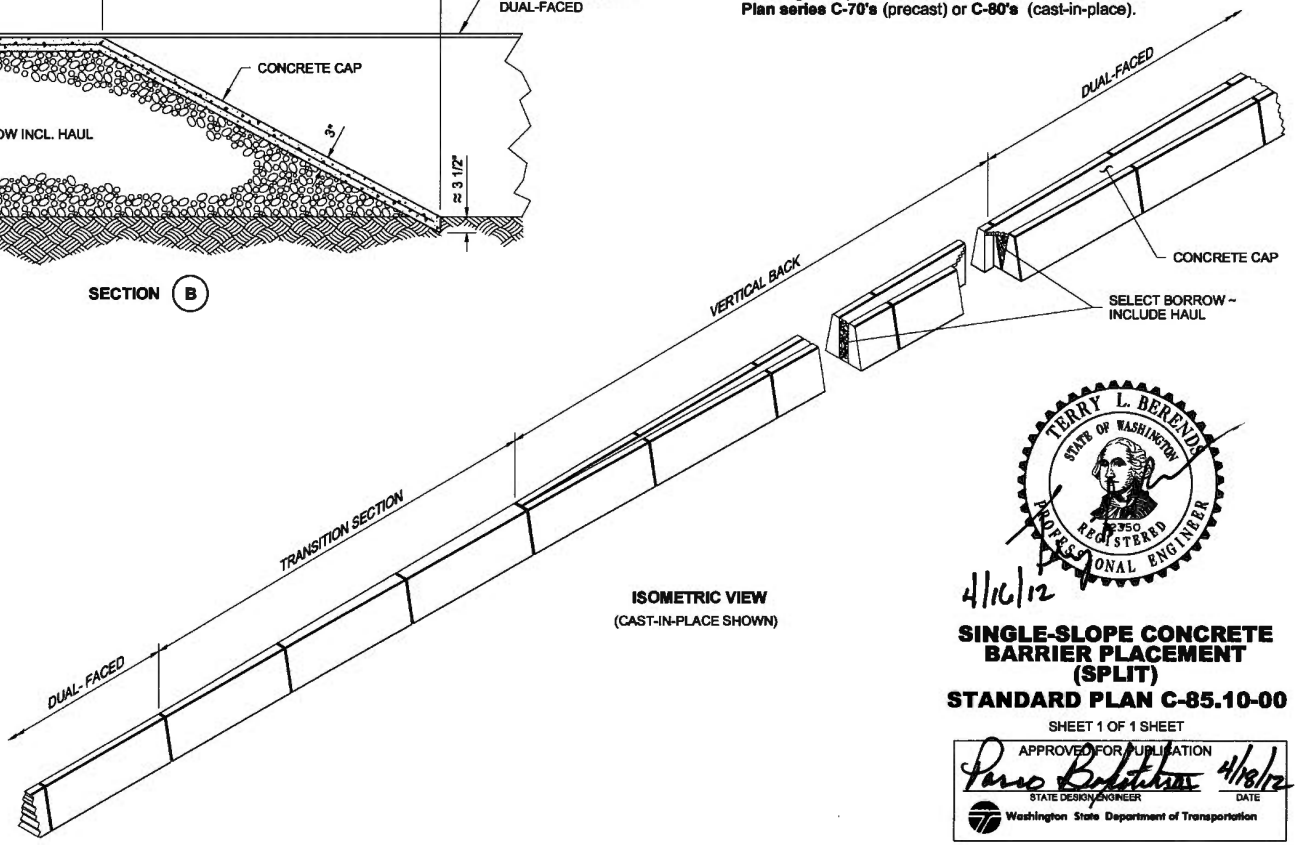

ISOMETRIC VIEW
(CAST-IN-PLACE SHOWN)

TERRY L. BERENDS
STATE OF WASHINGTON
12350
REGISTERED
PROFESSIONAL ENGINEER
4/16/12

SINGLE-SLOPE CONCRETE BARRIER PLACEMENT (SPLIT)

STANDARD PLAN C-85.10-00

SHEET 1 OF 1 SHEET

APPROVED FOR PUBLICATION
STATE DESIGN ENGINEER — DATE 4/18/12
Washington State Department of Transportation

DRAWN BY: LISA CYFORD

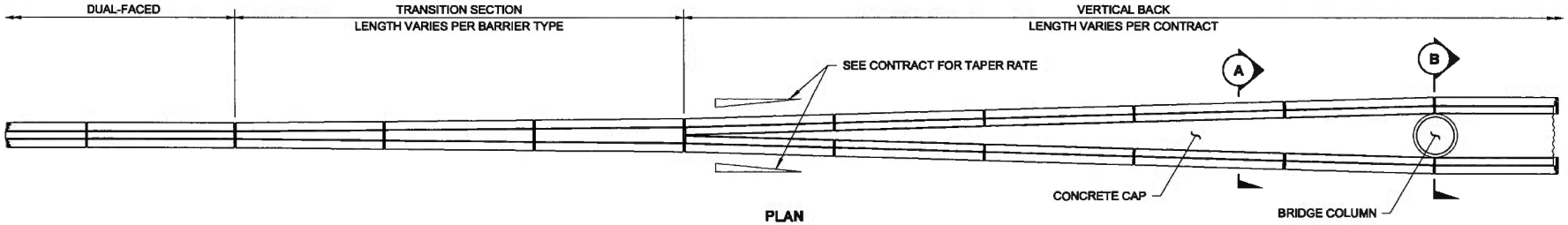

PLAN
(CAST-IN-PLACE SHOWN)

NOTES

1. Use the barrier type, precast or cast-in-place, as specified in the Contract.
2. For Single-Slope Concrete Barrier details, see **Standard Plan series C-70's** (precast) or **C-80's** (cast-in-place).

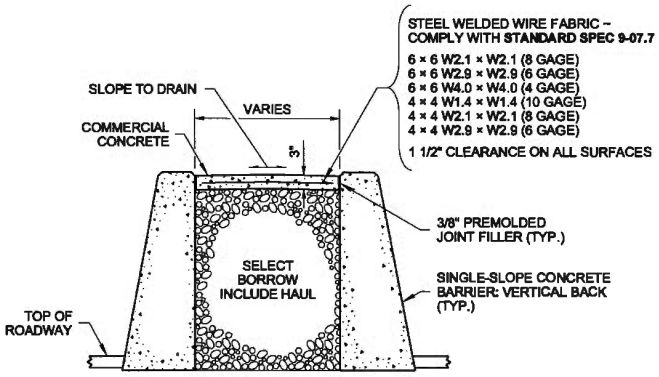

SECTION (A)

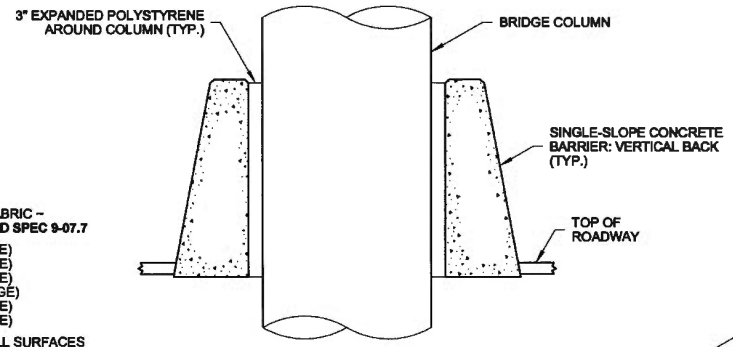

SECTION (B)

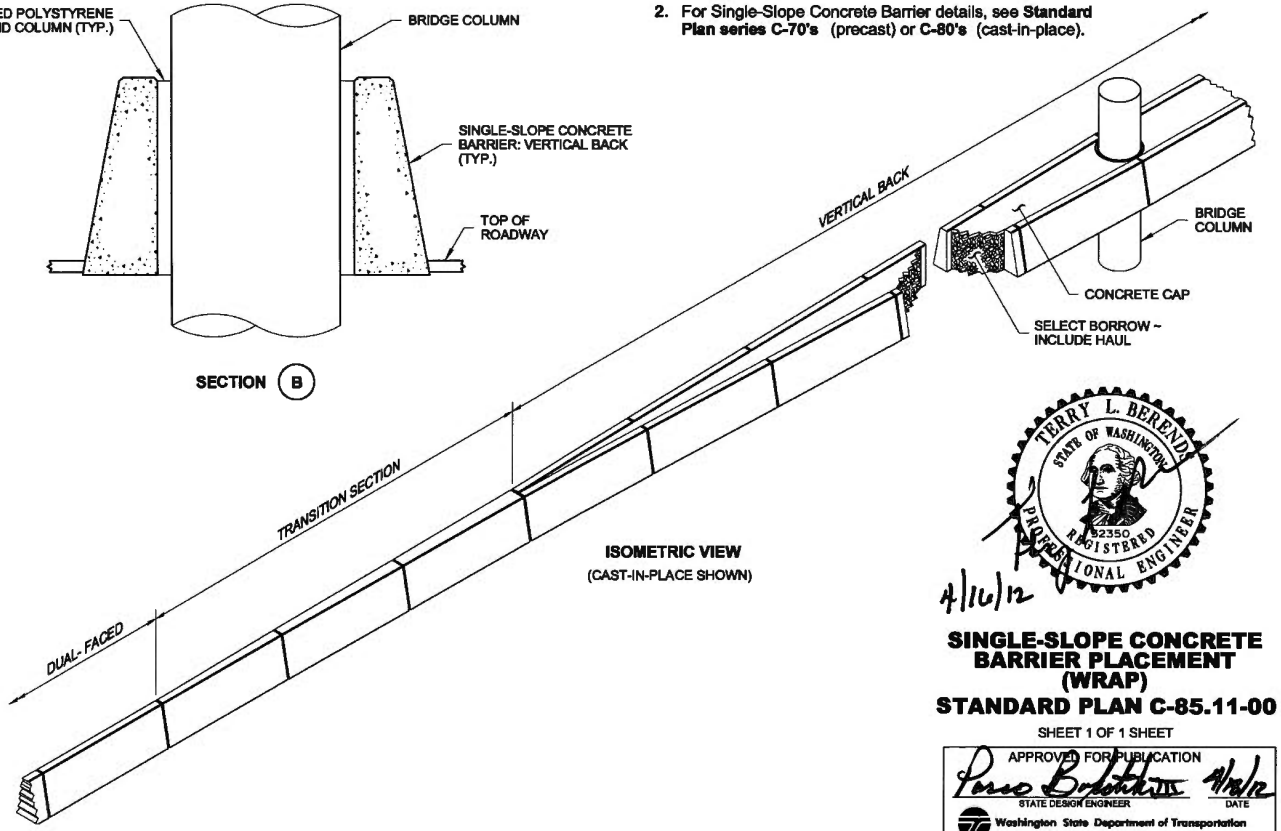

ISOMETRIC VIEW
(CAST-IN-PLACE SHOWN)

TERRY L. BERENDS
STATE OF WASHINGTON
32350
REGISTERED
PROFESSIONAL ENGINEER
4/16/12

SINGLE-SLOPE CONCRETE BARRIER PLACEMENT (WRAP)

STANDARD PLAN C-85.11-00

SHEET 1 OF 1 SHEET

APPROVED FOR PUBLICATION
STATE DESIGN ENGINEER — DATE 4/16/12
Washington State Department of Transportation

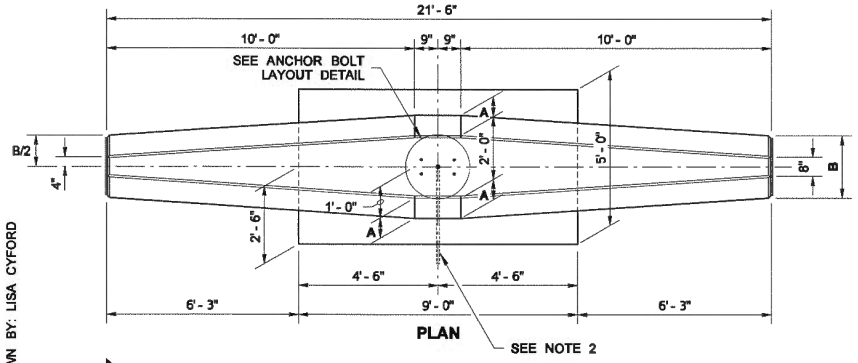

PLAN

DRAWN BY: LISA CYFORD

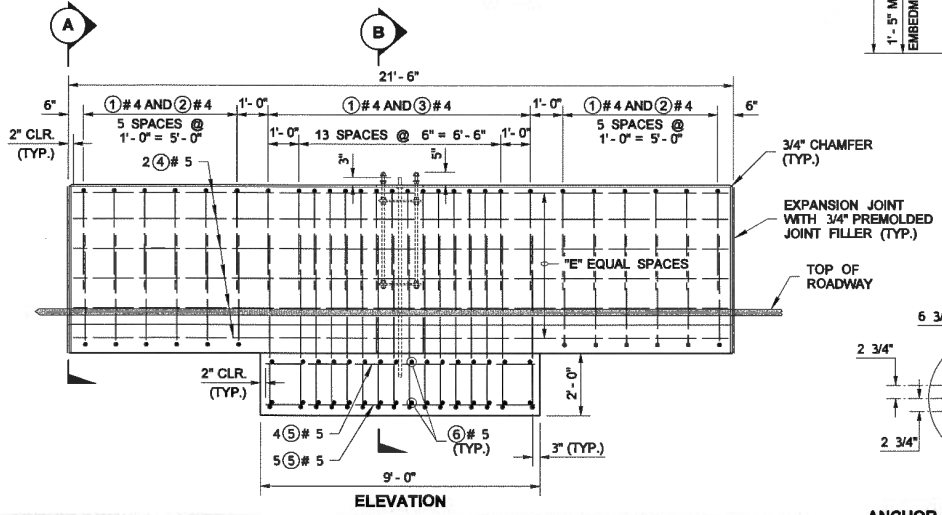

ELEVATION

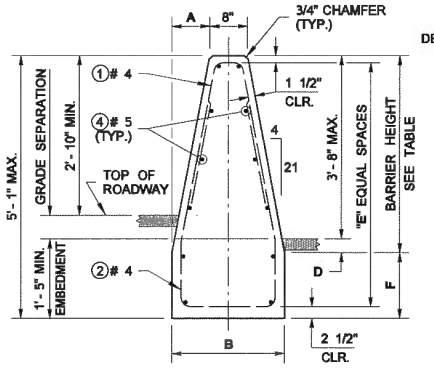

SECTION (A)

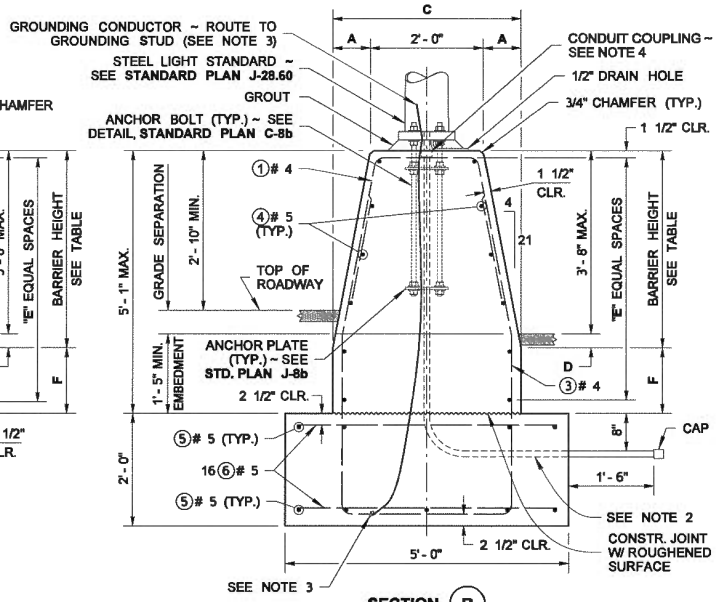

SECTION (B)

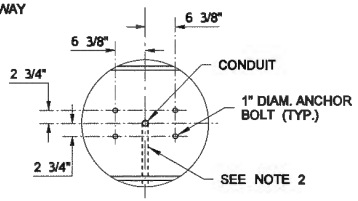

PLAN VIEW

ANCHOR BOLT LAYOUT DETAIL

NOTES

1. When connecting between cast-in-place and precast Single-Slope Barrier, provide a Connection Blockout and Rebar Grid as shown on **Standard Plan C-13.**
2. See the Contract Plans for conduit placement.
3. Grounding Conductor shall be non-insulated #4 AWG stranded copper, provide 3' - 0" min. slack. Clamp steel reinforcing bar with connector suitable for use embedded in concrete.
4. Install Conduit Coupling flush with top of foundation. Do not glue PVC stubout.
5. This plan shall be used for 40' and 50' Light Standards with 16' max. length double mast arms.
6. Concrete shall be Class 4000.

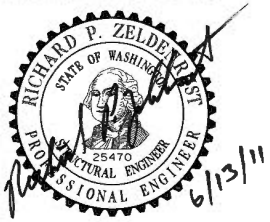

ALL DIMENSIONS ARE OUT TO OUT
ALL BENDS ARE 2" RADIUS

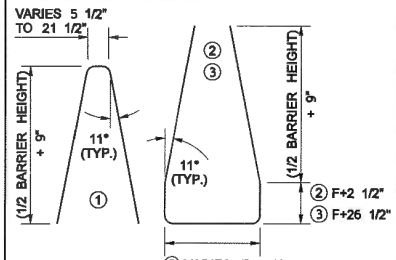

BAR LIST

MARK NO.	LOCATION	SIZE	QUANTITY
①	BARRIER ~ TOP VERTICAL	# 4	28
②	BARRIER ~ BOTTOM VERTICAL	# 4	12
③	FND. & BARRIER ~ VERTICAL	# 4	16
④	BARRIER ~ HORIZONTAL	# 5	"Q"
⑤	FOUNDATION	# 5	9
⑥	FOUNDATION	# 5	32

TABLE

GRADE SEPARATION	BARRIER HEIGHT	A	B	C	D	E	F	Q
0 TO 5"	3' - 6"	8"	2' - 0"	3' - 4"	3" MIN.	5	1' - 2"	12
UP TO 7"	4' - 0"	9 1/8"	2' - 2 1/4"	3' - 6 1/4"	7" MIN.	5	10"	12
UP TO 10"	4' - 6"	10 1/4"	2' - 4 1/2"	3' - 8 1/2"	10" MIN.	6	7"	14

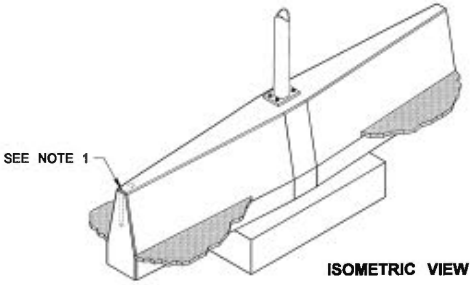

ISOMETRIC VIEW

SINGLE-SLOPE CONCRETE BARRIER LIGHT STANDARD FOUNDATION

STANDARD PLAN C-85.14-00

SHEET 1 OF 1 SHEET

APPROVED FOR PUBLICATION

STATE DESIGN ENGINEER — DATE 6/16/11

Washington State Department of Transportation

DRAWN BY: ADAM COCHRAN

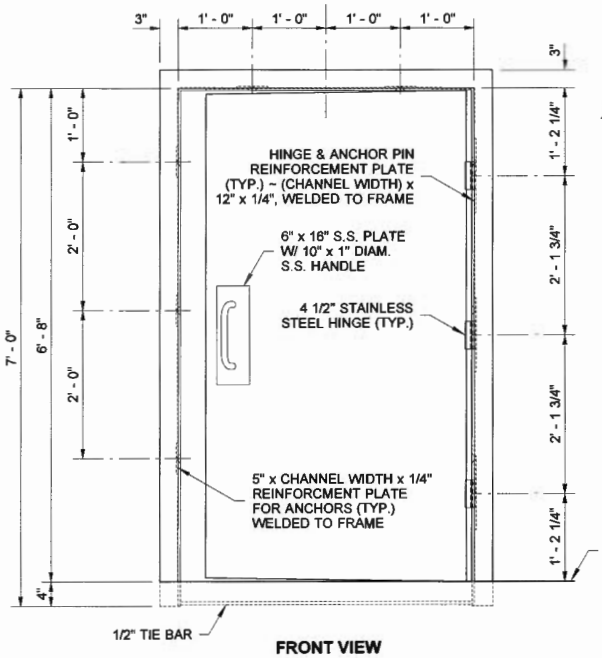

FRONT VIEW

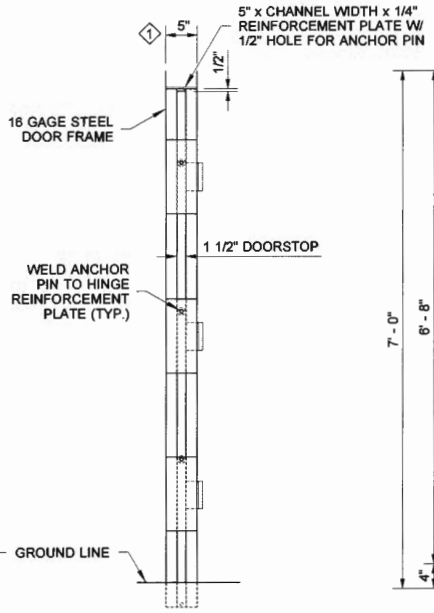

SIDE VIEW

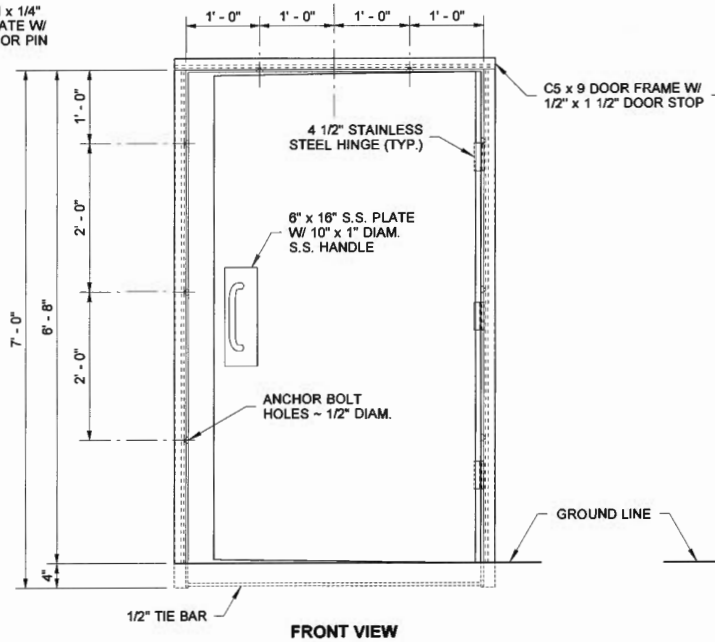

FRONT VIEW

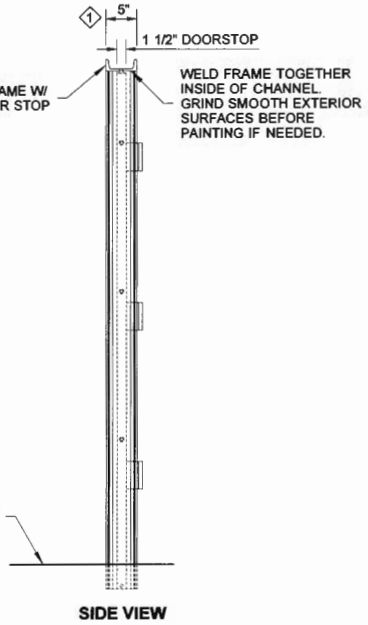

SIDE VIEW

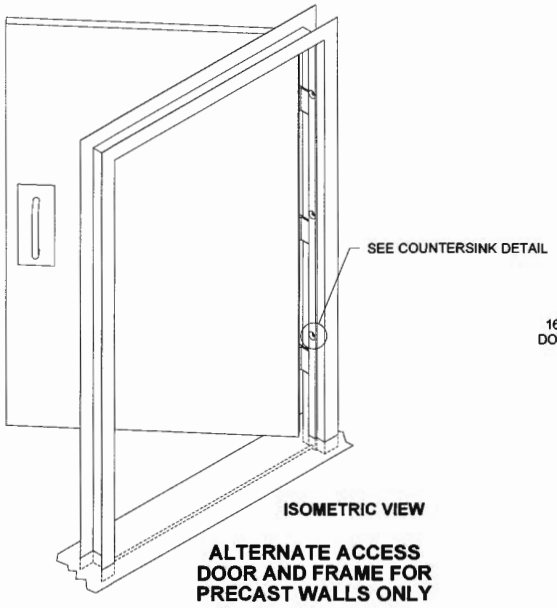

ISOMETRIC VIEW

ALTERNATE ACCESS DOOR AND FRAME FOR PRECAST WALLS ONLY

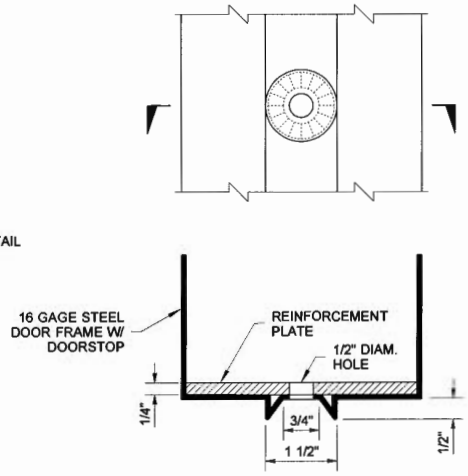

COUNTERSINK DETAIL

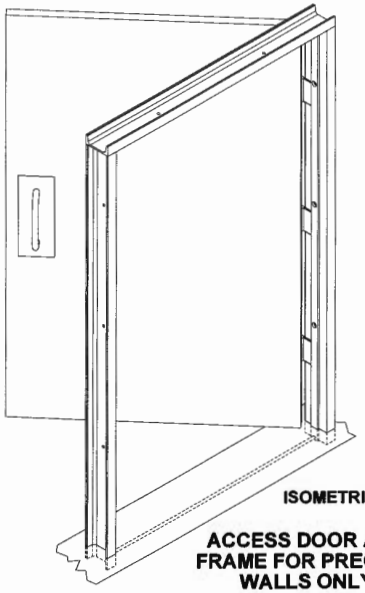

ISOMETRIC VIEW

ACCESS DOOR AND FRAME FOR PRECAST WALLS ONLY

BIJAN KHALEGHI
STATE OF WASHINGTON
11/9/05
27695
REGISTERED PROFESSIONAL ENGINEER

EXPIRES AUGUST 23, 2006

NOISE BARRIER WALL ACCESS DOOR & FRAME

STANDARD PLAN D-2.92-00

SHEET 2 OF 2 SHEETS

APPROVED FOR PUBLICATION

Harold Peterson 11.10.05

STATE DESIGN ENGINEER DATE

Washington State Department of Transportation

This page left blank intentionally.

DRAWN BY: BILL BERENS

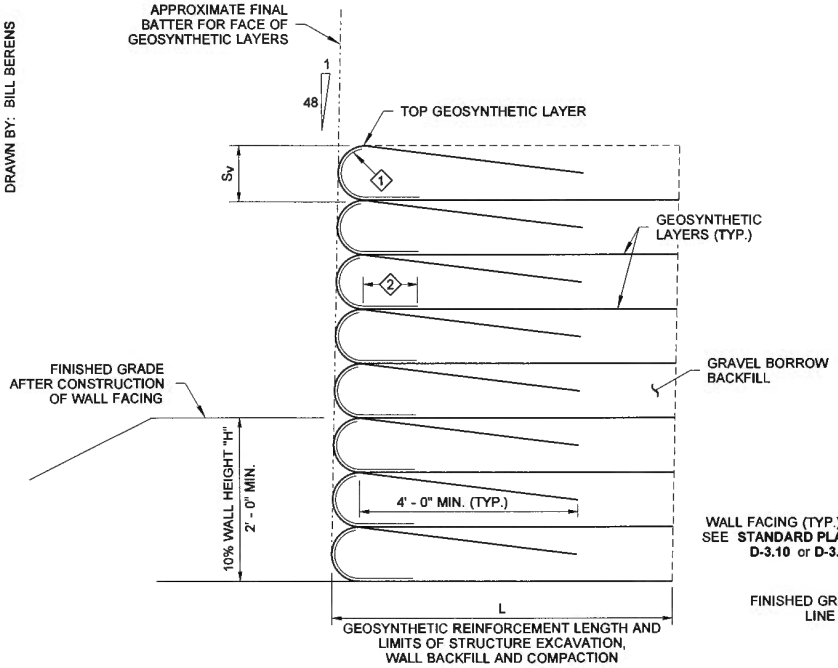

SECTION DETAIL

KEY NOTES

1. GEOTEXTILE FOR UNDERGROUND DRAINAGE CLASS A, MODERATE SURVIVABILITY (ONLY NEEDED IF A GEOGRID IS USED FOR GEOSYNTHETIC REINFORCEMENT)
2. 1' - 0" MIN. GEOTEXTILE OVERLAP, TOP & BOTTOM

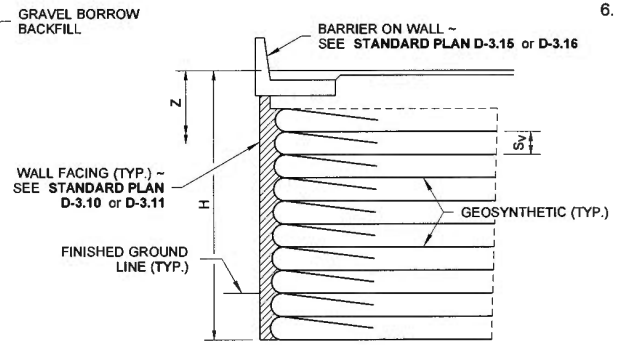

GEOSYNTHETIC WALL WITH 2 FT TRAFFIC SURCHARGE

TYPE 1, $A_S \leq 0.51g$

TYPE 5, $A_S \leq 0.20g$

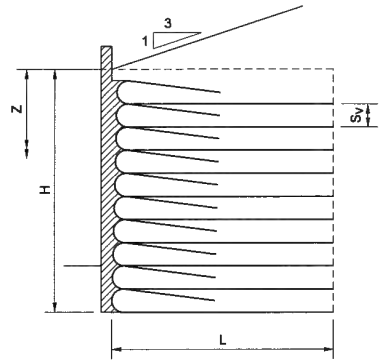

GEOSYNTHETIC WALL

TYPE 3, $A_S \leq 0.51g$

TYPE 7, $A_S \leq 0.20g$

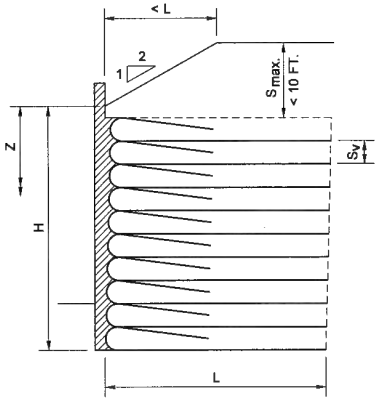

GEOSYNTHETIC WALL

TYPE 2, $A_S \leq 0.51g$

TYPE 6, $A_S \leq 0.20g$

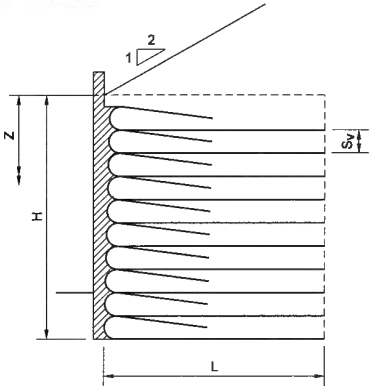

GEOSYNTHETIC WALL

TYPE 4, $A_S \leq 0.51g$

TYPE 8, $A_S \leq 0.20g$

NOTES

1. For the values of "L," see sheet 3, and for the values of "S_V" see sheet 2.
2. For Geosynthetic Wall Construction Sequence, see sheet 4.
3. "A_S" is the peak seismic ground acceleration as defined and applied in the AASHTO LRFD Bridge Design Specifications, Articles 3.10.4.1 and 11.6.5.
4. The long-term geosynthetic design strength "T_{al}" shall be determined in accordance with WSDOT Standard Practice T925. See Qualified Products List (QPL), Appendix "D," for products in which "T_{al}" has been determined. "H" and "Z" are graphically defined. "Z" is the distance from the top of the wall to a geosynthetic layer, and is used to determine "T_{al}" for that layer.
5. "L," the geosynthetic reinforcement length behind the wall face, is graphically defined. The maximum factored bearing stress acts in the vertical direction at the base of the wall. The load factors used are as specified in the AASHTO LRFD Bridge Design Specifications for each specified limit state.
6. Fascia or facing type shall be selected from **Standard Plans D-3.10** or **D-3.11** and called out in the Contract Plans. Region is to coordinate with the Geotechnical Services and Bridge & Structures offices.

5/15/12

TONY M. ALLEN
STATE OF WASHINGTON
25339
REGISTERED
PROFESSIONAL ENGINEER

PERMANENT GEOSYNTHETIC WALL

STANDARD PLAN D-3.09-00

SHEET 1 OF 4 SHEETS

APPROVED FOR PUBLICATION

STATE DESIGN ENGINEER — DATE 5/17/12

Washington State Department of Transportation

DRAWN BY: BILL BERENS

PERMANENT GEOSYNTHETIC WALL - GEOSYNTHETIC REINFORCEMENT DESIGN

WALL GEOMETRY AND REINFORCEMENT LAYER LOCATION			LONG-TERM GEOSYNTHETIC REINFORCEMENT STRENGTH REQUIRED, T_{al} (lbs/ft)*					
TOTAL WALL HEIGHT, H (ft)	DEPTH BELOW WALL TOP AT FACE, z (ft)	GEOSYNTHETIC REINFORCEMENT VERTICAL SPACING, S_v (ft)	GEOSYNTHETIC WALL TYPE 1	GEOSYNTHETIC WALL TYPES 2 AND 4	GEOSYNTHETIC WALL TYPE 3	GEOSYNTHETIC WALL TYPE 5	GEOSYNTHETIC WALL TYPES 6 AND 8	GEOSYNTHETIC WALL TYPE 7
UP TO 5	5	1.0	505	240	220	505	240	220
	5	1.25	631	300	280	631	300	275
5 < H ≤ 10	0 to 10	1.0	530	500	470	528	487	460
	0 to 10	1.25	660	630	590	660	609	575
10 < H ≤ 15	0 to 10	1.0	580	620	570	584	586	545
	10.1 to 15	1.0	760	780	740	760	760	719
	0 to 10	1.25	730	770	710	730	732	681
	10.1 to 15	1.25	950	980	920	950	950	899
15 < H ≤ 20	0 to 10	1.0	584	672	616	584	626	572
	10.1 to 20	1.0	992	1072	1000	992	1032	976
	0 to 10	1.25	730	840	770	730	783	715
	10.1 to 20	1.25	1240	1340	1250	1240	1290	1220
20 < H ≤ 25	0 to 10	1.0	580	720	660	584	667	599
	10.1 to 20	1.0	1050	1180	1100	1048	1128	1064
	20.1 to 25	1.0	1220	1350	1270	1224	1304	1240
	0 to 10	1.25	730	900	820	730	834	749
	10.1 to 20	1.25	1310	1470	1380	1310	1410	1330
	20.1 to 25	1.25	1530	1690	1590	1530	1630	1550
25 < H ≤ 30	0 to 10	1.0	580	780	700	584	708	626
	10.1 to 20	1.0	1050	1240	1140	1048	1168	1088
	20.1 to 30	1.0	1460	1640	1540	1456	1576	1496
	0 to 10	1.25	730	980	870	730	885	782
	10.1 to 20	1.25	1310	1550	1430	1310	1460	1360
	20.1 to 30	1.25	1820	2050	1920	1820	1970	1870
30 < H ≤ 35	0 to 10	1.0	580	830	740	584	749	653
	10.1 to 20	1.0	1050	1290	1180	1048	1216	1120
	20.1 to 30	1.0	1510	1740	1630	1512	1680	1584
	30.1 to 35	1.0	1690	1920	1800	1688	1848	1752
	0 to 10	1.25	730	1040	925	730	936	816
	10.1 to 20	1.25	1310	1610	1480	1310	1520	1400
	20.1 to 30	1.25	1890	2180	2040	1890	2100	1980
	30.1 to 35	1.25	2110	2400	2250	2110	2310	2190

NOTE: See Note 4, sheet 1.

5/15/12

TONY M. ALLEN
STATE OF WASHINGTON
25339
REGISTERED
PROFESSIONAL ENGINEER

PERMANENT GEOSYNTHETIC WALL

STANDARD PLAN D-3.09-00

SHEET 2 OF 4 SHEETS

APPROVED FOR PUBLICATION

STATE DESIGN ENGINEER — DATE 5/17/12

Washington State Department of Transportation

DRAWN BY: BILL BERENS

PERMANENT GEOSYNTHETIC WALL - EXTERNAL STABILITY DESIGN

(INCLUDES SEISMIC DESIGN FOR LARGE EARTHQUAKE: $A_S \leq 0.51g$)

TOTAL WALL HEIGHT, H (ft)	GEOSYNTHETIC WALL TYPE 1					GEOSYNTHETIC WALL TYPE 2				GEOSYNTHETIC WALL TYPE 3				GEOSYNTHETIC WALL TYPE 4			
	L (FT)	MAX. FACTORED BEARING STRESS (psf)				L (FT)	MAX. FACTORED BEARING STRESS (psf)			L (FT)	MAX. FACTORED BEARING STRESS (psf)			L (FT)	MAX. FACTORED BEARING STRESS (psf)		
		SERVICE 1	STRENGTH 1	EXTREME EVENT I	EXTREME EVENT II		SERVICE 1	STRENGTH 1	EXTREME EVENT I		SERVICE 1	STRENGTH 1	EXTREME EVENT I		SERVICE 1	STRENGTH 1	EXTREME EVENT I
5	11	847	1220	1011	1192	7	1057	1535	1391	6	852	1168	1284	7	975	1343	1473
6	11	1081	1566	1388	1949	8	1295	1862	1671	7	1028	1415	1598	9	1171	1613	1756
7	11	1248	1800	1685	2165	9	1469	2099	1981	8	1203	1657	1890	10	1366	1882	2058
8	11	1415	2034	1982	2381	10	1643	2336	2291	8	1378	1899	2182	11	1561	2151	2360
9	11	1582	2268	2279	2597	11	1817	2573	2601	9	1553	2141	2474	12	1756	2420	2662
10	11	1768	2531	2609	3278	11	2069	2968	3006	10	1738	2394	2811	14	1951	2685	2947
11	11	1916	2736	2873	3029	12	2165	3047	3221	11	1903	2625	3058	15	2146	2958	3266
12	11	2083	2970	3170	3245	13	2339	3284	3531	12	2078	2867	3350	16	2341	3227	3568
13	11	2250	3204	3467	3461	14	2513	3521	3841	13	2253	3109	3642	18	2536	3496	3870
14	11	2417	3438	3764	3677	15	2687	3758	4151	14	2428	3351	3934	19	2731	3765	4172
15	11	2650	3783	4198	4176	16	2800	3872	4374	15	2607	3590	4216	20	2924	4029	4494
16	11	2751	3906	4358	4238	17	3035	4232	4771	16	2778	3835	4518	22	3121	4303	4776
17	12	2918	4140	4655	4325	18	3209	4469	5081	17	2953	4077	4810	23	3316	4572	5078
18	13	3085	4374	4952	4541	18	3383	4706	5391	18	3128	4319	5102	24	3511	4841	5380
19	14	3252	4608	5249	4757	19	3557	4943	5701	19	3303	4561	5394	25	3706	5110	5682
20	15	3412	4835	5424	4927	21	3811	5286	5975	20	3476	4787	5621	27	3899	5371	5965
21	15	3586	5076	5843	5189	21	3905	5417	6321	21	3653	5045	5978	28	4096	5648	6286
22	16	3753	5310	6140	5405	22	4079	5654	6631	22	3828	5287	6270	29	4291	5917	6588
23	16	3920	5544	6437	5621	23	4253	5891	6941	23	4003	5529	6562	31	4486	6186	6890
24	17	4087	5778	6734	5837	24	4427	6128	7251	23	4178	5771	6854	32	4681	6455	7192
25	18	4268	6038	7040	6027	25	4629	6404	7505	24	4375	6032	7230	33	4873	6716	7519
26	18	4421	6246	7328	6269	25	4775	6602	7871	25	4528	6255	7438	35	5071	6993	7796
27	19	4588	6480	7625	6485	26	4949	6839	8181	26	4703	6497	7730	36	5266	7262	8098
28	19	4755	6714	7922	6701	27	5123	7076	8491	27	4878	6739	8022	37	5461	7531	8400
29	20	4922	6948	8219	6917	28	5297	7313	8801	28	5053	6981	8314	38	5656	7800	8702
30	21	5123	7238	8698	7148	29	5446	7523	9093	29	5244	7228	8632	40	5848	8057	8988
31	22	5256	7416	8813	7349	30	5645	7787	9421	30	5403	7465	8898	41	6046	8338	9306
32	23	5423	7650	9110	7565	30	5819	8024	9731	31	5578	7707	9190	42	6241	8607	9608
33	24	5590	7884	9407	7781	31	5993	8261	10041	32	5753	7949	9482	44	6436	8876	9910
34	25	5757	8118	9704	7997	32	6167	8498	10351	33	5928	8191	9774	45	6631	9145	10212
35	25	5863	8251	9874	8080	32	6320	8737	10766	34	6112	8425	10035	46	6823	9403	10544

NOTE: See General Note 5, sheet 1.

PERMANENT GEOSYNTHETIC WALL - EXTERNAL STABILITY DESIGN

(INCLUDES SEISMIC DESIGN FOR LARGE EARTHQUAKE: $A_S \leq 0.20g$)

TOTAL WALL HEIGHT, H (ft)	GEOSYNTHETIC WALL TYPE 5					GEOSYNTHETIC WALL TYPE 6				GEOSYNTHETIC WALL TYPE 7				GEOSYNTHETIC WALL TYPE 8			
	L (FT)	MAX. FACTORED BEARING STRESS (psf)				L (FT)	MAX. FACTORED BEARING STRESS (psf)			L (FT)	MAX. FACTORED BEARING STRESS (psf)			L (FT)	MAX. FACTORED BEARING STRESS (psf)		
		SERVICE 1	STRENGTH 1	EXTEME EVENT I	EXTEME EVENT II		SERVICE 1	STRENGTH 1	EXTREME EVENT I		SERVICE 1	STRENGTH 1	EXTREME EVENT I		SERVICE 1	STRENGTH 1	EXTREME EVENT I
5	11	847	1220	992	1192	6	1057	1535	1294	6	852	1168	1155	6	977	1349	1326
6	11	1105	1607	1320	1688	6	1358	1928	1574	6	1107	1536	1560	6	1278	1786	1868
7	11	1273	1843	1553	2090	6	1569	2226	1889	6	1302	1809	1842	6	1504	2105	2214
8	10	1441	2079	1786	2463	7	1780	2527	2211	7	1497	2082	2124	7	1730	2424	2560
9	10	1609	2315	2019	2808	7	1991	2831	2540	7	1692	2355	2406	7	1956	2743	2906
10	10	1768	2531	2229	3278	7	2266	3372	2776	7	1924	2692	2773	7	2228	3145	3381
11	10	1945	2787	2485	3424	8	2413	3445	3213	8	2082	2901	2970	8	2408	3381	3598
12	10	2113	3023	2718	3699	9	2624	3755	3555	9	2277	3174	3252	9	2634	3700	3944
13	11	2281	3259	2951	3954	10	2835	4066	3901	10	2472	3447	3534	10	2860	4019	4290
14	11	2449	3495	3184	4190	11	3046	4378	4249	11	2667	3720	3816	11	3086	4338	4636
15	11	2711	3884	3516	4396	11	3245	4598	4737	11	2886	4037	4159	11	3342	4718	5072
16	12	2785	3967	3650	4616	12	3468	5004	4948	12	3057	4266	4380	12	3538	4976	5328
17	12	2953	4203	3883	4809	12	3679	5316	5297	12	3252	4539	4662	12	3764	5295	5674
18	13	3121	4439	4116	4990	13	3890	5628	5644	13	3447	4812	4944	13	3990	5614	6020
19	14	3289	4675	4349	5163	14	4101	5939	5990	14	3642	5085	5226	14	4216	5933	6366
20	14	3522	5015	4642	5201	14	4326	6125	6321	14	3848	5383	5546	14	4456	6291	6762
21	15	3625	5147	4815	5489	15	4523	6557	6672	15	4032	5631	5790	15	4668	6571	7058
22	16	3793	5383	5048	5646	16	4734	6863	7006	16	4227	5904	6072	16	4894	6890	7404
23	17	3961	5619	5281	5801	17	4945	7166	7335	17	4422	6177	6354	17	5120	7209	7750
24	18	4129	5855	5514	5955	18	5156	7466	7657	18	4617	6450	6636	18	5346	7528	8096
25	18	4325	6131	5763	6146	18	5417	7683	7891	18	4810	6729	6932	18	5570	7863	8453
26	19	4465	6327	5980	6272	19	5578	8057	8280	19	5007	6996	7200	19	5798	8166	8788
27	19	4633	6563	6213	6438	19	5789	8346	8578	19	5202	7269	7482	19	6024	8485	9134
28	20	4801	6799	6446	6611	20	6000	8631	8866	20	5397	7542	7764	20	6250	8804	9480
29	21	4969	7035	6679	6793	21	6211	8912	9144	21	5592	7815	8046	21	6476	9123	9826
30	21	5123	7238	6881	7148	21	6577	9408	9515	21	5773	8075	8319	21	6684	9436	10143
31	22	5305	7507	7145	7192	22	6633	9457	9664	22	5982	8361	8610	22	6928	9761	10518
32	23	5473	7743	7378	7412	23	6844	9720	9905	23	6177	8634	8892	23	7154	10080	10864
33	24	5641	7979	7611	7649	24	7055	9978	10131	24	6372	8907	9174	24	7380	10399	11210
34	25	5809	8215	7844	7904	25	7266	10229	10343	25	6567	9180	9456	25	7606	10718	11556
35	25	5918	8341	7998	8177	25	7311	10373	10550	25	6735	9421	9705	25	7798	11009	11834

NOTE: See Note 5, sheet 1.

5/15/12

TONY M. ALLEN
STATE OF WASHINGTON
25339
REGISTERED
PROFESSIONAL ENGINEER

PERMANENT GEOSYNTHETIC WALL

STANDARD PLAN D-3.09-00

SHEET 3 OF 4 SHEETS

APPROVED FOR PUBLICATION

STATE DESIGN ENGINEER — DATE 5/17/12

Washington State Department of Transportation

DRAWN BY: BILL BERENS

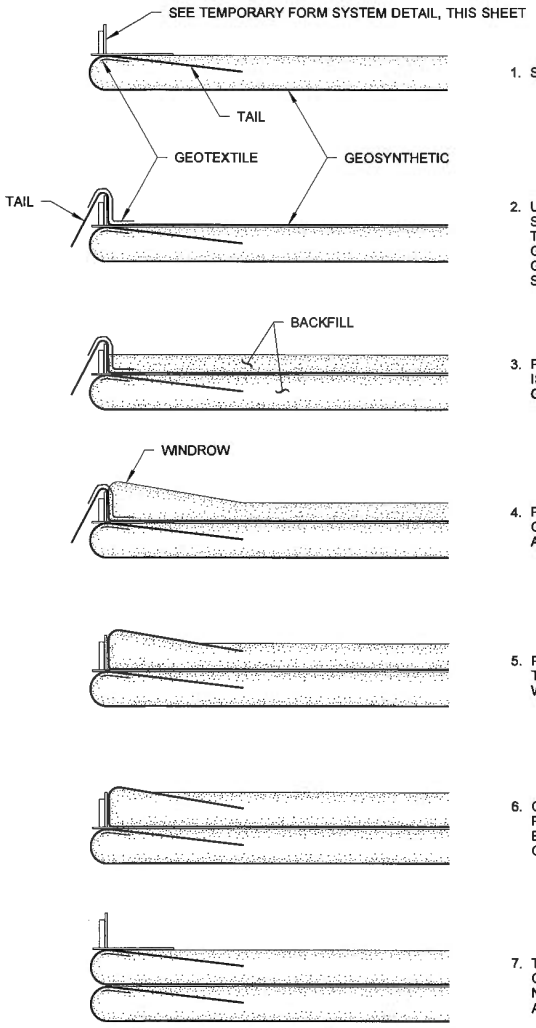

1. SET FORM ON COMPLETED LIFT.
2. UNROLL GEOSYNTHETIC AND POSITION IT SO THAT A 4' - 0" WIDE "TAIL" DRAPES OVER THE FORM. IF A GEOGRID IS USED FOR THE GEOSYNTHETIC REINFORCEMENT, POSITION GEOTEXTILE TO PREVENT BACKFILL FROM SPILLING THROUGH GEOGRID OPENINGS.
3. PLACE THE BACKFILL UNTIL THE BACKFILL IS UP TO HALF OF THE REQUIRED VERTICAL GEOSYNTHETIC LAYER SPACING.
4. PLACE A WINDROW TO SLIGHTLY GREATER THAN FULL LIFT HEIGHT AGAINST THE FORM.
5. PLACE THE GEOSYNTHETIC "TAIL" OVER THE WINDROW AND LOCK INTO PLACE WITH BACKFILL.
6. COMPLETE BACKFILLING UNTIL THE COMPACTED BACKFILL LAYER THICKNESS IS EQUAL TO THE REQUIRED VERTICAL GEOSYNTHETIC LAYER SPACING.
7. THE FORM MAY BE LEFT IN PLACE WHILE CONSTRUCTING THE NEXT LAYER (SEE NOTE 2) OTHERWISE, RESET THE FORM AND REPEAT THE SEQUENCE.

GEOSYNTHETIC WALL CONSTRUCTION SEQUENCE

(SECTION VIEW)

NOTES(SHEET)

1. Use of the Temporary Form System, as detailed in this plan, is optional.
2. To help maintain the wall face batter, leave the form system for the preceding layer in place while constructing the next layer. When the upper layer is complete, remove the form system from the lower layer and reset it for the next layer. See below.

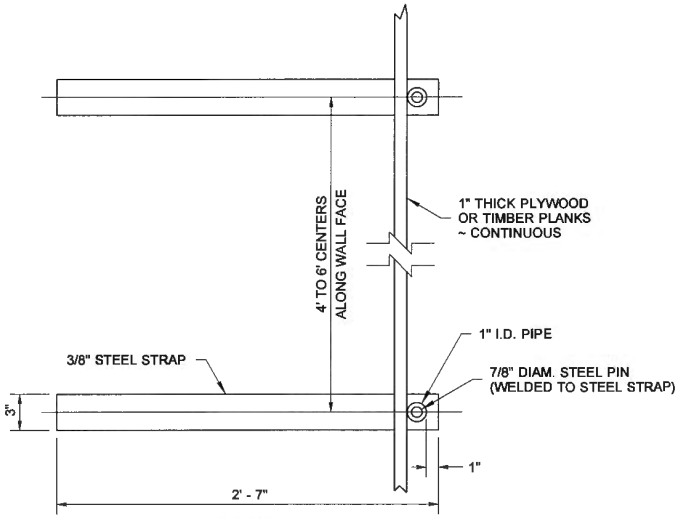

PLAN

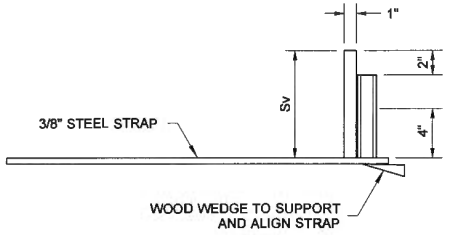

ELEVATION

TEMPORARY FORM SYSTEM DETAIL

5/15/12

TONY M. ALLEN
STATE OF WASHINGTON
25339
REGISTERED
PROFESSIONAL ENGINEER

PERMANENT GEOSYNTHETIC WALL

STANDARD PLAN D-3.09-00

SHEET 4 OF 4 SHEETS

APPROVED FOR PUBLICATION

STATE DESIGN ENGINEER — DATE 5/7/12

Washington State Department of Transportation

DRAWN BY: LISA CYFORD

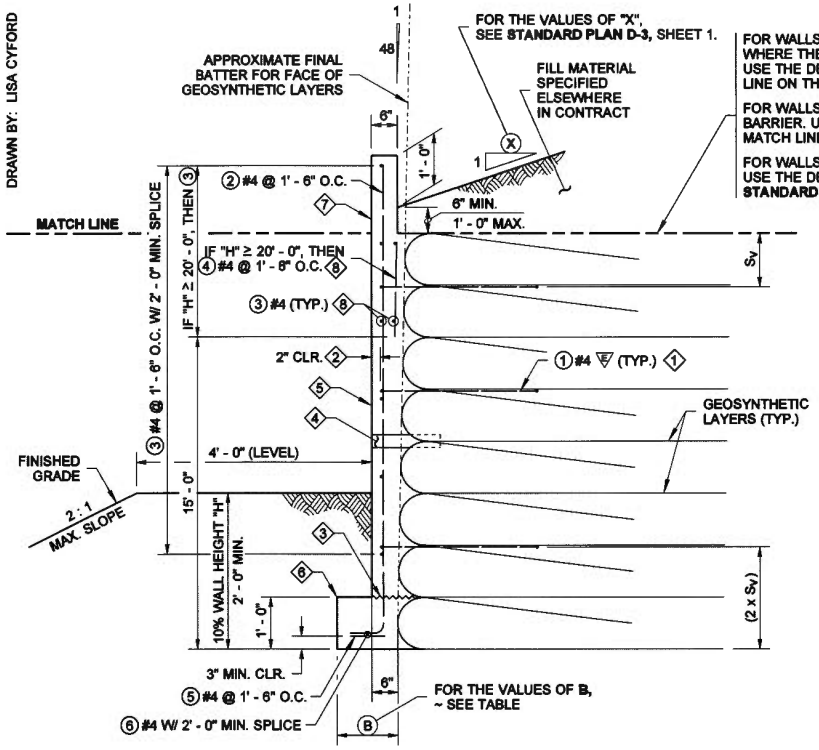

TYPICAL SECTION

PERMANENT GEOSYNTHETIC RETAINING WALL WITH CAST-IN-PLACE CONCRETE FASCIA

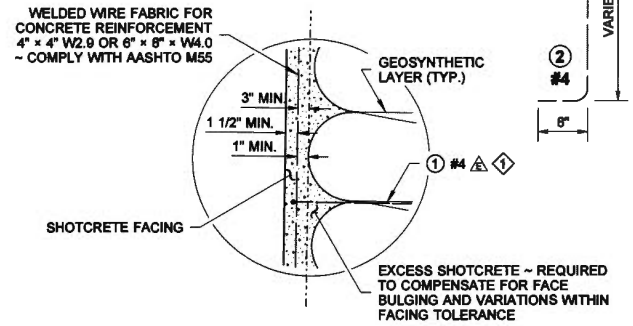

SHOTCRETE DETAIL

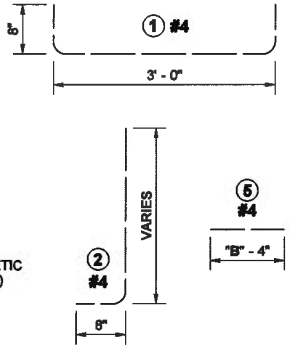

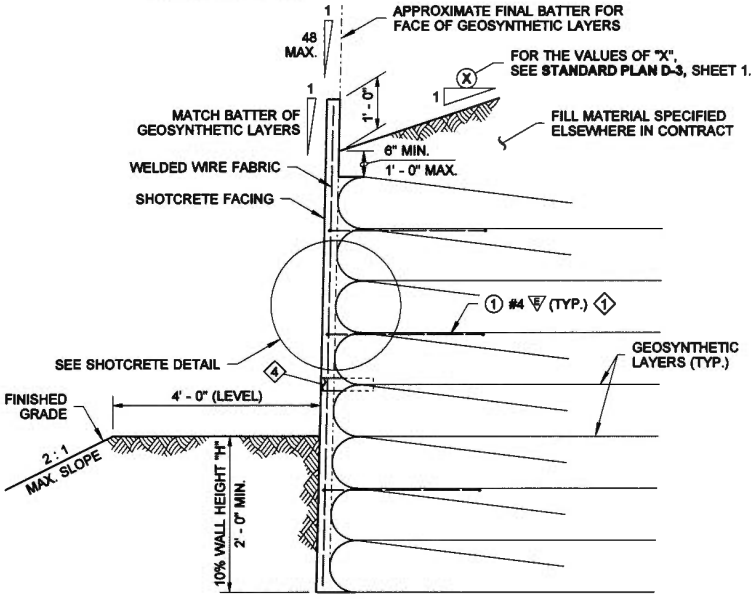

TYPICAL SECTION

PERMANENT GEOSYNTHETIC RETAINING WALL WITH SHOTCRETE FACING

NOTES

1. All bars shown on this plan shall be ASTM A706 unless otherwise specified in the Contract.

▽ = EPOXY COATED

DESIGN HEIGHT "H" (ft.)	ROWS OF #4 ▽ DOWEL BARS REQUIRED N (no.)	FASCIA FOOTING WIDTH B (ft. - in.)
UP TO 5	2	1' - 0"
6	3	1' - 0"
7	3	1' - 0"
8	3	1' - 0"
9	3	1' - 0"
10	4	1' - 0"
11	4	1' - 0 1/2"
12	4	1' - 0 1/2"
13	4	1' - 1"
14	4	1' - 1"
15	6	1' - 2"
16	6	1' - 2"
17	8	1' - 2 1/2"
18	8	1' - 2 1/2"
19	8	1' - 3"
20	10	1' - 3"
21	10	1' - 3 1/2"
22	10	1' - 3 1/2"
23	10	1' - 4"
24	10	1' - 4"
25	10	1' - 5"
26	10	1' - 5"
27	10	1' - 5 1/2"
28	10	1' - 5 1/2"
29	10	1' - 6"
30	10	1' - 6"
31	10	1' - 6 1/2"
32	10	1' - 6 1/2"
33	10	1' - 7"
34	10	1' - 7"
35	10	1' - 8"

KEY NOTES

1. "N" ROWS OF ① #4 ▽ DOWEL REINFORCEMENT PLACE BETWEEN GEOSYNTHETIC LAYERS AT 5' - 0" O.C. HORIZONTAL SPACING, SEE TABLE. VERTICAL SPACING BETWEEN ROWS TO BE EQUAL, AS MULTIPLES OF "S_V" ALLOW. ROWS MAY BE STAGGERED. SEE **STD. PLAN D-3** FOR "S_V".
2. INCREASE THE COVER AS REQUIRED TO ACCOMMODATE ARCHITECTURAL FEATURES AND FINISH.
3. CONSTRUCTION JOINT WITH ROUGHENED SURFACE.
4. 3" I.D. PVC PIPE FOR WEEP HOLE IN WALL FACING ~ PLACE BETWEEN GEOSYNTHETIC LAYERS APPROX. 9" DEEP AT 12' - 0" HORIZONTAL SPACING. LENGTH TO EXTEND TO OUTER SURFACE OF SPECIFIED WALL. WEEP HOLES SHALL BE KEPT CLEAR OF CONCRETE. SEE **STANDARD PLAN D-3**, FOR DETAILS NOT SHOWN.
5. VERTICAL CONSTRUCTION JOINTS IN FASCIA @ 24' - 0" O.C. WITH 1/2 " PREMOLDED JOINT FILLER (SEE **STANDARD PLAN D-10.45**, "SPLIT ELEVATION").
6. VERTICAL CONSTRUCTION JOINTS IN FOOTING @ 120' O.C. MAX. (SEE **STANDARD PLAN D-10.45**, "ELEVATION"). IF THE FOOTING IS STEPPED, PROVIDE 2' - 0" NON-CONTACT LAP SPLICES FOR THE ⑥ #4 BARS AT EACH STEP.
7. COORDINATE WALL FINISH AND CONFIGURATION WITH STATE BRIDGE AND STRUCTURES ARCHITECT PER WSDOT DESIGN MANUAL 1130.04(5).06.
8. THE ④ BARS AND INTERIOR ③ BARS SHALL BE USED ONLY IF THE FACE IS VERTICAL.

CAST-IN-PLACE PERMANENT GEOSYNTHETIC WALL FASCIA AND FACING STANDARD PLAN D-3.10-00

SHEET 1 OF 1 SHEET

APPROVED FOR PUBLICATION

STATE DESIGN ENGINEER — DATE 6/14/10

Washington State Department of Transportation

DRAWN BY: LISA CYFORD

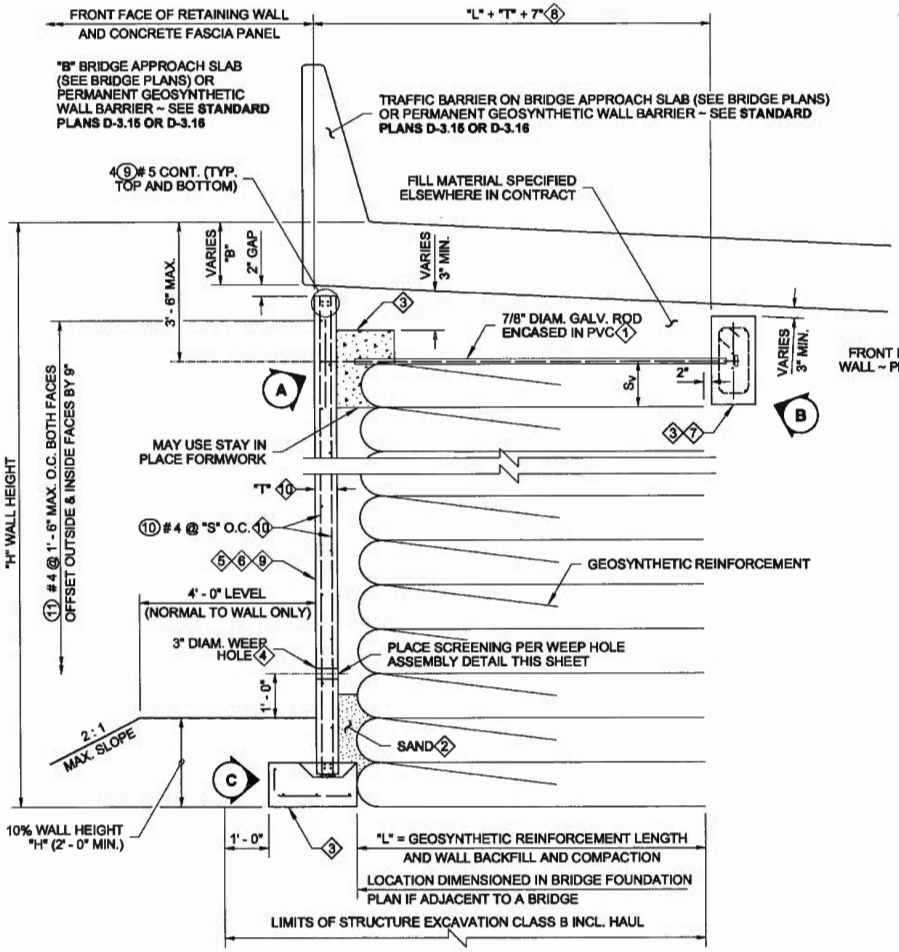

TYPICAL SECTION

PERMANENT GEOSYNTHETIC RETAINING WALL WITH PRECAST CONCRETE FASCIA PANEL AND TRAFFIC BARRIER

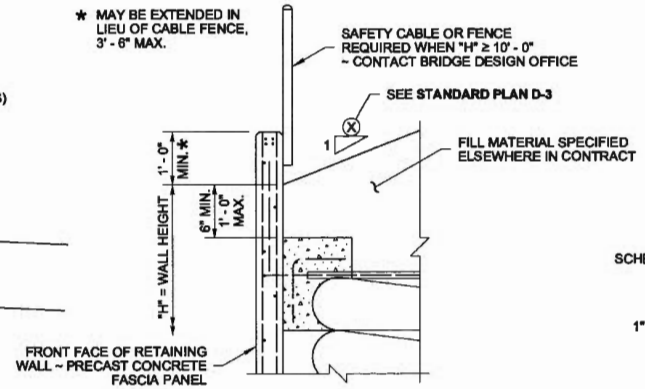

TYPICAL SECTION

PERMANENT GEOSYNTHETIC WALL PRECAST CONCRETE FASCIA PANEL

NOTES

1. All structural steel shall be ASTM A572 GR. 50 or ASTM A588 or as otherwise noted.
2. Anchor Rods shall be ASTM F1554 GR. 55
3. All cast-in-place concrete shall be Class 4000.

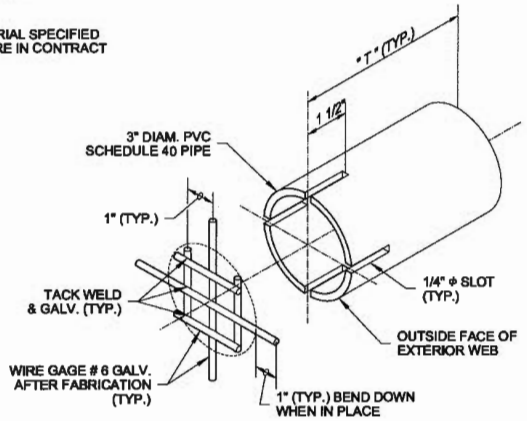

WEEP HOLE ASSEMBLY

KEY NOTES

1. 7/8" DIAMETER THREADED ROD (**STANDARD SPECIFICATION SECTION 9.06.5 (4)**), GALVANIZED AFTER FABRICATION IN ACCORDANCE WITH AASHTO M232. RODS SHALL BE THREADED A MINIMUM OF 1' - 0" AT ENDS. PLACE LEVEL AND NORMAL TO WALL. ENCASE RODS WITH PVC SLEEVE. EMBED PVC ENDS INTO GRADE BEAM AND EDGE BEAM.
2. BACKFILL VOID BEHIND WALL WITH SAND CONFORMING TO **STANDARD SPECIFICATION SECTION 9-03.13(1)** TO 6" ABOVE FINISHED GRADE ON FRONT FACE OF WALL.
3. LEVELING PAD, EDGE BEAM, AND GRADE BEAM ARE CAST-IN-PLACE CONCRETE PLACED AT 4 : 1 MAXIMUM SLOPE AND THE VERTICAL CONSTRUCTION JOINTS SHALL BE SPACED AT 120' MAXIMUM.
4. ONE 3" DIAMETER WEEP HOLE PER FASCIA PANEL. HORIZONTAL LOCATION AT THE CENTERLINE FASCIA PANEL.
5. ALL VERTICAL PANEL JOINTS SHALL BE SEALED FOR FULL CONTACT WITH AN APPROVED JOINT SEALANT. SEE "EXPANSION JOINT DETAIL", SHEET 2.
6. UNLESS OTHERWISE SHOWN, MINIMUM CONCRETE COVER FOR REINFORCEMENT IS 1 1/2". INCREASE COVER AS REQUIRED TO ACCOMMODATE ARCHITECTURAL FEATURES.
7. IF GRADE BEAM IS NEAR CENTERLINE OF ROADWAY, USE ONE GRADE BEAM AT CENTERLINE FOR FASCIA PANEL ON EITHER SIDE.
8. CONTACT BRIDGE OFFICE FOR ROADWAY CROSS SLOPES GREATER THAN 0.08'/FT.
9. COORDINATE WALL FINISH AND CONFIGURATION WITH STATE BRIDGE AND STRUCTURES ARCHITECT PER **WSDOT DESIGN MANUAL 730.05(5)**.
10. SEE PRECAST FASCIA TABLE, SHEET 2 OF 2.

3/9/12

PRECAST PERMANENT GEOSYNTHETIC WALL FASCIA

STANDARD PLAN D-3.11-01

SHEET 1 OF 2 SHEETS

APPROVED FOR PUBLICATION

STATE DESIGN ENGINEER — DATE 3/15/12

Washington State Department of Transportation

DRAWN BY: LISA CYFORD

PRECAST FASCIA TABLE		
DESIGN HEIGHT "H" (ft.)	PANEL THICKNESS "T" (in.)	(F 10) BAR SPACING "S" (in.)
5	6.0	18.0
6	6.0	18.0
7	6.0	18.0
8	6.0	18.0
9	6.0	18.0
10	6.0	18.0
11	6.0	18.0
12	6.0	18.0
13	6.0	18.0
14	6.0	18.0
15	6.0	18.0
16	6.0	18.0
17	6.0	18.0
18	6.0	18.0
19	6.0	18.0
20	6.0	18.0
21	6.0	18.0
22	7.0	18.0
23	7.0	18.0
24	7.0	18.0
25	8.0	18.0
26	8.0	18.0
27	8.0	18.0
28	9.0	12.0
29	9.0	12.0
30	9.0	12.0
31	10.0	12.0
32	10.0	12.0
33	11.0	12.0
34	11.0	12.0
35	11.0	12.0

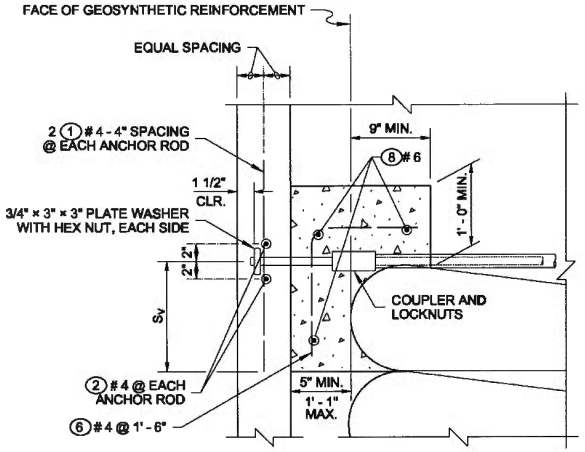

EDGE BEAM

DETAIL (A)

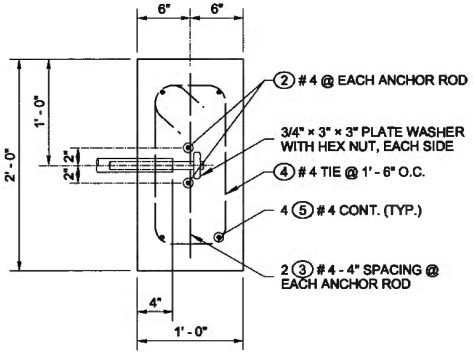

GRADE BEAM

DETAIL (B)

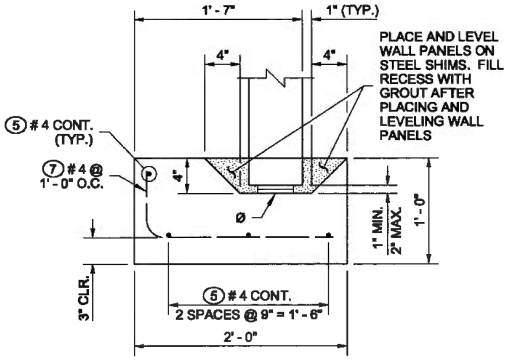

LEVELING PAD

DETAIL (C)

Φ 4" × 4" SHIM STACK
(2 LOCATIONS PER PANEL)
HEIGHT SHALL BE ADJUSTED SO THAT VERTICAL PANEL JOINTS ARE PLUMB

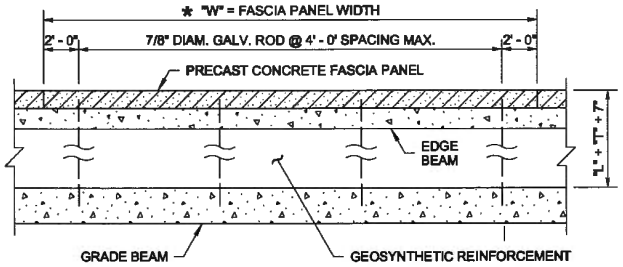

PLAN VIEW

TYPICAL PANEL LAYOUT

* PANEL WIDTH "W" SHOWN IN ELEVATION OF RETAINING WALLS

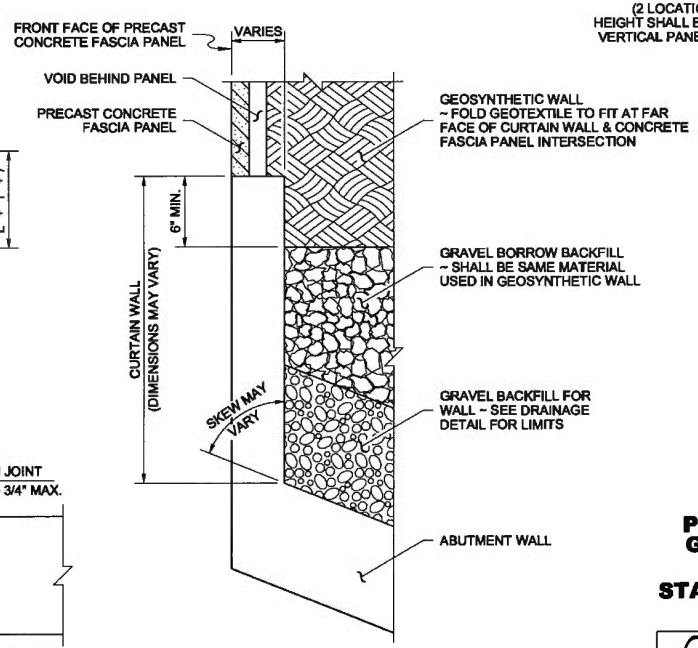

PLAN VIEW

WALL TRANSITION

GEOSYNTHETIC WALL TO CURTAIN WALL TRANSITION AT BRIDGE ~ SEE BRIDGE PLAN SHEETS FOR DETAILS

FASCIA PANEL BENDING DIAGRAM			
MARK	SIZE	LENGTH	ALL REINFORCEMENT SHALL BE ASTM A706.
(1)	4	2' - 0"	STR.
(2)	4	4' - 0"	STR.
(3)	4	1' - 9"	STR.
(4)	4	4' - 11"	
(5)	4	(A)	STR.
(6)	4	2' - 1 3/4"	
(7)	4		
(8)	6	(A)	STR.
(9)	5	(A)	STR.
(10)	4	(A)	STR.
(11)	4	(A)	STR.

(A) DETERMINE FROM PLANS

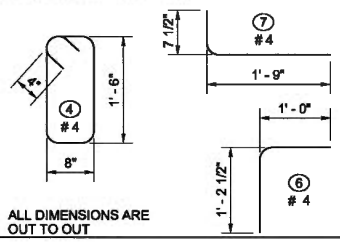

ALL DIMENSIONS ARE OUT TO OUT

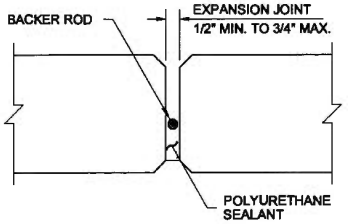

EXPANSION JOINT DETAIL

3/9/12

PRECAST PERMANENT GEOSYNTHETIC WALL FASCIA

STANDARD PLAN D-3.11-01

SHEET 2 OF 2 SHEETS

APPROVED FOR PUBLICATION

STATE DESIGN ENGINEER — DATE 3/13/12

Washington State Department of Transportation

DRAWN BY: BILL BERENS

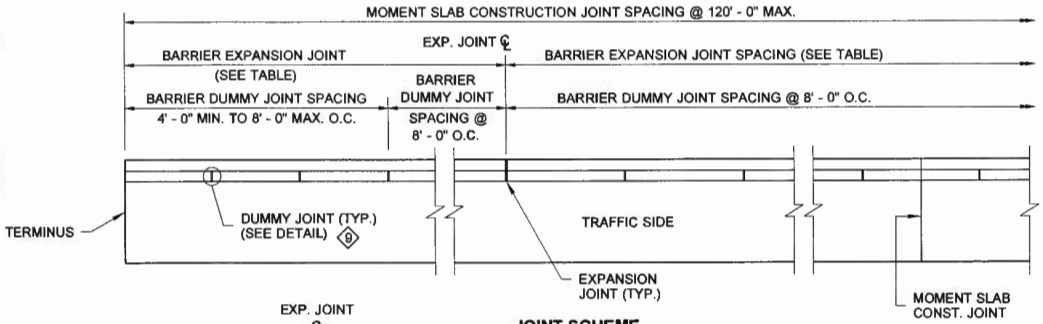

JOINT SCHEME
PLAN VIEW

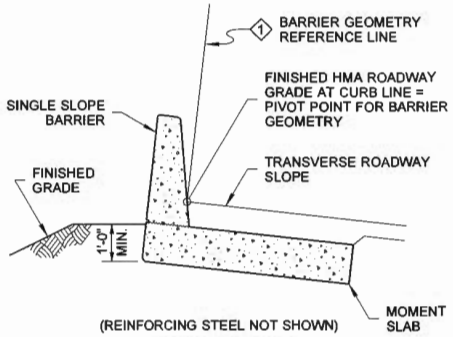

TYPICAL SECTION
SHOWN AT GRADE

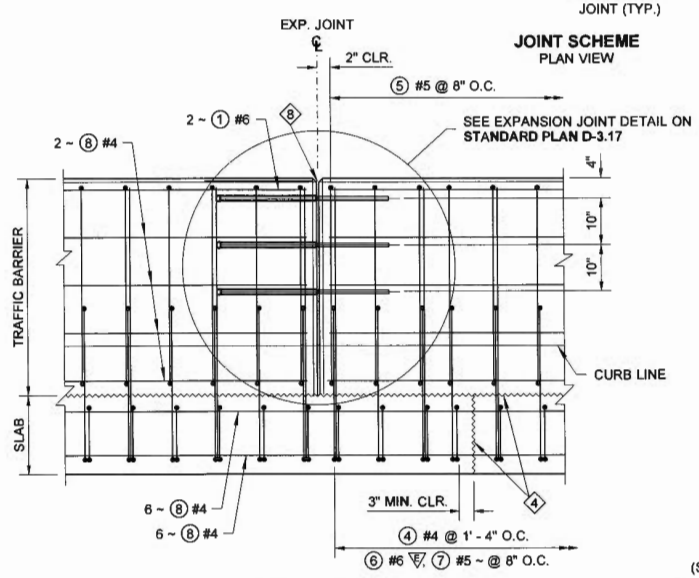

ELEVATION

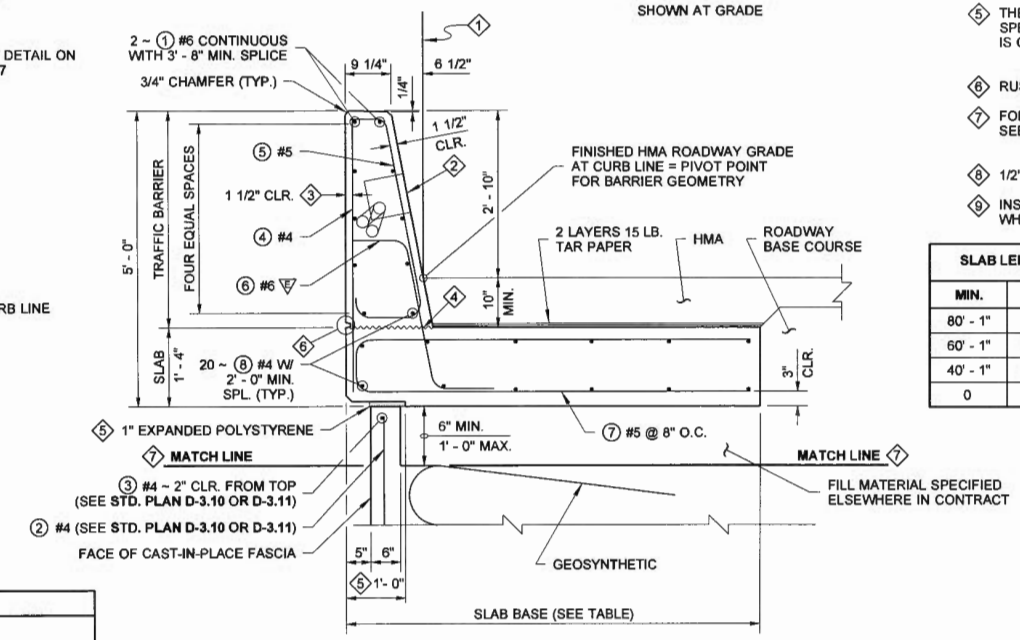

TYPICAL SECTION
SHOWN ON WALL

KEY NOTES

1. THE BARRIER GEOMETRY REFERENCE LINE (B.G.R.L.) IS PERPENDICULAR TO THE TRANSVERSE ROADWAY SLOPE (T.R.S.). FOR SUPERELEVATED TRANSVERSE ROADWAY SLOPES, THE B.G.R.L. ON THE LOW SIDE OF THE ROADWAY SHALL BE PERPENDICULAR TO THE T.R.S. UP TO A MAXIMUM OF 8% SUPERELEVATION; THE B.G.R.L. ON THE HIGH SIDE SHALL ALWAYS BE PERPENDICULAR TO THE T.R.S..
2. JUNCTION BOX & PULL BOX ~ 8" × 8" × 1' - 6" NEMA 4 X S.S. (TYP.). JUNCTION BOX CAN BE RECESSED 1/2" MAX. SEE SPECIAL PROVISIONS. SIZE CONDUIT PER WIRING SCHEDULE, SEE ELECTRICAL PLANS.
3. 1 1/2" MIN. CONCRETE COVER ~ INCREASE THE COVER AS REQUIRED TO ACCOMMODATE ARCHITECTURAL FEATURES AND FINISH.
4. CONSTRUCTION JOINT WITH ROUGHENED SURFACE.
5. THE NOTCH, DETAILED BY THESE DIMENSIONS AND SPECIFICATIONS, IS REQUIRED ONLY IF THE BARRIER IS ON WALL FACING.
6. RUSTICATION ~ SEE RUSTICATION DETAIL
7. FOR STRUCTURAL DETAILS BELOW THE MATCH LINE, SEE **STANDARD PLANS D-3.09, D-3.10 OR D-3.11.**
8. 1/2" EXPANSION JOINT WITH PREMOLDED JOINT FILLER.
9. INSTALL BARRIER DUMMY JOINTS ON TRAFFIC SIDE ONLY WHEN ARCHITECTURAL FEATURES ARE SPECIFIED.

SLAB LENGTH		SLAB BASE		BARRIER EXPANSION JOINT SPACING	
MIN.	MAX.	ON WALL	AT GRADE	MIN.	MAX.
80' - 1"	- -	7' - 0"	5' - 0"	80' - 0"	120' - 0"
60' - 1"	80' - 0"	8' - 0"	6' - 0"	60' - 0"	80' - 0"
40' - 1"	60' - 0"	9' - 0"	7' - 0"	40' - 0"	60' - 0"
0	40' - 0"	CONTACT BRIDGE OFFICE			

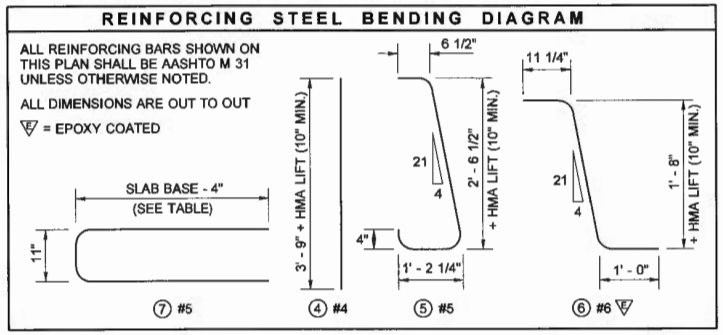

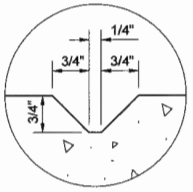

DUMMY JOINT DETAIL

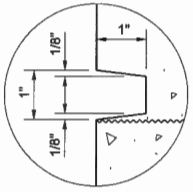

RUSTICATION DETAIL

5/15/12

PERMANENT GEOSYNTHETIC WALL SINGLE SLOPE BARRIER STANDARD PLAN D-3.15-01

SHEET 1 OF 1 SHEET

APPROVED FOR PUBLICATION

STATE DESIGN ENGINEER — DATE 5/17/12

Washington State Department of Transportation

DRAWN BY: BILL BERENS

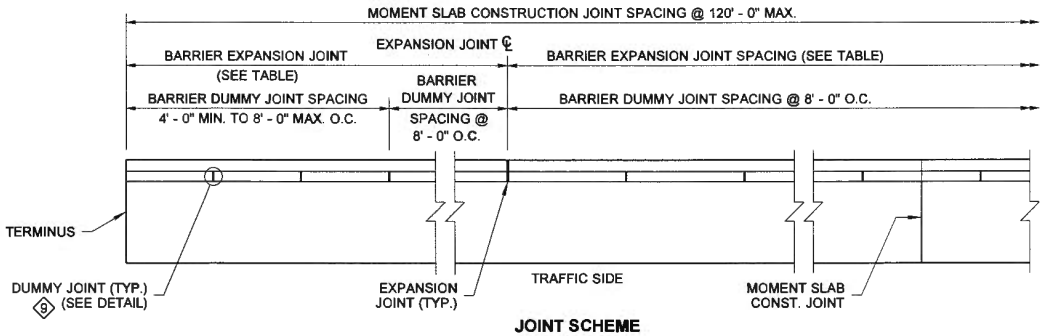

JOINT SCHEME
PLAN VIEW

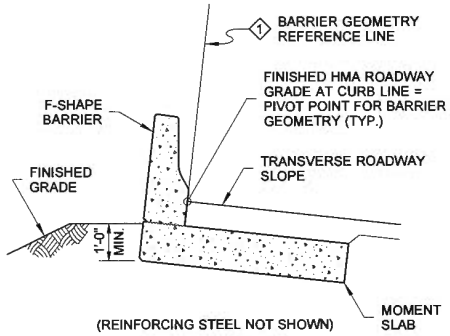

TYPICAL SECTION
SHOWN AT GRADE

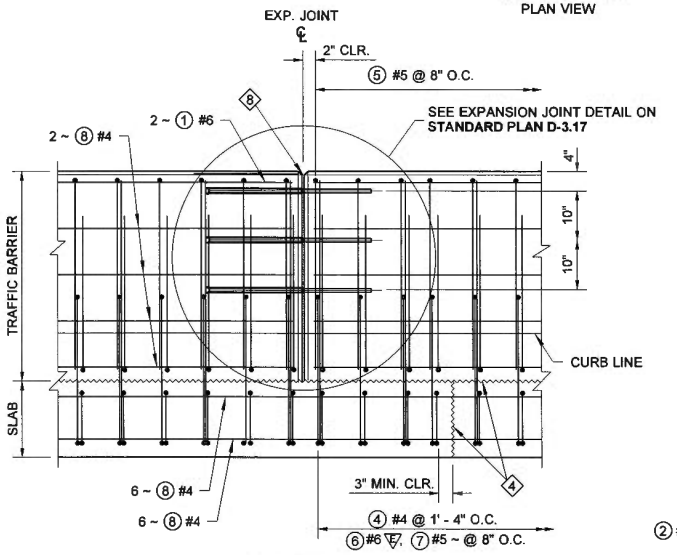

ELEVATION

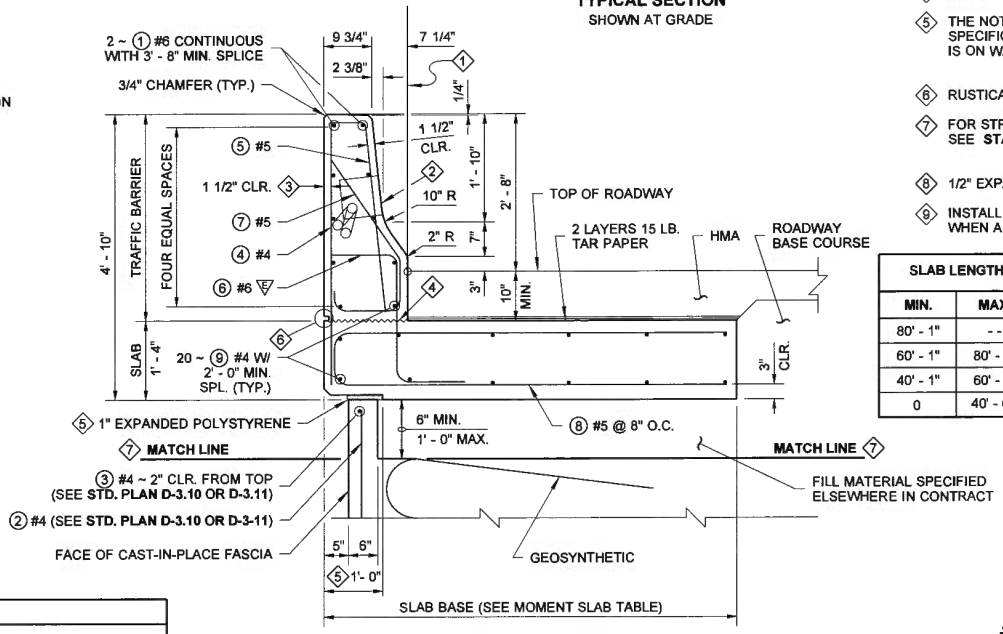

TYPICAL SECTION
SHOWN ON WALL

KEY NOTES

1. THE BARRIER GEOMETRY REFERENCE LINE (B.G.R.L.) IS PERPENDICULAR TO THE TRANSVERSE ROADWAY SLOPE (T.R.S.). FOR SUPERELEVATED TRANSVERSE ROADWAY SLOPES, THE B.G.R.L. ON THE LOW SIDE OF THE ROADWAY SHALL BE PERPENDICULAR TO THE T.R.S. UP TO A MAXIMUM OF 8% SUPERELEVATION; THE B.G.R.L. ON THE HIGH SIDE SHALL ALWAYS BE PERPENDICULAR TO THE T.R.S.
2. JUNCTION BOX & PULL BOX ~ 8" × 8" × 1' - 6" NEMA 4 X S.S. (TYP.). JUNCTION BOX CAN BE RECESSED 1/2" MAX. SEE SPECIAL PROVISIONS. SIZE CONDUIT PER WIRING SCHEDULE, SEE ELECTRICAL PLANS.
3. 1 1/2" MIN. CONCRETE COVER ~ INCREASE THE COVER AS REQUIRED TO ACCOMMODATE ARCHITECTURAL FEATURES AND FINISH.
4. CONSTRUCTION JOINT WITH ROUGHENED SURFACE.
5. THE NOTCH, DETAILED BY THESE DIMENSIONS AND SPECIFICATIONS, IS REQUIRED ONLY IF THE BARRIER IS ON WALL FACING.
6. RUSTICATION ~ SEE RUSTICATION DETAIL.
7. FOR STRUCTURAL DETAILS BELOW THE MATCH LINE, SEE **STANDARD PLANS D-3.09, D-3.10 OR D-3.11**.
8. 1/2" EXPANSION JOINT WITH PREMOLDED JOINT FILLER.
9. INSTALL BARRIER DUMMY JOINTS ON TRAFFIC SIDE ONLY WHEN ARCHITECTURAL FEATURES ARE SPECIFIED.

SLAB LENGTH		SLAB BASE		BARRIER EXPANSION JOINT SPACING	
MIN.	MAX.	ON WALL	AT GRADE	MIN.	MAX.
80' - 1"	- -	7' - 0"	5' - 0"	80' - 0"	120' - 0"
60' - 1"	80' - 0"	8' - 0"	6' - 0"	60' - 0"	80' - 0"
40' - 1"	60' - 0"	9' - 0"	7' - 0"	40' - 0"	60' - 0"
0	40' - 0"	CONTACT BRIDGE OFFICE			

REINFORCING STEEL BENDING DIAGRAM

ALL REINFORCING BARS SHOWN ON THIS PLAN SHALL BE AASHTO M 31 UNLESS OTHERWISE NOTED.

ALL DIMENSIONS ARE OUT TO OUT

▽ = EPOXY COATED

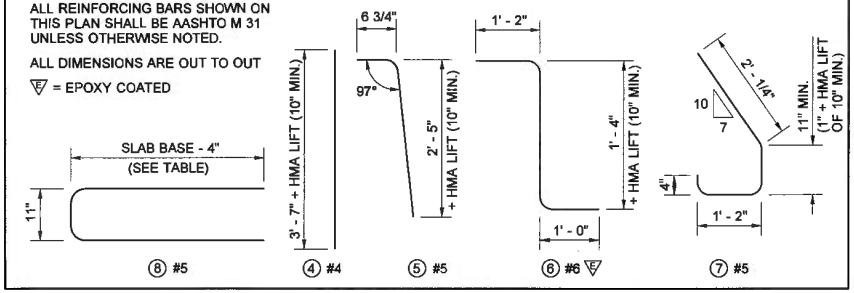

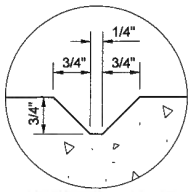

DUMMY JOINT DETAIL

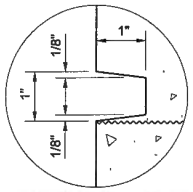

RUSTICATION DETAIL

PERMANENT GEOSYNTHETIC WALL F - SHAPE BARRIER STANDARD PLAN D-3.16-01

SHEET 1 OF 1 SHEET

APPROVED FOR PUBLICATION

STATE DESIGN ENGINEER — DATE 5/17/12

Washington State Department of Transportation

DRAWN BY: BILL BERENS

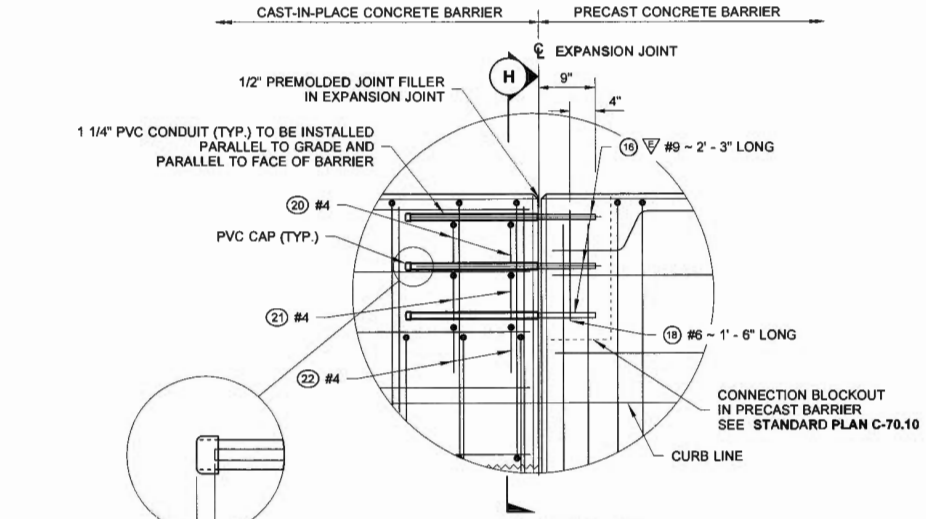

EXPANSION JOINT DETAIL
FOR CAST-IN-PLACE TO PRECAST BARRIER CONNECTION

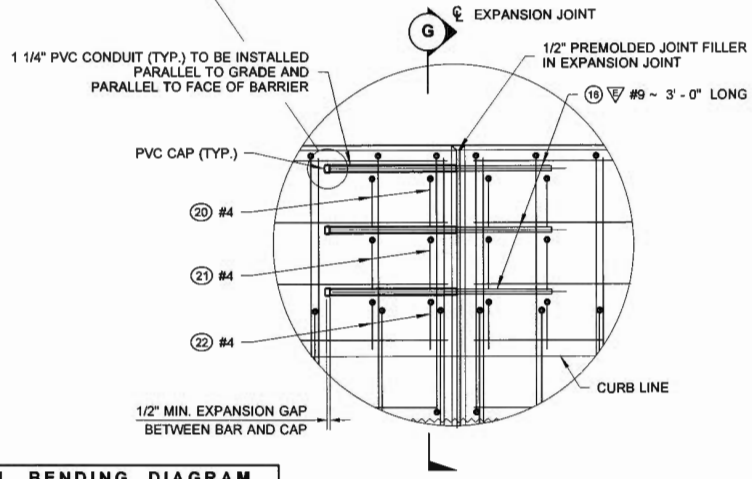

EXPANSION JOINT DETAIL

NOTE

1. Ensure that no concrete enters the PVC conduit during concrete placement.

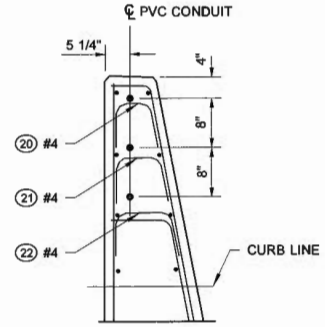

SECTION (H)

FOR DETAILS NOT SHOWN ~ SEE TYPICAL SECTION
STANDARD PLAN D-3.15 OR D-3.16

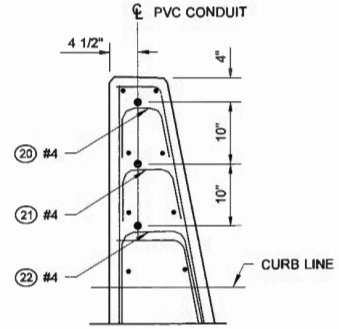

SECTION (G)

FOR DETAILS NOT SHOWN ~ SEE TYPICAL SECTION
STANDARD PLAN D-3.15 OR D-3.16

REINFORCING STEEL BENDING DIAGRAM

ALL REINFORCING BARS SHOWN ON THIS PLAN SHALL BE AASHTO M 31 UNLESS OTHERWISE NOTED.

ALL DIMENSIONS ARE OUT TO OUT

▽ = EPOXY COATED

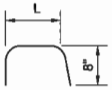

(20) #4 L = 7"
(21) #4 L = 8 7/8"
(22) #4 L = 10 3/4"

PERMANENT GEOSYNTHETIC WALL EXPANSION JOINT DETAILS
STANDARD PLAN D-3.17-01

SHEET 1 OF 1 SHEET

APPROVED FOR PUBLICATION
STATE DESIGN ENGINEER — DATE 5/17/12
Washington State Department of Transportation

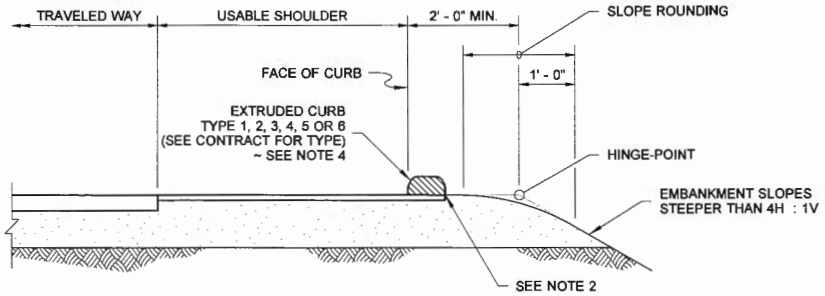

EXTRUDED CURB WITH SLOPE ROUNDING

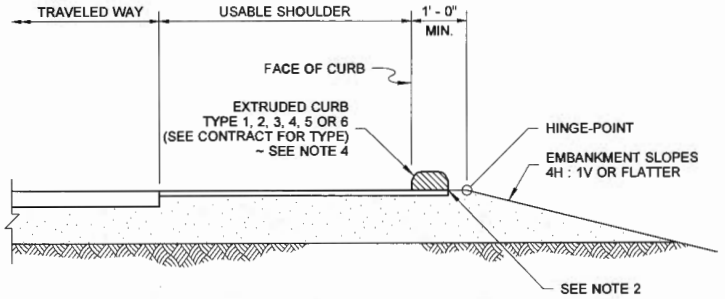

EXTRUDED CURB WITHOUT SLOPE ROUNDING

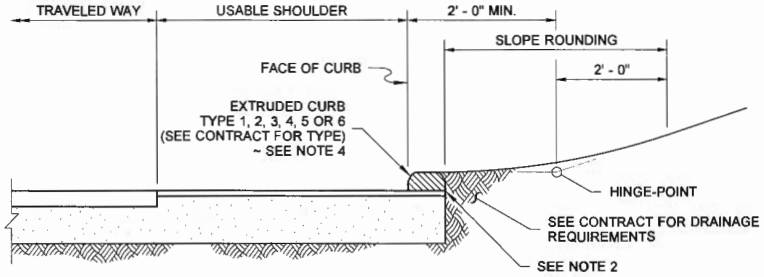

EXTRUDED CURB AT CUT SLOPE

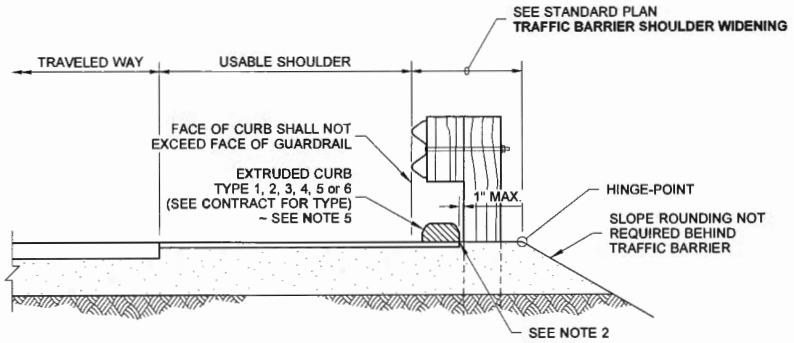

EXTRUDED CURB AT BEAM GUARDRAIL TYPE 1

NOTES

1. The installation of curb in areas with existing guardrail could require the removal and resetting of the guardrail or its components.
2. Extend shoulder pavement to provide a base for the extruded curb.
3. See Contract for exception to distances shown.
4. Type 3 and 6 curbs are not used on roadways with a posted speed greater than 40 mph.
5. Type 3 and 6 are not used under beam guardrail on roadways with a posted speed greater than 50 mph.
6. For extruded curb placement at Beam Guardrail Type 31, See **Standard Plan C-20.10.**
7. For extruded curb details, See **Standard Plan F-10.42.**

DRAWN BY: FERN LIDDELL

5-21-2012

EXTRUDED CURB PLACEMENT

STANDARD PLAN F-10.40-02

SHEET 1 OF 1 SHEET

APPROVED FOR PUBLICATION

STATE DESIGN ENGINEER — DATE 4/21/12

Washington State Department of Transportation

DRAWN BY: BILL BERENS

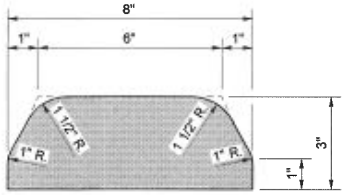

TYPE 1
(HOT MIX ASPHALT)

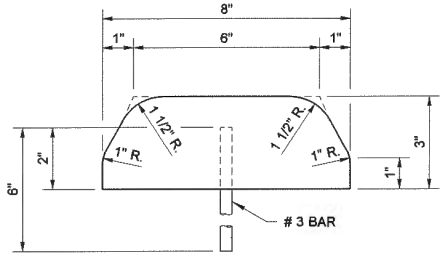

TYPE 4
(CEMENT CONCRETE)

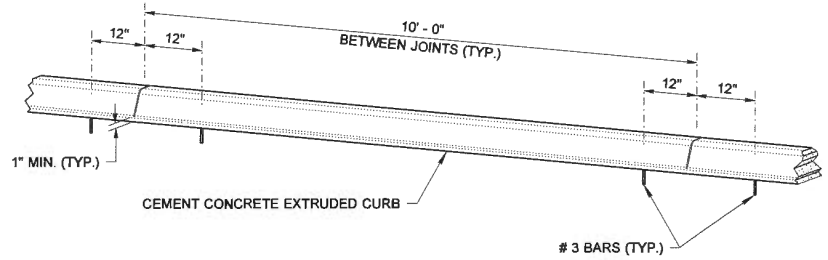

SPACING OF ANCHOR BARS
(FOR TYPES 4, 5, AND 6)

NOTE

JOINTS MAY BE FORMED DURING INSTALLATION USING A RIGID DIVIDER OR SAWCUT AFTER CONCRETE CURES TO MINIMUM STRENGTH.

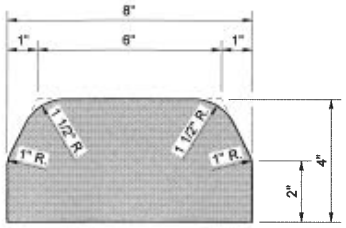

TYPE 2
(HOT MIX ASPHALT)

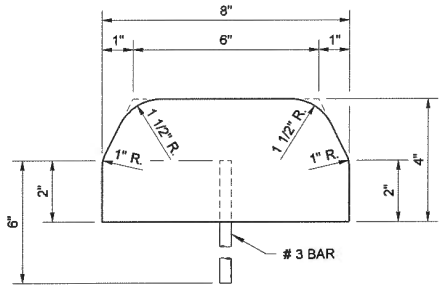

TYPE 5
(CEMENT CONCRETE)

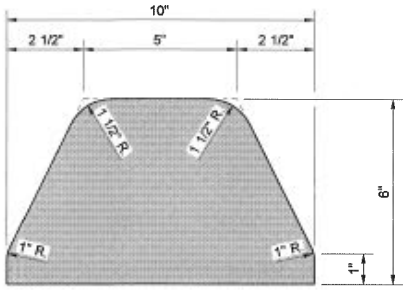

TYPE 3
(HOT MIX ASPHALT)

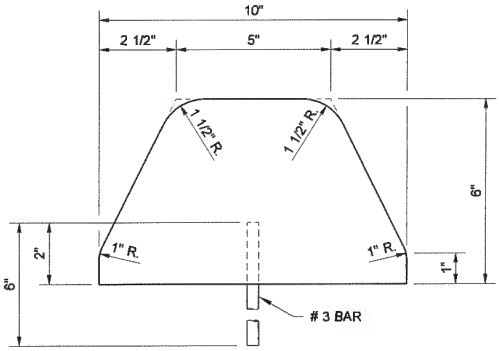

TYPE 6
(CEMENT CONCRETE)

EXPIRES AUGUST 26, 2007

EXTRUDED CURB

STANDARD PLAN F-10.42-00

SHEET 1 OF 1 SHEET

APPROVED FOR PUBLICATION

STATE DESIGN ENGINEER — DATE 01/23/07

Washington State Department of Transportation

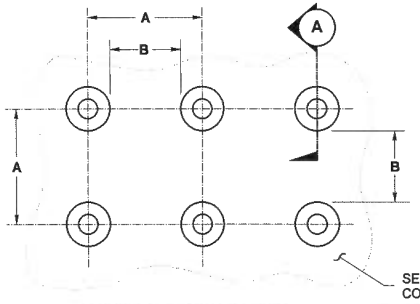

TRUNCATED DOME SPACING
SEE NOTE 3

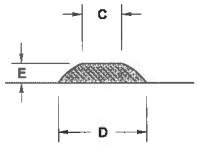

TRUNCATED DOME

SECTION (A)

	MIN.	MAX.
A	1.60"	2.40"
B	0.65"	—
C	0.45"	0.90"
D	0.9"	1.40"
E	0.2"	0.2"

TRUNCATED DOME DETAILS

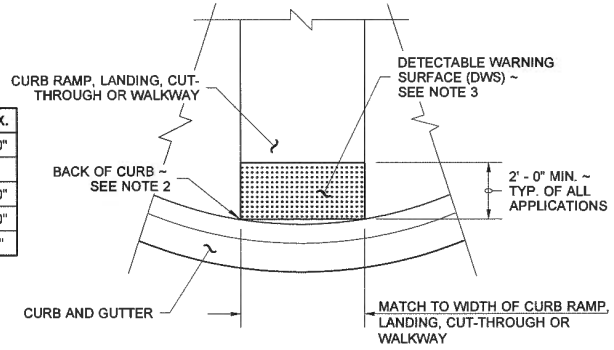

DETECTABLE WARNING SURFACE DETAIL

NOTES

1. The Detectable Warning Surface (DWS) shall extend the full width of the curb ramp (exclusive of flares) or the landing.
2. The Detectable Warning Surface shall be placed at the back of curb, and need not follow the radius.
3. The rows of truncated domes shall be aligned to be perpendicular to the grade break at the back of curb.
4. The rows of truncated domes shall be aligned to be parallel to the direction of travel.
5. If curb and gutter are not present, such as a shared-use path connection, the Detectable Warning Surface shall be placed at the pavement edge.
6. See **Standard Plans** for sidewalk and curb ramp details.
7. If a curb ramp is required, the location of the Detectable Warning Surface must be at the bottom of the ramp and within the required distance from the rail.
8. When the grade break between the curb ramp and the landing is less than or equal to 5 ft. from the back of curb at all points, place the Detectable Warning Surface on the bottom of the curb ramp.

DRAWN BY: FERN LIDDELL

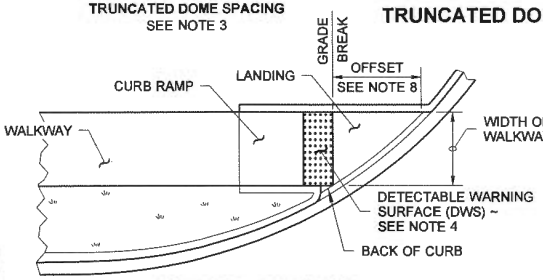

SINGLE DIRECTION CURB RAMP
(GRADE BREAK BETWEEN CURB AND LANDING ≤ 5 FT. FROM BACK OF CURB)
(SEE NOTE 6)

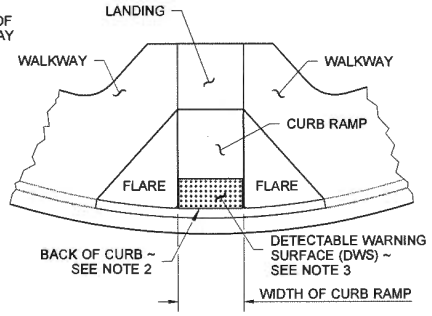

PERPENDICULAR CURB RAMP
(SEE NOTE 6)

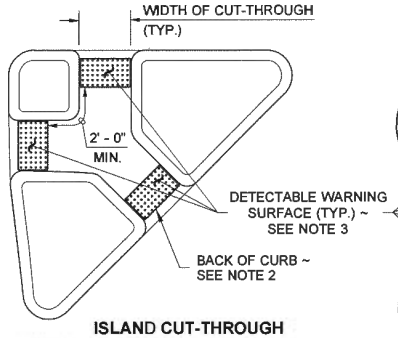

ISLAND CUT-THROUGH

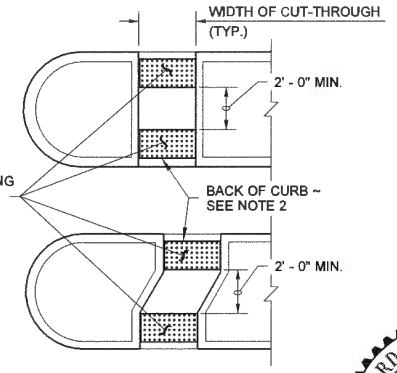

MEDIAN CUT-THROUGH

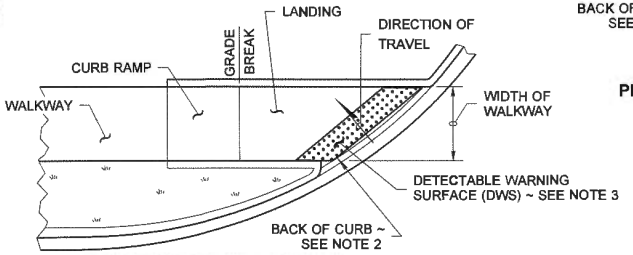

SINGLE DIRECTION CURB RAMP
(GRADE BREAK BETWEEN CURB AND LANDING > 5 FT. FROM BACK OF CURB)
(SEE NOTE 6)

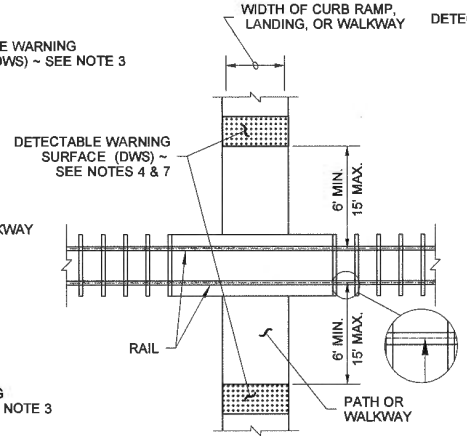

PEDESTRIAN RAILROAD CROSSING

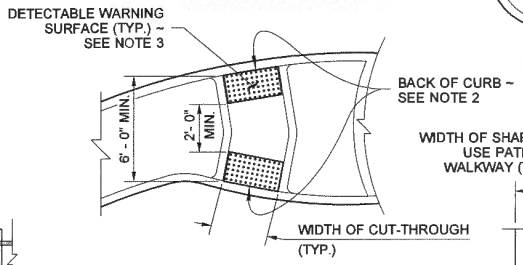

ROUNDABOUT SPLITTER ISLAND

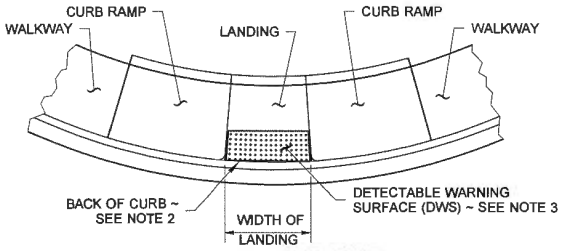

PARALLEL CURB RAMP
(SEE NOTE 6)

PLACEMENT GUIDELINES

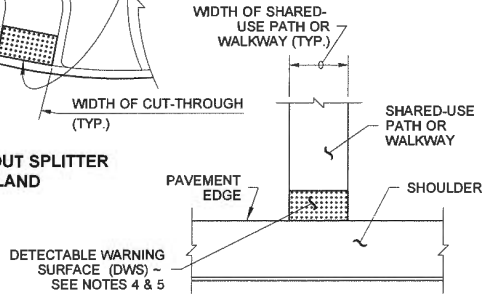

SHARED-USE PATH CONNECTION

6·18·2012

DETECTABLE WARNING SURFACE

STANDARD PLAN F-45.10-01

SHEET 1 OF 1 SHEET

APPROVED FOR PUBLICATION

STATE DESIGN ENGINEER — DATE 6/21/12

Washington State Department of Transportation

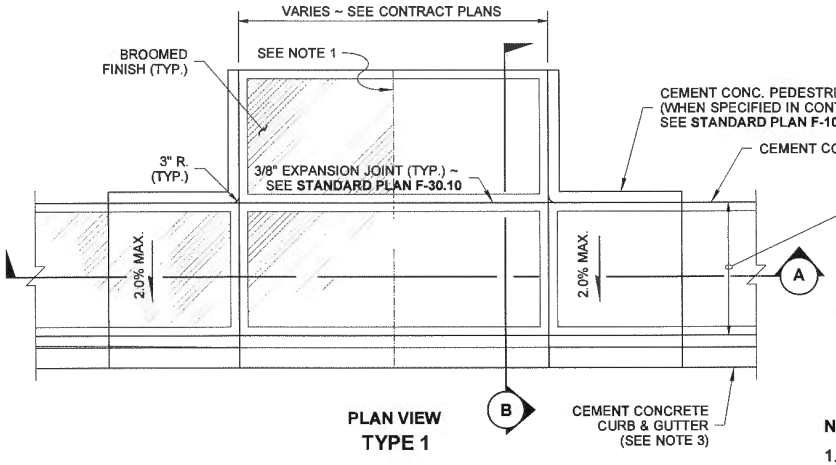

PLAN VIEW
TYPE 1

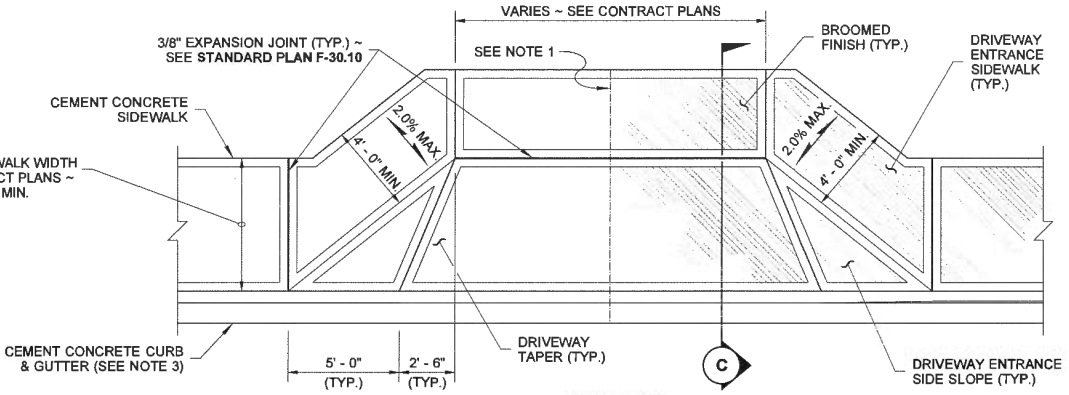

PLAN VIEW
TYPE 2

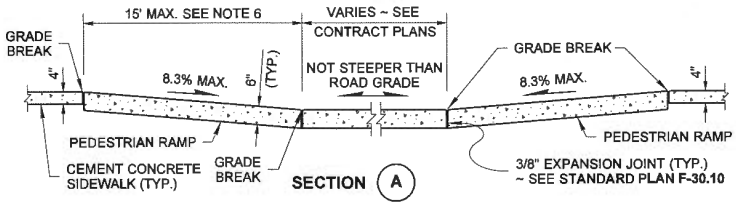

SECTION (A)

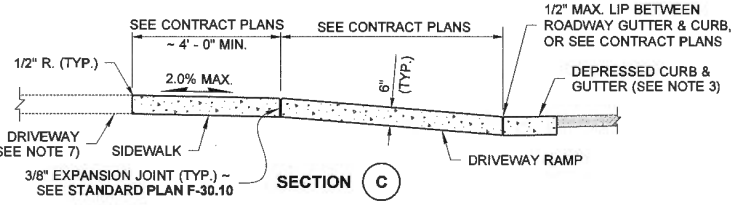

SECTION (C)

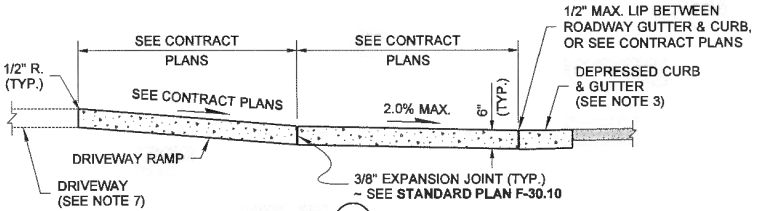

SECTION (B)

NOTES

1. When the driveway width exceeds 15 feet, construct a full depth expansion joint with 3/8" joint filler along the driveway centerline. **See Standard Plan F-30.10.** Construct expansion joints parallel with the centerline as required at 15 feet maximum spacing when driveway widths exceed 30 feet.
2. See **Standard Plan F-30.10** for sidewalk details.
3. Curb and gutter shown; see the Contract Plans for the curb design specified. See **Standard Plan F-10.12** for Curb Details.
4. Avoid placing drainage structures, junction boxes or other obstructions in front of driveway entrances.
5. Where "GRADE BREAK" is called out, the entire length of the line between the two adjacent surface planes shall be flush.
6. The curb ramp maximum running slope shall not require the ramp length to exceed 15 feet to avoid chasing the slope indefinitely when connecting to steep grades. When applying the 15 foot max. length, the running slope of the curb ramp shall be as flat as feasable.
7. Pay item does not include driveway. See Contract Plans.

LEGEND

SLOPE IN EITHER DIRECTION

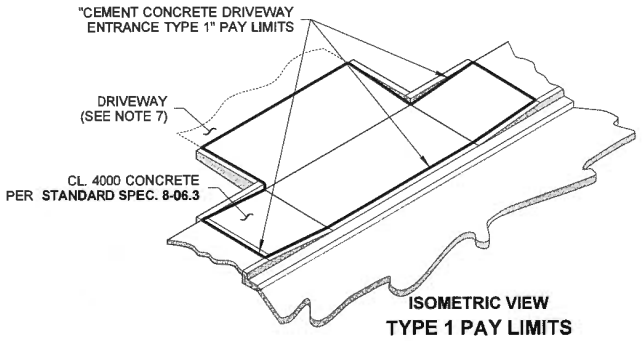

ISOMETRIC VIEW
TYPE 1 PAY LIMITS

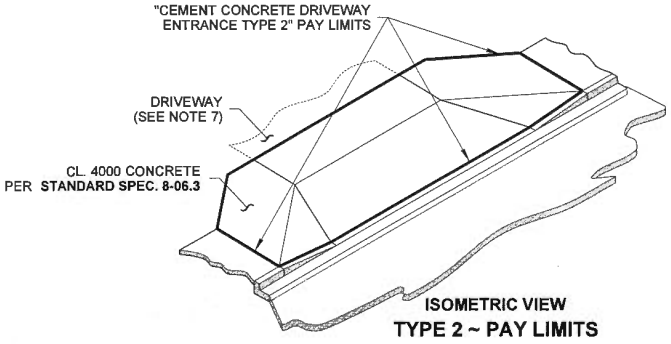

ISOMETRIC VIEW
TYPE 2 ~ PAY LIMITS

TERRY L. BERENDS
STATE OF WASHINGTON
32350
REGISTERED PROFESSIONAL ENGINEER
3/14/2012

CEMENT CONCRETE DRIVEWAY ENTRANCE TYPES 1, 2, 3 & 4
STANDARD PLAN F-80.10-02

SHEET 1 OF 2 SHEETS

APPROVED FOR PUBLICATION
STATE DESIGN ENGINEER — DATE 3/15/12
Washington State Department of Transportation

DRAWN BY: FERN LIDDELL

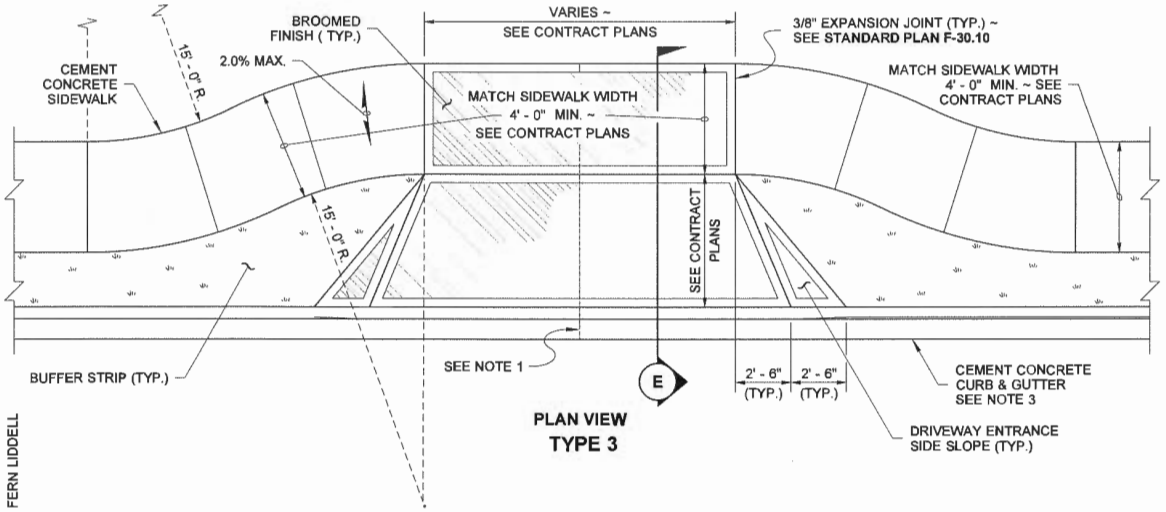

PLAN VIEW
TYPE 3

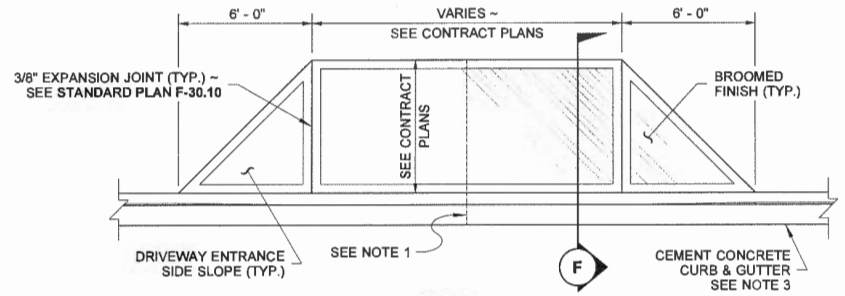

PLAN VIEW
TYPE 4*

*THIS ENTRANCE TYPE SHALL NOT BE USED ALONG A PEDESTRIAN ROUTE

DRAWN BY: FERN LIDDELL

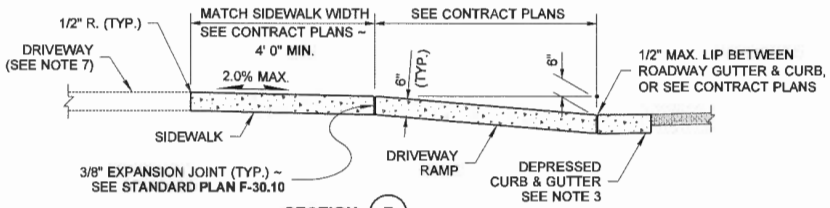

SECTION E

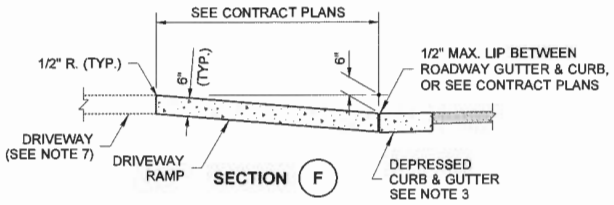

SECTION F

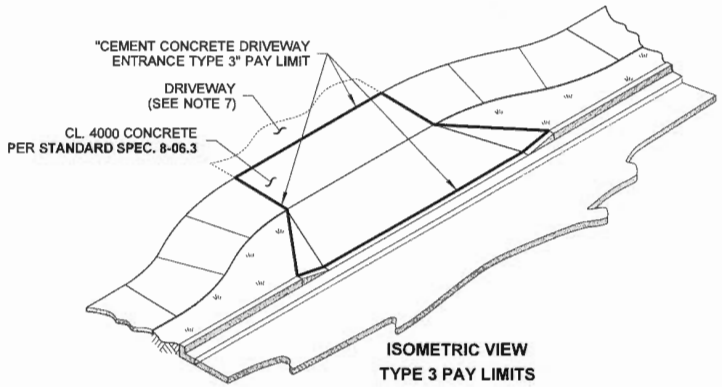

ISOMETRIC VIEW
TYPE 3 PAY LIMITS

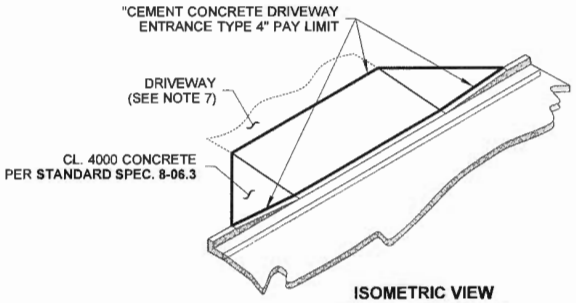

ISOMETRIC VIEW
TYPE 4 PAY LIMITS

TERRY L. BERENDS
STATE OF WASHINGTON
32350
REGISTERED
PROFESSIONAL ENGINEER
3/14/2012

CEMENT CONCRETE DRIVEWAY ENTRANCE TYPES 1, 2, 3 & 4
STANDARD PLAN F-80.10-02

SHEET 2 OF 2 SHEETS

APPROVED FOR PUBLICATION

STATE DESIGN ENGINEER — DATE 3/13/12

Washington State Department of Transportation

This page left blank intentionally.

DRAWN BY: LISA CYFORD

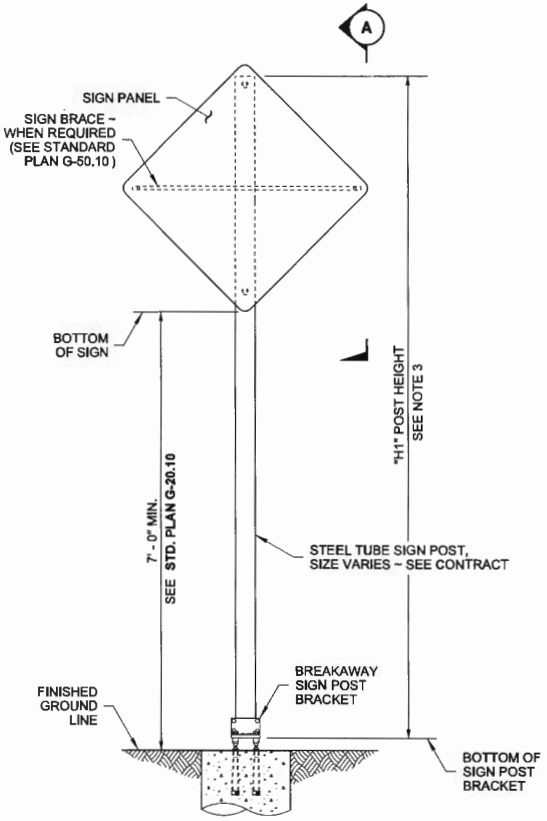

ELEVATION

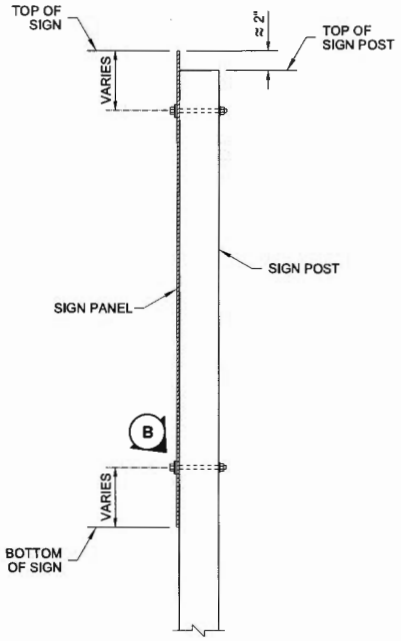

VIEW (A)

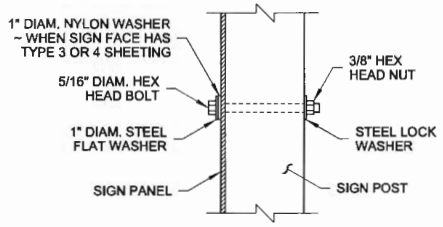

DETAIL (B)

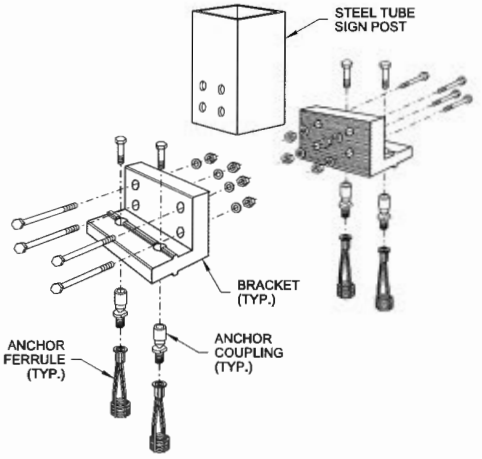

EXPLODED VIEW

BREAKAWAY SIGN BRACKET ASSEMBLY

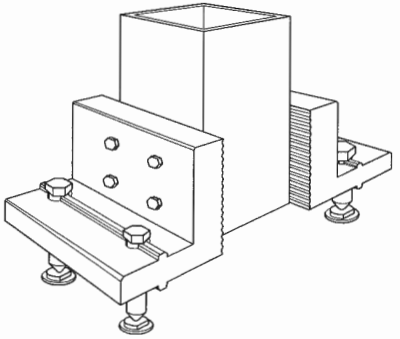

PERSPECTIVE VIEW

BREAKAWAY SIGN BRACKET ASSEMBLY

NOTES

1. Dimensions for the parts used to assemble the base connections are intentionally not shown. Base connections are patented manufactured products that are in compliance with NCHRP 350 crash test criteria. The base connection details are only shown on this plan to illustrate how the parts are assembled.
2. For Steel Sign Support Foundations, see **Standard Plan G-25.10.**
3. For "H1" refer to the Sign Specification Sheet in the Contract.

STEEL SIGN SUPPORT TYPE AS INSTALLATION DETAILS STANDARD PLAN G-24.20-01

SHEET 1 OF 1 SHEET

APPROVED FOR PUBLICATION

STATE DESIGN ENGINEER — DATE 2/2/12

Washington State Department of Transportation

DRAWN BY: LISA CYFORD

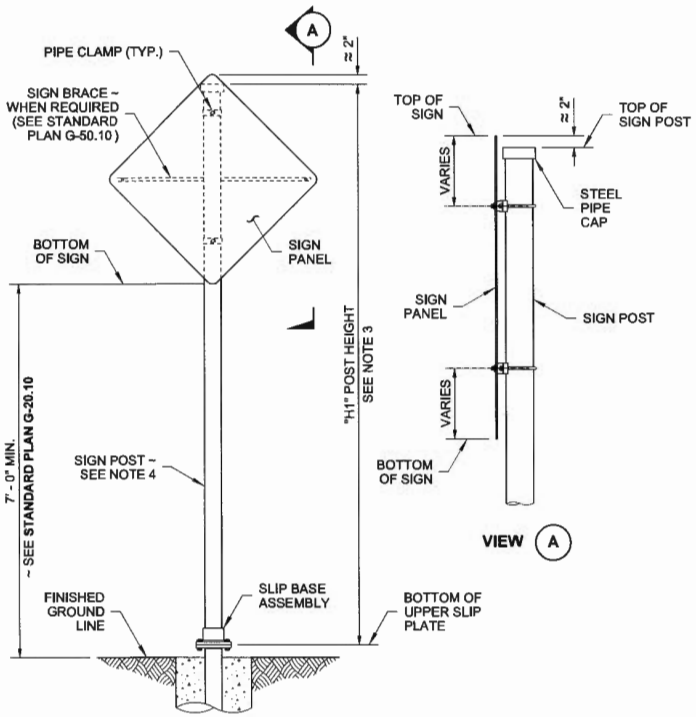

VIEW (A)

ELEVATION
TYPE PL SIGN SUPPORT

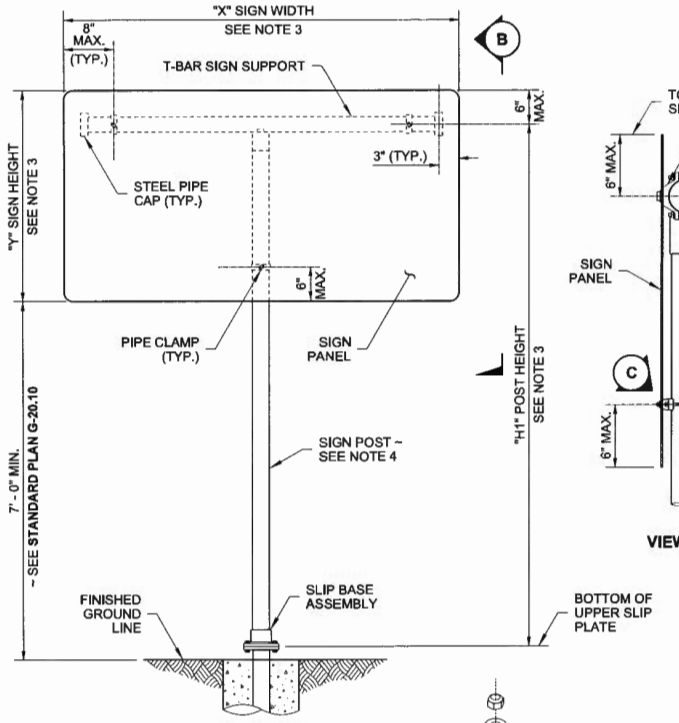

ELEVATION
TYPE PL-T SIGN SUPPORT

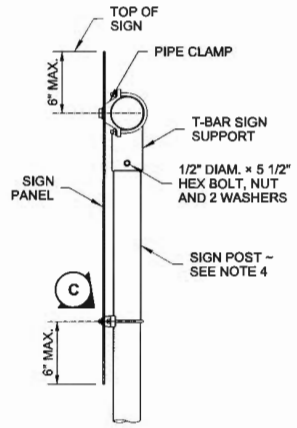

VIEW (B)

NOTES

1. Dimensions for the parts used to assemble the base connections are intentionally not shown. Base connections are patented manufactured products that are in compliance with NCHRP 350 crash test criteria. The base connection details are only shown on this plan to illustrate how the parts are assembled.
2. For Steel Sign Support Foundations, see **Standard Plan G-25.10.**
3. For "X", "Y", "H1", and "H2", refer to the Sign Specification Sheet in the Contract.
4. Sign posts shall be 2 1/2" nominal I.D. galvanized Schedule 80 steel pipe.
5. Do not tighten any slip plate bolt to the recommended torque before pretightening the other bolts. Progressively tighten the three slip plate bolts in 10 ft-lbs increments, alternately, to a final torque of 38 ft-lbs on each bolt.

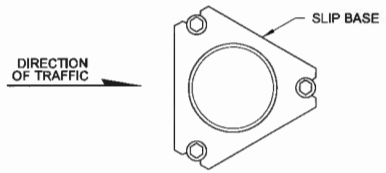

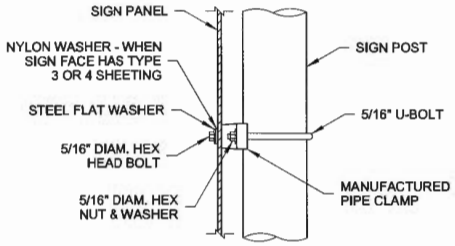

DETAIL (C)

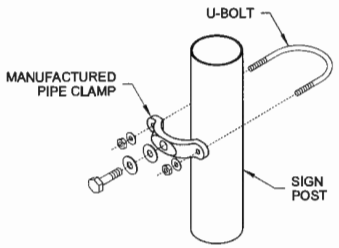

EXPLODED IVEW

PIPE CLAMP AND U-BOLT

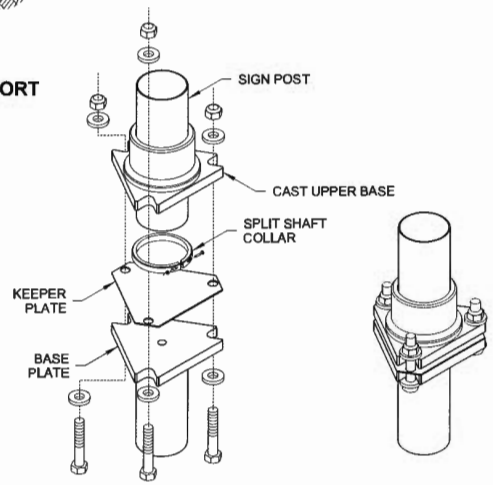

EXPLODED VIEW **ISOMETRIC VIEW**

TYPE PL SIGN SUPPORT

STEEL SIGN SUPPORT TYPES PL, PL-T, & PL-U INSTALLATIONS DETAILS STANDARD PLAN G-24.30-01

SHEET 1 OF 2 SHEETS

APPROVED FOR PUBLICATION

STATE DESIGN ENGINEER — DATE 2/7/12

Washington State Department of Transportation

DRAWN BY: LISA CYFORD

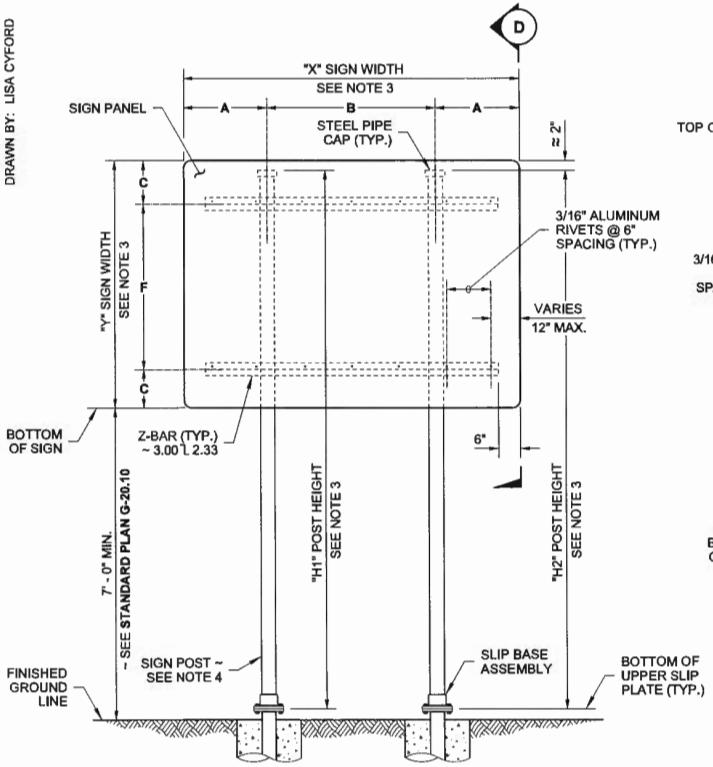

ELEVATION
TYPE PL SIGN SUPPORT
DUAL POST INSTALLATION

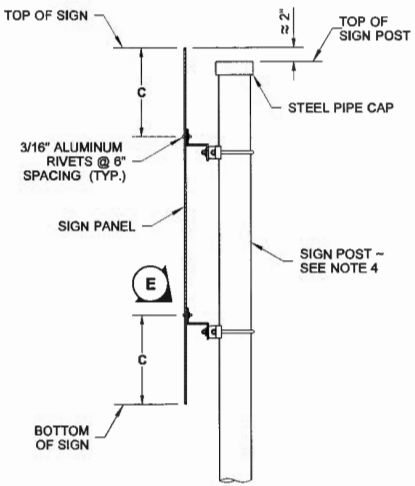

VIEW D

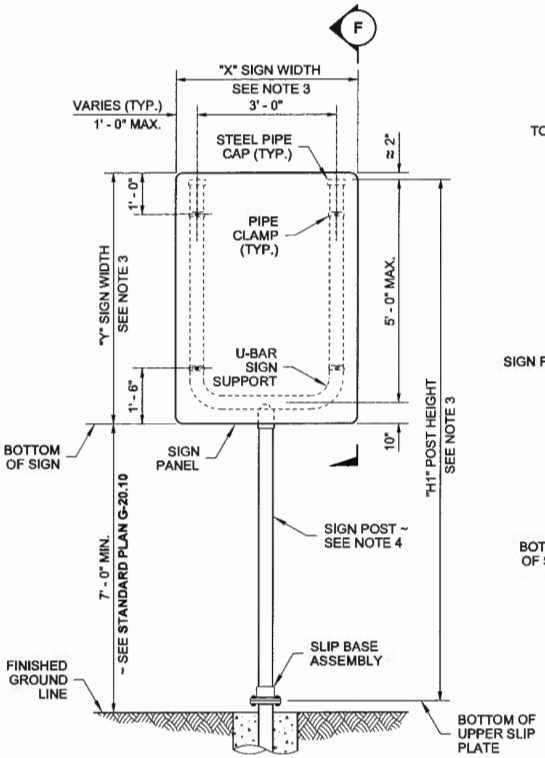

ELEVATION
TYPE PL-U SIGN SUPPORT

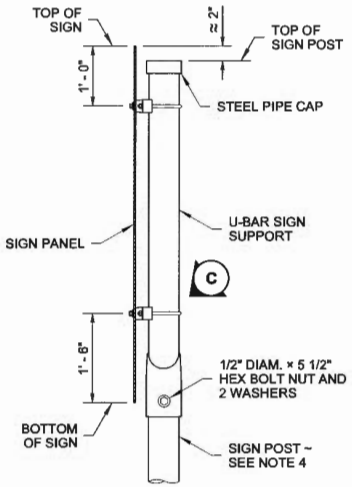

VIEW F

	"X" SIGN WIDTH		
	6' - 0"	8' - 0"	10' - 0"
A	1' - 0"	2' - 0"	3' - 0"
B	3' - 0"	4' - 0"	4' - 0"

	"Y" SIGN HEIGHT		
	6' - 0"	8' - 0"	10' - 0"
C	1' - 0"	2' - 0"	3' - 0"
F	4' - 0"	4' - 0"	4' - 0"

A, B, C, & F, MAY BE INTERPOLATED FOR INTERMEDIATE SIGN SIZES

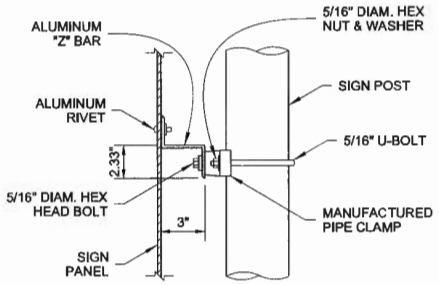

DETAIL E

STEEL SIGN SUPPORT
TYPES PL, PL-T, & PL-U
INSTALLATIONS DETAILS
STANDARD PLAN G-24.30-01

SHEET 2 OF 2 SHEETS

APPROVED FOR PUBLICATION

STATE DESIGN ENGINEER — DATE 2/7/12

Washington State Department of Transportation

DRAWN BY: LISA CYFORD

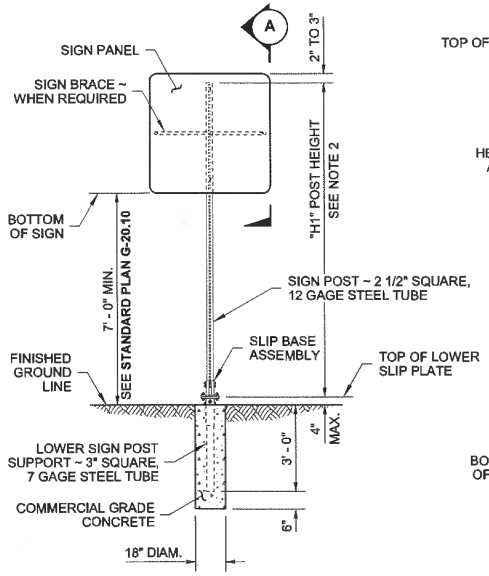

ELEVATION

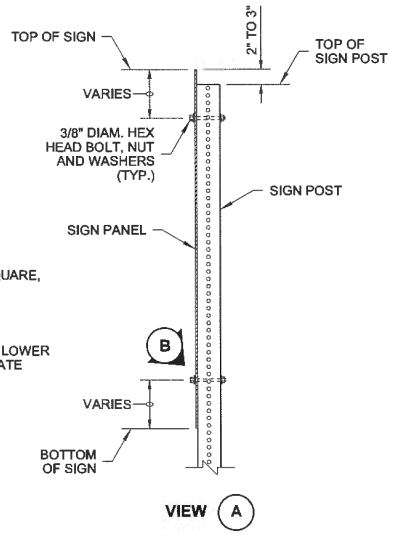

VIEW A

TYPE SB-1, SB-2 & SB-3 SIGN SUPPORT

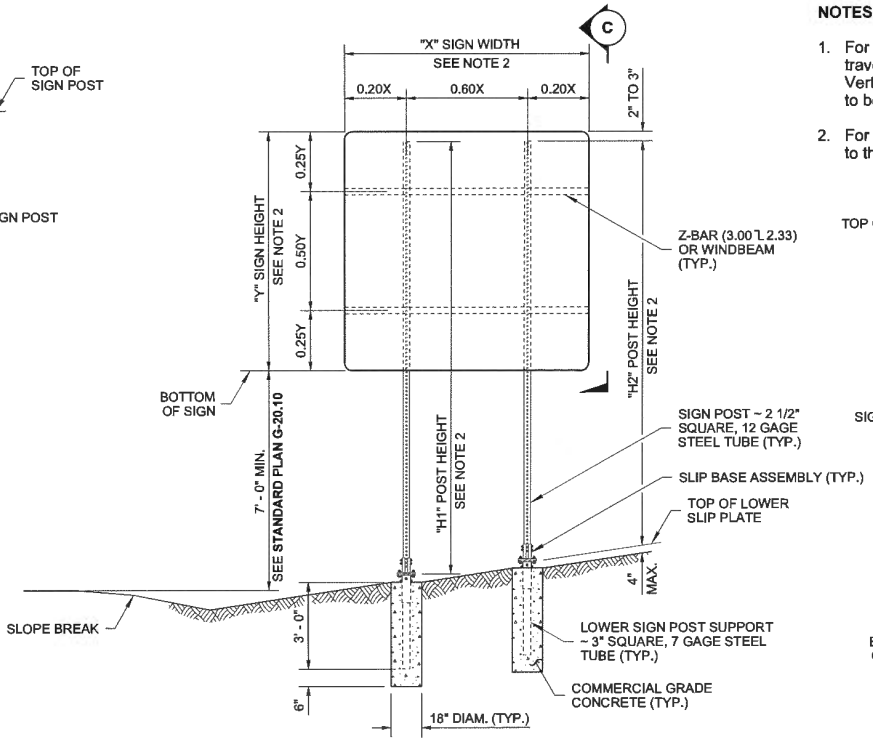

ELEVATION

TYPE SB-1, SB-2 & SB-3 SIGN SUPPORT
DUAL POST INSTALLATION

NOTES

1. For "W", Horizontal distance from edge of traveled way to center of nearest post, and "V", Vertical distance from edge of traveled way to bottom of sign, see **Standard Plan G-20.10.**
2. For "X", "Y", "H1", "H2", "H3", and "H4" refer to the Sign Specification Sheet in the Contract.

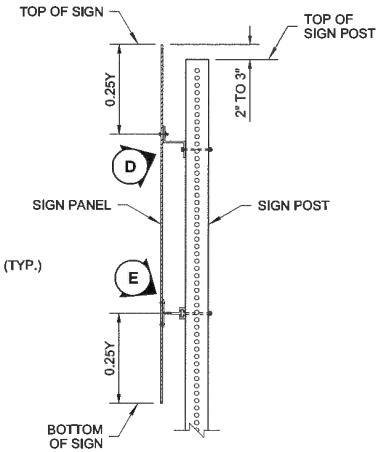

VIEW C

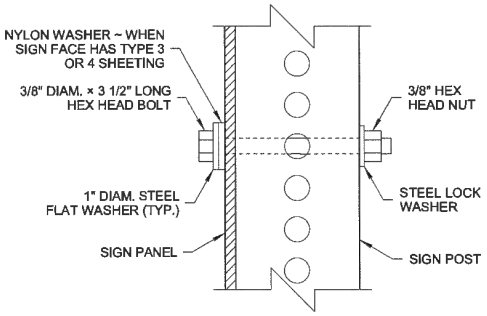

DETAIL B

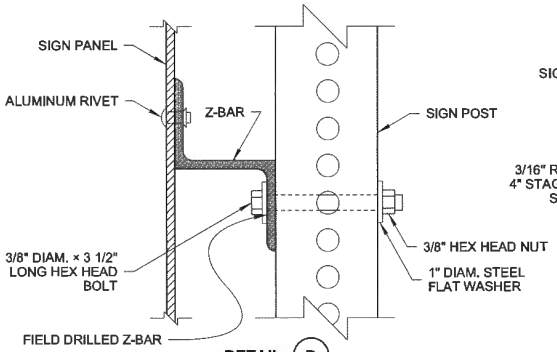

DETAIL D

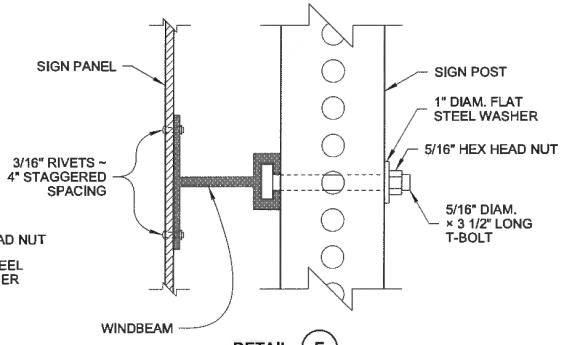

DETAIL E

STEEL SIGN SUPPORT TYPES SB-1, SB-2 & SB-3 INSTALLATION DETAILS STANDARD PLAN G-24.40-02

SHEET 1 OF 2 SHEETS

APPROVED FOR PUBLICATION

STATE DESIGN ENGINEER — DATE 2/7/12

Washington State Department of Transportation

DRAWN BY: LISA CYFORD

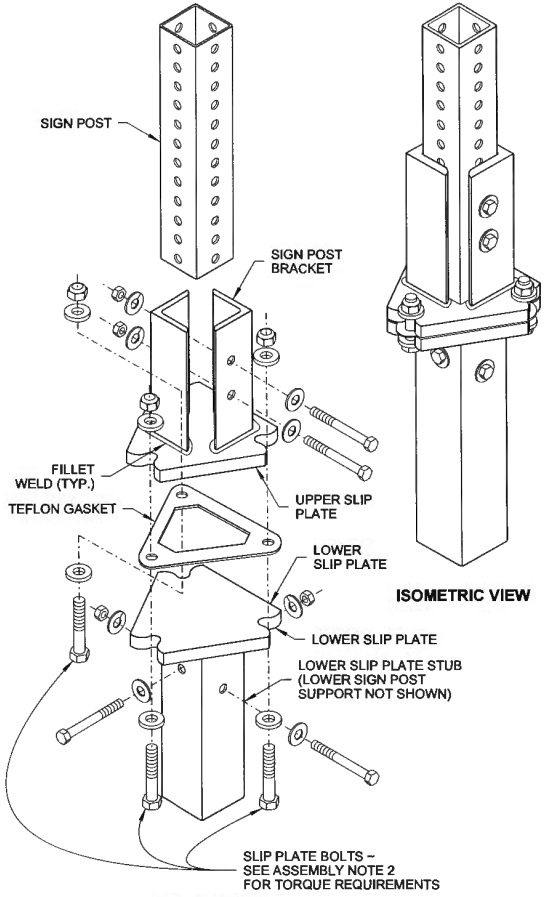

TYPE SB-1
SLIP BASE ASSEMBLY

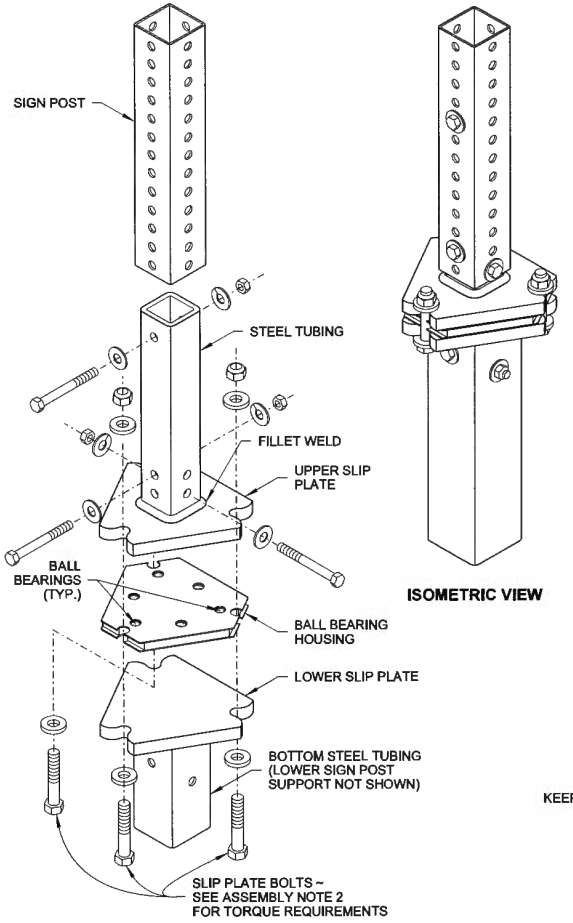

TYPE SB-2
SLIP BASE ASSEMBLY

ASSEMBLY NOTES

1. Dimensions for the parts used to assemble the base connections are intentionally not shown. Base connections are patented, manufactured products that are in compliance with NCHRP 350 crash test criteria. The base connection details are only shown on this plan to illustrate how the parts are assembled.

2. Do not tighten any single Slip Plate Bolt to the recommended torque before pre-tightening the other bolts. Progressively tighten the three Slip Plate Bolts in 10 ft-lb increments, alternately, to a final torque of 40 ft-lbs on each.

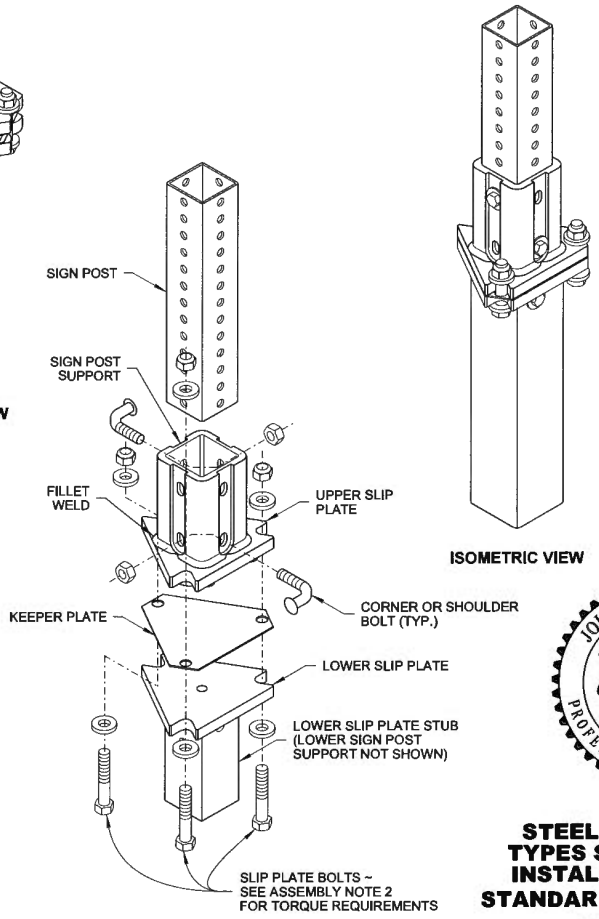

TYPE SB-3
SLIP BASE ASSEMBLY

JOHN C. NISBET
STATE OF WASHINGTON
29115
REGISTERED
PROFESSIONAL ENGINEER

STEEL SIGN SUPPORT TYPES SB-1, SB-2 & SB-3 INSTALLATION DETAILS STANDARD PLAN G-24.40-02

SHEET 2 OF 2 SHEETS

APPROVED FOR PUBLICATION

STATE DESIGN ENGINEER — DATE 2/7/12

Washington State Department of Transportation

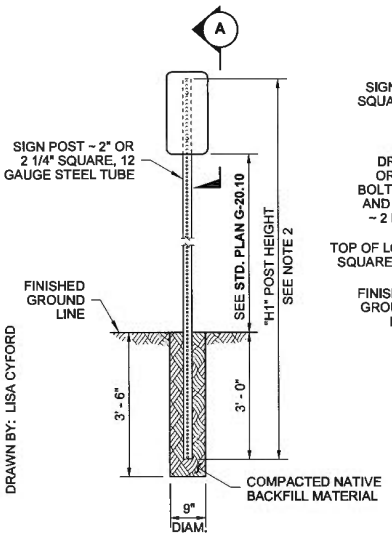

ELEVATION

TYPE ST-1 SIGN SUPPORT

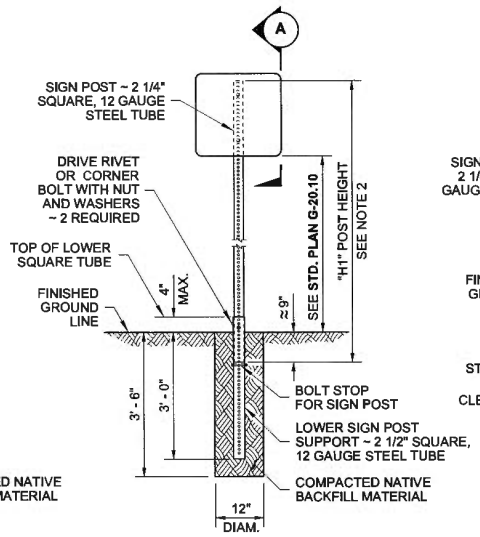

ELEVATION

TYPE ST-2 SIGN SUPPORT

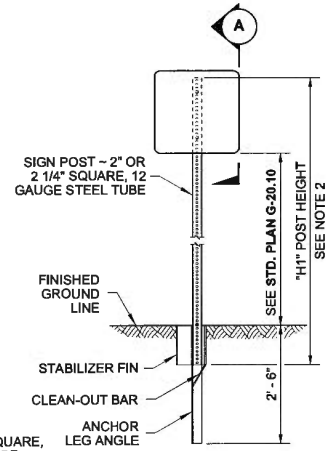

ELEVATION

TYPE ST-3 SIGN SUPPORT

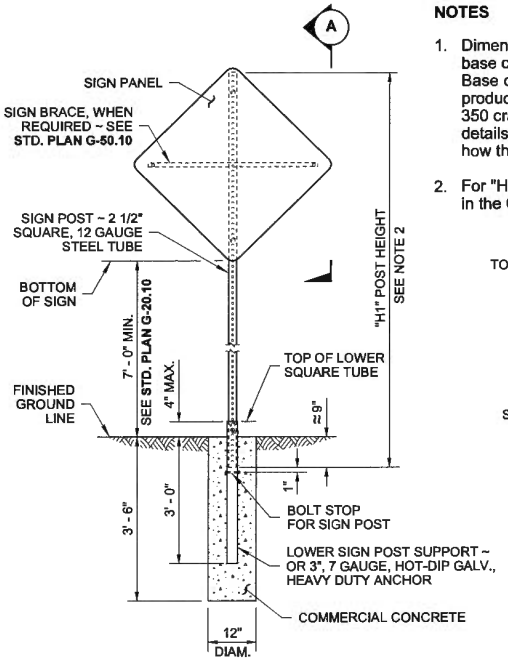

ELEVATION

TYPE ST-4 SIGN SUPPORT

NOTES

1. Dimensions for the parts used to assemble the base connections are intentionally not shown. Base connections are patented, manufactured products that are in compliance with NCHRP 350 crash test criteria. The base connection details are only shown on this plan to illustrate how the parts are assembled.
2. For "H1" refer to the Sign Specification Sheet in the Contract.

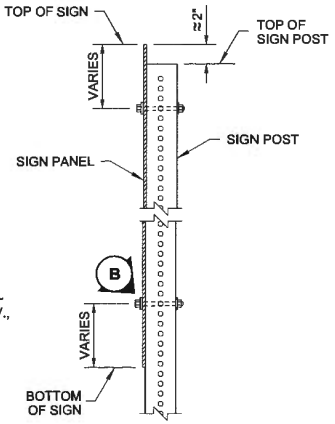

VIEW A

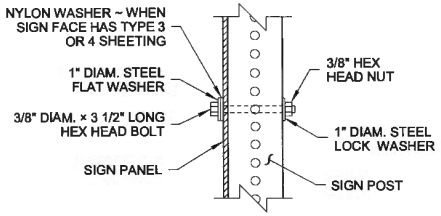

DETAIL B

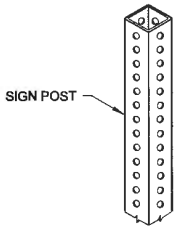

TYPE ST-1

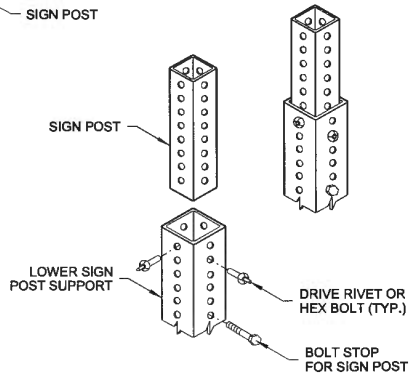

TYPE ST-2

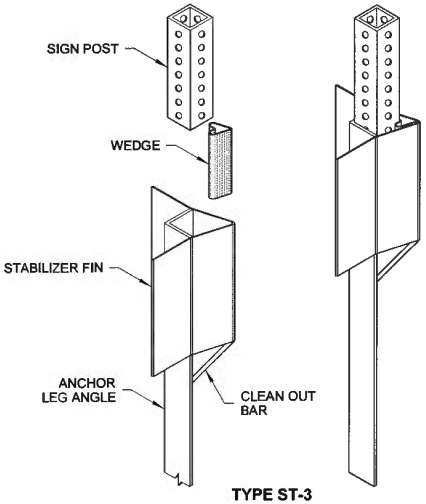

TYPE ST-3

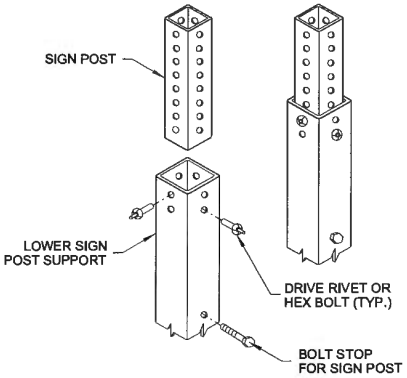

TYPE ST-4

STEEL SIGN SUPPORT TYPES ST-1 ~ ST-4 INSTALLATION DETAILS

STANDARD PLAN G-24.50-01

SHEET 1 OF 1 SHEET

APPROVED FOR PUBLICATION

STATE DESIGN ENGINEER — DATE 2/7/12

Washington State Department of Transportation

DRAWN BY: LISA CYFORD

DRAWN BY: LISA CYFORD

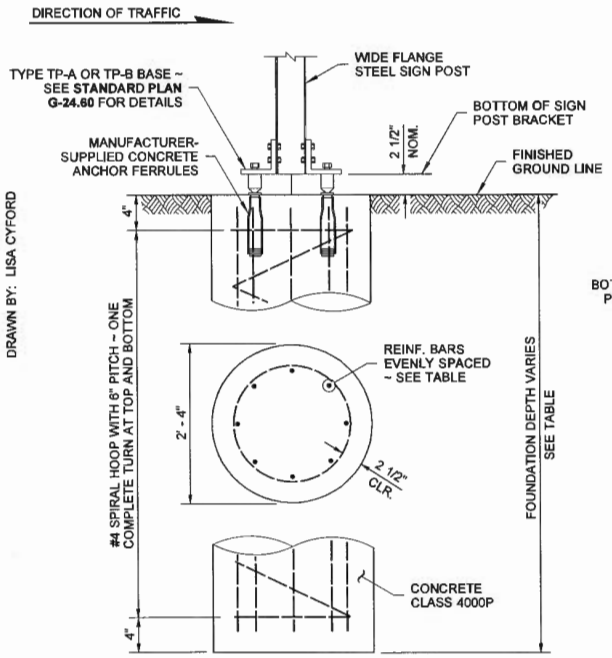

ELEVATION VIEW

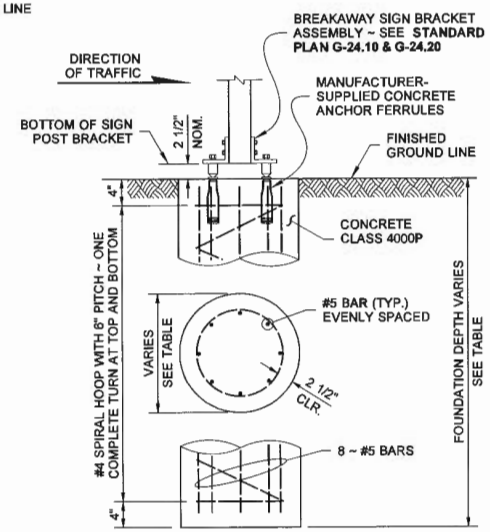

ELEVATION VIEW

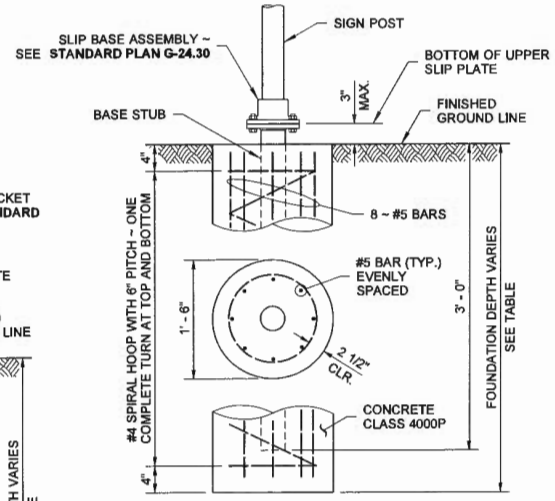

ELEVATION VIEW

NOTES

1. Per TRANSPO: 5" to 8" square steel posts are acceptable and require type TP-B foundations.
2. Install conduit for post-mounted Junction Box in the concrete foundation, when required. See **Standard Plan J-40.35, Sheet 2.**

KEY NOTES

1. Foundation depths based on allowable lateral bearing pressure in excess of 2500 PSF.
2. Two-post installation.
3. Single-post installations require square steel posts. For single-post installations, divide the 2 post MAX. XYZ in half.

TYPE TP-A & TYPE TP-B FOUNDATION

TYPE TP-A & TP-B FOUNDATION TABLE
SEE NOTE 1

POST SIZE		MAX. XYZ		VERTICAL REBAR	FDN. DEPTH 1
ASTM A 36	ASTM A 992	2 POST 3	3 POST		
W6 x 12	W6 x 9	1570	2355	8 ~ # 5	4' - 0"
W6 x 16	W6 x 12	2340	3510	8 ~ # 5	5' - 0"
W8 x 21	W8 x 18	4120	6180	8 ~ # 6	7' - 0"
W10 x 26	W10 x 22	6320	9480	8 ~ # 7	8' - 0"
W12 x 30	W12 x 26	8700	—	8 ~ # 7	9' - 0"

TYPE AS & TYPE AP FOUNDATION

TYPE AS FOUNDATION TABLE

POST SIZE	MAX. XYZ	FDN. DIAM.	FDN. DEPTH 1
4" SQ.	250	18"	4' - 0"

TYPE AP FOUNDATION TABLE

POST SIZE	MAX. XYZ	FDN. DIAM.	FDN. DEPTH 1
3" O.D.	225	18"	3' - 6"
3 1/2" O.D.	250	18"	4' - 0"
4" O.D.	275	24"	4' - 0"
4 1/2" O.D.	300	24"	4' - 0"

TYPE PL, TYPE PL-T & TYPE PL-U FOUNDATION

TYPE PL, TYPE PL-T & TYPE PL-U FOUNDATION TABLE

MAX. XYZ	FDN. DEPTH 1
225	3' - 6"
265	4' - 0"
300	4' - 6"
600 2	4' - 6"

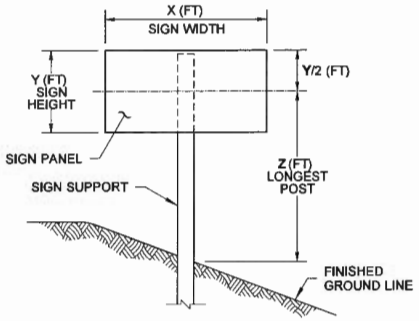

XYZ CALCULATION

$XYZ\ (FT^3) = X \times Y \times Z$
USED TO DETERMINE POST SIZE
~ SEE FOUNDATION TABLES

RICHARD P. ZELDENRUST
STATE OF WASHINGTON
25470
REGISTERED
PROFESSIONAL ENGINEER
2/6/12

STEEL SIGN SUPPORT FOUNDATION DETAILS

STANDARD PLAN G-25.10-03

SHEET 1 OF 1 SHEET

APPROVED FOR PUBLICATION
STATE DESIGN ENGINEER — DATE 3/16/12
Washington State Department of Transportation

DRAWN BY: LISA CYFORD

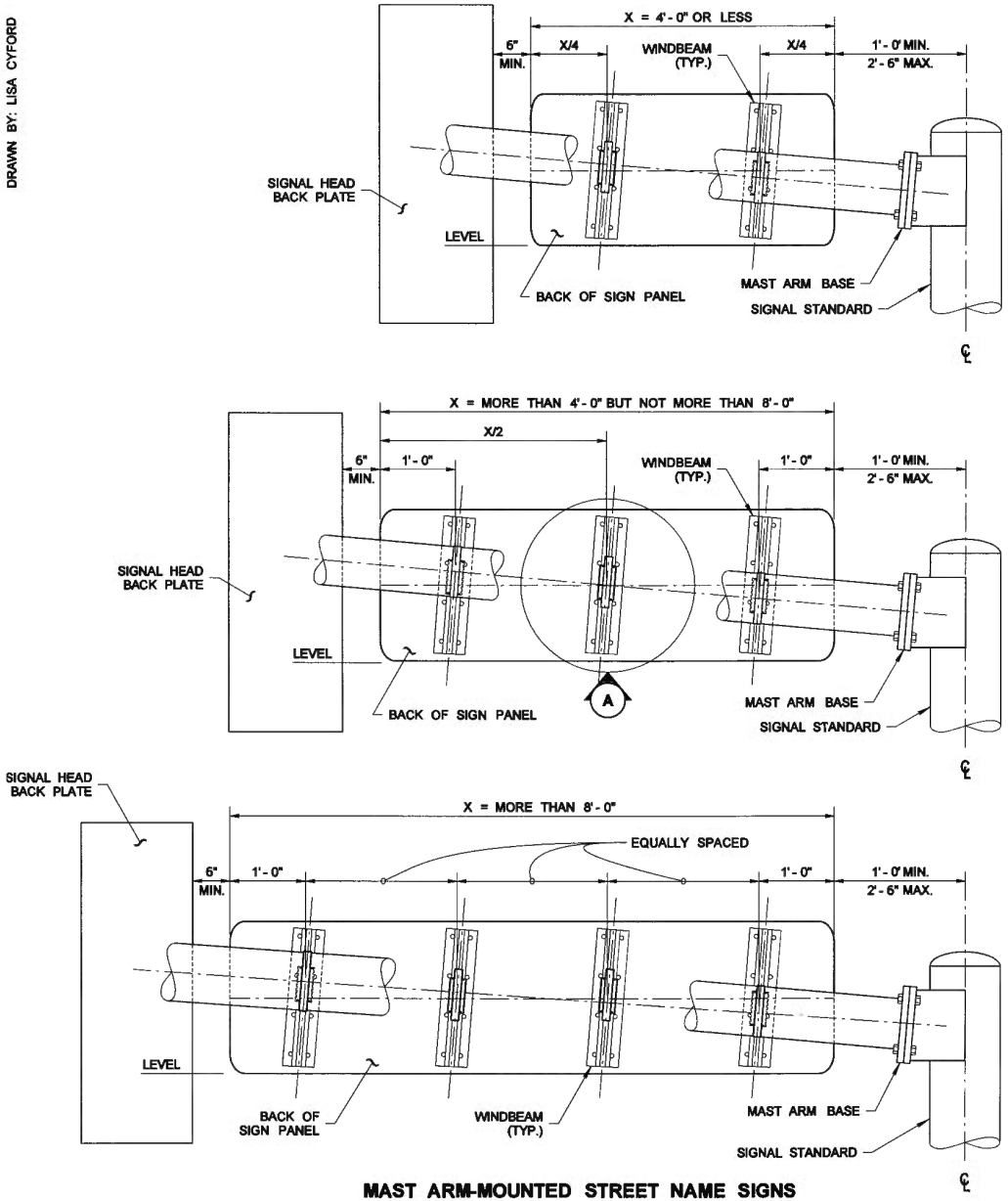

MAST ARM-MOUNTED STREET NAME SIGNS

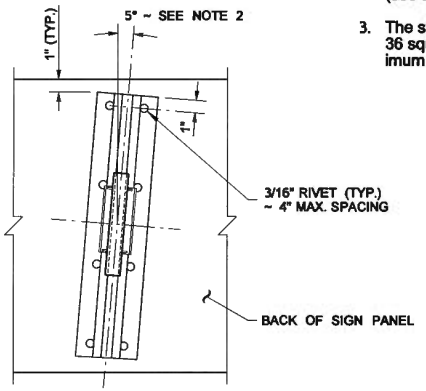

DETAIL (A)

TYPICAL FOR EACH CONNECTION

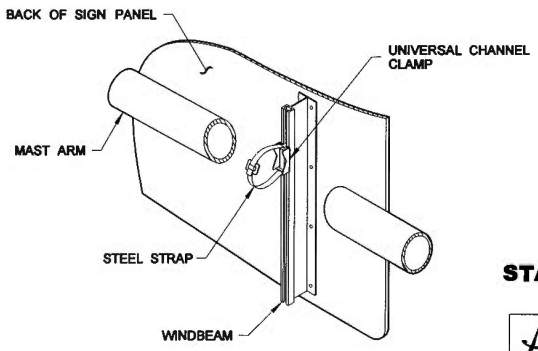

TYPICAL MAST ARM INSTALLATION

NOTES

1. Mounting brackets with steel straps shall be a stainless steel band and buckle system product or an approved equal. Mounting brackets shall be universal channel clamps; steel straps shall be 3/4" wide and 0.030" thick.
2. All signs installed on mast arms or standards (poles) require windbeams. All signs shall be installed with horizontal edges level. A skewed windbeam is required only when the sign is mounted within 12" of the mast arm base (see Detail "A").
3. The street name sign shall be a maximum of 36 square feet and the sign height is a maximum of 3 feet.

SIGN INSTALLATION ON SIGNAL AND LIGHT STANDARDS
STANDARD PLAN G-30.10-01

SHEET 1 OF 2 SHEETS

APPROVED FOR PUBLICATION

STATE DESIGN ENGINEER — DATE 6/16/11

Washington State Department of Transportation

DRAWN BY: BILL BERENS

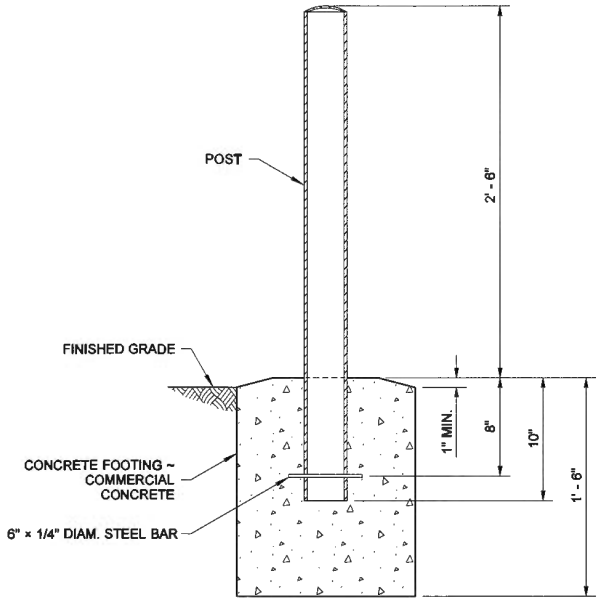

SECTION (A)

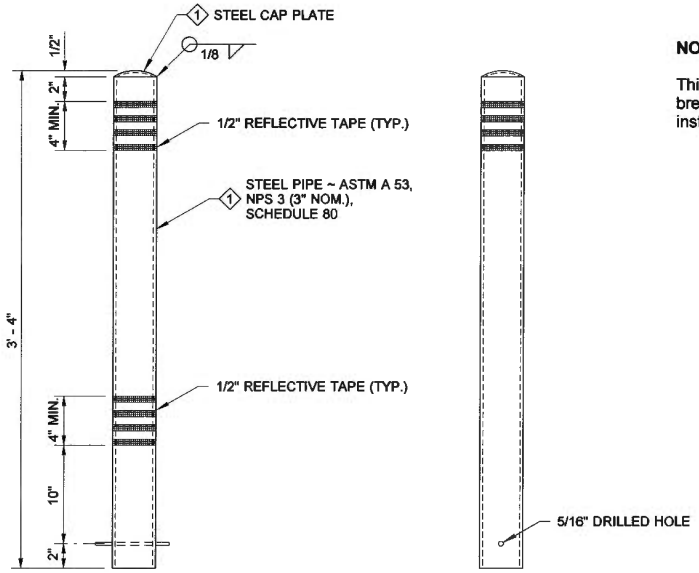

FRONT VIEW

SIDE VIEW

1 PAINT ASSEMBLY WITH A "HIGHLY VISIBLE" COLOR. (SAFETY YELLOW IS ACCEPTABLE)

POST

NOTE

This bollard does not have an effective breakaway design feature and cannot be installed within the Design Clear Zone.

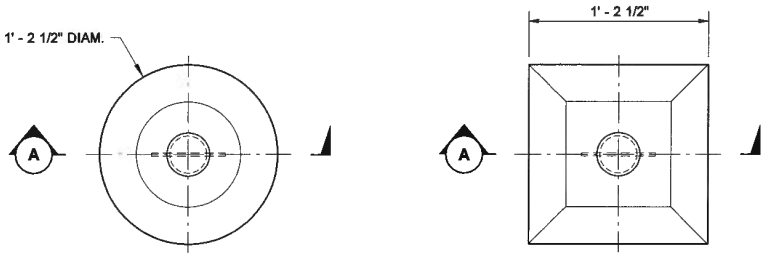

ROUND FOOTING

SQUARE FOOTING

PLAN VIEW

BOLLARD TYPE 2

STANDARD PLAN H-60.20-01

SHEET 1 OF 1 SHEET

APPROVED FOR PUBLICATION

STATE DESIGN ENGINEER — DATE 7/3/08

Washington State Department of Transportation

DRAWN BY: MARK SUJKA

WOOD POST FASTENERS			
SIZE / TYPE	QUANTITY	WASHERS	LOCKNUTS
3/8" DIAM. × 4 3/4" BOLT	2	4	2
3/8" DIAM. × 3/4" BOLT	4	8	4
3/16" DIAM. × 1" SCREW	4	8	4

STEEL POST FASTENERS			
SIZE / TYPE	QUANTITY	WASHERS	LOCKNUTS
3/8" DIAM. × 2 3/4" BOLT	2	4	2
3/8" DIAM. × 3/4" BOLT	4	8	4
3/16" DIAM. × 1" SCREW	4	8	4
1 7/8" M-CLAMP	2	4	4

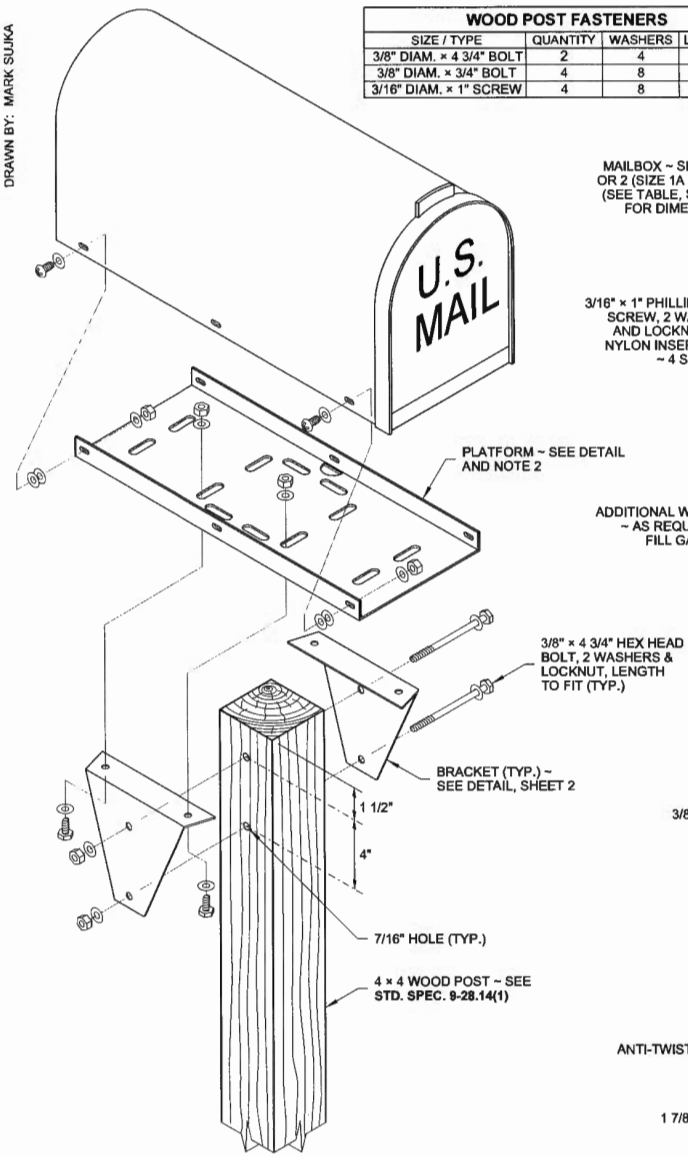

WOOD POST ASSEMBLY DETAIL

SEE STEEL POST ASSEMBLY DETAIL FOR SPECIFICATIONS NOT SHOWN

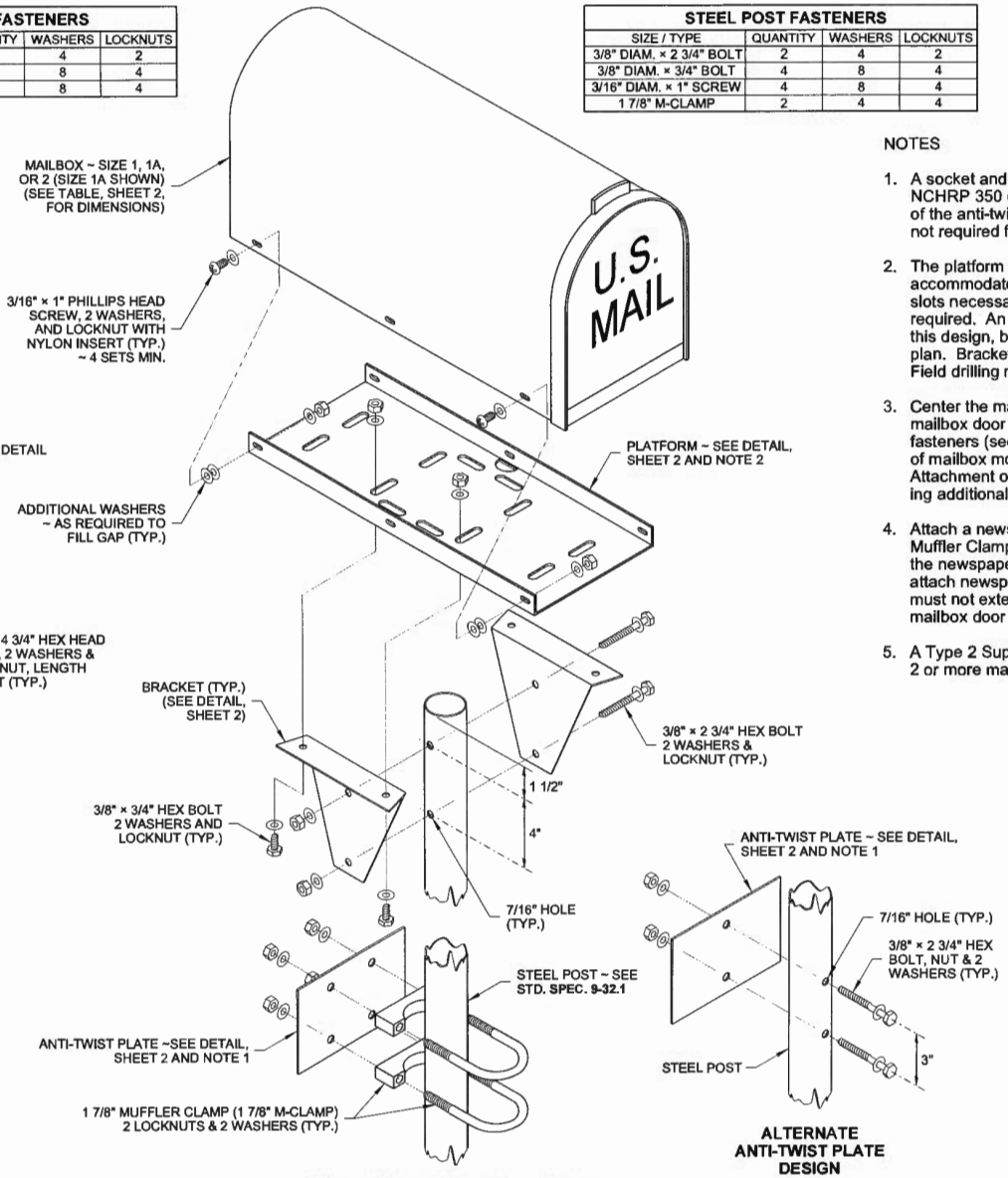

STEEL POST ASSEMBLY DETAIL

ALTERNATE ANTI-TWIST PLATE DESIGN

NOTES

1. A socket and wedge anchoring system that meets the NCHRP 350 crash test criteria may be substituted in lieu of the anti-twist plate designs shown. Anti-twist plates are not required for wood post installations.
2. The platform design shown on this plan features slots that accommodate several types of mailbox supports; only those slots necessary for assembling the type being installed are required. An adjustable platform may be used in lieu of this design, but it must fit the bracket design shown on this plan. Brackets are required for all single-post installations. Field drilling may be necessary.
3. Center the mailbox on the platform to ensure space for the mailbox door to open and to allow space for installing the fasteners (see ALIGNMENT DETAIL, Sheet 2). Spacing of mailbox mounting holes varies among manufacturers. Attachment of the mailbox to the platform may require drilling additional holes through the mailbox to fit the platform.
4. Attach a newspaper box to a steel post with two 1 7/8" Muffler Clamps spaced 4" apart. Field drill 7/16" holes in the newspaper box to fit. Use 2 1/2" × 1/4" lag bolts to attach newspaper boxes to wood posts. Newspaper boxes must not extend beyond the front of the mailbox when the mailbox door is closed.
5. A Type 2 Support **(Standard Plan H-70.20)** is required when 2 or more mailboxes are to be installed on one support.

MAILBOX SUPPORT TYPE 1

STANDARD PLAN H-70.10-01

SHEET 1 OF 2 SHEETS

APPROVED FOR PUBLICATION

STATE DESIGN ENGINEER — DATE 2/7/12

Washington State Department of Transportation

DRAWN BY: MARK SUJKA

MAILBOX & PLATFORM DIMENSIONS						
SIZE	MAILBOX DIMENSIONS			PLATFORM DIMENSIONS		
	L	W	H	L	W	H
1	19"	6 1/2"	8 1/2"	17"	6"	1"
1A	21"	8"	10 1/2"	19"	7 1/2"	1"
2	24"	11 1/2"	13 1/2"	21"	11"	1"

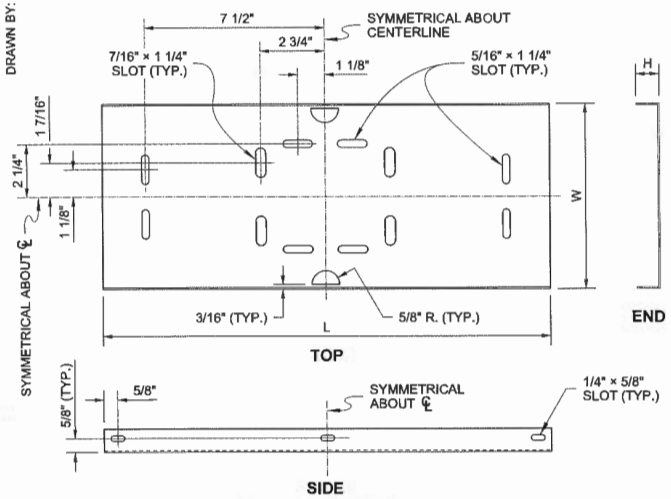

PLATFORM DETAIL

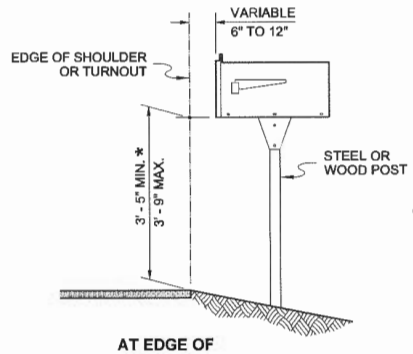

AT EDGE OF SHOULDER

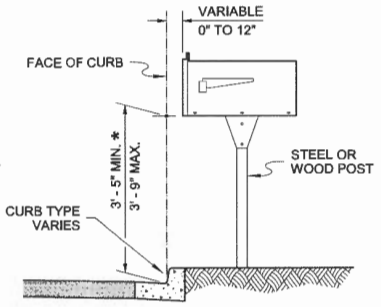

BEHIND CURB

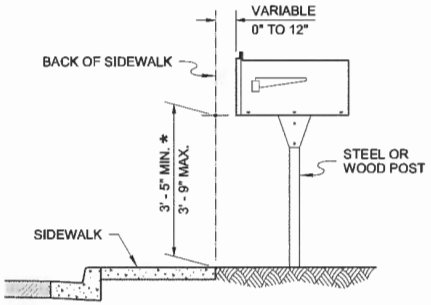

BEHIND SIDEWALK

* UNLESS OTHERWISE SHOWN IN THE PLANS

MAILBOX PLACEMENT SECTIONS

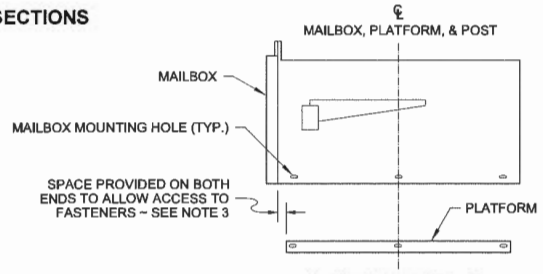

ALIGNMENT DETAIL

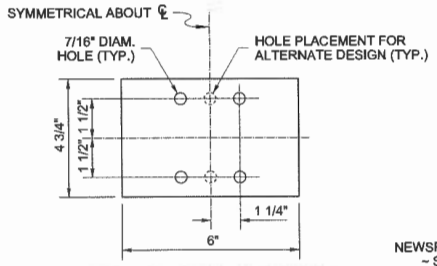

ANTI-TWIST PLATE DETAIL

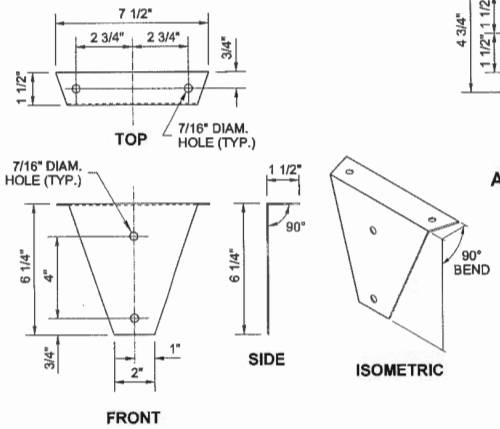

BRACKET DETAIL

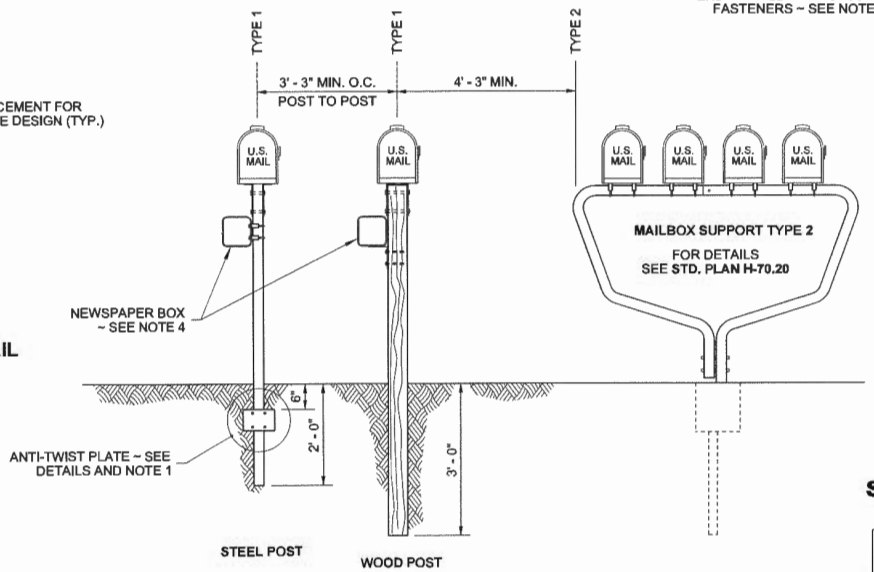

POST PLACEMENT DETAIL

MAILBOX SUPPORT TYPE 1

STANDARD PLAN H-70.10-01

SHEET 2 OF 2 SHEETS

APPROVED FOR PUBLICATION

STATE DESIGN ENGINEER — DATE 2/7/12

Washington State Department of Transportation

DRAWN BY: MARK SUJKA

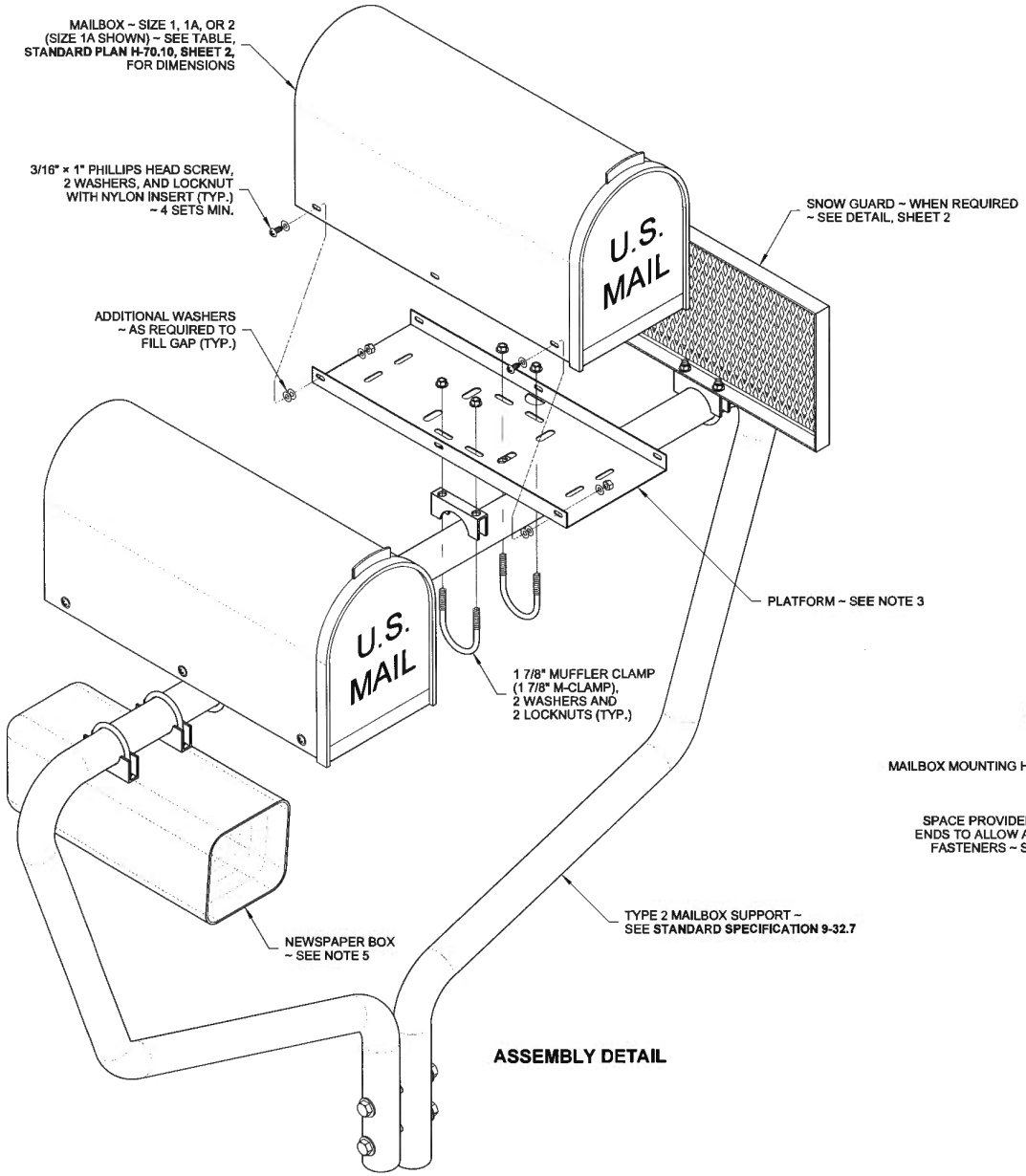

ASSEMBLY DETAIL

NOTES

1. The anchoring system shall meet NCHRP 350 crash test criteria. Use a socket and wedge system or the anchoring system supplied by or recommended by the Type 2 Support manufacturer.
2. A maximum of five mailboxes may be installed on a Type 2 Support.
3. The Platform design shown in this plan is detailed in the PLATFORM DETAIL, **Standard Plan H-70.10, Sheet 2**. The design features slots that accomodate several types of mailbox supports; only those slots necessary for assembling the type being installed are required. An adjustable platform may be used in lieu of this platform design. Adjustable platforms must fit the 1 7/8" M-Clamp.
4. Center the mailbox on the platform to ensure space for the mailbox door to open and to allow space for installing the fasteners (see ALIGNMENT DETAIL). Spacing of mailbox mounting holes varies among manufacturers. Attachment of the mailbox to the platform may require drilling additional holes through the mailbox to fit the platform.
5. Attach a newspaper box to a Type 2 Support with two 1 7/8" Muffler Clamps spaced 4" apart. Field drill 7/16" holes in the newspaper box to fit. Newspaper boxes must not extend beyond the front of the mailbox when the mailbox door is closed.

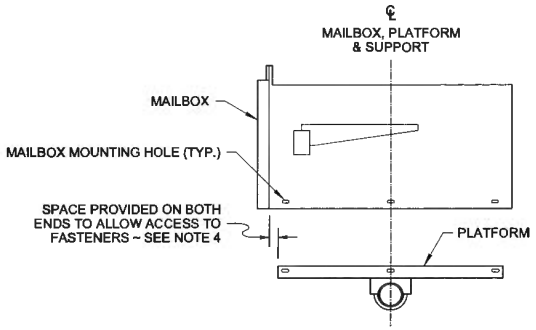

ALIGNMENT DETAIL

SEE NOTE 4

BAKOTICH, PASCO III
STATE OF WASHINGTON
24557
REGISTERED
PROFESSIONAL ENGINEER
2/16/12

MAILBOX SUPPORT TYPE 2

STANDARD PLAN H-70.20-01

SHEET 1 OF 2 SHEETS

APPROVED FOR PUBLICATION

STATE DESIGN ENGINEER — DATE 2/16/12

Washington State Department of Transportation

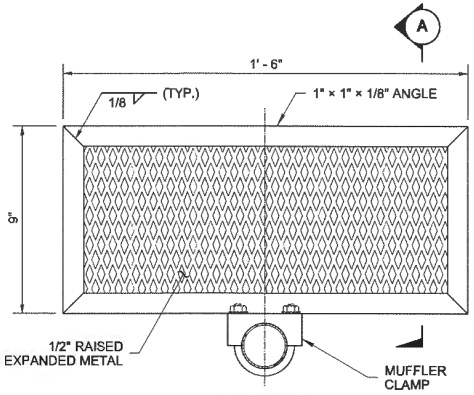

FRONT VIEW

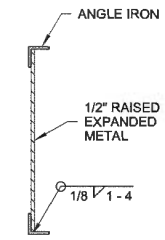

SECTION (A)

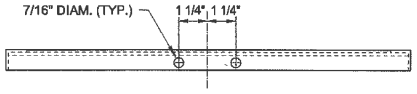

BOTTOM VIEW

SNOW GUARD DETAIL

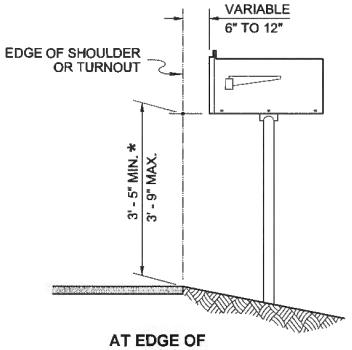

AT EDGE OF SHOULDER

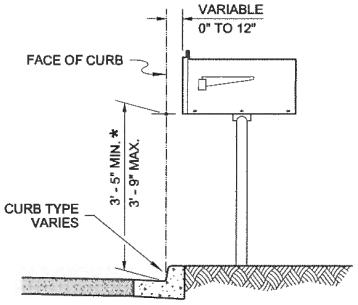

BEHIND CURB

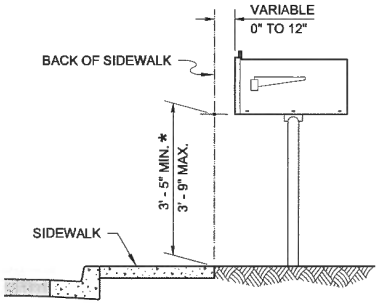

BEHIND SIDEWALK

* UNLESS OTHERWISE SHOWN IN THE PLANS

MAILBOX PLACEMENT SECTIONS

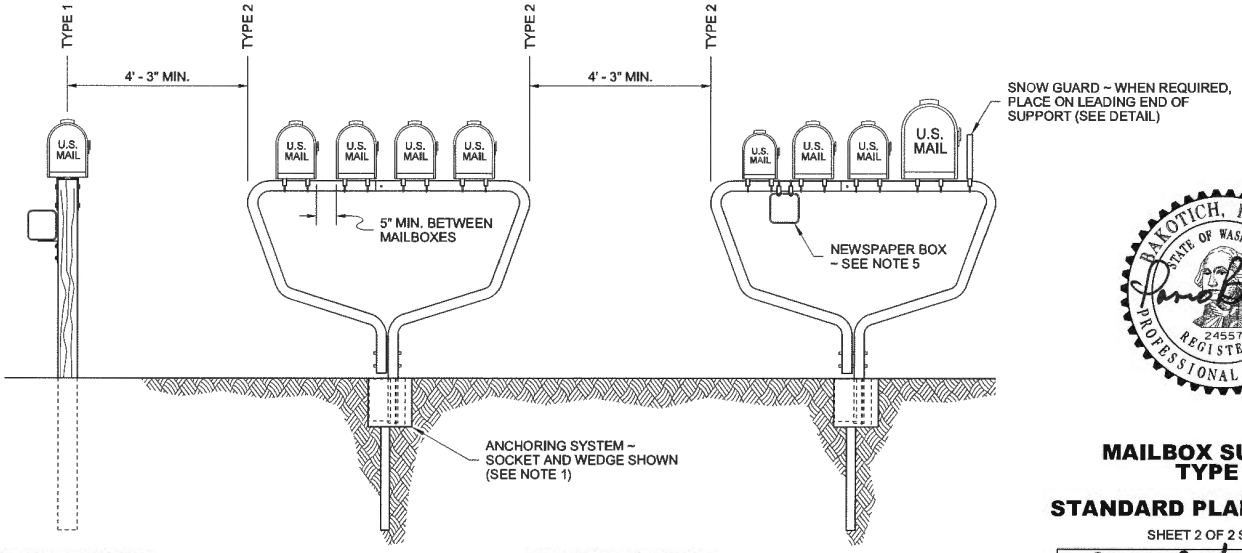

MAILBOX SUPPORT TYPE 1
(WOOD POST SHOWN)
FOR DETAILS,
SEE **STANDARD PLAN I-70.10**

MAILBOX SUPPORTS TYPE 2

SPACING DETAIL

DRAWN BY: MARK SUJKA

MAILBOX SUPPORT TYPE 2

STANDARD PLAN H-70.20-01

SHEET 2 OF 2 SHEETS

APPROVED FOR PUBLICATION

STATE DESIGN ENGINEER — DATE 2/16/12

Washington State Department of Transportation

DRAWN BY: MARK SUIKA

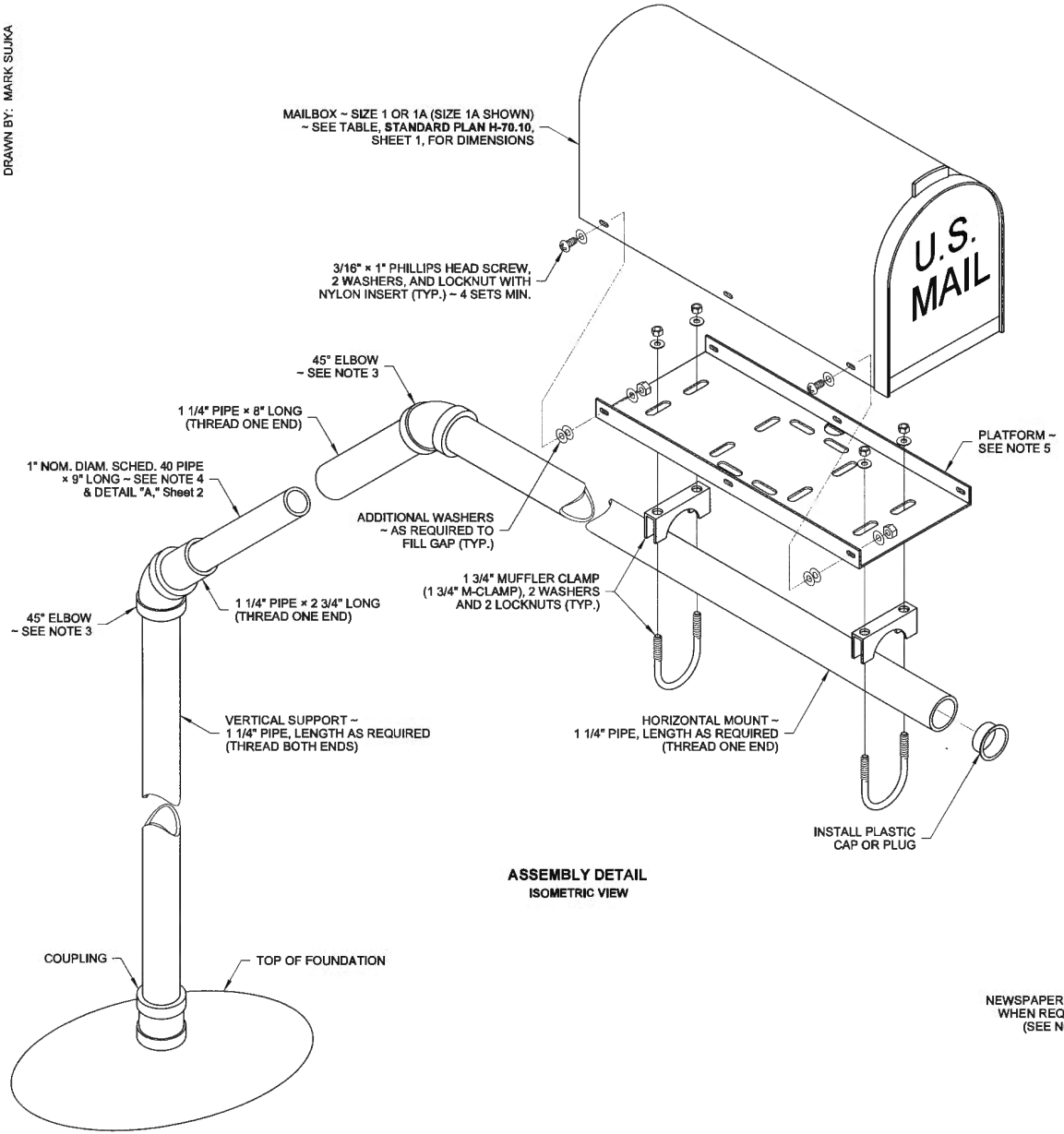

ASSEMBLY DETAIL
ISOMETRIC VIEW

NOTES

1. The insert pipe is 1" nominal diameter, Schedule 40 steel pipe, as indicated; all other pipe shown on this plan is 1 1/4" nominal diameter, Schedule 40 steel pipe. All pipe, couplings, and elbows shall be galvanized in accordance with ASTM A 153.
2. The vertical support may be cast in a concrete foundation, or bolted to a U-channel post, (see PLACEMENT DETAIL, Sheet 2). Avoid placing the vertical support in the flow line of a ditch.
3. The pipe angles required in this design may be achieved by using pipe fittings or by bending the pipes. See DETAIL "A," Sheet 2.
4. Coat the 1" diam. pipe with grease (petroleum) before sliding the 1 1/4" diam. pipe (cantilever arm) onto it, to aid rotation and to guard against corrosion.
5. The Platform design shown in this plan is detailed in the PLATFORM DETAIL, **Standard Plan H-70.10, Sheet 2.** The design features slots that accommodate several types of mailbox supports; only those slots necessary for assembling the type being installed are required.
6. Match the edge of the mailbox platform to the end of the horizontal pipe mount. Center the mailbox on the platform to ensure space for the mailbox door to open and to allow space for installing the fasteners. Spacing of mailbox mounting holes varies among manufacturers. Attachment of the mailbox to the platform may require drilling additional holes through the mailbox to fit the platform, (see ALIGNMENT DETAIL).
7. Attach a newspaper box to the pipe with two 1 3/4" muffler clamps spaced 4" apart. Newspaper boxes must not extend beyond the front of the mailbox when the mailbox door is closed.

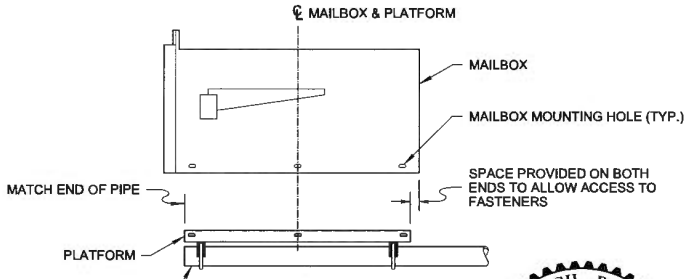

ALIGNMENT DETAIL
SIDE VIEW

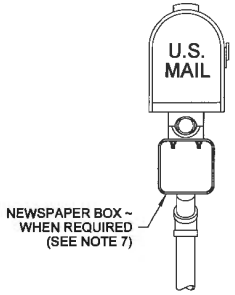

NEWSPAPER BOX ATTACHMENT DETAIL
ELEVATION VIEW

MAILBOX SUPPORT TYPE 3

STANDARD PLAN H-70.30-02

SHEET 1 OF 2 SHEETS

APPROVED FOR PUBLICATION

2/7/12

STATE DESIGN ENGINEER — DATE

Washington State Department of Transportation

DRAWN BY: MARK SUJKA

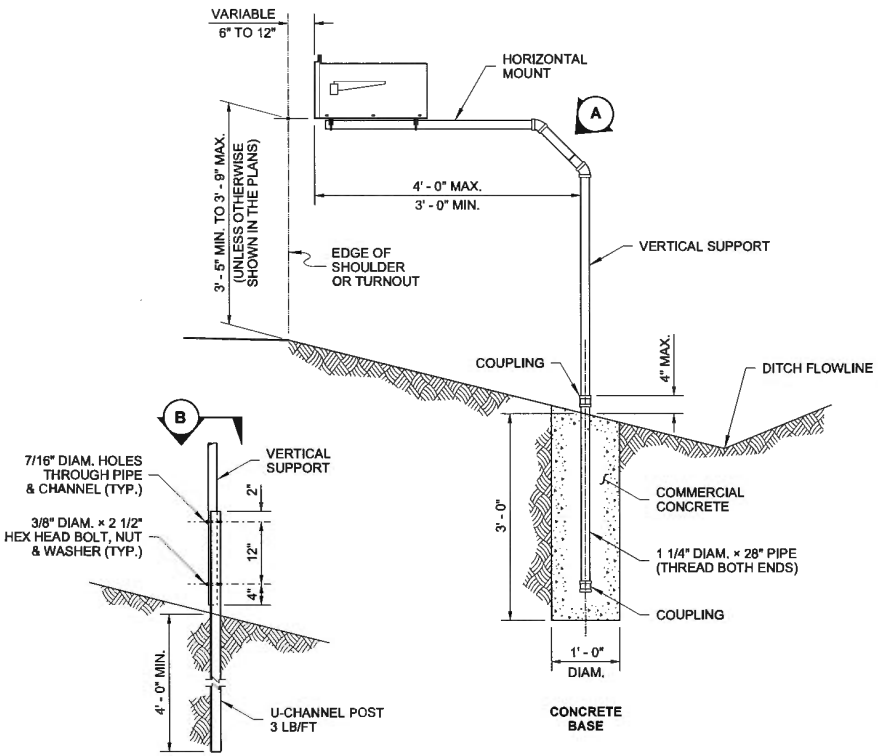

PLACEMENT DETAIL
SECTION VIEW

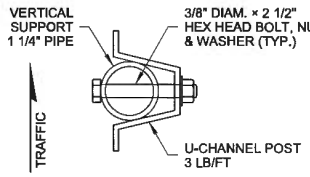

SECTION (B)

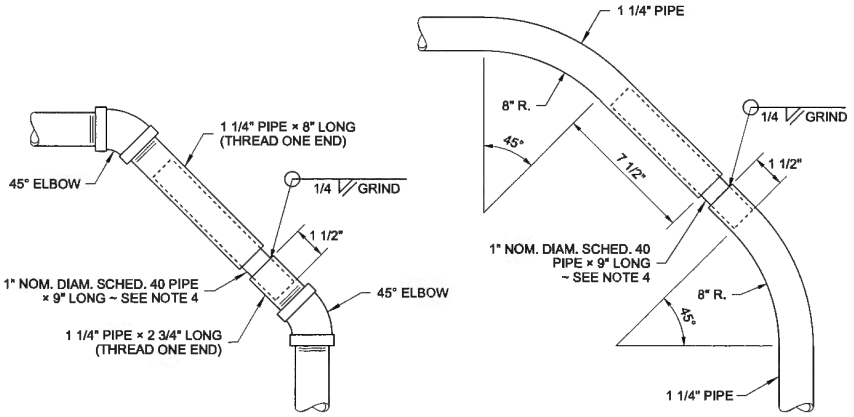

PIPE FITTING ANGLES **PIPE BENDING ANGLES**

DETAIL (A)

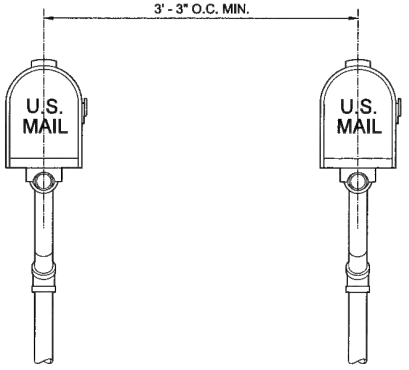

SPACING DETAIL
ELEVATION VIEW

MAILBOX SUPPORT TYPE 3

STANDARD PLAN H-70.30-02

SHEET 2 OF 2 SHEETS

APPROVED FOR PUBLICATION

Pasco Bakotich III 2/7/12

STATE DESIGN ENGINEER DATE

Washington State Department of Transportation

This page left blank intentionally.

DRAWN BY: BILL BERENS

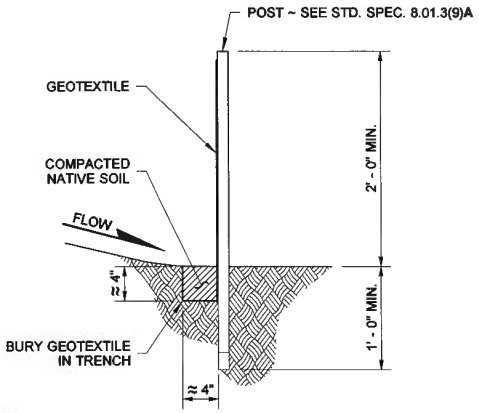

NOTE

DURING EXCAVATION, MINIMIZE DISTURBING THE GROUND AROUND TRENCH AS MUCH AS IS FEASIBLE AND SMOOTH SURFACE FOLLOWING EXCAVATION TO AVOID CONCENTRATING FLOWS.

SECTION (A)

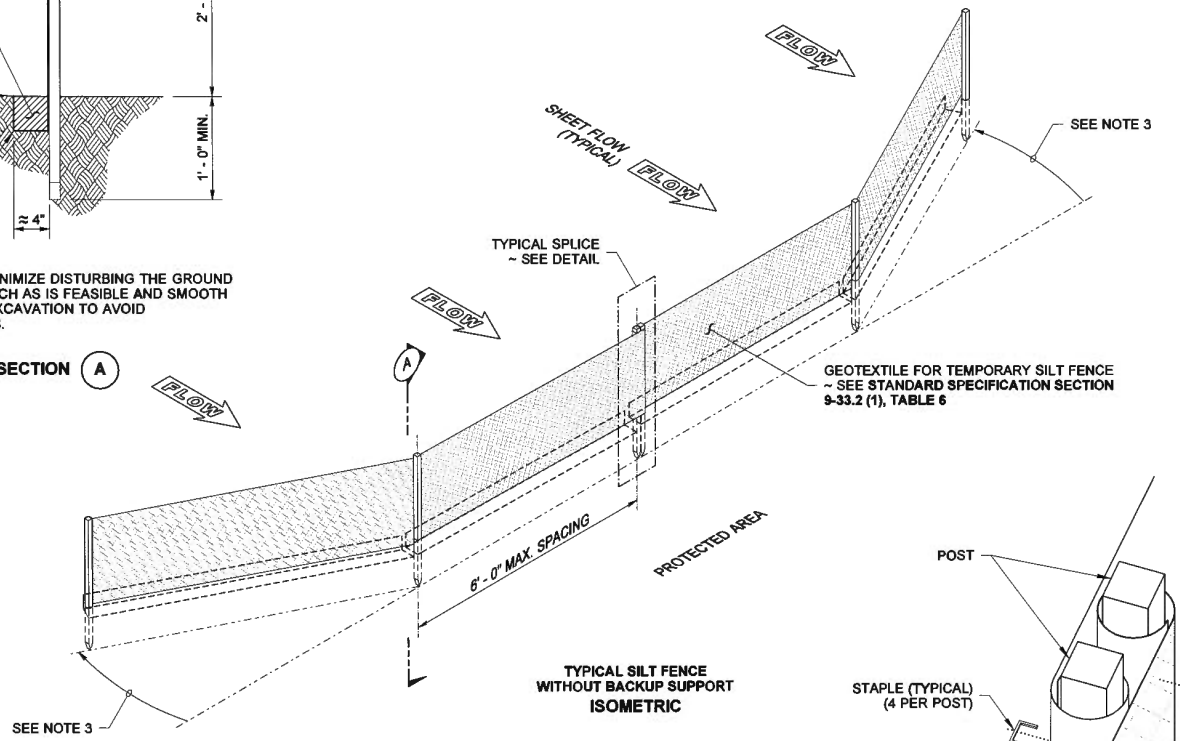

TYPICAL SILT FENCE WITHOUT BACKUP SUPPORT
ISOMETRIC

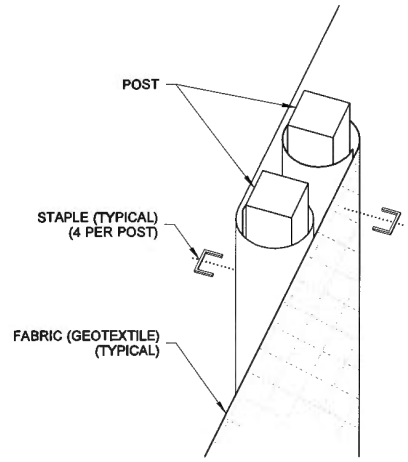

SPLICED FENCE SECTIONS SHALL BE CLOSE ENOUGH TOGETHER TO PREVENT SILT LADEN WATER FROM ESCAPING THROUGH THE FENCE AT THE OVERLAP. JOINING SECTIONS SHALL NOT BE PLACED IN LOW SPOTS OR IN SUMP LOCATIONS.

SPLICE DETAIL

NOTES

1. Maximize detention of stormwater by placing fence as far away from toe of slope as possible without encroaching on sensitive areas or outside of the clearing boundaries.
2. Install silt fencing along contours.
3. Install the ends of the silt fence to point slightly up-slope to prevent sediment from flowing around the ends of the fence.
4. Perform maintenance in accordance with **Standard Specifications 8.01.3(9)A and 8.01.3(15)**.

STATE OF WASHINGTON REGISTERED LANDSCAPE ARCHITECT
MARK W. MAURER
CERTIFICATE NO. 000598

SILT FENCE

STANDARD PLAN I-30.15-01

SHEET 1 OF 1 SHEET

APPROVED FOR PUBLICATION
STATE DESIGN ENGINEER — DATE 2/7/12
Washington State Department of Transportation

DRAWN BY: LISA CYFORD

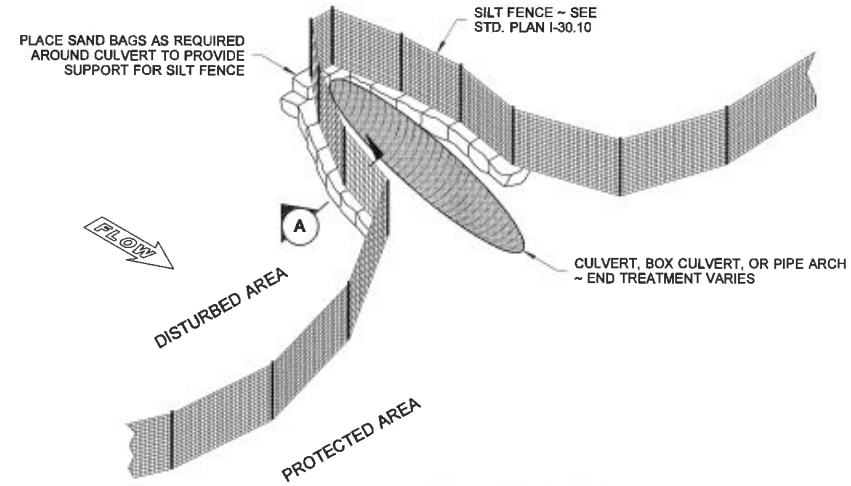

SILT FENCE DESIGN

NOTE

Perform maintenance in accordance with Standard Specification 8-01.3(9)A and 8-01.3(15).

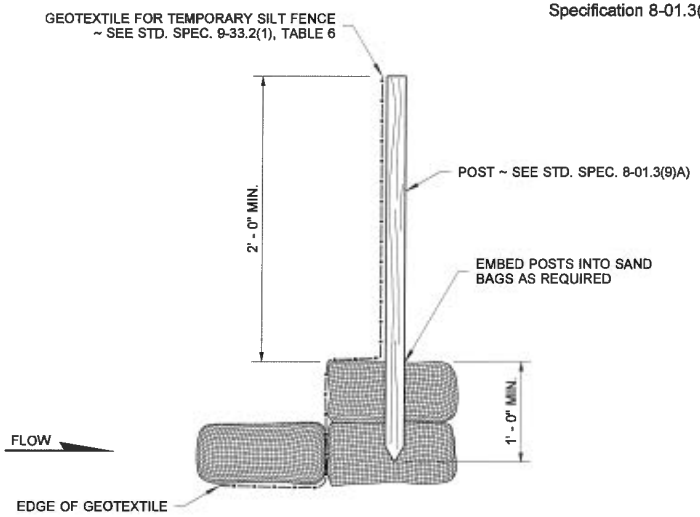

SECTION (A)

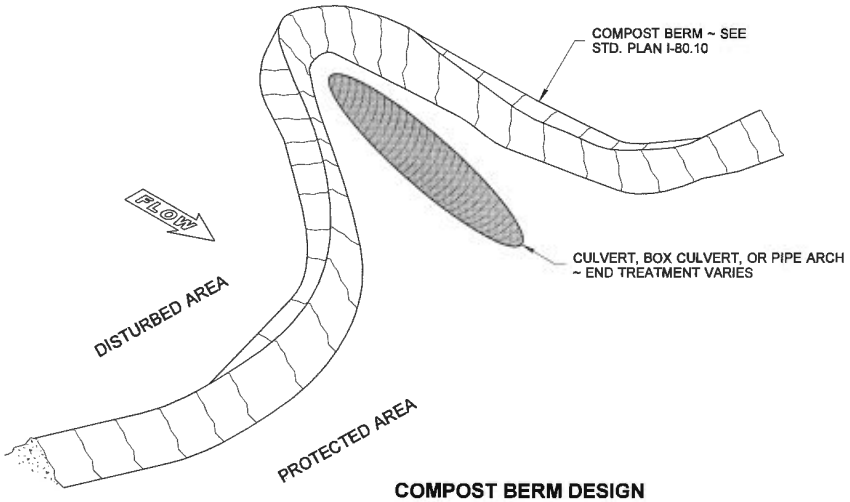

COMPOST BERM DESIGN

STATE OF WASHINGTON REGISTERED LANDSCAPE ARCHITECT
MARK W. MAURER
CERTIFICATE NO. 000598
9/20/07

EROSION CONTROL AT CULVERT ENDS

STANDARD PLAN I-30.20-00

SHEET 1 OF 1 SHEET

APPROVED FOR PUBLICATION

STATE DESIGN ENGINEER — DATE 9/20/07

Washington State Department of Transportation

DRAWN BY: LISA CYFORD

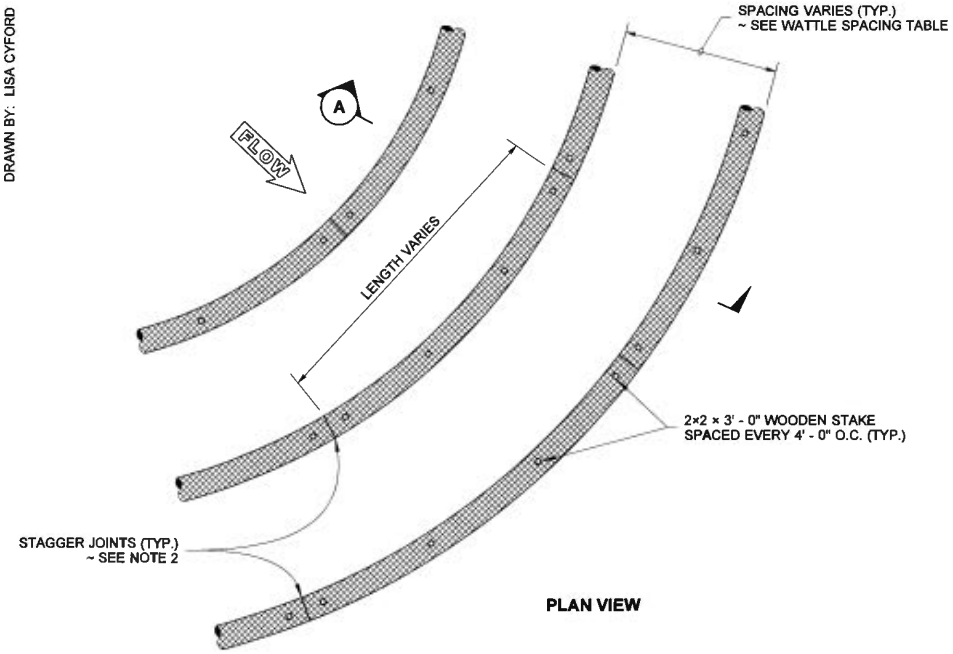

PLAN VIEW

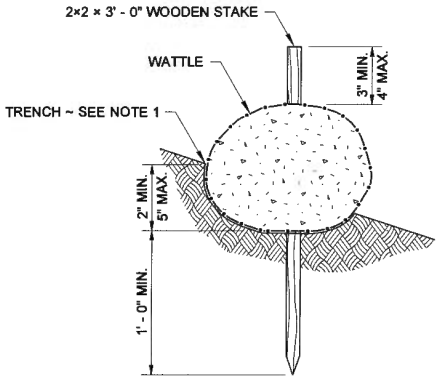

TYPICAL SECTION

WATTLE DETAIL

NOTES

1. Wattles shall be in accordance with Standard Specification 9-14.5(5). Install Wattles along contours. Installation shall be in accordance with Standard Specification 8-01.3(10).
2. Securely knot each end of Wattle. Abut adjacent Wattles tightly, end to end, without overlapping the ends.
3. Pilot holes may be driven through the Wattles and into the soil when soil conditions require.
4. Live stakes may be used for permanent installation and shall be in accordance with Standard Specification 9-14.5(6).
5. Wattles shall be inspected regularly, and immediately after a rainfall produces runoff, to ensure they remain thoroughly entrenched and in contact with the soil.
6. Perform maintenance in accordance with Standard Specification 8-01.3(15).

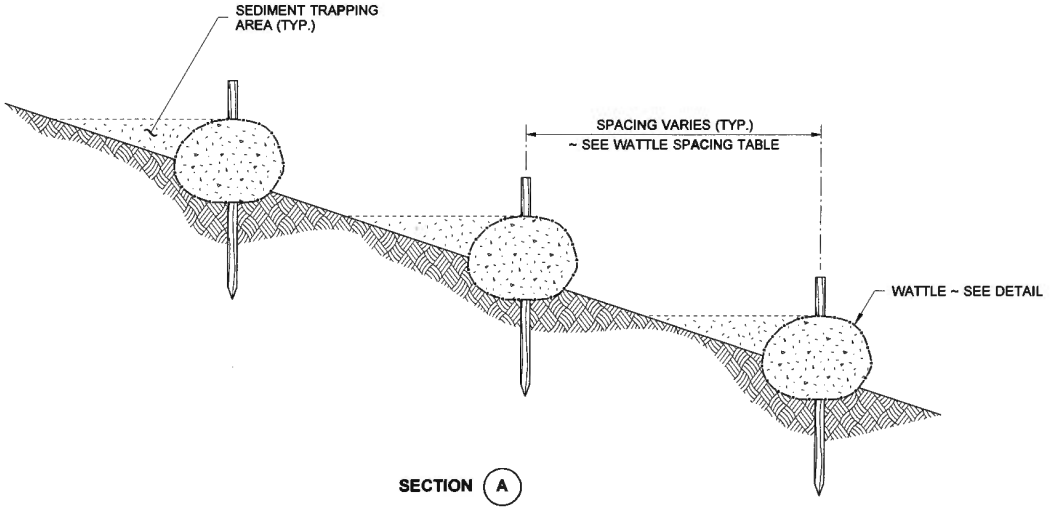

SECTION A

WATTLE SPACING TABLE	
SLOPE	MAXIMUM SPACING
1:1	10' - 0"
2:1	20' - 0"
3:1	30' - 0"
4:1	40' - 0"

STATE OF WASHINGTON REGISTERED LANDSCAPE ARCHITECT

MARK W. MAURER

CERTIFICATE NO. 000598

9/20/07

WATTLE INSTALLATION ON SLOPE

STANDARD PLAN I-30.30-00

SHEET 1 OF 1 SHEET

APPROVED FOR PUBLICATION

STATE DESIGN ENGINEER — DATE 9/20/07

Washington State Department of Transportation

DRAWN BY: LISA CYFORD

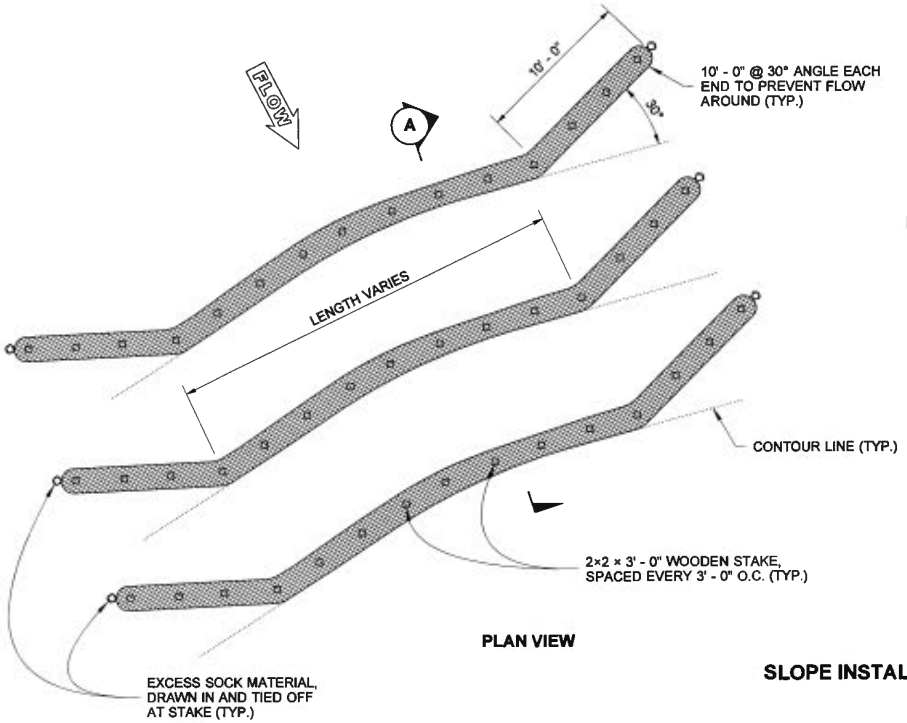

PLAN VIEW

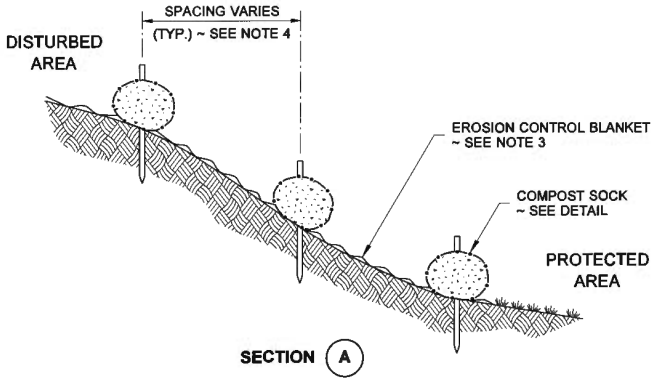

SECTION A

SLOPE INSTALLATION

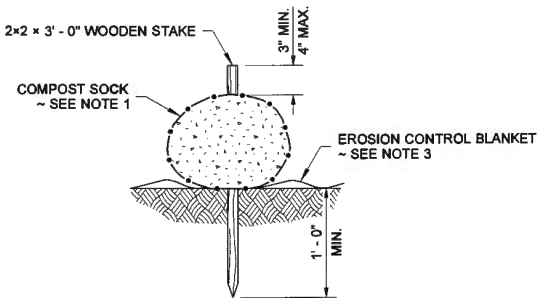

TYPICAL SECTION

COMPOST SOCK DETAIL

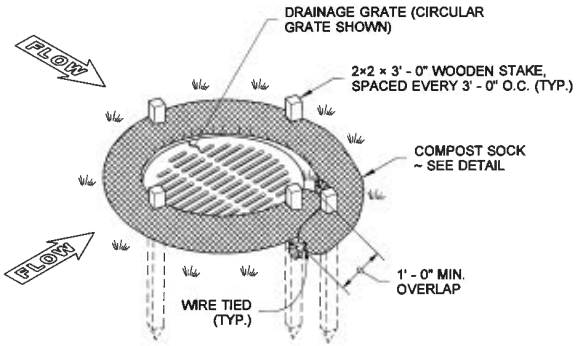

ISOMETRIC VIEW

CATCH BASIN INSTALLATION

NOTES

1. Compost Sock shall be in accordance with Standard Specification 9-14.5(6). Compost Sock shall be a minimum of 8" in diameter or sized to suit conditions as specified by the Engineer or Contract.
2. Compost material to be dispersed on site, as determined by the Engineer.
3. When placing Compost Sock on slopes, use Erosion Control Blanket if specified by the Engineer and in accordance with Standard Specification 9-14.5(2). See Standard Plan I-60.10.
4. Always install Compost Sock perpendicular to slope and along contour lines.
5. Remove sediment from the up slope side of the Compost Sock when accumulation has reached 1/2 of the effective height of the Compost Sock.
6. Live stakes can be used in addition to wooden stakes and shall be in accordance with Standard Specification 9-14.6(1). See plans for species selection and spacing.

STATE OF WASHINGTON REGISTERED LANDSCAPE ARCHITECT
SANDRA L. SALISBURY
CERTIFICATE NO. 000860
10/11/2007

COMPOST SOCK

STANDARD PLAN I-30.40-00

SHEET 1 OF 1 SHEET

APPROVED FOR PUBLICATION
STATE DESIGN ENGINEER — DATE 10/12/07
Washington State Department of Transportation

This page left blank intentionally.

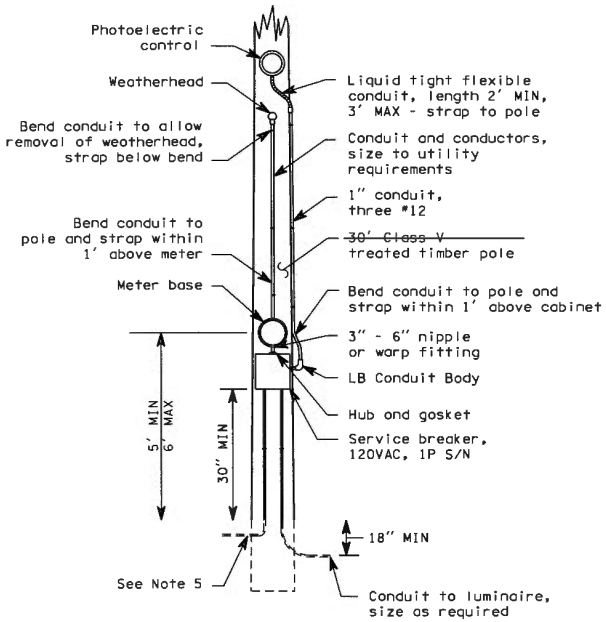

TYPE A SERVICE, 120 VOLT

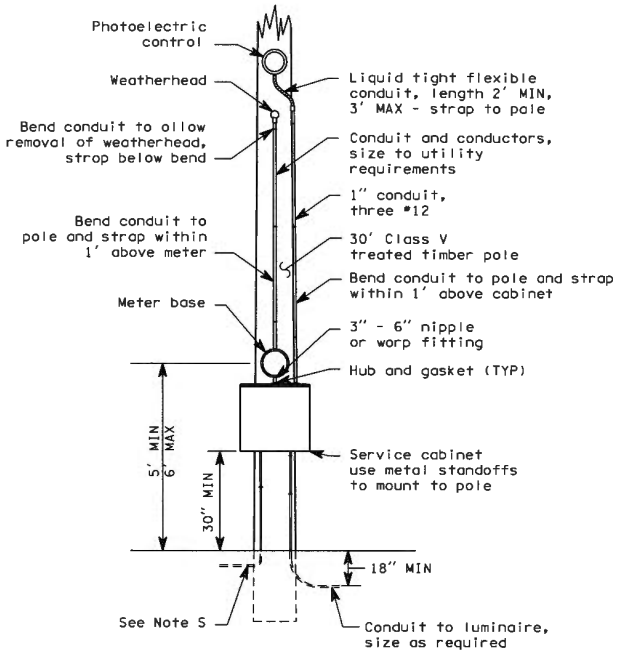

TYPE B SERVICE, 120/240 VOLT

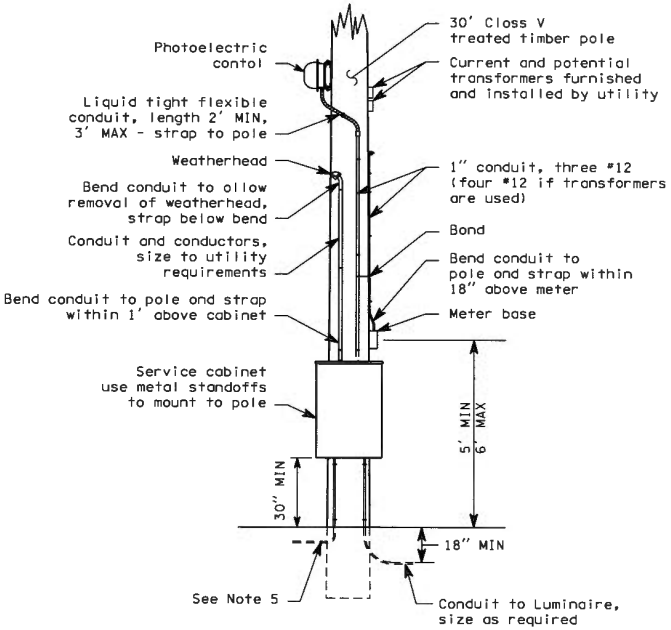

TYPE C SERVICE, 480 VOLT

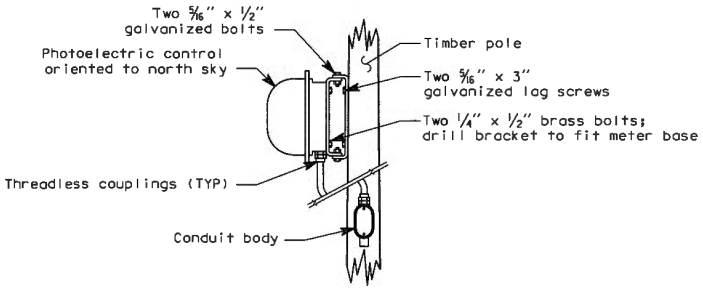

PHOTOELECTRIC CONTROL DETAILS

TYPE A, B AND C SERVICE LIGHTING DETAILS

DAVID K. PEACH
STATE OF WASHINGTON
20011089
REGISTERED
PROFESSIONAL ENGINEER
EXPIRES JUNE 4, 1999

STANDARD PLAN J-3

APPROVED FOR PUBLICATION.

Clifford E Mansfield 8/11/97

STATE DESIGN ENGINEER — DATE

WASHINGTON STATE DEPARTMENT OF TRANSPORTATION
OLYMPIA, WASHINGTON

Sheet 1 of 2 Sheets

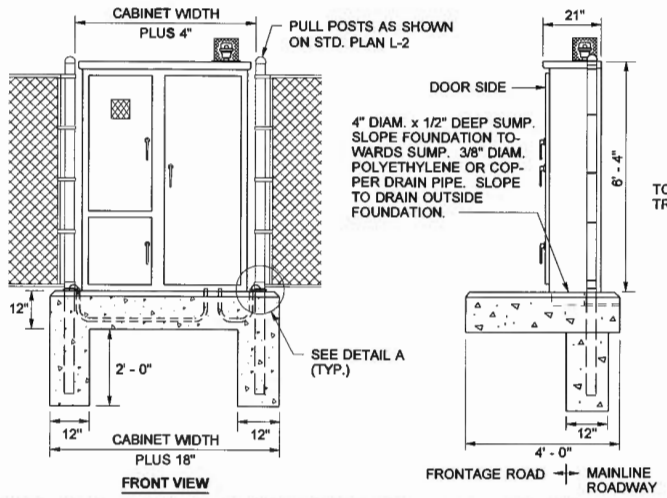

NOTE: INSTALL FOUNDATION AS SLAB SECTION UNLESS IDENTIFIED FOR CONSTRUCTION IN FENCE LINE IN CONTRACT PLANS.

INSTALLATION DETAIL

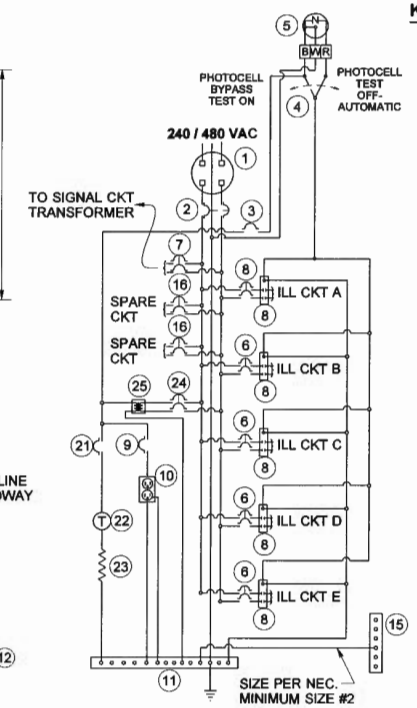

WIRING SCHEMATIC

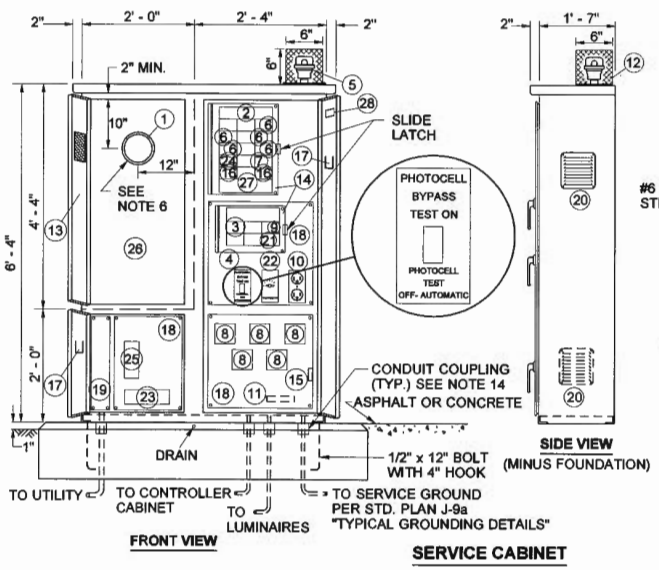

SERVICE CABINET

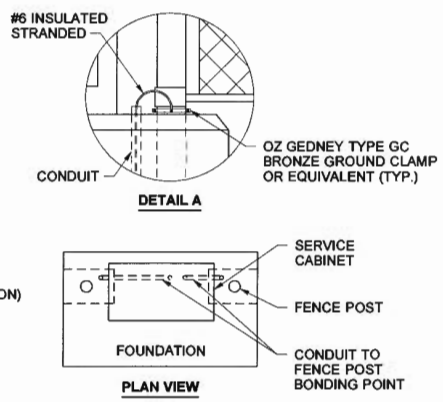

KEY

1. METER BASE PER SERVING UTILITY REQUIREMENTS. AS A MINIMUM, THE METER BASE SHALL BE SAFETY SOCKET BOX WITH FACTORY INSTALLED TEST BYPASS FACILITY THAT MEETS THE REQUIREMENTS OF EUSERC DRAWING 305.
2. MAIN BREAKER (SEE BREAKER SCHEDULE)
3. PHOTOCELL BREAKER (SPST 15 AMP - 120/240 VOLT)
4. TEST SWITCH (SPDT SNAP ACTION, POSITIVE CLOSE 15 AMP - 120/277 VOLT "T" RATED)
5. PHOTOELECTRIC CONTROL, STD. SPEC. 9 - 29.11(2)
6. BRANCH BREAKER (SEE BREAKER SCHEDULE)
7. SIGNAL TRANSFORMER BREAKER (SEE BREAKER SCHEDULE)
8. CONTACTOR (SEE BREAKER SCHEDULE)
9. RECEPTACLE BREAKER (SPST 20 AMP - 120/240 VOLT)
10. RECEPTACLE, GROUNDED (GFCI 20 AMP - 125 VOLT)
11. NEUTRAL BUSS, 14 LUG COPPER
12. PHOTOCELL ENCLOSURE - ENCLOSURE TO BE FABRICATED FROM 5/8" EXPANDED STEEL MESH WITH WELDED SEAMS AND MOUNTING FLANGES. HOT DIP GALVANIZED AFTER FABRICATION. TYPE 5052 - H32 ALUMINUM WITH 5/8" x 5/8" OPENINGS EQUIVALENT TO 5/8" EXPANDED STEEL MESH MAY BE USED AS ALTERNATIVE MATERIAL. SEE PHOTOCELL ENCLOSURE MOUNTING DETAILS, STANDARD PLAN J-3b.
13. HINGED FRONT FACING DOOR WITH 4" x 4" MIN. POLISHED WIRE GLASS WINDOW.
14. HINGED DEAD FRONT WITH 1/4 TURN FASTENERS OR SLIDE LATCH
15. CABINET MAIN BONDING JUMPER. BUSS SHALL BE 4 LUG TINNED COPPER. SEE CABINET MAIN BONDING JUMPER DETAIL, STANDARD PLAN J-3b.
16. SPARE BRANCH BREAKER (DPST 20AMP- 240/480 VOLT)
17. METAL WIRING DIAGRAM HOLDER
18. REMOVABLE EQUIPMENT MOUNTING PAN
19. 6" x 6" MIN. UNDERGROUND FEED - SERVICE WIREWAY (LEFT REAR CORNER)
20. SCREENED VENTS, 2 REQUIRED, 1 EACH SIDE, LOUVERED PLATES
21. HEATER BREAKER (SPST 15 AMP - 120/240 VOLT)
22. THERMOSTAT, 40°F CLOSURE - 3 DIFFERENTIAL
23. STRIP HEATER (100 WATT NOMINAL), WITH TERMINAL STRIP COVER
24. TRANSFORMER BREAKER (DPST 15 AMP - 480 VOLT)
25. DRY TRANSFORMER (480/120 VOLT) 3 KVA COPPER BUSSED AND COPPER WOUND
26. RESERVED FOR METER, CURRENT TRANSFORMER AND/OR DISCONNECT SWITCH AS REQUIRED BY THE UTILITY
27. 24 CIRCUIT PANEL BOARD - MINIMUM SIZE WITH SEPARATE MAIN BREAKER.
28. LABEL CABINET WITH BUSSWORK RATING

GENERAL NOTES

200 AMP TYPE 240/480 1ø SERVICE CABINET

1. SEE STD. SPECIFICATION 9-29.24, SERVICE CABINETS.
2. HINGES SHALL HAVE STAINLESS STEEL OR BRASS PINS.
3. CABINETS SHALL BE RATED NEMA 3R AND SHALL INCLUDE TWO RAIN TIGHT VENTS.
4. METERING EQUIPMENT DOORS SHALL BE PAD LOCKABLE. EACH DOOR SHALL BE GASKETED. INSTALL BEST CX CONSTRUCTION CORE ON BOTTOM LEFT AND RIGHT DOORS. SEE DOOR HINGE DETAIL, STD. PLAN J-3b; CONCEALED HEAVY DUTY STAINLESS STEEL LIFT OFF HINGES ARE ALLOWED AS AN ALTERNATIVE. UPPER LEFT DOOR SHALL HAVE 3 HINGES, LOWER LEFT DOOR SHALL HAVE 2 HINGES, AND RIGHT DOOR SHALL HAVE 3 HINGES. LOWER DOOR SHALL HAVE A TWO POSITION DOOR STOP ASSEMBLY.
5. THE FOLLOWING EQUIPMENT WITHIN THE SERVICE ENCLOSURE SHALL HAVE AN APPROPRIATELY ENGRAVED PHENOLIC NAME PLATE ATTACHED WITH SCREWS OR RIVETS: KEY NUMBERS 2, 3, 4, 6, 7, 8, 9, 16, 21 AND 25. KEY NUMBER 4 NAME PLATE SHALL READ: "PHOTOCELL BYPASS TEST ON" AND "PHOTOCELL TEST OFF- AUTOMATIC". SEE SERVICE CABINET DETAIL.
6. METERING ARRANGEMENTS VARY WITH DIFFERENT SERVING UTILITIES. THE UTILITY MAY REQUIRE METER BASE MOUNTING IN THE ENCLOSURE, ON THE SIDE, OR ON THE BACK OF THE ENCLOSURE. THE UTILITY MAY REQUIRE THE DIMENSION BETWEEN THE DOOR AND THE FRONT OF THE SAFETY SOCKET BOX TO BE LESS THAN THE 11 INCHES SHOWN IN THE LEFT SIDE- SAFETY SOCKET BOX MOUNTING DETAIL, SEE STD. PLAN J-3b. THE CONTRACTOR SHALL VERIFY THE SERVING UTILITY'S REQUIREMENTS PRIOR TO FABRICATION OF AND INSTALLING THE SERVICE EQUIPMENT.
7. THE DIMENSIONS SHOWN ARE MINIMUM AND SHALL BE ADJUSTED TO ACCOMMODATE THE VARIOUS SIZES OF EQUIPMENT INSTALLED.
8. ALL BUSSWORK SHALL BE HIGH GRADE COPPER AND SHALL EQUAL OR EXCEED THE MAIN BREAKER RATING. ALL BREAKERS SHALL BOLT ONTO THE BUSSWORK. JUMPERING OF BREAKERS SHALL NOT BE ALLOWED. BUSSWORK SHALL ACCOMMODATE ALL FUTURE EQUIPMENT AS SHOWN IN THE BREAKER SCHEDULE.
9. THE PHOTOCELL UNIT SHALL BE CENTERED IN THE PHOTOCELL ENCLOSURE TO PERMIT 360 DEGREE ROTATION OF THE PHOTOCELL WITHOUT REMOVAL OF THE PHOTOCELL UNIT OR THE PHOTOCELL ENCLOSURE.
10. ALL INTERNAL WIRE RUNS SHALL BE IDENTIFIED WITH "TO - FROM" CODED TAGS LABELED WITH THE CODE LETTERS AND/OR NUMBERS SHOWN ON THE SCHEDULES. APPROVED PVC OR POLYOLEFIN WIRE MARKING SLEEVES SHALL BE USED.
11. ALL NUTS, BOLTS, AND WASHERS USED FOR MOUNTING PHOTOCELL ENCLOSURE SHALL BE STAINLESS STEEL.
12. A 1% TOLERANCE IS ALLOWED FOR ALL DIMENSIONS.
13. SEE PLANS FOR BREAKER SCHEDULE.
14. INSTALL CONDUIT COUPLINGS ON ALL CONDUITS. PLACE COUPLINGS FLUSH WITH TOP OF CONCRETE FOUNDATION.
15. SEAL CABINET TO FOUNDATION WITH A 1/2" BEAD OF SILICONE. APPLY SILICONE TO DRY SURFACE ONLY.
16. THE METER BASE PORTION OF THIS SERVICE WAS DESIGNED TO MEET METERING PORTION OF EUSERC DRAWING 309 REQUIREMENTS.

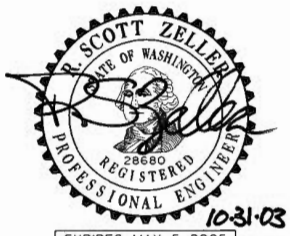

10-31-03

EXPIRES MAY 5, 2005

SERVICE CABINET TYPE E (0 - 200 AMP TYPE 240/480 SINGLE PHASE)

STANDARD PLAN J-3d

SHEET 1 OF 1 SHEET

APPROVED FOR PUBLICATION

Harold Petersen 11.5.03

STATE DESIGN ENGINEER — DATE

Washington State Department of Transportation

DATE	REVISION	BY
09/2003	REVISED KEY NOTE 16	MHG

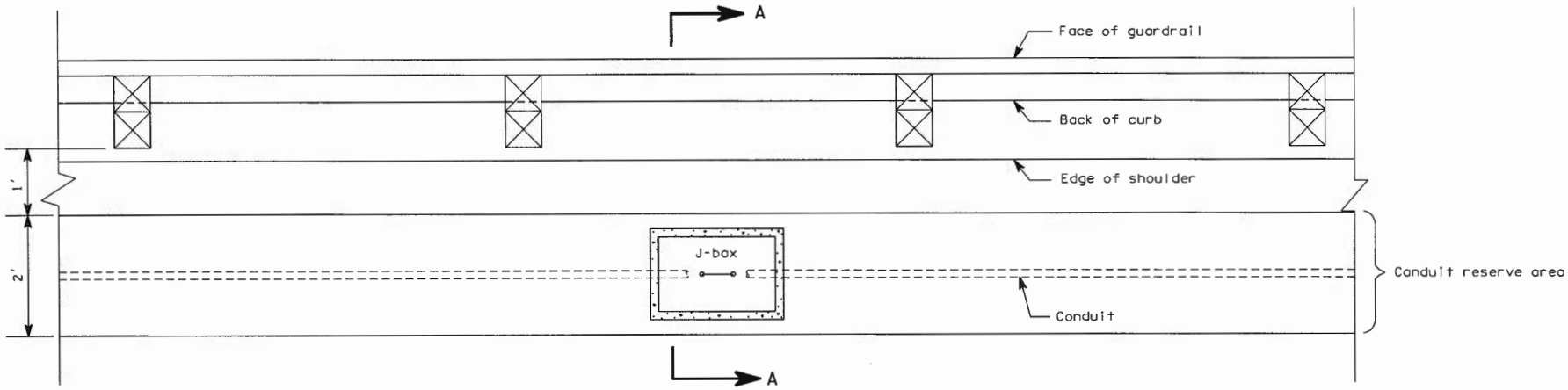

PLAN

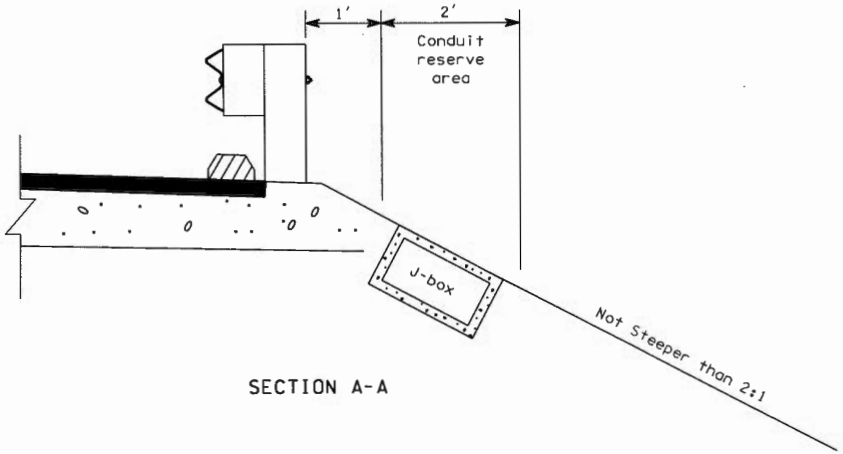

SECTION A-A

ELECTRICAL CONDUIT PLACEMENT

WILLIAM D. BROWN
STATE OF WASHINGTON
00148 12
REGISTERED
PROFESSIONAL ENGINEER
EXPIRES SEPT 10, 1998

STANDARD PLAN J-10

APPROVED FOR PUBLICATION

STATE DESIGN ENGINEER — DATE

WASHINGTON STATE DEPARTMENT OF TRANSPORTATION
OLYMPIA, WASHINGTON

DRAWN BY: LISA CYFORD

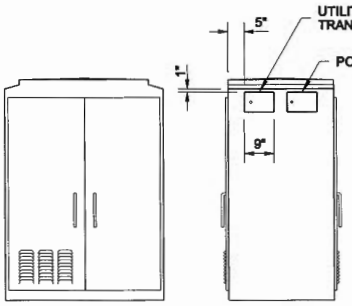

TYPE 332D CONTROLLER CABINET

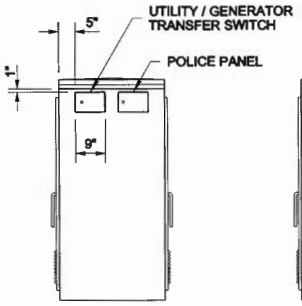

TYPE 332 CONTROLLER CABINET

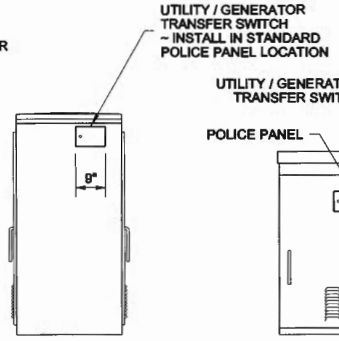

TYPE 332 UNINTERRUPTABLE POWER SUPPLY (UPS) CABINET

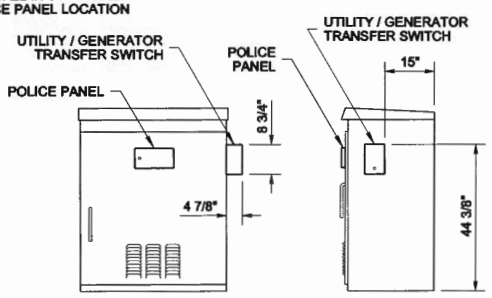

NEMA P44 CONTROLLER CABINET

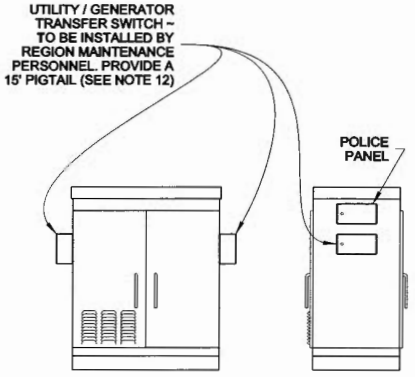

TYPE 333SD CONTROLLER CABINET

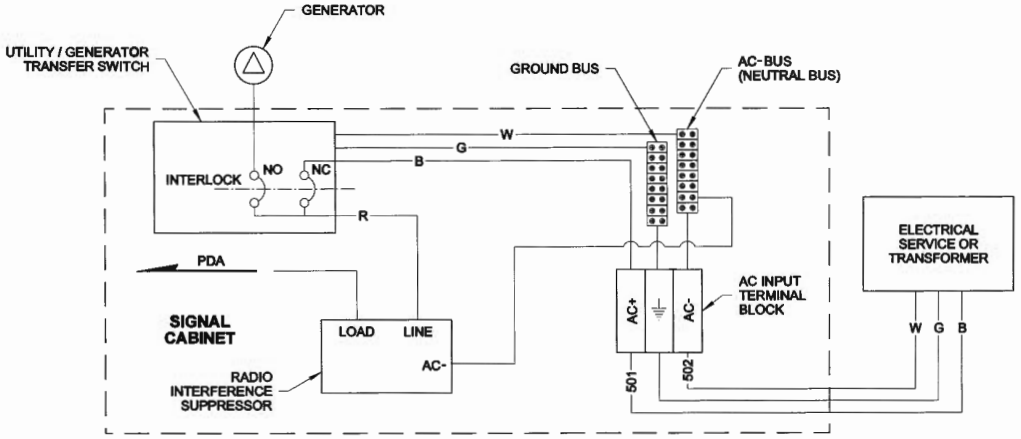

TRANSFER SWITCH CONNECTION
TYPICAL WIRING DIAGRAM

CABINET ORIENTATION CONDUIT LAYOUT AND FOUNDATION DETAIL

STANDARD PLAN J-10.10-01

SHEET 5 OF 5 SHEETS

APPROVED FOR PUBLICATION

STATE DESIGN ENGINEER — DATE

Washington State Department of Transportation

DRAWN BY: LISA CYFORD

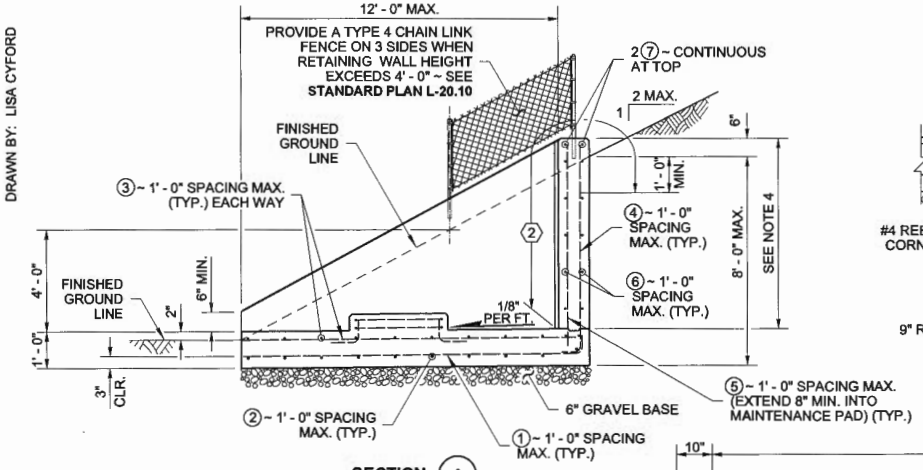

SECTION (A)

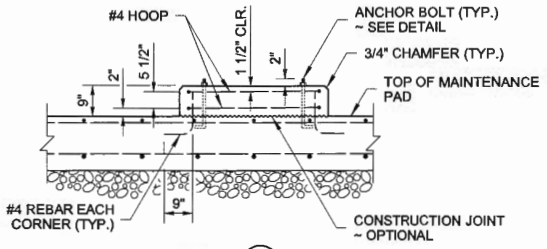

SECTION (B)

9" RAISED CABINET PAD SHOWN, 3 1/2" RAISED CABINET PAD SIMILAR WITH ONE #4 TOP HOOP

NOTES

1. Contractor shall orient the maintenance pad to align with the direction of natural grade as shown. Obtain Engineer's approval of maintenance pad orientation prior to proceeding with construction.
2. The maintenance pad and retaining walls have been designed to meet the requirements of the AASHTO LRFD Bridge Design Specifications 6th Edition, 2012.
3. Concrete for walls and bases shall be class 4000.
4. Height of wall varies to match slope of existing grade. Contractor shall field determine wall height and each maintenance pad location and obtain approval from the Engineer prior to proceeding with construction.
5. 3/4" chamfer for all exposed corners.
6. For grounding details, see **Standard Plan J-60.05.**
7. For cabinet and conduit details not shown, see **Standard Plan J-10.10.**
8. The Cabinets shall be attached to the foundation with 4 anchor bolts and located per the Cabinet supplier. Stainless steel epoxy anchor bolt may be used as an alternative and shall be 1/2" diameter by 9" long.

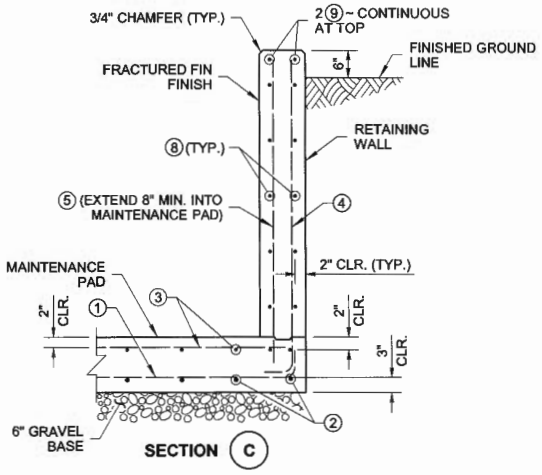

SECTION (C)

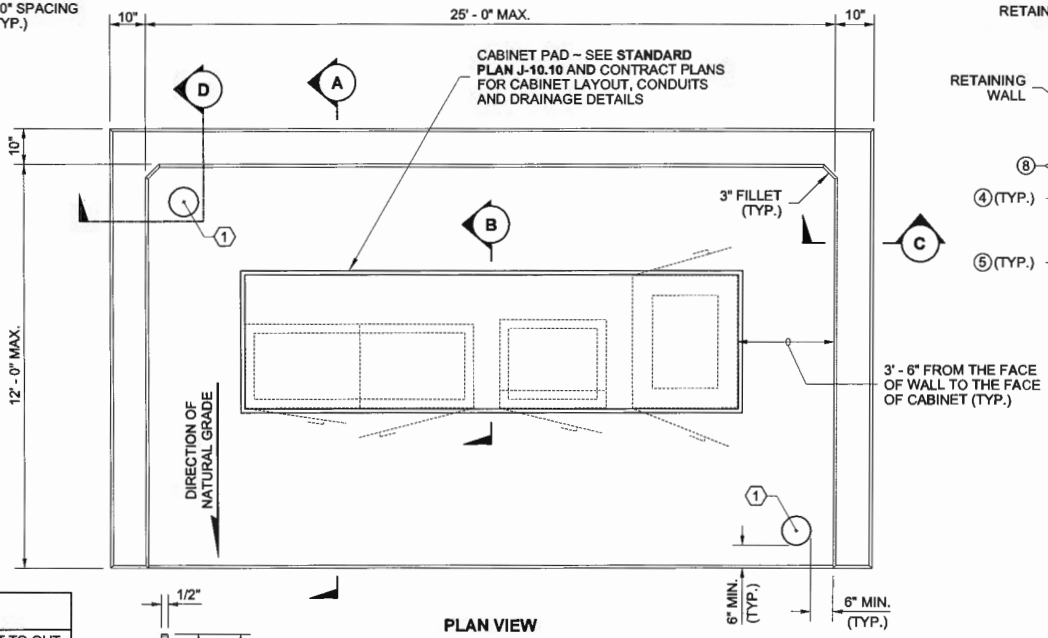

PLAN VIEW

CABINETS SHOWN FOR DISPLAY PURPOSES ONLY
SEE CONTRACT PLANS FOR CABINET LAYOUT

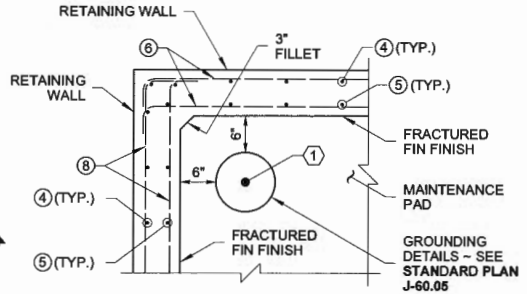

SECTION (D)

REINFORCING STEEL BENDING DIAGRAM

SEE **STD. SPEC. 9-07.1(2)** FOR BENDING DIAM. ALL DIMENSIONS ARE OUT TO OUT

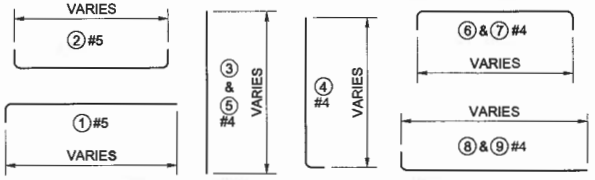

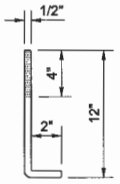

ANCHOR BOLT

ASTM A307 WITH WASHER AND NUT ~ GALVANIZED PER AASHTO M 232

① Drive ground rods before placing concrete. Move rod(s) and drain tile(s) with cover(s) as required to achieve full ground penetration. Maintain a 6' - 0" minimum clearance between ground rods as detailed on **Standard Plan J-60.05.**

② Limits of pigmented sealer. Typical for all retaining walls.

RICHARD P. ZELDENRUST
STATE OF WASHINGTON
25470
REGISTERED
PROFESSIONAL ENGINEER
6/21/12

CABINET ENCLOSURE ON SLOPE

STANDARD PLAN J-10.15-00

SHEET 1 OF 1 SHEET

APPROVED FOR PUBLICATION

STATE DESIGN ENGINEER — DATE 7/2/12

Washington State Department of Transportation

DRAWN BY: LISA CYFORD

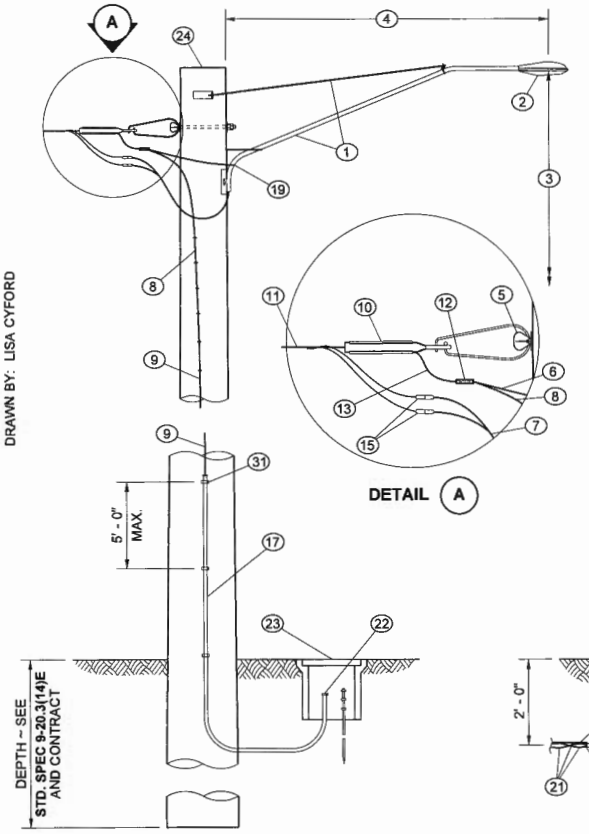

DETAIL A

TIMBER LUMINAIRE SUPPORT

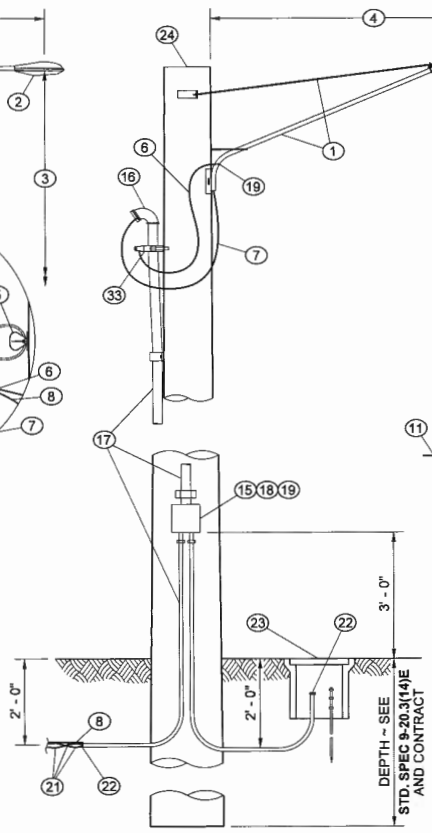

TIMBER LUMINAIRE SUPPORT

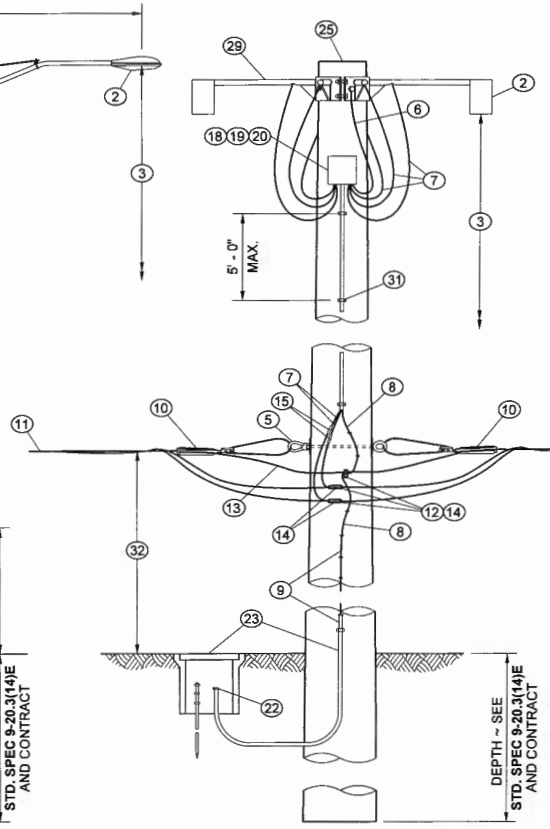

HIGH MAST TIMBER LUMINAIRE SUPPORT

SHOWN FOR 480 VAC POWER FEED.
INCREASE CONDUCTOR AND FUSE SIZE
AS REQUIRED FOR 240 VAC POWER FEED.

NOTES

1. Timber luminaire supports are allowed only for temporary installations where breakaway or slip bases are not required.
2. When down guys are required, See **Standard Plan J-15.15.**

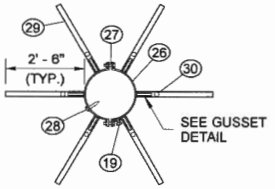

PLAN VIEW
LUMINAIRE SUPPORT BRACKET

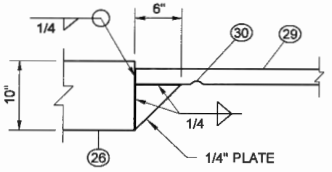

GUSSET DETAIL

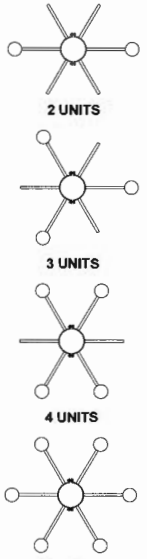

PLAN VIEW
TYPICAL LUMINAIRE MOUNTING CONFIGURATIONS

KEY

1. GALVANIZED STEEL OR ALUMINUM MAST ARM - CONFIGURATIONS VARIES WITH MANUFACTURER
2. LUMINAIRE - SEE CONTRACT FOR TYPE AND NUMBER
3. MOUNTING HEIGHT - ROADWAY TO LUMINAIRE ELEVATION DIFFERENCE ± 2% - SEE CONTRACT
4. MAST ARM LENGTH - SEE CONTRACT
5. 5/8" GALVANIZED THIMBLE EYE BOLT (SINGLE OR DOUBLE) WITH WASHERS AND NUTS OR EYENUT
6. BONDING JUMPER
7. POLE AND BRACKET CABLE
8. EQUIPMENT GROUNDING CONDUCTOR - SEE **STANDARD PLAN J-60.05**
9. FROM GROUND LINE TO 10' ABOVE GROUND, ENCLOSE EQUIPMENT GROUNDING CONDUCTOR IN GALVANIZED STEEL CONDUIT, CODE SIZED. ABOVE 10' FROM GROUND, STAPLE EQUIPMENT GROUNDING CONDUCTOR TO POLE. CONNNECT TO SUPPLEMENTAL GROUND, PER **STANDARD PLAN J-60.05**
10. SERVICE WEDGE CLAMP
11. ACSR TRIPLEX OR FOURPLEX CONDUCTORS - SEE CONTRACT
12. CU \ AL SPLIT BOLT CONNECTOR
13. MESSENGER CABLE
14. INSULATING TAPE FOR WATERPROOF CONNECTION
15. FUSED QUICK DISCONNECT, PER **STANDARD SPECIFICATION 9-29.7** - USE 30 AMP FUSES FOR HIGH MAST SUPPORTS
16. WEATHERHEAD - SIZE AS REQUIRED
17. STEEL CONDUIT
18. 8" × 8" × 4" NEMA 3R JUNCTION BOX WITH RAIN-TIGHT HUBS AND REMOVABLE COVER
19. GROUNDING LUG
20. 12 POLE TERMINAL BLOCK
21. DIRECT BURIAL CONDUCTORS OR GALVANIZED STEEL CONDUITS WITH CONDUCTORS - SEE CONTRACT
22. GROUNDING BUSHING
23. SUPPLEMENTAL GROUND - SEE **STANDARD PLAN J-60.05**
24. CLASS 5 TIMBER POLE - LENGTH SUFFICIENT FOR MOUNTING HEIGHT AND BURIAL DEPTH
25. CLASS 2 TIMBER POLE - LENGTH SUFFICIENT FOR MOUNTING HEIGHT AND BURIAL DEPTH
26. 1/4" × 10" PLATE COLLAR BENT TO FIT POLE DIAMETER (8" - 10")
27. 3/8" × 4" MACHINE BOLTS (FOUR REQUIRED) WITH WASHERS AND NUTS
28. 1/2" LAG BOLTS (SIX REQUIRED) - DRILL 9/16" HOLE IN PLATE
29. 2" PIPE
30. 3/4" WIRE HOLE 2" FROM GUSSET PLATE, SMOOTH HOLE EDGES
31. 1" NON-METALLIC CONDUIT WITH 1" STRAPS SPACED MAXIMUM 5' APART AND NEAR ALL CONDUIT ENDS
32. DISTANCE VARIES, 35' MIN. TO 50' MAX. DEPENDING ON LINE CLEARANCE REQUIREMENTS
33. CONDUIT GROUND CLAMP

TIMBER LIGHT STANDARD

STANDARD PLAN J-15.10-00

SHEET 1 OF 1 SHEET

APPROVED FOR PUBLICATION

STATE DESIGN ENGINEER — DATE 6/18/12

Washington State Department of Transportation

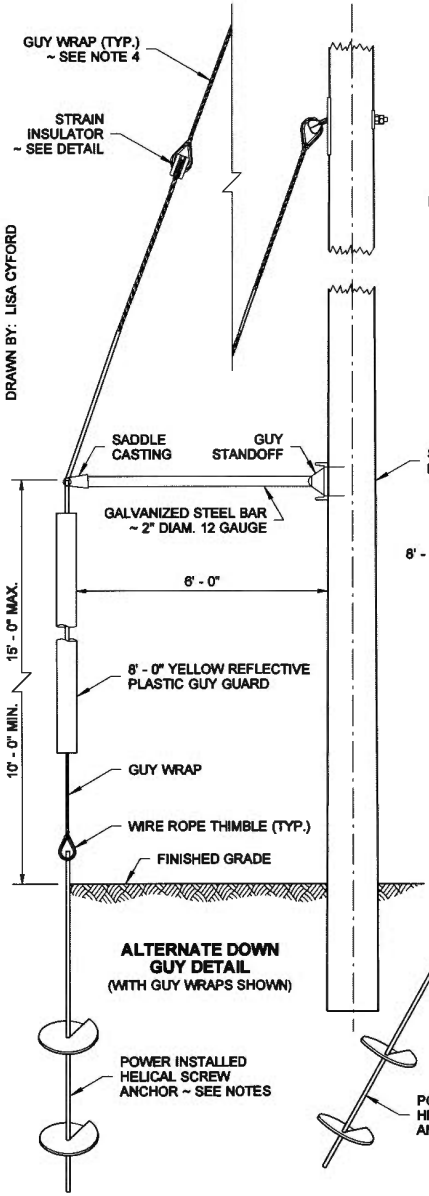

ALTERNATE DOWN GUY DETAIL
(WITH GUY WRAPS SHOWN)

ANCHOR ASSEMBLIES
(SEE STANDARD SPECIFICATION 9-29.4)

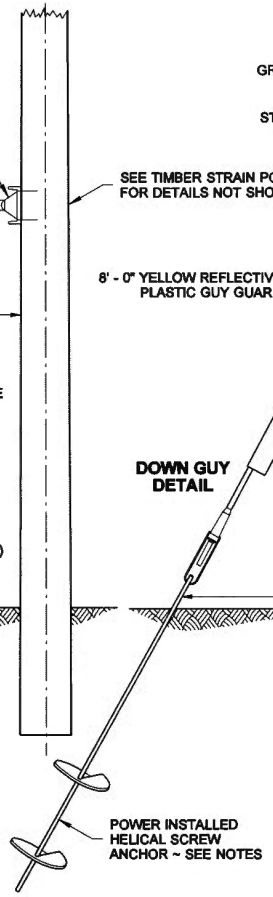

DOWN GUY DETAIL

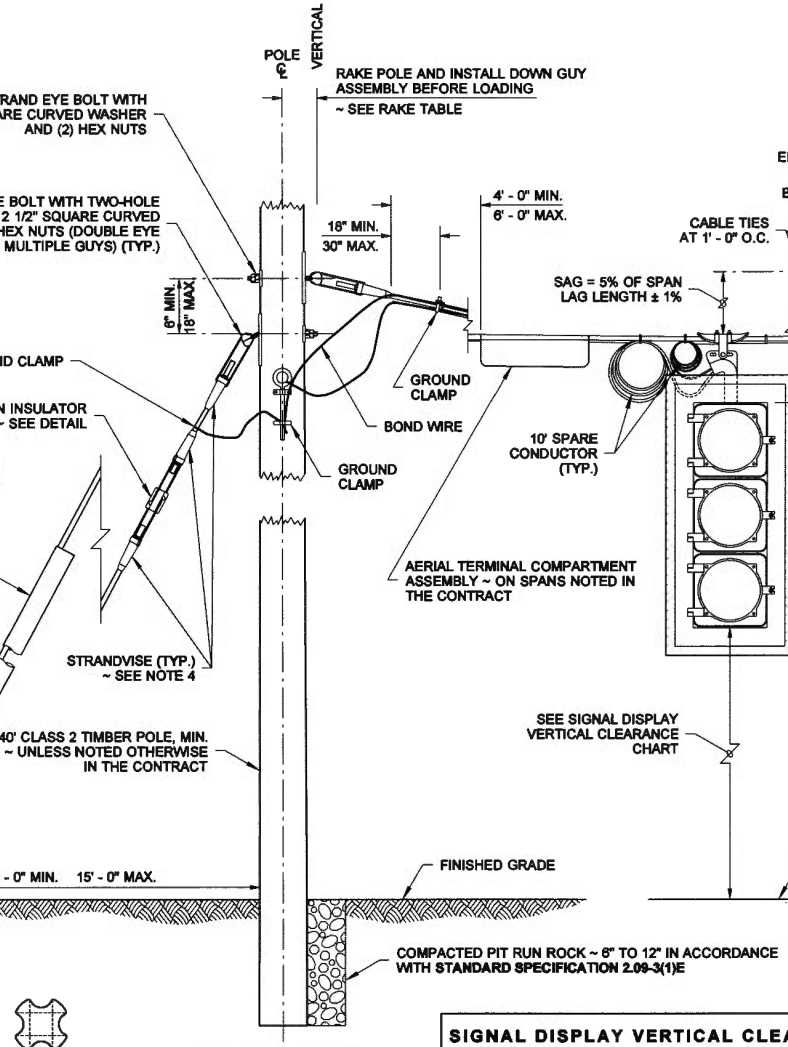

TIMBER STRAIN POLE
(WITH STRANDVISE SHOWN)

TYPE IV OR TYPE V STRAIN POLE STANDARD
(SEE NOTE 3)

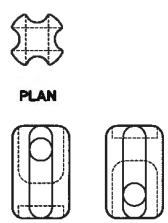

STRAIN INSULATOR DETAIL

NOTES

1. An eight-way expanding anchor may be used as an acceptable alternate to power installed helical screw anchor.
2. If anchor hole diameter is greater than nominal diameter of folded anchors, a 5' cover of 6" to 12" size rock shall be tamped in to replace the disturbed soil immediately above the anchor.
3. See **Standard Plan J-7c** for Type IV or Type V Strain Pole details not shown.
4. Strandvise or Guy Wrap may be used.

RAKE TABLE	
POLE CLASS	RAKE
1900#	7"
2700#	6"
3700#	5"
4800#	5"
5400#	4"
4300#	4"
7200#	4"
ALL TIMBER	6"

SIGNAL DISPLAY VERTICAL CLEARANCE TO ROADWAY

HORIZONTAL DISTANCE FROM STOP LINE	40'		45'		50'		53' - 180'	
	MIN.	MAX.	MIN.	MAX.	MIN.	MAX.	MIN.	MAX.
3 SECTION 12" 5 SECTION DOGHOUSE 12"	16.5'	17.5"	16.5'	19.2'	16.5'	20.9'	16.5'	22.0'
4 SECTION 12"	16.5'	17.0'	16.5'	18.0'	16.5'	19.7'	16.5'	20.8'
5 SECTION 12"	16.5'	17.0'	16.5'	17.5"	16.5'	18.5'	16.5'	19.6'

MEASURED FROM BOTTOM OF SIGNAL HEAD HOUSING TO ROADWAY

BRIAN J. WALSH
STATE OF WASHINGTON
36103
REGISTERED PROFESSIONAL ENGINEER
06-11-10

SPAN WIRE INSTALLATION

STANDARD PLAN J-15.15-00

SHEET 1 OF 1 SHEET

APPROVED FOR PUBLICATION

STATE DESIGN ENGINEER — DATE

Washington State Department of Transportation

DRAWN BY: LISA CYFORD

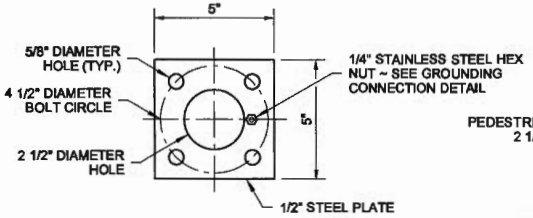

BASE PLATE DETAIL

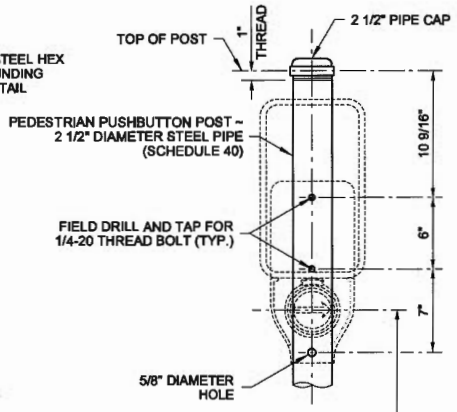

POST DETAIL

NOTES

1. See **Standard Plan J-20.26** for Accessible Pedestrian Pushbutton details.
2. Pole shall be galvanized per AASHTO M111.
3. When additional crossing time is provided by an extended pushbutton press, a "PUSH BUTTON FOR 2 SECONDS FOR EXTRA CROSSING TIME" sign (R10.32P) shall be installed above the APS assembly. Leave a 2" space between signs.

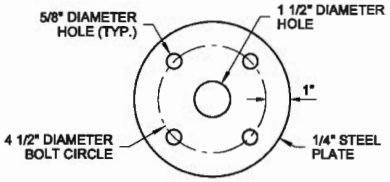

ANCHOR BOLT TEMPLATE

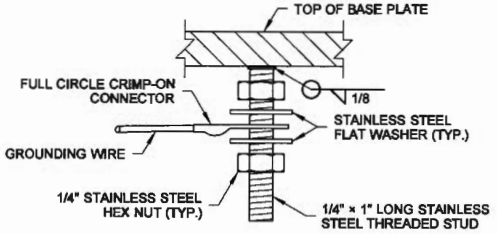

GROUNDING CONNECTION DETAIL

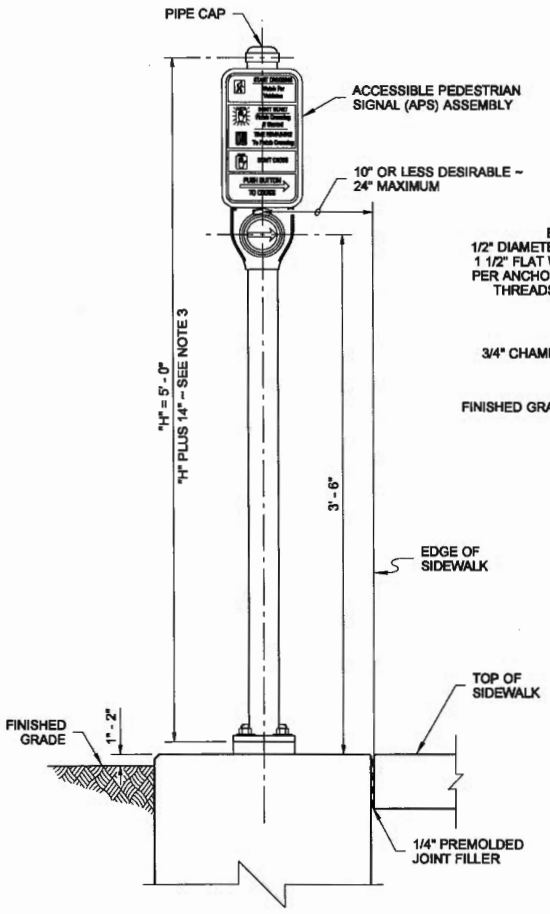

ELEVATION

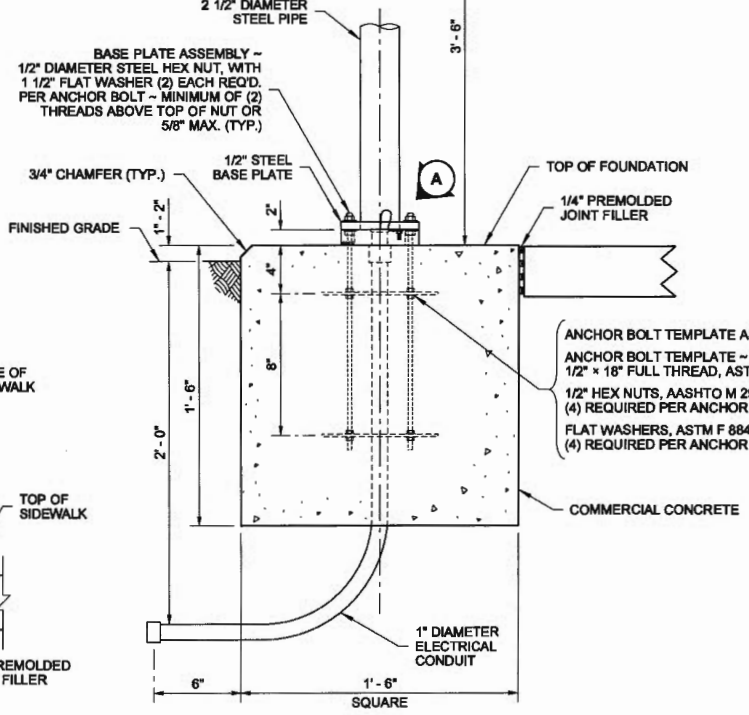

FOUNDATION DETAIL

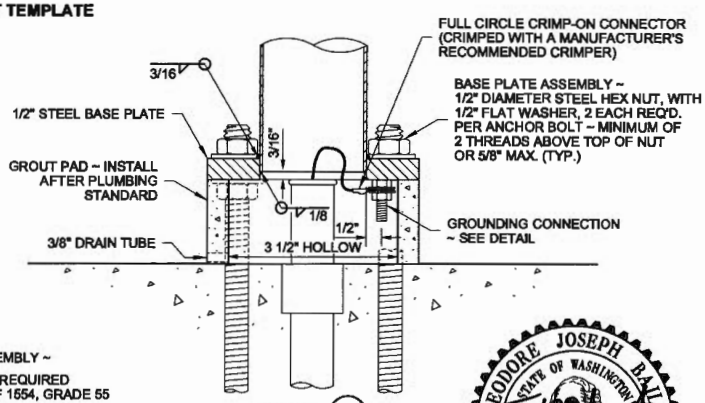

DETAIL A

(LEVELING NUT NOT SHOWN FOR CLARITY)

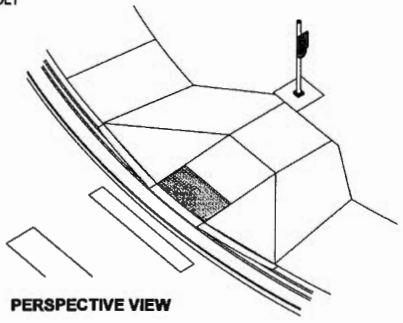

PERSPECTIVE VIEW

7/10/2012

ACCESSIBLE PEDESTRIAN PUSHBUTTON POST (PPB) AND FOUNDATION

STANDARD PLAN J-20.10-01

SHEET 1 OF 1 SHEET

APPROVED FOR PUBLICATION

STATE DESIGN ENGINEER — DATE 7/12/12

Washington State Department of Transportation

DRAWN BY: LISA CYFORD

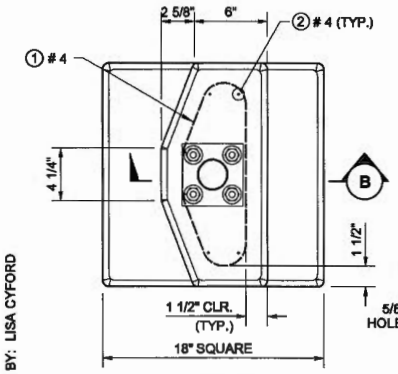

PLAN VIEW

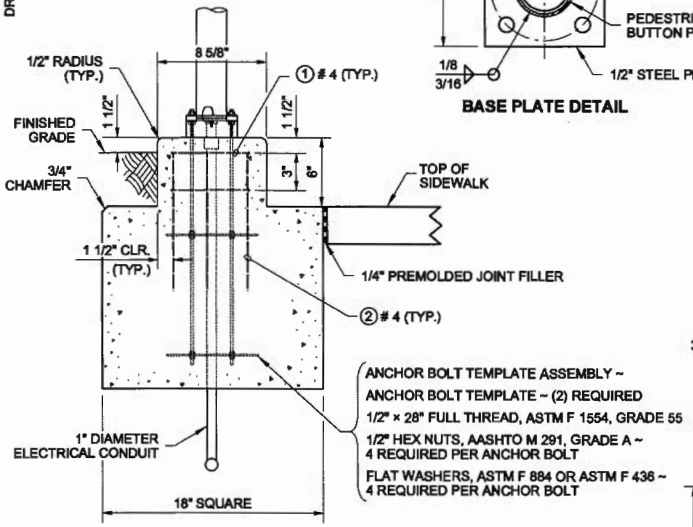

VIEW (A)

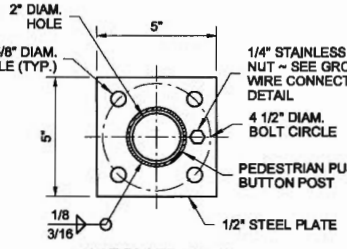

BASE PLATE DETAIL

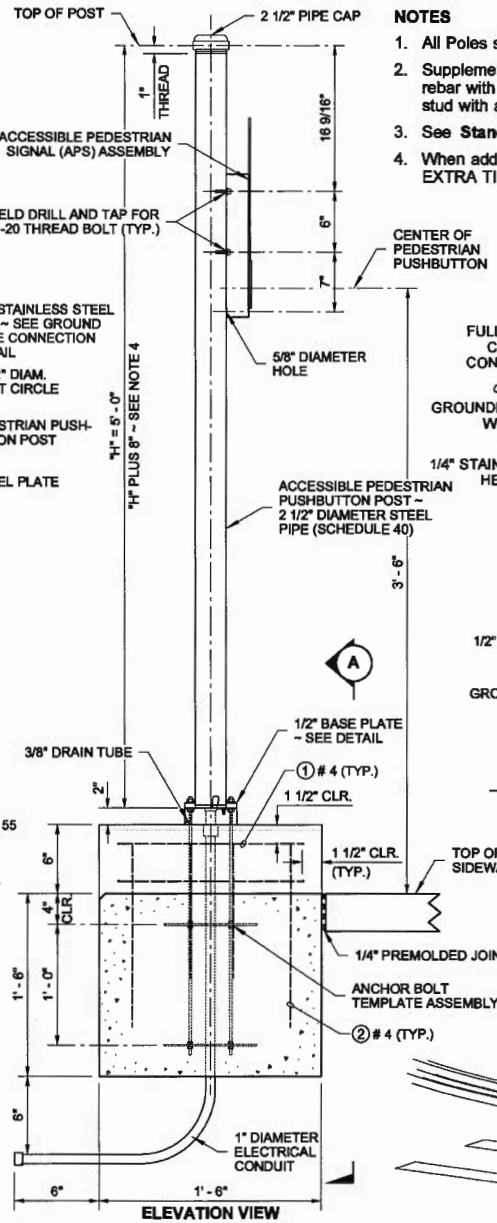

ELEVATION VIEW

NOTES

1. All Poles shall be hot dip galvanized per AASHTO M111.
2. Supplemental grounding conductor shall be non-insulated #4 AWG stranded copper and shall be clamped to vertical rebar with a connector suitable for use embedded in concrete: provide 3' - 0" min. slack. Attach to pole grounding stud with a full circle crimp-on connector (crimped with manufacturer's recommended crimper).
3. See **Standard Plan J-20.26** for Accessible Pedestrian Pushbutton details.
4. When additional crossing time is provided by an extended pushbutton press, a PUSH BUTTON FOR 2 SECONDS FOR EXTRA TIME CROSSING sign (R10.32P) shall be installed above the APS assembly. Leave a 2" space between signs.

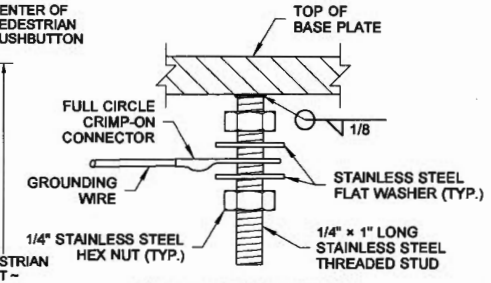

GROUNDING CONNECTION DETAIL

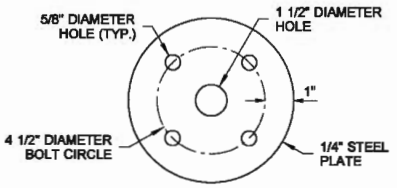

ANCHOR BOLT TEMPLATE

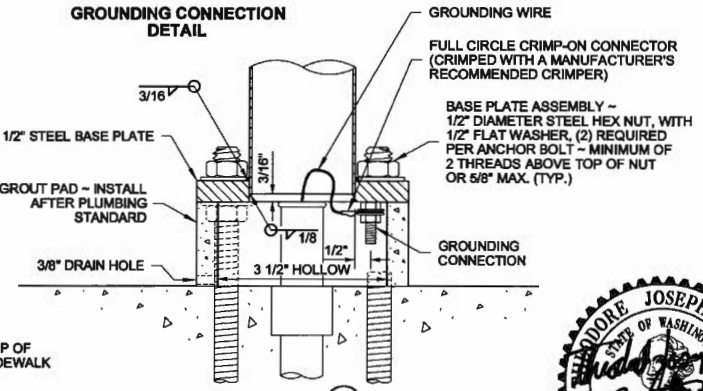

SECTION (B)

(LEVELING NUTS NOT SHOWN FOR CLARITY)

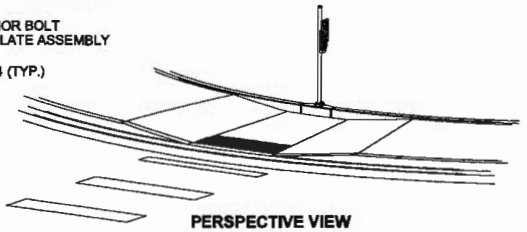

PERSPECTIVE VIEW

REINFORCING STEEL BENDING DIAGRAM

SEE **STD. SPEC. 9-07.1(2)** FOR BENDING DIMENSIONS

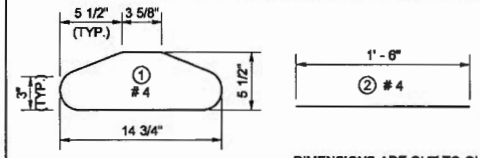

DIMENSIONS ARE OUT TO OUT

THEODORE JOSEPH BAILEY
STATE OF WASHINGTON
39820
REGISTERED
PROFESSIONAL ENGINEER

7/10/2012

ACCESSIBLE PEDESTRIAN PUSHBUTTON WITH CURB BASE

STANDARD PLAN J-20.11-00

SHEET 1 OF 2 SHEETS

APPROVED FOR PUBLICATION

STATE DESIGN ENGINEER — DATE 7/12/12

Washington State Department of Transportation

TYPE PPB SIGNAL STANDARD DETAILS

DRAWN BY: LISA CYFORD

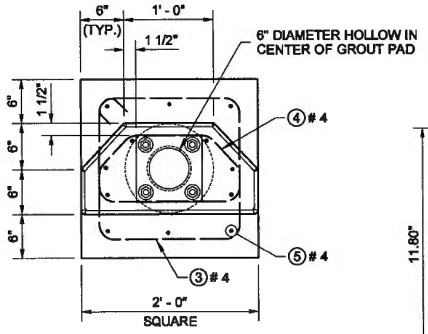

PLAN VIEW

FOUNDATION DETAILS

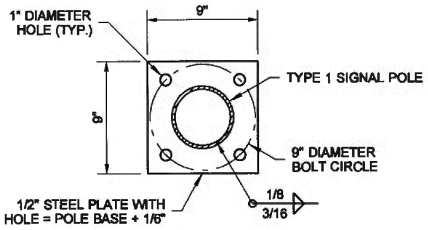

BASE PLATE DETAIL

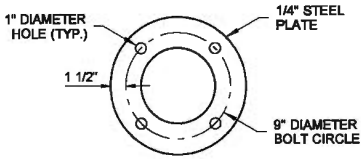

ANCHOR BOLT TEMPLATE

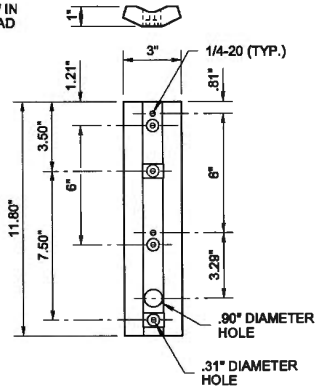

DUEL (APS) ASSEMBLY MOUNTING ADAPTER DETAILS

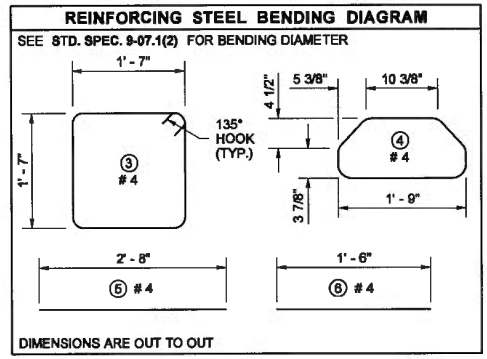

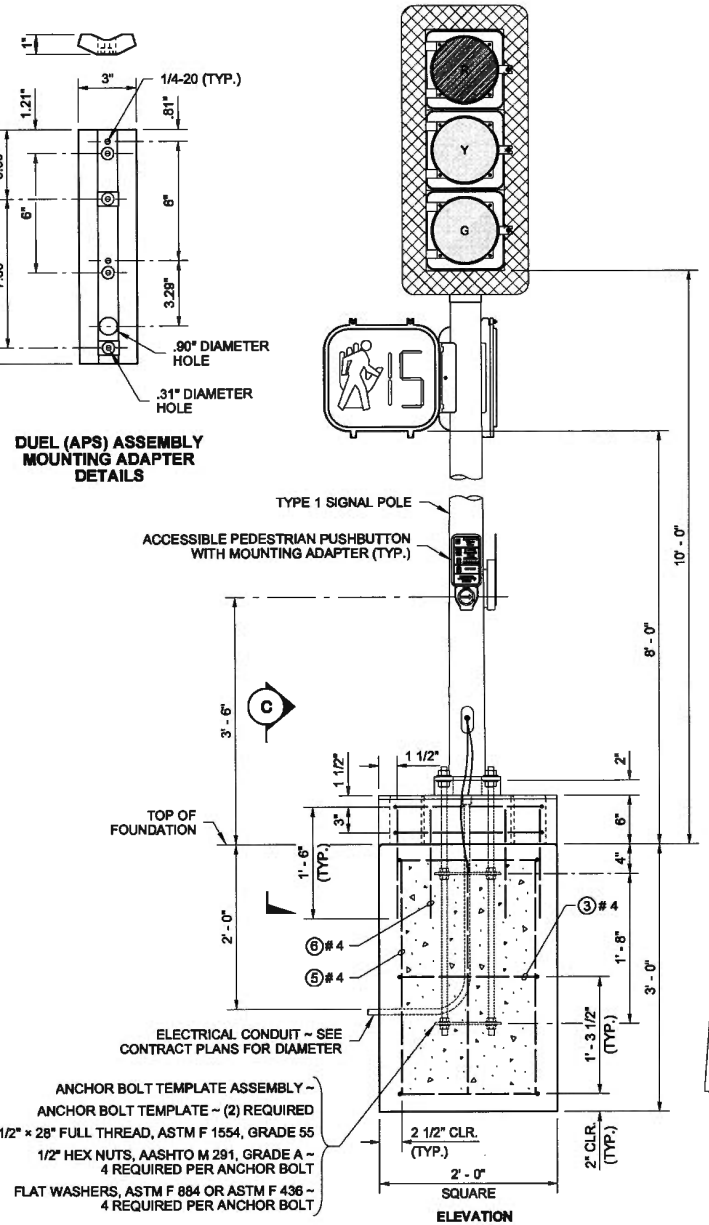

ELEVATION

FOUNDATION DETAIL

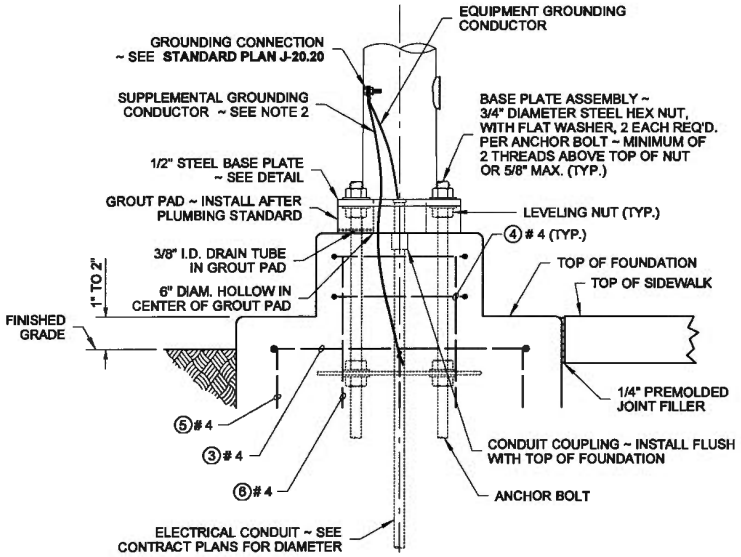

SECTION C

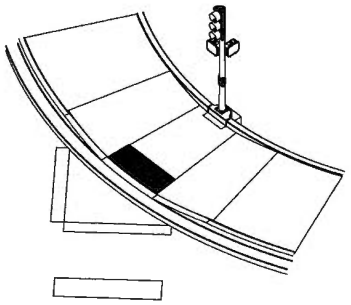

PERSPECTIVE VIEW

TYPE 1 SIGNAL STANDARD DETAILS

7/10/2012

ACCESSIBLE PEDESTRIAN PUSHBUTTON WITH CURB BASE

STANDARD PLAN J-20.11-00

SHEET 2 OF 2 SHEETS

APPROVED FOR PUBLICATION

STATE DESIGN ENGINEER — DATE 7/12/12

Washington State Department of Transportation

DRAWN BY: LISA CYFORD

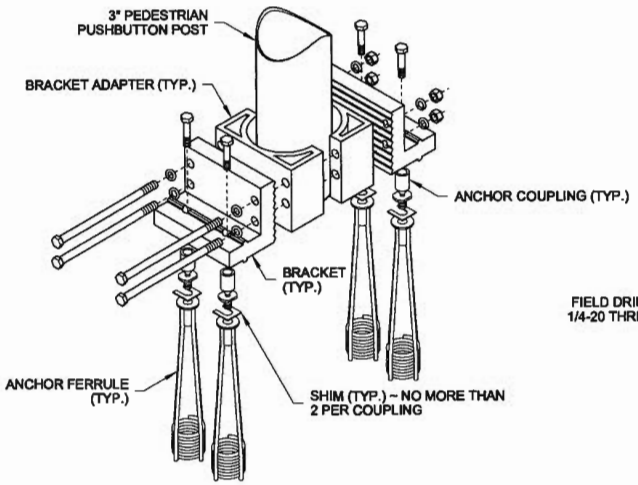

EXPLODED VIEW

BREAKAWAY BASE CONNECTOR

(SEE NOTE 1)

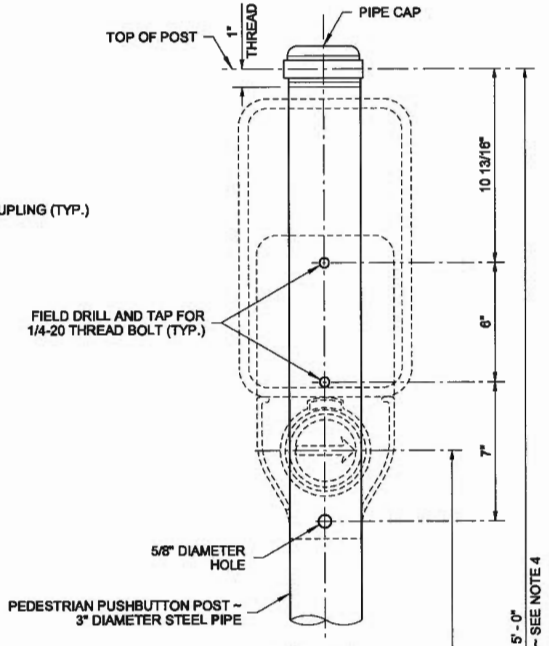

POST DETAIL

NOTES

1. See **Standard Specification 9-06.16** for Breakaway Base Connectors details. Dimensions for the parts used to assemble the base connections are intentionally not shown. Base connections are patented manufactured products that are in compliance with NCHRP 350 crash test criteria. The base connection details are only shown on this plan to illustrate how parts are assembled.
2. See **Standard Plan J-20.26** for Accessible Pedestrian Pushbutton details.
3. Secure conductor in adjacent junction box per detail, **Standard Plan J-28.70.**

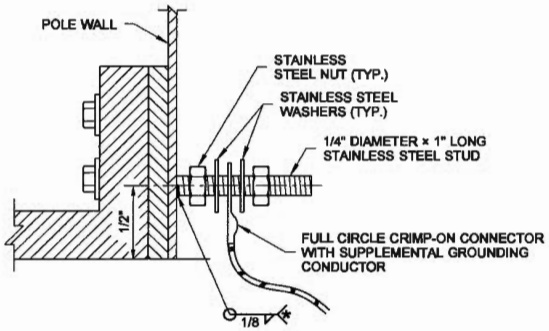

GROUNDING CONNECTION DETAIL

* WELD STUD TO POLE WALL TO MAXIMUM EXTENT AS POSSIBLE ~ 1/2" MINIMUM WELD

CONFIGURATIONS VARY AMONG DIFFERENT MANUFACTURERS (SHOWN EXPLODED FOR CLARITY)

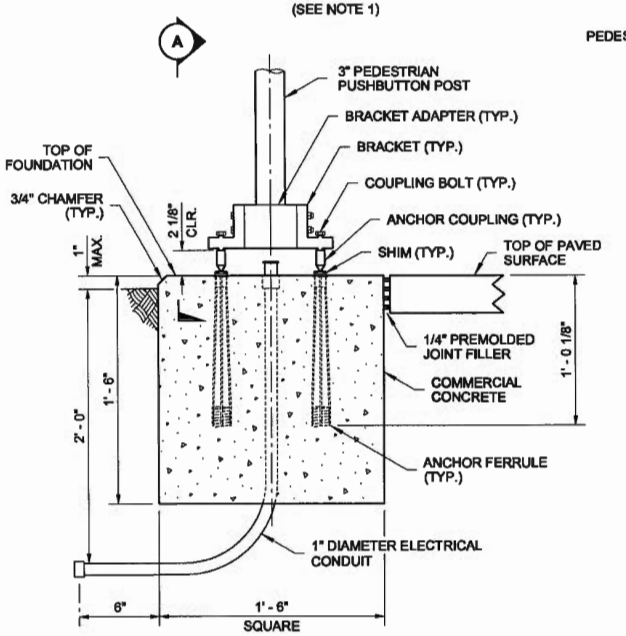

FOUNDATION DETAIL

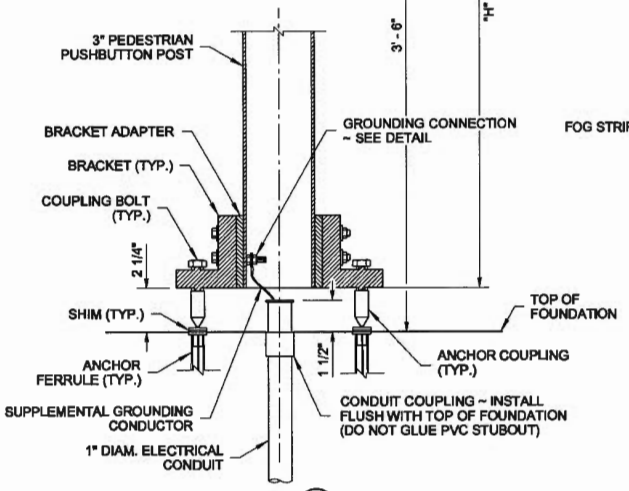

SECTION A

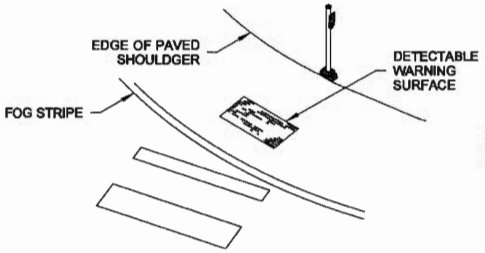

PERSPECTIVE VIEW

THEODORE JOSEPH BAILEY
STATE OF WASHINGTON
39820
REGISTERED
PROFESSIONAL ENGINEER

7/10/2012

ACCESSIBLE BREAKAWAY PEDESTRIAN PUSHBUTTON (PPB) POST

STANDARD PLAN J-20.15-01

SHEET 1 OF 1 SHEET

APPROVED FOR PUBLICATION

STATE DESIGN ENGINEER — DATE 7/12/12

Washington State Department of Transportation

DRAWN BY: LISA CYFORD

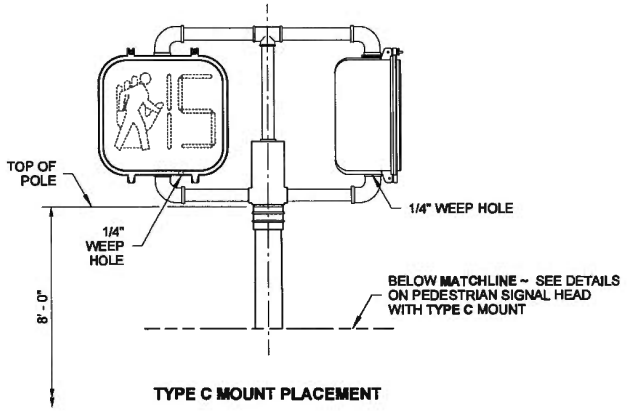

TYPE C MOUNT PLACEMENT

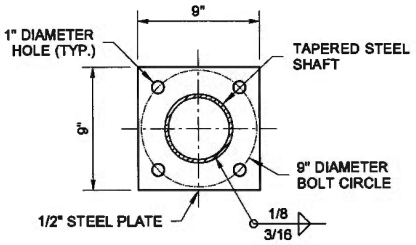

BASE PLATE DETAIL

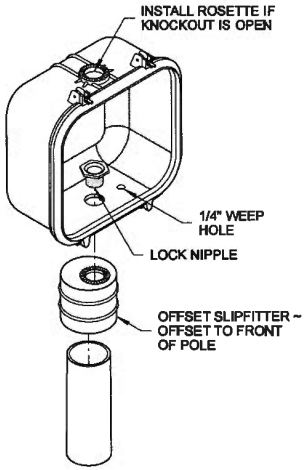

VIEW (A)

TYPE D MOUNTING DETAIL

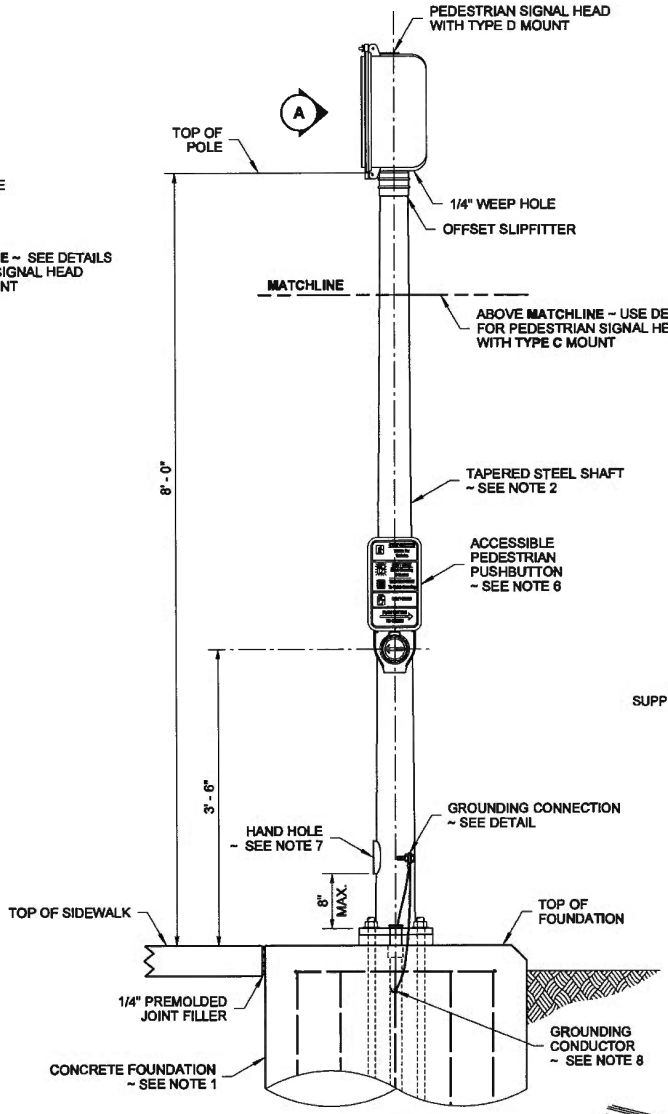

TYPE D MOUNT

PEDESTRIAN SIGNAL STANDARD

(FIXED BASE SHOWN)

NOTES

1. See **Standard Plan J-21.10** for Signal Standard Foundation with Fixed Base and Slip Base details.
2. Steel shaft shall be tapered either round or dodecagon (12-sided), 11 gage, 4 1/2" O.D. at slipfitter weld. Taper shall be 0.14 inches per foot.
3. All poles shall be hot dip galvanized per AASHTO M 111.
4. Welding of structures shall be in accordance with the latest edition of the AWS D1.1 Structural Welding Code - Steel. All butt welds shall be ground flush with base metal.
5. See **Standard Plan J-20.26** for Accessible Pedestrian Pushbutton details.
6. See **Standard Plan J-20.20** for Accessible Pedestrian Signal Standard Electrical details.
7. Hand holes shall include a removable, rain-tight cover and gasket, fastened with two stainless steel screws (ASTM 593).
8. Grounding Conductor shall be non-insulated #4 AWG stranded copper, provide 3' - 0' min. slack. Clamp to vertical steel reinforcing bar with connector suitable for use embedded in concrete.

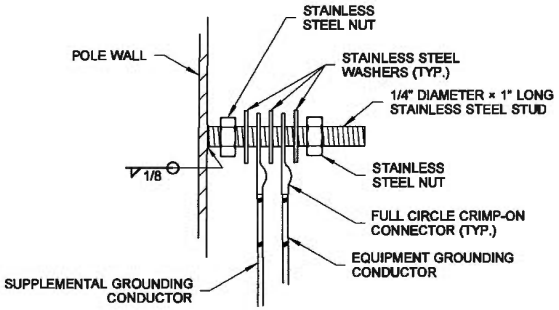

GROUNDING CONNECTION DETAIL

CONFIGURATIONS VARY AMONG DIFFERENT MANUFACTURERS (SHOWN EXPLODED FOR CLARITY)

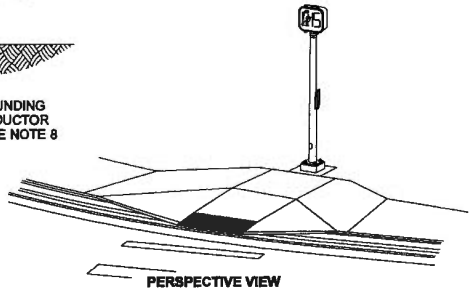

PERSPECTIVE VIEW

7/10/2012

PEDESTRIAN SIGNAL STANDARD (TYPE PS) DETAILS

STANDARD PLAN J-20.16-01

SHEET 1 OF 1 SHEET

APPROVED FOR PUBLICATION

STATE DESIGN ENGINEER — DATE 7/12/12

Washington State Department of Transportation

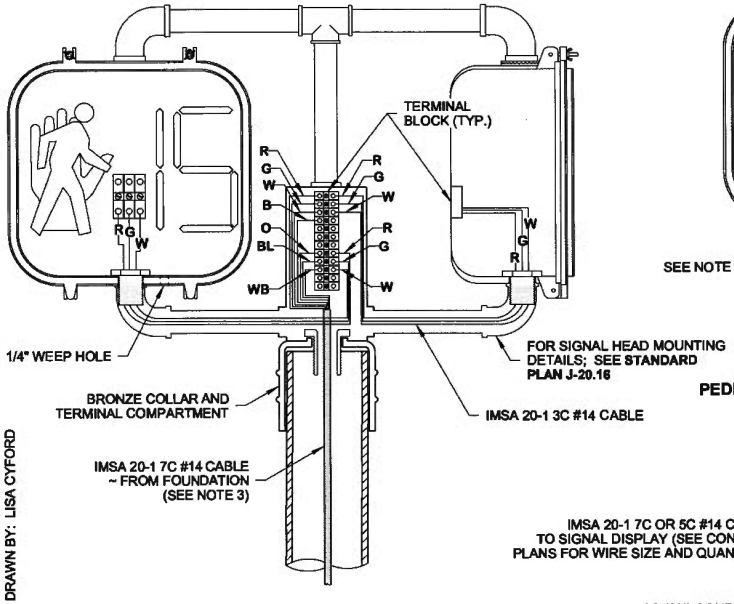

DOUBLE PEDESTRIAN SIGNAL WIRING DETAIL

(TYPE C MOUNTING SHOWN)

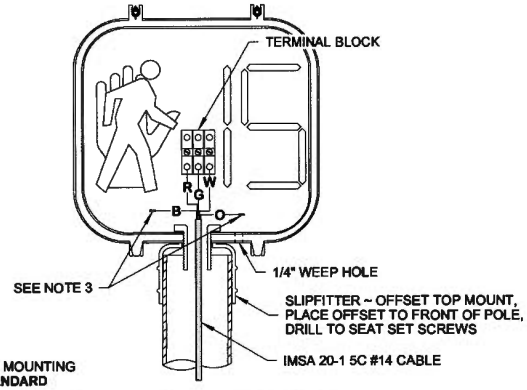

PEDESTRIAN SIGNAL WIRING DETAIL

(TYPE D MOUNTING SHOWN)

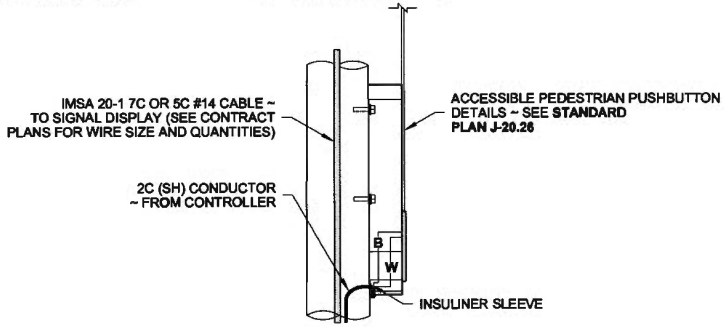

ACCESSIBLE PEDESTRIAN PUSHBUTTON WIRING DETAIL

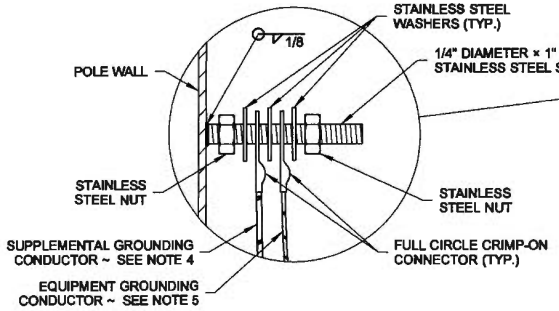

GROUNDING CONNECTION DETAIL

CONFIGURATIONS VARY AMONG DIFFERENT MANUFACTURERS (SHOWN EXPLODED FOR CLARITY)

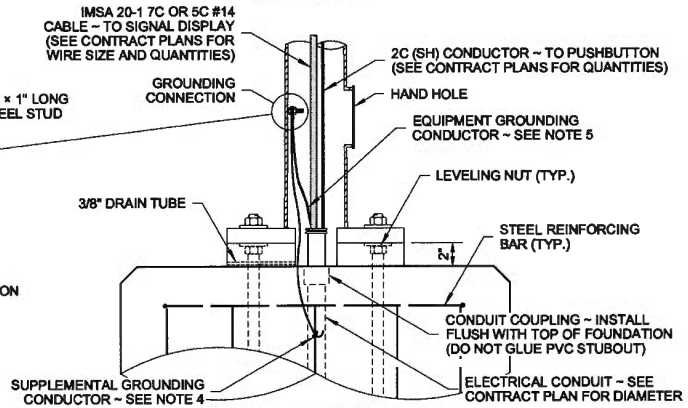

FOUNDATION WIRING DETAIL

DRAWN BY: LISA CYFORD

NOTES

1. See **Standard Plan J-21.10** for Signal Standard Foundation with Fixed Base and Slip Base details.
2. See **Standard Specification 9-29.3** for Cable Conductor requirements.
3. Install heat shrink caps on all spare conductors not terminated on a terminal strip.
4. Supplemental grounding conductor shall be non-insulated #4 AWG stranded copper and shall be clamped to vertical rebar with a connector suitable for use embedded in concrete: provide 3' - 0" min. slack. Attach to pole grounding stud with a full circle crimp-on connector (crimped with manufacturer's recommended crimper).
5. Equipment grounding conductor shall attach to grounding stud with a full circle crimp-on connector (crimped with a manufacurer's recommended crimper).

5C PEDESTRIAN HEAD TERMINATIONS

TERMINAL NUMBER	COLOR CODE	USE
7 * 1	R	DON'T WALK DISPLAY
7 * 2	G	WALK DISPLAY
7 * 3	W	NEUTRAL CONDUCTOR
7 * 6	B	SPARE CONDUCTOR
7 * 7	O	SPARE CONDUCTOR

* ASSOCIATED PHASE NUMBER

7C PEDESTRIAN HEAD TERMINATIONS

TERMINAL NUMBER	COLOR CODE	USE
7 * 1	R	DON'T WALK DISPLAY
7 * 2	G	WALK DISPLAY
7 * 3	W	NEUTRAL CONDUCTOR
7 * 6	B	SPARE CONDUCTOR
7 * 1	O	DON'T WALK DISPLAY
7 * 2	BL	WALK DISPLAY
7 * 3	WB	NEUTRAL CONDUCTOR

* ASSOCIATED PHASE NUMBER

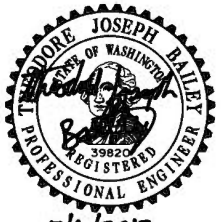

7/10/2012

PEDESTRIAN SIGNAL STANDARD (TYPE PS) ELECTRICAL DETAIL

STANDARD PLAN J-20.20-01

SHEET 1 OF 1 SHEET

APPROVED FOR PUBLICATION

STATE DESIGN ENGINEER — DATE 7/12/12

Washington State Department of Transportation

This page left blank intentionally.

DRAWN BY: LISA CYFORD

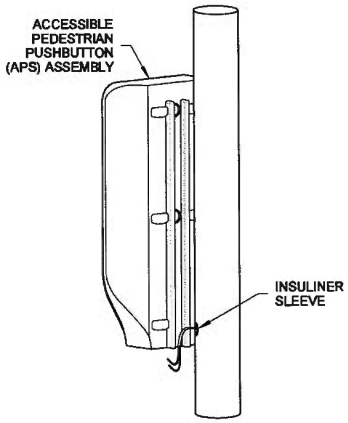

WIRE ROUTING
PERSPECTIVE VIEW

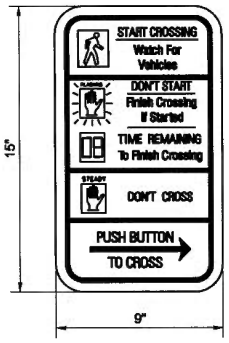

R10-3e (RIGHT)

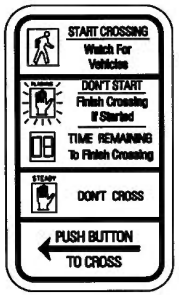

R10-3e (LEFT)

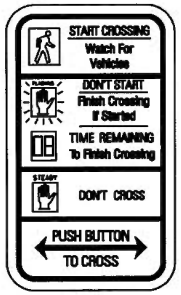

R10-3e (MOD.)

PEDESTRIAN PUSHBUTTON INSTRUCTIONAL SIGN

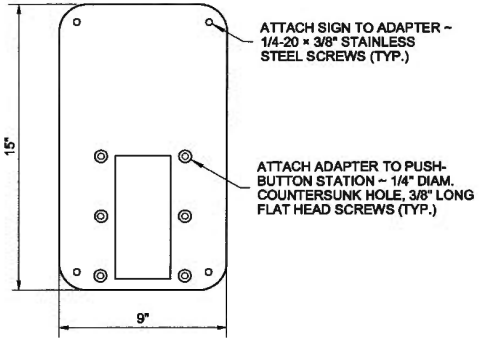

PEDESTRIAN PUSHBUTTON FRAME ADAPTER

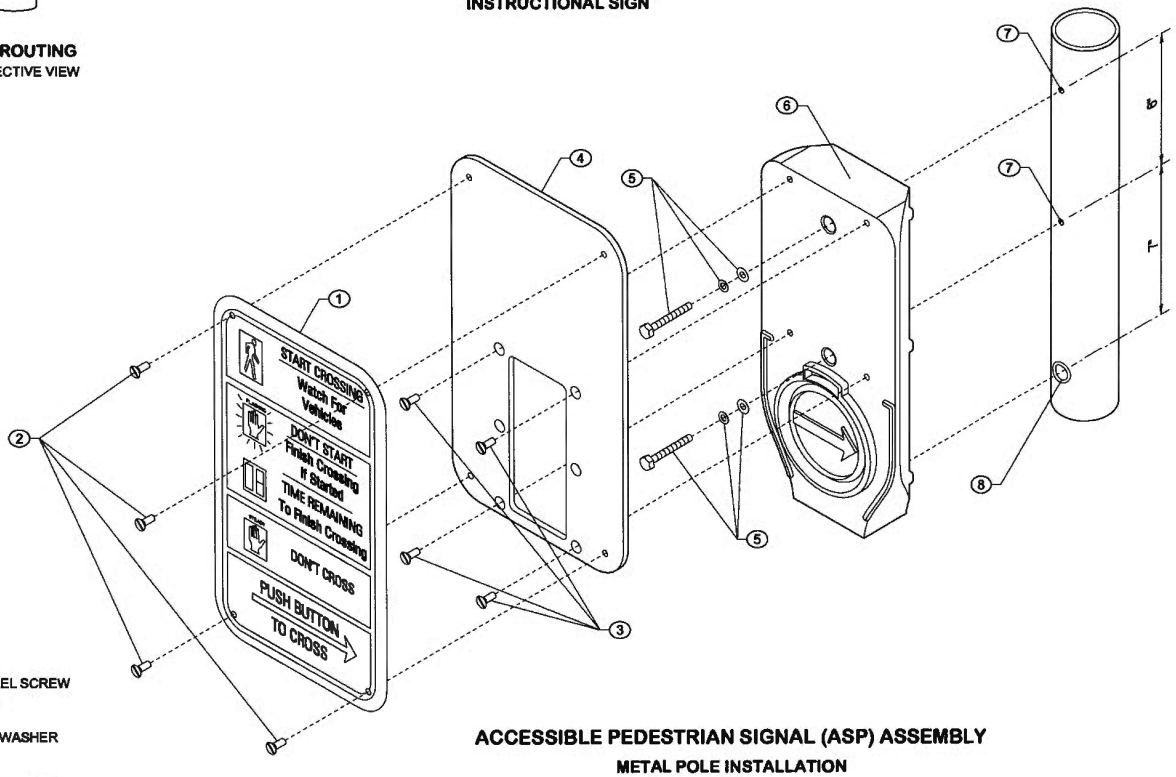

ACCESSIBLE PEDESTRIAN SIGNAL (ASP) ASSEMBLY

METAL POLE INSTALLATION
PPB-M

ISOMETRIC VIEW
(METAL POLE SHOWN)

KEY

1. FACE PLATE
2. 1/4-20 × 3/8" LONG STAINLESS STEEL SCREW
3. 1/4-20 STAINLESS STEEL SCREWS
4. PUSHBUTTON FRAME ADAPTER
5. 1/4-20 STAINLESS STEEL BOLT W/ WASHER AND LOCK WASHER
6. PUSHBUTTON STATION
7. DRILL AND TAP SHAFT FOR 1/4" DIAM. BOLT
8. DRILL AND TAP SHAFT FOR 5/8" WIRE GUIDE HOLE - ADD INSULINER

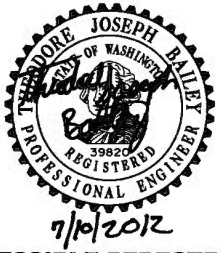

7/10/2012

ACCESSIBLE PEDESTRIAN PUSHBUTTON (PPB) DETAILS

STANDARD PLAN J-20.26-01

SHEET 1 OF 2 SHEETS

APPROVED FOR PUBLICATION

STATE DESIGN ENGINEER — DATE

Washington State Department of Transportation

DRAWN BY: LISA CYFORD

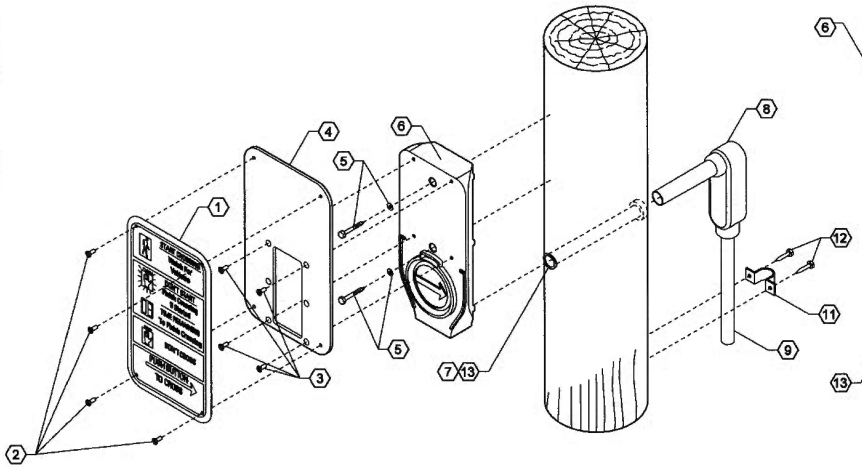

WOOD POLE INSTALLATION
ALTERNATIVE 1
PPB-W
(ACCESSIBLE PEDESTRIAN PUSHBUTTON - TEMPORARY TIMBER STRAIN POLE)

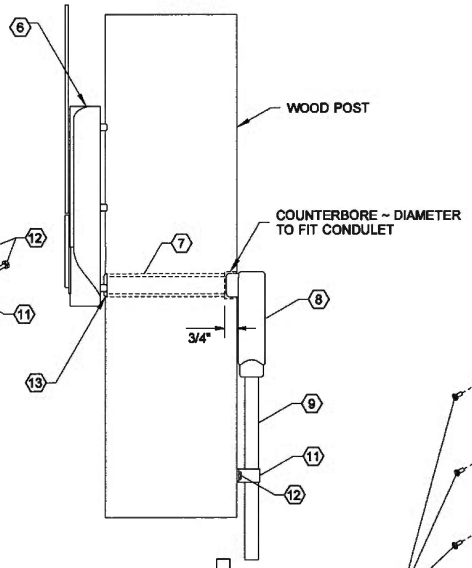

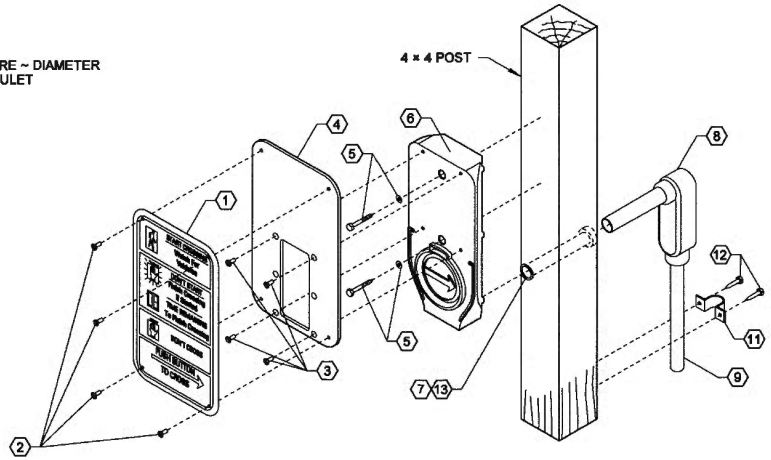

WOOD POLE INSTALLATION
ALTERNATIVE 3
PPB-W
(ACCESSIBLE PEDESTRIAN PUSHBUTTON - TEMPORARY TIMBER POLE)

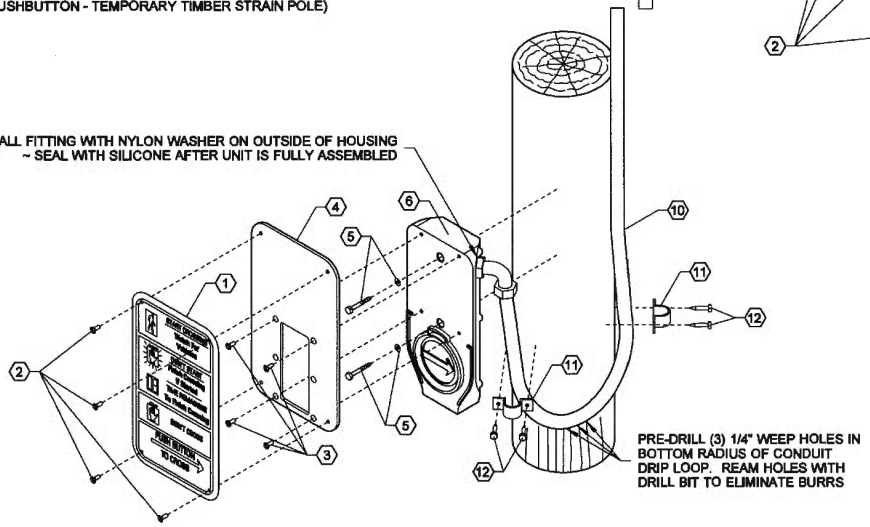

ACCESSIBLE PEDESTRIAN SIGNAL (ASP) ASSEMBLY

WOOD POLE INSTALLATION
ALTERNATIVE 2
PPB-W
(ACCESSIBLE PEDESTRIAN PUSHBUTTON - TEMPORARY TIMBER STRAIN POLE)

TEMPORARY TIMBER POLE

KEY

1. FACE PLATE
2. 1/4-20 × 3/8" LONG STAINLESS STEEL SCREW
3. 1/4-20 STAINLESS STEEL SCREWS
4. PUSHBUTTON FRAME ADAPTER
5. LAG BOLT WITH WASHER
6. PUSHBUTTON STATION
7. CONDUIT DIAMETER + 1/8" HOLE THRU POLE
8. CONDULET
9. 3/4" CONDUIT
10. LIQUID-TITE FLEX CONDUIT
11. ONE PIECE TWO HOLE CLAMP
12. LAG BOLT
13. INSULINER SLEEVE

7/10/2012

ACCESSIBLE PEDESTRIAN PUSHBUTTON (PPB) DETAILS

STANDARD PLAN J-20.26-01

SHEET 2 OF 2 SHEETS

APPROVED FOR PUBLICATION

STATE DESIGN ENGINEER — DATE 7/12/12

Washington State Department of Transportation

DRAWN BY: LISA CYFORD

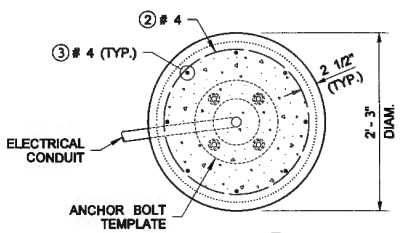

SECTION (A)

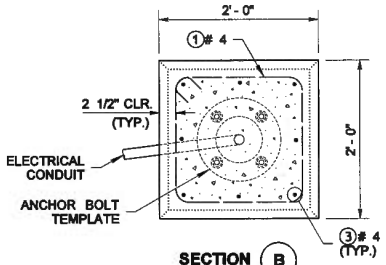

SECTION (B)

REINFORCING STEEL BENDING DIAGRAM

SEE STD. SPEC. 9-07.1(2) FOR BENDING DIAM.

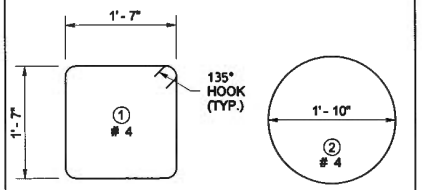

DIMENSIONS ARE OUT TO OUT

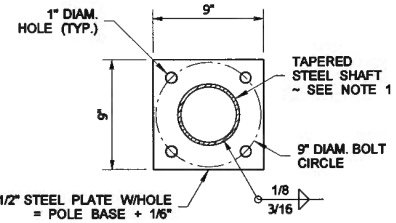

BASE PLATE DETAIL

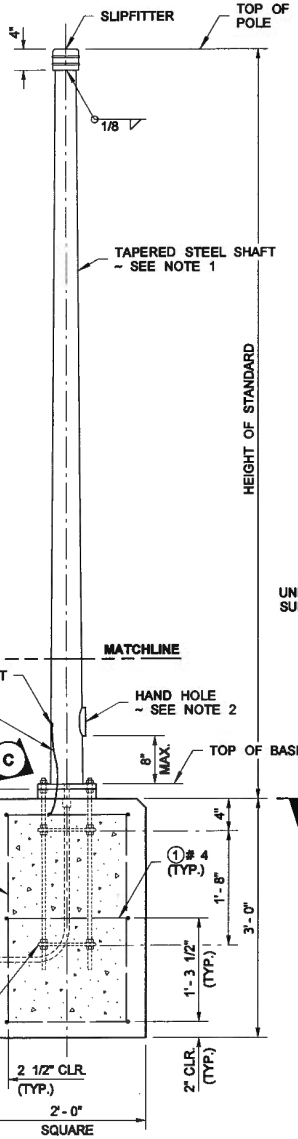

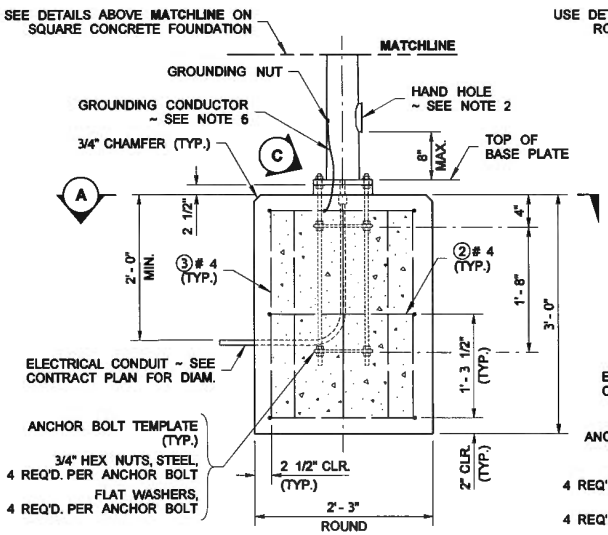

ELEVATION

ROUND CONCRETE FOUNDATION DETAIL

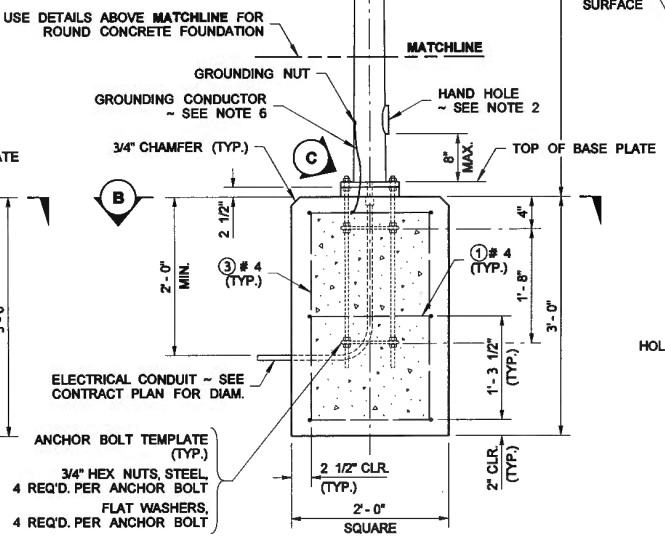

ELEVATION

SQUARE CONCRETE FOUNDATION DETAIL

FIXED BASE

NOTES

1. Steel Shaft shall be tapered either round or dodecagon (12-sided), 11-gauge, 4 1/2" O.D. at slipfitter weld. Taper shall be 0.14 inches per foot.
2. Hand Holes shall include a removable, rain-tight cover and gasket, fastened with two stainless steel screws (ASTM F 593).
3. Clamping Bolts shall be tightened to 50 ft-lbs max. torque. After state inspection, burr threads to prevent nut rotation. DO NOT OVERTIGHTEN.
4. The final height of the Anchor Bolts must be below the top of the Slip Plate Assembly to ensure proper function of the Slip Base.
5. All Poles shall be hot dip galvanized per AASHTO M111.
6. Grounding Conductor shall be non-insulated #4 AWG stranded copper, provide 3' - 0" min. slack. Clamp to steel reinforcing bar with connector suitable for use embedded in concrete.

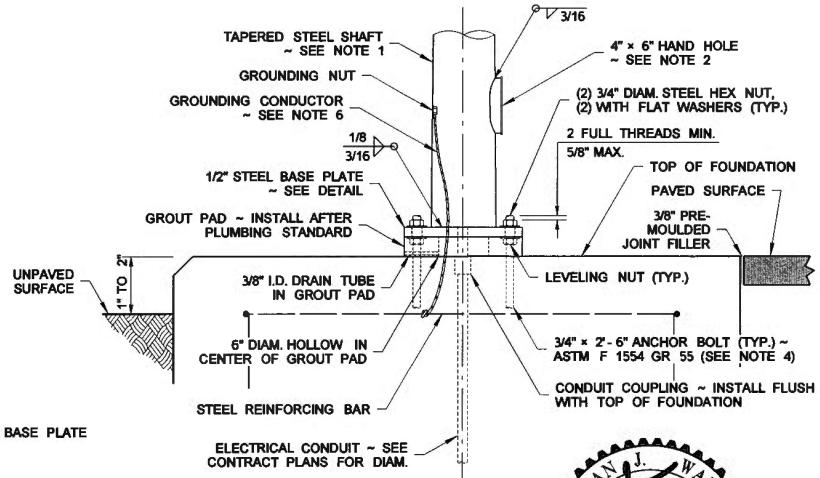

DETAIL (C)

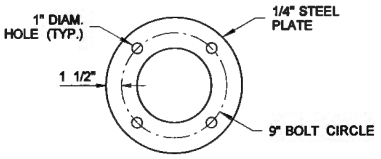

ANCHOR BOLT TEMPLATE

6-18-11

TYPE PS, TYPE 1, RM & FB SIGNAL STANDARD FOUNDATION DETAILS

STANDARD PLAN J-21.10-02

SHEET 1 OF 2 SHEETS

APPROVED FOR PUBLICATION

STATE DESIGN ENGINEER — DATE 6/22/11

Washington State Department of Transportation

DRAWN BY: LISA CYFORD

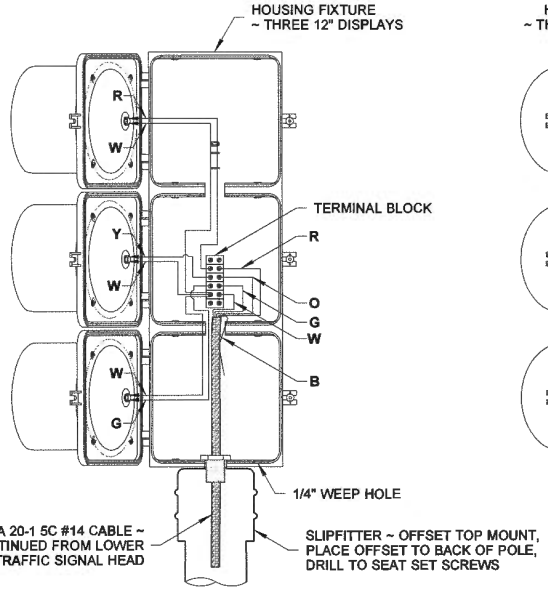

DETAIL (A)

UPPER TRAFFIC SIGNAL HEAD WIRING

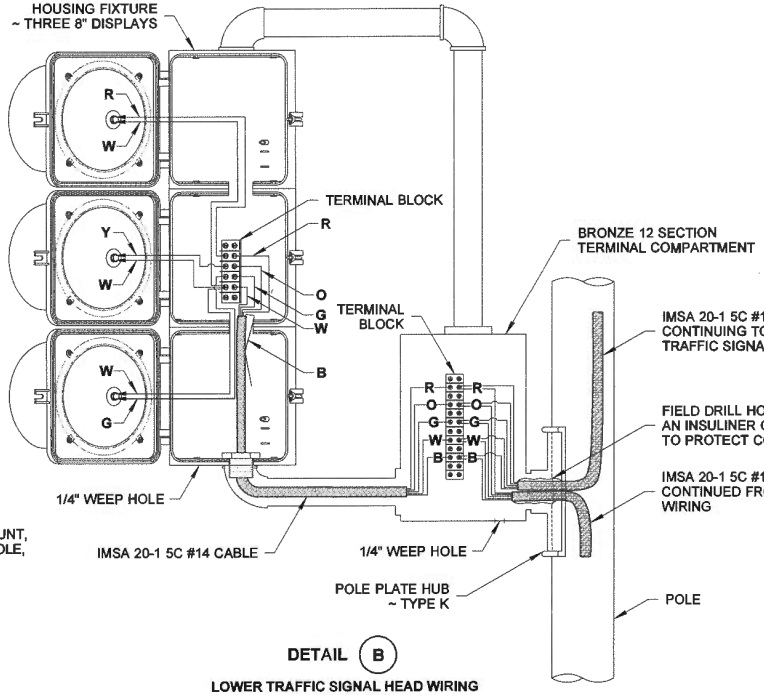

DETAIL (B)

LOWER TRAFFIC SIGNAL HEAD WIRING
(SHOWN LARGER FOR CLARITY)

NOTES

1. See **Standard Plan J-21.10** for Ramp Meter Signal Standard and Foundation Details
2. See **Standard Specifications 9-29.17** for additional Mounting Bracket and Fitting information not shown.
3. Grounding Conductor shall be non-insulated #4 AWG stranded copper, provide 3' - 0" min. slack. Clamp to steel reinforcing bar with connector suitable for use embedded in concrete.
4. Top of Leveling Nut height shall be 1" maximum above foundation.
5. Heat shrink cap all spare conductors not terminated on a terminal strip.

COLOR CODE	USE
R	RED DISPLAY
O	AMBER DISPLAY
G	GREEN DISPLAY
W	NEUTRAL CONDUCTOR
B	SPARE CONDUCTOR

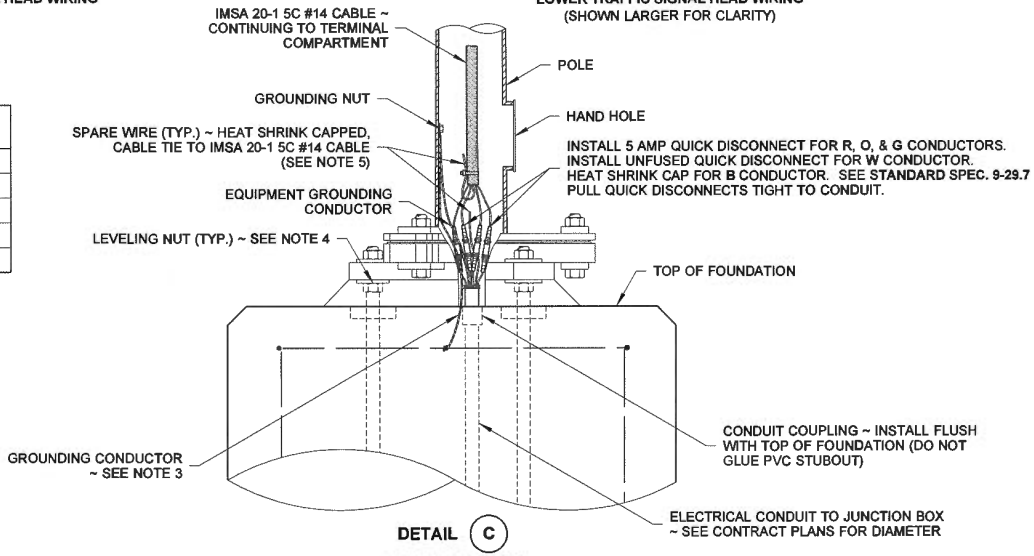

DETAIL (C)

FOUNDATION WIRING

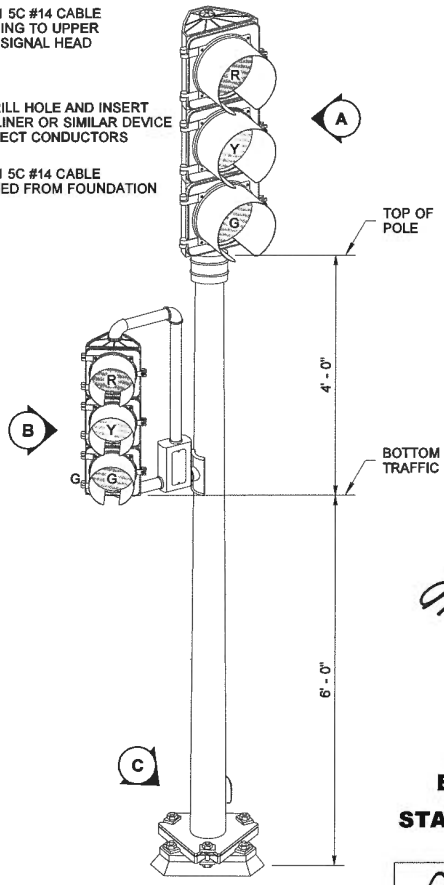

PERSPECTIVE VIEW
RAMP METER

THEODORE J. TREPANIER
STATE OF WASHINGTON
25335
REGISTERED
PROFESSIONAL ENGINEER
4/13/10

RAMP METER SIGNAL STANDARD ELECTRICAL DETAILS

STANDARD PLAN J-22.16-01

SHEET 1 OF 1 SHEET

APPROVED FOR PUBLICATION

STATE DESIGN ENGINEER — DATE 6/3/10

Washington State Department of Transportation

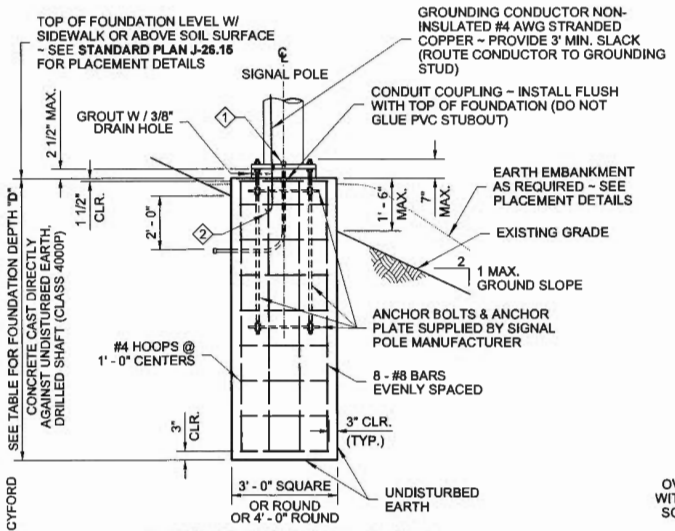

FOUNDATION REINFORCEMENT DETAIL

CONCRETE CAST DIRECTLY AGAINST UNDISTURBED EARTH, DRILLED SHAFT

ALTERNATE # 1

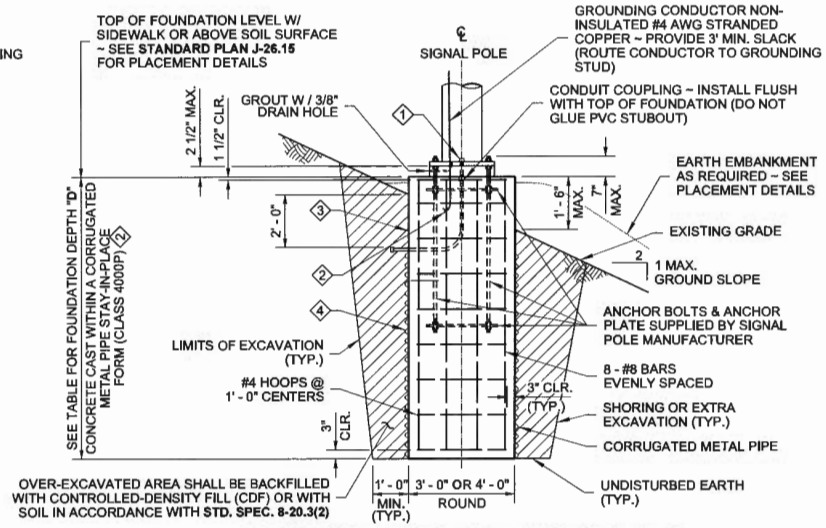

FOUNDATION REINFORCEMENT AND BACKFILL DETAIL

4 CONCRETE CAST WITHIN A CORRUGATED METAL PIPE STAY-IN-PLACE FORM

ALTERNATE # 2

1 CONDUIT SIZE AND QUANTITY AS SHOWN IN THE CONTRACT; CAP BOTH ENDS

2 CLAMP CONDUCTOR TO STEEL REINFORCING WITH LISTED CONNECTOR SUITABLE FOR USE EMBEDDED IN CONCRETE

3 PAPER OR CARDBOARD FORM SHALL NOT STAY-IN-PLACE

DRAWN BY: LISA CYFORD

NOTES

1. This structure has been designed according to the Fifth Edition 2009 AASHTO Standard Specifications for Structural Supports for Highway Signs, Luminaires and Traffic Signals. Basic wind velocity is 90 mph, Design Life/Recurrence Interval 50 years, and Fatigue Category III.
2. Foundations are designed for Type II, III, and SD Signal Standards with a maximum mast arm length of 65'.
3. Foundations are designed for Single Mast Arm Standards and Double Mast Arm Standards with 90° between arms. Special foundation design is required for Double Arm Standards where the angle between mast arms is other than 90°. For Double Mast Arm Standards with 90° between arms, use larger XYZ value for foundation depth selection.
4. Foundations not within the parameters of this standard require Special Design. Contact the WSDOT Bridge and Structures Office through the Engineer for Special Foundation Designs.
5. Foundations constructed within Ecology Embankments shall be increased in depth by the depth of the Ecology Embankment.
6. The top 2 feet of the foundation shall use a smooth form (such as paper or cardboard). After the concrete has cured, this entire form shall be removed.
7. For design parameters between the values listed in Table, depth requirements may be interpolated between the values provided.
8. Install Signal Foundation Identification Tag. See **Standard Plan J-26.15** for details.

FOUNDATION DEPTH "D" TABLE

ALTERNATE # 1 DRILLED SHAFT-TYPE CONSTRUCTION
FOR LATERAL BEARING PRESSURE = 2500 PSF & Ø = 34°, 1500 PSF & Ø = 28°, 1000 PSF & Ø = 26°

GROUND SLOPE = 3H : 1V OR FLATTER

ALLOWABLE LATERAL BEARING PRESSURE	FOUNDATION TYPE	XYZ (FT³) 700	900	1350	1500	1900	2300	2600	3000
1000 PSF	3' - 0" ROUND	10' - 0"	10' - 0"	11' - 0"	11' - 0"	15' - 0"	18' - 0"	20' - 0"	20' - 0"
	3' - 0" SQUARE	8' - 0"	8' - 0"	9' - 0"	9' - 0"	10' - 0"	11' - 0"	12' - 0"	12' - 0"
	4' - 0" ROUND	8' - 0"	8' - 0"	9' - 0"	9' - 0"	10' - 0"	11' - 0"	12' - 0"	12' - 0"
1500 PSF	3' - 0" ROUND	8' - 0"	8' - 0"	9' - 0"	11' - 0"	13' - 0"	15' - 0"	18' - 0"	18' - 0"
	3' - 0" SQUARE	7' - 0"	7' - 0"	7' - 0"	8' - 0"	8' - 0"	9' - 0"	10' - 0"	10' - 0"
	4' - 0" ROUND	7' - 0"	7' - 0"	7' - 0"	8' - 0"	8' - 0"	9' - 0"	10' - 0"	10' - 0"
2500 PSF OR GREATER	3' - 0" ROUND	6' - 0"	6' - 0"	7' - 0"	8' - 0"	9' - 0"	11' - 0"	15' - 0"	15' - 0"
	3' - 0" SQUARE	6' - 0"	6' - 0"	6' - 0"	6' - 0"	7' - 0"	7' - 0"	8' - 0"	8' - 0"
	4' - 0" ROUND	6' - 0"	6' - 0"	6' - 0"	6' - 0"	7' - 0"	7' - 0"	8' - 0"	8' - 0"

GROUND SLOPE = GREATER THAN 3H : 1V TO 2H : 1V

ALLOWABLE LATERAL BEARING PRESSURE	FOUNDATION TYPE	XYZ (FT³) 700	900	1350	1500	1900	2300	2600	3000
1000 PSF	3' - 0" ROUND	SPECIAL FOUNDATION TYPE							
	3' - 0" SQUARE	SPECIAL FOUNDATION TYPE							
	4' - 0" ROUND	SPECIAL FOUNDATION TYPE							
1500 PSF	3' - 0" ROUND	11' - 0"	11' - 0"	12' - 0"	14' - 0"	16' - 0"	18' - 0"	21' - 0"	21' - 0"
	3' - 0" SQUARE	10' - 0"	10' - 0"	10' - 0"	11' - 0"	11' - 0"	12' - 0"	13' - 0"	13' - 0"
	4' - 0" ROUND	10' - 0"	10' - 0"	10' - 0"	11' - 0"	11' - 0"	12' - 0"	13' - 0"	13' - 0"
2500 PSF OR GREATER	3' - 0" ROUND	9' - 0"	9' - 0"	10' - 0"	12' - 0"	12' - 0"	14' - 0"	18' - 0"	18' - 0"
	3' - 0" SQUARE	9' - 0"	9' - 0"	9' - 0"	9' - 0"	10' - 0"	10' - 0"	11' - 0"	11' - 0"
	4' - 0" ROUND	9' - 0"	9' - 0"	9' - 0"	9' - 0"	10' - 0"	10' - 0"	11' - 0"	11' - 0"

ALTERNATE # 2 CORRUGATED METAL PIPE TYPE CONSTRUCTION
FOR LATERAL BEARING PRESSURE = 2500 PSF & Ø = 23°, 1500 PSF & Ø = 18°, 1000 PSF & Ø = 17°

GROUND SLOPE = 3H : 1V OR FLATTER

ALLOWABLE LATERAL BEARING PRESSURE	FOUNDATION TYPE	XYZ (FT³) 700	900	1350	1500	1900	2300	2600	3000
1000 PSF	3' - 0" ROUND	10' - 0"	10' - 0"	11' - 0"	15' - 0"	20' - 0"	25' - 0"	28' - 0"	28' - 0"
	4' - 0" ROUND	8' - 0"	8' - 0"	9' - 0"	12' - 0"	13' - 0"	14' - 0"	15' - 0"	15' - 0"
1500 PSF	3' - 0" ROUND	8' - 0"	8' - 0"	11' - 0"	15' - 0"	18 - 0"	21' - 0"	25' - 0"	25' - 0"
	4' - 0" ROUND	7' - 0"	7' - 0"	7' - 0"	8' - 0"	10' - 0"	13' - 0"	15' - 0"	15' - 0"
2500 PSF OR GREATER	3' - 0" ROUND	6' - 0"	6' - 0"	7' - 0"	11' - 0"	13' - 0"	18' - 0"	20' - 0"	20' - 0"
	4' - 0" ROUND	6' - 0"	6' - 0"	6' - 0"	6' - 0"	7' - 0"	9' - 0"	9' - 0"	9' - 0"

GROUND SLOPE = GREATER THAN 3H : 1V TO 2H : 1V

ALLOWABLE LATERAL BEARING PRESSURE	FOUNDATION TYPE	XYZ (FT³) 700	900	1350	1500	1900	2300	2600	3000
1000 PSF	3' - 0" ROUND	SPECIAL FOUNDATION TYPE							
	4' - 0" ROUND	SPECIAL FOUNDATION TYPE							
1500 PSF	3' - 0" ROUND	11' - 0"	11' - 0"	14' - 0"	18' - 0"	21' - 0"	24' - 0"	28' - 0"	23' - 0"
	4' - 0" ROUND	10' - 0"	10' - 0"	10' - 0"	11' - 0"	13' - 0"	16' - 0"	18' - 0"	18' - 0"
2500 PSF OR GREATER	3' - 0" ROUND	9' - 0"	9' - 0"	10' - 0"	14' - 0"	16' - 0"	21' - 0"	23' - 0"	23' - 0"
	4' - 0" ROUND	9' - 0"	9' - 0"	9' - 0"	9' - 0"	10' - 0"	12' - 0"	12' - 0"	12' - 0"

ALTERNATE #2 - CONSTRUCTION METHOD
METAL (SUBSURFACE) FORM REQUIRED

When the existing soil will not retain a vertical face, over-excavate the foundation area and install a 36" or 48" diameter corrugated metal (pipe) form. The top of the corrugated metal form shall terminate 1 foot below final grade. Continue forming to full height using paper or cardboard form to achieve a smooth finish on final exposed cement concrete. Support the form as necessary to remain plumb.

Place the concrete foundation.

After concrete has cured, remove the entire paper or cardboard form portion.

Backfill with controlled-density fill or compacted borrow in accordance with **Standard Specification 8-20.3(2).**

RICHARD P. ZELDENRUST
STATE OF WASHINGTON
38470
STRUCTURAL ENGINEER
PROFESSIONAL ENGINEER

2/6/12

SIGNAL STANDARD FOUNDATION PLAN

STANDARD PLAN J-26.10-02

SHEET 1 OF 1 SHEET

APPROVED FOR PUBLICATION

STATE DESIGN ENGINEER — DATE 2/13/12

Washington State Department of Transportation

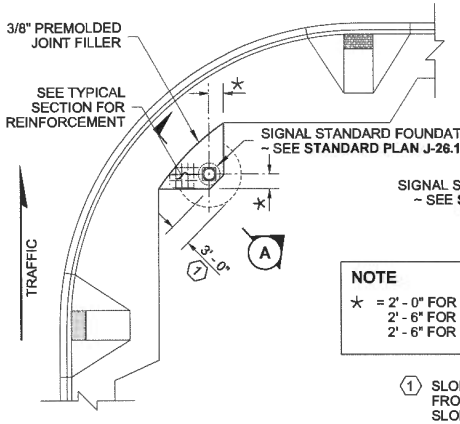

(SHOWN REDUCED)

PLAN

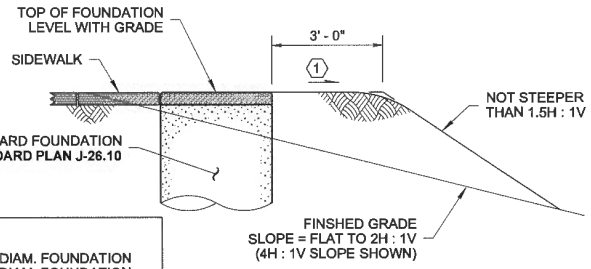

NOTE

* = 2' - 0" FOR 3' - 0" DIAM. FOUNDATION
2' - 6" FOR 4' - 0" DIAM. FOUNDATION
2' - 6" FOR 3' - 0" SQUARE FOUNDATION

1 SLOPE TO DRAIN AWAY FROM THE FOUNDATION SLOPE NOT STEEPER THAN 5%

SECTION A

FOUNDATION IN OR NEAR SIDEWALK

CASE A

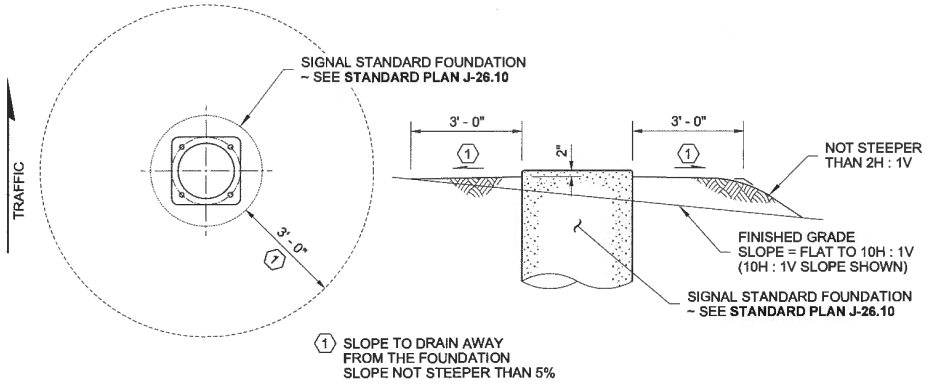

1 SLOPE TO DRAIN AWAY FROM THE FOUNDATION SLOPE NOT STEEPER THAN 5%

PLAN ELEVATION

EXISTING GRADE OR FILL SLOPE = FLAT TO 10H : 1V

CASE B

DRAWN BY: LISA CYFORD

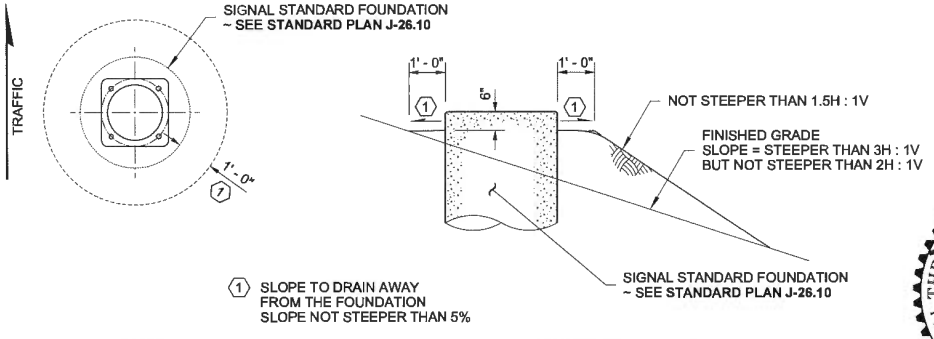

1 SLOPE TO DRAIN AWAY FROM THE FOUNDATION SLOPE NOT STEEPER THAN 5%

PLAN ELEVATION

EXISTING GRADE OR FILL SLOPE = > 3H : 1V TO 2H : 1V

CASE D

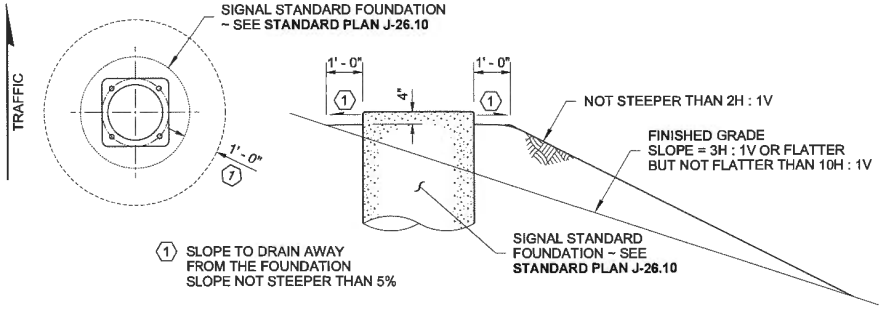

1 SLOPE TO DRAIN AWAY FROM THE FOUNDATION SLOPE NOT STEEPER THAN 5%

PLAN ELEVATION

EXISTING GRADE OR FILL SLOPE = 10H : 1V TO ≤ 3H : 1V

CASE C

THEODORE JOSEPH BAILEY
STATE OF WASHINGTON
REGISTERED PROFESSIONAL ENGINEER

5/15/2012

SIGNAL STANDARD FOUNDATION PLACEMENTS

STANDARD PLAN J-26.15-01

SHEET 1 OF 3 SHEETS

APPROVED FOR PUBLICATION

STATE DESIGN ENGINEER — DATE 5/17/12

Washington State Department of Transportation

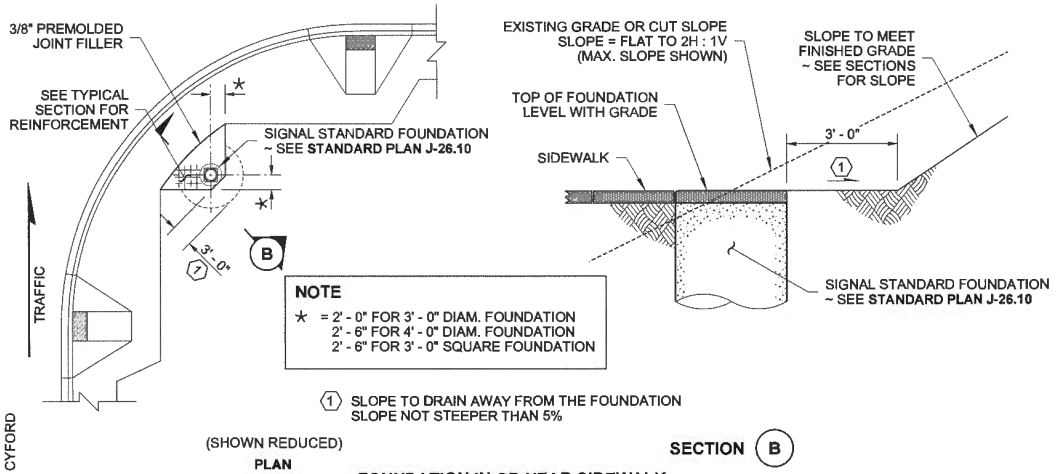

NOTE

★ = 2' - 0" FOR 3' - 0" DIAM. FOUNDATION
2' - 6" FOR 4' - 0" DIAM. FOUNDATION
2' - 6" FOR 3' - 0" SQUARE FOUNDATION

(1) SLOPE TO DRAIN AWAY FROM THE FOUNDATION SLOPE NOT STEEPER THAN 5%

(SHOWN REDUCED)
PLAN

SECTION (B)

FOUNDATION IN OR NEAR SIDEWALK
CASE E

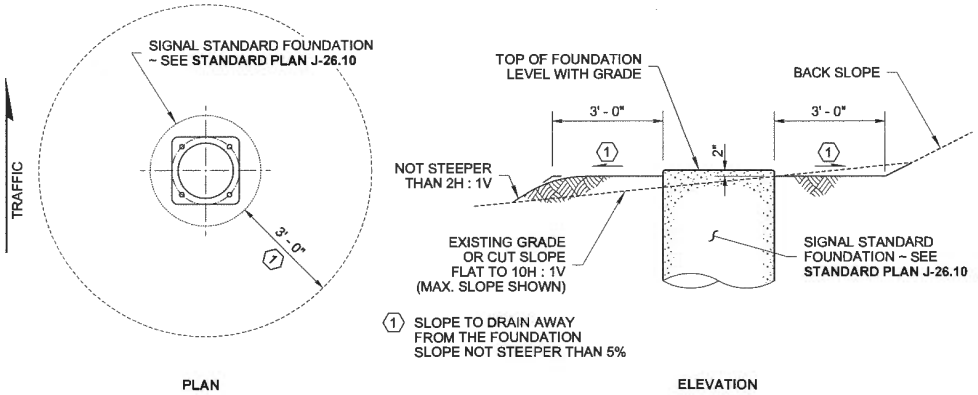

(1) SLOPE TO DRAIN AWAY FROM THE FOUNDATION SLOPE NOT STEEPER THAN 5%

PLAN

ELEVATION

EXISTING GRADE OR CUT SLOPE FLAT TO 10H : 1V
CASE F

DRAWN BY: LISA CYFORD

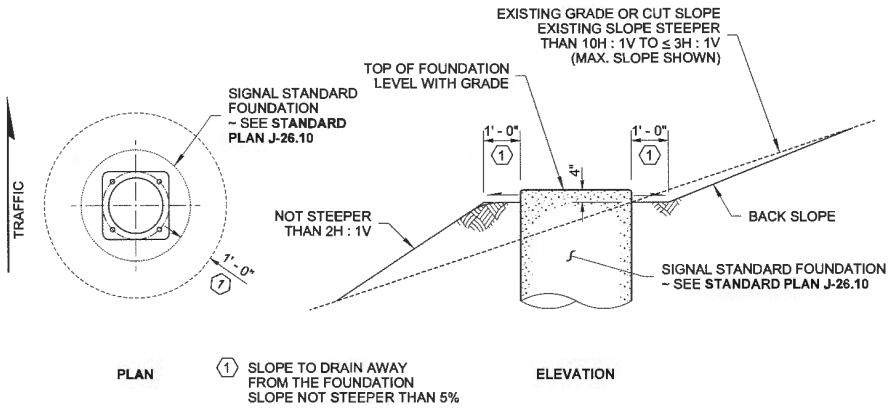

PLAN

(1) SLOPE TO DRAIN AWAY FROM THE FOUNDATION SLOPE NOT STEEPER THAN 5%

ELEVATION

EXISTING GRADE OR CUT SLOPE 10H : 1V TO ≤ 3H : 1V
CASE G

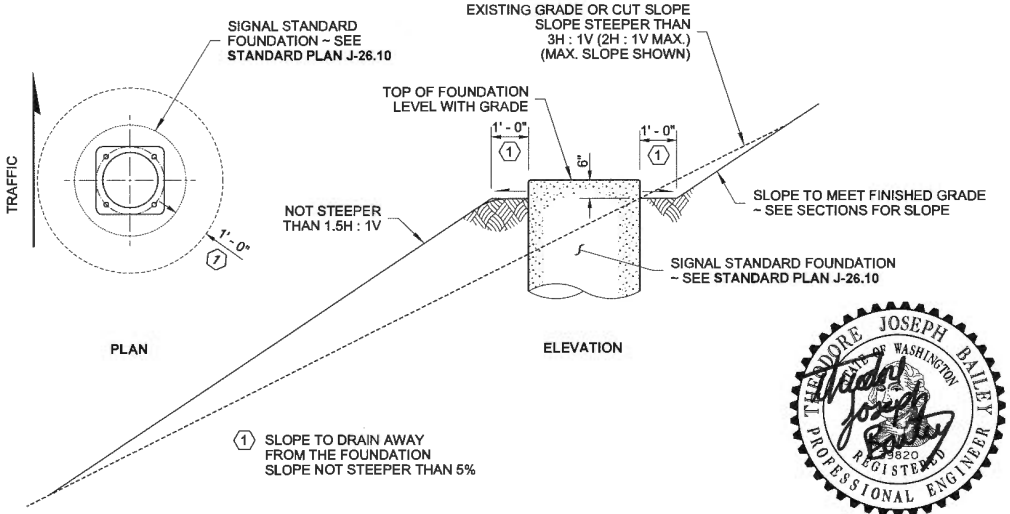

PLAN

ELEVATION

(1) SLOPE TO DRAIN AWAY FROM THE FOUNDATION SLOPE NOT STEEPER THAN 5%

EXISTING GRADE OR CUT SLOPE STEEPER THAN 3H : 1V (2H : 1V MAX.)
CASE H

THEODORE JOSEPH BAILEY
STATE OF WASHINGTON
20820
REGISTERED PROFESSIONAL ENGINEER

5/15/2012

SIGNAL STANDARD FOUNDATION PLACEMENTS

STANDARD PLAN J-26.15-01

SHEET 2 OF 3 SHEETS

APPROVED FOR PUBLICATION

STATE DESIGN ENGINEER — DATE 5/17/12

Washington State Department of Transportation

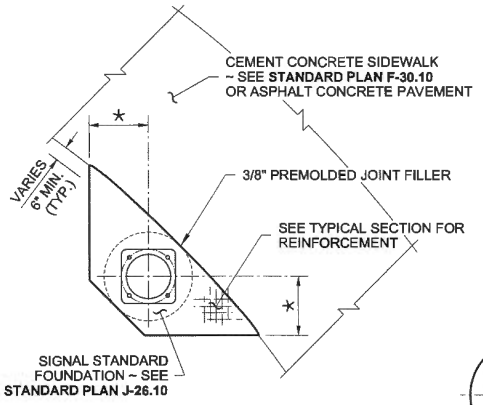

DUAL PEDESTRIAN PUSH BUTTON

NOTE

* = 2' - 0" FOR 3' - 0" DIAM. FOUNDATION
2' - 6" FOR 4' - 0" DIAM. FOUNDATION
2' - 6" FOR 3' - 0" SQUARE FOUNDATION

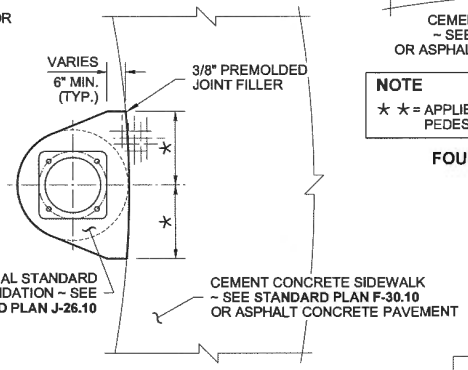

SINGLE PEDESTRIAN PUSH BUTTON

FOUNDATION OUTSIDE THE SIDEWALK SECTION

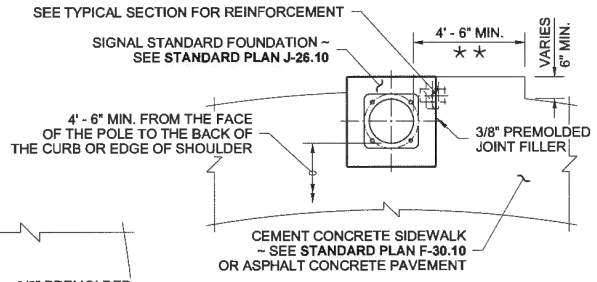

NOTE

* * = APPLIES TO THE SIDE OF THE FOUNDATION WHEN PEDESTRIAN PUSH BUTTON IS TO BE INSTALLED.

FOUNDATION PARTIALLY WITHIN SIDEWALK SECTION

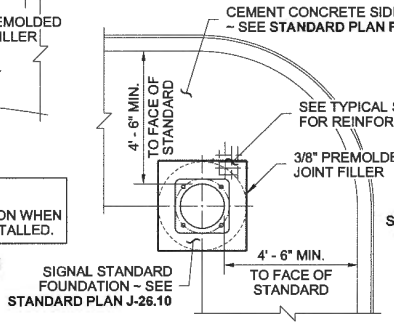

FOUNDATION PARTIALLY WITHIN SIDEWALK SECTION

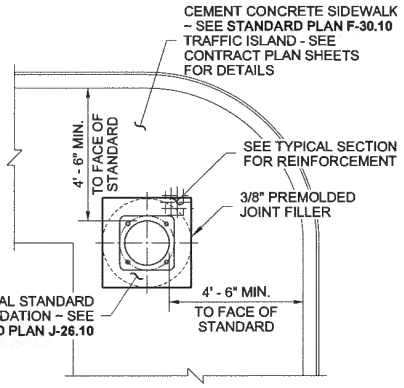

FOUNDATION WITHIN SIDEWALK OR TRAFFIC ISLAND SECTION

NOTE

REFER TO CONTRACT DOCUMENTS FOR PROJECT SPECIFIC INTERSECTION LAYOUTS & TRAFFIC ISLAND MATERIAL TYPE

DRAWN BY: LISA CYFORD

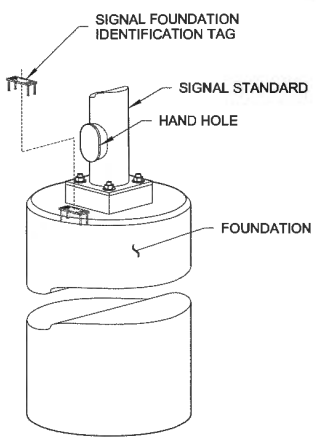

OBLIQUE VIEW

REINFORCING AND ANCHOR BOLTS NOT SHOWN FOR CLARITY (GROUT PAD OPTION SHOWN)

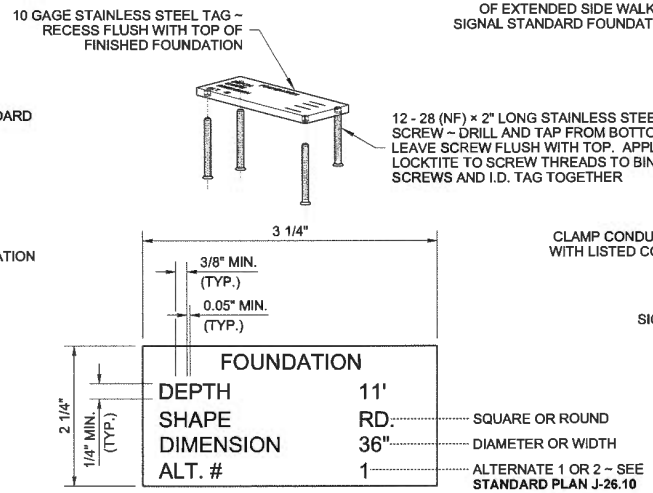

SIGNAL FOUNDATION IDENTIFICATION TAG DETAIL

TEXT SHALL BE ENGRAVED 0.014" DEEP

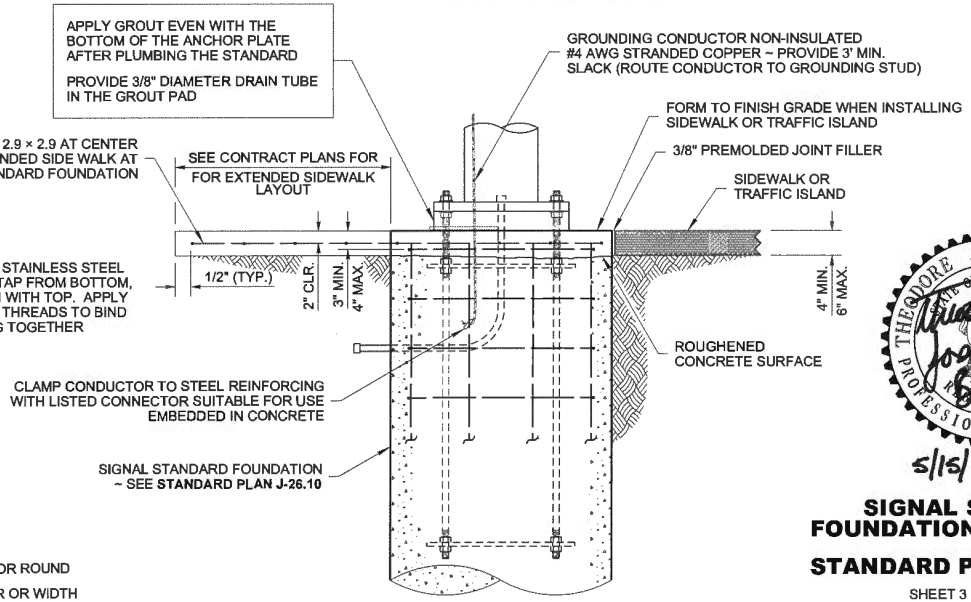

NOTE

FOUNDATION REINFORCING ONLY PARTIALLY SHOWN FOR CLARITY. ~ SEE STANDARD PLAN J-26.10 FOR DETAILS NOT SHOWN.

TYPICAL SECTION

5/15/2012

SIGNAL STANDARD FOUNDATION PLACEMENTS

STANDARD PLAN J-26.15-01

SHEET 3 OF 3 SHEETS

APPROVED FOR PUBLICATION

STATE DESIGN ENGINEER — DATE 5/17/12

Washington State Department of Transportation

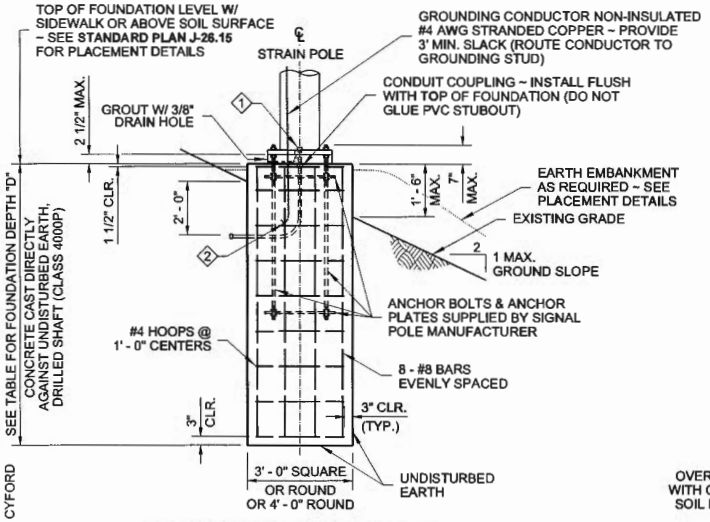

FOUNDATION REINFORCEMENT DETAIL

CONCRETE CAST DIRECTLY AGAINST UNDISTURBED EARTH, DRILLED SHAFT

ALTERNATE #1

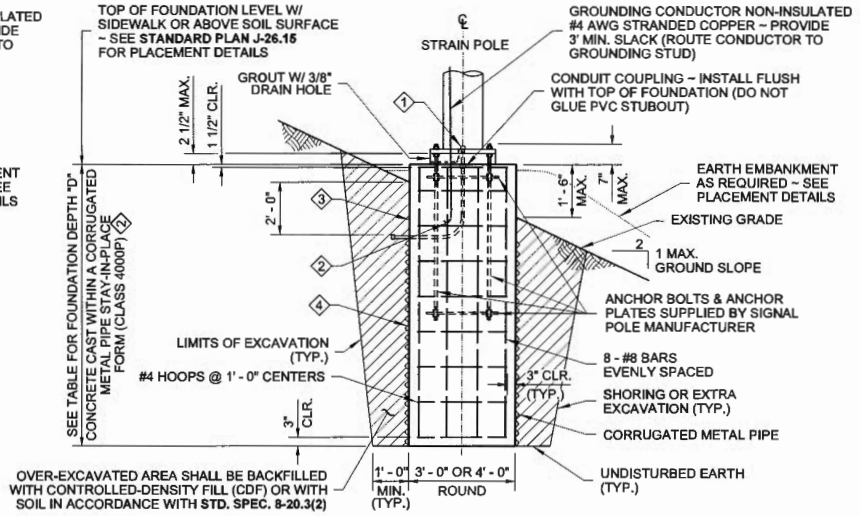

FOUNDATION REINFORCEMENT AND BACKFILL DETAIL

4 CONCRETE CAST WITHIN A CORRUGATED METAL PIPE STAY-IN-PLACE FORM

ALTERNATE #2

DRAWN BY: LISA CYFORD

1 CONDUIT SIZE AND QUANTITY AS SHOWN IN THE CONTRACT; CAP BOTH ENDS

2 CLAMP CONDUCTOR TO STEEL REINFORCING WITH LISTED CONNECTOR SUITABLE FOR USE EMBEDDED IN CONCRETE

3 PAPER OR CARDBOARD FORM SHALL NOT STAY-IN-PLACE

NOTES

1. This structure has been designed according to the Fifth Edition 2009 AASHTO Standard Specifications for Structural Supports for Highway Signs, Luminaires, and Traffic Signals: Basic wind velocity 90 mph, Design Life/Recurrence Interval 50 years, and Fatigue Category III.
2. Foundations are designed for Type IV and V Strain Pole Standards with a maximum mast arm length of 16' - 0".
3. Foundations not within the parameters of this standard require Special Design. Contact the WSDOT Bridge and Structures Office through the Engineer for Special Foundation Designs.
4. Foundations constructed within Ecology Embankments shall be increased in depth by the depth of the Ecology Embankment.
5. The top 2 feet of the foundation shall use a smooth form (such as paper or cardboard). After the concrete has cured, this entire form shall be removed.
6. See **Standard Plan J-27.15** for Strain Pole Standards Type IV and V details.
7. Install Signal Foundation Identification Tag. See **Standard Plan J-26.15** for details.

ALTERNATE # 1 DRILLED SHAFT-TYPE CONSTRUCTION - DEPTH "D"
FOR LATERAL BEARING PRESSURE = 2500 PSF & Ø = 34°, 1500 PSF & Ø = 28°, 1000 PSF & Ø = 26°

GROUND SLOPE = 3H : 1V OR FLATTER

ALLOWABLE LATERAL BEARING PRESSURE	FOUNDATION TYPE	POLE CLASS - RESULTANT HORIZONTAL TENSION (LBS)						
		1900	2700	3700	4800	5600	6300	7200
1000 PSF	3' - 0" ROUND	11' - 0"	13' - 0"	15' - 0"	16' - 0"	18' - 0"	19' - 0"	20' - 0"
	3' - 0" SQUARE	11' - 0"	13' - 0"	15' - 0"	16' - 0"	18' - 0"	19' - 0"	20' - 0"
	4' - 0" ROUND	10' - 0"	11' - 0"	13' - 0"	15' - 0"	15' - 0"	16' - 0"	18' - 0"
1500 PSF	3' - 0" ROUND	9' - 0"	11' - 0"	12' - 0"	14' - 0"	15' - 0"	15' - 0"	16' - 0"
	3' - 0" SQUARE	9' - 0"	11' - 0"	12' - 0"	14' - 0"	15' - 0"	15' - 0"	16' - 0"
	4' - 0" ROUND	8' - 0"	9' - 0"	10' - 0"	12' - 0"	13' - 0"	13' - 0"	14' - 0"
2500 PSF OR GREATER	3' - 0" ROUND	7' - 0"	8' - 0"	9' - 0"	10' - 0"	11' - 0"	12' - 0"	13' - 0"
	3' - 0" SQUARE	7' - 0"	8' - 0"	9' - 0"	10' - 0"	11' - 0"	12' - 0"	13' - 0"
	4' - 0" ROUND	6' - 0"	7' - 0"	8' - 0"	9' - 0"	10' - 0"	10' - 0"	11' - 0"

GROUND SLOPE = 3H : 1V TO 2H : 1V

ALLOWABLE LATERAL BEARING PRESSURE	FOUNDATION TYPE	POLE CLASS - RESULTANT HORIZONTAL TENSION (LBS)						
		1900	2700	3700	4800	5600	6300	7200
1000 PSF	3' - 0" ROUND	SPECIAL FOUNDATION TYPE						
	3' - 0" SQUARE	SPECIAL FOUNDATION TYPE						
	4' - 0" ROUND	SPECIAL FOUNDATION TYPE						
1500 PSF	3' - 0" ROUND	10' - 0"	12' - 0"	13' - 0"	15' - 0"	16' - 0"	16' - 0"	17' - 0"
	3' - 0" SQUARE	10' - 0"	12' - 0"	13' - 0"	15' - 0"	16' - 0"	16' - 0"	17' - 0"
	4' - 0" ROUND	9' - 0"	10' - 0"	11' - 0"	13' - 0"	14' - 0"	14' - 0"	15' - 0"
2500 PSF OR GREATER	3' - 0" ROUND	8' - 0"	9' - 0"	10' - 0"	11' - 0"	12' - 0"	13' - 0"	14' - 0"
	3' - 0" SQUARE	8' - 0"	9' - 0"	10' - 0"	11' - 0"	12' - 0"	13' - 0"	14' - 0"
	4' - 0" ROUND	7' - 0"	8' - 0"	9' - 0"	10' - 0"	11' - 0"	11' - 0"	12' - 0"

ALTERNATE # 2 CORRUGATED METAL PIPE TYPE CONSTRUCTION - DEPTH "D"
FOR LATERAL BEARING PRESSURE = 2500 PSF & Ø = 23°, 1500 PSF & Ø = 18°, 1000 PSF & Ø = 17°

GROUND SLOPE = 3H : 1V OR FLATTER

ALLOWABLE LATERAL BEARING PRESSURE	FOUNDATION TYPE	POLE CLASS - RESULTANT HORIZONTAL TENSION (LBS)						
		1900	2700	3700	4800	5600	6300	7200
1000 PSF	3' - 0" ROUND	11' - 0"	13' - 0"	15' - 0"	16' - 0"	18' - 0"	19' - 0"	20' - 0"
	4' - 0" ROUND	10' - 0"	11' - 0"	13' - 0"	15' - 0"	15' - 0"	16' - 0"	18' - 0"
1500 PSF	3' - 0" ROUND	9' - 0"	11' - 0"	12' - 0"	14' - 0"	15' - 0"	15' - 0"	16' - 0"
	4' - 0" ROUND	8' - 0"	9' - 0"	10' - 0"	12' - 0"	13' - 0"	13' - 0"	14' - 0"
2500 PSF OR GREATER	3' - 0" ROUND	7' - 0"	8' - 0"	9' - 0"	10' - 0"	11' - 0"	12' - 0"	13' - 0"
	4' - 0" ROUND	6' - 0"	7' - 0"	8' - 0"	9' - 0"	10' - 0"	10' - 0"	11' - 0"

GROUND SLOPE = 3H : 1V TO 2H : 1V

ALLOWABLE LATERAL BEARING PRESSURE	FOUNDATION TYPE	POLE CLASS - RESULTANT HORIZONTAL TENSION (LBS)						
		1900	2700	3700	4800	5600	6300	7200
1000 PSF	3' - 0" ROUND	SPECIAL FOUNDATION TYPE						
	4' - 0" ROUND	SPECIAL FOUNDATION TYPE						
1500 PSF	3' - 0" ROUND	10' - 0"	12' - 0"	13' - 0"	15' - 0"	16' - 0"	16' - 0"	17' - 0"
	4' - 0" ROUND	9' - 0"	10' - 0"	11' - 0"	13' - 0"	14' - 0"	14' - 0"	15' - 0"
2500 PSF OR GREATER	3' - 0" ROUND	8' - 0"	9' - 0"	10' - 0"	11' - 0"	12' - 0"	13' - 0"	14' - 0"
	4' - 0" ROUND	7' - 0"	8' - 0"	9' - 0"	10' - 0"	11' - 0"	11' - 0"	12' - 0"

ALTERNATE #2 - CONSTRUCTION METHOD
METAL (SUBSURFACE) FORM REQUIRED

When the existing soil will not retain a vertical face, over-excavate the foundation area and install a 36" or 48" diameter corrugated metal (pipe) form. The top of the corrugated metal form shall terminate 1 foot below final grade. Continue forming to full height using a paper or cardboard form to achieve a smooth finish on final exposed cement concrete. Support the form as necessary to remain plumb.

Place the concrete foundation.

After concrete has cured, remove the entire paper or cardboard form portion.

Backfill with controlled-density fill or compacted borrow in accordance with **Standard Specification 8-20.3(2).**

TYPE IV AND V STRAIN POLE FOUNDATION

STANDARD PLAN J-27.10-00

SHEET 1 OF 1 SHEET

APPROVED FOR PUBLICATION

STATE DESIGN ENGINEER — DATE 2/15/12

Washington State Department of Transportation

DRAWN BY: LISA CYFORD

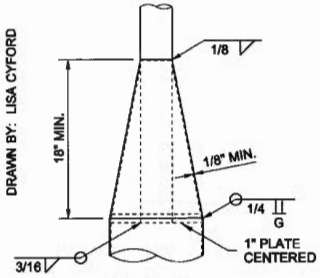

CONE SECTION DETAIL

STRAIN POLE DIMENSION CHART								
KEY	ITEM	POLE CLASS (Resultant Horizontal Tension)						
		1900 LB	2700 LB	3700 LB	4800 LB	5600 LB	6300 LB	7200 LB
	POLE GAGE OR THICKNESS *	3	3	1/4	5/16	5/16	5/16	5/16
A	BASE PLATE	15"	17"	19"	20"	20"	22"	22"
B	ANCHOR BOLT CIRCLE DIAM.	15"	17"	19"	20"	20"	22"	22"
C	POLE BASE DIAMETER *	11"	12 1/2"	14"	14"	15"	16"	17"
D	BASE PLATE THICKNESS *	1 1/2"	1 1/2"	1 1/2"	1 3/4"	1 3/4"	1 3/4"	1 3/4"
E	ANCHOR BOLT DIAMETER	1 1/4"	1 1/2"	1 1/2"	1 3/4"	1 3/4"	1 3/4"	1 3/4"

* MINIMUM REQUIRED DIMENSION - CONTRACTOR MAY REVISE WITH ENGINEER APPROVAL

NOTES

1. This structure has been designed according to the Fifth Edition 2009 AASHTO Standard Specifications for Structural Supports for Highway Signs, Luminaires, and Traffic Signals: Basic wind velocity 90 mph, Design Life/Recurrence Interval 50 years, and Fatigue Category III.
2. 2 1/2" diameter weatherhead may be substituted for the elbow and nipple assembly.
3. Pole shaft shall have 0.14" ft/taper.
4. See **Standard Plan J-15.15** for Span Wire Installation details.
5. Hand holes may be 6" × 4", oval or rectangle. Provide a "J" or "C" hook at 90° or 180° off upper hand hole.
6. See **Standard Plan J-27.10** for Type IV and V Strain Pole Foundation.

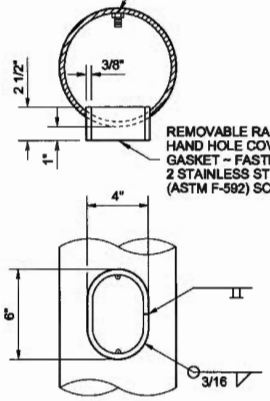

HAND HOLE DETAIL
(SEE NOTE 5)

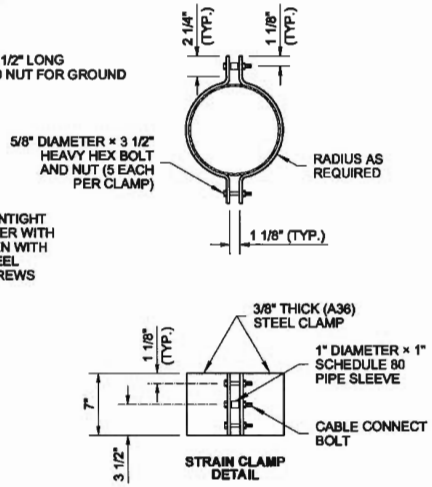

STRAIN CLAMP DETAIL

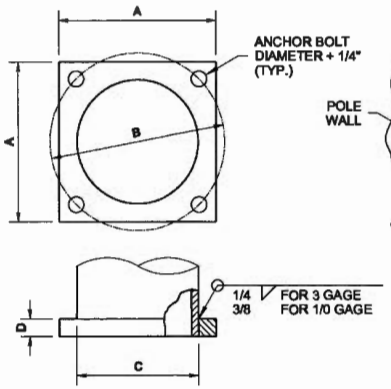

BASE PLATE DETAIL

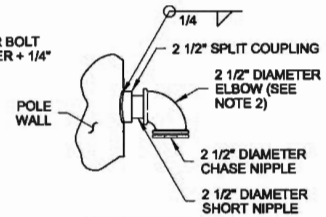

WIREWAY DETAIL

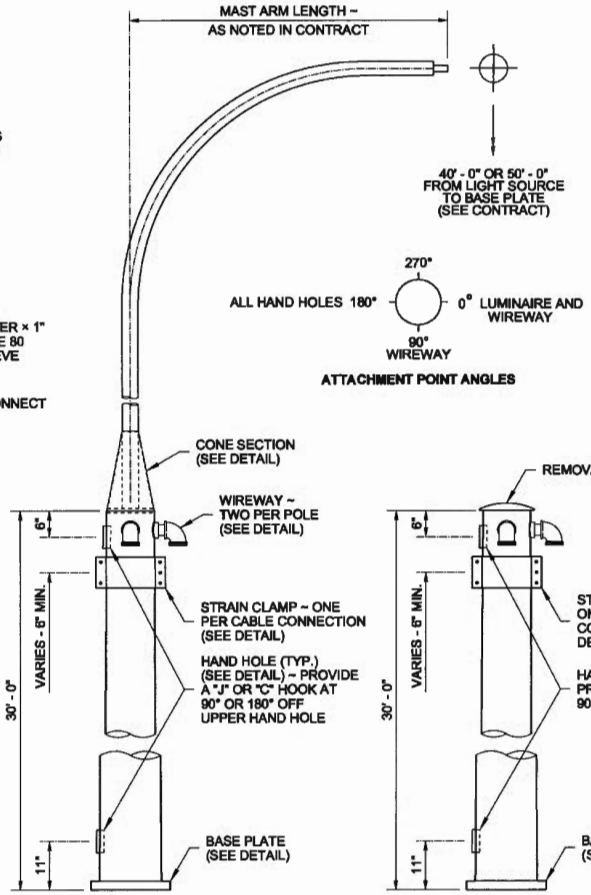

ATTACHMENT POINT ANGLES

TYPE V STANDARD

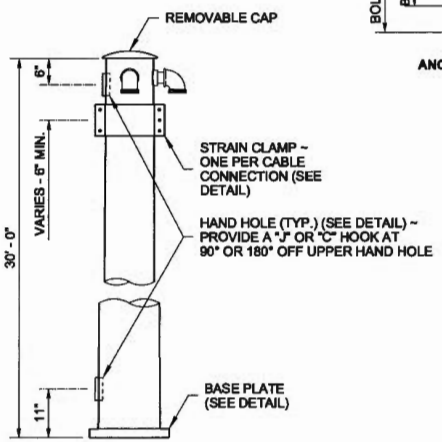

TYPE IV STANDARD

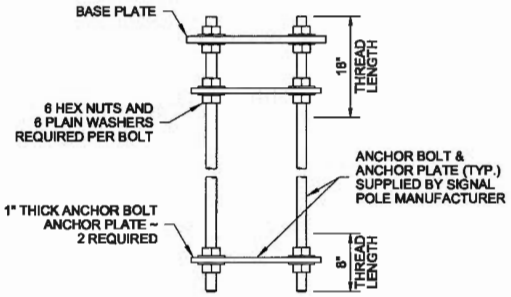

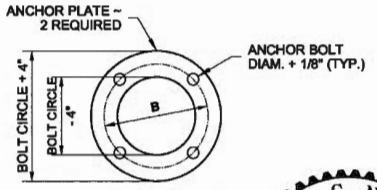

ANCHOR BOLT AND ANCHOR PLATE ASSEMBLY DETAIL

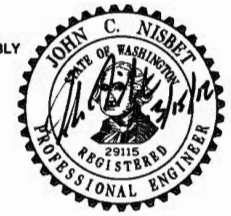

TYPE IV AND V STRAIN POLE STANDARD

STANDARD PLAN J-27.15-00

SHEET 1 OF 1 SHEET

APPROVED FOR PUBLICATION

STATE DESIGN ENGINEER — DATE 3/15/12

Washington State Department of Transportation

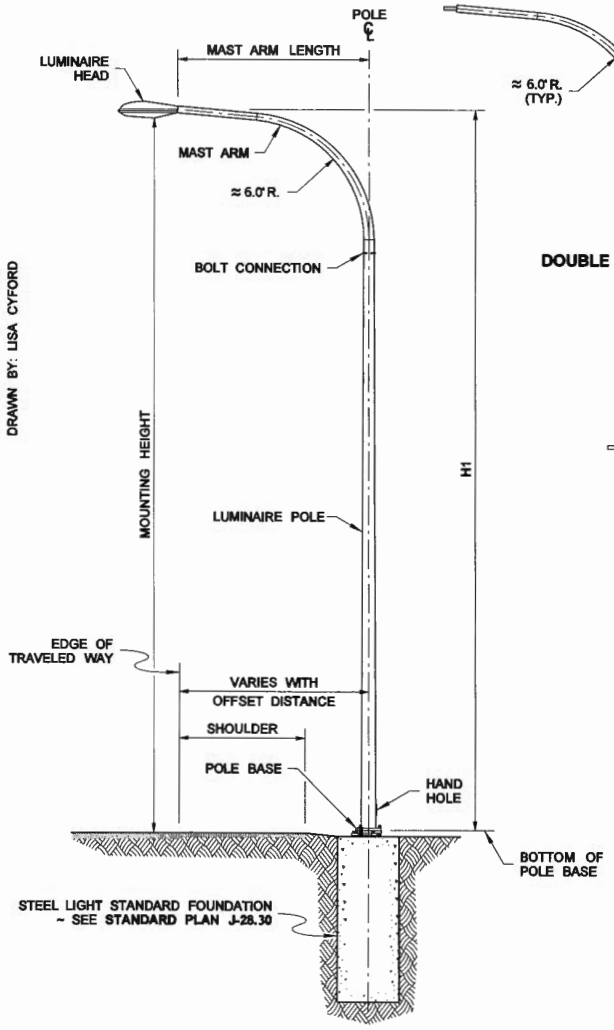

LIGHT STANDARD
WITH TYPE 1 (DAVIT) MAST ARM
(SLIP BASE SHOWN)

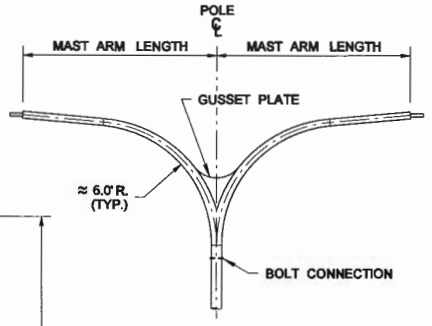

DOUBLE TYPE 1 MAST ARM

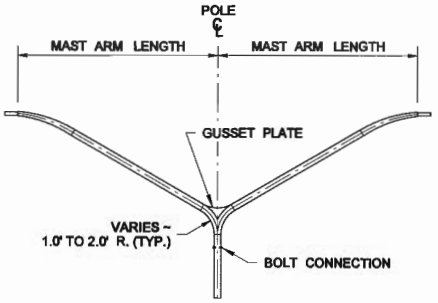

DOUBLE TYPE 2 MAST ARM

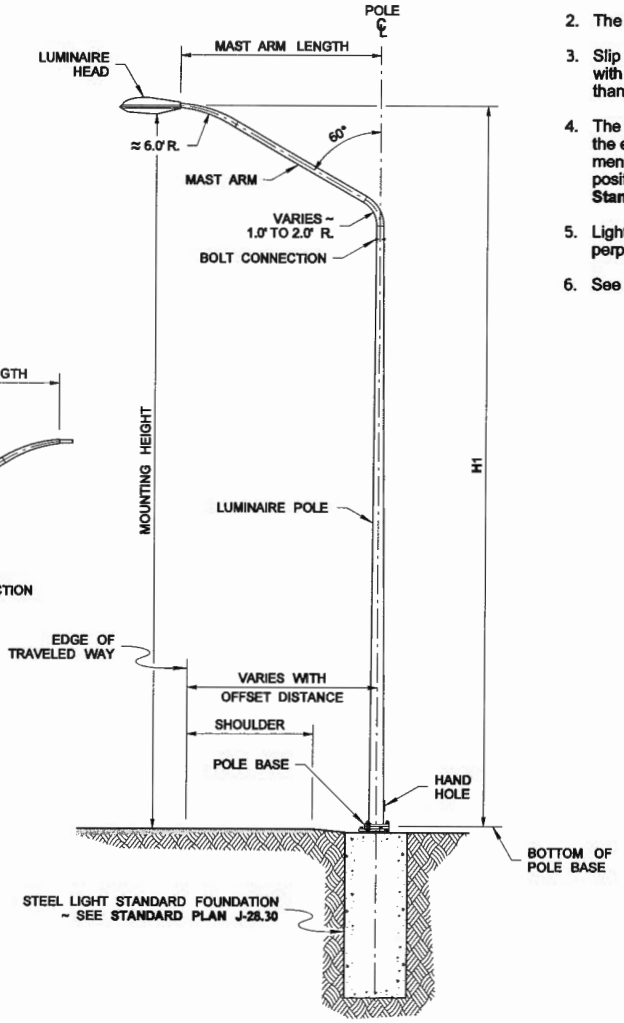

LIGHT STANDARD
WITH TYPE 2 (ELBOW) MAST ARM
(SLIP BASE SHOWN)

DRAWN BY: LISA CYFORD

NOTES

1. This plan depicts the Steel Light Standard types and terms commonly referred to in the Contract. All Steel Light Standards are fabricated in accordance with the Standard Specifications and the Contract Provisions.
2. The Luminaire Pole height shall not exceed 50' (**H1**).
3. Slip Bases shall not be installed on 50' (**H1**) poles with Double Mast Arms, nor on poles weighing more than 1000 lbs.
4. The optimal location of the Luminaire head is over the edge of the traveled way. Based on the placement of the Steel Light Standard foundation, the position of the Luminaire head may vary. See **Standard Plan J-28.22.**
5. Light Standard mast arm orientation is typically perpendicular to roadway centerline.
6. See **Standard Plan J-28.50** for Hand Hole details.

STEEL LIGHT STANDARD

STANDARD PLAN J-28.10-01

SHEET 1 OF 2 SHEETS

APPROVED FOR PUBLICATION

STATE DESIGN ENGINEER — DATE 5/10/11

Washington State Department of Transportation

DRAWN BY: LISA CYFORD

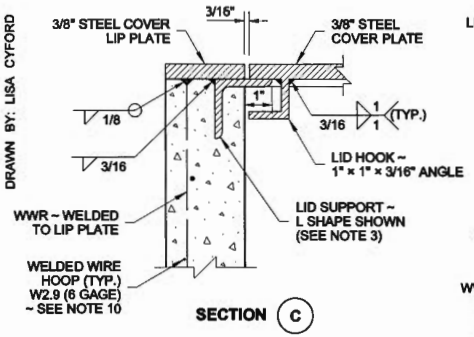

SECTION (C)

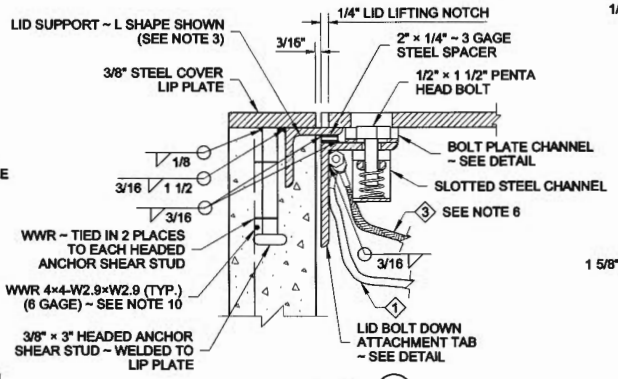

DETAIL (E)
ALTERNATIVE 1 SHOWN

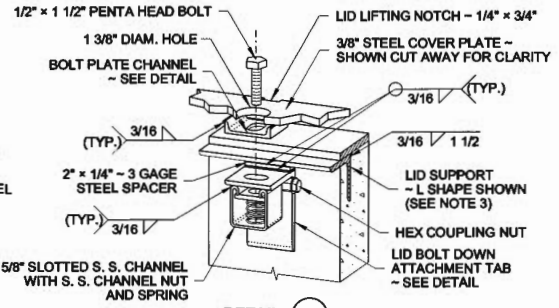

DETAIL (F)
ALTERNATIVE 1 SHOWN
PERSPECTIVE VIEW

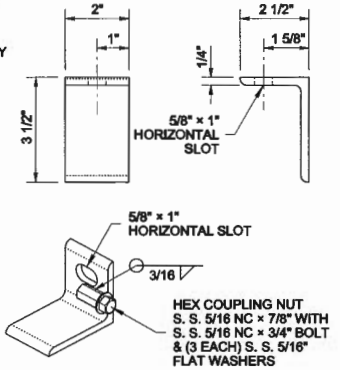

ALTERNATIVE 1
LID BOLT DOWN ATTACHMENT TAB
(SEE NOTE 12)

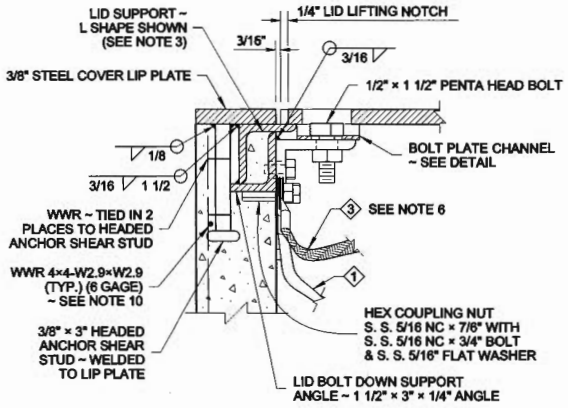

DETAIL (E)
ALTERNATIVE 2 SHOWN

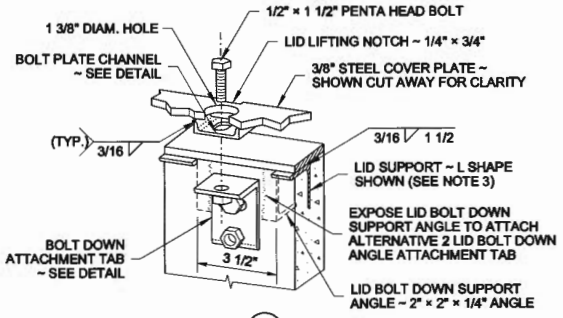

DETAIL (F)
ALTERNATIVE 2 SHOWN
PERSPECTIVE VIEW

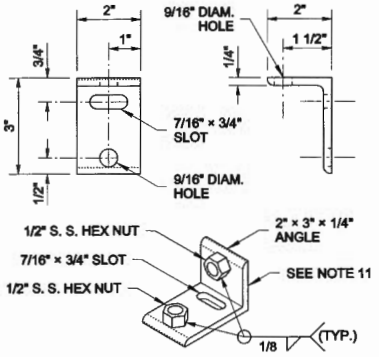

ALTERNATIVE 2
LID BOLT DOWN ATTACHMENT TAB
(SEE NOTE 12)

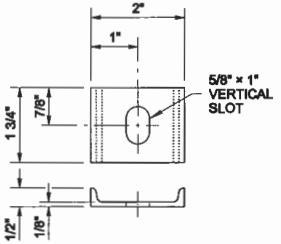

BOLT PLATE CHANNEL

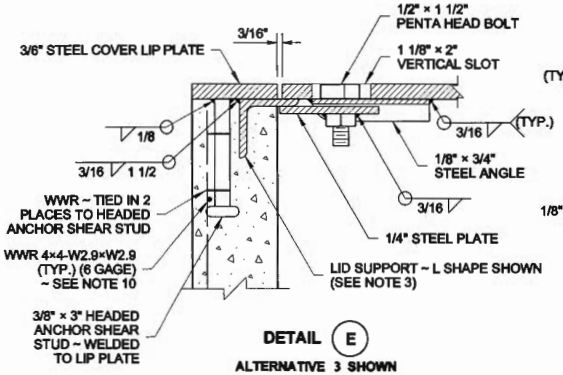

DETAIL (E)
ALTERNATIVE 3 SHOWN

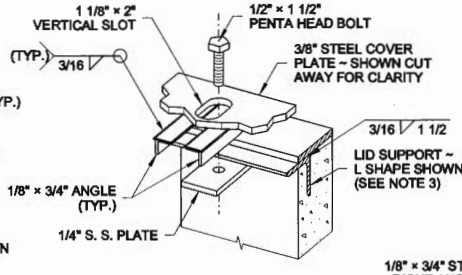

DETAIL (F)
ALTERNATIVE 3 SHOWN
PERSPECTIVE VIEW

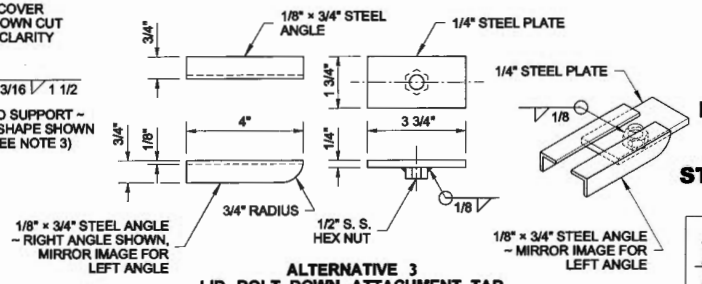

ALTERNATIVE 3
LID BOLT DOWN ATTACHMENT TAB
(SEE NOTE 12)

LOCKING LID STANDARD DUTY JUNCTION BOX TYPES 1 & 2

STANDARD PLAN J-40.10-02

SHEET 2 OF 2 SHEETS

APPROVED FOR PUBLICATION

STATE DESIGN ENGINEER — DATE 5/9/11

Washington State Department of Transportation

DRAWN BY: LISA CYFORD

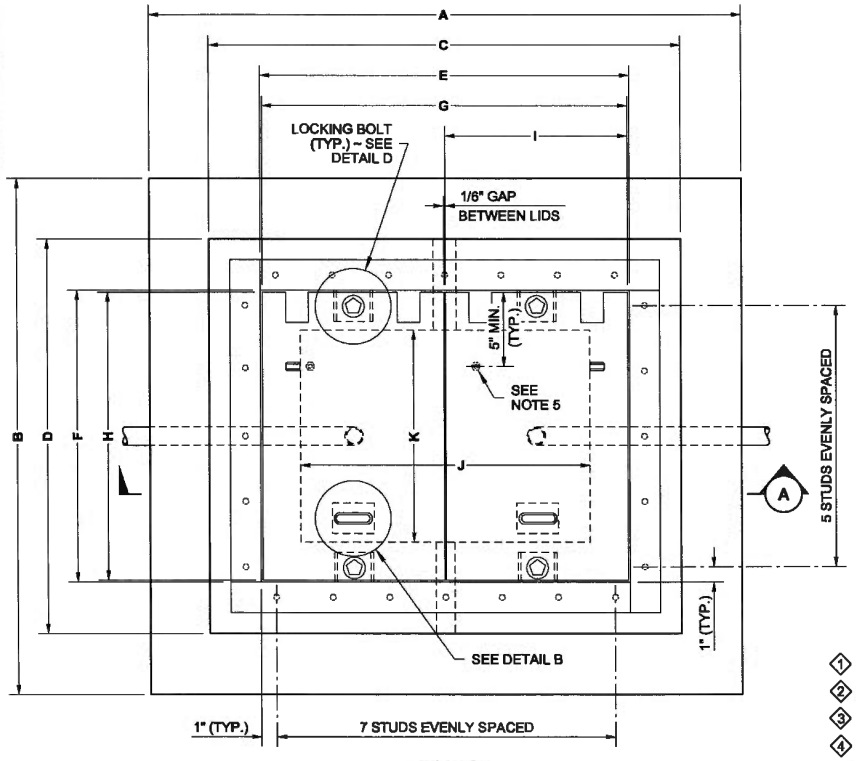

TOP VIEW

JUNCTION BOX DIMENSION TABLE				
MARK	ITEM	BOX TYPE		
		TYPE 4	TYPE 5	TYPE 6
A	OVERALL LENGTH	39"	48 7/16"	56"
B	OVERALL WIDTH	34"	37 7/16"	44"
C	JUNCTION BOX LENGTH	31"	40 7/16"	48"
D	JUNCTION BOX WIDTH	26"	29 7/16"	36"
E	LID OPENING LENGTH	24"	33 1/4"	41 1/8"
F	LID OPENING WIDTH	19"	22 1/4"	29 1/4"
G	TYPE 4 LID LENGTH	24"	——	——
H	TYPE 4, 5 & 6 LID WIDTH	19"	22"	29"
I	TYPE 5 & 6 LID LENGTH	——	16 7/16"	20 3/8"
J	INSIDE BOX LENGTH	19"	28 7/16"	36"
K	INSIDE BOX WIDTH	14"	17 7/16"	24"
X	STIFFENER SPACING	VARIES	VARIES	VARIES
Y	STIFFENER SPACING	VARIES	VARIES	VARIES
Z	STIFFENER LENGTH	18 1/4"	20 1/4"	28 1/8"
CAPACITY ~ CONDUIT DIAM.		6"	12"	24"

1. Equipment Grounding Conductor
2. Copper Solderless Crimp Connector
3. Equipment Bonding Jumper ~ see note 8
4. See Contract Plans and Special Provisions for conduit size and number

NOTES

1. All box dimensions are approximate. Exact configurations vary among manufacturers.
2. All lid thicknesses are minimum. The diamond pattern shall be 3/32" minimum thickness.
3. Lid stiffener plates shall bear on frame. Mill to bearing seat and perimeter bar for full even contact after fabrication of frame and lid. Lid and frame units with uneven bearing will be rejected.
4. The installed lid and frame shall fit with full even contact around the perimeter of a junction box after installation. Care shall be taken to prevent debris accumulation on the contact surfaces.
5. A 1/4-20 NC × 3/4" S. S. ground stud shall be welded to the bottom of each lid: include (2) each S. S. nuts and (2) each S. S. flat washers.
6. The hinges shall allow the lids to open 180°.
7. Bolts and nuts shall be liberally coated with anti-seize compound.
8. Connect Equipment Bonding Jumper to ground stud on lid. As an alternative to ground stud connection, the Equipment Bonding Jumper shall be attached to the front face of the hinge pocket with a 5/16-20 NC × 3/4" S. S. bolt, (2) each S. S. nuts, and (2) each S. S. flat washers. Equipment bonding jumper shall be #8 AWG min. × 4' of tinned braided copper.
9. The System Identification letters shall be 1/8" line thickness formed by engraving, stamping, or with a S. S. weld bead. See Cover Marking details. Grind off diamond pattern before forming letters. See **Standard Specification 9-29.2(4)** for details.
10. See **Standard Specification 9-29.2(1)B** for class of concrete.
11. Unless otherwise noted in the plans or approved by the Engineer, Junction Boxes, Cable Vaults, and Pull Boxes shall not be placed within the traveled way or paved shoulders. All Junction Boxes, Cable Vaults, and Pull Boxes placed within the traveled way or paved shoulders shall be Heavy-Duty. Heavy-Duty Junction Boxes shall not be installed in sidewalks, walkways, and shared use paths.
12. Distance between the top of the conduit and the bottom of the Junction Box lid shall be 6" min. to 8" max. for final grade of new construction only. See **Standard Specification 8-20.3(5)**. Where adjustments are to be made to existing Junction Boxes, or for interim construction stages during the contract, the limits shall be from 6" min. to 10" max. See **Standard Specification 8-20.3(6)**.

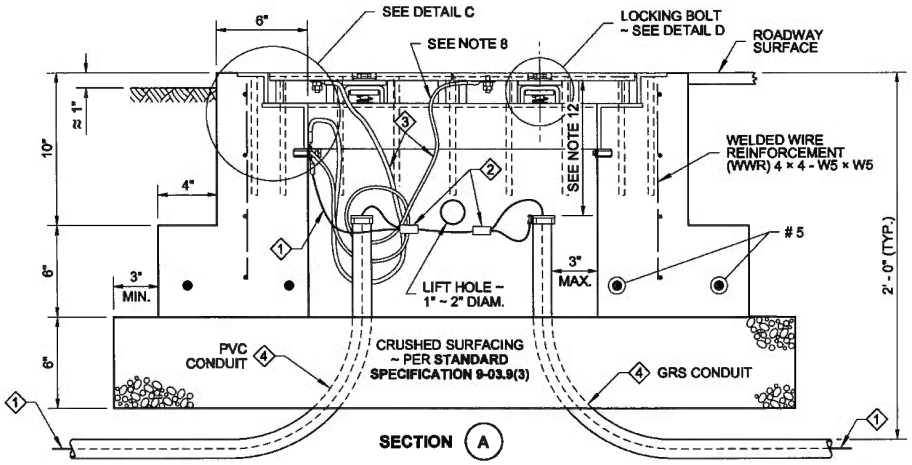

SECTION (A)

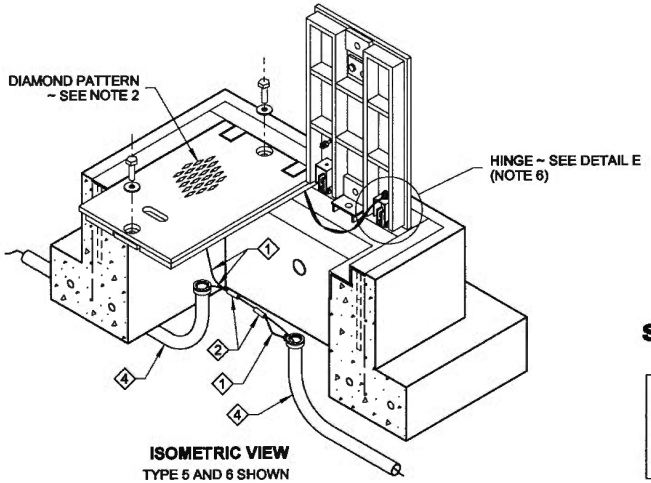

ISOMETRIC VIEW
TYPE 5 AND 6 SHOWN

BRIAN J. WALSH
STATE OF WASHINGTON
36103
REGISTERED
PROFESSIONAL ENGINEER
5/1/2012

HEAVY-DUTY JUNCTION BOX TYPES 4, 5, & 6

STANDARD PLAN J-40.20-01

SHEET 1 OF 2 SHEETS

APPROVED FOR PUBLICATION
STATE DESIGN ENGINEER — DATE 5/17/12
Washington State Department of Transportation

DRAWN BY: LISA CYFORD

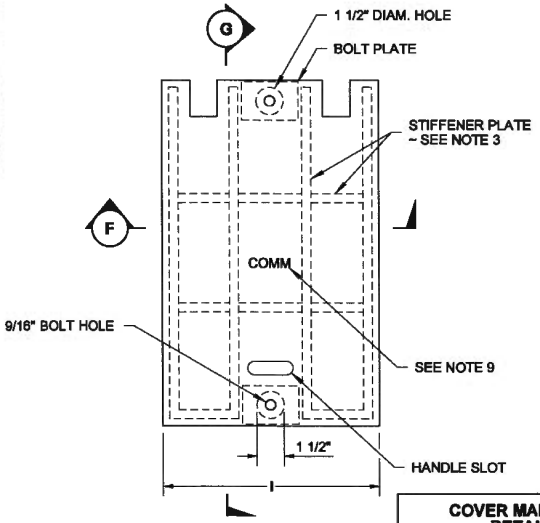

PLAN VIEW
LID

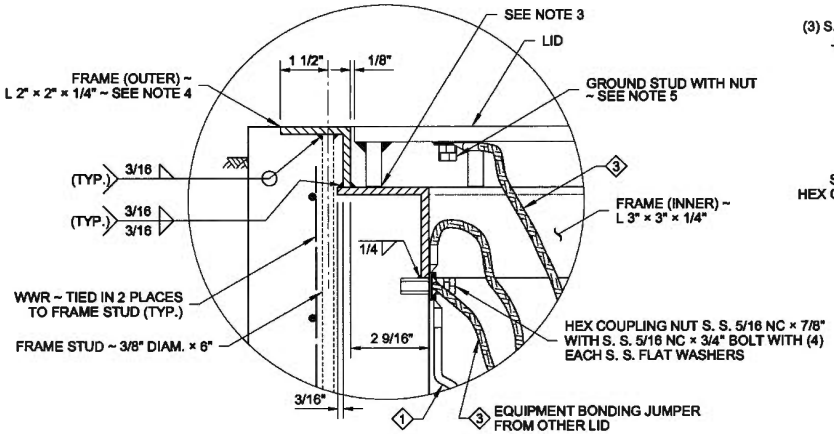

DETAIL C

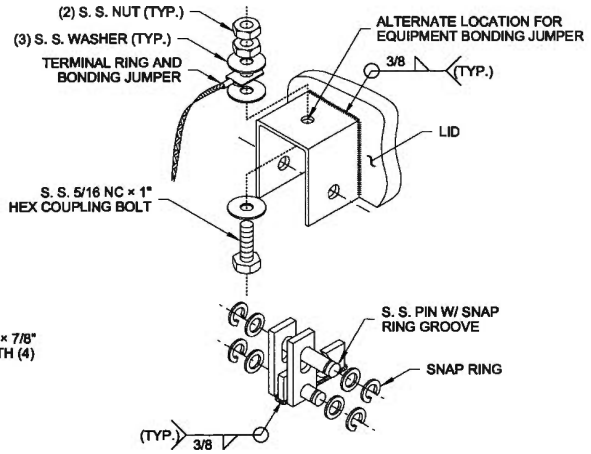

DETAIL E
HINGE

COVER MARKING DETAIL

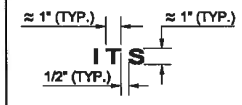

SEE NOTE 9

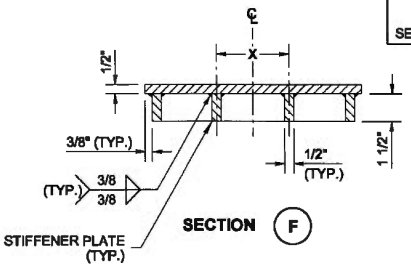

SECTION F

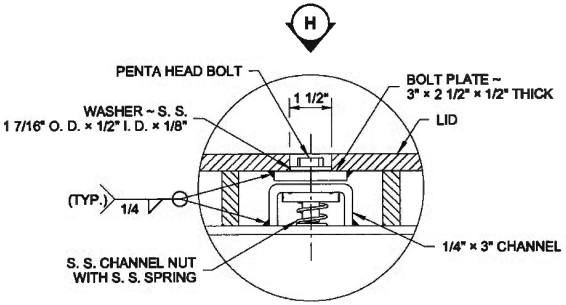

DETAIL D
LOCKING BOLT

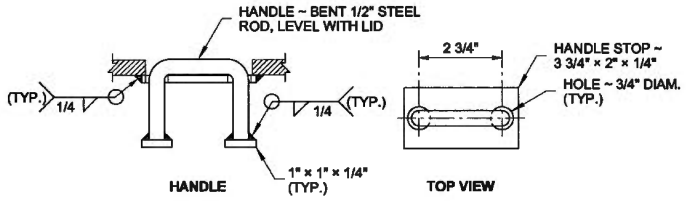

DETAIL B

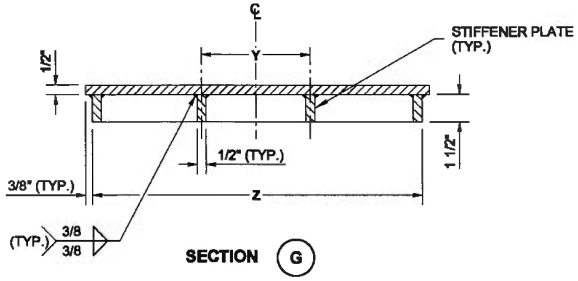

SECTION G

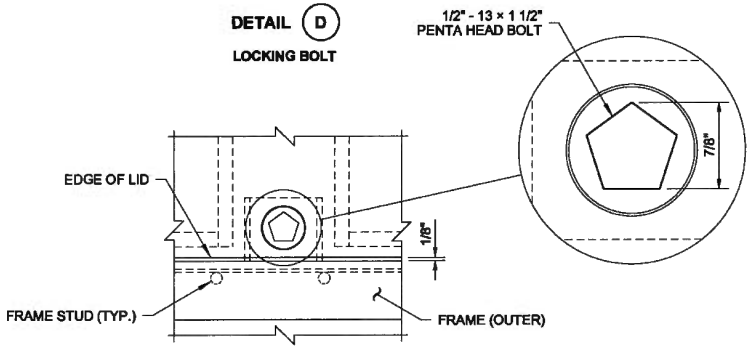

VIEW H

HEAVY-DUTY JUNCTION BOX TYPES 4, 5, & 6

STANDARD PLAN J-40.20-01

SHEET 2 OF 2 SHEETS

APPROVED FOR PUBLICATION

STATE DESIGN ENGINEER — DATE 5/17/12

Washington State Department of Transportation

DRAWN BY: LISA CYFORD

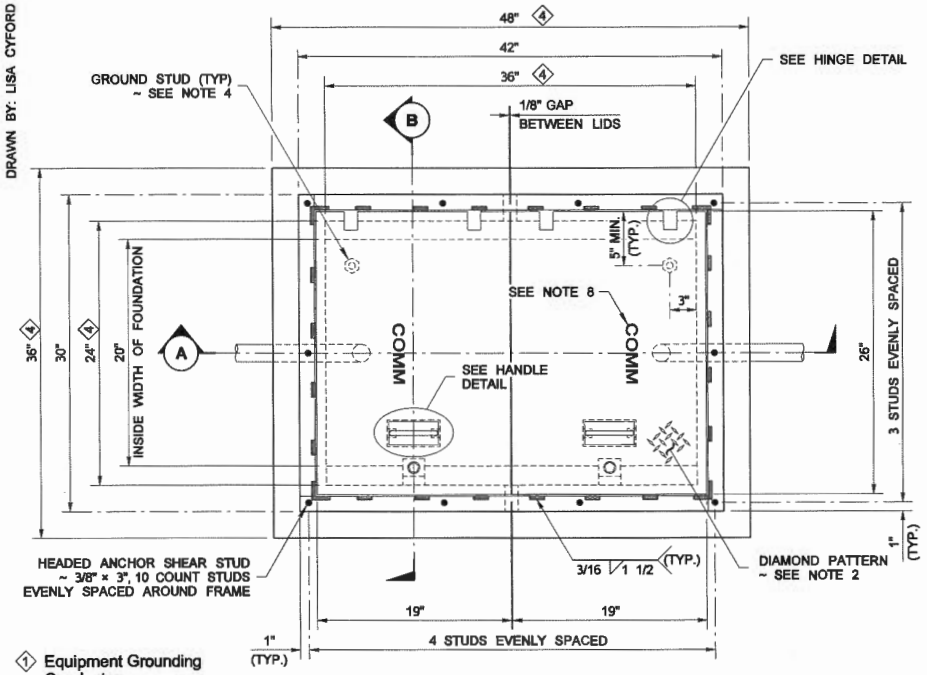

① Equipment Grounding Conductor

② Copper Solderless Crimp Connector

③ Equipment Bonding Jumper

④ Foundation

⑤ See Contract Plan for conduit size and number

PLAN VIEW

LOCKING LID STANDARD DUTY JUNCTION BOX

CONDUITS NOT SHOWN

COVER MARKING DETAIL

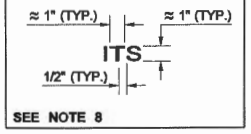

NOTES

1. All box dimensions are approximate. Exact configurations vary among manufacturers.
2. Minimum lid thicknesses are shown. The diamond pattern shall be a minimum of 28% of the overall thickness. Junction Boxes installed in sidewalks, walkways, and shared-use paths shall have a slip-resistant coating on the lid and lip cover plate and shall be installed with the surface flush with and matched to the grade of the sidewalk, walkway, or shared-use path. The non-slip lid shall be identified with permanent markings on the underside, indicating the type of surface treatment (see Contract Documents for details) and the year of manufacture. The permanent marking shall be 1/8" inch line thickness formed with a stainless steel weld bead and shall be placed prior to hot-dip galvanizing.
3. Lid support members shall be 3/16" min. thick steel C, L, or T shape, welded to the frame. Exact configurations vary among manufacturers.
4. A 1/4-20 NC × 3/4" S. S. ground stud shall be welded to the bottom of each lid; include (2) S. S. nuts and (2) S. S. flat washers.
5. The hinges shall allow the lids to open 180°.
6. Bolts and nuts shall be liberally coated with anti-seize compound.
7. Connect Equipment Bonding Jumper to ground stud on lid. As an alternative to the ground stud connection, the Equipment Bonding Jumper shall be attached to the front face of the hinge pocket with a 5/16-20 NC × 3/4" S. S. bolt, (2) each S. S. nuts, and (2) each S. S. flat washers. Equipment Bonding Jumper shall be #8 AWG min. × 4' of tinned braided copper.
8. The System Identification letters shall be 1/8" line thickness formed by engraving, stamping, or with a S. S. weld bead. See Cover Marking detail. Grind off diamond pattern before forming letters. See **Standard Specification 9-29.2(4)** for details.
9. See the Standard Specifications for alternative reinforcement and class of concrete.
10. See **Standard Plan J-40.10** for Welded Wire Reinforcement and Headed Anchor Shear Stud attachment details.
11. Capacity ~ conduit diameter = 24"
12. Lid Bolt Down Attachment Tab provides a method of retrofitting by using a mechanical process in lieu of welding. Attachment Tab shown depicts a typical component arrangement; actual configurations of assembly will vary among manufacturers. See approved manufacturers' shop drawing for specifics.
13. Unless otherwise noted in the plans or approved by the Engineer, Junction Boxes, Cable Vaults and Pull Boxes shall not be placed within the traveled way or paved shoulders. All Junction Boxes, Cable Vaults, and Pull Boxes placed within the traveled way or paved shoulders shall be Heavy-Duty.
14. Distance between the top of the conduit and the bottom of the Junction Box lid shall be 6" min. to 8" max. for final grade of new construction only. See **Standard Specification 8-20.3(5)**. Where adjustments are to be made to existing Junction Boxes, or for interim construction stages during the contract, the limits shall be from 6" min. to 10" max. See **Standard Specification 8-20.3(6)**.

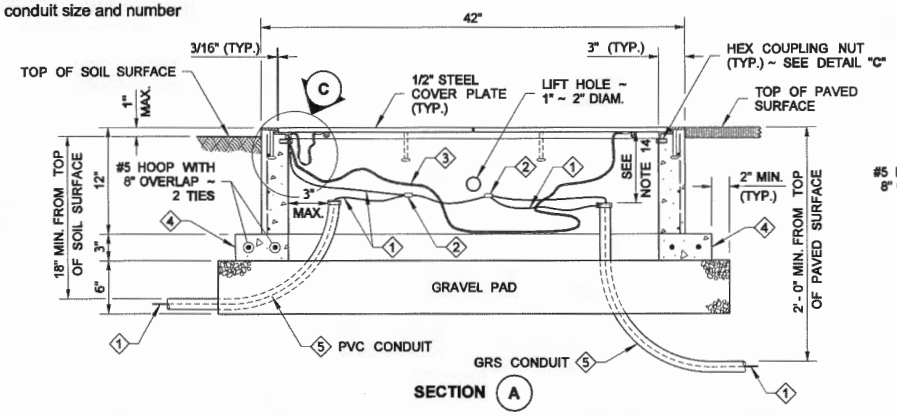

SECTION (A)

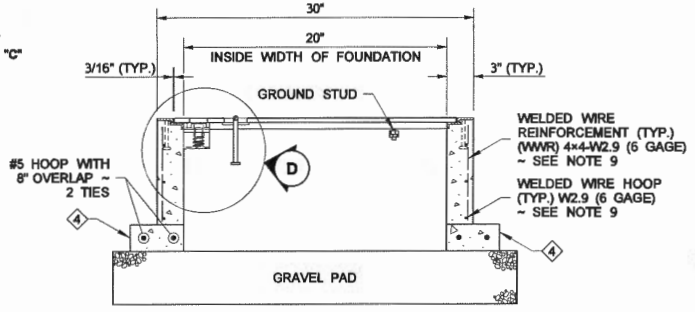

SECTION (B)

CONDUITS NOT SHOWN

LOCKING LID STANDARD DUTY JUNCTION BOX TYPE 8

STANDARD PLAN J-40.30-02

SHEET 1 OF 2 SHEETS

APPROVED FOR PUBLICATION

STATE DESIGN ENGINEER — DATE

Washington State Department of Transportation

DRAWN BY: LISA CYFORD

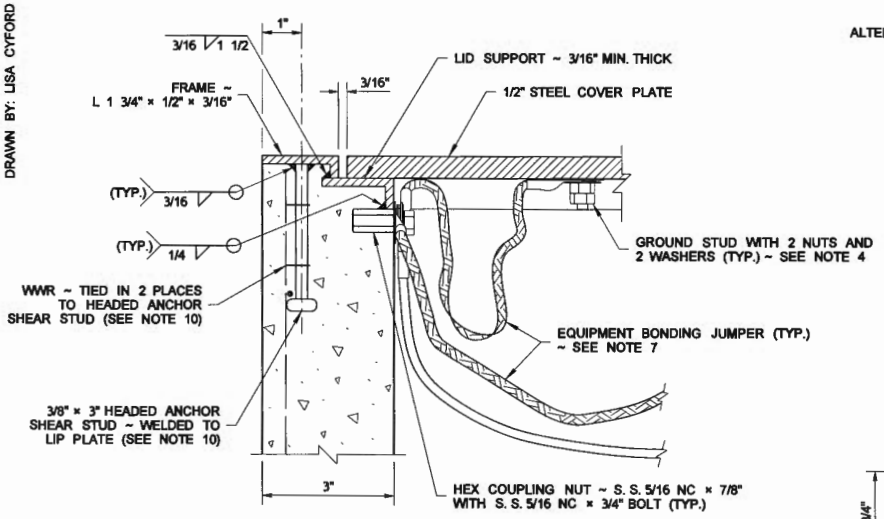

DETAIL C

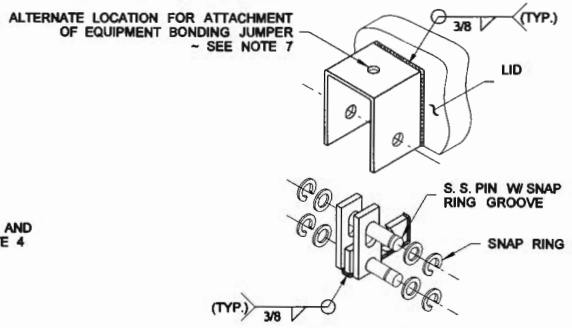

HINGE DETAIL

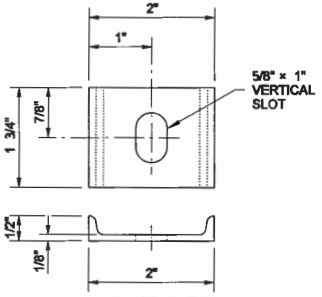

BOLT PLATE CHANNEL

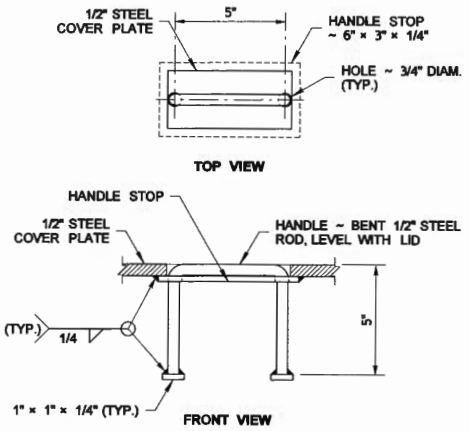

HANDLE DETAIL

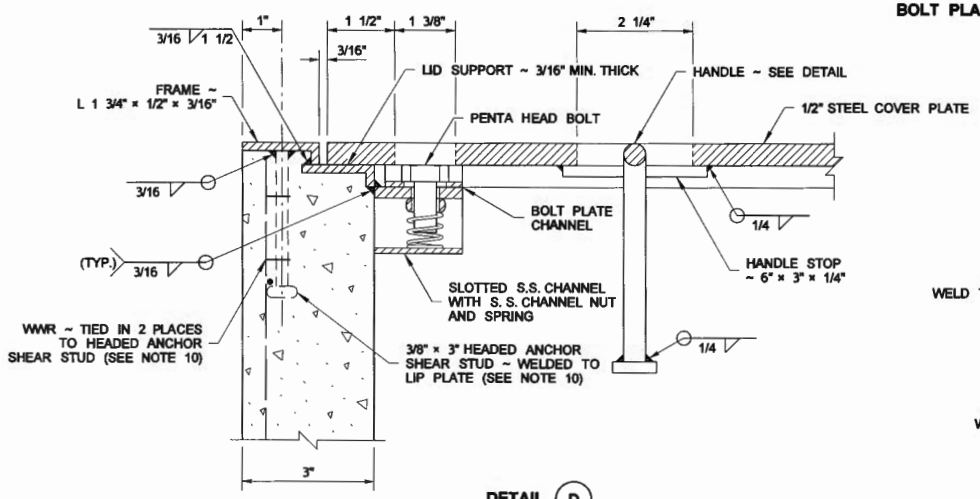

DETAIL D

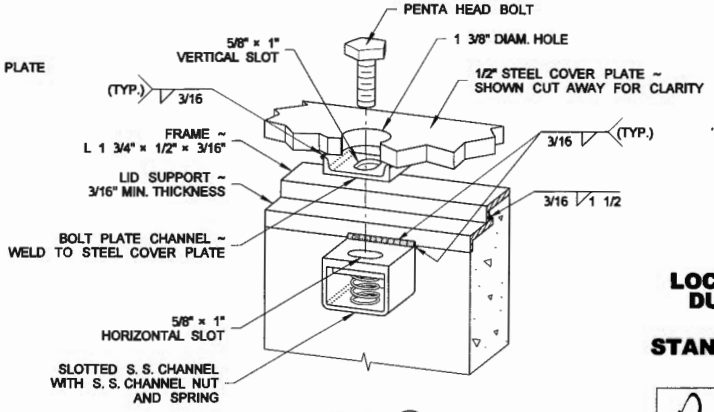

DETAIL D
ISOMETRIC VIEW

LOCKING LID STANDARD DUTY JUNCTION BOX TYPE 8

STANDARD PLAN J-40.30-02

SHEET 2 OF 2 SHEETS

APPROVED FOR PUBLICATION

STATE DESIGN ENGINEER — DATE 5/11/11

Washington State Department of Transportation

DRAWN BY: LISA CYFORD

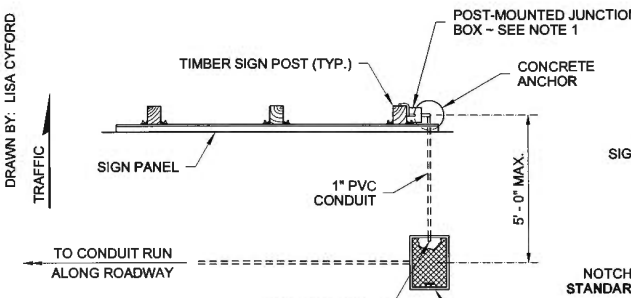

PLAN

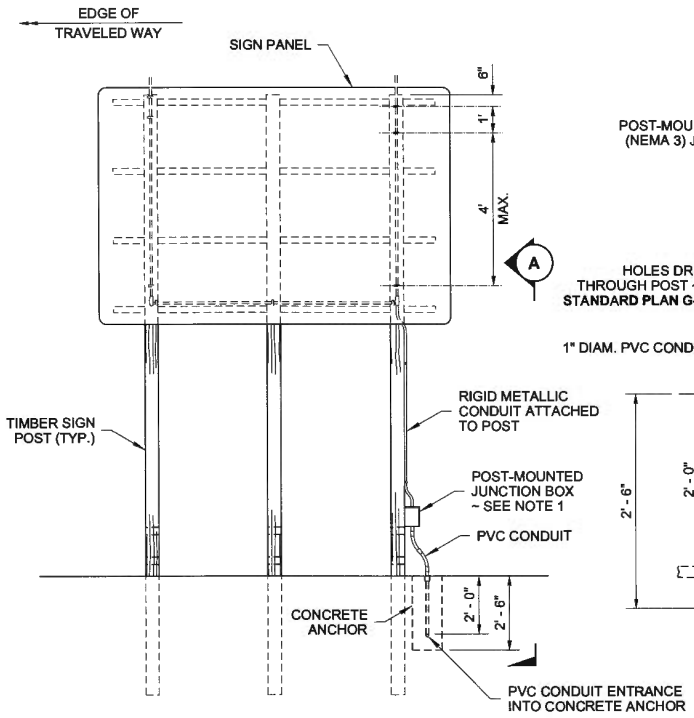

ELEVATION

JUNCTION BOX ATTACHMENT TO TIMBER SIGN SUPPORT

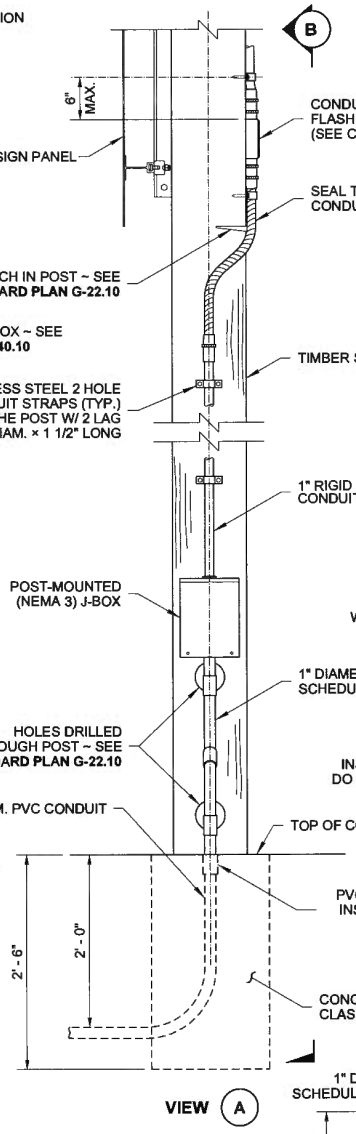

VIEW A

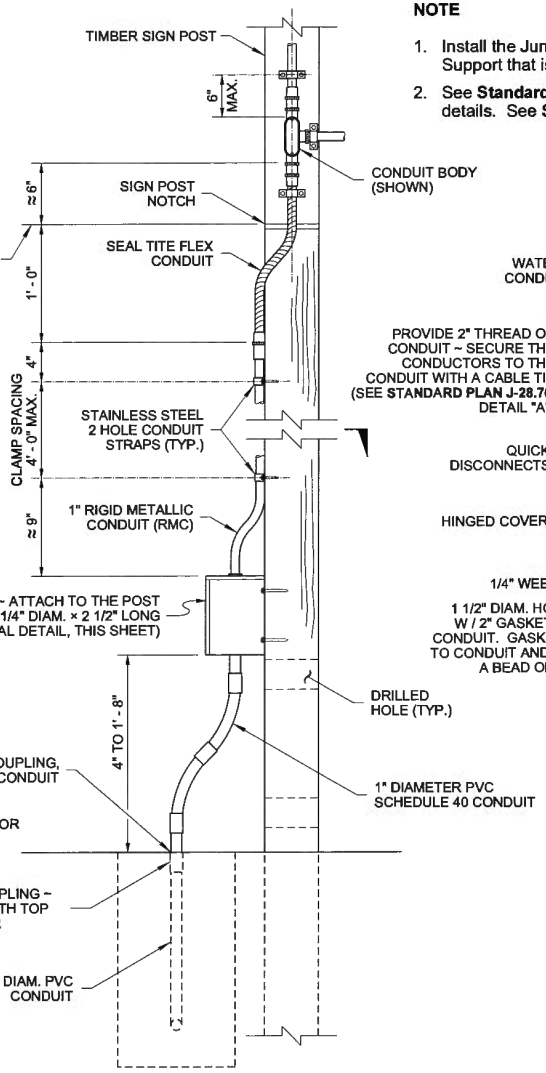

VIEW B

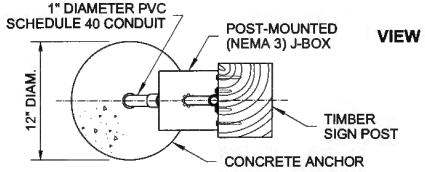

SECTION C

NOTE

1. Install the Junction Box on the Timber Sign Post or the Steel Sign Support that is farthest from the roadway.
2. See **Standard Plan J-21.16** for Flashing Beacon Installation details. See **Standard Plan J-21.17** for Electrical Wiring details.

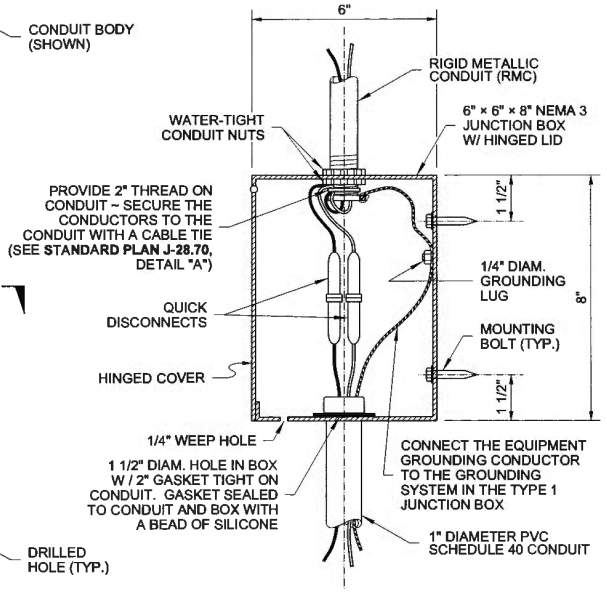

JUNCTION BOX INTERNAL DETAIL

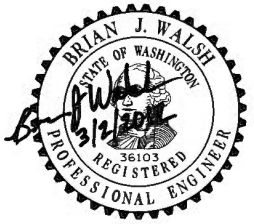

SIGN POST-MOUNTED JUNCTION BOX

STANDARD PLAN J-40.35-00

SHEET 1 OF 3 SHEETS

APPROVED FOR PUBLICATION

STATE DESIGN ENGINEER — DATE 3/15/12

Washington State Department of Transportation

DRAWN BY: LISA CYFORD

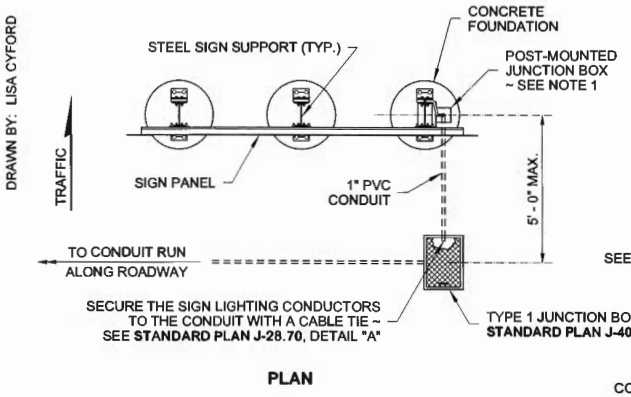

PLAN

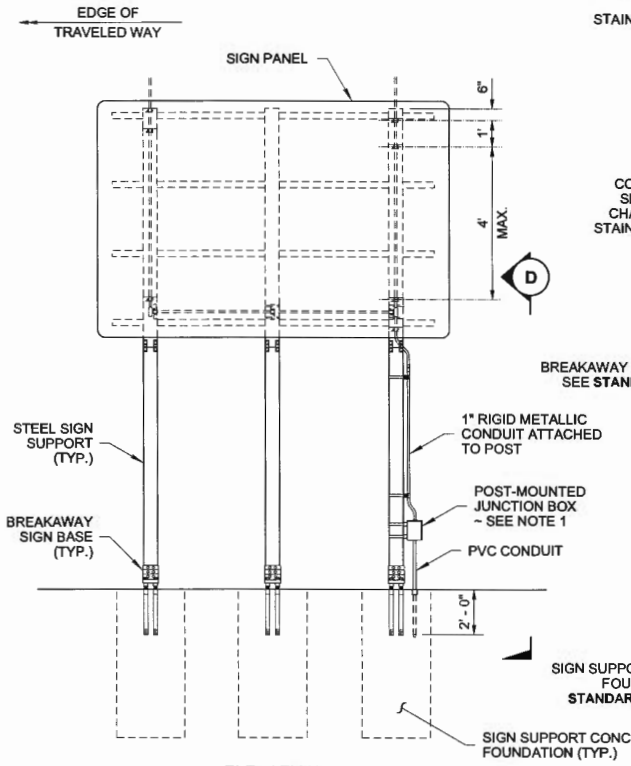

ELEVATION

JUNCTION BOX ATTACHMENT TO STEEL SIGN SUPPORT

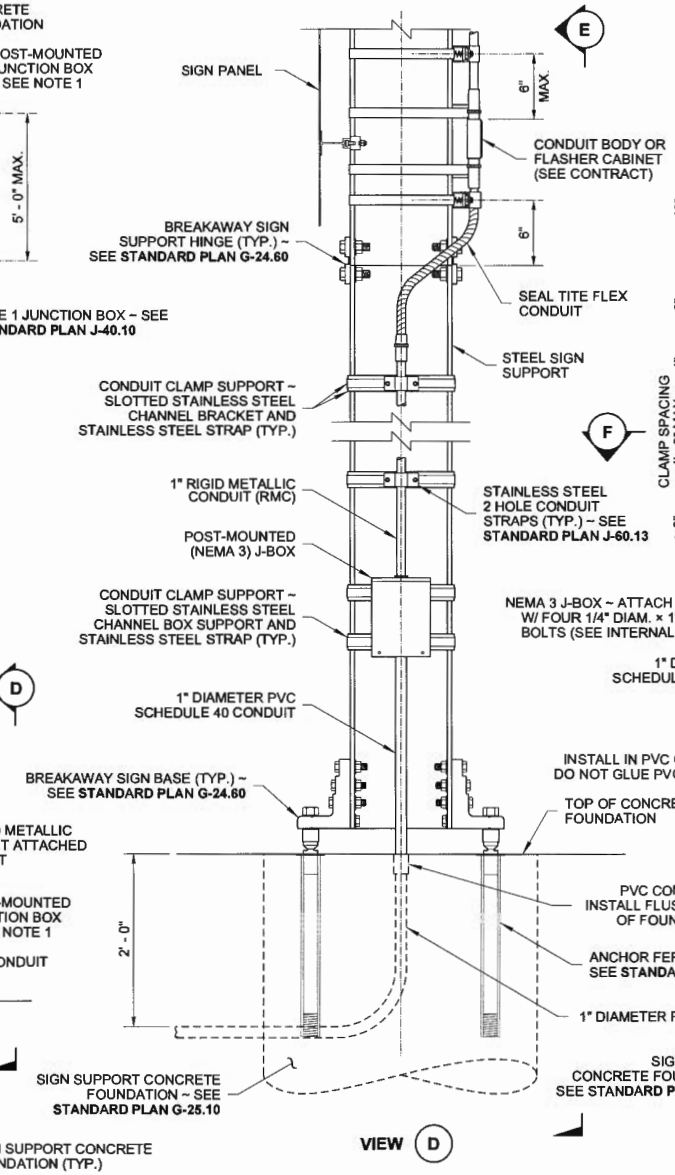

VIEW D

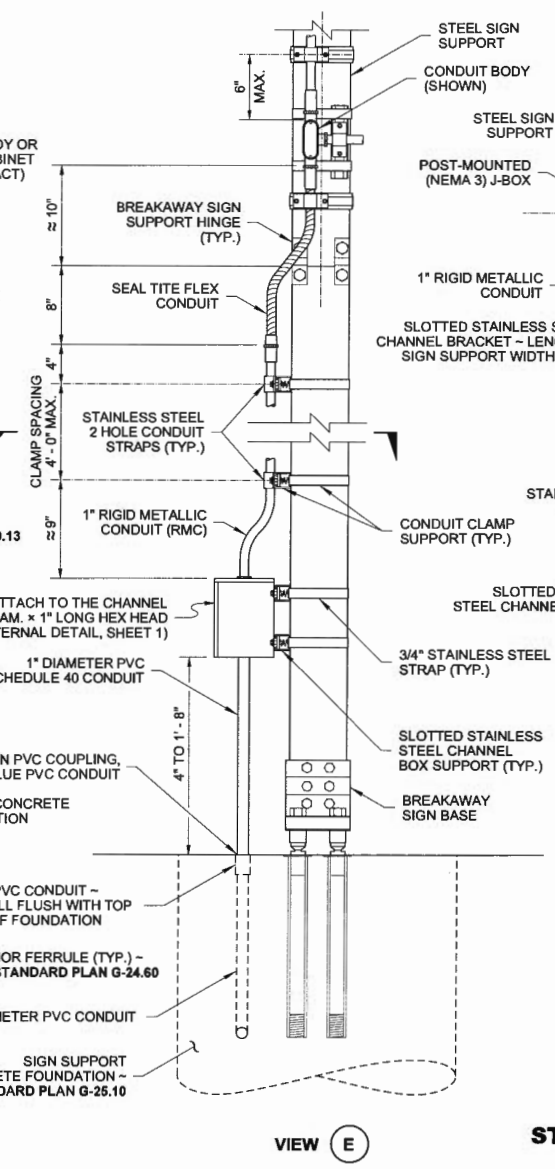

VIEW E

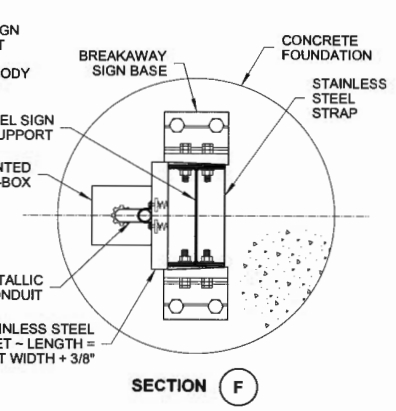

SECTION F

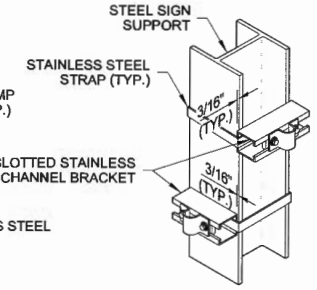

SLOTTED STEEL CHANNEL ATTACHMENT DETAILS

SIGN POST-MOUNTED JUNCTION BOX

STANDARD PLAN J-40.35-00

SHEET 2 OF 3 SHEETS

APPROVED FOR PUBLICATION

STATE DESIGN ENGINEER — DATE 3/13/12

Washington State Department of Transportation

DRAWN BY: LISA CYFORD

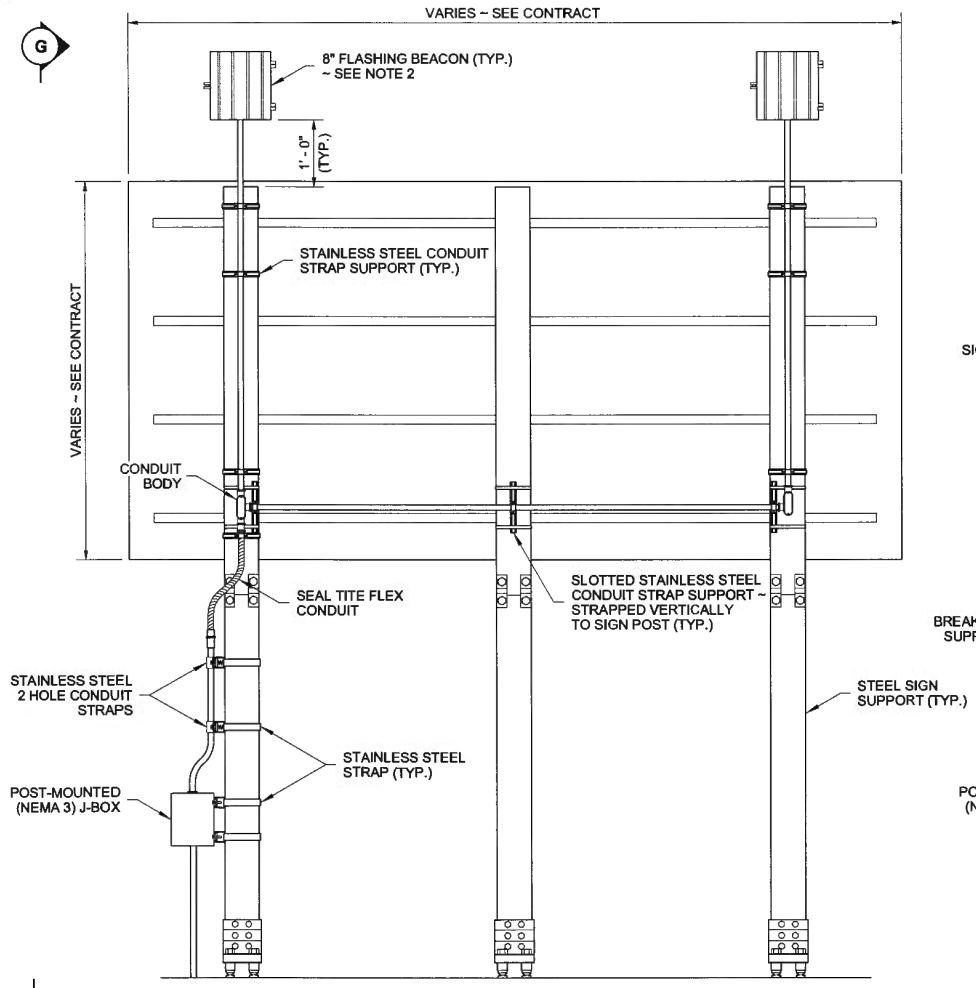

ELEVATION

FLASHING BEACON ATTACHMENT

(STEEL SIGN SUPPORT SHOWN)

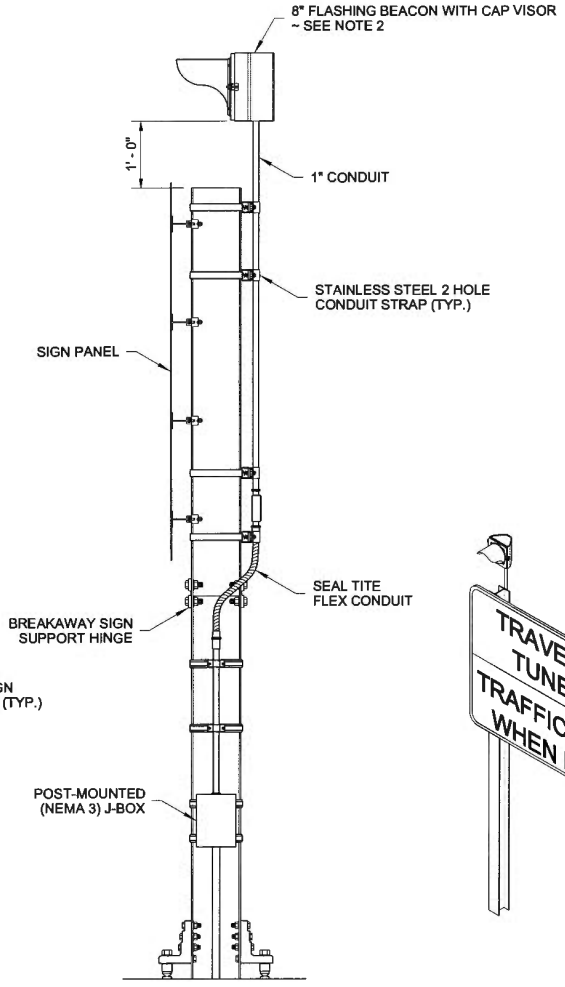

VIEW G

RIGHT ISOMETRIC VIEW

TRAVELER INFORMATION SIGN SHOWN ~
SEE CONTRACT FOR SIGN MESSAGE AND SIZE

SIGN POST-MOUNTED JUNCTION BOX

STANDARD PLAN J-40.35-00

SHEET 3 OF 3 SHEETS

APPROVED FOR PUBLICATION

STATE DESIGN ENGINEER — DATE 3/15/12

Washington State Department of Transportation

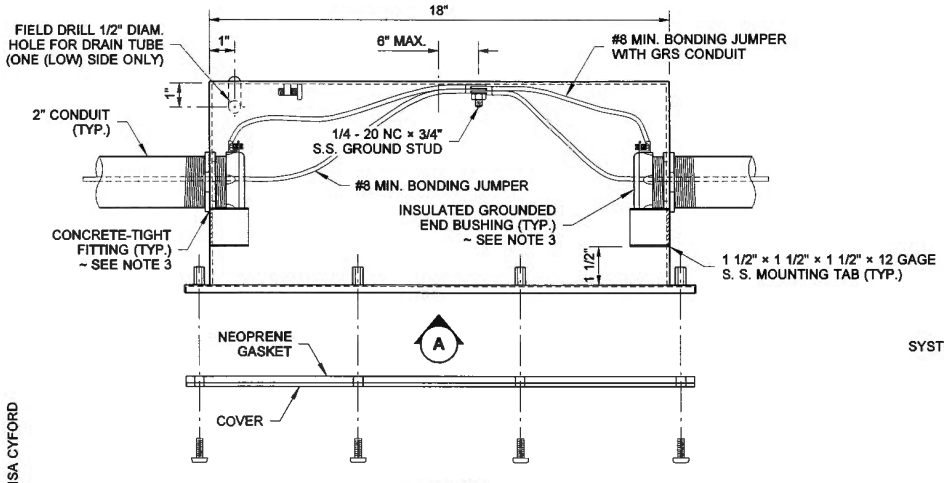

PLAN VIEW

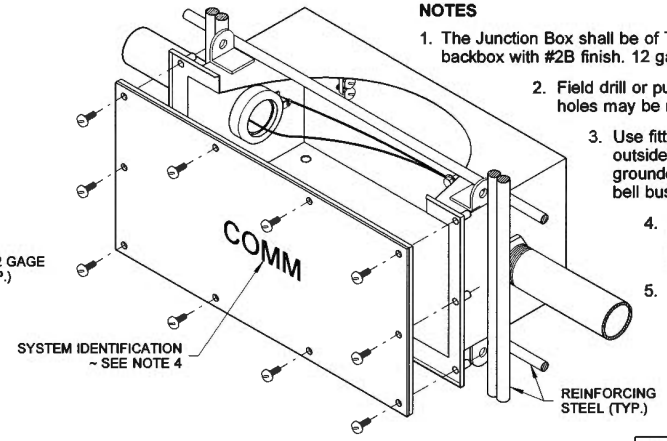

ISOMETRIC VIEW

SHOWN MOUNTED IN REINFORCING STEEL

NOTES

1. The Junction Box shall be of Type 304 stainless steel. welded seam construction: 12 gage backbox with #2B finish. 12 gage cover with #4 finish, and 12 gage mounting tabs.
2. Field drill or punch holes in the center of Junction Box ends. Additional holes may be required. **See Section B.**
3. Use fittings that are UL listed and CSA certified concrete tight on the outside of the Junction Box conduit connection. Use an insulated. grounded end bushing on the inside for GRS conduit. Use an end bell bushing on the inside for PVC conduit.
4. The System Identification letters shall be 1/16" line thickness formed by engraving, stamping, or with a stainless steel weld bead. **See System Identification Detail.**
5. Liberally coat the threads of the cover fasteners with anti-seize compound during construction & before final closure.
6. Details show for box installation in stationary forms.
7. Conduit Capacity = 8"
8. Conduits shall enter Junction Box from ends only.

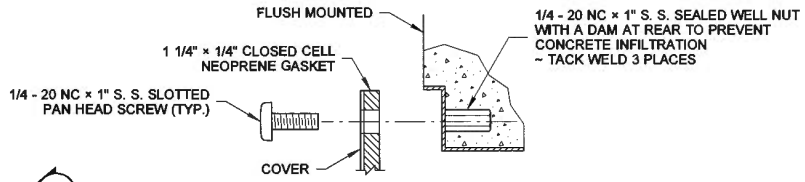

DETAIL C

SYSTEM IDENTIFICATION DETAIL

≈ 1" (TYP.) ≈ 1" (TYP.)

ITS

INTELLIGENT TRANSPORTATION SYSTEM

COMM

COMMUNICATION SYSTEM

LT

LIGHTING SYSTEM

TS

TRAFFIC SIGNAL SYSTEM

TEL

TELEPHONE SYSTEM

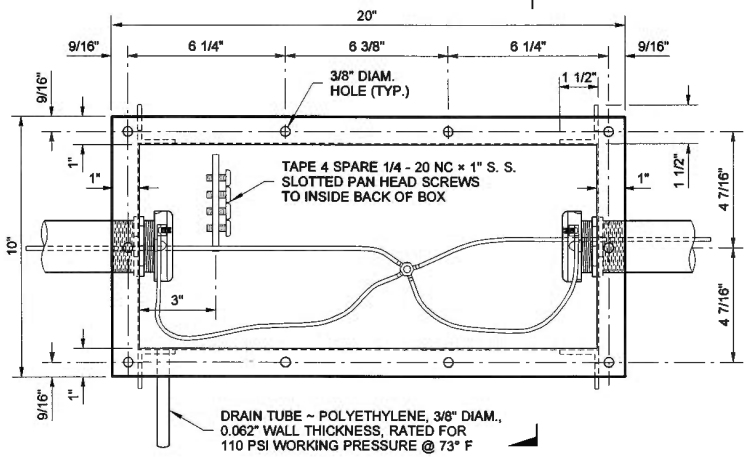

VIEW A

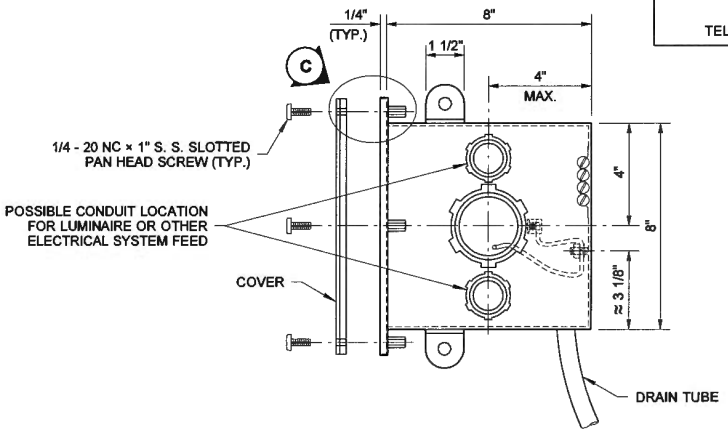

SECTION B

4/13/10

NEMA 4X NON-ADJUSTABLE JUNCTION BOX

STANDARD PLAN J-40.36-00

SHEET 1 OF 1 SHEET

APPROVED FOR PUBLICATION

STATE DESIGN ENGINEER — DATE 6/3/10

Washington State Department of Transportation

DRAWN BY: LISA CYFORD

DRAWN BY: LISA CYFORD

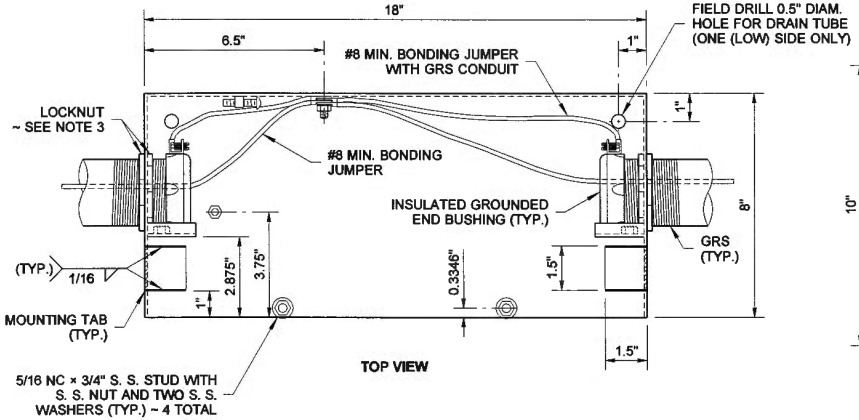

TOP VIEW

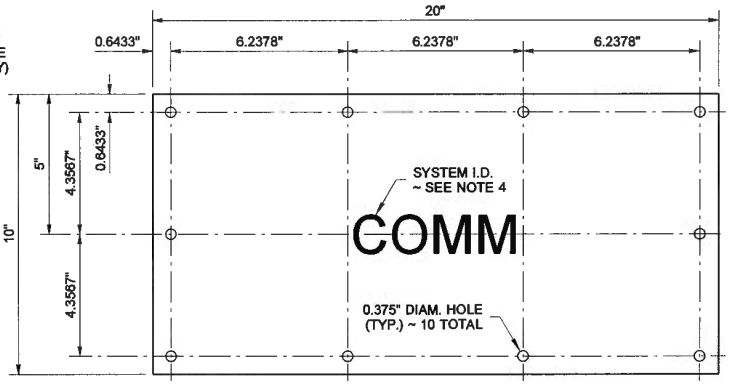

FRONT VIEW
PERMANENT COVER
12 GAGE, TYPE 304 STAINLESS STEEL WITH #4 FINISH

NOTES

1. Junction Box shall be constructed of Type 304 stainless steel, welded seam construction, 12 gage box with #2B finish, 12 gage adjustment tabs, and 12 gage mounting tabs.
2. Field drill or punch holes in the center of Junction Box ends. Additional holes may be required.
3. Use fittings that are UL listed and CSA certified condrete tight on the outside of the Junction Box conduit connection. Use an insulated, grounded end bushing on the inside for GRS conduit. Use an end bell bushing on the inside for PVC conduit.
4. The System Identification letters shall be 1/16" line thickness formed by engraving, stamping or with a S.S. weld bead.
5. Liberally coat the threads of the cover fasteners with anti-sieze compound during construction and before final closure.
6. Detail shown for box installation in slip form barrier.
7. Conduit capacity = 8"
8. Conduits shall enter Junction Box from ends only.
9. Not to be used for Stainless Steel Junction Box that are traffic barrier Mounted. See **Standard Plan J-40.36.**

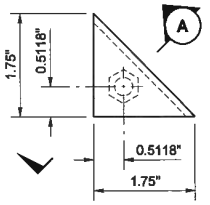

ADJUSTMENT TAB DETAIL

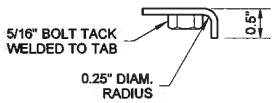

SECTION (A)

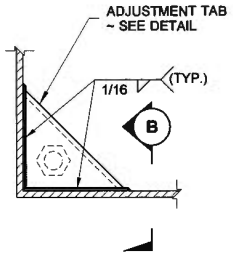

ADJUSTMENT TAB MOUNTING DETAIL

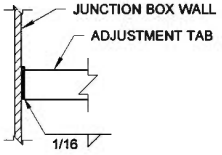

SECTION (B)

SYSTEM IDENTIFICATION DETAIL

≈ 1" (TYP.) ≈ 1" (TYP.)

ITS
INTELLIGENT TRANSPORTATION SYSTEM

COMM
COMMUNICATION SYSTEM

LT
LIGHTING SYSTEM

TS
TRAFFIC SIGNAL SYSTEM

TEL
TELEPHONE SYSTEM

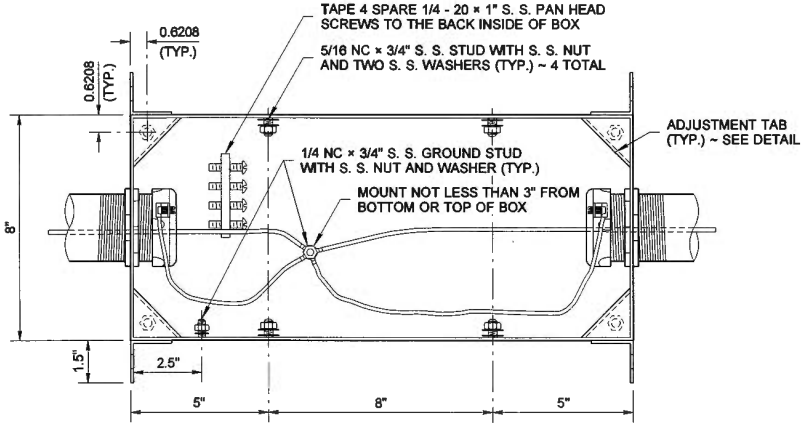

FRONT VIEW
JUNCTION BOX

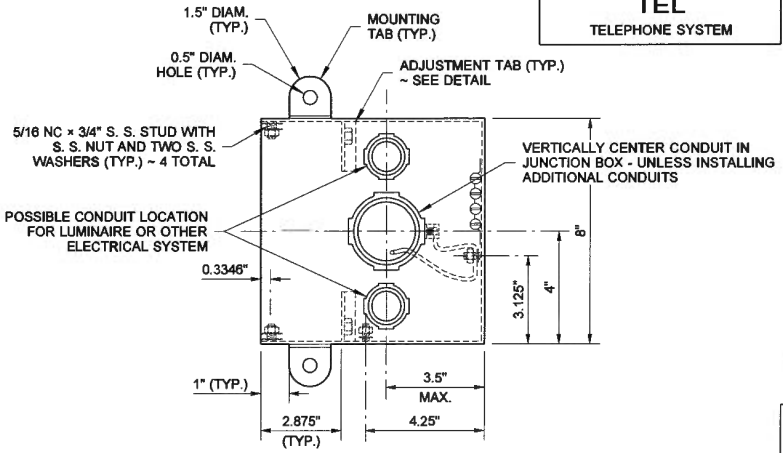

SIDE VIEW

CONDUITS SHALL BE VERTICALLY ALIGNED AND PLACED WITH EQUIDISTANCE FROM ADJACENT CONDUITS TO JUNCTION BOX WALLS

4/13/10

NEMA 3R ADJUSTABLE FLUSH MOUNT JUNCTION BOX

STANDARD PLAN J-40.37-00

SHEET 1 OF 2 SHEETS

APPROVED FOR PUBLICATION

STATE DESIGN ENGINEER — DATE 6/3/10

Washington State Department of Transportation

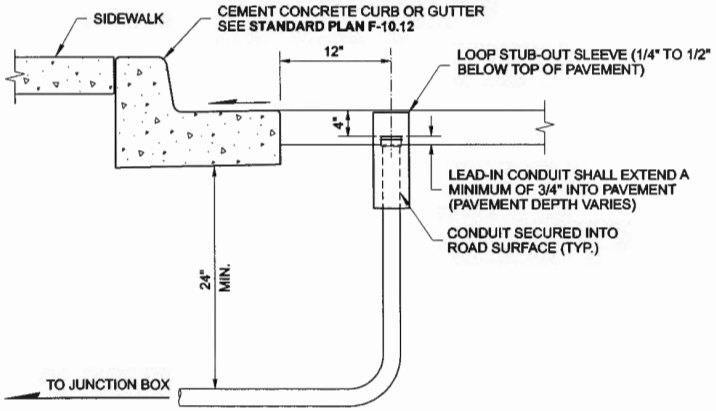

STUB-OUT DETAIL
WITH CEMENT CONCRETE CURB OR GUTTER

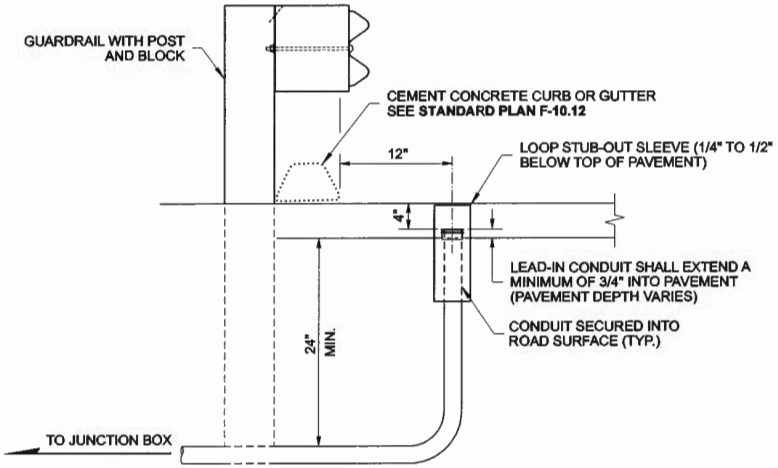

STUB-OUT DETAIL
WITH GUARDRAIL AND CURB

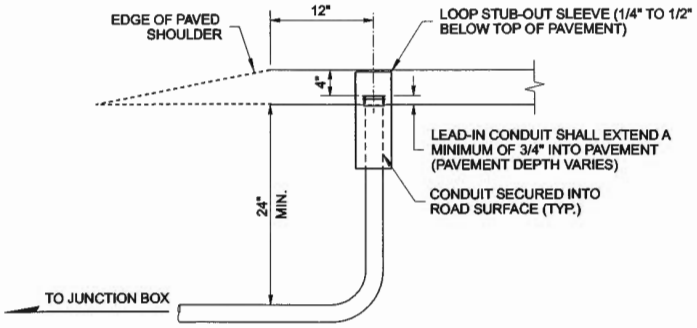

STUB-OUT DETAIL
WITH ROADWAY

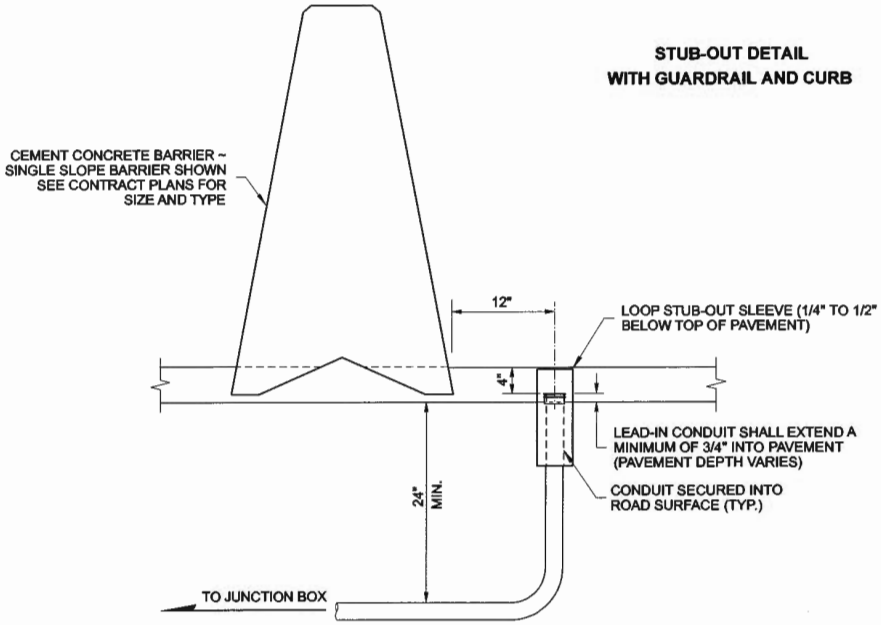

STUB-OUT DETAIL WITH
CEMENT CONCRETE BARRIER

STUBOUT CONDUIT PLACEMENT DETAILS

JOHN C. NISBET
STATE OF WASHINGTON
29115
REGISTERED
PROFESSIONAL ENGINEER
6/02/2011

INDUCTION LOOP DETAILS

STANDARD PLAN J-50.15-00

SHEET 3 OF 3 SHEETS

APPROVED FOR PUBLICATION

STATE DESIGN ENGINEER — DATE 6/3/11

Washington State Department of Transportation

This page left blank intentionally.

This page left blank intentionally.

DRAWN BY: LISA CYFORD

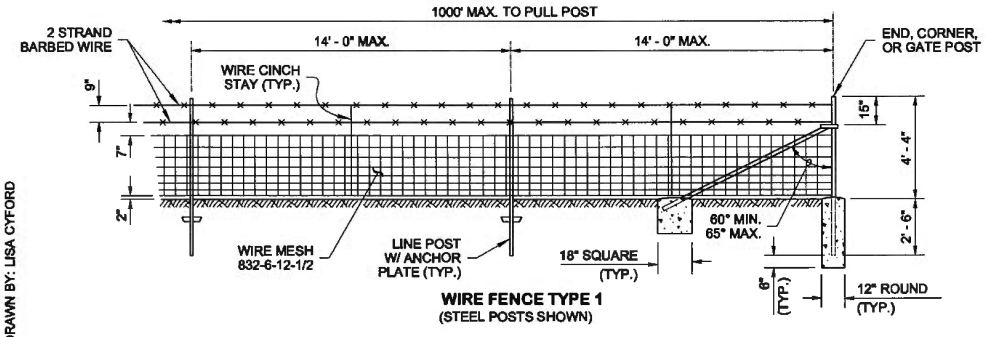

WIRE FENCE TYPE 1
(STEEL POSTS SHOWN)

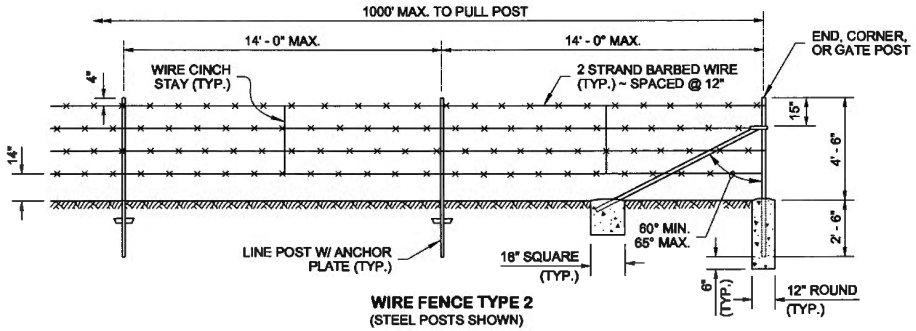

WIRE FENCE TYPE 2
(STEEL POSTS SHOWN)

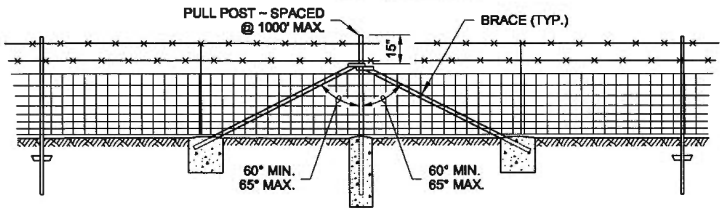

INTERMEDIATE BRACING/PULL POST
(SHOWN FOR WIRE FENCE TYPE 1)

NOTES

1. The bracing and pull post details for Wire Fence Type 2 are the same as for Type 1.
2. Attach the wire mesh to the posts using four fasteners. Three additional fasteners per post are required within and at the limits of sag conditions. Use additional fasteners on posts that mark the angle point of any sudden change in topography.
3. See **Standard Specification 9-16.2(1)** for wood post sizes. Wood anchors (for wood posts) shall be 2 × 4 lumber, 12" long minimum, and fastened with three 16d galvanized nails.

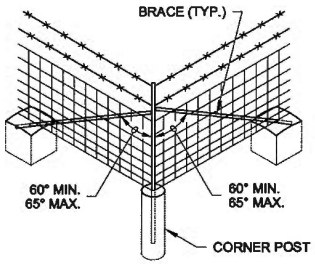

CORNER BRACING
(SHOWN FOR WIRE FENCE TYPE 1)

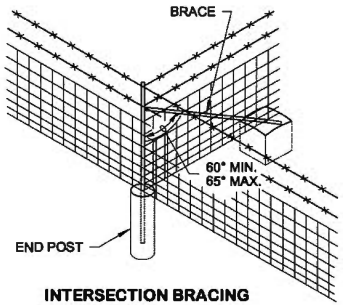

INTERSECTION BRACING
(SHOWN FOR WIRE FENCE TYPE 1)

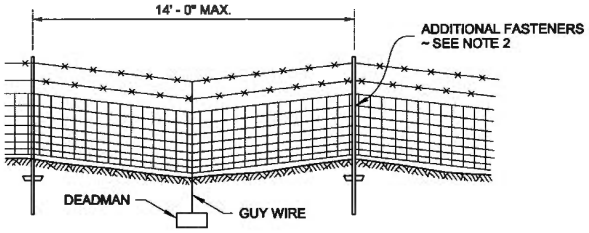

GRADE DEPRESSION (SAG) DETAIL
(STEEL POSTS SHOWN)

POST SPECIFICATIONS				
POST	PIPE	ROLL FORMED		T-POST
	NOM. SIZE (SCH. 40) I.D.	SECTION	WEIGHT (lb/ft)	WEIGHT (lb/ft)
END, CORNER, OR PULL POST	2" DIAM.	Y	5.10	
LINE OR BRACE POST	2" DIAM.	Z	1.85	1.33

STEEL POSTS AND BRACES

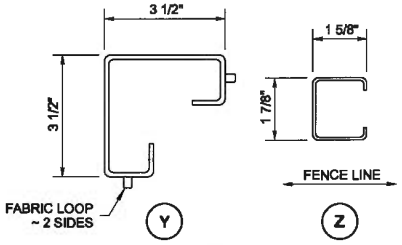

6·19·2012

WIRE FENCE TYPES 1 & 2 AND WIRE GATES

STANDARD PLAN L-10.10-02

SHEET 1 OF 2 SHEETS

APPROVED FOR PUBLICATION

STATE DESIGN ENGINEER — DATE 6/21/12

Washington State Department of Transportation

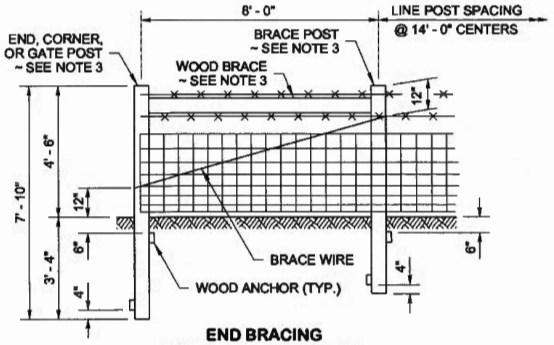

END BRACING
(WIRE FENCE TYPE 1 SHOWN)

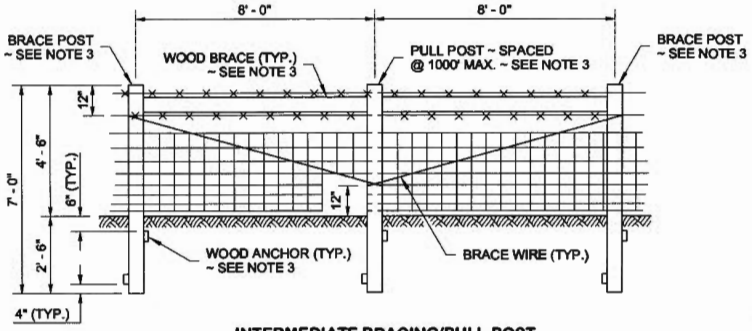

INTERMEDIATE BRACING/PULL POST
(WIRE FENCE TYPE 1 SHOWN)

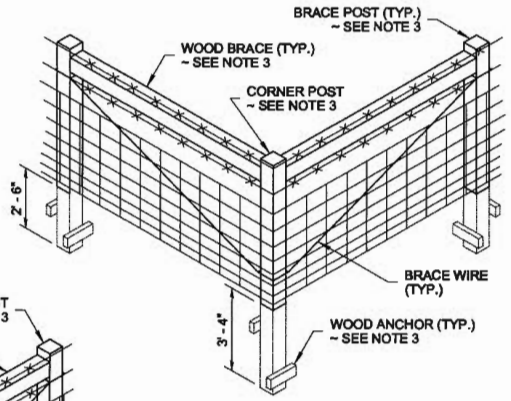

CORNER BRACING
(WIRE FENCE TYPE 1 SHOWN)

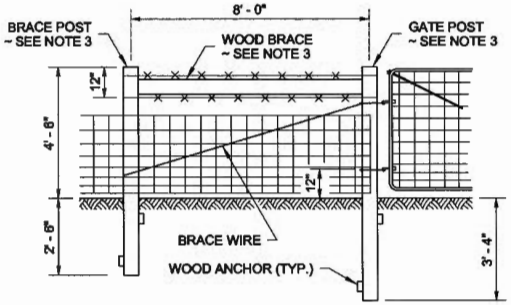

GATE BRACING
(WIRE FENCE TYPE 1 SHOWN)

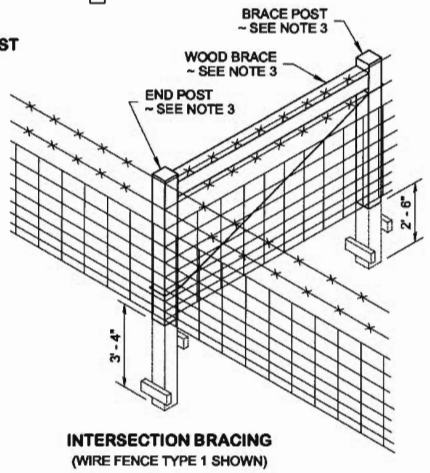

INTERSECTION BRACING
(WIRE FENCE TYPE 1 SHOWN)

WOOD POSTS AND BRACES

DRAWN BY: LISA CYFORD

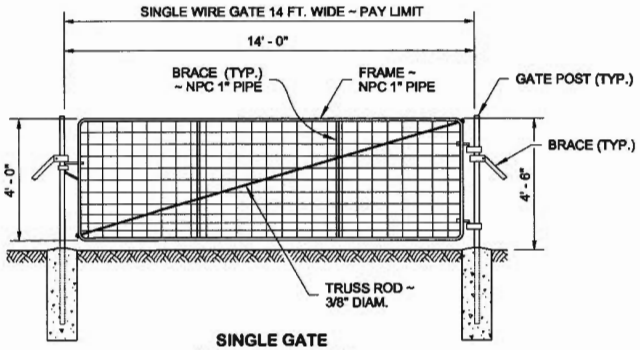

SINGLE GATE
(STEEL POSTS SHOWN)

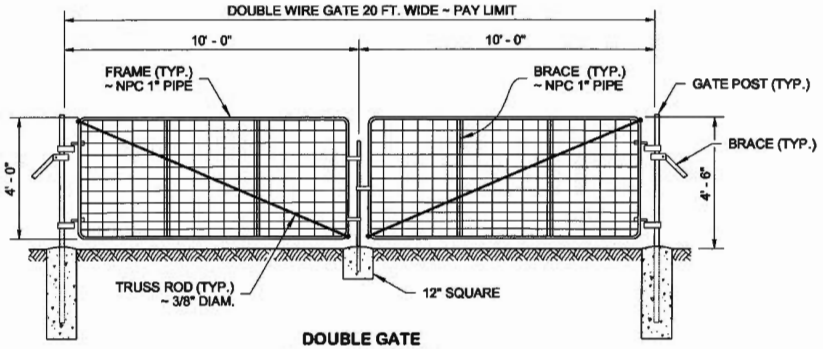

DOUBLE GATE
(STEEL POSTS SHOWN)

GATES

6·19·12

WIRE FENCE TYPES 1 & 2 AND WIRE GATES

STANDARD PLAN L-10.10-02

SHEET 2 OF 2 SHEETS

APPROVED FOR PUBLICATION

STATE DESIGN ENGINEER — DATE 6/21/12

Washington State Department of Transportation

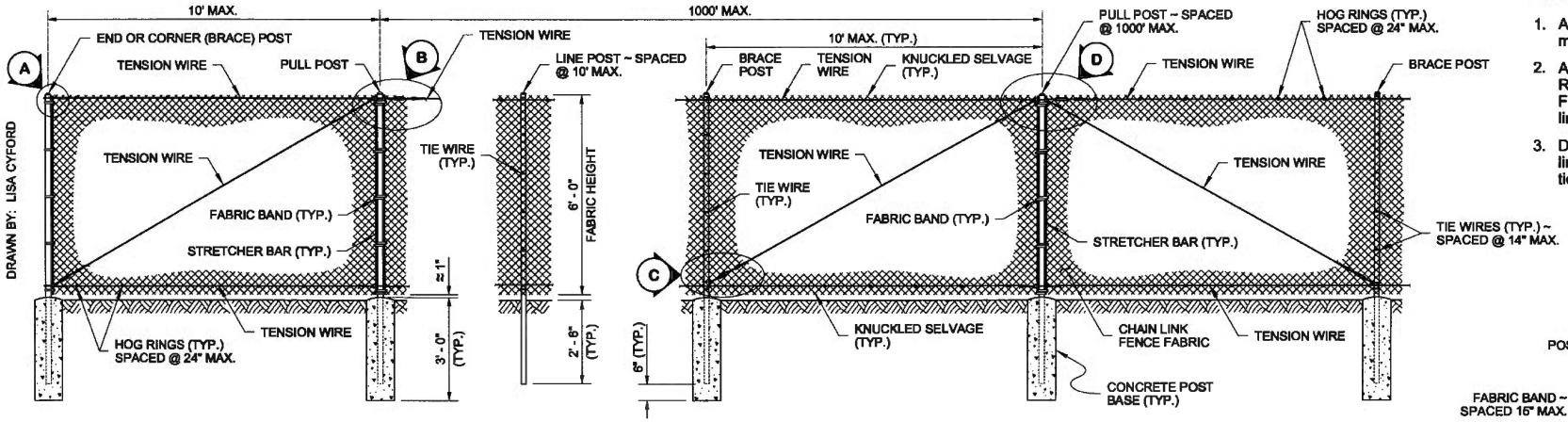

TYPE 3

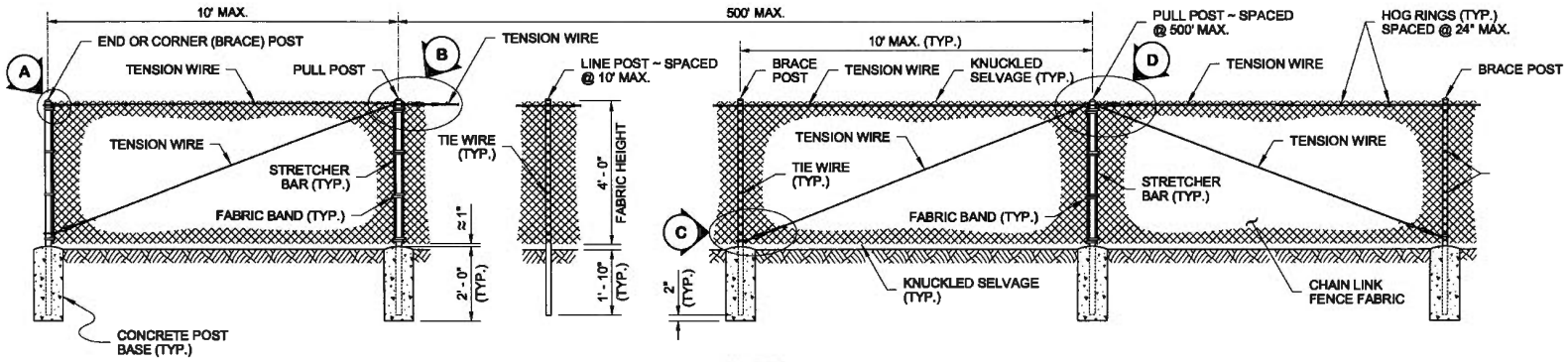

TYPE 4

NOTES

1. All concrete post bases shall be 10" minimum diameter.
2. Along the top and bottom, using Hog Rings, fasten the Chain Link Fence Fabric to the Tension Wire within the limits of the first full fabric weave.
3. Details are illustrative and shall not limit hardware design or post selection of any particular fence type.

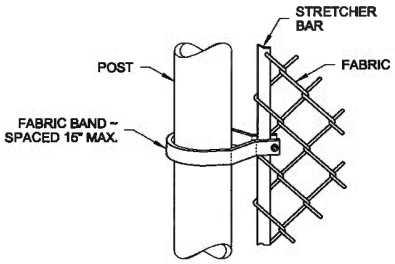

METHOD OF FASTENING STRETCHER BAR TO POST

POST AND RAIL SPECIFICATIONS			
POST	PIPE	ROLL FORMED	
	NOM. SIZE (SCH. 40) I.D.	SECTION	WEIGHT (lb/ft)
END, CORNER, OR PULL POST	2 1/2" DIAM.	Y	5.10
LINE OR BRACE POST	2" DIAM.	Z	1.85

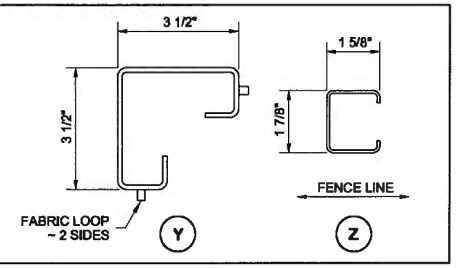

5·21·2012

CHAIN LINK FENCE TYPES 3 AND 4

STANDARD PLAN L-20.10-02

SHEET 1 OF 2 SHEETS

APPROVED FOR PUBLICATION

STATE DESIGN ENGINEER — DATE

Washington State Department of Transportation

DRAWN BY: LISA CYFORD

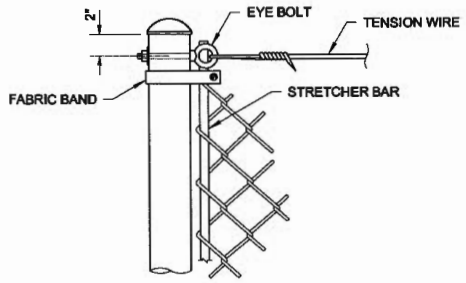

END OR CORNER (BRACE) POST

DETAIL (A)

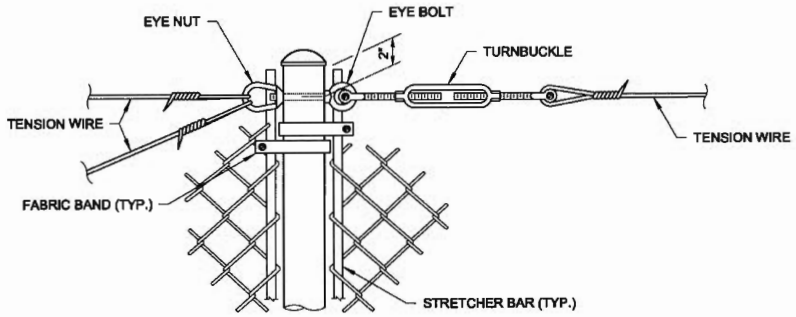

PULL POST (AT END OR CORNER)

DETAIL (B)

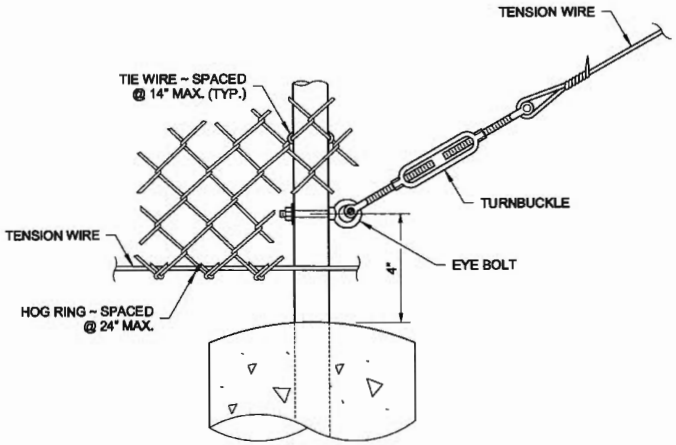

BRACE POST

DETAIL (C)

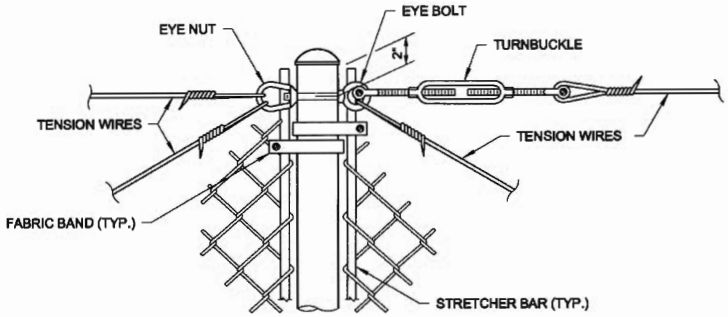

PULL POST (WITHIN RUN)

DETAIL (D)

5·21·2012

CHAIN LINK FENCE TYPES 3 AND 4

STANDARD PLAN L-20.10-02

SHEET 2 OF 2 SHEETS

APPROVED FOR PUBLICATION

STATE DESIGN ENGINEER — DATE 6/21/12

Washington State Department of Transportation

DRAWN BY: BILL BERENS

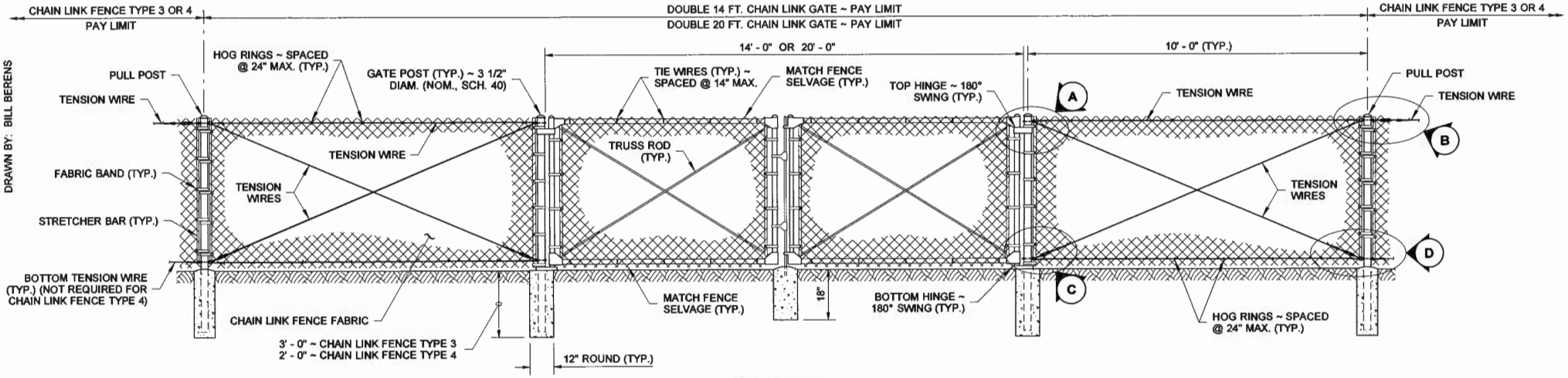

DOUBLE GATE

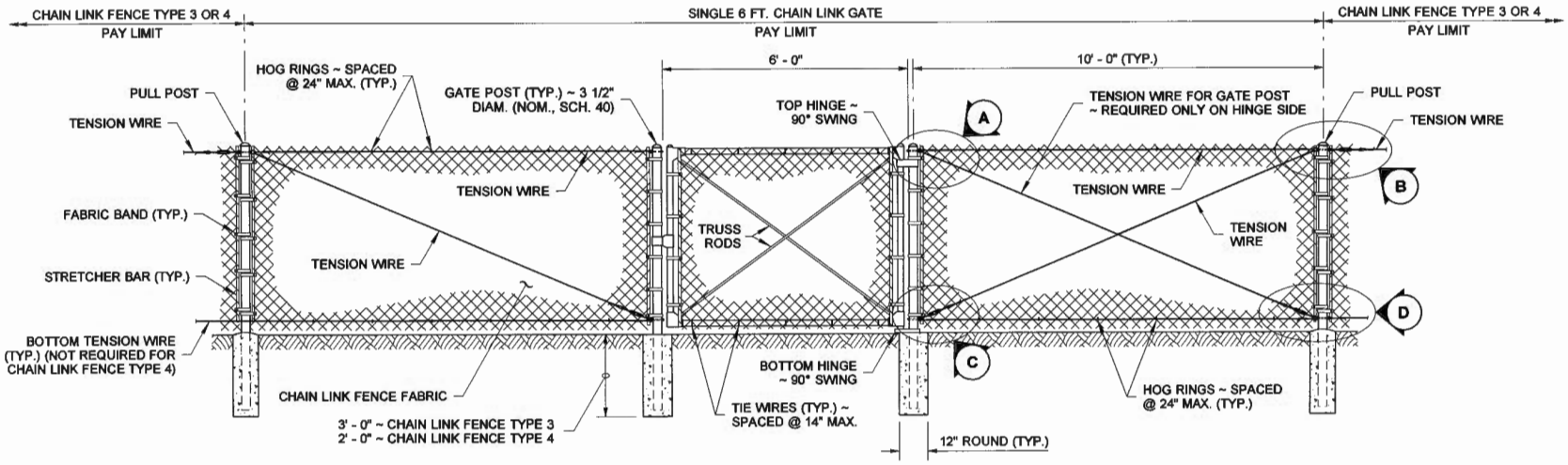

SINGLE GATE

5-26-2011

CHAIN LINK GATE

STANDARD PLAN L-30.10-01

SHEET 1 OF 2 SHEETS

APPROVED FOR PUBLICATION

Paul Brekke III 6/16/11

STATE DESIGN ENGINEER — DATE

Washington State Department of Transportation

DRAWN BY: BILL BERENS

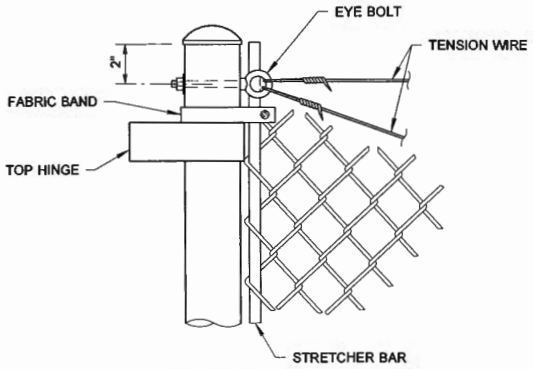

GATE POST

DETAIL (A)

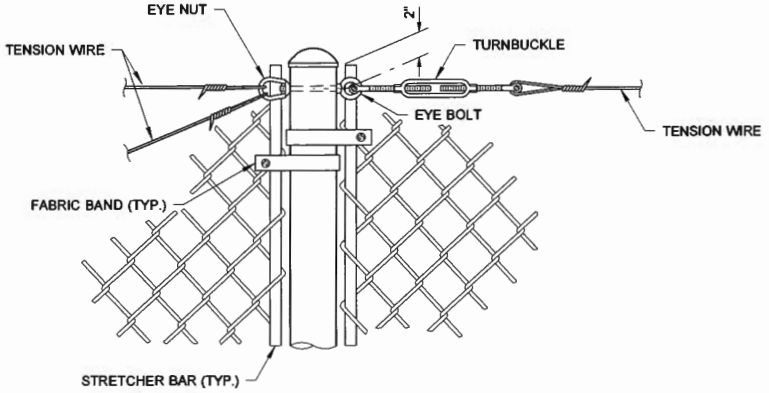

PULL POST

DETAIL (B)

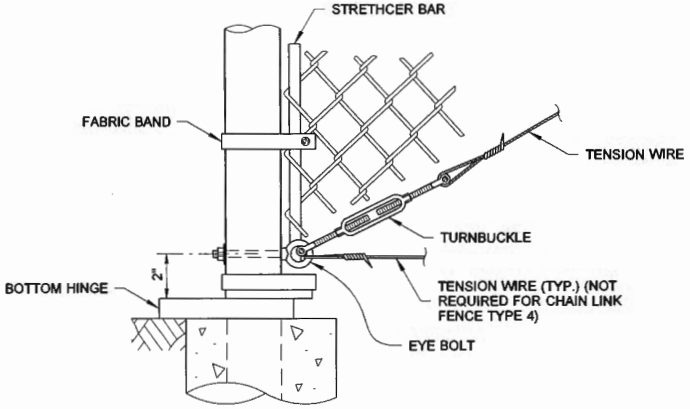

GATE POST

DETAIL (C)

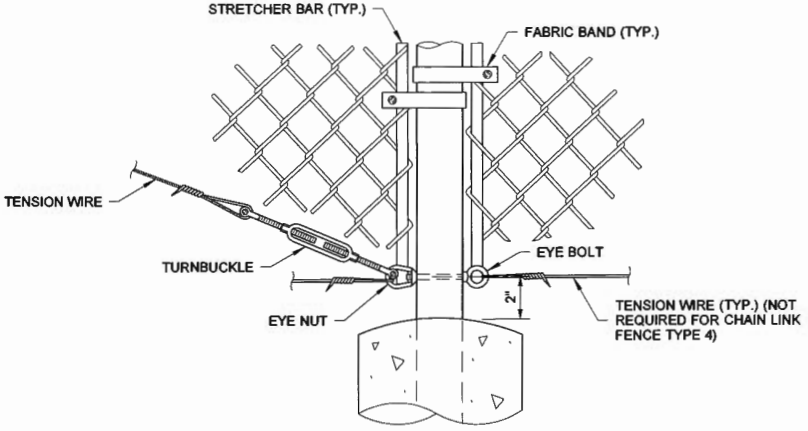

PULL POST

DETAIL (D)

5-26-2011

CHAIN LINK GATE

STANDARD PLAN L-30.10-01

SHEET 2 OF 2 SHEETS

APPROVED FOR PUBLICATION

STATE DESIGN ENGINEER — DATE 6/16/11

Washington State Department of Transportation

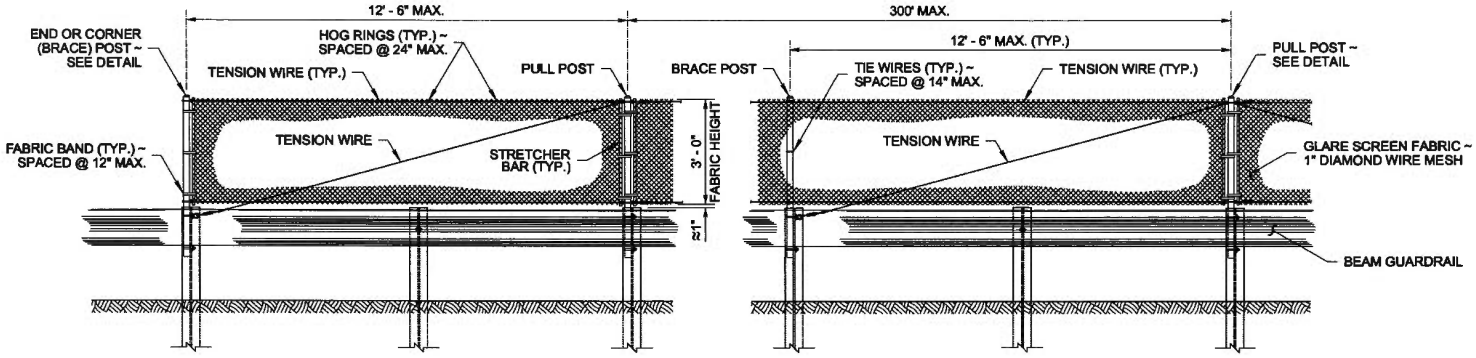

ELEVATION VIEW

DRAWN BY: LISA CYFORD

NOTES

1. All glare screen posts shall be 2 1/2" I.D. galvanized steel.
2. Wood blocks shown. Blocks of alternate material may be used. Wood blocks shall be toe-nailed to post with 16d galvanized nails to prevent block rotation. **See Standard Specification 9-16.3(2).**
3. Attach blocks to steel posts using bolt holes on approaching traffic side of post web.
4. See **Standard Plan C-1b** for posts and wood block details.

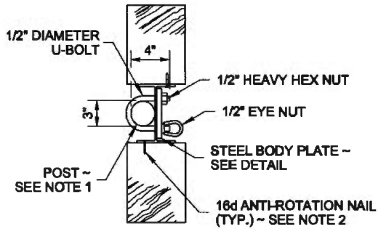

VIEW (B)

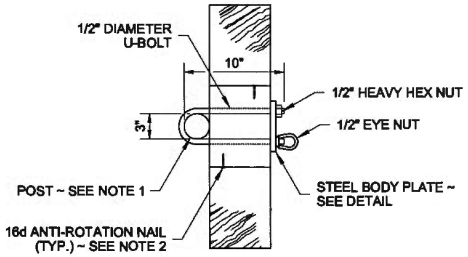

VIEW (B)

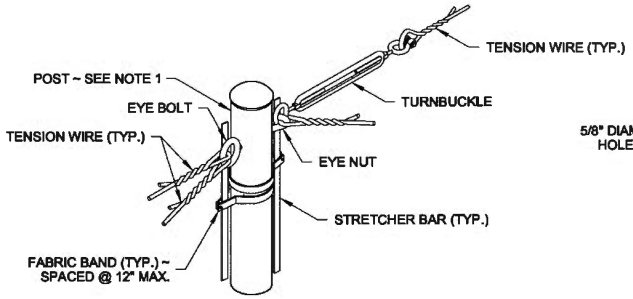

PULL POST (WITHIN RUN)

DETAIL (C)

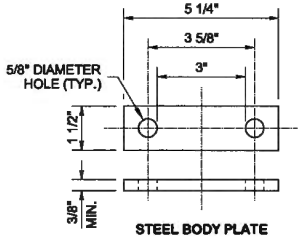

STEEL BODY PLATE

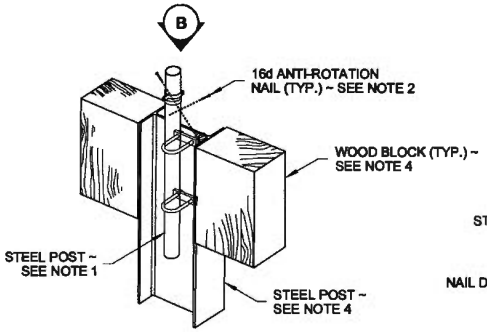

END OR CORNER (BRACE) POST WITH STEEL POST

DETAIL (A)

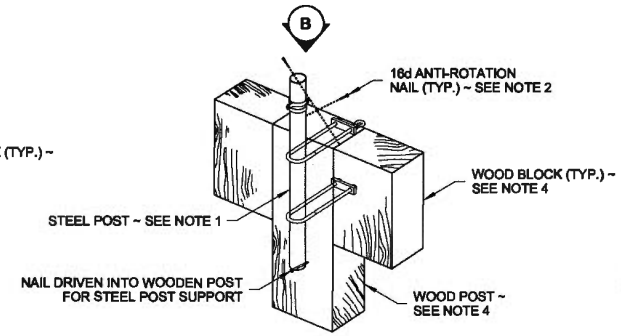

END OR CORNER (BRACE) POST WITH EXISTING WOOD POST

DETAIL (A)

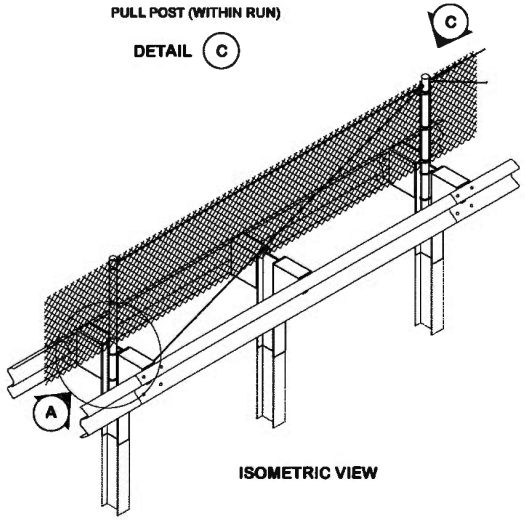

ISOMETRIC VIEW

GLARE SCREEN TYPE 1 DESIGN A

STANDARD PLAN L-40.10-02

SHEET 1 OF 2 SHEETS

APPROVED FOR PUBLICATION

STATE DESIGN ENGINEER — DATE 6/21/12

Washington State Department of Transportation

DRAWN BY: LISA CYFORD

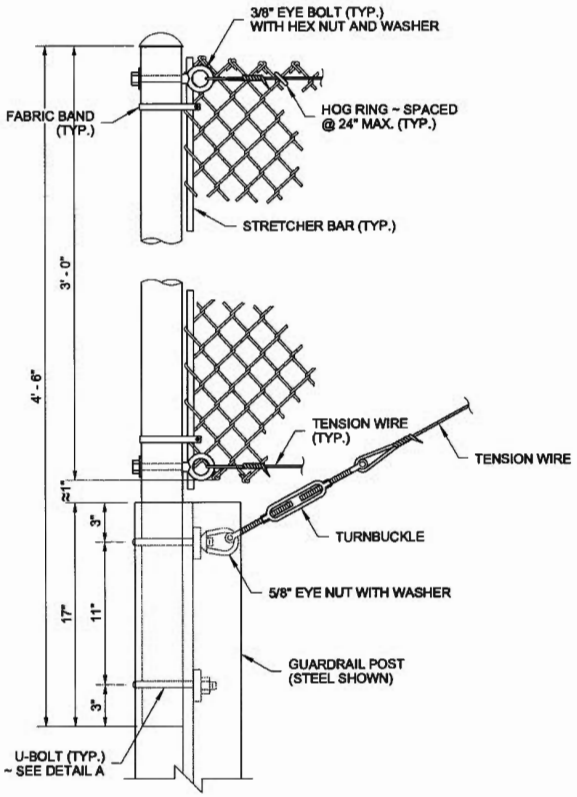

END OR CORNER (BRACE) POST DETAIL

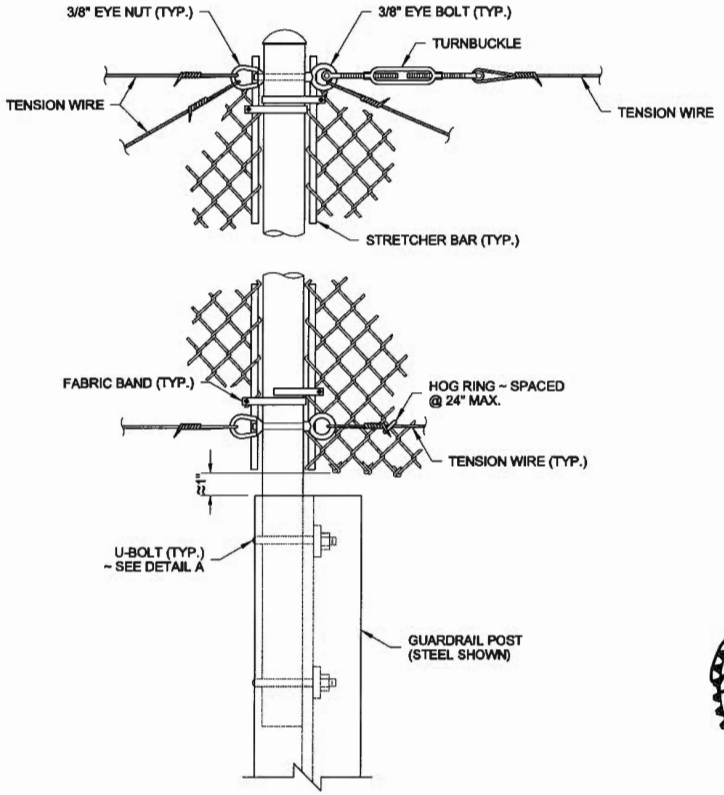

PULL POST (WITHIN RUN) DETAIL

5·21·2012

GLARE SCREEN TYPE 1
DESIGN A

STANDARD PLAN L-40.10-02

SHEET 2 OF 2 SHEETS

APPROVED FOR PUBLICATION

STATE DESIGN ENGINEER — DATE 6/21/12

Washington State Department of Transportation

DRAWN BY: BILL BERENS

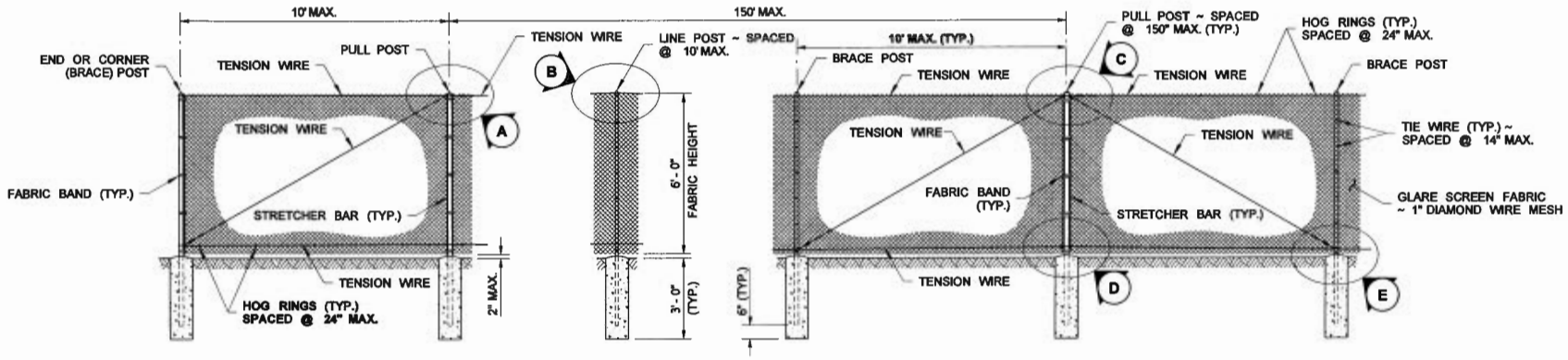

ELEVATION VIEW

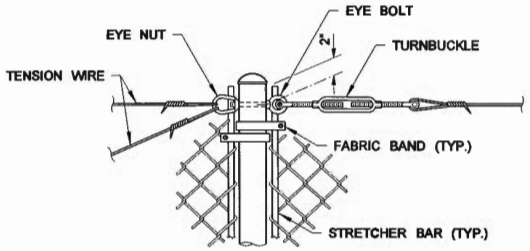

PULL POST

DETAIL A

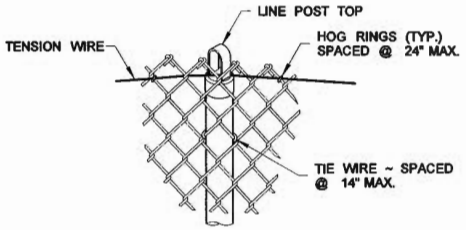

LINE POST

DETAIL B

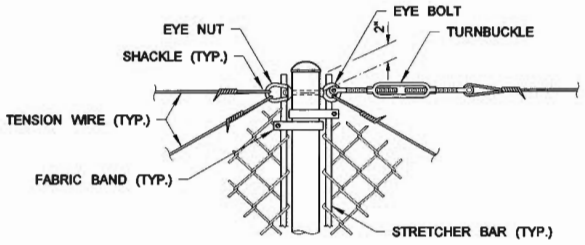

PULL POST (WITHIN RUN)

DETAIL C

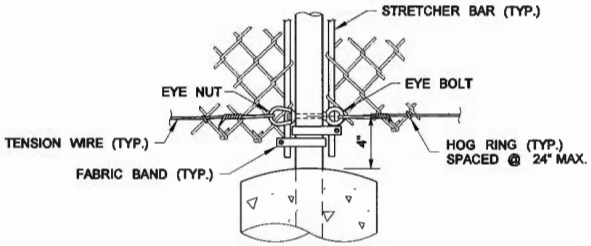

PULL POST

DETAIL D

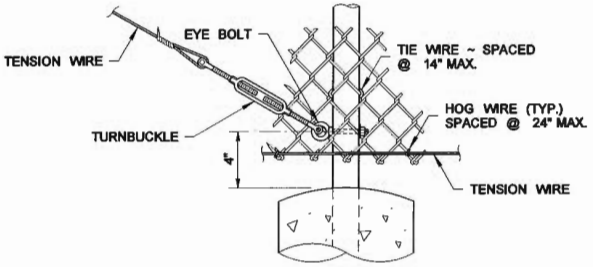

BRACE POST

DETAIL E

6-8-2011

GLARE SCREEN TYPE 1
DESIGN B

STANDARD PLAN L-40.15-01

SHEET 1 OF 1 SHEET

APPROVED FOR PUBLICATION

STATE DESIGN ENGINEER — DATE

Washington State Department of Transportation

DRAWN BY: LISA CYFORD

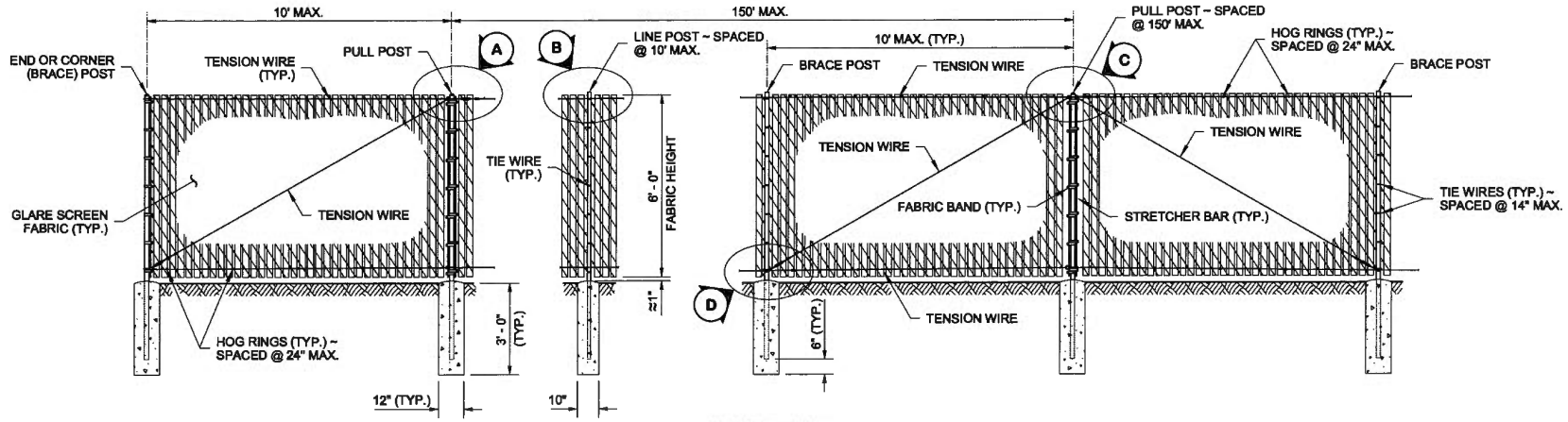

ELEVATION VIEW

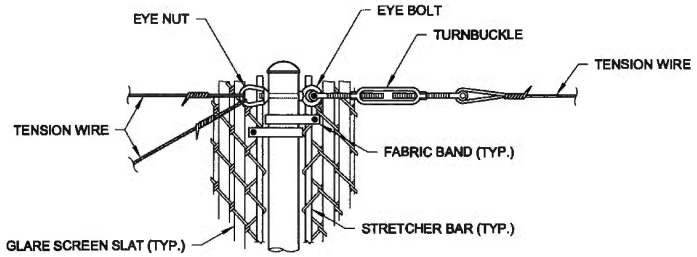

PULL POST

DETAIL (A)

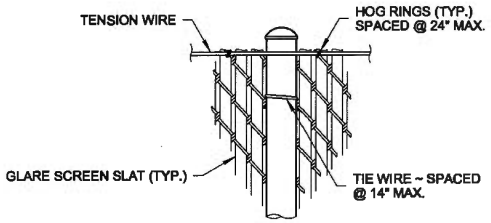

LINE POST

DETAIL (B)

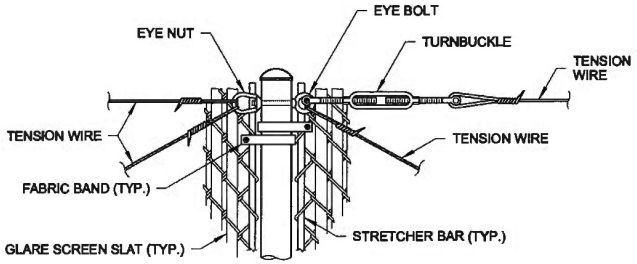

PULL POST (WITHIN RUN)

DETAIL (C)

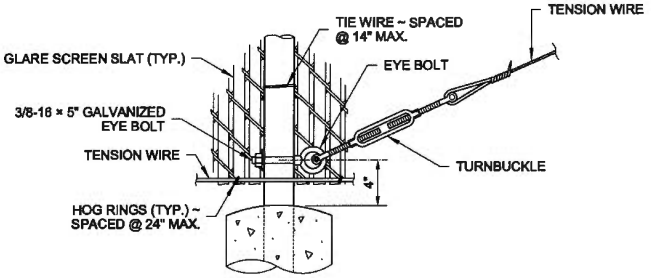

BRACE POST

DETAIL (D)

5·21·2012

GLARE SCREEN TYPE 2 (CHAIN LINK WITH SLATS)

STANDARD PLAN L-40.20-02

SHEET 1 OF 1 SHEET

APPROVED FOR PUBLICATION

STATE DESIGN ENGINEER — DATE 6/21/12

Washington State Department of Transportation

DRAWN BY: BILL BERENS

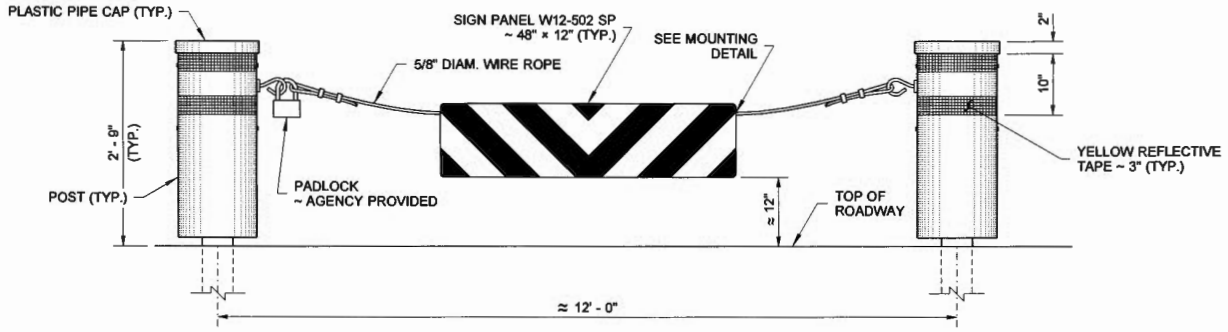

ELEVATION

NOTE

Hardware shall be stainless steel or galvanized in accordance with AASHTO M232.

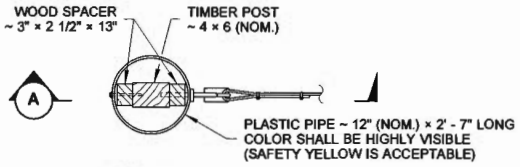

TOP VIEW
(CAP NOT SHOWN)
END POST

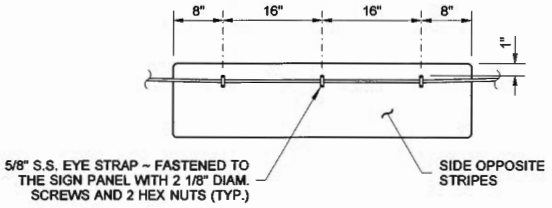

SIGN PANEL MOUNTING DETAIL

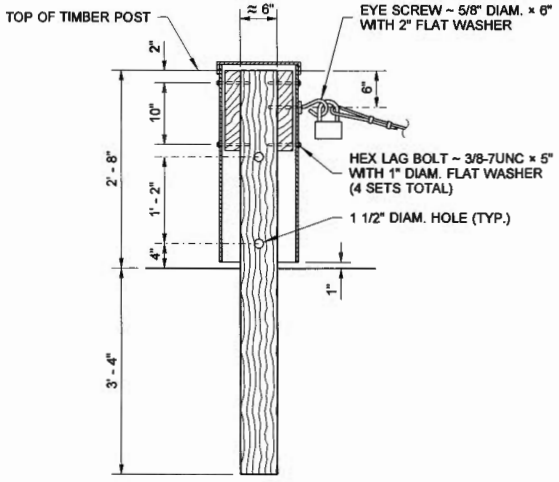

SECTION (A)

EXPIRES JUNE 19, 2008

ACCESS CONTROL GATE

STANDARD PLAN L-70.10-01

SHEET 1 OF 1 SHEET

APPROVED FOR PUBLICATION

5/21/08

STATE DESIGN ENGINEER — DATE

Washington State Department of Transportation