Washington State Department of Transportation

Publications Transmittal

Transmittal Number	Date
PT 11-036	**August 1, 2011**
Publication Distribution: To: ***Standard Plans*** holders	
Publication Title: *Standard Plans* Revision	Publication Number: **M 21-01**
Originating Organization: Headquarters Design Office through Engineering Publications	

Remarks:

Additional copies may be purchased from:
Washington State Department of Transportation
Engineering Publications
Olympia, WA 98504-7304
PO BOX 47304

Phone: (360) 705-7430
Fax: (360) 705-6861
E-mail: engrpubs@wsdot.wa.gov

Please e-mail us if you no longer desire to receive updates, have a quantity change, or your address has changed.

Instructions:

1. Replace Cover page with **new Cover page** provided.
2. Remove **pages 3 ~ 13** from your current manual.
3. Insert **pages 3 ~ 13**.
4. Refer to ***REMOVE & INSERT INSTRUCTIONS ~ Standard Plans Revision 8-1-2011***

Distributed By	Phone Number	Signature
Administrative and Engineering Publications	(360) 705-7430 FAX: 705-6861	David K. Olson

REMOVE & INSERT INSTRUCTIONS ~ Standard Plans Revision 8-1-2011

REMOVE				*INSERT*			
A-30.15-00	11/8/07			A-30.15-00	11/8/07		Reprinted
A-30.30-00	11/8/07			A-30.30-01	6/16/11		Revised
A-40.10-01	8/11/09			A-40.10-02	6/2/11		Revised
A-40.15-00	8/11/09	Sheet 1 of 2		A-40.15-00	8/11/09	Sheet 1 of 2	Reprinted
A-40.20-00	9/20/07			A-40.20-00	9/20/07		Reprinted
A-40.50-00	11/8/07	Sheet 1 of 2		A-40.50-01	6/2/11	Sheet 1 of 2	Revised
A-40.50-00	11/8/07	Sheet 2 of 2		A-40.50-01	6/2/11	Sheet 2 of 2	Revised
A-50.10-00	11/17/08	Sheet 1 of 2		A-50.10-00	11/17/08	Sheet 1 of 2	Reprinted
A-60.10-01	10/14/09	Sheet 2 of 2		A-60.10-01	10/14/09	Sheet 2 of 2	Reprinted
A-60.20-01	8/11/09	Sheet 1 of 2		A-60.20-02	6/2/11	Sheet 1 of 2	Revised
A-60.20-01	8/11/09	Sheet 2 of 2		A-60.20-02	6/2/11	Sheet 2 of 2	Revised
Blank				Blank			
B-5.20-00	6/1/06			B-5.20-01	6/16/11		Revised
B-5.40-00	6/1/06			B-5.40-01	6/16/11		Revised
B-5.60-00	6/1/06			B-5.60-01	6/16/11		Revised
B-10.20-00	6/1/06			B-10.20-00	6/1/06		Reprinted
B-30.50-00	6/1/06			B-30.50-00	6/1/06		Reprinted
B-30.70-01	8/31/07			B-30.70-02	6/16/11		Revised
Blank				Blank			
C-1	2/10/09	Sheet 1 of 2		C-1	6/16/11	Sheet 1 of 2	Revised
C-1	2/10/09	Sheet 2 of 2		C-1	6/16/11	Sheet 2 of 2	Revised
C-1a	10/14/09			C-1a	10/14/09		Reprinted
Blank				Blank			
C-1b	6/3/10	Sheet 1 of 2		C-1b	6/16/11	Sheet 1 of 2	Revised
C-1b	6/3/10	Sheet 2 of 2		C-1b	6/16/11	Sheet 2 of 2	Revised
C-1c	5/30/97			C-1c	5/30/97		Reprinted
C-2p	10/31/03			C-2p	10/31/03		Reprinted
C-3	10/4/05			C-3	6/27/11		Revised
C-3a	10/4/05			C-3a	10/4/05		Reprinted
C-3b	10/4/05	Sheet 1 of 2		C-3b	6/27/11	Sheet 1 of 2	Revised
C-3b	10/4/05	Sheet 2 of 2		C-3b	6/27/11	Sheet 2 of 2	Revised
C-3c	6/21/06			C-3c	6/27/11		Revised
C-4f	6/30/04	Sheet 1 of 4		C-4f	6/16/11	Sheet 1 of 4	Revised
C-4f	6/30/04	Sheet 2 of 4		C-4f	6/16/11	Sheet 2 of 4	Revised
C-4f	6/30/04	Sheet 3 of 4		C-4f	6/16/11	Sheet 3 of 4	Revised
C-4f	6/30/04	Sheet 4 of 4		C-4f	6/16/11	Sheet 4 of 4	Revised
C-5	10/14/09			C-5	6/16/11		Revised
C-6	5/30/97	Sheet 1 of 2		C-6	5/30/97	Sheet 1 of 2	Reprinted
C-6f	7/25/97			C-6f	7/25/97		Reprinted
C-7	10/31/03			C-7	6/16/11		Revised
C-7a	10/31/03			C-7a	6/16/11		Revised
C-8	2/10/09	Sheet 1 of 2		C-8	2/10/09	Sheet 1 of 2	Reprinted
C-8b	2/10/09	Sheet 1 of 2		C-8b	6/27/11	Sheet 1 of 2	Revised
C-8b	2/10/09	Sheet 2 of 2		C-8b	6/27/11	Sheet 2 of 2	Revised
C-14h	2/10/09		Deleted				
C-14i	2/10/09	Sheet 1 of 2	Deleted				
C-14i	2/10/09	Sheet 2 of 2	Deleted				
C-14j	12/2/03		Deleted				

REMOVE & INSERT INSTRUCTIONS ~ Standard Plans Revision 8-1-2011

REMOVE				*INSERT*			
C-14k	2/10/09	Sheet 1 of 2	Deleted				
C-14k	2/10/09	Sheet 2 of 2	Deleted				
C-20.40-01	10/14/09			C-20.40-02	6/16/11		Revised
C-20.42-01	10/14/09			C-20.42-02	6/16/11		Revised
				C-20.45-00	6/16/11		New Plan
				Blank			
C-22.14-01	6/3/10			C-22.14-02	6/16/11		Revised
C-22.16-01	6/3/10			C-22.16-02	6/16/11		Revised
C-22.40-02	6/16/10			C-22.40-02	6/16/10		Reprinted
C-23.60-01	10/14/09			C-22.45-00	6/16/11		New Plan
				C-23.60-01	10/14/09		Reprinted
				Blank			
C-25.18-01	9/20/07			C-25.18-02	6/16/11		Revised
C-25.20-04	10/14/09			C-25.20-04	10/14/09		Reprinted
C-25.80-01	7/3/08			C-25.80-01	7/3/08		Reprinted
C-28.40-00	2/6/07			C-28.40-01	6/16/11		Revised
C-40.18-01	10/14/09			C-40.18-01	10/14/09		Reprinted
C-90.10-00	7/3/08			C-85.14-00	6/16/11		New Plan
				C-85.15-00	6/16/11		New Plan
				C-85.16-00	6/16/11	Sheet 1 of 2	New Plan
				C-85.16-00	6/16/11	Sheet 2 of 2	New Plan
				Blank			
				C-85.18-00	6/16/11		New Plan
				C-85.20-00	6/16/11	Sheet 1 of 2	New Plan
				C-85.20-00	6/16/11	Sheet 2 of 2	New Plan
				C-90.10-00	7/3/08		Reprinted
D-2.02-00	11/10/05		Deleted	Blank			
D-2.04-00	11/10/05	Sheet 1 of 2		D-2.04-00	11/10/05	Sheet 1 of 2	Reprinted
D-2.08-00	11/10/05	Sheet 2 of 2		D-2.08-00	11/10/05	Sheet 2 of 2	Reprinted
D-2.10-00	11/10/05		Deleted	D-2.14-00	11/10/05		Reprinted
D-2.12-00	11/10/05		Deleted				
D-2.14-00	11/10/05						
D-2.20-00	11/10/05			D-2.20-00	11/10/05		Reprinted
D-2.30-00	11/10/05		Deleted	D-2.32-00	11/10/05	Sheet 1 of 2	Reprinted
Blank							
D-2.32-00	11/10/05	Sheet 1 of 2					
Blank							
D-2.38-00	11/10/05		Deleted				
D-2.40-00	11/10/05		Deleted	Blank			
D-2.42-00	11/10/05			D-2.42-00	11/10/05		Reprinted
D-2.68-00	11/10/05	Sheet 2 of 2		D-2.68-00	11/10/05	Sheet 2 of 2	Reprinted
D-2.78-00	11/10/05		Deleted	Blank			
D-2.92-00	11/10/05	Sheet 2 of 2		D-2.92-00	11/10/05	Sheet 2 of 2	Reprinted
D-3	6/16/10	Sheet 1 of 4		D-3	6/2/11	Sheet 1 of 4	Revised
D-3	6/16/10	Sheet 2 of 4		D-3	6/2/11	Sheet 2 of 4	Revised
D-3	6/16/10	Sheet 3 of 4		D-3	6/2/11	Sheet 3 of 4	Revised
D-3	6/16/10	Sheet 4 of 4		D-3	6/2/11	Sheet 4 of 4	Revised
D-3.10-00	6/16/10			D-3.10-00	6/16/10		Reprinted
D-3.11-00	6/16/10	Sheet 2 of 2		D-3.11-00	6/16/10	Sheet 2 of 2	Reprinted
D-3b	6/30/04		Deleted	D-3.15-00	6/16/11		New Plan
D-3c	6/30/04		Deleted	D-3.16-00	6/16/11		New Plan
D-4	12/11/98			D-3.17-00	6/16/11		New Plan

REMOVE & INSERT INSTRUCTIONS ~ Standard Plans Revision 8-1-2011

REMOVE				*INSERT*			
				D-4	12/11/98		Reprinted
				Blank			
D-15.10-01	12/2/08	Sheet 2 of 2		D-15.10-01	12/2/08	Sheet 2 of 2	Reprinted
D-15.20-01	1/6/09	Sheet 1 of 2		D-15.20-02	6/2/11	Sheet 1 of 2	Revised
D-15.20-01	1/6/09	Sheet 2 of 2		D-15.20-02	6/2/11	Sheet 2 of 2	Revised
D-15.30-01	12/2/08	Sheet 1 of 2		D-15.30-01	12/2/08	Sheet 1 of 2	Reprinted
Blank				Blank			
F-10.12-01	6/3/10			F-10.12-02	6/16/11		Revised
F-10.16-00	12/20/06			F-10.16-00	12/20/06		Reprinted
F-10.40-01	7/3/08			F-10.18-00	6/27/11		New Plan
F-10.42-00	1/23/07			F-10.40-01	7/3/08		Reprinted
F-10.62-01	9/5/07	Sheet 1 of 2		F-10.42-00	1/23/07		Reprinted
				Blank			
				F-10.62-01	9/5/07	Sheet 1 of 2	Reprinted
G-24.60-00	11/8/07	Sheet 1 of 2		G-24.60-01	6/16/11	Sheet 1 of 2	Revised
G-24.60-00	11/8/07	Sheet 2 of 2		G-24.60-01	6/16/11	Sheet 2 of 2	Revised
G-25.10-01	1/6/09			G-25.10-02	6/27/11		Revised
G-30.10-00	11/8/07	Sheet 1 of 2		G-30.10-01	6/16/11	Sheet 1 of 2	Revised
G-30.10-00	11/8/07	Sheet 2 of 2		G-30.10-01	6/16/11	Sheet 2 of 2	Revised
G-50.10-00	11/8/07	Sheet 1 of 2		G-50.10-00	11/8/07	Sheet 1 of 2	Reprinted
G-50.10-00	11/8/07	Sheet 2 of 2		G-50.10-00	11/8/07	Sheet 2 of 2	Reprinted
G-60.10-00	8/31/07	Sheet 1 of 4		G-60.10-01	6/27/11	Sheet 1 of 4	Revised
G-60.10-00	8/31/07	Sheet 2 of 4		G-60.10-01	6/27/11	Sheet 2 of 4	Revised
G-60.10-00	8/31/07	Sheet 3 of 4		G-60.10-01	6/27/11	Sheet 3 of 4	Revised
G-60.10-00	8/31/07	Sheet 4 of 4		G-60.10-01	6/27/11	Sheet 4 of 4	Revised
G-60.20-00	8/31/07	Sheet 1 of 2		G-60.20-01	6/27/11	Sheet 1 of 2	Revised
G-60.20-00	8/31/07	Sheet 2 of 2		G-60.20-01	6/27/11	Sheet 2 of 2	Revised
G-60.30-00	8/31/07	Sheet 1 of 2		G-60.30-01	6/27/11	Sheet 1 of 2	Revised
G-60.30-00	8/31/07	Sheet 2 of 2		G-60.30-01	6/27/11	Sheet 2 of 2	Revised
G-70.10-00	10/5/07	Sheet 1 of 4		G-70.10-01	6/27/11	Sheet 1 of 4	Revised
G-70.10-00	10/5/07	Sheet 2 of 4		G-70.10-01	6/27/11	Sheet 2 of 4	Revised
G-70.10-00	10/5/07	Sheet 3 of 4		G-70.10-01	6/27/11	Sheet 3 of 4	Revised
G-70.10-00	10/5/07	Sheet 4 of 4		G-70.10-01	6/27/11	Sheet 4 of 4	Revised
G-70.20-00	10/5/07			G-70.20-01	6/27/11		Revised
G-70.30-00	10/5/07			G-70.30-01	6/27/11		Revised
Blank				Blank			
G-90.10-00	1/6/09			G-90.10-01	5/11/11		Revised
G-90.20-00	1/6/09			G-90.20-01	6/27/11		Revised
G-90.30-00	1/6/09			G-90.30-01	6/2/11		Revised
G-90.40-01	10/14/09			G-90.40-01	10/14/09		Reprinted
G-95.10-00	11/8/07	Sheet 1 of 3		G-95.10-01	6/2/11	Sheet 1 of 3	Revised
G-95.10-00	11/8/07	Sheet 2 of 3		G-95.10-01	6/2/11	Sheet 2 of 3	Revised
G-95.10-00	11/8/07	Sheet 3 of 3		G-95.10-01	6/2/11	Sheet 3 of 3	Revised
G-95.20-01	7/10/08	Sheet 1 of 3		G-95.20-02	6/2/11	Sheet 1 of 3	Revised
G-95.20-01	7/10/08	Sheet 2 of 3		G-95.20-02	6/2/11	Sheet 2 of 3	Revised
G-95.20-01	7/10/08	Sheet 3 of 3		G-95.20-02	6/2/11	Sheet 3 of 3	Revised
G-95.30-01	7/10/08	Sheet 1 of 2		G-95.30-02	6/2/11	Sheet 1 of 2	Revised
G-95.30-01	7/10/08	Sheet 2 of 2		G-95.30-02	6/2/11	Sheet 2 of 2	Revised
J-8a	5/20/04		Deleted				
J-8b	5/20/04	Sheet 1 of 2	Deleted				
J-8b	5/20/04	Sheet 2 of 2	Deleted				
J-8c	5/20/04	Sheet 1 of 3	Deleted				

REMOVE & INSERT INSTRUCTIONS ~ Standard Plans Revision 8-1-2011

REMOVE				*INSERT*			
J-8c	5/20/04	Sheet 2 of 3	Deleted				
J-8c	5/20/04	Sheet 3 of 3	Deleted				
J-8d	5/20/04	Sheet 1 of 2	Deleted				
J-8d	5/20/04	Sheet 2 of 2	Deleted				
J-9a	4/24/98		Deleted	Blank			
J-10	7/8/97			J-10	7/8/97		Reprinted
J-10.10-00	6/16/10	Sheet 1 of 5		J-10.10-01	5/11/11	Sheet 1 of 5	Revised
J-10.10-00	6/16/10	Sheet 2 of 5		J-10.10-01	5/11/11	Sheet 2 of 5	Revised
J-10.10-00	6/16/10	Sheet 3 of 5		J-10.10-01	5/11/11	Sheet 3 of 5	Revised
J-10.10-00	6/16/10	Sheet 4 of 5		J-10.10-01	5/11/11	Sheet 4 of 5	Revised
J-10.10-00	6/16/10	Sheet 5 of 5		J-10.10-01	5/11/11	Sheet 5 of 5	Revised
J-11b	9/2/05	Sheet 1 of 2	Deleted	J-12	2/10/09	Sheet 1 of 2	Reprinted
J-11b	9/2/05	Sheet 2 of 2	Deleted				
J-12	2/10/09	Sheet 1 of 2					
Blank							
J-18	2/10/09	Sheet 1 of 2	Deleted				
J-18	2/10/09	Sheet 2 of 2	Deleted				
J-19	2/10/09		Deleted				
Blank							
J-20	9/2/05	Sheet 1 of 3	Deleted				
J-20	9/2/05	Sheet 2 of 3	Deleted				
J-20	9/2/05	Sheet 3 of 3	Deleted				
J-20.26-00	10/14/09			J-20.26-00	10/14/09		Reprinted
J-21.10-01	6/3/10	Sheet 1 of 2		J-21.10-02	6/27/11	Sheet 1 of 2	Revised
J-21.10-01	6/3/10	Sheet 2 of 2		J-21.10-02	6/27/11	Sheet 2 of 2	Revised
J-21.15-00	10/14/09			J-21.15-00	10/14/09		Reprinted
J-22.16-01	6/3/10			J-22.16-01	6/3/10		Reprinted
J-26.10-00	6/16/10			J-26.10-01	6/27/11		Revised
J-26.15-00	6/16/10	Sheet 3 of 3		J-26.15-00	6/16/10	Sheet 3 of 3	Reprinted
J-28.10-00	8/7/07	Sheet 1 of 2		J-28.10-01	5/11/11	Sheet 1 of 2	Revised
J-28.10-00	8/7/07	Sheet 2 of 2		J-28.10-01	5/11/11	Sheet 2 of 2	Revised
J-28.22-00	8/7/07	Sheet 1 of 2		J-28.22-00	8/7/07	Sheet 1 of 2	Reprinted
J-28.26-01	12/2/08			J-28.26-01	12/2/08		Reprinted
J-28.30-01	10/14/09	Sheet 1 of 2		J-28.30-02	6/27/11	Sheet 1 of 2	Revised
J-28.30-01	10/14/09	Sheet 2 of 2		J-28.30-02	6/27/11	Sheet 2 of 2	Revised
J-28.40-01	10/14/09			J-28.40-01	10/14/09		Reprinted
J-28.42-00	8/7/07			J-28.42-00	8/7/07		Reprinted
J-28.45-00	8/7/07			J-28.45-01	6/27/11		Revised
J-28.50-01	6/16/10			J-28.50-02	6/2/11		Revised
J-28.60-00	8/7/07			J-28.60-01	6/2/11		Revised
J-28.70-00	11/8/07			J-28.70-01	5/11/11		Revised
J-40.10-01	10/14/09	Sheet 1 of 2		J-29.10-00	6/27/11		New Plan
J-40.10-01	10/14/09	Sheet 2 of 2		J-29.15-00	6/27/11	Sheet 1 of 2	New Plan
J-40.30-01	6/3/10	Sheet 1 of 2		J-29.15-00	6/27/11	Sheet 2 of 2	New Plan
				J-29.16-00	6/27/11		New Plan
				J-40.10-02	5/11/11	Sheet 1 of 2	Revised
				J-40.10-02	5/11/11	Sheet 2 of 2	Revised
				J-40.20-00	5/11/11	Sheet 1 of 2	New Plan
				J-40.20-00	5/11/11	Sheet 2 of 2	New Plan
				J-40.30-02	5/11/11	Sheet 1 of 2	Revised
J-40.30-01	6/3/10	Sheet 2 of 2		J-40.30-02	5/11/11	Sheet 2 of 2	Revised
J-40.36-00	6/3/10			J-40.36-00	6/3/10		Reprinted
J-40.37-00	6/3/10	Sheet 2 of 2		J-40.37-00	6/3/10	Sheet 2 of 2	Reprinted
J-60.13-00	6/16/10			J-40.38-00	6/16/11		New Plan

REMOVE & INSERT INSTRUCTIONS ~ Standard Plans Revision 8-1-2011

REMOVE				*INSERT*			
				J-50.10-00	6/3/11		New Plan
				J-50.11-00	6/3/11	Sheet 1 of 2	New Plan
				J-50.11-00	6/3/11	Sheet 2 of 2	New Plan
				J-50.12-00	6/3/11	Sheet 1 of 3	New Plan
				J-50.12-00	6/3/11	Sheet 2 of 3	New Plan
				J-50.12-00	6/3/11	Sheet 3 of 3	New Plan
				J-50.15-00	6/3/11	Sheet 1 of 3	New Plan
				J-50.15-00	6/3/11	Sheet 2 of 3	New Plan
				J-50.15-00	6/3/11	Sheet 3 of 3	New Plan
				J-50.16-00	6/3/11		New Plan
				J-50.20-00	6/3/11	Sheet 1 of 3	New Plan
				J-50.20-00	6/3/11	Sheet 2 of 3	New Plan
				J-50.20-00	6/3/11	Sheet 3 of 3	New Plan
				J-50.25-00	6/3/11	Sheet 1 of 2	New Plan
				J-50.25-00	6/3/11	Sheet 2 of 2	New Plan
				J-50.30-00	6/3/11	Sheet 1 of 3	New Plan
				J-50.30-00	6/3/11	Sheet 2 of 3	New Plan
				J-50.30-00	6/3/11	Sheet 3 of 3	New Plan
				J-60.05-00	6/16/11	Sheet 1 of 4	New Plan
				J-60.05-00	6/16/11	Sheet 2 of 4	New Plan
				J-60.05-00	6/16/11	Sheet 3 of 4	New Plan
				J-60.05-00	6/16/11	Sheet 4 of 4	New Plan
				Blank			
				J-60.13-00	6/16/10		Reprinted
J-60.14-00	6/16/10			J-60.14-00	6/16/10		Reprinted
J-75.10-00	2/10/09			J-75.10-01	5/11/11		Revised
J-75.20-00	2/10/09			J-75.20-00	2/10/09		Reprinted
J-75.30-00	2/10/09			J-75.30-01	5/11/11		Revised
J-75.45-00	10/14/09	Sheet 2 of 2		J-75.45-00	10/14/09	Sheet 2 of 2	Reprinted
J-90.10-00	2/10/09	Sheet 1 of 2		J-90.10-01	6/27/11	Sheet 1 of 2	Revised
J-90.10-00	2/10/09	Sheet 2 of 2		J-90.10-01	6/27/11	Sheet 2 of 2	Revised
J-90.20-00	2/10/09	Sheet 1 of 2		J-90.20-01	6/27/11	Sheet 1 of 2	Revised
J-90.20-00	2/10/09	Sheet 2 of 2		J-90.20-01	6/27/11	Sheet 2 of 2	Revised
Blank				Blank			
Blank				Blank			
L-10.10-00	2/21/07	Sheet 1 of 2		L-10.10-01	6/16/11	Sheet 1 of 2	Revised
L-10.10-00	2/21/07	Sheet 2 of 2		L-10.10-01	6/16/11	Sheet 2 of 2	Revised
L-20.10-00	2/7/07	Sheet 1 of 2		L-20.10-01	6/16/11	Sheet 1 of 2	Revised
L-20.10-00	2/7/07	Sheet 2 of 2		L-20.10-01	6/16/11	Sheet 2 of 2	Revised
L-30.10-00	2/7/07	Sheet 1 of 2		L-30.10-01	6/16/11	Sheet 1 of 2	Revised
L-30.10-00	2/7/07	Sheet 2 of 2		L-30.10-01	6/16/11	Sheet 2 of 2	Revised
L-40.10-00	2/21/07	Sheet 1 of 2		L-40.10-01	6/16/11	Sheet 1 of 2	Revised
L-40.10-00	2/21/07	Sheet 2 of 2		L-40.10-01	6/16/11	Sheet 2 of 2	Revised
L-40.15-00	2/21/07			L-40.15-01	6/16/11		Revised
L-40.20-00	2/21/07			L-40.20-01	6/16/11		Revised
L-70.10-01	5/21/08			L-70.10-01	5/21/08		Reprinted
M-1.20-01	1/30/07			M-1.20-02	6/3/11		Revised
M-1.40-01	1/30/07			M-1.40-02	6/3/11		Revised
M-1.60-01	1/30/07			M-1.60-02	6/3/11		Revised
M-1.80-02	8/31/07			M-1.80-03	6/3/11		Revised
M-2.20-01	1/30/07			M-2.20-02	6/3/11		Revised
M-2.40-01	1/30/07		Deleted	M-3.10-03	6/3/11		Revised

REMOVE & INSERT INSTRUCTIONS ~ Standard Plans Revision 8-1-2011

REMOVE				*INSERT*			
M-2.60-01	1/30/07		Deleted				
M-3.10-02	2/10/09						
M-3.20-01	1/30/07			M-3.20-02	6/3/11		Revised
M-3.30-02	2/10/09			M-3.30-03	6/3/11		Revised
M-3.40-02	2/10/09			M-3.40-03	6/3/11		Revised
M-3.50-01	1/30/07			M-3.50-02	6/3/11		Revised
M-5.10-01	1/30/07			M-5.10-02	6/3/11		Revised
M-7.50-01	1/30/07			M-7.50-01	1/30/07		Reprinted
M-20.10-01	1/30/07			M-20.10-02	6/3/11		Revised
M-20.20-01	1/30/07			M-20.20-01	1/30/07		Reprinted
M-20.30-02	10/14/09			M-20.30-02	10/14/09		Reprinted
M-20.40-01	1/30/07	Sheet 1 of 2		M-20.40-02	6/3/11	Sheet 1 of 2	Revised
M-20.40-01	1/30/07	Sheet 2 of 2		M-20.40-02	6/3/11	Sheet 2 of 2	Revised
M-20.50-01	1/30/07			M-20.50-02	6/3/11		Revised
M-24.40-01	5/31/06	Sheet 2 of 2		M-24.40-01	5/31/06	Sheet 2 of 2	Reprinted
M-24.60-02	2/6/07	Sheet 1 of 2		M-24.50-00	6/16/11		New Plan
				Blank			
				M-24.60-03	5/11/11	Sheet 1 of 2	Revised
M-24.60-02	2/6/07	Sheet 2 of 2		M-24.60-03	5/11/11	Sheet 2 of 2	Revised
M-40.10-01	6/3/10			M-40.10-02	5/11/11		Revised
M-40.60-00	9/20/07			M-40.60-00	9/20/07		Reprinted
M-60.10-00	9/5/07	Sheet 1 of 4		M-60.10-01	6/3/11	Sheet 1 of 4	Revised
M-60.10-00	9/5/07	Sheet 2 of 4		M-60.10-01	6/3/11	Sheet 2 of 4	Revised
M-60.10-00	9/5/07	Sheet 3 of 4		M-60.10-01	6/3/11	Sheet 3 of 4	Revised
M-60.10-00	9/5/07	Sheet 4 of 4		M-60.10-01	6/3/11	Sheet 4 of 4	Revised
M-60.20-01	2/3/09	Sheet 1 of 2		M-60.20-02	6/27/11	Sheet 1 of 2	Revised
M-60.20-01	2/3/09	Sheet 2 of 2		M-60.20-02	6/27/11	Sheet 2 of 2	Revised
M-65.10-01	5/21/08	Sheet 1 of 2		M-65.10-02	5/11/11	Sheet 1 of 2	Revised
M-65.10-01	5/21/08	Sheet 2 of 2		M-65.10-02	5/11/11	Sheet 2 of 2	Revised
M-80.10-00	6/10/08	Sheet 1 of 2		M-80.10-01	6/3/11	Sheet 1 of 2	Revised
M-80.10-00	6/10/08	Sheet 2 of 2		M-80.10-01	6/3/11	Sheet 2 of 2	Revised
M-80.20-00	6/10/08			M-80.20-00	6/10/08		Reprinted

This page left blank intentionally.

Washington State
Department of Transportation

Standard Plans

M 21-01

August 1, 2011

Environmental and Engineering Programs
Design Office

Americans with Disabilities Act (ADA) Information

Materials can be provided in alternative formats by calling the ADA Compliance Manager at 360-705-7097. Persons who are deaf or hard of hearing may contact that number via the Washington Relay Service at 7-1-1.

Title VI Notice to Public

It is the Washington State Department of Transportation's (WSDOT) policy to assure that no person shall, on the grounds of race, color, national origin, or sex, as provided by Title VI of the Civil Rights Act of 1964, be excluded from participation in, be denied the benefits of, or be otherwise discriminated against under any of its federally funded programs and activities. Any person who believes his/her Title VI protection has been violated, may file a complaint with WSDOT's Office of Equal Opportunity (OEO). For Title VI complaint forms and advice, please contact OEO's Title VI Coordinator at 360-705-7098 or 509-324-6018.

To get the latest information for WSDOT administrative and engineering manuals, sign up for individual manual e-mail updates at www.wsdot.wa.gov/publications/manuals.

Washington State Department of Transportation
Administrative and Engineering Publications
PO Box 47304
Olympia, WA 98504-7304

Contents

Plan No.	Plan Title	Publication Approval Date	
Section A	**Roadway Construction**		
A-10.10-00	Survey Stakes	8/7/07	*2 Sheets*
A-10.20-00	Survey Monument Types 1 and 2	10/5/07	
A-10.30-00	Monument and Cover	10/5/07	
A-20.10-00	Slope Treatment	8/31/07	
A-30.10-00	Concrete Slope Protection	11/8/07	
A-30.15-00	Semi-open Concrete Masonry Slope Protection	11/8/07	
A-30.30-01	Wire Mesh Slope Protection	6/16/11	
A-30.35-00	Slope Protection Anchors	10/12/07	
A-40.00-00	Dowel Bar Baskets	8/11/09	
A-40.10-02	Cement Concrete Pavement Joints	6/2/11	
A-40.15-00	PCC Pavement Isolation Joints	8/11/09	*2 Sheets*
A-40.20-00	Bridge Transverse Joint Seals for HMA	9/20/07	
A-40.50-01	Bridge Approach Slab	6/2/11	*2 Sheets*
A-50.10-00	Embankment Widening at Bridge End with Wing Wall	11/17/08	*2 Sheets*
A-50.20-01	Embankment Widening at Bridge End with Curtain Wall	9/22/09	*2 Sheets*
A-50.30-00	Embankment Widening at Bridge End with "L" Shaped Abutment	11/17/08	*2 Sheets*
A-50.40-00	Embankment Widening at Bridge End with Sidewalk	11/17/08	
A-60.10-01	Cement Concrete Pavement Repair	10/14/09	*2 Sheets*
A-60.20-02	Dowel Bar Retrofit for Cement Concrete Pavement	6/2/11	*2 Sheets*
A-60.30-00	Bridge Deck Transition for HMA Overlay	11/8/07	
A-60.40-00	HMA Overlay: Further Deck Preparation	8/31/07	
Section B	**Drainage Structures and Hydraulics**		
B-5.20-01	Catch Basin Type 1	6/16/11	
B-5.40-01	Catch Basin Type 1L	6/16/11	
B-5.60-01	Catch Basin Type 1P (for Parking Lot)	6/16/11	
B-10.20-00	Catch Basin Type 2	6/1/06	
B-10.40-00	Catch Basin Type 2 with Flow Restrictor	6/1/06	
B-10.60-00	Catch Basin Type 2 with Baffle Type Flow Restrictor	6/8/06	
B-15.20-00	Manhole Type 1	6/1/06	
B-15.40-00	Manhole Type 2	6/1/06	
B-15.60-00	Manhole Type 3	6/1/06	
B-20.20-01	Drywell Type 1 (for Swale)	11/21/06	
B-20.40-02	Drywell Type 2 (with Pipe Inlet)	6/10/08	
B-20.60-02	Drywell Type 3 (with At-Grade Inlet)	6/10/08	
B-25.20-00	Combination Inlet	6/8/06	
B-25.60-00	Concrete Inlet	6/1/06	
B-30.10-00	Rectangular Frame (Reversible)	6/8/06	
B-30.20-01	Rectangular Solid Metal Cover	11/21/06	
B-30.30-00	Rectangular Vaned Grate	6/1/06	
B-30.40-00	Rectangular Bi-Directional Vaned Grate	6/1/06	
B-30.50-00	Rectangular Herringbone Grate	6/1/06	
B-30.70-02	Circular Frame (Ring) and Cover	6/16/11	
B-30.80-00	Circular Grate	6/8/06	
B-30.90-01	Miscellaneous Details for Drainage Structures	9/20/07	

Contents

Plan No.	Plan Title	Publication Approval Date	
B-35.20-00	Grate Inlet Type 1 (Cast-In-Place)	6/8/06	
B-35.40-00	Grate Inlet Type 2	6/8/06	*2 Sheets*
B-40.20-00	Welded Grates for Grate Inlet	6/1/06	
B-40.40-01	Frame and Dual Vaned Grates for Grate Inlet	6/16/10	
B-45.20-00	Drop Inlet Type 1	6/1/06	
B-45.40-00	Drop Inlet Type 2	6/1/06	
B-50.20-00	Grates for Drop Inlet	6/1/06	
B-55.20-00	Pipe Zone Bedding and Backfill	6/1/06	
B-60.20-00	Connection Details for Dissimilar Culvert Pipe	6/8/06	
B-60.40-00	Coupling Bands for Corrugated Metal Pipe	6/1/06	
B-65.20-00	Animal/Pedestrian Underpass	6/1/06	
B-65.40-00	Equipment Underpass	6/1/06	
B-70.20-00	Beveled End Sections (for Culverts 30” Diameter or Less)	6/1/06	
B-70.60-00	Flared End Sections	6/1/06	
B-75.20-01	Headwalls for Culvert Pipe and Underpass	6/10/08	
B-75.50-01	Type 1 Safety Bars for Stepped Culvert Pipe or Pipe Arch	6/10/08	
B-75.60-00	Type 2 Safety Bars for Culvert Pipe or Pipe Arch (On Cross Road)	6/8/06	
B-80.20-00	Tapered End Section with Type 3 Safety Bars	6/8/06	
B-80.40-00	Tapered End Section with Type 4 Safety Bars (On Cross Road)	6/1/06	
B-82.20-00	Residential Storm Drain, Under Sidewalk	6/1/06	
B-85.10-01	Vertical Connection (for Sanitary Sewer Use)	6/10/08	
B-85.20-00	Side Sewer Connection (for Sanitary Sewer Use)	6/1/06	
B-85.30-00	Standing Side Sewer Connection (for Sanitary Sewer Use)	6/1/06	
B-85.40-00	8 Inch Sewer Clean-Out (for Sanitary Sewer Use)	6/8/06	
B-85.50-01	Drop Connections (for Sanitary Sewer Use)	6/10/08	
B-90.10-00	Hydrant Setting Types A and B	6/8/06	
B-90.20-00	2 Inch Blowoff Assembly	6/8/06	
B-90.30-00	Combination Air Release / Air Vacuum Valve Assembly	6/8/06	
B-90.40-00	Concrete Thrust Block	6/8/06	
B-90.50-00	Concrete Thrust Block for Convex Vertical Bends	6/8/06	
B-95.20-01	Median Barrier Drainage Installation	2/3/09	
B-95.40-00	Inlet Placement at Bridge End	6/8/06	

Section C Traffic Barrier

C-1	Beam Guardrail Types 1 ~ 4 (W-Beam)	6/16/11	*2 Sheets*
C-1a	Beam Guardrail (Thrie Beam)	10/14/09	
C-1b	Beam Guardrail Posts and Blocks	6/16/11	*2 Sheets*
C-1c	Beam Guardrail	5/30/97	
C-1d	Thrie Beam Guardrail Reducer Section	10/31/03	
C-2	Guardrail Placement (Cases 1, 2 & 3)	1/6/00	
C-2a	Guardrail Placement (Cases 4, 5 & 6)	6/21/06	
C-2b	Guardrail Placement (Cases 7 & 8)	6/21/06	
C-2c	Guardrail Placement, Median Bull Nose (Cases 9A, 9B & 9C)	6/21/06	
C-2d	Guardrail Placement (Cases 10A, 10B & 10C)	6/21/06	

Contents

Plan No.	Plan Title	Publication Approval Date	
C-2e	Guardrail Placement (Cases 11A, 11B & 11C)	6/21/06	
C-2f	Guardrail Placement, Weak Post Intersection Design (8' - 6" Max. Radius) (Cases 12AC, 12AD, 12BC & 12BD)	3/14/97	
C-2g	Guardrail Placement, Weak Post Intersection Design (35' Max. Radius) (Cases 13AC, 13AD, 13BC & 13BD)	7/27/01	
C-2h	Guardrail Placement (Case 14)	3/28/97	
C-2i	Guardrail Placement (Case 15)	3/28/97	
C-2j	Guardrail Placement (Cases 16, 17 & 18)	6/12/98	
C-2k	Guardrail Placement 12’ - 6” Span (Cases 19A & 19B)	7/27/01	
C-2n	Guardrail Placement 18’ - 9” Span (Case 20)	7/27/01	
C-2o	Guardrail Placement 25’ Span (Case 21)	7/13/01	
C-2p	Guardrail Placement, Strong Post Intersection Design (Cases 22AC, 22AD, 22BC & 22BD)	10/31/03	
C-3	Beam Guardrail Transition Sections (Types 1, 1A, & 1B)	6/27/11	
C-3a	Beam Guardrail Transition Sections (Types 2, 4, 5, & 6)	10/4/05	
C-3b	Beam Guardrail Transition Sections (Types 10 ~ 15)	6/27/11	*2 Sheets*
C-3c	Beam Guardrail Transition Sections (Types 16, 17, & 18)	6/27/11	
C-4b	Beam Guardrail Flared Terminal	6/8/06	
C-4e	Beam Guardrail Non-Flared Terminal	2/20/03	
C-4f	Beam Guardrail Bull Nose Terminal	6/16/11	*4 Sheets*
C-5	Guardrail Connection to Bridge Rail or Concrete Barrier	6/16/11	
C-6	Beam Guardrail Anchor Type 1	5/30/97	*2 Sheets*
C-6a	Beam Guardrail Anchor Type 2	10/14/09	
C-6c	Beam Guardrail Anchor Type 4	1/6/00	
C-6d	Beam Guardrail Anchor Type 5	5/30/97	
C-6f	Beam Guardrail Anchor Type 7	7/25/97	
C-7	Beam Guardrail End Sections	6/16/11	
C-7a	Thrie Beam End Sections	6/16/11	
C-8	Concrete Barrier Type 2	2/10/09	*2 Sheets*
C-8a	Concrete Barrier Type 4 and Transition Section	7/25/97	
C-8b	Concrete Barrier Light Standard Section	6/27/11	2 Sheets
C-8e	Precast Concrete Barrier Anchor ~ Type 3 (Permanent)	2/21/07	
C-8f	Concrete Barrier Transition, Type 2 to Bridge F-Shape	6/30/04	
C-10	Box Culvert Guardrail Steel Post	6/3/10	*2 Sheets*
C-13	Single Slope Concrete Barrier (Pre-Cast)	7/3/08	*3 Sheets*
C-13a	Single Slope Concrete Barrier (Pre-Cast)Transition Section	7/3/08	
C-13b	Single Slope Concrete Barrier (Pre-Cast) Vertical Back	7/3/08	
C-13c	Single Slope Concrete Barrier (Pre-Cast) Terminal	7/3/08	
C-14a	Single Slope Concrete Barrier (Cast-in-Place) Dual Faced	7/3/08	*3 Sheets*
C-14b	Concrete Barrier Transition, Type 2 to Single Slope	7/26/02	
C-14c	Single Slope Concrete Barrier (Cast-in-Place) Terminal	7/3/08	
C-14d	Single Slope Concrete Barrier (Cast-in-Place) Trans. Section	7/3/08	
C-14e	Single Slope Concrete Barrier (Cast-in-Place) Vertical Back	7/3/08	
C-15a	Single Slope Concrete Barrier Placement (Split)	7/3/08	

Contents

Plan No.	Plan Title	Publication Approval Date	
C-15b	Single Slope Concrete Barrier Placement (Wrap)	7/3/08	
C-16a	Traffic Barrier Shoulder Widening ~ for Shoulders 8.0' and Wider	6/3/10	
C-16b	Traffic Barrier Shoulder Widening ~ for Shoulders Less Than 8.0' Wide	6/3/10	
C-20.14-01	Beam Guardrail Type 31: Placement (Cases 1-31, 2-31, & 3-31)	10/14/09	
C-20.15-00	Beam Guardrail Type 31: Placement (Cases 4-31 & 5-31)	10/14/09	
C-20.18-00	Beam Guardrail Type 31 Placement (Cases 10A-31, 10B-31 and 10C-31)	10/14/09	
C-20.19-00	Beam Guardrail Type 31 Placement (Cases 11A-31, 11B-31 and 11C-31)	10/14/09	
C-20.40-02	Beam Guardrail Type 31: Placement ~ 12'-6", 18'-9", or 25'-0" Span	6/16/11	
C-20.42-02	Guardrail Placement Strong Post ~ Type 31 Intersection Design	6/16/11	
C-20.45-00	Beam Guardrail Type 31 - DS (W-Beam)	6/16/11	
C-22.14-02	Beam Guardrail Type 1 Buried Terminal Type 2	6/16/11	
C-22.16-02	Beam Guardrail Type 31 Buried Terminal Type 2	6/16/11	
C-22.40-02	Beam Guardrail Type 31: Non-Flared Terminal	6/16/10	
C-22.45-00	Beam Guardrail Type 31 Non-Flared Terminal Steel Posts (40 mph/Below)	6/16/11	
C-23.60-01	Beam Guardrail (Type 31) Anchor Type 10	10/14/09	
C-25.18-02	Beam Guardrail (Type 31) Transition Section Type 20	6/16/11	
C-25.20-04	Beam Guardrail (Type 31) Transition Section Type 21	10/14/09	
C-25.22-03	Beam Guardrail (Type 31) Transition Section Type 22	10/14/09	
C-25.26-01	Beam Guardrail (Type 31) Transition Section Type 23	10/14/09	
C-25.80-01	Beam Guardrail Type 31 to Beam Guardrail Type 1 Adapter	7/3/08	
C-28.40-01	Beam Guardrail Type 31	6/16/11	
C-40.14-01	Barrier Placement Cable to Thrie Beam Bull Nose Connection	6/3/10	
C-40.16-01	Barrier Placement ~ Cable to W-Beam Shielding for Redirectional Landform	6/3/10	
C-40.18-01	Barrier Placement ~ Cable Barrier Shielding for Redirectional Landform	10/14/09	
C-85.14-00	Single Slope Concrete Barrier Light Standard Foundation	6/16/11	
C-85.15-00	Single Slope Concrete Barrier (42") Light Standard Foundation	6/16/11	
C-85.16-00	Single Slope Concrete Barrier Sign Bridge Foundation	6/16/11	*2 Sheets*
C-85.18-00	Single Slope Concrete Barrier Transition for Monotube Support	6/16/11	
C-85.20-00	Single Slope Concrete Barrier Truss-Type Sign Foundation	6/16/11	*2 Sheets*
C-90.10-00	Impact Attenuator Inertial Barrier Configurations	7/3/08	

Contents

Plan No.	Plan Title	Publication Approval Date	
Section D	**Retaining, Noise Barrier, and Geosynthetic Walls**		
D-2.04-00	Noise Barrier Wall Type 2 (CIP Conc. on Spread Footing)	11/10/05	*2 Sheets*
D-2.06-01	Noise Barrier Wall Type 3 (… on Offset Spread Footing)	1/6/09	*2 Sheets*
D-2.08-00	Noise Barrier Wall Type 4 (CIP Conc. on Shaft Foundation)	11/10/05	*2 Sheets*
D-2.14-00	Noise Barrier Wall Type 6 (CIP Conc. with Traffic Barrier on Spread Footing)	11/10/05	
D-2.16-00	Noise Barrier Wall Type 6SS (CIP Conc. w/ Single Slope Traffic Barrier on Spread Footing)	11/10/05	
D-2.18-00	Noise Barrier Wall Type 7 (CIP Conc. with Traffic Barrier on Shaft Foundation)	11/10/05	
D-2.20-00	Noise Barrier Wall Type 7SS (CIP Conc. w/ Single Slope Traffic Barrier on Shaft Fdn.)	11/10/05	
D-2.32-00	Noise Barrier Wall Type 9 (Precast Conc. on Spread Footing)	11/10/05	*2 Sheets*
D-2.34-01	Noise Barrier Wall Type 10 (… on Offset Spread Footing)	1/6/09	*2 Sheets*
D-2.36-02	Noise Barrier Wall Type 11 (... on Shaft Foundation)	1/6/09	*3 Sheets*
D-2.42-00	Noise Barrier Wall Type 13 (Precast Conc. with Traffic Barrier on Spread Footing)	11/10/05	
D-2.44-00	Noise Barrier Wall Type 13SS (Precast w/ Single Slope Traffic Barrier on Spread Footing)	11/10/05	
D-2.46-00	Noise Barrier Wall Type 14 (Precast Conc. w/ Traffic Barrier on Shaft Foundation)	11/10/05	*2 Sheets*
D-2.48-00	Noise Barrier Wall Type 14SS (Precast Conc. w/ Single Slope Traffic Barrier on Shaft Fdn.)	11/10/05	*2 Sheets*
D-2.60-00	Noise Barrier Wall Type 16 (Masonry on Trench Footing)	11/10/05	*2 Sheets*
D-2-62-00	Noise Barrier Wall Type 17 (Masonry on Spread Footing)	11/10/05	*2 Sheets*
D-2.64-01	Noise Barrier Wall Type 18 (Masonry on Offset Spread Ftg.)	1/6/09	*2 Sheets*
D-2.66-00	Noise Barrier Wall Type 19 (Masonry on Shaft with Grade Beam Foundation)	11/10/05	*2 Sheets*
D-2.68-00	Noise Barrier Wall Type 20 (Masonry on Shaft Foundation)	11/10/05	*2 Sheets*
D-2.80-00	Noise Barrier Wall Access Door Type 1 (Cast-In-Place)	11/10/05	
D-2.82-00	Noise Barrier Wall Access Door Type 2 (Cast-In-Place)	11/10/05	*2 Sheets*
D-2.84-00	Noise Barrier Wall Access Door Type 3 (Precast)	11/10/05	
D-2.86-00	Noise Barrier Wall Access Door Type 4 (Precast)	11/10/05	*2 Sheets*
D-2.88-00	Noise Barrier Wall Access Door Type 5 (Masonry)	11/10/05	
D-2.92-00	Noise Barrier Wall Access Door & Frame	11/10/05	*2 Sheets*
D-3	Permanent Geosynthetic Wall	6/2/11	*4 Sheets*
D-3.10-00	Cast-In-Place Permanent Geosynthetic Wall Fascia and Facing	6/16/10	
D-3.11-00	Precast Permanent Geosynthetic Wall Fascia	6/16/10	*2 Sheets*
D-3.15-00	Permanent Geosynthetic Wall: Single Slope Barrier	6/16/11	
D-3.16-00	Permanent Geosynthetic Wall: F-Shape Barrier	6/16/11	
D-3.17-00	Permanent Geosynthetic Wall Expansion Joint Details	6/16/11	
D-4	Backfill and Drainage for Retaining Walls	12/11/98	
D-6	Gabions	6/19/98	

Contents

Plan No.	Plan Title	Publication Approval Date	
D-10.10-01	Reinforced Concrete Retaining Wall Type 1 and 1 SW	12/2/08	*2 Sheets*
D-10.15-01	Reinforced Concrete Retaining Wall Type 2 and 2 SW	12/2/08	*2 Sheets*
D-10.20-00	Reinforced Concrete Retaining Wall Type 3 and 3 SW	7/8/08	*2 Sheets*
D-10.25-00	Reinforced Concrete Retaining Wall Type 4 and 4 SW	7/8/08	*2 Sheets*
D-10.30-00	Reinforced Concrete Retaining Wall Type 5	7/8/08	*2 Sheets*
D-10.35-00	Reinforced Concrete Retaining Wall Type 6	7/8/08	*2 Sheets*
D-10.40-01	Reinforced Concrete Retaining Wall Type 7	12/2/08	*2 Sheets*
D-10.45-01	Reinforced Concrete Retaining Wall Type 8	12/2/08	*2 Sheets*
D-15.10-01	Traffic Barrier Details for Reinforced Concrete Retaining Walls	12/2/08	*2 Sheets*
D-15.20-02	Traffic Barrier Details for Reinforced Concrete Retaining Walls	6/2/11	*2 Sheets*
D-15.30-01	Traffic Barrier Details for Reinforced Concrete Retaining Walls	12/2/08	*2 Sheets*

Section E Bridges and Trestles

E-1	Date Numeral Placement on Bridge Traffic Barrier	2/21/07	
E-2	Pile or Frame Detour Bridge with Asphalt Overlay	5/29/98	*2 Sheets*
E-4	Precast Prestressed Concrete Piles	8/27/03	
E-4a	Precast Prestressed Concrete Piles: Handling & Capping	8/27/03	

Section F Curbs, Sidewalks, and Driveways

F-10.12-02	Cement Concrete Curbs	6/16/11	
F-10.16-00	Cement Concrete Curb and Gutter Pan	12/20/06	
F-10.18-00	Roundabout Cement Concrete Curbs	6/27/11	
F-10.40-01	Extruded Curb Placement	7/3/08	
F-10.42-00	Extruded Curb	1/23/07	
F-10.62-01	Precast Concrete Sloped Mountable Curb	9/5/07	*2 Sheets*
F-10.64-02	Precast Concrete Dual Faced Sloped Mountable Curb	7/3/08	
F-30.10-01	Cement Concrete Sidewalk	6/3/10	
F-40.12-01	Parallel Curb Ramp	6/3/10	
F-40.14-01	Combination Curb Ramps	6/3/10	
F-40.15-01	Perpendicular Curb Ramps	6/3/10	
F-40.16-01	Single Direction Curb Ramps	6/3/10	
F-45.10-00	Detectable Warning Surface	6/3/10	
F-80.10-01	Cement Concrete Driveway Entrance: Types 1, 2, 3, & 4	6/3/10	*2 Sheets*

Section G Signs and Sign Supports

G-10.10-00	Milepost	9/20/07	
G-20.10-00	Ground Mounted Sign Placement	9/20/07	
G-22.10-01	Timber Sign Support	7/3/08	*3 Sheets*
G-24.10-00	Steel Sign Support Type AP, Installation Details	11/8/07	
G-24.20-00	Steel Sign Support Type AS, Installation Details	11/8/07	
G-24.30-00	Steel Sign Support, Types PL, PL-T, & PL-U, Inst. Det.	11/8/07	*2 Sheets*
G-24.40-01	Steel Sign Support, Types SB-1, SB-2 & SB-3 Installation Details	12/2/08	*2 Sheets*
G-24.50-00	Steel Sign Support, Types ST-1 ~ ST-4, Installation Details	11/8/07	

Plan No.	Plan Title	Publication Approval Date	
G-24.60-01	Steel Sign Support, Types TP-A & TP-B, Installation Details	6/16/11	*2 Sheets*
G-25.10-02	Steel Sign Support Foundation Details	6/27/11	
G-30.10-01	Sign Installation on Signal and Light Standards	6/16/11	*2 Sheets*
G-50.10-00	Sign Bracing	11/8/07	*2 Sheets*
G-60.10-01	Cantilever Sign Structure (Truss-Type)	6/27/11	*4 Sheets*
G-60.20-01	Cantilever Sign Structure (Truss-Type) Foundation Type 1	6/27/11	*2 Sheets*
G-60.30-01	Cantilever Sign Structure (Truss-Type) Fdn., Types 2 & 3	6/27/11	*2 Sheets*
G-70.10-01	Sign Bridge (Truss-Type)	6/27/11	*4 Sheets*
G-70.20-01	Sign Bridge (Truss-Type) Foundation Type1	6/27/11	
G-70.30-01	Sign Bridge (Truss-Type) Foundation Types 2 & 3	6/27/11	
G-90.10-01	Overhead Sign Bracing and Lighting Placement	5/11/11	
G-90.20-01	Overhead Sign Mounting (Monotube Structure)	6/27/11	
G-90.30-01	Overhead Sign Mounting (Truss Structure)	6/2/11	
G-90.40-01	Overhead Sign Lighting Details	10/14/09	
G-95.10-01	Maintenance Walkway for Sign Bridges	6/2/11	*3 Sheets*
G-95.20-02	Maintenance Walkway Mounting for Monotube Sign Bridge	6/2/11	*3 Sheets*
G-95.30-02	Maintenance Walkway Mounting for Truss-Type Sign Bridge	6/2/11	*2 Sheets*
Section H	**Roadside and Site Development**		
H-10.10-00	Tree and Shrub Planting Details	7/3/08	
H-10.15-00	Live Stake Installations	7/3/08	
H-30.10-00	Crest Gage	10/12/07	
H-32.10-00	Automated Ground Water Monitoring Well	9/20/07	
H-60.10-01	Bollard Type 1	7/3/08	
H-60.20-01	Bollard Type 2	7/3/08	
H-70.10-00	Mailbox Support Type 1	9/5/07	*2 Sheets*
H-70.20-00	Mailbox Support Type 2	9/5/07	*2 Sheets*
H-70.30-01	Mailbox Support Type 3	11/17/08	*2 Sheets*
Section I	**Site Preservation and Erosion Control**		
I-10.10-01	High Visibility Fence	8/11/09	
I-30.10-01	Silt Fence with Backup Support	8/11/09	
I-30.15-00	Silt Fence	8/11/09	
I-30.20-00	Erosion Control At Culvert Ends	9/20/07	
I-30.30-00	Wattle Installation On Slope	9/20/07	
I-30.40-00	Compost Sock	10/12/07	
I-30.50-00	Straw Bale Barrier	11/14/07	
I-40.10-00	Temporary Silt Fence for Inlet Protection In Unpaved Areas	9/20/07	
I-40.20-00	Storm Drain Inlet Protection	9/20/07	
I-50.10-00	Geotextile Encased Check Dam Installation	9/20/07	
I-50.20-00	Check Dams	8/31/07	
I-60.10-00	Erosion Control Blanket Placement On Slope	8/31/07	
I-60.20-00	Erosion Control Blanket Placement In Channel	8/31/07	
I-80.10-01	Miscellaneous Erosion Control Details	8/11/09	

Contents

Plan No.	Plan Title	Publication Approval Date	
Section J	**Illumination, Signals, and ITS**		
J-1f	Timber Light Standards	6/23/00	
J-3	Type A, B, and C Service Lighting Details	8/1/97	*2 Sheets*
J-3b	Service Cabinet Type B Modified (0 - 200 Amp Type, 120/240 Single Phase)	3/4/05	*2 Sheets*
J-3c	Service Cabinet Type D (0 - 200 Amp Type, 120/240 Single Phase)	6/24/02	
J-3d	Service Cabinet Type E (0 - 200 Amp Type, 240/480 Single Phase)	11/5/03	
J-7c	Strain Pole Standards Type IV and V	6/19/98	
J-10	Electrical Conduit Placement	7/18/97	
J-10.10-01	Cabinet Orientation, Conduit Layout and Foundation Detail	5/11/11	*5 Sheets*
J-12	Sign Post-Mounted Junction Box	2/10/09	*2 Sheets*
J-15.15-00	Span Wire Installation	6/16/10	
J-16b	Conduit Installation in Traffic Barrier on Retaining Wall	2/10/09	
J-16c	Conduit Installation in Single Slope Conc. Barrier (Dual Face)	2/10/09	
J-20.10-00	Pedestrian Push Button Post and Foundation	10/14/09	*2 Sheets*
J-20.15-00	Breakaway Pedestrian Push Button Post (PPB)	10/14/09	
J-20.16-00	Pedestrian Signal Standard Details	10/14/09	
J-20.20-00	Pedestrian Signal Standard Electrical Details	10/14/09	
J-20.26-00	Pedestrian Push Button (PPB) Details	10/14/09	
J-21.10-02	Type PS, Type 1 RM and FB Signal Standard Foundation Details	6/27/11	*2 Sheets*
J-21.15-00	Type 1 Signal Standard Details	10/14/09	
J-21.16-00	Flashing Beacon Type 1 Signal Standard Details	10/14/09	
J-21.17-00	Flashing Beacon Type 1 Signal Standard Electrical Details	10/14/09	
J-21.20-00	Type 1 Signal Standard Electrical Details	10/14/09	
J-22.15-00	Ramp Meter Signal Standard Details	10/14/09	
J-22.16-01	Ramp Meter Signal Standard Electrical Details	6/3/10	
J-26.10-01	Signal Standard Foundation Plan	6/27/11	
J-26.15-00	Signal Standard Foundation Placements	6/16/10	*3 Sheets*
J-28.10-01	Steel Light Standard	5/11/11	*2 Sheets*
J-28.22-00	Steel Light Standard: Placement (Slip Base)	8/7/07	*2 Sheets*
J-28.24-00	Steel Light Standard: Placement (Fixed Base)	8/7/07	
J-28.26-01	Steel Light Standard: Placement ~ Miscellaneous	12/2/08	
J-28.30-02	Steel Light Standard: Foundation Types A & B	6/27/11	*2 Sheets*
J-28.40-01	Steel Light Standard: Base Mounting	10/14/09	
J-28.42-00	Steel Light Standard: Anchor/Slip Plate for Slip Base	8/7/07	
J-28.45-01	Steel Light Std.: Elbow Mounting on Bridge & Retaining Wall	6/27/11	
J-28.50-02	Steel Light Standard: Pole Base and Hand Hole Details	6/2/11	
J-28.60-01	Steel Light Standard: Barrier Mounted Base	6/2/11	
J-28.70-01	Steel Light Standard: Wiring Details	5/11/11	
J-29.10-00	Camera Pole Foundation Details	6/27/11	
J-29.15-00	Camera Pole Standard Details	6/27/11	*2 Sheets*
J-29.16-00	Camera Pole Details	6/27/11	
J-40.10-02	Locking Lid Standard Junction Box Types 1 & 2	5/11/11	*2 Sheets*
J-40.20-00	Heavy Duty Junction Box, Types 4, 5 & 6	5/11/11	*2 Sheets*
J-40.30-02	Locking Lid Standard Duty Junction Box Type 8	5/11/11	*2 Sheets*
J-40.36-00	Nema 4X Non-Adjustable Junction Box	6/3/10	
J-40.37-00	Nema 3R Adjustable Junction Box	6/3/10	*2 Sheets*

Plan No.	Plan Title	Publication Approval Date	
J-40.38-00	Surface Mounted Junction Box	6/16/11	
J-50.10-00	Type 1 Induction Loop	6/3/11	
J-50.11-00	Type 2 Induction Loop	6/3/11	*2 Sheets*
J-50.12-00	Type 3 Induction Loop	6/3/11	*3 Sheets*
J-50.15-00	Induction Loop Details	6/3/11	*3 Sheets*
J-50.16-00	Preformed Loop Detail	6/3/11	
J-50.20-00	Permanent Traffic Rcorder Site Installations	6/3/11	*3 Sheets*
J-50.25-00	Weigh-In Motion Site Installation	6/3/11	*2 Sheets*
J-50.30-00	Permanent Traffic Recorder & Weigh-In Motion Details	6/3/11	*3 Sheets*
J-60.05-00	Typical Grounding Details	6/16/11	*4 Sheets*
J-60.13-00	Stainless Steel Channel	6/16/10	
J-60.14-00	Stainless Steel Channel Mounting Details on Column or Pole	6/16/10	
J-75.10-01	Signal Head Mounting Details Pole and Post Top Mountings	5/11/11	
J-75.20-00	Signal Head Mounting Details Mast Arm and Span Wire Mountings	2/10/09	
J-75.30-01	Miscellaneous Signal Details	5/11/11	
J-75.40-00	Overhead Sign Electrical Details (Monotube Structure)	10/14/09	
J-75.45-00	Overhead Sign Electrical Details (Truss Structure)	10/14/09	
J-90.10-01	Pull Box	6/27/11	*2 Sheets*
J-90.20-01	Cable Vault	6/27/11	*2 Sheets*

Section K Work Zone Traffic Control

K-10.20-01	Road Closure, with Diversion	10/12/07
K-10.40-00	Road Closure, with Off-Site Detour	2/15/07
K-20.20-01	Lane Closure, without Flaggers ~ Low Volume Road	10/12/07
K-20.40-00	Lane Closure, with Flagger Control	2/15/07
K-20.60-00	Lane Closure, with Pilot Car	2/15/07
K-22.20-01	Lane Shift, onto Passing Lane	10/12/07
K-24.20-00	Single Lane Closure, with Encroachment	2/15/07
K-24.40-01	Double Lane Closure, on Multilane Roadway	10/12/07
K-24.60-00	Single Lane Closure, on Multilane Roadway	2/15/07
K-24.80-01	Single Lane Closure, with Temporary Concrete Barrier	10/12/07
K-26.20-00	Lane Shift, onto Two-way Left Turn Lane	2/15/07
K-26.40-01	Left and Center Lane Closure ~ Two-Way Left Turn Lane	10/12/07
K-30.20-00	Intersection ~ Lane Shift on 3 Lane Two-Way Left Turn Lane	2/15/07
K-30.40-01	Intersection ~ Lane Shift on 5 Lane Two-Way Left Turn Lane	10/12/07
K-32.20-00	Intersection ~ Right Lane Closure, Far Side	2/15/07
K-32.40-00	Intersection ~ Left Lane Closure, Far Side	2/15/07
K-32.60-00	Intersection ~ Multiple Lane Closure	2/15/07
K-32.80-00	Intersection ~ Half Road Closure with Lane Shift	2/15/07

Contents

Plan No.	Plan Title	Publication Approval Date	
K-34.20-00	Intersection ~ Pedestrian Detour	2/15/07	
K-36.20-00	Intersection ~ Shoulder Work	2/15/07	
K-40.20-00	Shoulder Closure ~ High Speed Roadway (45 MPH or Higher)	2/15/07	
K-40.40-00	Shoulder Closure ~ Low Speed Roadway (40 MPH or Lower)	2/15/07	
K-40.60-00	Shoulder Closure ~ Short Duration	2/15/07	
K-40.80-00	Work Beyond the Shoulder	2/15/07	
K-55.20-00	Emergency ~ Passable Hazard	2/15/07	
K-60.20-02	Speed Zone, Supplemental Signing ~ Chip Seal Project	7/3/08	
K-60.40-00	Motorcycle, Supplemental Signing	2/15/07	
K-70.20-00	Temporary Channelization	2/15/07	
K-80.10-00	Class A Construction Signing Installation	2/21/07	
K-80.20-00	Type 3 Barricade	12/20/06	*2 Sheets*
K-80.30-00	Alternative Temporary Conc. Barrier (F-Shape)	2/21/07	
K-80.35-00	Temporary Conc. Barrier Anchoring	2/21/07	
K-80.37-00	Temporary Conc. Barrier Anchoring ~ Narrow	2/21/07	

Section L Fence and Glare Screen

L-10.10-01	Wire Fence Types 1 & 2, and Wire Gates	6/16/11	*2 Sheets*
L-20.10-01	Chain Link Fence, Types 3 and 4	6/16/11	*2 Sheets*
L-30.10-01	Chain Link Gate	6/16/11	*2 Sheets*
L-40.10-01	Glare Screen Type 1, Design A	6/16/11	*2 Sheets*
L-40.15-01	Glare Screen Type 1, Design B	6/16/11	
L-40.20-01	Glare Screen Type 2 (Chain Link with Slats)	6/16/11	
L-70.10-01	Access Control Gate	5/21/08	
L-70.20-01	Access Control Double Gate	5/21/08	

Section M Roadway Delineation

M-1.20-02	Ramp Channelization: Single Lane	6/3/11	
M-1.40-02	Ramp Channelization: Two Lane	6/3/11	
M-1.60-02	Ramp Channelization: Collector Distributor Road	6/3/11	
M-1.80-03	Ramp Channelization: Parallel On & Weaving Section	6/3/11	
M-2.20-02	Gore Area Marking Layouts	6/3/11	
M-3.10-03	Left Turn Channelization	6/3/11	
M-3.20-02	Left Turn Channelization: Reduced Tapers	6/3/11	
M-3.30-03	Left Turn Channelization: Tee Intersection and Back-to-back Turn Lanes	6/3/11	
M-3.40-03	Two-way Left-Turn and Median Channelization	6/3/11	
M-3.50-02	Double Left Turn Channelization	6/3/11	
M-5.10-02	Right Turn Channelization	6/3/11	
M-7.50-01	High Occupancy Vehicle (HOV) Lane Symbol Layout	1/30/07	
M-9.50-01	Bicycle Lane Symbol Layout	1/30/07	
M-9.60-00	Shared - Use Path Markings	2/10/09	
M-11.10-01	Railroad Crossing Layout	1/30/07	
M-15.10-01	Crosswalk Layout	2/6/07	

Plan No.	Plan Title	Publication Approval Date	
M-17.10-02	Parking Space Layouts	7/3/08	
M-20.10-02	Longitudinal Marking Patterns	6/3/11	
M-20.20-01	Profiled and Embossed Plastic Lines	1/30/07	
M-20.30-02	Longitudinal Marking Supplement with Raised Pavement Markers (RPM's)	10/14/09	
M-20.40-02	Longitudinal Marking Supplement with RPM's ~ Turn Lanes	6/3/11	*2 Sheets*
M-20.50-02	Longitudinal Marking Substitution with RPM's	6/3/11	
M-24.20-01	Symbol Markings: Traffic Arrows for High Speed Roadways	5/31/06	*3 Sheets*
M-24.40-01	Symbol Markings: Traffic Arrows for Low Speed Roadways	5/31/06	*2 Sheets*
M-24.50-00	Roundabout Traffic Arrows	6/16/11	
M-24.60-03	Symbol Markings: Miscellaneous	5/11/11	*2 Sheets*
M-40.10-02	Guide Posts and Barrier Delineators	5/11/11	
M-40.20-00	Guide Post Placement: Interchanges	10/12/07	
M-40.30-00	Guide Post Placement: Grade Intersections	9/20/07	
M-40.40-00	Guide Post Placement: Horizontal Curves	9/20/07	
M-40.50-00	Guide Post Placement: Bridges	9/20/07	
M-40.60-00	Guide Post Placement: Miscellaneous	9/20/07	
M-60.10-01	Shoulder Rumble Strip Type 1, for Divided Highways	6/3/11	*4 Sheets*
M-60.20-02	Shoulder Rumble Strip, Types 2, 3, and 4, for Undivided Highways	6/27/11	*2 Sheets*
M-65.10-02	Center Line Rumble Strip	5/11/11	*2 Sheets*
M-80.10-01	Traffic Letter and Numeral Applications	6/3/11	*2 Sheets*
M-80.20-00	Traffic Letters and Numerals (High Speed Roadways)	6/10/08	
M-80.30-00	Traffic Letters and Numerals (Low Speed Roadways)	6/10/08	

This page left blank intentionally.

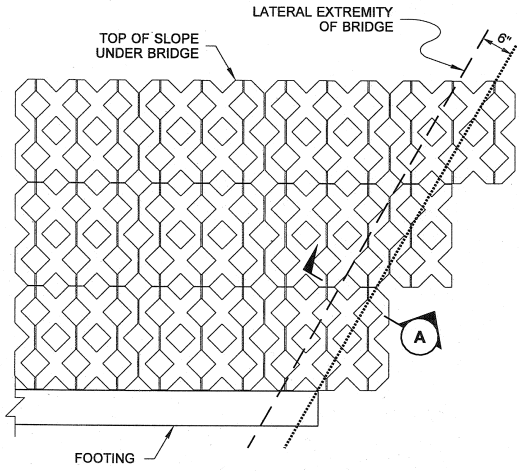

PLAN

MASONRY UNIT PLACEMENT ON SKEWED BRIDGE

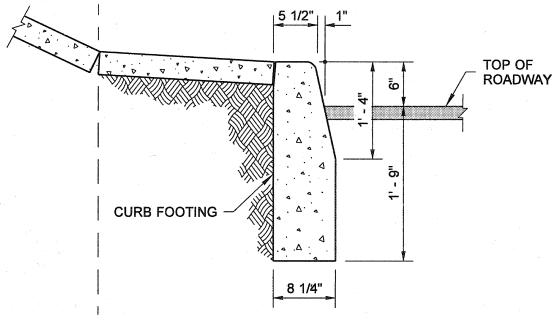

CURB SECTION
(SEE NOTE 2)

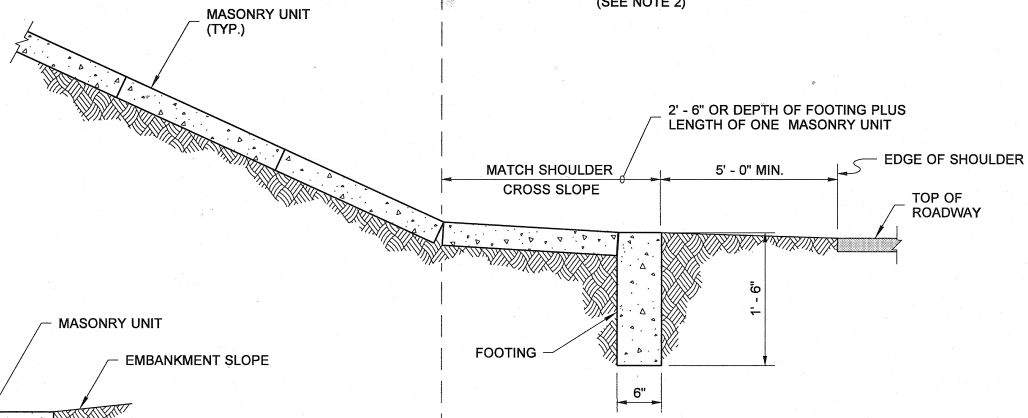

TYPICAL SECTION

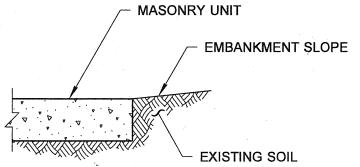

SECTION (A)

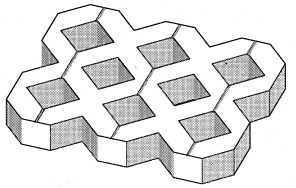

ISOMETRIC VIEW

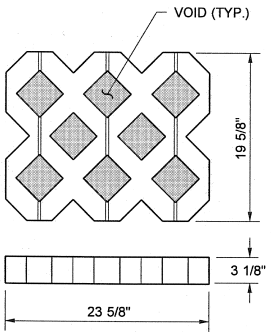

MASONRY UNIT DETAIL
(SEE NOTE 1)

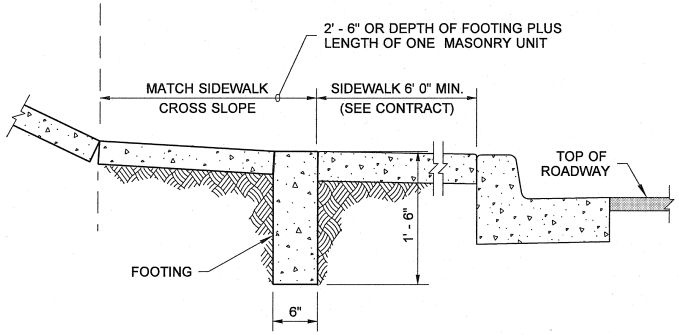

SECTION WITH SIDEWALK

NOTES

1. The design and shape of the semi-open concrete masonry unit shown is only one example of the products that may be used.
2. The Curb Section shall be used only when the lower roadway cross section requires a curb.

STATE OF
WASHINGTON
REGISTERED
LANDSCAPE ARCHITECT
SANDRA L. SALISBURY
CERTIFICATE NO. 000860
10-23-07

NOTE: THIS PLAN IS NOT A LEGAL ENGINEERING DOCUMENT BUT AN ELECTRONIC DUPLICATE. THE ORIGINAL, SIGNED BY THE ENGINEER AND APPROVED FOR PUBLICATION, IS KEPT ON FILE AT THE WASHINGTON STATE DEPARTMENT OF TRANSPORTATION. A COPY MAY BE OBTAINED UPON REQUEST.

SEMI-OPEN CONCRETE MASONRY SLOPE PROTECTION STANDARD PLAN A-30.15-00

SHEET 1 OF 1 SHEET

APPROVED FOR PUBLICATION

STATE DESIGN ENGINEER — DATE 11/8/07

Washington State Department of Transportation

DRAWN BY: FERN LIDDELL

DRAWN BY: FERN LIDDELL

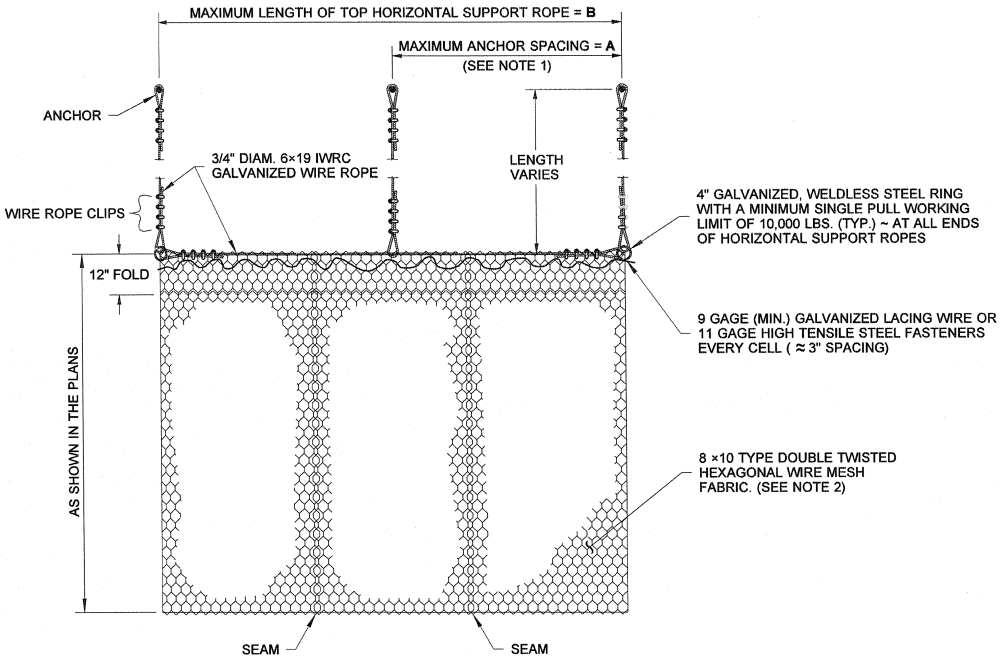

ELEVATION

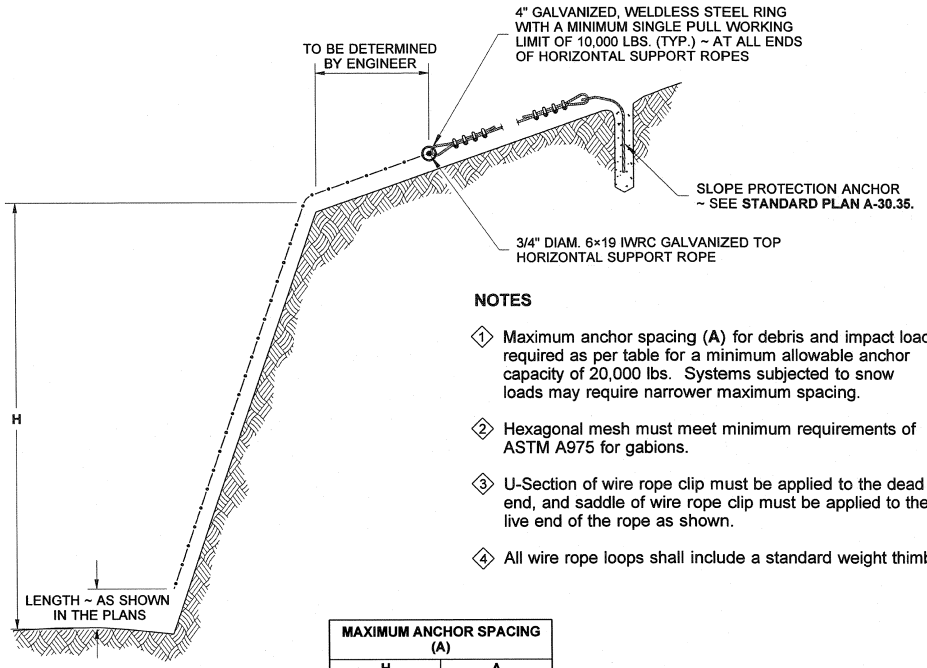

SECTION VIEW

NOTES

1. Maximum anchor spacing **(A)** for debris and impact loads required as per table for a minimum allowable anchor capacity of 20,000 lbs. Systems subjected to snow loads may require narrower maximum spacing.
2. Hexagonal mesh must meet minimum requirements of ASTM A975 for gabions.
3. U-Section of wire rope clip must be applied to the dead end, and saddle of wire rope clip must be applied to the live end of the rope as shown.
4. All wire rope loops shall include a standard weight thimble.

MAXIMUM ANCHOR SPACING (A)	
H	A
0' ~ 100'	50'
100' ~ 200'	35'
200' ~ 300'	20'

MAXIMUM LENGTH ~ TOP HORIZONTAL SUPPORT ROPE (B)	
H	B
50'	400'
100'	200'
200'	100'
300'	75'

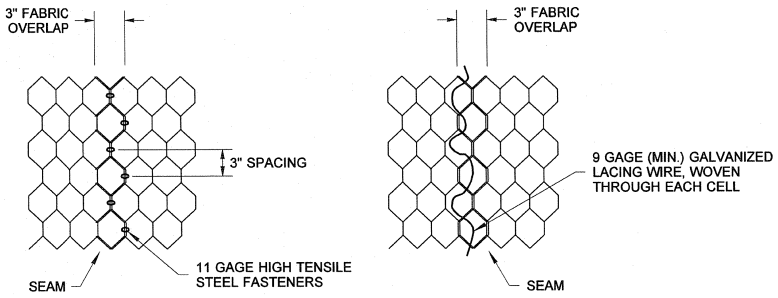

OVERLAPPED SEAM WITH FASTENERS

OVERLAPPED SEAM WITH LACING

SEAM ALTERNATIVES

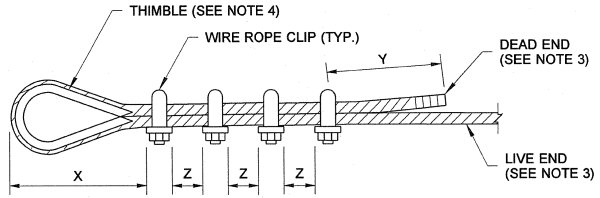

WIRE ROPE DETAIL

DISTANCES X,Y,Z AND TORQUE TO COMPLY WITH MANUFACTURER'S SPECIFICATIONS

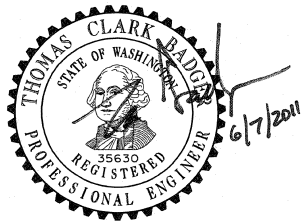

WIRE MESH SLOPE PROTECTION

STANDARD PLAN A-30.30-01

SHEET 1 OF 1 SHEET

APPROVED FOR PUBLICATION

STATE DESIGN ENGINEER — DATE 6/16/11

Washington State Department of Transportation

DRAWN BY: FERN LIDDELL

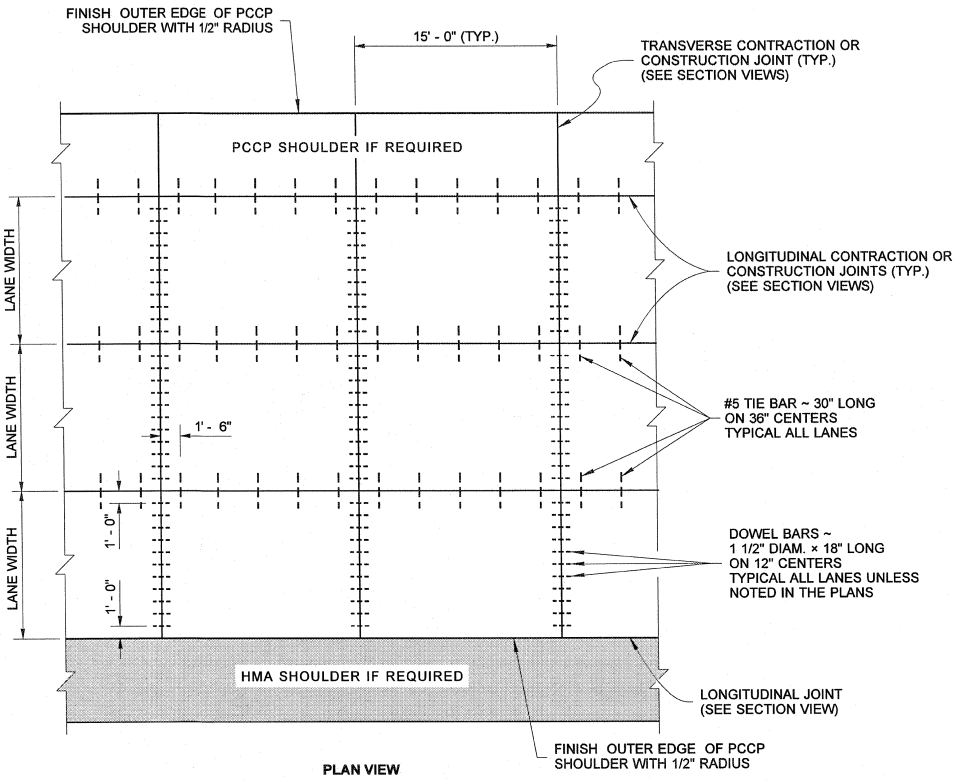

PLAN VIEW

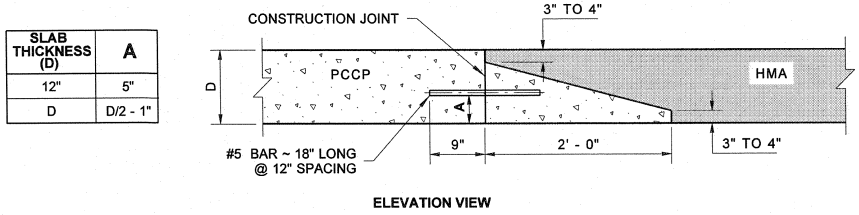

SLAB THICKNESS (D)	A
12"	5"
D	D/2 - 1"

ELEVATION VIEW

HMA TRANSITION DETAIL

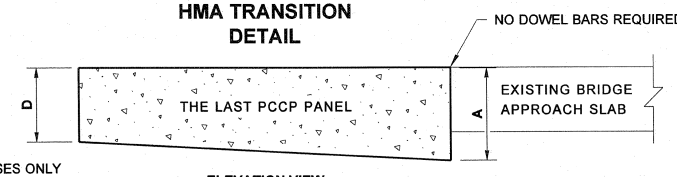

DEPTH OF PCCP (D)	A
12"	15"
D	1.25 × D

USE ON GRANDULAR BASES ONLY
NO TAPER REQUIRED ON ASPHALT BASES

ELEVATION VIEW

EXISTING APPROACH SLAB TRANSITION DETAIL

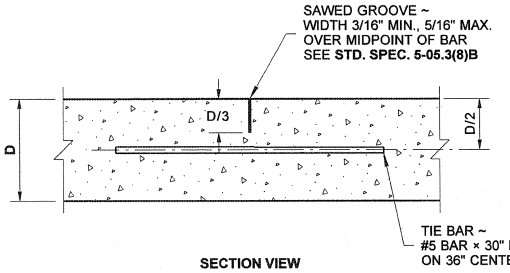

SECTION VIEW

LONGITUDINAL CONTRACTION JOINT

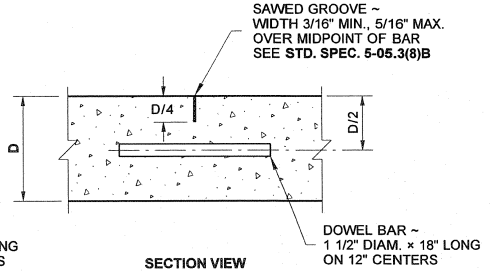

SECTION VIEW

TRANSVERSE CONTRACTION JOINT

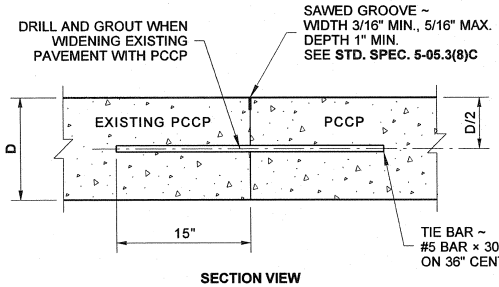

SECTION VIEW

PCCP TO PCCP LONGITUDINAL CONSTRUCTION JOINT

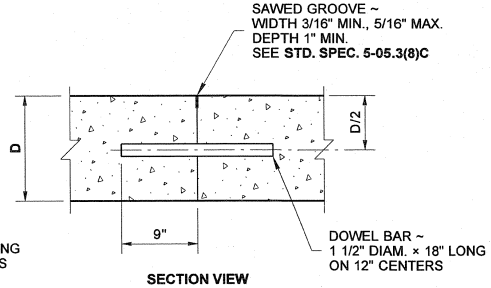

SECTION VIEW

TRANSVERSE CONSTRUCTION JOINT

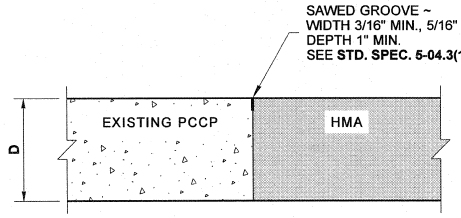

SECTION VIEW

PCCP TO HMA LONGITUDINAL JOINT

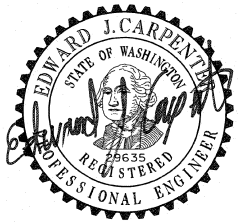

CEMENT CONCRETE PAVEMENT JOINTS

STANDARD PLAN A-40.10-02

SHEET 1 OF 1 SHEET

APPROVED FOR PUBLICATION

Paso Bakotich III — STATE DESIGN ENGINEER — 6/2/11 — DATE

Washington State Department of Transportation

DRAWN BY: FERN LIDDELL

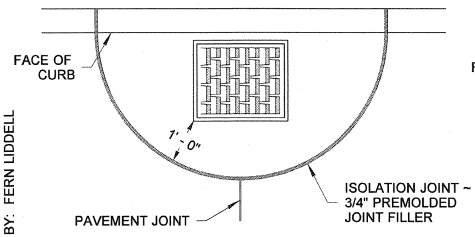

CONDITION A

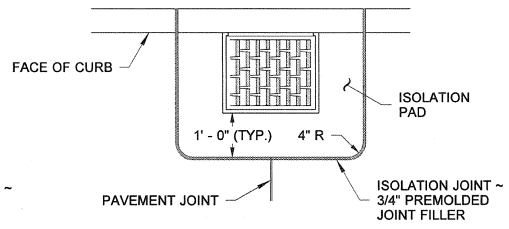

CONDITION B

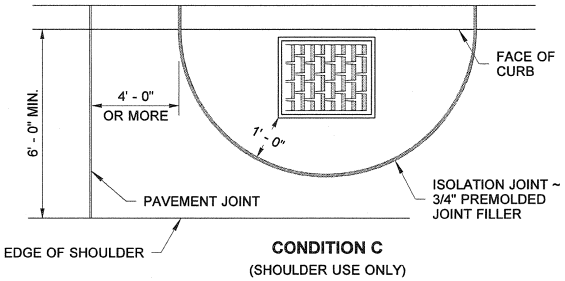

CONDITION C
(SHOULDER USE ONLY)

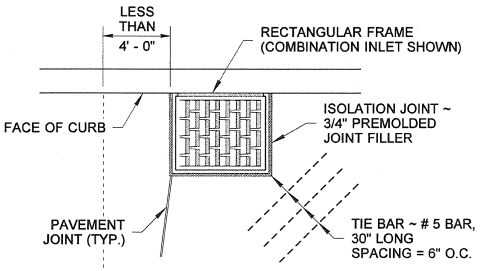

CONDITION D

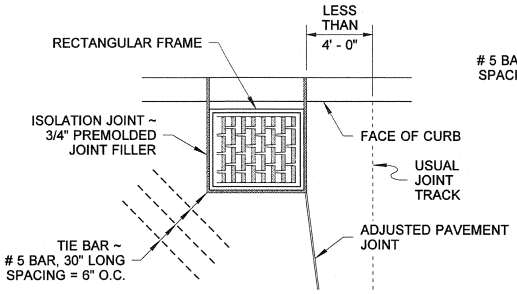

CONDITION E

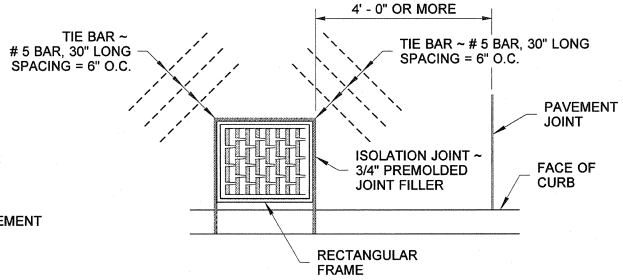

CONDITION F

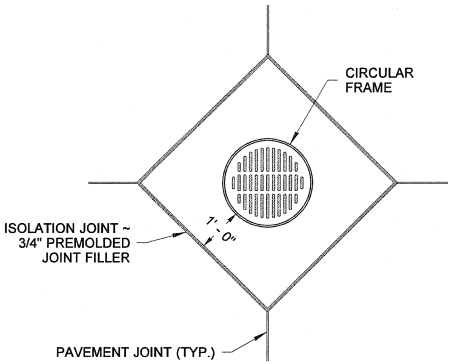

CONDITION G

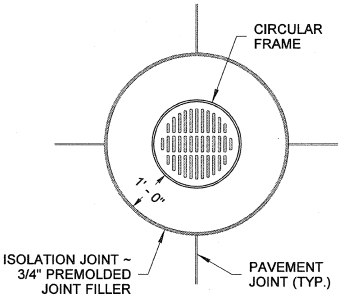

CONDITION H

NOTE

ALL CONDITIONS ARE SHOWN IN PLAN VIEW.

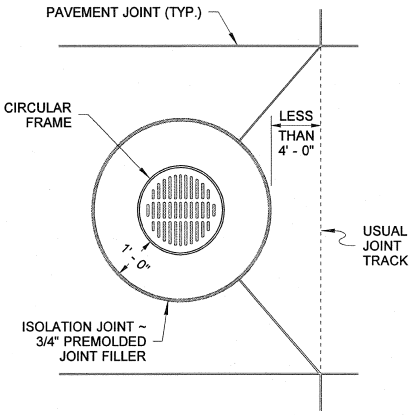

CONDITION I

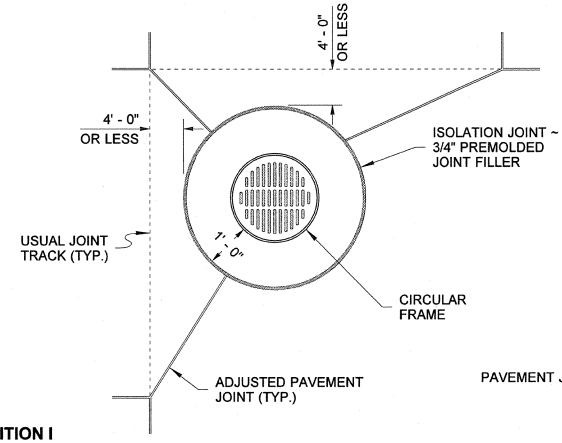

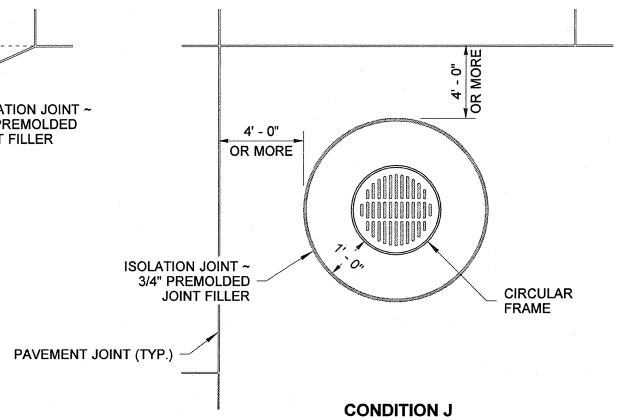

CONDITION J

EDWARD J. CARPENTER
STATE OF WASHINGTON
29625
REGISTERED
PROFESSIONAL ENGINEER

July 7 2009

PCC PAVEMENT ISOLATION JOINTS

STANDARD PLAN A-40.15-00

SHEET 1 OF 2 SHEETS

APPROVED FOR PUBLICATION

STATE DESIGN ENGINEER — DATE 9/10/09

Washington State Department of Transportation

DRAWN BY: ELENA BRUNSTEIN

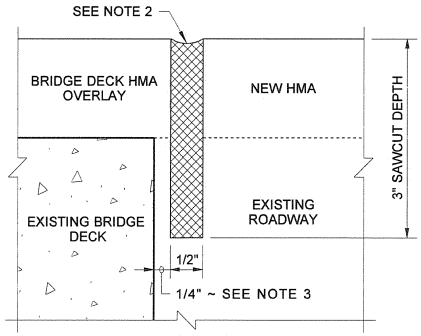

DETAIL 1
1/2" JOINT SEAL
BRIDGE DECK WITH HMA OVERLAY

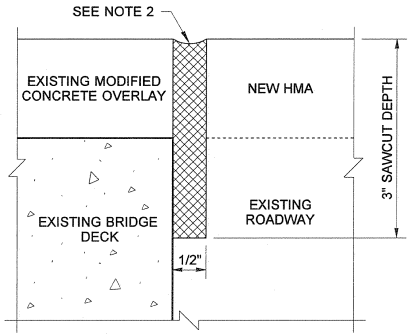

DETAIL 2
1/2" JOINT SEAL
BRIDGE DECK WITH CONCRETE OVERLAY

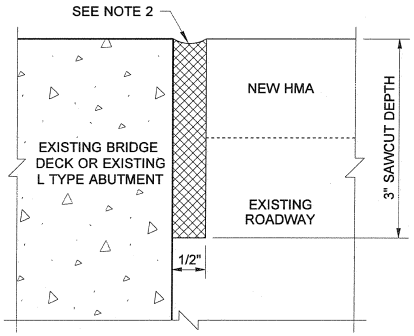

DETAIL 3
1/2" JOINT SEAL
BRIDGE DECK OR L TYPE ABUTMENT

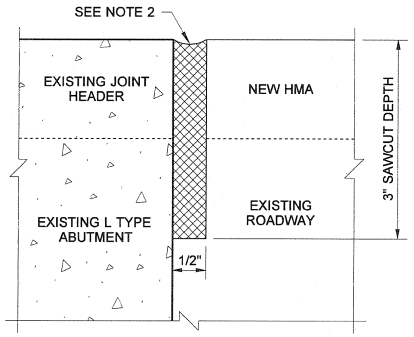

DETAIL 4
1/2" JOINT SEAL
L TYPE ABUTMENT WITH HEADER

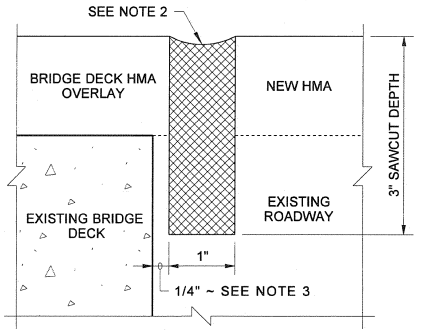

DETAIL 5
1" JOINT SEAL
BRIDGE DECK WITH HMA OVERLAY

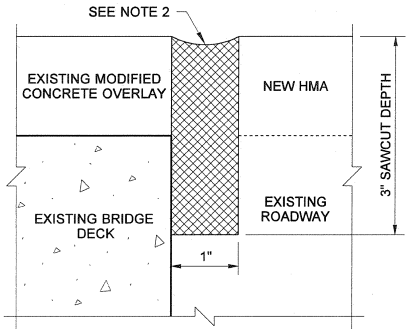

DETAIL 6
1" JOINT SEAL
BRIDGE DECK WITH CONCRETE OVERLAY

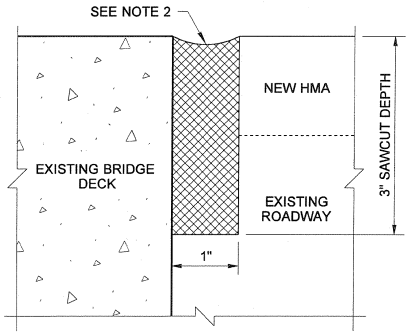

DETAIL 7
1" JOINT SEAL
BRIDGE DECK

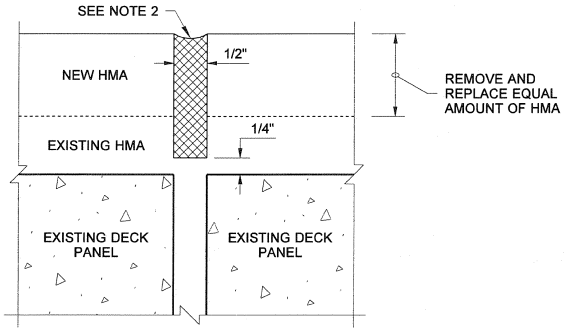

DETAIL 8
1/2" JOINT SEAL
BRIDGE DECK PANELS WITH HMA OVERLAY

NOTES

1. Use the 1/2" joint details for bridges with a length less than 100' and for bridges with L type abutments. Use the 1" joint details for other applications. Use DETAIL 8 on steel trusses and timber bridges with concrete deck panels.
2. Sawcut shall be filled with hot-poured compound in accordance with Standard Specification 9-04.2(1) and sealed in accordance with Standard Specification 5-05.3(8)B.
3. The contractor shall avoid sawing existing concrete. The construction tolerance to locate the saw cut is ± 1/4" (0 min. to 1/2" max.) from the existing concrete (DETAILs 1 and 5).

EXPIRES AUGUST 23, 2008

BRIDGE TRANSVERSE JOINT SEALS FOR HMA

STANDARD PLAN A-40.20-00

SHEET 1 OF 1 SHEET

APPROVED FOR PUBLICATION

STATE DESIGN ENGINEER — DATE 9/20/07

Washington State Department of Transportation

DRAWN BY: FERN LIDDELL

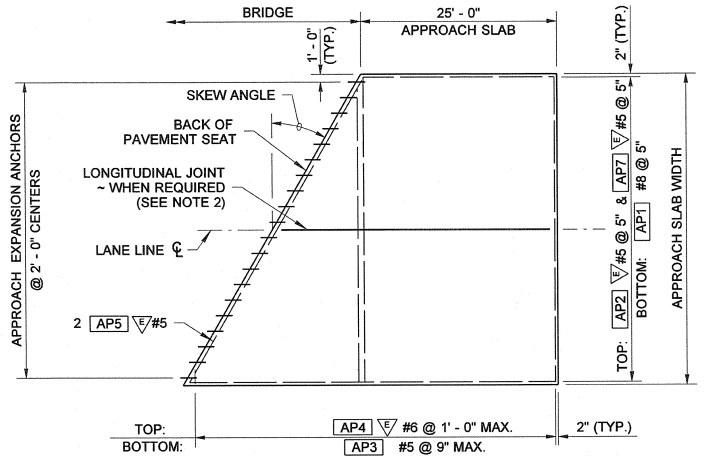

PLAN

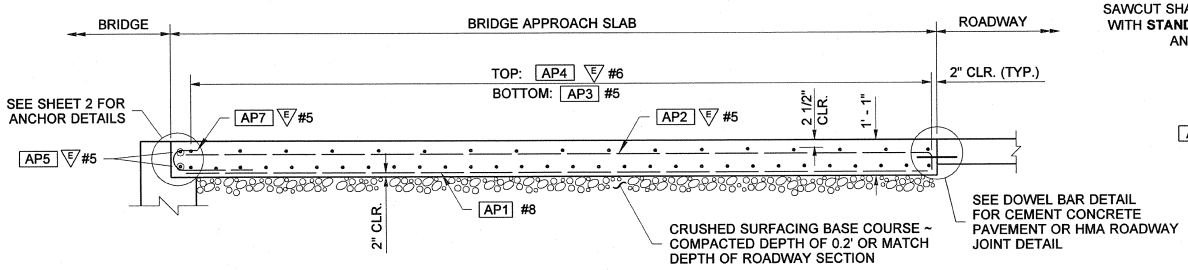

LONGITUDINAL SECTION

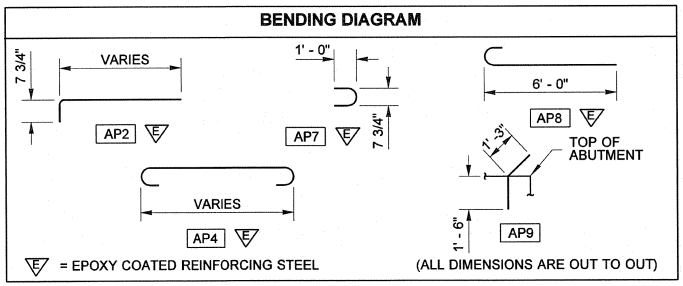

NOTES

1. All edges of the approach slab shall have 1/2" radii except the longitudinal edge of the preceeding placement of a LONGITUDINAL CONSTRUCTION JOINT.

2. Longitudinal joints shall be placed on lane lines and shall be constructed and sealed in accordance with **Standard Specification Section 5-05.3(8).** Joints may be either a sawcut crack control joint or a construction joint. Sawcut joints shall terminate 1' - 0" before reaching edge of slab and must be saw cut as soon as possible after placement of concrete.

   (A) Approach slabs less than 40' wide -- no joint is required.

   (B) Approach slabs wider than 40' -- one or more joints are required to divide the slab into approximately 24' wide sections.

3. The minimum lap splice of #5 is 2' - 0". E #5 is 2' - 6". E #6 is 3' - 0". And #8 is 3' - 3". All lap splices shall be stagged so that no more than 50% of rebar is spliced at the same location. Lap splices shall be located within the middle half of the bridge approach slab. Optional splices are allowed for AP4 E #6.

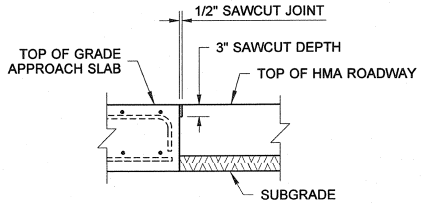

SAWCUT SHALL BE FILLED WITH HOT- POURED COMPONENT IN ACCORDANCE WITH **STANDARD SPECIFICATION SECTION 9-04.2(1)** AND SEALED IN ACCORDANCE WITH **STANDARD SPECIFICATION SECTION 5-05.3(8)B**

HMA ROADWAY JOINT DETAIL

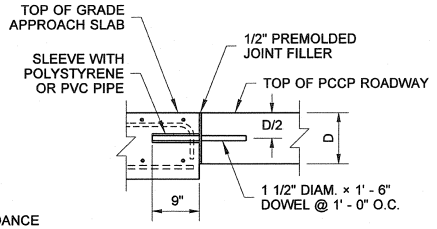

INSERT DOWELS PARALLEL TO CENTER LINE ALONG TRANSVERSE CONSTRUCTION JOINT

DOWEL BAR DETAIL FOR CEMENT CONCRETE PAVEMENT

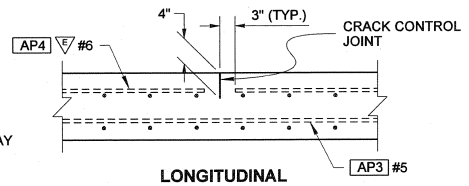

LONGITUDINAL CRACK CONTROL JOINT
SEE NOTE 2

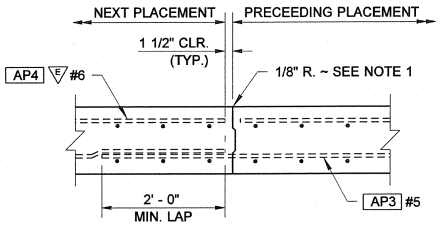

EDGE PRECEEDING PLACEMENT ONLY WITH 1/8" RADIUS

ALTERNATE LONGITUDINAL JOINT DETAIL
SEE NOTE 2

FOR LOCAL AGENCY USE ONLY

BRIDGE APPROACH SLAB

STANDARD PLAN A-40.50-01

SHEET 1 OF 2 SHEETS

APPROVED FOR PUBLICATION

STATE DESIGN ENGINEER — DATE 6/2/11

Washington State Department of Transportation

DRAWN BY: FERN LIDDELL

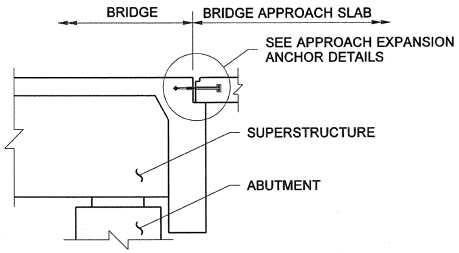

LONGITUDAL SECTION

SEMI-INTEGRAL TYPE ABUTMENT

NOTE

PAINT THE METAL COMPONENTS OF THE APPROACH EXPANSION ANCHOR WITH ONE COAT OF INORGANIC ZINC PAINT CONFORMING TO EITHER **STANDARD SPECIFICATION SECTION 9-08.1(2)F** OR BE GALVANIZED IN ACCORDANCE WITH **AASHTO M 232.**

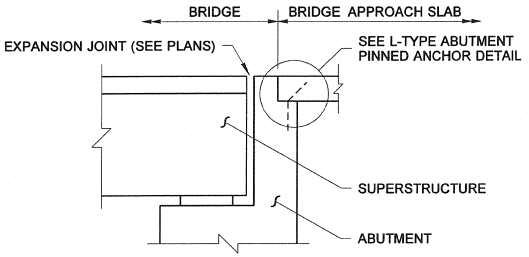

LONGITUDAL SECTION

L - TYPE ABUTMENT

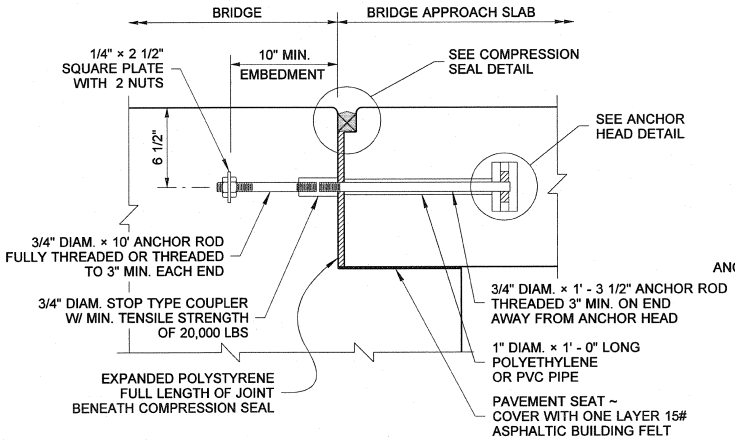

APPROACH EXPANSION ANCHOR ~ METHOD A

SEMI-INTEGRAL TYPE ONLY

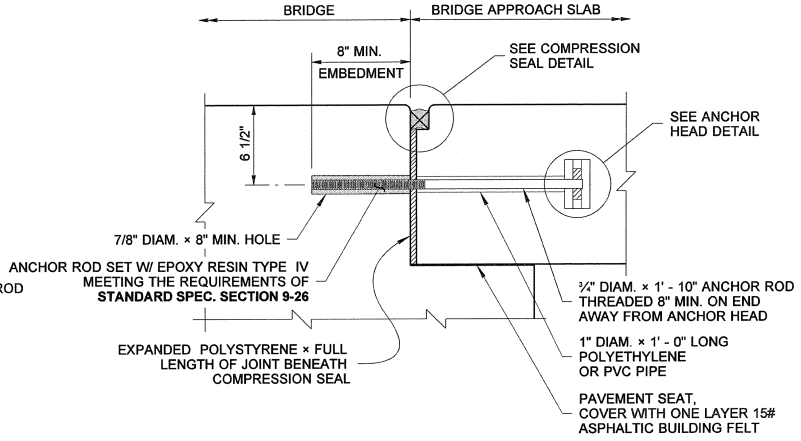

APPROACH EXPANSION ANCHOR ~ METHOD B

SEMI-INTEGRAL TYPE ONLY

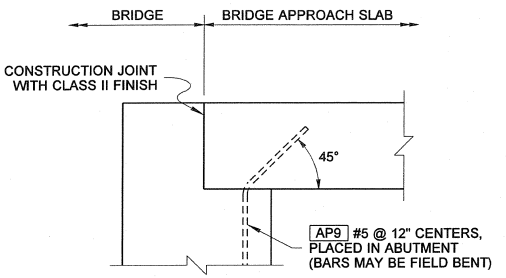

L - TYPE ABUTMENT PINNED ANCHOR DETAIL

FOR LOCAL AGENCY USE ONLY

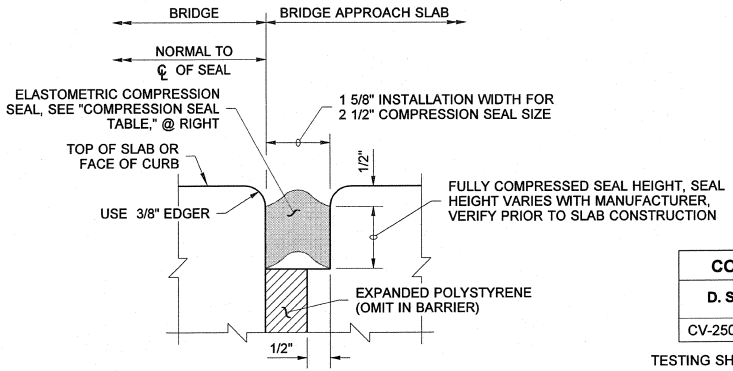

COMPRESSION SEAL DETAIL

COMPRESSION SEAL TABLE			
D. S. BROWN		WATSON BOWMAN ACME	
CV-2502	2 1/2	WA-250	2 1/2

TESTING SHALL BE PER AASHTO M-220 PRIOR TO USE

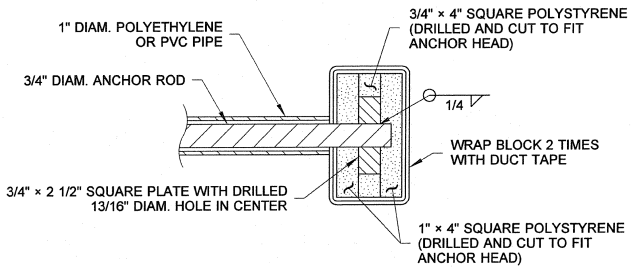

ANCHOR HEAD DETAIL

BRIDGE APPROACH SLAB

STANDARD PLAN A-40.50-01

SHEET 2 OF 2 SHEETS

APPROVED FOR PUBLICATION

STATE DESIGN ENGINEER — DATE 6/2/11

Washington State Department of Transportation

DRAWN BY: FERN LIDDELL

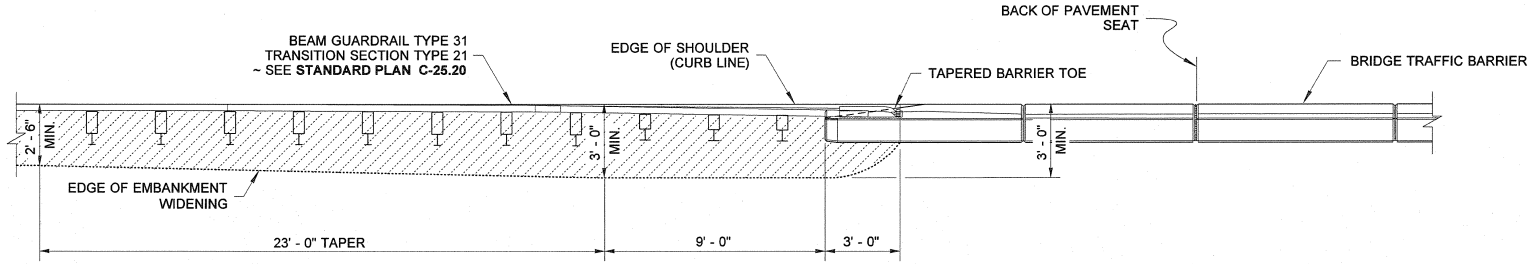

PLAN

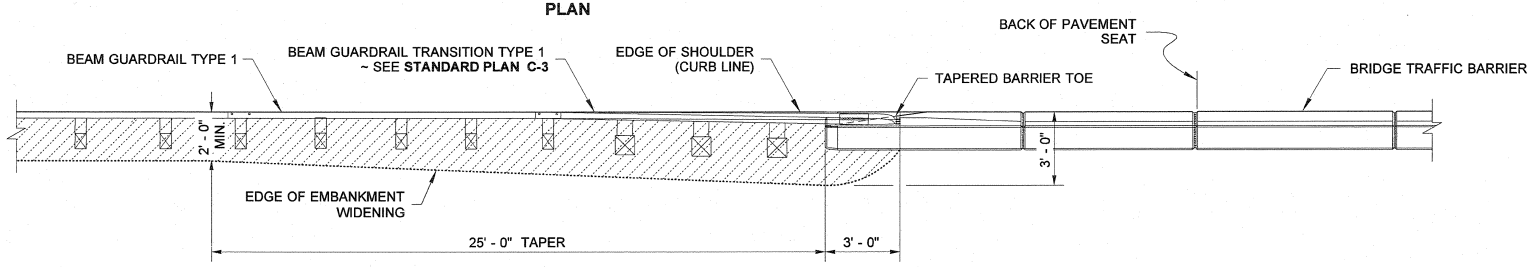

PLAN

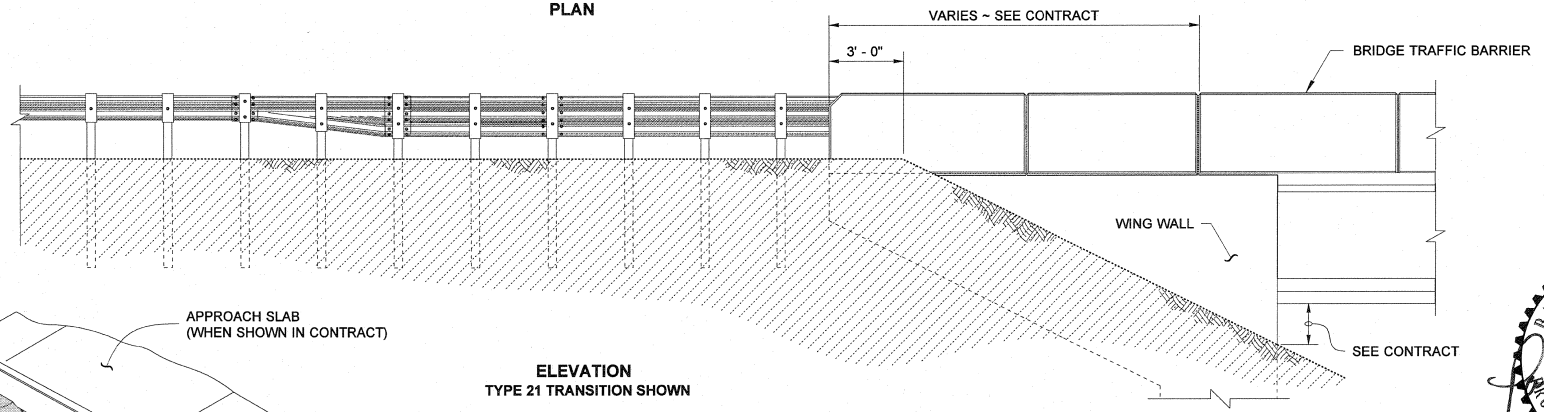

ELEVATION
TYPE 21 TRANSITION SHOWN

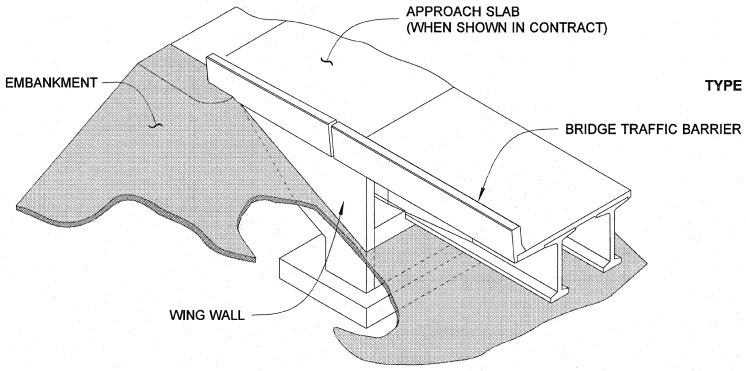

ISOMETRIC VIEW

BAKOTICH, PASCO III
STATE OF WASHINGTON
14455
REGISTERED
PROFESSIONAL ENGINEER

EMBANKMENT WIDENING AT BRIDGE END WITH WING WALL STANDARD PLAN A-50.10-00

SHEET 1 OF 2 SHEETS

APPROVED FOR PUBLICATION

STATE DESIGN ENGINEER — DATE 11/17/08

Washington State Department of Transportation

BEAM GUARDRAIL CONNECTION TO BRIDGE TRAFFIC BARRIER

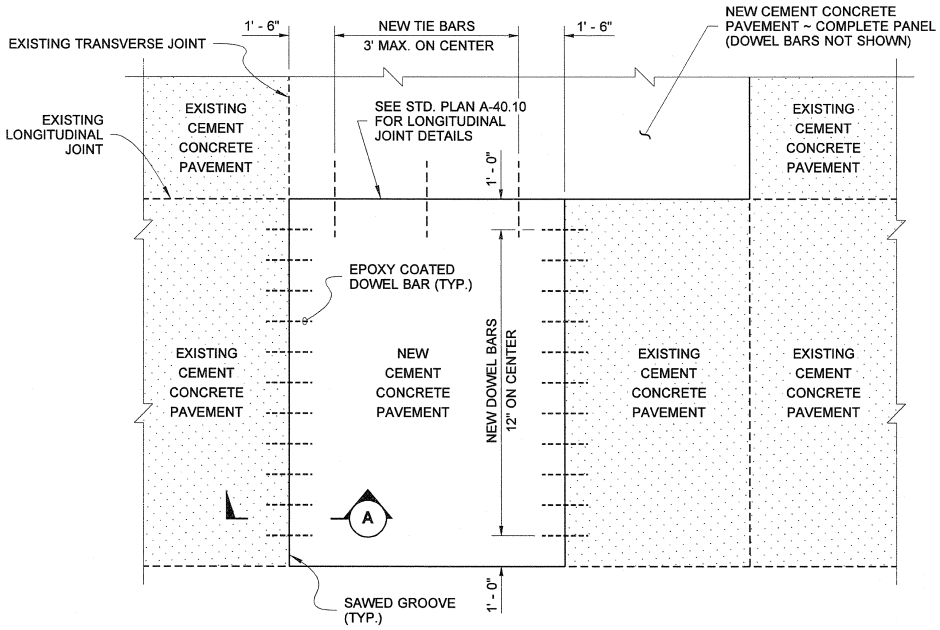

PLAN VIEW

PARTIAL PANEL REPLACEMENT
WITH TIE BARS

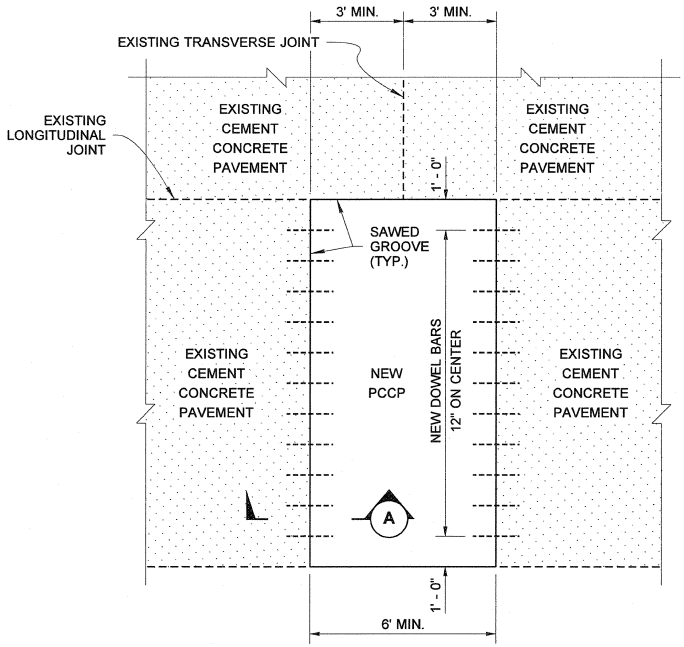

PLAN VIEW

PARTIAL PANEL REPLACEMENT
WITHOUT TIE BARS

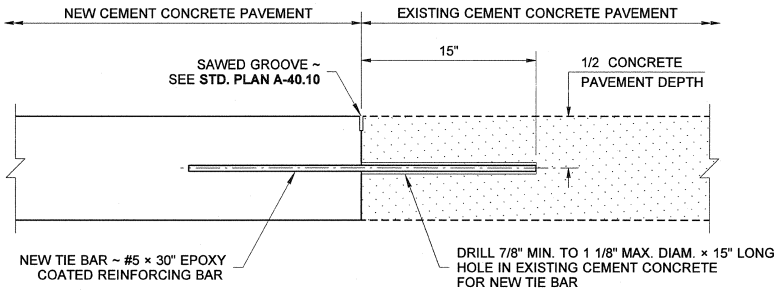

SECTION (B)

EDWARD J. CARPENTER
STATE OF WASHINGTON
29635
REGISTERED
PROFESSIONAL ENGINEER

AUG 25, 2009

CEMENT CONCRETE PAVEMENT REPAIR

STANDARD PLAN A-60.10-01

SHEET 2 OF 2 SHEETS

APPROVED FOR PUBLICATION

STATE DESIGN ENGINEER — DATE 10/14/09

Washington State Department of Transportation

DRAWN BY: FERN LIDDELL

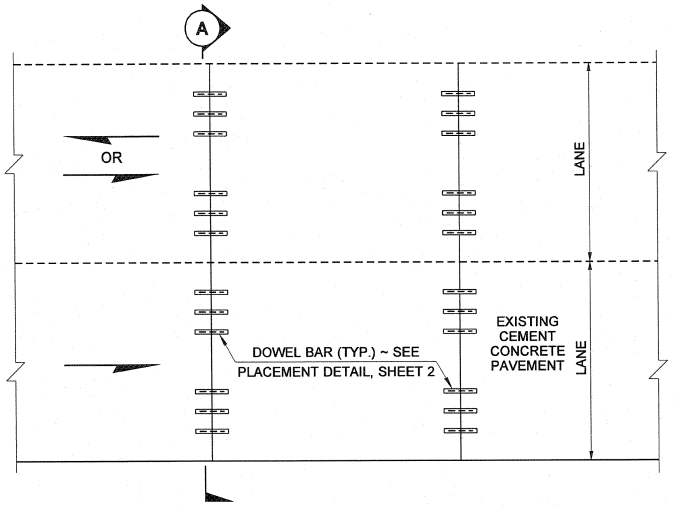

PLAN VIEW

DOWEL BAR RETROFIT

FOR TWO LANE DIVIDED HIGHWAY (ONE WAY TRAFFIC)
FOR EACH LANE IN UNDIVIDED HIGHWAY (TWO WAY TRAFFIC)

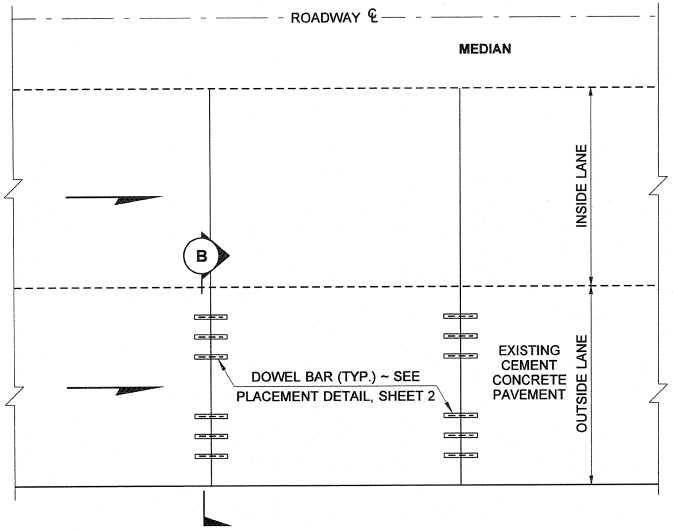

PLAN VIEW

DOWEL BAR RETROFIT FOR ONE LANE

DIVIDED HIGHWAY (ONE WAY TRAFFIC)

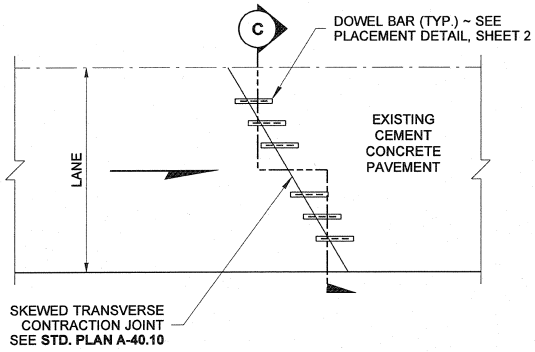

PLAN VIEW

SKEWED JOINT DETAIL

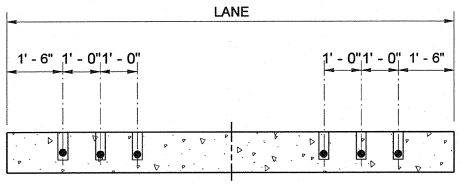

SECTION C

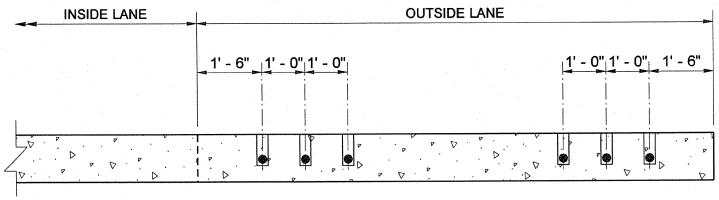

SECTION B

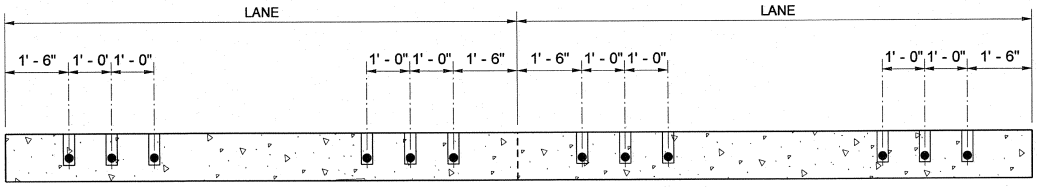

SECTION A

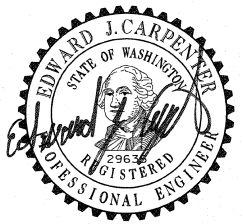

DOWEL BAR RETROFIT FOR CEMENT CONCRETE PAVEMENT STANDARD PLAN A-60.20-02

SHEET 1 OF 2 SHEETS

APPROVED FOR PUBLICATION

STATE DESIGN ENGINEER — DATE 4/2/11

Washington State Department of Transportation

DRAWN BY: FERN LIDDELL

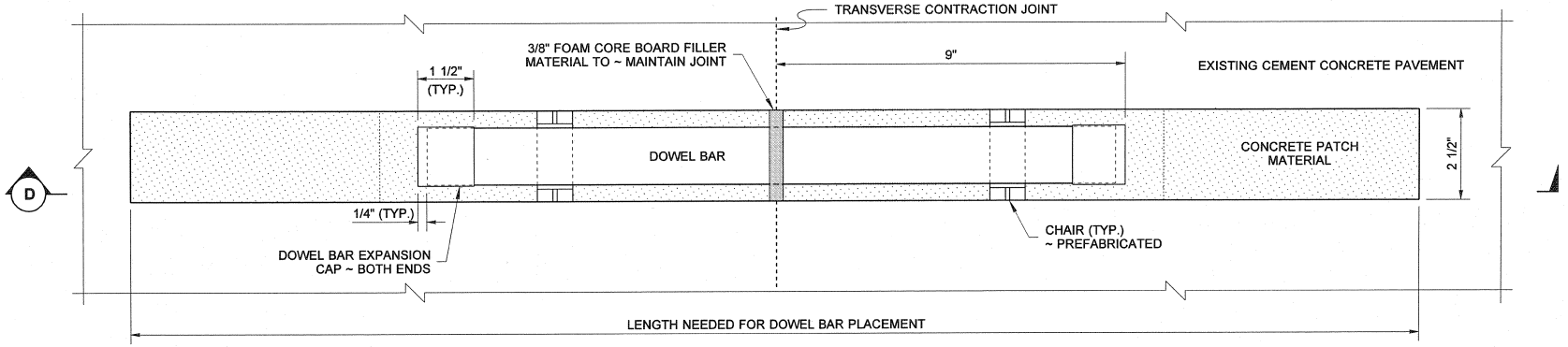

PLAN VIEW

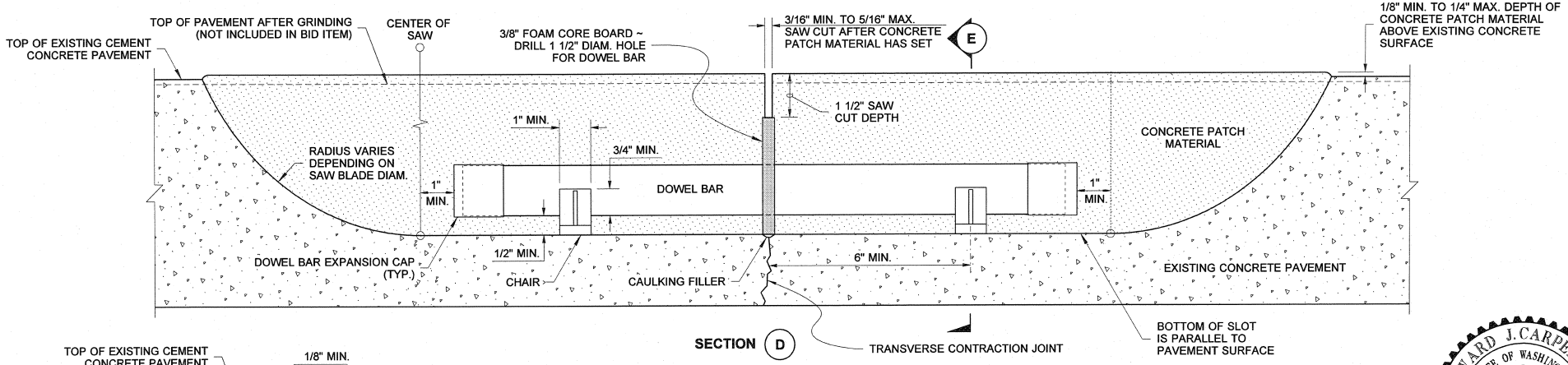

DOWEL BAR PLACEMENT DETAIL

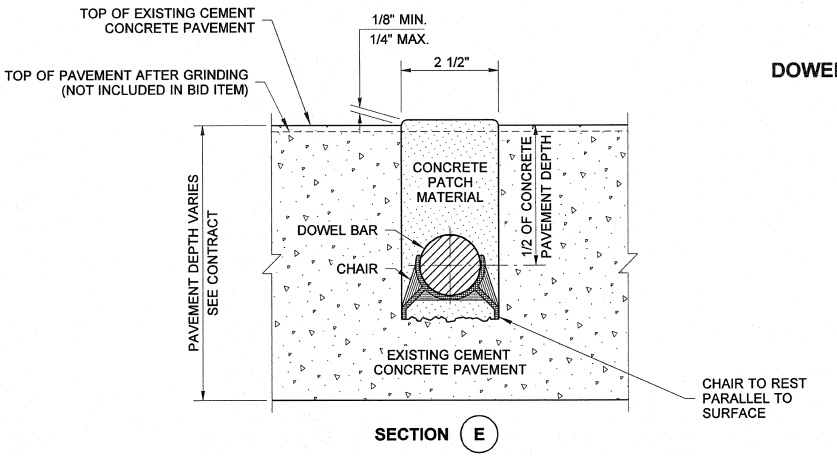

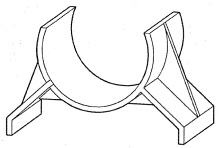

CHAIR DETAIL

EDWARD J. CARPENTER
STATE OF WASHINGTON
29634
REGISTERED
PROFESSIONAL ENGINEER

DOWEL BAR RETROFIT FOR CEMENT CONCRETE PAVEMENT STANDARD PLAN A-60.20-02

SHEET 2 OF 2 SHEETS

APPROVED FOR PUBLICATION

STATE DESIGN ENGINEER — DATE 6/2/11

Washington State Department of Transportation

This page left blank intentionally.

DRAWN BY: LISA CYFORD

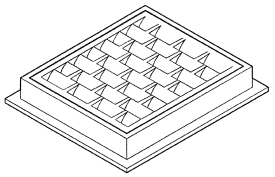

FRAME AND VANED GRATE

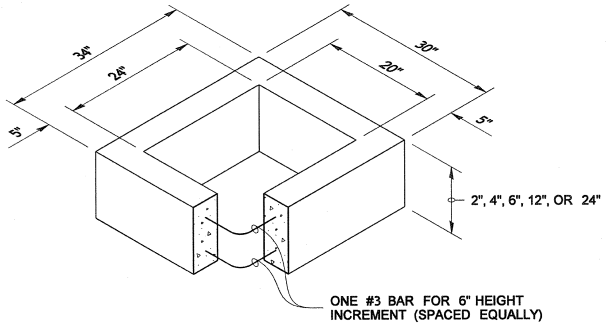

RECTANGULAR ADJUSTMENT SECTION

PIPE ALLOWANCES	
PIPE MATERIAL	**MAXIMUM INSIDE DIAMETER**
REINFORCED OR PLAIN CONCRETE	12"
ALL METAL PIPE	15"
CPSSP * **(STD. SPEC. 9-05.20)**	12"
SOLID WALL PVC **(STD. SPEC. 9-05.12(1))**	15"
PROFILE WALL PVC **(STD. SPEC. 9-05.12(2))**	15"

* CORRUGATED POLYETHYLENE STORM SEWER PIPE

NOTES

1. As acceptable alternatives to the rebar shown in the PRECAST BASE SECTION, fibers (placed according to the Standard Specifications), or wire mesh having a minimum area of 0.12 square inches per foot shall be used with the minimum required rebar shown in the ALTERNATIVE PRECAST BASE SECTION. Wire mesh shall not be placed in the knockouts.
2. The knockout diameter shall not be greater than 20". Knockouts shall have a wall thickness of 2" minimum to 2.5" maximum. Provide a 1.5" minimum gap between the knockout wall and the outside of the pipe. After the pipe is installed, fill the gap with joint mortar in accordance with Standard Specification 9-04.3.
3. The maximum depth from the finished grade to the lowest pipe invert shall be 5'.
4. The frame and grate may be installed with the flange down, or integrally cast into the adjustment section with flange up.
5. The Precast Base Section may have a rounded floor, and the walls may be sloped at a rate of 1:24 or steeper.
6. The opening shall be measured at the top of the Precast Base Section.
7. All pickup holes shall be grouted full after the basin has been placed.

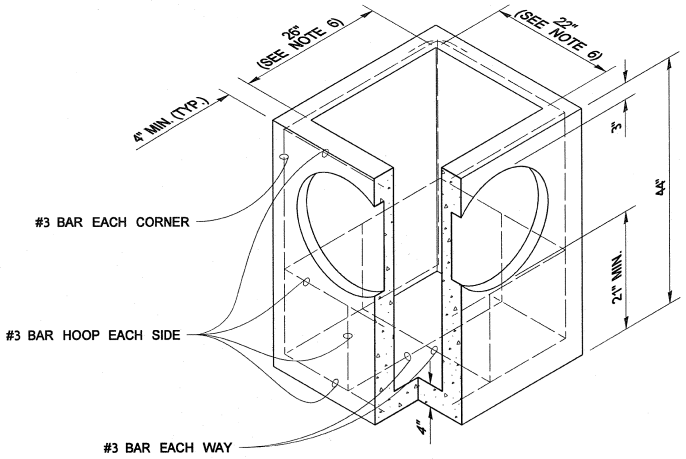

PRECAST BASE SECTION

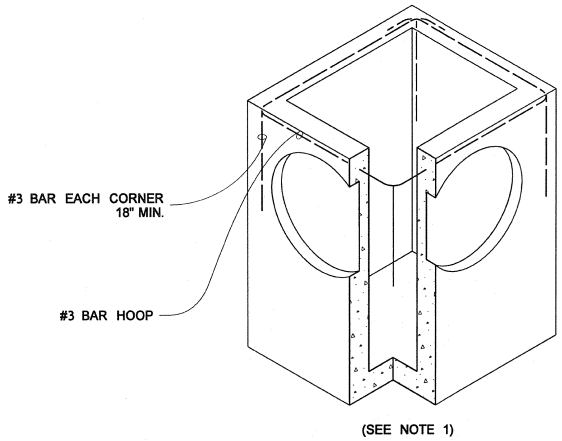

(SEE NOTE 1)

ALTERNATIVE PRECAST BASE SECTION

CASEY M. KRAMER
STATE OF WASHINGTON
44535
REGISTERED
PROFESSIONAL ENGINEER
6/15/11

CATCH BASIN TYPE 1

STANDARD PLAN B-5.20-01

SHEET 1 OF 1 SHEET

APPROVED FOR PUBLICATION

STATE DESIGN ENGINEER — DATE 6/16/11

Washington State Department of Transportation

DRAWN BY: LISA CYFORD

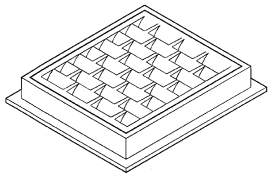

FRAME AND VANED GRATE

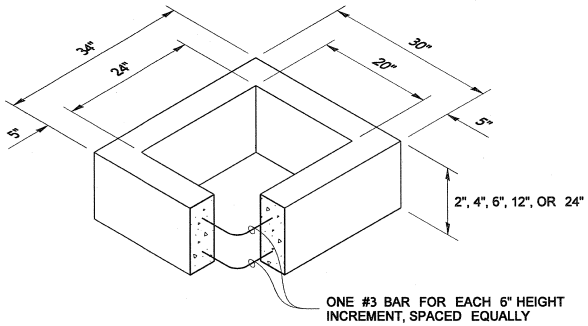

RECTANGULAR ADJUSTMENT SECTION

PIPE ALLOWANCES	
PIPE MATERIAL	**MAXIMUM INSIDE DIAMETER**
REINFORCED OR PLAIN CONCRETE	18"
ALL METAL PIPE	21"
CPSSP * **(STD. SPEC. 9-05.20)**	18"
SOLID WALL PVC **(STD. SPEC. 9-05.12(1))**	21"
PROFILE WALL PVC **(STD. SPEC. 9-05.12(2))**	21"

* CORRUGATED POLYETHYLENE STORM SEWER PIPE

NOTES

1. As acceptable alternatives to the rebar shown in the **PRECAST BASE SECTION**, fibers (placed according to the Standard Specifications), or wire mesh having a minimum area of 0.12 square inches per foot, shall be used with the minimum required rebar shown in the ALTERNATIVE **PRECAST BASE SECTION**. Wire mesh shall not be placed in the knockouts.
2. The knockout shall not be greater than 26", in any direction. Knockouts shall have a wall thickness of 2" minimum to 2.5" maximum. Provide a 1.5" minimum gap between the knockout wall and the outside of the pipe. After the pipe is installed, fill the gap with joint mortar in accordance with **Standard Specification 9-04.3**.
3. The maximum depth from the finished grade to the lowest pipe invert shall be 5'.
4. The frame and grate may be installed with the flange down or integrally cast into the adjustment section with flange up.
5. The Precast Base Section may have a rounded floor, and the walls may be sloped at a rate of 1:24 or steeper.
6. The opening shall be measured at the top of the Precast Base Section.
7. All pickup holes shall be grouted full after the basin has been placed.

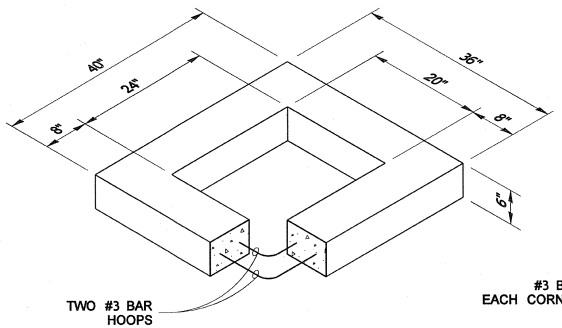

REDUCING SECTION

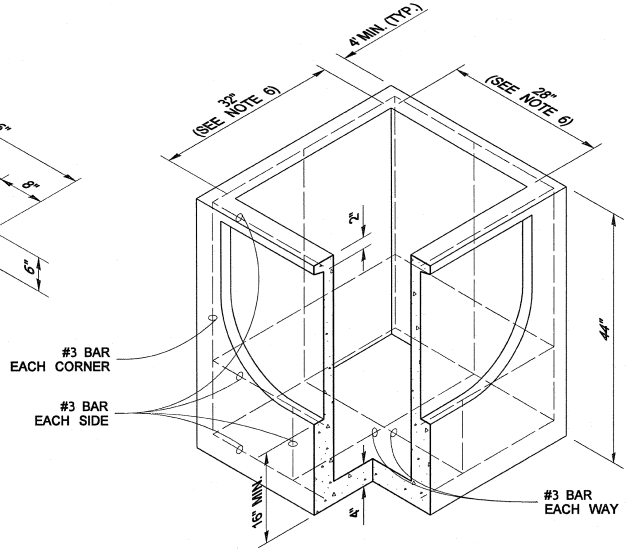

PRECAST BASE SECTION

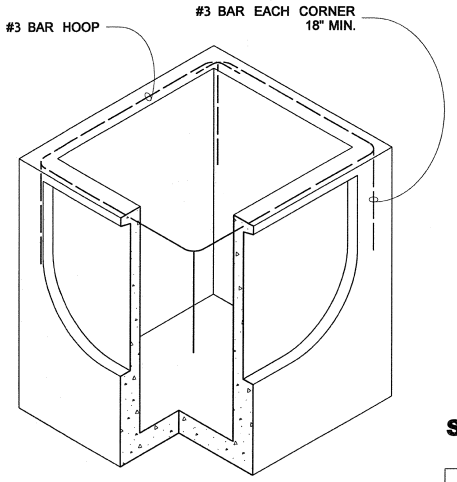

(SEE NOTE 1)

ALTERNATIVE PRECAST BASE SECTION

CATCH BASIN TYPE 1L

STANDARD PLAN B-5.40-01

SHEET 1 OF 1 SHEET

APPROVED FOR PUBLICATION

STATE DESIGN ENGINEER — DATE 6/16/11

Washington State Department of Transportation

DRAWN BY: LISA CYFORD

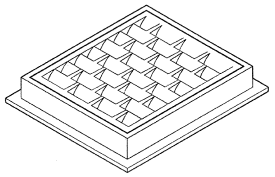

FRAME AND VANED GRATE

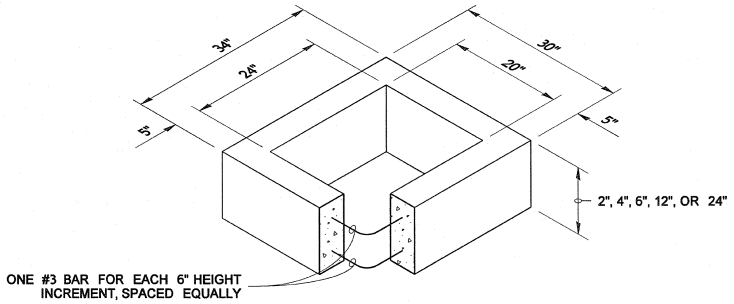

RECTANGULAR ADJUSTMENT SECTION

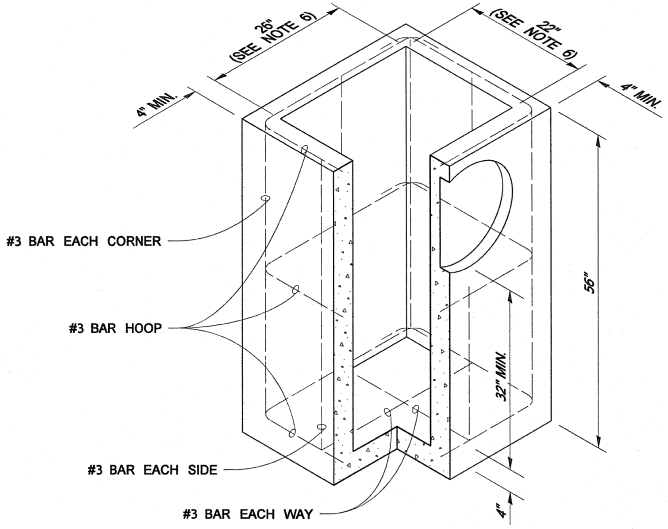

PRECAST BASE SECTION

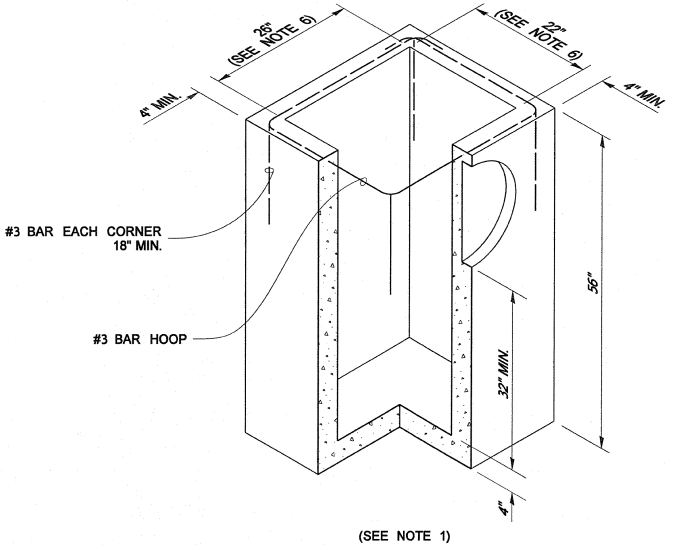

(SEE NOTE 1)

ALTERNATIVE PRECAST BASE SECTION

NOTES

1. As acceptable alternatives to the rebar shown in the **PRECAST BASE SECTION**, fibers (placed according to the Standard Specifications), or wire mesh having a minimum area of 0.12 square inches per foot, shall be used with the minimum required rebar shown in the ALTERNATIVE **PRECAST BASE SECTION**. Wire mesh shall not be placed in the knockouts.
2. The knockout diameter shall not be greater than 18". Knockouts shall have a wall thickness of 2" minimum to 2.5" maximum. Provide a 1.5" minimum gap between the knockout wall and the outside of the pipe. After the pipe is installed, fill the gap with joint mortar in accordance with **Standard Specification 9-04.3**.
3. The maximum depth from the finished grade to the lowest pipe invert shall be 5'.
4. The frame and grate may be installed with the flange down, or integrally cast into the adjustment section with flange up.
5. The Precast Base Section may have a rounded floor, and the walls may be sloped at a rate of 1:24 or steeper.
6. The opening shall be measured at the top of the Precast Base Section.
7. All pickup holes shall be grouted full after the basin has been placed.

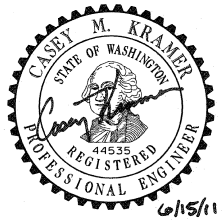

CATCH BASIN TYPE 1P (FOR PARKING LOT)

STANDARD PLAN B-5.60-01

SHEET 1 OF 1 SHEET

APPROVED FOR PUBLICATION

STATE DESIGN ENGINEER — DATE 6/16/11

Washington State Department of Transportation

DRAWN BY: ADAM COCHRAN

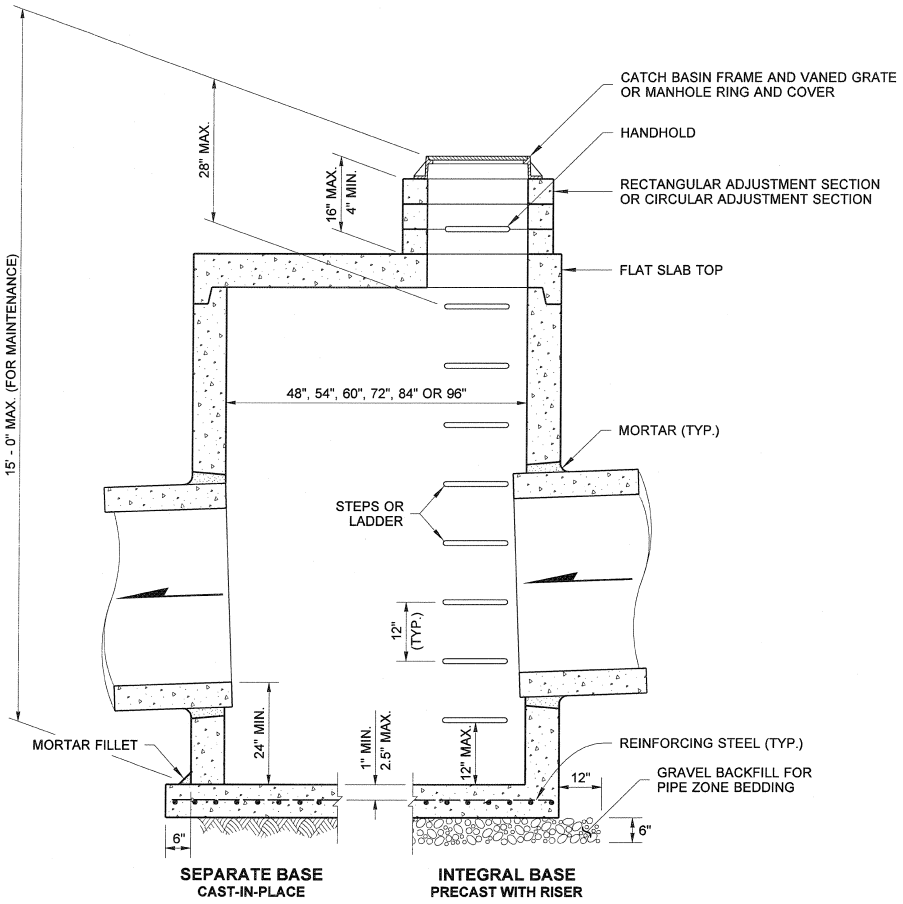

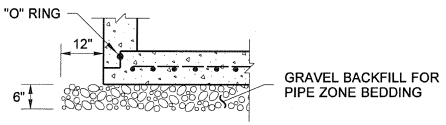

SEPARATE BASE
PRECAST

NOTES

1. No steps are required when height is 4' or less.
2. The bottom of the precast catch basin may be sloped to facilitate cleaning.
3. The rectangular frame and grate may be installed with the flange up or down. The frame may be cast into the adjustment section.
4. Knockouts shall have a wall thickness of 2" minimum to 2.5" maximum. Provide a 1.5" minimum gap between the knockout wall and the outside of the pipe. After the pipe is installed, fill the gap with joint mortar in accordance with Standard Specification 9-04.3.

CATCH BASIN DIMENSIONS

CATCH BASIN DIAMETER	WALL THICKNESS	BASE THICKNESS	MAXIMUM KNOCKOUT SIZE	MINIMUM DISTANCE BETWEEN KNOCKOUTS	BASE REINFORCING STEEL in^2/ft. IN EACH DIRECTION	
					SEPARATE BASE	INTEGRAL BASE
48"	4"	6"	36"	8"	0.23	0.15
54"	4.5"	8"	42"	8"	0.19	0.19
60"	5"	8"	48"	8"	0.25	0.25
72"	6"	8"	60"	12"	0.35	0.24
84"	8"	12"	72"	12"	0.39	0.29
96"	8"	12"	84"	12"	0.39	0.29

PIPE ALLOWANCES

CATCH BASIN DIAMETER	PIPE MATERIAL WITH MAXIMUM INSIDE DIAMETER				
	CONCRETE	ALL METAL	CPSSP ①	SOLID WALL PVC ②	PROFILE WALL PVC ③
48"	24"	30"	24"	27"	30"
54"	30"	36"	30"	27"	36"
60"	36"	42"	36"	36"	42"
72"	42"	54"	42"	36"	48"
84"	54"	60"	54"	36"	48"
96"	60"	72"	60"	36"	48"

① Corrugated Polyethylene Storm Sewer Pipe (Std. Spec. 9-05.20)
② (Std. Spec. 9-05.12(1))
③ (Std. Spec. 9-05.12(2))

MATTHEW J. WITECKI
STATE OF WASHINGTON
15588
REGISTERED
PROFESSIONAL ENGINEER
6/1/06
EXPIRES JULY 1, 2007

CATCH BASIN TYPE 2

STANDARD PLAN B-10.20-00

SHEET 1 OF 1 SHEET

APPROVED FOR PUBLICATION

Harold Peterson 6-1-06

STATE DESIGN ENGINEER — DATE

Washington State Department of Transportation

DRAWN BY: MARK SUJKA

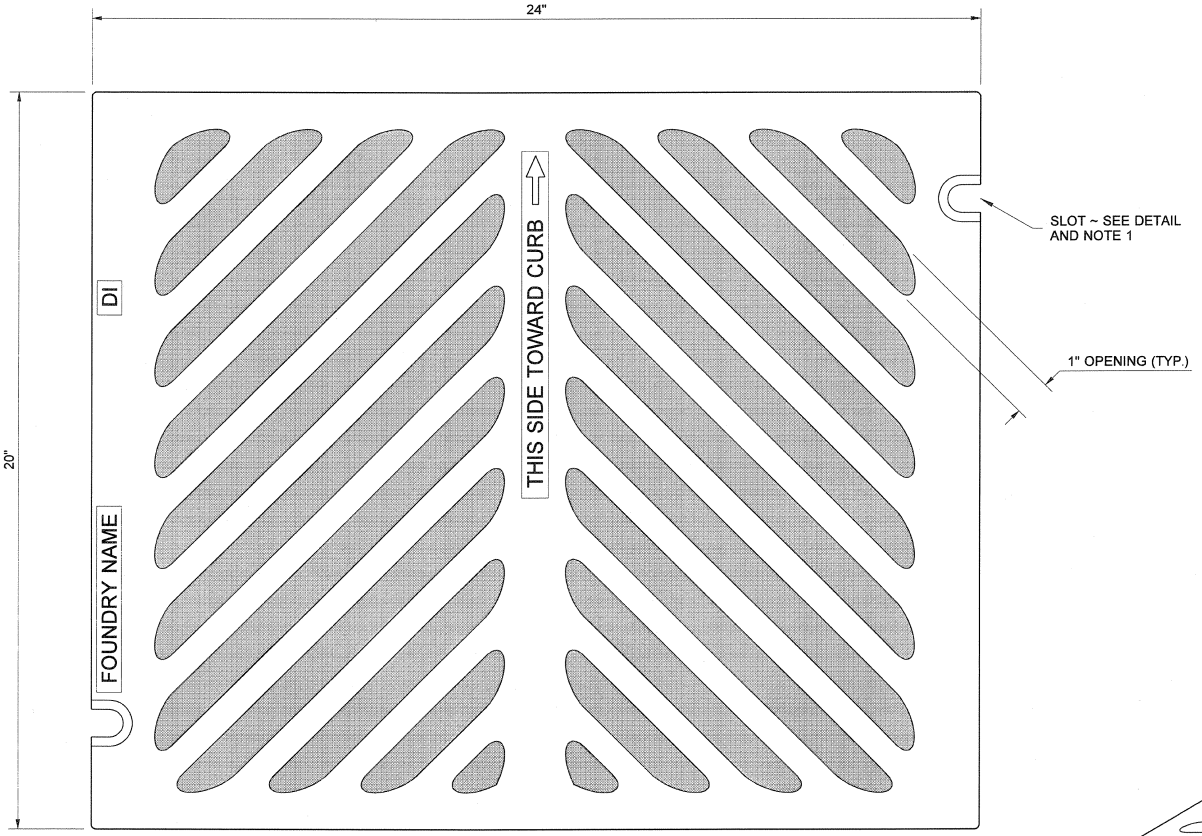

TOP

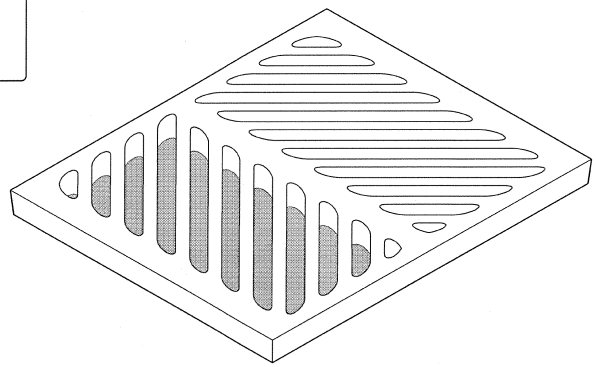

ISOMETRIC

NOTES

1. When bolt-down grates are specified in the Contract, provide two slots in the grate that are vertically aligned with the holes in the frame. Location of bolt-down slots varies among different manufacturers.
2. Refer to Standard Specification 9-05.15(2) for additional requirements.
3. For Frame details, see Standard Plan B-30.10.
4. The thickness of the grate shall not exceed 1 5/8".

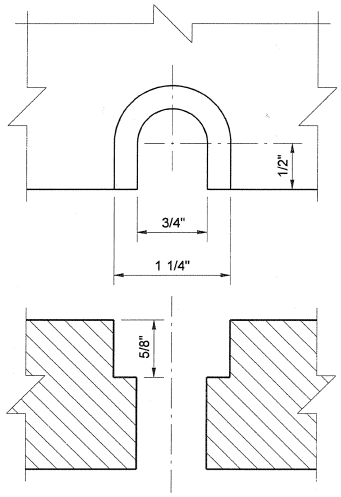

BOLT-DOWN SLOT DETAIL
SEE NOTE 1

MATTHEW J. WITECKI
STATE OF WASHINGTON
15578
REGISTERED
PROFESSIONAL ENGINEER
6/1/06
EXPIRES JULY 1, 2007

RECTANGULAR HERRINGBONE GRATE

STANDARD PLAN B-30.50-00

SHEET 1 OF 1 SHEET

APPROVED FOR PUBLICATION

Harold Petrasek 6-1-06

STATE DESIGN ENGINEER — DATE

Washington State Department of Transportation

DRAWN BY: LISA CYFORD

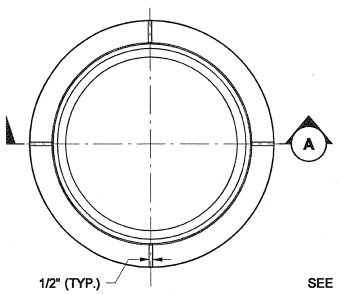

RING PLAN

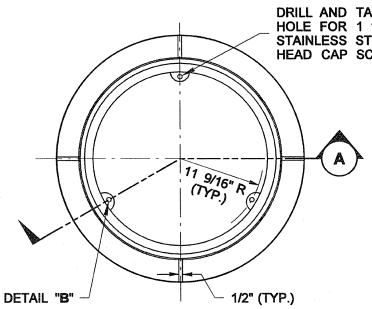

RING PLAN

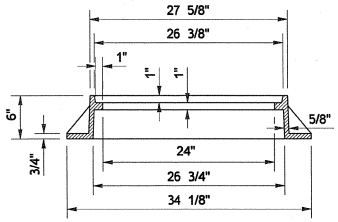

RING SECTION (A)

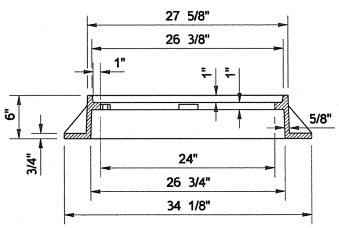

RING SECTION (A)

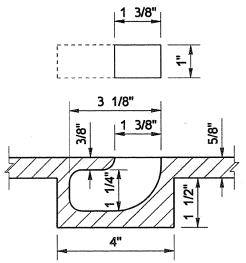

BLIND PICK NOTCH
DETAIL "A"

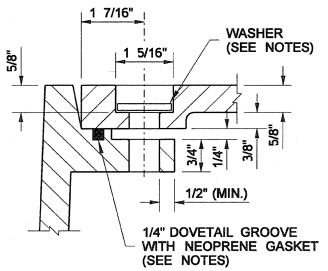

BOLT-DOWN / WATERTIGHT
DETAIL "B"

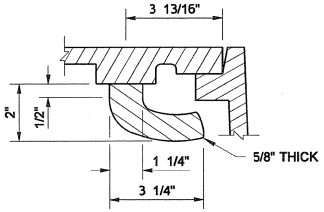

BOLT ON CAM TYPE LOCKING DEVICE
SECTION (C)

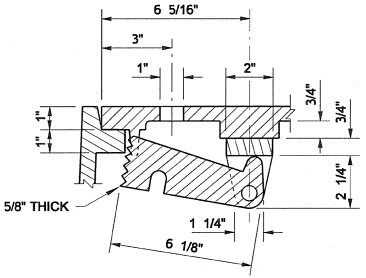

BOLT ON CAM TYPE LOCKING DEVICE
DETAIL "C"

NOTES

1. The gasket and groove may be in the seat (frame) or in the underside of the cover. The gasket may be "T" shaped in section. The groove may be cast or machined.
2. For bolt-down manhole ring and covers that are not designated "Watertight," the neoprene gasket, groove, and washer are not required.
3. Washer shall be neoprene (Detail "B").
4. In lieu of blind pick notch for storm sewer manhole covers, a single 1" pick hole is acceptable. Hole location and number of holes may vary by manufacturer.
5. Proprietary manhole covers without bottom ribs are acceptable.
6. For clarity, the vertical scale of the Cover Section has been exaggerated, it is 1.5 times the horizontal scale (1H:1.5V).

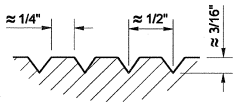

SKID GROOVE PATTERN DETAIL

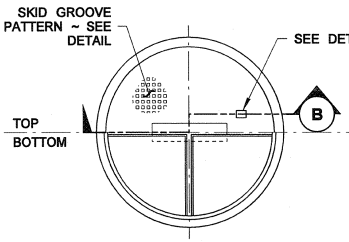

COVER PLAN

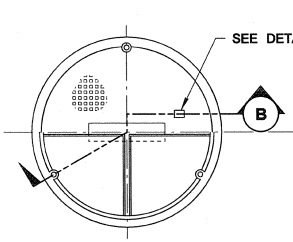

COVER PLAN

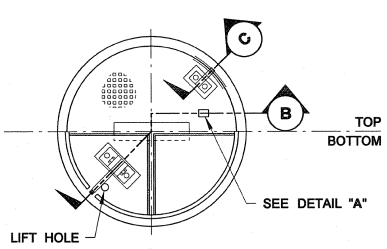

COVER PLAN

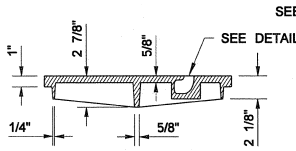

COVER SECTION (B)
(SEE NOTE 6)
STANDARD
TYPE 1

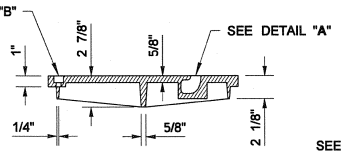

COVER SECTION (B)
(SEE NOTE 6)
BOLT-DOWN/WATERTIGHT
TYPE 2

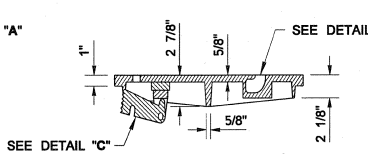

COVER SECTION (B)
(SEE NOTE 6)
CAMLOCK
TYPE 3

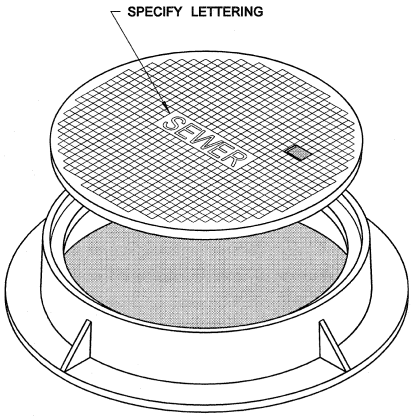

ISOMETRIC VIEW

CIRCULAR FRAME (RING) AND COVER

STANDARD PLAN B-30.70-02

SHEET 1 OF 1 SHEET

APPROVED FOR PUBLICATION

STATE DESIGN ENGINEER — DATE 6/16/11

Washington State Department of Transportation

This page left blank intentionally.

DRAWN BY: FERN LIDDELL

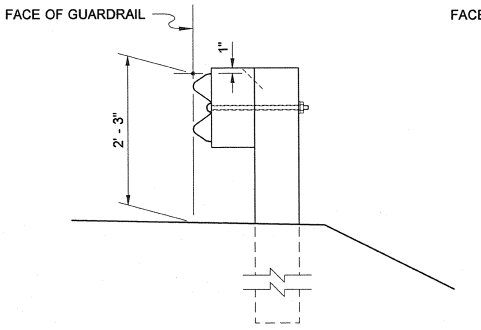

TYPE 1

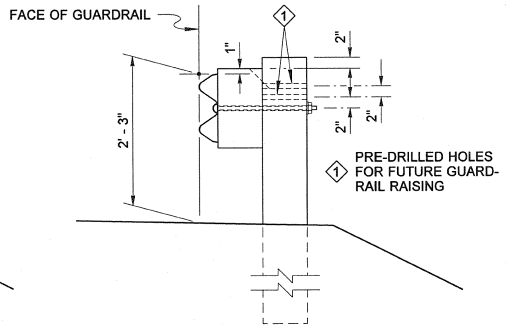

INITIAL INSTALLATION

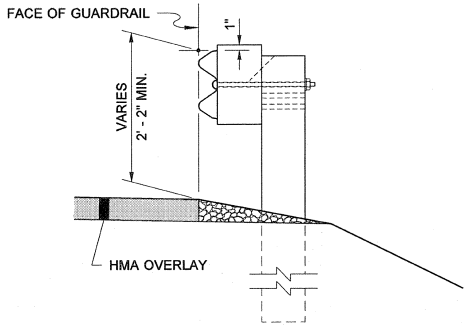

RAIL ELEMENT RAISED

TYPE 1 ALTERNATIVE

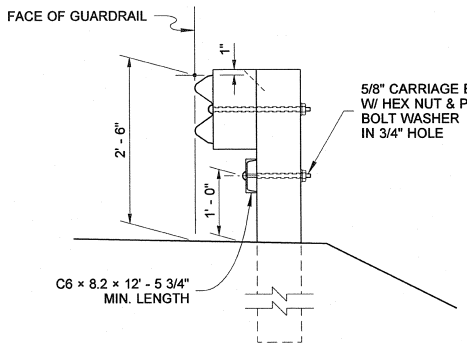

TYPE 2

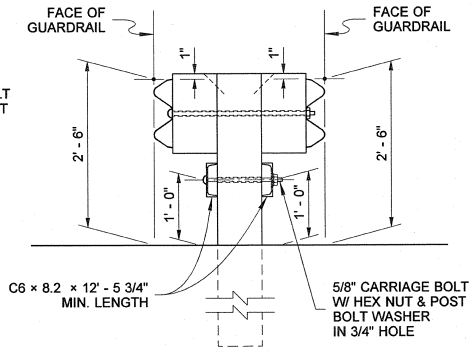

TYPE 3

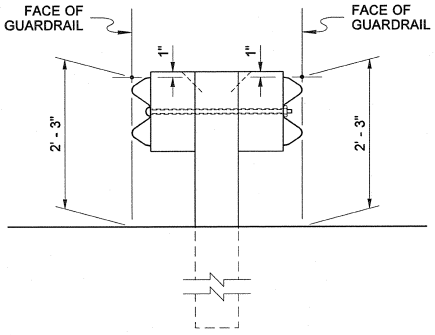

TYPE 4

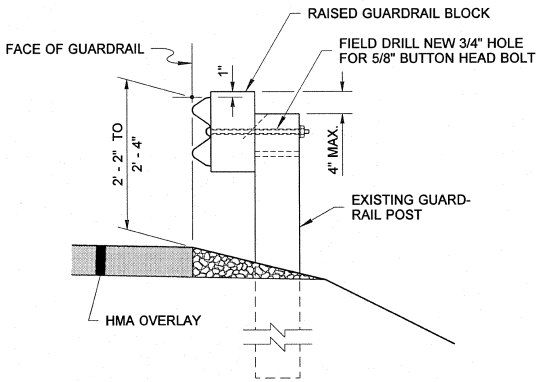

BEAM GUARDRAIL RAISING FOR HMA OVERLAYS

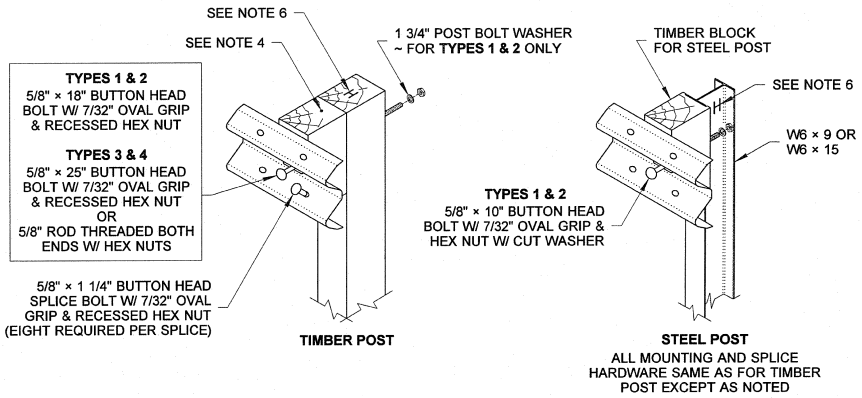

ASSEMBLY DETAIL

NOTES

1. When required by the Contract, a Snow Load Post Washer shall be used on the backside of the post (in lieu of the 1 3/4" Post Bolt Washer) and a Snow Load Rail Washer shall be placed on the face side of Beam Guardrail Types 1 and 2. Snow Load Rail Washers shall not be installed on terminals.
2. Rail Washers, also called "Snow Load Rail Washers" are not required on new installation except as called for in Note 1. Unnecessary Rail washers need not be removed from existing installations, except those on posts 2 through 8 of a BCT installation shall be removed.
3. Beam Guardrail post spacing for Types 1 through 4 shall be 6' - 3" on centers.
4. Timber blocks shall be toe-nailed to the post with a16d galvanized nail to prevent block rotation.
5. For post and block details, see **Standard Plan C-1b**.
6. When "Beam Guardrail Type - ___ Ft. Long Post" is specified in the Contract, the post length shall be stamped with numbers, 1 1/2" min. high and 3/4" wide at the location where the letter "H" is shown in the ASSEMBLY DETAIL. For wood post applications, the letter shall be stamped to a minimum depth of 1/4". For steel post applications, the letter shall be legible after the post is galvanized. After post installation, it shall be the Contractor's responsibility to ensure that the stamped numbers remain visible.
7. Existing posts shall not be raised. Replace posts as necessary to achieve required guardrail height.

TERRY L. BERENDS
STATE OF WASHINGTON
32350
REGISTERED
PROFESSIONAL ENGINEER

6-8-2011

BEAM GUARDRAIL TYPES 1 ~ 4 (W-BEAM) STANDARD PLAN C-1

SHEET 1 OF 2 SHEETS

APPROVED FOR PUBLICATION

STATE DESIGN ENGINEER — DATE 6/14/11

Washington State Department of Transportation

DRAWN BY: FERN LIDDELL

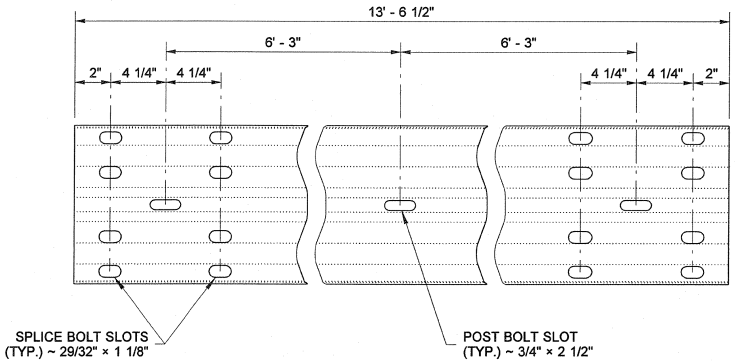

TYPICAL RAIL ELEMENT

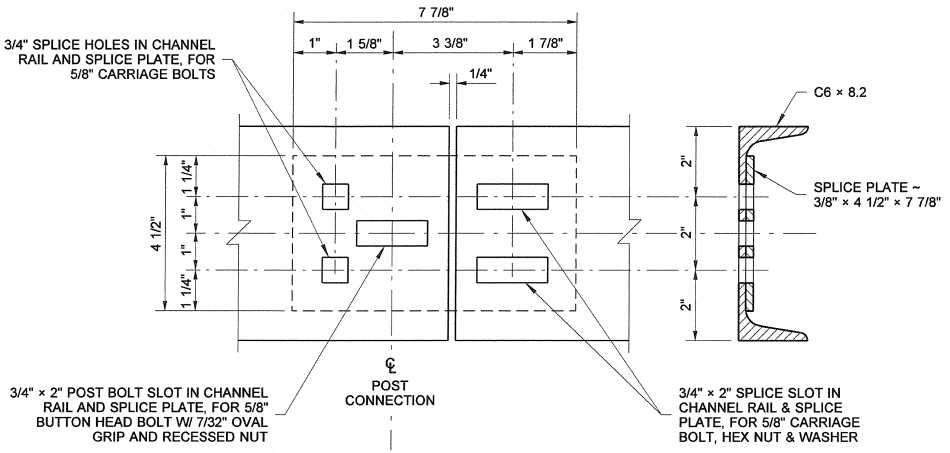

CHANNEL RAIL SPLICE

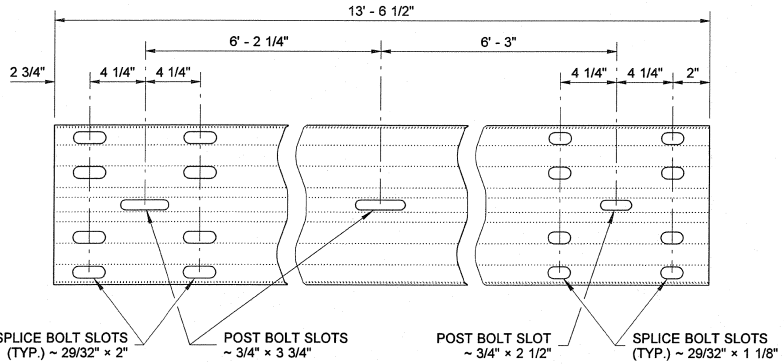

EXPANSION SECTION

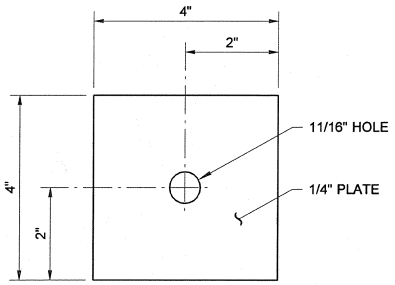

SNOW LOAD
POST WASHER
SEE NOTE 1

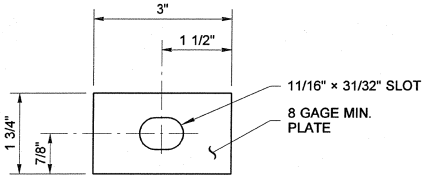

SNOW LOAD
RAIL WASHER
SEE NOTES 1 & 2

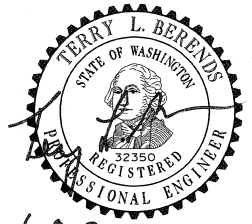

6-8-2011

BEAM GUARDRAIL TYPES 1 ~ 4 (W-BEAM) STANDARD PLAN C-1

SHEET 2 OF 2 SHEETS

APPROVED FOR PUBLICATION

STATE DESIGN ENGINEER — DATE 6/16/11

Washington State Department of Transportation

DRAWN BY: BILL BERENS

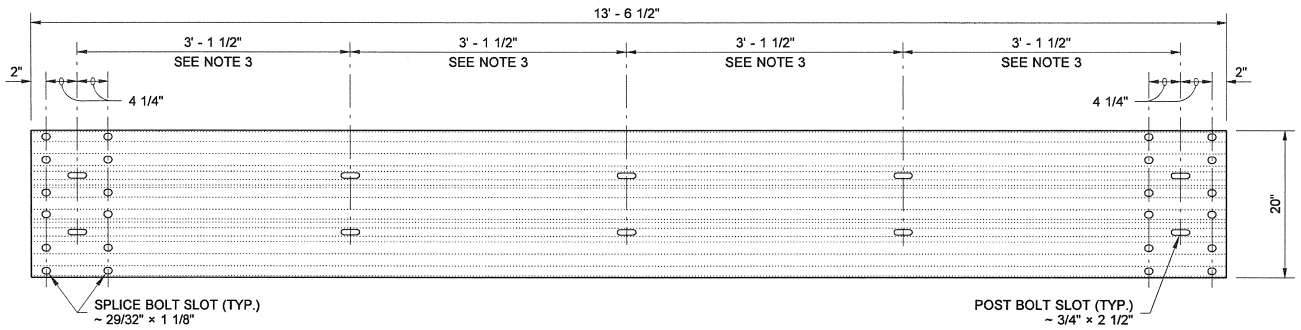

TYPICAL RAIL ELEMENT

NOTES

1. Type 10 post shall be 6×8 timber or W6×9.
   Type 11 post shall be 10×10 timber or W6×15.
   For additional details see **Standard Plan C-1b.**
2. Type 10 guardrail post spacing shall be 6' - 3" on center.
   Type 11 shall be a maximum of 3' - 1 1/2 " on center.
3. Spacing may vary depending on application. See **Standard Specification Section 9-16.3(1)** for rail element requirements.

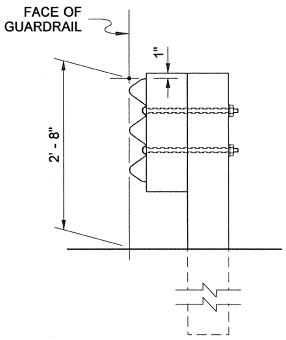

RAIL ASSEMBLY

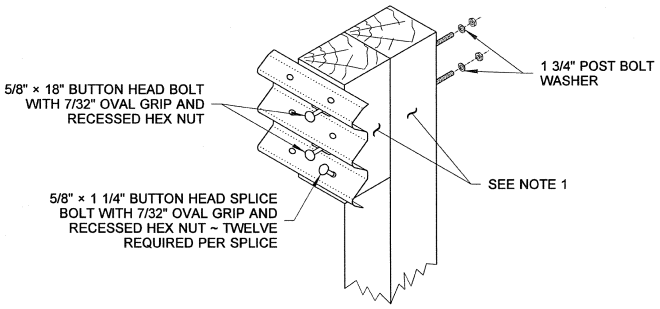

WOOD POST ASSEMBLY

TYPE 10

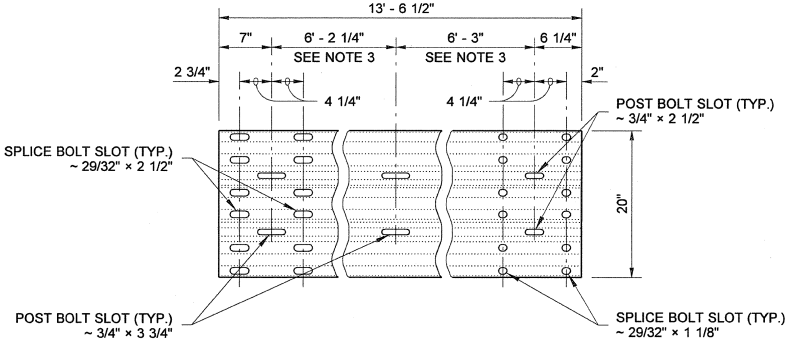

EXPANSION SECTION

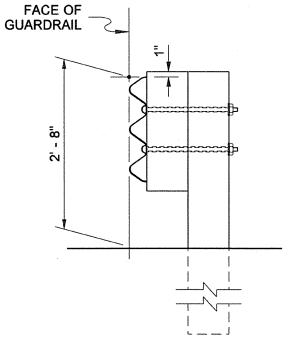

RAIL ASSEMBLY

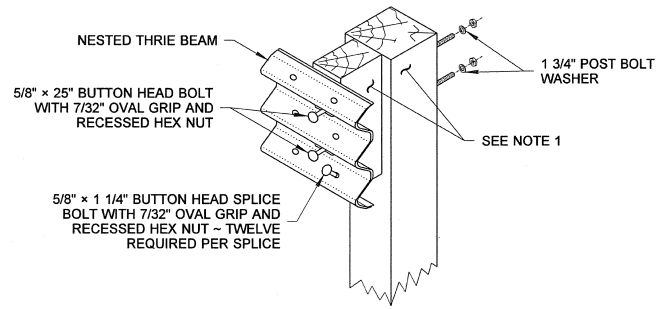

WOOD POST ASSEMBLY

TYPE 11

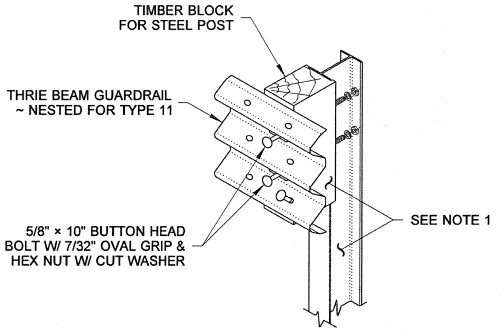

STEEL POST ASSEMBLY

TYPE 10 AND 11

TERRY L. BERENDS
STATE OF WASHINGTON
32350
REGISTERED
PROFESSIONAL ENGINEER

10-5-09

BEAM GUARDRAIL (THRIE BEAM)

STANDARD PLAN C-1a

SHEET 1 OF 1 SHEET

APPROVED FOR PUBLICATION

STATE DESIGN ENGINEER — DATE 10/14/09

Washington State Department of Transportation

This page left blank intentionally.

DRAWN BY: FERN LIDDELL

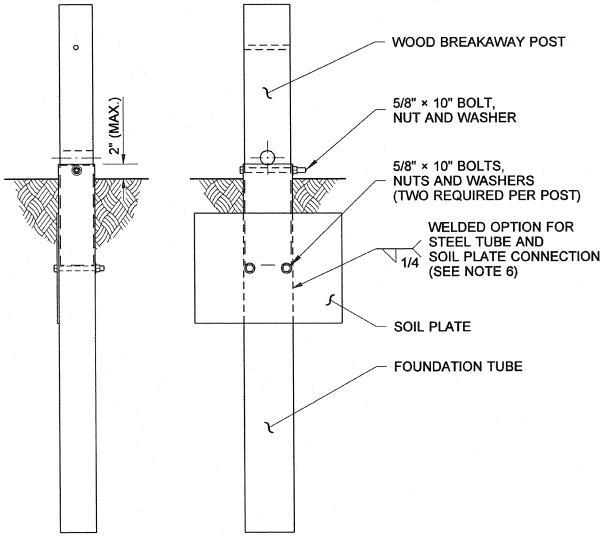

ANCHOR POST ASSEMBLY

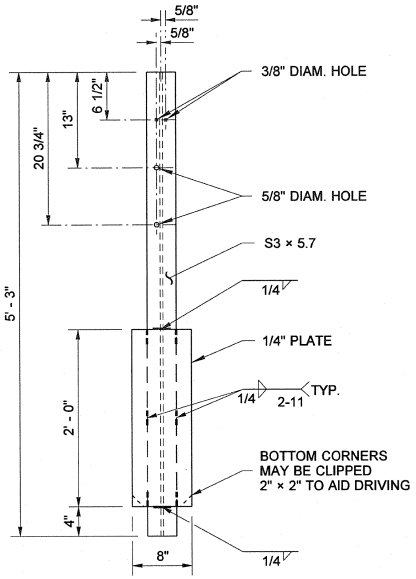

G-2 POST

NOTES

1. Wood posts for all guardrail placement plans shall be 6 × 8 except where noted otherwise.
2. Lower hole is for Rub Rail of Type 2 and Type 3 Beam Guardrail.
3. W6×9 steel posts and timber blocks are alternates for 6 × 8 timber posts and blocks. W6×15 steel posts and timber blocks are alternates for 10 × 10 timber posts and blocks.
4. Holes shall be located on approaching traffic side of web.
5. When "Beam Guardrail Type - _ _ Ft. Long Post" is specified in the Contract, the post length shall be stamped with numbers, 1 1/2" min. high and 3/4" wide at the location where the letter "H" is shown in the ASSEMBLY DETAIL. For wood post applications, the letter shall be stamped to a minimum depth of 1/4". For steel post applications, the letter shall be legible after the post is galvanized. After post installation, it shall be the Contractor's responsibility to ensure that the stamped numbers remain visible.
6. Soil plate may be welded to foundation tube. If so, holes in soil plate and foundation tube may be omitted.

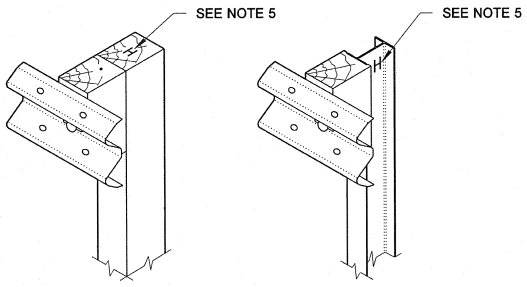

PARTIAL ASSEMBLY DETAIL

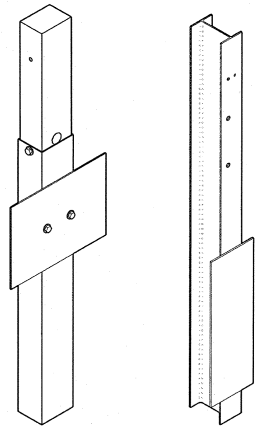

ISOMETRIC

6-8-2011

BEAM GUARDRAIL POSTS AND BLOCKS

STANDARD PLAN C-1b

SHEETS 1 OF 2 SHEETS

APPROVED FOR PUBLICATION

STATE DESIGN ENGINEER — DATE 6/16/11

Washington State Department of Transportation

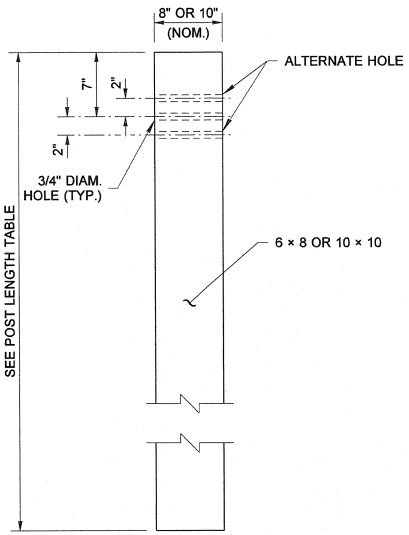

W-BEAM

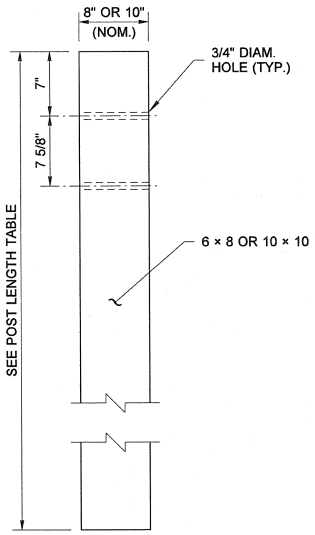

THRIE BEAM

WOOD POST

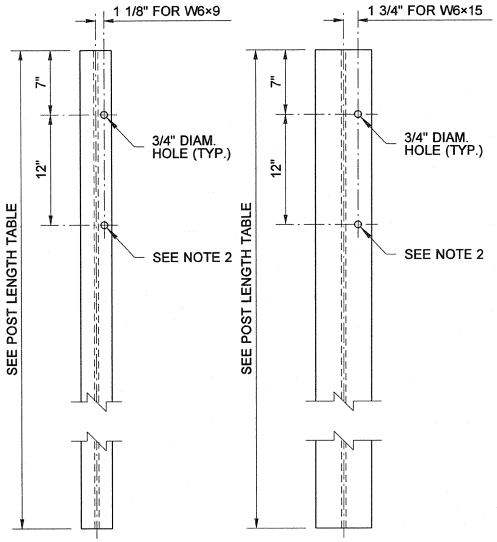

W-BEAM THRIE BEAM

STEEL POST
SEE NOTES 3 AND 4

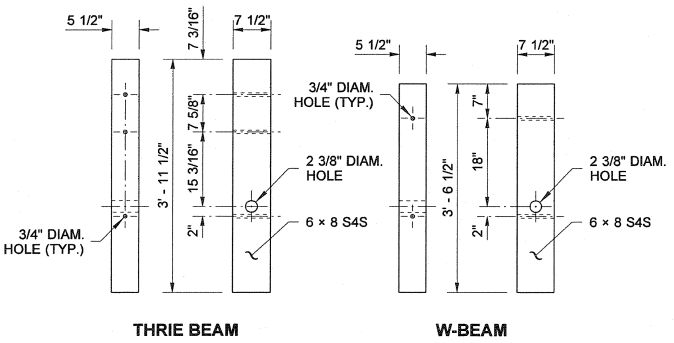

THRIE BEAM W-BEAM

WOOD BREAKAWAY POST

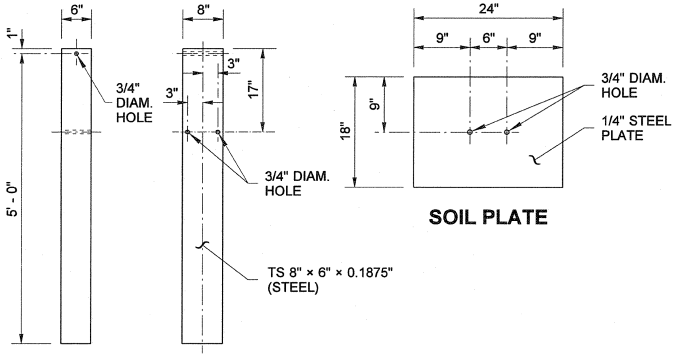

FOUNDATION TUBE **SOIL PLATE**

DRAWN BY: FERN LIDDELL

POST LENGTH TABLE	
GUARDRAIL TYPE	**LENGTH**
1 through 4 & 31	6' - 0"
10 or 11	6' - 6"

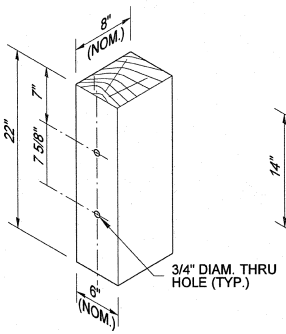

THRIE BEAM WOOD BLOCK FOR WOOD POST

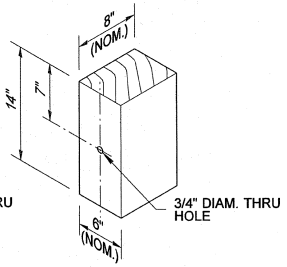

W-BEAM WOOD BLOCK FOR WOOD POSTS

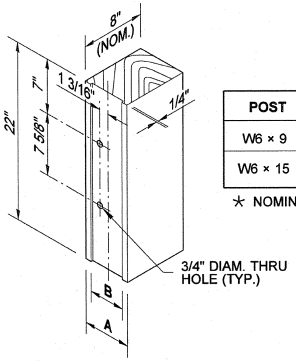

THRIE BEAM WOOD BLOCK FOR STEEL POST

POST	A	B
W6 × 9	6"★	4 1/4"
W6 × 15	8"★	6 1/4"

★ NOMINAL (NOM.)

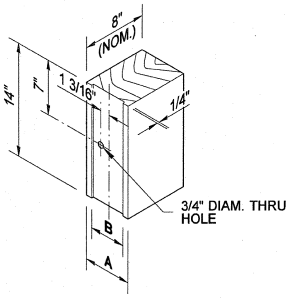

W-BEAM WOOD BLOCK FOR STEEL POST

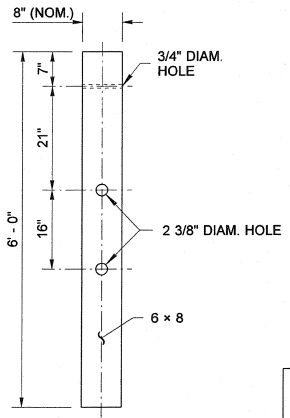

CONTROLLED RELEASING TERMINAL (CRT) POST

TERRY L. BERENDS
STATE OF WASHINGTON
32350
REGISTERED
PROFESSIONAL ENGINEER

6-8-2011

BEAM GUARDRAIL POSTS AND BLOCKS

STANDARD PLAN C-1b

SHEETS 2 OF 2 SHEETS

APPROVED FOR PUBLICATION

STATE DESIGN ENGINEER — DATE 6/16/11

Washington State Department of Transportation

NOTES

1. For post details see Standard Plan, "Beam Guardrail Posts and Blocks".

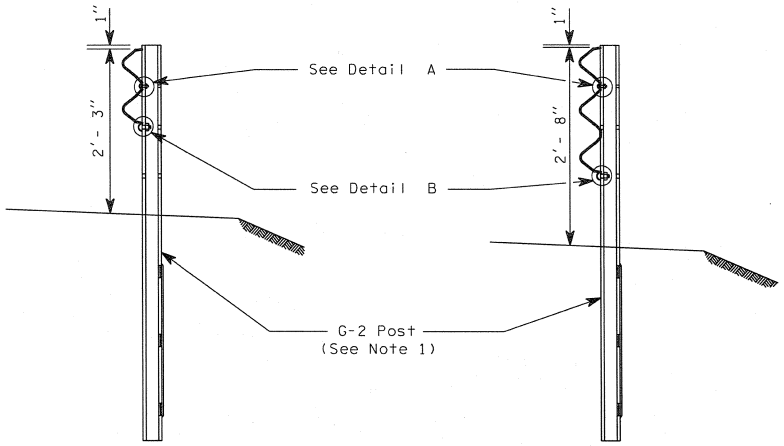

TYPE 20 TYPE 21

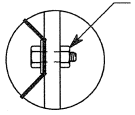

DETAIL A

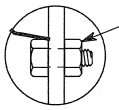

DETAIL B

BEAM GUARDRAIL

CLIFFORD B. MANSFIELD
STATE OF WASHINGTON
15224
REGISTERED
PROFESSIONAL ENGINEER
EXPIRES MAY 3, 1998

STANDARD PLAN C-1c

APPROVED FOR PUBLICATION

STATE DESIGN ENGINEER 5/12/97 DATE

WASHINGTON STATE DEPARTMENT OF TRANSPORTATION
OLYMPIA, WASHINGTON

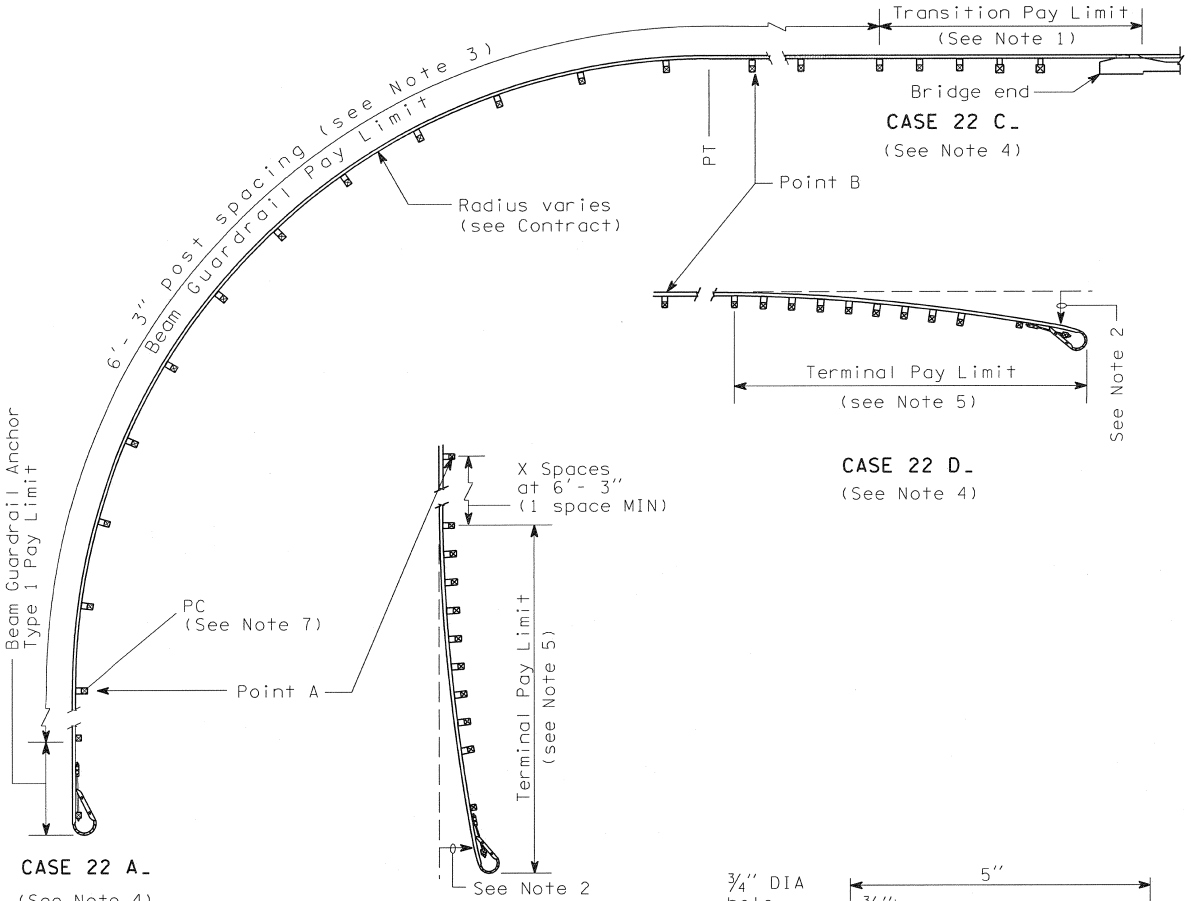

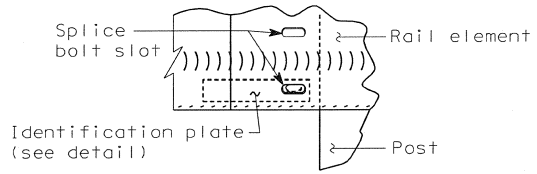

IDENTIFICATION PLATE MOUNTING DETAIL
(See Note 7)

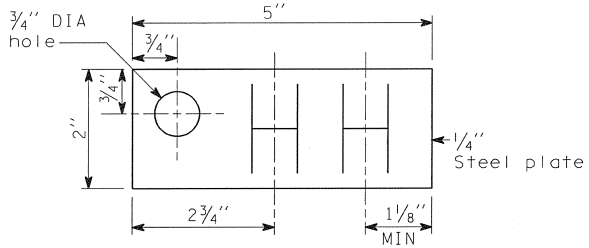

IDENTIFICATION PLATE DETAIL
(See Note 6)

NOTES

1. See Contract for transition and connection type.
2. The slope from the edge of the shoulder into the face of the guardrail should not be steeper than 10:1.
3. Guardrail installation shall be Beam Guardrail Type 1 with standard post and block.
4. First letter of case designation indicates end treatment on side road. Second letter indicates end treatment on main road. For instance a terminal on the side road and a bridge connection on the main road would be Case 22 BC.
5. For terminal type and details, see Contract and applicable Standard Plan(s).
6. Radius dimensions shall be etched into plate replacing the letters "HH" shown on the Identification Plate Detail. Digits shall be 1½" MIN height and ¾" MAX width. Plate shall be galvanized after etching.
7. The guardrail Identification Plate shall be mounted at the lower splice bolt on the back side of the rail element at the PC of the guardrail radius.

RICHARD BARSTOW ALBIN
STATE OF WASHINGTON
34042
REGISTERED
PROFESSIONAL ENGINEER
10/30/03
EXPIRES JULY 24, 2004

GUARDRAIL PLACEMENT STRONG POST INTERSECTION DESIGN STANDARD PLAN C-2p

SHEET 1 OF 1 SHEET

APPROVED FOR PUBLICATION
STATE DESIGN ENGINEER 10-31-03
DATE

Washington State Department of Transportation

DATE	REVISION	BY
09/2003	CORRECTED REFERENCES TO NOTES.	MHG

DRAWN BY: FERN LIDDELL

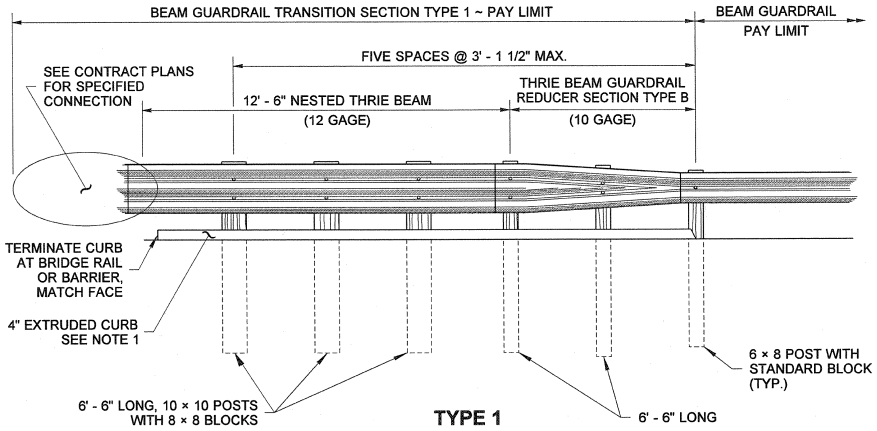

TYPE 1

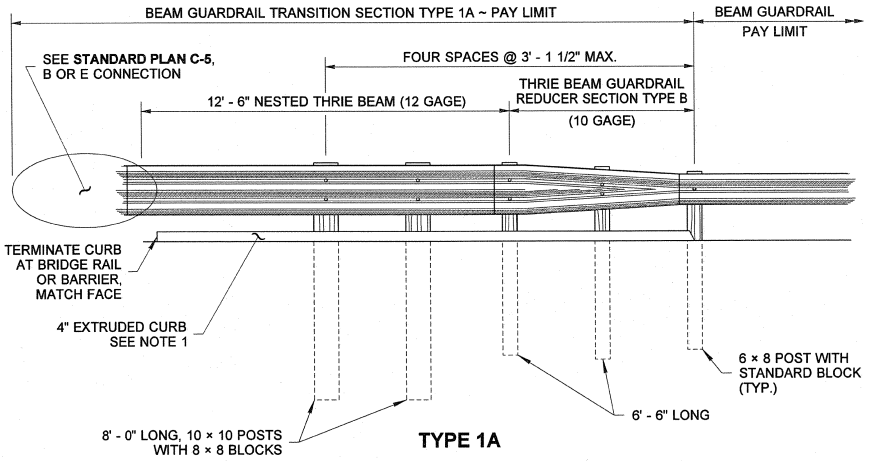

TYPE 1A

NOTE

1. Install Extruded Curb at face of Guardrail. See **Standard Plan F-10.40** for details.

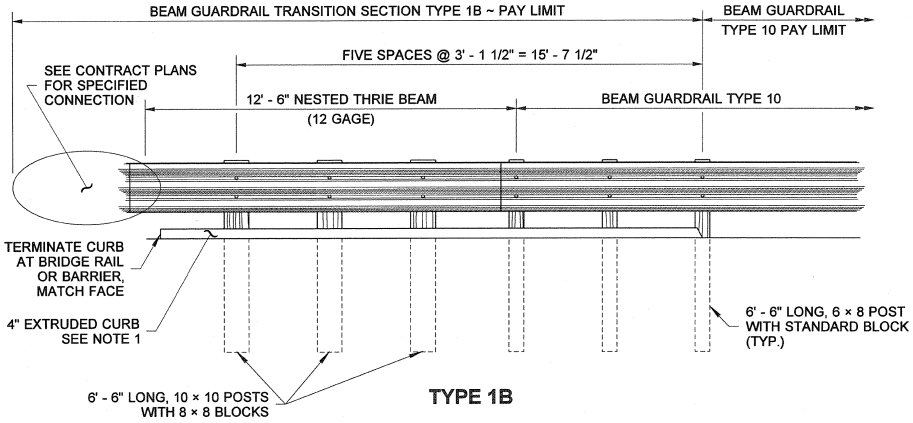

TYPE 1B

BEAM GUARDRAIL TRANSITION SECTIONS

STANDARD PLAN C-3

SHEET 1 OF 1 SHEET

APPROVED FOR PUBLICATION

STATE DESIGN ENGINEER — DATE 6/23/11

Washington State Department of Transportation

DRAWN BY: MARK SUJKA

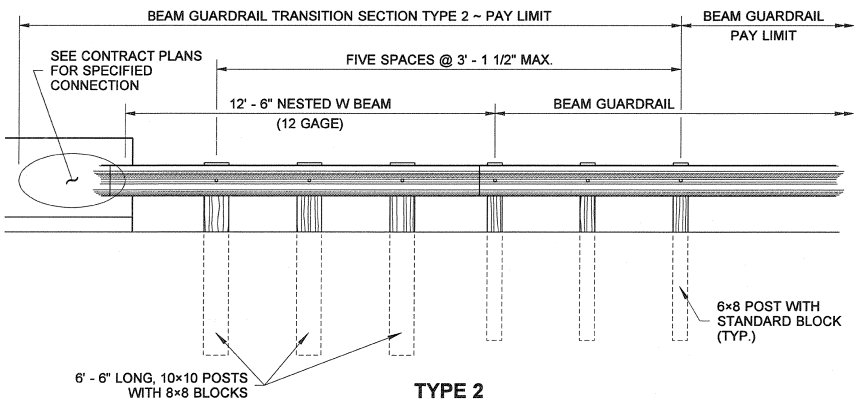

TYPE 2

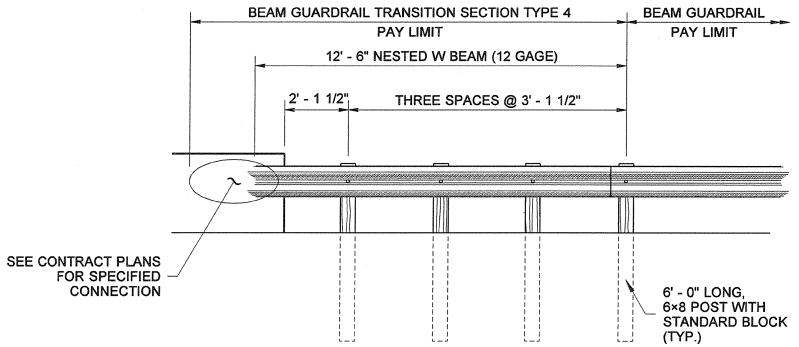

TYPE 4
FOR 45 MPH AND BELOW

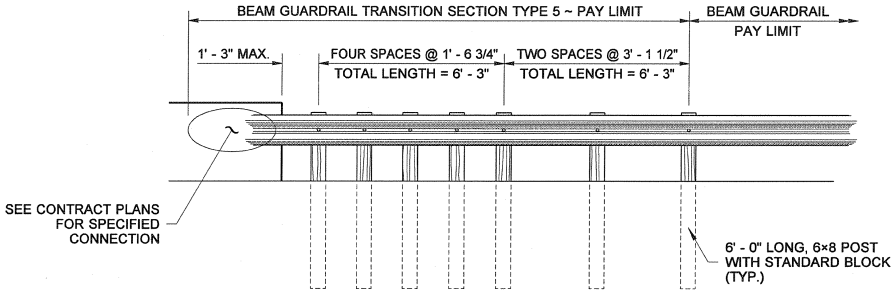

TYPE 5

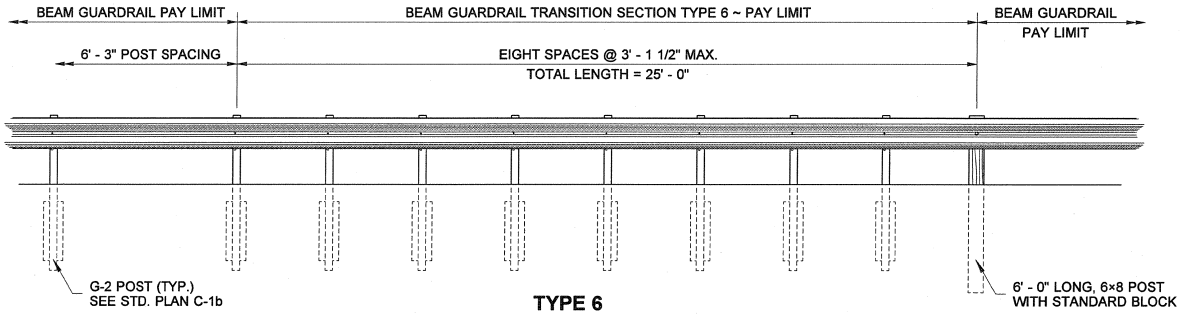

TYPE 6

RICHARD BARSTOW BIN
STATE OF WASHINGTON
34042
REGISTERED PROFESSIONAL ENGINEER
9/1/05
EXPIRES JULY 24, 2006

BEAM GUARDRAIL TRANSITION SECTIONS

STANDARD PLAN C-3a

SHEET 1 OF 1 SHEET

APPROVED FOR PUBLICATION

Harold Petrupero 10.4.05

STATE DESIGN ENGINEER DATE

Washington State Department of Transportation

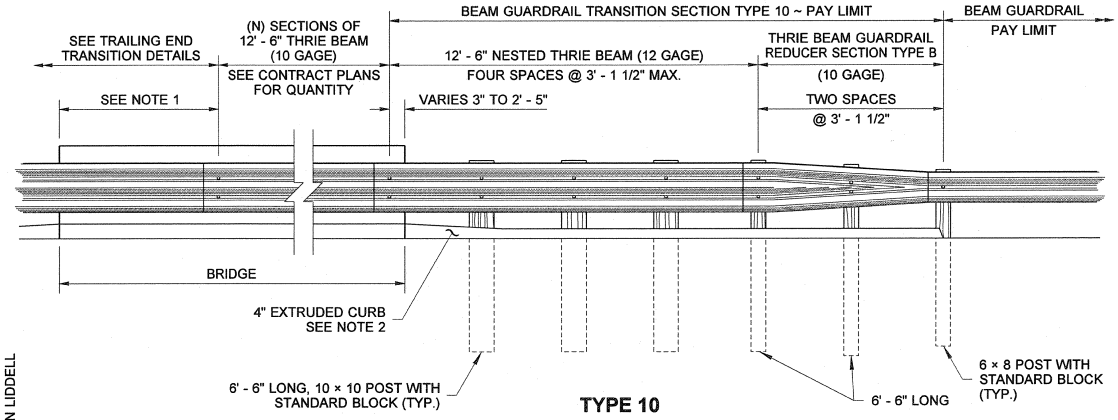

TYPE 10

APPROACH END

THRIE BEAM INSTALLED AT FACE OF BRIDGE CURB

DRAWN BY: FERN LIDDELL

NOTES

1. If the distance from the end of the bridge to the end of the thrie beam bridge rail section exceeds 6' - 3" using 12' - 6" thrie beam sections, add a 6' - 3" section of thrie beam bridge rail to reduce the length to less than 6' - 3".
2. When thrie beam is installed at the face of the bridge curb, install Extruded Curb at face of Guardrail. See **Standard Plan F-10.40** for details. Match the height of existing bridge curb with a 20H : 1V transition.
3. When thrie beam is installed at the face of rigid bridge rail, an HMA ramp is required from the roadway surface to the top of the bridge curb or sidewalk. The slope of the ramp shall be 20H : 1V or flatter.

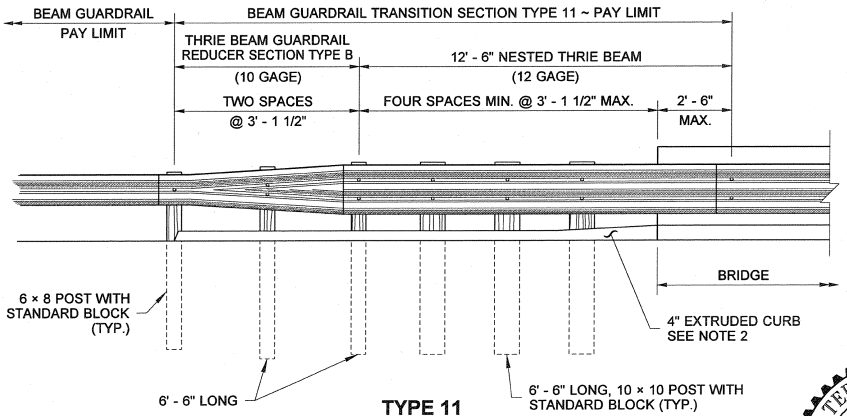

TYPE 11

TRAILING END

THRIE BEAM INSTALLED AT FACE OF BRIDGE CURB

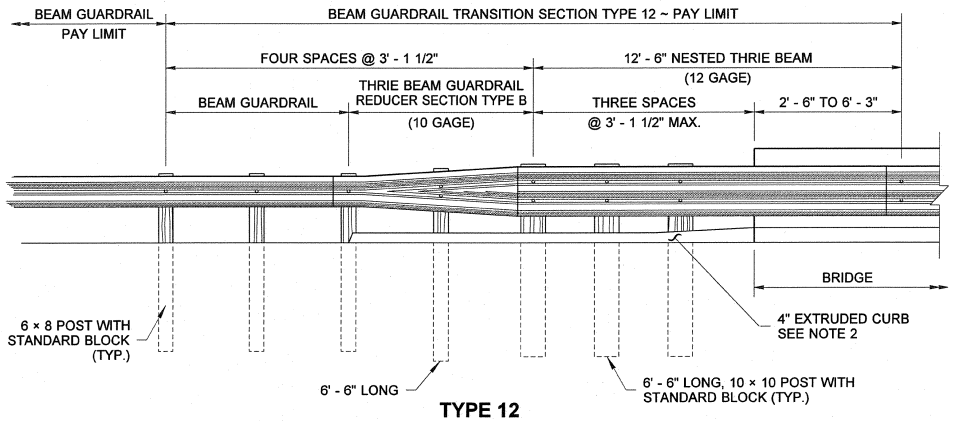

TYPE 12

TRAILING END

THRIE BEAM INSTALLED AT FACE OF BRIDGE CURB

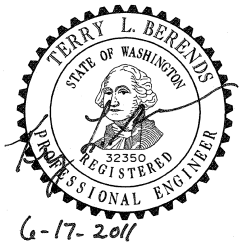

BEAM GUARDRAIL TRANSITION SECTIONS

STANDARD PLAN C-3b

SHEET 1 OF 2 SHEETS

APPROVED FOR PUBLICATION

STATE DESIGN ENGINEER — DATE 6/27/11

Washington State Department of Transportation

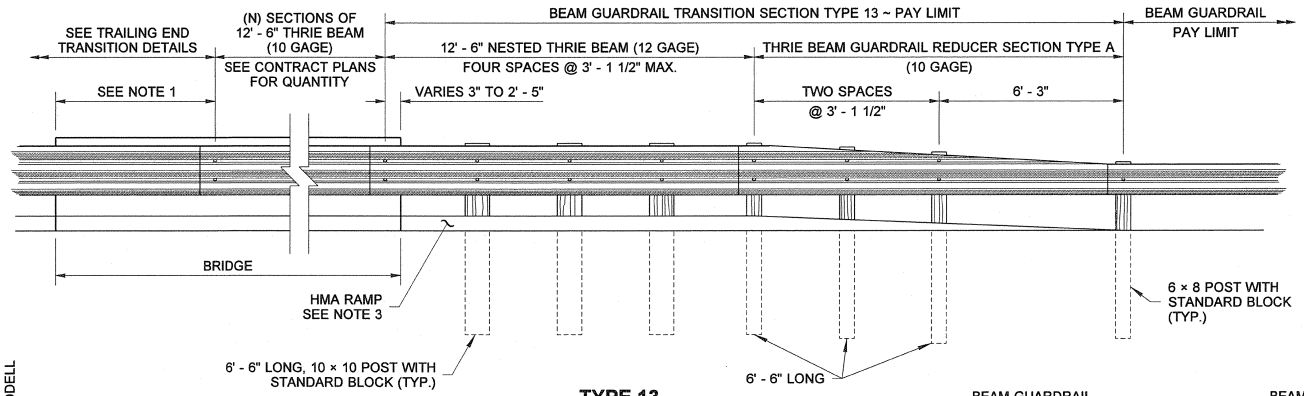

TYPE 13

APPROACH END

THRIE BEAM INSTALLED AT FACE OF BRIDGE RAIL

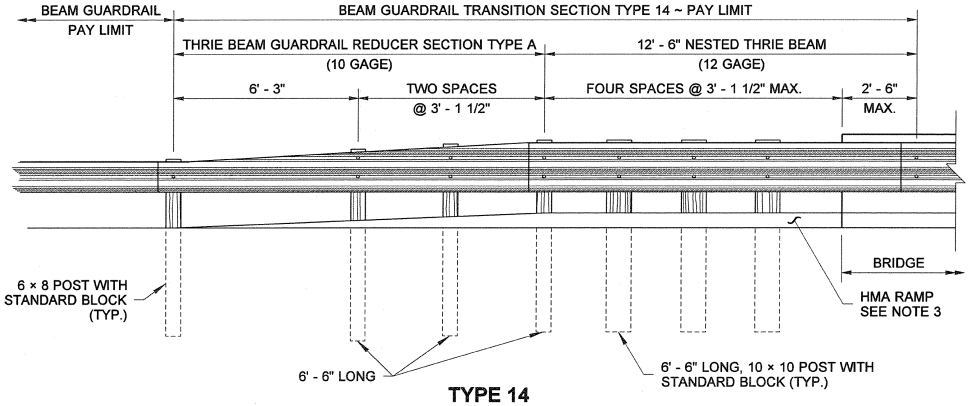

TYPE 14

TRAILING END

THRIE BEAM INSTALLED AT FACE OF BRIDGE RAIL

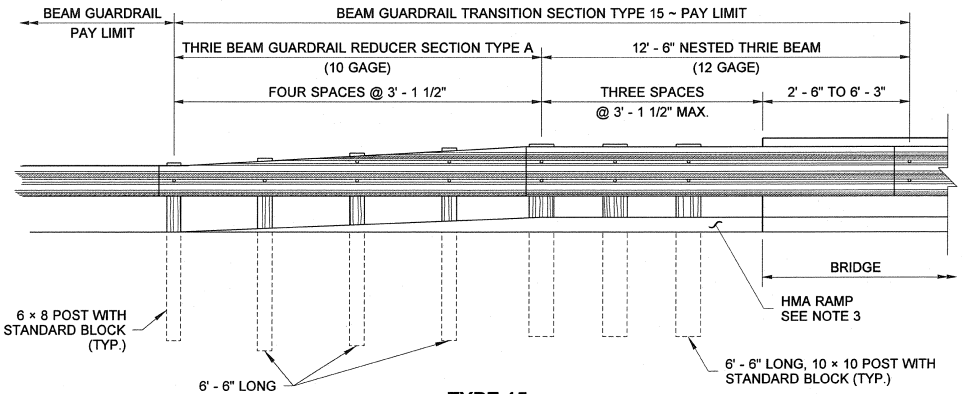

TYPE 15

TRAILING END

THRIE BEAM INSTALLED AT FACE OF BRIDGE RAIL

DRAWN BY: FERN LIDDELL

TERRY L. BERENDS
STATE OF WASHINGTON
32350
REGISTERED
PROFESSIONAL ENGINEER
6-17-2011

BEAM GUARDRAIL TRANSITION SECTIONS

STANDARD PLAN C-3b

SHEET 2 OF 2 SHEETS

APPROVED FOR PUBLICATION

STATE DESIGN ENGINEER — DATE 6/22/11

Washington State Department of Transportation

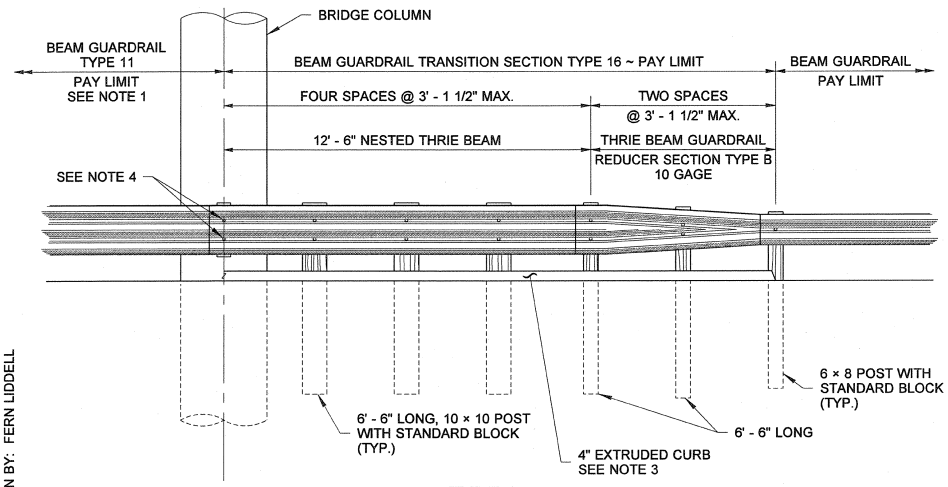

TYPE 16
APPROACH END

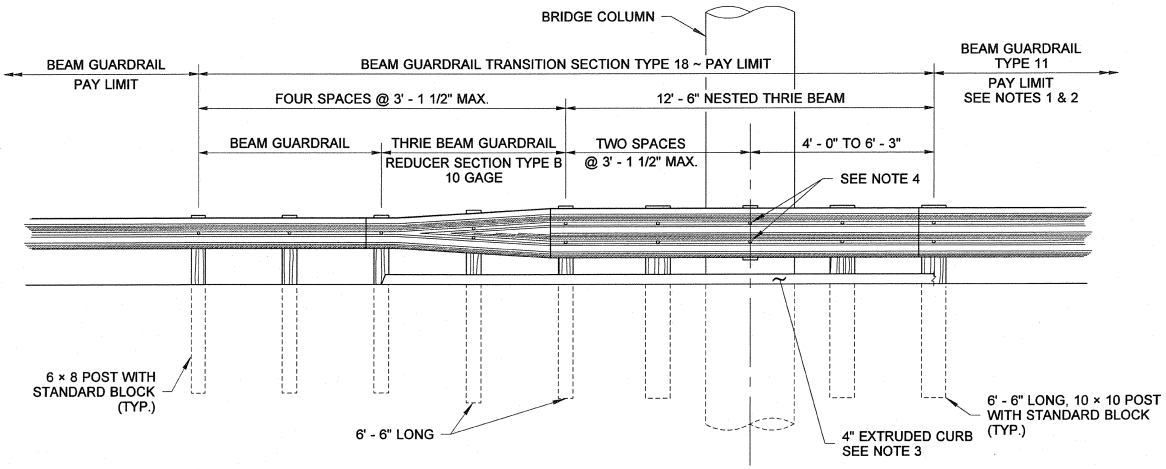

TYPE 18
TRAILING END

DRAWN BY: FERN LIDDELL

NOTES

1. See Contract for the number of thrie beam sections for Beam Guardrail Type 11.
2. If the distance from the end of the Beam Guardrail Type 11 to the column/structure exceeds 6' - 3" using 12' - 6" thrie beam sections, add a 6' - 3" nested section of thrie beam to reduce the distance to less than 6' - 3".
3. Install Extruded Curb (See **Standard Plan F-10.40)** at face of Guardrail.
4. Attach the standard block to the rail using two 5/8" × 4" lag bolts.

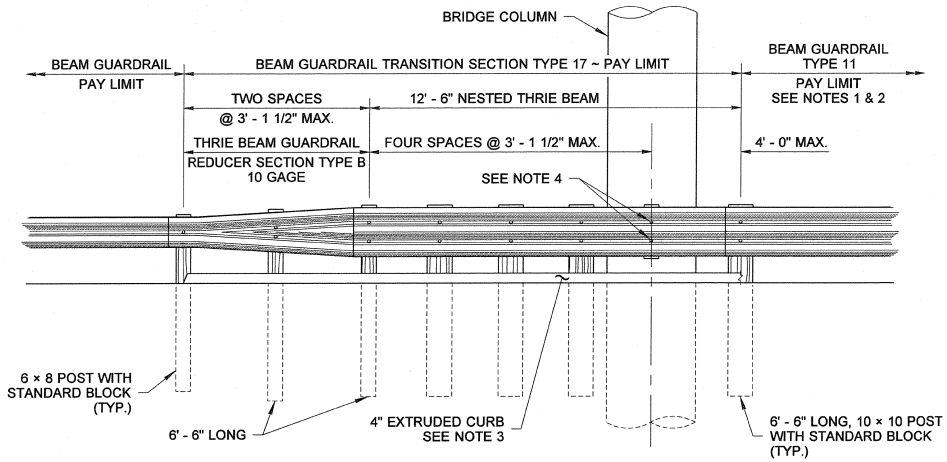

TYPE 17
TRAILING END

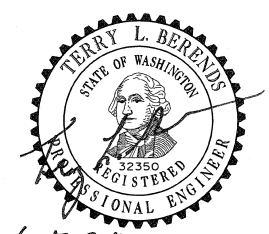

6-17-2011

BEAM GUARDRAIL TRANSITION SECTIONS

STANDARD PLAN C-3c

SHEET 1 OF 1 SHEET

APPROVED FOR PUBLICATION

STATE DESIGN ENGINEER — DATE 6/22/11

Washington State Department of Transportation

DRAWN BY: FERN LIDDELL

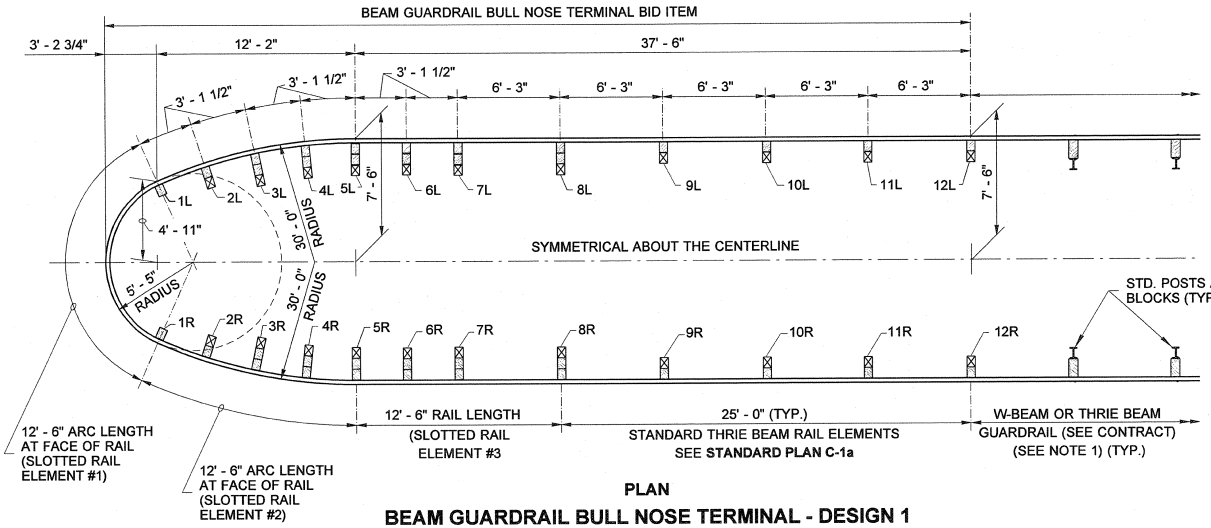

PLAN

BEAM GUARDRAIL BULL NOSE TERMINAL - DESIGN 1

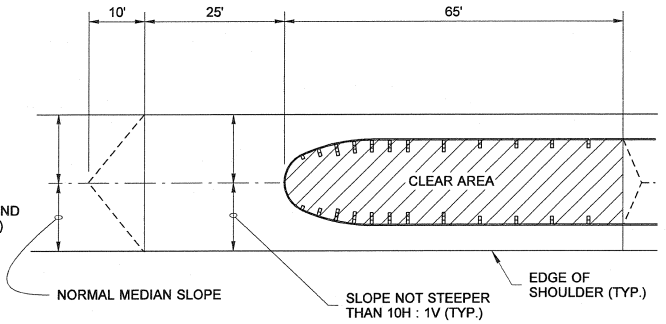

BULL NOSE GRADING PLAN

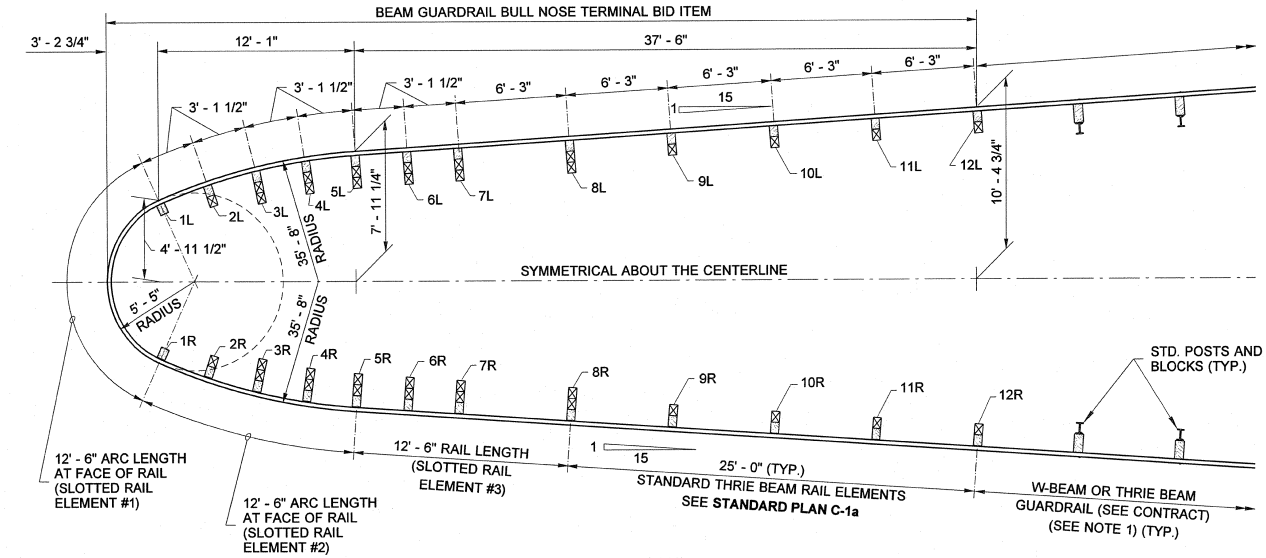

PLAN

BEAM GUARDRAIL BULL NOSE TERMINAL - DESIGN 2

NOTES

1. For W-Beam applications extend the rail from the bullnose terminal by using a "Reducer Element Type C" followed by a standard Post and Block, spaced at 3' - 1 1/2". Continue runs with standard 6' - 3" post spacing. For additional Details see **Standard Plans C-25.20. and C-28.40.**

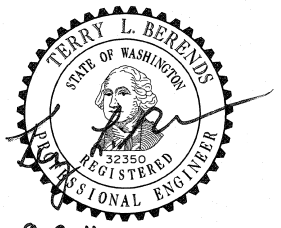

6-8-2011

BEAM GUARDRAIL BULL NOSE TERMINAL

STANDARD PLAN C-4f

SHEET 1 OF 4 SHEETS

APPROVED FOR PUBLICATION

STATE DESIGN ENGINEER — DATE 6/16/11

Washington State Department of Transportation

DRAWN BY: FERN LIDDELL

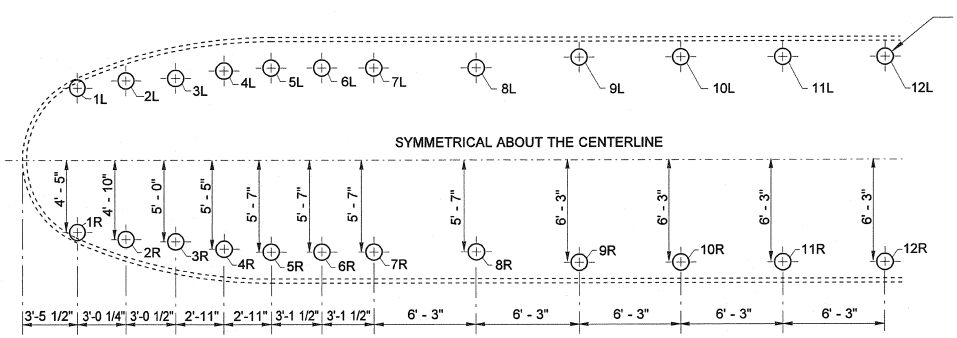

PLAN
GUARDRAIL POST LAYOUT - DESIGN 1

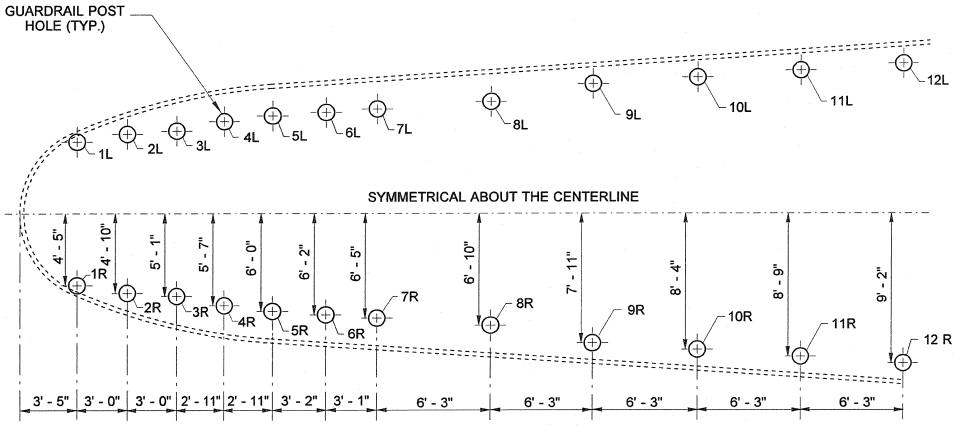

PLAN
GUARDRAIL POST LAYOUT - DESIGN 2

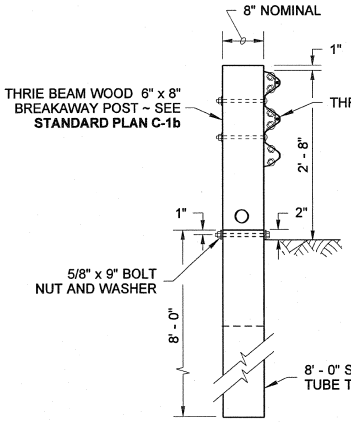

POST
1R & 1L

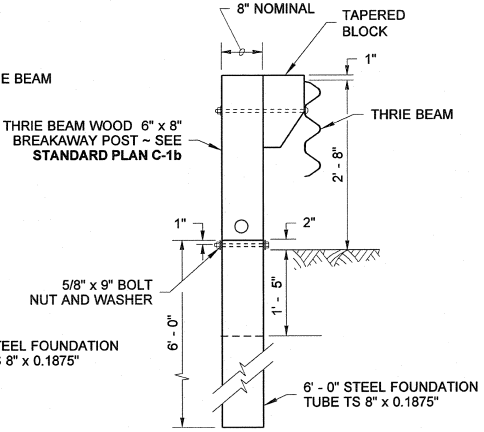

POST
2R & 2L

NOTE : CABLE BEARING PLATE NOT SHOWN

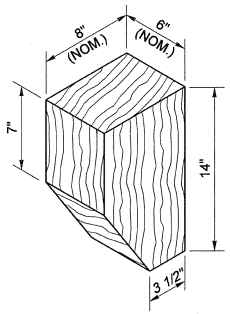

TAPERED BLOCK

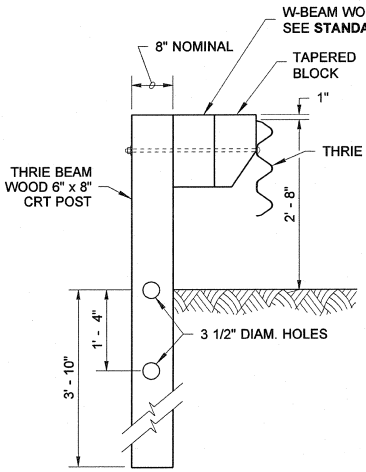

POST
3R TO 8R
3L TO 8L

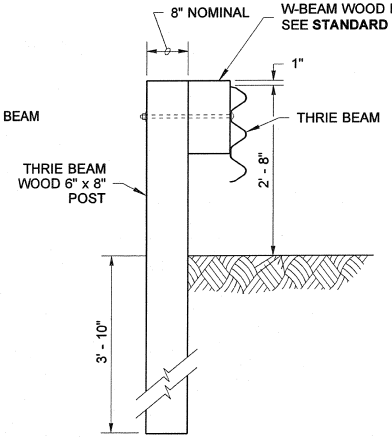

POST
9R TO 12R
9L TO 12L

6-8-2011

BEAM GUARDRAIL BULL NOSE TERMINAL

STANDARD PLAN C-4f

SHEET 2 OF 4 SHEETS

APPROVED FOR PUBLICATION

STATE DESIGN ENGINEER — DATE 6/16/11

Washington State Department of Transportation

DRAWN BY: FERN LIDDELL

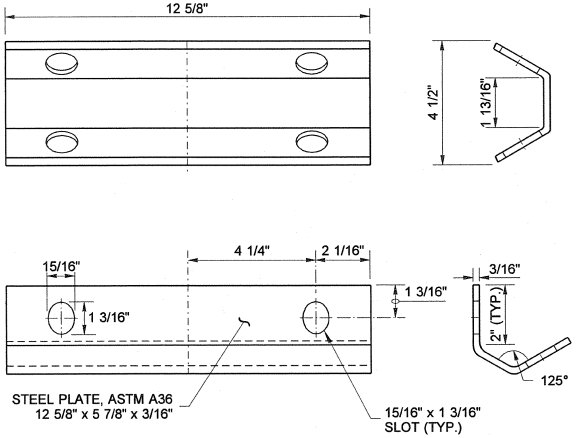

NOSE CABLE ANCHOR PLATE

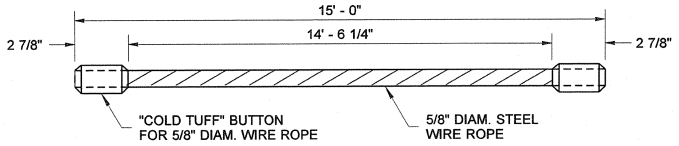

NOSE CABLE

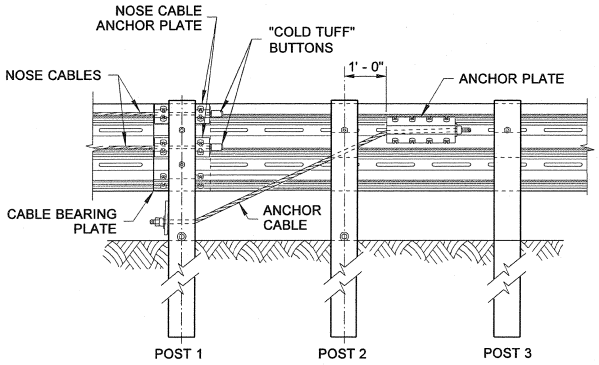

CABLE ANCHOR & BRACKET ASSEMBLY

FOR ANCHOR PLATE, CABLE END PLATE, AND ANCHOR CABLE ~ SEE **STANDARD PLAN C-6f**

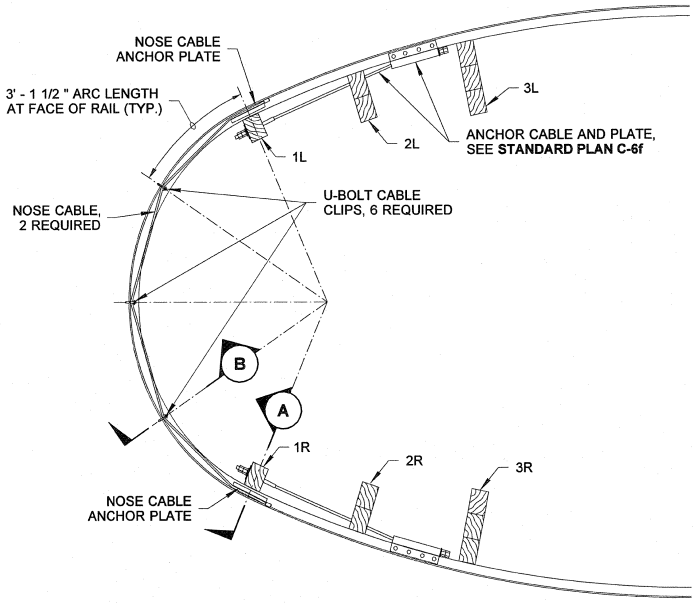

PLAN - THRIE BEAM NOSE

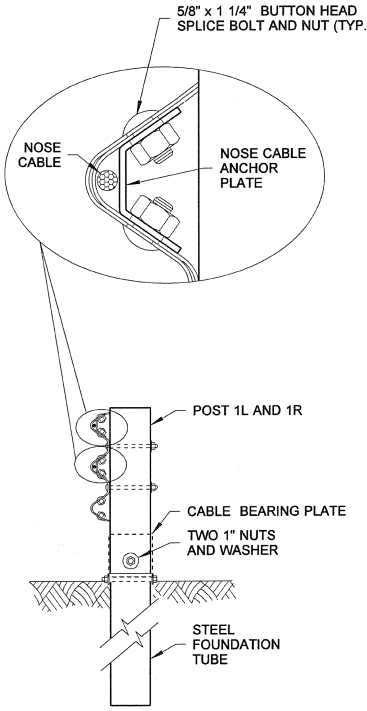

NOSE CABLE ASSEMBLY

SECTION (A)

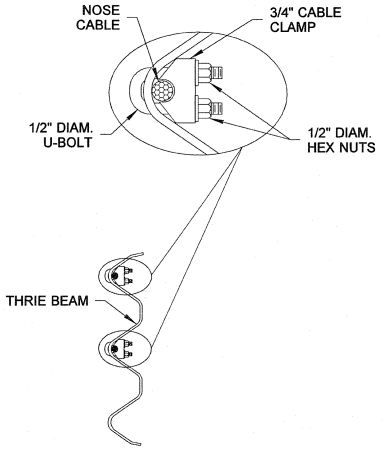

U-BOLT CABLE CLIP ASSEMBLY

SECTION (B)

6-8-2011

BEAM GUARDRAIL
BULL NOSE TERMINAL
STANDARD PLAN C-4f

SHEET 3 OF 4 SHEETS

APPROVED FOR PUBLICATION

STATE DESIGN ENGINEER — DATE 6/8/11

Washington State Department of Transportation

DRAWN BY: FERN LIDDELL

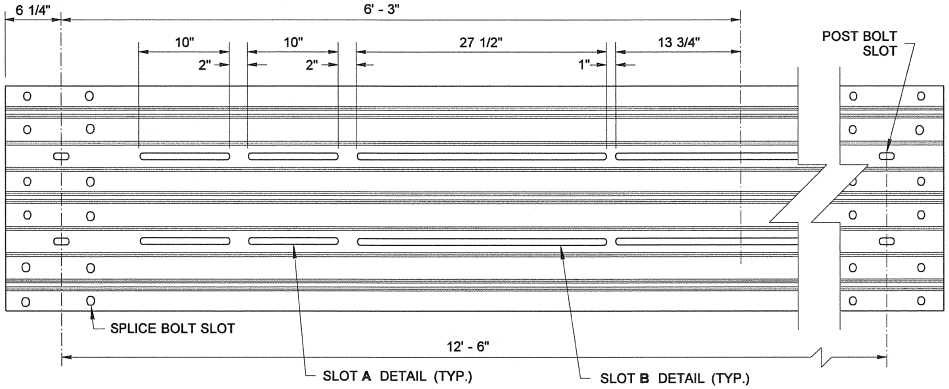

SLOTTED THRIE BEAM RAIL ELEMENT #1
SEE **STANDARD PLAN C-1a** FOR RAIL ELEMENT DETAILS
(RAIL DIMENSIONS SHOWN ARE BEFORE BENDING TO RADIUS SHOWN IN PLAN)

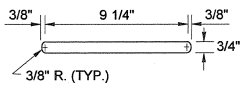

SLOT A DETAIL

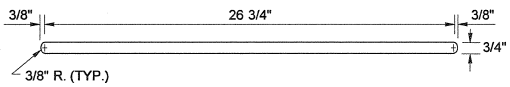

SLOT B DETAIL

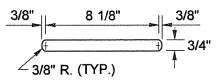

SLOT C DETAIL

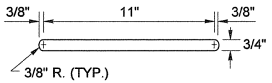

SLOT D DETAIL

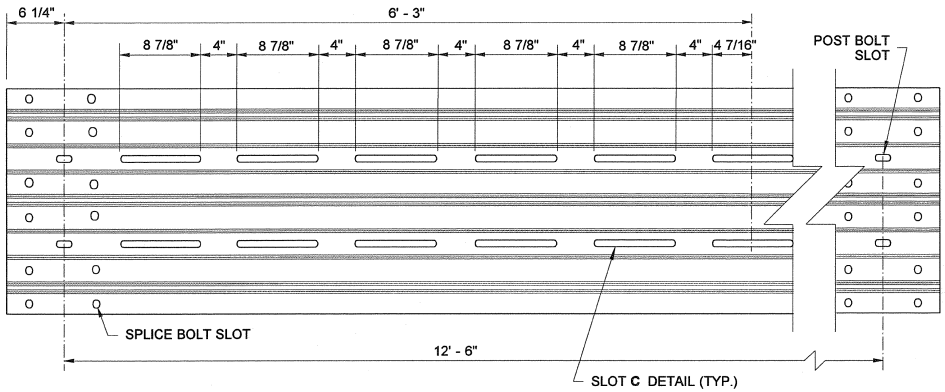

SLOTTED THRIE BEAM RAIL ELEMENT #2
SEE **STANDARD PLAN C-1a** FOR RAIL ELEMENT DETAILS
(RAIL DIMENSIONS SHOWN ARE BEFORE BENDING TO RADIUS SHOWN IN PLAN)

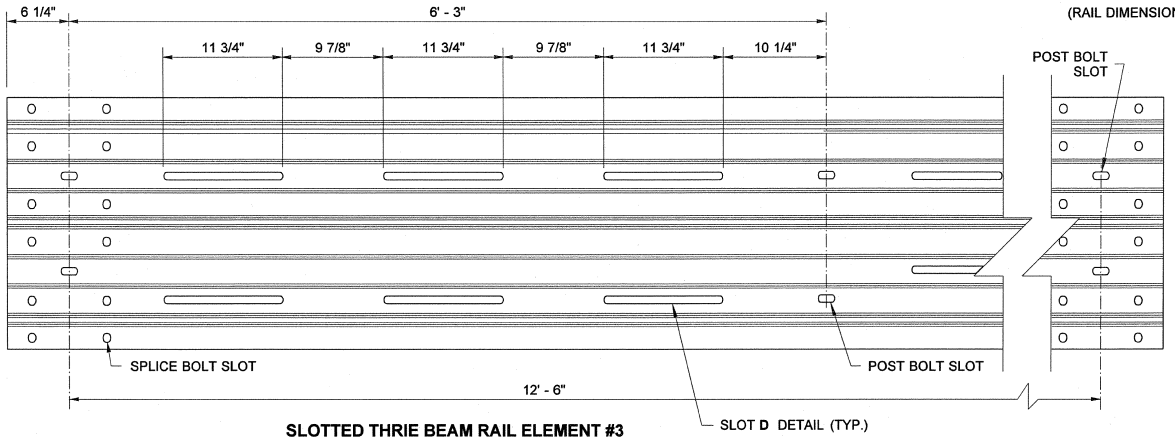

SLOTTED THRIE BEAM RAIL ELEMENT #3
SEE **STANDARD PLAN C-1a** FOR RAIL ELEMENT DETAILS

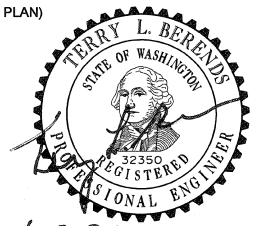

BEAM GUARDRAIL
BULL NOSE TERMINAL
STANDARD PLAN C-4f

SHEET 4 OF 4 SHEETS

APPROVED FOR PUBLICATION

STATE DESIGN ENGINEER — DATE 6/14/11

Washington State Department of Transportation

DRAWN BY: FERN LIDDELL

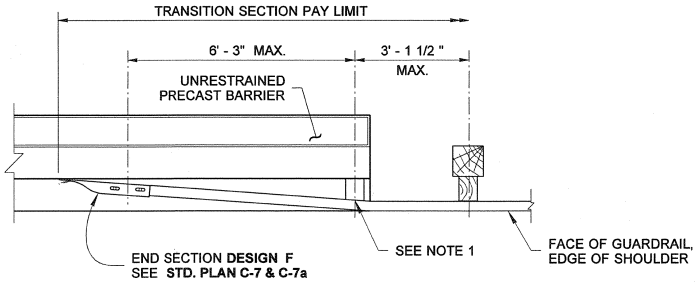

PLAN

A CONNECTION

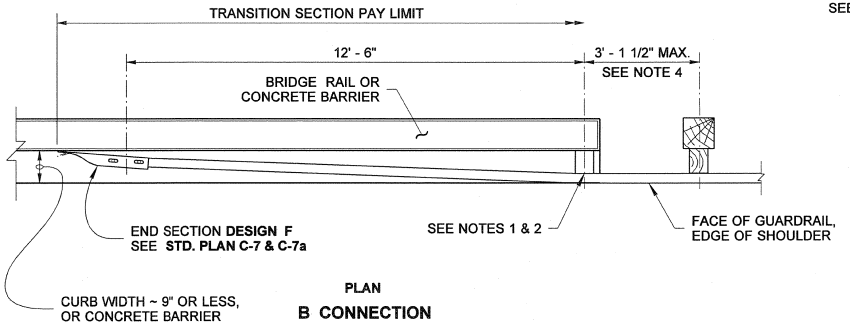

PLAN

B CONNECTION

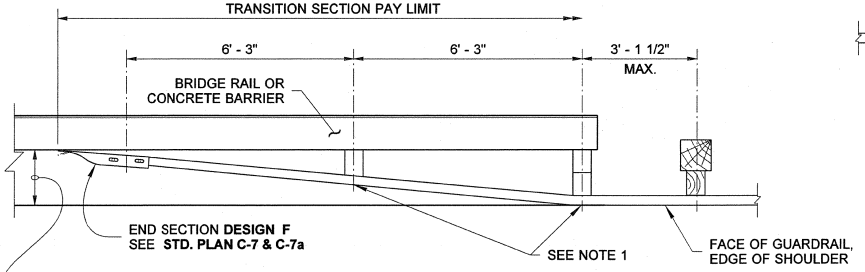

PLAN

C CONNECTION

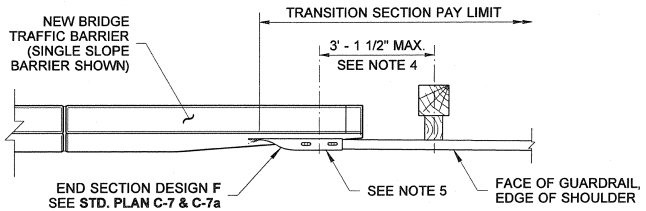

PLAN

D CONNECTION

(SEE NOTE 3)

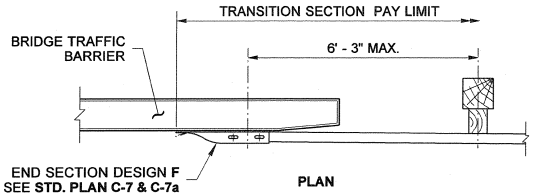

PLAN

E CONNECTION

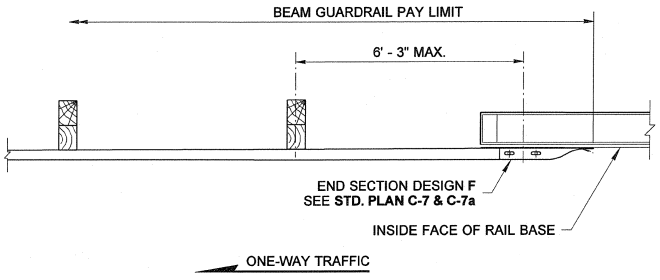

PLAN

F CONNECTION

NOTES

1. Attach guardrail to bridge rail or concrete barrier with 7/8" diameter bolts in accordance with **Standard Spec. 9-06.5(4),** with thin slab ferrule inserts or resin bonded anchors. See Contract Plans.
2. If the last guardrail post is 3" or less from the end of the bridge barrier, this attachment and blockout is not necessary.
3. This case is also applicable for F-shape and vertical faces with no curbs.
4. When B connection is used with Type 1A Transition, the maximum spacing between bolts is 6' - 3".
5. See bridge plans for additional connection details.

6-8-2011

BEAM GUARDRAIL TRANSITION SECTIONS

STANDARD PLAN C-5

SHEET 1 OF 1 SHEET

APPROVED FOR PUBLICATION

STATE DESIGN ENGINEER — DATE 6/16/11

Washington State Department of Transportation

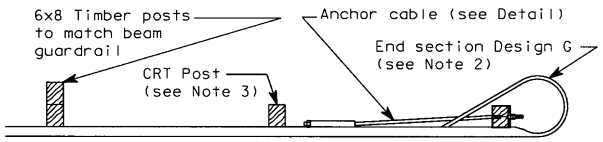

PLAN

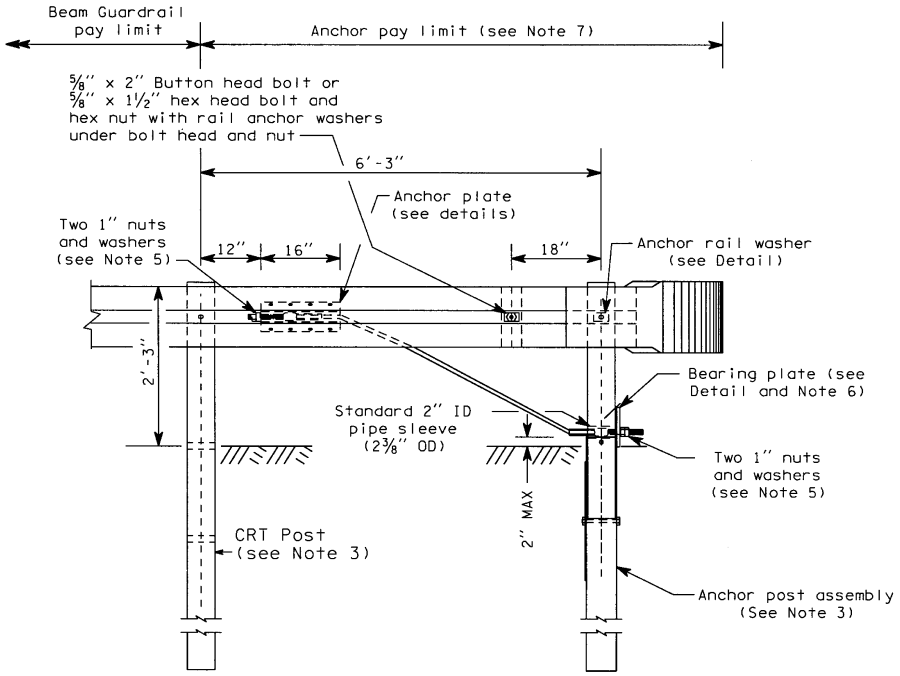

TYPE 1 ANCHOR

NOTES

1. Anchor plate may be constructed from 1/4" plates welded to equal strength and dimensions as shown.
2. For end section details see Standard Plan "Beam Guardrail End Sections".
3. For post details, see Standard Plan "Beam Guardrail Posts and Blocks".
4. Eight 5/8" x 1 1/2" machine bolts with hex nut and washer. Place washer on face side of rail.
5. Outside nut shall be torqued against inside nut a minimum of 100 ft-lbs.
6. Toenail bearing plate with 10d nail at corners to prevent turning.
7. Anchor pay limit does not apply when anchor is included in a Beam Guardrail Terminal.

BEAM GUARDRAIL ANCHOR TYPE 1

CLIFFORD E. MANSFIELD
STATE OF WASHINGTON
15224
REGISTERED
PROFESSIONAL ENGINEER
EXPIRES MAY 3, 1998

STANDARD PLAN C-6

APPROVED FOR PUBLICATION

STATE DESIGN ENGINEER — DATE 5/30/97

WASHINGTON STATE DEPARTMENT OF TRANSPORTATION
OLYMPIA, WASHINGTON

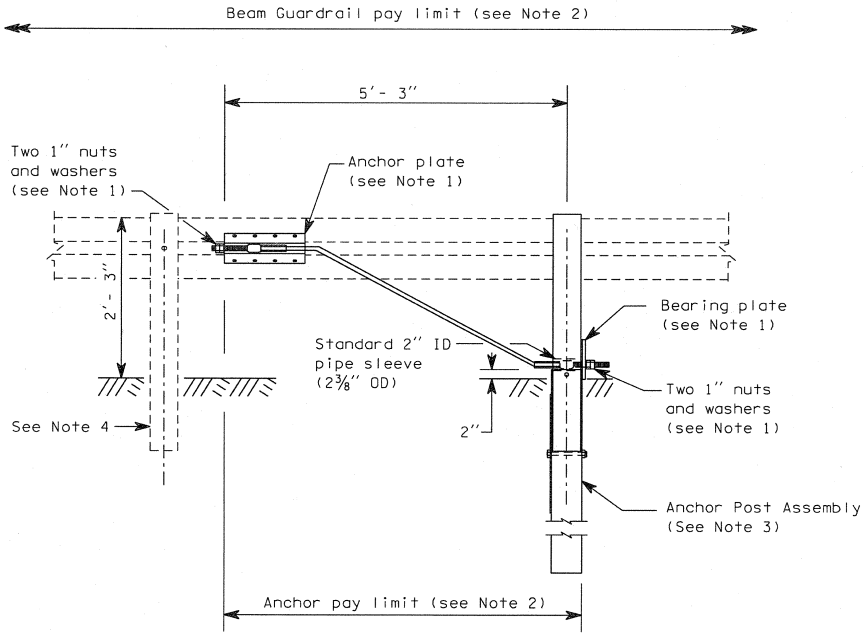

TYPE 7 ANCHOR

NOTES

1. For details, see Standard Plan, "Beam Guardrail Anchor Type 1".

2. The rail element is to be included in the "Beam Guardrail" pay item. The "Anchor" pay item includes the anchor post, anchor plate, anchor cable, bearing plate, nuts and washers.

3. For details, see Standard Plan, "Beam Guardrail Posts and Blocks".

4. Post shall match beam guardrail posts.

BEAM GUARDRAIL ANCHOR TYPE 7

CLIFFORD E. MANSFIELD
STATE OF WASHINGTON
15224
REGISTERED
PROFESSIONAL ENGINEER
EXPIRES MAY 3, 1998

STANDARD PLAN C-6f

APPROVED FOR PUBLICATION

STATE DESIGN ENGINEER — DATE 7/25/97

WASHINGTON STATE DEPARTMENT OF TRANSPORTATION
OLYMPIA, WASHINGTON

DRAWN BY: FERN LIDDELL

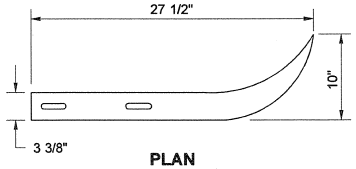

PLAN

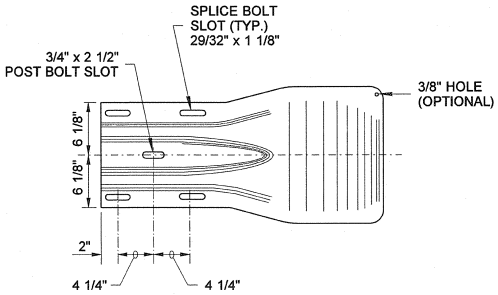

ELEVATION

DESIGN A

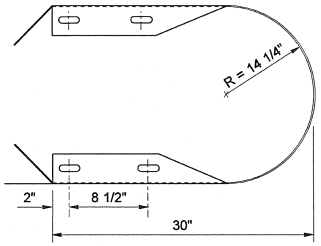

PLAN

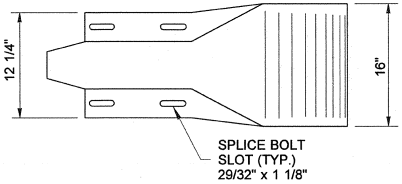

ELEVATION

DESIGN D

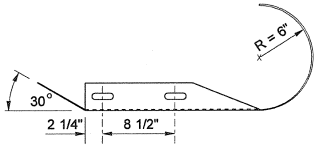

PLAN

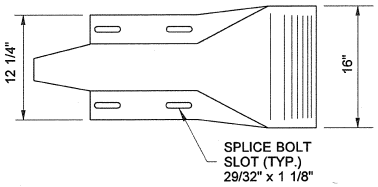

ELEVATION

DESIGN C

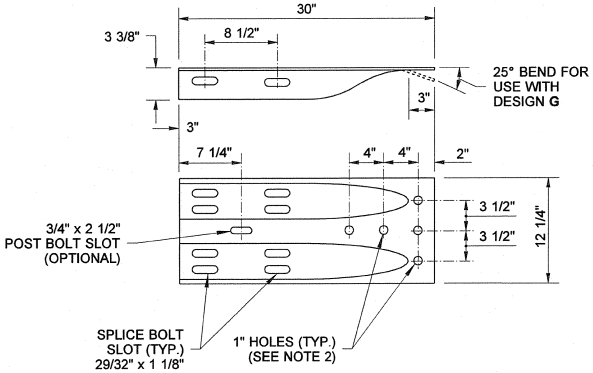

ELEVATION

DESIGN F

(SEE NOTE 4)

NOTES

1. End Section Design G shall be used except where noted on the plans or contract.
2. Attach guardrail to bridge rail or concrete barrier with 7/8" diameter bolts (five minimum) **Standard Spec. 9-06.5(4),** with thin slab ferrule inserts or resin bonded anchors. See the Contract Plans.
3. A single piece having similar dimensional shape to Design G and mating with the W-beam guardrail is an alternate.
4. In cases where Design "F" end section is lapped on the outside of the guardrail, a galvanized 1" ID, 2" OD, 0.134" thick, narrow Type A Plain Washer or a anchor rail washer shall be placed under the splice bolt heads.

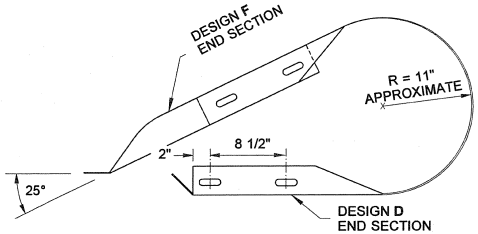

PLAN

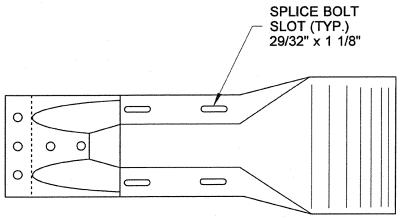

ELEVATION

DESIGN G

(SEE NOTE 3)

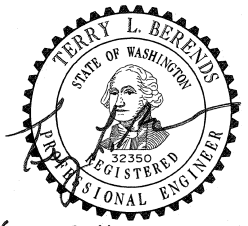

6-8-2011

BEAM GUARDRAIL END SECTIONS

STANDARD PLAN C-7

SHEET 1 OF 1 SHEET

APPROVED FOR PUBLICATION

STATE DESIGN ENGINEER — DATE 6/16/11

Washington State Department of Transportation

DRAWN BY: FERN LIDDELL

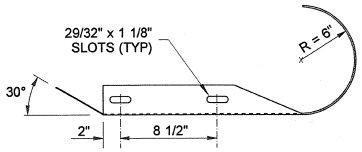

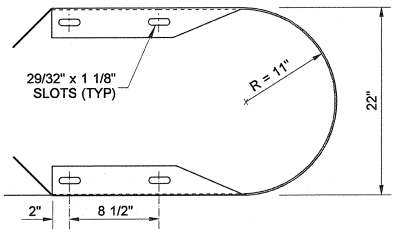

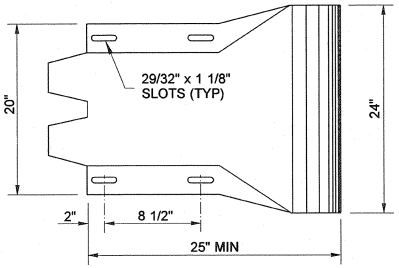

DESIGN C (THRIE BEAM)

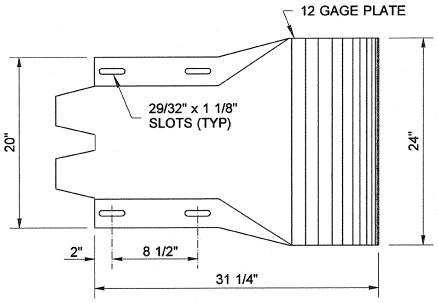

DESIGN D (THRIE BEAM)

NOTES

1. Attach guardrail to bridge rail or concrete barrier with 7/8" diameter bolts (five minimum) **Standard Spec. 9-06.5(4),** with thin slab ferrule inserts or resin bonded anchors. See the Contract Plans.

2. In cases where Design F End Section is lapped on the outside of the guardrail, a galvanized 1" ID, 2" OD, 0.134" thick, narrow Type A Plain Washer or an anchor rail washer will be placed under the splice bolt heads.

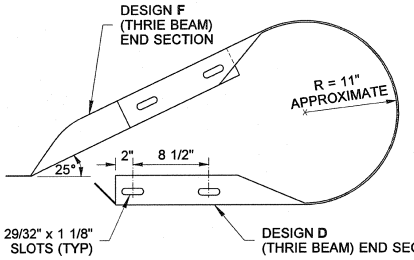

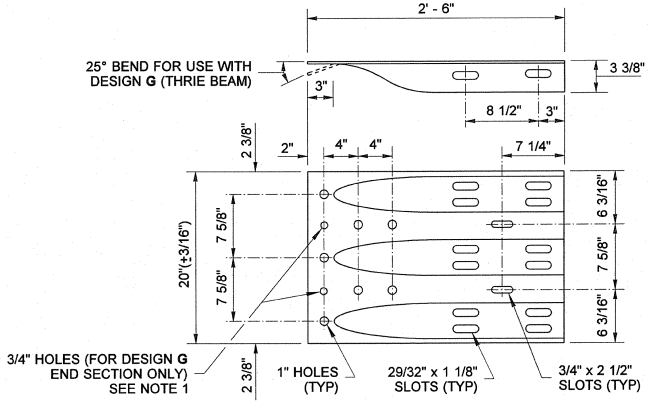

DESIGN F (THRIE BEAM)

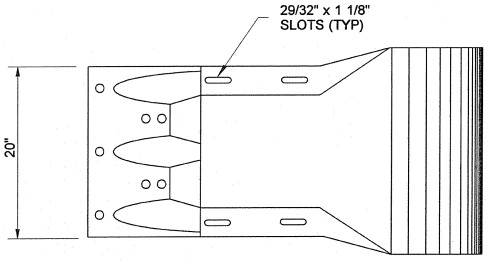

DESIGN G (THRIE BEAM)

6-8-2011

THRIE BEAM END SECTIONS

STANDARD PLAN C-7a

SHEET 1 OF 1 SHEET

APPROVED FOR PUBLICATION

STATE DESIGN ENGINEER — DATE 6/16/11

Washington State Department of Transportation

DRAWN BY: MARK SUJKA

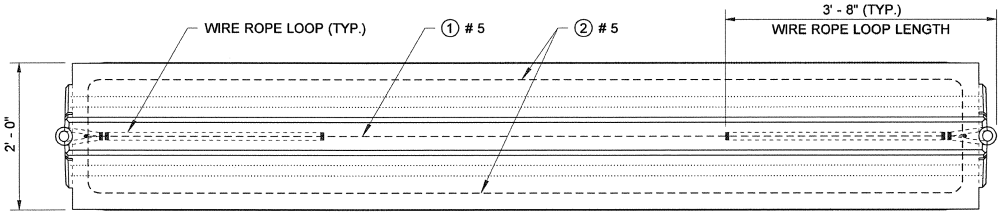

TOP VIEW

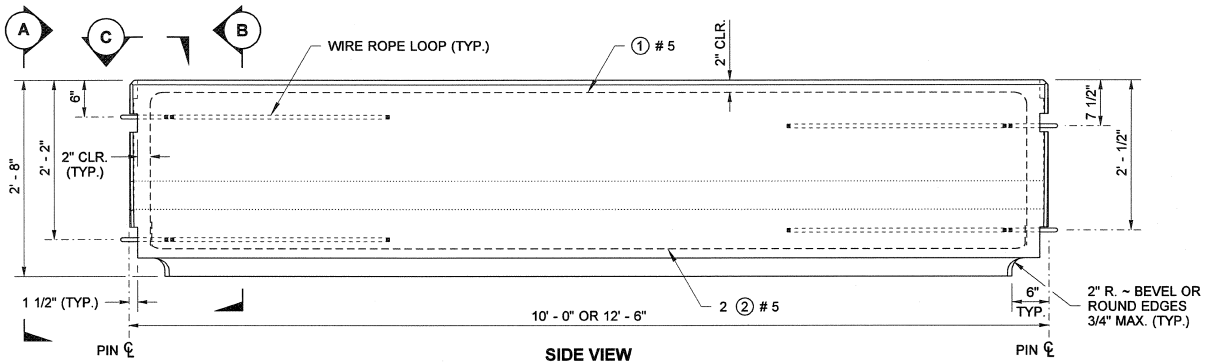

SIDE VIEW

BARRIER SECTION

NOTES

1. Wire rope loops shall be 3' - 8" long, except for the top loop of the Barrier Terminal, which shall be 2' - 0" long.
2. Except for the locations of the wire rope loops, the dimensions shown in END VIEW "A" are typical for both ends of a Barrier Section or opposing ends of Barrier Terminals.
3. Connecting and Drift Pin head designs vary among different manufacturers. Pin designs that are shaped differently than those shown in the detail are acceptable, if the bearing surface is within the minimum and maximum widths specified.
4. The vertical spacing of the Wire Rope Loops in a Barrier Terminal is determined by the end of the Barrier Segment to which it is being connected. See BARRIER CONNECTION DETAIL (Sheet 2).

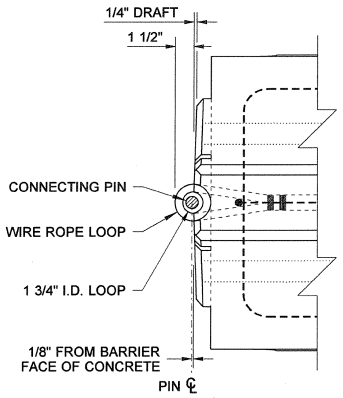

DETAIL C

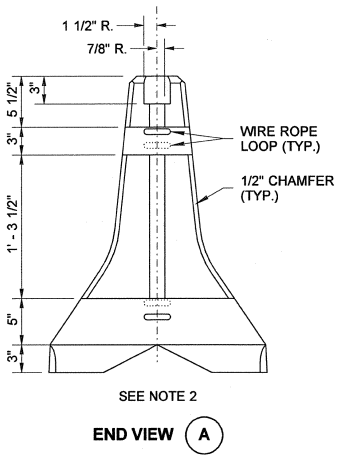

END VIEW (A)

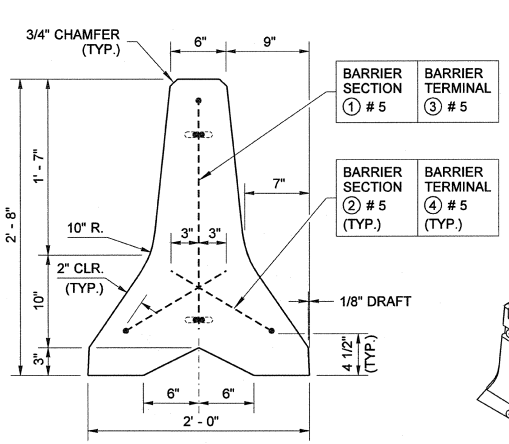

SECTION (B)

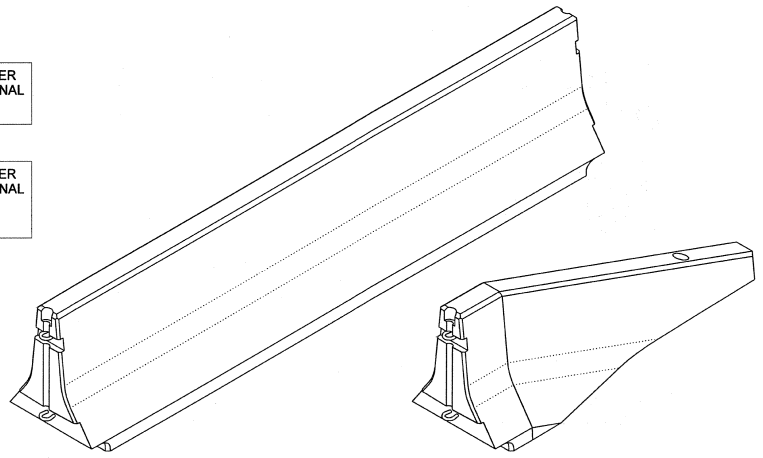

BARRIER SECTION **BARRIER TERMINAL**

ISOMETRIC VIEWS

CONCRETE BARRIER TYPE 2

STANDARD PLAN C-8

SHEET 1 OF 2 SHEETS

APPROVED FOR PUBLICATION

STATE DESIGN ENGINEER — DATE 2/10/09

Washington State Department of Transportation

DRAWN BY: LISA CYFORD

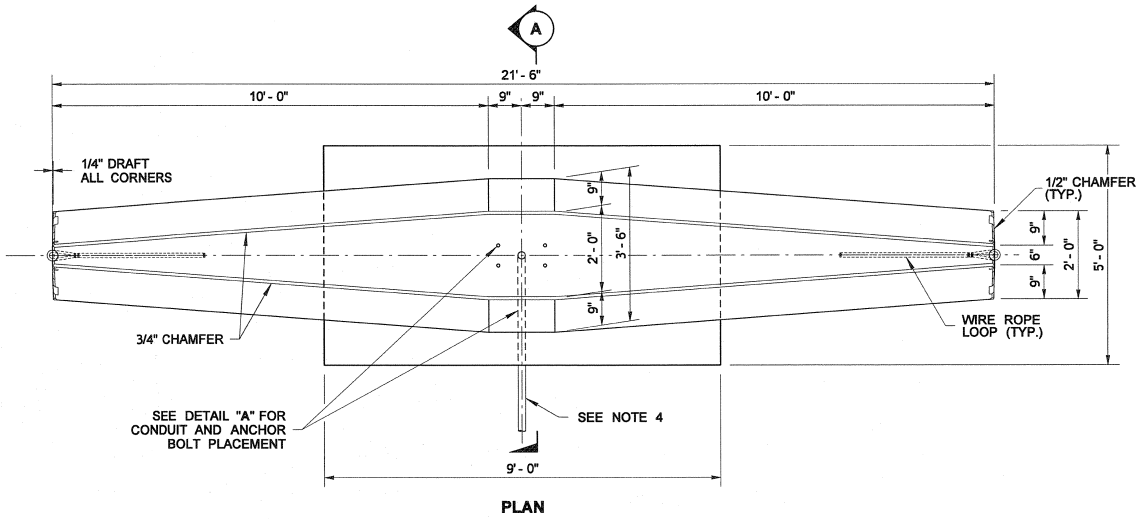

PLAN

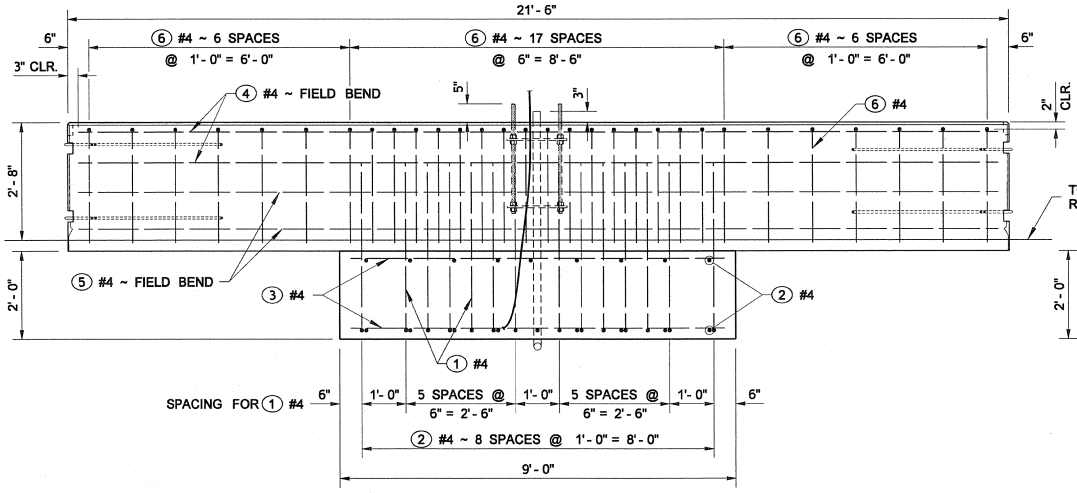

ELEVATION

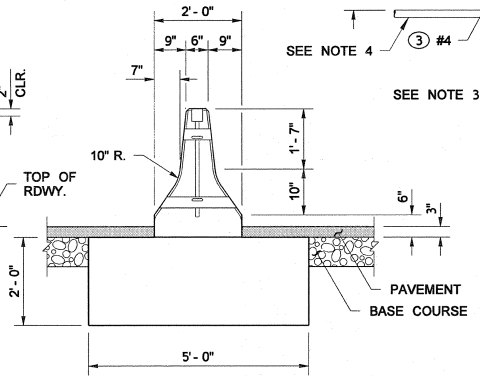

END

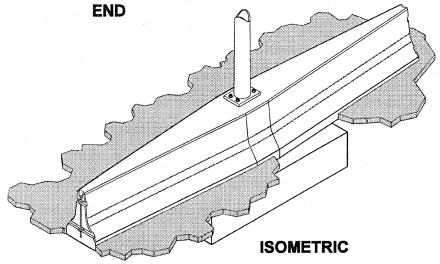

ISOMETRIC

NOTES

1. This plan shall be used for 40' and 50' Light Standards with 16' max. length double mast arms.
2. See **Standard Plan C-8** for details on barrier ends, Wire Rope Loops, and Connecting Pins.
3. Grounding Conductor shall be non-insulated #4 AWG stranded copper, provide 3' - 0" min. slack. Clamp steel reinforcing bar with connnector suitable for use embedded in concrete.
4. See the Contract Plans for conduit placement.
5. Concrete shall be Class 4000.

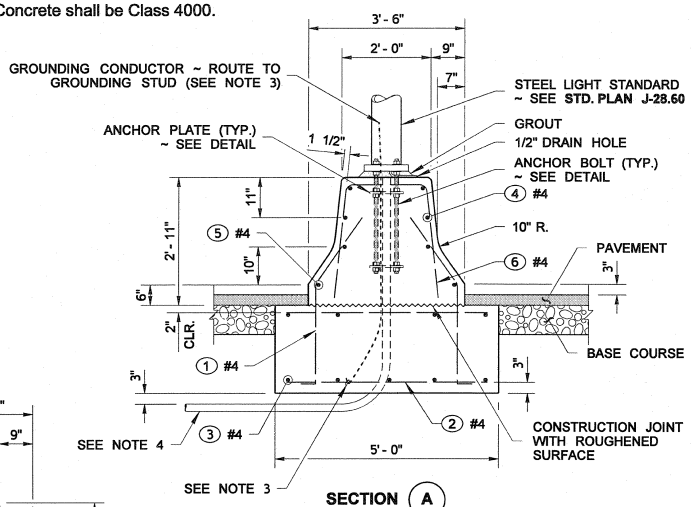

SECTION (A)

CONCRETE BARRIER LIGHT STANDARD SECTION

STANDARD PLAN C-8b

SHEET 1 OF 2 SHEETS

APPROVED FOR PUBLICATION

Paco Bandstra 6/22/11

STATE DESIGN ENGINEER — DATE

Washington State Department of Transportation

DRAWN BY: LISA CYFORD

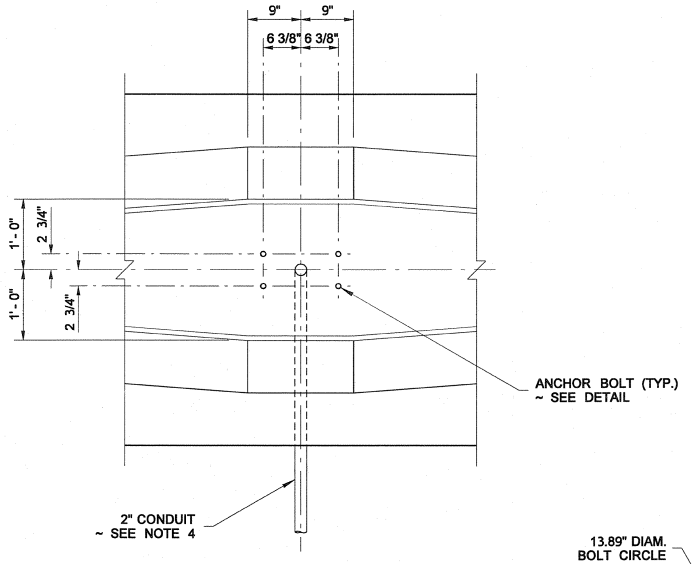

DETAIL "A"

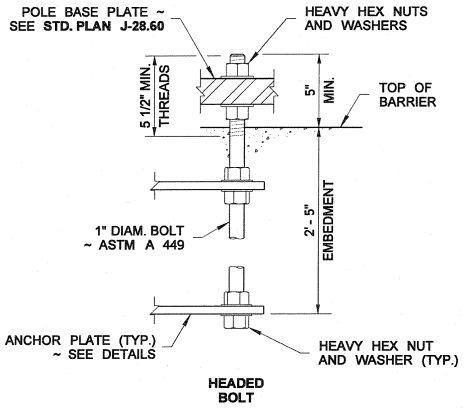

HEADED BOLT

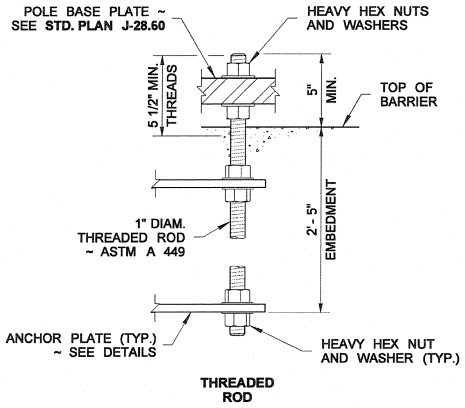

THREADED ROD

ANCHOR BOLT DETAIL

GALVANIZE EXPOSED ANCHOR ROD END 1'- 0" MIN.

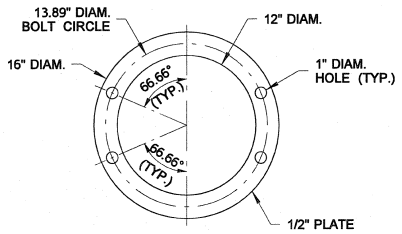

ANCHOR PLATE

BAR LIST				
MARK	LOCATION	QTY.	SIZE	LENGTH
①	FOOTING - DOWEL	28	#4	4'- 3"
②	FOOTING	18		4'- 8"
③	FOOTING	9		8'- 8"
④	BARRIER	4		21'- 0"
⑤	BARRIER	4		21'- 0"
⑥	BARRIER	30		5'- 3" TO 6'- 9"

BENDING DIAGRAM

(ALL DIMENSIONS ARE OUT TO OUT)

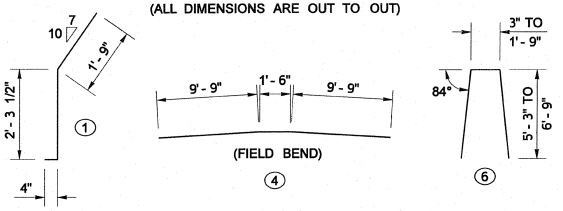

CONCRETE BARRIER LIGHT STANDARD SECTION

STANDARD PLAN C-8b

SHEET 2 OF 2 SHEETS

APPROVED FOR PUBLICATION

Paco Bakht III 6/27/11

STATE DESIGN ENGINEER — DATE

Washington State Department of Transportation

DRAWN BY: FERN LIDDELL

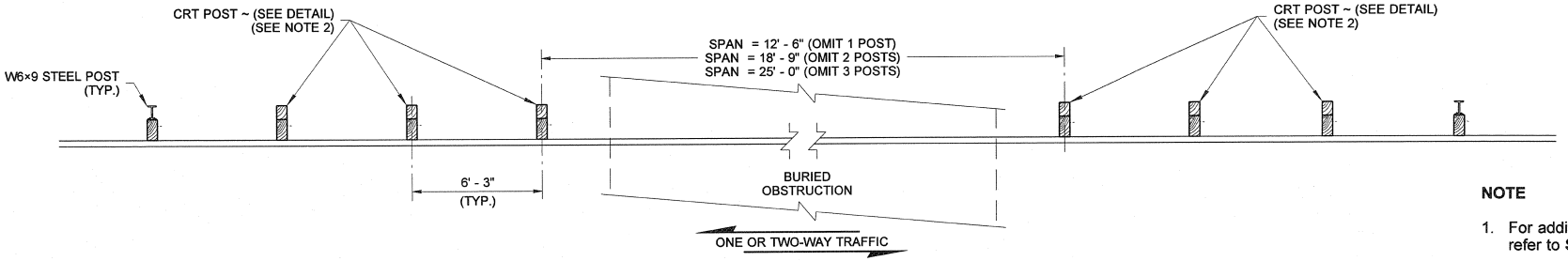

PLAN VIEW

NOTE

1. For additional details not shown on this plan, refer to **Standard Plan C-28.40.**
2. CRT post to be wood only.

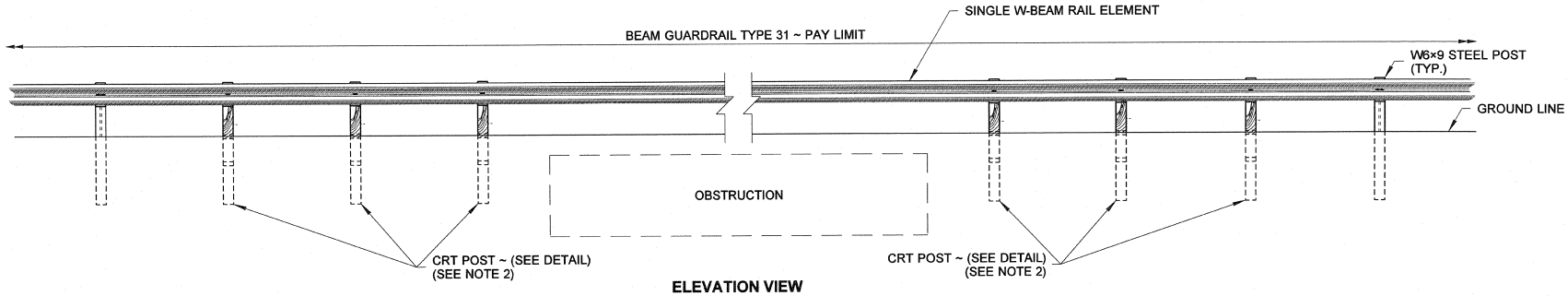

ELEVATION VIEW

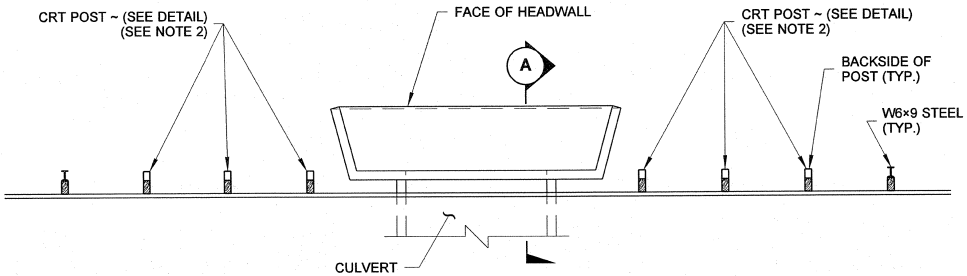

SPAN WITH HEADWALL DETAIL

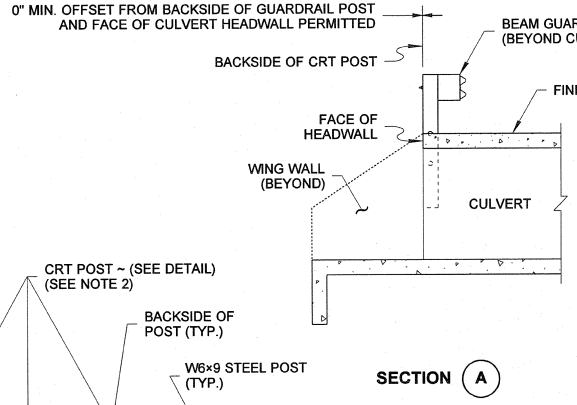

SECTION (A)

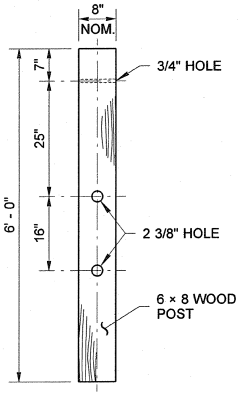

CONTROLLED RELEASING TERMINAL (CRT) POST DETAIL

6-8-2011

BEAM GUARDRAIL TYPE 31 PLACEMENT 12' - 6", 18' - 9" OR 25' - 0" SPAN STANDARD PLAN C-20.40-02

SHEET 1 OF 1 SHEET

APPROVED FOR PUBLICATION

STATE DESIGN ENGINEER — DATE 6/16/11

Washington State Department of Transportation

DRAWN BY: FERN LIDDELL

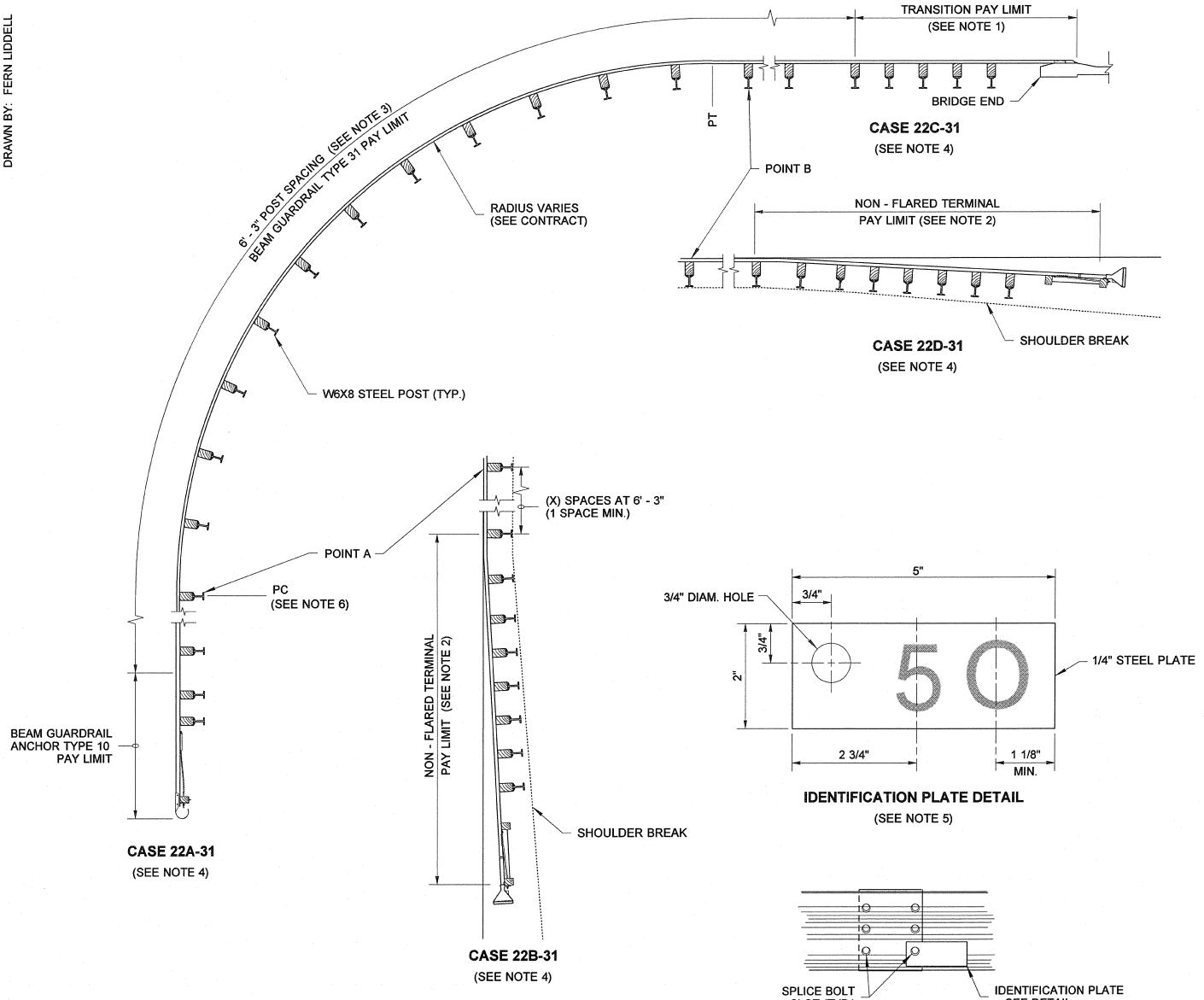

IDENTIFICATION PLATE DETAIL
(SEE NOTE 5)

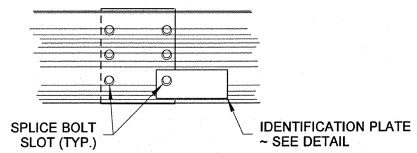

IDENTIFICATION PLATE MOUNTING DETAIL
(SEE NOTE 6)

NOTES

1. See Contract for transition and connection type.
2. For additional installation requirements for Non-Flared Terminal placement see **Standard Plan C-22.40.**
3. Guardrail installation shall be Beam Guardrail Type 31 with standard post and block. See **Standard Plan 28.40** for additional details.
4. The first letter of case designation indicates the end treatment on the side road. The second letter indicates the end treatment on the main road. For instance, a terminal on a side road and a bridge connection on the main road would be Case 22BC-31.
5. The radius dimension shall be etched into the plate as shown in the example on the Identification Plate Detail. Numerals shall be 1 1/2" high minimum, and 3/4" wide maximum. Plate shall be galvanized after etching and the letter shall remain permanently legible.
6. The guardrail Identification Plate shall be mounted at the lower splice bolt on the back side of the rail element at the PC of the guardrail radius.

6-8-2011

GUARDRAIL PLACEMENT
STRONG POST ~ TYPE 31
INTERSECTION DESIGN
STANDARD PLAN C-20.42-02

SHEET 1 OF 1 SHEET

APPROVED FOR PUBLICATION

STATE DESIGN ENGINEER — DATE 6/16/11

Washington State Department of Transportation

DRAWN BY: LISA CYFORD

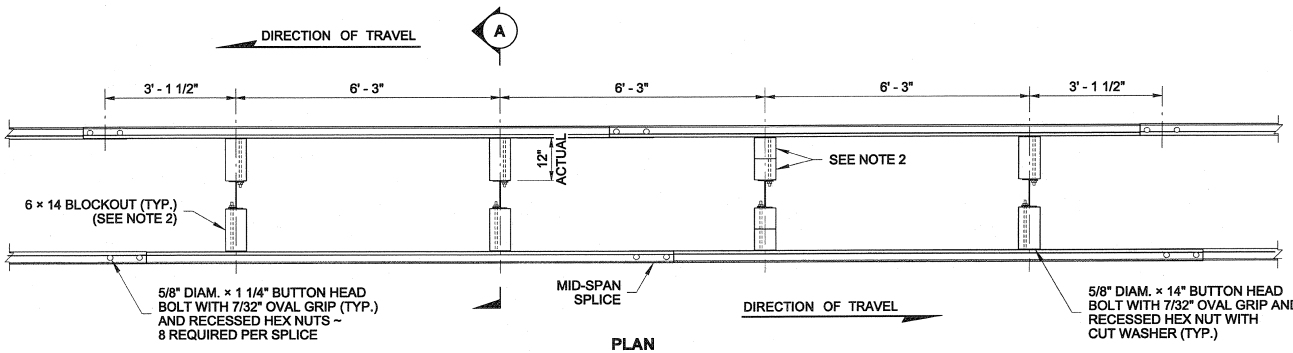

PLAN

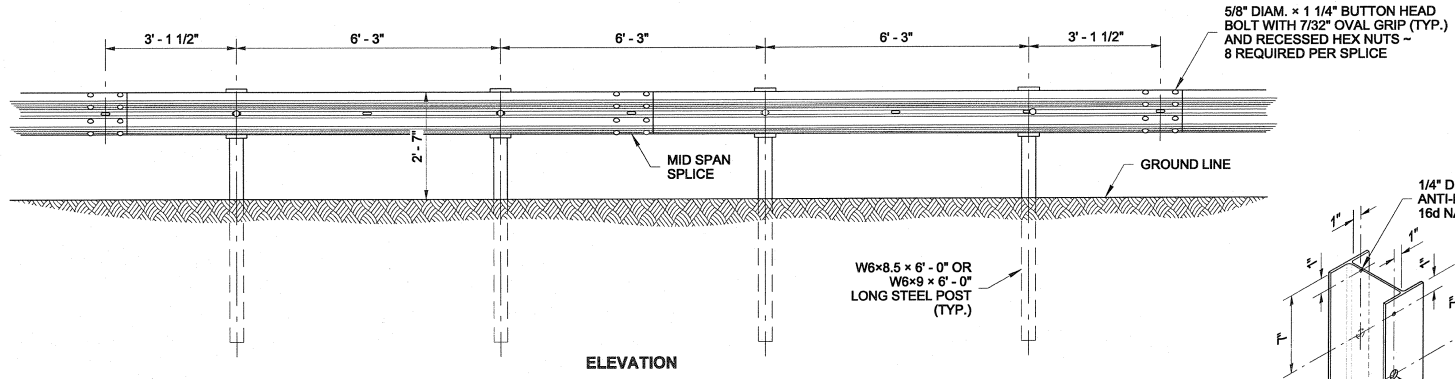

ELEVATION

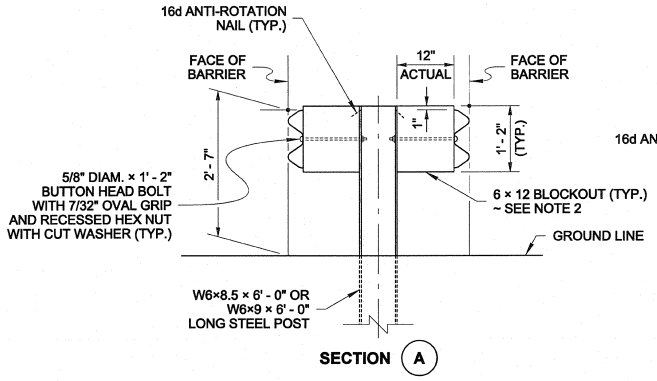

SECTION (A)

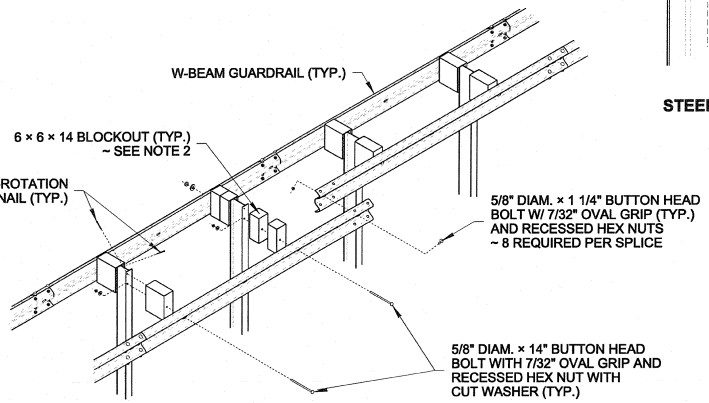

ISOMETRIC

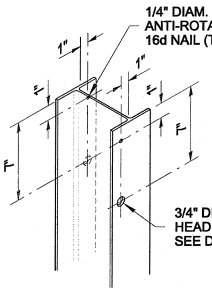

STEEL POST

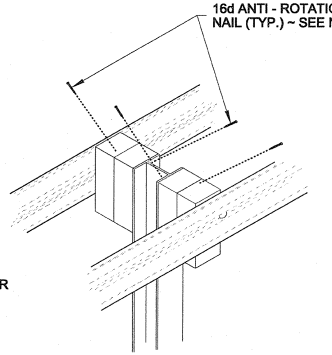

ANTI-ROTATION NAIL DETAIL

NOTES

1. Beam Guardrail post spacing shall be 6' - 3" on centers.
2. Use a single or combination of blocks to achieve the actual 12" offset. See **Standard Specification 9-16.3(2)**. Wood blocks shall be toe-nailed to post (and blocks, if block combinations are used) with 16d galvanized nails to prevent block rotation.
3. Attach blockouts to steel posts using bolt holes on approaching traffic side of post web.
4. For details not shown, see **Standard Plan C-28.40.**
5. Wood blocks shown. Blocks of alternate material may be used. See **Standard Specification 9-16.3(2).**

6-8-2011

BEAM GUARDRAIL TYPE 31 DS (DOUBLE SIDED) (W-BEAM)

STANDARD PLAN C-20.45-00

SHEET 1 OF 1 SHEET

APPROVED FOR PUBLICATION

STATE DESIGN ENGINEER — DATE 6/16/11

Washington State Department of Transportation

This page left blank intentionally.

DRAWN BY: LISA CYFORD

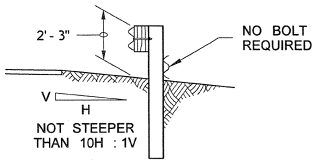

SECTION (A)

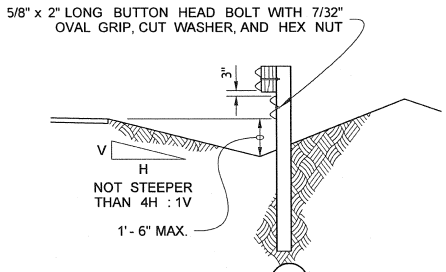

SECTION (B)

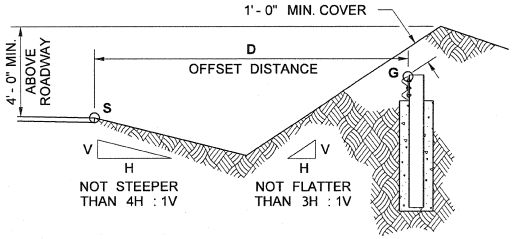

SECTION (C)

SEE NOTE 3

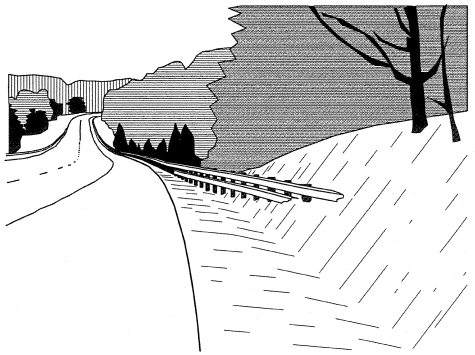

PERSPECTIVE

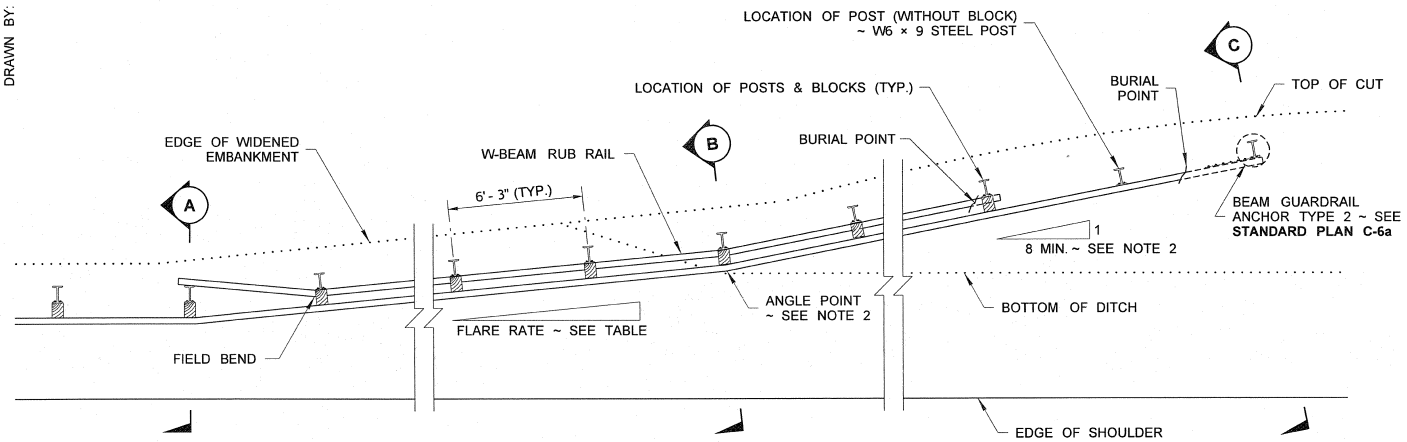

PLAN

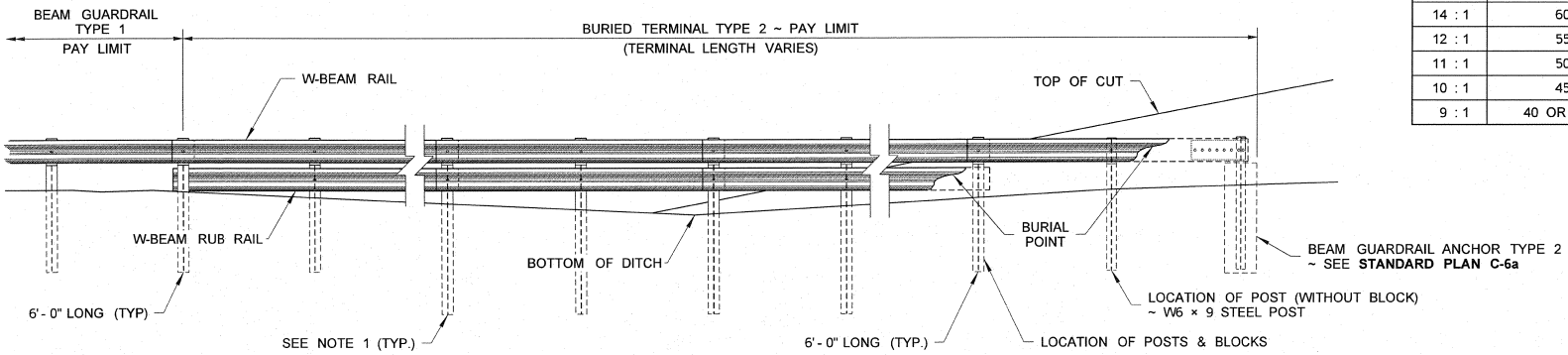

ELEVATION
(PROFILE ALONG RAIL)

NOTES

1. Posts installed on shoulder slopes steeper than 10H : 1V shall be 8' long.
2. The flare rate of the guardrail may be increased after crossing the ditch bottom to shorten the length of the terminal.
3. Determine the height of the W-Beam at the Anchor (**G**) by first calculating the perpendicular offset distance (**D**) from the edge of shoulder (**S**) to the Anchor (on station). Multiply that distance by 0.1, then subtract the product from the elevation of the same point (**S**) on the edge of shoulder used to obtain the offset distance (at the same station). Add Beam Guardrail design height (27") to that remainder for a sum that equals the elevation of the top of the W-Beam at the Anchor.

   Refer to SECTION "C":

   $$\text{Elevation}_{G} = (\text{Elevation}_{S} - D\ (0.1)) + 27$$

FLARE RATE TABLE	
RATE	**POSTED SPEED** (mph)
15 : 1	70
14 : 1	60
12 : 1	55
11 : 1	50
10 : 1	45
9 : 1	40 OR LESS

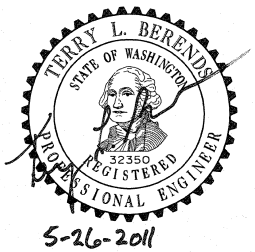

BEAM GUARDRAIL TYPE 1 BURIED TERMINAL TYPE 2

STANDARD PLAN C-22.14-02

SHEET 1 OF 1 SHEET

APPROVED FOR PUBLICATION

STATE DESIGN ENGINEER — DATE 6/16/11

Washington State Department of Transportation

DRAWN BY: LISA CYFORD

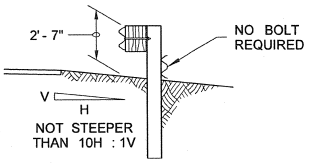

SECTION (A)

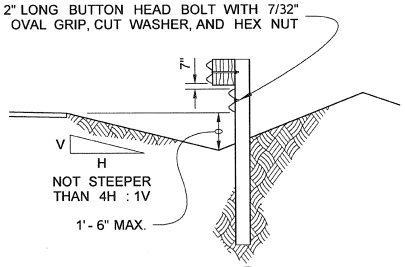

SECTION (B)

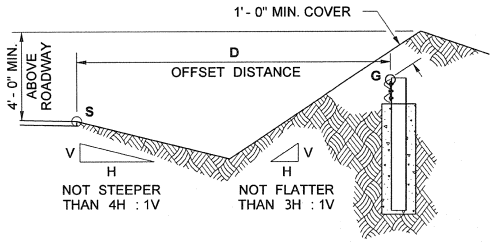

SECTION (C)

SEE NOTE 3

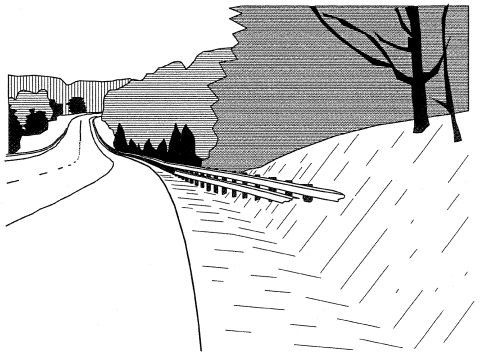

PERSPECTIVE

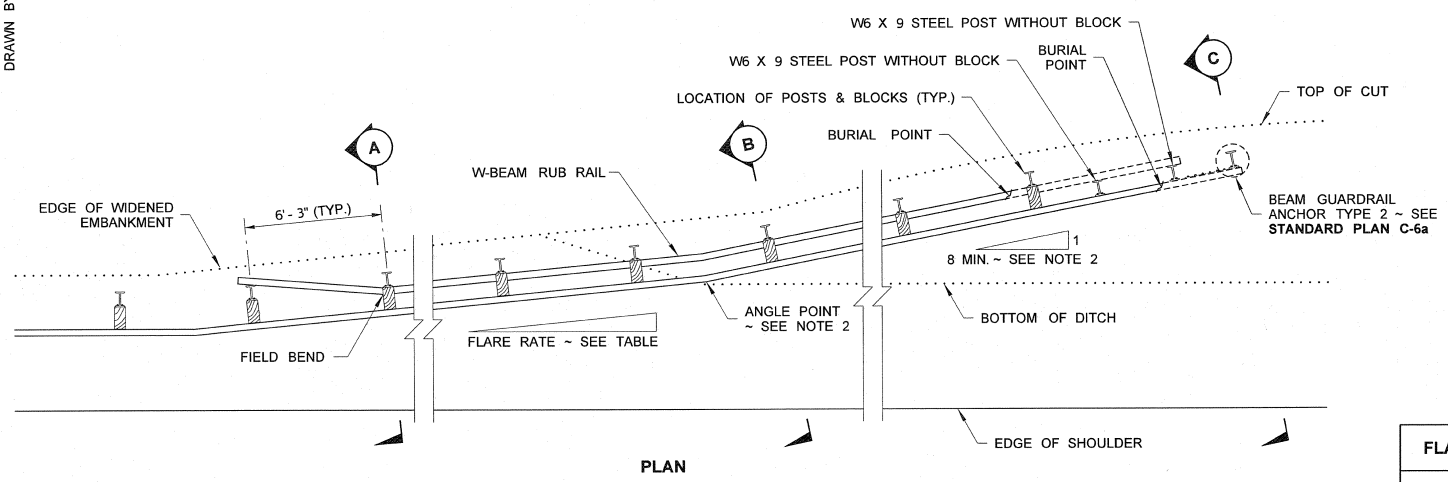

PLAN

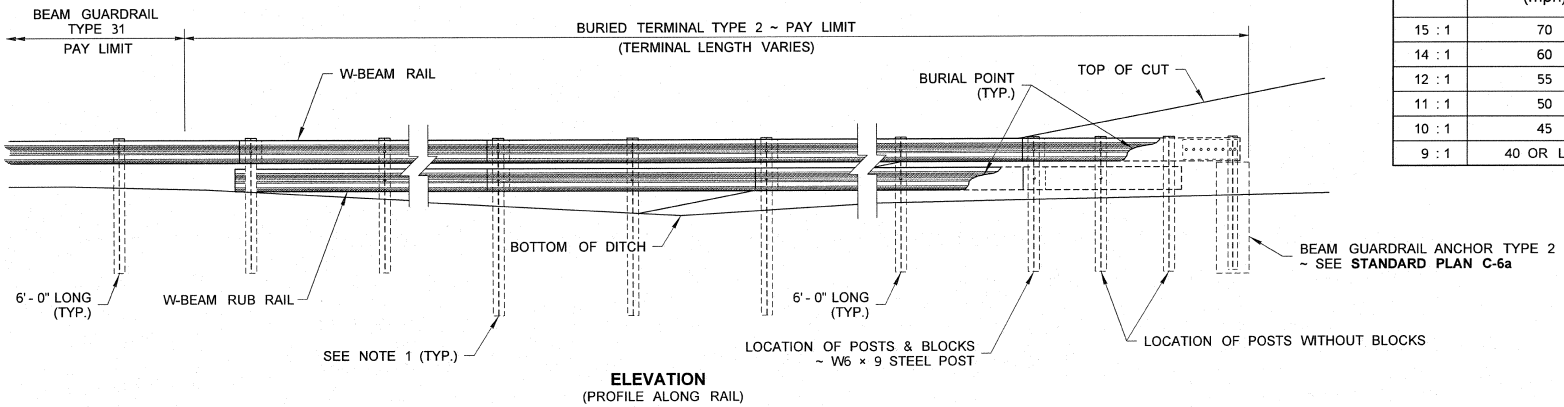

ELEVATION
(PROFILE ALONG RAIL)

NOTES

1. Posts installed on shoulder slopes steeper than 10H : 1V shall be 8' long.
2. The flare rate of the guardrail may be increased after crossing the ditch bottom to shorten the length of the terminal.
3. Determine the height of the W-Beam at the Anchor (**G**) by first calculating the perpendicular offset distance (**D**) from the edge of shoulder (**S**) to the Anchor (on station). Multiply that distance by 0.1, then subtract the product from the elevation of the same point (**S**) on the edge of shoulder used to obtain the offset distance (at the same station). Add Beam Guardrail design height (31") to that remainder for a sum that equals the elevation of the top of the W-Beam at the Anchor.

   Refer to SECTION "C":

   $$\text{Elevation}_{G} = (\text{Elevation}_{S} - (0.1)) + 27$$

FLARE RATE TABLE	
RATE	**POSTED SPEED** (mph)
15 : 1	70
14 : 1	60
12 : 1	55
11 : 1	50
10 : 1	45
9 : 1	40 OR LESS

5-26-2011

BEAM GUARDRAIL TYPE 31 BURIED TERMINAL TYPE 2

STANDARD PLAN C-22.16-02

SHEET 1 OF 1 SHEET

APPROVED FOR PUBLICATION

STATE DESIGN ENGINEER — DATE 6/16/11

Washington State Department of Transportation

DRAWN BY: LISA CYFORD

NOTES

1. These terminals are FHWA accepted at Test Level Three (TL-3) and may be used for all posted speeds.
2. An ET-31 (Steel) as manufactured by Trinity Industries, Inc. or an SKT-SP-MGS as manufactured by Road Systems Inc. shall be installed according to manufacturer's recommendations.
3. A reflectorized object marker shall be installed according to manufacturer's recommendations.
4. When snow load post washers and snow load rail washers are required by the contract, the snow load rail washers shall not be installed within the terminal limits.
5. Terminal shall be installed at a widening, ensuring that the end piece is entirely off the shoulder. While these terminals do not require an offset at the end, a flare is recommended. A maximum flare of 25 : 1, or flatter over the length of the terminal is allowed for either the ET-31 (Steel) or the SKT-SP-MGS, with a maximum offset of 24" (in.) over 50' (ft.).
6. For Terminal details, see WSDOT approved manufacturer's drawings.

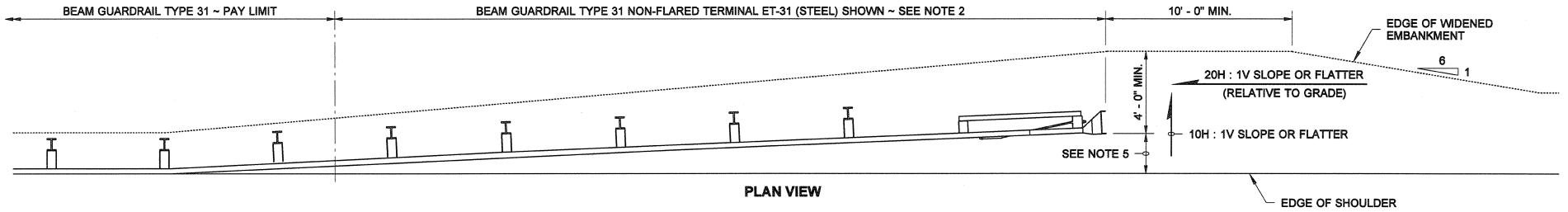

PLAN VIEW

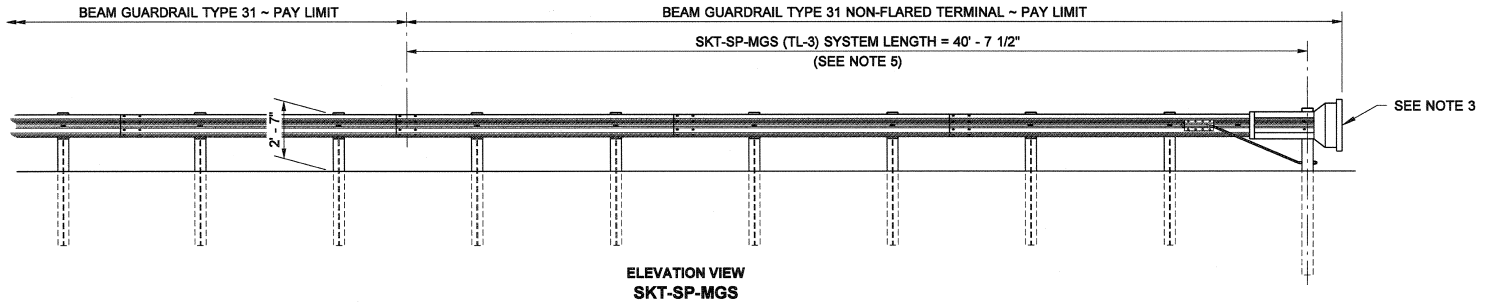

ELEVATION VIEW
SKT-SP-MGS

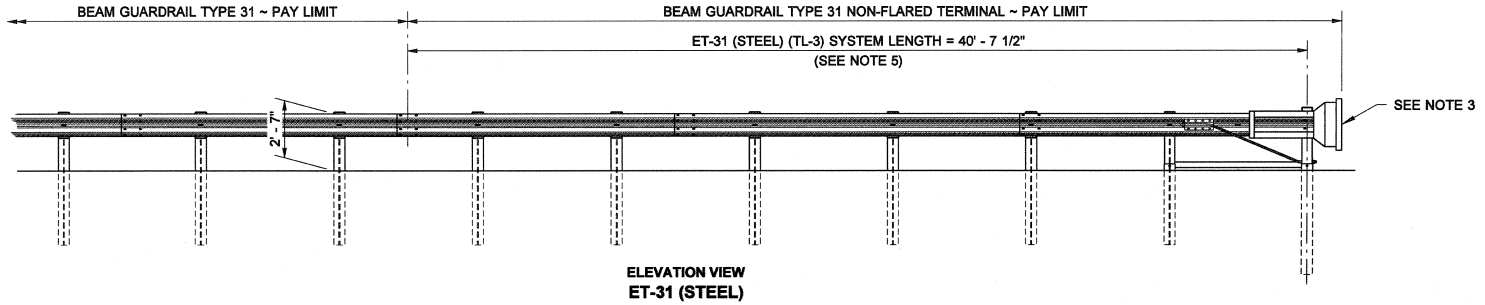

ELEVATION VIEW
ET-31 (STEEL)

6-15-10

BEAM GUARDRAIL TYPE 31 NON-FLARED TERMINAL STEEL POSTS (ALL POSTED SPEEDS)

STANDARD PLAN C-22.40-02

SHEET 1 OF 1 SHEET

APPROVED FOR PUBLICATION

STATE DESIGN ENGINEER — DATE 6/16/10

Washington State Department of Transportation

DRAWN BY: LISA CYFORD

NOTES

1. These Terminals are FHWA accepted at Test Level Two (TL-2) and may be used in applications with speeds of 40 MPH or less.
2. An ET-31 (TL-2) as manufactured by Trinity Industries, Inc. or an SKT-SP-MGS (TL-2) as manufactured by Road Systems Inc. shall be installed according to manufacturers' recommendations.
3. A reflectorized object marker shall be installed according to manufacturers' recommendations.
4. When snow load post washers and snow load rail washers are required by the Contract, the snow load rail washers shall not be installed within the Terminal limits.
5. Terminal shall be installed at a widening, ensuring the end piece is entirely off the shoulder. While these Terminals do not require an offset at the end, a flare is recommended. A maximum flare of 25 : 1 or flatter over the length of the Terminal is allowed for either the ET-31 (TL-2) or the SKT-SP-MGS (TL-2), with a maximum offset of 24" (in.) over 50' (ft.).
6. For Terminal details, see WSDOT-approved manufacturers' drawings.

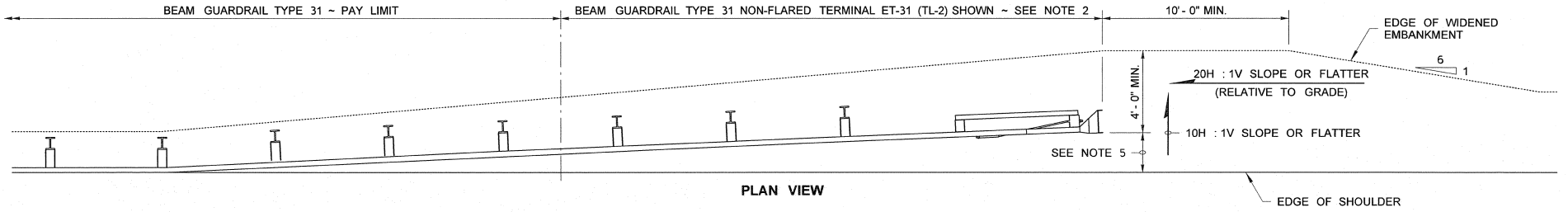

PLAN VIEW

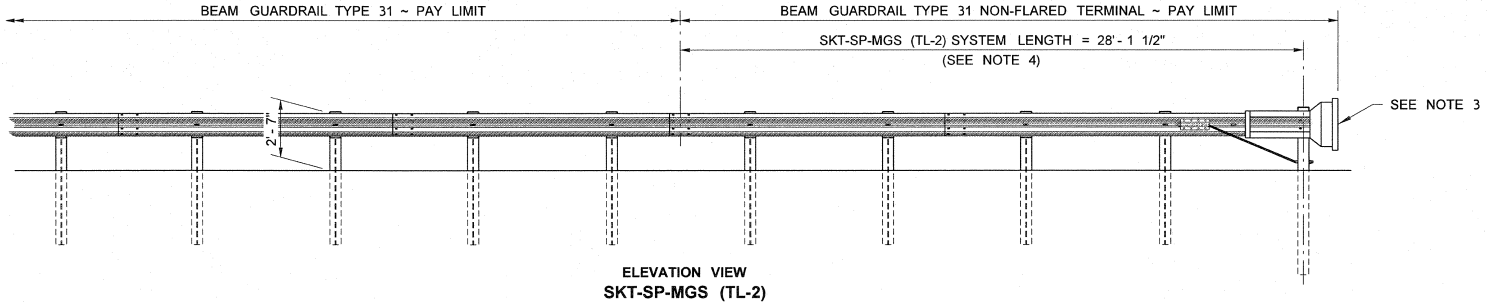

ELEVATION VIEW
SKT-SP-MGS (TL-2)

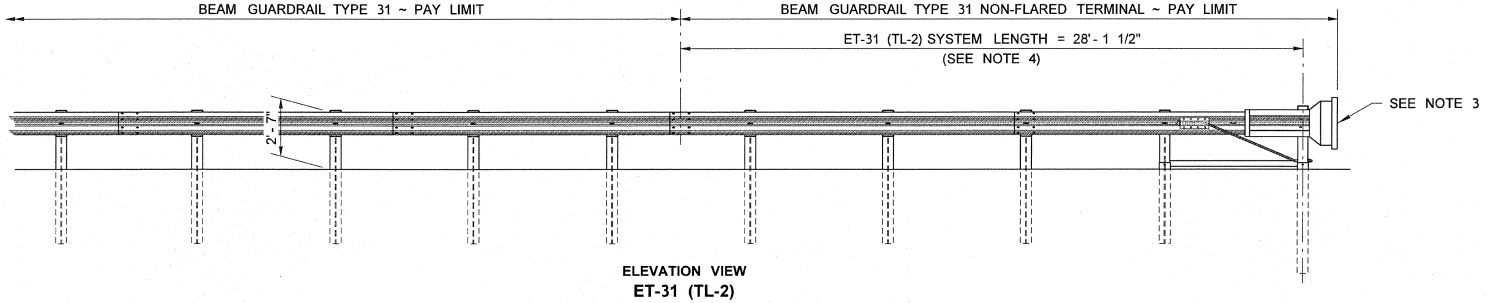

ELEVATION VIEW
ET-31 (TL-2)

BEAM GUARDRAIL TYPE 31 NON-FLARED TERMINAL STEEL POSTS (POSTED SPEED ~ 40 MPH AND BELOW)

STANDARD PLAN C-22.45-00

SHEET 1 OF 1 SHEET

APPROVED FOR PUBLICATION

STATE DESIGN ENGINEER — DATE 6/16/11

Washington State Department of Transportation

DRAWN BY: LISA CYFORD

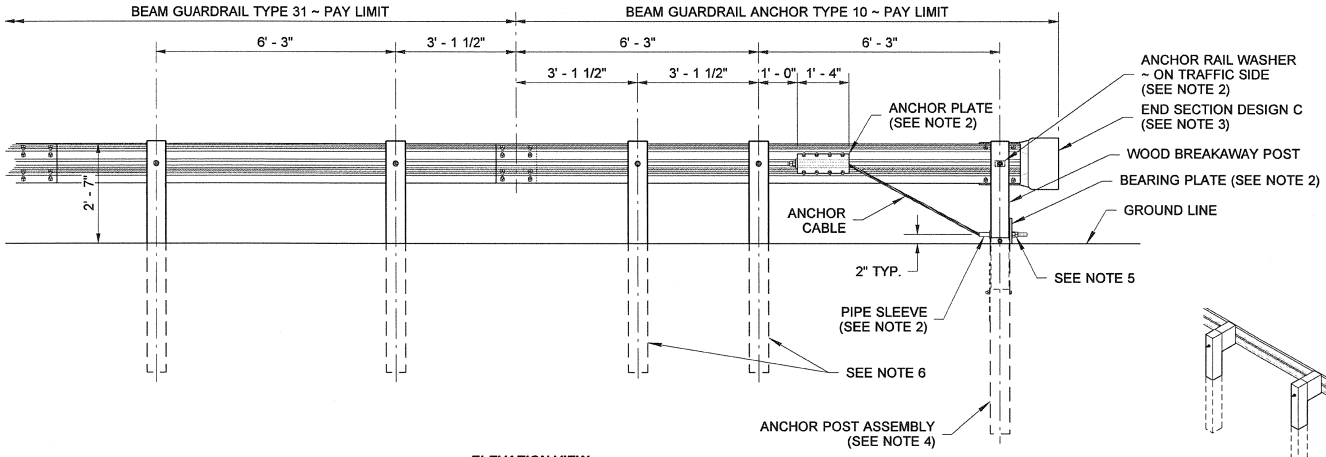

ELEVATION VIEW
W-BEAM

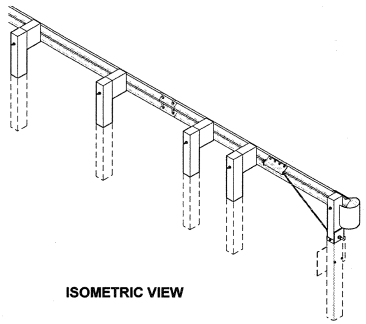

ISOMETRIC VIEW

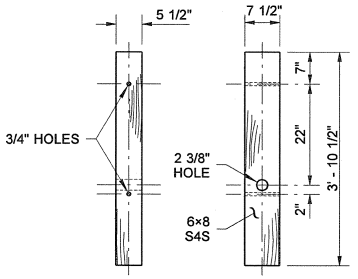

WOOD BREAKAWAY POST DETAIL

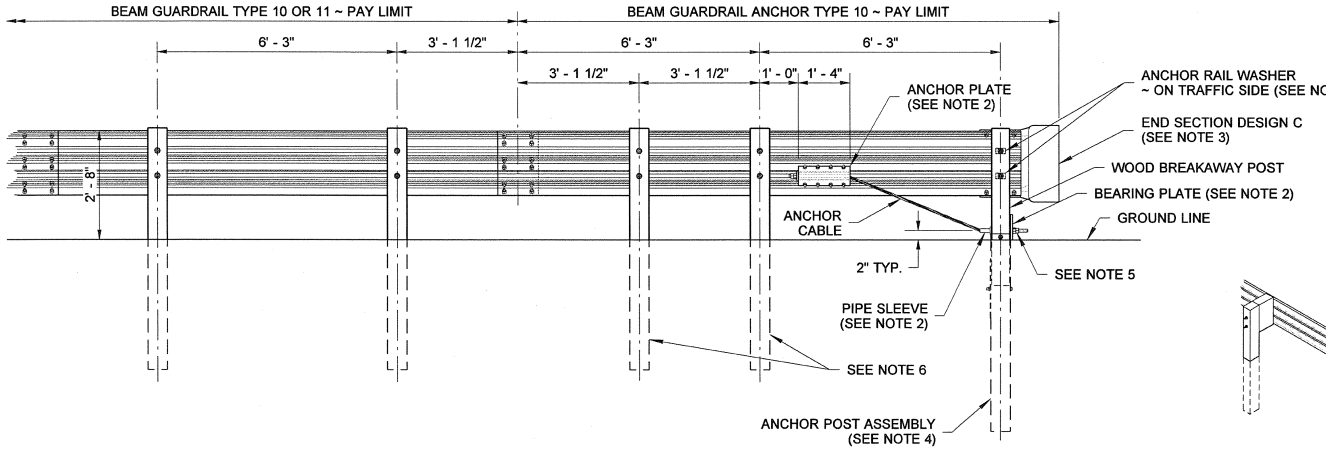

ELEVATION VIEW
THRIE BEAM

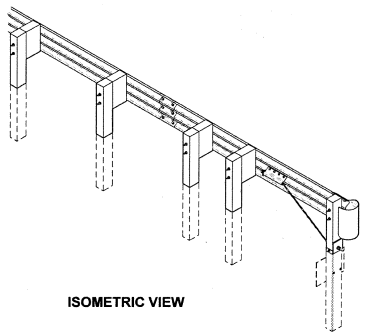

ISOMETRIC VIEW

NOTES

1. For use on the end of guardrail runs when a crashworthy terminal is not required.
2. For additional details not shown, see **Standard Plan C-6c**.
3. For End Section details, see **Standard Plans C-7** and **C7a.**
4. For Anchor Post Assembly details, see **Standard Plan C-1b**. Use detail on this plan for Wood Breakaway Post. (No Block on this post).
5. Fasten the Anchor Cable using two 1" nuts and washer, at both ends of cable. Outside nut shall be torqued against inside nut a minimum of 100 ft.-lbs.
6. Posts shall match those of connecting run: Timber or Steel.

10-5-09

BEAM GUARDRAIL (TYPE 31)
ANCHOR TYPE 10

STANDARD PLAN C-23.60-01

SHEET 1 OF 1 SHEET

APPROVED FOR PUBLICATION

STATE DESIGN ENGINEER — DATE 10/14/09

Washington State Department of Transportation

This page left blank intentionally.

DRAWN BY: FERN LIDDELL

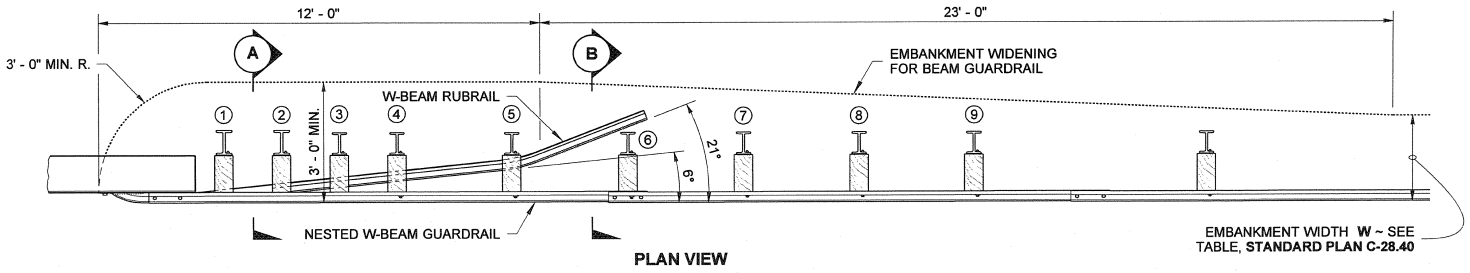

PLAN VIEW

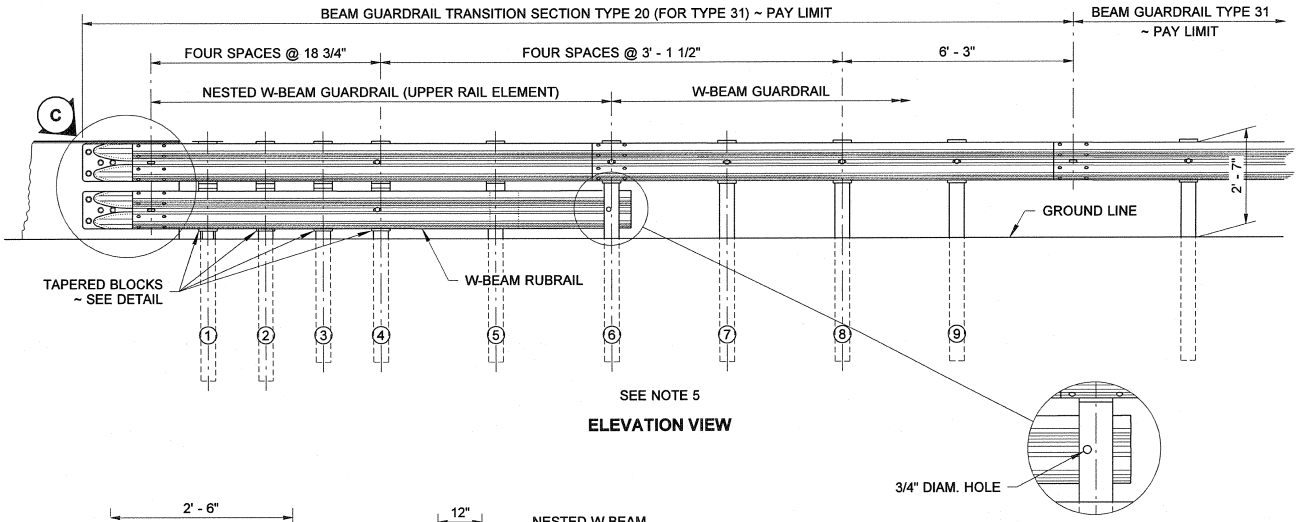

ELEVATION VIEW

BOLT LOCATION DETAIL FOR STEEL POST

NOTES

1. For additional details not shown in this plan, refer to **Standard Plan C-28.40.**
2. This guardrail transition is for connection to a vertical concrete shape or single slope barrier and cannot be connected directly to a concrete safety shape.
3. Do not bolt nested W-Beam or rubrail W-Beam to posts and blocks on posts 1,2,3 and 5. Bolt tapered blocks directly to posts.
4. The rubrail W-Beam can be shop bent to facilitate installation.
5. Posts 1,2,3,4 and 6 require an additional hole to attach tapered blocks and/or rubrail.
6. Posts 1 and 2 are W8×15 steel posts~ 7' - 6" long. Posts 3 through 9 areW6×9 steel posts ~ 6' - 0" long.

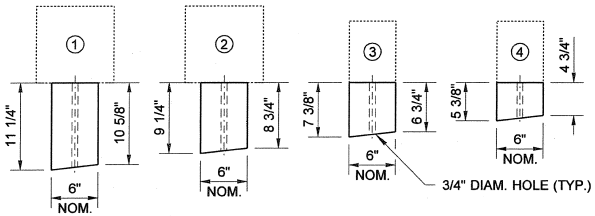

PLAN VIEW
TAPERED BLOCKS FOR RUBRAIL DETAIL
14" LONG (TYP.)

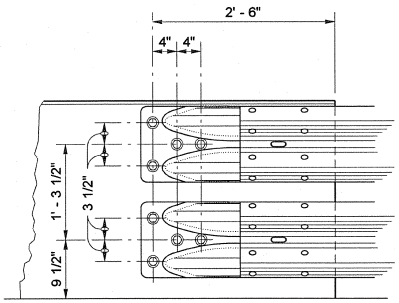

DETAIL C

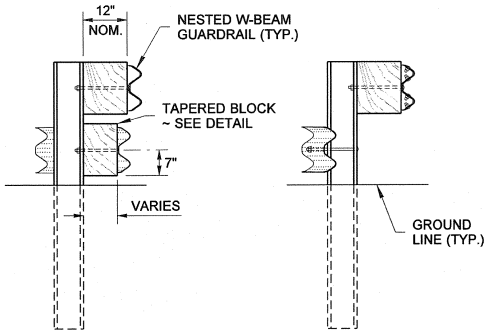

(OR)

SECTION A
(STEEL POST)

SECTION B
(STEEL POST)

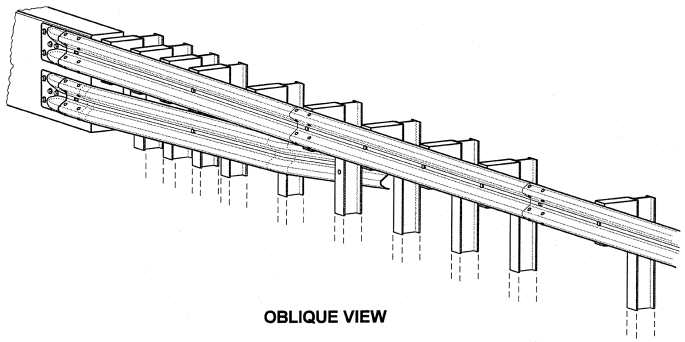

OBLIQUE VIEW

6-8-2011

BEAM GUARDRAIL (TYPE 31) TRANSITION SECTION TYPE 20 STANDARD PLAN C-25.18-02

SHEET 1 OF 1 SHEET

APPROVED FOR PUBLICATION

STATE DESIGN ENGINEER — DATE 6/8/11

Washington State Department of Transportation

DRAWN BY: BILL BERENS

NOTES

1. This guardrail transition is for connection to a vertical concrete shape, a single slope, or a safety shape barrier. The toe of the single slope and the safety shaped barrier shall be tapered or the barrier blocked out so that the toe of the barrier does not project past the face of the approach guardrail.
2. See **Standard Plan C-5** for details regarding connection to Bridge rail or traffic barrier.
3. **For details of typical components, see Standard Plans C-1b and C-28.40.**

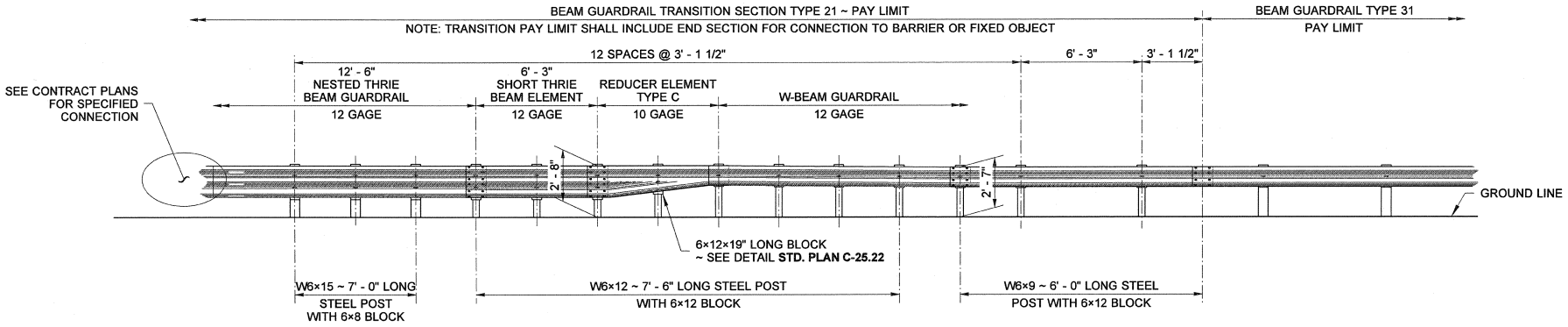

ELEVATION VIEW

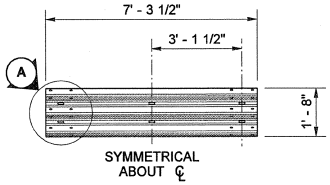

SHORT THRIE BEAM ELEMENT

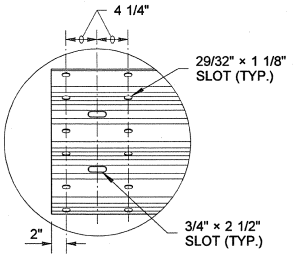

DETAIL (A)

LEFT
(MIRROR OF RIGHT)

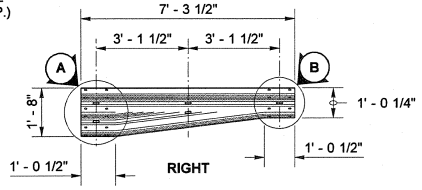

REDUCER ELEMENT TYPE C

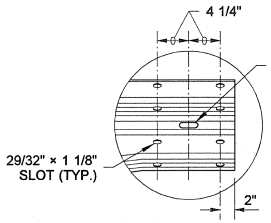

DETAIL (B)

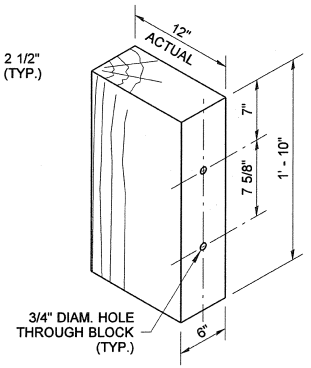

THRIE BEAM WOOD BLOCK

TERRY L. BERENDS
STATE OF WASHINGTON
32350
REGISTERED
PROFESSIONAL ENGINEER

10-5-09

BEAM GUARDRAIL (TYPE 31) TRANSITION SECTION TYPE 21

STANDARD PLAN C-25.20-04

SHEET 1 OF 1 SHEET

APPROVED FOR PUBLICATION

Pasco Bakotich 10/14/09

STATE DESIGN ENGINEER — DATE

Washington State Department of Transportation

DRAWN BY: BILL BERENS

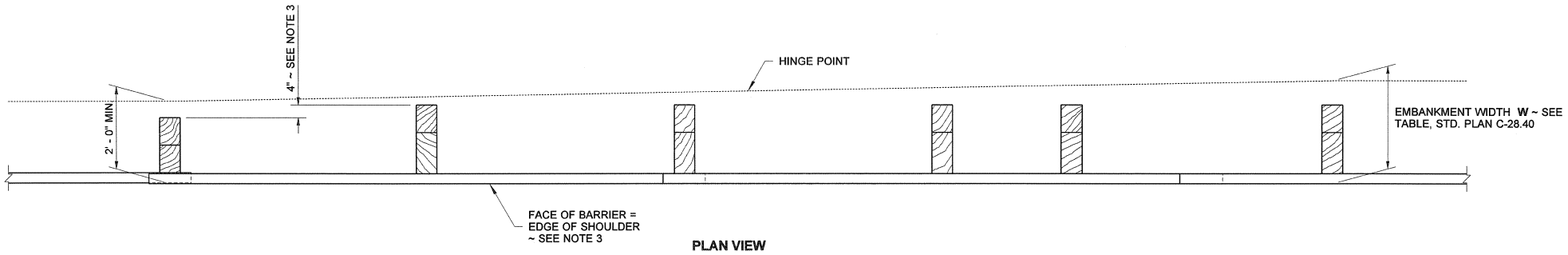

PLAN VIEW

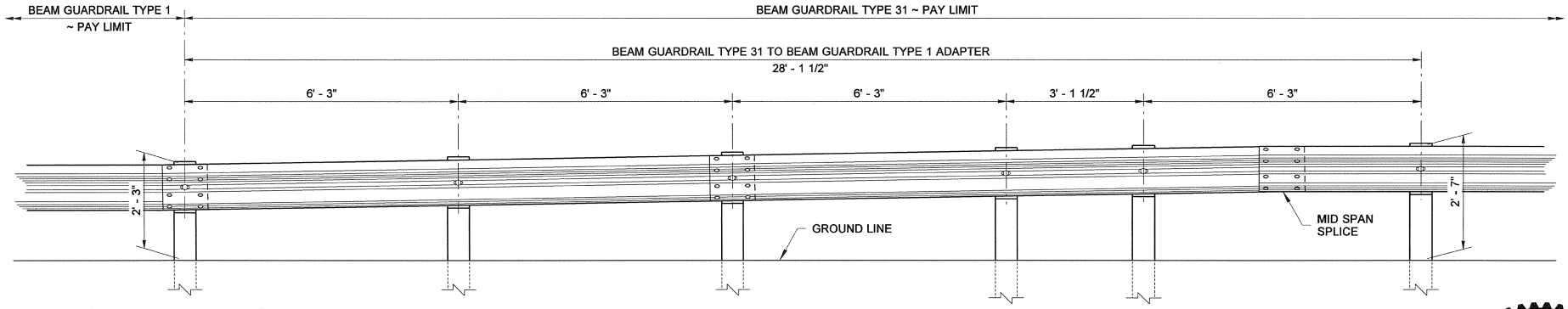

ELEVATION VIEW ~ PROFILE TAPER

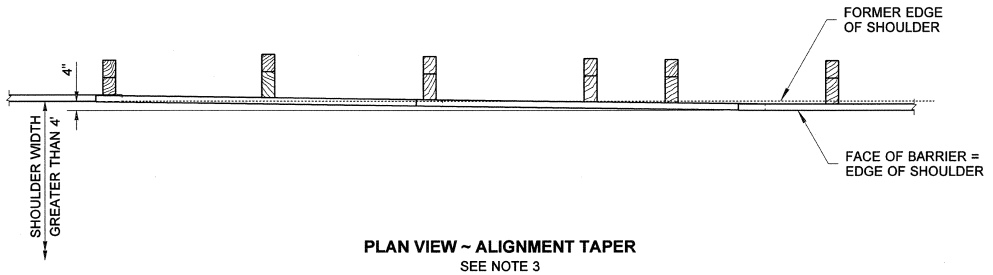

PLAN VIEW ~ ALIGNMENT TAPER
SEE NOTE 3

NOTES

1. Refer to **Standard Plan C-1** and **C-1b** for component details for Beam Guardrail Type 1 not shown on this plan.
2. Refer to **Standard Plan C-28.40** for component details for Beam Guardrail Type 31 not shown on this plan.
3. Where post off-set is constrained, and when the existing shoulder will not be widened and is wider than 4 feet, the existing shoulder may be reduced up to 4" to accomodate the 12" blockouts of the Beam Guardrail Type 31. See **PLAN VIEW ~ ALIGNMENT TAPER**.
4. All posts for any standard barrier run shall be of the same type: Timber or Steel.

RICHARD BARSTOW ALBIN
STATE OF WASHINGTON
34042
REGISTERED PROFESSIONAL ENGINEER
6/10/2008

EXPIRES JULY 24, 2008

BEAM GUARDRAIL TYPE 31 TO BEAM GUARDRAIL TYPE 1 ADAPTER
STANDARD PLAN C-25.80-01

SHEET 1 OF 1 SHEET

DATE	REVISION	BY
05/2008	REVISED TITLE	BB
08/2007	REVISED DISTANCE FROM FACE TO SLOPE HINGE	MAS

APPROVED FOR PUBLICATION

STATE DESIGN ENGINEER — DATE 7/3/08

Washington State Department of Transportation

DRAWN BY: FERN LIDDELL

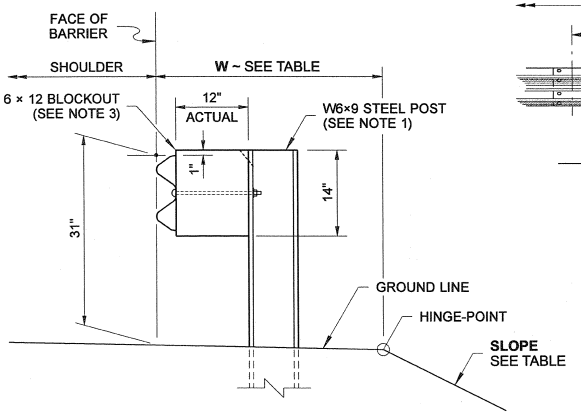

TYPICAL SECTION ~ WITHOUT CURB
(6' - 0" LONG POSTS)

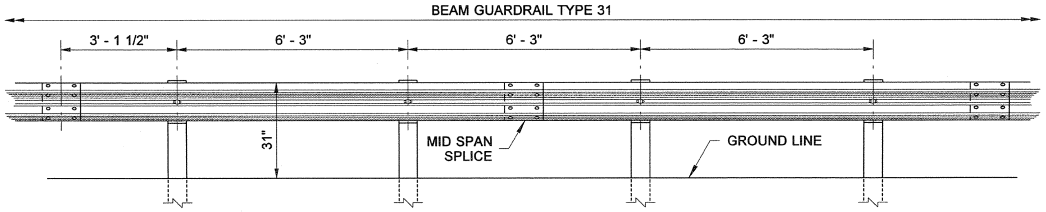

TYPICAL ELEVATION

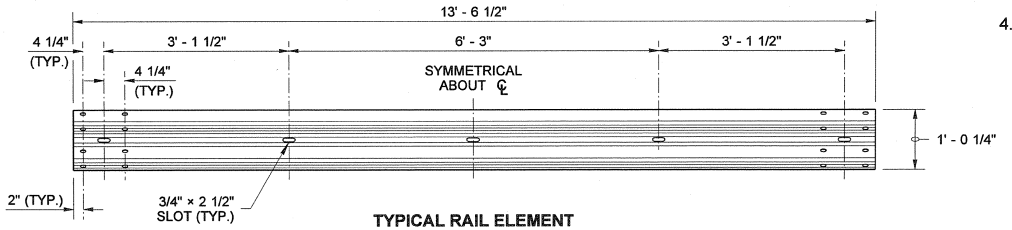

TYPICAL RAIL ELEMENT

NOTES

1. Refer to **Standard Plan C-1** and **C-1b** for additional details not shown on this plan.
2. See contract plans for curb type and horizontal placement requirements.
3. Use a single combination of blocks to achieve the actual 12" offset. See **Standard Specification 9-16.3(2)**. Wood blocks shall be toe-nailed to post and blocks, (if block combinations are utilized) with a 16d galvanized nail to prevent block rotation.
4. Wood blocks are shown. Blocks of alternative material may be used. **See Standard Specification 9-16.3(2).**

SLOPE \ EMBANKMENT TABLE	
SLOPE	**W**
2H : 1V OR FLATTER	2.5' MIN.
STEEPER THAN 2H : 1V BUT NOT STEEPER THAN 1H : 1V	4.0' MIN.

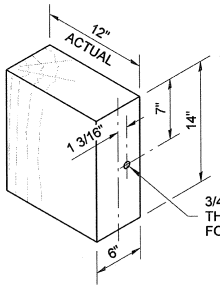

WOOD BLOCK

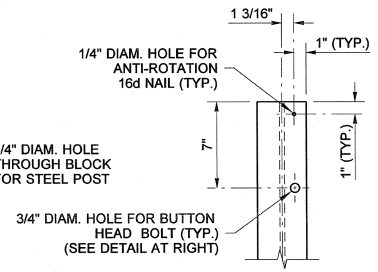

STEEL POST

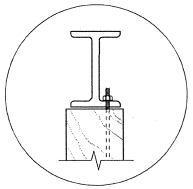

DETAIL

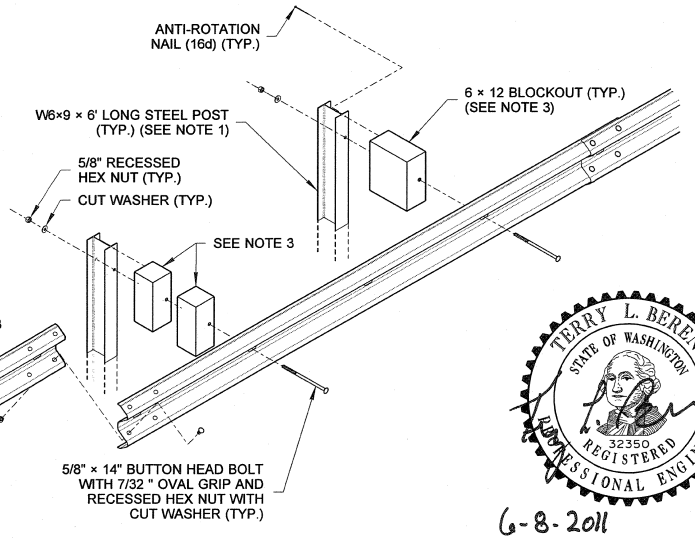

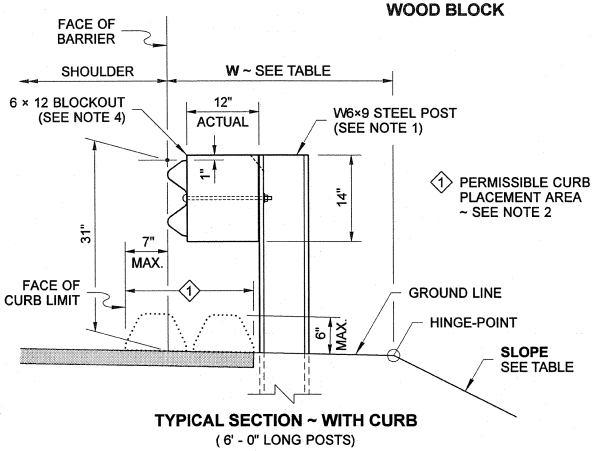

TYPICAL SECTION ~ WITH CURB
(6' - 0" LONG POSTS)

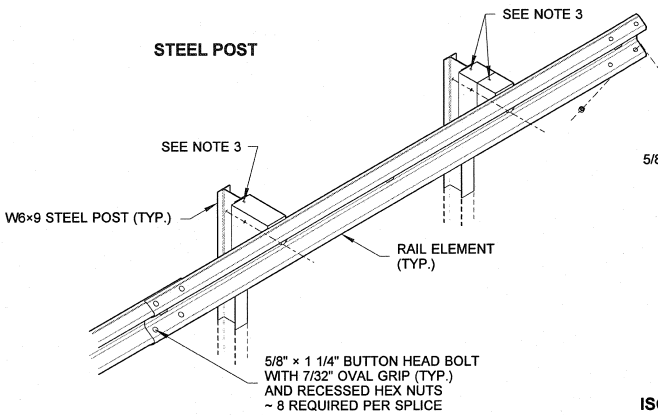

ISOMETRIC VIEW

TERRY L. BERENDS
STATE OF WASHINGTON
32350
REGISTERED
PROFESSIONAL ENGINEER

6-8-2011

BEAM GUARDRAIL TYPE 31

STANDARD PLAN C-28.40-01

SHEET 1 OF 1 SHEET

APPROVED FOR PUBLICATION

STATE DESIGN ENGINEER — DATE 6/16/11

Washington State Department of Transportation

LEGEND

Design Layout Line

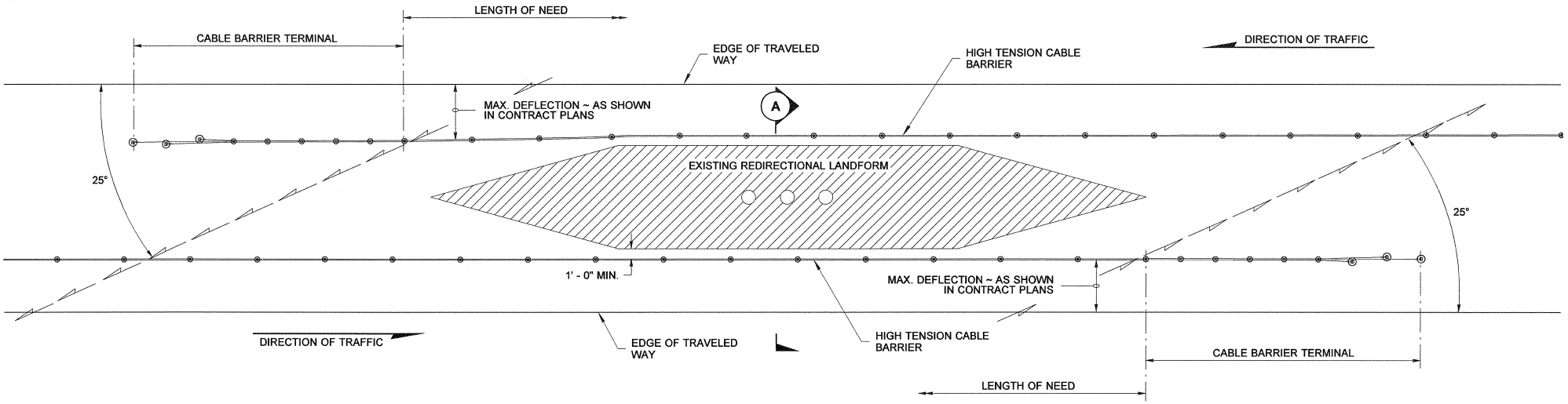

PLAN VIEW

CASE 27

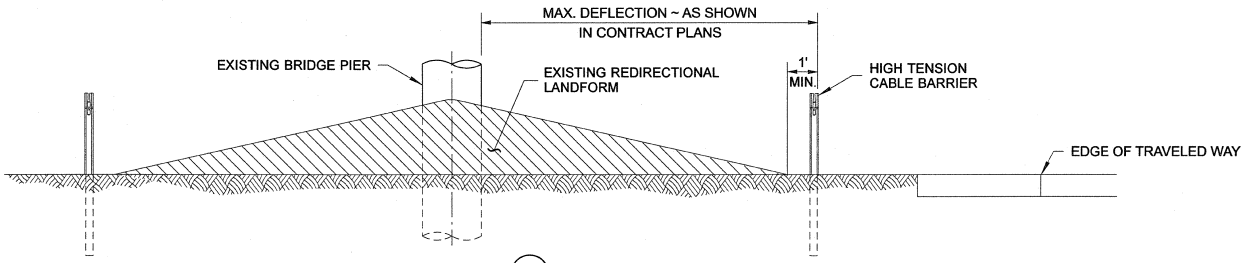

SECTION (A)

TERRY L. BERENDS
STATE OF WASHINGTON
32350
REGISTERED
PROFESSIONAL ENGINEER

10-5-09

BARRIER PLACEMENT ~ CABLE BARRIER SHIELDING FOR REDIRECTIONAL LANDFORM

STANDARD PLAN C-40.18-01

SHEET 1 OF 1 SHEET

APPROVED FOR PUBLICATION

STATE DESIGN ENGINEER — DATE 10/14/09

Washington State Department of Transportation

DRAWN BY: LISA CYFORD

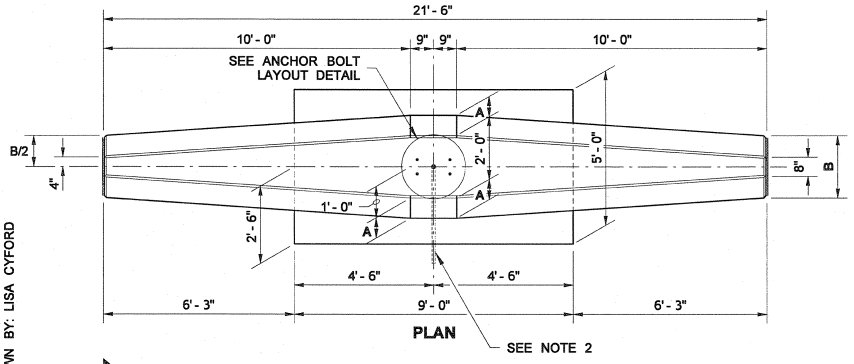

PLAN

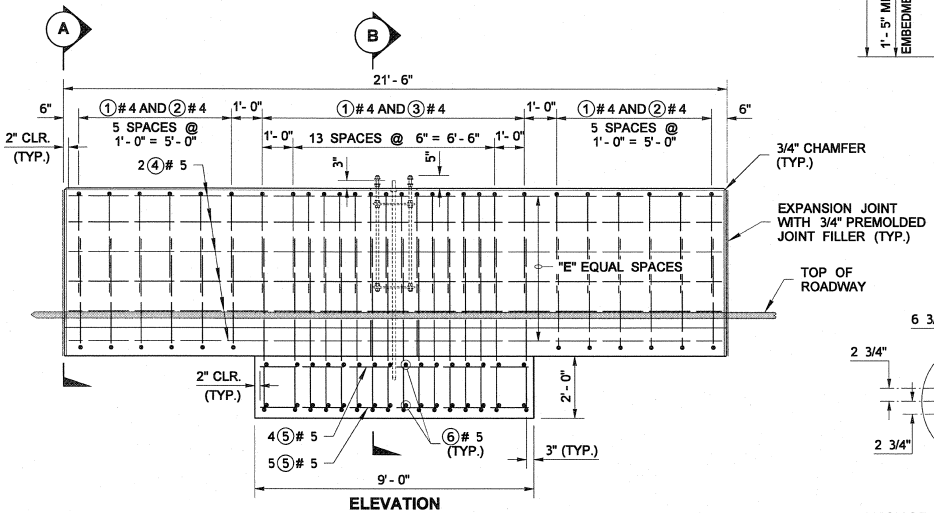

ELEVATION

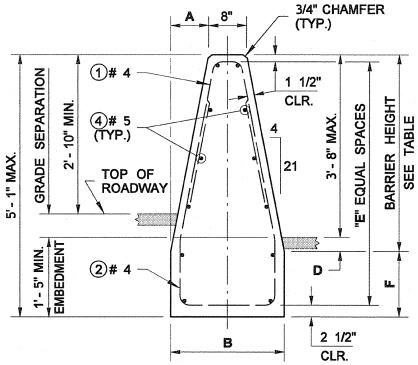

SECTION (A)

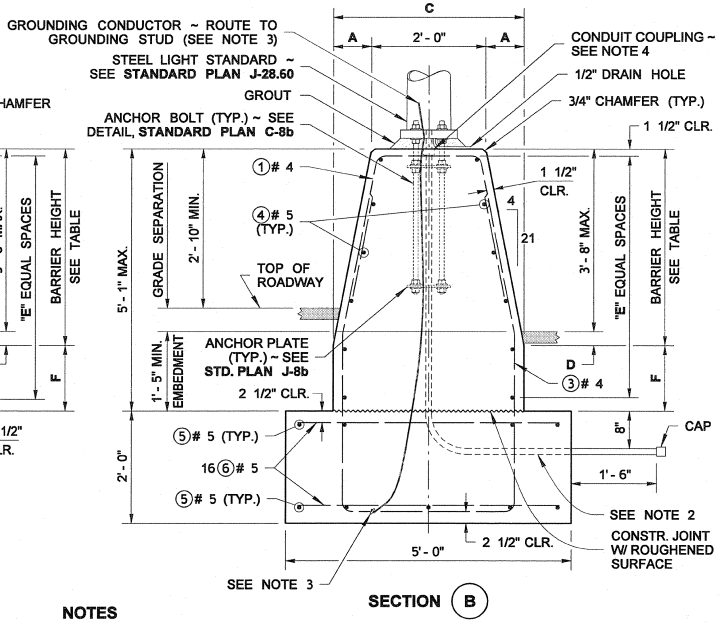

SECTION (B)

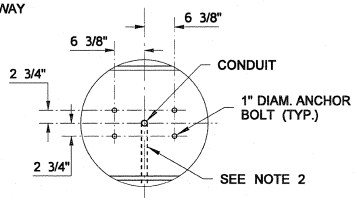

PLAN VIEW

ANCHOR BOLT LAYOUT DETAIL

NOTES

1. When connecting between cast-in-place and precast Single-Slope Barrier, provide a Connection Blockout and Rebar Grid as shown on **Standard Plan C-13.**
2. See the Contract Plans for conduit placement.
3. Grounding Conductor shall be non-insulated #4 AWG stranded copper, provide 3' - 0" min. slack. Clamp steel reinforcing bar with connector suitable for use embedded in concrete.
4. Install Conduit Coupling flush with top of foundation. Do not glue PVC stubout.
5. This plan shall be used for 40' and 50' Light Standards with 16' max. length double mast arms.
6. Concrete shall be Class 4000.

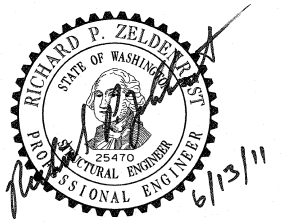

ALL DIMENSIONS ARE OUT TO OUT
ALL BENDS ARE 2" RADIUS

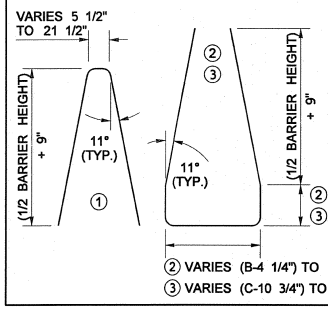

BAR LIST

MARK NO.	LOCATION	SIZE	QUANTITY
1	BARRIER ~ TOP VERTICAL	# 4	28
2	BARRIER ~ BOTTOM VERTICAL	# 4	12
3	FND. & BARRIER ~ VERTICAL	# 4	16
4	BARRIER ~ HORIZONTAL	# 5	"Q"
5	FOUNDATION	# 5	9
6	FOUNDATION	# 5	32

TABLE

GRADE SEPARATION	BARRIER HEIGHT	A	B	C	D	E	F	Q
0 TO 5"	3' - 6"	8"	2' - 0"	3' - 4"	3" MIN.	5	1' - 2"	12
UP TO 7"	4' - 0"	9 1/8"	2' - 2 1/4"	3' - 6 1/4"	7" MIN.	5	10"	12
UP TO 10"	4' - 6"	10 1/4"	2' - 4 1/2"	3' - 8 1/2"	10" MIN.	6	7"	14

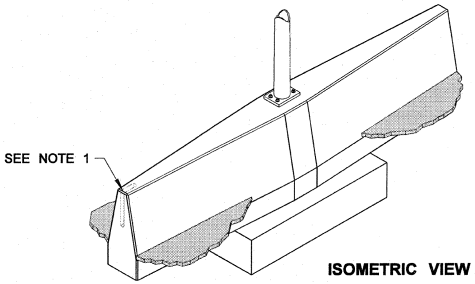

ISOMETRIC VIEW

SINGLE-SLOPE CONCRETE BARRIER LIGHT STANDARD FOUNDATION

STANDARD PLAN C-85.14-00

SHEET 1 OF 1 SHEET

APPROVED FOR PUBLICATION

STATE DESIGN ENGINEER — DATE 6/16/11

Washington State Department of Transportation

DRAWN BY: LISA CYFORD

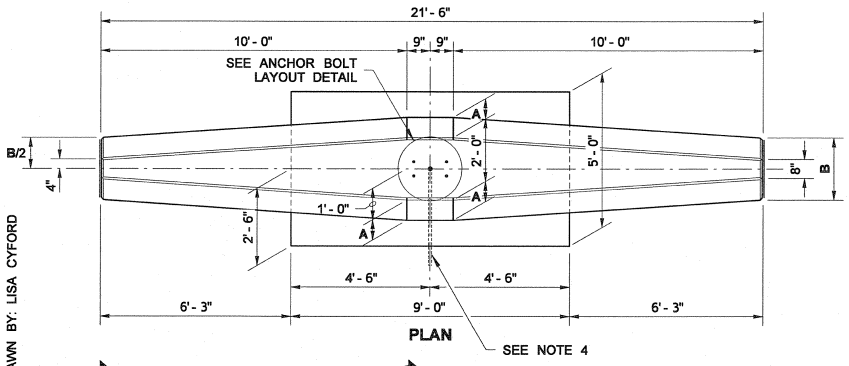

PLAN

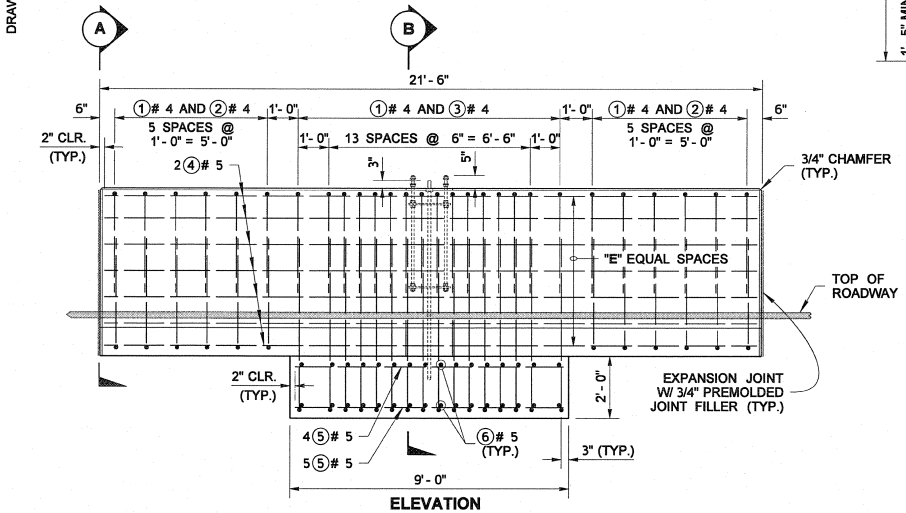

ELEVATION

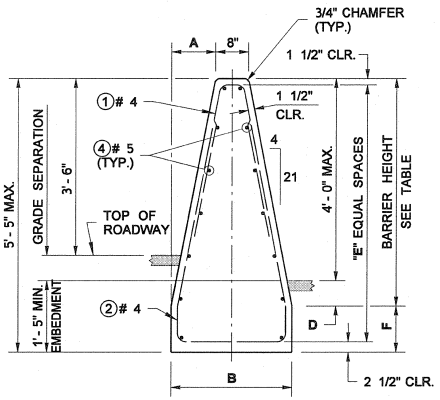

SECTION (A)

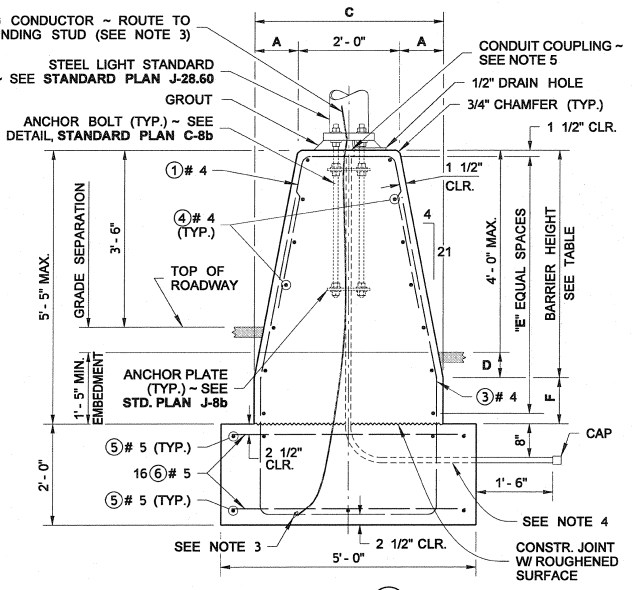

SECTION (B)

NOTES

1. This Barrier/Foundation combination has been designed in accordance with AASHTO LRFD Test Level 4 requirements. The horizontal vehicle impact force at the top of the barrier is taken at 54 kips for Strength and Extreme Limit States, and 10 kips for footing stability (overturning and sliding) in the Service Limit State.
2. When connecting between cast-in-place and precast Single-Slope Barrier, provide a Connection Blockout and Rebar Grid as shown on **Standard Plan C-13.**
3. Grounding conductor shall be non-insulated #4 AWG stranded copper, provide a 3' - 0" min. slack. Clamp steel reinforcing bar with connector suitable for use embedded in concrete.
4. See the Contract Plans for conduit placement.
5. Install Conduit Coupling flush with top of foundation. Do not glue PVC stubout.
6. This plan shall be used for 40' and 50' Light Standards with 16' max. length double mast arms.
7. Concrete shall be Class 4000.

ALL DIMENSIONS ARE OUT TO OUT
ALL BENDS ARE 2" RADIUS

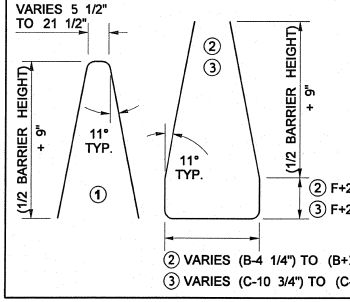

BAR LIST

MARK NO.	LOCATION	SIZE	QUANTITY
①	BARRIER ~ TOP VERTICAL	# 4	28
②	BARRIER ~ BOTTOM VERTICAL	# 4	12
③	FND. & BARRIER ~ VERTICAL	# 4	16
④	BARRIER ~ HORIZONTAL	# 5	"Q"
⑤	FOUNDATION	# 5	9
⑥	FOUNDATION	# 5	32

TABLE

GRADE SEPARATION	BARRIER HEIGHT	A	B	C	D	E	F	Q
0 TO 3"	4' - 0"	9 1/8"	2' - 2 1/4"	3' - 6 1/4"	VARIES 6" TO 9"	6	1' - 2"	14
UP TO 6" MAX.	4' - 6"	10 1/4"	2' - 4 1/2"	3' - 8 1/2"	VARIES 6" TO 9"	6	11"	14

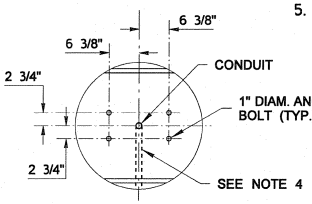

PLAN VIEW

ANCHOR BOLT LAYOUT DETAIL

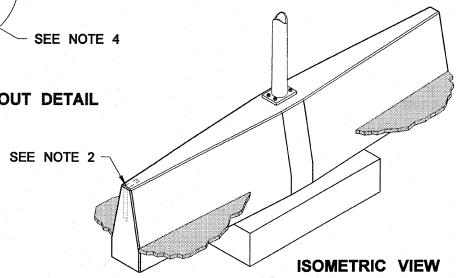

ISOMETRIC VIEW

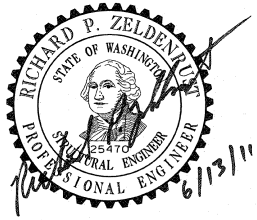

SINGLE-SLOPE CONCRETE BARRIER (42")
LIGHT STANDARD FOUNDATION
STANDARD PLAN C-85.15-00

SHEET 1 OF 1 SHEET

APPROVED FOR PUBLICATION

STATE DESIGN ENGINEER — DATE 6/16/11

Washington State Department of Transportation

DRAWN BY: LISA CYFORD

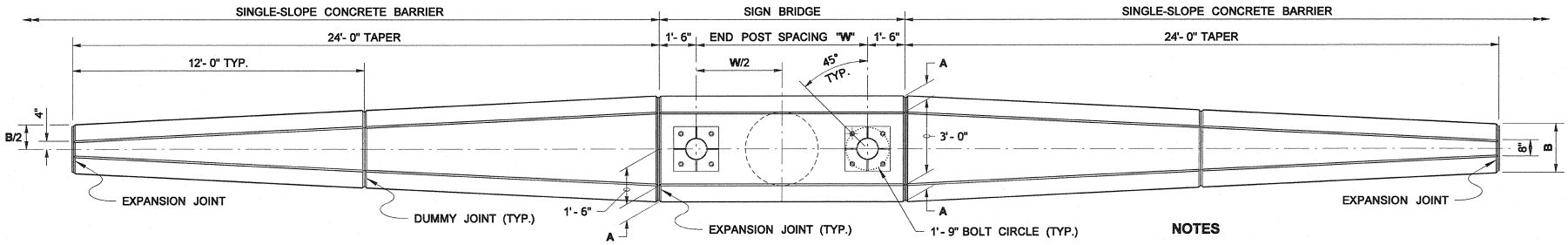

PLAN

NOTES

1. When connecting between Cast-in-Place and Precast Single-Slope Barrier, provide a Connection Blockout and Rebar Grid as shown in **Standard Plan C-13.**
2. Grounding Conductor shall be non-insulated #4 AWG stranded copper, provide a 3' - 0" slack. Clamp steel reinforcing bar with connector suitable for use embeded in concrete.
3. Install Conduit Coupling flush with top of Barrier. Do not glue PVC stubout.
4. Concrete shall be Class 4000, unless otherwise noted.

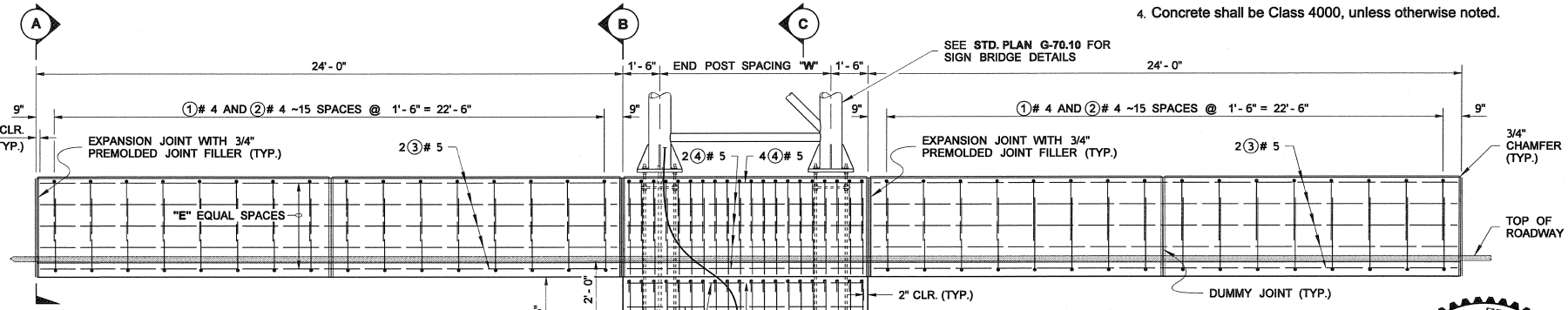

ELEVATION

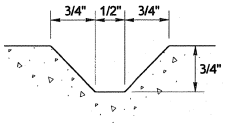

DUMMY JOINT

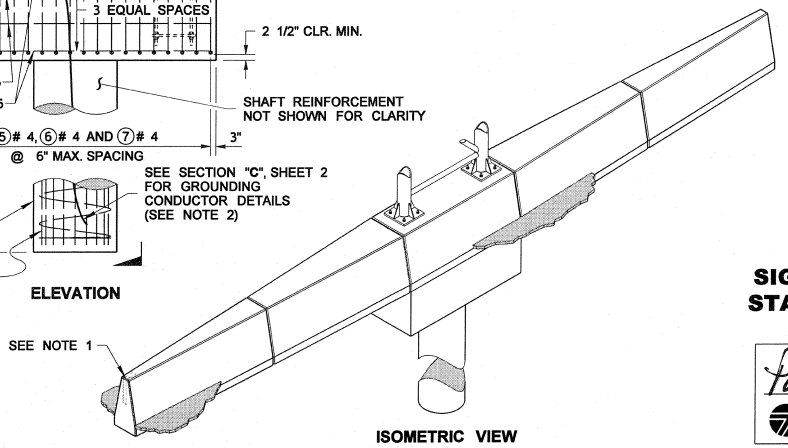

ISOMETRIC VIEW

DIMENSIONS "W" AND "Z"		
SIGN BRIDGE SPAN LENGTH	W	Z
60' OR LESS	4'- 0"	11'- 6"
61' TO 91'	5'- 0"	13'- 6"
91' TO 120'	6'- 0"	15'- 0"
121' TO 150'	7'- 0"	16'- 6"

SHAFT DEPTH "Z" IS BASED ON ALLOWABLE LATERAL BEARING PRESSURE IN EXCESS OF 1500 PSF.

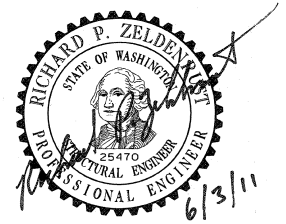

SINGLE-SLOPE CONCRETE BARRIER SIGN BRIDGE FOUNDATION

STANDARD PLAN C-85.16-00

SHEET 1 OF 2 SHEETS

APPROVED FOR PUBLICATION

STATE DESIGN ENGINEER — DATE 6/16/11

Washington State Department of Transportation

DRAWN BY: LISA CYFORD

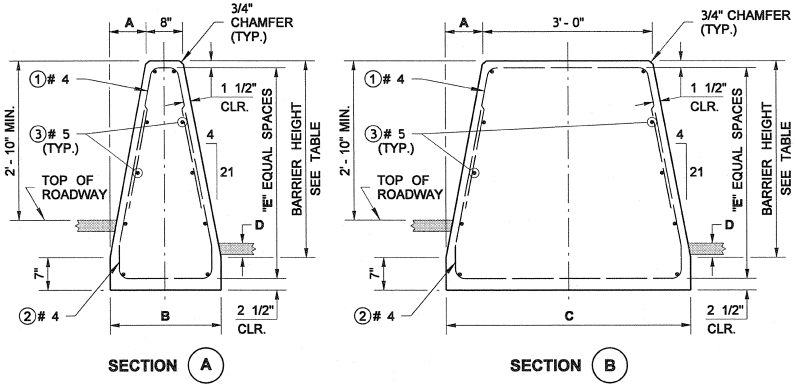

SECTION (A)

SECTION (B)

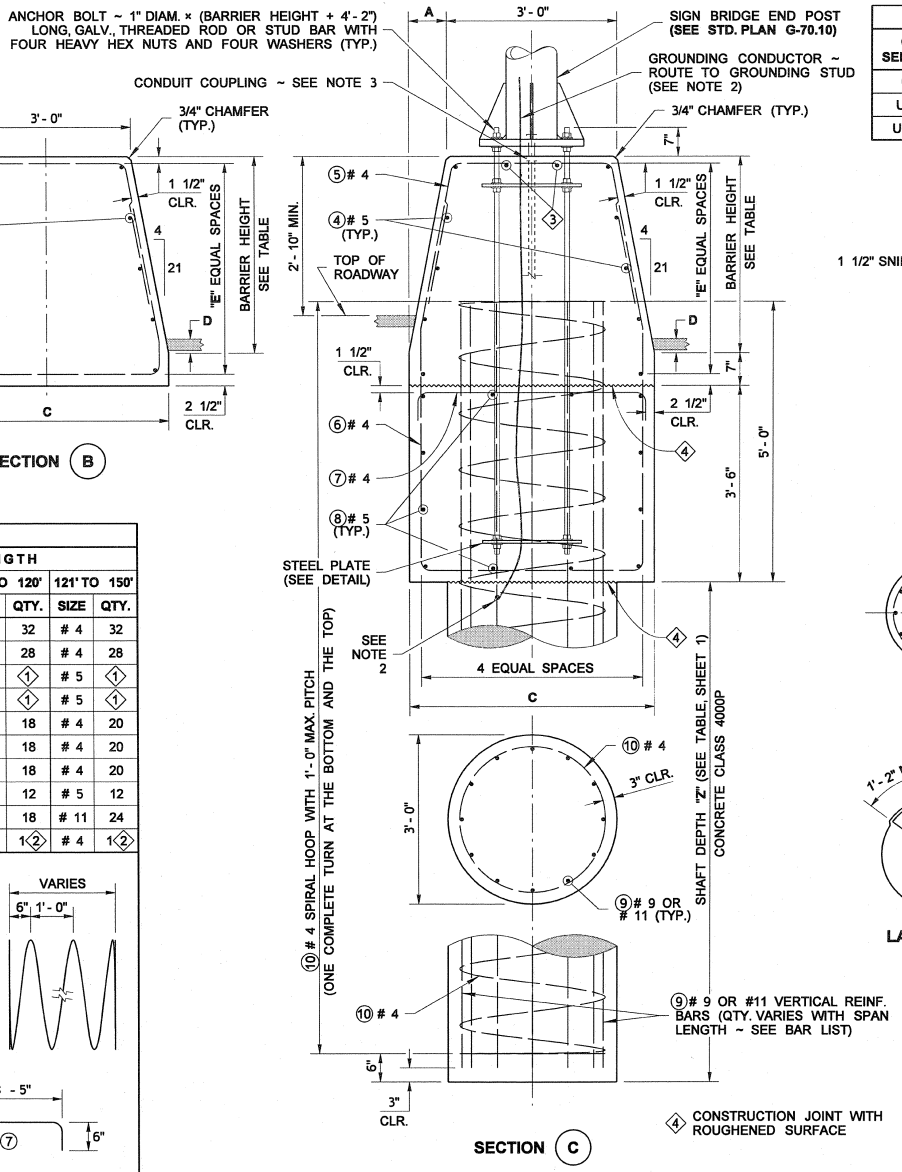

SECTION (C)

(4) CONSTRUCTION JOINT WITH ROUGHENED SURFACE

TABLE							
GRADE SEPARATION	BARRIER HEIGHT	A	B	C	D	E	Q
0 TO 5"	3' - 6"	8"	2' - 0"	4' - 4"	3" MIN.	4	10 (3)
UP TO 7"	4' - 0"	9 1/8"	2' - 2 1/4"	4' - 6 1/4"	7" MIN.	5	12 (3)
UP TO 10"	4' - 6"	10 1/4"	2' - 4 1/2"	4' - 8 1/2"	10" MIN.	6	14 (3)

(3) ADD TWO (4) # 5 BARS, EQUALLY SPACED, AT THE TOP OF THE FOUNDATION BARRIER

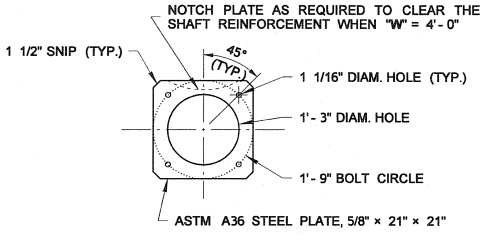

STEEL PLATE DETAIL

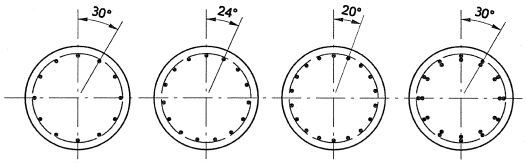

VERTICAL SHAFT STEEL LAYOUT

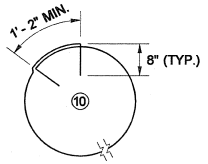

LAP SPLICE DETAIL

BAR LIST									
MARK NO.	LOCATION	SPAN LENGTH							
		60' OR LESS		61' TO 91'		91' TO 120'		121' TO 150'	
		SIZE	QTY.	SIZE	QTY.	SIZE	QTY.	SIZE	QTY.
(1)	BARRIER ~ TOP VERTICAL	# 4	32	# 4	32	# 4	32	# 4	32
(2)	BARRIER ~ BOTTOM VERTICAL	# 4	28	# 4	28	# 4	28	# 4	28
(3)	BARRIER ~ HORIZONTAL	# 5	(1)	# 5	(1)	# 5	(1)	# 5	(1)
(4)	BARRIER ~ HORIZONTAL	# 5	(1)	# 5	(1)	# 5	(1)	# 5	(1)
(5)	BARRIER ~ TOP VERTICAL	# 4	14	# 4	16	# 4	18	# 4	20
(6)	CAP & BARRIER ~ VERTICAL	# 4	14	# 4	16	# 4	18	# 4	20
(7)	CAP ~ TOP TRANSVERSE	# 4	14	# 4	16	# 4	18	# 4	20
(8)	CAP ~ HORIZONTAL	# 5	12	# 5	12	# 5	12	# 5	12
(9)	SHAFT ~ VERTICAL	# 9	12	# 11	15	# 11	18	# 11	24
(10)	SHAFT ~ SPIRAL	# 4	1 (2)	# 4	1 (2)	# 4	1 (2)	# 4	1 (2)

(1) SEE TABLE, THIS SHEET, COLUMN "Q"

(2) IF JOINING TWO SPIRALS, SEE LAP SPLICE DETAIL

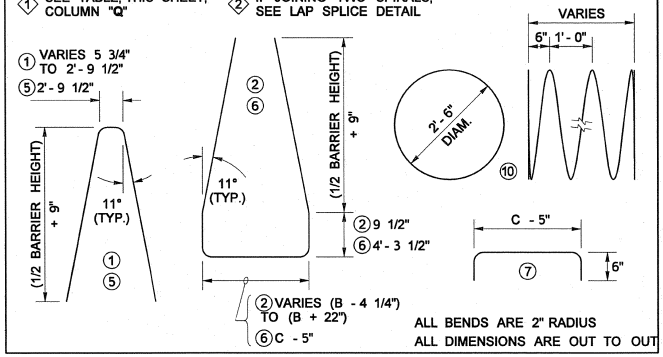

ALL BENDS ARE 2" RADIUS

ALL DIMENSIONS ARE OUT TO OUT

RICHARD P. ZELDENRUST
STATE OF WASHINGTON
25470
STRUCTURAL ENGINEER
PROFESSIONAL ENGINEER
6/3/11

SINGLE-SLOPE CONCRETE BARRIER SIGN BRIDGE FOUNDATION

STANDARD PLAN C-85.16-00

SHEET 2 OF 2 SHEETS

APPROVED FOR PUBLICATION

STATE DESIGN ENGINEER — DATE 6/16/14

Washington State Department of Transportation

This page left blank intentionally.

DRAWN BY: LISA CYFORD

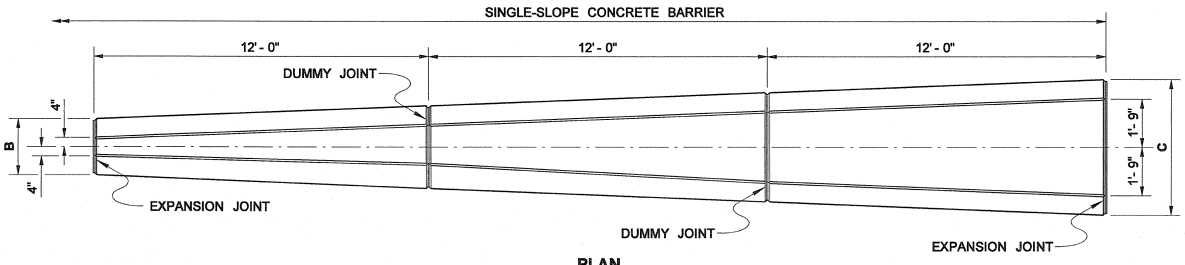

PLAN

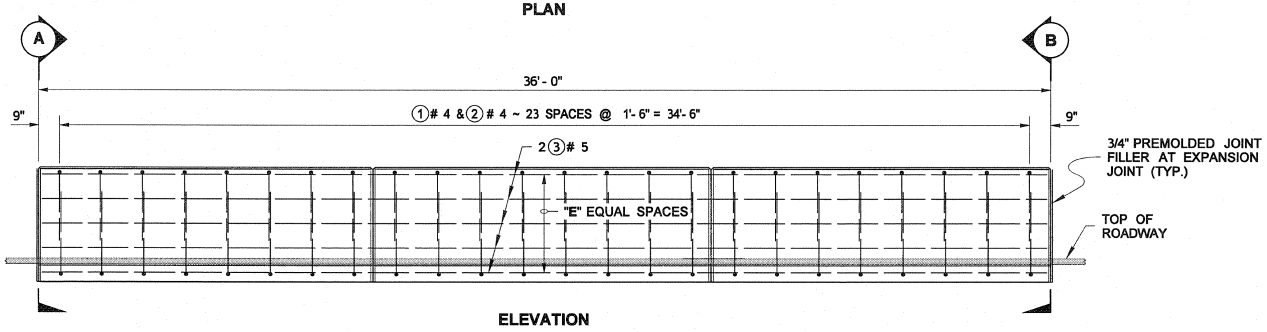

ELEVATION

NOTES

1. When connecting between Cast-in-Place and Precast Single-Slope Barrier, provide a Connection Blockout and Rebar Grid as shown in **Standard Plan C-13**
2. All concrete shall be class 4000.

BAR LIST			
MARK NO.	LOCATION	SIZE	QTY.
①	BARRIER ~ TOP VERTICAL	# 4	24
②	BARRIER ~ BOTTOM VERTICAL	# 4	24
③	BARRIER ~ HORIZONTAL	# 5	◇1

◇1 SEE DIMENSION TABLE ~ NOT COUNTING SPLICES

ALL DIMENSIONS ARE OUT TO OUT
ALL BENDS ARE 2" RADIUS

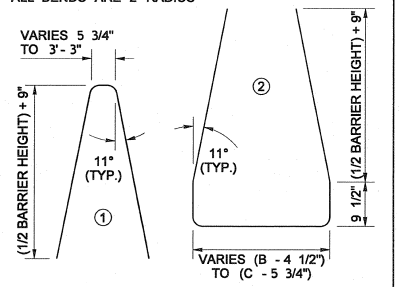

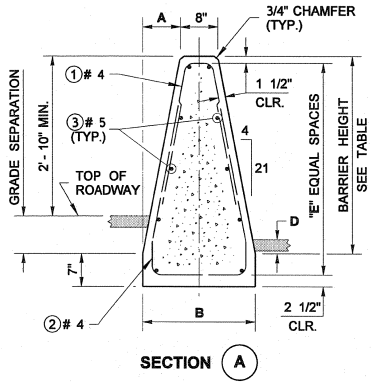

SECTION (A)

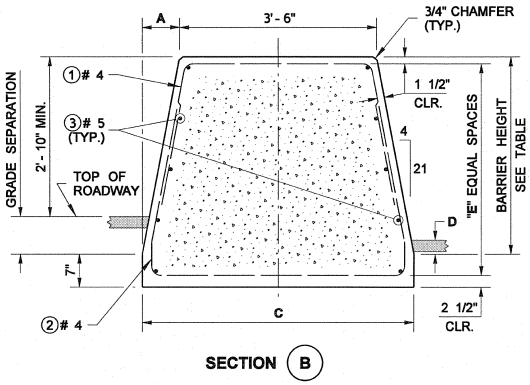

SECTION (B)

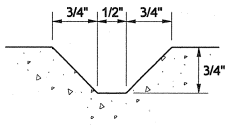

DUMMY JOINT

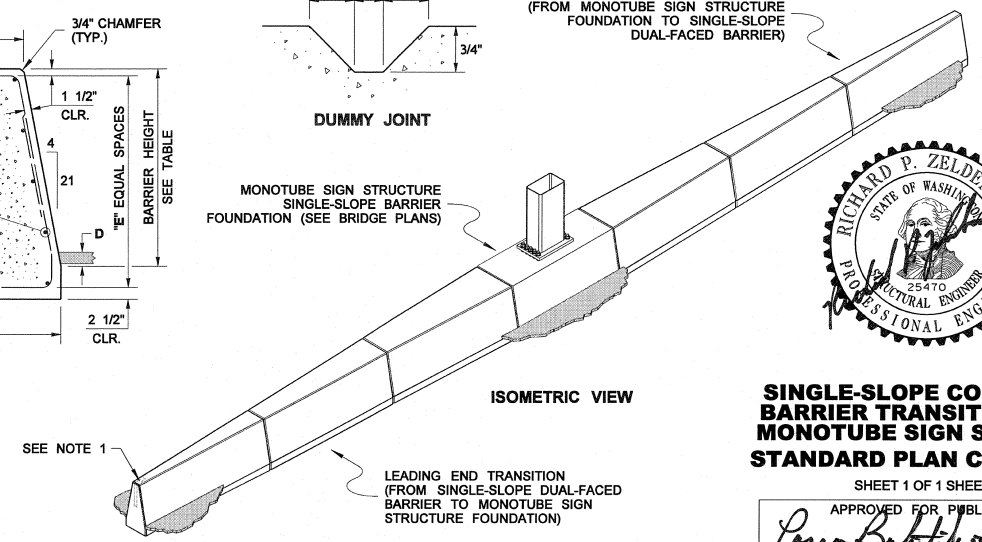

ISOMETRIC VIEW

TABLE							
GRADE SEPARATION	BARRIER HEIGHT	A	B	C	D	E	HORIZONTAL BARS (QTY.)
0 TO 5"	3'- 6"	8"	2'- 0"	4'- 10"	3" MIN.	4	10
UP TO 7"	4'- 0"	9 1/8"	2'- 2 1/4"	5'- 0 1/4"	7" MIN.	5	12
UP TO 10"	4'- 6"	10 1/4"	2'- 4 1/2"	5'- 2 1/2"	10" MIN.	6	14

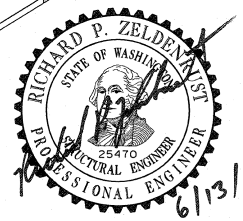

SINGLE-SLOPE CONCRETE BARRIER TRANSITION FOR MONOTUBE SIGN SUPPORT

STANDARD PLAN C-85.18-00

SHEET 1 OF 1 SHEET

APPROVED FOR PUBLICATION

STATE DESIGN ENGINEER — DATE

Washington State Department of Transportation

DRAWN BY: LISA CYFORD

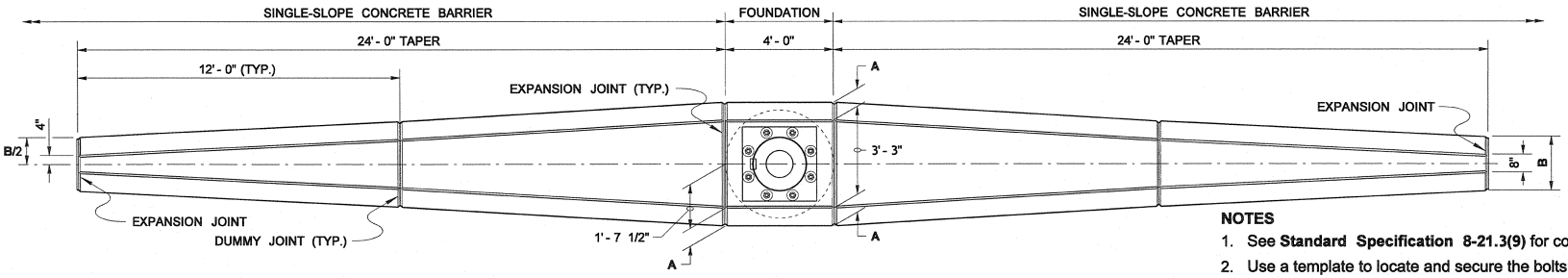

PLAN

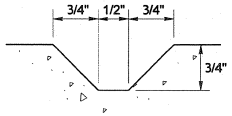

DUMMY JOINT

NOTES

1. See **Standard Specification 8-21.3(9)** for construction requirements.
2. Use a template to locate and secure the bolts during foundation installation.
3. When connecting between cast-in-place and precast Single-Slope Barrier, provide a Connection Blockout and Rebar Grid as shown in **Standard Plan C-13.**
4. Grounding Conductor shall be non-insulated #4 AWG stranded copper, provide a 3' - 0" slack. Clamp steel reinforcing bar with connector suitable for use embedded in concrete.
5. Install Conduit Coupling flush with top of Barrier. Do not glue PVC stubout.

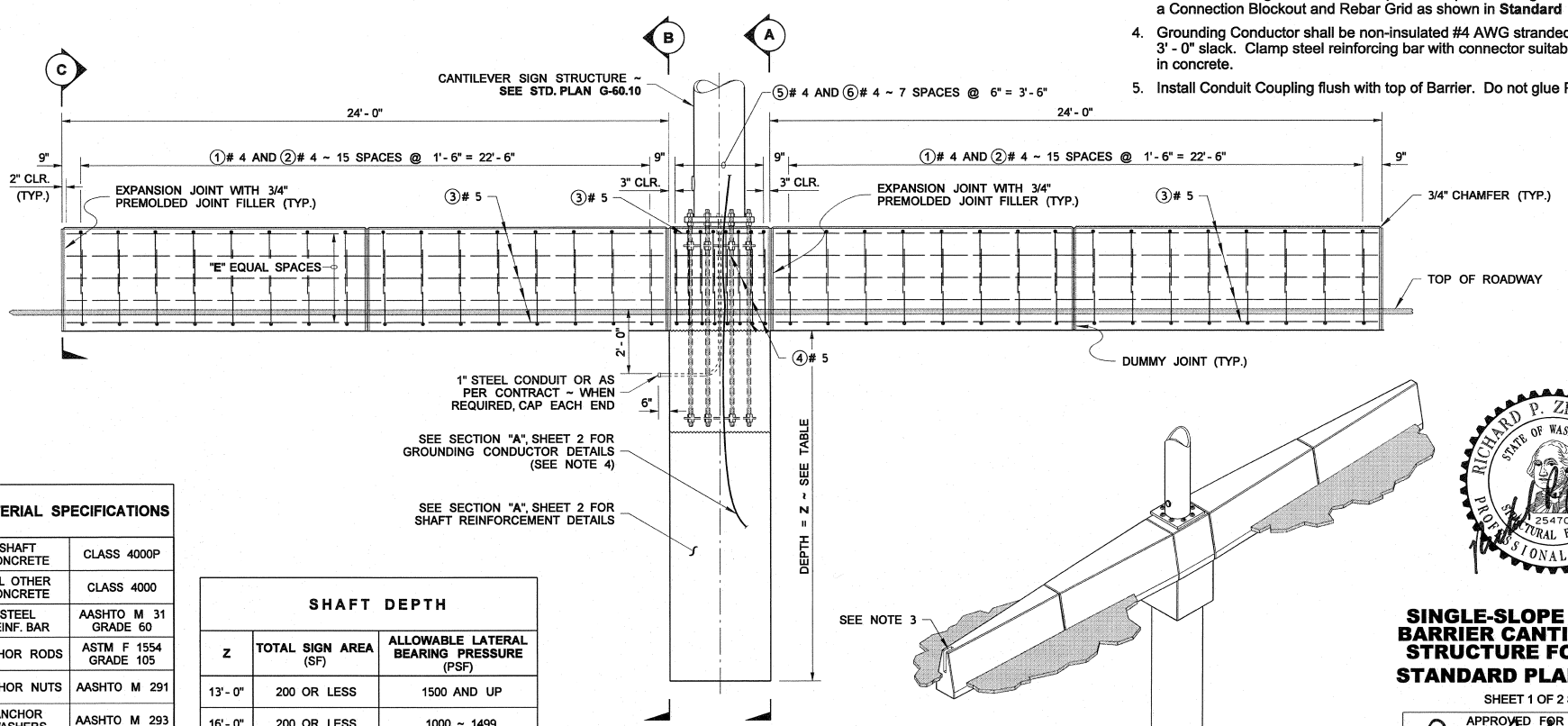

ELEVATION

ISOMETRIC

MATERIAL SPECIFICATIONS	
SHAFT CONCRETE	CLASS 4000P
ALL OTHER CONCRETE	CLASS 4000
STEEL REINF. BAR	AASHTO M 31 GRADE 60
ANCHOR RODS	ASTM F 1554 GRADE 105
ANCHOR NUTS	AASHTO M 291
ANCHOR WASHERS	AASHTO M 293
ANCHORAGE GALVANIZING	AASHTO M 232
STEEL PLATE	ASTM A 36

SHAFT DEPTH		
Z	TOTAL SIGN AREA (SF)	ALLOWABLE LATERAL BEARING PRESSURE (PSF)
13' - 0"	200 OR LESS	1500 AND UP
16' - 0"	200 OR LESS	1000 ~ 1499
18' - 0"	200 ~ 400	1500 AND UP
22' - 0"	200 ~ 400	1000 ~ 1499

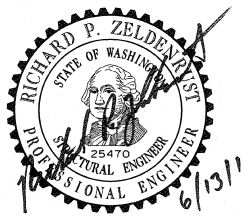

SINGLE-SLOPE CONCRETE BARRIER CANTILEVER SIGN STRUCTURE FOUNDATION

STANDARD PLAN C-85.20-00

SHEET 1 OF 2 SHEETS

APPROVED FOR PUBLICATION

STATE DESIGN ENGINEER — DATE 6/16/11

Washington State Department of Transportation

DRAWN BY: LISA CYFORD

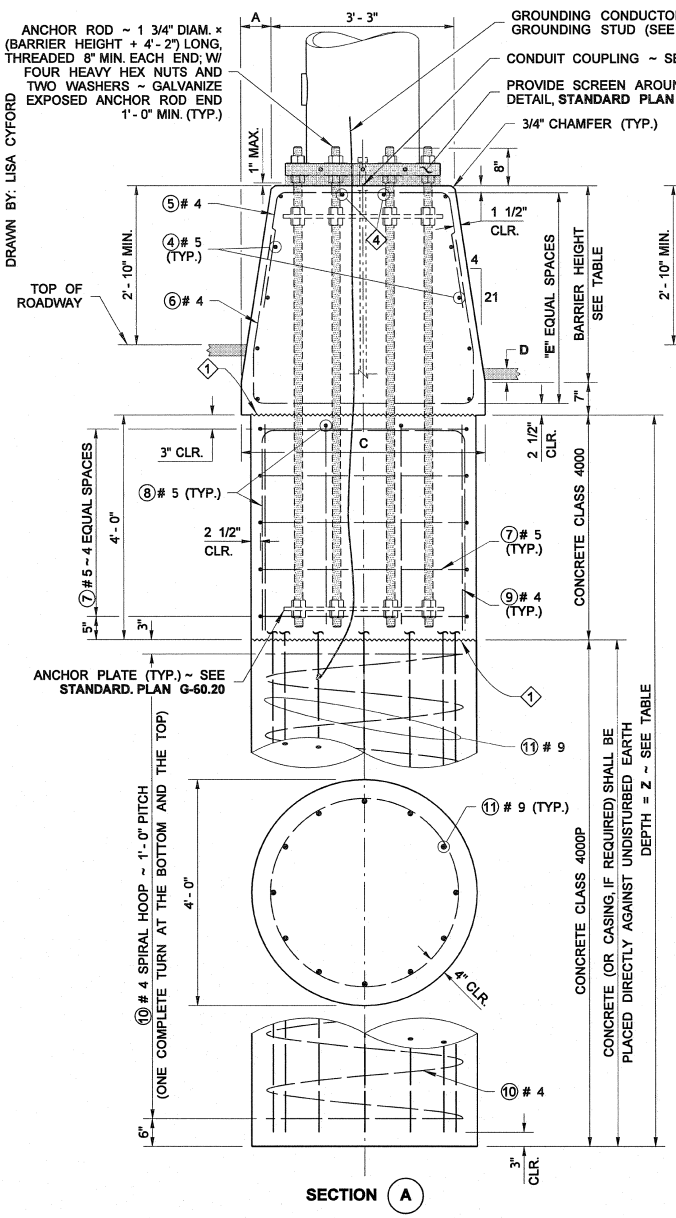

SECTION (A)

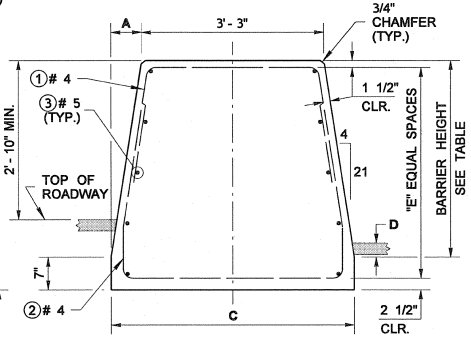

SECTION (B)

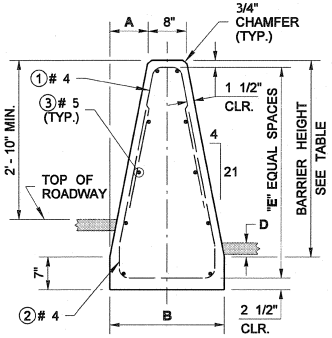

SECTION (C)

TABLE							
GRADE SEPARATION	BARRIER HEIGHT	A	B	C	D	E	Q
0 TO 5"	3'-6"	8"	2'-0"	4'-7"	3" MIN.	4	10 ◇4
UP TO 7"	4'-0"	9 1/8"	2'-2 1/4"	4'-9 1/4"	7" MIN.	5	12 ◇4
UP TO 10"	4'-6"	10 1/4"	2'-4 1/2"	4'-11 1/2"	10" MIN.	6	14 ◇4

BAR LIST					
MARK NO.	LOCATION	QTY.	LENGTH	SIZE	TYPE
①	BARRIER ~ TOP VERTICAL	32	VARIES	# 4	
②	BARRIER ~ BOTTOM VERTICAL	32	VARIES	# 4	
③	BARRIER ~ HORIZONTAL	◇2	23'-8"	# 5	STR.
④	BARRIER ~ HORIZONTAL	◇2	3'-8"	# 5	STR.
⑤	BARRIER ~ TOP VERTICAL	8	VARIES	# 4	
⑥	BARRIER ~ BOTTOM VERTICAL	8	VARIES	# 4	
⑦	CAP ~ HOOP	5	15'-9"	# 5	
⑧	CAP ~ TOP	4	10'-10"	# 5	
⑨	CAP ~ VERTICAL, EACH CORNER	4	3'-4"	# 4	STR.
⑩	SHAFT ~ SPIRAL	1 ◇3	AS REQ'D	# 4	
⑪	SHAFT ~ VERTICAL	12	"Z" MINUS CLEARANCES	# 9	STR.

◇1 CONSTRUCTION JOINT WITH ROUGHENED SURFACE

◇2 SEE TABLE, THIS SHEET, COLUMN "Q"

◇3 IF JOINING TWO SPIRALS, SEE LAP SPLICE DETAIL, STANDARD PLAN G-60.20, SHEET 2

◇4 ADD TWO ④ #5 BARS, EQUALLY SPACED, AT THE TOP OF THE FOUNDATION BARRIER

BENDING DIAGRAM

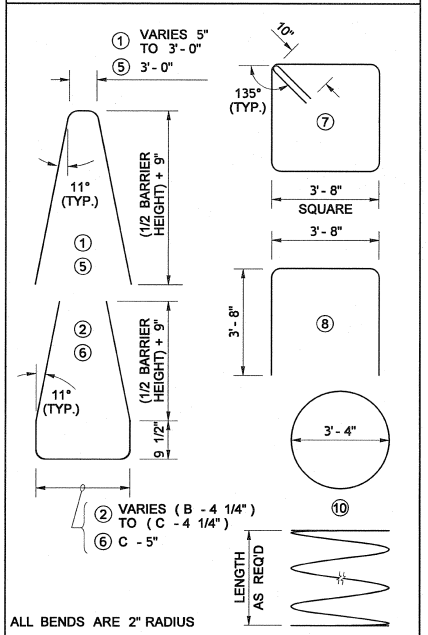

ALL BENDS ARE 2" RADIUS
ALL DIMENSIONS ARE OUT TO OUT

RICHARD P. ZELDENRUST — STATE OF WASHINGTON — 25470 — STRUCTURAL ENGINEER — PROFESSIONAL ENGINEER
6/13/11

SINGLE-SLOPE CONCRETE BARRIER CANTILEVER SIGN STRUCTURE FOUNDATION

STANDARD PLAN C-85.20-00

SHEET 2 OF 2 SHEETS

APPROVED FOR PUBLICATION

STATE DESIGN ENGINEER — DATE 6/14/11

Washington State Department of Transportation

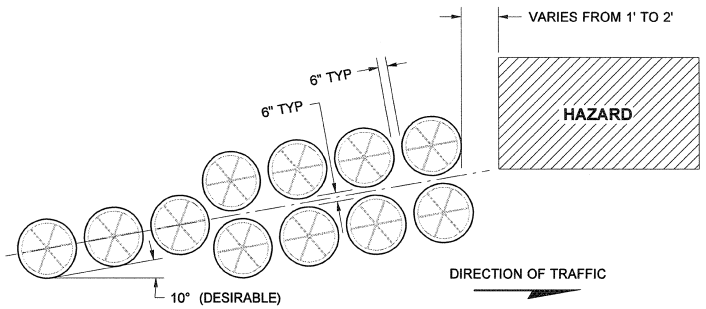

ROADSIDE INSTALLATION DETAIL

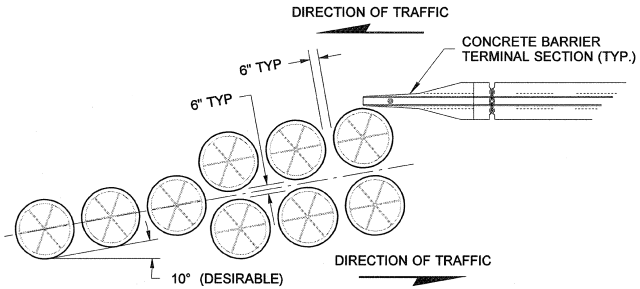

MEDIAN INSTALLATION DETAIL

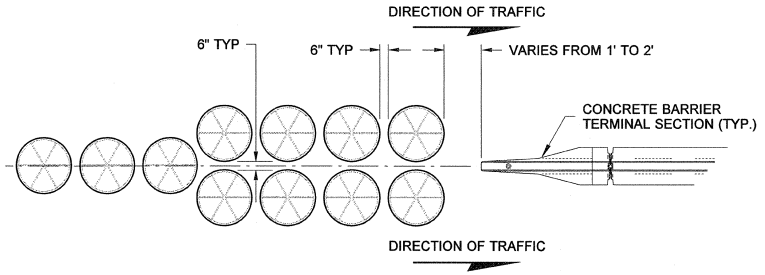

GORE INSTALLATION DETAIL

INSTALLATION DETAILS

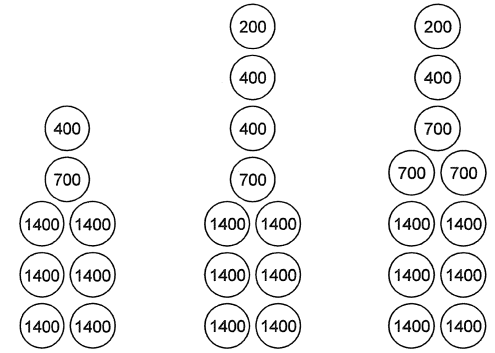

TYPE 1 POSTED SPEED 40 MPH OR LESS

TYPE 2 POSTED SPEED 45 MPH

TYPE 3 POSTED SPEED 50 MPH

PLAN VIEW

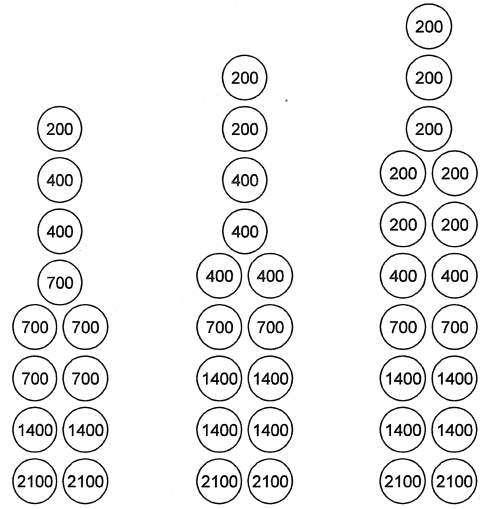

TYPE 4 POSTED SPEED 55 MPH

TYPE 5 POSTED SPEED 60 MPH

TYPE 6 POSTED SPEED 70 MPH

PLAN VIEW

ATTENUATOR CONFIGURATIONS

(NUMBERS INSIDE BARRELS INDICATE LBS.)

NOTES

1. Approved Inertial Barrier Systems (sand barrel arrays) are listed in the Qualified Products List and shall be installed in accordance with the manufacturer's recommendations. When products not listed on the Qualified Products List are considered, a Request of Approval of Materials (RAM) form is required.
2. For temporary installations, the inertial barriers may be placed on wood pallets that are 4" or less in height.

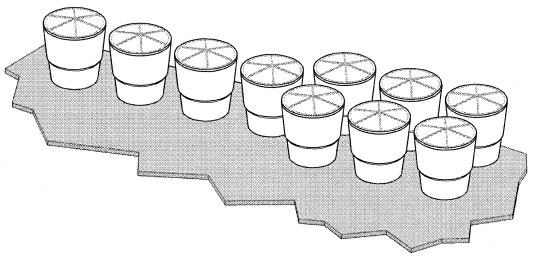

EXAMPLE CONFIGURATION

RICHARD BARSTOW ALBIN
STATE OF WASHINGTON
34042
REGISTERED
PROFESSIONAL ENGINEER
6/10/2008

EXPIRES JULY 24, 2008

IMPACT ATTENUATOR INERTIAL BARRIER CONFIGURATIONS STANDARD PLAN C-90.10-00

SHEET 1 OF 1 SHEET

APPROVED FOR PUBLICATION

STATE DESIGN ENGINEER — DATE 7/3/08

Washington State Department of Transportation

This page left blank intentionally.

DRAWN BY: ADAM COCHRAN

WALL HT H	TYPE 2A					TYPE 2B					TYPE 2C					TYPE 2D					WALL HT H
	W	t	BARS "A"&"F"	BAR "B"	BARS "D"&"E"	W	t	BARS "A"&"F"	BAR "B"	BARS "D"&"E"	W	t	BARS "A"&"F"	BAR "B"	BARS "D"&"E"	W	t	BARS "A"&"F"	BAR "B"	BARS "D"&"E"	
6' - 0"	2' - 0"	5"	3 ~ #4	#4 @ 18"	#3 @ 15"	2' - 3"	5"	3 ~ #4	#4 @ 18"	#3 @ 12"	2' - 0"	5"	3 ~ #4	#4 @ 18"	#3 @ 15"	2' - 6"	5"	3 ~ #4	#4 @ 18"	#3 @ 11"	6' - 0"
8' - 0"	2' - 3"	5"	3 ~ #4	#4 @ 18"	#3 @ 12"	2' - 9"	5"	3 ~ #4	#4 @ 18"	#4 @ 15"	2' - 6"	5"	3 ~ #4	#4 @ 18"	#3 @ 10"	3' - 3"	5"	5 ~ #4	#4 @ 18"	#4 @ 12"	8' - 0"
10' - 0"	2' - 6"	5"	3 ~ #4	#4 @ 18"	#3 @ 9"	3' - 3"	5"	5 ~ #4	#4 @ 18"	#4 @ 10"	2' - 9"	5"	3 ~ #4	#4 @ 18"	#4 @ 12"	3' - 6"	5"	5 ~ #4	#4 @ 18"	#4 @ 10"	10' - 0"
12' - 0"	3' - 0"	5"	3 ~ #4	#4 @ 18"	#4 @ 12"	3' - 9"	5"	5 ~ #4	#4 @ 18"	#4 @ 10"	3' - 3"	5"	3 ~ #4	#4 @ 18"	#4 @ 10"	4' - 3"	5"	5 ~ #4	#4 @ 18"	#5 @ 12"	12' - 0"
14' - 0"	3' - 3"	5"	3 ~ #4	#4 @ 18"	#4 @ 10"	4' - 3"	5"	5 ~ #4	#4 @ 18"	#5 @ 11"	3' - 9"	5"	3 ~ #4	#4 @ 18"	#4 @ 9"	4' - 9"	5"	5 ~ #4	#4 @ 18"	#5 @ 8"	14' - 0"
16' - 0"	3' - 9"	5"	5 ~ #4	#4 @ 18"	#4 @ 9"	4' - 9"	5"	5 ~ #4	#4 @ 18"	#6 @ 12"	4' - 3"	5"	5 ~ #4	#4 @ 18"	#5 @ 11"	5' - 6"	5"	5 ~ #4	#4 @ 18"	#6 @ 9"	16' - 0"
18' - 0"	4' - 0"	5"	5 ~ #4	#4 @ 18"	#5 @ 11"	5' - 3"	5"	5 ~ #4	#4 @ 18"	#6 @ 9"	4' - 6"	5"	5 ~ #4	#4 @ 18"	#6 @ 12"	6' - 0"	6"	5 ~ #4	#4 @ 18"	#6 @ 9"	18' - 0"
20' - 0"	5' - 0"	5"	5 ~ #4	#4 @ 18"	#5 @ 9"	6' - 0"	6"	5 ~ #4	#4 @ 18"	#6 @ 9"	5' - 3"	5"	5 ~ #4	#4 @ 18"	#6 @ 10"	6' - 6"	6"	5 ~ #4	#4 @ 12"	#6 @ 7 1/4"	20' - 0"
22' - 0"	5' - 6"	5"	5 ~ #4	#4 @ 18"	#5 @ 7"	6' - 3"	6"	5 ~ #4	#4 @ 12"	#6 @ 8"	5' - 9"	6"	5 ~ #4	#4 @ 18"	#6 @ 9"	7' - 0"	7"	5 ~ #4	#4 @ 11"	#6 @ 7"	22' - 0"
24' - 0"	6' - 0"	5"	5 ~ #4	#4 @ 15"	#5 @ 6"	6' - 9"	7"	5 ~ #4	#4 @ 11"	#6 @ 8"	6' - 3"	6"	5 ~ #4	#4 @ 12"	#6 @ 8"	7' - 6"	7"	5 ~ #4	#4 @ 9"	#6 @ 6 1/4"	24' - 0"

t = WALL THICKNESS

NOTES

1. Wall to be designated Noise Barrier Wall Type 2A, 2B, 2C or 2D. The Contract specifies actual wall designations.
2. For intermediate wall heights not listed, use the next higher H.
3. Panels shall have at least 3 feet of level ground on each side.
4. Construction joints in the footing shall be spaced at 120 feet maximum.

WIND EXPOSURE & VELOCITY		
NOISE BARRIER TYPE	WIND EXPOSURE	WIND VELOCITY (MPH)
2A	B1	80
2B	B1	90
2C	B2	80
2D	B2	90

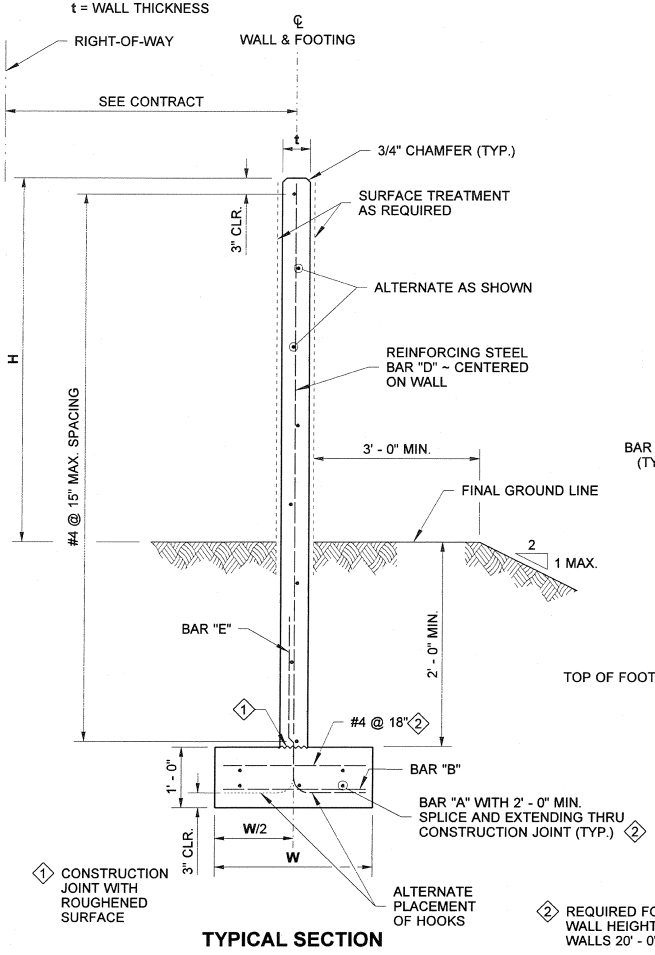

TYPICAL SECTION

2 REQUIRED FOR WALLS 24' - 0" ~ TYPE 2C, WALL HEIGHT 22' - 0" & 24' - 0" ~ TYPE 2B & WALLS 20' - 0", 22' - 0" & 24' - 0" ~ TYPE 2D

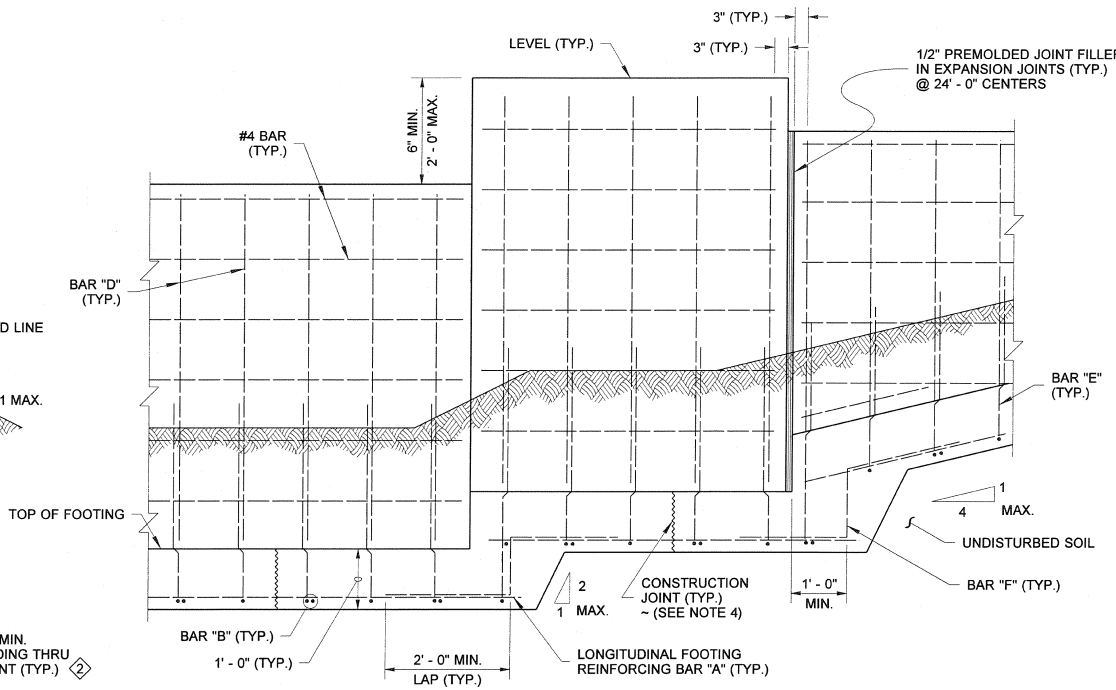

ELEVATION

CAST-IN-PLACE CONCRETE WALL ON SPREAD FOOTING

BIJAN KHALEGHI STATE OF WASHINGTON 27695 REGISTERED PROFESSIONAL ENGINEER

EXPIRES AUGUST 23, 2006

NOISE BARRIER WALL TYPE 2

STANDARD PLAN D-2.04-00

SHEET 1 OF 2 SHEETS

APPROVED FOR PUBLICATION

Harold Petersen 11-10-05

STATE DESIGN ENGINEER — DATE

Washington State Department of Transportation

DRAWN BY: ADAM COCHRAN

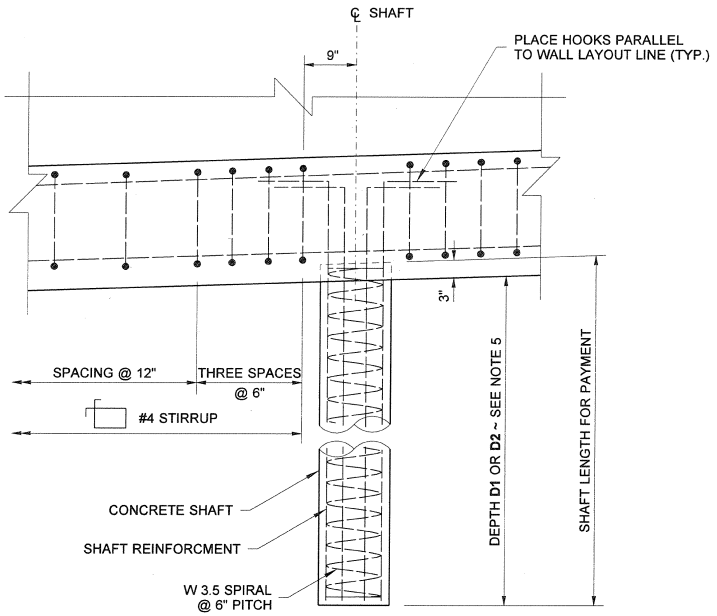

DETAIL "B"

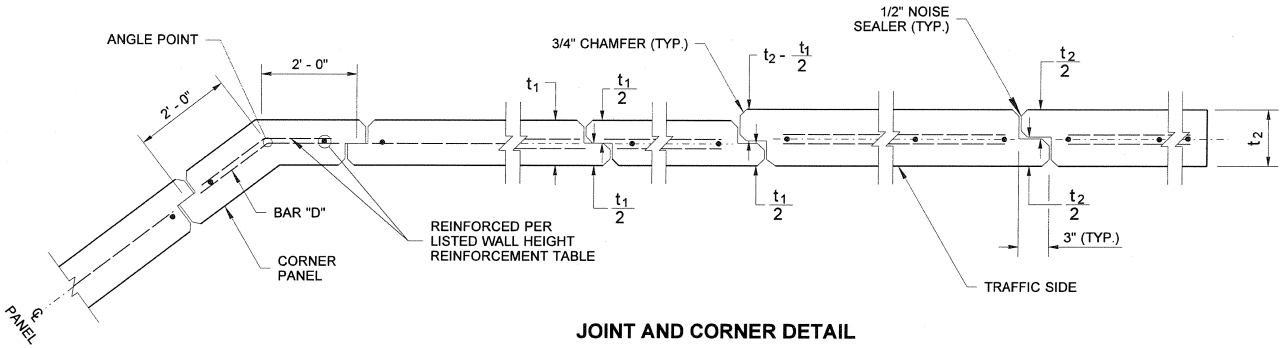

JOINT AND CORNER DETAIL

CAST-IN-PLACE CONCRETE WALL ON SHAFT FOUNDATION

BIJAN KHALEGHI
STATE OF WASHINGTON
11/9/05
27695
REGISTERED
PROFESSIONAL ENGINEER

EXPIRES AUGUST 23, 2006

NOISE BARRIER WALL TYPE 4

STANDARD PLAN D-2.08-00

SHEET 2 OF 2 SHEETS

APPROVED FOR PUBLICATION

Harold Peterseo 11.10.05

STATE DESIGN ENGINEER DATE

Washington State Department of Transportation

DRAWN BY: ADAM COCHRAN

WALL HT H	TYPE 6A				TYPE 6B				TYPE 6C				TYPE 6D				WALL HT H
	W	X	BARS "B"&"C"	BARS "D"&"E"	W	X	BARS "B"&"C"	BARS "D"&"E"	W	X	BARS "B"&"C"	BARS "D"&"E"	W	X	BARS "B"&"C"	BARS "D"&"E"	
6' - 0"	5' - 6"	3"	#4 @ 12"	#4 @ 12"	5' - 6"	3"	#4 @ 12"	#4 @ 12"	5' - 6"	3"	#4 @ 12"	#4 @ 12"	5' - 6"	3"	#4 @ 12"	#4 @ 12"	6' - 0"
8' - 0"	5' - 3"	3"	#4 @ 12"	#4 @ 12"	5' - 3"	3"	#4 @ 12"	#4 @ 12"	5' - 3"	3"	#4 @ 12"	#4 @ 12"	5' - 3"	3"	#4 @ 12"	#4 @ 12"	8' - 0"
10' - 0"	5' - 3"	3"	#4 @ 12"	#4 @ 12"	5' - 3"	3"	#4 @ 12"	#4 @ 12"	5' - 3"	3"	#4 @ 12"	#4 @ 12"	5' - 3"	3"	#4 @ 12"	#4 @ 12"	10' - 0"
12' - 0"	5' - 0"	3"	#4 @ 12"	#4 @ 12"	5' - 0"	3"	#4 @ 12"	#4 @ 12"	5' - 0"	3"	#4 @ 12"	#4 @ 12"	5' - 0"	3"	#4 @ 12"	#4 @ 12"	12' - 0"
14' - 0"	4' - 9"	3"	#4 @ 12"	#4 @ 12"	5' - 0"	3"	#4 @ 11"	#4 @ 11"	4' - 9"	3"	#4 @ 12"	#4 @ 12"	5' - 3"	3"	#4 @ 10"	#4 @ 10"	14' - 0"
16' - 0"	5' - 0"	3"	#4 @ 12"	#4 @ 12"	5' - 0"	3"	#4 @ 10"	#4 @ 10"	5' - 0"	3"	#4 @ 10"	#4 @ 10"	5' - 6"	3"	#4 @ 12"	#5 @ 12"	16' - 0"
18' - 0"	5' - 0"	3"	#4 @ 10"	#4 @ 10"	5' - 3"	3' - 0"	#4 @ 12"	#5 @ 12"	5' - 0"	3' - 0"	#4 @ 10"	#4 @ 10"	5' - 9"	3"	#4 @ 9"	#5 @ 9"	18' - 0"

WIND EXPOSURE & VELOCITY		
NOISE BARRIER TYPE	WIND EXPOSURE	WIND VELOCITY (MPH)
6A	B1	80
6B	B1	90
6C	B2	80
6D	B2	90

NOTES

1. Wall to be designated Noise Barrier Wall Type 6A, 6B, 6C or 6D. The Contract specifies actual wall designations.
2. For intermediate wall heights, use the next higher H.
3. Panels shall have at least 3 feet of level ground on each side.
4. Construction joints in the foundation shall be spaced at 120 feet maximum.

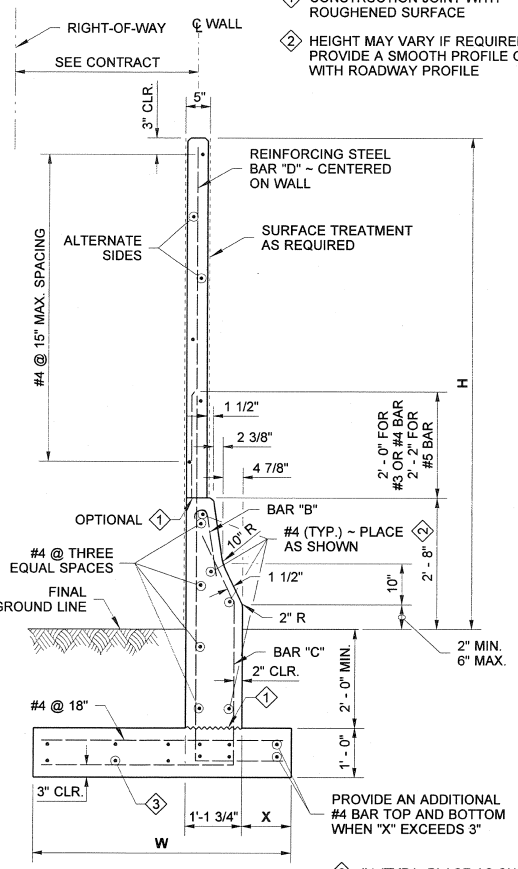

TYPICAL SECTION

3 #4 (TYP.) PLACE AS SHOWN WITH 2' - 0" SPLICE AND EXTENDING THRU CONSTRUCTION JOINTS

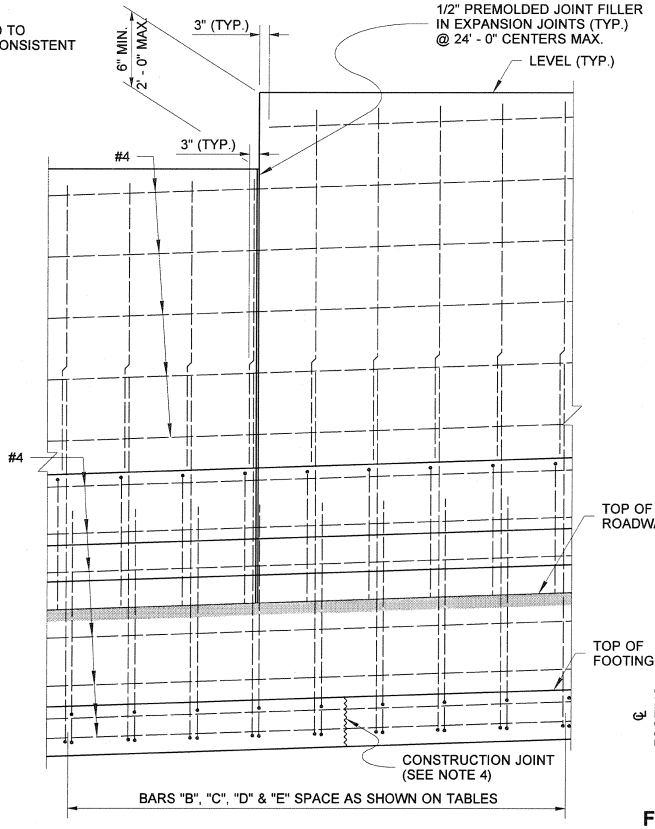

ELEVATION

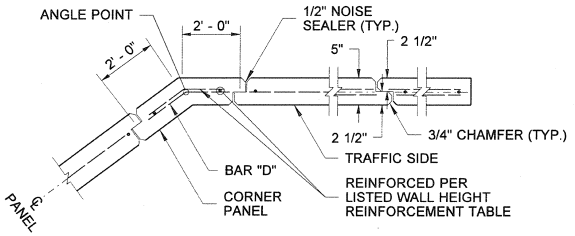

JOINT AND CORNER DETAIL

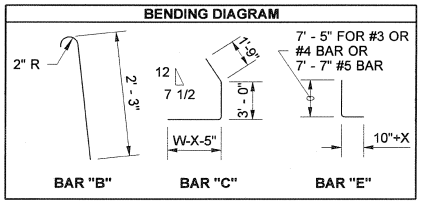

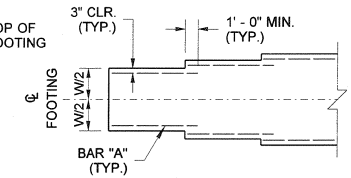

FOOTING WIDTH TRANSITION DETAIL

(FOR LOCATIONS WITHOUT FOOTING STEP)

CAST-IN-PLACE CONCRETE WALL W/ TRAFFIC BARRIER ON SPREAD FOOTING

BIJAN KHALEGHI STATE OF WASHINGTON 27695 REGISTERED PROFESSIONAL ENGINEER 11/9/05

EXPIRES AUGUST 23, 2006

NOISE BARRIER WALL TYPE 6

STANDARD PLAN D-2.14-00

SHEET 1 OF 1 SHEET

APPROVED FOR PUBLICATION

Harold Pitzpeso 11·10·05

STATE DESIGN ENGINEER — DATE

Washington State Department of Transportation

DRAWN BY: ADAM COCHRAN

WALL HT H	TYPE 7SSA BARS "B"&"C"	TYPE 7SSB BARS "B"&"C"	TYPE 7SSC BARS "B"&"C"	TYPE 7SSD BARS "B"&"C"	WALL HT H
6' - 0"	#4 @ 15"	#4 @ 15"	#4 @ 15"	#4 @ 15"	6' - 0"
8' - 0"	#4 @ 15"	#4 @ 15"	#4 @ 15"	#4 @ 15"	8' - 0"
10' - 0"	#4 @ 15"	#4 @ 15"	#4 @ 15"	#4 @ 15"	10' - 0"
12' - 0"	#4 @ 15"	#4 @ 15"	#4 @ 15"	#4 @ 12"	12' - 0"
14' - 0"	#4 @ 15"	#4 @ 11"	#4 @ 14"	#4 @ 10"	14' - 0"
16' - 0"	#4 @ 14"	#4 @ 10"	#4 @ 10"	#5 @ 12"	16' - 0"
18' - 0"	#4 @ 12"	#5 @ 12"	#4 @ 10"	#5 @ 9"	18' - 0"

BENDING DIAGRAM

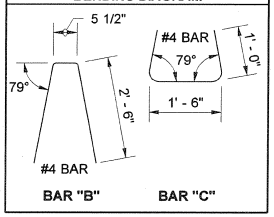

WIND EXPOSURE & VELOCITY		
NOISE BARRIER TYPE	WIND EXPOSURE	WIND VELOCITY (MPH)
7SSA	B1	80
7SSB	B1	90
7SSC	B2	80
7SSD	B2	90

SOIL TYPE	
SOIL TYPE	ANGLE OF INTERNAL FRICTION ϕ (DEGREES)
D1	32
D2	38

NOTES

1. Wall to be designated Noise Barrier Wall Type 7SSA, 7SSB, 7SSC or 7SSD. The Contract specifies actual wall designations.
2. For intermediate wall heights, use the next higher H.
3. Panels shall have at least 3 feet of level ground on each side.
4. The Contract specifies actual foundation requirements D1 or D2.

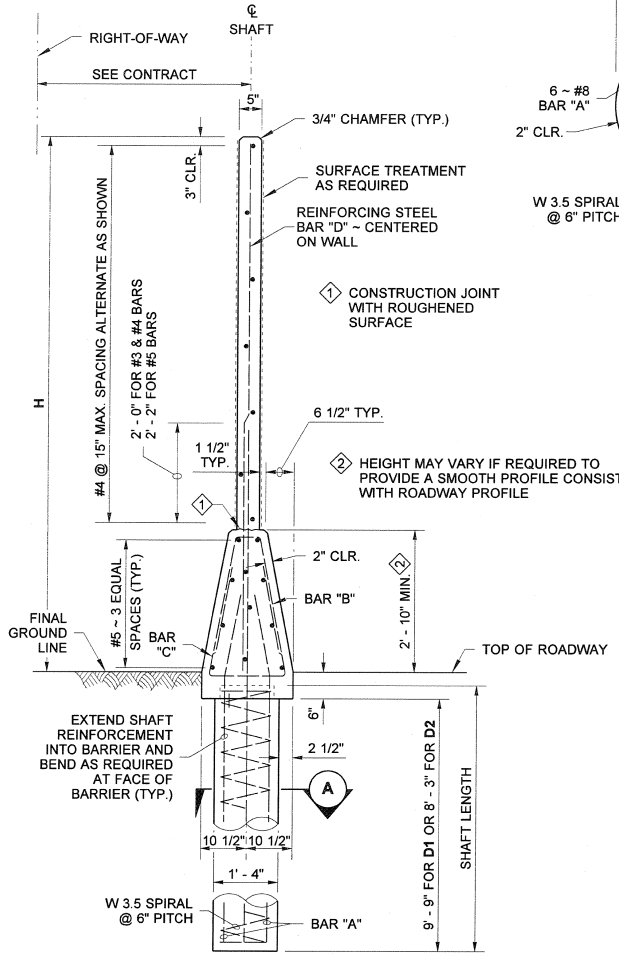

SECTION

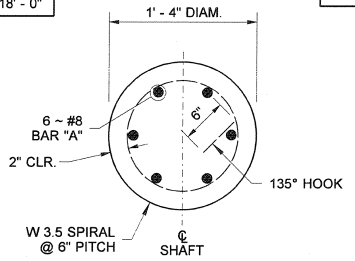

SECTION A

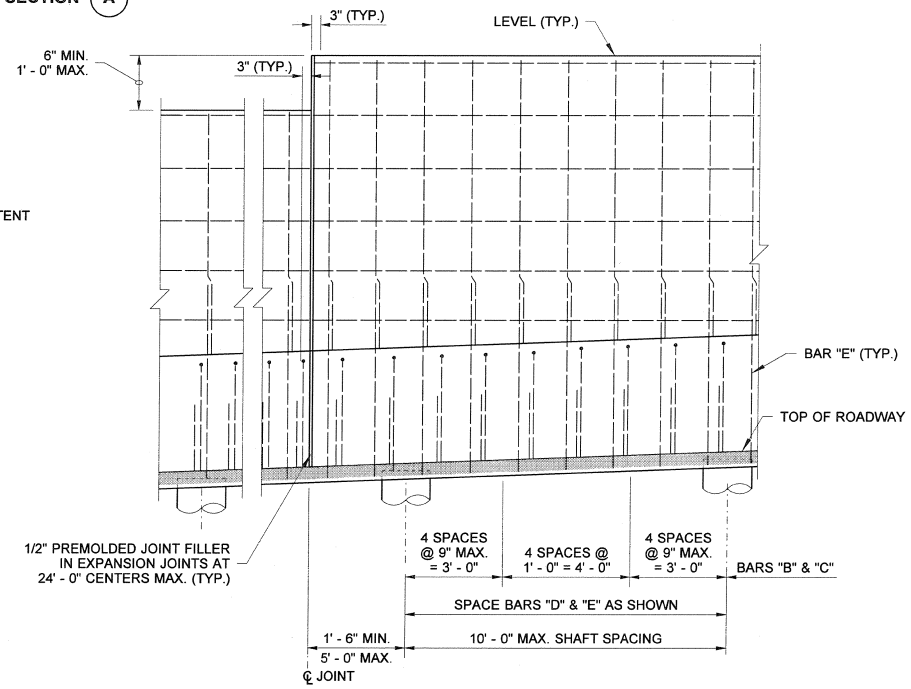

ELEVATION

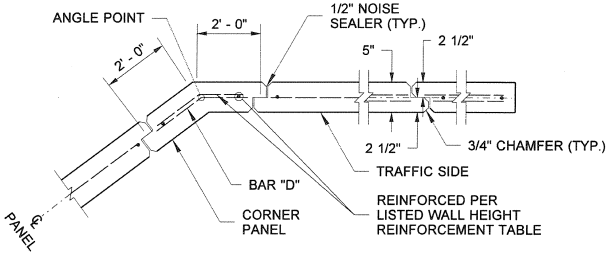

JOINT AND CORNER DETAIL

CAST-IN-PLACE CONC. WALL W/ SINGLE SLOPE TRAFFIC BARRIER ON SHAFT FOUNDATION

BIJAN KHALEGHI
STATE OF WASHINGTON
11/9/05
27695
REGISTERED PROFESSIONAL ENGINEER

EXPIRES AUGUST 23, 2006

NOISE BARRIER WALL TYPE 7SS

STANDARD PLAN D-2.20-00

SHEET 1 OF 1 SHEET

APPROVED FOR PUBLICATION

Harold Petitpas 11.10.05

STATE DESIGN ENGINEER — DATE

Washington State Department of Transportation

DRAWN BY: ADAM COCHRAN

WALL HT H	TYPE 9A						TYPE 9B						TYPE 9C						TYPE 9D						WALL HT H
	W	BARS "A"&"F"	t	BAR "B"	SPIRAL BAR "G"	BARS "D"&"H"	W	BARS "A"&"F"	t	BAR "B"	SPIRAL BAR "G"	BARS "D"&"H"	W	BARS "A"&"F"	t	BAR "B"	SPIRAL BAR "G"	BARS "D"&"H"	W	BARS "A"&"F"	t	BAR "B"	SPIRAL BAR "G"	BARS D & H	
6' - 0"	2' - 0"	3 ~ #4	5"	#4 @ 18"	W2.0 @ 2"	#3 @ 15"	2' - 3"	3 ~ #4	5"	#4 @ 18"	W2.0 @ 2"	#3 @ 12"	2' - 0"	3 ~ #4	5"	#4 @ 18"	W2.0 @ 2"	#3 @ 15"	2' - 6"	3 ~ #4	5"	#4 @ 18"	W2.0 @ 2"	#3 @ 11"	6' - 0"
8' - 0"	2' - 3"	3 ~ #4	5"	#4 @ 18"	W2.0 @ 2"	#3 @ 12"	2' - 9"	3 ~ #4	5"	#4 @ 18"	W3.0 @ 2"	#4 @ 15"	2' - 6"	3 ~ #4	5"	#4 @ 18"	W2.0 @ 2"	#3 @ 10"	3' - 3"	5 ~ #4	5"	#4 @ 18"	W3.0 @ 2"	#4 @ 12"	8' - 0"
10' - 0"	2' - 6"	3 ~ #4	5"	#4 @ 18"	W2.0 @ 2"	#3 @ 9"	3' - 3"	5 ~ #4	5"	#4 @ 18"	W3.0 @ 2"	#4 @ 10"	2' - 9"	3 ~ #4	5"	#4 @ 18"	W3.0 @ 2"	#4 @ 12"	3' - 6"	5 ~ #4	5"	#4 @ 18"	W3.0 @ 2"	#4 @ 10"	10' - 0"
12' - 0"	3' - 0"	5 ~ #4	5"	#4 @ 18"	W3.0 @ 2"	#4 @ 12"	3' - 9"	5 ~ #4	5"	#4 @ 18"	W3.0 @ 2"	#4 @ 10"	3' - 3"	5 ~ #4	5"	#4 @ 18"	W3.0 @ 2"	#4 @ 10"	4' - 3"	5 ~ #4	5"	#4 @ 18"	W3.0 @ 1 3/4"	#5 @ 12"	12' - 0"
14' - 0"	3' - 3"	5 ~ #4	5"	#4 @ 18"	W3.0 @ 2"	#4 @ 10"	4' - 3"	5 ~ #4	5"	#4 @ 18"	W3.0 @ 1 3/4"	#5 @ 11"	3' - 9"	5 ~ #4	5"	#4 @ 18"	W3.0 @ 2"	#4 @ 9"	4' - 9"	5 ~ #4	5"	#4 @ 18"	W3.0 @ 1 3/4"	#5 @ 8"	14' - 0"
16' - 0"	3' - 9"	5 ~ #4	5"	#4 @ 18"	W3.0 @ 2"	#4 @ 9"	4' - 9"	5 ~ #4	5"	#4 @ 18"	W4.0 @ 2"	#6 @ 12"	4' - 3"	5 ~ #4	5"	#4 @ 18"	W3.0 @ 1 3/4"	#5 @ 11"	5' - 6"	5 ~ #4	5"	#4 @ 18"	W4.0 @ 2"	#6 @ 9"	16' - 0"
18' - 0"	4' - 0"	5 ~ #4	5"	#4 @ 18"	W3.0 @ 1 3/4"	#5 @ 11"	5' - 3"	5 ~ #4	5"	#4 @ 18"	W4.0 @ 2"	#6 @ 9"	4' - 6"	5 ~ #4	5"	#4 @ 18"	W4.0 @ 2"	#6 @ 12"	6' - 0"	5 ~ #4	6"	#4 @ 18"	W4.0 @ 2"	#6 @ 9"	18' - 0"
20' - 0"	5' - 0"	5 ~ #4	5"	#4 @ 18"	W3.0 @ 1 1/2"	#5 @ 9"	6' - 0"	5 ~ #4	6"	#4 @ 18"	W4.0 @ 2"	#6 @ 9"	5' - 3"	5 ~ #4	5"	#4 @ 18"	W4.0 @ 2"	#6 @ 10"	6' - 6"	6 ~ #4	6"	#4 @ 12"	W4.0 @ 1 3/4"	#6 @ 7"	20' - 0"
22' - 0"	5' - 6"	5 ~ #4	5"	#4 @ 18"	W3.0 @ 1 1/2"	#5 @ 7"	6' - 3"	5 ~ #4	6"	#4 @ 12"	W4.0 @ 1 3/4"	#6 @ 8"	5' - 9"	5 ~ #4	6"	#4 @ 18"	W4.0 @ 2"	#6 @ 9"	7' - 0"	6 ~ #4	7"	#4 @ 12"	W4.0 @ 1 3/4"	#6 @ 7"	22' - 0"
24' - 0"	6' - 0"	5 ~ #4	5"	#4 @ 15"	W3.0 @ 1 1/2"	#5 @ 6"	6' - 9"	5 ~ #4	7"	#4 @ 11"	W4.0 @ 1 3/4"	#6 @ 8"	6' - 3"	5 ~ #4	6"	#4 @ 12"	W4.0 @ 1 3/4"	#6 @ 8"	7' - 6"	6 ~ #4	7"	#4 @ 15"	W4.0 @ 1 1/2"	#6 @ 6"	24' - 0"

t = WALL THICKNESS

WIND EXPOSURE & VELOCITY		
NOISE BARRIER TYPE	WIND EXPOSURE	WIND VELOCITY (MPH)
9A	B1	80
9B	B1	90
9C	B2	80
9D	B2	90

BENDING DIAGRAM

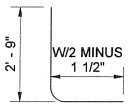

BAR "H"

NOTES

1. Wall to be designated Noise Barrier Wall Type 9A, 9B, 9C or 9D. The Contract specifies actual wall designation.
2. For intermediate wall heights, use the next higher H.
3. Panels shall have at least 3' - 0" of level ground on each side.
4. Construction joints in the footing shall be spaced at 120 feet maximum.
5. All joints shall be in full contact and sealed.

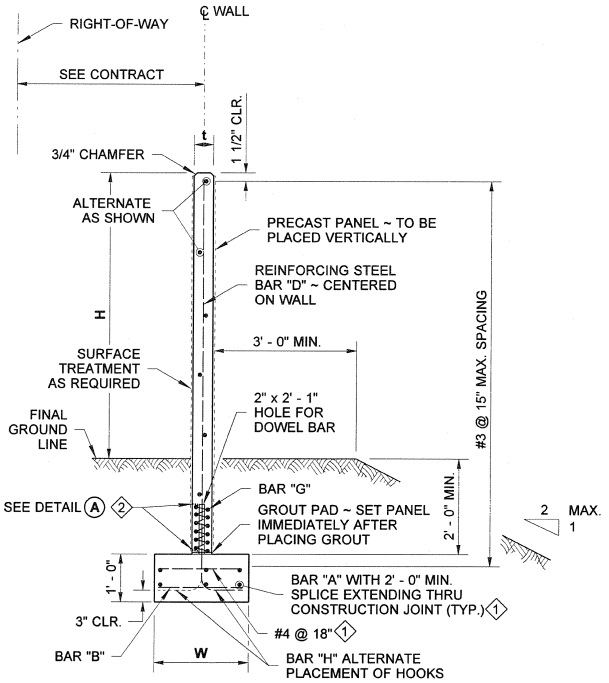

TYPICAL SECTION

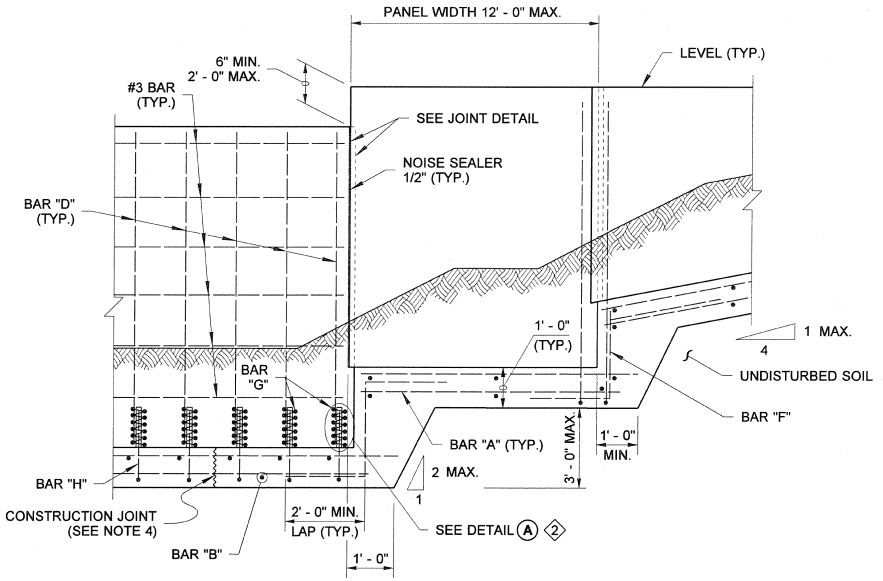

ELEVATION

1 REQUIRED FOR WALL HEIGHT 24' - 0" ~ TYPE 9C, WALLS 22' - 0" & 24' - 0" ~ TYPE 9B & WALLS 20' - 0", 22' - 0" & 24' - 0" ~ TYPE 9D.

PRECAST CONCRETE WALL ON SPREAD FOOTING

EXPIRES AUGUST 23, 2006

NOISE BARRIER WALL TYPE 9

STANDARD PLAN D-2.32-00

SHEET 1 OF 2 SHEETS

APPROVED FOR PUBLICATION

Harold Pitinga 11-10-05

STATE DESIGN ENGINEER — DATE

Washington State Department of Transportation

This page left blank intentionally.

DRAWN BY: ADAM COCHRAN

WALL HT H	TYPE 13A						TYPE 13B						TYPE 13C						TYPE 13D						WALL HT H
	W	X	BARS "B"&"C"	BAR "E"	BAR "D"	BAR "J"	W	X	BARS "B"&"C"	BAR "E"	BAR "D"	BAR "J"	W	X	BARS "B"&"C"	BAR "E"	BAR "D"	BAR "J"	W	X	BARS "B"&"C"	BAR "E"	BAR "D"	BAR "J"	
6' - 0"	5' - 6"	1"	#4 @ 15"	#4 @ 15"	#3 @ 15"	#5 @ 15"	5' - 6"	1"	#4 @ 15"	#4 @ 15"	#3 @ 15"	#5 @ 15"	5' - 6"	1"	#4 @ 15"	#4 @ 15"	#3 @ 15"	#5 @ 15"	5' - 6"	1"	#4 @ 15"	#4 @ 15"	#3 @ 15"	#5 @ 15"	6' - 0"
8' - 0"	5' - 3"	1"	#4 @ 15"	#4 @ 15"	#3 @ 15"	#5 @ 15"	5' - 3"	1"	#4 @ 15"	#4 @ 15"	#3 @ 15"	#5 @ 15"	5' - 3"	1"	#4 @ 15"	#4 @ 15"	#3 @ 15"	#5 @ 15"	5' - 3"	1"	#4 @ 15"	#4 @ 15"	#3 @ 15"	#5 @ 15"	8' - 0"
10' - 0"	5' - 3"	1"	#4 @ 15"	#4 @ 15"	#3 @ 15"	#5 @ 15"	5' - 3"	1"	#4 @ 15"	#4 @ 15"	#3 @ 15"	#5 @ 15"	5' - 3"	1"	#4 @ 15"	#4 @ 15"	#3 @ 15"	#5 @ 15"	5' - 3"	1"	#4 @ 12"	#4 @ 12"	#3 @ 12"	#5 @ 12"	10' - 0"
12' - 0"	5' - 0"	1"	#4 @ 15"	#4 @ 15"	#3 @ 15"	#5 @ 15"	5' - 0"	1"	#4 @ 10"	#4 @ 10"	#3 @ 10"	#5 @ 10"	5' - 0"	1"	#4 @ 12"	#4 @ 12"	#3 @ 12"	#5 @ 15"	5' - 0"	1"	#4 @ 12"	#5 @ 12"	#4 @ 12"	#5 @ 12"	12' - 0"
14' - 0"	4' - 9"	1"	#4 @ 11"	#4 @ 11"	#3 @ 11"	#5 @ 11"	5' - 0"	1"	#4 @ 12"	#5 @ 12"	#4 @ 12"	#5 @ 12"	4' - 9"	1"	#4 @ 12"	#5 @ 12"	#4 @ 12"	#5 @ 11"	5' - 3"	10"	#4 @ 10"	#5 @ 10"	#4 @ 10"	#5 @ 10"	14' - 0"
16' - 0"	5' - 0"	10"	#4 @ 12"	#5 @ 12"	#4 @ 12"	#5 @ 12"	5' - 0"	10"	#4 @ 10"	#5 @ 10"	#4 @ 10"	#5 @ 10"	5' - 0"	10"	#4 @ 10"	#5 @ 10"	#4 @ 10"	#5 @ 12"	5' - 6"	1' - 6"	#4 @ 13"	#5 @ 13"	#5 @ 13"	#5 @ 13"	16' - 0"
18' - 0"	5' - 0"	10"	#4 @ 10"	#5 @ 10"	#4 @ 10"	#5 @ 10"	5' - 3"	1' - 6"	#4 @ 12"	#5 @ 12"	#5 @ 12"	#5 @ 12"	5' - 0"	1' - 0"	#4 @ 10"	#5 @ 10"	#4 @ 10"	#5 @ 10"	5' - 9"	1 - 9"	#4 @ 9"	#5 @ 9"	#5 @ 9"	#5 @ 9"	18' - 0"

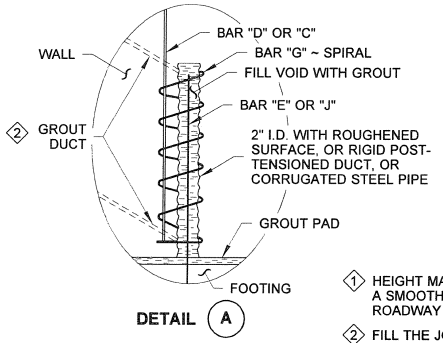

DETAIL (A)

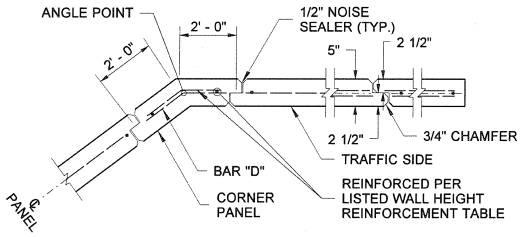

JOINT AND CORNER DETAIL

WIND EXPOSURE & VELOCITY		
NOISE BARRIER TYPE	WIND EXPOSURE	WIND VELOCITY (MPH)
13A	B1	80
13B	B1	90
13C	B2	80
13D	B2	90

NOTES

1. Wall to be designated Noise Barrier Wall Type 13A, 13B, 13C or 13D. The Contract specifies actual wall designations.
2. For intermediate wall heights, use the next higher H.
3. Panels shall have at least 3 feet of level ground on each side.
4. Construction joints in the footing shall be spaced at 120 feet max.
5. All joints shall be in full contact and sealed.
6. The Contract specifies actual foundation requirements D1 or D2.

1 HEIGHT MAY VARY IF REQUIRED TO PROVIDE A SMOOTH PROFILE CONSISTENT WITH THE ROADWAY PROFILE

2 FILL THE JOINT HOLE WITH GROUT USING DUCTS. DUCTS SHALL BE LOCATED ON PANEL FACE OPPOSITE TRAFFIC

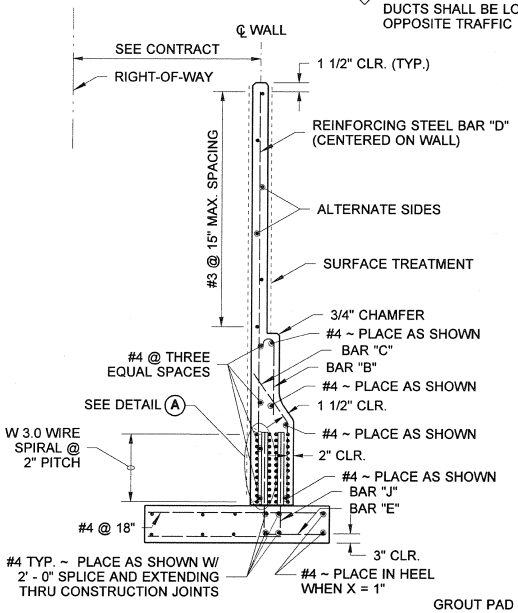

REINFORCEMENT SECTION

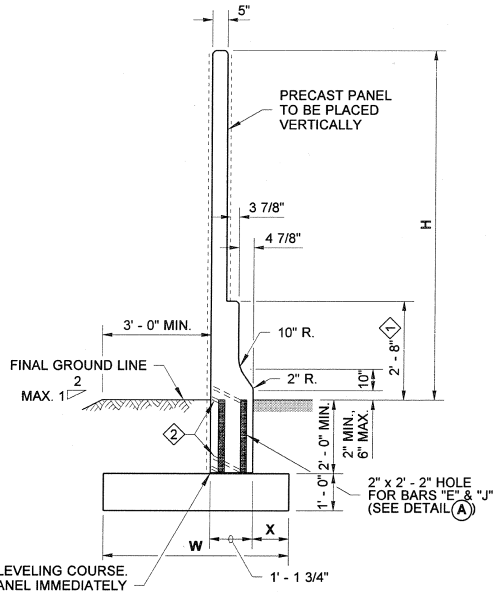

TYPICAL SECTION

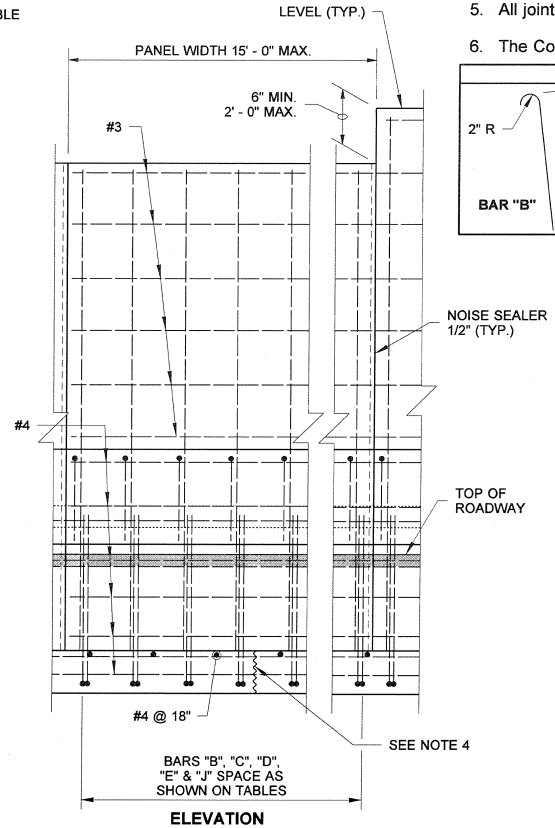

ELEVATION

BENDING DIAGRAM

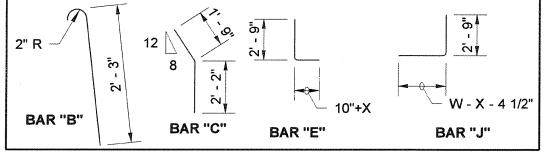

PRECAST CONCRETE WALL W/ TRAFFIC BARRIER ON SPREAD FOOTING

EXPIRES AUGUST 23, 2006

NOISE BARRIER WALL TYPE 13

STANDARD PLAN D-2.42-00

SHEET 1 OF 1 SHEET

APPROVED FOR PUBLICATION

Harold Petrasek 11.10.05

STATE DESIGN ENGINEER — DATE

Washington State Department of Transportation

DRAWN BY: ADAM COCHRAN

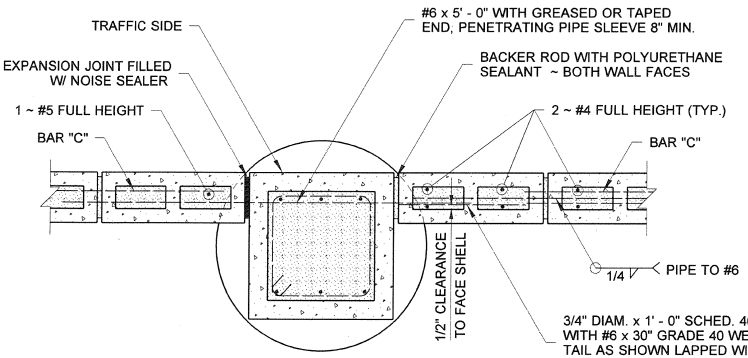

SECTION (D)

TYPICAL EXPANSION JOINT

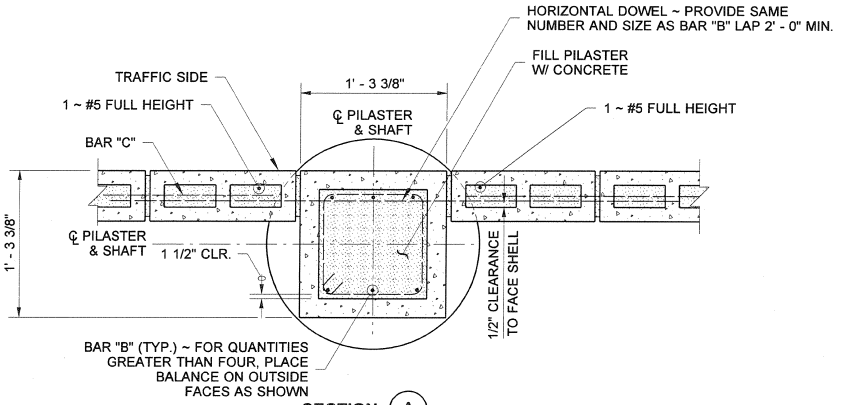

SECTION (A)

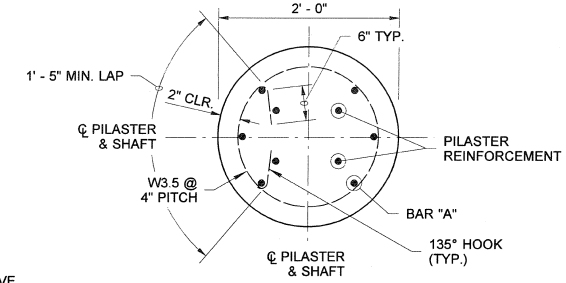

SECTION (B)

NOTE
SPIRAL REINFORCEMENT SHALL BE LAPPED 17" MIN. A 135° HOOK THAT IS HOOKED AROUND A LONGITUDINAL BAR SHALL BE USED TO TERMINATE THE ENDS OF THE SPIRAL REINFORCEMENT AT LAPPED SPLICES AND AT THE TOP AND BOTTOM OF SHAFT.

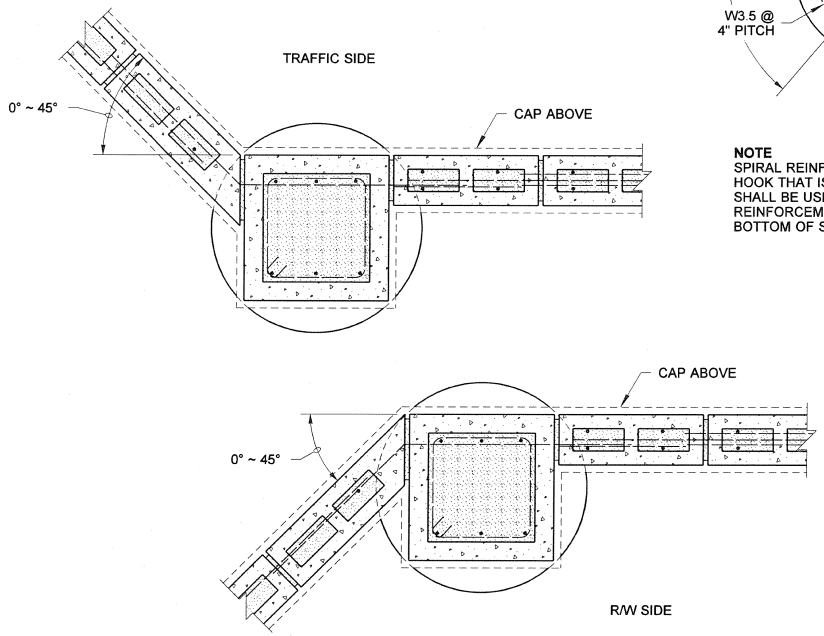

ANGLE POINT PLAN

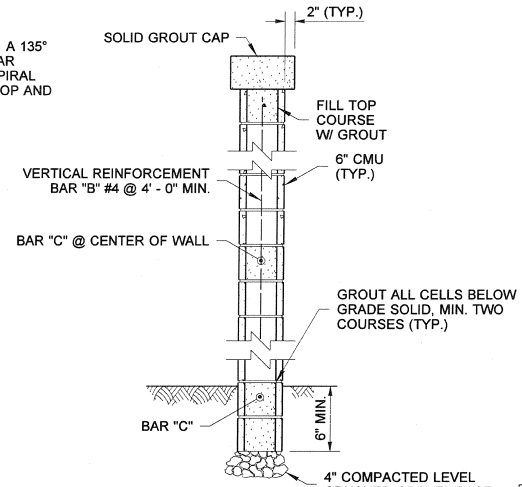

SECTION (C)

MASONRY WALL ON SHAFT FOUNDATION

BIJAN KHALEGHI
STATE OF WASHINGTON
27695
REGISTERED PROFESSIONAL ENGINEER
11/9/05

EXPIRES AUGUST 23, 2006

NOISE BARRIER WALL TYPE 20

STANDARD PLAN D-2.68-00

SHEET 2 OF 2 SHEETS

APPROVED FOR PUBLICATION

Harold Peterson 11.10.05

STATE DESIGN ENGINEER — DATE

Washington State Department of Transportation

This page left blank intentionally.

DRAWN BY: ADAM COCHRAN

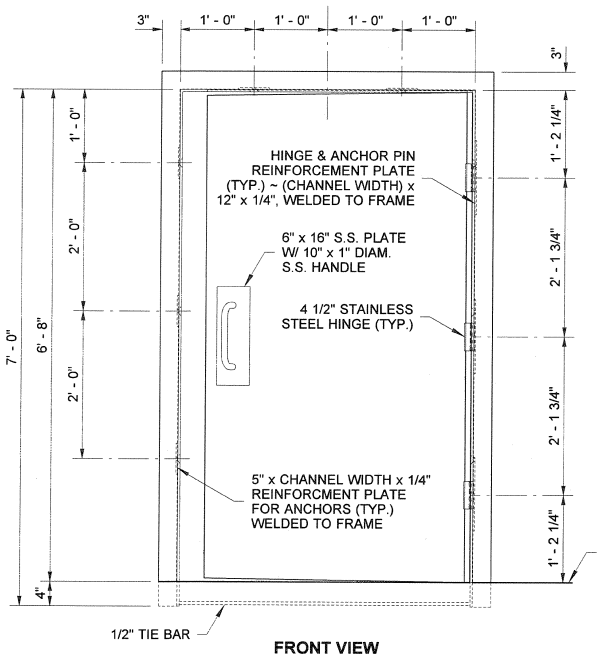

FRONT VIEW

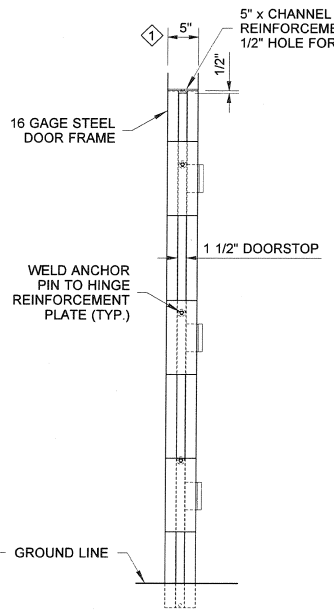

SIDE VIEW

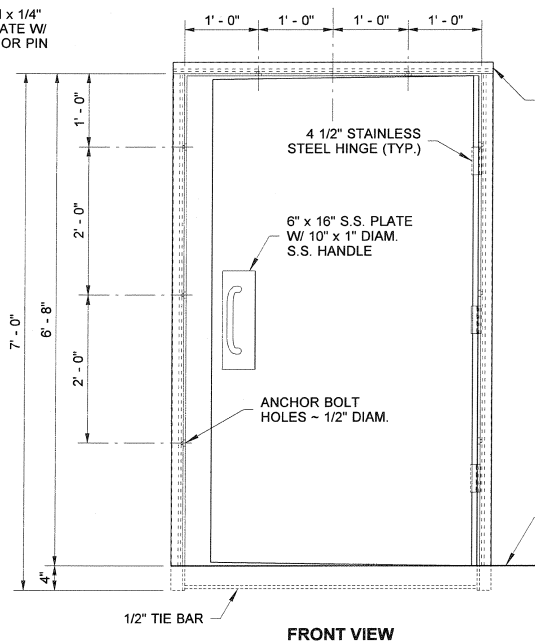

FRONT VIEW

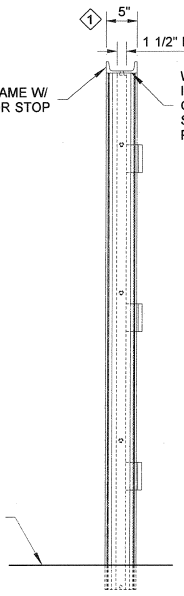

SIDE VIEW

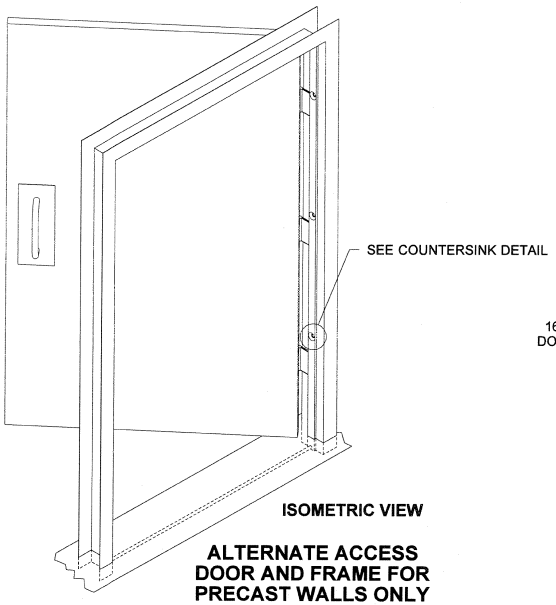

ISOMETRIC VIEW

ALTERNATE ACCESS DOOR AND FRAME FOR PRECAST WALLS ONLY

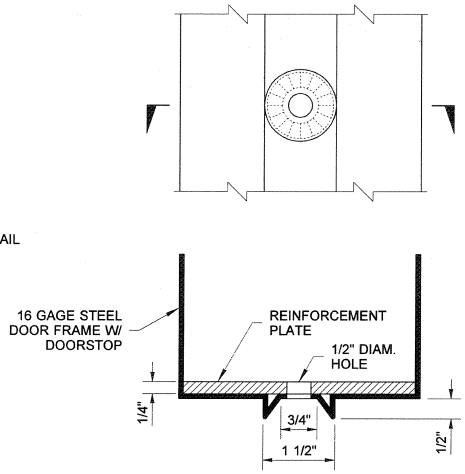

COUNTERSINK DETAIL

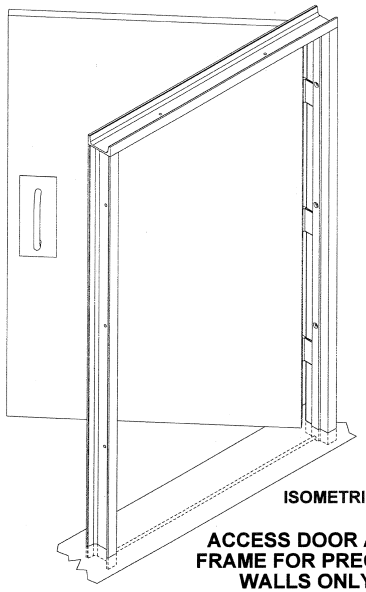

ISOMETRIC VIEW

ACCESS DOOR AND FRAME FOR PRECAST WALLS ONLY

EXPIRES AUGUST 23, 2006

NOISE BARRIER WALL ACCESS DOOR & FRAME

STANDARD PLAN D-2.92-00

SHEET 2 OF 2 SHEETS

APPROVED FOR PUBLICATION

Harold Petitpas 11.10.05

STATE DESIGN ENGINEER — DATE

Washington State Department of Transportation

DRAWN BY: LISA CYFORD

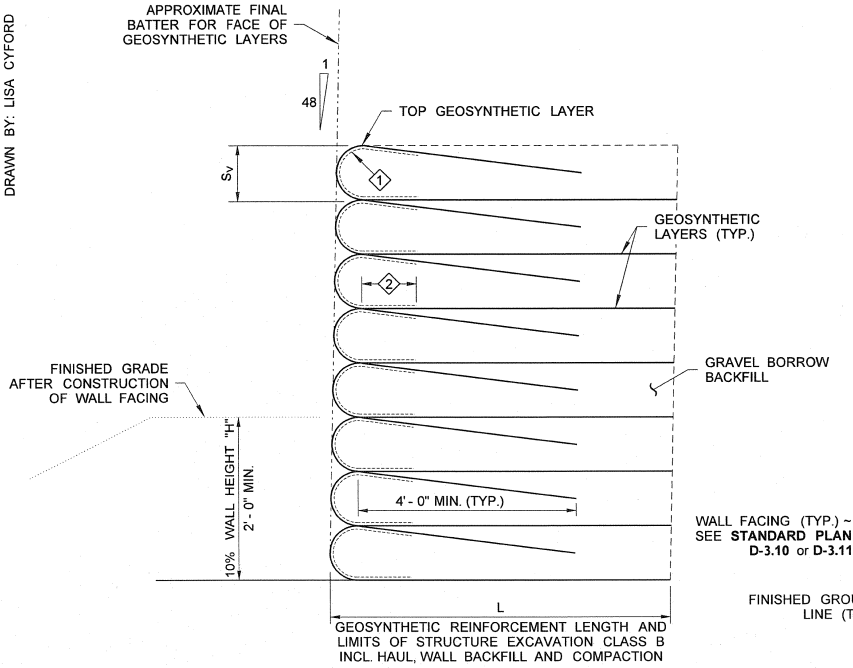

SECTION DETAIL

KEY NOTES

1. GEOTEXTILE FOR UNDERGROUND DRAINAGE CLASS A, MODERATE SURVIVABILITY (ONLY NEEDED IF A GEOGRID IS USED FOR GEOSYNTHETIC REINFORCEMENT)
2. 1' - 0" MIN. GEOTEXTILE OVERLAP, TOP & BOTTOM

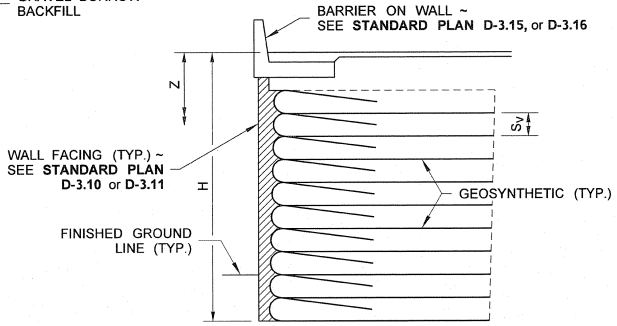

GEOSYNTHETIC WALL WITH 2 FT TRAFFIC SURCHARGE

TYPE 1, $A_S \leq$ 0.51g

TYPE 5, $A_S \leq$ 0.20g

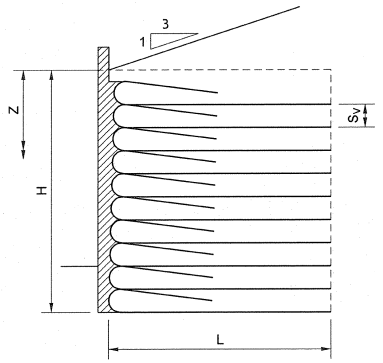

GEOSYNTHETIC WALL

TYPE 3, $A_S \leq$ 0.51g

TYPE 7, $A_S \leq$ 0.20g

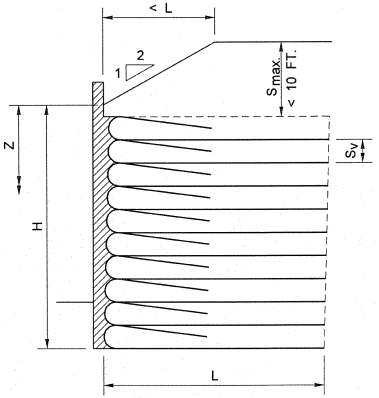

GEOSYNTHETIC WALL

TYPE 2, $A_S \leq$ 0.51g

TYPE 6, $A_S \leq$ 0.20g

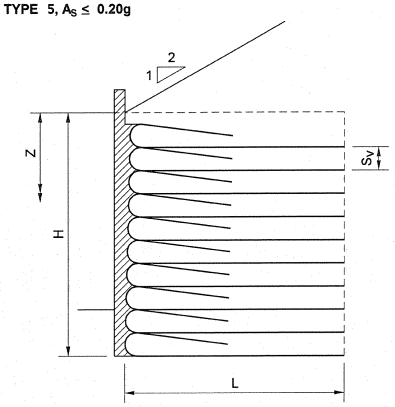

GEOSYNTHETIC WALL

TYPE 4, $A_S \leq$ 0.51g

TYPE 8, $A_S \leq$ 0.20g

NOTES

1. For the values of "L," see sheet 3, and for the values of "S_V," see sheet 2.
2. For Geosynthetic Wall Construction Sequence, see sheet 4.
3. "A_S" is the peak seismic ground acceleration as defined and applied in the AASHTO LRFD Bridge Design Specifications, Articles 3.10.4.1 and 11.6.5.
4. The long-term geosynthetic design strength "T_{al}" shall be determined in accordance with WSDOT Standard Practice T925. See Qualified Products List (QPL), Appendix "D," for products in which "T_{al}" has been determined. "H" and "Z" are graphically defined. "Z" is the distance from the top of the wall to a geosynthetic layer, and is used to determine "T_{al}" for that layer.
5. "L," the geosynthetic reinforcement length behind the wall face, is graphically defined. The maximum factored bearing stress acts in the vertical direction at the base of the wall. The load factors used are as specified in the AASHTO LRFD Bridge Design Specifications for each specified limit state.
6. Fascia or facing type shall be selected from **Standard Plans D-3.10** or **D-3.11** and called out in the Contract Plans. Region is to coordinate with the Geotechnical Services and Bridge & Structures offices.

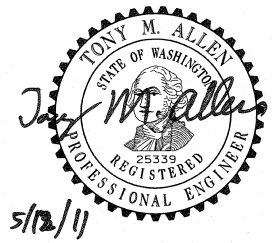

PERMANENT GEOSYNTHETIC WALL

STANDARD PLAN D-3

SHEET 1 OF 4 SHEETS

APPROVED FOR PUBLICATION

STATE DESIGN ENGINEER — DATE 4/2/11

Washington State Department of Transportation

DRAWN BY: LISA CYFORD

PERMANENT GEOSYNTHETIC WALL - GEOSYNTHETIC REINFORCEMENT DESIGN

WALL GEOMETRY AND REINFORCEMENT LAYER LOCATION			LONG-TERM GEOSYNTHETIC REINFORCEMENT STRENGTH REQUIRED, T_{al} (lbs/ft)*					
TOTAL WALL HEIGHT, H (ft)	DEPTH BELOW WALL TOP AT FACE, z (ft)	GEOSYNTHETIC REINFORCEMENT VERTICAL SPACING, S_v (ft)	GEOSYNTHETIC WALL TYPE 1	GEOSYNTHETIC WALL TYPES 2 AND 4	GEOSYNTHETIC WALL TYPE 3	GEOSYNTHETIC WALL TYPE 5	GEOSYNTHETIC WALL TYPES 6 AND 8	GEOSYNTHETIC WALL TYPE 7
UP TO 5	5	1.0	505	240	220	505	240	220
	5	1.25	631	300	280	631	300	275
5 < H ≤ 10	0 to 10	1.0	530	500	470	528	487	460
	0 to 10	1.25	660	630	590	660	609	575
10 < H ≤ 15	0 to 10	1.0	580	620	570	584	586	545
	10.1 to 15	1.0	760	780	740	760	760	719
	0 to 10	1.25	730	770	710	730	732	681
	10.1 to 15	1.25	950	980	920	950	950	899
15 < H ≤ 20	0 to 10	1.0	584	672	616	584	626	572
	10.1 to 20	1.0	992	1072	1000	992	1032	976
	0 to 10	1.25	730	840	770	730	783	715
	10.1 to 20	1.25	1240	1340	1250	1240	1290	1220
20 < H ≤ 25	0 to 10	1.0	580	720	660	584	667	599
	10.1 to 20	1.0	1050	1180	1100	1048	1128	1064
	20.1 to 25	1.0	1220	1350	1270	1224	1304	1240
	0 to 10	1.25	730	900	820	730	834	749
	10.1 to 20	1.25	1310	1470	1380	1310	1410	1330
	20.1 to 25	1.25	1530	1690	1590	1530	1630	1550
25 < H ≤ 30	0 to 10	1.0	580	780	700	584	708	626
	10.1 to 20	1.0	1050	1240	1140	1048	1168	1088
	20.1 to 30	1.0	1460	1640	1540	1456	1576	1496
	0 to 10	1.25	730	980	870	730	885	782
	10.1 to 20	1.25	1310	1550	1430	1310	1460	1360
	20.1 to 30	1.25	1820	2050	1920	1820	1970	1870
30 < H ≤ 35	0 to 10	1.0	580	830	740	584	749	653
	10.1 to 20	1.0	1050	1290	1180	1048	1216	1120
	20.1 to 30	1.0	1510	1740	1630	1512	1680	1584
	30.1 to 35	1.0	1690	1920	1800	1688	1848	1752
	0 to 10	1.25	730	1040	925	730	936	816
	10.1 to 20	1.25	1310	1610	1480	1310	1520	1400
	20.1 to 30	1.25	1890	2180	2040	1890	2100	1980
	30.1 to 35	1.25	2110	2400	2250	2110	2310	2190

NOTE: See Note 4, sheet 1.

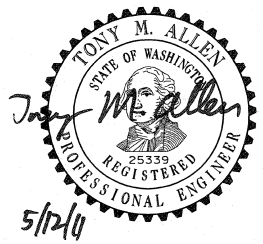

PERMANENT GEOSYNTHETIC WALL

STANDARD PLAN D-3

SHEET 2 OF 4 SHEETS

APPROVED FOR PUBLICATION

STATE DESIGN ENGINEER — DATE 6/2/11

Washington State Department of Transportation

DRAWN BY: LISA CYFORD

PERMANENT GEOSYNTHETIC WALL - EXTERNAL STABILITY DESIGN

(INCLUDES SEISMIC DESIGN FOR LARGE EARTHQUAKE: $A_S \leq 0.51g$)

TOTAL WALL HEIGHT, H (ft)	GEOSYNTHETIC WALL TYPE 1					GEOSYNTHETIC WALL TYPE 2				GEOSYNTHETIC WALL TYPE 3				GEOSYNTHETIC WALL TYPE 4			
	L (FT)	MAX. FACTORED BEARING STRESS (psf)				L (FT)	MAX. FACTORED BEARING STRESS (psf)			L (FT)	MAX. FACTORED BEARING STRESS (psf)			L (FT)	MAX. FACTORED BEARING STRESS (psf)		
		SERVICE 1	STRENGTH 1	EXTREME EVENT I	EXTREME EVENT II		SERVICE 1	STRENGTH 1	EXTREME EVENT I		SERVICE 1	STRENGTH 1	EXTREME EVENT I		SERVICE 1	STRENGTH 1	EXTREME EVENT I
5	11	847	1220	1011	1192	7	1057	1535	1391	6	852	1168	1284	7	975	1343	1473
6	11	1081	1566	1388	1949	8	1295	1862	1671	7	1028	1415	1598	9	1171	1613	1756
7	11	1248	1800	1685	2165	9	1469	2099	1981	8	1203	1657	1890	10	1366	1882	2058
8	11	1415	2034	1982	2381	10	1643	2336	2291	8	1378	1899	2182	11	1561	2151	2360
9	11	1582	2268	2279	2597	11	1817	2573	2601	9	1553	2141	2474	12	1756	2420	2662
10	11	1768	2531	2609	3278	11	2069	2968	3006	10	1738	2394	2811	14	1951	2685	2947
11	11	1916	2736	2873	3029	12	2165	3047	3221	11	1903	2625	3058	15	2146	2958	3266
12	11	2083	2970	3170	3245	13	2339	3284	3531	12	2078	2867	3350	16	2341	3227	3568
13	11	2250	3204	3467	3461	14	2513	3521	3841	13	2253	3109	3642	18	2536	3496	3870
14	11	2417	3438	3764	3677	15	2687	3758	4151	14	2428	3351	3934	19	2731	3765	4172
15	11	2650	3783	4198	4176	16	2800	3872	4374	15	2607	3590	4216	20	2924	4029	4494
16	11	2751	3906	4358	4238	17	3035	4232	4771	16	2778	3835	4518	22	3121	4303	4776
17	12	2918	4140	4655	4325	18	3209	4469	5081	17	2953	4077	4810	23	3316	4572	5078
18	13	3085	4374	4952	4541	18	3383	4706	5391	18	3128	4319	5102	24	3511	4841	5380
19	14	3252	4608	5249	4757	19	3557	4943	5701	19	3303	4561	5394	25	3706	5110	5682
20	15	3412	4835	5424	4927	21	3811	5286	5975	20	3476	4787	5621	27	3899	5371	5965
21	15	3586	5076	5843	5189	21	3905	5417	6321	21	3653	5045	5978	28	4096	5648	6286
22	16	3753	5310	6140	5405	22	4079	5654	6631	22	3828	5287	6270	29	4291	5917	6588
23	16	3920	5544	6437	5621	23	4253	5891	6941	23	4003	5529	6562	31	4486	6186	6890
24	17	4087	5778	6734	5837	24	4427	6128	7251	23	4178	5771	6854	32	4681	6455	7192
25	18	4268	6038	7040	6027	25	4629	6404	7505	24	4375	6032	7230	33	4873	6716	7519
26	18	4421	6246	7328	6269	25	4775	6602	7871	25	4528	6255	7438	35	5071	6993	7796
27	19	4588	6480	7625	6485	26	4949	6839	8181	26	4703	6497	7730	36	5266	7262	8098
28	19	4755	6714	7922	6701	27	5123	7076	8491	27	4878	6739	8022	37	5461	7531	8400
29	20	4922	6948	8219	6917	28	5297	7313	8801	28	5053	6981	8314	38	5656	7800	8702
30	21	5123	7238	8698	7148	29	5446	7523	9093	29	5244	7228	8632	40	5848	8057	8988
31	22	5256	7416	8813	7349	30	5645	7787	9421	30	5403	7465	8898	41	6046	8338	9306
32	23	5423	7650	9110	7565	30	5819	8024	9731	31	5578	7707	9190	42	6241	8607	9608
33	24	5590	7884	9407	7781	31	5993	8261	10041	32	5753	7949	9482	44	6436	8876	9910
34	25	5757	8118	9704	7997	32	6167	8498	10351	33	5928	8191	9774	45	6631	9145	10212
35	25	5863	8251	9874	8080	32	6320	8737	10766	34	6112	8425	10035	46	6823	9403	10544

NOTE: See General Note 5, sheet 1.

PERMANENT GEOSYNTHETIC WALL - EXTERNAL STABILITY DESIGN

(INCLUDES SEISMIC DESIGN FOR LARGE EARTHQUAKE: $A_S \leq 0.20g$)

TOTAL WALL HEIGHT, H (ft)	GEOSYNTHETIC WALL TYPE 5					GEOSYNTHETIC WALL TYPE 6				GEOSYNTHETIC WALL TYPE 7				GEOSYNTHETIC WALL TYPE 8			
	L (FT)	MAX. FACTORED BEARING STRESS (psf)				L (FT)	MAX. FACTORED BEARING STRESS (psf)			L (FT)	MAX. FACTORED BEARING STRESS (psf)			L (FT)	MAX. FACTORED BEARING STRESS (psf)		
		SERVICE 1	STRENGTH 1	EXTEME EVENT I	EXTEME EVENT II		SERVICE 1	STRENGTH 1	EXTREME EVENT I		SERVICE 1	STRENGTH 1	EXTREME EVENT I		SERVICE 1	STRENGTH 1	EXTREME EVENT I
5	11	847	1220	992	1192	6	1057	1535	1294	6	852	1168	1155	6	977	1349	1326
6	11	1105	1607	1320	1688	6	1358	1928	1574	6	1107	1536	1560	6	1278	1786	1868
7	11	1273	1843	1553	2090	6	1569	2226	1889	6	1302	1809	1842	6	1504	2105	2214
8	10	1441	2079	1786	2463	7	1780	2527	2211	7	1497	2082	2124	7	1730	2424	2560
9	10	1609	2315	2019	2808	7	1991	2831	2540	7	1692	2355	2406	7	1956	2743	2906
10	10	1768	2531	2229	3278	7	2266	3372	2776	7	1924	2692	2773	7	2228	3145	3381
11	10	1945	2787	2485	3424	8	2413	3445	3213	8	2082	2901	2970	8	2408	3381	3598
12	10	2113	3023	2718	3699	9	2624	3755	3555	9	2277	3174	3252	9	2634	3700	3944
13	11	2281	3259	2951	3954	10	2835	4066	3901	10	2472	3447	3534	10	2860	4019	4290
14	11	2449	3495	3184	4190	11	3046	4378	4249	11	2667	3720	3816	11	3086	4338	4636
15	11	2711	3884	3516	4396	11	3245	4598	4737	11	2886	4037	4159	11	3342	4718	5072
16	12	2785	3967	3650	4616	12	3468	5004	4948	12	3057	4266	4380	12	3538	4976	5328
17	12	2953	4203	3883	4809	12	3679	5316	5297	12	3252	4539	4662	12	3764	5295	5674
18	13	3121	4439	4116	4990	13	3890	5628	5644	13	3447	4812	4944	13	3990	5614	6020
19	14	3289	4675	4349	5163	14	4101	5939	5990	14	3642	5085	5226	14	4216	5933	6366
20	14	3522	5015	4642	5201	14	4326	6125	6321	14	3848	5383	5546	14	4456	6291	6762
21	15	3625	5147	4815	5489	15	4523	6557	6672	15	4032	5631	5790	15	4668	6571	7058
22	16	3793	5383	5048	5646	16	4734	6863	7006	16	4227	5904	6072	16	4894	6890	7404
23	17	3961	5619	5281	5801	17	4945	7166	7335	17	4422	6177	6354	17	5120	7209	7750
24	18	4129	5855	5514	5955	18	5156	7466	7657	18	4617	6450	6636	18	5346	7528	8096
25	18	4325	6131	5763	6146	18	5417	7683	7891	18	4810	6729	6932	18	5570	7863	8453
26	19	4465	6327	5980	6272	19	5578	8057	8280	19	5007	6996	7200	19	5798	8166	8788
27	19	4633	6563	6213	6438	19	5789	8346	8578	19	5202	7269	7482	19	6024	8485	9134
28	20	4801	6799	6446	6611	20	6000	8631	8866	20	5397	7542	7764	20	6250	8804	9480
29	21	4969	7035	6679	6793	21	6211	8912	9144	21	5592	7815	8046	21	6476	9123	9826
30	21	5123	7238	6881	7148	21	6577	9408	9515	21	5773	8075	8319	21	6684	9436	10143
31	22	5305	7507	7145	7192	22	6633	9457	9664	22	5982	8361	8610	22	6928	9761	10518
32	23	5473	7743	7378	7412	23	6844	9720	9905	23	6177	8634	8892	23	7154	10080	10864
33	24	5641	7979	7611	7649	24	7055	9978	10131	24	6372	8907	9174	24	7380	10399	11210
34	25	5809	8215	7844	7904	25	7266	10229	10343	25	6567	9180	9456	25	7606	10718	11556
35	25	5918	8341	7998	8177	25	7311	10373	10550	25	6735	9421	9705	25	7798	11009	11834

NOTE: See Note 5, sheet 1.

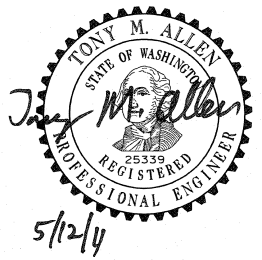

5/12/11

PERMANENT GEOSYNTHETIC WALL

STANDARD PLAN D-3

SHEET 3 OF 4 SHEETS

APPROVED FOR PUBLICATION

STATE DESIGN ENGINEER — DATE 6/2/11

Washington State Department of Transportation

DRAWN BY: LISA CYFORD

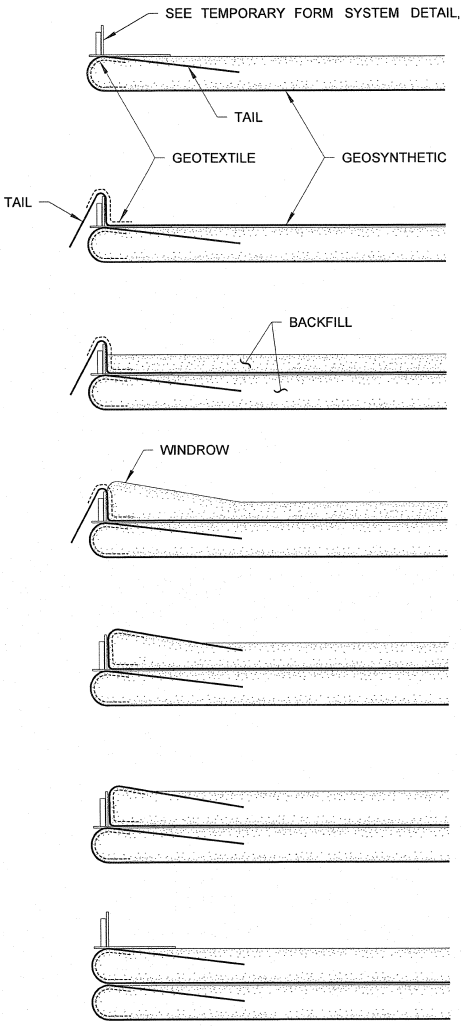

1. SET FORM ON COMPLETED LIFT.
2. UNROLL GEOSYNTHETIC AND POSITION IT SO THAT A 4' - 0" WIDE "TAIL" DRAPES OVER THE FORM. IF A GEOGRID IS USED FOR THE GEOSYNTHETIC REINFORCEMENT, POSITION GEOTEXTILE TO PREVENT BACKFILL FROM SPILLING THROUGH GEOGRID OPENINGS.
3. PLACE THE BACKFILL UNTIL THE BACKFILL IS UP TO HALF OF THE REQUIRED VERTICAL GEOSYNTHETIC LAYER SPACING.
4. PLACE A WINDROW TO SLIGHTLY GREATER THAN FULL LIFT HEIGHT AGAINST THE FORM.
5. PLACE THE GEOSYNTHETIC "TAIL" OVER THE WINDROW AND LOCK INTO PLACE WITH BACKFILL.
6. COMPLETE BACKFILLING UNTIL THE COMPACTED BACKFILL LAYER THICKNESS IS EQUAL TO THE REQUIRED VERTICAL GEOSYNTHETIC LAYER SPACING.
7. THE FORM MAY BE LEFT IN PLACE WHILE CONSTRUCTING THE NEXT LAYER (SEE NOTE 2) OTHERWISE, RESET THE FORM AND REPEAT THE SEQUENCE.

GEOSYNTHETIC WALL CONSTRUCTION SEQUENCE

(SECTION VIEW)

NOTES

1. Use of the Temporary Form System, as detailed in this plan, is optional.
2. To help maintain the wall face batter, leave the form system for the preceding layer in place while constructing the next layer. When the upper layer is complete, remove the form system from the lower layer and reset it for the next layer. See below.

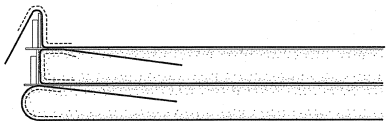

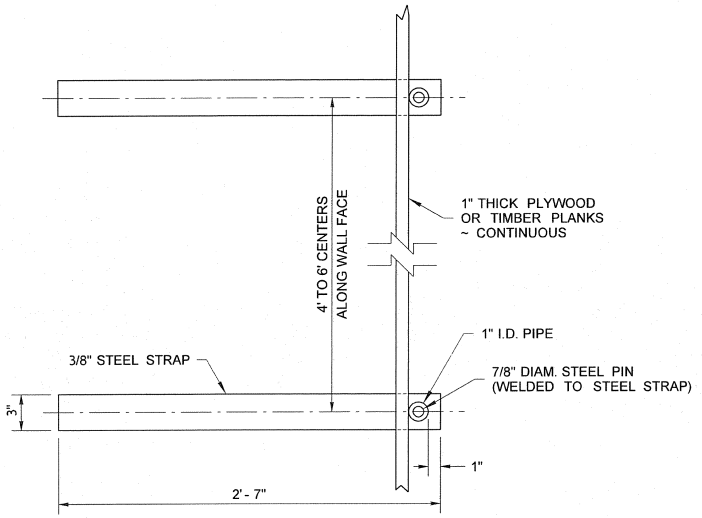

PLAN

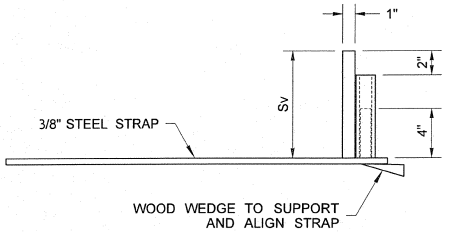

ELEVATION

TEMPORARY FORM SYSTEM DETAIL

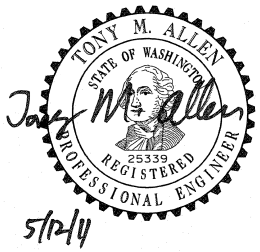

PERMANENT GEOSYNTHETIC WALL

STANDARD PLAN D-3

SHEET 4 OF 4 SHEETS

APPROVED FOR PUBLICATION

STATE DESIGN ENGINEER — DATE 6/2/11

Washington State Department of Transportation

DRAWN BY: LISA CYFORD

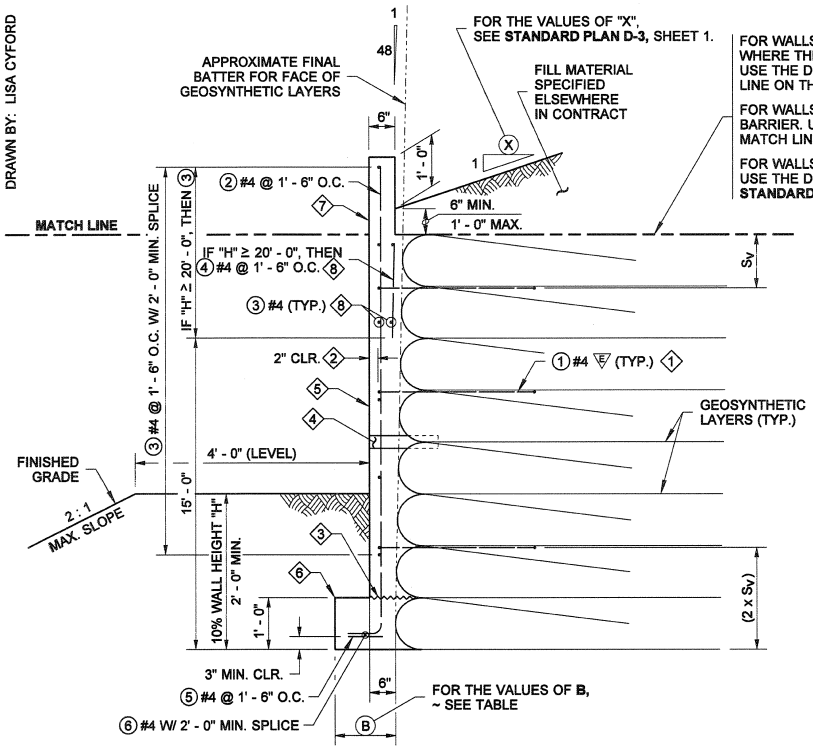

TYPICAL SECTION

PERMANENT GEOSYNTHETIC RETAINING WALL WITH CAST-IN-PLACE CONCRETE FASCIA

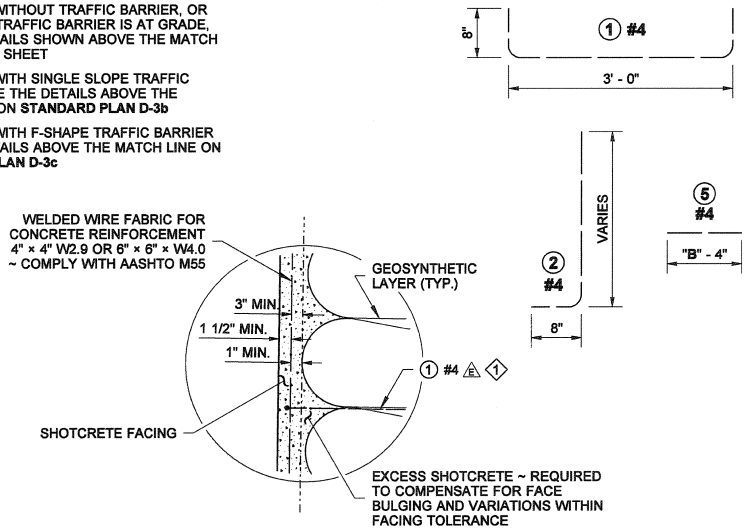

SHOTCRETE DETAIL

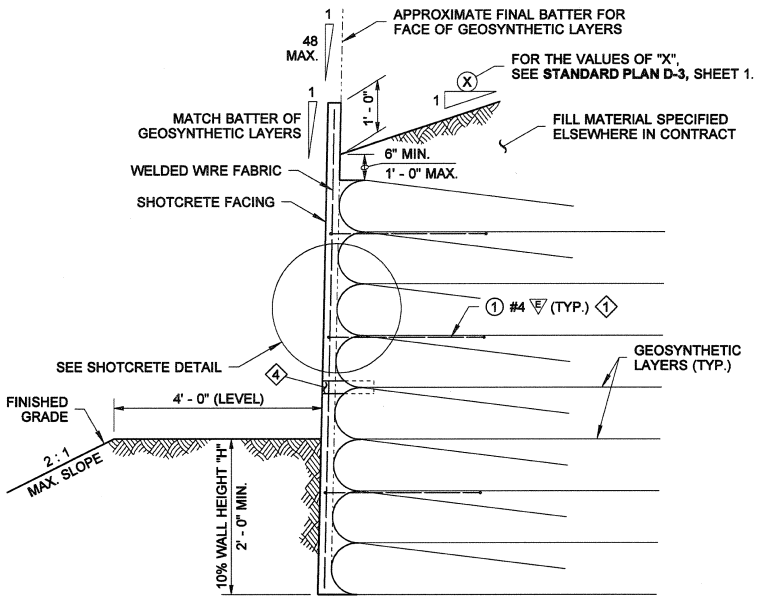

TYPICAL SECTION

PERMANENT GEOSYNTHETIC RETAINING WALL WITH SHOTCRETE FACING

KEY NOTES

1. "N" ROWS OF ① #4 Ⓔ DOWEL REINFORCEMENT PLACE BETWEEN GEOSYNTHETIC LAYERS AT 5' - 0" O.C. HORIZONTAL SPACING, SEE TABLE. VERTICAL SPACING BETWEEN ROWS TO BE EQUAL, AS MULTIPLES OF "S_V" ALLOW. ROWS MAY BE STAGGERED. SEE **STD. PLAN D-3** FOR "S_V".
2. INCREASE THE COVER AS REQUIRED TO ACCOMMODATE ARCHITECTURAL FEATURES AND FINISH.
3. CONSTRUCTION JOINT WITH ROUGHENED SURFACE.
4. 3" I.D. PVC PIPE FOR WEEP HOLE IN WALL FACING ~ PLACE BETWEEN GEOSYNTHETIC LAYERS APPROX. 9" DEEP AT 12' - 0" HORIZONTAL SPACING. LENGTH TO EXTEND TO OUTER SURFACE OF SPECIFIED WALL. WEEP HOLES SHALL BE KEPT CLEAR OF CONCRETE. SEE **STANDARD PLAN D-3,** FOR DETAILS NOT SHOWN.
5. VERTICAL CONSTRUCTION JOINTS IN FASCIA @ 24' - 0" O.C. WITH 1/2 " PREMOLDED JOINT FILLER (SEE **STANDARD PLAN D-10.45,** "SPLIT ELEVATION").
6. VERTICAL CONSTRUCTION JOINTS IN FOOTING @ 120' O.C. MAX. (SEE **STANDARD PLAN D-10.45,** "ELEVATION"). IF THE FOOTING IS STEPPED, PROVIDE 2' - 0" NON-CONTACT LAP SPLICES FOR THE ⑥ #4 BARS AT EACH STEP.
7. COORDINATE WALL FINISH AND CONFIGURATION WITH STATE BRIDGE AND STRUCTURES ARCHITECT PER WSDOT DESIGN MANUAL 1130.04(5).06.
8. THE ④ BARS AND INTERIOR ③ BARS SHALL BE USED ONLY IF THE FACE IS VERTICAL.

NOTES

1. All bars shown on this plan shall be ASTM A706 unless otherwise specified in the Contract.

Ⓔ = EPOXY COATED

DESIGN HEIGHT "H" (ft.)	ROWS OF #4 Ⓔ DOWEL BARS REQUIRED N (no.)	FASCIA FOOTING WIDTH B (ft. - in.)
UP TO 5	2	1' - 0"
6	3	1' - 0"
7	3	1' - 0"
8	3	1' - 0"
9	3	1' - 0"
10	4	1' - 0"
11	4	1' - 0 1/2"
12	4	1' - 0 1/2"
13	4	1' - 1"
14	4	1' - 1"
15	6	1' - 2"
16	6	1' - 2"
17	8	1' - 2 1/2"
18	8	1' - 2 1/2"
19	8	1' - 3"
20	10	1' - 3"
21	10	1' - 3 1/2"
22	10	1' - 3 1/2"
23	10	1' - 4"
24	10	1' - 4"
25	10	1' - 5"
26	10	1' - 5"
27	10	1' - 5 1/2"
28	10	1' - 5 1/2"
29	10	1' - 6"
30	10	1' - 6"
31	10	1' - 6 1/2"
32	10	1' - 6 1/2"
33	10	1' - 7"
34	10	1' - 7"
35	10	1' - 8"

CAST-IN-PLACE PERMANENT GEOSYNTHETIC WALL FASCIA AND FACING STANDARD PLAN D-3.10-00

SHEET 1 OF 1 SHEET

APPROVED FOR PUBLICATION

STATE DESIGN ENGINEER — DATE 6/6/12

Washington State Department of Transportation

DRAWN BY: LISA CYFORD

PRECAST FASCIA TABLE		
DESIGN HEIGHT "H" (ft.)	PANEL THICKNESS "T" (in.)	(F 10) BAR SPACING "S" (in.)
5	6.0	18.0
6	6.0	18.0
7	6.0	18.0
8	6.0	18.0
9	6.0	18.0
10	6.0	18.0
11	6.0	18.0
12	6.0	18.0
13	6.0	18.0
14	6.0	18.0
15	6.0	18.0
16	6.0	18.0
17	6.0	18.0
18	6.0	18.0
19	6.0	18.0
20	6.0	18.0
21	6.0	18.0
22	7.0	18.0
23	7.0	18.0
24	7.0	18.0
25	8.0	18.0
26	8.0	18.0
27	8.0	18.0
28	9.0	12.0
29	9.0	12.0
30	9.0	12.0
31	10.0	12.0
32	10.0	12.0
33	11.0	12.0
34	11.0	12.0
35	11.0	12.0

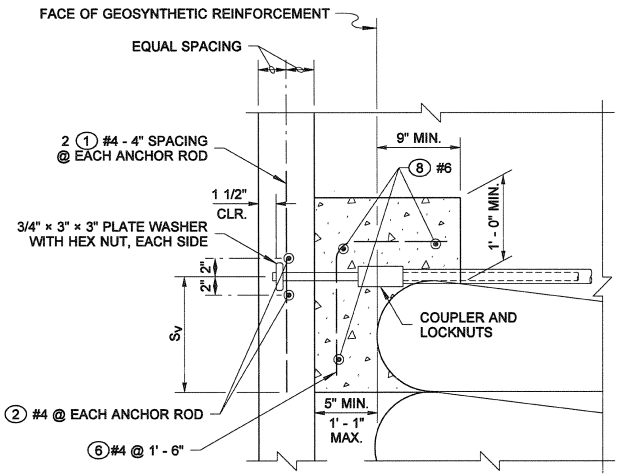

EDGE BEAM

DETAIL (A)

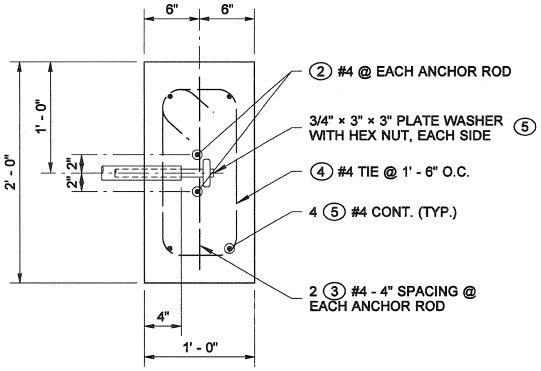

GRADE BEAM

DETAIL (B)

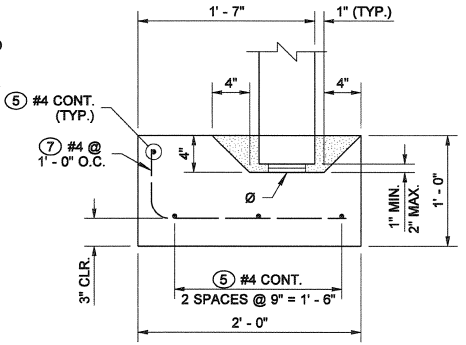

LEVELING PAD

DETAIL (C)

Φ 4" × 4" SHIM STACK
(2 LOCATIONS PER PANEL)
HEIGHT SHALL BE ADJUSTED SO THAT VERTICAL PANEL JOINTS ARE PLUMB

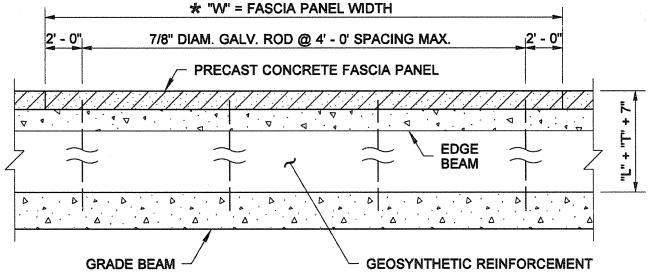

PLAN VIEW

TYPICAL PANEL LAYOUT

* PANEL WIDTH "W" SHOWN IN ELEVATION OF RETAINING WALLS

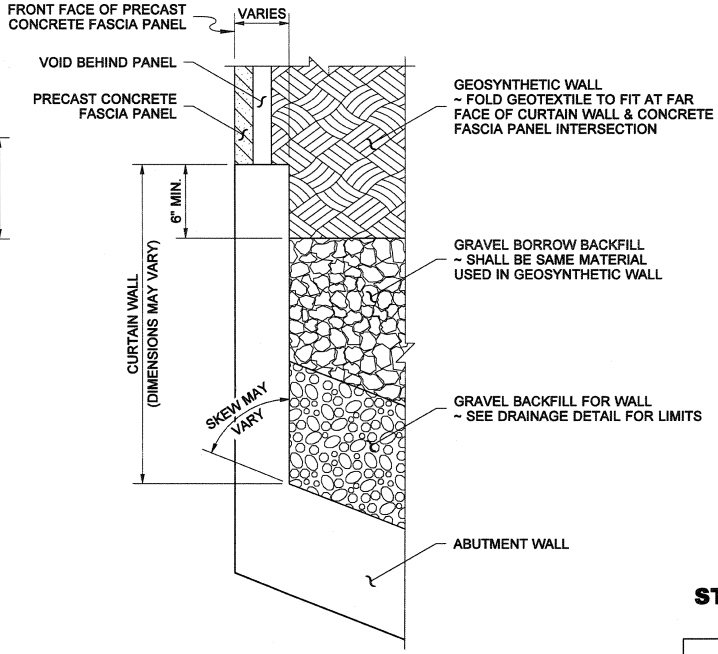

PLAN VIEW

WALL TRANSITION

GEOSYNTHETIC WALL TO CURTAIN WALL TRANSITION AT BRIDGE ~ SEE BRIDGE PLAN SHEETS FOR DETAILS

FASCIA PANEL BENDING DIAGRAM				
MARK	SIZE	LENGTH		ALL REINFORCEMENT SHALL BE ASTM A706.
(1)	4	2' - 0"	STR.	(A) DETERMINE FROM PLANS
(2)	4	4' - 0"	STR.	
(3)	4	1' - 9"	STR.	
(4)	4	4' - 11"		
(5)	4	(A)	STR.	
(6)	4	2' - 1 3/4"		
(7)	4	2' - 3 1/2"		
(8)	6	(A)	STR.	
(9)	5	(A)	STR.	
(10)	4	(A)	STR.	
(11)	4	(A)	STR.	

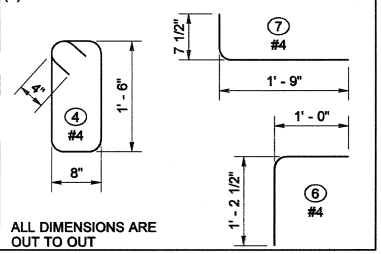

ALL DIMENSIONS ARE OUT TO OUT

BIJAN KHALEGHI
STATE OF WASHINGTON
27695
STRUCTURAL ENGINEER
PROFESSIONAL ENGINEER

PRECAST PERMANENT GEOSYNTHETIC WALL FASCIA

STANDARD PLAN D-3.11-00

SHEET 2 OF 2 SHEETS

APPROVED FOR PUBLICATION

STATE DESIGN ENGINEER — DATE

Washington State Department of Transportation

DRAWN BY: FERN LIDDELL

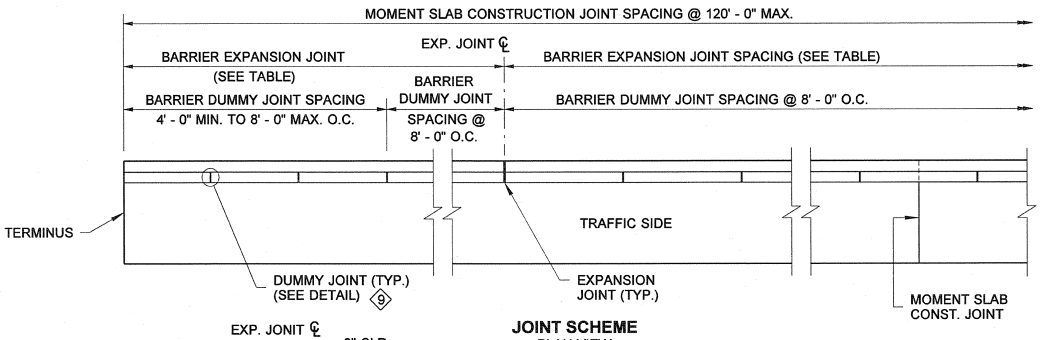

JOINT SCHEME
PLAN VIEW

(REINF. STEEL NOT SHOWN)

TYPICAL SECTION
SHOWN AT GRADE

KEY NOTES

1. THE BARRIER GEOMETRY REFERENCE LINE (B.G.R.L.) IS PERPENDICULAR TO THE TRANSVERSE ROADWAY SLOPE (T.R.S.). FOR SUPERELEVATED TRANSVERSE ROADWAY SLOPES, THE B.G.R.L. ON THE LOW SIDE OF THE ROADWAY SHALL BE PERPENDICULAR TO THE T.R.S. UP TO A MAXIMUM OF 8% SUPERELEVATION; THE B.G.R.L. ON THE HIGH SIDE SHALL ALWAYS BE PERPENDICULAR TO THE T.R.S.
2. JUNCTION BOX & PULL BOX ~ 8" × 8" × 1' - 6" NEMA 4 X S.S. (TYP.). JUNCTION BOX CAN BE RECESSED 1/2" MAX. SEE SPECIAL PROVISIONS. SIZE CONDUIT PER WIRING SCHEDULE, SEE ELECTRICAL PLANS.
3. 1 1/2" MIN. CONCRETE COVER ~ INCREASE THE COVER AS REQUIRED TO ACCOMMODATE ARCHITECTURAL FEATURES AND FINISH.
4. CONSTRUCTION JOINT WITH ROUGHENED SURFACE
5. THE NOTCH, DETAILED BY THESE DIMENSIONS AND SPECIFICATIONS, IS REQUIRED ONLY IF THE BARRIER IS ON WALL FACING.
6. RUSTICATION ~ SEE RUSTICATION DETAIL
7. FOR STRUCTURAL DETAILS BELOW THE MATCH LINE, SEE STANDARD PLANS D-3, D-3.10 OR D-3.11.
8. 1/2" EXPANSION JOINT WITH PREMOLDED JOINT FILLER
9. INSTALL BARRIER DUMMY JOINTS ON TRAFFIC SIDE ONLY WHEN ARCHITECTURAL FEATURES ARE SPECIFIED.

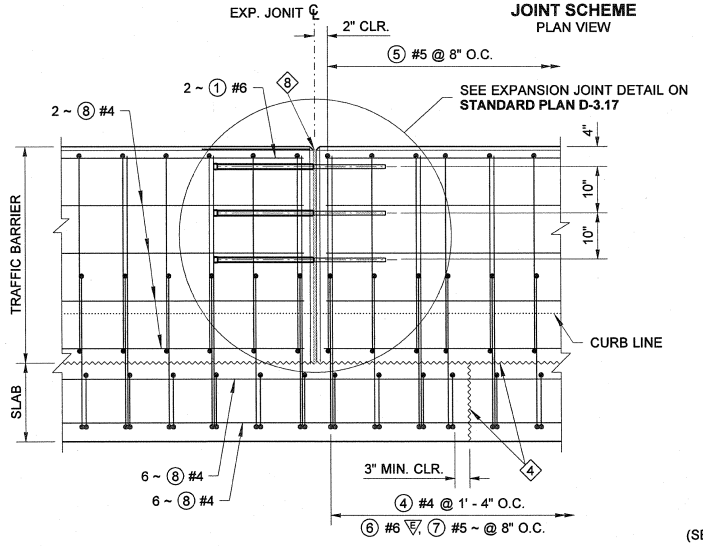

ELEVATION

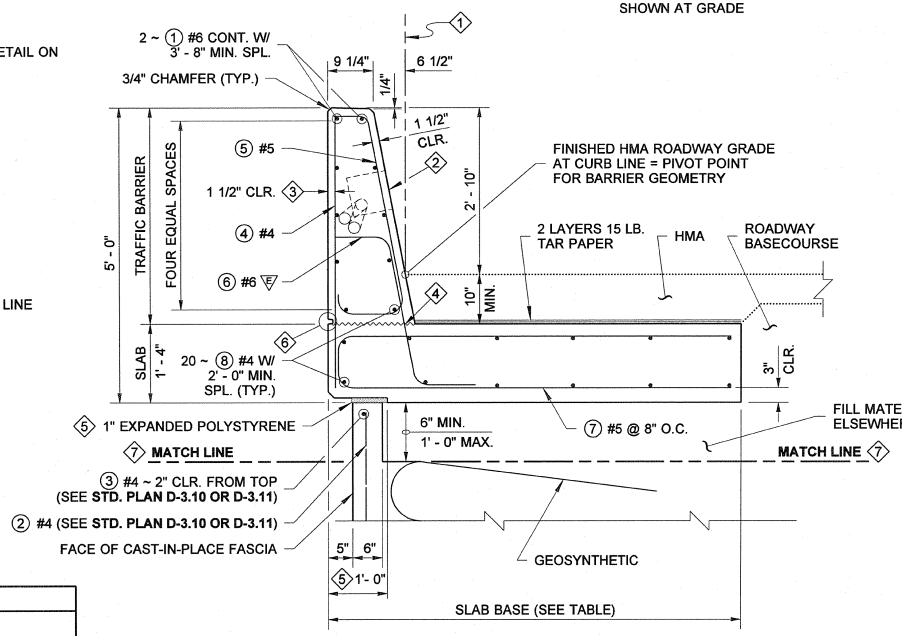

TYPICAL SECTION
SHOWN ON WALL

SLAB LENGTH		SLAB BASE		BARRIER EXPANSION JOINT SPACING	
MIN	MAX	ON WALL	AT GRADE	MIN	MAX
80' - 1"	- -	7' - 0"	5' - 0"	80' - 0"	120' - 0"
60' - 1"	80' - 0"	8' - 0"	6' - 0"	60' - 0"	80' - 0"
40' - 1"	60' - 0"	9' - 0"	7' - 0"	40' - 0"	60' - 0"
0	40' - 0"	CONTACT BRIDGE OFFICE			

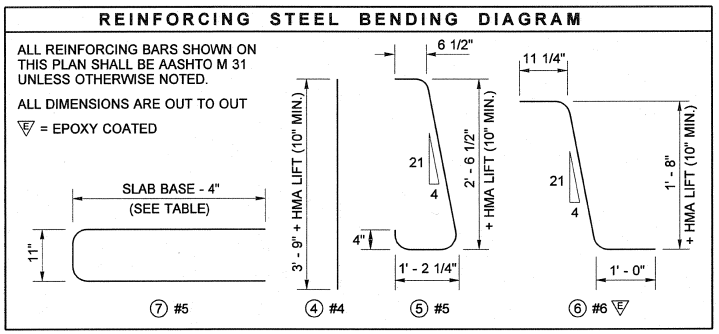

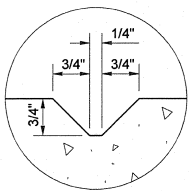

DUMMY JOINT DETAIL

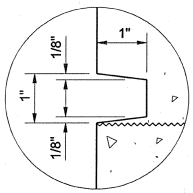

RUSTICATION DETAIL

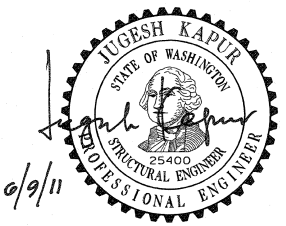

6/9/11

PERMANENT GEOSYNTHETIC WALL SINGLE SLOPE BARRIER STANDARD PLAN D-3.15-00

SHEET 1 OF 1 SHEET

APPROVED FOR PUBLICATION

STATE DESIGN ENGINEER — DATE 6/10/11

Washington State Department of Transportation

DRAWN BY: FERN LIDDELL

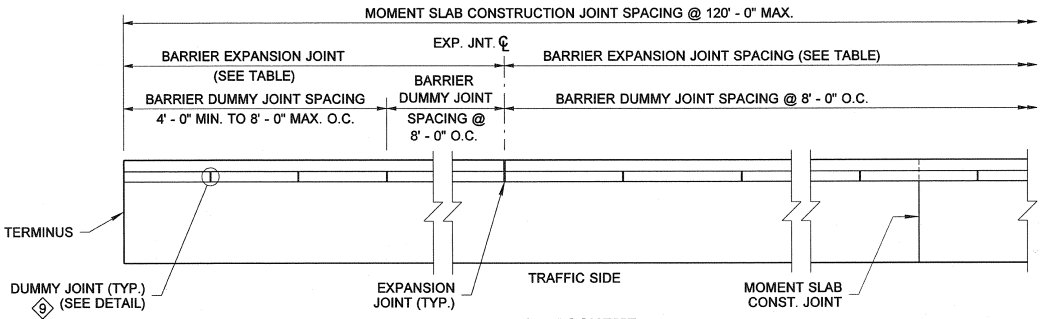

JOINT SCHEME
PLAN VIEW

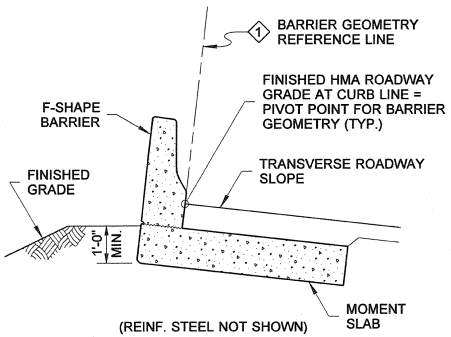

TYPICAL SECTION
SHOWN AT GRADE

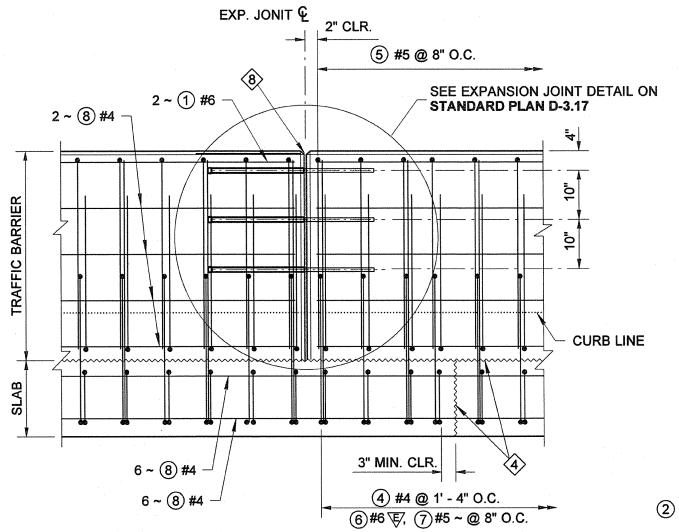

ELEVATION

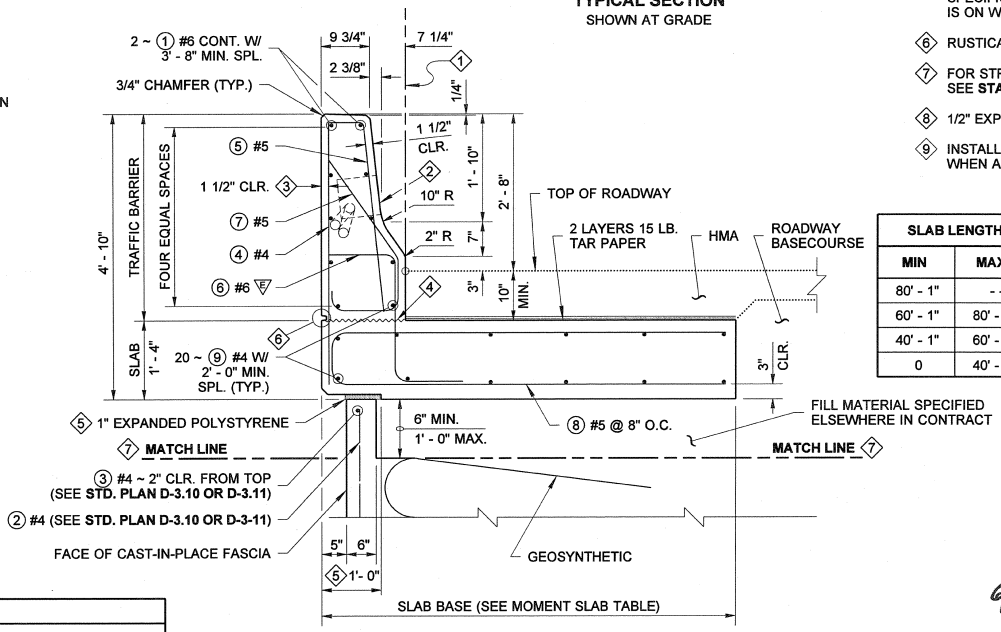

TYPICAL SECTION
SHOWN ON WALL

KEY NOTES

① THE BARRIER GEOMETRY REFERENCE LINE (B.G.R.L.) IS PERPENDICULAR TO THE TRANSVERSE ROADWAY SLOPE (T.R.S.). FOR SUPERELEVATED TRANSVERSE ROADWAY SLOPES, THE B.G.R.L. ON THE LOW SIDE OF THE ROADWAY SHALL BE PERPENDICULAR TO THE T.R.S. UP TO A MAXIMUM OF 8% SUPERELEVATION; THE B.G.R.L. ON THE HIGH SIDE SHALL ALWAYS BE PERPENDICULAR TO THE T.R.S.

② JUNCTION BOX & PULL BOX ~ 8" × 8" × 1' - 6" NEMA 4 X S.S. (TYP.). JUNCTION BOX CAN BE RECESSED 1/2" MAX. SEE SPECIAL PROVISIONS. SIZE CONDUIT PER WIRING SCHEDULE, SEE ELECTRICAL PLANS.

③ 1 1/2" MIN. CONCRETE COVER ~ INCREASE THE COVER AS REQUIRED TO ACCOMMODATE ARCHITECTURAL FEATURES AND FINISH.

④ CONSTRUCTION JOINT WITH ROUGHENED SURFACE

⑤ THE NOTCH, DETAILED BY THESE DIMENSIONS AND SPECIFICATIONS, IS REQUIRED ONLY IF THE BARRIER IS ON WALL FACING.

⑥ RUSTICATION ~ SEE RUSTICATION DETAIL

⑦ FOR STRUCTURAL DETAILS BELOW THE MATCH LINE, SEE **STANDARD PLANS D-3, D-3.10 OR D-3.11.**

⑧ 1/2" EXPANSION JOINT WITH PREMOLDED JOINT FILLER

⑨ INSTALL BARRIER DUMMY JOINTS ON TRAFFIC SIDE ONLY WHEN ARCHITECTURAL FEATURES ARE SPECIFIED.

SLAB LENGTH		SLAB BASE		BARRIER EXPANSION JOINT SPACING	
MIN	MAX	ON WALL	AT GRADE	MIN	MAX
80' - 1"	- -	7' - 0"	5' - 0"	80' - 0"	120' - 0"
60' - 1"	80' - 0"	8' - 0"	6' - 0"	60' - 0"	80' - 0"
40' - 1"	60' - 0"	9' - 0"	7' - 0"	40' - 0"	60' - 0"
0	40' - 0"	CONTACT BRIDGE OFFICE			

REINFORCING STEEL BENDING DIAGRAM

ALL REINFORCING BARS SHOWN ON THIS PLAN SHALL BE AASHTO M 31 UNLESS OTHERWISE NOTED.

ALL DIMENSIONS ARE OUT TO OUT

Ⓔ = EPOXY COATED

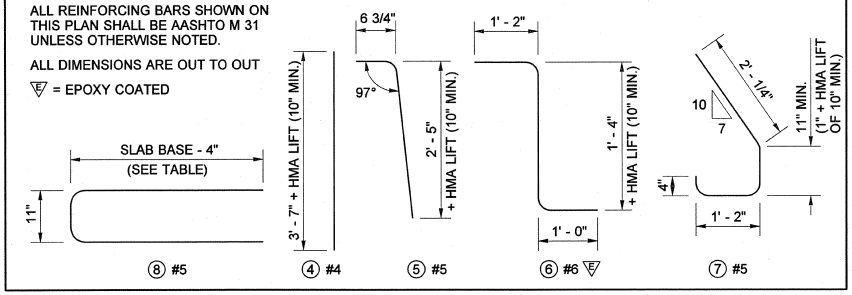

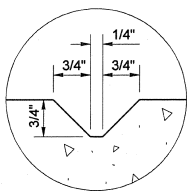

DUMMY JOINT DETAIL

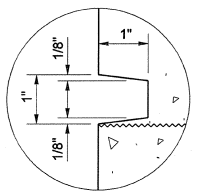

RUSTICATION DETAIL

6/9/11

PERMANENT GEOSYNTHETIC WALL F - SHAPE BARRIER STANDARD PLAN D-3.16-00

SHEET 1 OF 1 SHEET

APPROVED FOR PUBLICATION

STATE DESIGN ENGINEER — DATE 6/16/11

Washington State Department of Transportation

DRAWN BY: FERN LIDDELL

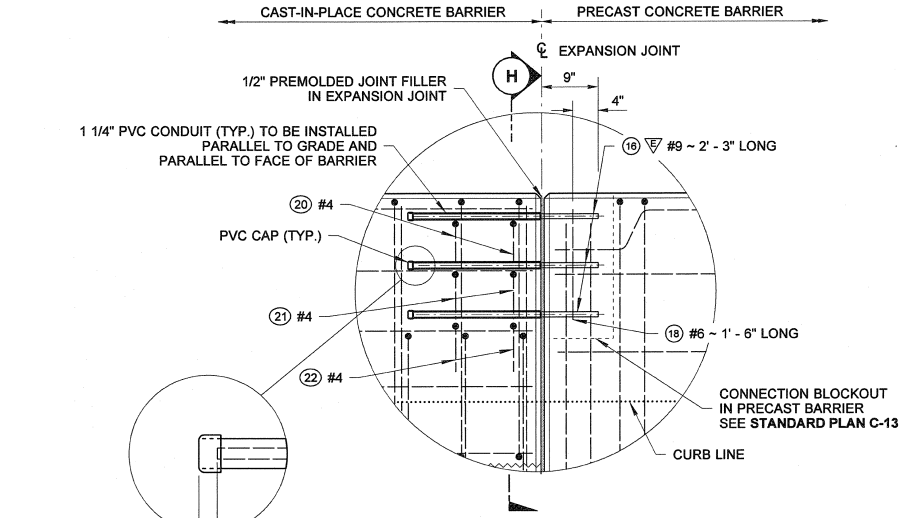

EXPANSION JOINT DETAIL
FOR CAST-IN-PLACE TO PRECAST BARRIER CONNECTION

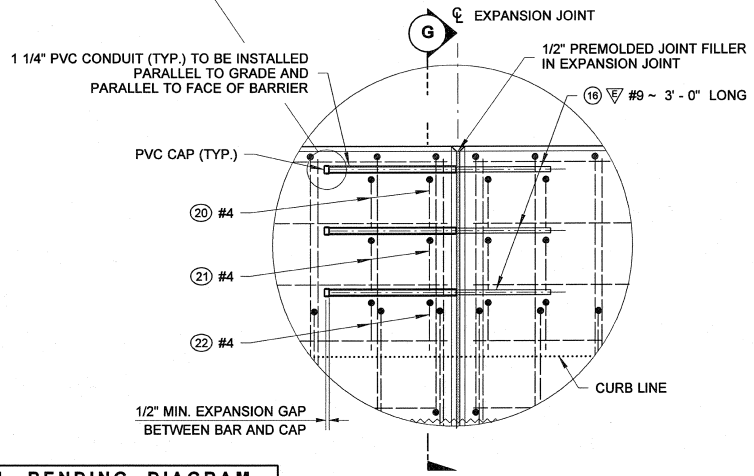

EXPANSION JOINT DETAIL

REINFORCING STEEL BENDING DIAGRAM

ALL REINFORCING BARS SHOWN ON THIS PLAN SHALL BE AASHTO M 31 UNLESS OTHERWISE NOTED.

ALL DIMENSIONS ARE OUT TO OUT

E = EPOXY COATED

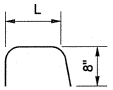

(20) #4 L = 7"
(21) #4 L = 8 7/8"
(22) #4 L = 10 3/4"

NOTE

1. Ensure that no concrete enters the PVC conduit during concrete placement.

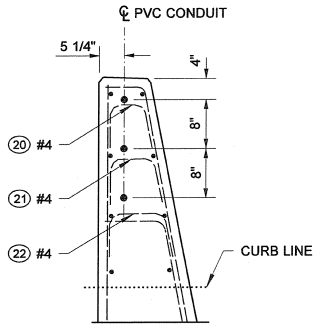

SECTION H

FOR DETAILS NOT SHOWN ~ SEE TYPICAL SECTION
STANDARD PLAN D-3.15 OR D-3.16

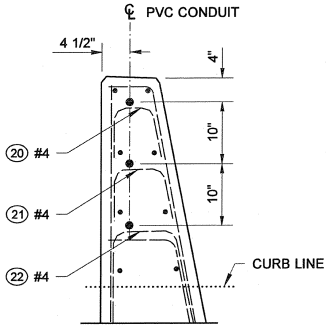

SECTION G

FOR DETAILS NOT SHOWN ~ SEE TYPICAL SECTION
STANDARD PLAN D-3.15 OR D-3.16

6/9/11

PERMANENT GEOSYNTHETIC WALL EXPANSION JOINT DETAILS

STANDARD PLAN D-3.17-00

SHEET 1 OF 1 SHEET

APPROVED FOR PUBLICATION

STATE DESIGN ENGINEER — DATE 6/16/11

Washington State Department of Transportation

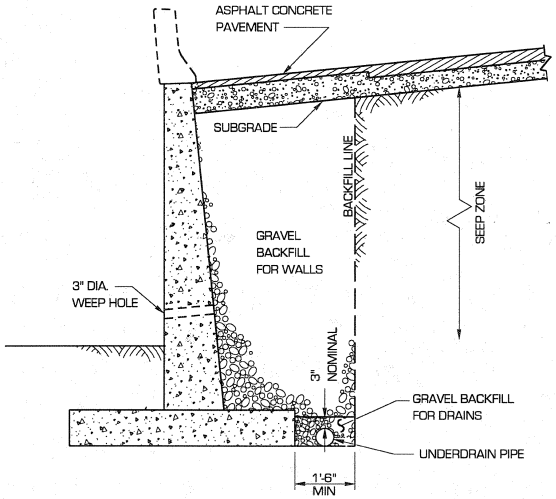

CONDITION A

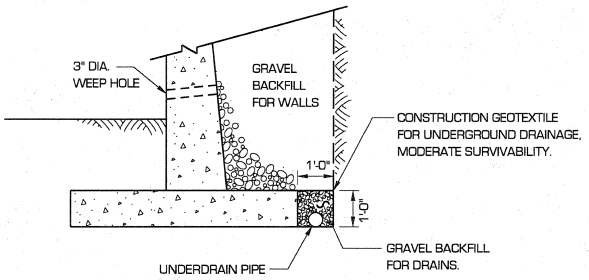

CONDITION A OR CONDITION B WITH GEOTEXTILE

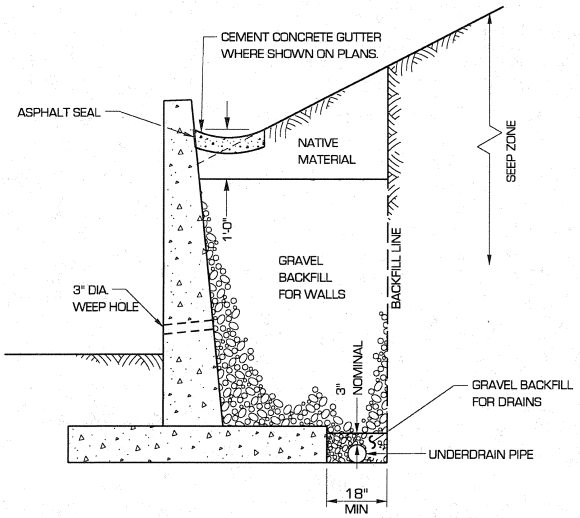

CONDITION B

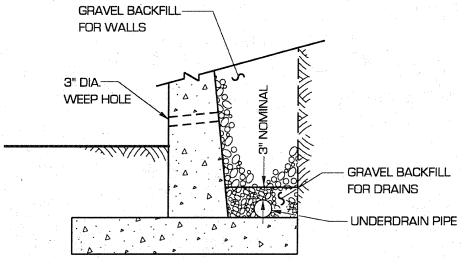

ALTERNATE DETAIL

TYPICAL FOR CONSTRUCTION WITH SHORING.

NOTES

1. SEE CONTRACT FOR BACKFILL LIMITS AND GEOTEXTILE CLASS.

12-3-98

M. MYINT LWIN
STATE OF WASHINGTON
10536
REGISTERED
PROFESSIONAL ENGINEER

EXPIRES JANUARY 17, 1999

BACKFILL AND DRAINAGE FOR RETAINING WALLS

STANDARD PLAN D-4

APPROVED FOR PUBLICATION

Clifford E. Mansfield 12/4/98

DEPUTY STATE DESIGN ENGINEER — DATE

WASHINGTON STATE DEPARTMENT OF TRANSPORTATION
OLYMPIA, WASHINGTON

DATE	REVISION	BY
10/98	REMOVED GUARDRAIL, CURB & METAL CRIB WALLS.	MT

This page left blank intentionally.

DRAWN BY: BILL BERENS

REINFORCING STEEL BENDING DIAGRAM

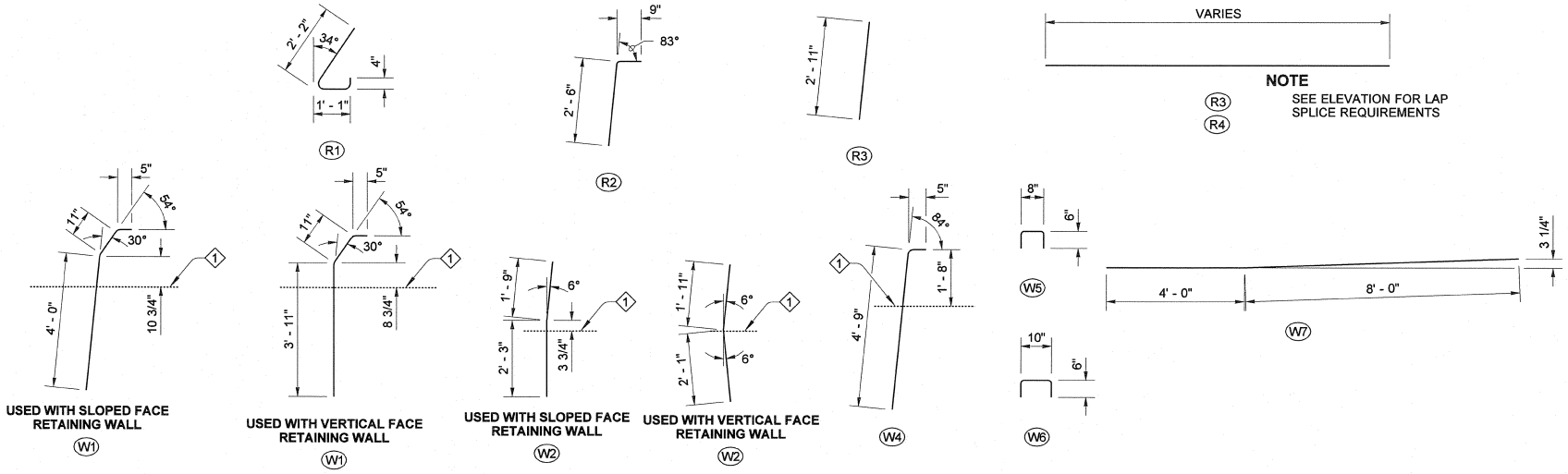

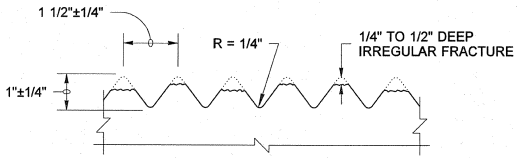

PLAN VIEW

FRACTURED FIN FINISH DETAIL

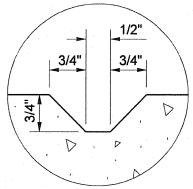

DUMMY JOINT DETAIL

BIJAN KHALEGHI
STATE OF WASHINGTON
27695
STRUCTURAL ENGINEER
PROFESSIONAL ENGINEER
11/25/08

TRAFFIC BARRIER DETAILS FOR REINFORCED CONCRETE RETAINING WALLS

STANDARD PLAN D-15.10-01

SHEET 2 OF 2 SHEETS

APPROVED FOR PUBLICATION

STATE DESIGN ENGINEER — DATE 12/2/08

Washington State Department of Transportation

DRAWN BY: BILL BERENS

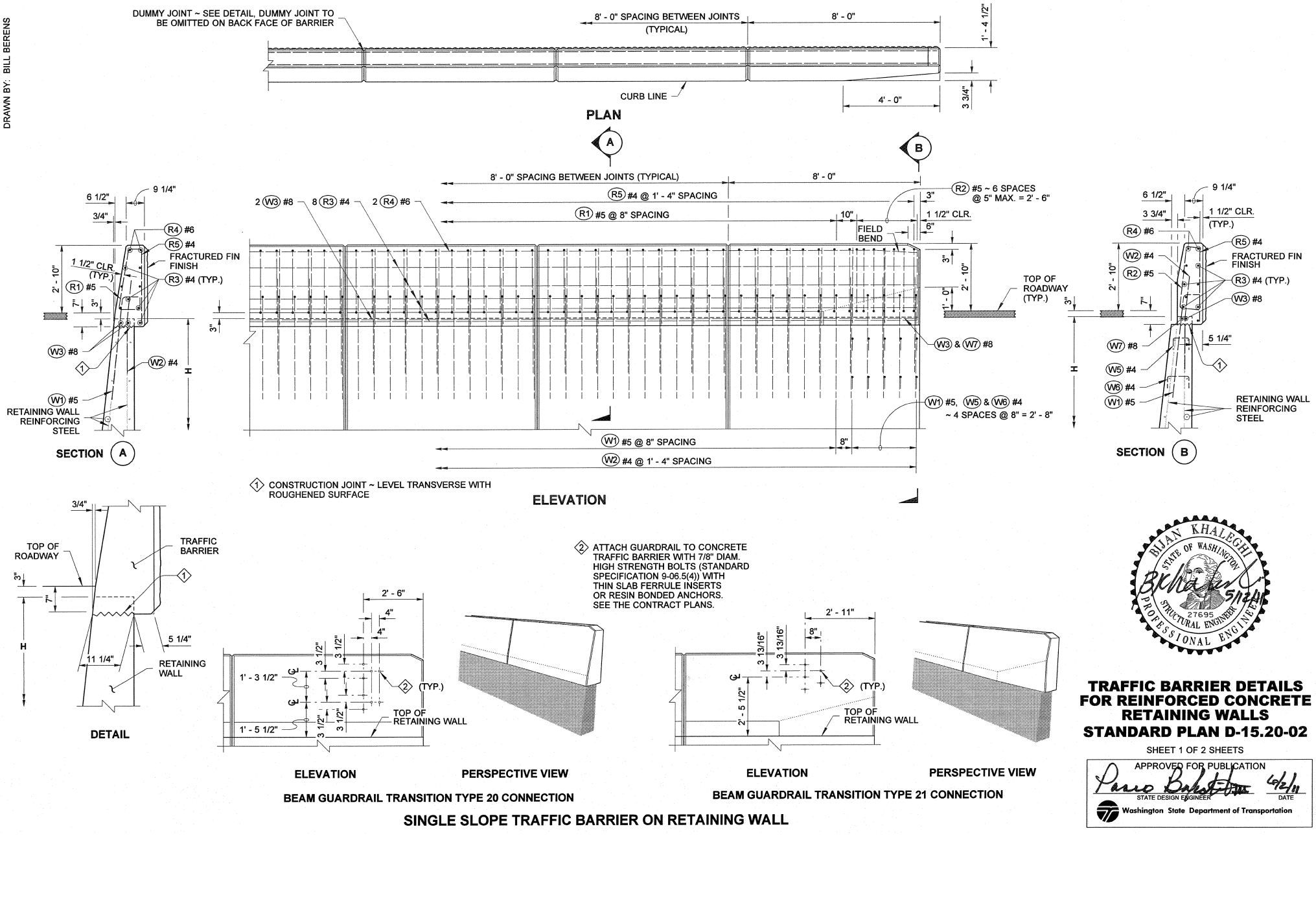

2 ATTACH GUARDRAIL TO CONCRETE TRAFFIC BARRIER WITH 7/8" DIAM. HIGH STRENGTH BOLTS (STANDARD SPECIFICATION 9-06.5(4)) WITH THIN SLAB FERRULE INSERTS OR RESIN BONDED ANCHORS. SEE THE CONTRACT PLANS.

ELEVATION

PERSPECTIVE VIEW

BEAM GUARDRAIL TRANSITION TYPE 20 CONNECTION

ELEVATION

PERSPECTIVE VIEW

BEAM GUARDRAIL TRANSITION TYPE 21 CONNECTION

BIJAN KHALEGHI
STATE OF WASHINGTON
27695
STRUCTURAL ENGINEER
PROFESSIONAL ENGINEER

TRAFFIC BARRIER DETAILS FOR REINFORCED CONCRETE RETAINING WALLS
STANDARD PLAN D-15.20-02

SHEET 1 OF 2 SHEETS

APPROVED FOR PUBLICATION
STATE DESIGN ENGINEER
6/2/11
DATE
Washington State Department of Transportation

SINGLE SLOPE TRAFFIC BARRIER ON RETAINING WALL

DRAWN BY: BILL BERENS

REINFORCING STEEL BENDING DIAGRAM

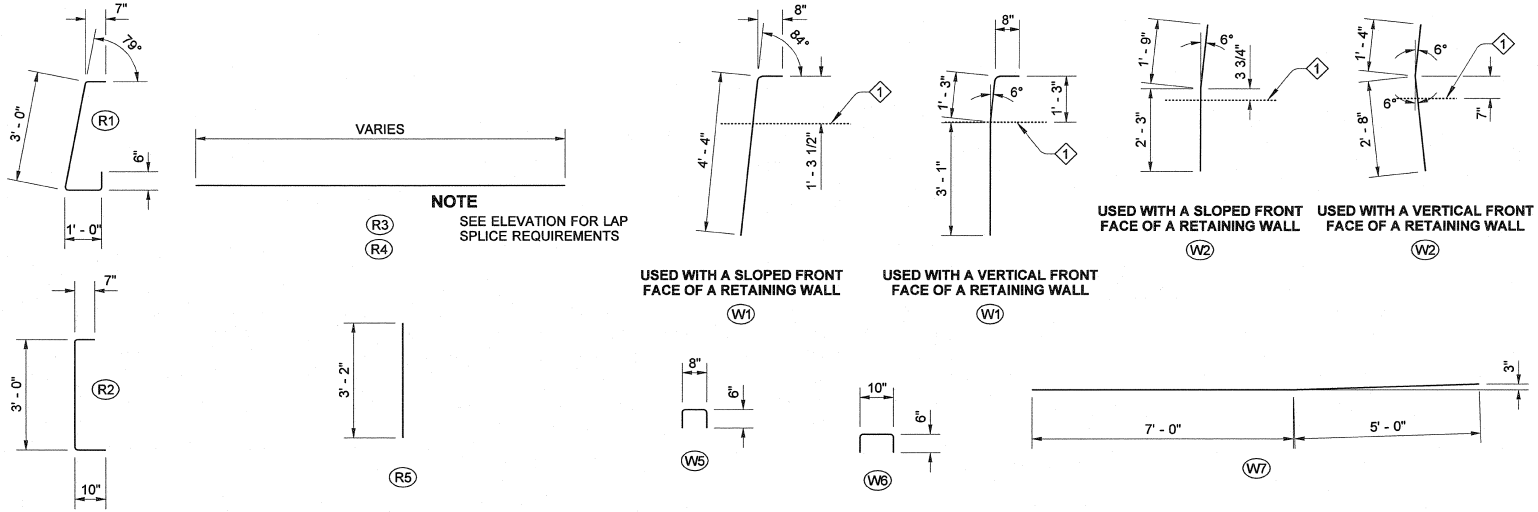

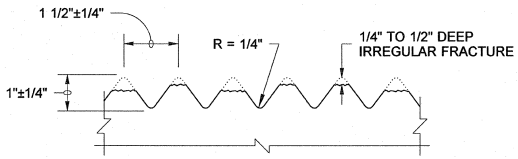

PLAN VIEW

FRACTURED FIN FINISH DETAIL

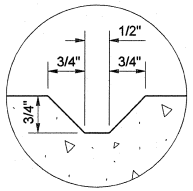

DUMMY JOINT DETAIL

TRAFFIC BARRIER DETAILS FOR REINFORCED CONCRETE RETAINING WALLS

STANDARD PLAN D-15.20-02

SHEET 2 OF 2 SHEETS

APPROVED FOR PUBLICATION

Pasco Bakotich III — STATE DESIGN ENGINEER — 6/2/11 — DATE

Washington State Department of Transportation

DRAWN BY: BILL BERENS

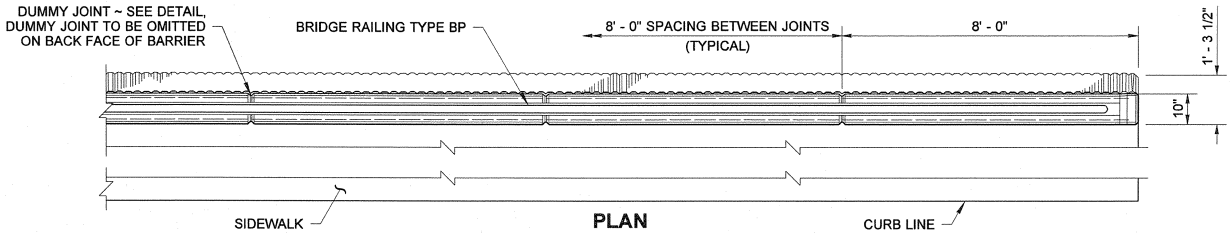

PLAN

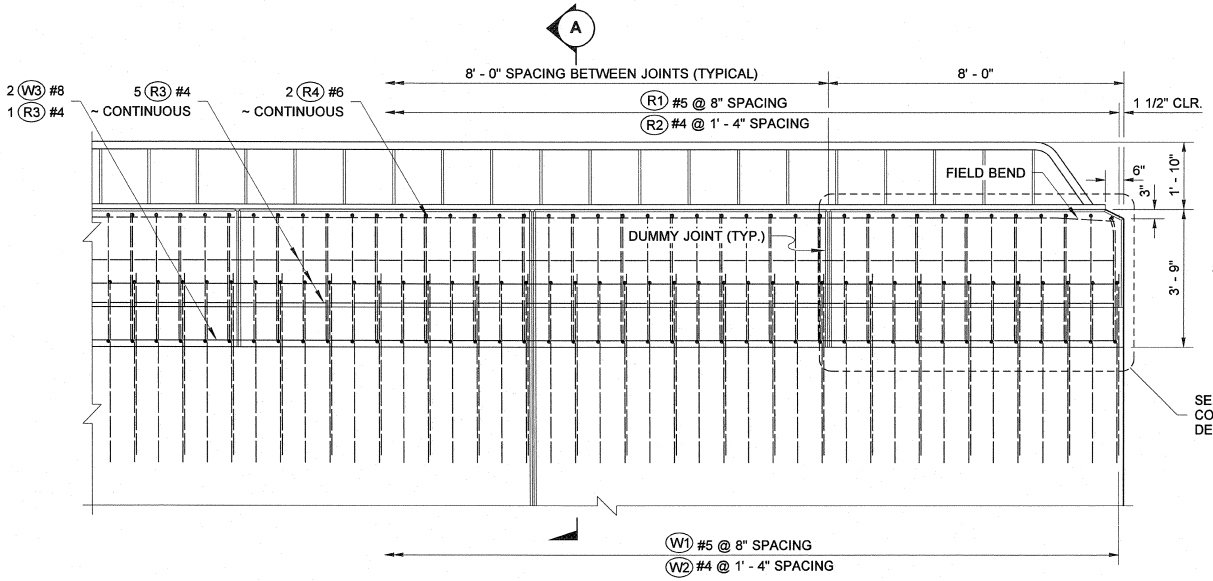

ELEVATION

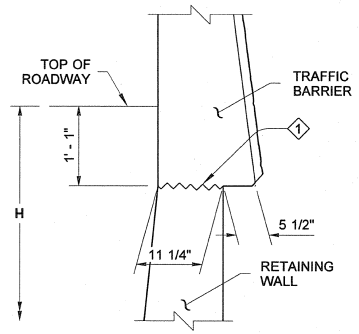

DETAIL

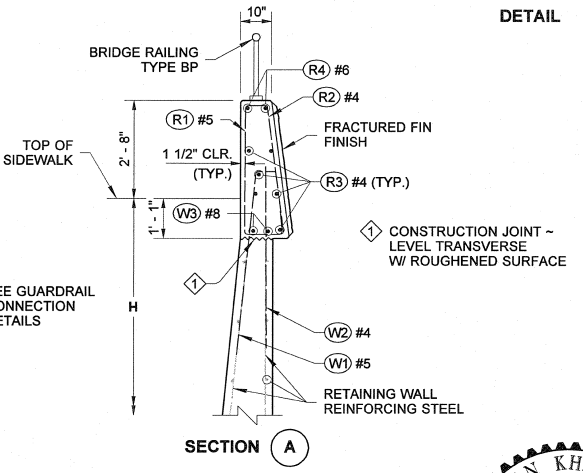

SECTION A

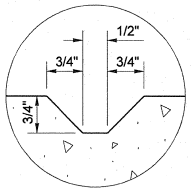

DUMMY JOINT DETAIL

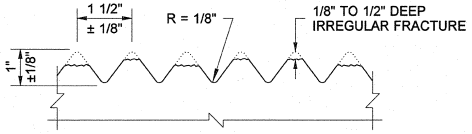

PLAN VIEW

FRACTURED FIN FINISH DETAIL

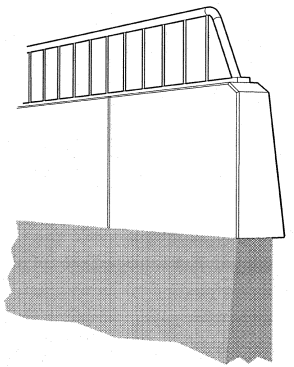

OBLIQUE VIEW

TRAFFIC BARRIER DETAILS FOR REINFORCED CONCRETE RETAINING WALLS

STANDARD PLAN D-15.30-01

SHEET 1 OF 2 SHEETS

APPROVED FOR PUBLICATION

STATE DESIGN ENGINEER — DATE 12/2/08

Washington State Department of Transportation

This page left blank intentionally.

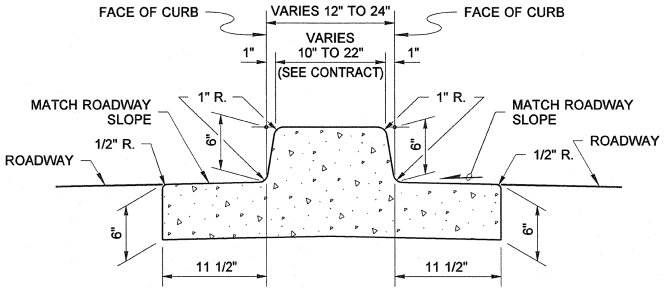

DUAL-FACED CEMENT CONCRETE TRAFFIC CURB AND GUTTER

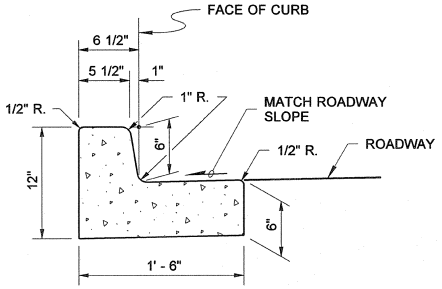

CEMENT CONCRETE TRAFFIC CURB AND GUTTER

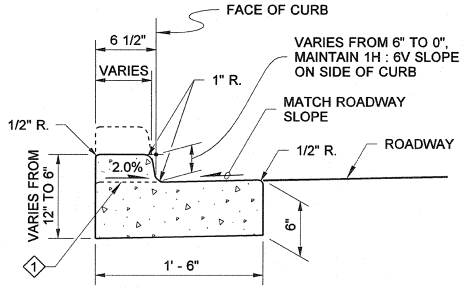

DEPRESSED CURB SECTION

AT CURB RAMPS AND DRIVEWAY ENTRANCES

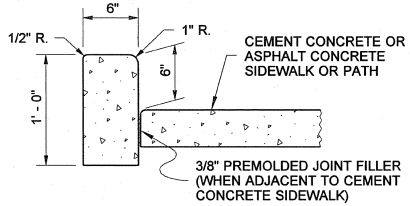

CEMENT CONCRETE PEDESTRIAN CURB

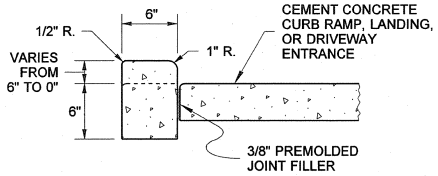

CEMENT CONCRETE PEDESTRIAN CURB

AT CURB RAMPS, LANDINGS, AND DRIVEWAY ENTRANCES

NOTE

1. See **Standard Plan F-30.10** for Curb Expansion and Contraction Joint spacing.

1 FLUSH WITH GUTTER PAN AT CURB RAMP ENTRANCE ~ 1/2" VERTICAL LIP AT DRIVEWAY ENTRANCE

DRAWN BY: FERN LIDDELL

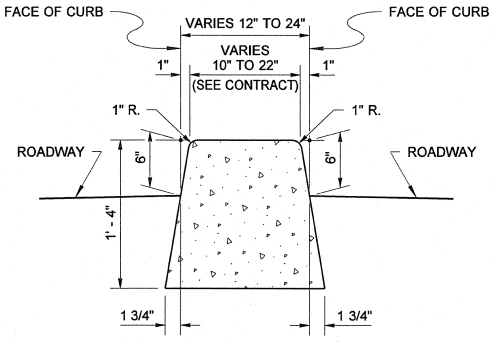

DUAL-FACED CEMENT CONCRETE TRAFFIC CURB

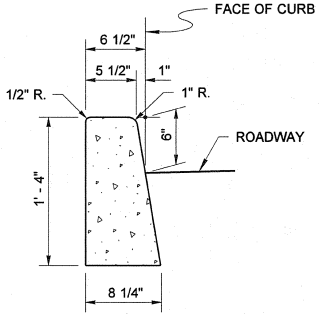

CEMENT CONCRETE TRAFFIC CURB

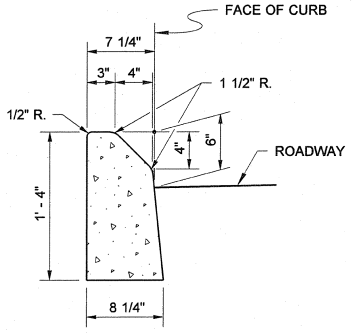

MOUNTABLE CEMENT CONCRETE TRAFFIC CURB

6-8-2011

CEMENT CONCRETE CURBS

STANDARD PLAN F-10.12-02

SHEET 1 OF 1 SHEET

APPROVED FOR PUBLICATION

STATE DESIGN ENGINEER — DATE

Washington State Department of Transportation

DRAWN BY: MARK SUJKA

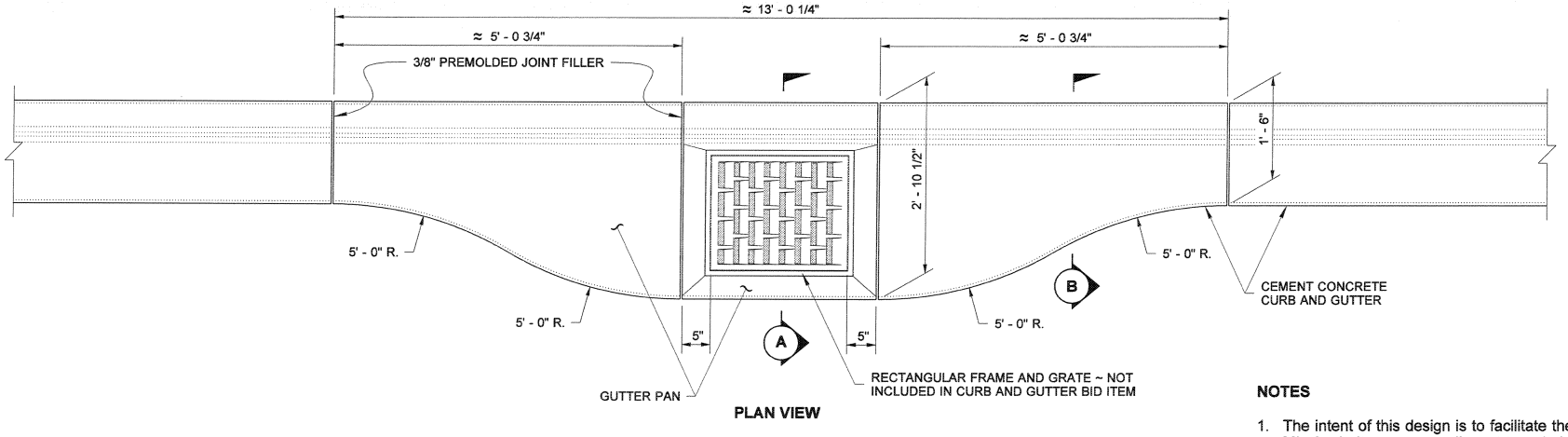

PLAN VIEW

CATCH BASIN GUTTER PAN

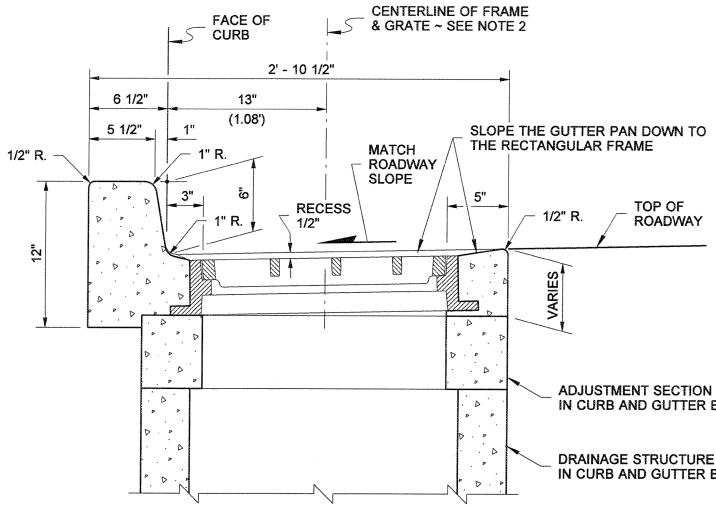

SECTION (A)

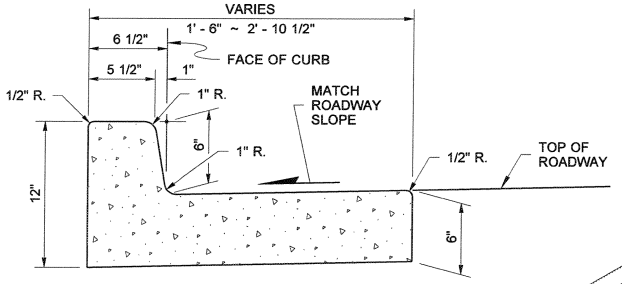

SECTION (B)

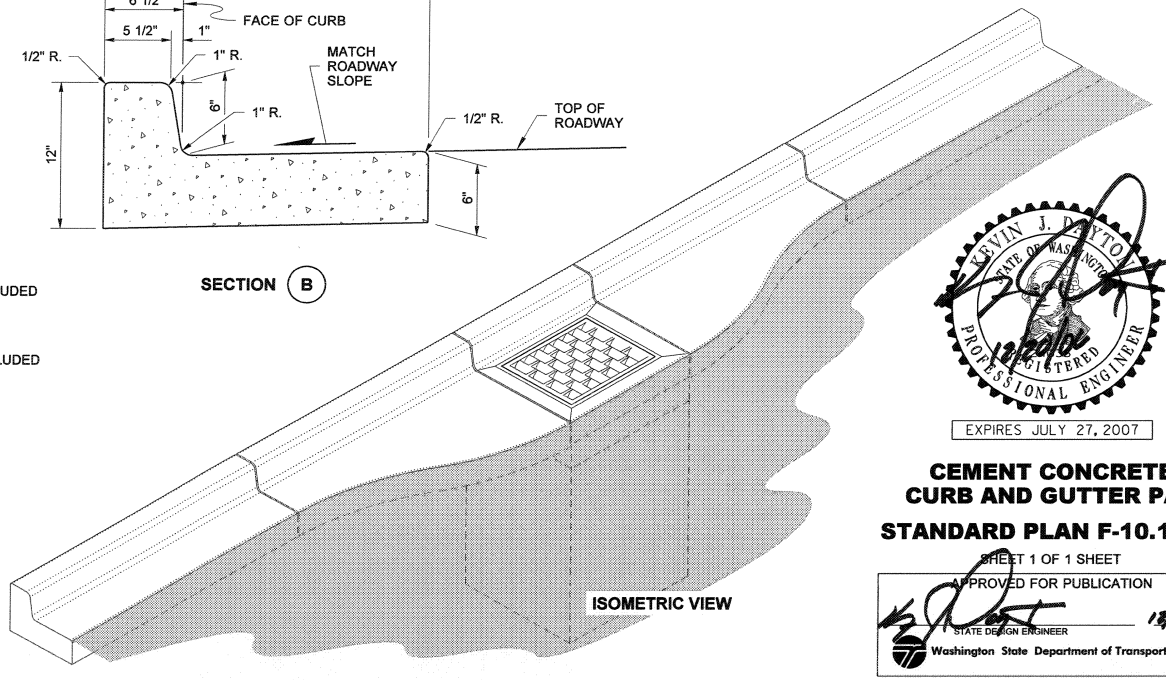

NOTES

1. The intent of this design is to facilitate the compaction of Hot Mix Asphalt pavement adjacent to a drainage structure.
2. The centerline of the drainage structure may differ from the centerline of the frame and grate.

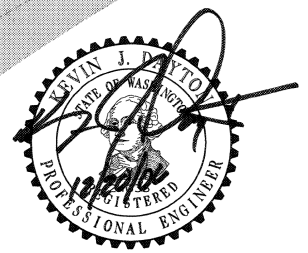

EXPIRES JULY 27, 2007

CEMENT CONCRETE CURB AND GUTTER PAN

STANDARD PLAN F-10.16-00

SHEET 1 OF 1 SHEET

APPROVED FOR PUBLICATION

STATE DESIGN ENGINEER — DATE 12/20/06

Washington State Department of Transportation

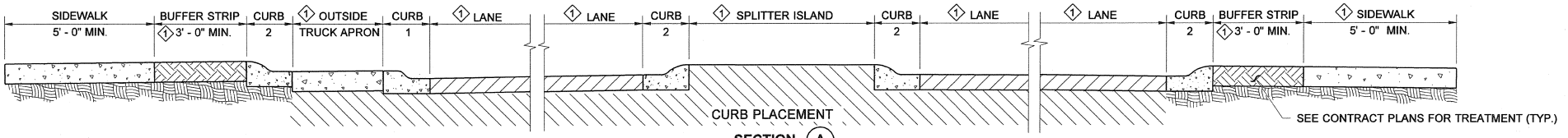

SECTION (A)

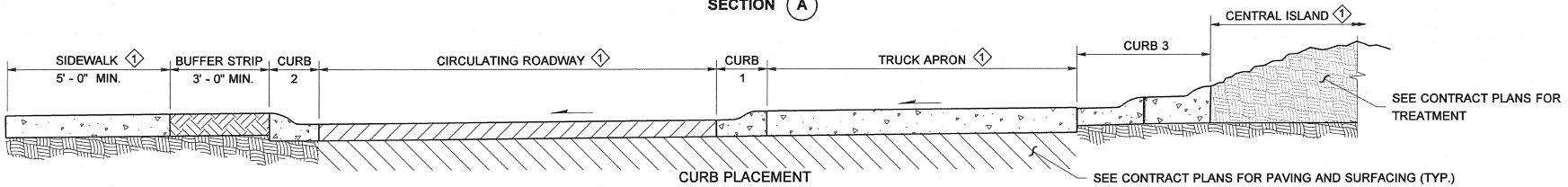

SECTION (B)

(ROUNDABOUT CONFIGURATION WILL VARY DEPENDING ON CONTRACT PLANS)

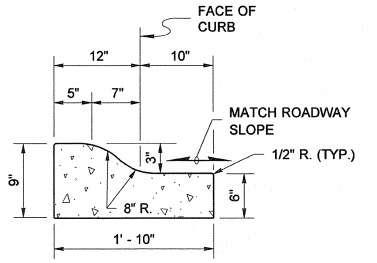

CURB 1
ROUNDABOUT TRUCK APRON
CEMENT CONCRETE CURB & GUTTER

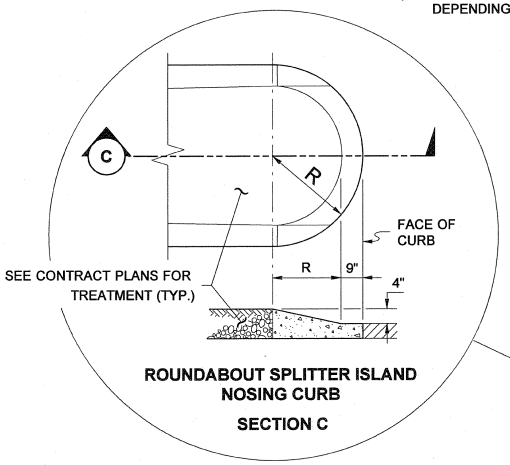

ROUNDABOUT SPLITTER ISLAND NOSING CURB

SECTION C

DETAIL

(SEE CONTRACT PLANS FOR R)

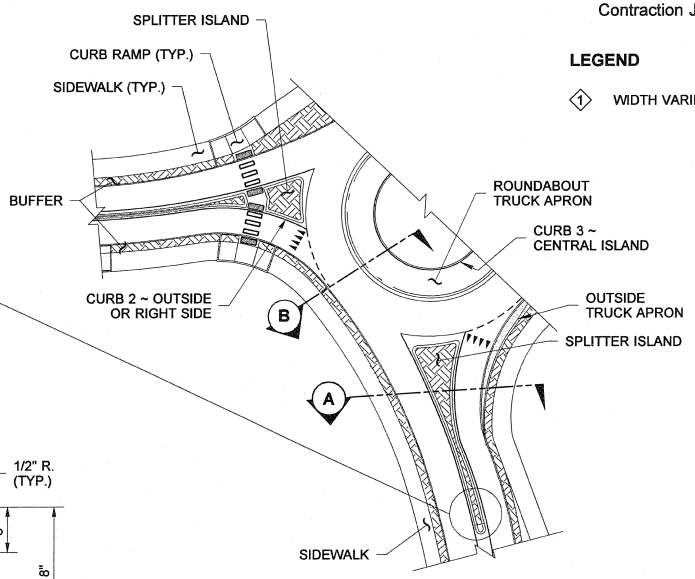

PARTIAL PLAN

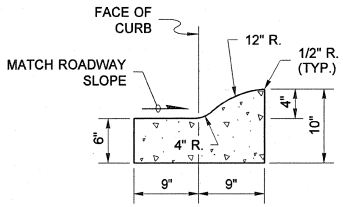

CURB 2
(OUTSIDE, RIGHT SIDE OR SPLITTER ISLAND)

ROUNDABOUT CEMENT CONCRETE CURB AND GUTTER

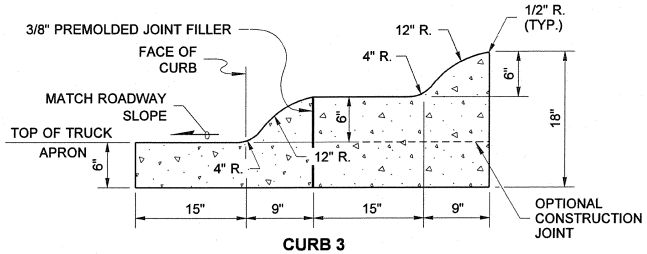

CURB 3
ROUNDABOUT CENTRAL ISLAND
CEMENT CONCRETE CURB

NOTES

1. See **Standard Plan F-30.10** for Curb Expansion and Contraction Joint spacing.

LEGEND

(1) WIDTH VARIES ~ SEE CONTRACT PLANS

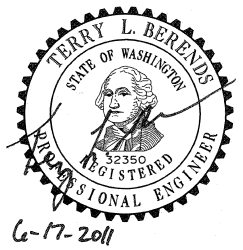

ROUNDABOUT CEMENT CONCRETE CURBS

STANDARD PLAN F-10.18-00

SHEET 1 OF 1 SHEET

APPROVED FOR PUBLICATION

6/23/11

STATE DESIGN ENGINEER — DATE

Washington State Department of Transportation

DRAWN BY: FERN LIDDELL

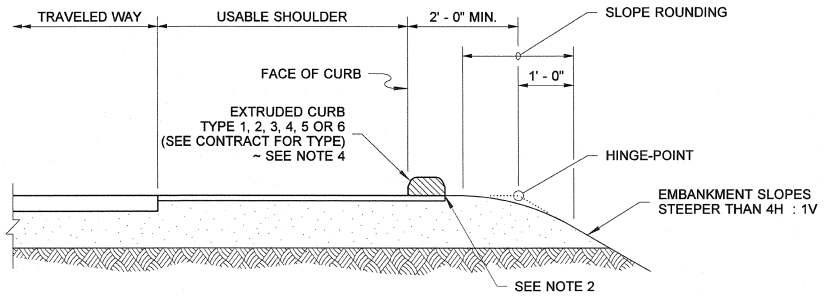

EXTRUDED CURB WITH SLOPE ROUNDING

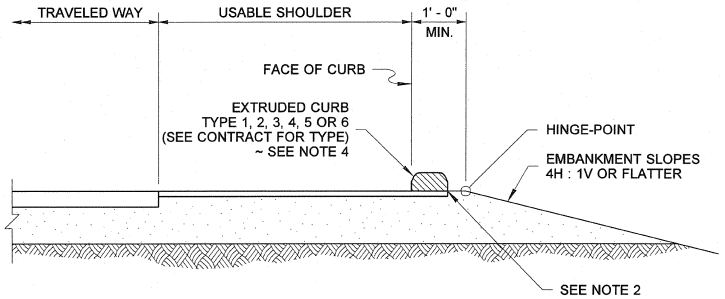

EXTRUDED CURB WITHOUT SLOPE ROUNDING

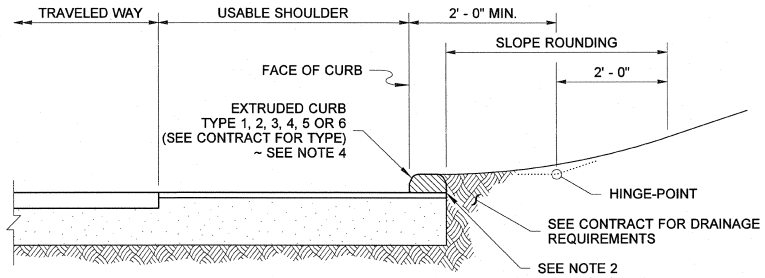

EXTRUDED CURB AT CUT SLOPE

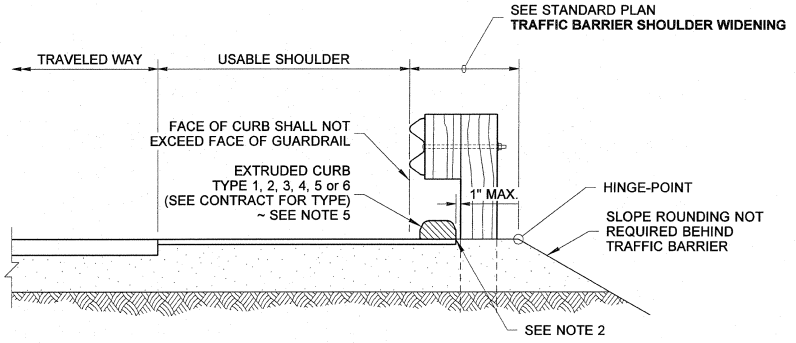

EXTRUDED CURB AT BEAM GUARDRAIL TYPE 1

NOTES

1. The installation of curb in areas with existing guardrail could require the removal and resetting of the guardrail or its components.
2. Extend shoulder pavement to provide a base for the extruded curb.
3. See Contract for exception to distances shown.
4. Type 3 and 6 curbs are not used on roadways with a posted speed greater than 40 mph.
5. Type 3 and 6 are not used under beam guardrail on roadways with a posted speed greater than 50 mph.

EXPIRES JUNE 19, 2010

EXTRUDED CURB PLACEMENT

STANDARD PLAN F-10.40-01

SHEET 1 OF 1 SHEET

APPROVED FOR PUBLICATION

7/3/08

STATE DESIGN ENGINEER DATE

Washington State Department of Transportation

DRAWN BY: BILL BERENS

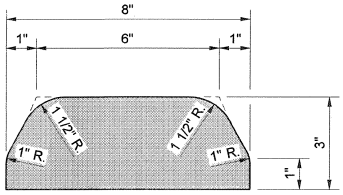

TYPE 1
(HOT MIX ASPHALT)

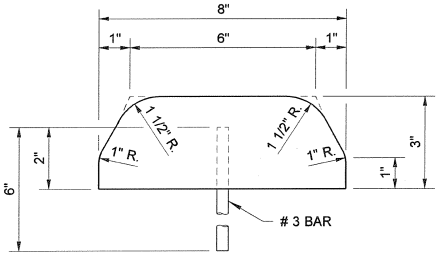

TYPE 4
(CEMENT CONCRETE)

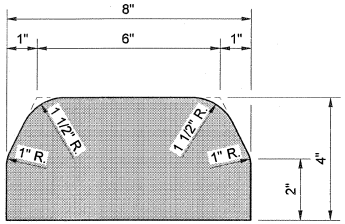

TYPE 2
(HOT MIX ASPHALT)

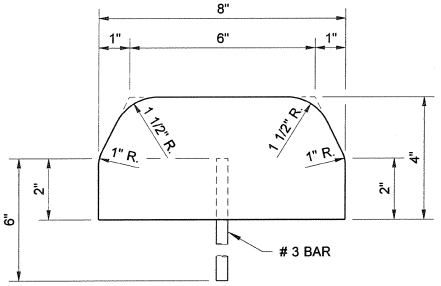

TYPE 5
(CEMENT CONCRETE)

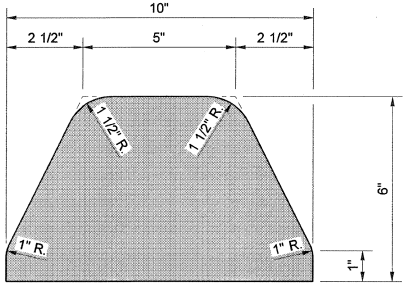

TYPE 3
(HOT MIX ASPHALT)

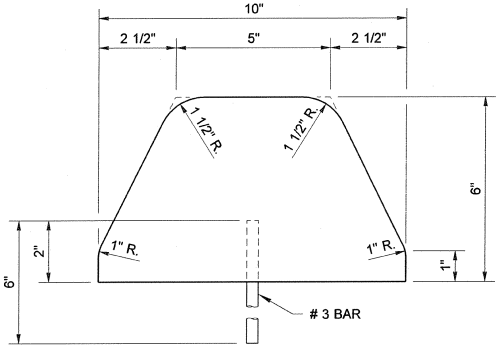

TYPE 6
(CEMENT CONCRETE)

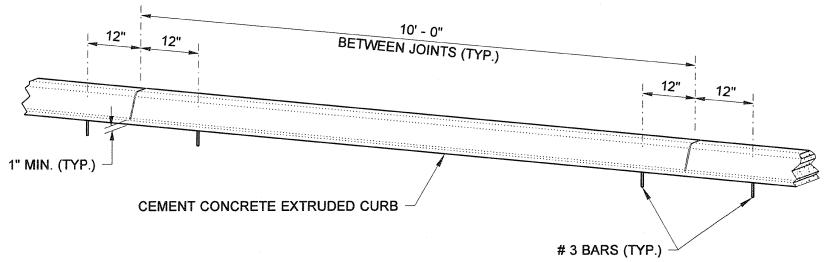

SPACING OF ANCHOR BARS
(FOR TYPES 4, 5, AND 6)

NOTE

JOINTS MAY BE FORMED DURING INSTALLATION USING A RIGID DIVIDER OR SAWCUT AFTER CONCRETE CURES TO MINIMUM STRENGTH.

KEN LEROY SMITH
STATE OF WASHINGTON
31805
REGISTERED
PROFESSIONAL ENGINEER
01/23/07
EXPIRES AUGUST 26, 2007

EXTRUDED CURB

STANDARD PLAN F-10.42-00

SHEET 1 OF 1 SHEET

APPROVED FOR PUBLICATION

STATE DESIGN ENGINEER — DATE 01/23/07

Washington State Department of Transportation

This page left blank intentionally.

DRAWN BY: BILL BERENS

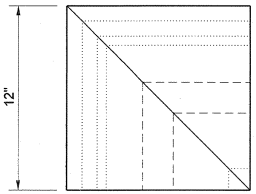

TOP VIEW

INSIDE CORNER BLOCK

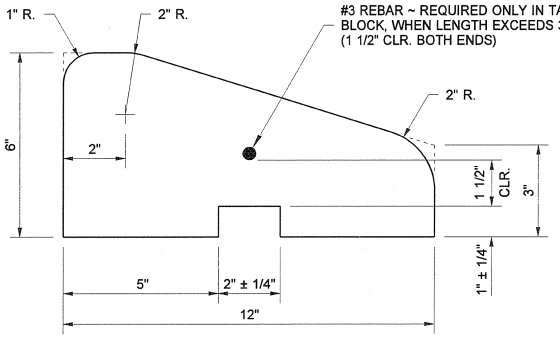

TYPICAL OF ALL

END VIEW

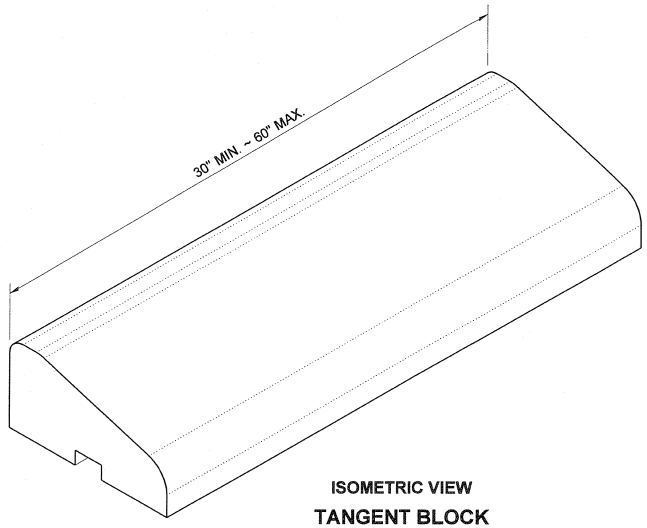

ISOMETRIC VIEW

TANGENT BLOCK

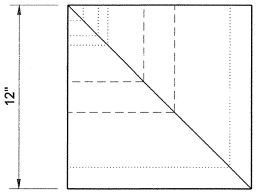

TOP VIEW

OUTSIDE CORNER BLOCK

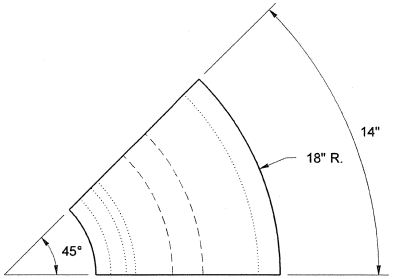

TOP VIEW

18" RADIUS BLOCK

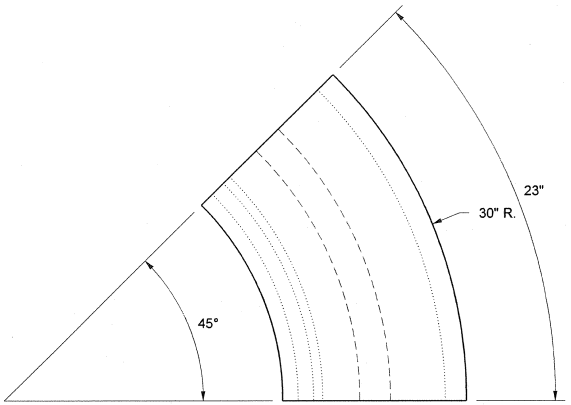

TOP VIEW

30" RADIUS BLOCK

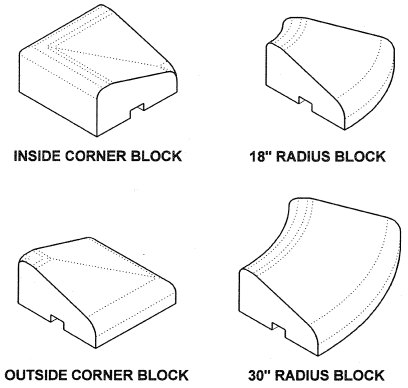

INSIDE CORNER BLOCK — 18" RADIUS BLOCK

OUTSIDE CORNER BLOCK — 30" RADIUS BLOCK

ISOMETRIC VIEWS

BAKOTICH, PASQUALE — STATE OF WASHINGTON — 24557 — REGISTERED PROFESSIONAL ENGINEER — 9/5/07

EXPIRES JUNE 19, 2008

PRECAST CONCRETE SLOPED MOUNTABLE CURB

STANDARD PLAN F-10.62-01

SHEET 1 OF 2 SHEETS

APPROVED FOR PUBLICATION

Pasco Bakotich — STATE DESIGN ENGINEER — 9/5/07 — DATE

Washington State Department of Transportation

DRAWN BY: LISA CYFORD

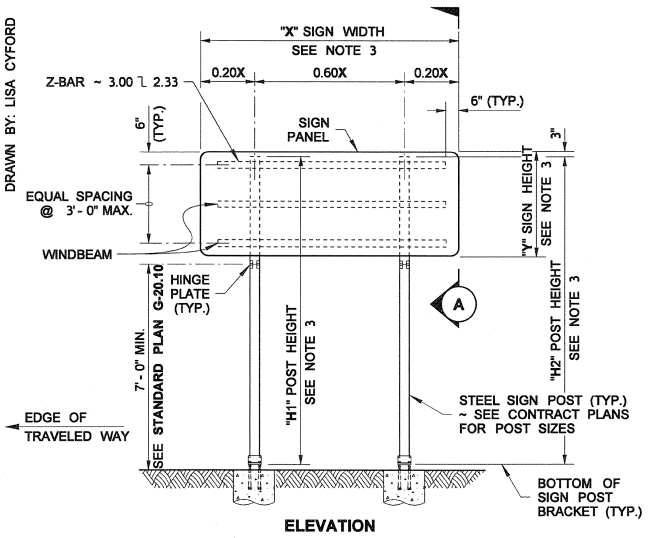

ELEVATION

TYPE TP-A OR TP-B SIGN SUPPORT

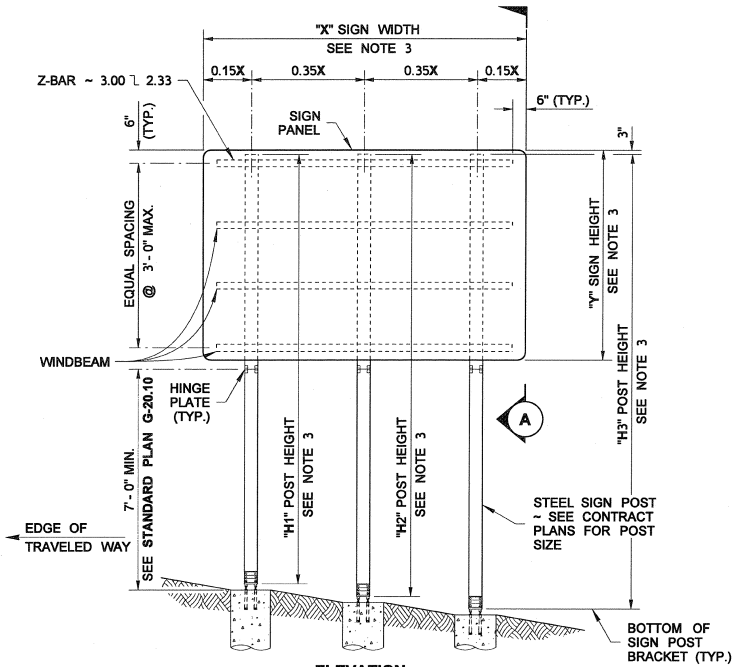

ELEVATION

TYPE TP-A OR TP-B SIGN SUPPORT

NOTES

1. Dimensions for the parts used to assemble the base connections are intentionally not shown. Base connections are patented, manufactured products that are in compliance with NCHRP 350 crash test criteria. The base connection details are only shown on this plan to illustrate how the parts are assembled.
2. For Steel Sign Support Foundations, see **Standard Plan G-25.10.**
3. For "X," "Y," "H1," "H2," and "H3," refer to the Sign Specification Sheet in the Contract.

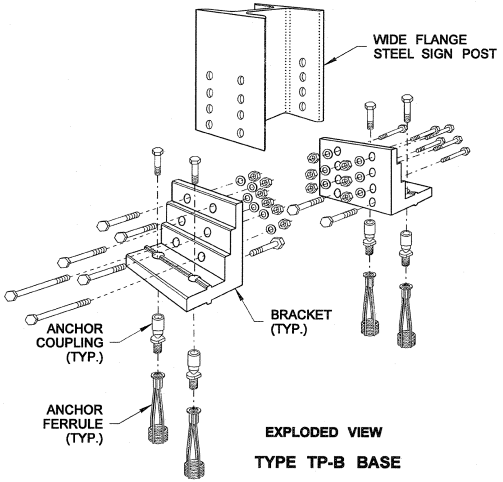

EXPLODED VIEW

TYPE TP-B BASE

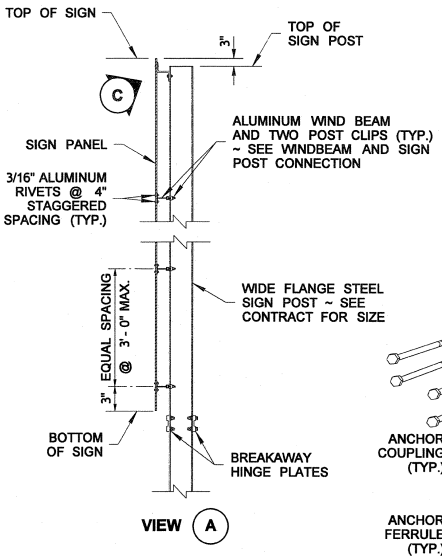

VIEW (A)

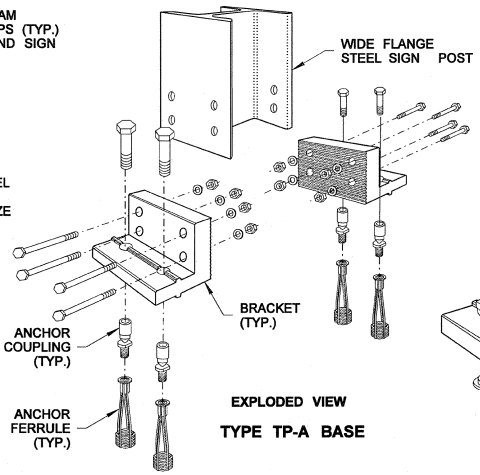

EXPLODED VIEW

TYPE TP-A BASE

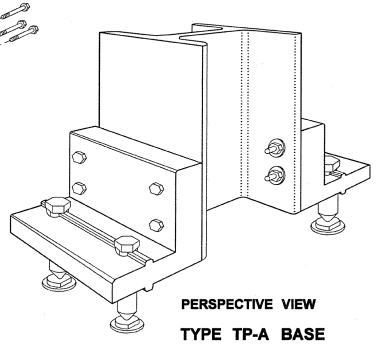

PERSPECTIVE VIEW

TYPE TP-A BASE

(W6×9)

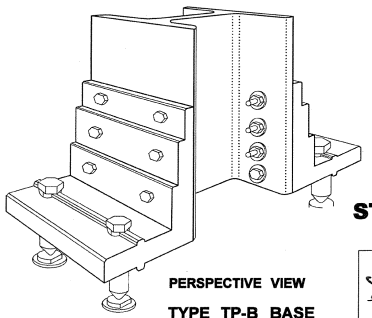

PERSPECTIVE VIEW

TYPE TP-B BASE

(W6×12 OR LARGER)

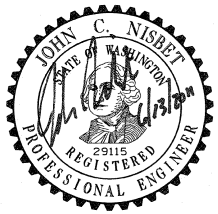

STEEL SIGN SUPPORT TYPES TP-A AND TP-B INSTALLATION DETAILS

STANDARD PLAN G-24.60-01

SHEET 1 OF 2 SHEETS

APPROVED FOR PUBLICATION

STATE DESIGN ENGINEER — DATE 6/16/11

Washington State Department of Transportation

DRAWN BY: LISA CYFORD

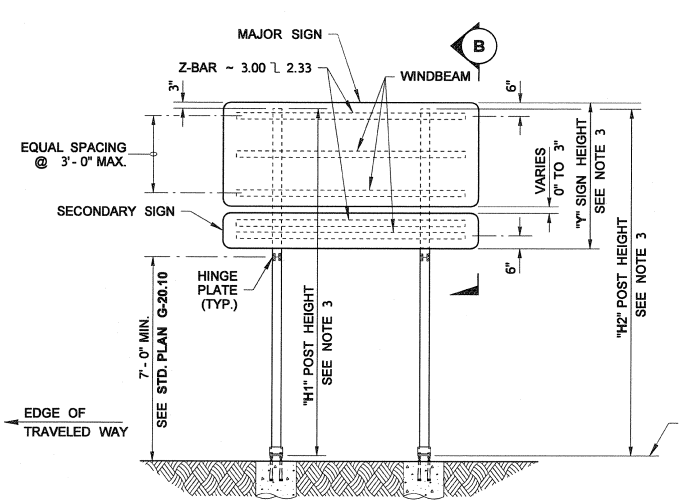

ELEVATION

MAJOR AND SECONDARY SIGN SUPPORT INSTALLATION

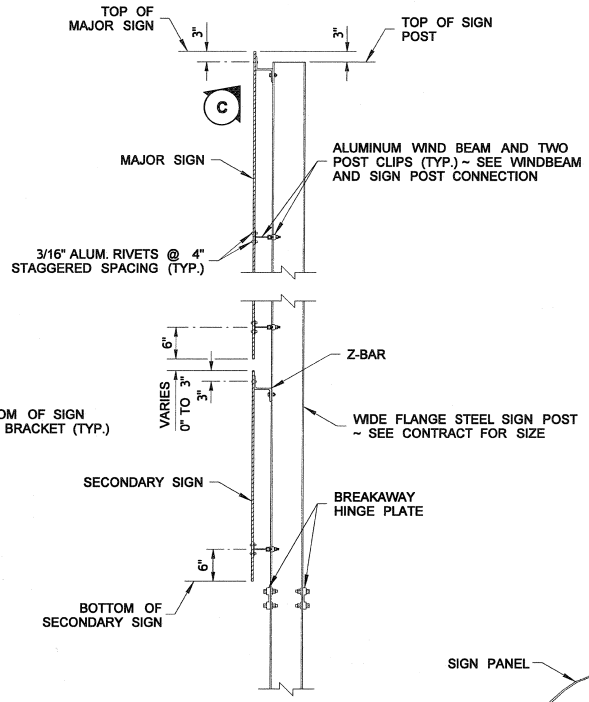

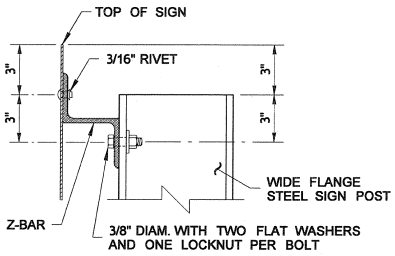

DETAIL C

(BOLT ON ONE SIDE OF EACH WIDE FLANGE STEEL SIGN POST)

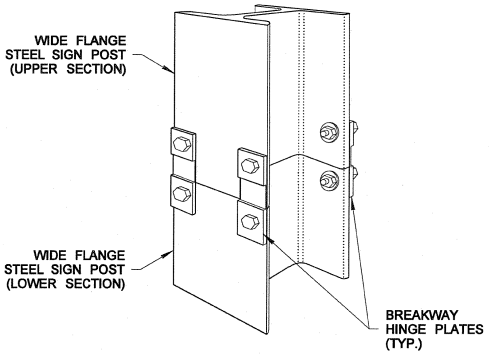

PERSPECTIVE VIEW

BREAKAWAY HINGE PLATE CONNECTION

VIEW B

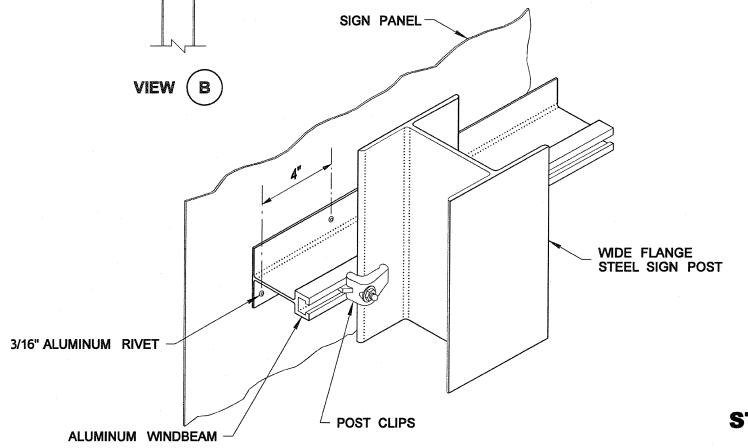

ISOMETRIC VIEW

WINDBEAM AND SIGN POST CONNECTION

(ATTACH POST CLIPS ON BOTH SIDES OF WIDE FLANGE STEEL SIGN POST)

JOHN C. NISBET
STATE OF WASHINGTON
29115
REGISTERED
PROFESSIONAL ENGINEER

STEEL SIGN SUPPORT TYPES TP-A AND TP-B INSTALLATION DETAILS

STANDARD PLAN G-24.60-01

SHEET 2 OF 2 SHEETS

APPROVED FOR PUBLICATION

STATE DESIGN ENGINEER — DATE 6/16/11

Washington State Department of Transportation

DRAWN BY: LISA CYFORD

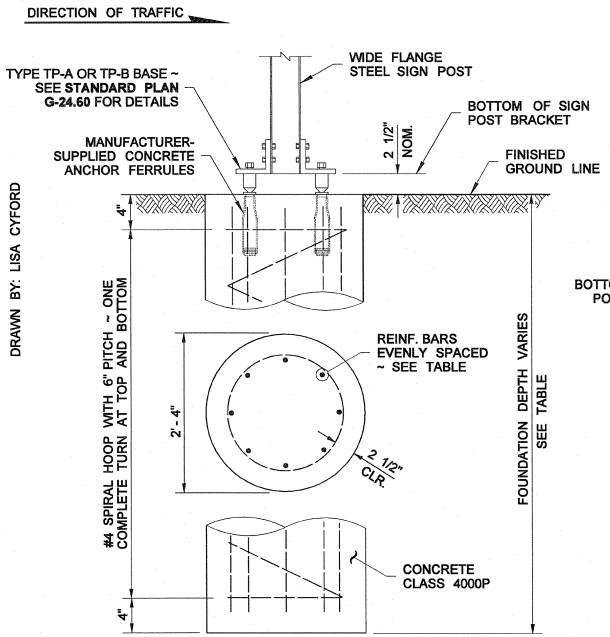

ELEVATION VIEW

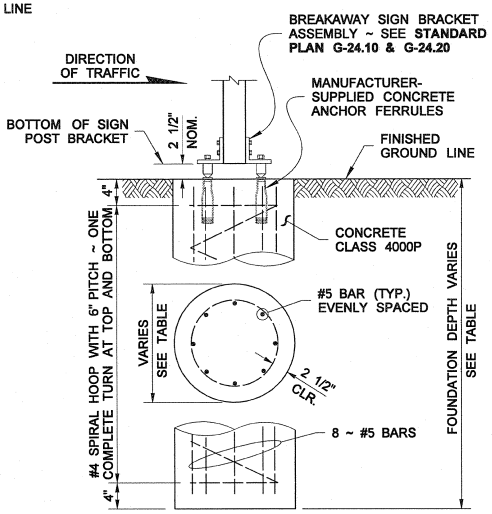

ELEVATION VIEW

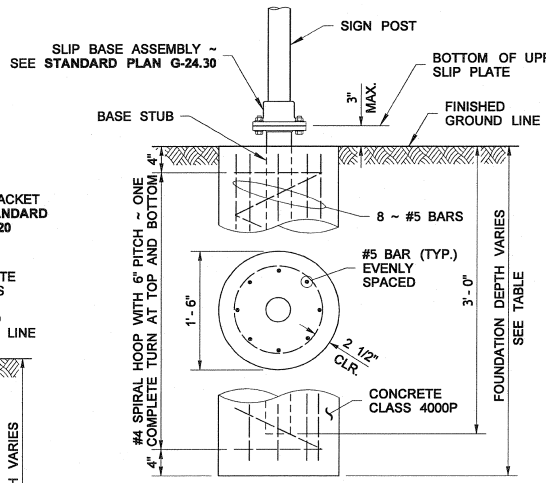

ELEVATION VIEW

TYPE TP-A & TYPE TP-B FOUNDATION

TYPE TP-A & TP-B FOUNDATION TABLE SEE NOTE 1					
POST SIZE		MAX. XYZ		VERTICAL REBAR	FDN. DEPTH ⟨1⟩
ASTM A 36	ASTM A 992	2 POST ⟨3⟩	3 POST		
W6 x 12	W6 x 9	1570	2355	8 ~ # 5	4'-0"
W6 x 16	W6 x 12	2340	3510	8 ~ # 5	5'-0"
W8 x 21	W8 x 18	4120	6180	8 ~ # 6	7'-0"
W10 x 26	W10 x 22	6320	9480	8 ~ # 7	8'-0"
W12 x 30	W12 x 26	8700	—	8 ~ # 7	9'-0"

TYPE AS & TYPE AP FOUNDATION

TYPE AS FOUNDATION TABLE			
POST SIZE	MAX. XYZ	FDN. DIAM.	FDN. DEPTH ⟨1⟩
4" SQ.	250	18"	4'-0"

TYPE AP FOUNDATION TABLE			
POST SIZE	MAX. XYZ	FDN. DIAM.	FDN. DEPTH ⟨1⟩
3" O.D.	225	18"	3'-6"
3 1/2" O.D.	250	18"	4'-0"
4" O.D.	275	24"	4'-0"
4 1/2" O.D.	300	24"	4'-0"

TYPE PL, TYPE PL-T & TYPE PL-U FOUNDATION

TYPE PL, TYPE PL-T & TYPE PL-U FOUNDATION TABLE	
MAX. XYZ	FDN. DEPTH ⟨1⟩
225	3'-6"
265	4'-0"
300	4'-6"
600 ⟨2⟩	4'-6"

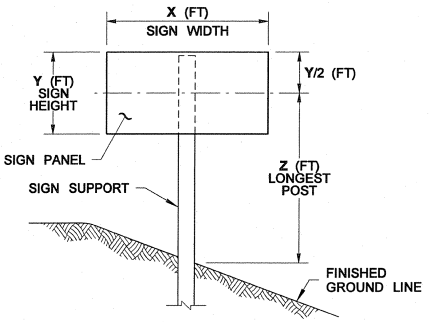

XYZ CALCULATION

$XYZ\ (FT^3) = X \times Y \times Z$

USED TO DETERMINE POST SIZE ~ SEE FOUNDATION TABLES

NOTES

1. Per TRANSPO: 5" to 8" square steel posts are acceptable and require type TP-B foundations.
2. Install conduit for post-mounted Junction Box in the concrete foundation, when required. See **Standard Plan J-12, Sheet 2.**

KEY NOTES

⟨1⟩ Foundation depths based on allowable lateral bearing pressure in excess of 2500 PSF.

⟨2⟩ Two-post installation.

⟨3⟩ Single-post installations require square steel posts. For single-post installations, divide the ⟨2⟩ post MAX. XYZ in half.

STEEL SIGN SUPPORT FOUNDATION DETAILS

STANDARD PLAN G-25.10-02

SHEET 1 OF 1 SHEET

APPROVED FOR PUBLICATION

STATE DESIGN ENGINEER — DATE 6/27/11

Washington State Department of Transportation

DRAWN BY: LISA CYFORD

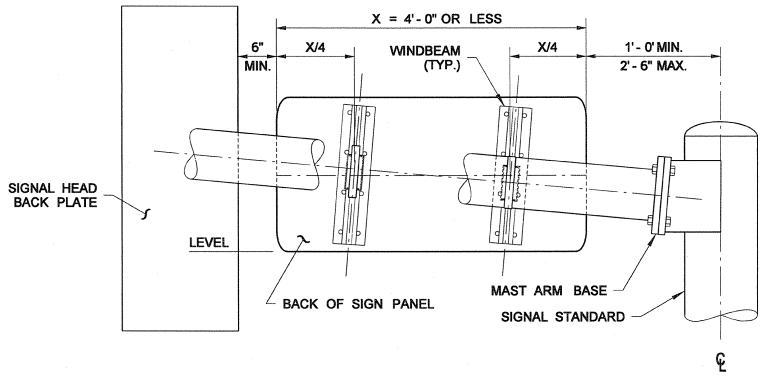

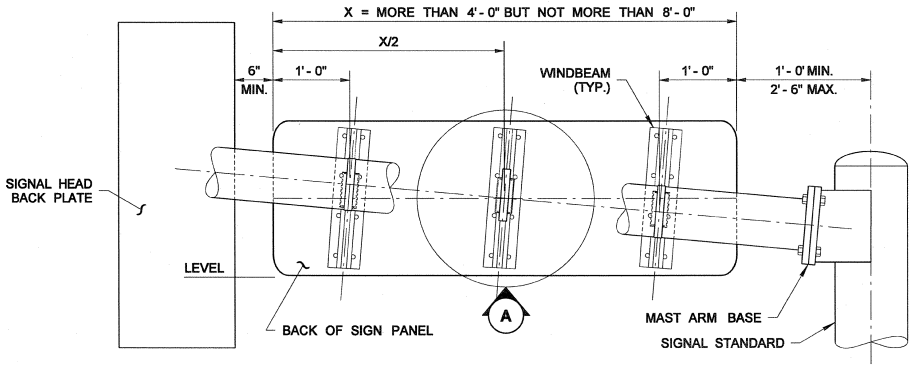

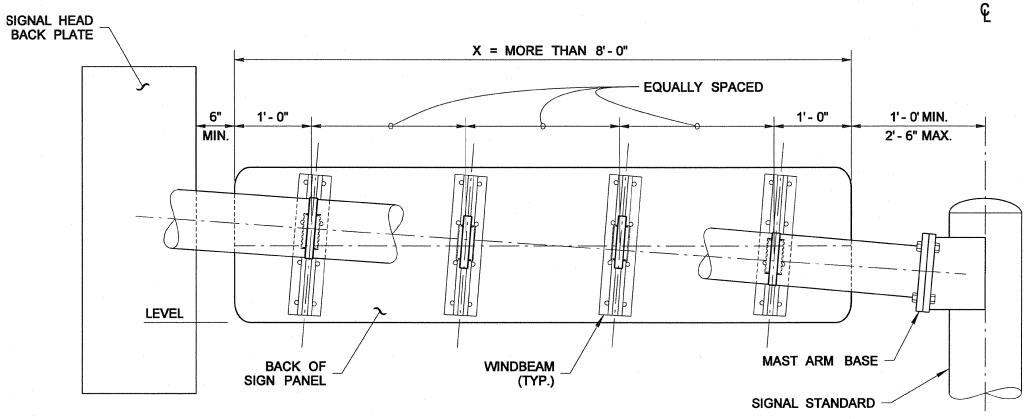

MAST ARM-MOUNTED STREET NAME SIGNS

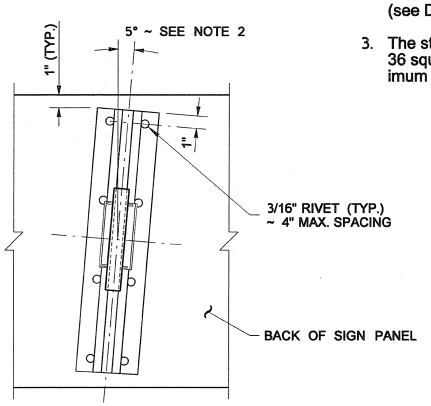

DETAIL (A)

TYPICAL FOR EACH CONNECTION

NOTES

1. Mounting brackets with steel straps shall be a stainless steel band and buckle system product or an approved equal. Mounting brackets shall be universal channel clamps; steel straps shall be 3/4" wide and 0.030" thick.
2. All signs installed on mast arms or standards (poles) require windbeams. All signs shall be installed with horizontal edges level. A skewed windbeam is required only when the sign is mounted within 12" of the mast arm base (see Detail "A").
3. The street name sign shall be a maximum of 36 square feet and the sign height is a maximum of 3 feet.

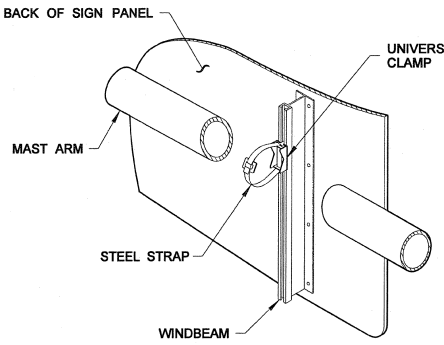

TYPICAL MAST ARM INSTALLATION

JOHN C. NISBET
STATE OF WASHINGTON
29115
REGISTERED
PROFESSIONAL ENGINEER

SIGN INSTALLATION ON SIGNAL AND LIGHT STANDARDS STANDARD PLAN G-30.10-01

SHEET 1 OF 2 SHEETS

APPROVED FOR PUBLICATION

STATE DESIGN ENGINEER — DATE 6/16/11

Washington State Department of Transportation

DRAWN BY: LISA CYFORD

DIMENSIONS	
A	B
3' - 0"	9"
4' - 0"	1' - 0"

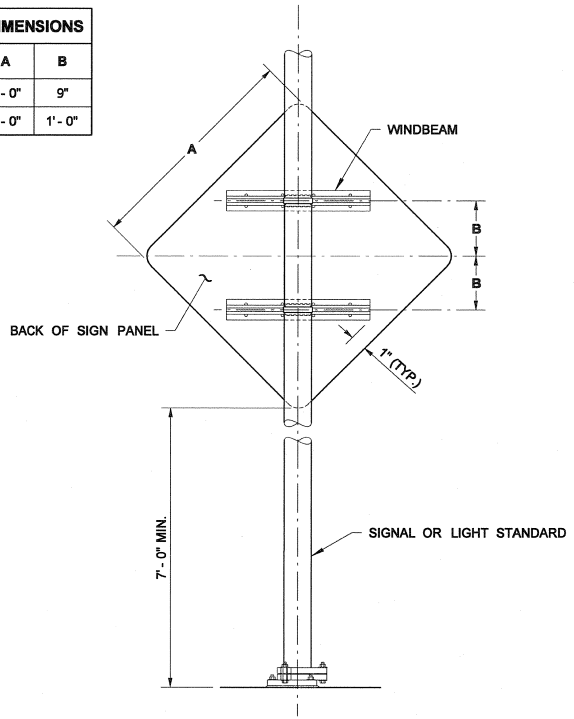

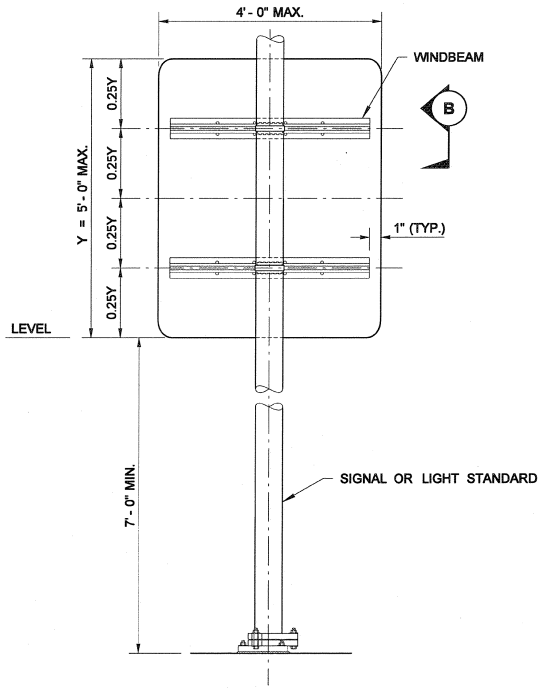

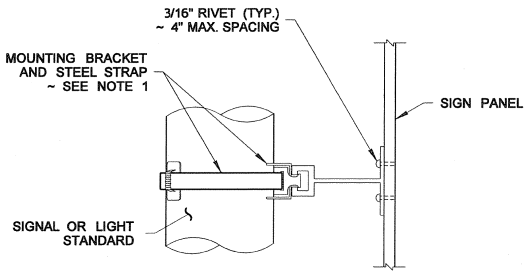

SECTION (B)

SIGN INSTALLATION ON SIGNAL OR LIGHT STANDARD

DIMENSIONS			
X	Y	C	D
3' - 0"	2' - 6"	1' - 0"	6"
3' - 0"	3' - 0"	1' - 0"	6"
4' - 0"	2' - 6"	1' - 3"	9"

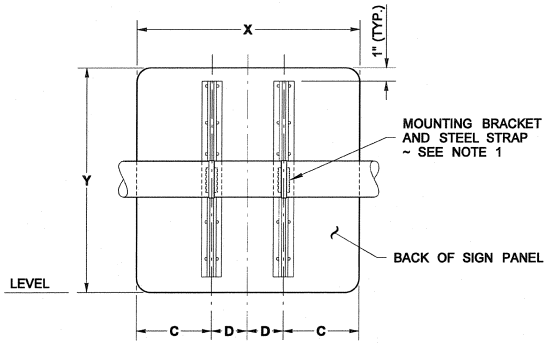

MAST ARM-MOUNTED LANE USE SIGNS

SIGN INSTALLATION ON SIGNAL AND LIGHT STANDARDS STANDARD PLAN G-30.10-01

SHEET 2 OF 2 SHEETS

APPROVED FOR PUBLICATION

STATE DESIGN ENGINEER — DATE 6/16/11

Washington State Department of Transportation

DRAWN BY: ELENA BRUNSTEIN

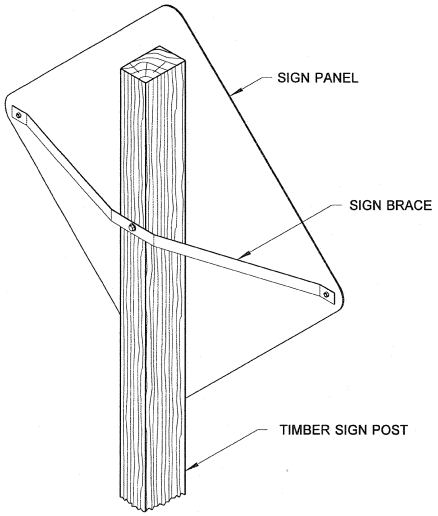

SIGN BRACE ON TIMBER POST

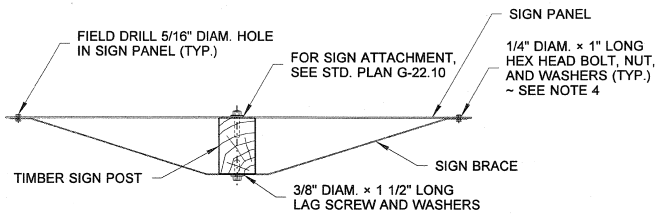

PLAN

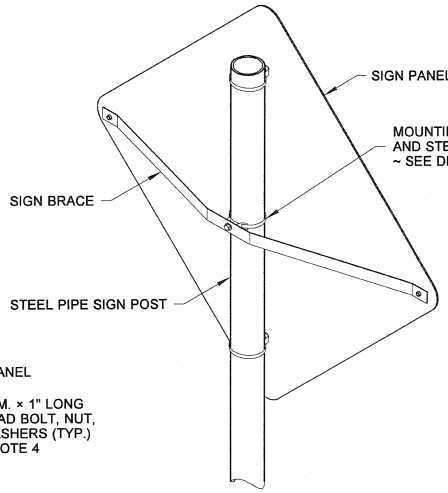

SIGN BRACE ON STEEL PIPE

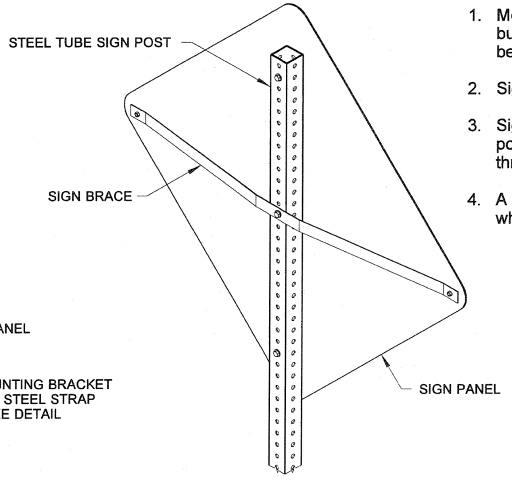

SIGN BRACE ON STEEL TUBE

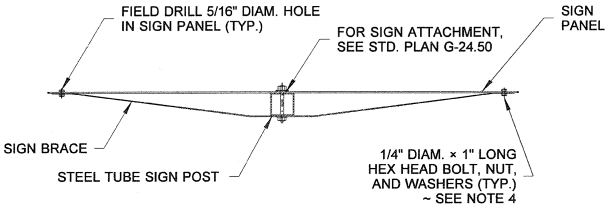

PLAN

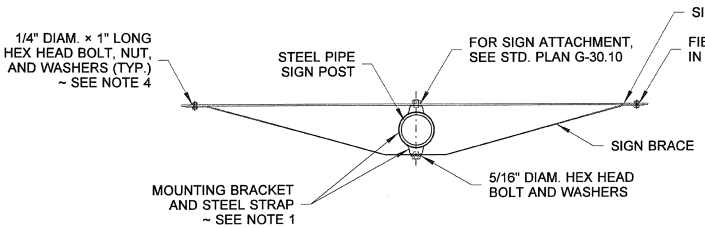

PLAN

NOTES

1. Mounting brackets with steel straps shall be a stainless steel band and buckle system product or an approved equal. Mounting brackets shall be one bolt, flared leg; steel straps shall be 3/4" wide and 0.030" thick.
2. Sign braces are only installed when specified in the contract.
3. Sign braces are typically necessary on large sign panels that are exposed to high winds, traffic generated wind buffeting, or when snow thrown from plows might impact the sign.
4. A nylon washer shall be placed between the sign and the steel washer when the sign face has Type 3 or 4 sheeting.

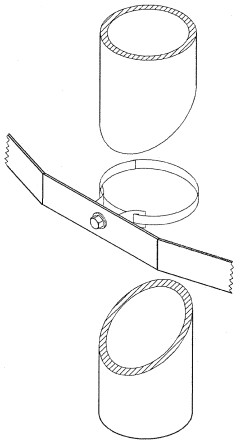

MOUNTING BRACKET AND STEEL STRAP DETAIL

THEODORE J. TREPANIER
STATE OF WASHINGTON
25535
REGISTERED
PROFESSIONAL ENGINEER
EXPIRES AUGUST 9, 2009

SIGN BRACING

STANDARD PLAN G-50.10-00

SHEET 1 OF 2 SHEETS

APPROVED FOR PUBLICATION

STATE DESIGN ENGINEER — DATE 11/8/07

Washington State Department of Transportation

DRAWN BY: ELENA BRUNSTEIN

SIGN BRACE DIMENSIONS				
	SIGN TYPE			
	YIELD	DIAMOND-SHAPED	OTHERS	
A	1/3 SIGN WIDTH - 1 3/4"	1/2 SIGN WIDTH - 2 1/4"	1/2 SIGN WIDTH - 1"	
	SIGN POST TYPE			
	4×6 OR 6×6 TIMBER POST	6×8 TIMBER POST	3" DIAM. STEEL PIPE	2 1/2" SQUARE TUBE
B	5 1/2"	7 1/2"	4 3/4"	2 1/2"

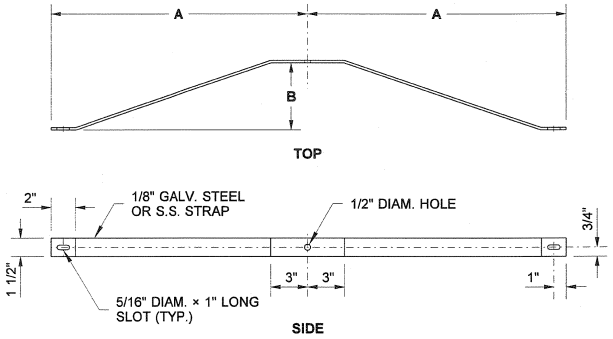

SIGN BRACE DETAIL

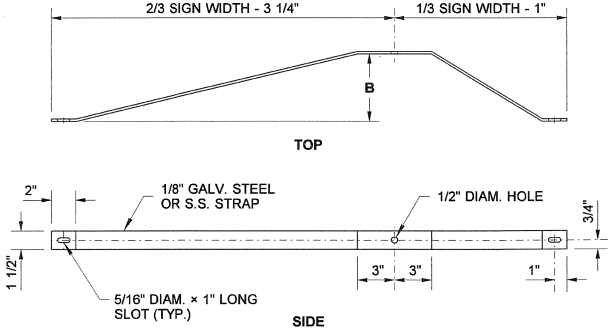

NO PASSING ZONE SIGN BRACE DETAIL

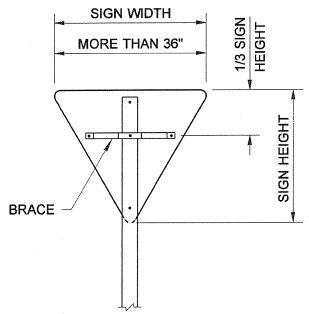

YIELD SIGN

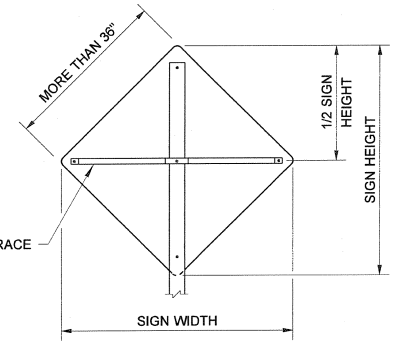

DIAMOND-SHAPED SIGN

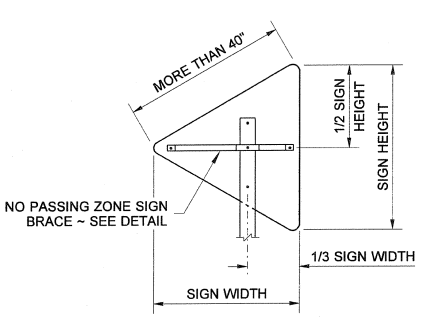

NO PASSING ZONE SIGN

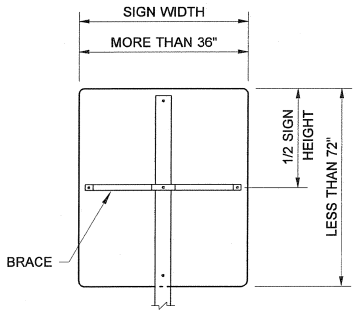

SMALL RECTANGULAR SIGN

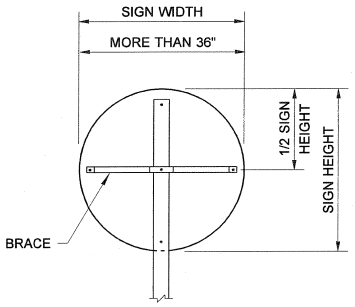

RAILROAD WARNING SIGN

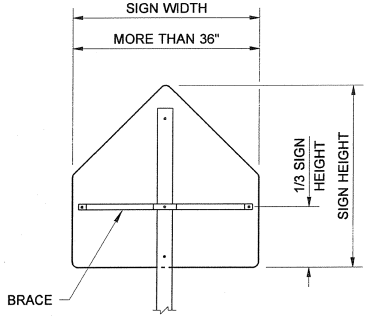

SCHOOL ZONE SIGN

SIGN BRACE PLACEMENT

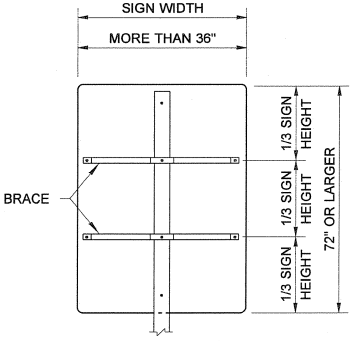

LARGE RECTANGULAR SIGN

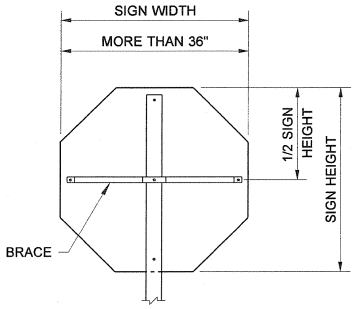

STOP SIGN

THEODORE J. TREPANIER
STATE OF WASHINGTON
25335
REGISTERED
PROFESSIONAL ENGINEER
EXPIRES AUGUST 9, 2009

SIGN BRACING

STANDARD PLAN G-50.10-00

SHEET 2 OF 2 SHEETS

APPROVED FOR PUBLICATION

STATE DESIGN ENGINEER — DATE 11/8/07

Washington State Department of Transportation

DRAWN BY: BILL BERENS

POST SELECTION		
TOTAL SIGN AREA ◇1 Σ (X TIMES Y) (FT^2)	POST SIZE	
	O.D.	WALL
50 OR LESS	18"	0.438"
50+ to 100	18"	0.438"
100+ to 150	24"	0.375"
150+ to 200	24"	0.375"
200+ to 250	24"	0.375"
250+ to 300	24"	0.375"
300+ to 350	24"	0.438"
350+ to 400	24"	0.500"

SINGLE OR DOUBLE CANTILEVER

DOUBLE CANTILEVER ONLY

◇1 SUM OF SIGN FOR DOUBLE CANTILEVER

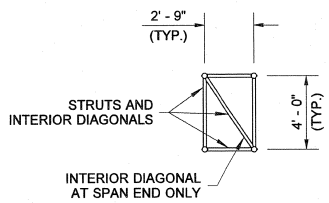

END

ALL TRUSS DIAGONALS AND STRUTS SHALL BE 1 1/2" PIPE (0.145" WALL)

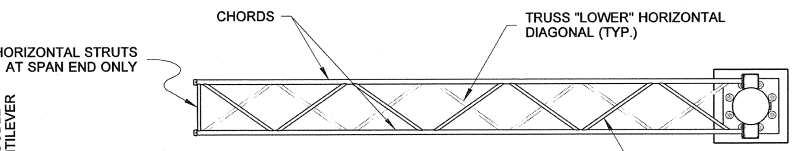

TOP

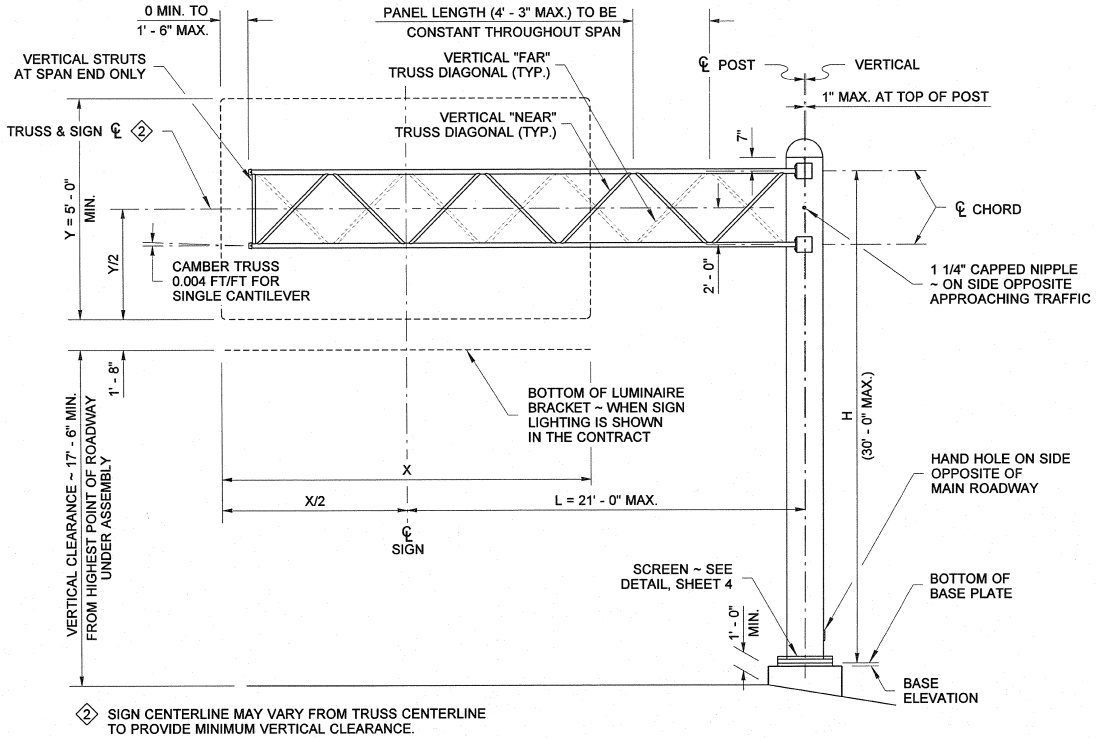

◇2 SIGN CENTERLINE MAY VARY FROM TRUSS CENTERLINE TO PROVIDE MINIMUM VERTICAL CLEARANCE.

ELEVATION

SINGLE CANTILEVER SIGN STRUCTURE

MATERIAL SPECIFICATIONS	
PIPE (CHORDS, DIAGONALS, STRUTS AND POSTS)	ASTM A 36 OR ASTM A 53 GRADE B, TYPE E OR S, OR A 500 GRADE B
PLATES	ASTM A 36
SHAPES	ASTM A 36 ASTM A 992
BOLTS, NUTS, & WASHERS	STD. SPEC. 9-06.5(3)
PIPE, PLATE & SHAPE GALVANIZING	AASHTO M 111
FASTENER GALVANIZING	AASHTO M 232

CHORD SELECTION		
SIGN AREA (X TIMES Y) (FT^2)	CHORD SIZE	
	NOM. DIAM.	WALL
50 OR LESS	2"	0.154"
50+ TO 100	2"	0.218"
100+ TO 150	2 1/2"	0.203"
150+ TO 200	3"	0.216"

NOTES

1. Vertical and horizontal clearance requirements shall be as shown on the contract plans.
2. No post splices permitted in lower third of height, nor closer than 3' - 0" to bottom chord, except as otherwise noted. No chord shop splices permitted in first two-thirds of the span, except as otherwise noted. A maximum of two splices are permitted in the post. For post or chord shop splice details, see **Standard Plan G-70.10**.
3. The back-up plates or rings for all full penetration welds shall be welded continuously to the joined pieces. This can be done by either a continuous fillet weld on the back side of the piece, or by a continuous weld in the root of the full penetration weld.
4. All bolt holes shall be drilled, and the diameter shall be 1/16" larger than the nominal bolt diameter, except as noted.
5. The design and analysis of the structures has been done in accordance with AASHTO Standard Specification for Structural Supports for Highway Signs, Luminaires and Traffic Signals Dated 2001, using 90 MPH wind velocity and fatigue category - I.
6. Adjust post alignment in plane normal to roadway centerline by means of leveling nuts located below base plate to maintain upward slope in cantilever arm(s). Tighten anchor nuts above base plate in accordance with Standard Specification 6-03.3(33).
7. Variable Message Signs (VMS) exceeding 700 lbs. and/or 200 sq. ft. shall not be installed on cantilever structure.

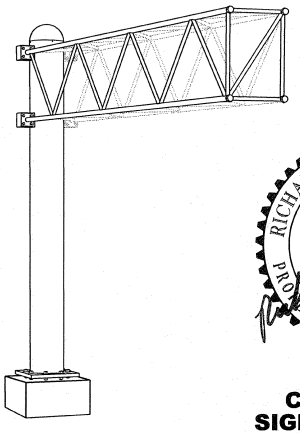

PERSPECTIVE

CANTILEVER SIGN STRUCTURE (TRUSS-TYPE) STANDARD PLAN G-60.10-01

SHEET 1 OF 4 SHEETS

APPROVED FOR PUBLICATION

STATE DESIGN ENGINEER — DATE 6/23/11

Washington State Department of Transportation

DRAWN BY: BILL BERENS

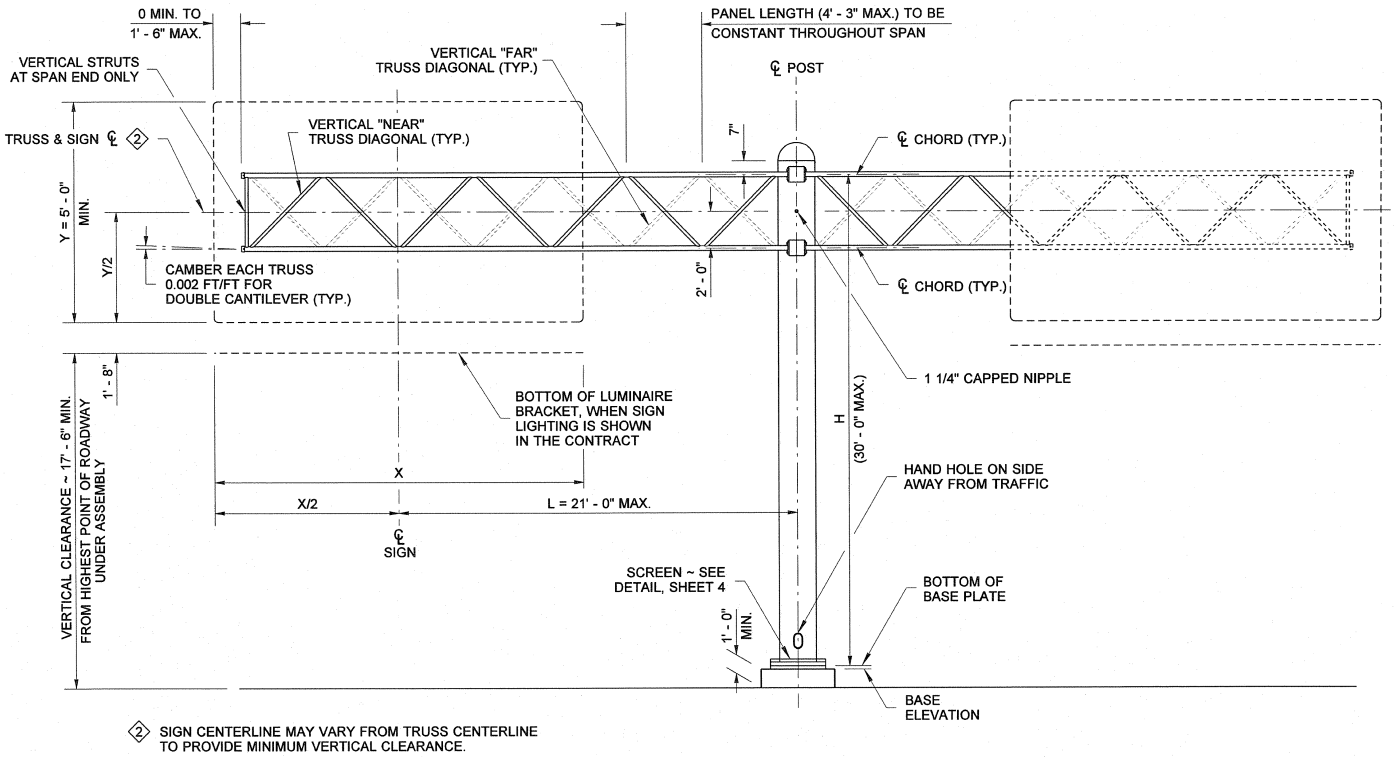

ELEVATION

DOUBLE CANTILEVER SIGN STRUCTURE

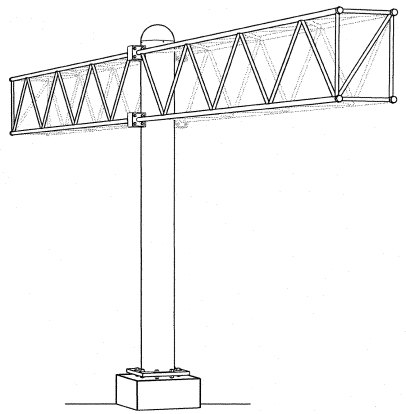

PERSPECTIVE

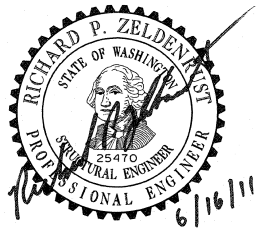

CANTILEVER SIGN STRUCTURE (TRUSS-TYPE) STANDARD PLAN G-60.10-01

SHEET 2 OF 4 SHEETS

APPROVED FOR PUBLICATION

STATE DESIGN ENGINEER — DATE 6/22/11

Washington State Department of Transportation

DRAWN BY: BILL BERENS

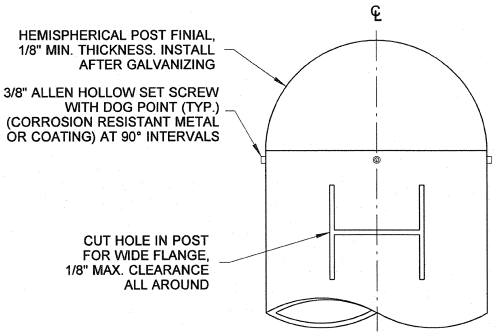

ELEVATION
ROTATED 90° TO SHOW CUTOUT

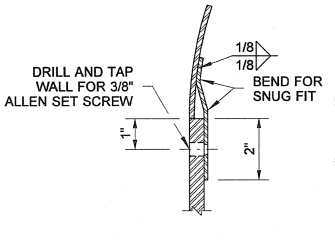

SECTION THROUGH FINIAL AND POST

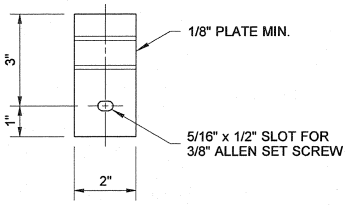

FINIAL BRACKET

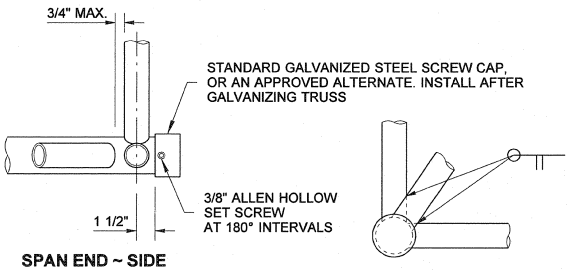

SPAN END ~ SIDE

SPAN END ~ END
OPPOSITE HAND SHOWN FOR CLARITY

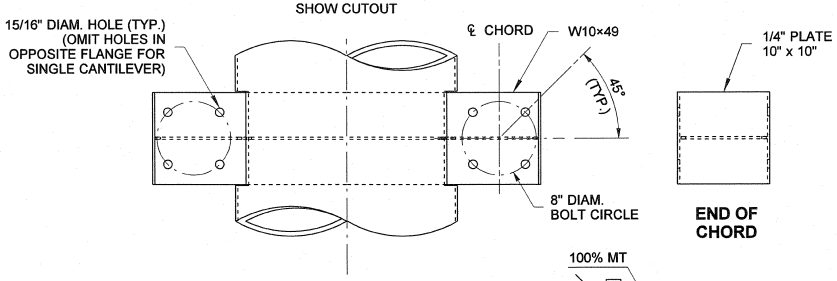

ELEVATION

END OF CHORD

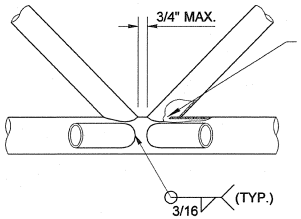

DIAGONAL CONNECTION DETAIL
TYPICAL OF ALL DIAGONALS

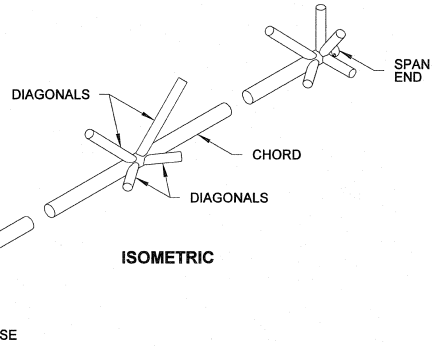

ISOMETRIC

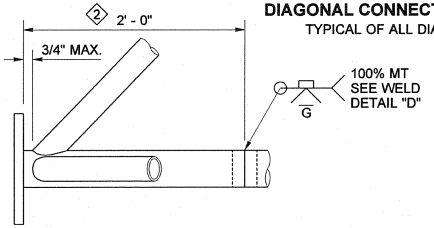

BASE ~ SIDE

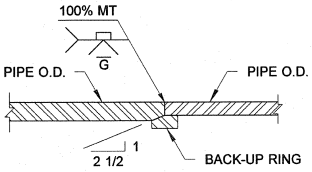

DETAIL "D"

② 3" DIAM. PIPE (t = 0.300) SPLICE WITH 3" DIAM. PIPE (t = 0.216) (SEE CHORD SELECTION TABLE)
2 1/2" DIAM. PIPE (t = 0.276) SPLICE WITH 2 1/2" DIAM. PIPE (t = 0.203) (SEE CHORD SELECTION TABLE)

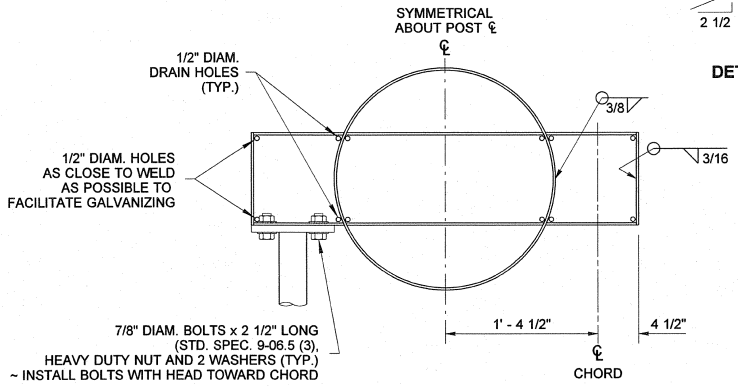

TOP

CHORD TO POST CONNECTION DETAIL

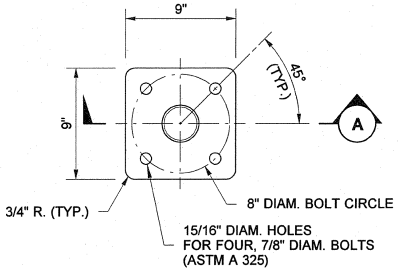

BASE ~ TOP

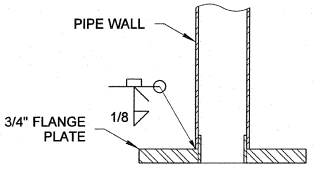

SECTION (A)

TYPICAL TRUSS DETAILS
ENDS OF DIAGONALS SHALL BE CUT TO FIT NEATLY AGAINST CHORDS

CANTILEVER SIGN STRUCTURE (TRUSS-TYPE)
STANDARD PLAN G-60.10-01

SHEET 3 OF 4 SHEETS

APPROVED FOR PUBLICATION
STATE DESIGN ENGINEER — DATE 6/22/11
Washington State Department of Transportation

DRAWN BY: BILL BERENS

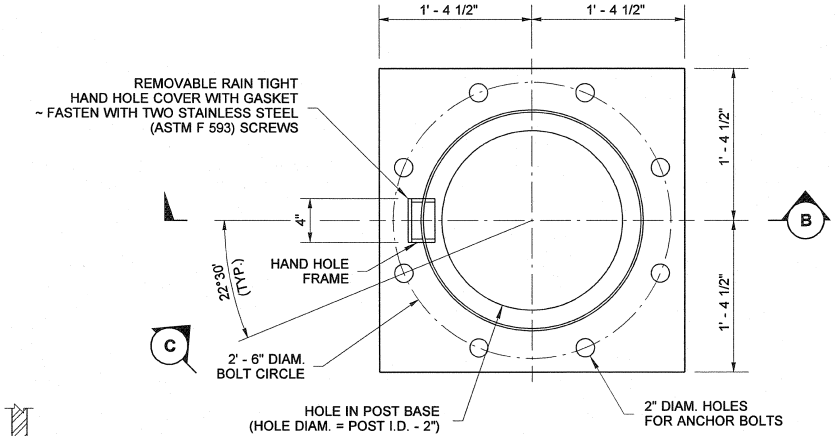

TOP

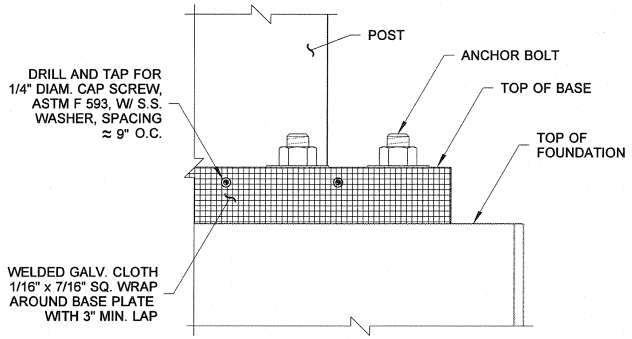

SCREEN DETAIL

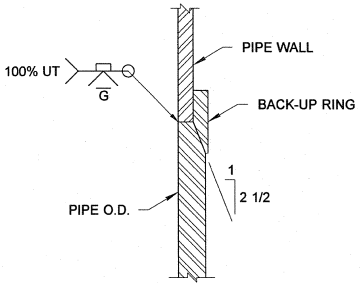

DETAIL "G"

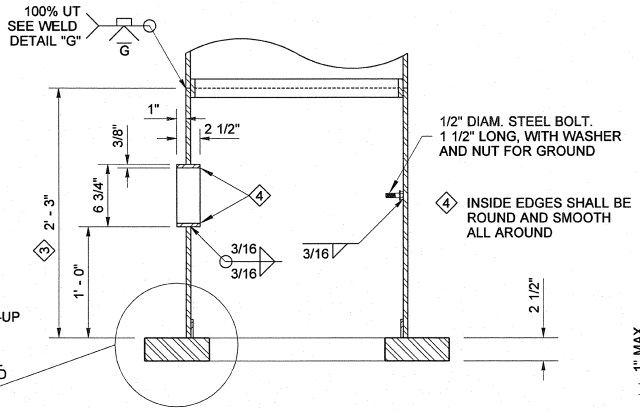

SECTION B

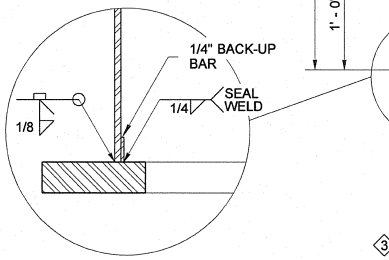

BASE WELD DETAIL

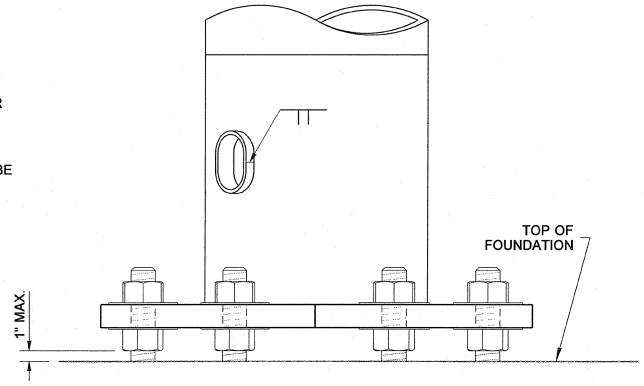

VIEW C

3 24" O.D. PIPE (t = 0.969) SPLICE WITH
24" O.D. UPPER POST (SEE POST SELECTION TABLE)
18" O.D. PIPE (t = 0.750) SPLICE WITH
18" O.D. UPPER POST (SEE POST SELECTION TABLE)

POST BASE DETAILS

RICHARD P. ZELDENRUST
STATE OF WASHINGTON
25470
STRUCTURAL ENGINEER
PROFESSIONAL ENGINEER
6/16/11

CANTILEVER SIGN STRUCTURE (TRUSS-TYPE) STANDARD PLAN G-60.10-01

SHEET 4 OF 4 SHEETS

APPROVED FOR PUBLICATION

STATE DESIGN ENGINEER — DATE 6/22/11

Washington State Department of Transportation

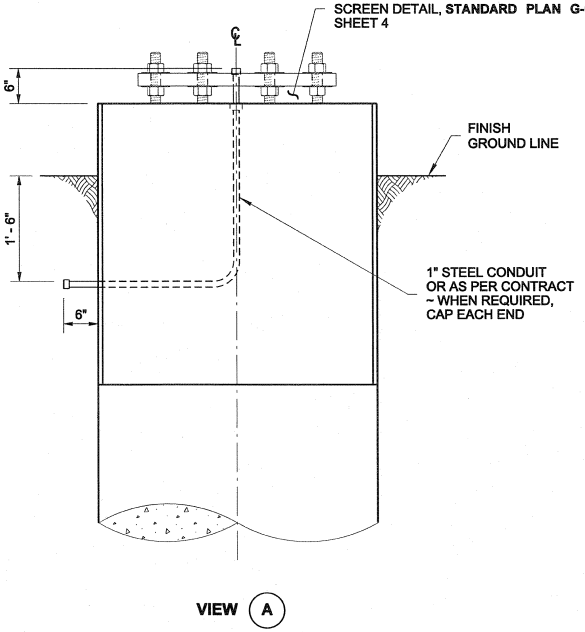

VIEW (A)

DRAWN BY: LISA CYFORD

VALUES OF Z			
FOUNDATION TYPE	TOTAL SIGN AREA		ALLOWABLE LATERAL BEARING PRESSURE (PSF)
	200 SF OR LESS	200 SF ~ 400 SF	
	Z	Z	
1	13' - 0"	18' - 0"	1500 AND UP
	16' - 0"	22' - 0"	1000 ~ 1499

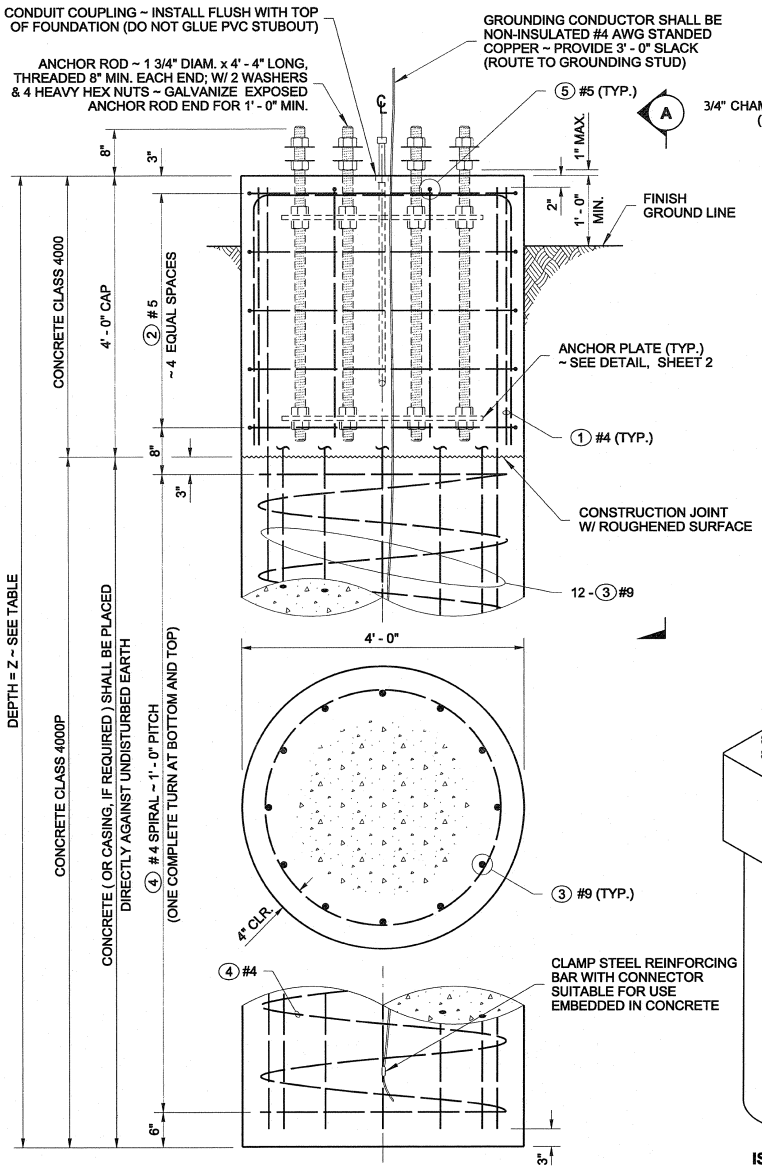

SIDE

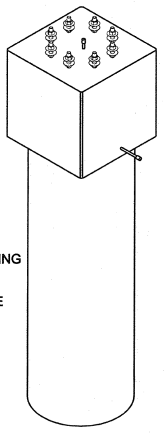

ISOMETRIC

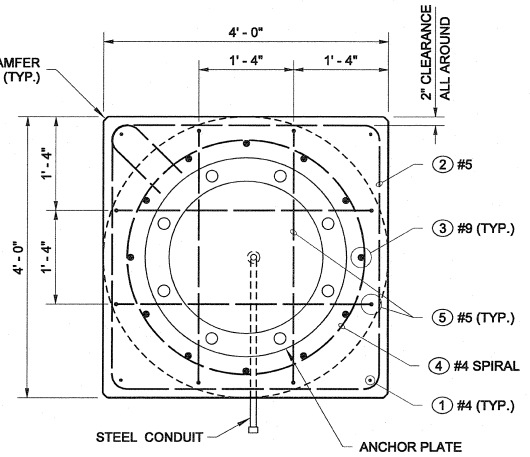

TOP

NOTES

1. See **Standard Specification 8-21.3(9)** for construction requirements.
2. Use a template to locate and secure bolts in place during foundation installation.

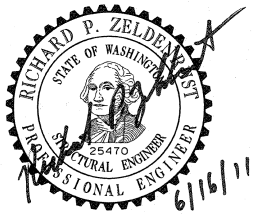

CANTILEVER SIGN STRUCTURE (TRUSS-TYPE) FOUNDATION TYPE 1

STANDARD PLAN G-60.20-01

SHEET 1 OF 2 SHEETS

APPROVED FOR PUBLICATION

STATE DESIGN ENGINEER — DATE 6/27/11

Washington State Department of Transportation

DRAWN BY: LISA CYFORD

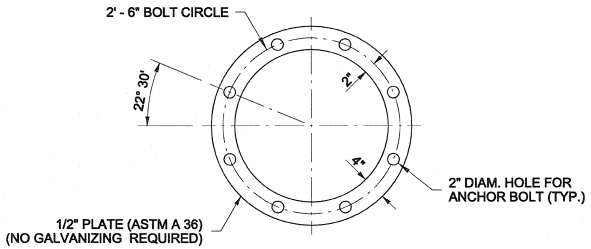

ANCHOR PLATE DETAIL

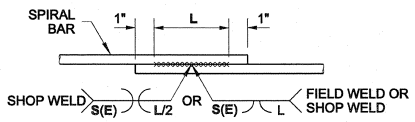

SEE TABLE FOR WELD DIMENSIONS

SPIRAL WELDED LAP SPLICE DETAIL

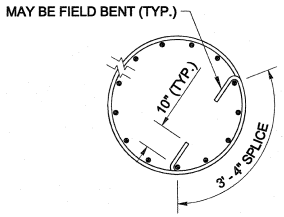

SPIRAL LAP SPLICE DETAIL

WELDING SHALL MEET THE REQUIREMENTS OF STD. SPEC. 6-02.3(24)E FOR WELD DIMENSIONS ~ SEE TABLE BELOW

COLUMN AND SHAFT SPIRAL OPTIONS

DEFORMED BAR AASHTO M 31 GRADE 60	PLAIN STEEL BAR AASHTO M 31 GRADE 60	COLD DRAWN WIRE AASHTO M 32	DEFORMED WIRE AASHTO M 225	WELD DIMENSIONS (INCHES)		
				S	E	L
# 4	1/2" DIAM.	W20	D20	1/4	1/8	4
# 5	5/8" DIAM.	W31	D31	5/16	3/16	6
# 6	3/4" DIAM.	W44	D44	3/8	3/16	6

BAR LIST

MARK	LOCATION	QTY.	LENGTH	SIZE	TYPE
①	CAP VERTICAL	4	3' - 10"	#4	STR.
②	CAP HOOPS	5	15' - 9"	#5	
③	SHAFT VERTICAL	12	"Z" MINUS CLEARANCES	#9	STR.
④	SHAFT SPIRAL	1	AS REQUIRED	#4	
⑤	CAP TOP	4	10' - 10"	#5	

BENDING DIAGRAM
(ALL DIMENSIONS ARE OUT TO OUT)

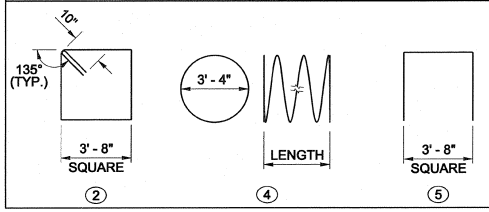

MATERIAL SPECIFICATIONS

SHAFT CONCRETE	CLASS 4000P
ALL OTHER CONCRETE	CLASS 4000
STEEL REINF. BAR	AASHTO M 31 GRADE 60
ANCHOR RODS	ASTM F 1554 GRADE 105
ANCHOR NUTS	AASHTO M 291
ANCHOR WASHERS	AASHTO M 293
ANCHORAGE GALVANIZING	AASHTO M 232
ANCHOR PLATE	ASTM A 36

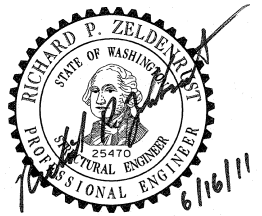

CANTILEVER SIGN STRUCTURE (TRUSS-TYPE) FOUNDATION TYPE 1

STANDARD PLAN G-60.20-01

SHEET 2 OF 2 SHEETS

APPROVED FOR PUBLICATION

Pasco Bakotich III 6/22/11

STATE DESIGN ENGINEER — DATE

Washington State Department of Transportation

DRAWN BY: LISA CYFORD

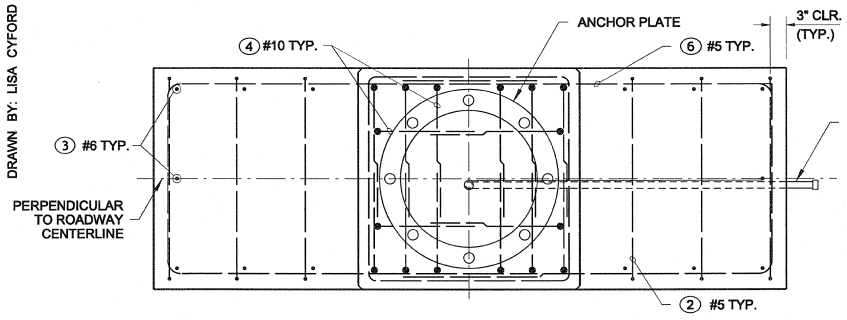

TOP

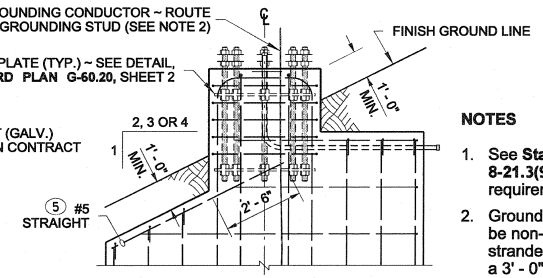

SIDE
ON SLOPED GRADE
(SHOWN AT REDUCED SCALE)

NOTES

1. See **Standard Specification 8-21.3(9)** for construction requirements.
2. Grounding Conductor shall be non-insulated #4 AWG stranded copper. Provide a 3' - 0" min. slack.

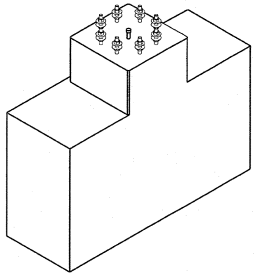

FOR LEVEL GRADE

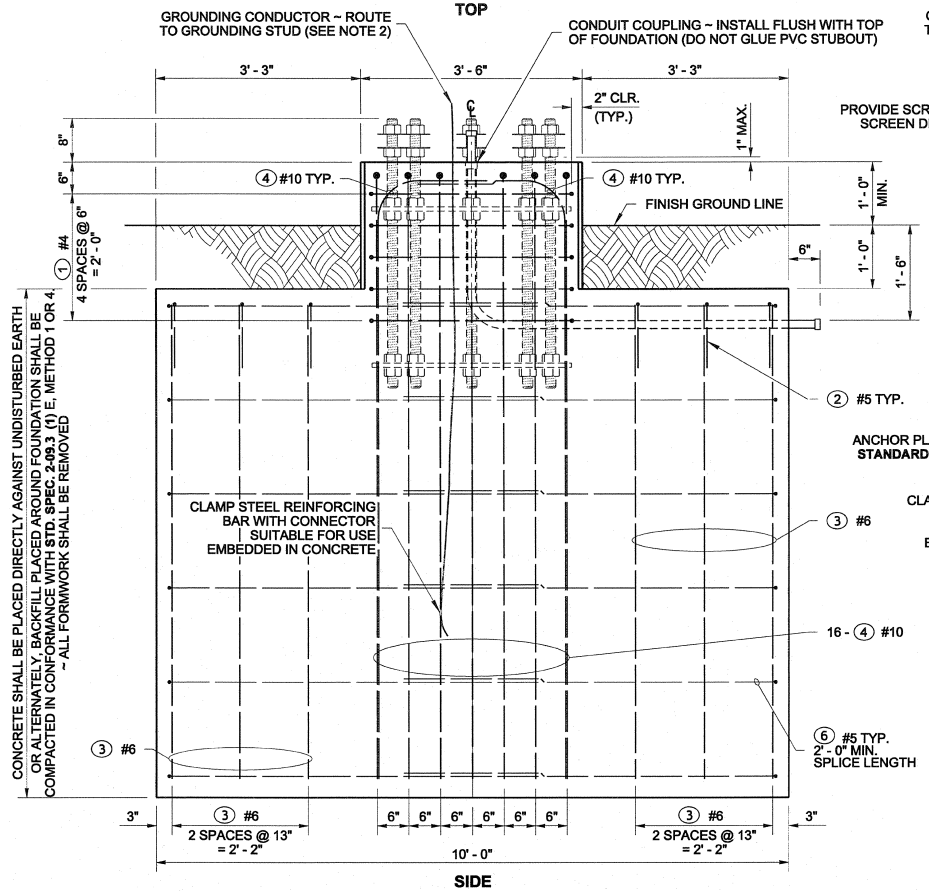

SIDE

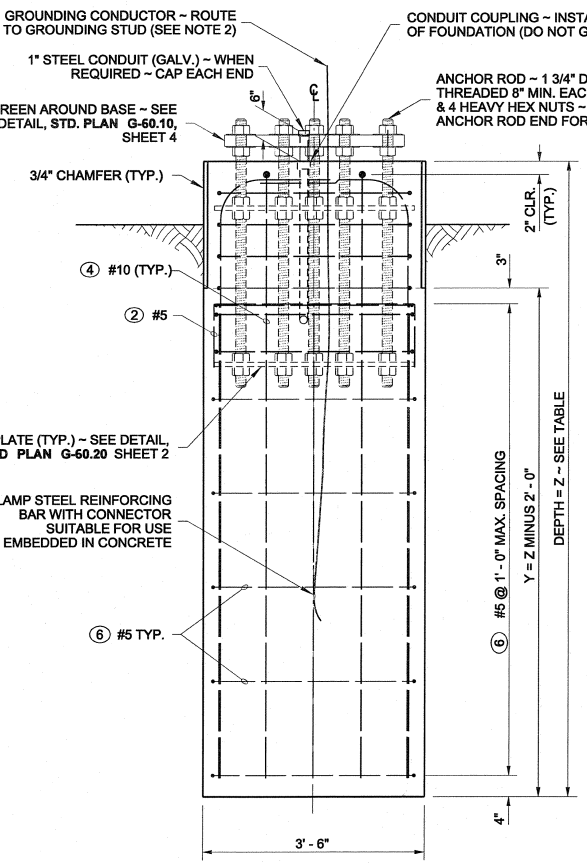

END

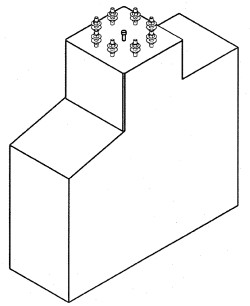

FOR SLOPED GRADE

ISOMETRIC

CANTILEVER SIGN STRUCTURE (TRUSS-TYPE) FOUNDATION TYPES 2 & 3

STANDARD PLAN G-60.30-01

SHEET 1 OF 2 SHEETS

APPROVED FOR PUBLICATION

STATE DESIGN ENGINEER — DATE 6/22/11

Washington State Department of Transportation

DRAWN BY: BILL BERENS

BAR LIST ~ TYPES 2 AND 3

MARK	LOCATION	TOTAL SIGN AREA			
		200 SF OR LESS		+200 SF -400 SF	
		QTY.	SIZE	QTY.	SIZE
①	PEDESTAL HOOP	5	#4	5	#4
②	FOUNDATION WALL TIES	6	#5	6	#5
③	FOUNDATION VERTICALS	14	#6	14	#6
④	PEDESTAL VERTICALS	16	#10	16	#10
⑤	FOUNDATION WALL HORIZONTALS AT SLOPE	2	#5	2	#5
⑥	FOUNDATION WALL HORIZONTALS	VARIES SEE PLANS	#5	VARIES SEE PLANS	#5

BENDING DIAGRAM

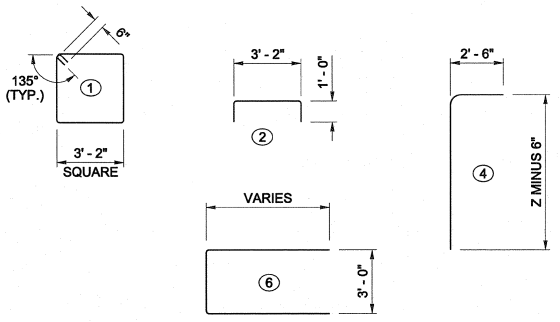

VALUES OF Z

FOUNDATION TYPE	TOTAL SIGN AREA		ALLOWABLE LATERAL BEARING PRESSURE (PSF)
	200 SF OR LESS	200 SF ~ 400 SF	
	Z	Z	
TYPE 2	9' - 0"	11' - 0"	2500 OR GREATER
TYPE 3	11' - 0"	13' - 6"	NOT LESS THAN 1500

MATERIAL SPECIFICATIONS

CONCRETE	CLASS 4000P
STEEL REINF. BAR	AASHTO M 31 GRADE 60
ANCHOR RODS	ASTM F 1554 GRADE 105
ANCHOR NUTS	AASHTO M 291
ANCHOR WASHERS	AASHTO M 293
ANCHORAGE GALVANIZING	AASHTO M 232
ANCHOR PLATE	ASTM A 36

RICHARD P. ZELDENRUST
STATE OF WASHINGTON
25470
STRUCTURAL ENGINEER
PROFESSIONAL ENGINEER
6/16/11

CANTILEVER SIGN STRUCTURE (TRUSS-TYPE) FOUNDATION TYPES 2 & 3

STANDARD PLAN G-60.30-01

SHEET 2 OF 2 SHEETS

APPROVED FOR PUBLICATION

STATE DESIGN ENGINEER — DATE 6/22/11

Washington State Department of Transportation

DRAWN BY: BILL BERENS

1. SEE CHORD TO END POST CONNECTION TYPE **Q**
2. SEE CHORD TO END POST CONNECTION TYPE **R**
3. TOP END TRUSS DIAGONAL JOINS END POSTS AT CHORDS WHERE VERTICAL AND HORIZONTAL DIAGONALS CONNECT

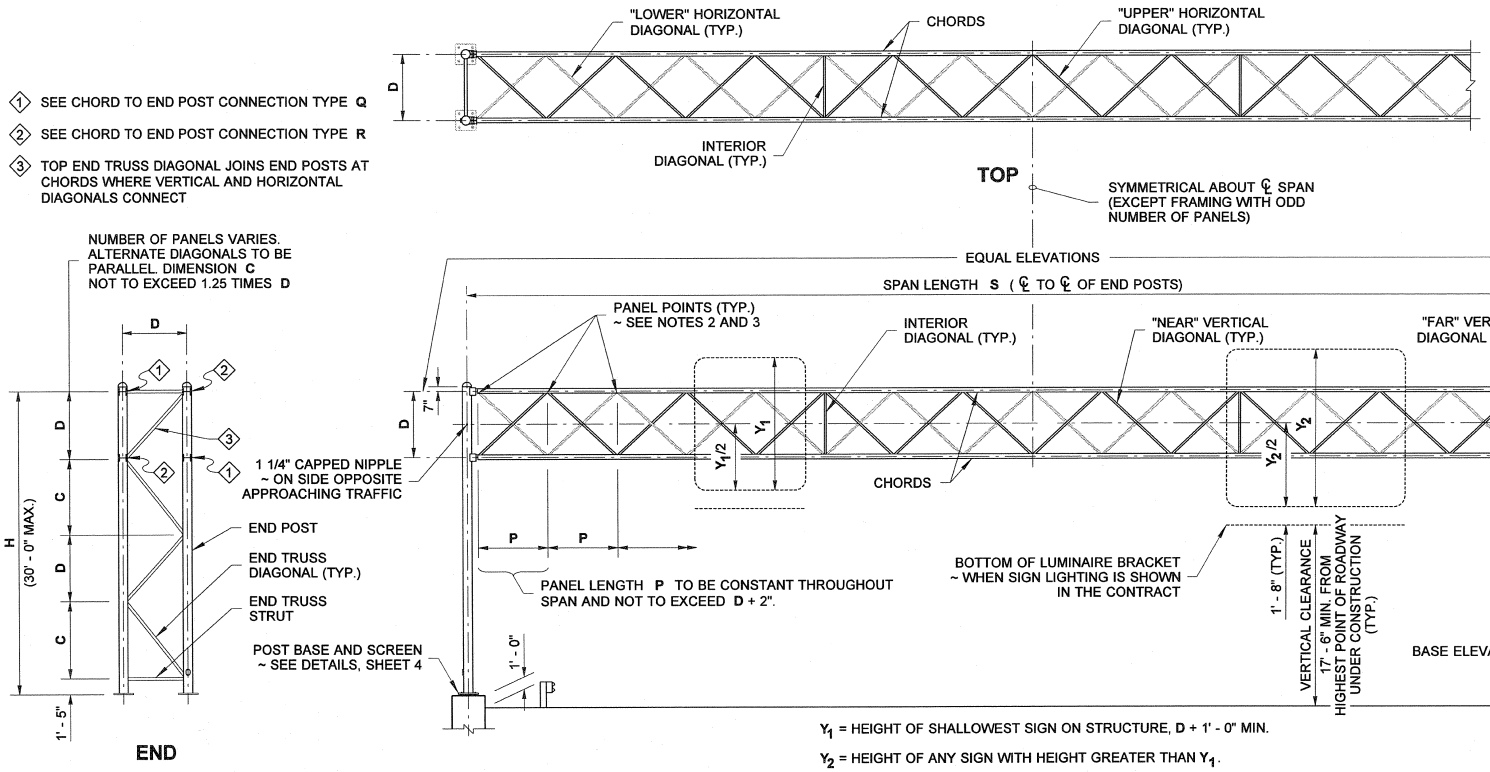

END

Y_1 = HEIGHT OF SHALLOWEST SIGN ON STRUCTURE, D + 1' - 0" MIN.

Y_2 = HEIGHT OF ANY SIGN WITH HEIGHT GREATER THAN Y_1.

ELEVATION

NOTES

1. Horizontal and vertical clearance requirements shall be as shown in Contract Plans.
2. Horizontal diagonals must join chords where vertical diagonals connect (panel points).
3. Interior diagonals shall be placed at panel points, 40' maximum spacing. Locate symmetrically about centerline of span if possible. An interior diagonal is not required at span ends.
4. No post splices permitted in lower third of height, nor closer than 3' - 0" to bottom of chord. No chord shop splices permitted in middle third of span. Maximum of one splice in each end post.

MATERIAL SPECIFICATIONS	
PIPE (CHORDS, DIAGONALS, STRUTS AND POSTS)	ASTM A 36 OR ASTM A 53 GRADE B, TYPE E OR S, OR A 500 GRADE B
PLATES	ASTM A 36
SHAPES	ASTM A 36 ASTM A 992
BOLTS, NUTS, & WASHERS	STD. SPEC. 9-06.5(3)
PIPE, PLATE & SHAPE GALVANIZING	AASHTO M 111
FASTENER GALVANIZING	AASHTO M 232

STRUCTURE DIMENSIONS						
SPAN LENGTH **S**	DIMENSION **D**	TOP AND BOTTOM CHORDS	DIAGONALS	END TRUSS POSTS	END TRUSS STRUTS AND DIAGONALS	TOTAL SIGN AREA (MAX.) (SQ. FT.)
60' OR LESS	4' - 0"	3" x .216"	1 1/4" x .140"	10" x .279"	2 1/2" x .203"	384
61' to 90'	5' - 0"	4" x .237"	2" x .154"	10" x .279"	2 1/2" x .203"	624
91' to 120'	6' - 0"	5" x .258"	2" x .154"	10" x .307"	3" x .216"	864
121' to 150'	7' - 0"	6" x .280"	2 1/2" x .203"	10" x .365"	3 1/2" x .226"	1104

ALL MEMBERS ARE PIPE. VALUES SHOWN ARE NOMINAL PIPE SIZE AND WALL THICKNESS.

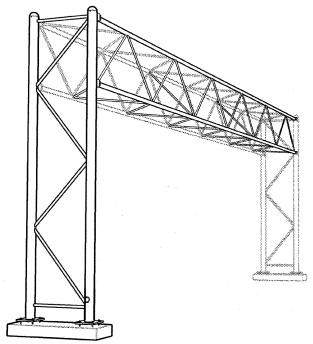

PERSPECTIVE

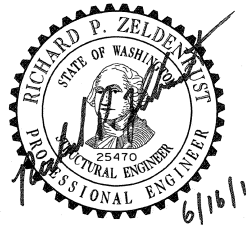

SIGN BRIDGE (TRUSS-TYPE)

STANDARD PLAN G-70.10-01

SHEET 1 OF 4 SHEETS

APPROVED FOR PUBLICATION

STATE DESIGN ENGINEER — DATE 4/27/11

Washington State Department of Transportation

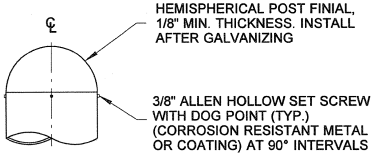

ELEVATION

FINIAL DETAIL

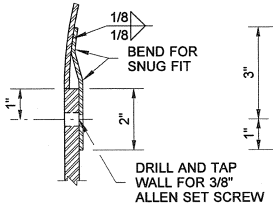

SECTION THROUGH FINIAL AND POST

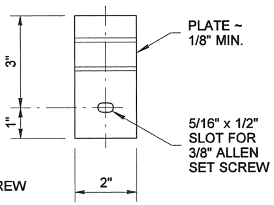

FINIAL BRACKET

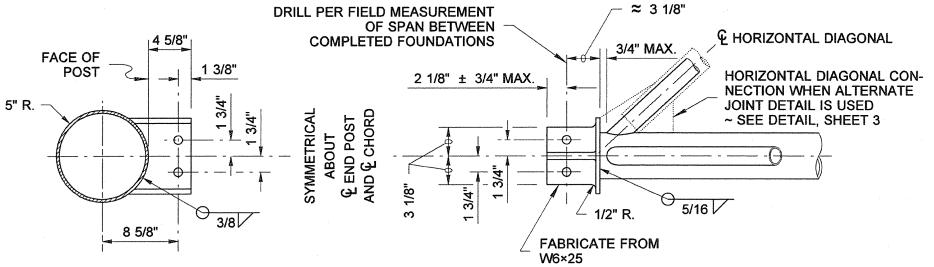

TOP

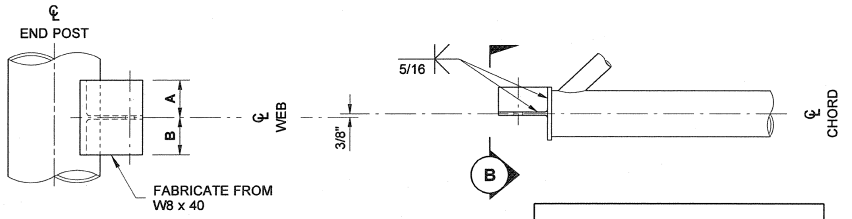

ELEVATION

CONNECTION DATA			
SPAN LENGTH	A	B	BOLT DIAMETER
60' OR LESS	2 3/8"	1 5/8"	7/8" ④
61' TO 90'	2 7/8"	2 1/8"	
91' TO 120'	3 3/8"	2 5/8"	
121' TO 150'	4 1/16"	3 1/4"	

④ INSTALL BOLTS WITH HEAD UPWARD. EXCLUDE BOLT THREADING FROM GRIP.

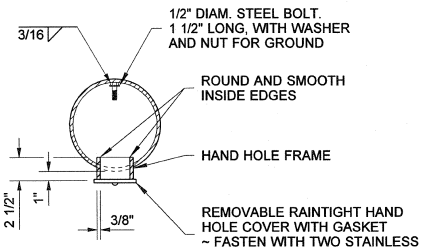

TOP

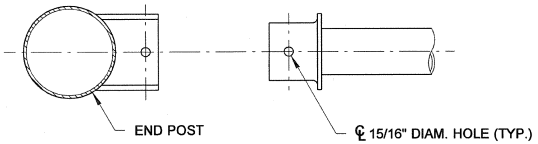

TOP

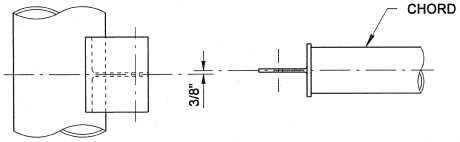

ELEVATION

CHORD TO END POST CONNECTION TYPE Q

USED WHERE NO DIAGONALS CONNECT

DETAILS NOT SHOWN ARE SAME AS **CHORD TO END POST CONNECTION TYPE R**, OMITTING THE 3/4" PLATE STIFFENER ON THE TEE MEMBER.

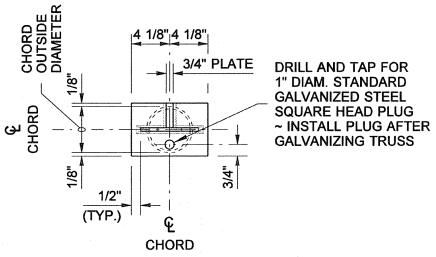

VIEW (B)

CHORD TO END POST CONNECTION TYPE R

USED WHERE DIAGONALS CONNECT

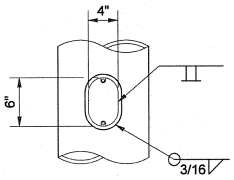

ELEVATION
(COVER NOT SHOWN FOR CLARITY)

HAND HOLE DETAIL

SIGN BRIDGE (TRUSS-TYPE)

STANDARD PLAN G-70.10-01

SHEET 2 OF 4 SHEETS

APPROVED FOR PUBLICATION

STATE DESIGN ENGINEER — DATE

Washington State Department of Transportation

DRAWN BY: BILL BERENS

DRAWN BY: BILL BERENS

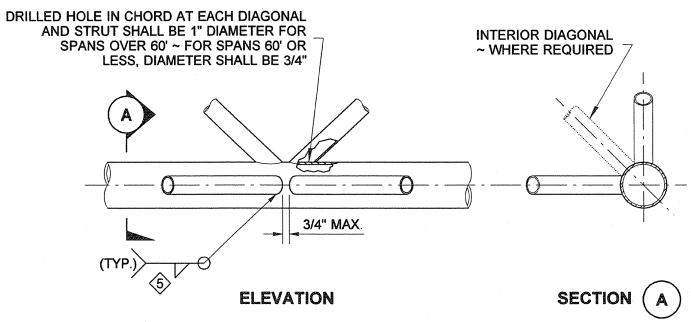

5 ENDS OF DIAGONALS SHALL BE CUT TO FIT NEATLY AGAINST CHORD OR POST. FILLET WELD SIZE TO BE DIAGONAL TUBE OR PIPE THICKNESS PLUS 1/16".

TYPICAL JOINT DETAIL

CHORD SHOWN ~ END POST SIMILAR

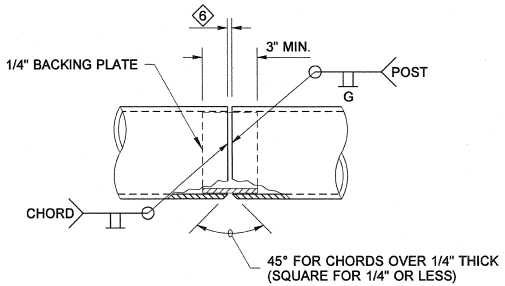

6 DIMENSION SHALL EQUAL CHORD THICKNESS OR 1/4", WHICHEVER IS LESS.

END POST OR CHORD SHOP SPLICE

NO POST SPLICES PERMITTED IN LOWER THIRD OF HEIGHT, NOR CLOSER THAN 3' - 0" TO BOTTOM OF CHORD. NO CHORD SHOP SPLICES PERMITTED IN MIDDLE THIRD OF SPAN. MAXIMUM OF ONE SPLICE IN EACH END POST.

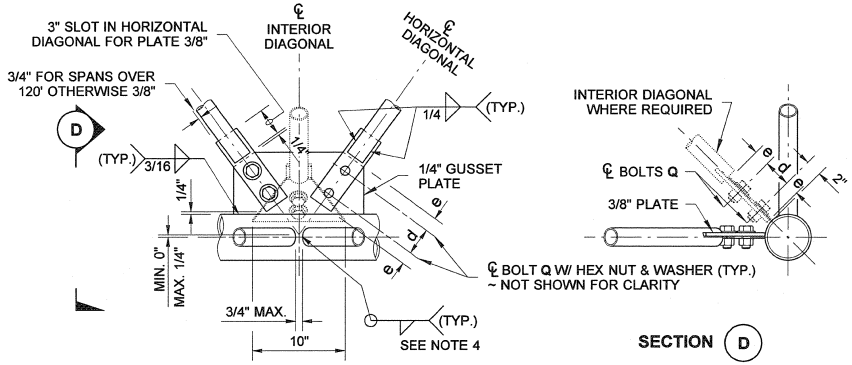

ALTERNATE JOINT DATA			
SPAN LENGTH	d	e	BOLT Q DIAMETER
60' OR LESS	2 1/2"	1 1/4"	3/4"
61' TO 90'	3"	1 1/2"	7/8"
91' TO 120'	3"	1 1/2"	7/8"
121' TO 150'	3 1/2"	1 3/4"	1"

ALTERNATE JOINT DETAIL

NOT FOR CONNECTIONS BETWEEN VERTICAL DIAGONALS AND CHORDS

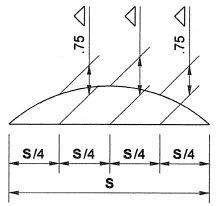

SPAN LENGTH S (FT.)	△ (IN.)
40	1/2
50	3/4
60	7/8
61	7/8
70	1
80	1 1/4
90	1 1/2
91	1 3/8
100	1 5/8
110	2
120	2 3/8
121	2 1/8
130	2 1/2
140	2 7/8
150	3 3/8

FOR SPAN LENGTHS NOT LISTED, INTERPOLATE VALUES OF △.

FABRICATE TRUSS WITH CHORDS CURVED TO PROVIDE CAMBER. DO NOT CAMBER BY USING SHIMS BETWEEN CHORDS AT SPLICES.

DEAD LOAD CAMBER

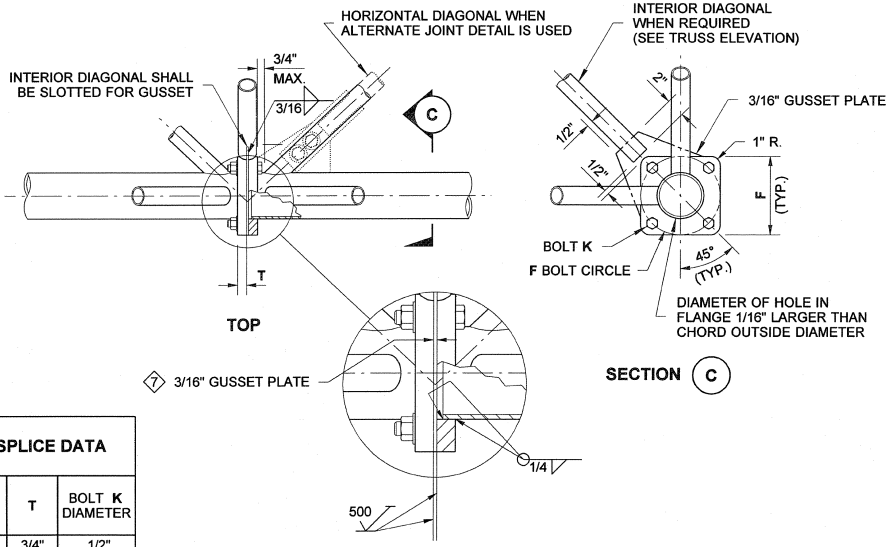

CHORD FIELD SPLICE DATA			
SPAN LENGTH	F	T	BOLT K DIAMETER
60' OR LESS	6"	3/4"	1/2"
61' TO 90'	7"	7/8"	5/8"
91' TO 120'	8 1/2"	1"	3/4"
121' TO 150'	9 1/2"	1 1/4"	7/8"

CHORD FIELD SPLICE

(NO CHORD FIELD SPLICE PERMITTED IN MIDDLE THIRD OF SPAN LENGTH)

7 3/16" SHIMS ARE REQUIRED AT THE REMAINING TWO CHORD JOINTS WHEN INTERIOR DIAGONAL IS INSTALLED.

SIGN BRIDGE (TRUSS-TYPE)

STANDARD PLAN G-70.10-01

SHEET 3 OF 4 SHEETS

APPROVED FOR PUBLICATION

STATE DESIGN ENGINEER — DATE 4/27/11

Washington State Department of Transportation

DRAWN BY: BILL BERENS

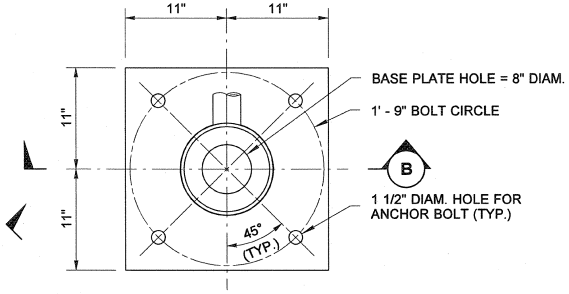

TOP

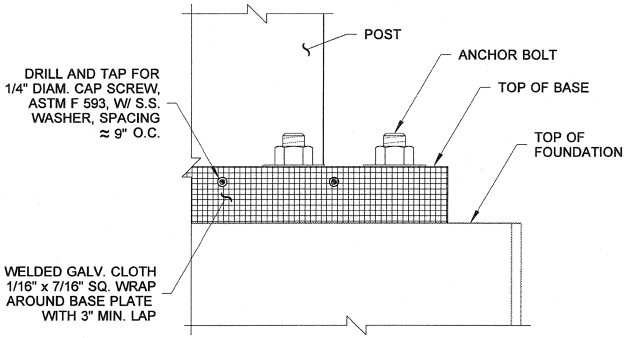

SCREEN DETAIL

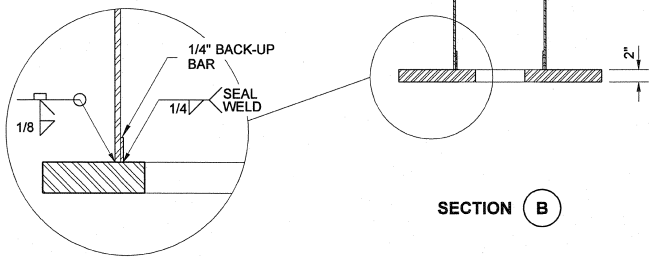

SECTION (B)

BASE WELD DETAIL

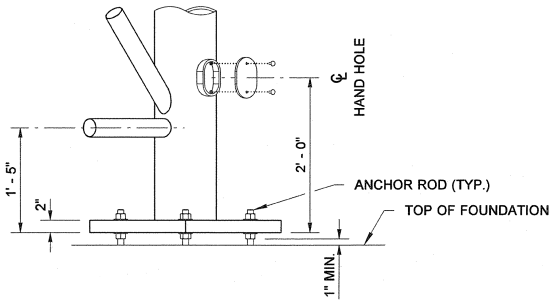

VIEW (C)

POST BASE DETAILS

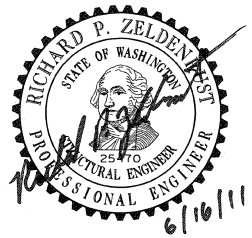

SIGN BRIDGE (TRUSS-TYPE)

STANDARD PLAN G-70.10-01

SHEET 4 OF 4 SHEETS

APPROVED FOR PUBLICATION

STATE DESIGN ENGINEER — DATE 6/22/11

Washington State Department of Transportation

DRAWN BY: LISA CYFORD

MATERIAL SPECIFICATIONS	
SHAFT CONCRETE	CLASS 4000P ①
ALL OTHER CONCRETE	CLASS 4000
STEEL REINF. BAR	AASHTO M 31 GRADE 60
ANCHOR RODS	ASTM F 1554 GRADE 105
ANCHOR NUTS	AASHTO M 291
ANCHOR WASHERS	AASHTO M 293
ANCHORAGE GALVANIZING	AASHTO M 232
ANCHOR PLATE	ASTM A 36

① CASE THE EXCAVATION AND PLACE USING TREMIE METHOD WHEN WATER IS PRESENT

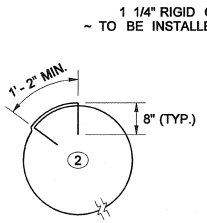

LAP SPLICE DETAIL

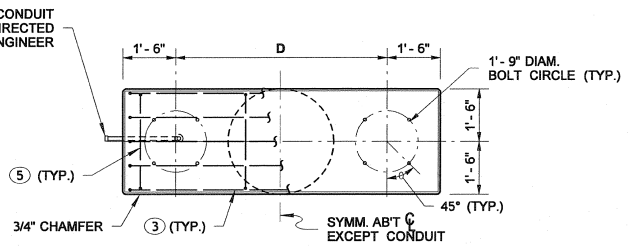

TOP

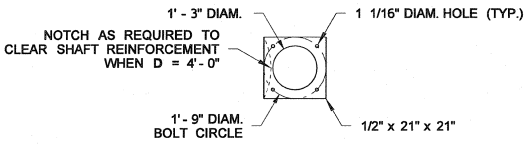

ANCHOR PLATE DETAIL

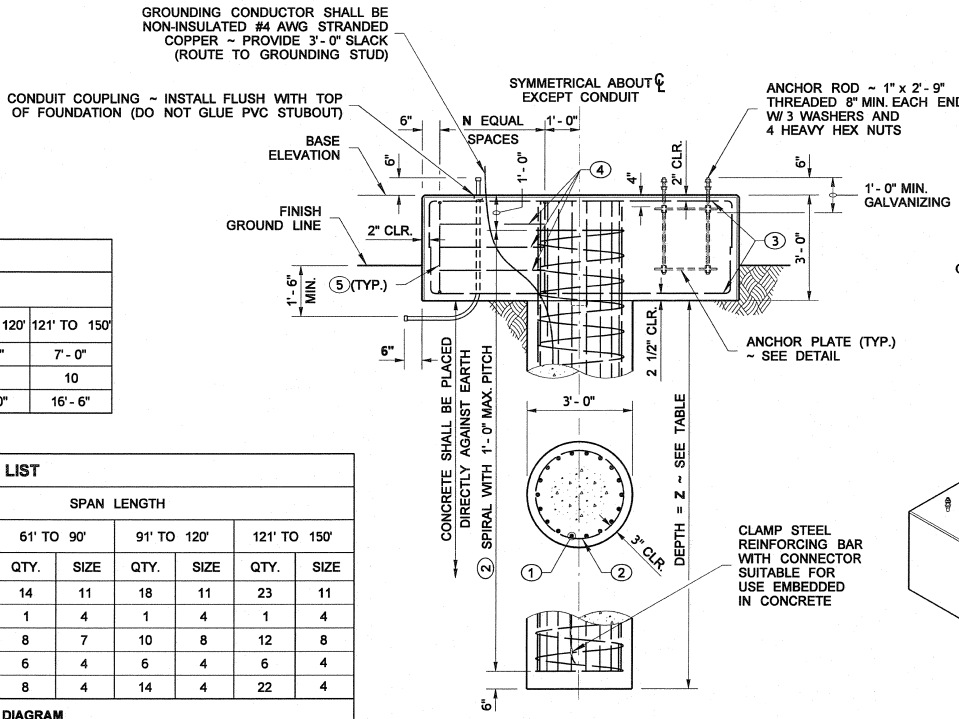

ELEVATION

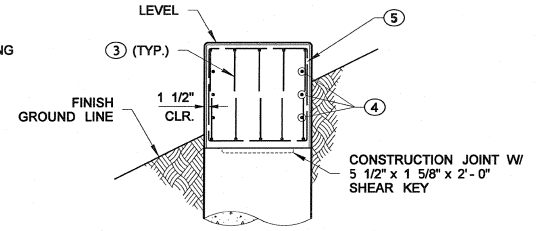

END

TABLE				
VARIABLES	SPAN LENGTH			
	60' OR LESS	61' TO 90'	91' TO 120'	121' TO 150'
DIMENSION ~ D	4' - 0"	5' - 0"	6' - 0"	7' - 0"
BAR SPACES ~ N	2	3	6	10
SHAFT DEPTH ~ Z	11' - 6"	13' - 6"	15' - 0"	16' - 6"

BAR LIST									
MARK	LOCATION	SPAN LENGTH							
		60' OR LESS		61' TO 90'		91' TO 120'		121' TO 150'	
		QTY.	SIZE	QTY.	SIZE	QTY.	SIZE	QTY.	SIZE
①	SHAFT - VERTICAL	11	9	14	11	18	11	23	11
②	SHAFT - SPIRAL	1	4	1	4	1	4	1	4
③	CAP - TOP AND BOTTOM	8	6	8	7	10	8	12	8
④	CAP - SIDES	6	4	6	4	6	4	6	4
⑤	CAP - HOOPS	6	4	8	4	14	4	22	4

BENDING DIAGRAM

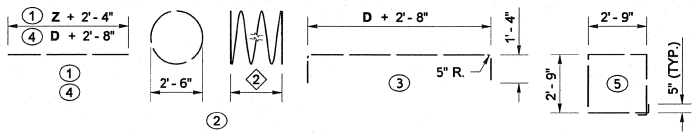

(ALL DIMENSIONS ARE OUT TO OUT)
2" RADIUS, UNLESS OTHERWISE NOTED

② DETERMINE LENGTH FROM PLANS

FOUNDATION TYPE 1

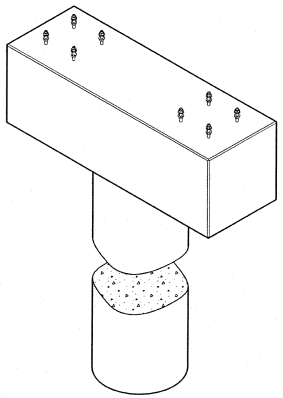

ISOMETRIC

SIGN BRIDGE (TRUSS-TYPE) FOUNDATION TYPE 1

STANDARD PLAN G-70.20-01

SHEET 1 OF 1 SHEET

APPROVED FOR PUBLICATION

Paco Bakotich 6/22/11

STATE DESIGN ENGINEER — DATE

Washington State Department of Transportation

DRAWN BY: LISA CYFORD

MATERIAL SPECIFICATIONS	
CONCRETE	CLASS 4000P
STEEL REINF. BAR	AASHTO M 31 GRADE 60
ANCHOR RODS	ASTM F 1554 GRADE 105
ANCHOR NUTS	AASHTO M 291
ANCHOR WASHERS	AASHTO M 293
ANCHORAGE GALVANIZING	AASHTO M 232
ANCHOR PLATE	ASTM A 36

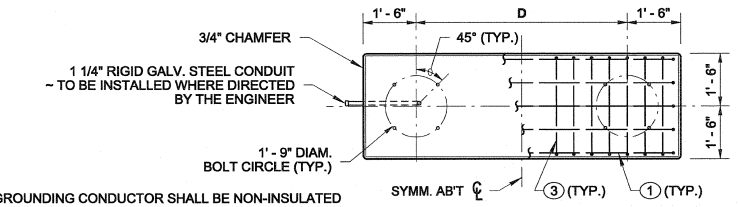

TOP

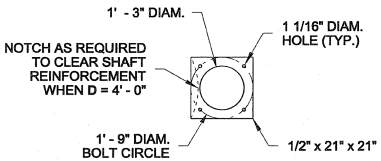

ANCHOR PLATE DETAIL

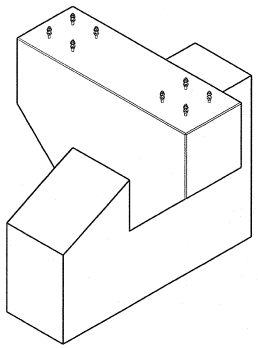

ISOMETRIC

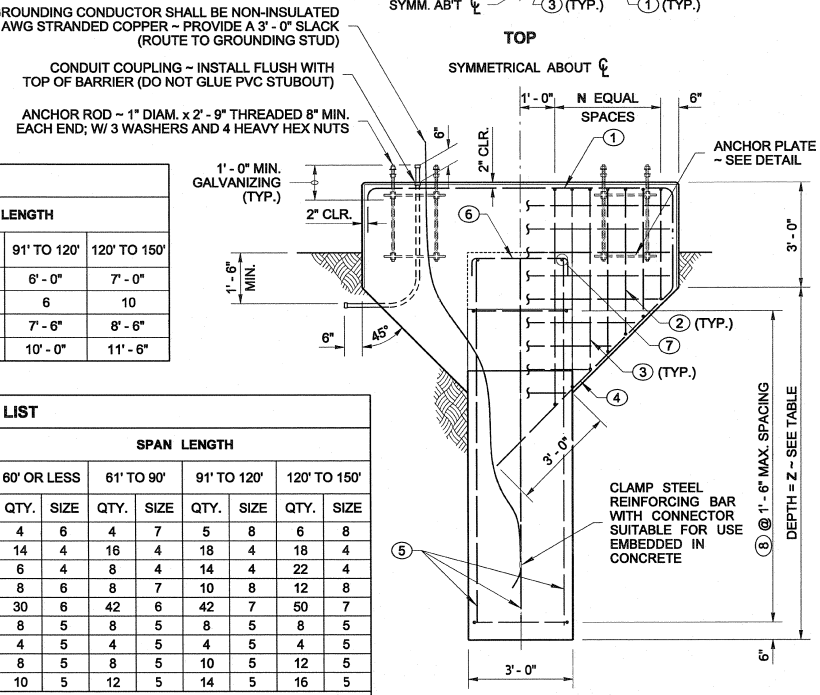

END

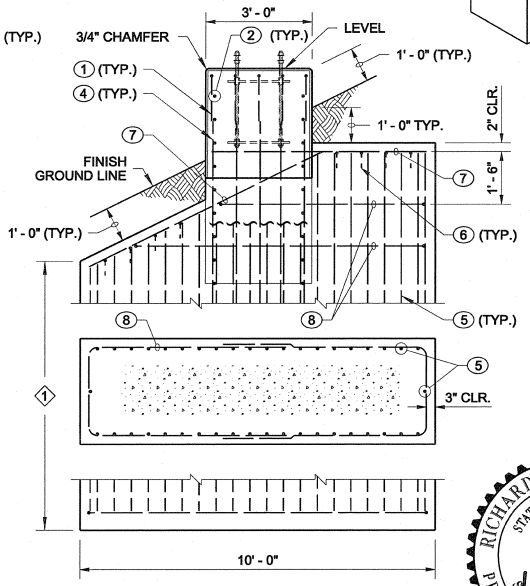

SIDE

TABLE						
VARIABLES			SPAN LENGTH			
			60' OR LESS	61' TO 90'	91' TO 120'	120' TO 150'
DIMENSION ~ D			4' - 0"	5' - 0"	6' - 0"	7' - 0"
BAR SPACES ~ N			2	3	6	10
SHAFT DEPTH ~ Z	TYPE	2	5' - 6"	6' - 6"	7' - 6"	8' - 6"
		3	7' - 0"	8' - 6"	10' - 0"	11' - 6"

BAR LIST										
FOUNDATION TYPE	MARK	LOCATION	SPAN LENGTH							
			60' OR LESS		61' TO 90'		91' TO 120'		120' TO 150'	
			QTY.	SIZE	QTY.	SIZE	QTY.	SIZE	QTY.	SIZE
2 AND 3	1	CAP - TOP	4	6	4	7	5	8	6	8
	2	CAP - SIDES	14	4	16	4	18	4	18	4
	3	CAP - HOOPS	6	4	8	4	14	4	22	4
	4	CAP - BOTTOM	8	6	8	7	10	8	12	8
	5	FND. WALL - VERTICAL	30	6	42	6	42	7	50	7
	6	FND. WALL - TIES	8	5	8	5	8	5	8	5
	7	FND. WALL - HORIZONTAL	4	5	4	5	4	5	4	5
2	8	FND. WALL - HORIZONTAL	8	5	8	5	10	5	12	5
3	8	FND. WALL - HORIZONTAL	10	5	12	5	14	5	16	5

BENDING DIAGRAM

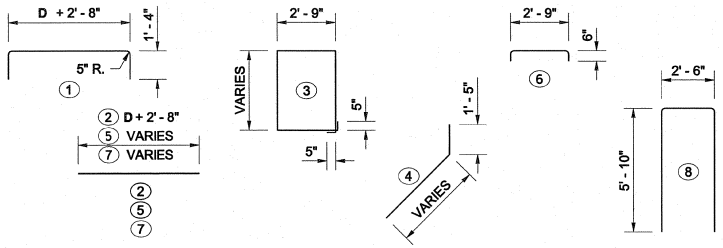

(ALL DIMENSIONS ARE OUT TO OUT)
2" RADIUS, UNLESS OTHERWISE NOTED

1 CONCRETE BELOW FINISHED GROUNDLINE SHALL BE PLACED DIRECTLY AGAINST UNDISTURBED EARTH, OR ALTERNATELY, BACKFILL PLACED AROUND FOUNDATION SHALL BE COMPACTED IN CONFORMANCE WITH **STANDARD SPECIFICATION 2-09.3(1)E**, METHOD 1 OR 4. ALL FORMWORK SHALL BE REMOVED.

FOUNDATION TYPES 2 & 3

RICHARD P. ZELDENRUST
STATE OF WASHINGTON
25470
STRUCTURAL ENGINEER
PROFESSIONAL ENGINEER
6/16/11

SIGN BRIDGE (TRUSS-TYPE) FOUNDATION TYPES 2 & 3

STANDARD PLAN G-70.30-01

SHEET 1 OF 1 SHEET

APPROVED FOR PUBLICATION

STATE DESIGN ENGINEER — DATE 6/22/11

Washington State Department of Transportation

This page left blank intentionally.

DRAWN BY: LISA CYFORD

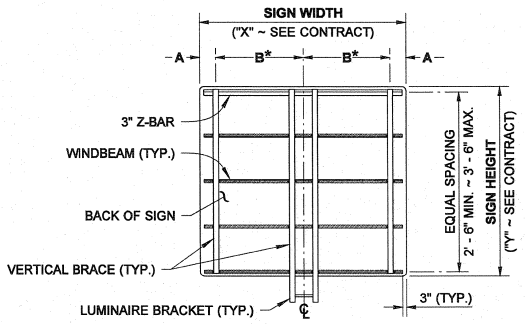

ONE SIGN LIGHTING LUMINAIRE
BRACE PLACEMENT

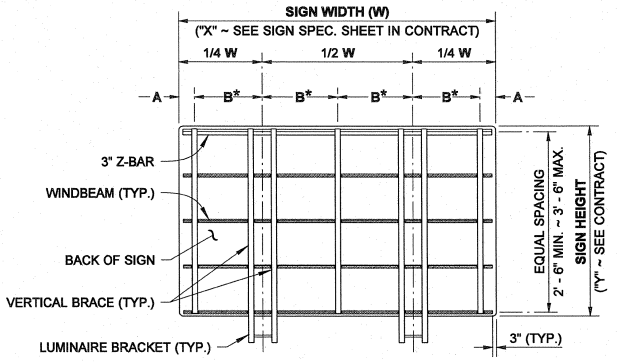

TWO SIGN LIGHTING LUMINAIRES
BRACE PLACEMENT

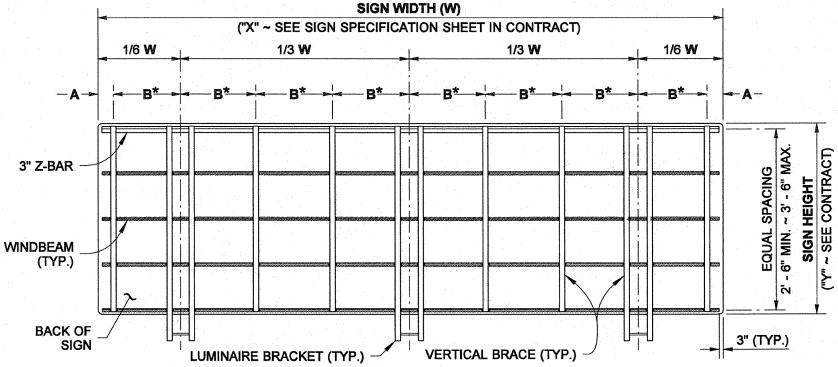

THREE SIGN LIGHTING LUMINAIRES
BRACE PLACEMENT

VERTICAL BRACE SPACING WITH SIGN LIGHTING		
SIGN WIDTH	A	B*
ONE SIGN LIGHTING LUMINAIRE		
8' - 0"	6"	3' - 6"
10' - 0"	6"	4' - 6"
12' - 0"	6"	5' - 6"
14' - 0"	1' - 0"	6' - 0"
16' - 0"	2' - 0"	6' - 0"
TWO SIGN LIGHTING LUMINAIRES		
18' - 0"	6"	4' - 3"
20' - 0"	6"	4' - 9"
22' - 0"	6"	5' - 3"
24' - 0"	6"	5' - 9"
26' - 0"	6"	6' - 3"
28' - 0"	6"	6' - 9"
30' - 0"	1' - 0"	7' - 0"
32' - 0"	2' - 0"	7' - 0"
THREE SIGN LIGHTING LUMINAIRES		
34' - 0"	6"	4' - 1 1/2"
36' - 0"	6"	4' - 4 1/2"

* IF "B" EXCEEDS THE SPACING LISTED ON THE VERTICAL BRACE SPACING TABLE, ADD AN ADDITIONAL VERTICAL BRACE

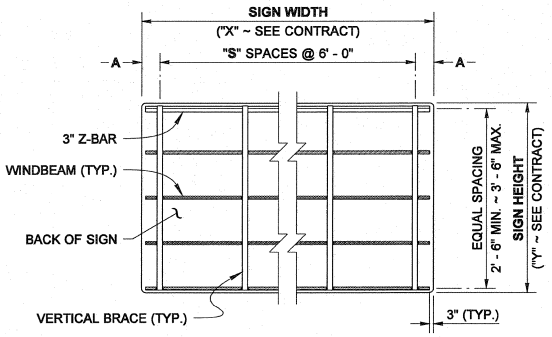

WITHOUT SIGN LIGHTING
BRACE PLACEMENT

VERTICAL BRACE SPACING WITHOUT SIGN LIGHTING		
SIGN WIDTH	A	S (SPACES)
8' - 0"	1' - 0"	1
10' - 0"	2' - 0"	1
12' - 0"	3' - 0"	1
14' - 0"	1' - 0"	2
16' - 0"	2' - 0"	2
18' - 0"	3' - 0"	2
20' - 0"	1' - 0"	3
22' - 0"	2' - 0"	3
24' - 0"	3' - 0"	3
26' - 0"	1' - 0"	4
28' - 0"	2' - 0"	4
30' - 0"	3' - 0"	4
32' - 0"	1' - 0"	5
34' - 0"	2' - 0"	5
36' - 0"	3' - 0"	5

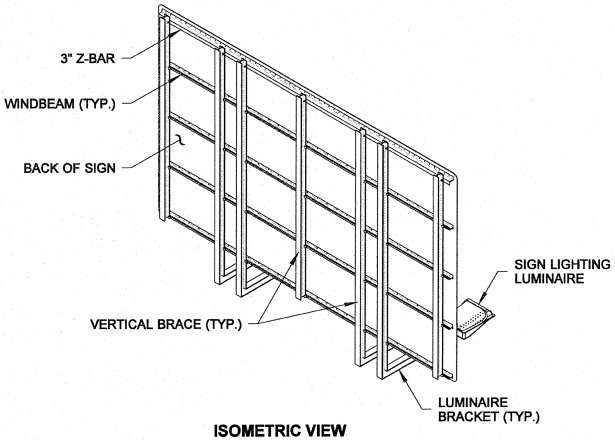

ISOMETRIC VIEW

NOTES

1. Install Sign Lighting Luminaires (and Brackets) only when required in the Contract.
2. Windbeam and 3" Z-Bar are aluminum. All nuts, bolts, washers, and other hardware shall be stainless steel, except as noted.
3. See **Standard Plan G-90.20** (Monotube), or **G-90.30** (Truss) for additional Overhead Sign Mounting details.
4. Galvanize all non-stainless steel parts.

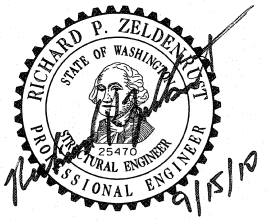

OVERHEAD SIGN BRACING AND LIGHTING PLACEMENT

STANDARD PLAN G-90.10-01

SHEET 1 OF 1 SHEET

APPROVED FOR PUBLICATION

STATE DESIGN ENGINEER — DATE 5/15/12

Washington State Department of Transportation

DRAWN BY: LISA CYFORD

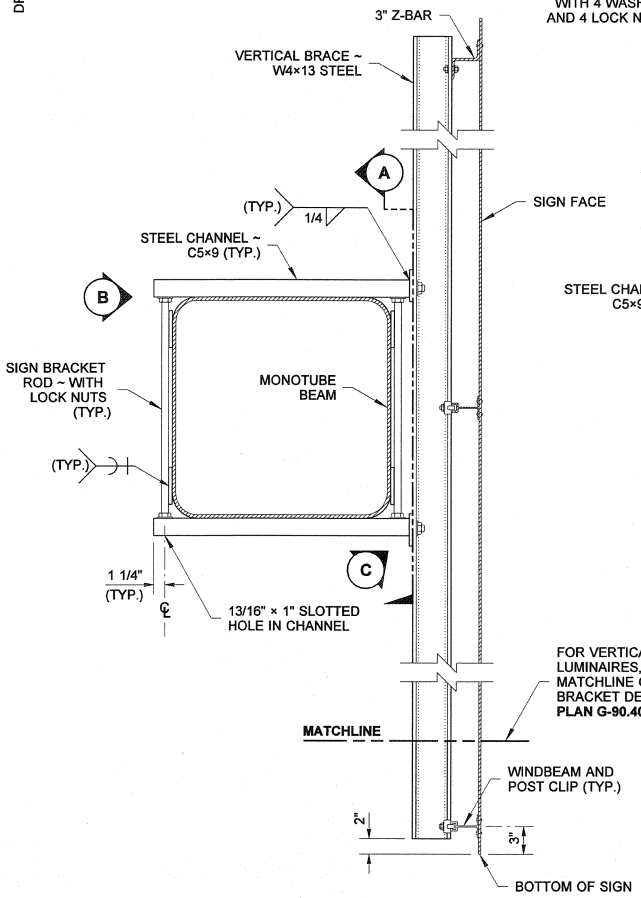

SIDE VIEW

MONOTUBE CONNECTION

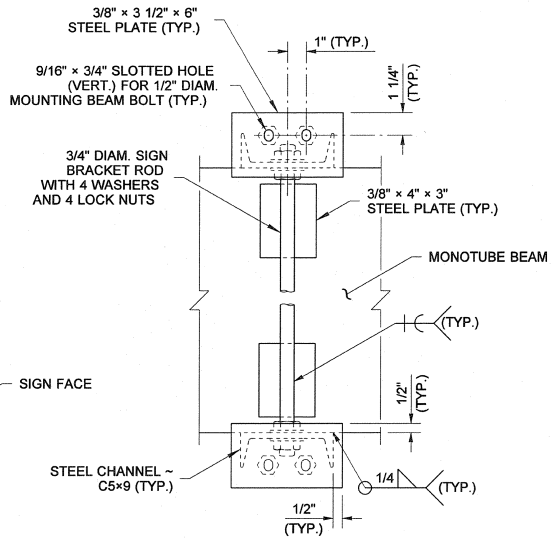

SECTION (A)

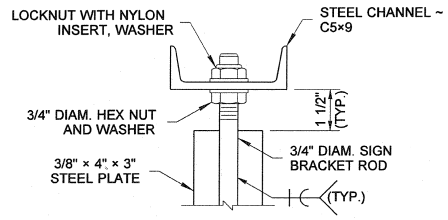

VIEW (B)

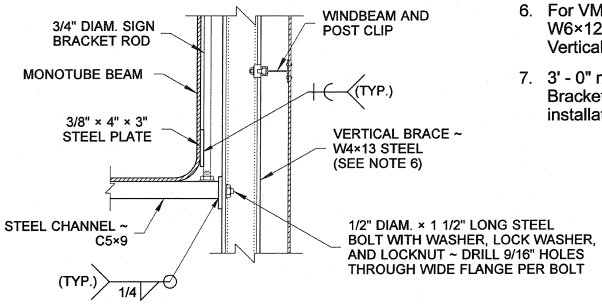

DETAIL (C)

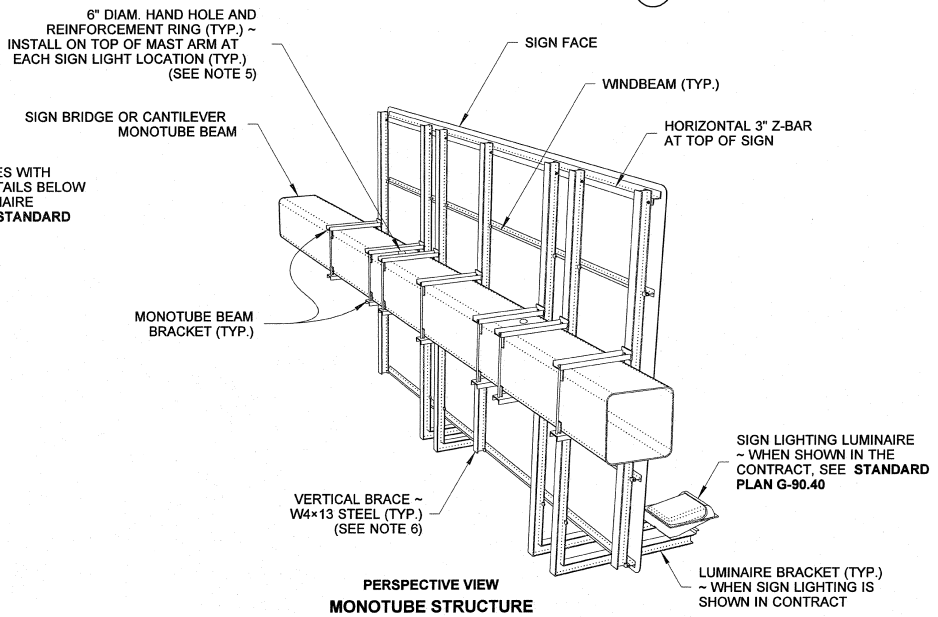

PERSPECTIVE VIEW

MONOTUBE STRUCTURE

NOTES

1. Refer to Contract Plans for Monotube Beam Bracket element sizes, dimensions, and weld symbols.
2. See **Standard Plan G-90.10** for Sign Bracing and Lighting Placement details.
3. Galvanize all non stainless steel parts.
4. See **Standard Plan G-90.40** for Sign Lighting details.
5. Hand holes shall be installed at the time of fabrication. Only additional conduits for lighting accommodations to previously non illuminated structures may be installed in field as long as the proper repairs are made to the structure. For details not shown, see **Standard Plan J-75.40.**
6. For VMS mounting, the Contractor may substitute W6×12 steel or W8×13 steel sections for the Vertical Brace 4 × 13 steel.
7. 3' - 0" max. Vertical Brace and Monotube Beam Bracket spacing for walk-in cabinet Type VMS installation.

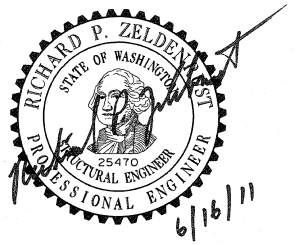

OVERHEAD SIGN MOUNTING (MONOTUBE STRUCTURE)

STANDARD PLAN G-90.20-01

SHEET 1 OF 1 SHEET

APPROVED FOR PUBLICATION

STATE DESIGN ENGINEER — DATE 4/22/11

Washington State Department of Transportation

DRAWN BY: BILL BERENS

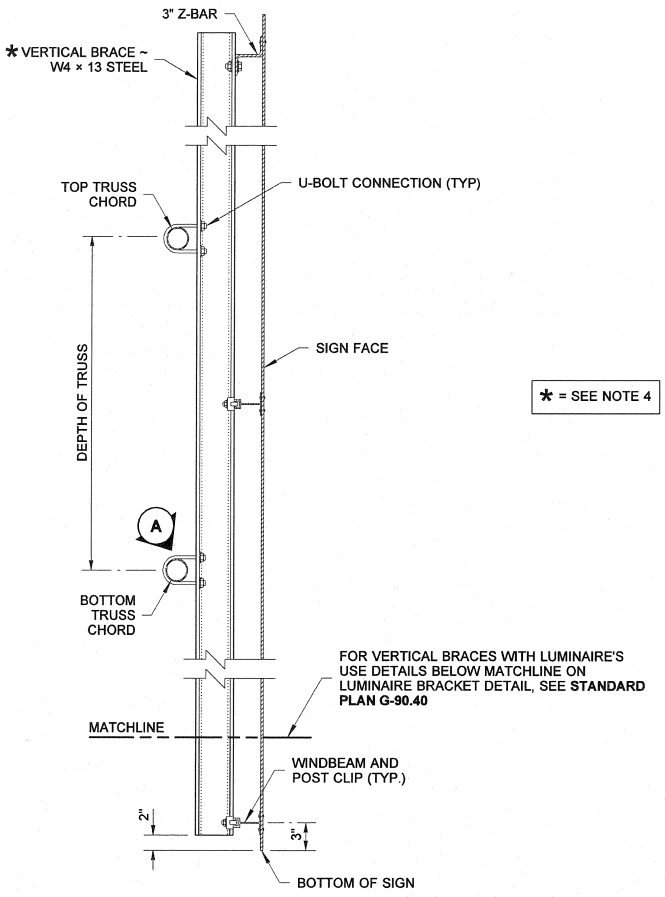

SIDE VIEW
TRUSS CONNECTION

* = SEE NOTE 4

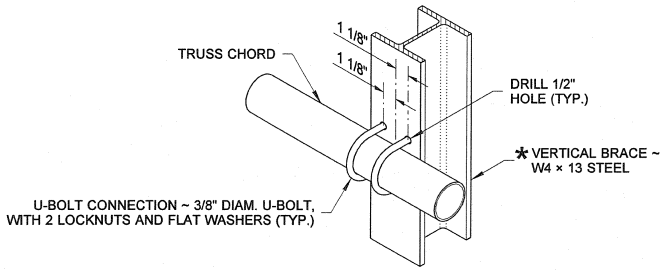

DETAIL (A)

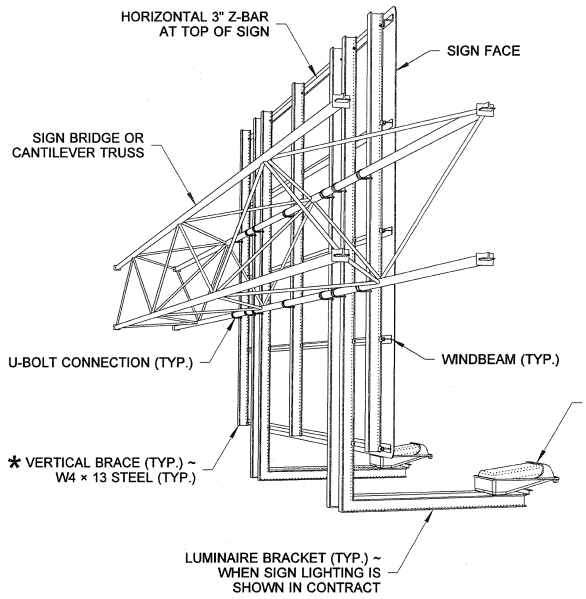

PERSPECTIVE VIEW
TRUSS STRUCTURE

NOTES

1. U-Bolts, Washers and Nuts shall be stainless steel, except as noted.
2. See **Standard Plan G-90.10** for Overhead Sign Lighting details.
3. Galvanize all non-stainless steel parts.
4. For VMS mounting, the contractor may substitute W6 x 12 Steel or W8 x 13 Steel sections for the Vertical Brace W4 x 13 Steel.
5. 3' - 0" MAX. Vertical Brace spacing for Walk-In Cabinet Type VMS installation.

OVERHEAD SIGN MOUNTING (TRUSS STRUCTURE)

STANDARD PLAN G-90.30-01

SHEET 1 OF 1 SHEET

APPROVED FOR PUBLICATION

STATE DESIGN ENGINEER — DATE 6/6/11

Washington State Department of Transportation

DRAWN BY: LISA CYFORD

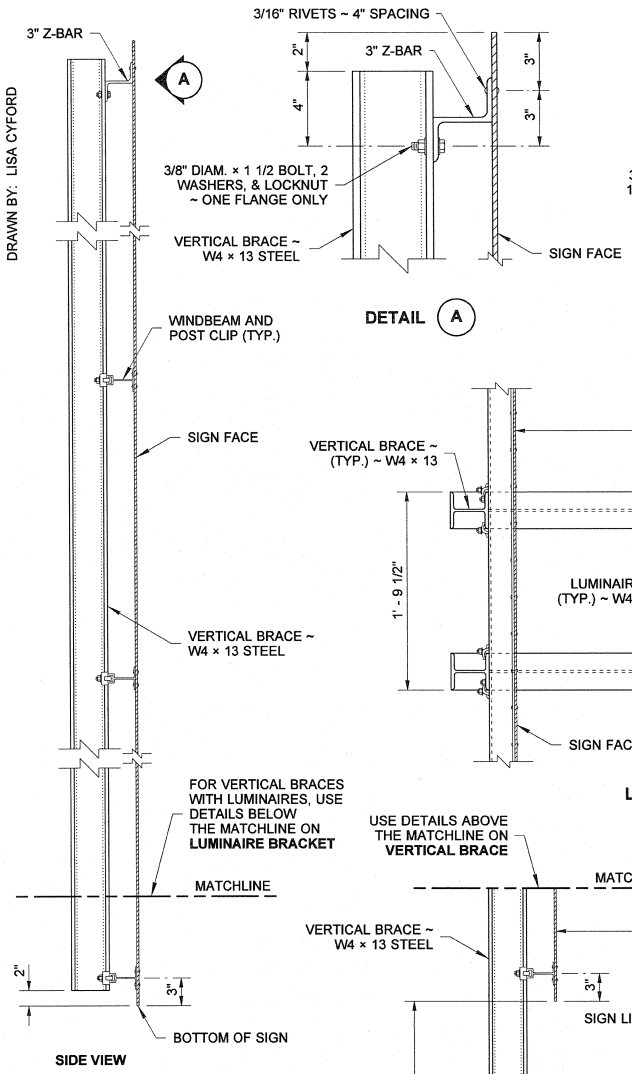

SIDE VIEW

VERTICAL BRACE

DETAIL (A)

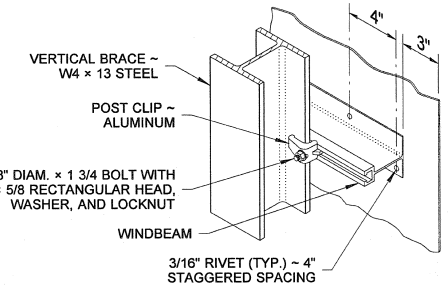

WINDBEAM CONNECTION DETAIL

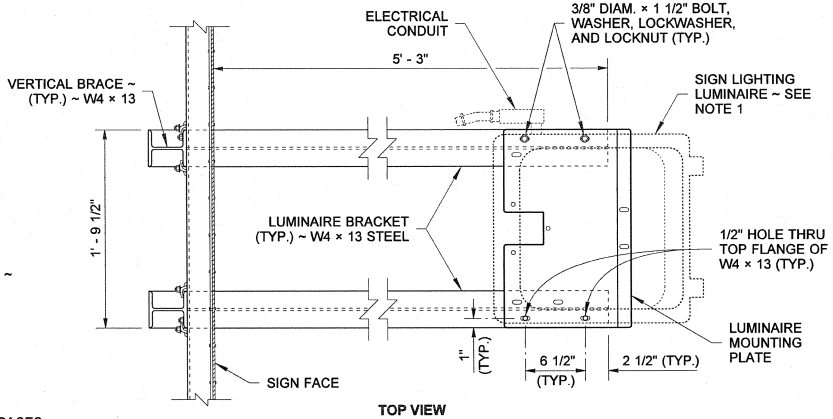

TOP VIEW

LUMINAIRE BRACKET

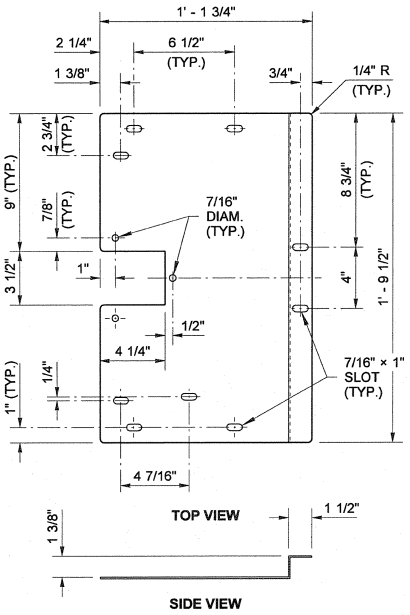

10 GAGE GALV. STEEL PLATE ~ ITEM AVAILABLE FROM LUMINAIRE MANUFACTURER

LUMINAIRE MOUNTING PLATE

NOTES

1. Sign Lighting Luminaire shall include a 3/4" threaded side entry, a gasketed front entry, a door prop, and 4 mounting holes. Refer to **Standard Spec. 8-20.3(13)** for additional requirements.
2. See **Standard Plan J-75.40** and **J-75.45** for Sign Light Luminaire Electrical Details.

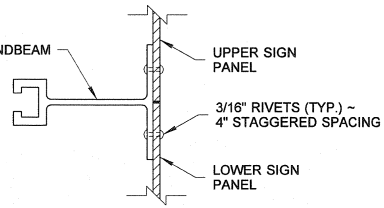

HORIZONTAL SIGN PANEL SPLICE

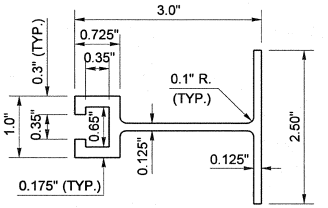

WINDBEAM DETAIL

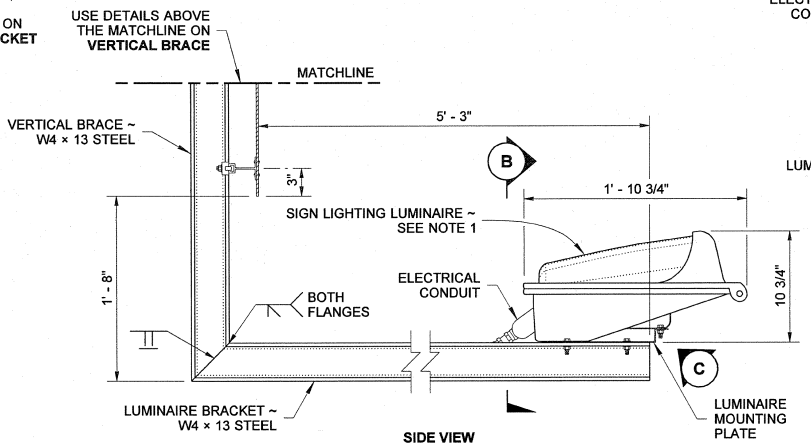

SIDE VIEW

LUMINAIRE BRACKET

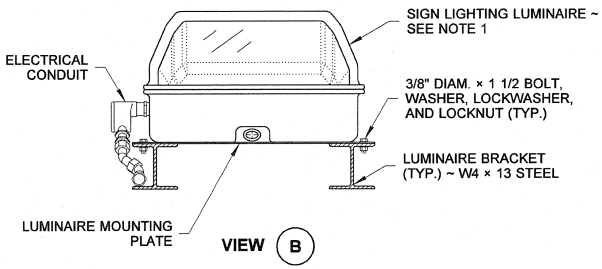

VIEW (B)

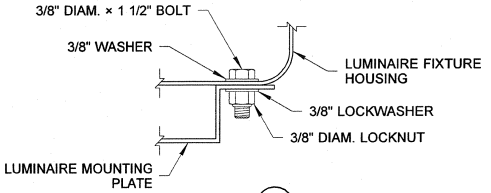

DETAIL (C)

RICHARD P. ZELDENRUST
STATE OF WASHINGTON
25470
STRUCTURAL ENGINEER
PROFESSIONAL ENGINEER
10/12/09

OVERHEAD SIGN LIGHTING DETAILS

STANDARD PLAN G-90.40-01

SHEET 1 OF 1 SHEET

APPROVED FOR PUBLICATION

STATE DESIGN ENGINEER — DATE 10/21/09

Washington State Department of Transportation

DRAWN BY: BILL BERENS

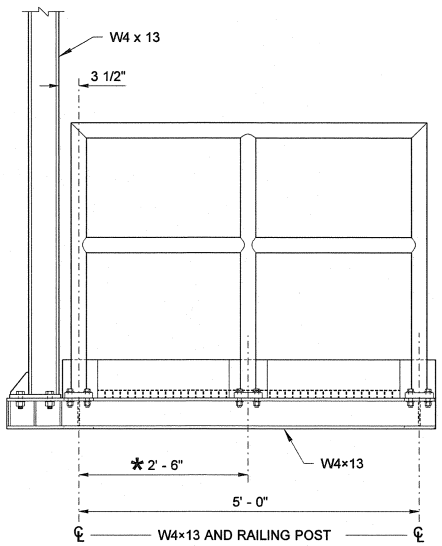

END VIEW (A)

* MODIFY DIMENSION AS REQUIRED FOR PROPER FIT-UP WITH THE VMS DOOR OPENING.

MATERIAL SPECIFICATIONS	
PIPE	ASTM A 36 OR ASTM A 53 GRADE B, TYPE E OR S, OR ASTM A 500 GRADE B
PLATES AND SHAPES	ASTM A 36
STRUCTURAL TUBING	ASTM A 500 GRADE B
GALVANIZING FOR PIPE PLATES AND SHAPES	AASHTO M 111
HIGH STRENGTH BOLTS, NUTS, & WASHERS; INCL. MOUNTING BEAM BOLTS	STD SPEC. 9-06.5(3)
ALL OTHER BOLTS	STD SPEC. 9-06.5(1)
FASTENER GALVANIZING	AASHTO M 232
STEEL GRATING	ASTM A 36

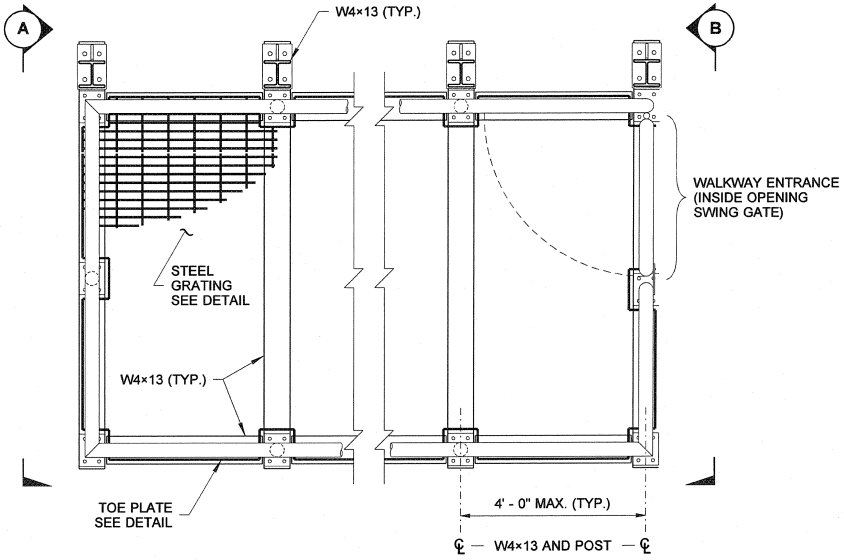

PLAN

MAINTENANCE WALKWAY

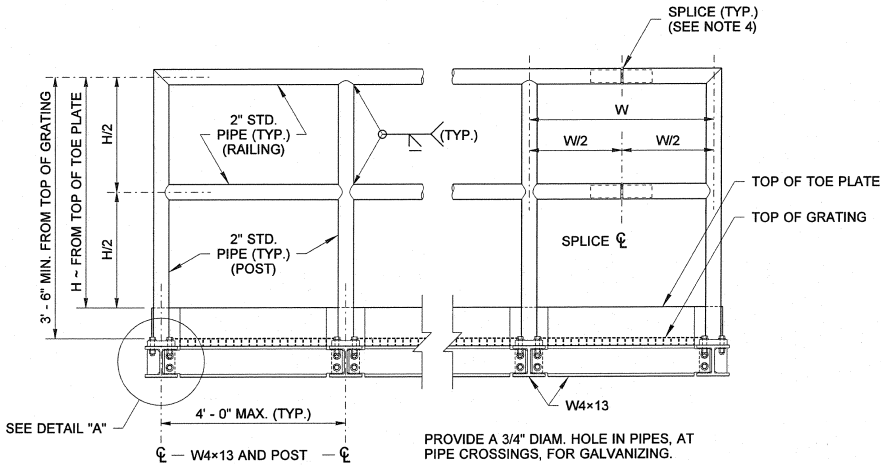

PROVIDE A 3/4" DIAM. HOLE IN PIPES, AT PIPE CROSSINGS, FOR GALVANIZING.

ELEVATION

MAINTENANCE WALKWAY

NOTES

1. NOT INTENDED FOR USE IN FRONT OF STATIC SIGNS.
2. FOR MOUNTING THE MAINTENANCE WALKWAY TO A MONOTUBE SIGN BRIDGE, **SEE STANDARD PLAN G-95.20**.
3. FOR MOUNTING THE MAINTENANCE WALKWAY TO A TRUSS-TYPE SIGN BRIDGE, **SEE STANDARD PLAN G-95.30**.
4. LOCATION OF RAILING SPLICES TO BE DETERMINED BY FABRICATOR. SEE "RAILING SPLICE DETAIL".

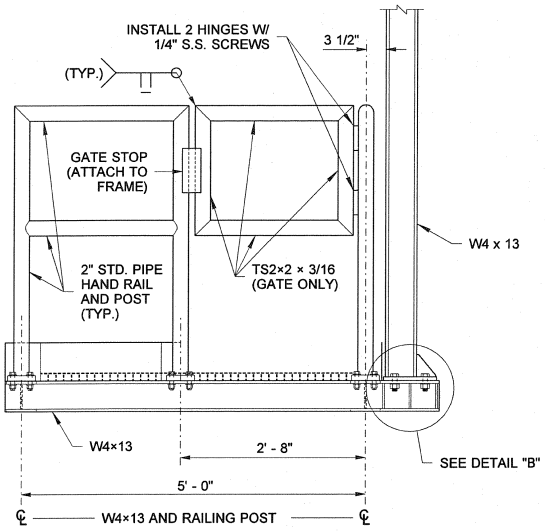

MAINTENANCE WALKWAY GATE

END VIEW (B)

MAINTENANCE WALKWAY FOR SIGN BRIDGES

STANDARD PLAN G-95.10-01

SHEET 1 OF 3 SHEETS

APPROVED FOR PUBLICATION

STATE DESIGN ENGINEER — DATE 10/2/11

Washington State Department of Transportation

DRAWN BY: BILL BERENS

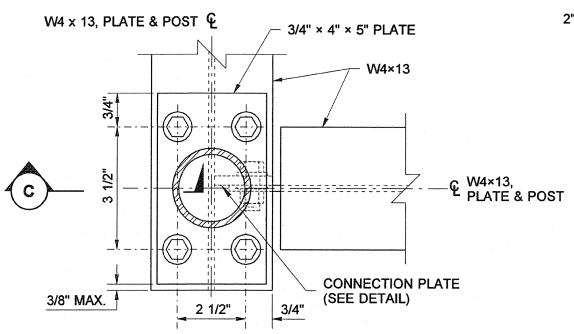

PLAN

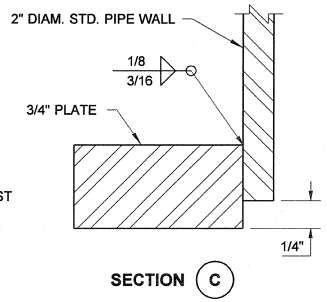

SECTION (C)

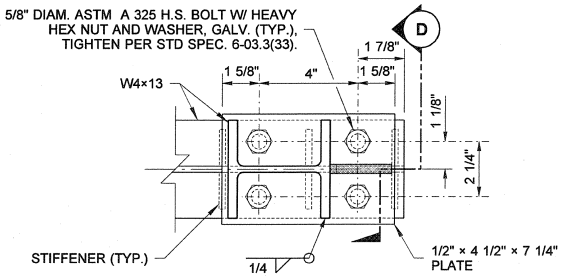

PLAN

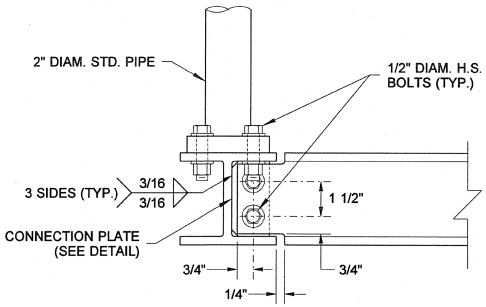

ELEVATION

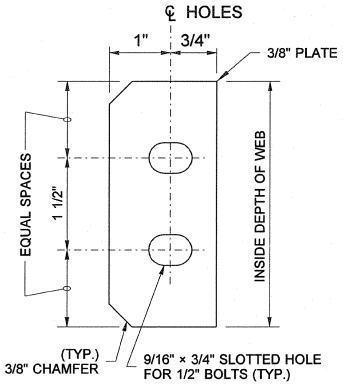

CONNECTION PLATE DETAIL

DETAIL "A"

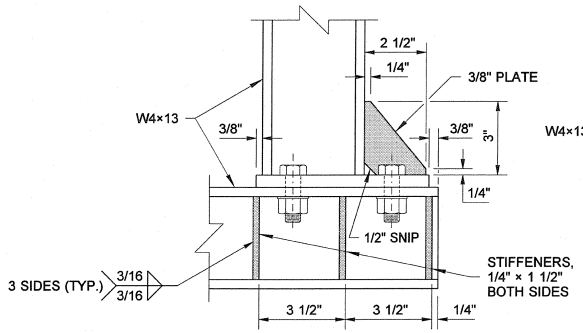

ELEVATION

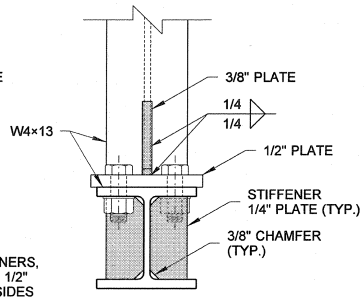

SECTION (D)

DETAIL "B"

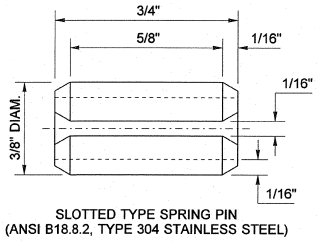

DRIVE PIN DETAIL

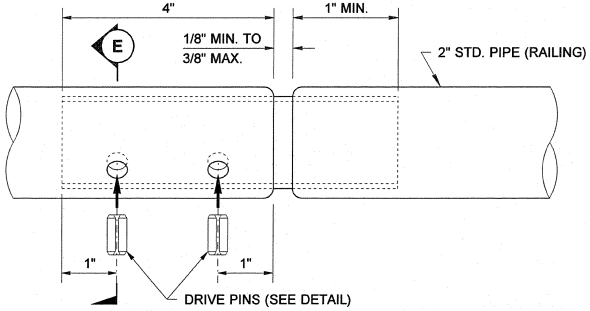

ELEVATION

RAILING SPLICE DETAIL

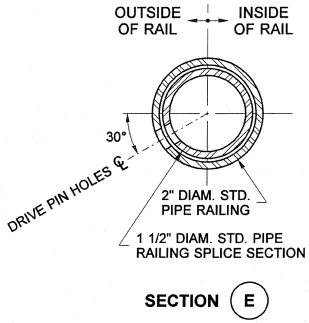

SECTION (E)

MAINTENANCE WALKWAY FOR SIGN BRIDGES

STANDARD PLAN G-95.10-01

SHEET 2 OF 3 SHEETS

APPROVED FOR PUBLICATION

STATE DESIGN ENGINEER — DATE 6/2/11

Washington State Department of Transportation

DRAWN BY: BILL BERENS

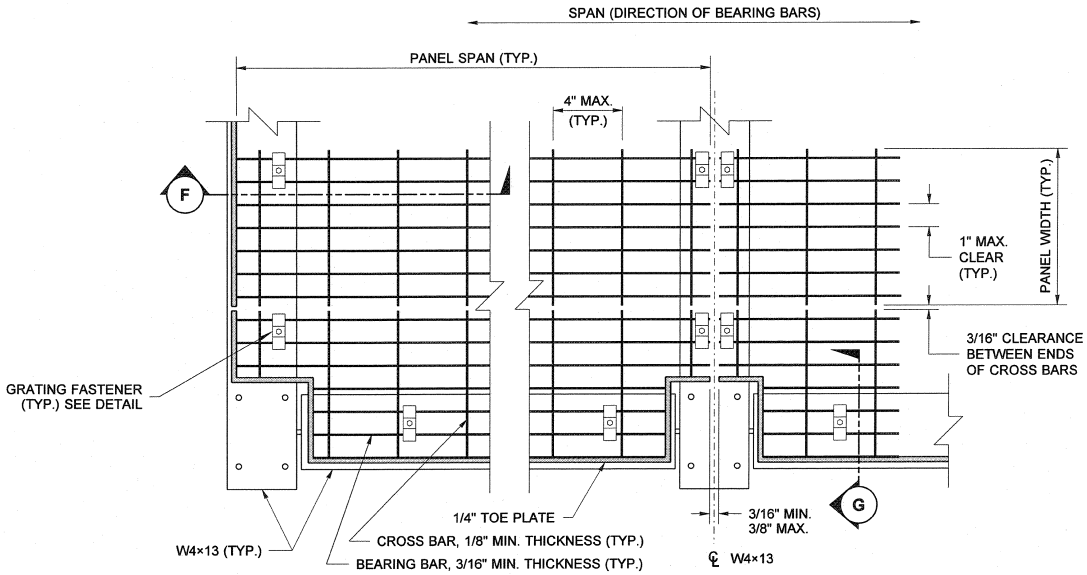

PLAN

STEEL GRATING DETAIL

(RAILING NOT SHOWN FOR CLARITY)

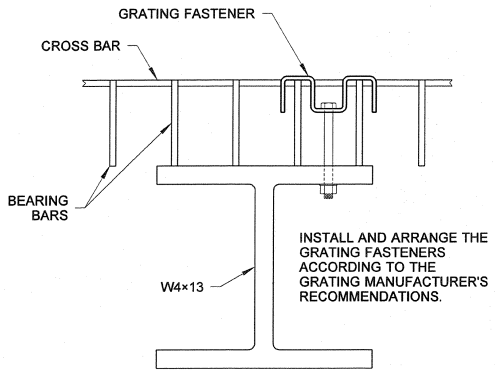

GRATING FASTENER DETAIL

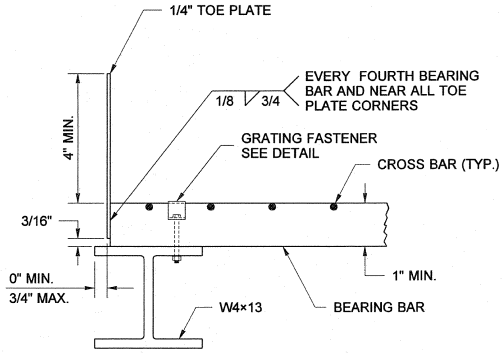

SECTION F

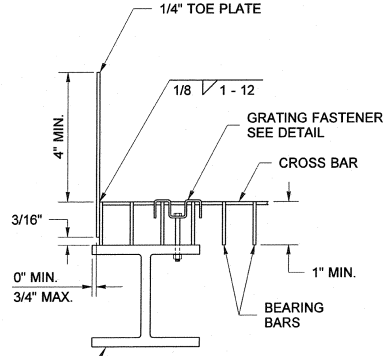

SECTION G

MAINTENANCE WALKWAY FOR SIGN BRIDGES

STANDARD PLAN G-95.10-01

SHEET 3 OF 3 SHEETS

APPROVED FOR PUBLICATION

STATE DESIGN ENGINEER — DATE 6/2/11

Washington State Department of Transportation

DRAWN BY: BILL BERENS

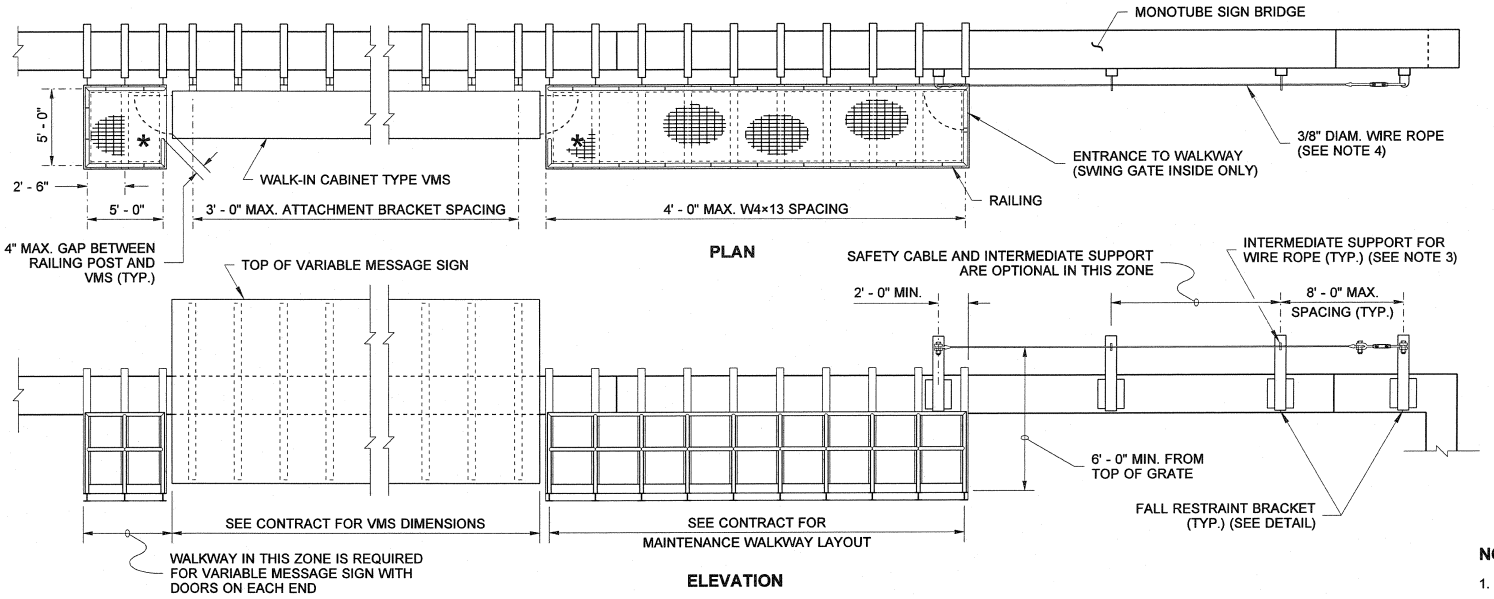

MAINTENANCE WALKWAY INSTALLED ON MONOTUBE SIGN BRIDGE

(WALKWAYS MAY BE USED WITH OTHER LAYOUTS THAN THAT SHOWN ABOVE)

MATERIAL SPECIFICATIONS	
PIPE	ASTM A 36 OR ASTM A 53 GRADE B, TYPE E OR S, OR ASTM A 500 GRADE B
PLATES AND SHAPES	ASTM A 36
STRUCTURAL TUBING	ASTM A 500 GRADE B
GALVANIZING FOR PIPE PLATES AND SHAPES	AASHTO M 111
HIGH STRENGTH BOLTS, NUTS, & WASHERS; INCL. MOUNTING BEAM BOLTS	STD SPEC. 9-06.5(3)
ALL OTHER BOLTS	STD SPEC. 9-06.5(1)
FASTENER GALVANIZING	AASHTO M 232
STEEL GRATING	ASTM A 36
WIRE ROPE	ASTM A 603 W/ CLASS A WEIGHT ZINC COATED WIRES THROUGHOUT ①

① ALLOWABLE ALTERNATE MATERIAL: FEDERAL STANDARD RR-W-410F TYPE 6 CLASS 3 GALVANIZED.

NOTES

1. NOT INTENDED FOR USE IN FRONT OF STATIC SIGNS.
2. FOR MAINTENANCE WALKWAY, RAILING, GRATING, AND TOE PLATE DETAILS, **SEE STANDARD PLAN G-95.10**.
3. USE TWO LANYARDS THROUGH INTERMEDIATE WIRE ROPE SUPPORT.
4. 3/8" DIAM. WIRE ROPE WITH 14 KIPS MIN. BREAKING STRENGTH. THE WIRE ROPE SHALL BE INSTALLED WITH 450 LBS. OF TENSION, AND WITH 6" OF TAKE UP ADJUSTMENT AVAILABLE IN THE TURNBUCKLE.
5. HANDRAIL FIT-UP WITH VMS DOOR OPENING IS THE RESPONSIBILITY OF THE CONTRACTOR.

✱ = SEE NOTE 5

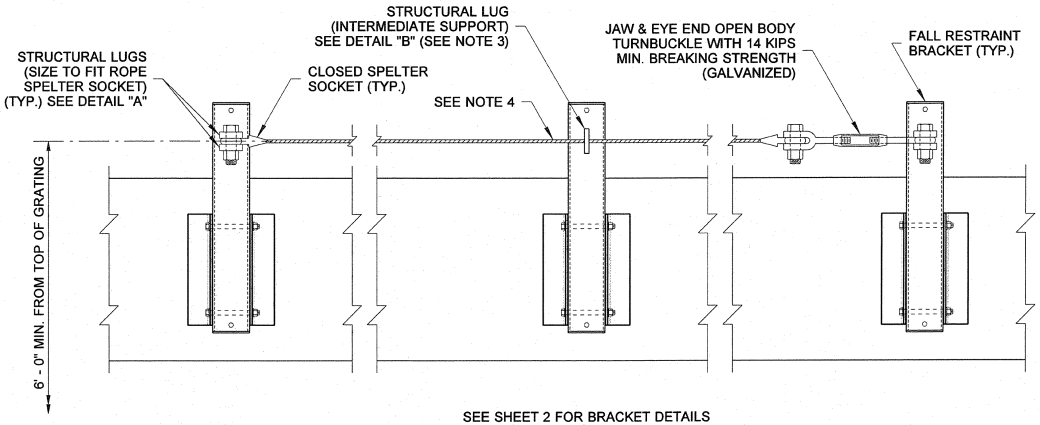

FALL RESTRAINT

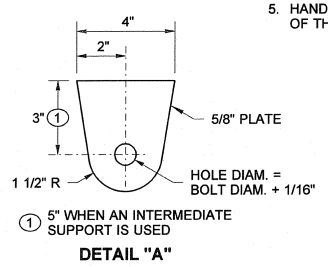

DETAIL "A"

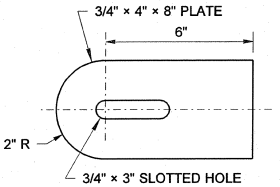

DETAIL "B"

RICHARD P. ZELDENRUST
STATE OF WASHINGTON
25470
STRUCTURAL ENGINEER
PROFESSIONAL ENGINEER
5/16/11

MAINTENANCE WALKWAY MOUNTING FOR MONOTUBE SIGN BRIDGE STANDARD PLAN G-95.20-02

SHEET 1 OF 3 SHEETS

APPROVED FOR PUBLICATION

STATE DESIGN ENGINEER — DATE 5/16/11

Washington State Department of Transportation

DRAWN BY: BILL BERENS

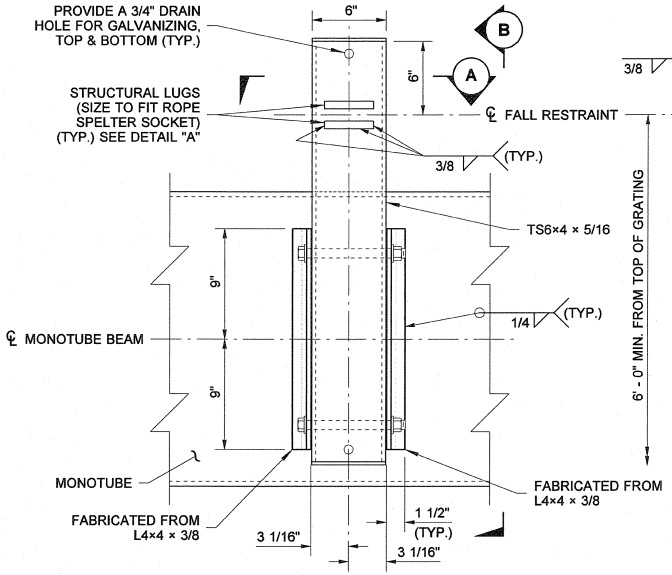

ELEVATION VIEW

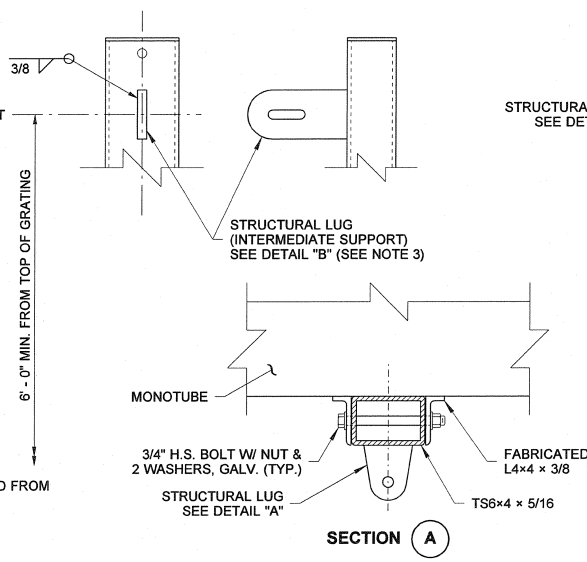

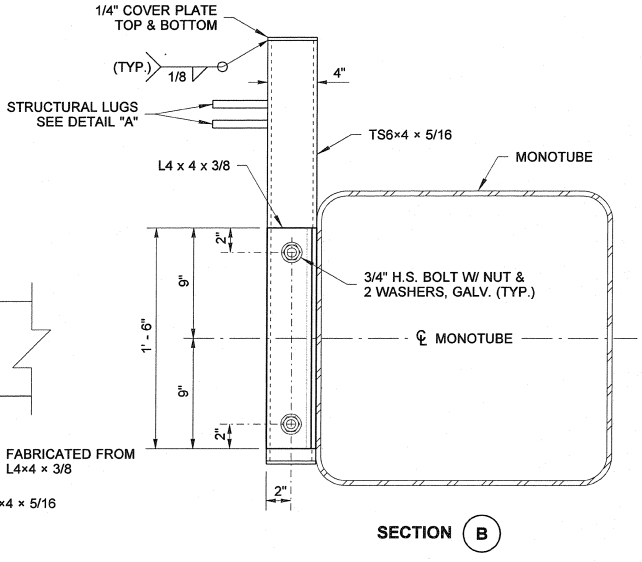

FALL RESTRAINT BRACKET INSTALLATION ON NEW MONOTUBE SIGN BRIDGE

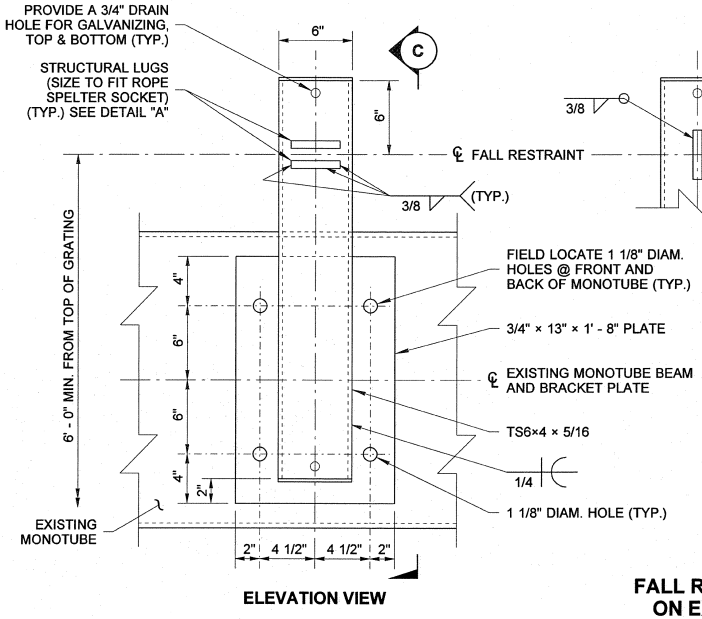

ELEVATION VIEW

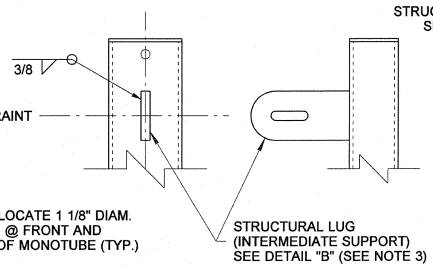

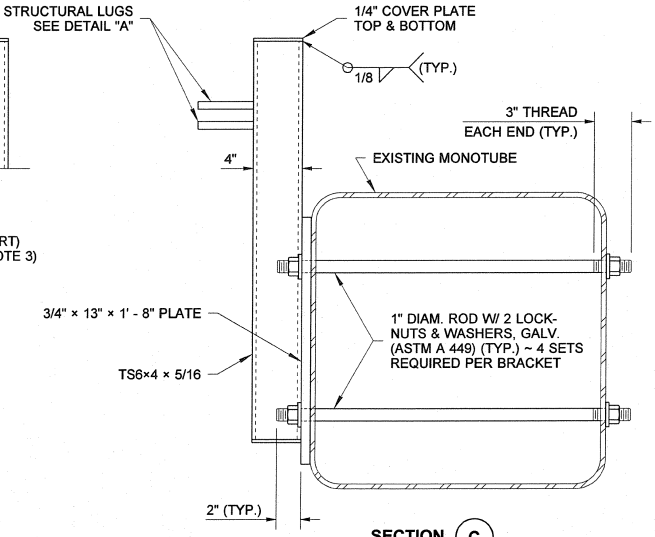

FALL RESTRAINT BRACKET INSTALLATION ON EXISTING MONOTUBE SIGN BRIDGE

RICHARD P. ZELDENRUST
STATE OF WASHINGTON
25470
STRUCTURAL ENGINEER
PROFESSIONAL ENGINEER

5/16/11

MAINTENANCE WALKWAY MOUNTING FOR MONOTUBE SIGN BRIDGE STANDARD PLAN G-95.20-02

SHEET 2 OF 3 SHEETS

APPROVED FOR PUBLICATION

STATE DESIGN ENGINEER — DATE 6/2/11

Washington State Department of Transportation

DRAWN BY: BILL BERENS

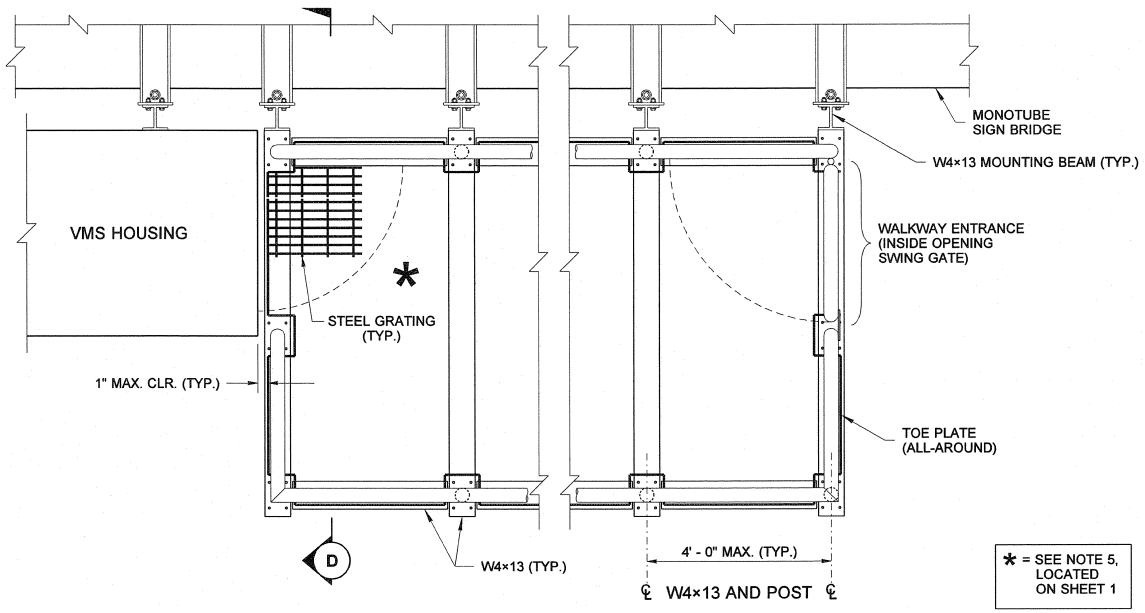

MAINTENANCE WALKWAY
PARTIAL PLAN

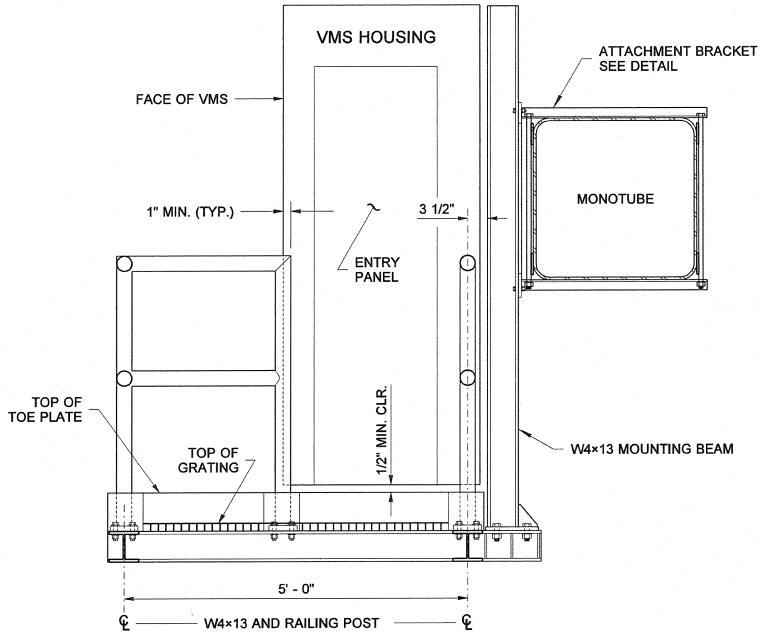

SECTION (D)

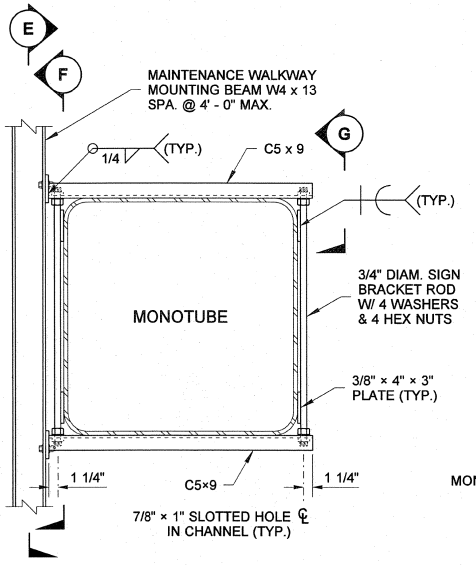

ATTACHMENT BRACKET DETAIL

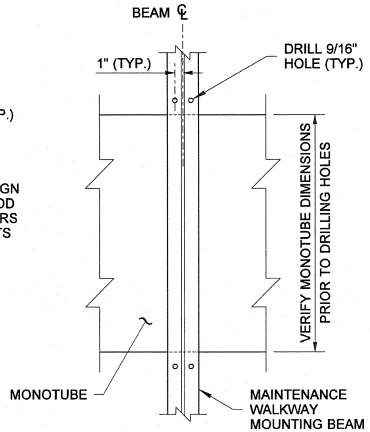

SECTION (E)

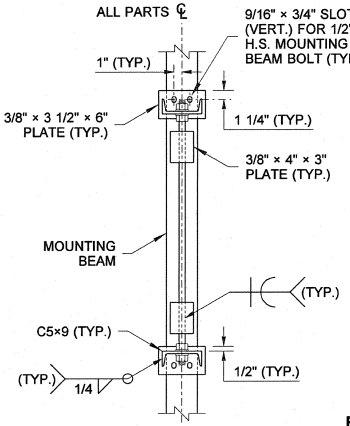

SECTION (F)

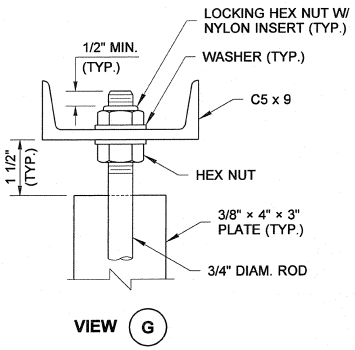

VIEW (G)

BRACKET NOTES

PAINT ENTIRE ATTACHMENT BRACKET TO MATCH EXISTING STRUCTURE EXCEPT FOR MOUNTING BEAM.

SIGN, LIGHT, BEAM LENGTHS, SIZE AND SPACING SHALL BE DETERMINED FROM THE CONTRACT PLANS OR WSDOT STANDARD PLANS.

MAINTENANCE WALKWAY MOUNTING FOR MONOTUBE SIGN BRIDGE STANDARD PLAN G-95.20-02

SHEET 3 OF 3 SHEETS

APPROVED FOR PUBLICATION

STATE DESIGN ENGINEER — DATE 6/2/11

Washington State Department of Transportation

DRAWN BY: BILL BERENS

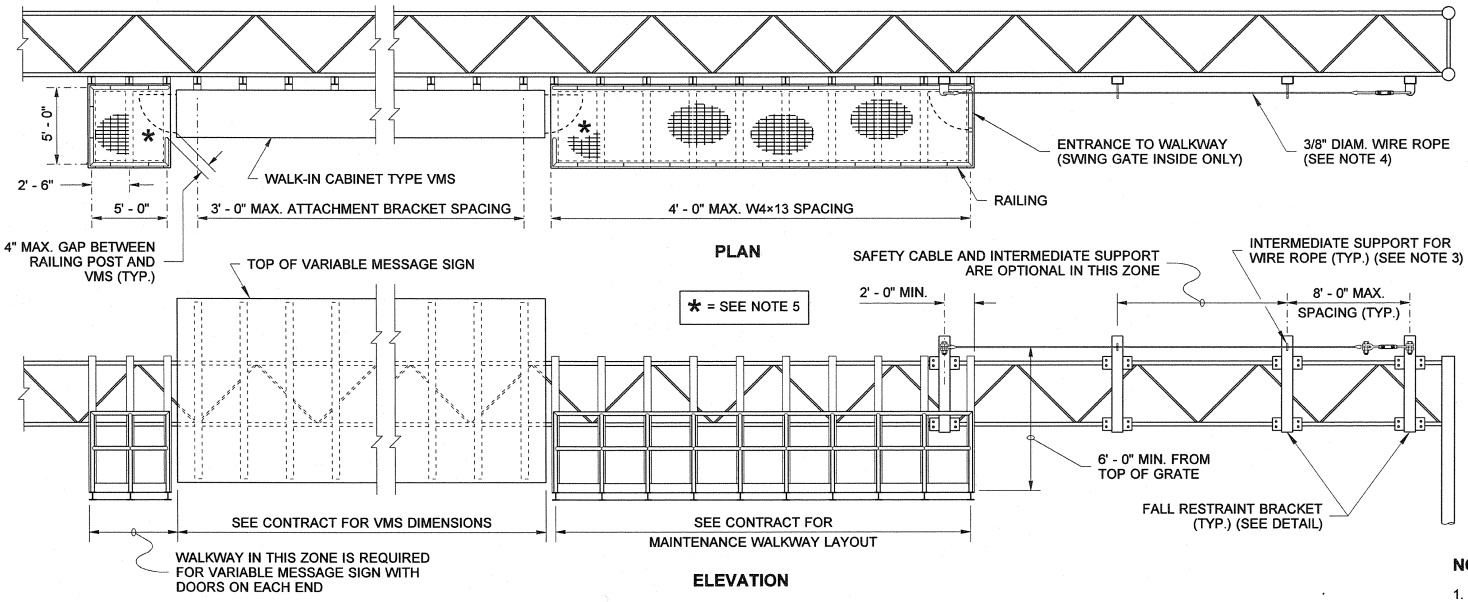

MAINTENANCE WALKWAY INSTALLED ON TRUSS-TYPE SIGN BRIDGE

(WALKWAYS MAY BE USED WITH OTHER LAYOUTS THAN THAT SHOWN ABOVE)

MATERIAL SPECIFICATIONS	
PIPE	ASTM A 36 OR ASTM A 53 GRADE B, TYPE E OR S, OR ASTM A 500 GRADE B
PLATES AND SHAPES	ASTM A 36
STRUCTURAL TUBING	ASTM A 500 GRADE B
GALVANIZING FOR PIPE PLATES AND SHAPES	AASHTO M 111
HIGH STRENGTH BOLTS, NUTS, & WASHERS; INCL. MOUNTING BEAM BOLTS	STD SPEC. 9-06.5(3)
ALL OTHER BOLTS	STD SPEC. 9-06.5(1)
FASTENER GALVANIZING	AASHTO M 232
STEEL GRATING	ASTM A 36
WIRE ROPE	ASTM A 603 W/ CLASS A WEIGHT ZINC COATED WIRES THROUGHOUT ①

① ALLOWABLE ALTERNATE MATERIAL: FEDERAL STANDARD RR-W-410F TYPE 6 CLASS 3 GALVANIZED.

NOTES

1. NOT INTENDED FOR USE IN FRONT OF STATIC SIGNS.
2. FOR MAINTENANCE WALKWAY, RAILING, GRATING, AND TOE PLATE DETAILS, SEE **STANDARD PLAN G-95.10**.
3. USE TWO LANYARDS THROUGH INTERMEDIATE WIRE ROPE SUPPORT.
4. 3/8" DIAM. WIRE ROPE WITH 14 KIPS MIN. BREAKING STRENGTH. THE WIRE ROPE SHALL BE INSTALLED WITH 450 LBS. OF TENSION, AND WITH 6" OF TAKE UP ADJUSTMENT AVAILABLE IN THE TURNBUCKLE.
5. HANDRAIL FIT-UP WITH VMS DOOR OPENING IS THE RESPONSIBILITY OF THE CONTRACTOR.

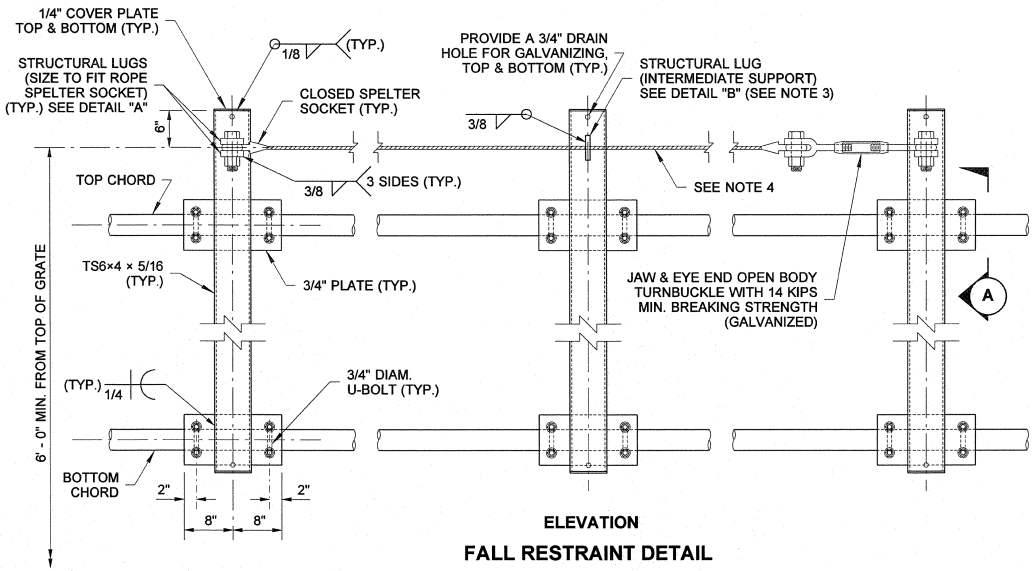

FALL RESTRAINT DETAIL

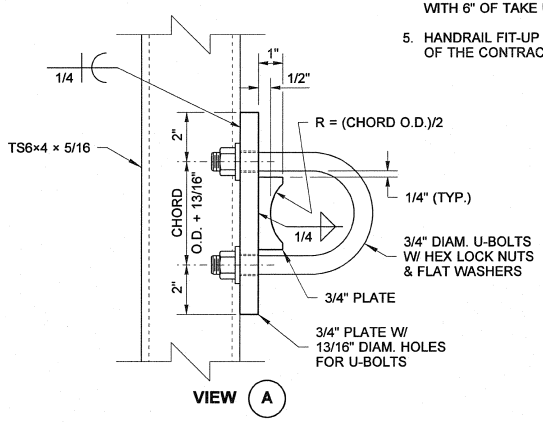

RICHARD P. ZELDENRUST
STATE OF WASHINGTON
25470
STRUCTURAL ENGINEER
PROFESSIONAL ENGINEER
5/16/11

MAINTENANCE WALKWAY MOUNTING FOR TRUSS-TYPE SIGN BRIDGE STANDARD PLAN G-95.30-02

SHEET 1 OF 2 SHEETS

APPROVED FOR PUBLICATION

STATE DESIGN ENGINEER — DATE 6/2/11

Washington State Department of Transportation

DRAWN BY: BILL BERENS

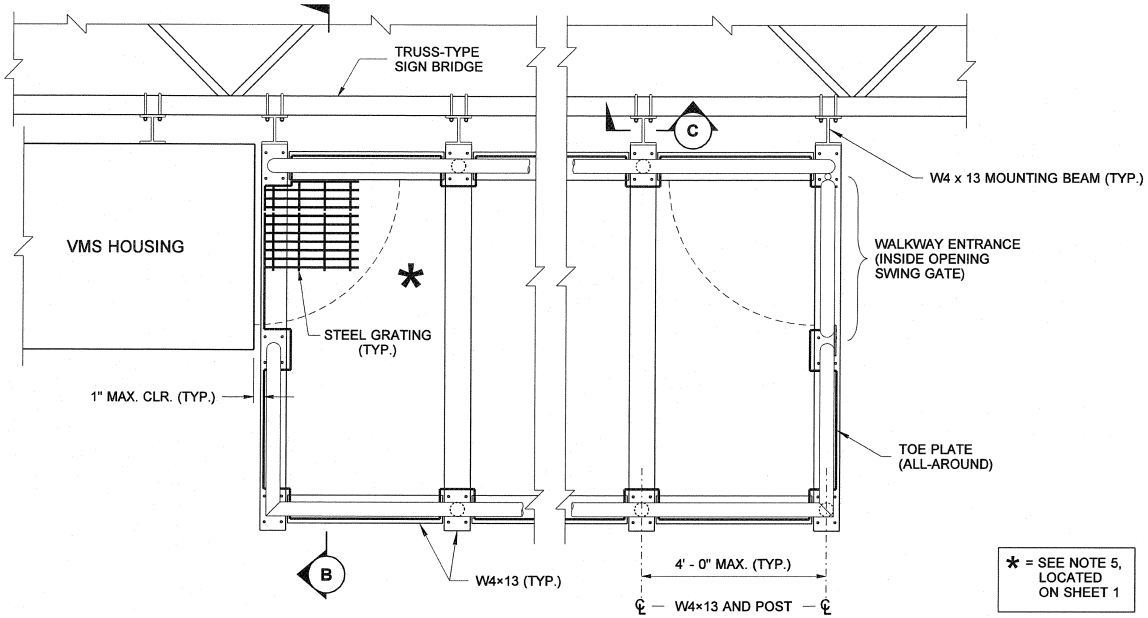

* = SEE NOTE 5, LOCATED ON SHEET 1

MAINTENANCE WALKWAY
PARTIAL PLAN

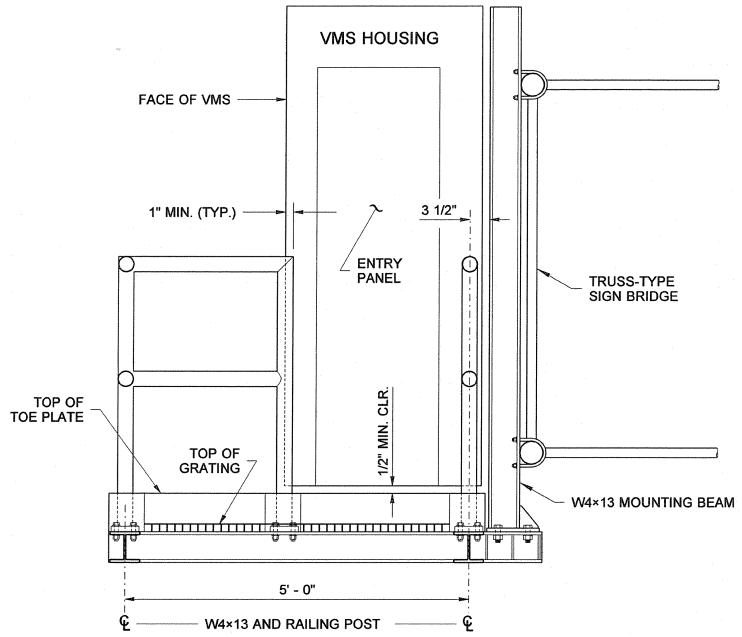

SECTION (B)

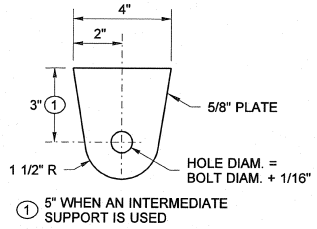

DETAIL "A"

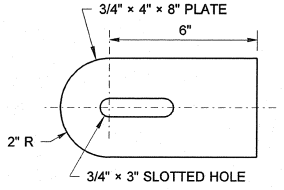

DETAIL "B"

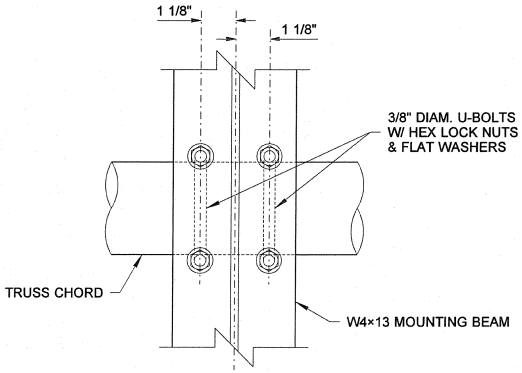

SECTION (C)

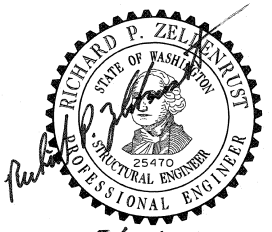

5/16/11

MAINTENANCE WALKWAY MOUNTING FOR TRUSS-TYPE SIGN BRIDGE STANDARD PLAN G-95.30-02

SHEET 2 OF 2 SHEETS

APPROVED FOR PUBLICATION

Pasco Bakotich 6/2/11
STATE DESIGN ENGINEER — DATE

Washington State Department of Transportation

This page left blank intentionally.

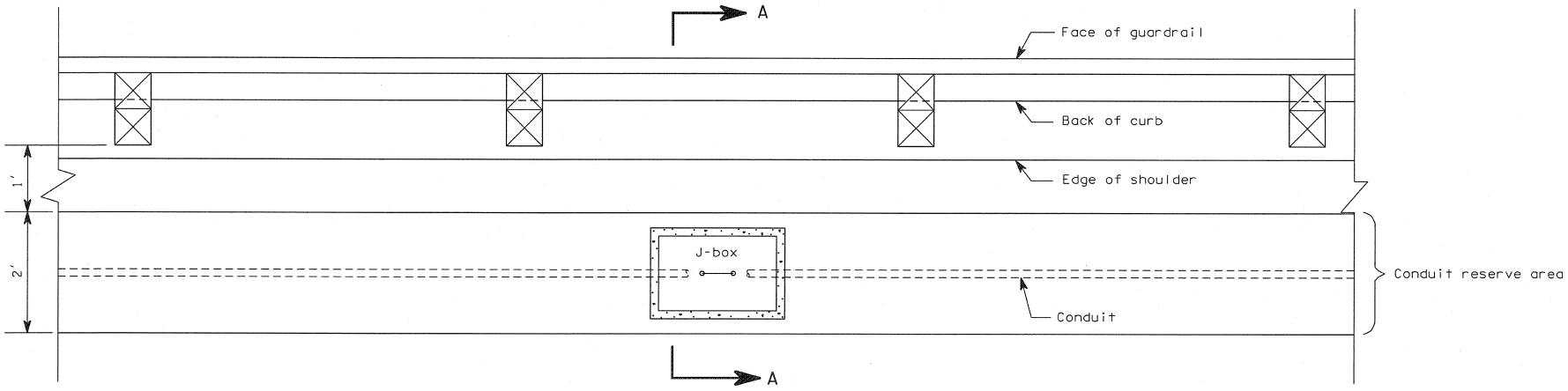

PLAN

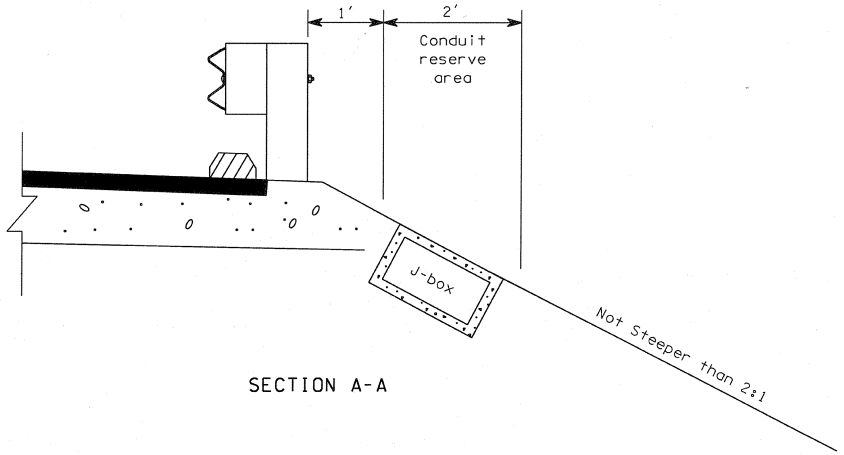

SECTION A-A

ELECTRICAL CONDUIT PLACEMENT

WILLIAM D. BROWN
STATE OF WASHINGTON
9014812
REGISTERED
PROFESSIONAL ENGINEER

EXPIRES SEPT 10, 1998

STANDARD PLAN J-10

APPROVED FOR PUBLICATION

Clifford E. Crawford 7/18/97

STATE DESIGN ENGINEER DATE

WASHINGTON STATE DEPARTMENT OF TRANSPORTATION
OLYMPIA, WASHINGTON

DRAWN BY: LISA CYFORD

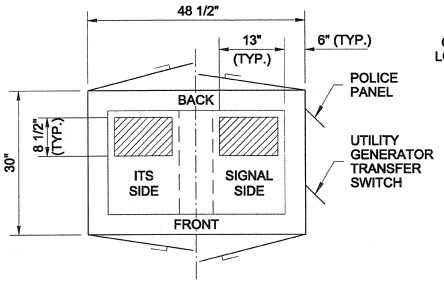

TYPE 332D CONTROLLER CABINET

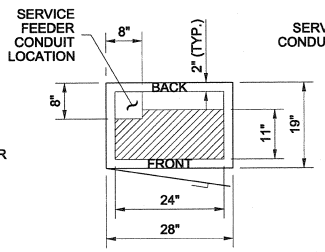

TYPE D SERVICE CABINET

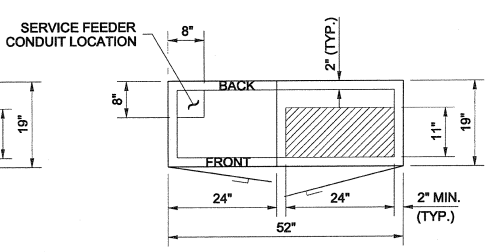

TYPE E SERVICE CABINET

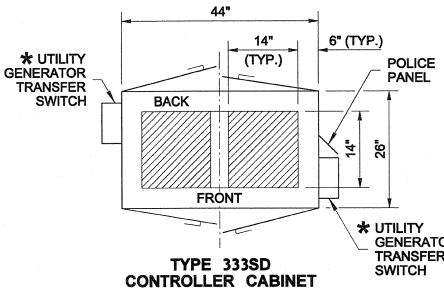

TYPE 333SD CONTROLLER CABINET

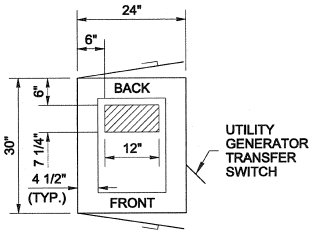

TYPE 332 UNINTERRUPTABLE POWER SUPPLY CABINET

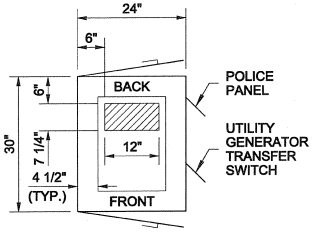

TYPE 332 CONTROLLER CABINET

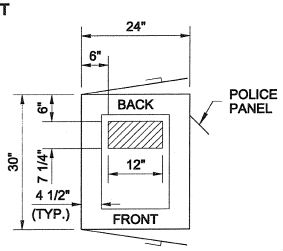

TYPE 334

* TO BE INSTALLED BY REGION MAINTAINANCE PERSONNEL. PROVIDE A 15' PIGTAIL. (SEE NOTE 12)

CONDUIT PLACEMENT LOCATION AREA (OR TRANSFORMER HIGH VOLTAGE CONDUIT AREA)

LOW VOLTAGE CONDUIT PLACEMENT LOCATION

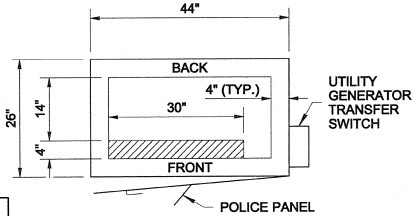

NEMA P44 CONTROLLER CABINET

CONTROLLER OR CABINET BASE	SIZE W × D	CAPACITY CONDUIT DIAMETER
TYPE 332	24" × 30"	12"
TYPE 332D	48.5" × 30"	24" ⟨1⟩
NEMA P44	44" × 26"	15"
TYPE 333SD	44" × 26"	48" ⟨2⟩
TYPE 334	24" × 30"	12"
TRANSFORMER	**SIZE W × D**	
UP TO 3 KVA	18" × 12"	8"
3.1 TO 12.5 KVA	24" × 20"	12"
12.6 TO 35.0 KVA	32" × 30"	15"
UNINTERRUPTABLE POWER SUPPLY	**SIZE W × D**	
332 CABINET	16" × 16"	12"

⟨1⟩ 12" OF CONDUIT IN EACH LOCATION SHOWN

⟨2⟩ 24" OF CONDUIT IN EACH LOCATION SHOWN

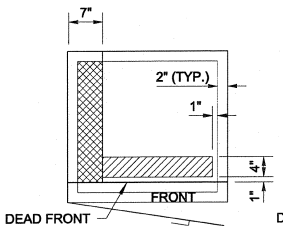

12.6 TO 35.0 KVA TRANSFORMER

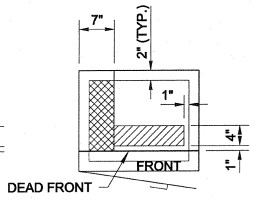

3.1 TO 12.5 KVA TRANSFORMER

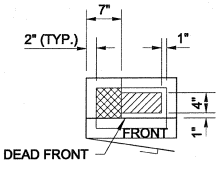

UP TO 3 KVA TRANSFORMER

PLAN VIEWS
CABINET FOOTPRINT AND CONDUIT PLACEMENT LOCATIONS

CONSTRUCTION NOTES

⟨1⟩ Drive ground rods before placing concrete. Move rod(s) and drain tiles with cover(s) as required to achieve full ground penetration. Maintain a 6' minimum clearance between ground rods and 6" from foundation edge as detailed on **Standard Plan J-60.05.**

⟨2⟩ GRS conduits penetrating all cabinets shall be terminated with grounding end bushing and bonded to the cabinet grounding bus. All PVC conduits penetrating cabinet shall be terminated with end bell bushings.

⟨3⟩ Install conduit couplings on all conduits. Place couplings flush with top of concrete. If PVC conduits are specified, the conduit stub and end bell bushing shall not be glued to the coupling.

⟨4⟩ 4" diam. × 1/2" deep sump. Slope foundation within cabinet footprint toward sump. Drainpipe shall be 3/8" diam. polyethylene or copper tubing.

⟨5⟩ The Type D Service shall not be installed on a raised section. All other cabinets shall be installed on 3 1/2" or 9" cabinet footing.

⟨6⟩ Cabinet power supply conduit.

⟨7⟩ Conduits for service grounding electrodes.

NOTES

1. The cabinets shown in these details are shown for illustrative purposes only. The Contractor shall verify the plans and substitute those cabinets in place of the cabinets shown in these details. The Contractor shall install each cabinet type in the locations and orientations shown in these details.
2. The Contractor shall install the conduits in the locations shown. Conduits shall extend 2" min. above the coupling. The conduit containing unfused utility conductors shall extend into the utility chase.
3. The ground rods, drain tiles, associated conduits, and #4 rebar, 90° with 30" legs, may be omitted if no transformer or service cabinet is to be installed.
4. The cabinets shall be attached to the foundation with 4 each: 1/2" × 12" × 2" × 4" hot dip galv. anchor bolts, washers, and nuts. Stainless steel epoxy anchors may be used as an alternative, and shall be 1/2" diam. × 9", or 5/8" diam. × 8". Bolts shall extend 1 1/2" min. to 2" max. above the concrete pad.
5. All reinforcing steel shall be embedded 2" below surface of concrete.
6. Place a 1/2" bead of silicone between cabinets and foundation.
7. Two ground rods are required for foundations with a service cabinet or transformer cabinet. See **Standard Plan J-60.05** for details.
8. Concrete shall be class 3000. See **Standard Specification 8-20.3(4).**
9. Verify dead front locations from manufacturer prior to placing conduit in foundation.
10. Foundations installed in, or adjacent to, sidewalks shall be constructed with the top flush with the sidewalk surface and grade, not including concrete risers for cabinets. Omit chamfers where foundation abuts sidewalk.
11. If the slope is 3H : 1V or steeper, special considerations may be necessary for safety reasons. Coordinate with Maintenance and Project Engineer.
12. For Type 333SD Controller Cabinet, the cabinet vendor shall allow the Utility Transfer Switch to be installed on either side of the cabinet. The Utility Transfer Switch unit shall be shipped inside the cabinet for field installation by Region Maintenance Personnel.
13. Height of cabinet footings shall be adjusted to serve environmental needs. Adjust length of conduits and rebar accordingly.
14. Use (1) #4 hoop for a 3 1/2" cabinet footing and (2) #4 hoops for a 9" cabinet footing.
15. The Police Panel location is set by Industry Standards on all Controller Cabinets.
16. See **Standard Plan J-3b** for Foundation Construction and Conduit Routing for Type B Modified Service Cabinet with Controller Cabinet.
17. Verify pad size and location with Project Engineer prior to placing.
18. Field bend #4 rebar around the Generator Anti-Theft Tie Down Unit when required.
19. See **Standard Plan J-3c** and **J-3d** for additional details for Type D and Type E Service Cabinets.

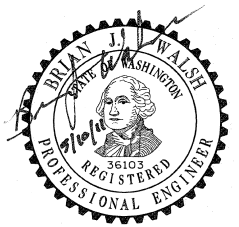

CABINET ORIENTATION CONDUIT LAYOUT AND FOUNDATION DETAIL

STANDARD PLAN J-10.10-01

SHEET 1 OF 5 SHEETS

APPROVED FOR PUBLICATION

STATE DESIGN ENGINEER — DATE 5/9/11

Washington State Department of Transportation

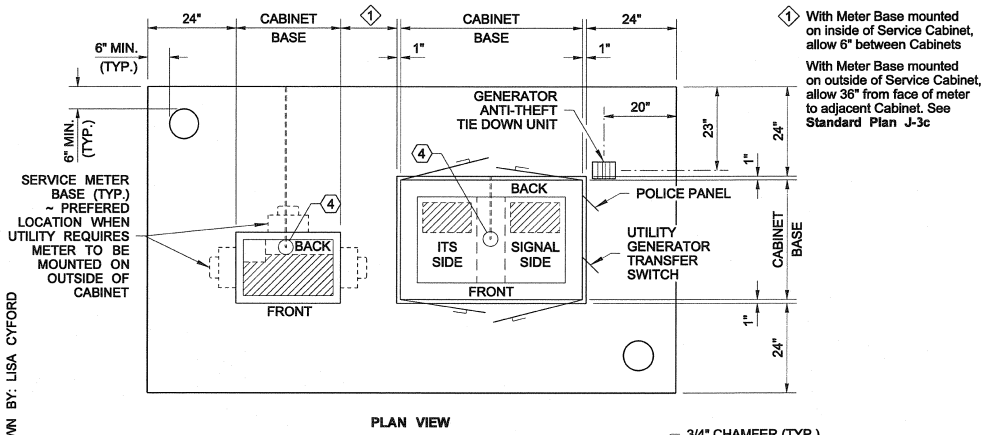

1 With Meter Base mounted on inside of Service Cabinet, allow 6" between Cabinets

With Meter Base mounted on outside of Service Cabinet, allow 36" from face of meter to adjacent Cabinet. See **Standard Plan J-3c**

PLAN VIEW

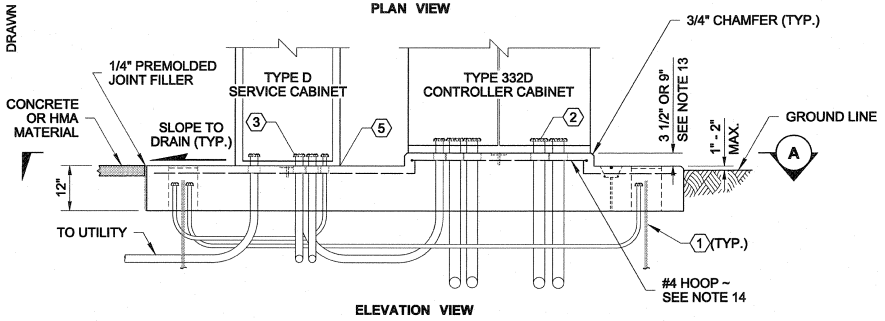

ELEVATION VIEW

TWO CABINET FOUNDATION

(TYPE D SERVICE AND TYPE 332D CONTROLLER CABINET SHOWN)

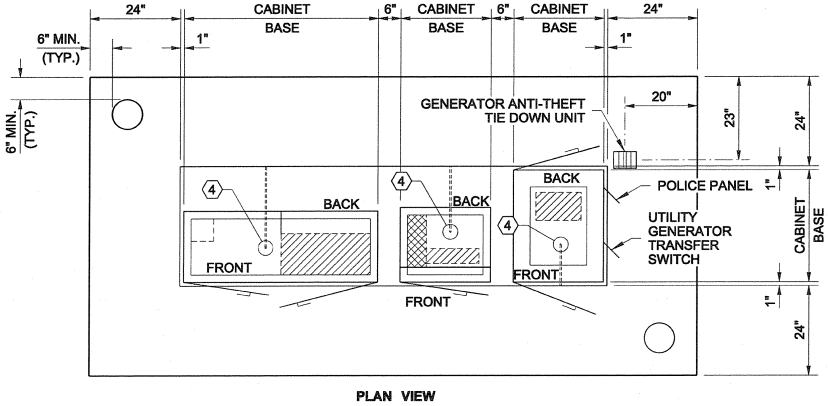

PLAN VIEW

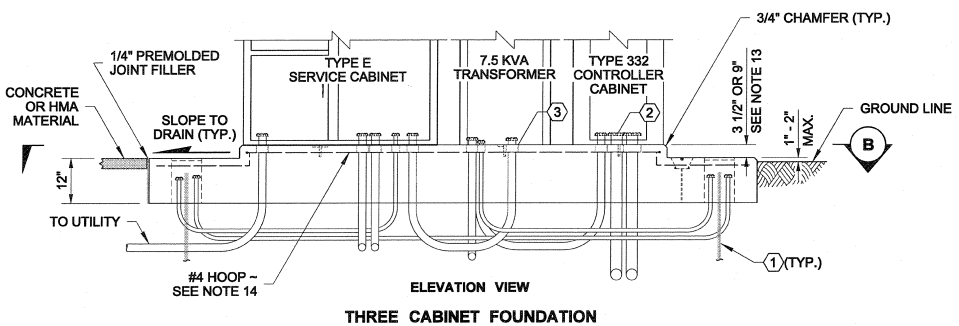

ELEVATION VIEW

THREE CABINET FOUNDATION

(TYPE E SERVICE, 7.5 KVA TRANSFORMER AND TYPE 332 CONTROLLER CABINET SHOWN)

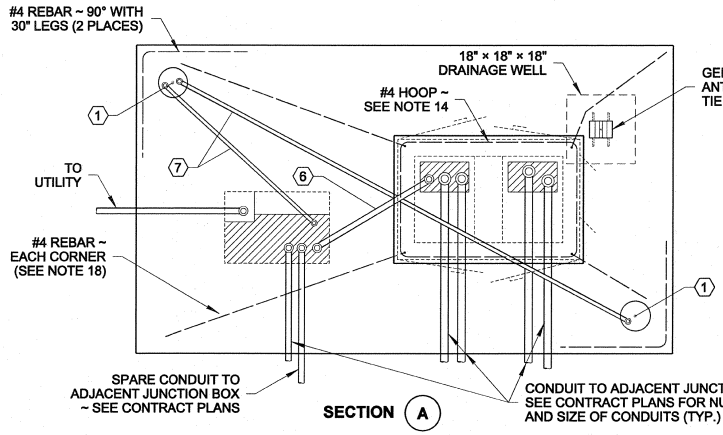

SECTION A

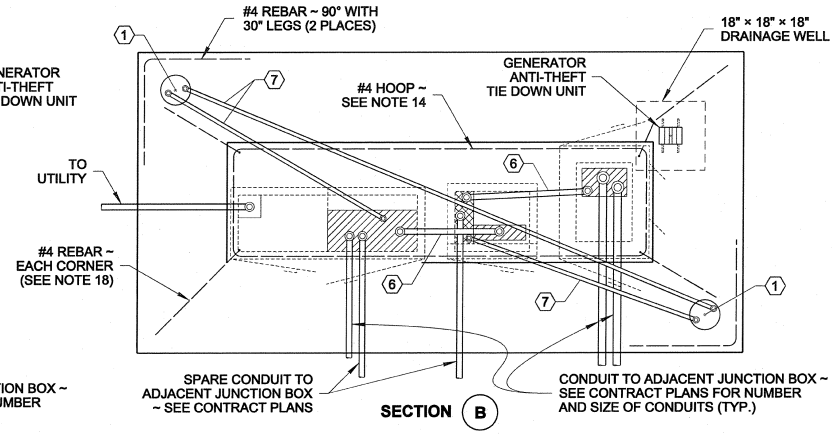

SECTION B

DRAWN BY: LISA CYFORD

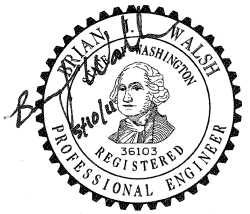

CABINET ORIENTATION CONDUIT LAYOUT AND FOUNDATION DETAIL

STANDARD PLAN J-10.10-01

SHEET 2 OF 5 SHEETS

APPROVED FOR PUBLICATION

STATE DESIGN ENGINEER — DATE 5/10/11

Washington State Department of Transportation

DRAWN BY: LISA CYFORD

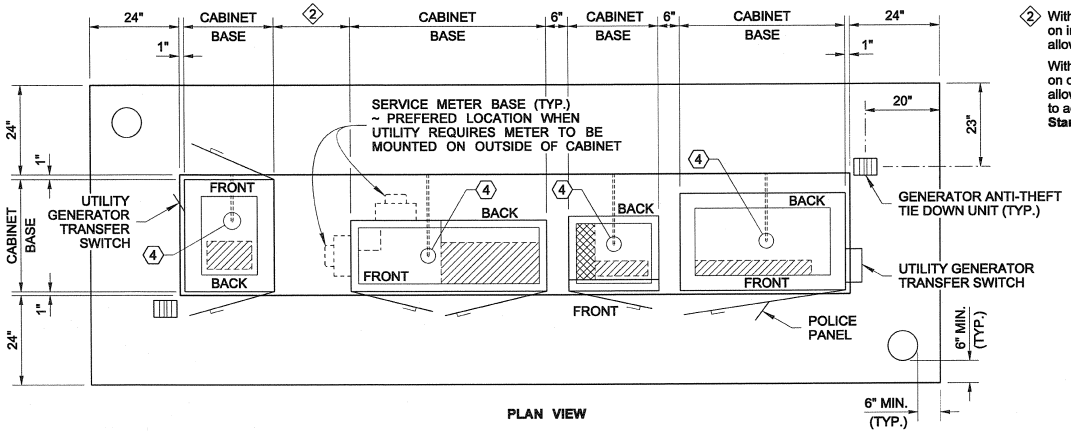

PLAN VIEW

2 With Meter Base mounted on inside of Service Cabinet, allow 6" between cabinets

With Meter Base mounted on outside of Service Cabinet, allow 36" from face of meter to adjacent Cabinet. See **Standard Plan J-3d**

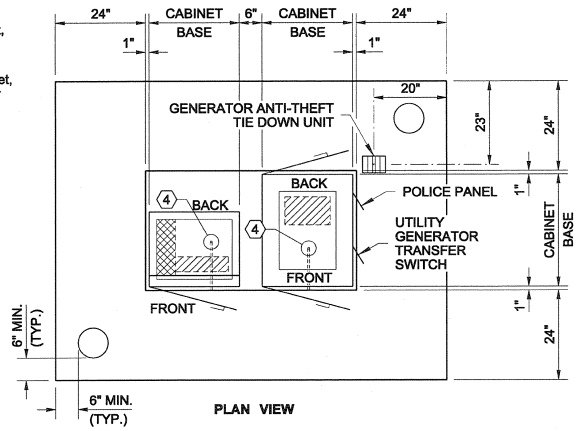

PLAN VIEW

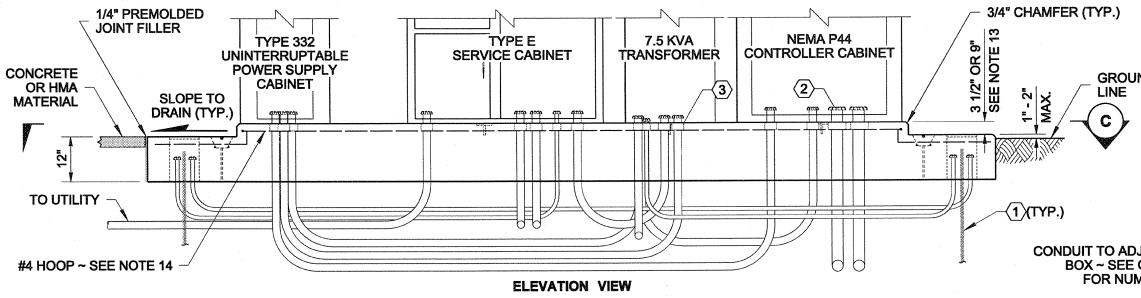

ELEVATION VIEW

FOUR CABINET FOUNDATION

(TYPE 332 UNINTERRUPTABLE POWER SUPPLY CABINET, TYPE E SERVICE CABINET, 7.5 KVA TRANSFORMER AND NEMA P44 CONTROLLER CABINET SHOWN)

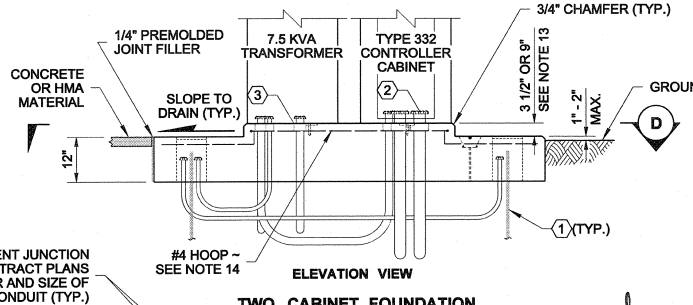

ELEVATION VIEW

TWO CABINET FOUNDATION

(7.5 KVA TRANSFORMER AND TYPE 332 CONTROLLER CABINET SHOWN)

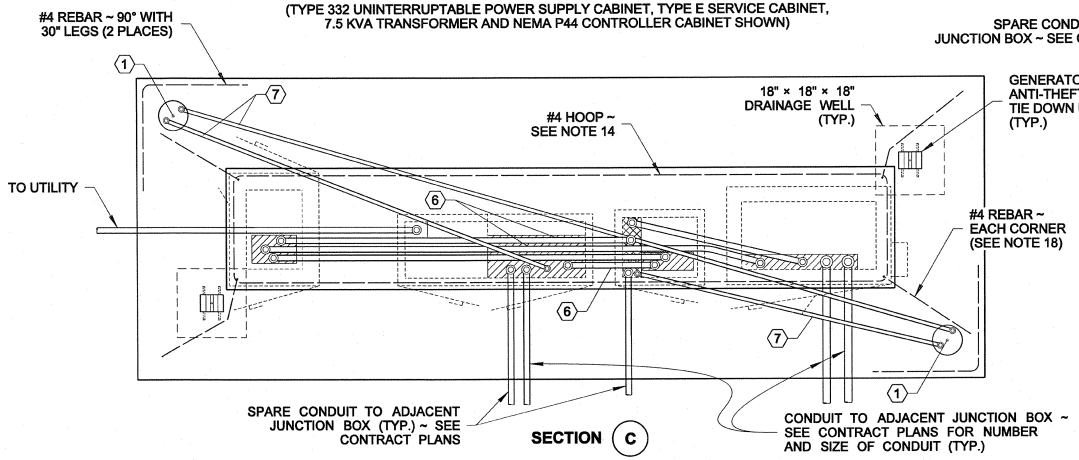

SECTION C

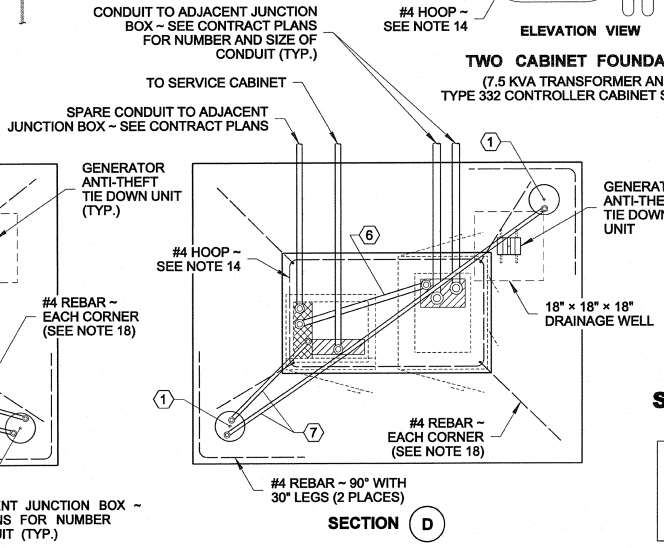

SECTION D

BRIAN L. WALSH
STATE OF WASHINGTON
5-10-11
36103
REGISTERED
PROFESSIONAL ENGINEER

CABINET ORIENTATION CONDUIT LAYOUT AND FOUNDATION DETAIL

STANDARD PLAN J-10.10-01

SHEET 3 OF 5 SHEETS

APPROVED FOR PUBLICATION

STATE DESIGN ENGINEER — DATE 5/11/11

Washington State Department of Transportation

DRAWN BY: LISA CYFORD

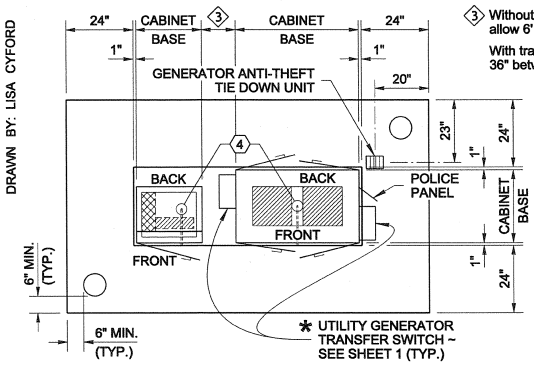

3 Without transfer switch, allow 6' between cabinets

With transfer switch, allow 36" between cabinets.

PLAN VIEW

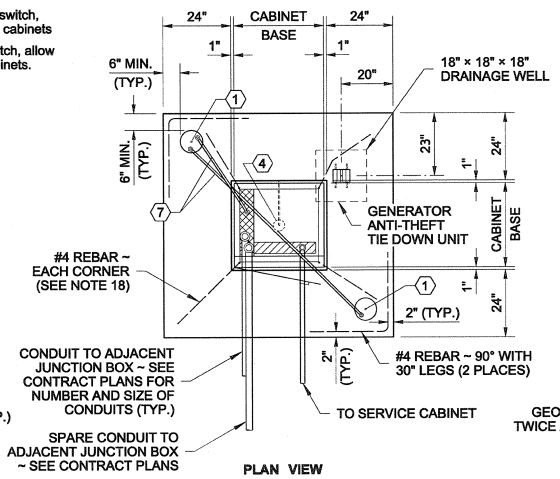

PLAN VIEW

PLAN VIEW

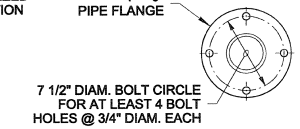

PEDESTAL BASE DETAIL

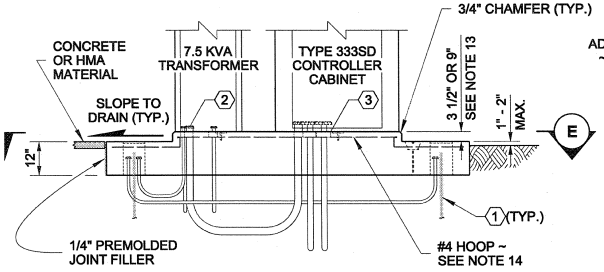

ELEVATION VIEW

TWO CABINET FOUNDATION

(7.5 KVA TRANSFORMER AND TYPE 333SD CONTROLLER CABINET SHOWN)

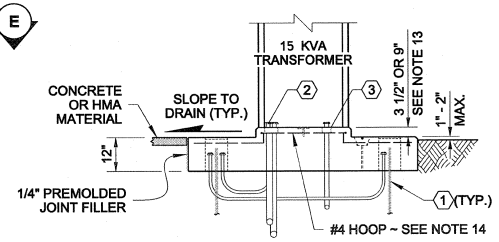

ELEVATION VIEW

SINGLE CABINET FOUNDATION

(15 KVA TRANSFORMER SHOWN)

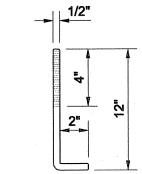

ANCHOR BOLT

(SEE NOTE 4)

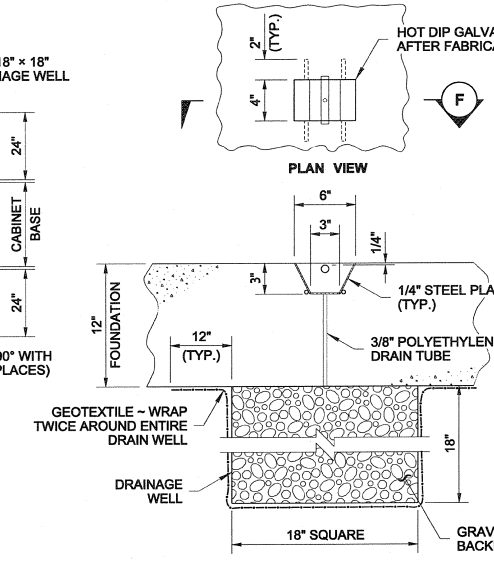

ELEVATION VIEW

SECTION F

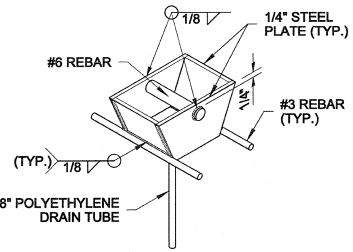

ISOMETRIC VIEW

GENERATOR ANTI-THEFT TIE DOWN UNIT

(FABRICATE IF NOT AVAILABLE COMMERCIALLY)

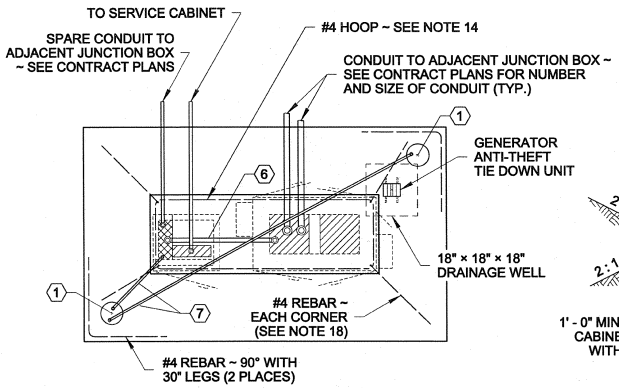

SECTION E

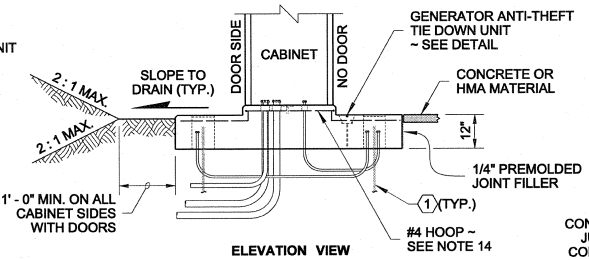

ELEVATION VIEW

TYPICAL FOUNDATION CROSS SECTION

(SEE NOTE 12)

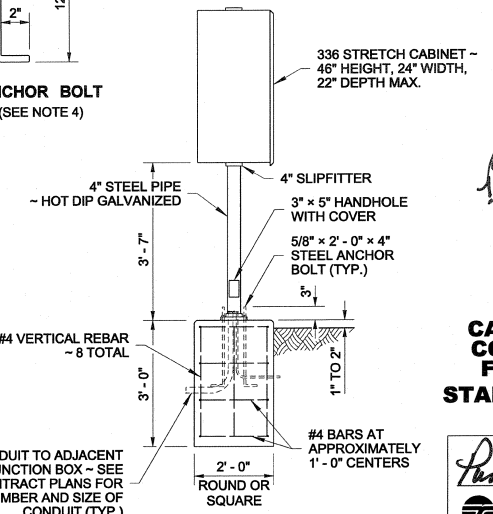

PEDESTAL MOUNT

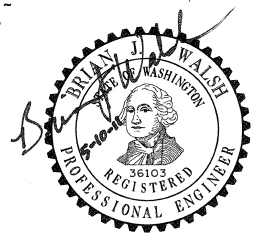

CABINET ORIENTATION CONDUIT LAYOUT AND FOUNDATION DETAIL

STANDARD PLAN J-10.10-01

SHEET 4 OF 5 SHEETS

APPROVED FOR PUBLICATION

STATE DESIGN ENGINEER — DATE 5/10/11

Washington State Department of Transportation

DRAWN BY: LISA CYFORD

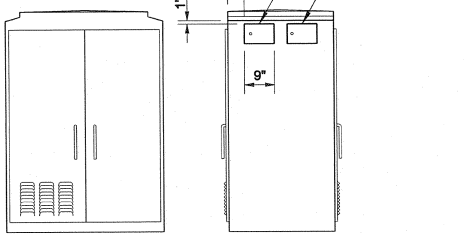

TYPE 332D CONTROLLER CABINET

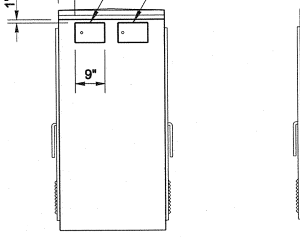

TYPE 332 CONTROLLER CABINET

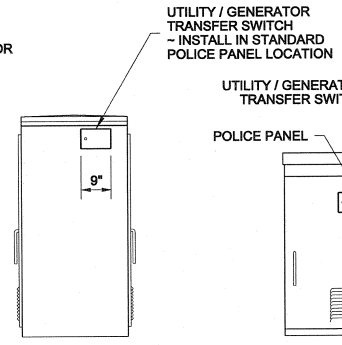

TYPE 332 UNINTERRUPTABLE POWER SUPPLY (UPS) CABINET

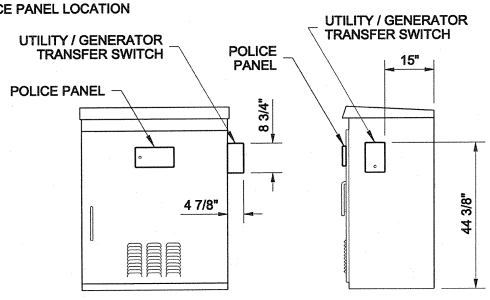

NEMA P44 CONTROLLER CABINET

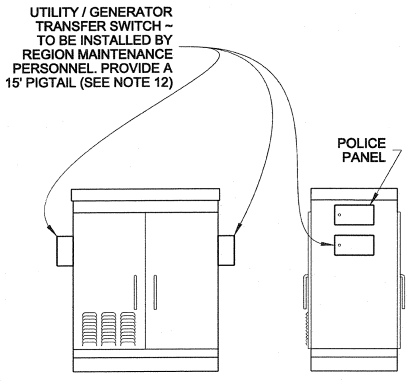

TYPE 333SD CONTROLLER CABINET

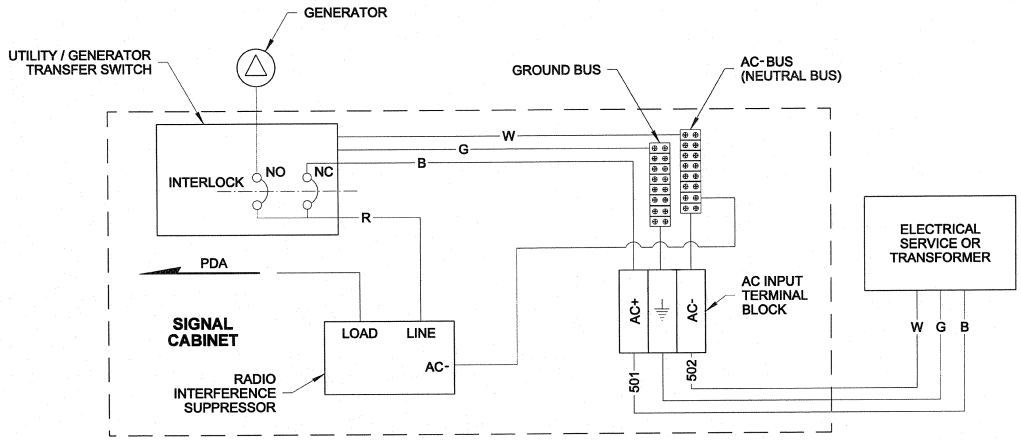

TRANSFER SWITCH CONNECTION TYPICAL WIRING DIAGRAM

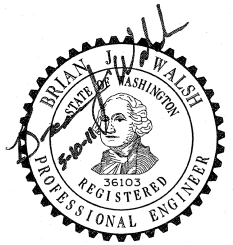

CABINET ORIENTATION CONDUIT LAYOUT AND FOUNDATION DETAIL

STANDARD PLAN J-10.10-01

SHEET 5 OF 5 SHEETS

APPROVED FOR PUBLICATION

STATE DESIGN ENGINEER — DATE

Washington State Department of Transportation

DRAWN BY: MARK SUJKA

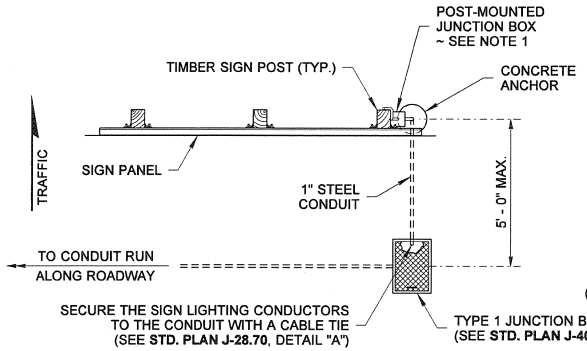

PLAN

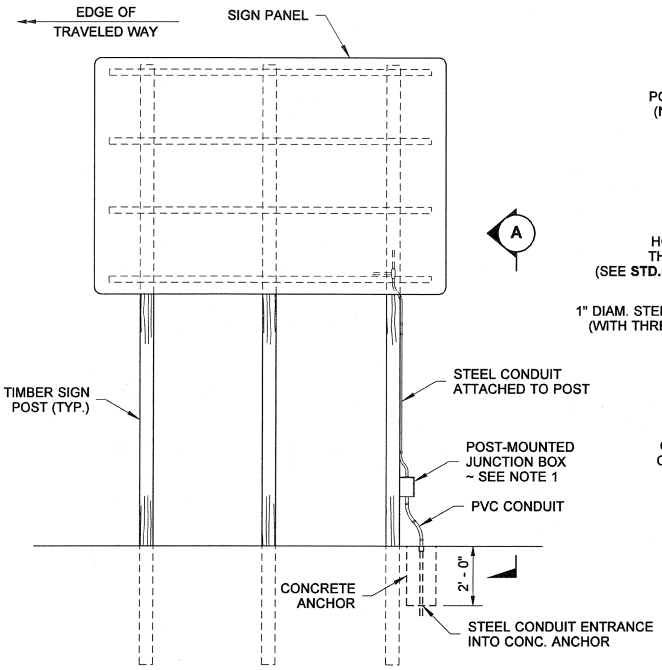

ELEVATION

JUNCTION BOX ATTACHMENT TO TIMBER SIGN SUPPORT

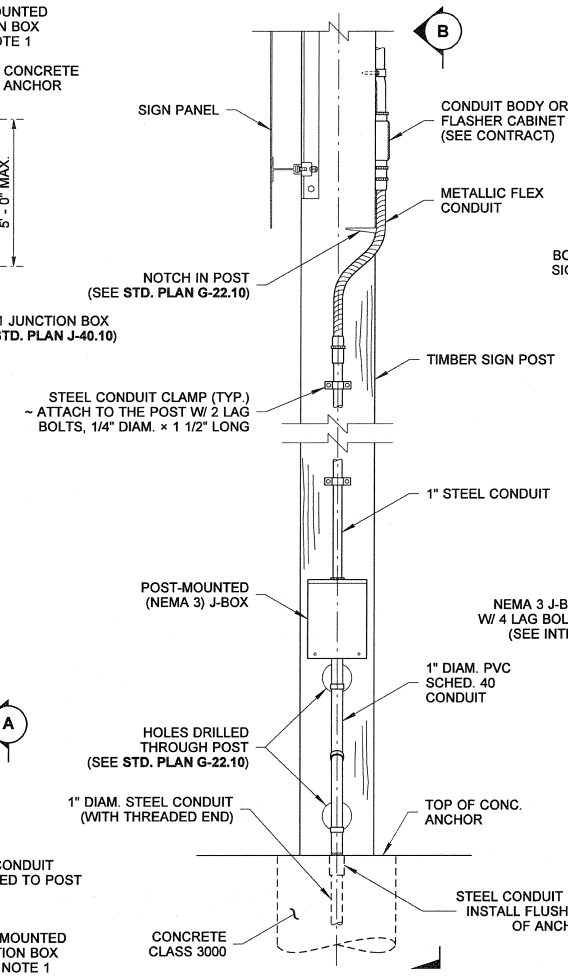

DETAIL VIEW (A)

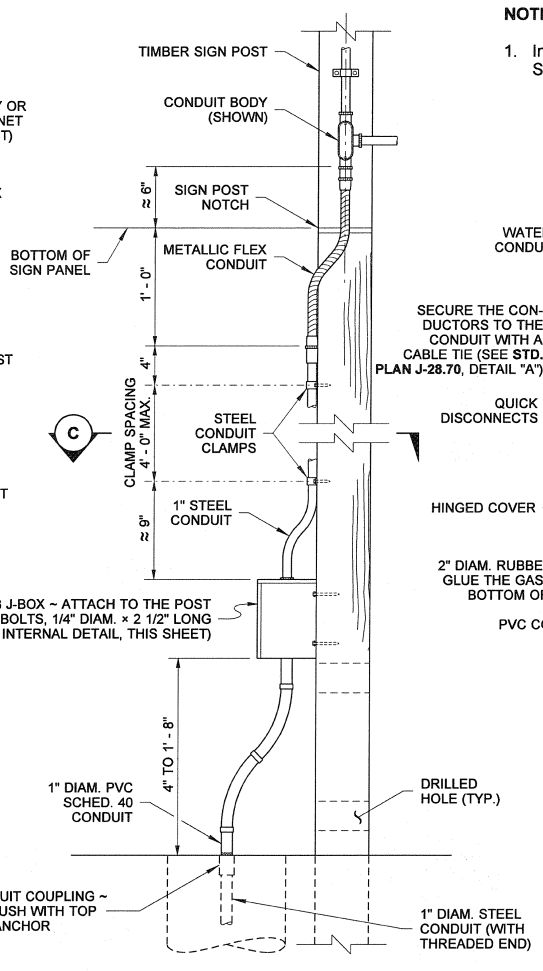

DETAIL VIEW (B)

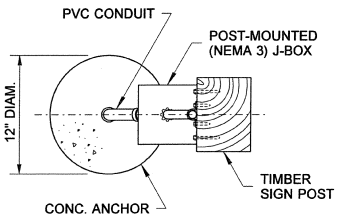

SECTION (C)

NOTE

1. Install the Junction Box on the Timber Sign Post, or the Steel Sign Support, that is farthest from the roadway.

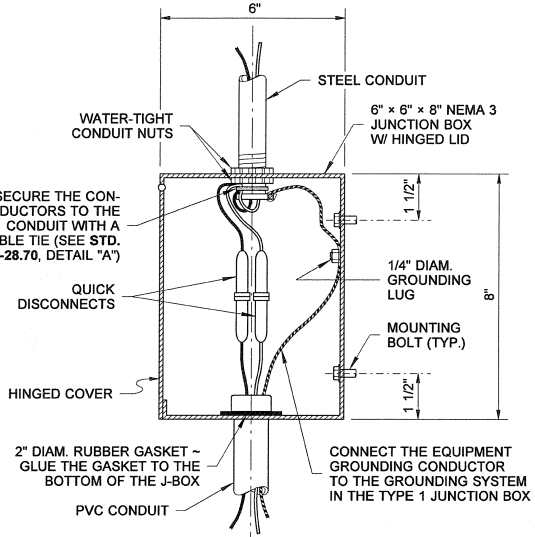

JUNCTION BOX INTERNAL DETAIL

SIGN POST-MOUNTED JUNCTION BOX

STANDARD PLAN J-12

SHEET 1 OF 2 SHEETS

APPROVED FOR PUBLICATION

STATE DESIGN ENGINEER — DATE 2/10/09

Washington State Department of Transportation

DRAWN BY: LISA CYFORD

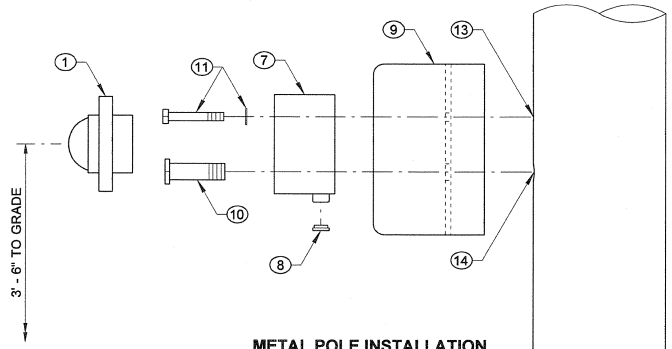

METAL POLE INSTALLATION
PPB-M
(PEDESTRIAN PUSH BUTTON - METAL POLE)

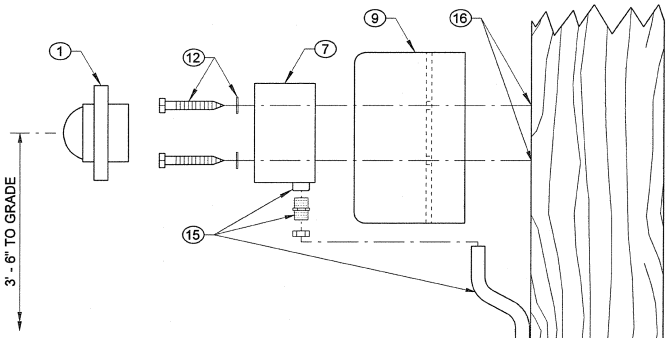

WOOD POLE INSTALLATION
PPB-W
(PEDESTRIAN PUSH BUTTON - WOOD POLE)
(BOTTOM FEED SHOWN)

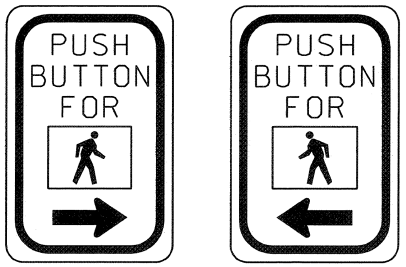

R10-4001 R10-4002

NOTES

1. When "PPB-MR" or PPB-WR" are specified in the contract, the arrow shall be installed in the opposite direction than as shown for "PPB-M" OR "PPB-W"

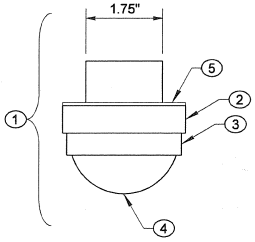

TOP VIEW

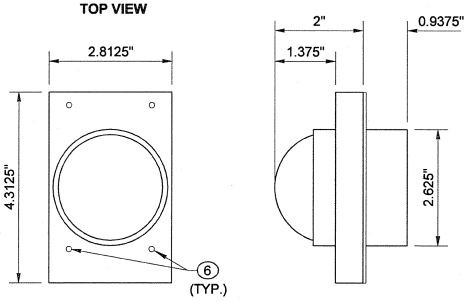

FRONT VIEW SIDE VIEW

PUSH BUTTON SWITCH ASSEMBLY

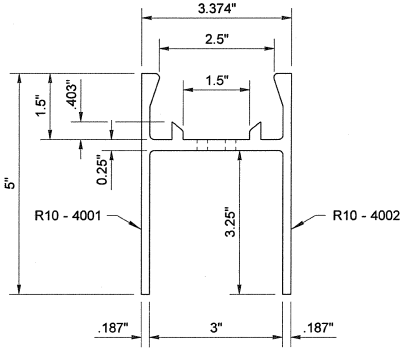

TOP VIEW

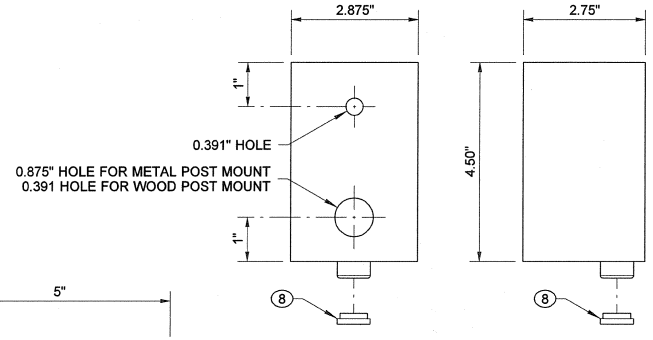

FRONT VIEW SIDE VIEW

CAST ALUMINUM CONDULET

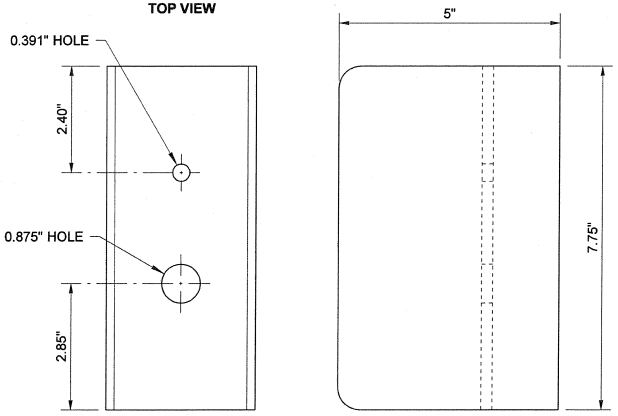

FRONT VIEW SIDE VIEW

ALUMINUM "H" EXTRUSION

KEY

1. PUSH BUTTON SWITCH ASSEMBLY
2. CAST METAL HOUSING
3. PROTECTIVE COLLAR
4. PUSH BUTTON SWITCH
5. GASKET
6. STAINLESS STEEL FASTENER
7. CAST ALUMINUM CONDULET
8. ALUMINUM PLUG WITH 1/8" DRILLED WEEP HOLE. ON TIMBER POLE INSTALLATION, REMOVE PLUG FOR WIRE ENTRANCE AND DRILL WEEP HOLE IN CONDULET
9. ALUMINUM "H" EXTRUSION
10. CHASE NIPPLE - 7/8" HEX HEAD × 1/2" PIPE THREAD × 2 1/2" LONG
11. 3/8" - 16 × 2 1/2" STAINLESS STEEL BOLT WITH WASHER
12. 3/8" × 4" LAG BOLT WITH WASHER
13. DRILL AND TAP SHAFT FOR 3/8" BOLT
14. DRILL AND TAP SHAFT FOR 1/2" NIPPLE
15. CONDUIT AND FITTINGS AS REQUIRED FOR TIMBER POLE INSTALLATION: REVERSE CONDULET AND CONDUIT FOR TOP FEED
16. DRILL PILOT HOLE FOR 3/8" LAG BOLT

PEDESTRIAN PUSH BUTTON (PPB) DETAILS

STANDARD PLAN J-20.26-00

SHEET 1 OF 1 SHEET

APPROVED FOR PUBLICATION

STATE DESIGN ENGINEER — DATE 10/14/09

Washington State Department of Transportation

DRAWN BY: LISA CYFORD

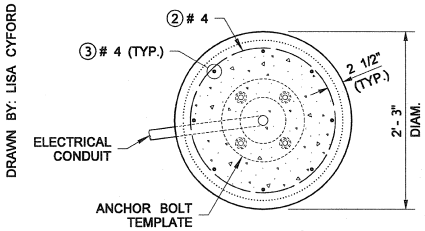

SECTION (A)

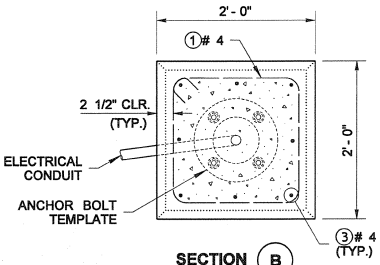

SECTION (B)

REINFORCING STEEL BENDING DIAGRAM

SEE **STD. SPEC. 9-07.1(2)** FOR BENDING DIAM.

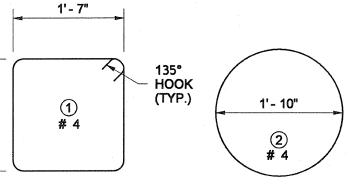

DIMENSIONS ARE OUT TO OUT

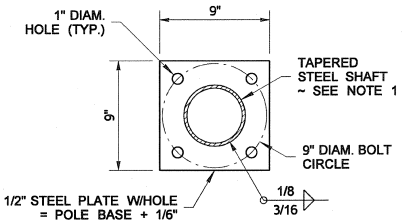

BASE PLATE DETAIL

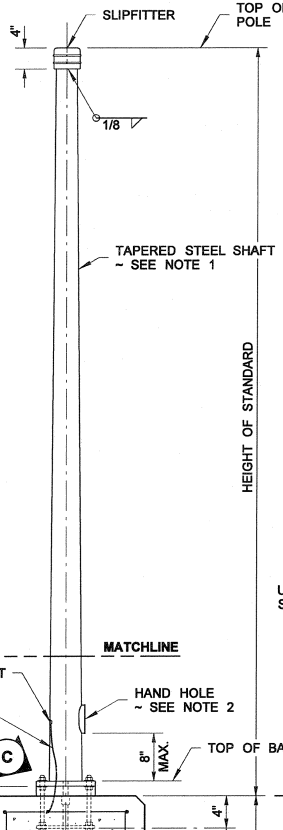

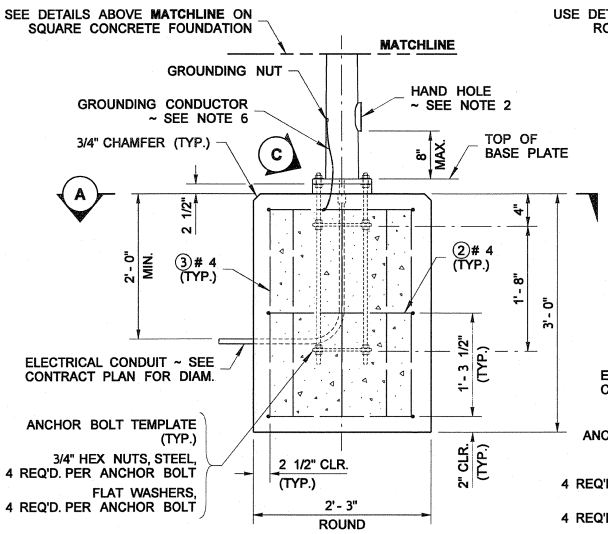

ELEVATION

ROUND CONCRETE FOUNDATION DETAIL

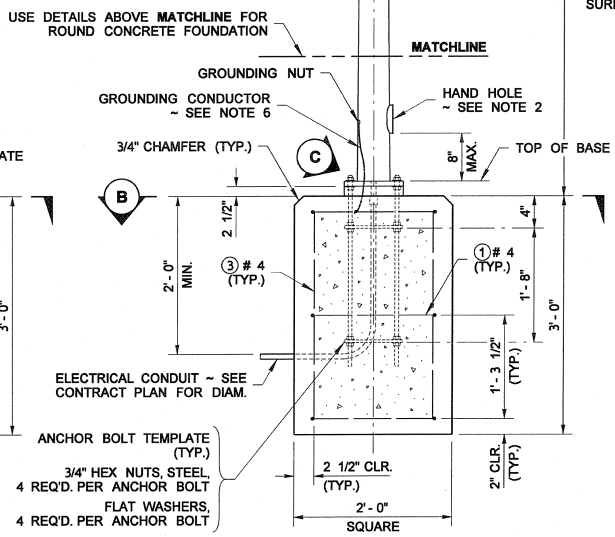

ELEVATION

SQUARE CONCRETE FOUNDATION DETAIL

FIXED BASE

NOTES

1. Steel Shaft shall be tapered either round or dodecagon (12-sided), 11-gauge, 4 1/2" O.D. at slipfitter weld. Taper shall be 0.14 inches per foot.
2. Hand Holes shall include a removable, rain-tight cover and gasket, fastened with two stainless steel screws (ASTM F 593).
3. Clamping Bolts shall be tightened to 50 ft-lbs max. torque. After state inspection, burr threads to prevent nut rotation. DO NOT OVERTIGHTEN.
4. The final height of the Anchor Bolts must be below the top of the Slip Plate Assembly to ensure proper function of the Slip Base.
5. All Poles shall be hot dip galvanized per AASHTO M111.
6. Grounding Conductor shall be non-insulated #4 AWG stranded copper, provide 3' - 0" min. slack. Clamp to steel reinforcing bar with connector suitable for use embedded in concrete.

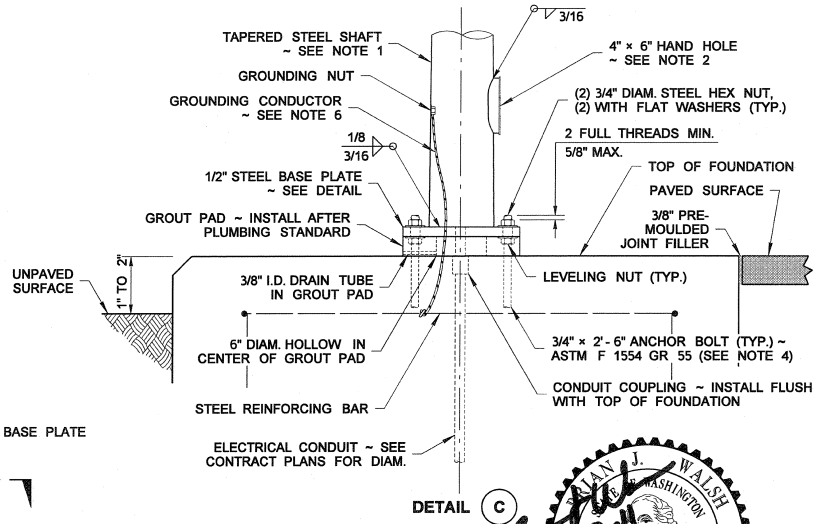

DETAIL (C)

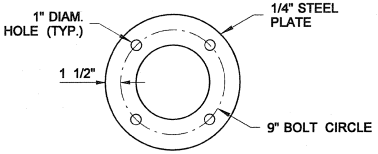

ANCHOR BOLT TEMPLATE

TYPE PS, TYPE 1, RM & FB SIGNAL STANDARD FOUNDATION DETAILS

STANDARD PLAN J-21.10-02

SHEET 1 OF 2 SHEETS

APPROVED FOR PUBLICATION

STATE DESIGN ENGINEER — DATE

Washington State Department of Transportation

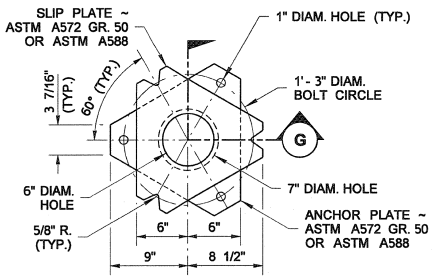

FOR DIMENSIONS NOT SHOWN, SEE BASE PLATE DETAIL

SLIP AND ANCHOR PLATES DETAIL

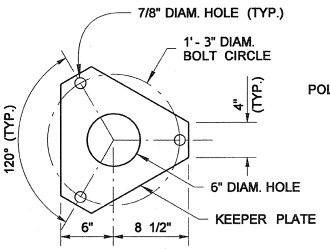

(28 GAGE SHEET METAL) PLACE BETWEEN POLE BASE PLATE AND SLIP PLATE ON TOP OF MIDDLE WASHERS ~ SEE **STANDARD PLAN J-28.42**

KEEPER PLATE DETAIL

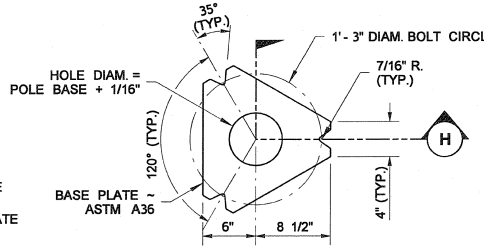

FOR DIMENSIONS NOT SHOWN, SEE SLIP AND ANCHOR PLATES DETAIL

BASE PLATE DETAIL

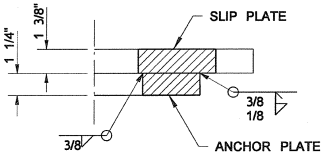

SECTION G

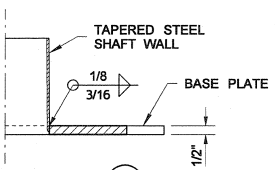

SECTION H

DRAWN BY: LISA CYFORD

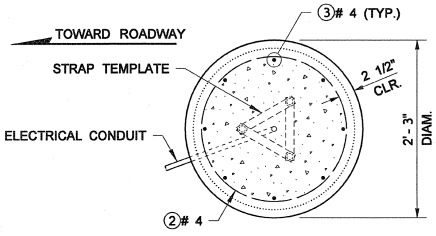

SECTION D

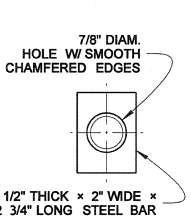

PLATE WASHER DETAIL

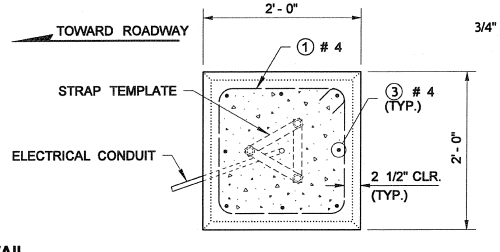

SECTION E

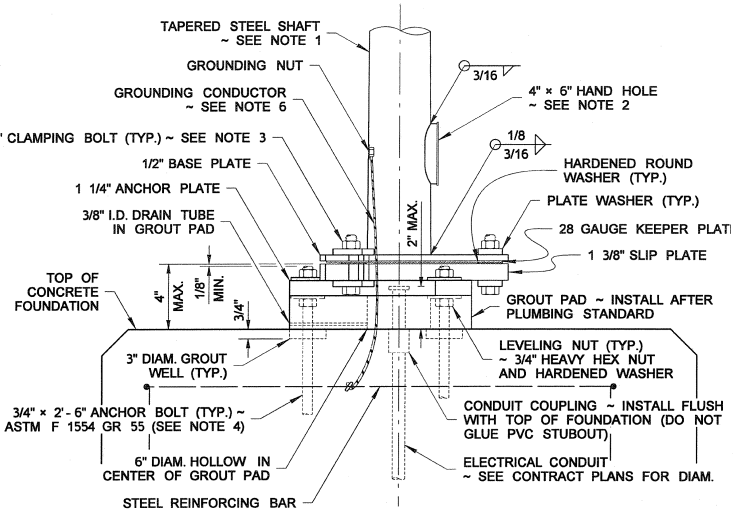

DETAIL F

SEE DETAILS ABOVE **MATCHLINE** ~ FIXED BASE SQUARE CONCRETE FOUNDATION, SHEET 1

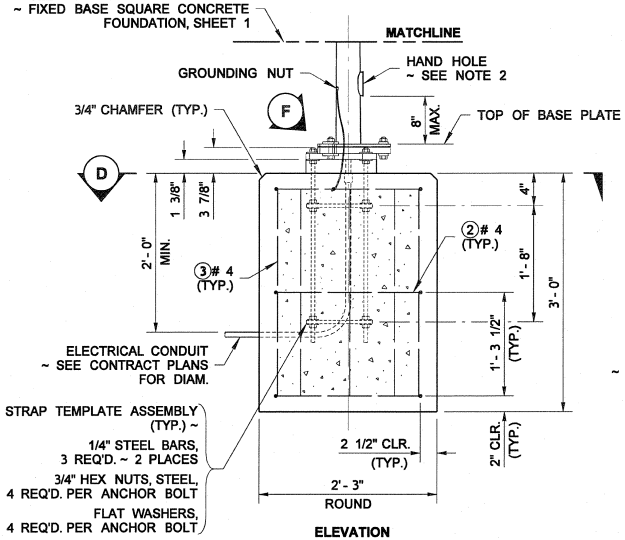

ELEVATION

ROUND CONCRETE FOUNDATION DETAIL

SEE DETAILS ABOVE **MATCHLINE** ~ FIXED BASE SQUARE CONCRETE FOUNDATION, SHEET 1

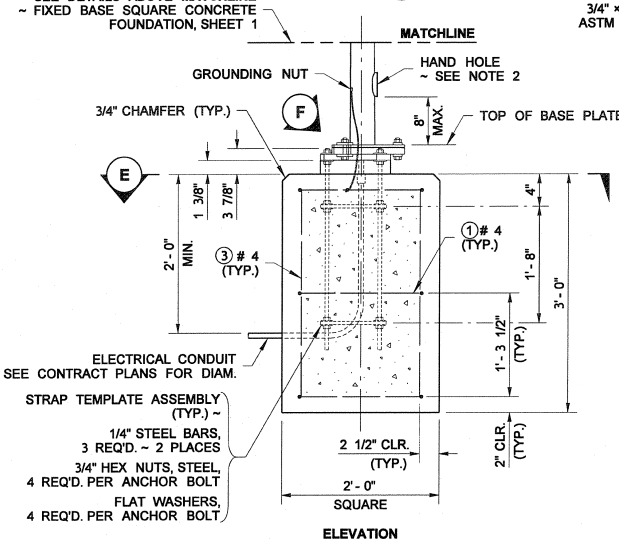

ELEVATION

SQUARE CONCRETE FOUNDATION DETAIL

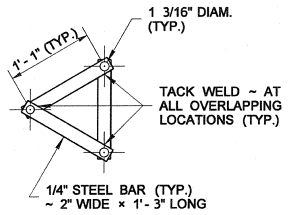

STRAP TEMPLATE DETAIL

SLIP BASE

TYPE PS, TYPE 1, RM & FB SIGNAL STANDARD FOUNDATION DETAILS

STANDARD PLAN J-21.10-02

SHEET 2 OF 2 SHEETS

APPROVED FOR PUBLICATION

STATE DESIGN ENGINEER — DATE 6/22/11

Washington State Department of Transportation

DRAWN BY: LISA CYFORD

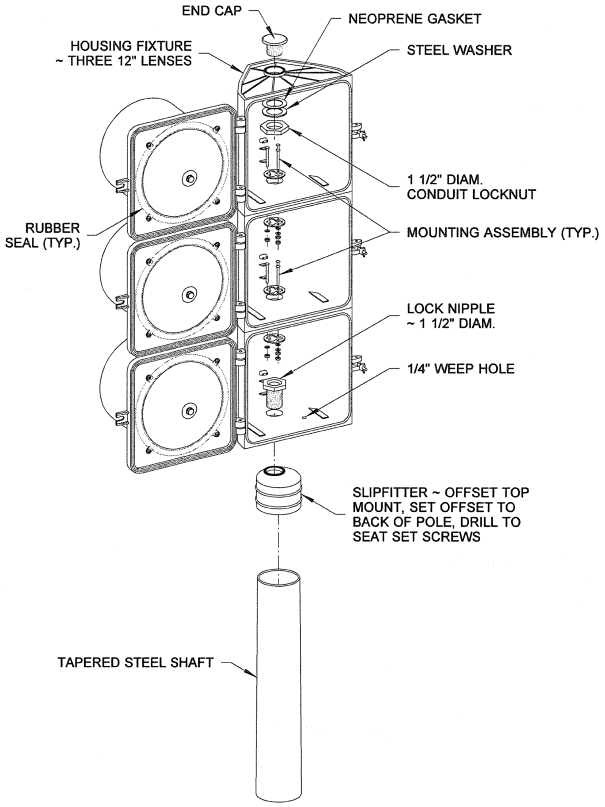

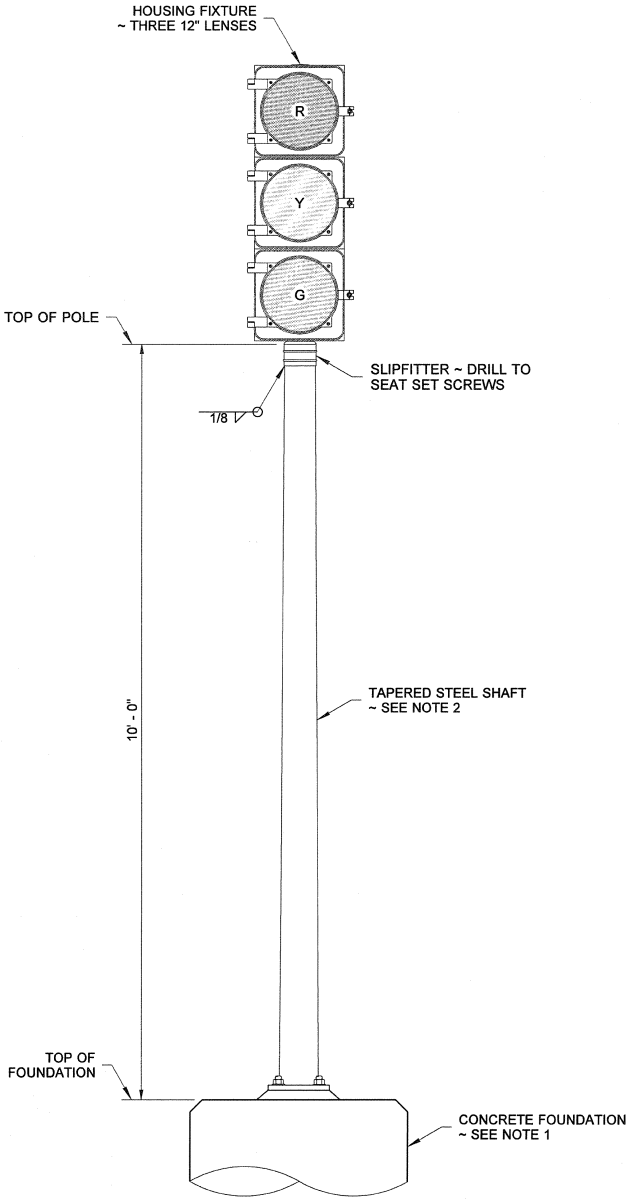

TYPE 1 SIGNAL STANDARD
FIXED BASE SHOWN

NOTES

1. See **Standard Plan J-21.10** for Signal Standard Foundation with Fixed Base and Slip Base details.
2. Steel shaft shall be tapered either round or dodecagon (12 sided), 11 gage, 4 1/2" O.D. at slipfitter weld. Taper shall be 0.14 inches per foot.
3. All poles shall be hot dip galvanized per AASHTO M111.
4. Welding of structures shall be in accordance with the latest edition of the AWS D1.1 Structural Welding Code - Steel. All butt welds shall be ground flush with base metal.
5. See **Standard Plan J-21.20** for Electrical details.

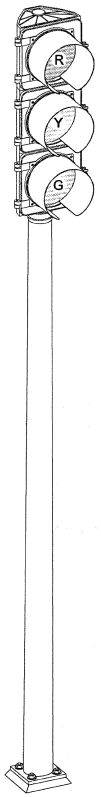

ISOMETRIC VIEW

THEODORE J. TREPANIER
STATE OF WASHINGTON
25335
REGISTERED
PROFESSIONAL ENGINEER

TYPE 1 SIGNAL STANDARD DETAILS

STANDARD PLAN J-21.15-00

SHEET 1 OF 1 SHEET

APPROVED FOR PUBLICATION

STATE DESIGN ENGINEER — DATE 10/1/09

Washington State Department of Transportation

DRAWN BY: LISA CYFORD

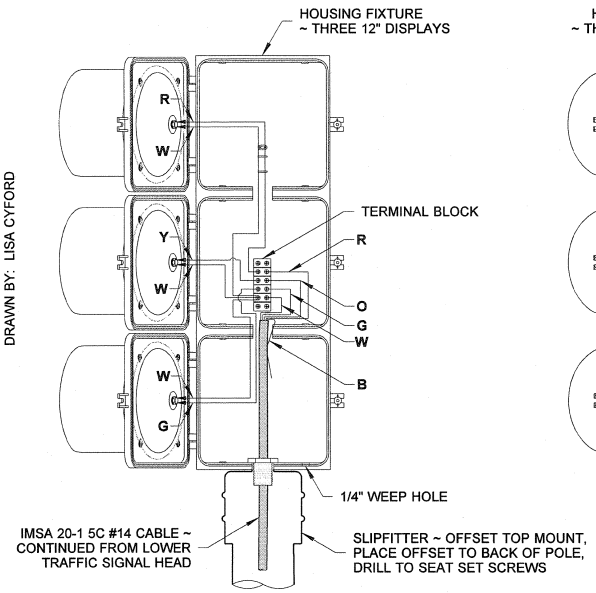

DETAIL (A)

UPPER TRAFFIC SIGNAL HEAD WIRING

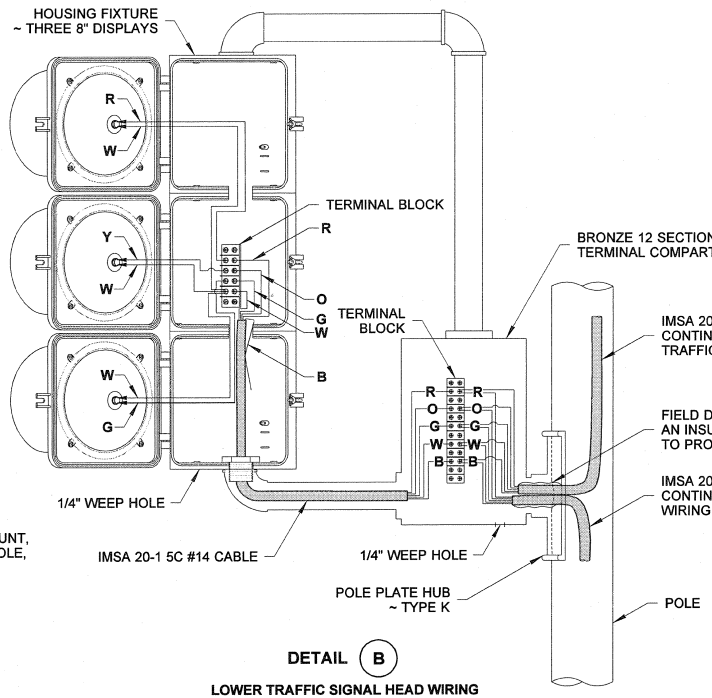

DETAIL (B)

LOWER TRAFFIC SIGNAL HEAD WIRING
(SHOWN LARGER FOR CLARITY)

COLOR CODE	USE
R	RED DISPLAY
O	AMBER DISPLAY
G	GREEN DISPLAY
W	NEUTRAL CONDUCTOR
B	SPARE CONDUCTOR

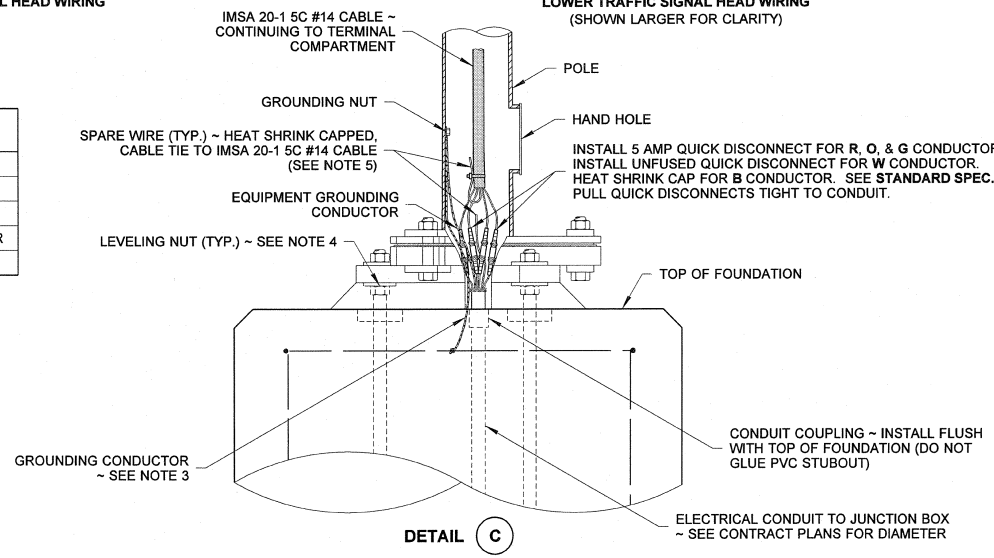

DETAIL (C)

FOUNDATION WIRING

NOTES

1. See **Standard Plan J-21.10** for Ramp Meter Signal Standard and Foundation Details
2. See **Standard Specifications 9-29.17** for additional Mounting Bracket and Fitting information not shown.
3. Grounding Conductor shall be non-insulated #4 AWG stranded copper, provide 3' - 0" min. slack. Clamp to steel reinforcing bar with connector suitable for use embedded in concrete.
4. Top of Leveling Nut height shall be 1" maximum above foundation.
5. Heat shrink cap all spare conductors not terminated on a terminal strip.

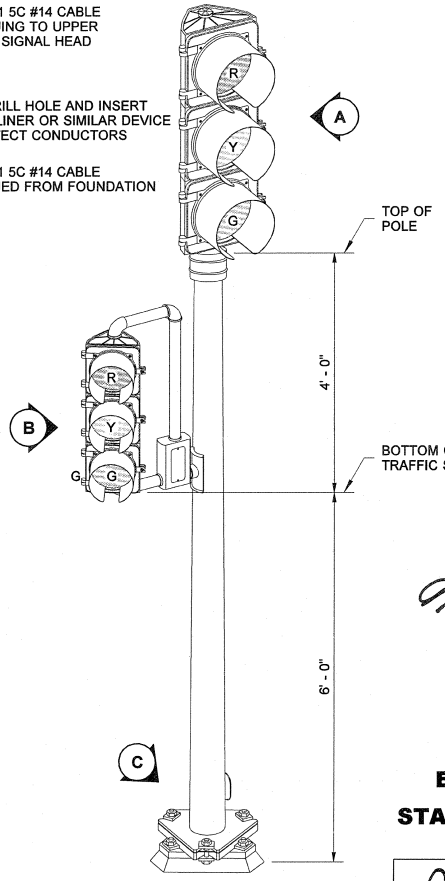

PERSPECTIVE VIEW
RAMP METER

THEODORE J. TREPANIER
STATE OF WASHINGTON
25335
REGISTERED
PROFESSIONAL ENGINEER
4/13/10

RAMP METER SIGNAL STANDARD ELECTRICAL DETAILS

STANDARD PLAN J-22.16-01

SHEET 1 OF 1 SHEET

APPROVED FOR PUBLICATION

STATE DESIGN ENGINEER — DATE 4/13/10

Washington State Department of Transportation

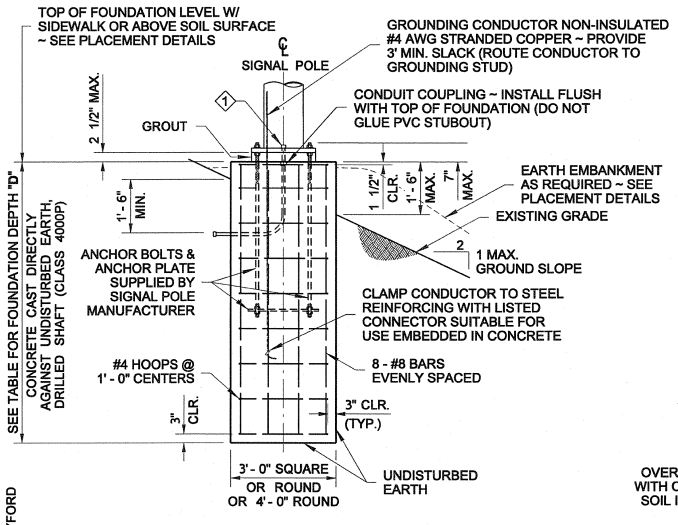

FOUNDATION REINFORCEMENT DETAIL

CONCRETE CAST DIRECTLY AGAINST UNDISTURBED EARTH, DRILLED SHAFT

ALTERNATE # 1

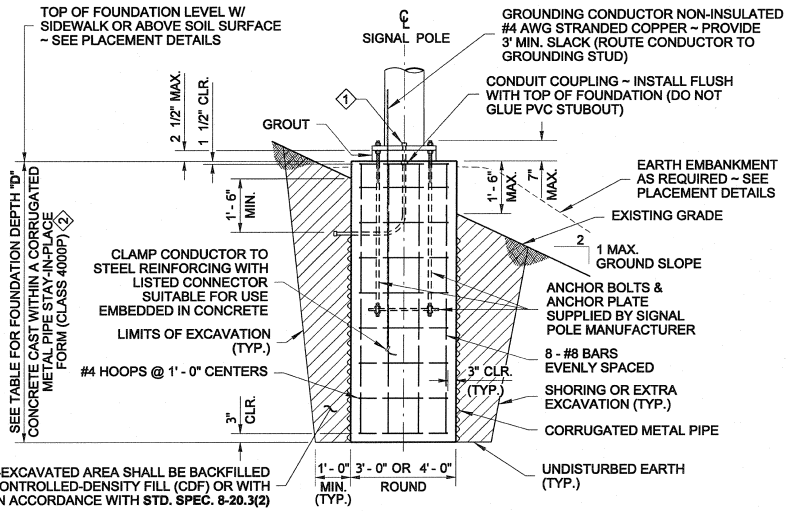

FOUNDATION REINFORCEMENT AND BACKFILL DETAIL

② CONCRETE CAST WITHIN A CORRUGATED METAL PIPE STAY-IN-PLACE FORM

ALTERNATE # 2

ASSEMBLY NOTE

A TEMPORARY TEMPLATE SHALL BE USED TO HOLD THE TOP OF THE ANCHOR BOLT ASSEMBLY SECURELY IN THE PROPER POSITION DURING THE FOUNDATION INSTALLATION

① CONDUIT SIZE AND QUANTITY AS SHOWN IN THE CONTRACT; CAP BOTH ENDS

② PAPER OR CARDBOARD FORM SHALL NOT BE USED BENEATH THE GROUND SURFACE

DRAWN BY: LISA CYFORD

FOUNDATION DEPTH "D" TABLE

ALTERNATE #1 - DRILLED SHAFT-TYPE CONSTRUCTION

FOR LATERAL BEARING PRESSURE = 2500 PSF & Ø = 34°, 1500 PSF & Ø = 28°, 1000 PSF & Ø = 26°

GROUND SLOPE = 3H : 1V OR FLATTER

ALLOWABLE LATERAL BEARING PRESSURE	FOUNDATION TYPE	XYZ (FT) 700	900	1350	1500	1900	2300	2600	3000
1000 PSF	3' - 0" ROUND	10' - 0"	10' - 0"	11' - 0"	11' - 0"	15' - 0"	18' - 0"	20' - 0"	20' - 0"
	3' - 0" SQUARE	8' - 0"	8' - 0"	9' - 0"	9' - 0"	10' - 0"	11' - 0"	12' - 0"	12' - 0"
	4' - 0" ROUND	8' - 0"	8' - 0"	9' - 0"	9' - 0"	10' - 0"	11' - 0"	12' - 0"	12' - 0"
1500 PSF	3' - 0" ROUND	8' - 0"	8' - 0"	9' - 0"	11' - 0"	13' - 0"	15' - 0"	18' - 0"	18' - 0"
	3' - 0" SQUARE	7' - 0"	7' - 0"	7' - 0"	8' - 0"	8' - 0"	9' - 0"	10' - 0"	10' - 0"
	4' - 0" ROUND	7' - 0"	7' - 0"	7' - 0"	8' - 0"	8' - 0"	9' - 0"	10' - 0"	10' - 0"
2500 PSF OR GREATER	3' - 0" ROUND	6' - 0"	6' - 0"	7' - 0"	8' - 0"	9' - 0"	11' - 0"	15' - 0"	15' - 0"
	3' - 0" SQUARE	6' - 0"	6' - 0"	6' - 0"	6' - 0"	7' - 0"	7' - 0"	8' - 0"	8' - 0"
	4' - 0" ROUND	6' - 0"	6' - 0"	6' - 0"	6' - 0"	7' - 0"	7' - 0"	8' - 0"	8' - 0"

GROUND SLOPE = GREATER THAN 3H : 1V TO 2H : 1V

ALLOWABLE LATERAL BEARING PRESSURE	FOUNDATION TYPE	XYZ (FT) 700	900	1350	1500	1900	2300	2600	3000
1000 PSF	3' - 0" ROUND	SPECIAL FOUNDATION DESIGN							
	3' - 0" SQUARE	SPECIAL FOUNDATION DESIGN							
	4' - 0" ROUND	SPECIAL FOUNDATION DESIGN							
1500 PSF	3' - 0" ROUND	11' - 0"	11' - 0"	12' - 0"	14' - 0"	16' - 0"	18' - 0"	21' - 0"	21' - 0"
	3' - 0" SQUARE	10' - 0"	10' - 0"	10' - 0"	11' - 0"	11' - 0"	12' - 0"	13' - 0"	13' - 0"
	4' - 0" ROUND	10' - 0"	10' - 0"	10' - 0"	11' - 0"	11' - 0"	12' - 0"	13' - 0"	13' - 0"
2500 PSF OR GREATER	3' - 0" ROUND	9' - 0"	9' - 0"	10' - 0"	12' - 0"	12' - 0"	14' - 0"	18' - 0"	18' - 0"
	3' - 0" SQUARE	9' - 0"	9' - 0"	9' - 0"	9' - 0"	10' - 0"	10' - 0"	11' - 0"	11' - 0"
	4' - 0" ROUND	9' - 0"	9' - 0"	9' - 0"	9' - 0"	10' - 0"	10' - 0"	11' - 0"	11' - 0"

ALTERNATE #2 - CORRUGATED METAL PIPE TYPE CONSTRUCTION

FOR LATERAL BEARING PRESSURE = 2500 PSF & Ø = 23°, 1500 PSF & Ø = 18°, 1000 PSF & Ø = 17°

GROUND SLOPE = 3H : 1V OR FLATTER

ALLOWABLE LATERAL BEARING PRESSURE	FOUNDATION TYPE	XYZ (FT) 700	900	1350	1500	1900	2300	2600	3000
1000 PSF	3' - 0" ROUND	10' - 0"	10' - 0"	11' - 0"	15' - 0"	20' - 0"	25' - 0"	28' - 0"	28' - 0"
	4' - 0" ROUND	8' - 0"	8' - 0"	9' - 0"	12' - 0"	13' - 0"	14' - 0"	15' - 0"	15' - 0"
1500 PSF	3' - 0" ROUND	8' - 0"	8' - 0"	11' - 0"	15' - 0"	18' - 0"	21' - 0"	25' - 0"	25' - 0"
	4' - 0" ROUND	7' - 0"	7' - 0"	7' - 0"	8' - 0"	10' - 0"	13' - 0"	15' - 0"	15' - 0"
2500 PSF OR GREATER	3' - 0" ROUND	6' - 0"	6' - 0"	7' - 0"	11' - 0"	13' - 0"	18' - 0"	20' - 0"	20' - 0"
	4' - 0" ROUND	6' - 0"	6' - 0"	6' - 0"	6' - 0"	7' - 0"	9' - 0"	9' - 0"	9' - 0"

GROUND SLOPE = GREATER THAN 3H : 1V TO 2H : 1V

ALLOWABLE LATERAL BEARING PRESSURE	FOUNDATION TYPE	XYZ (FT) 700	900	1350	1500	1900	2300	2600	3000
1000 PSF	3' - 0" ROUND	SPECIAL FOUNDATION DESIGN							
	4' - 0" ROUND	SPECIAL FOUNDATION DESIGN							
1500 PSF	3' - 0" ROUND	11' - 0"	11' - 0"	14' - 0"	18' - 0"	21' - 0"	24' - 0"	28' - 0"	28' - 0"
	4' - 0" ROUND	10' - 0"	10' - 0"	10' - 0"	11' - 0"	13' - 0"	16' - 0"	18' - 0"	18' - 0"
2500 PSF OR GREATER	3' - 0" ROUND	9' - 0"	9' - 0"	10' - 0"	14' - 0"	16' - 0"	21' - 0"	23' - 0"	23' - 0"
	4' - 0" ROUND	9' - 0"	9' - 0"	9' - 0"	9' - 0"	10' - 0"	12' - 0"	12' - 0"	12' - 0"

NOTES

1. This structure has been designed according to the Fifth Edition 2009 AASHTO Standard Specifications for Structural Supports for Highway Signs, Luminaires and Traffic Signals. Basic wind velocity is 90 mph, Design Life/Recurrence Interval 50 years, and Fatigue Category III.
2. Foundations are designed for Type II, III, and SD Signal Standards with a maximum mast arm length of 65'.
3. Foundations are designed for Single Mast Arm Standards and Double Mast Arm Standards with 90° between arms. Special foundation design is required for Double Arm Standards where the angle between mast arms is other than 90°. For Double Mast Arm Standards with 90° between arms, use larger XYZ value for foundation depth selection.
4. Foundations not within the parameters of this standard require Special Design. Contact the WSDOT Bridge and Structures Office through the Engineer for Special Foundation Designs.
5. Foundations constructed within Ecology Embankments shall be increased in depth by the depth of the Ecology Embankment.
6. The top 2 feet of the foundation shall use a smooth form (such as paper or cardboard). After the concrete has cured, this entire form shall be removed.
7. For design parameters between the values listed in Table, depth requirements may be interpolated between the values provided.

ALTERNATE #2 - CONSTRUCTION METHOD
METAL (SUBSURFACE) FORM REQUIRED

When the existing soil will not retain a vertical face, over-excavate the foundation area and install a 36" or 48" diameter corrugated metal (pipe) form. The top of the corrugated metal form shall terminate 1 foot below final grade. Continue forming to full height using paper or cardboard form to achieve a smooth finish on final exposed cement concrete. Support the form as necessary to remain plumb.

Place the concrete foundation.

After concrete has cured, remove the entire paper or cardboard form portion.

Backfill with controlled-density fill or compacted borrow in accordance with **Standard Specification 8-20.3(2).**

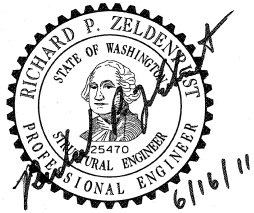

SIGNAL STANDARD FOUNDATION PLAN

STANDARD PLAN J-26.10-01

SHEET 1 OF 1 SHEET

APPROVED FOR PUBLICATION

STATE DESIGN ENGINEER — DATE 6/22/11

Washington State Department of Transportation

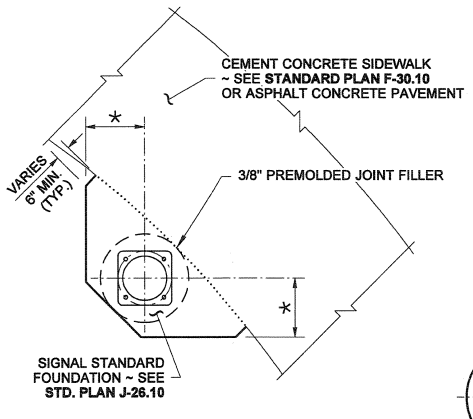

DUAL PEDESTRIAN PUSH BUTTON

NOTE

* = 2' - 0" FOR 3' - 0" DIAM. FOUNDATION
2' - 6" FOR 4' - 0" DIAM. FOUNDATION
2' - 6" FOR 3' - 0" SQUARE FOUNDATION

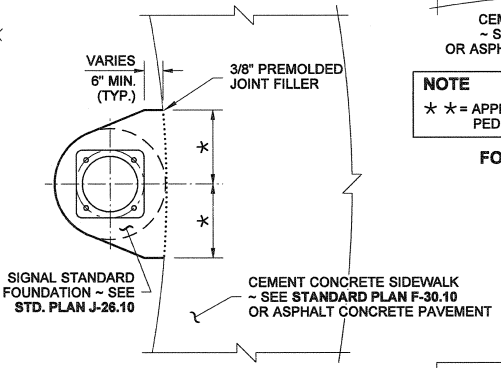

SINGLE PEDESTRIAN PUSH BUTTON

FOUNDATION OUTSIDE THE SIDEWALK SECTION

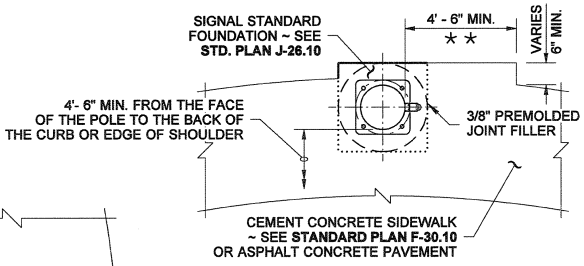

NOTE

* * = APPLIES TO THE SIDE OF THE FOUNDATION WHEN PEDESTRIAN PUSH BUTTON IS TO BE INSTALLED.

FOUNDATION PARTIALLY WITHIN SIDEWALK SECTION

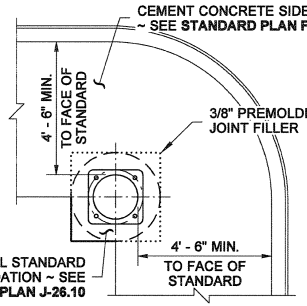

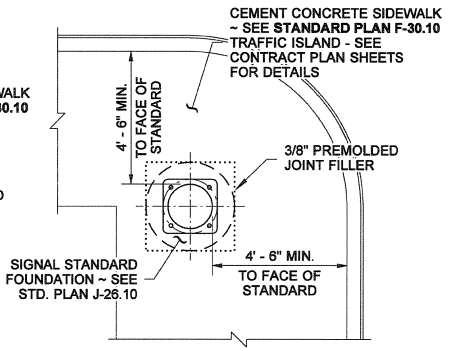

FOUNDATION WITHIN SIDEWALK OR TRAFFIC ISLAND SECTION

NOTE

REFER TO CONTRACT DOCUMENTS FOR PROJECT SPECIFIC INTERSECTION LAYOUTS & TRAFFIC ISLAND MATERIAL TYPE

FOUNDATION PARTIALLY WITHIN SIDEWALK SECTION

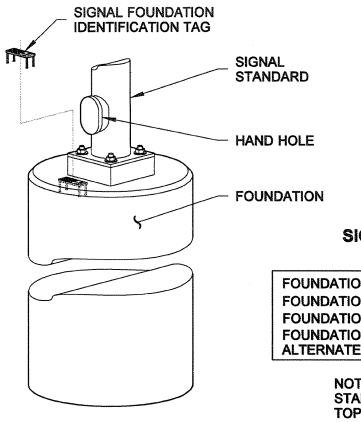

OBLIQUE VIEW

REINFORCING AND ANCHOR BOLTS
NOT SHOWN FOR CLARITY
(GROUT PAD OPTION SHOWN)

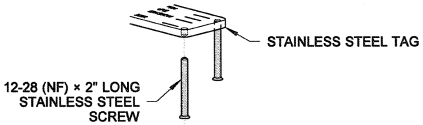

PARTIAL SIGNAL FOUNDATION IDENTIFICATION TAG DETAIL

SIGNAL FOUNDATION IDENTIFICATION TAG DETAIL

FOUNDATION DEPTH	
FOUNDATION SHAPE	SQUARE OR ROUND
FOUNDATION DIMENSION	DIAMETER OR WIDTH
FOUNDATION ALTERNATE NUMBER	ALTERNATE 1 OR 2

EXAMPLE:

FOUNDATION DEPTH	11'
FOUNDATION SHAPE	RD.
FOUNDATION DIMENSION	36"
FOUNDATION ALTERNATE NUMBER	1

NOTE:
STAINLESS STEEL TAG 10 GAGE, RECESSED INTO FINISHED CONCRETE. TOP OF TAG SET FLUSH WITH TOP OF FINISHED FOUNDATION. SECURE USING 12-28 (NF) × 2" LONG STAINLESS STEEL SCREWS TAPPED IN FROM UNDERSIDE (SIDE AGAINST CONCRETE) DRILL AND TAP COMPLETELY THROUGH AND LEAVE THE SCREW FLUSH WITH THE TOP. APPLY LOCKTITE TO BIND PIECES TOGETHER WHILE WAITING FOR THE CONCRETE TO CURE. TEXT SHALL BE A MINIMUM OF 3/16" HIGH, STAMPED.

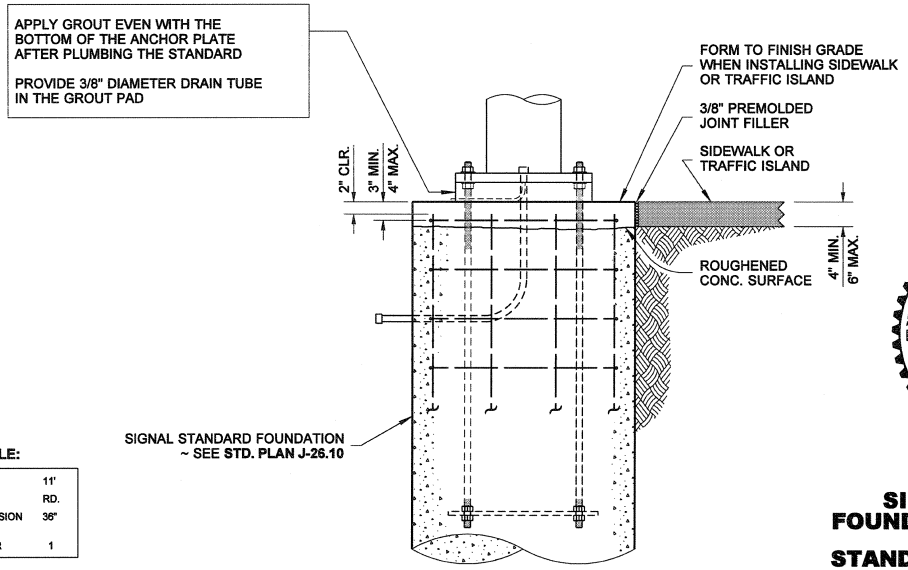

NOTE

FOUNDATION REINFORCING ONLY PARTIALLY SHOWN FOR CLARITY.
~ SEE **STANDARD PLAN J-26.10** FOR DETAILS NOT SHOWN

TYPICAL SECTION

THEODORE JOSEPH BAILEY
STATE OF WASHINGTON
39820
REGISTERED
PROFESSIONAL ENGINEER
6/8/2010

SIGNAL STANDARD FOUNDATION PLACEMENTS

STANDARD PLAN J-26.15-00

SHEET 3 OF 3 SHEETS

APPROVED FOR PUBLICATION

STATE DESIGN ENGINEER — DATE

Washington State Department of Transportation

DRAWN BY: LISA CYFORD

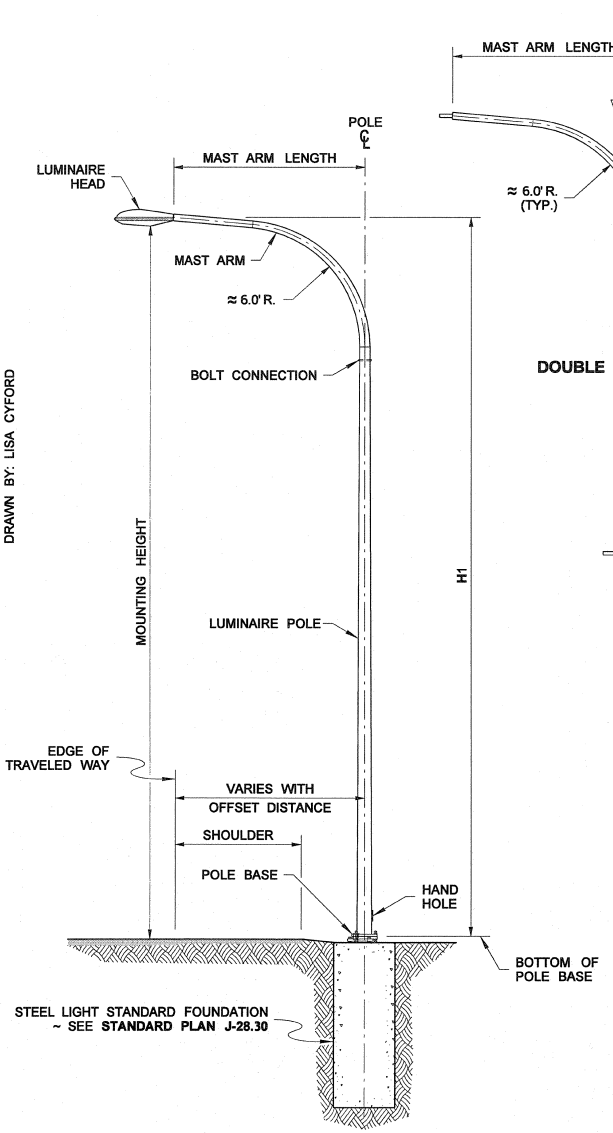

LIGHT STANDARD
WITH TYPE 1 (DAVIT) MAST ARM
(SLIP BASE SHOWN)

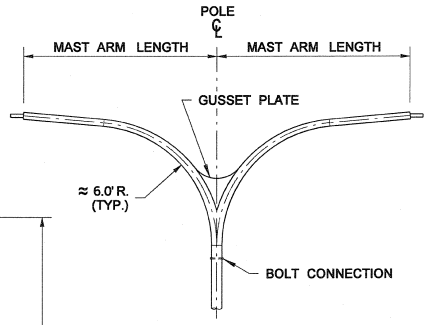

DOUBLE TYPE 1 MAST ARM

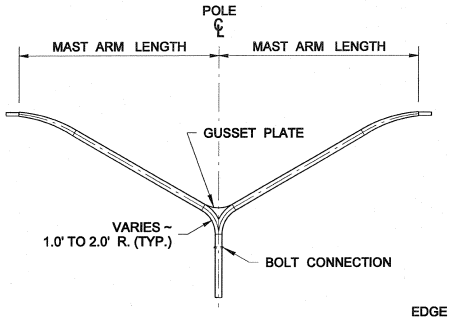

DOUBLE TYPE 2 MAST ARM

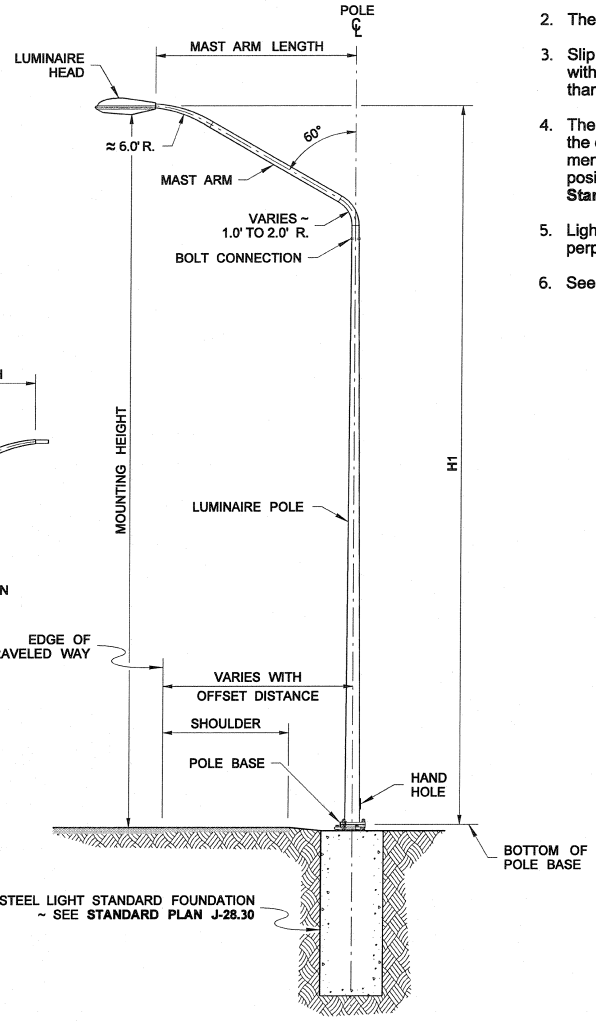

LIGHT STANDARD
WITH TYPE 2 (ELBOW) MAST ARM
(SLIP BASE SHOWN)

NOTES

1. This plan depicts the Steel Light Standard types and terms commonly referred to in the Contract. All Steel Light Standards are fabricated in accordance with the Standard Specifications and the Contract Provisions.
2. The Luminaire Pole height shall not exceed 50' (**H1**).
3. Slip Bases shall not be installed on 50' (**H1**) poles with Double Mast Arms, nor on poles weighing more than 1000 lbs.
4. The optimal location of the Luminaire head is over the edge of the traveled way. Based on the placement of the Steel Light Standard foundation, the position of the Luminaire head may vary. See **Standard Plan J-28.22.**
5. Light Standard mast arm orientation is typically perpendicular to roadway centerline.
6. See **Standard Plan J-28.50** for Hand Hole details.

JOHN C. NISBET
STATE OF WASHINGTON
29115
REGISTERED
PROFESSIONAL ENGINEER

STEEL LIGHT STANDARD

STANDARD PLAN J-28.10-01

SHEET 1 OF 2 SHEETS

APPROVED FOR PUBLICATION

STATE DESIGN ENGINEER — DATE 5/11/11

Washington State Department of Transportation

DRAWN BY: LISA CYFORD

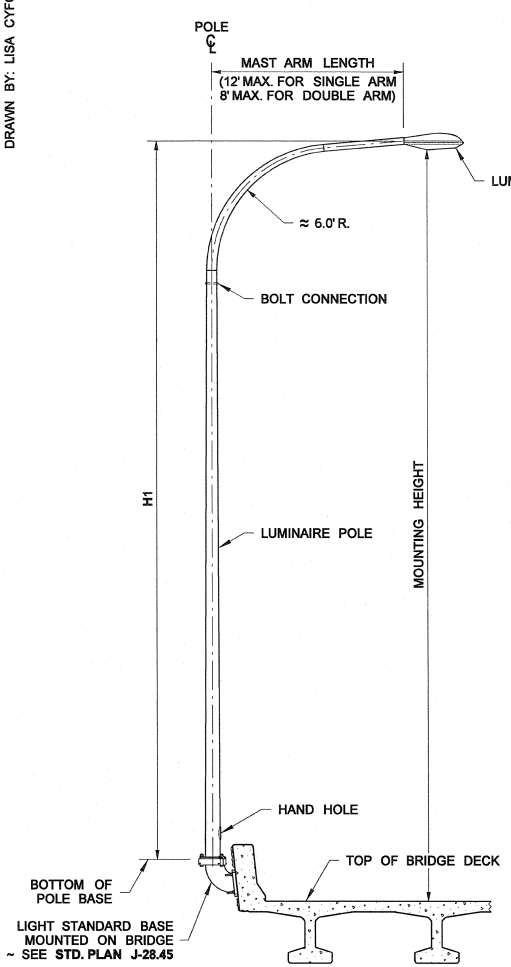

BRIDGE-MOUNTED LUMINAIRE

(TYPE 1 MAST ARM SHOWN)

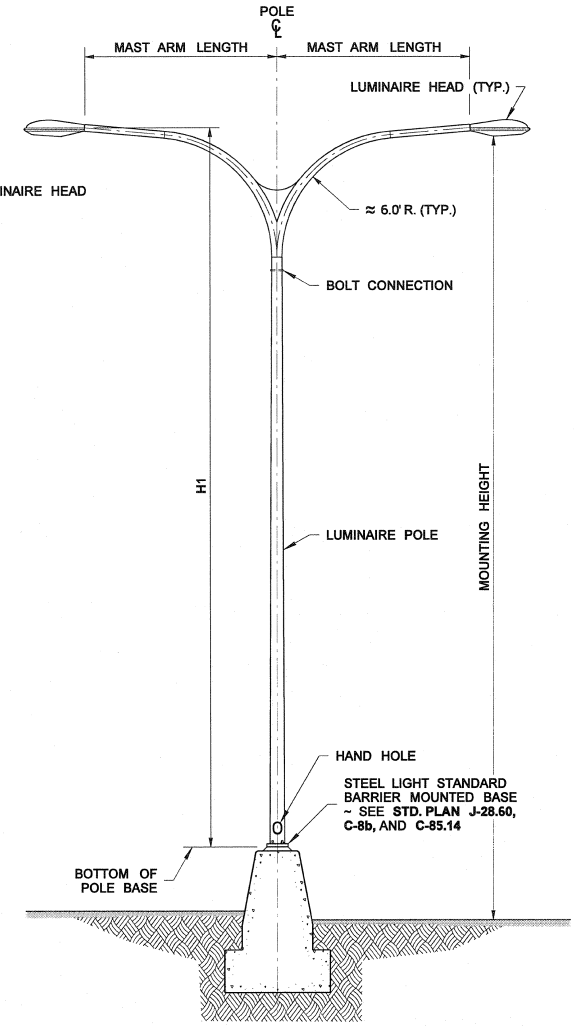

MEDIAN BARRIER-MOUNTED LUMINAIRE

(TYPE 1 MAST ARM SHOWN)

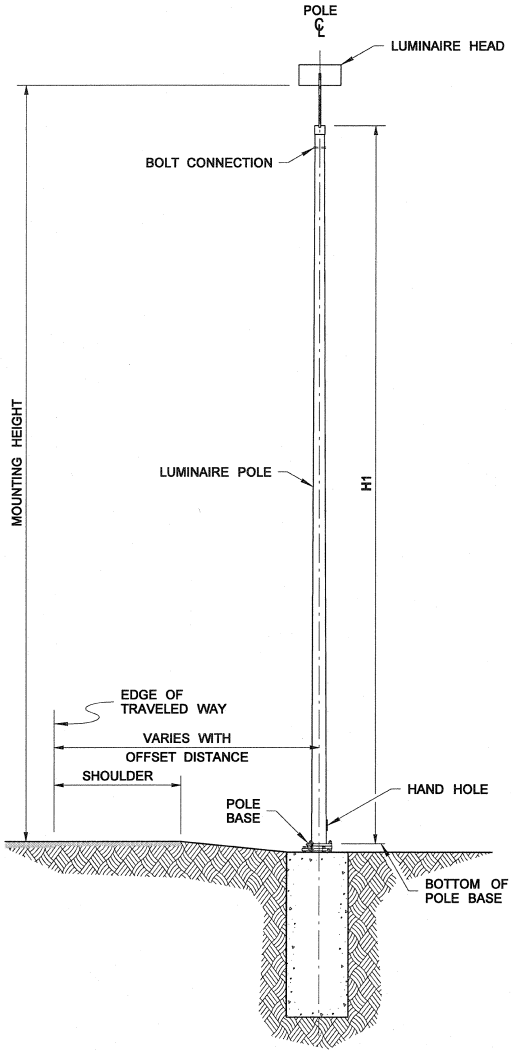

POST TOP-MOUNTED LUMINAIRE

(SLIP BASE SHOWN)

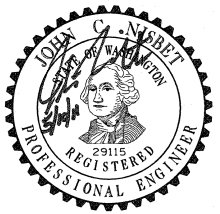

STEEL LIGHT STANDARD

STANDARD PLAN J-28.10-01

SHEET 2 OF 2 SHEETS

APPROVED FOR PUBLICATION

STATE DESIGN ENGINEER — DATE 6/11/11

Washington State Department of Transportation

DRAWN BY: BILL BERENS

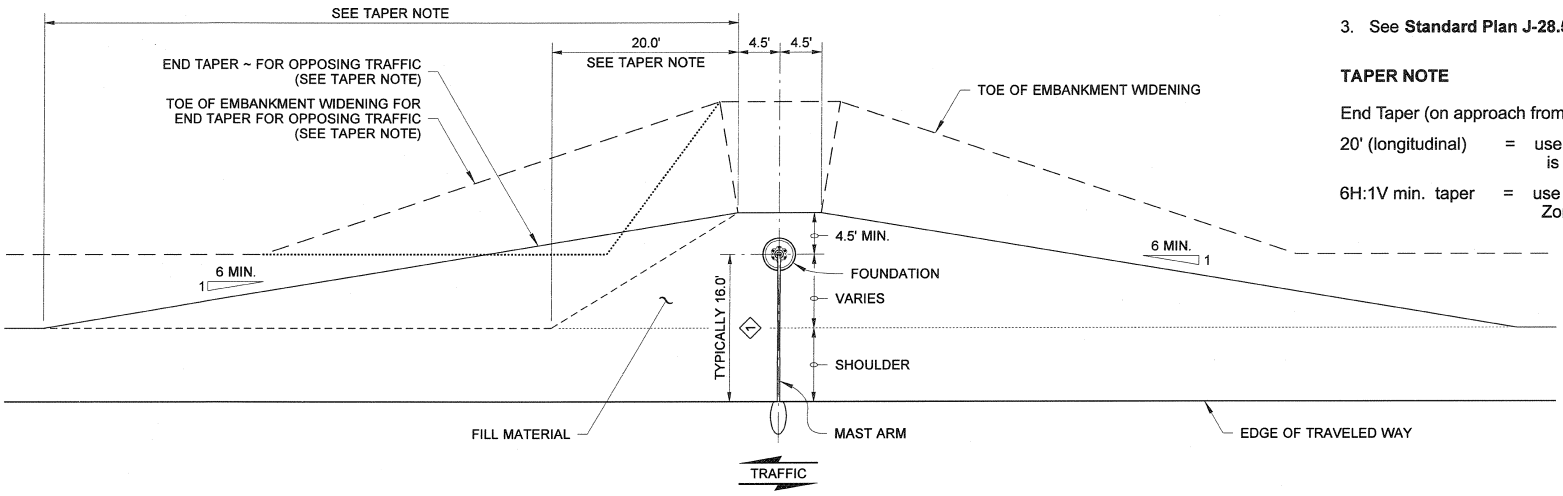

PLAN VIEW

CASES A & B

EMBANKMENTS

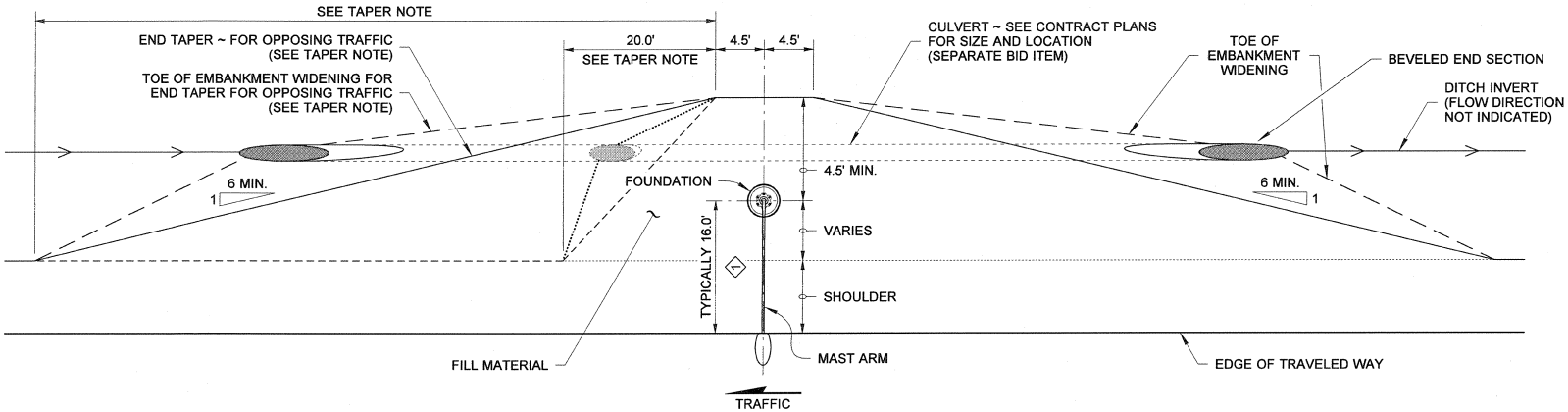

PLAN VIEW

CASE C

DITCH SECTIONS

NOTES

1. The Steel Light Standard Placement depicted on this plan is only intended for installations where roadside conditions allow its usage. Roadside conditions may require a special design by the Bridge Office, as determined by the Project Engineer.
2. See **Standard Plan J-28.30** for foundation details and construction methods.
3. See **Standard Plan J-28.50** for pole base and hand hole details.

TAPER NOTE

End Taper (on approach from opposing traffic):

20' (longitudinal) = use on one-way roadways or where the Light Standard is not in the Design Clear Zone of the opposing traffic.

6H:1V min. taper = use when the Light Standard is in the Design Clear Zone of the opposing traffic.

1 BASED ON FIELD CONDITIONS, STEEL LIGHT STANDARD PLACEMENT CAN BE ADJUSTED ± 4.0', WHEN APPROVED BY THE PROJECT ENGINEER.

THEODORE J. TREPANIER
STATE OF WASHINGTON
25335
REGISTERED
PROFESSIONAL ENGINEER
EXPIRES AUGUST 9, 2007

STEEL LIGHT STANDARD PLACEMENT (SLIP BASE)

STANDARD PLAN J-28.22-00

SHEET 1 OF 2 SHEETS

APPROVED FOR PUBLICATION

STATE DESIGN ENGINEER — DATE 8/7/07

Washington State Department of Transportation

DRAWN BY: BILL BERENS

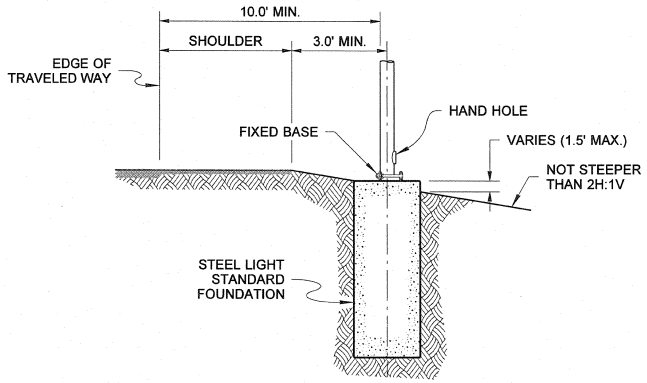

SECTION VIEW

CASE I

POSTED SPEED LIMIT LESS THAN 35 MPH

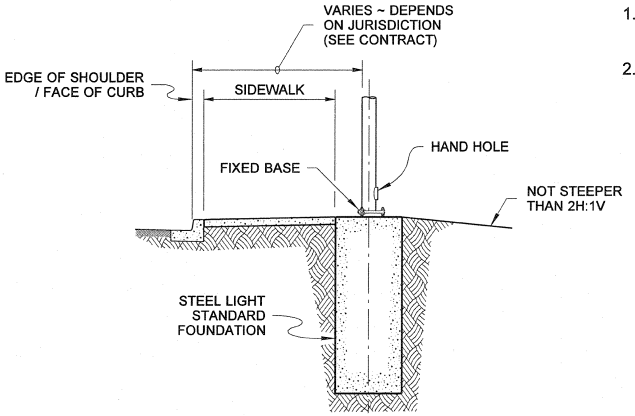

SECTION VIEW

CASE J

POSTED SPEED LIMIT LESS THAN 35 MPH

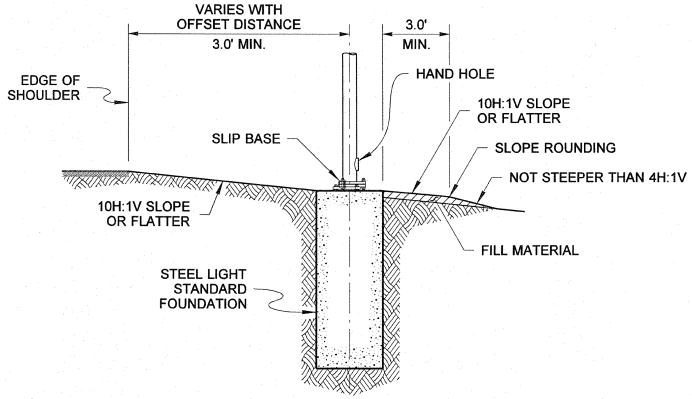

SECTION VIEW

CASE K

ROADWAYS WITH 10H:1V OR FLATTER SIDE SLOPES

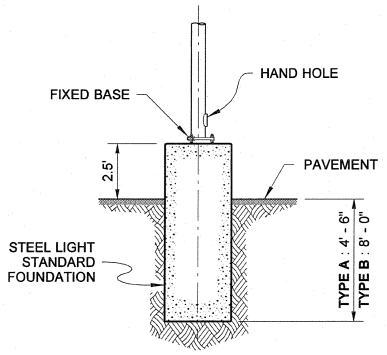

SECTION VIEW

CASE L

PARKING LOTS

NOTES

1. See **Standard Plan J-28.30** for foundation details and construction methods.
2. See **Standard Plan J-28.50** for pole base and hand hole details.

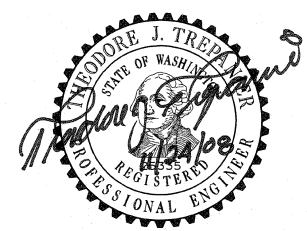

STEEL LIGHT STANDARD PLACEMENT MISCELLANEOUS

STANDARD PLAN J-28.26-01

SHEET 1 OF 1 SHEET

APPROVED FOR PUBLICATION

STATE DESIGN ENGINEER — DATE 12/2/08

Washington State Department of Transportation

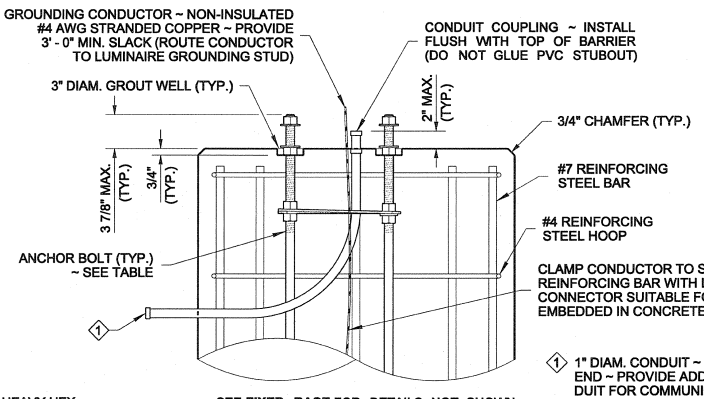

PARTIAL ELEVATION VIEW

SLIP BASE

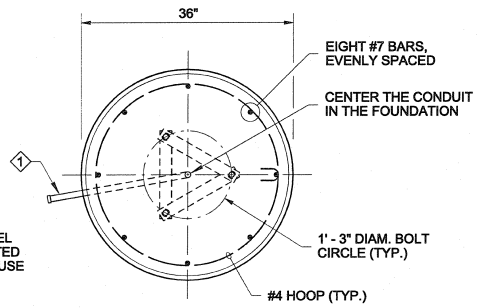

TOP VIEW

FIXED BASE

1 1" DIAM. CONDUIT ~ CAP EACH END ~ PROVIDE ADDITIONAL CONDUIT FOR COMMUNICATION OR SIGNAL CABLE WHERE SHOWN IN THE CONTRACT

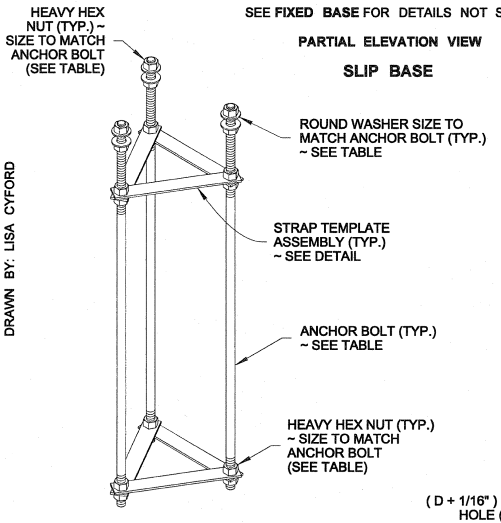

ISOMETRIC VIEW

ANCHOR BOLT ASSEMBLY

(SLIP BASE SHOWN)

DRAWN BY: LISA CYFORD

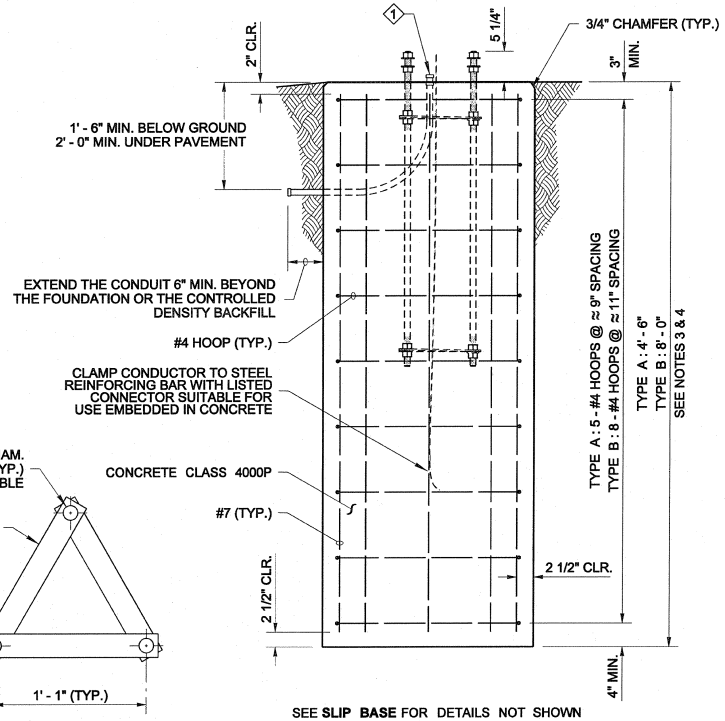

SEE SLIP BASE FOR DETAILS NOT SHOWN

ELEVATION VIEW

FIXED BASE

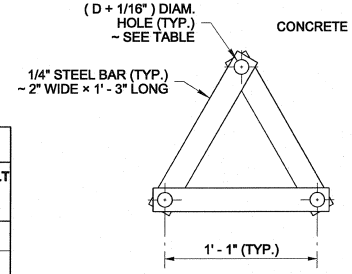

TOP VIEW

STRAP TEMPLATE ASSEMBLY

ANCHOR BOLT TABLE			
LUMINAIRE HEIGHT (H1)	MAST ARM TYPE	MAST ARM LENGTH	ANCHOR BOLT DIAMETER "D"
20' TO 50'	SINGLE	6' TO 16'	1"
20' TO 50'	DOUBLE	6' TO 8'	1"
20' TO 45'	DOUBLE	10' TO 16'	1"
46' TO 50'	DOUBLE	10' TO 16'	1 1/8"

NOTES

1. See **Standard Plan J-28.40** for Luminaire Pole base mounting details.
2. The Strap Templates shall be held in place by nuts, 6" from the top of the foundation and 3" from the bottom of the anchor bolts. 18 heavy duty hex nuts and 6 round washers are required for a Slip Base assembly. 18 heavy duty hex nuts and 6 plate washers are required for a Fixed Base assembly.
3. Use Steel Light Standard Foundation **Type A** on level ground or slopes not exceeding 4H : 1V. Use **Type B** for slopes steeper than 4H : 1V, but not exceeding 2H : 1V. Slopes steeper than 2H : 1V shall require a special design.
4. These foundations are designed for a minimum of 2000 PSF **(TYPE A)** or 1500 PSF **(TYPE B)** allowable lateral bearing pressure for the soil. A special foundation shall be required for soil with allowable lateral bearing pressure lower than 1500 PSF.
5. The Luminaire Pole height shall not exceed 50' (H1).
6. Slip Bases shall not be installed on 50' (H1) poles with Double Mast Arms, nor on poles weighing more than 1000 lbs.
7. Slip Bases are not required on poles placed outside of the Design Clear Zone, nor on poles installed behind traffic barrier.
8. Foundations constructed within Ecology Embankments shall be increased in depth by the depth of the Ecology Embankment.
9. Exposed portions of the foundation shall be formed to create a Class 2 surface finish. All forming shall be removed upon completion of foundation construction.
10. For excavation, concrete placement, and backfill options, see METHOD 1 and METHOD 2 on Sheet 2 of 2.
11. The Anchor Bolts shall be high-strength steel, manufactured from ASTM A449, with heavy hex nuts and hardened washers. Galvanize the Anchor Bolts according to AASHTO M232.
12. The foundation shall be grounded in accordance with the requirements of **Standard Specification 8-20.3(4).**
13. See **Standard Plans C-8b** and **C-85.14** for steel light standards on traffic barrier.

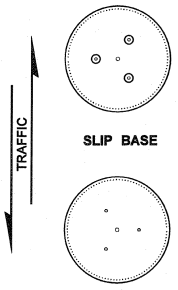

SLIP BASE

FIXED BASE

ANCHOR BOLT LAYOUT

STEEL LIGHT STANDARD FOUNDATION TYPES A & B

STANDARD PLAN J-28.30-02

SHEET 1 OF 2 SHEETS

APPROVED FOR PUBLICATION

STATE DESIGN ENGINEER — DATE 6/20/11

Washington State Department of Transportation

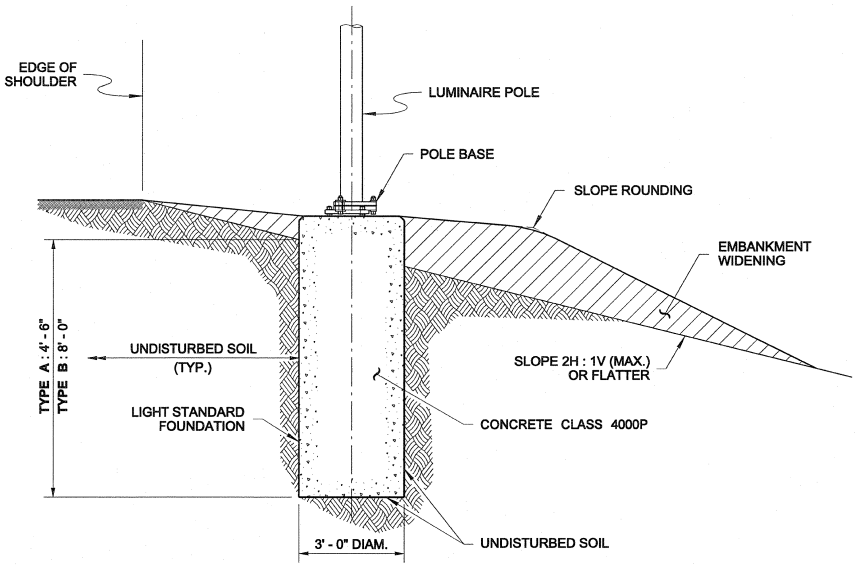

(CASE A SHOWN)

METHOD 1

NO SUBSURFACE FORM

This option is only used when the existing soil in the hole will remain standing and the cement concrete can be placed without causing the soil to collapse. Concrete shall be cast directly against undisturbed soil.

Auger the hole for the foundation. Use paper or cardboard form to achieve a smooth finish on the final exposed cement concrete. Support the form as necessary to remain plumb.

See **Standard Plans J-28.24** and **J-28.26** for maximum heights of exposed foundation when no embankment widening is to be installed.

Place the concrete foundation.

After concrete has cured, remove the paper or cardboard form portion.

Construct the embankment widening (if required).

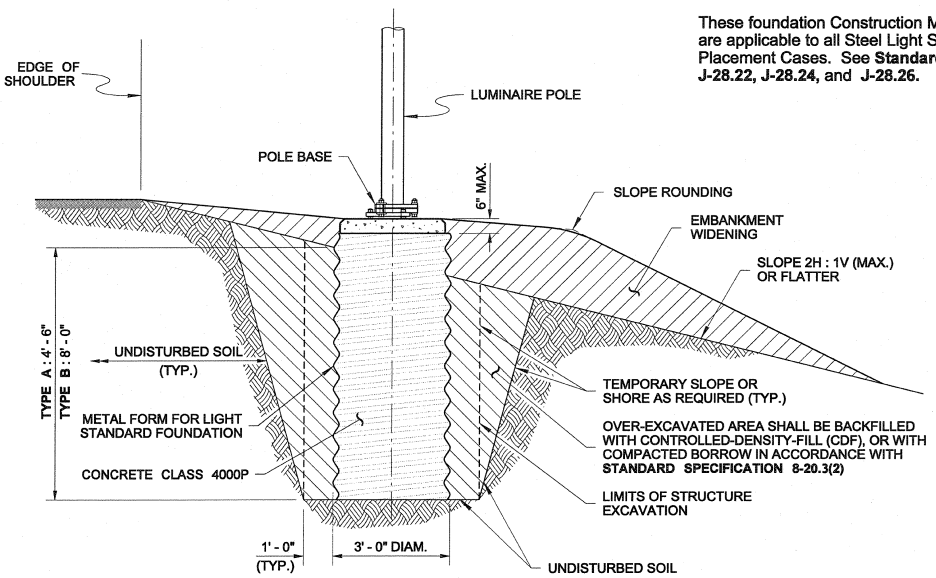

(CASE A SHOWN)

METHOD 2

METAL (SUBSURFACE) FORM REQUIRED

When the existing soil will not retain a vertical face, over-excavate the foundation area and install a 36" diameter, corrugated metal (pipe) form. The corrugated metal form shall not extend more than 6" below any portion of the foundation that will remain exposed upon final grading. Continue forming to full height using paper or cardboard form to achieve a smooth finish on final exposed cement concrete. Support the form as necessary to remain plumb.

See **Standard Plans J-28.24** and **J-28.26** for maximum heights of exposed foundation when no embankment widening is to be installed.

Place the concrete foundation.

After concrete has cured, remove the paper or cardboard form portion.

Backfill with controlled-density fill or compacted borrow in accordance with **Standard Specification 8-20.3(2).**

Construct the embankment widening (if required).

CONSTRUCTION METHODS

NOTE

These foundation Construction Methods are applicable to all Steel Light Standard Placement Cases. See **Standard Plans J-28.22, J-28.24,** and **J-28.26.**

RICHARD P. ZELDENRUST
STATE OF WASHINGTON
25470
STRUCTURAL ENGINEER
PROFESSIONAL ENGINEER
6/16/11

STEEL LIGHT STANDARD FOUNDATION TYPES A & B

STANDARD PLAN J-28.30-02

SHEET 2 OF 2 SHEETS

APPROVED FOR PUBLICATION

STATE DESIGN ENGINEER — DATE 6/22/11

Washington State Department of Transportation

DRAWN BY: LISA CYFORD

DRAWN BY: FERN LIDDELL

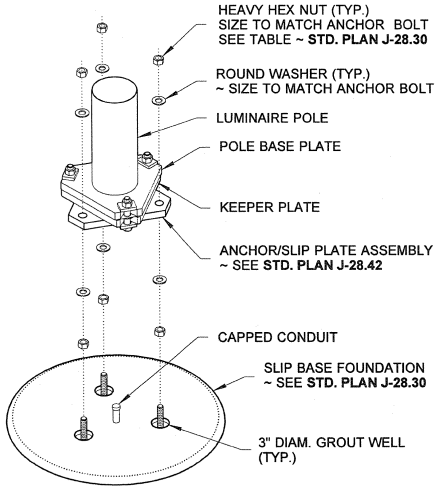

EXPLODED VIEW

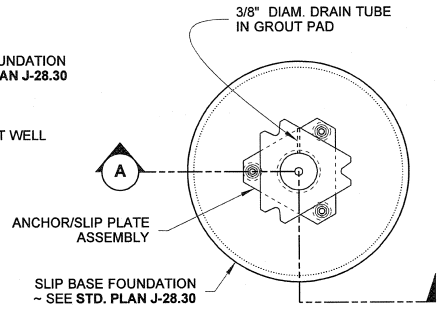

PLAN VIEW

SLIP BASE

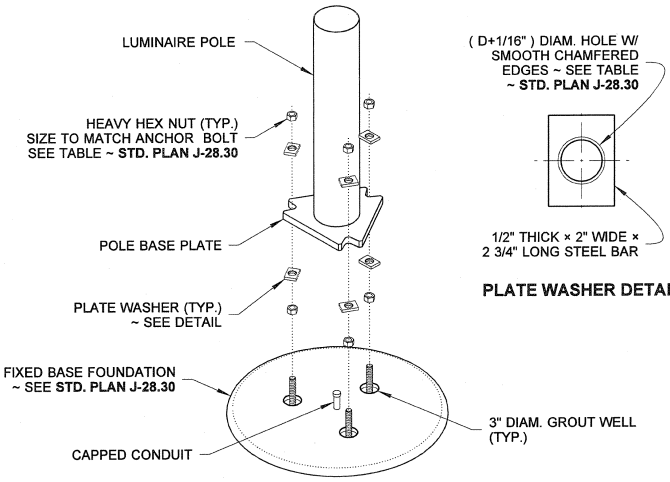

EXPLODED VIEW

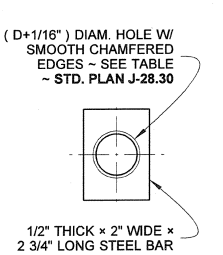

PLATE WASHER DETAIL

NOTES

1. 50' (**H1**) poles with double mast arms or poles weighing in excess of 1000 LBS shall not be installed on a slip base.
2. Galvanizing shall be in accordance with AASHTO M 111.
3. See **Standard Plans C-8b, C-14h,** and **J-28.60** for foundation and base plate requirements when light standards are mounted on cement concrete traffic barrier.
4. See **Standard Specification Section 6-03.3(33)** and **8-20.3 (4)** for the torque requirements for all of the Anchor Bolt installations. Install 1-inch diameter Clamping Bolts in all Slip Bases to **a torque of 95 Foot-Pounds -** See **Standard Specification Section 8-20.3 (13)A.** **DO NOT OVERTIGHTEN.** After state inspection, burr threads to prevent nut rotation.
5. For Anchor Bolt Diameter " **D** ", See Table, **Standard Plan J-28.30**.

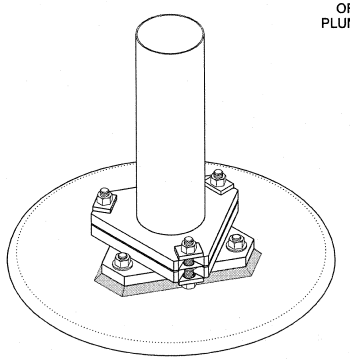

ASSEMBLED

ISOMETRIC VIEW

SLIP BASE

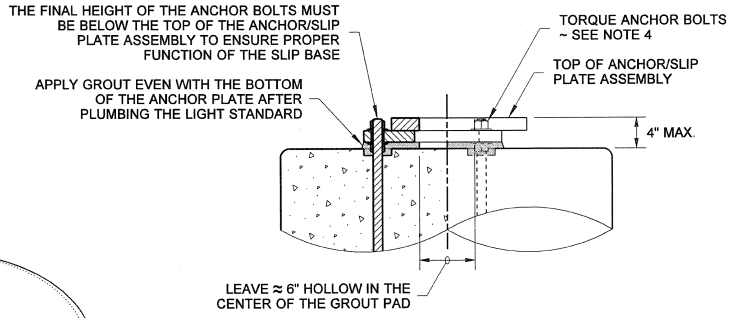

SECTION (A)

(CONDUIT NOT SHOWN)

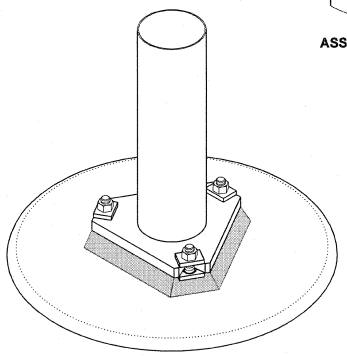

ASSEMBLED

ISOMETRIC VIEW

FIXED BASE

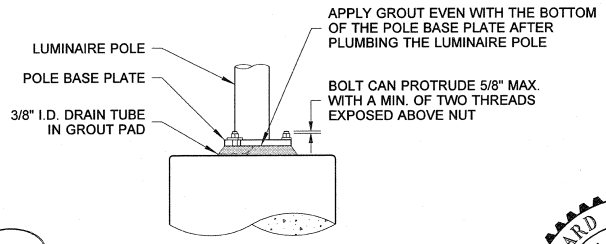

ASSEMBLED AND GROUTED

ELEVATION VIEW

FIXED BASE

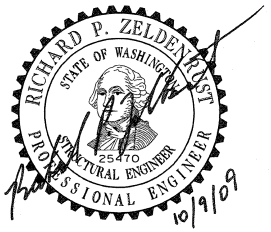

STEEL LIGHT STANDARD BASE MOUNTING

STANDARD PLAN J-28.40-01

SHEET 1 OF 1 SHEET

APPROVED FOR PUBLICATION

STATE DESIGN ENGINEER — DATE

Washington State Department of Transportation

DRAWN BY: BILL BERENS

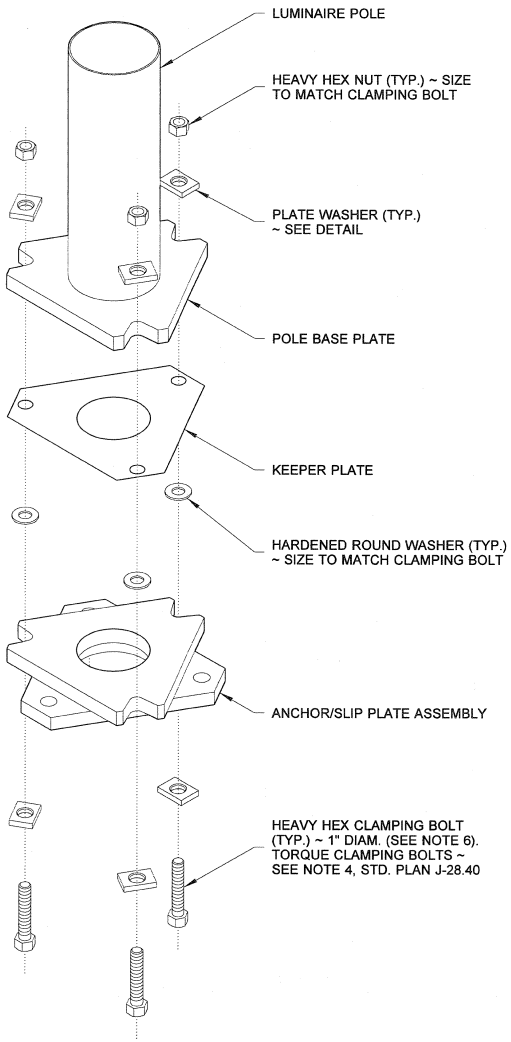

EXPLODED ISOMETRIC VIEW

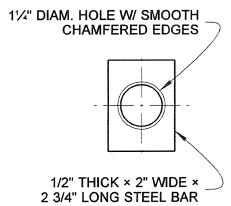

PLATE WASHER DETAIL

CLAMPING BOLT TABLE			
LUMINAIRE HEIGHT (H1)	MAST ARM TYPE	MAST ARM LENGTH	CLAMPING BOLT DIAMETER " D "
20' TO 50'	SINGLE	6' TO 16'	1"
20' TO 45'	DOUBLE	6' TO 8'	1"
46' TO 50'	DOUBLE	6' TO 8'	①
20' TO 45'	DOUBLE	10' TO 16'	①
46' TO 50'	DOUBLE	10' TO 16'	①

① SLIP BASE NOT ALLOWED

NOTES

1. 50' (H1) poles with double mast arms or poles weighing in excess of 1000 lbs. shall not be installed on a Slip Base.
2. The Slip and Anchor Plates shall be manufactured from ASTM A572 GR.50 or ASTM A588. All Slip Plate notched surfaces shall be finished smooth.
3. The Clamping Bolts shall be high strength steel, manufactured from AASHTO M164, with heavy hex nut and hardened washer. Galvanize the Clamping Bolts according to AASHTO M232.
4. Round and smooth all edges along wire-way to protect the conductors. See **Standard Plan J-28.70** for wiring details.
5. Galvanize the Anchor/Slip Plate after fabrication according to AASHTO M 111.
6. Clamping Bolt diameters may vary on existing installations. Replace them with the same size as the originals when repairing or reusing a luminaire pole.

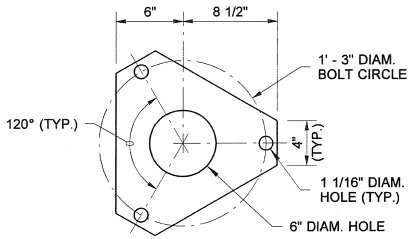

(28 GAUGE SHEET METAL)

TOP VIEW

KEEPER PLATE

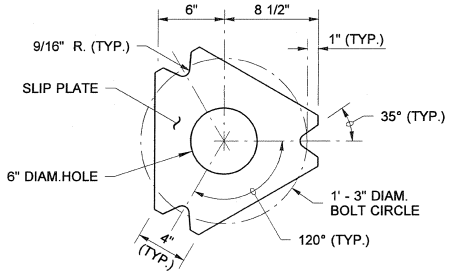

TOP VIEW

SLIP PLATE

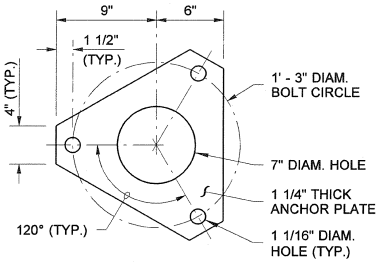

TOP VIEW

ANCHOR PLATE

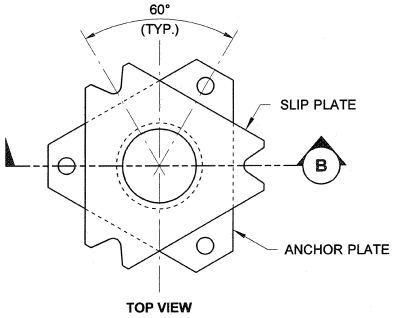

TOP VIEW

ANCHOR/SLIP PLATE ASSEMBLY

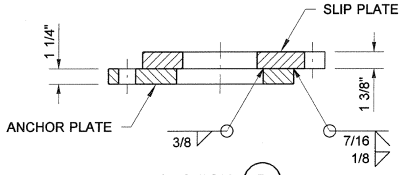

SECTION (B)

STEEL LIGHT STANDARD ANCHOR/SLIP PLATE FOR SLIP BASE

STANDARD PLAN J-28.42-00

SHEET 1 OF 1 SHEET

APPROVED FOR PUBLICATION

STATE DESIGN ENGINEER — DATE 8/7/07

Washington State Department of Transportation

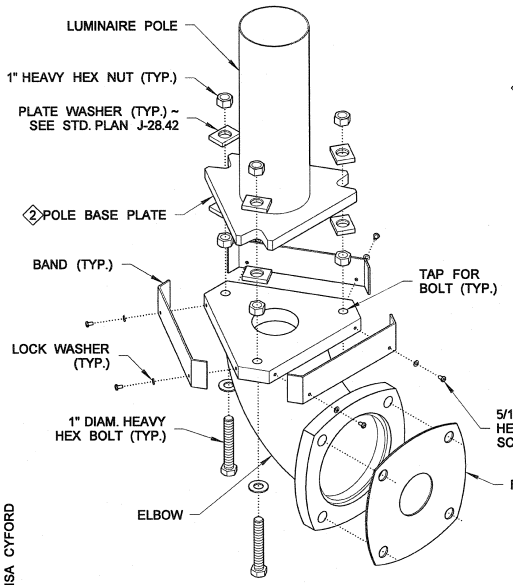

EXPLODED ISOMETRIC VIEW

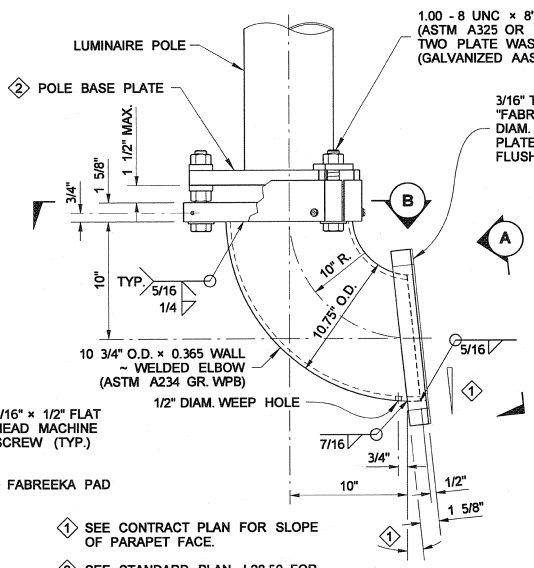

1 SEE CONTRACT PLAN FOR SLOPE OF PARAPET FACE.

2 SEE STANDARD PLAN J-28.50 FOR POLE BASE PLATE REQUIREMENTS.

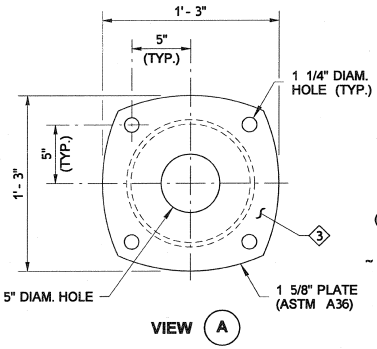

VIEW (A)

3 THE FACE SHALL BE PLANE AFTER FABRICATION, TO PROVIDE A SEAL BETWEEN THE BARRIER AND THE ELBOW.

NOTES

1. Galvanize the Elbow Assembly after fabrication according to AASHTO M 111.
2. See **Standard Plan J-28.50** for Pole Base and Hand Hole details.

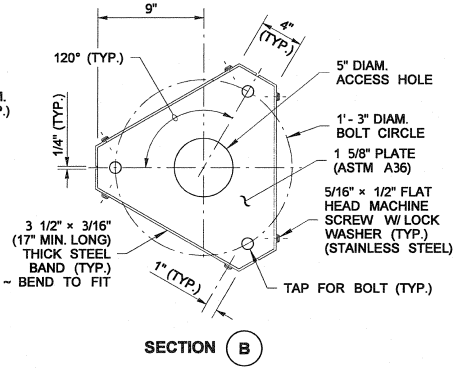

SECTION (B)

DRAWN BY: LISA CYFORD

STEEL LIGHT STANDARD ELBOW DETAIL

FOR LUMINAIRE POLES WITH SINGLE MAST ARM 12' - 0" OR LESS AND DOUBLE MAST ARMS 8' - 0" OR LESS, MOUNTED ON BRIDGE OR RETAINING WALLS.

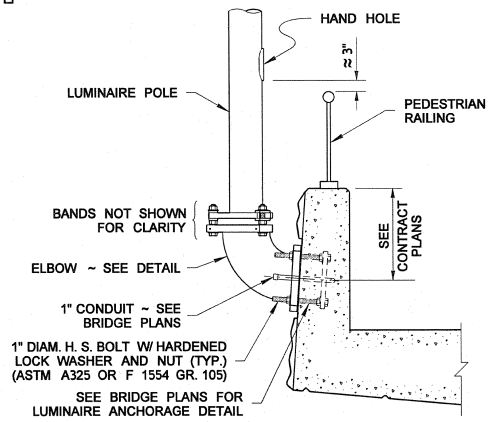

BRIDGE PEDESTRIAN BARRIER

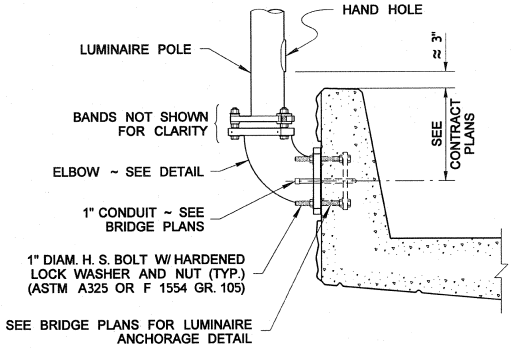

SINGLE-SLOPE BRIDGE TRAFFIC BARRIER

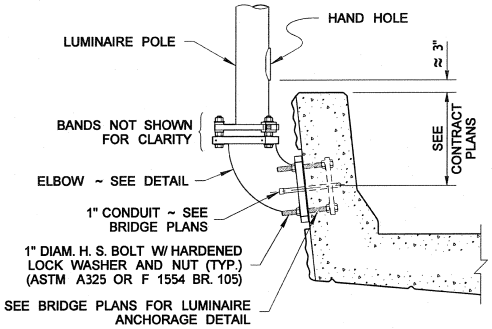

F-SHAPE BRIDGE TRAFFIC BARRIER

WHEN TRAFFIC BARRIER HEIGHT IS 42", MAINTAIN APPROX. HEIGHT FROM TOP OF BARRIER TO HAND HOLE SHOWN.

TYPICAL SECTIONS

STEEL LIGHT STANDARD ELBOW MOUNTING ON BRIDGE 7 RETAINING WALL

STANDARD PLAN J-28.45-01

SHEET 1 OF 1 SHEET

APPROVED FOR PUBLICATION

STATE DESIGN ENGINEER — DATE 4/22/11

Washington State Department of Transportation

DRAWN BY: LISA CYFORD

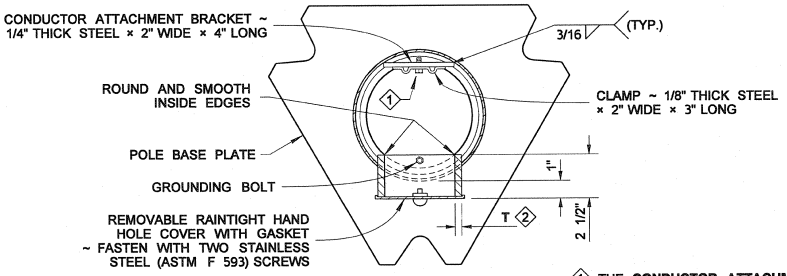

TYPICAL HAND HOLE ORIENTATION

VIEW (A)

1. THE **CONDUCTOR ATTACHMENT** CONFIGURATIONS VARY AMONG DIFFERENT MANUFACTURERS. CONDUCTOR ATTACHMENTS ARE REQUIRED ON ALL POLES, FIXED OR SLIP BASE.
2. T = RIM PLATE THICKNESS BY LUMINAIRE POLE FABRICATOR.

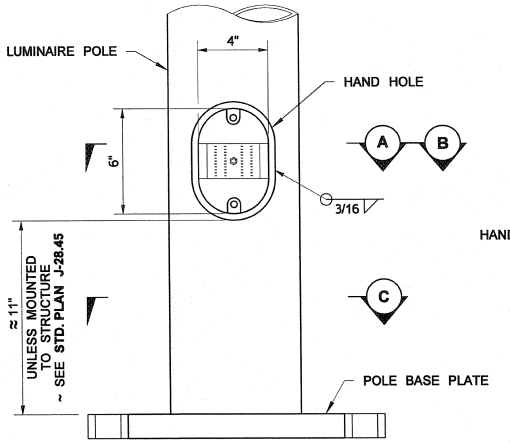

(COVER NOT SHOWN FOR CLARITY)

ELEVATION VIEW

CONFIGURATION AND LOCATION OF THE HAND HOLE VARIES AMONG MANUFACTURERS ~ MINIMUM SIZE OPENING SHOWN

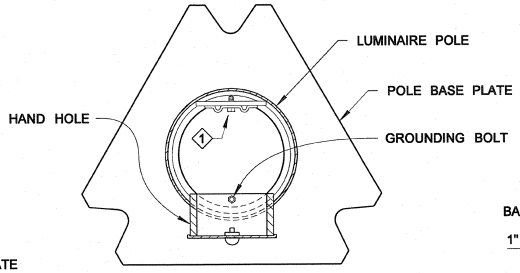

FOR DETAILS NOT SHOWN, SEE VIEW (A) ABOVE

ORIENTATION FOR INSTALLATION ON BRIDGE OR RETAINING WALL ~ SEE **STANDARD PLAN J-28.45**

VIEW (B)

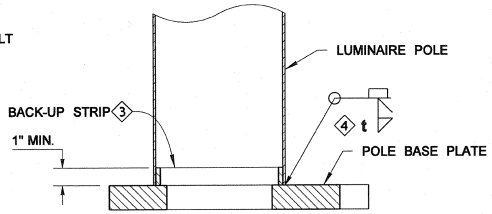

3. 1/4" THICK, OR NO THINNER THAN POLE WALL THICKNESS. TACK WELD OR SEAL WELD TO BASE PLATE.
4. t = SIZE OF FILLET WELD BY LUMINAIRE POLE FABRICATOR.

SECTION (D)

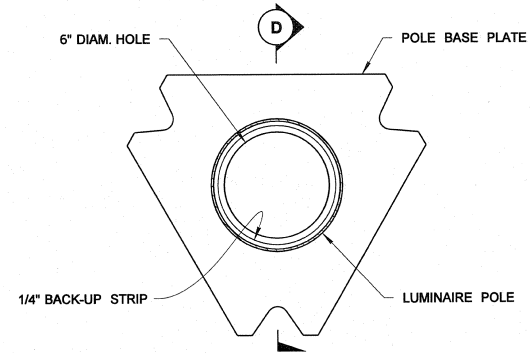

VIEW (C)

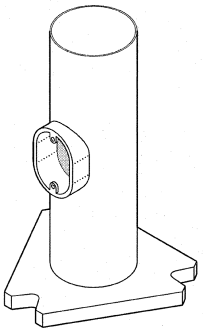

ISOMETRIC VIEW

NOTES

1. Pole Base Plate for a Slip Base design shall be 1 1/4" steel manufactured from ASTM A572 GR. 50 or ASTM A588. Pole Base Plate for a Fixed Base design shall be either 1 1/4" steel manufactured from ASTM A572 GR. 50, ASTM A588, or 1 1/2" manufactured from ASTM A36. All Pole Base Plate notched surfaces shall be finished smooth.
2. Round and smooth all edges along wire-way to protect conductors. See **Standard Plan J-28.70** for wiring details.
3. Galvanizing shall be in accordance with AASHTO M 111.
4. See **Standard Plans C-8b, C-85.14,** and **J-28.60** for foundation and base plate requirements when steel light standards are mounted on concrete traffic barrier.
5. See **Standard Plan J-28.42** for details when Slip Base is required.

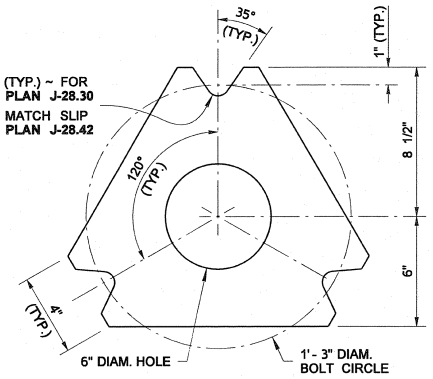

FOR PLATE THICKNESS, REFER TO NOTE 1

TOP VIEW

POLE BASE PLATE DETAIL

RICHARD P. ZELDENRUST
STATE OF WASHINGTON
25470
STRUCTURAL ENGINEER
PROFESSIONAL ENGINEER

5/16/11

STEEL LIGHT STANDARD POLE BASE AND HAND HOLE DETAILS

STANDARD PLAN J-28.50-02

SHEET 1 OF 1 SHEET

APPROVED FOR PUBLICATION

STATE DESIGN ENGINEER — DATE 6/2/11

Washington State Department of Transportation

DRAWN BY: LISA CYFORD

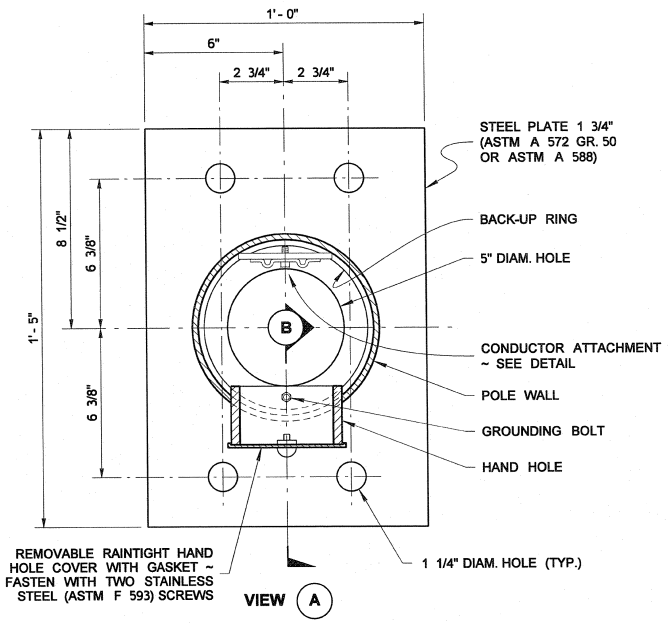

VIEW (A)

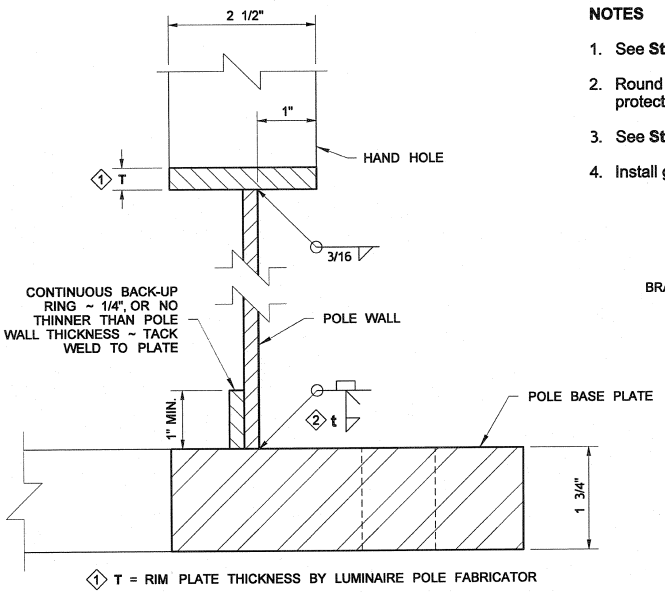

1 T = RIM PLATE THICKNESS BY LUMINAIRE POLE FABRICATOR

2 t = SIZE OF FILLET WELD BY LUMINAIRE POLE FABRICATOR

SECTION (B)

NOTES

1. See **Standard Plans C-8b** and **C-85.14** for foundation and anchor bolt details.
2. Round and smooth all edges around hand hole and along the wire-way to protect the conductors.
3. See **Standard Plan J-28.70** for wiring details.
4. Install grout after plumbing the pole.

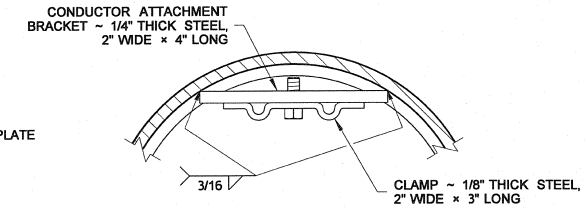

CONDUCTOR ATTACHMENT DETAIL

CONFIGURATIONS VARY AMONG DIFFERENT MANUFACTURERS

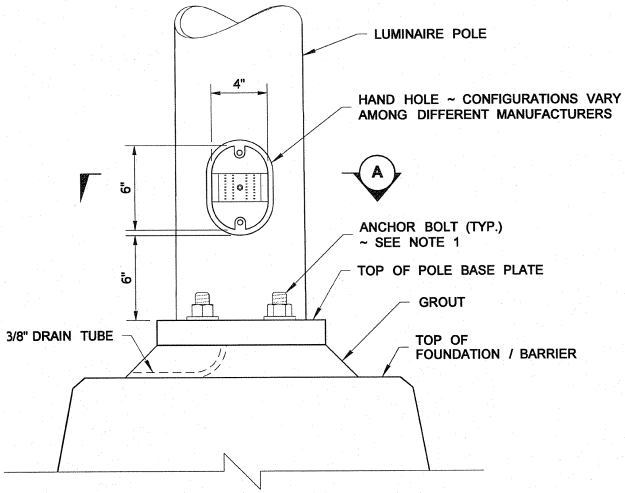

SEE NOTE 4

PLACEMENT DETAIL

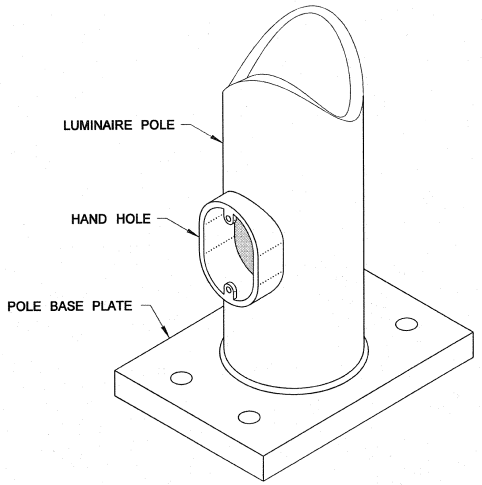

ISOMETRIC VIEW

RICHARD P. ZELDENRUST
STATE OF WASHINGTON
25470
STRUCTURAL ENGINEER
PROFESSIONAL ENGINEER

5/16/11

STEEL LIGHT STANDARD BARRIER MOUNTED BASE

STANDARD PLAN J-28.60-01

SHEET 1 OF 1 SHEET

APPROVED FOR PUBLICATION

STATE DESIGN ENGINEER — DATE 6/2/11

Washington State Department of Transportation

DRAWN BY: LISA CYFORD

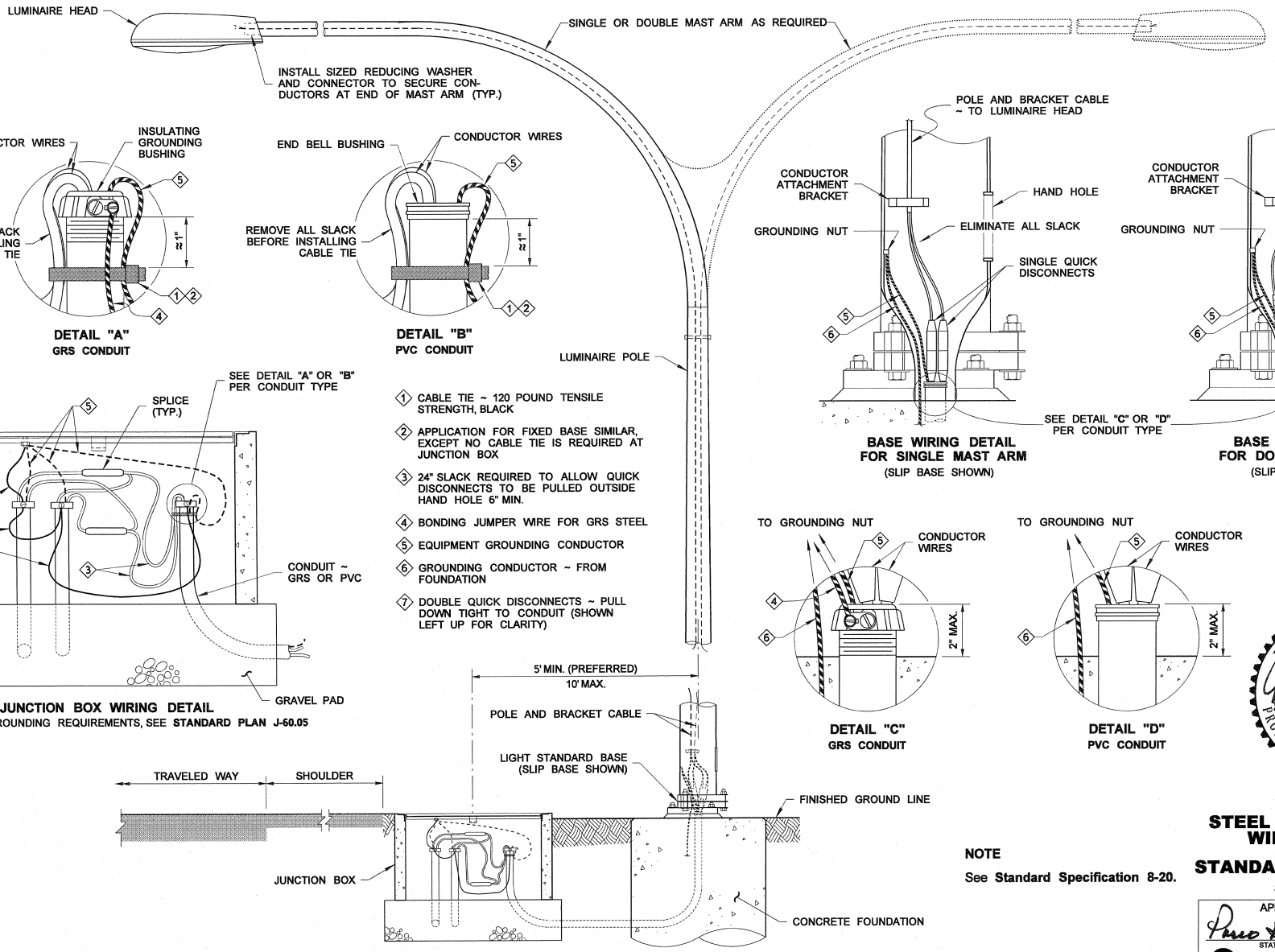

DETAIL "A"
GRS CONDUIT

DETAIL "B"
PVC CONDUIT

JUNCTION BOX WIRING DETAIL
FOR GROUNDING REQUIREMENTS, SEE **STANDARD PLAN J-60.05**

TYPICAL LOCATION OF JUNCTION BOX AND FOUNDATION

1. CABLE TIE ~ 120 POUND TENSILE STRENGTH, BLACK
2. APPLICATION FOR FIXED BASE SIMILAR, EXCEPT NO CABLE TIE IS REQUIRED AT JUNCTION BOX
3. 24" SLACK REQUIRED TO ALLOW QUICK DISCONNECTS TO BE PULLED OUTSIDE HAND HOLE 6" MIN.
4. BONDING JUMPER WIRE FOR GRS STEEL
5. EQUIPMENT GROUNDING CONDUCTOR
6. GROUNDING CONDUCTOR ~ FROM FOUNDATION
7. DOUBLE QUICK DISCONNECTS ~ PULL DOWN TIGHT TO CONDUIT (SHOWN LEFT UP FOR CLARITY)

BASE WIRING DETAIL FOR SINGLE MAST ARM
(SLIP BASE SHOWN)

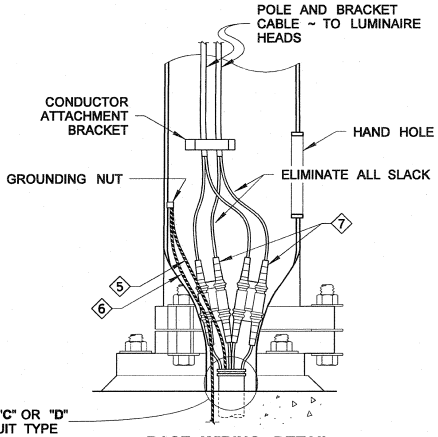

BASE WIRING DETAIL FOR DOUBLE MAST ARMS
(SLIP BASE SHOWN)

DETAIL "C"
GRS CONDUIT

DETAIL "D"
PVC CONDUIT

NOTE
See **Standard Specification 8-20.**

STEEL LIGHT STANDARD WIRING DETAILS

STANDARD PLAN J-28.70-01

SHEET 1 OF 1 SHEET

APPROVED FOR PUBLICATION

STATE DESIGN ENGINEER — DATE

Washington State Department of Transportation

DRAWN BY: LISA CYFORD

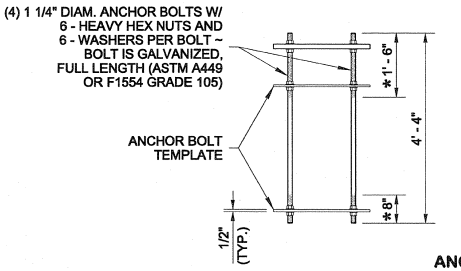

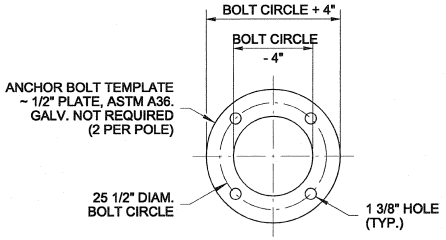

ANCHOR BOLT ASSEMBLY

* THREADED LENGTH

CAMERA POLE HEIGHT	DEPTH OF FOUNDATION "D"		ANCHOR BOLT ASTM A449 OR F1554 GR 105		
FOR LOAD CASES #1 and #2	3H : 1V OR FLATTER	2H : 1V	DIAMETER	LENGTH	BOLT CIRCLE
20' - 30'	4' - 6"	6' - 6"	1 1/4"	4' - 4"	25 1/2"
40'	5' - 6"	7' - 6"	1 1/4"	4' - 4"	25 1/2"
50'	7' - 0"	9' - 0"	1 1/4"	4' - 4"	25 1/2"

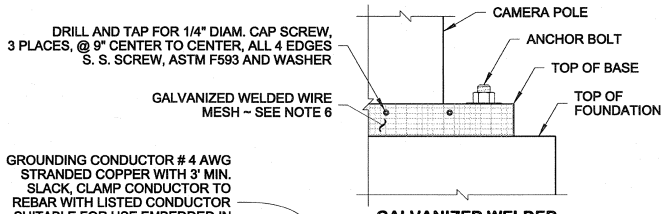

GALVANIZED WELDED WIRE MESH

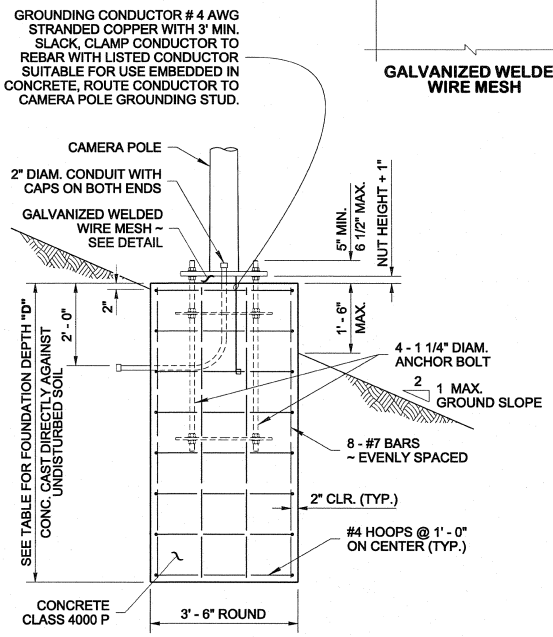

FOUNDATION REINFORCEMENT DETAIL

(CONCRETE CAST DIRECTLY AGAINST UNDISTURBED EARTH)

ALTERNATE # 1

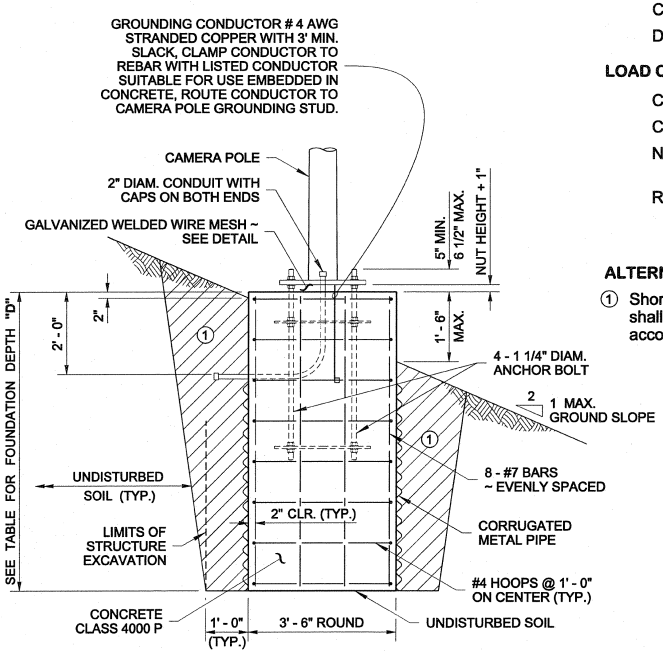

FOUNDATION REINFORCEMENT AND BACKFILL DETAIL

(CONCRETE CAST INSIDE CORRUGATED METAL PIPE STAY-IN-PLACE FORM)

ALTERNATE # 2

NOTES

1. These Foundations are designed for a minimum of 1,500 PSF allowable lateral bearing pressure for the soil. A Special Foundation shall be required for soil with allowable lateral bearing pressure lower than 1,500 PSF.
2. These Foundations are designed for installation on level ground, or on sloping ground, not to exceed 2 : 1 slopes. Slopes steeper than 2 : 1 require a special design.
3. Foundations constructed within ecology embankments shall be increased in depth, by the depth of the ecology embankment.
4. Foundations not within the parameters of this standard require Special Design. Contact the WSDOT Bridge and Structures Office through the Engineer for Special Foundation Designs.
5. The top 2' - 0" of the foundation shall use a smooth form (such as paper or cardboard). After the concrete has cured, this entire form shall be removed.
6. Galvanized Welded Wire Mesh shall be 2 mesh per lineal inch, 0.0625" diam. wire, with 0.4375" overlap. Contractor to form fit and install.

DESIGN CRITERIA:

This structure has been designed according to the Fifth Edition **2009 AASHTO Standard Specifications for Structural Supports for Highway Signs, Luminaires, and Traffic Signals.** Basic wind velocity is 90 MPH. Design Life/Recurrence Interval 50 years and Fatigue Category III.

WIND VELOCITY:

90 MPH
Maximum Pole Deflection shall not exceed 0.7" in 30 MPH and 1.4" in 70 MPH wind.

LOAD CASE # 1

Camera (1) - EPA = 4.00 sq. ft. @ 2' - 0" above pole top, and:

Dish (1) - 1' - 0" diameter @ pole top level.

LOAD CASE # 2

Camera (1) - EPA = 4.00 sq. ft. @ 2' - 0" above pole top, and:

Camera (2) - EPA = 0.54 sq. ft. each @ 1' - 0" and 2' - 0" from pole top, and:

NEMA Cabinet (2) - EPA = 1.33 sq. ft. each @ 3' - 8" from pole top, install both NEMA cabinets back to back, and:

Radio Equipment (2) - EPA = 2.25 sq ft. each @ 2' - 0" and 9' - 0" from pole top.

EPA = Effective Projected Area

ALTERNATE #2 - CONSTRUCTION METHOD

① Shoring or Extra Excavation as Required. Excavated area shall be backfilled with Controlled-Density Fill or with soil in accordance with **Standard Specification 8-20.3(2).**

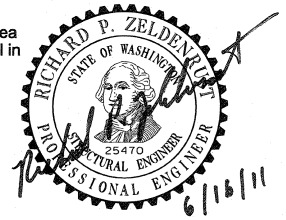

CAMERA POLE FOUNDATION DETAILS

STANDARD PLAN J-29.10-00

SHEET 1 OF 1 SHEET

APPROVED FOR PUBLICATION

STATE DESIGN ENGINEER — DATE

Washington State Department of Transportation

DRAWN BY: LISA CYFORD

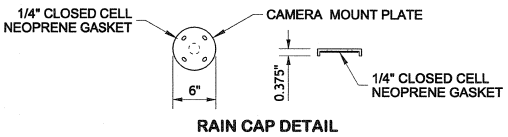

RAIN CAP DETAIL

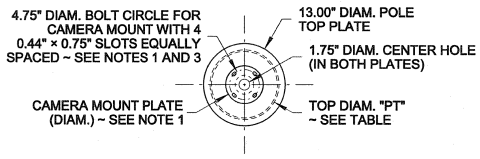

VIEW (A)

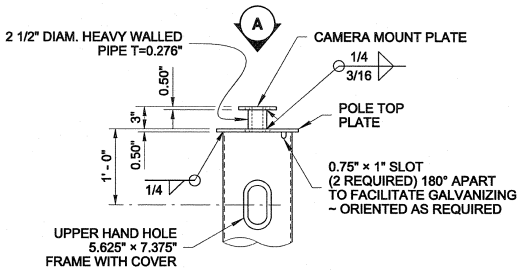

POLE TOP DETAIL

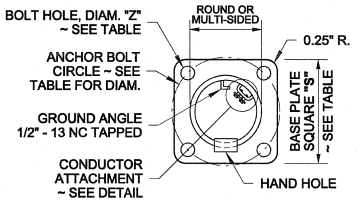

VIEW (B)

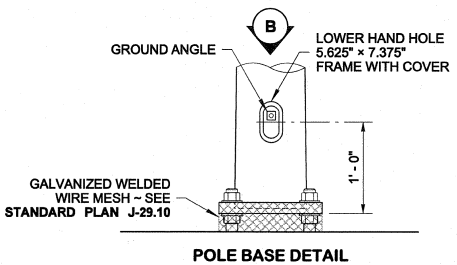

POLE BASE DETAIL

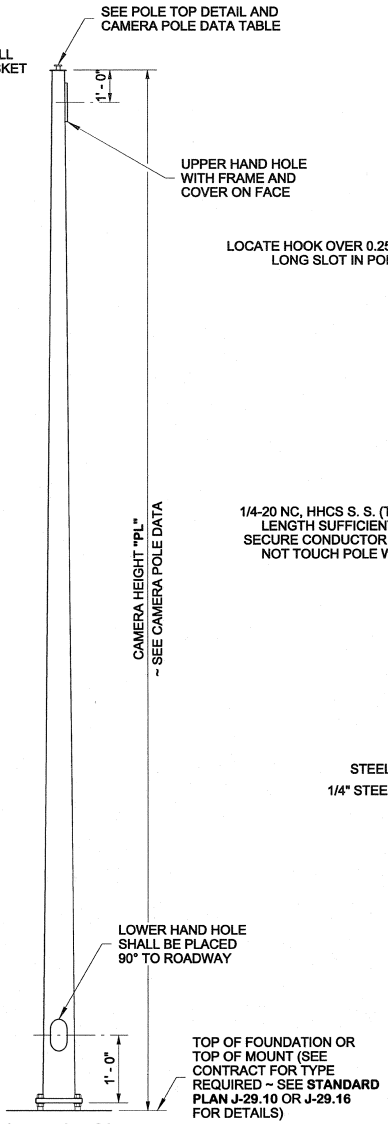

CAMERA POLE
CAMERA POLE FOR LOADING LOAD CASE #1
(TOP MOUNT CAMERA AND 1' - 0" DIAM. DISH)

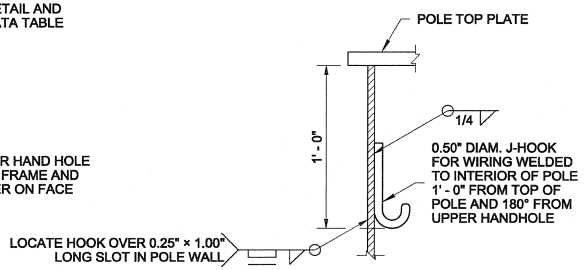

J-HOOK FOR WIRING LOAD CASE #1

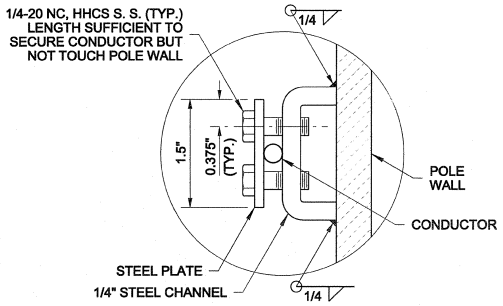

CONDUCTOR ATTACHMENT DETAIL

CONDUCTOR ATTACHMENT DETAILS MAY VARY PER MANUFACTURER

NOTES

1. Verify Pole Top Plate, Camera Mount Plate, Bolt Circle, and Bolt Holes are adequate for the required Camera prior to releasing poles for manufacturing.
2. Steel shall be galvanized after fabrication per AASHTO M111. Hardware shall be galvanized per AASHTO M232. Fasteners less than 0.50" (in.) diameter shall be stainless or brass.
3. Attach Camera to Camera Mount Plate using four (4) 3/8"-16 UNC × 1.75" stainless steel bolts with eight (8) stainless steel washers and four (4) lock-nuts with nylon inserts, or as approved by the Camera Supplier.
4. For Ground Mount Details, see **Standard Plan J-29.10.** For Elbow Mount Details, see **Standard Plan J-29.16.**

DESIGN CRITERIA:

This structure has been designed according to the Fifth Edition **2009 AASHTO Standard Specifications for Structural Supports for Highway Signs, Luminaires, and Traffic Signals**. Basic wind velocity is 90 MPH. Design Life/Recurrence Interval 50 years.

WIND VELOCITY:

90 MPH

Maximum Pole Deflection shall not exceed 0.7" in 30 MPH and 1.4" in 70 MPH wind.

LOAD CASE #1:

Camera (1) - EPA = 4.00 sq. ft. @ 2' - 0" above pole top, and:

Dish (1) - 1' - 0" diameter @ pole top level.

LOAD CASE #2:

Camera (1) - EPA = 4.00 sq. ft. @ 2' - 0" above pole top, and:

Camera (2) - EPA = 0.54 sq. ft. @ 1' - 0" and 2' - 0" from pole top, and:

NEMA Cabinet (2) - EPA = 1.33 sq. ft. @ 3' - 8" from pole top, install back-to-back NEMA Cabinets, and:

Radio Equipment (2) - EPA = 2.25 sq. ft. each @ 2' - 0" and 9' - 0" from pole top.

EPA = Effective Projected Area

CAMERA POLE DATA

CAMERA HEIGHT "PL" (FT.)	POLE MOUNT TYPE	TOP DIAM. "PT" (IN.) (MIN.)	POLE TUBE			ANCHOR BOLT DIAM. (IN.)	CONNECTION BOLT DIAM. (IN.)
			SQUARE "S" (IN.)	BOLT CIRCLE (IN.)	HOLE "Z" (IN.)		
15	ELBOW	8.50	25.00	25.50	1.50	–	1.25
20	ELBOW	8.50	25.00	25.50	1.50	–	1.25
30	ELBOW	9.00	25.00	25.50	1.50	–	1.25
20 - 30	GROUND	9.00	25.00	25.50	1.50	1.25	–
40	ELBOW	9.00	25.00	25.50	1.50	–	1.25
40	GROUND	9.00	25.00	25.50	1.50	1.25	–
50	ELBOW	10.00	25.00	25.50	1.50	–	1.25
50	GROUND	10.00	25.00	25.50	1.50	1.25	–

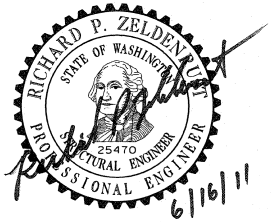

CAMERA POLE STANDARD

STANDARD PLAN J-29.15-00

SHEET 1 OF 2 SHEETS

APPROVED FOR PUBLICATION

STATE DESIGN ENGINEER — DATE

Washington State Department of Transportation

DRAWN BY: LISA CYFORD

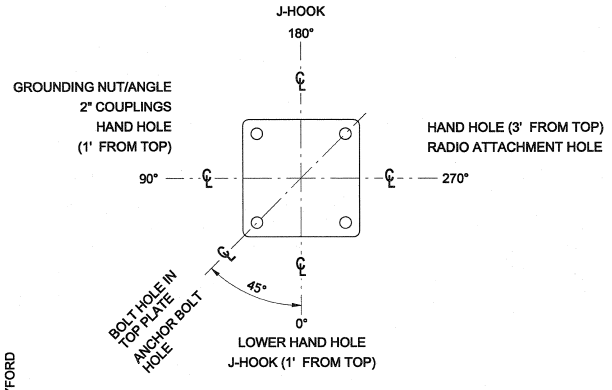

RADIAL INDEX LOAD CASE #2

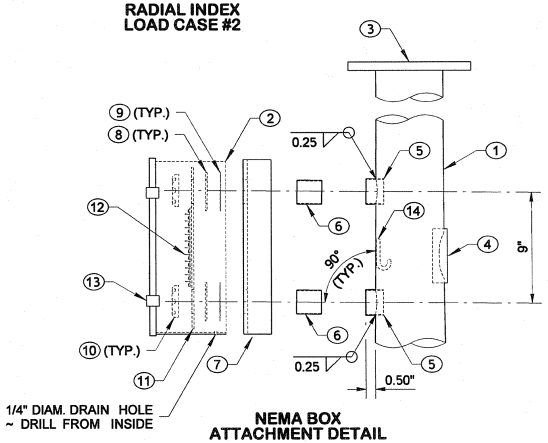

NEMA BOX ATTACHMENT DETAIL

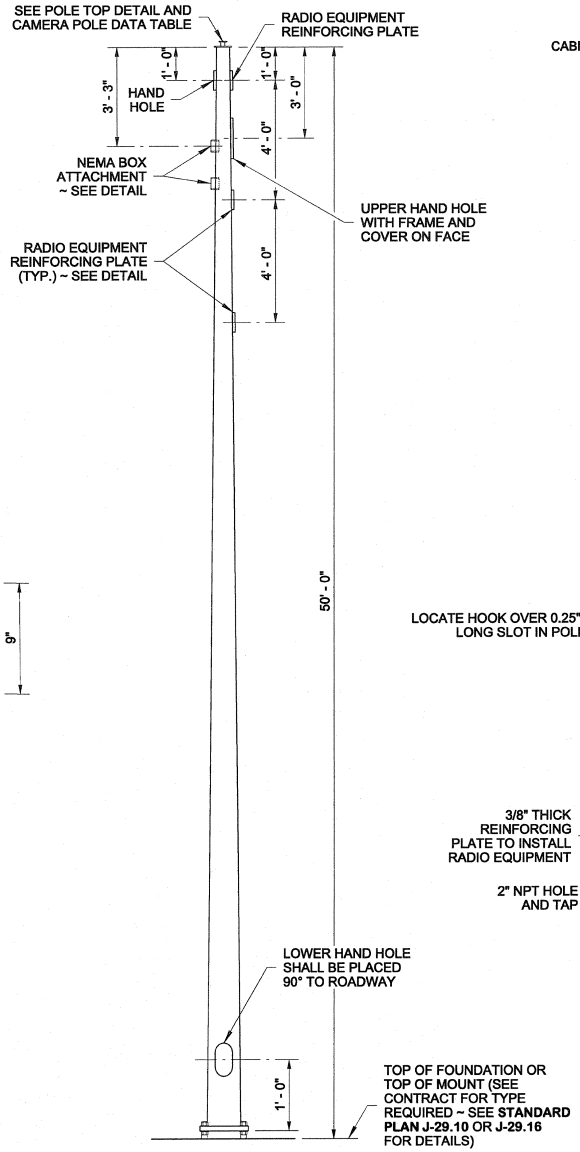

CAMERA POLE FOR LOADING LOAD CASE #2

(TOP MOUNT CAMERA, 2 SIDEMOUNT CAMERAS, 2 NEMA CABINETS & 2 RADIO EQUIPMENTS)

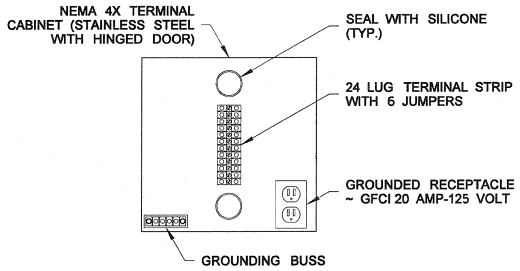

NEMA BOX DETAIL

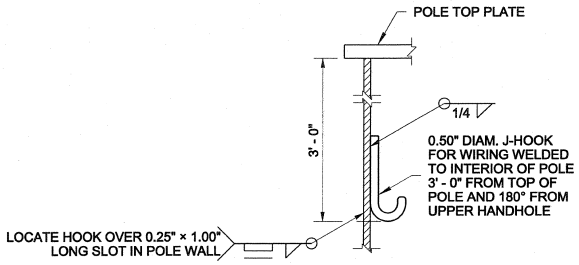

J-HOOK FOR WIRING LOAD CASE #2

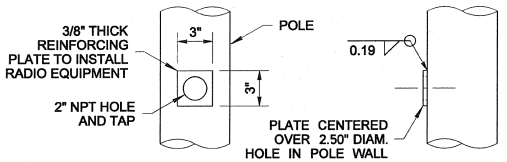

RADIO EQUIPMENT REINFORCING PLATE

KEY

1. CAMERA/TDA POLE MOUNTS
2. NEMA 4X (STAINLESS STEEL) ~ SIZE 16" H × 12" W × 6" D
3. CAMERA MOUNT PLATE
4. CAMERA UPPER HANDHOLE
5. 2" COUPLING
6. 2" SHORT NIPPLE
7. CHANNEL DRILLED 1/8" OVERSIZE OF NIPPLE
8. STEEL WASHER
9. CONDUIT WATERTIGHT LOCKNUT
10. END BUSHING
11. BACK PLATE ~ DRILL OVER SIZE FOR CONDUIT, SEAL WASHER, AND LOCKNUT
12. TERMINAL BLOCK
13. HINGED DOOR WITH TWO PAD-LOCKABLE FLIP LATCHES (TYP.)
14. J-HOOK FOR WIRING

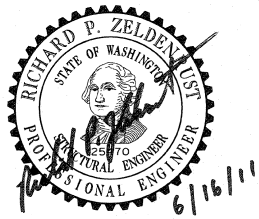

CAMERA POLE STANDARD

STANDARD PLAN J-29.15-00

SHEET 2 OF 2 SHEETS

APPROVED FOR PUBLICATION

STATE DESIGN ENGINEER — DATE 6/28/11

Washington State Department of Transportation

DRAWN BY: LISA CYFORD

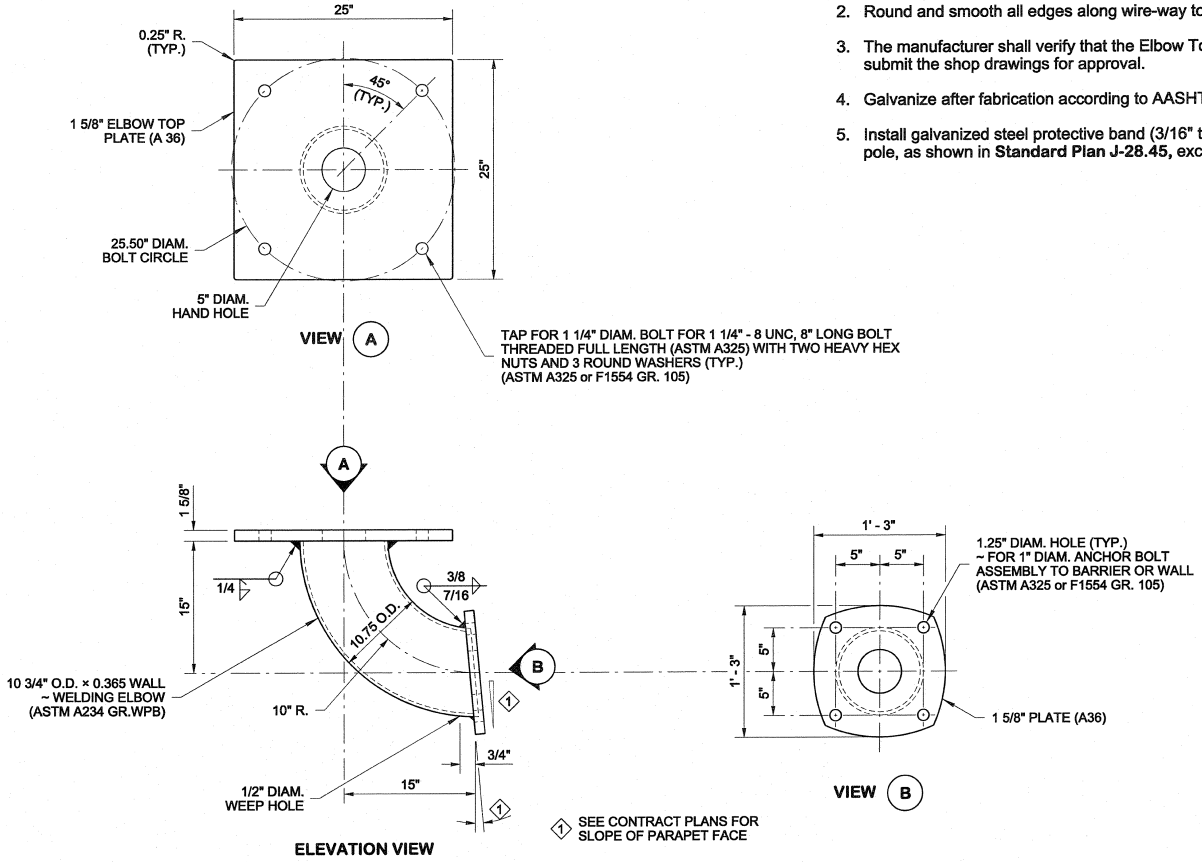

CAMERA POLE ELBOW MOUNT ~ 25" SQUARE

NOTES

1. For information not shown, see Steel Light Standard Elbow detail, **Standard Plan J-28.45.** For Camera Pole Details, see **Standard Plan J-29.15.**
2. Round and smooth all edges along wire-way to protect conductors; see **Standard Plan J-28.70.**
3. The manufacturer shall verify that the Elbow Top Plate matches the Camera Pole Base, and shall submit the shop drawings for approval.
4. Galvanize after fabrication according to AASHTO M111.
5. Install galvanized steel protective band (3/16" thick × 3 1/2" high (A36)) on all four sides after truing pole, as shown in **Standard Plan J-28.45,** except fasten 6" from corners on 25" square base.

CAMERA POLE STANDARD DETAILS

STANDARD PLAN J-29.16-00

SHEET 1 OF 1 SHEET

APPROVED FOR PUBLICATION

STATE DESIGN ENGINEER — DATE 6/22/11

Washington State Department of Transportation

DRAWN BY: LISA CYFORD

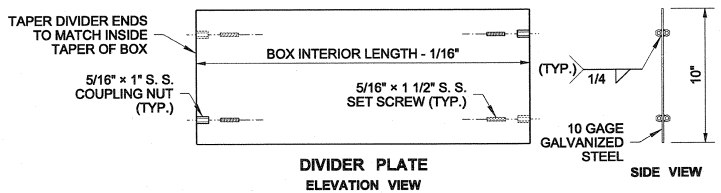

DIVIDER PLATE
ELEVATION VIEW
(FOR TYPE 2 JUNCTION BOX ONLY)

JUNCTION BOX DIMENSION TABLE

MARK	ITEM	BOX TYPE	
		TYPE 1	TYPE 2
A	OUTSIDE LENGTH OF JUNCTION BOX	22"	33"
B	OUTSIDE WIDTH OF JUNCTION BOX	17"	22 1/2"
C	INSIDE LENGTH OF JUNCTION BOX	18" ~ 19"	28" ~ 29"
D	INSIDE WIDTH OF JUNCTION BOX	13" ~ 14"	17" ~ 18"
E	LID LENGTH	17 5/8"	28 5/8"
F	LID WIDTH	12 5/8"	18 1/8"
	CAPACITY ~ CONDUIT DIAMETER	6"	12"

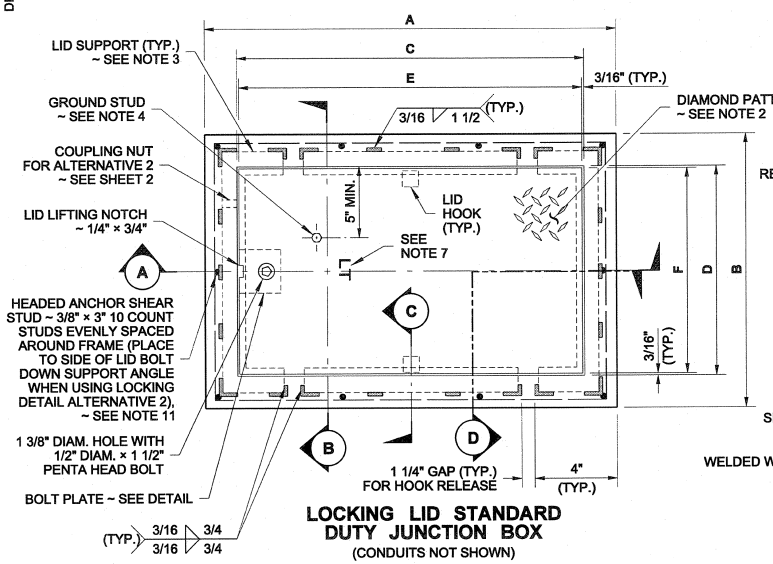

LOCKING LID STANDARD DUTY JUNCTION BOX
(CONDUITS NOT SHOWN)

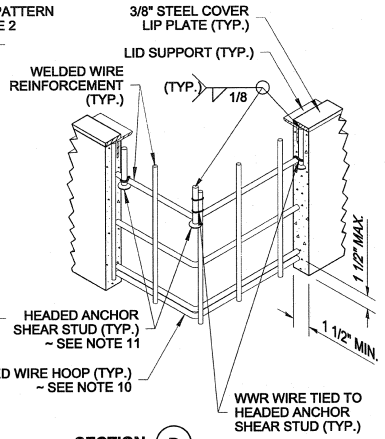

SECTION (D)
PERSPECTIVE VIEW

NOTES

1. All box dimensions are approximate. Exact configurations vary among manufacturers.
2. Minimum lid thickness shown. The diamond pattern shall be a minimum of 28% of the overall thickness. Junction Boxes installed in sidewalks, walkways, and shared-use paths shall have a slip-resistant coating on the lid and lip cover plate, and shall be installed with the surface flush with and matched to the grade of the sidewalk, walkway, or shared-use path. The non-slip lid shall be identified with permanent markings on the underside, indicating the type of surface treatment (see Contract Documents for details) and the year of manufacture. The permanent marking shall be 1/8" inch line thickness formed with a stainless steel weld bead and shall be placed prior to hot-dip galvanizing.
3. Lid support members shall be 3/16" minimum thick steel C, L, or T shape, welded to the frame.
4. A 1/4-20 NC × 3/4" S. S. ground stud shall be welded to the bottom of the lid; include (2) S. S. nuts and (2) S. S. flat washers.
5. Bolts and nuts shall be liberally coated with anti-seize compound.
6. Equipment Bonding Jumper shall be #8 AWG min. × 4' of tinned braided copper.
7. The System Identification letters shall be 1/8" line thickness formed by engraving, stamping, or with a S. S. weld bead. See Cover Marking detail. Grind off diamond pattern before forming letters. For System Identification details, see **Standard Specification 9-29.2(4).**
8. When required in the Contract, provide a 10" x 27 1/2", 10 gage divider plate, complete, with fasteners, in each Type 2 Junction Box where specified.
9. When required in Contract, provide a 12" deep extension for each Type 2 Junction Box where specified.
10. See the Standard Specifications for alternative reinforcement and class of concrete.
11. Headed Anchor Shear Studs must be welded to the Steel Cover Lip Plate and wire tied in two places to the vertical Welded Reinforcement Wire when in contact with each other. Wire tie all other Headed Anchor Shear Studs to the horizontal Welded Reinforcement Wire.
12. Lid Bolt Down Attachment Tab provides a method of retrofitting by using a mechanical process in lieu of welding. Attachment Tab shown depicts a typical component arrangement; actual configurations of assembly will vary among manufacturers. See approved manufacturers' shop drawings for specifics.
13. Unless otherwise noted in the plans or approved by the Engineer, Junction Boxes, Cable Vaults, and Pull Boxes shall not be placed within the traveled way or paved shoulders. All Junction Boxes, Cable Vaults, and Pull Boxes placed within the traveled way or paved shoulders shall be Heavy-Duty.
14. Distance between the top of the conduit and the bottom of the Junction Box lid shall be 6" min. to 8" max. for final grade of new construction only. See **Standard Specification 8-20.3(5).** Where adjustments are to be made to existing Junction Boxes, or for interim construction stages during the contract, the limits shall be from 6" min. to 10" max. See **Standard Specification 8-20.3(6).**

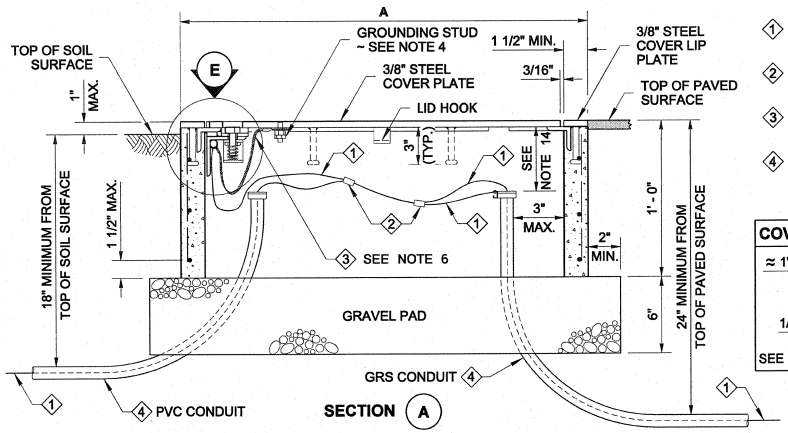

SECTION (A)

① Equipment Grounding Conductor
② Copper Solderless Crimp Connector
③ Equipment Bonding Jumper ~ see note 6
④ See Contract for conduit size and number

COVER MARKING DETAIL

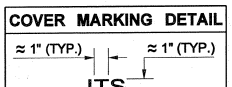

SEE NOTE 7

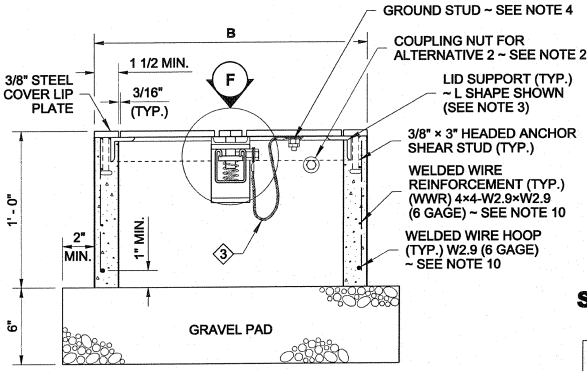

SECTION (B)
(CONDUITS NOT SHOWN)

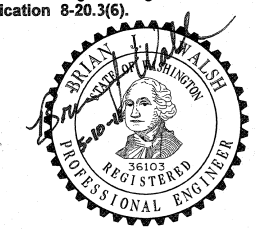

LOCKING LID STANDARD DUTY JUNCTION BOX TYPES 1 & 2

STANDARD PLAN J-40.10-02

SHEET 1 OF 2 SHEETS

APPROVED FOR PUBLICATION

STATE DESIGN ENGINEER — DATE 5/11/11

Washington State Department of Transportation

DRAWN BY: LISA CYFORD

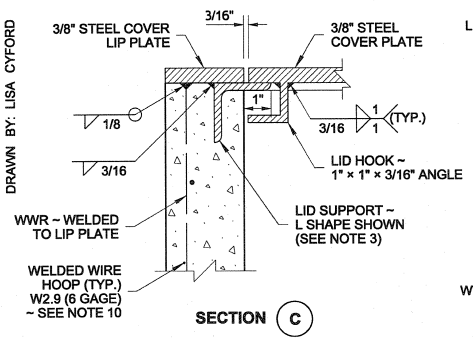

SECTION (C)

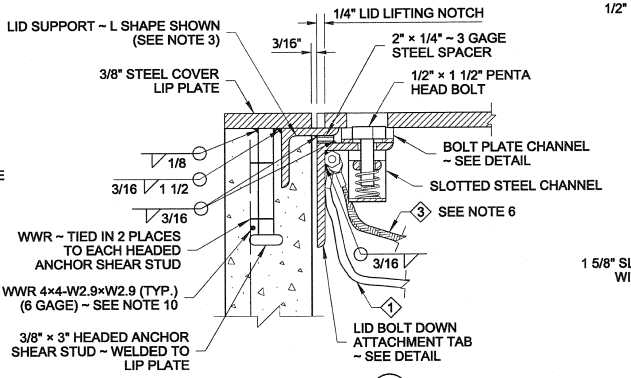

DETAIL (E)
ALTERNATIVE 1 SHOWN

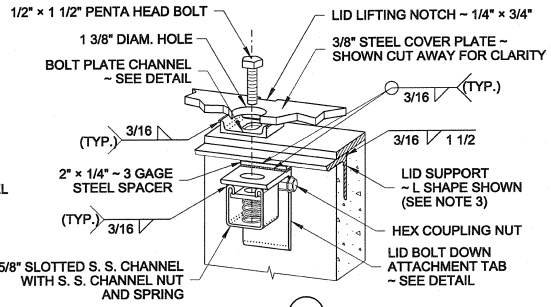

DETAIL (F)
ALTERNATIVE 1 SHOWN
PERSPECTIVE VIEW

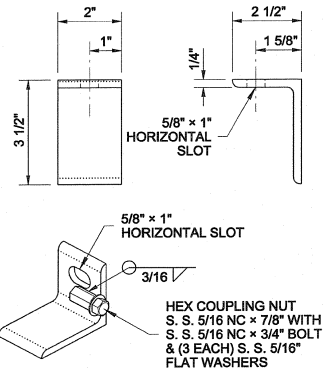

ALTERNATIVE 1
LID BOLT DOWN ATTACHMENT TAB
(SEE NOTE 12)

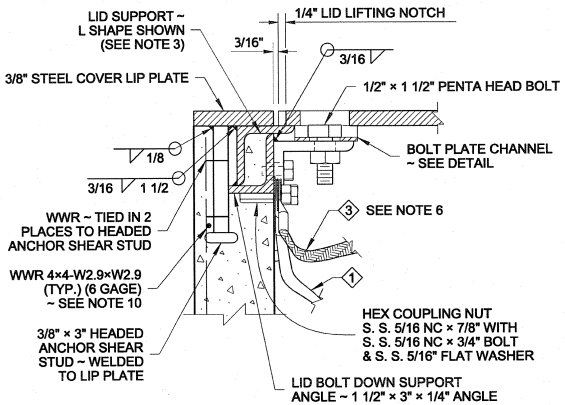

DETAIL (E)
ALTERNATIVE 2 SHOWN

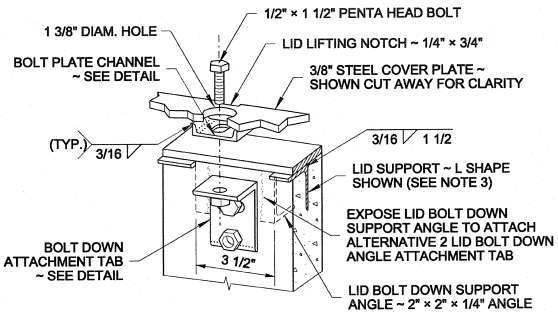

DETAIL (F)
ALTERNATIVE 2 SHOWN
PERSPECTIVE VIEW

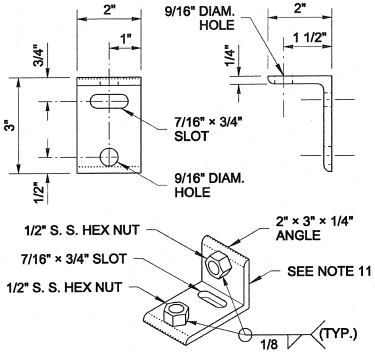

ALTERNATIVE 2
LID BOLT DOWN ATTACHMENT TAB
(SEE NOTE 12)

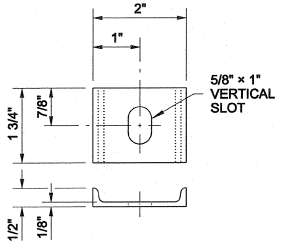

BOLT PLATE CHANNEL

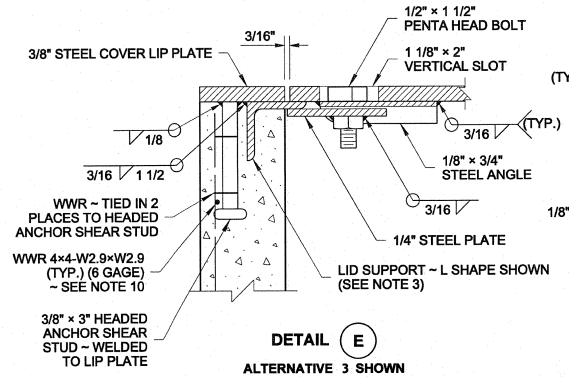

DETAIL (E)
ALTERNATIVE 3 SHOWN

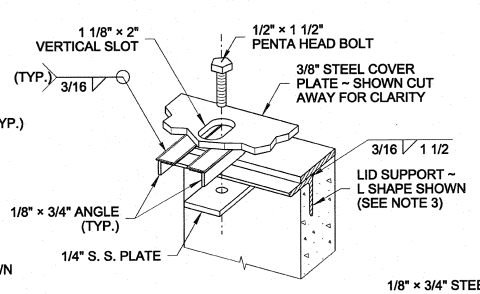

DETAIL (F)
ALTERNATIVE 3 SHOWN
PERSPECTIVE VIEW

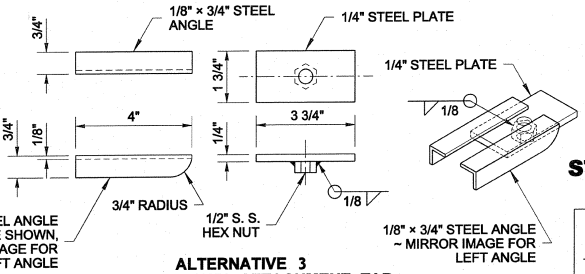

ALTERNATIVE 3
LID BOLT DOWN ATTACHMENT TAB
(SEE NOTE 12)

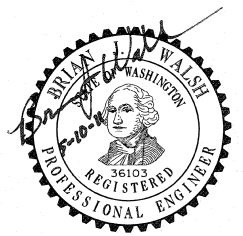

LOCKING LID STANDARD DUTY JUNCTION BOX TYPES 1 & 2

STANDARD PLAN J-40.10-02

SHEET 2 OF 2 SHEETS

APPROVED FOR PUBLICATION

STATE DESIGN ENGINEER — DATE 5/10/11

Washington State Department of Transportation

DRAWN BY: LISA CYFORD

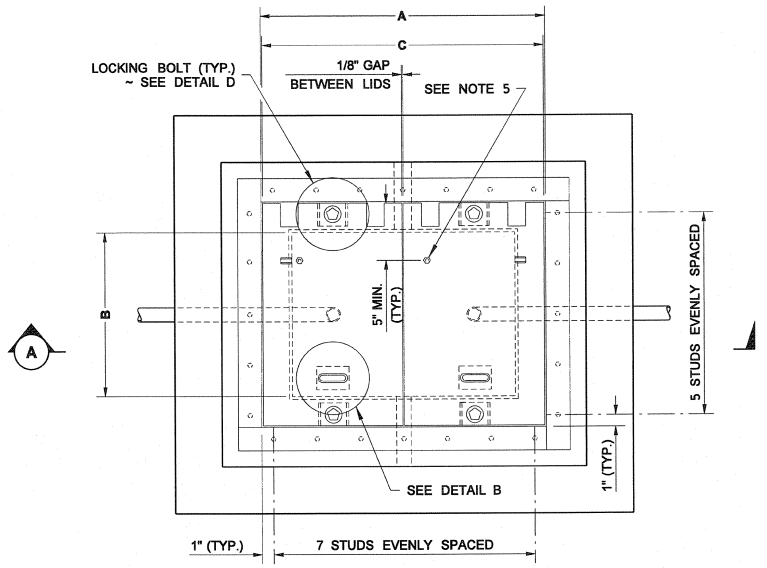

TOP VIEW

JUNCTION BOX DIMENSION TABLE				
MARK	ITEM	BOX TYPE		
		TYPE 4	TYPE 5	TYPE 6
A	BOX INSIDE LENGTH	19"	28"	36"
B	BOX INSIDE WIDTH	14"	17"	24"
C	LID LENGTH	19"	22"	29"
D	LID WIDTH	11 15/16"	16 7/16"	20 7/16"
W	STIFFENER SPACING	4"	5 1/2"	6 3/4"
X	STIFFENER LENGTH	3 1/16"	4 9/16"	5 43/48"
Y	STIFFENER SPACING	6"	7"	9 1/2"
Z	STIFFENER LENGTH	18 1/4"	21 1/4"	28 1/4"
CAPACITY ~ CONDUIT DIAM.		6"	12"	24"

1. Equipment Grounding Conductor
2. Copper Solderless Crimp Connector
3. Equipment Bonding Jumper ~ see note 8
4. See Contract Plans for conduit size and number

NOTES

1. All box dimensions are approximate. Exact configurations vary among manufacturers.
2. All lid thicknesses are minimum. The diamond pattern shall be 3/32" minimum thick.
3. Lid stiffener plates shall bear on frame. Mill to bearing seat and perimeter bar for full even contact after fabrication of frame and lid. Lid and frame units with uneven bearing will be rejected.
4. The installed lid and frame shall fit with full even contact around the perimeter of a junction box after installation. Care shall be taken to prevent debris accumulation on the contact surfaces.
5. A 1/4-20 NC × 3/4" S. S. ground stud shall be welded to the bottom of each lid: include (2) each S. S. nuts and (2) each S. S. flat washers.
6. The hinges shall allow the lids to open 180°.
7. Bolts and nuts shall be liberally coated with anti-seize compound.
8. Connect Equipment Bonding Jumper to ground stud on lid. As an alternative to ground stud connection, the Equipment Bonding Jumper shall be attached to the front face of the hinge pocket with a 5/16-20 NC × 3/4" S. S. bolt, (2) each S. S. nuts, and (2) each S. S. flat washers. Equipment bonding jumper shall be #8 AWG min. × 4' of tinned braided copper.
9. The System Identification letters shall be 1/8" line thickness formed by engraving, stamping, or with an S. S. weld bead. See Cover Marking details. Grind off diamond pattern before forming letters. See **Standard Specification 9-29.2(4)** for details.
10. A 1% tolerance is allowed for all dimensions.
11. See **Standard Specification 9-29.2(1)B** for class of concrete.
12. Unless otherwise noted in the plans or approved by the Engineer, Junction Boxes, Cable Vaults, and Pull Boxes shall not be placed within the traveled way or paved shoulders. All Junction Boxes, Cable Vaults, and Pull Boxes placed within the traveled way or paved shoulders shall be Heavy-Duty. Heavy-Duty Junction Boxes shall not be installed in sidewalks, walkways, and shared use paths.

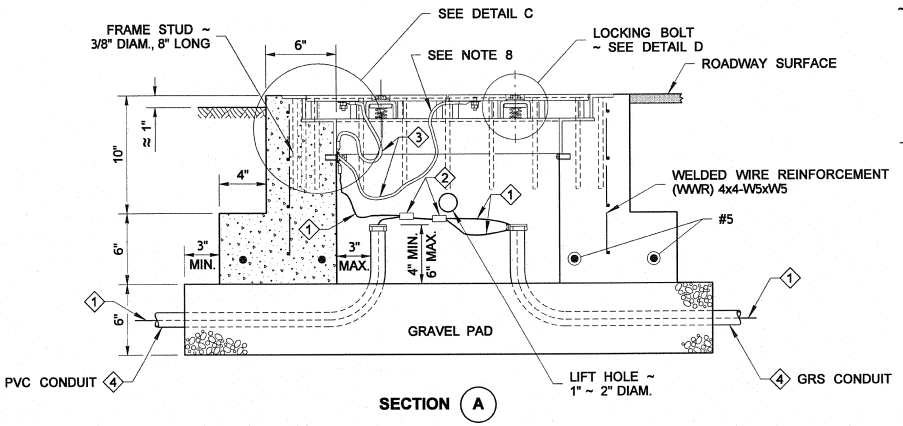

SECTION (A)

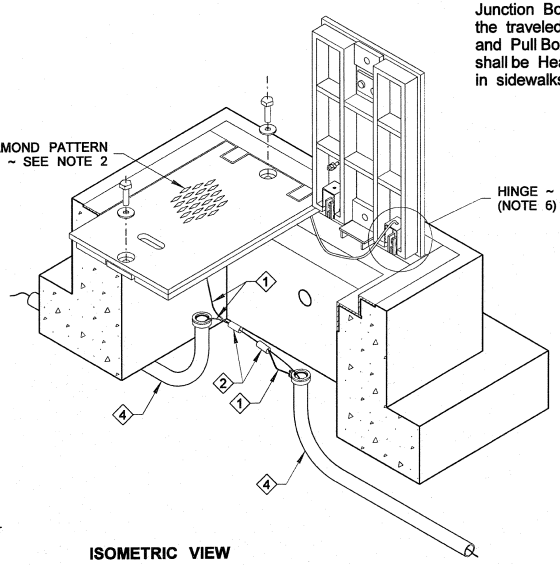

ISOMETRIC VIEW

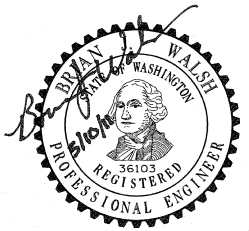

HEAVY-DUTY JUNCTION BOX TYPES 4, 5, & 6

STANDARD PLAN J-40.20-00

SHEET 1 OF 2 SHEETS

APPROVED FOR PUBLICATION

STATE DESIGN ENGINEER — DATE 5/11/11

Washington State Department of Transportation

DRAWN BY: LISA CYFORD

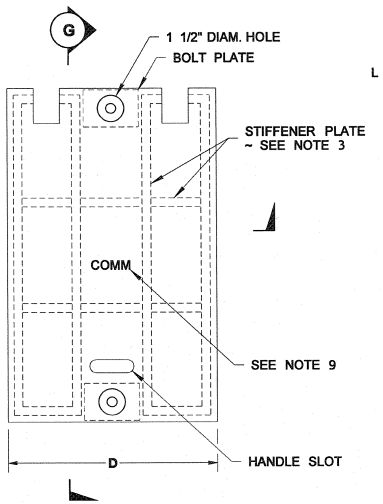

PLAN VIEW
LID

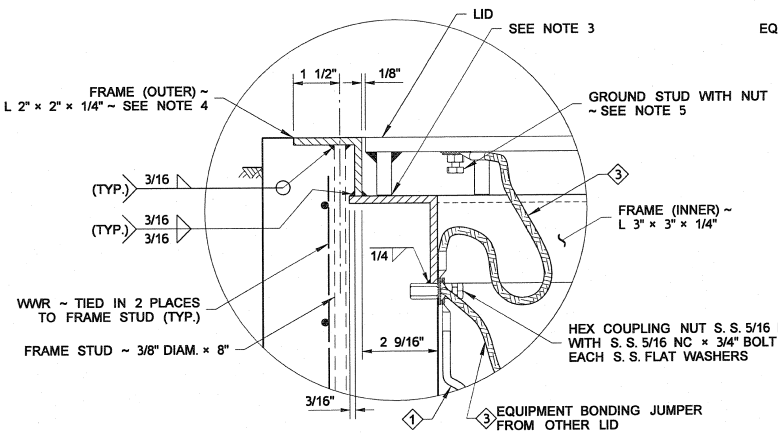

DETAIL C

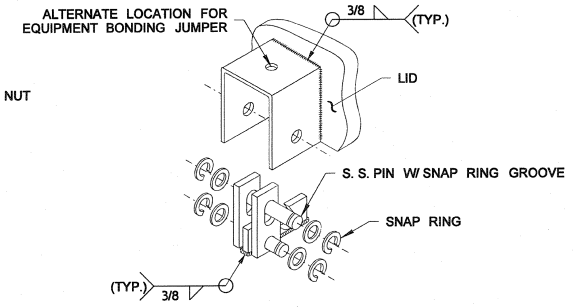

DETAIL E
HINGE

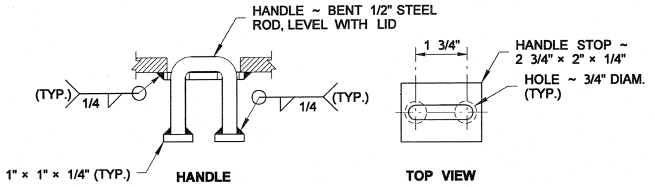

HANDLE **TOP VIEW**

DETAIL B

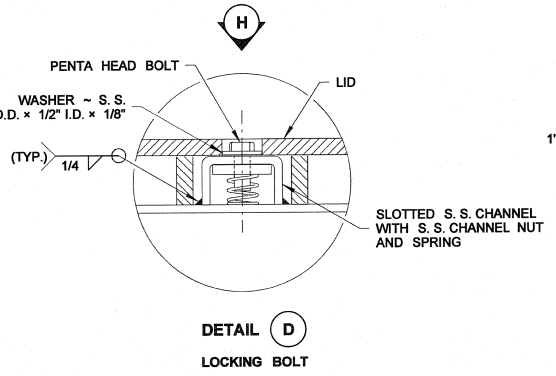

DETAIL D
LOCKING BOLT

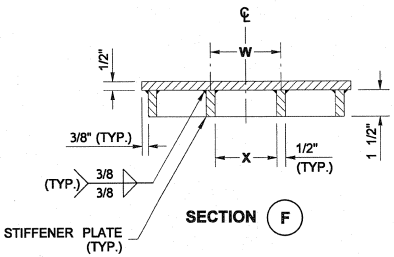

SECTION F

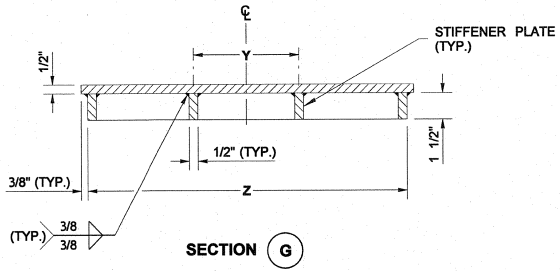

SECTION G

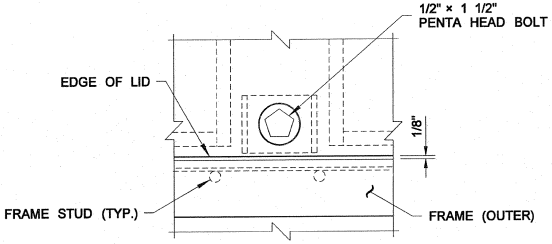

VIEW H

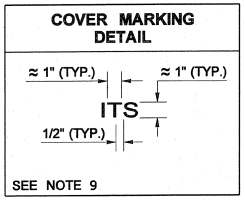

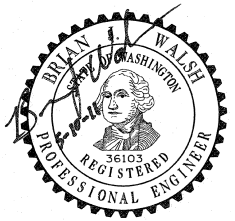

HEAVY-DUTY JUNCTION BOX TYPES 4, 5, & 6

STANDARD PLAN J-40.20-00

SHEET 2 OF 2 SHEETS

APPROVED FOR PUBLICATION

STATE DESIGN ENGINEER — DATE 5/11/11

Washington State Department of Transportation

DRAWN BY: LISA CYFORD

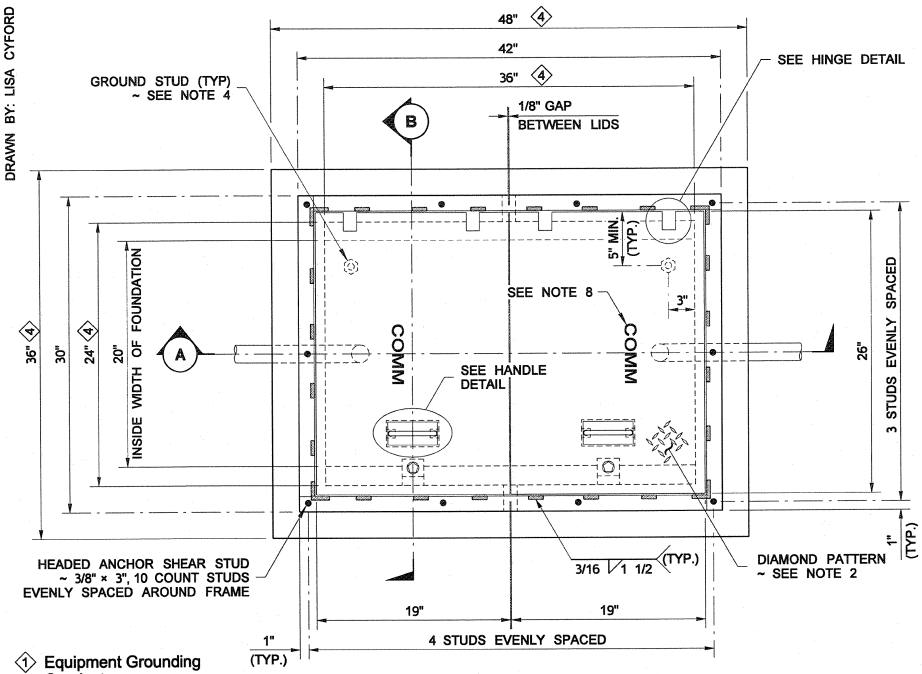

PLAN VIEW

LOCKING LID STANDARD DUTY JUNCTION BOX

CONDUITS NOT SHOWN

COVER MARKING DETAIL
≈ 1" (TYP.) ITS ≈ 1" (TYP.) 1/2" (TYP.)
SEE NOTE 8

NOTES

1. All box dimensions are approximate. Exact configurations vary among manufacturers.
2. Minimum lid thicknesses are shown. The diamond pattern shall be a minimum of 28% of the overall thickness. Junction Boxes installed in sidewalks, walkways, and shared-use paths shall have a slip-resistant coating on the lid and lip cover plate and shall be installed with the surface flush with and matched to the grade of the sidewalk, walkway, or shared-use path. The non-slip lid shall be identified with permanent markings on the underside, indicating the type of surface treatment (see Contract Documents for details) and the year of manufacture. The permanent marking shall be 1/8" inch line thickness formed with a stainless steel weld bead and shall be placed prior to hot-dip galvanizing.
3. Lid support members shall be 3/16" min. thick steel C, L, or T shape, welded to the frame. Exact configurations vary among manufacturers.
4. A 1/4-20 NC × 3/4" S. S. ground stud shall be welded to the bottom of each lid; include (2) S. S. nuts and (2) S. S. flat washers.
5. The hinges shall allow the lids to open 180°.
6. Bolts and nuts shall be liberally coated with anti-seize compound.
7. Connect Equipment Bonding Jumper to ground stud on lid. As an alternative to the ground stud connection, the Equipment Bonding Jumper shall be attached to the front face of the hinge pocket with a 5/16-20 NC × 3/4" S. S. bolt, (2) each S. S. nuts, and (2) each S. S. flat washers. Equipment Bonding Jumper shall be #8 AWG min. × 4' of tinned braided copper.
8. The System Identification letters shall be 1/8" line thickness formed by engraving, stamping, or with a S. S. weld bead. See Cover Marking detail. Grind off diamond pattern before forming letters. See **Standard Specification 9-29.2(4)** for details.
9. See the Standard Specifications for alternative reinforcement and class of concrete.
10. See **Standard Plan J-40.10** for Welded Wire Reinforcement and Headed Anchor Shear Stud attachment details.
11. Capacity ~ conduit diameter = 24"
12. Lid Bolt Down Attachment Tab provides a method of retrofitting by using a mechanical process in lieu of welding. Attachment Tab shown depicts a typical component arrangement; actual configurations of assembly will vary among manufacturers. See approved manufacturers' shop drawing for specifics.
13. Unless otherwise noted in the plans or approved by the Engineer, Junction Boxes, Cable Vaults and Pull Boxes shall not be placed within the traveled way or paved shoulders. All Junction Boxes, Cable Vaults, and Pull Boxes placed within the traveled way or paved shoulders shall be Heavy-Duty.
14. Distance between the top of the conduit and the bottom of the Junction Box lid shall be 6" min. to 8" max. for final grade of new construction only. See **Standard Specification 8-20.3(5).** Where adjustments are to be made to existing Junction Boxes, or for interim construction stages during the contract, the limits shall be from 6" min. to 10" max. See **Standard Specification 8-20.3(6).**

1. Equipment Grounding Conductor
2. Copper Solderless Crimp Connector
3. Equipment Bonding Jumper
4. Foundation
5. See Contract Plan for conduit size and number

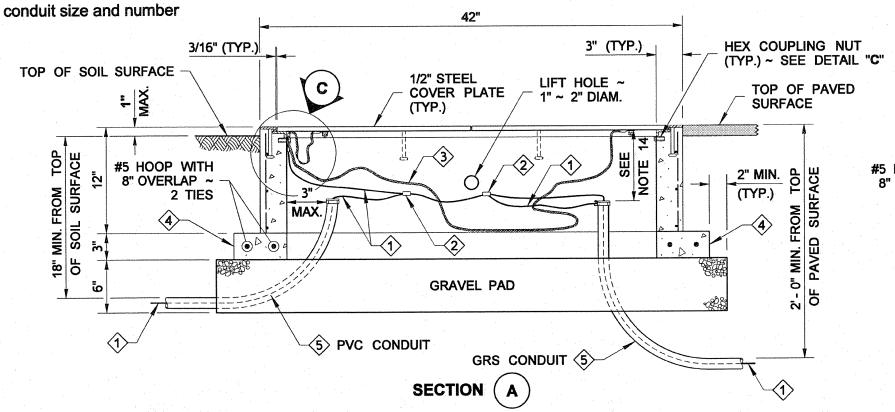

SECTION (A)

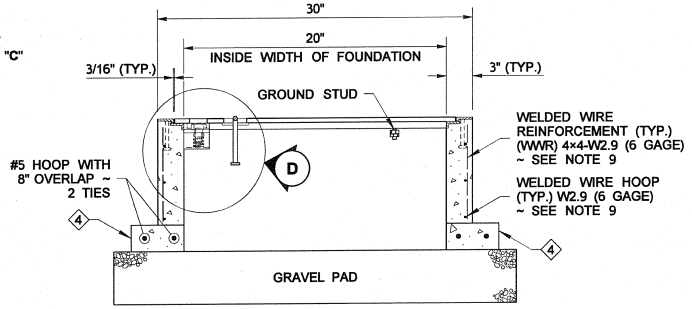

SECTION (B)

CONDUITS NOT SHOWN

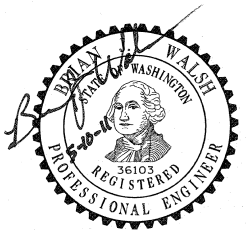

LOCKING LID STANDARD DUTY JUNCTION BOX TYPE 8

STANDARD PLAN J-40.30-02

SHEET 1 OF 2 SHEETS

APPROVED FOR PUBLICATION

STATE DESIGN ENGINEER — DATE 5/10/14

Washington State Department of Transportation

DRAWN BY: LISA CYFORD

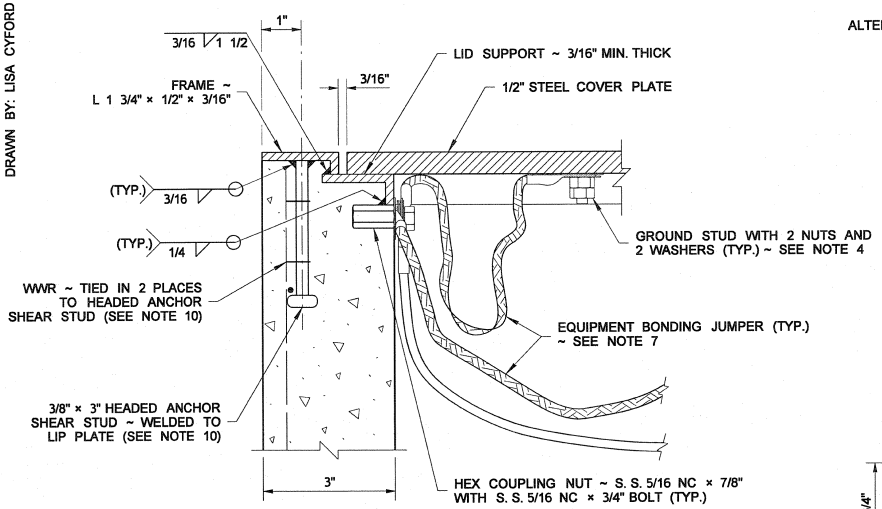

DETAIL C

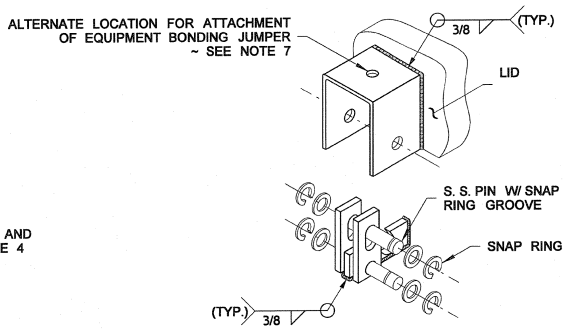

HINGE DETAIL

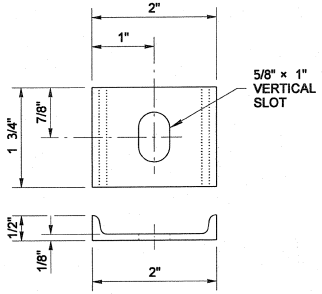

BOLT PLATE CHANNEL

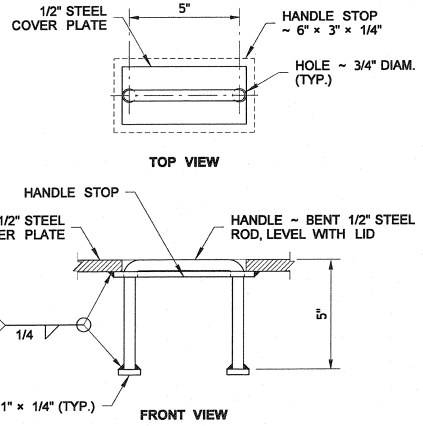

HANDLE DETAIL

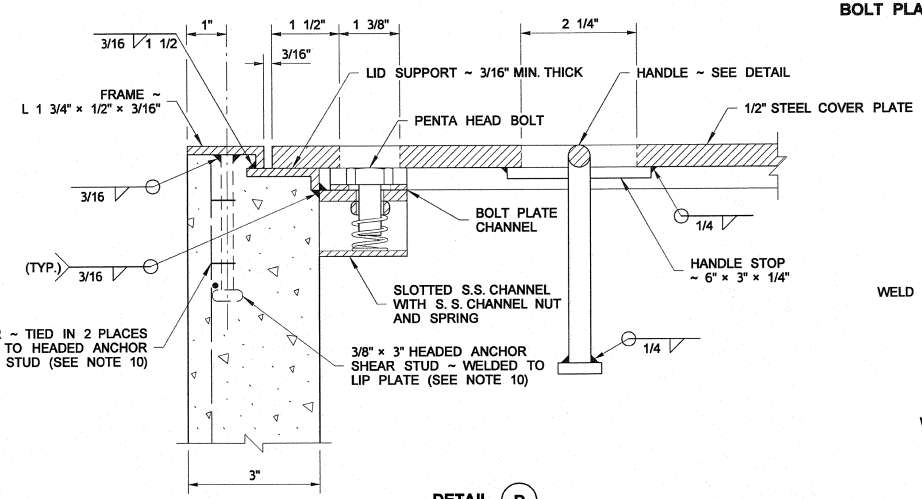

DETAIL D

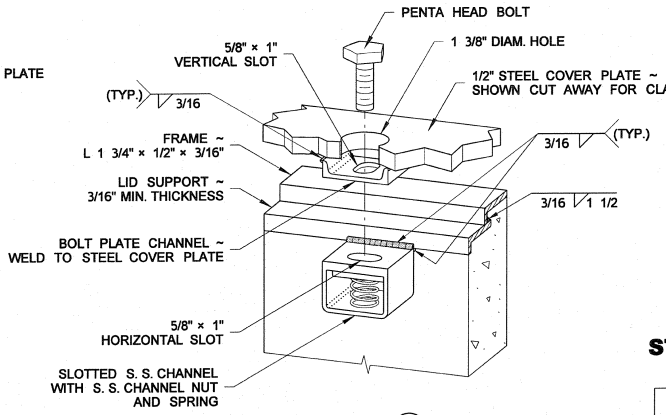

DETAIL D
ISOMETRIC VIEW

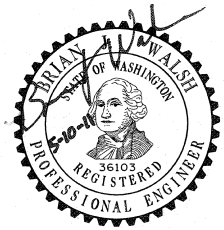

LOCKING LID STANDARD DUTY JUNCTION BOX TYPE 8

STANDARD PLAN J-40.30-02

SHEET 2 OF 2 SHEETS

APPROVED FOR PUBLICATION

STATE DESIGN ENGINEER — DATE 5/11/11

Washington State Department of Transportation

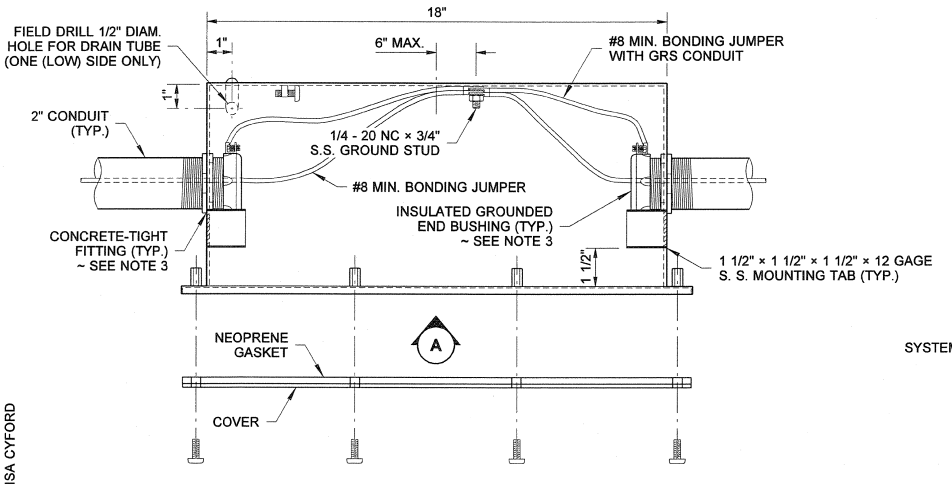

PLAN VIEW

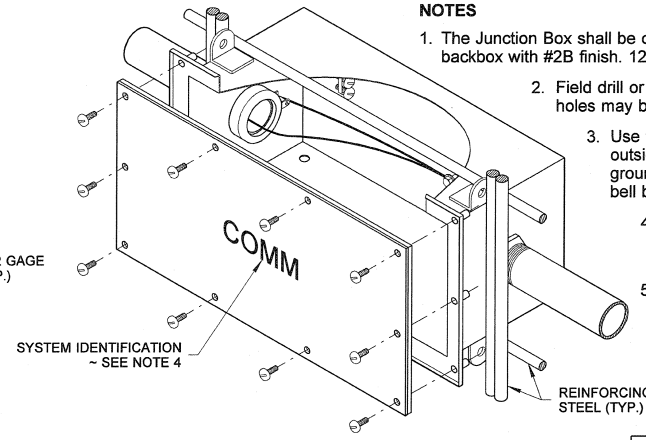

ISOMETRIC VIEW

SHOWN MOUNTED IN REINFORCING STEEL

NOTES

1. The Junction Box shall be of Type 304 stainless steel. welded seam construction: 12 gage backbox with #2B finish. 12 gage cover with #4 finish, and 12 gage mounting tabs.
2. Field drill or punch holes in the center of Junction Box ends. Additional holes may be required. **See Section B.**
3. Use fittings that are UL listed and CSA certified concrete tight on the outside of the Junction Box conduit connection. Use an insulated. grounded end bushing on the inside for GRS conduit. Use an end bell bushing on the inside for PVC conduit.
4. The System Identification letters shall be 1/16" line thickness formed by engraving, stamping, or with a stainless steel weld bead. **See System Identification Detail.**
5. Liberally coat the threads of the cover fasteners with anti-seize compound during construction & before final closure.
6. Details show for box installation in stationary forms.
7. Conduit Capacity = 8"
8. Conduits shall enter Junction Box from ends only.

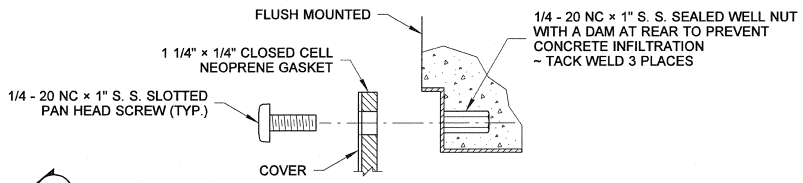

DETAIL C

SYSTEM IDENTIFICATION DETAIL

≈ 1" (TYP.) ITS ≈ 1" (TYP.)

INTELLIGENT TRANSPORTATION SYSTEM

COMM
COMMUNICATION SYSTEM

LT
LIGHTING SYSTEM

TS
TRAFFIC SIGNAL SYSTEM

TEL
TELEPHONE SYSTEM

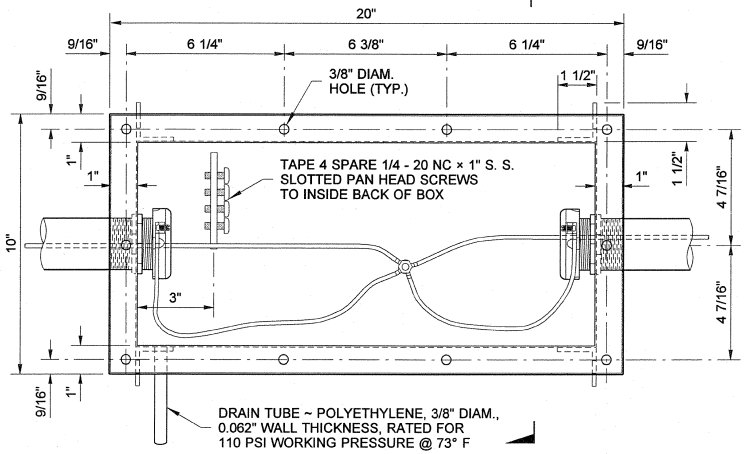

VIEW A

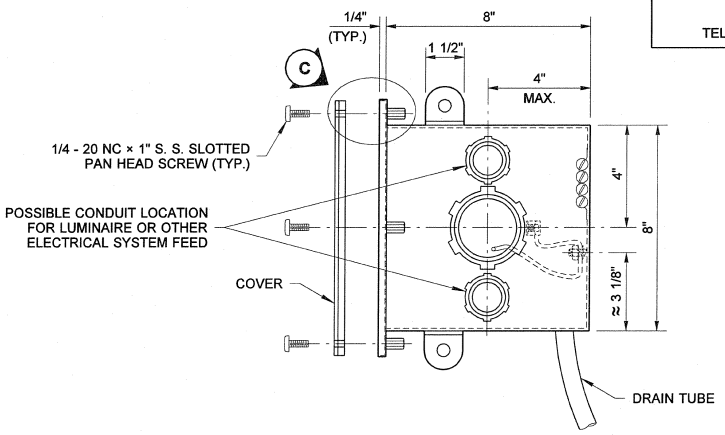

SECTION B

DRAWN BY: LISA CYFORD

THEODORE J. TREPANIER
STATE OF WASHINGTON
25335
REGISTERED PROFESSIONAL ENGINEER
4/13/10

NEMA 4X NON-ADJUSTABLE JUNCTION BOX

STANDARD PLAN J-40.36-00

SHEET 1 OF 1 SHEET

APPROVED FOR PUBLICATION

STATE DESIGN ENGINEER — DATE 6/3/10

Washington State Department of Transportation

DRAWN BY: LISA CYFORD

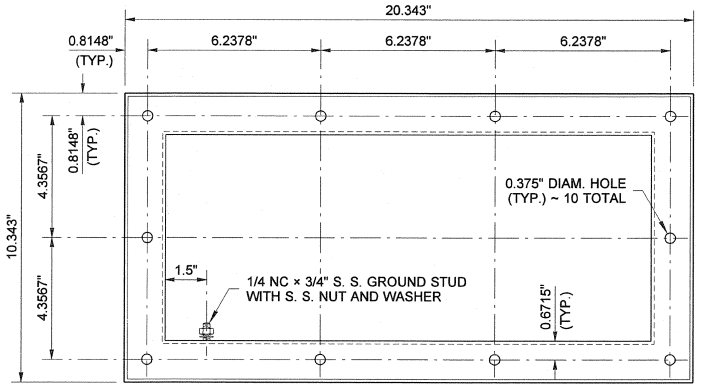

FRONT VIEW

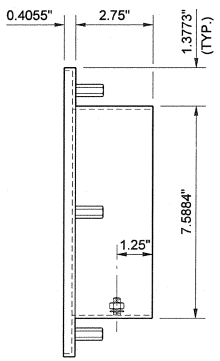

SIDE VIEW

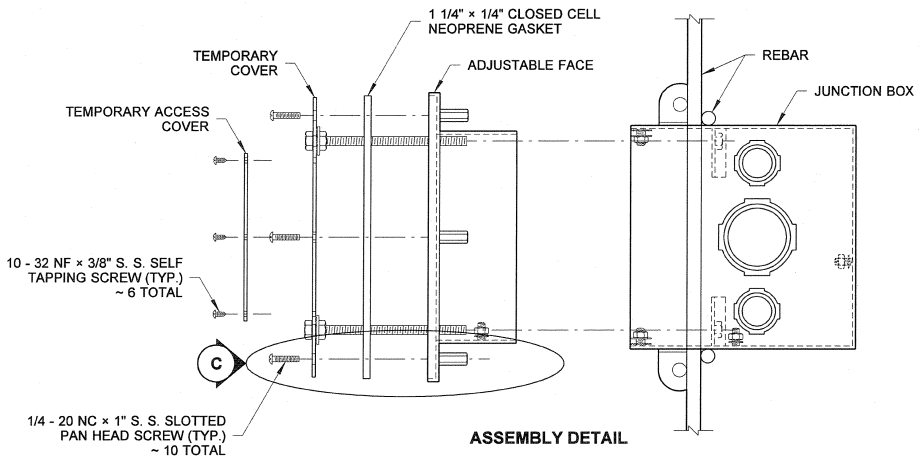

ASSEMBLY DETAIL

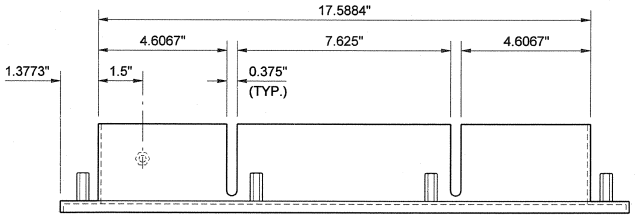

TOP VIEW

ADJUSTABLE FACE

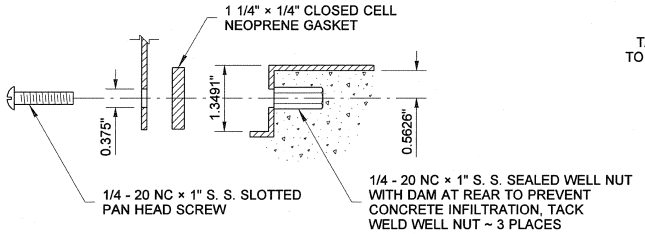

DETAIL (C)

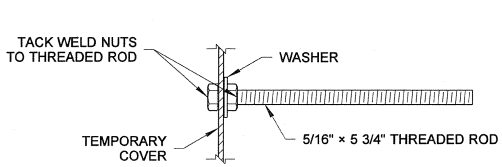

ADJUSTMENT BOLT DETAIL

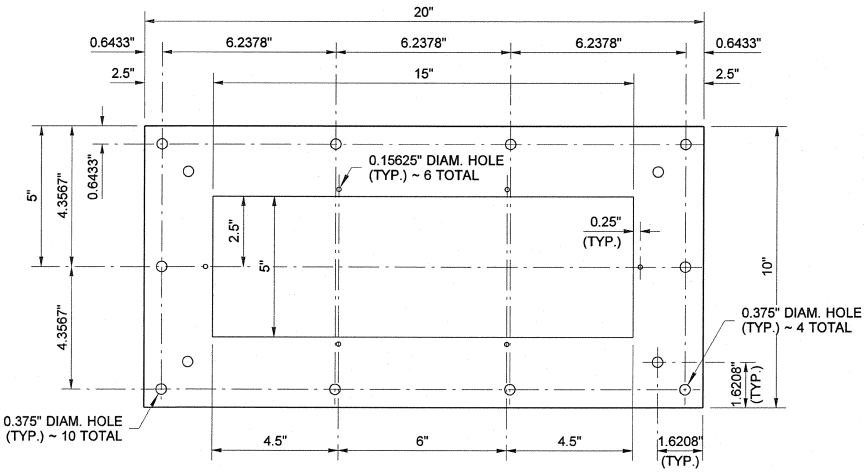

FRONT VIEW

TEMPORARY COVER

12 GAGE STEEL

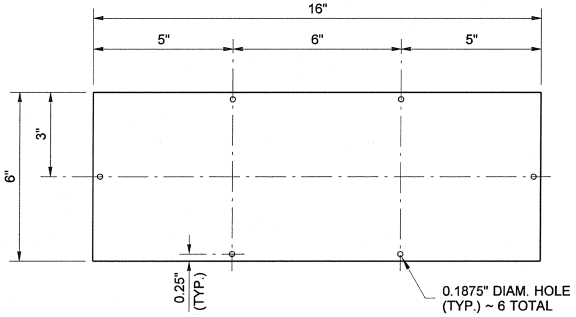

FRONT VIEW

TEMPORARY ACCESS COVER

12 GAGE STEEL

THEODORE J. TREPANIER
STATE OF WASHINGTON
25335
REGISTERED
PROFESSIONAL ENGINEER

4/13/10

NEMA 3R ADJUSTABLE FLUSH MOUNT JUNCTION BOX

STANDARD PLAN J-40.37-00

SHEET 2 OF 2 SHEETS

APPROVED FOR PUBLICATION

STATE DESIGN ENGINEER — DATE 4/13/10

Washington State Department of Transportation

DRAWN BY: LISA CYFORD

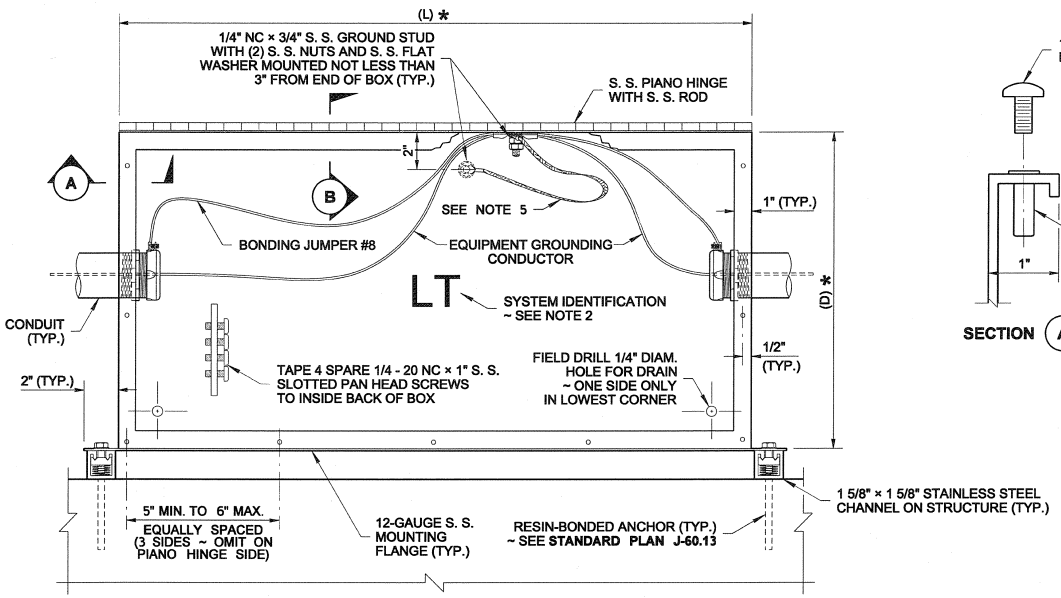

PLAN VIEW

TYPE 304 STAINLESS STEEL, WELDED SEAM CONSTRUCTION
12-GAUGE BACKBOX WITH #4 FINISH

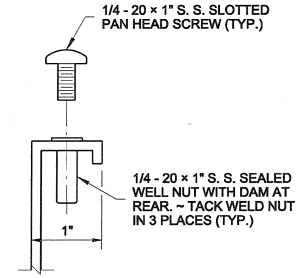

SECTION (A)

* See Contract Plans for L, W, and D dimensions.

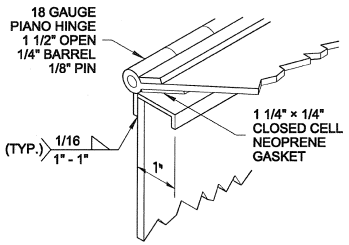

SECTION (B)

ISOMETRIC VIEW

NOTES

1. Drilling through reinforcing steel is not allowed. If steel is hit while drilling, the location shall be moved and the abandoned hole filled with grout conforming to **Standard Specification 6-02.3(20)**. There shall be a minimum of 3" edge distance to the centerline of anchor holes in concrete. Mount the stainless steel support using an approved resin-bonded anchor system, installed per manufacturers' recommendation. Resin bonded anchors shall be stainless steel and shall be of 3/8" diameter. (Expansion Anchors are not allowed).
2. The System Identification letters on the box lid shall be 1/8" line thickness formed by engraving, stamping, or with a S. S. weld bead. See System Identification Detail and **Standard Specifications 9-29.2(4)**.
3. See **Standard Plan J-60.13** for Stainless Steel Channel details.
4. Size Junction Box per **NEC 314.28**, with the exception that for all length and width calculations, use the 8 times multiplier instead of the 6 times.
5. Equipment Bonding Jumper shall be #8 AWG (min.) × 1 foot of tinned, braided copper.

SYSTEM IDENTIFICATION DETAIL

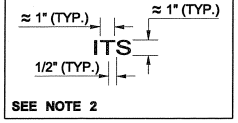

SEE NOTE 2

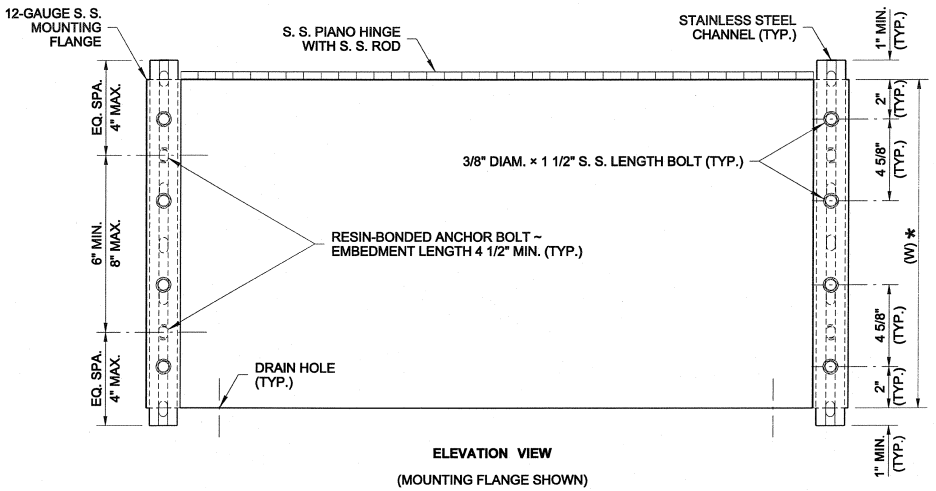

ELEVATION VIEW

(MOUNTING FLANGE SHOWN)

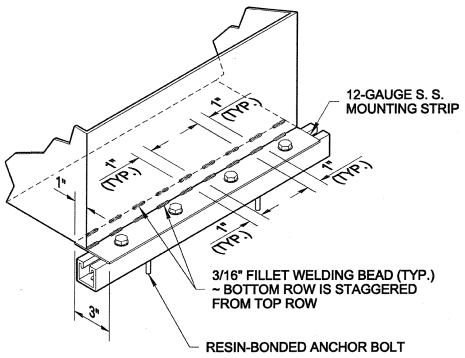

ISOMETRIC VIEW

(MOUNTING STRIP SHOWN)

JOHN C. NISBET
STATE OF WASHINGTON
29115
REGISTERED
PROFESSIONAL ENGINEER

TOP ENTRY NEMA 4X SURFACE-MOUNT JUNCTION BOX

STANDARD PLAN J-40.38-00

SHEET 1 OF 1 SHEET

APPROVED FOR PUBLICATION

STATE DESIGN ENGINEER — DATE

Washington State Department of Transportation

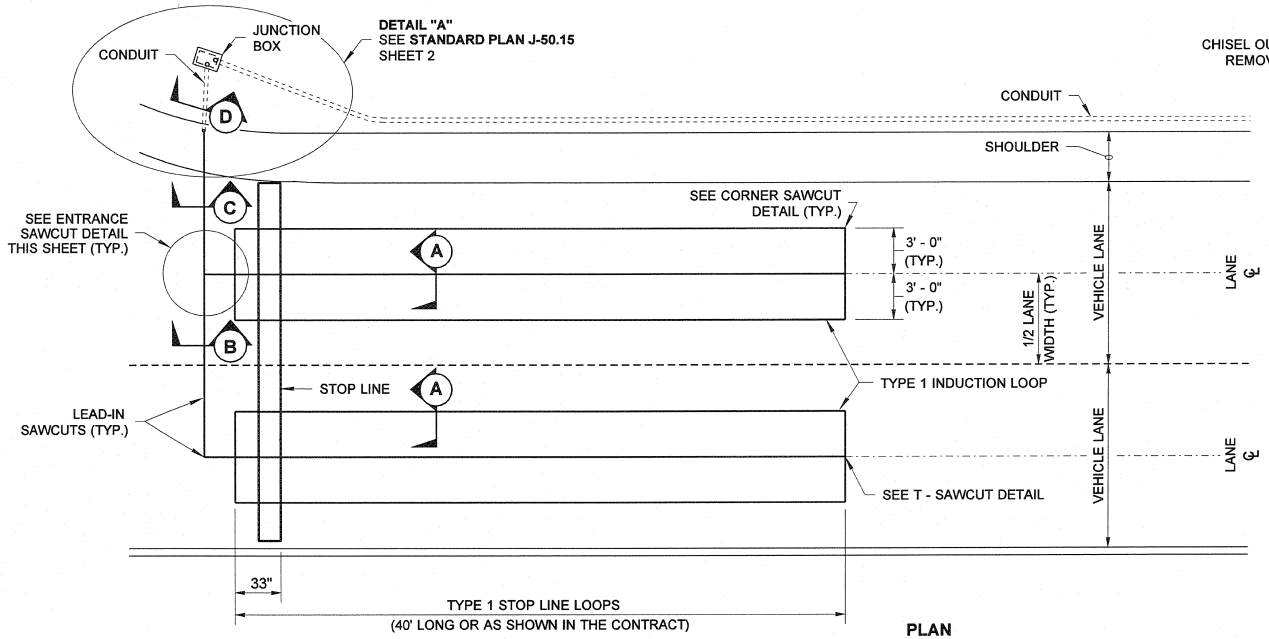

PLAN

TYPE 1 STOP LINE LOOPS

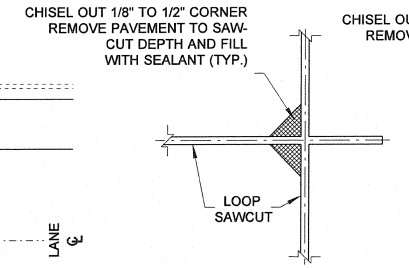

T - SAWCUT DETAIL

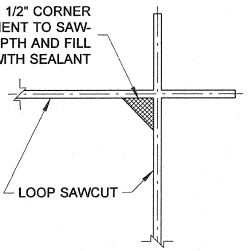

CORNER SAWCUT DETAIL

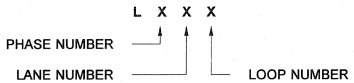

LOOP NUMBER MARKING DETAIL

NOTES

1. For Installation Notes and Details see **Standard Plan J-50.15.**
2. For Sections A, B, C, and D, see **Standard Plan J-50.15.**

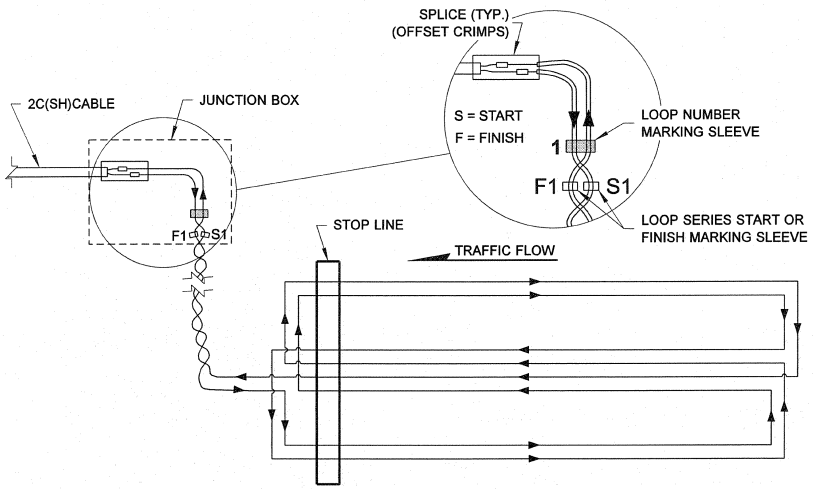

TYPE 1 STOP LINE LOOP WIRING DIAGRAM

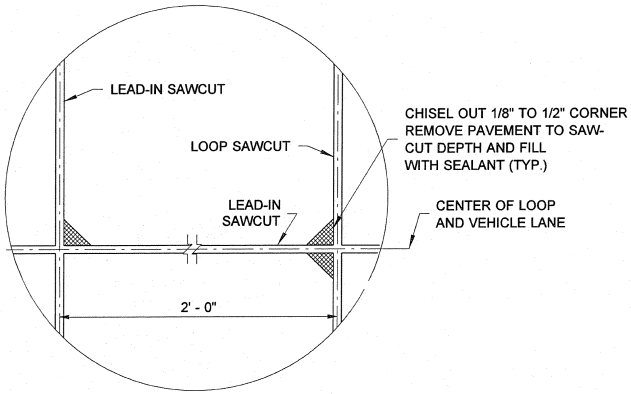

ENTRANCE SAWCUT DETAIL

JOHN C. NISBET
STATE OF WASHINGTON
29115
REGISTERED
PROFESSIONAL ENGINEER
6/02/2011

TYPE 1 INDUCTION LOOP

STANDARD PLAN J-50.10-00

SHEET 1 OF 1 SHEET

APPROVED FOR PUBLICATION

STATE DESIGN ENGINEER — DATE 6/3/11

Washington State Department of Transportation

DRAWN BY: FERN LIDDELL

DRAWN BY: FERN LIDDELL

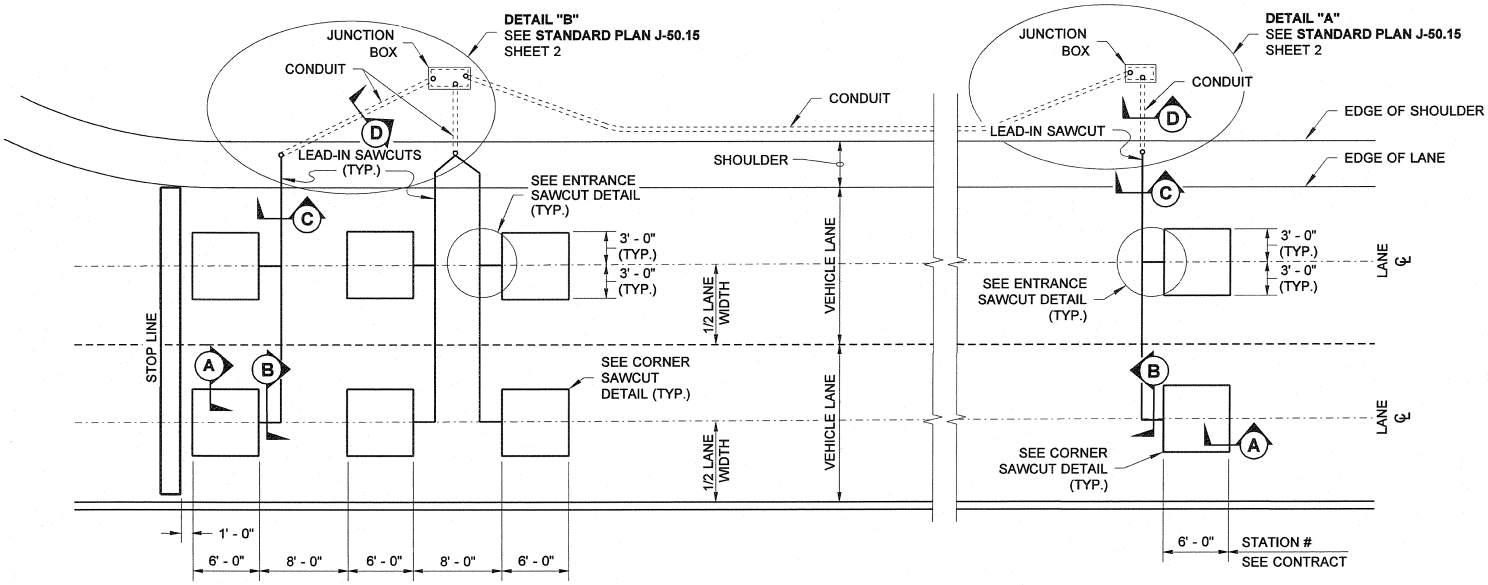

TYPE 2 STOP LINE LOOPS

PLAN

TYPE 2 ADVANCE LOOPS

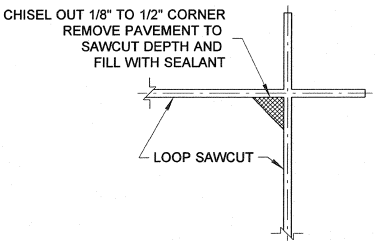

CORNER SAWCUT DETAIL

NOTES

1. For Installation Notes and Details see **Standard Plan J-50.15.**
2. For Sections A, B, C, and D, see **Standard Plan J-50.15.**
3. All of the loop lead-in wires shall return to the Junction Box.
4. For Splice Detail, see **Standard Plan J-50.15.**
5. For additional Induction Loop details, see **Standard Plan J-50.15.**

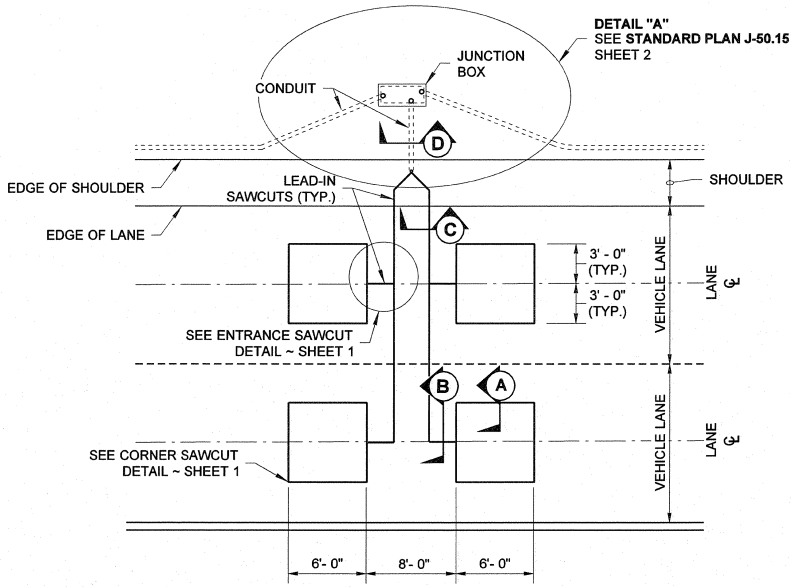

TYPE 2 SAMPLING LOOPS

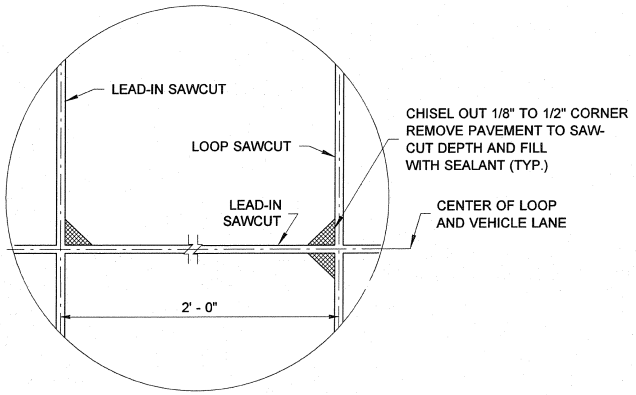

ENTRANCE SAWCUT DETAIL

JOHN C. NISBET
STATE OF WASHINGTON
29115
REGISTERED
PROFESSIONAL ENGINEER
6/02/2011

TYPE 2 INDUCTION LOOP

STANDARD PLAN J-50.11-00

SHEET 1 OF 2 SHEETS

APPROVED FOR PUBLICATION

STATE DESIGN ENGINEER — DATE 6/3/11

Washington State Department of Transportation

DRAWN BY: FERN LIDDELL

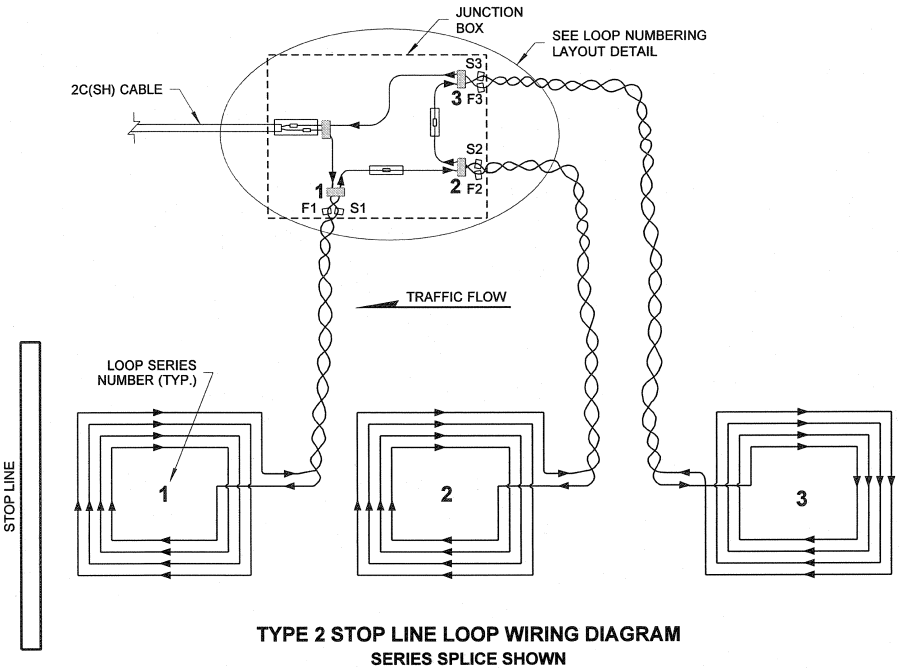

TYPE 2 STOP LINE LOOP WIRING DIAGRAM
SERIES SPLICE SHOWN

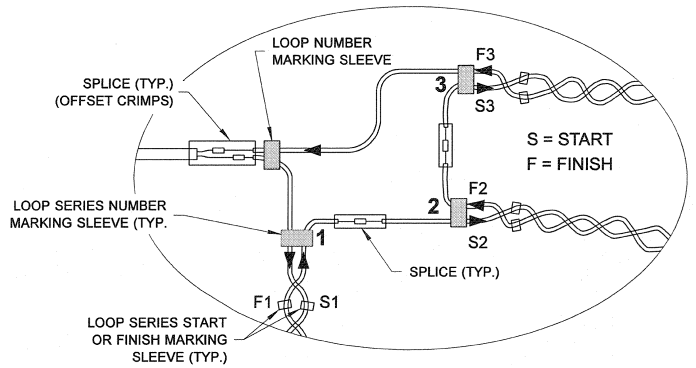

LOOP NUMBERING LAYOUT DETAIL

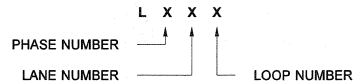

LOOP NUMBER MARKING DETAIL

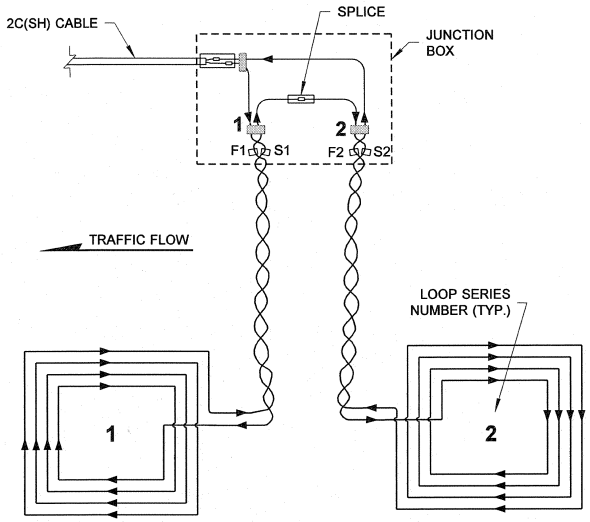

TYPE 2 SAMPLING LOOP WIRING DIAGRAM
SERIES SPLICE SHOWN

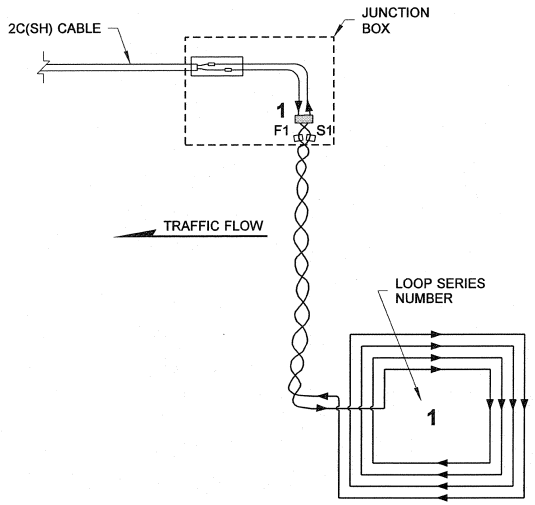

TYPE 2 ADVANCE LOOP WIRING DIAGRAM

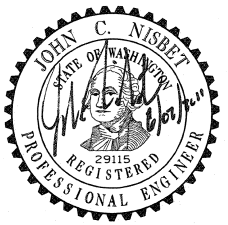

TYPE 2 INDUCTION LOOP

STANDARD PLAN J-50.11-00

SHEET 2 OF 2 SHEETS

APPROVED FOR PUBLICATION

6/3/11

STATE DESIGN ENGINEER — DATE

Washington State Department of Transportation

DRAWN BY: FERN LIDDELL

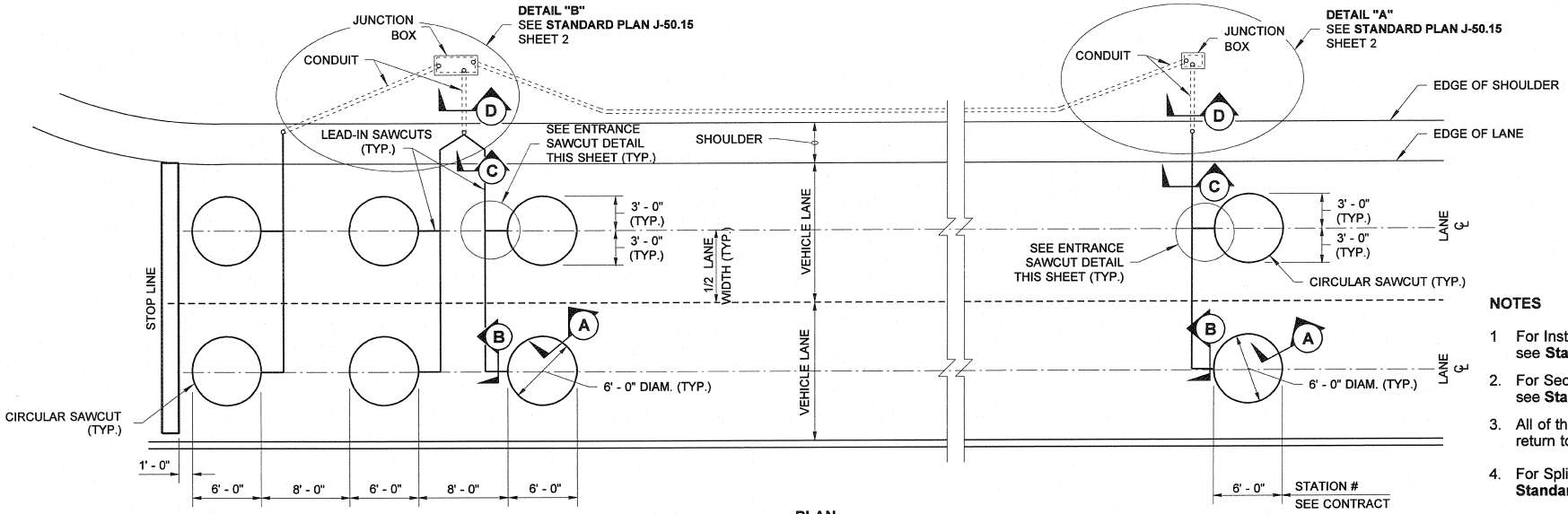

PLAN

TYPE 3 STOP LINE LOOPS

TYPE 3 ADVANCE LOOPS

NOTES

1. For Installation Notes and Details see **Standard Plan J-50.15.**
2. For Sections A, B, C, and D, see **Standard Plan J-50.15.**
3. All of the loop lead-in wires shall return to the Junction Box.
4. For Splice Detail, see **Standard Plan J-50.15.**
5. For Loop numbering Layout Details, see **sheet 3.**
6. For additional Induction Loop Details, see **Standard Plan J-50.15.**

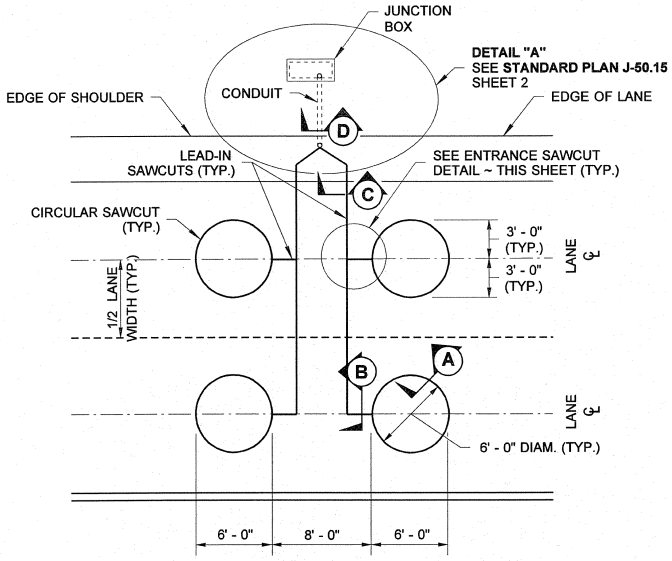

PLAN

TYPE 3 SAMPLING LOOPS

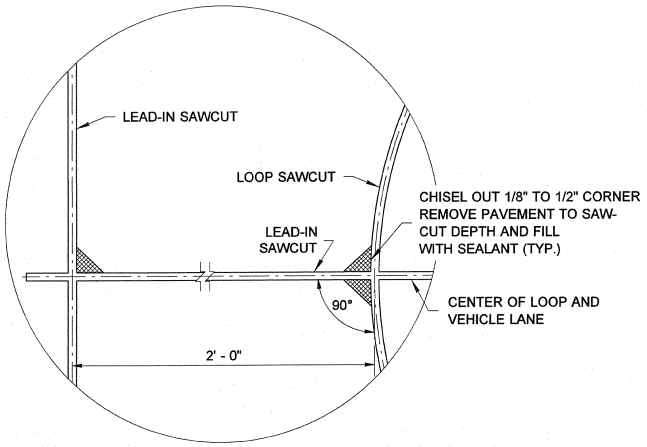

ENTRANCE SAWCUT DETAIL

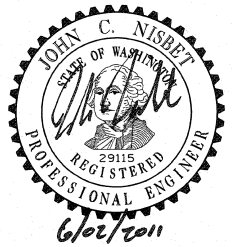

TYPE 3 INDUCTION LOOP

STANDARD PLAN J-50.12-00

SHEET 1 OF 3 SHEETS

APPROVED FOR PUBLICATION

STATE DESIGN ENGINEER — DATE 6/3/11

Washington State Department of Transportation

DRAWN BY: FERN LIDDELL

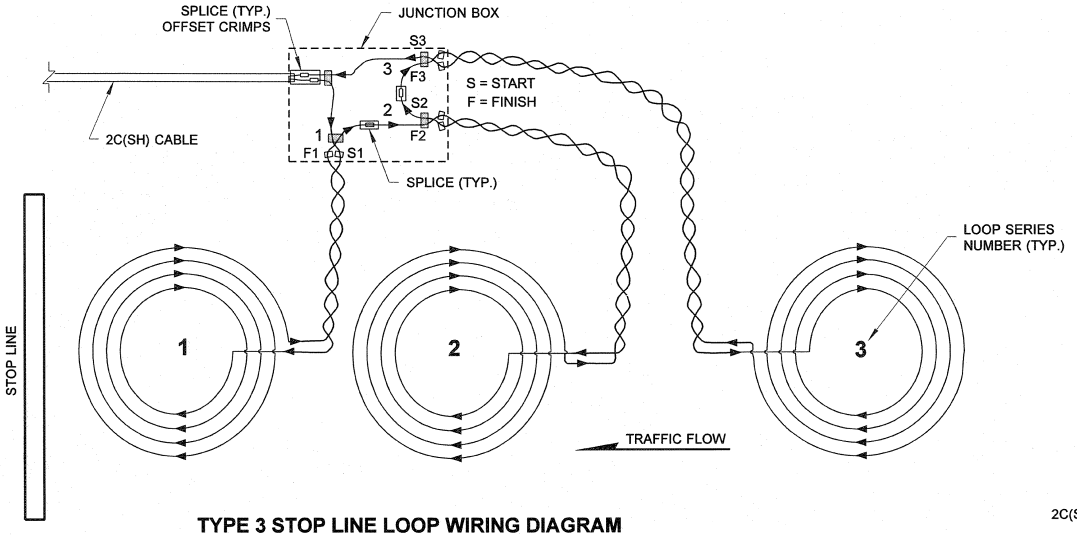

TYPE 3 STOP LINE LOOP WIRING DIAGRAM

SERIES SPLICE SHOWN

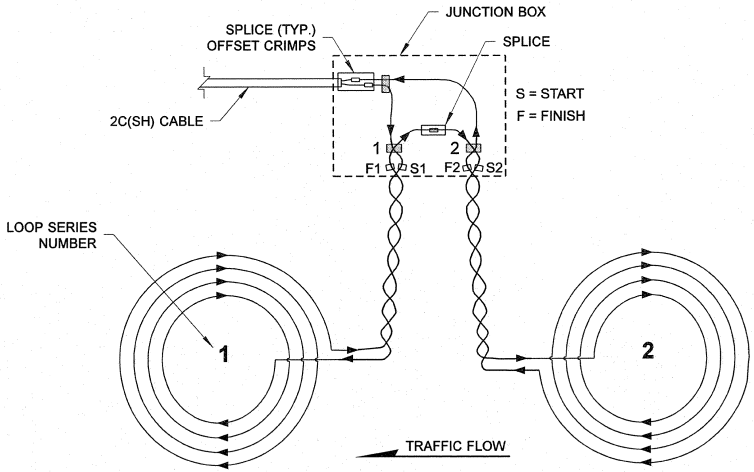

TYPE 3 SAMPLING LOOP WIRING DIAGRAM

SERIES SPLICE SHOWN

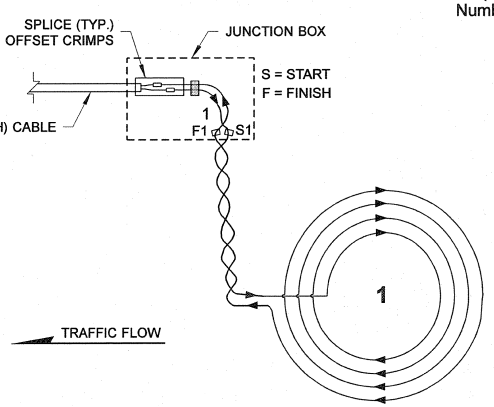

TYPE 3 ADVANCE
LOOP WIRING DIAGRAM

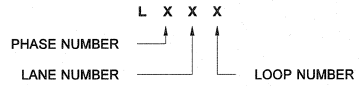

LOOP NUMBER MARKING DETAIL

NOTES

Loop numbering layout will be similar to Loop Numbering Layout Detail, Sheet 3

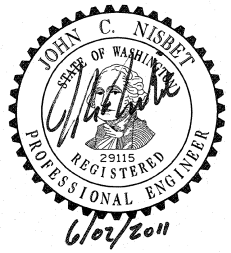

TYPE 3 INDUCTION LOOP

STANDARD PLAN J-50.12-00

SHEET 2 OF 3 SHEETS

APPROVED FOR PUBLICATION

STATE DESIGN ENGINEER — DATE 6/3/11

Washington State Department of Transportation

DRAWN BY: FERN LIDDELL

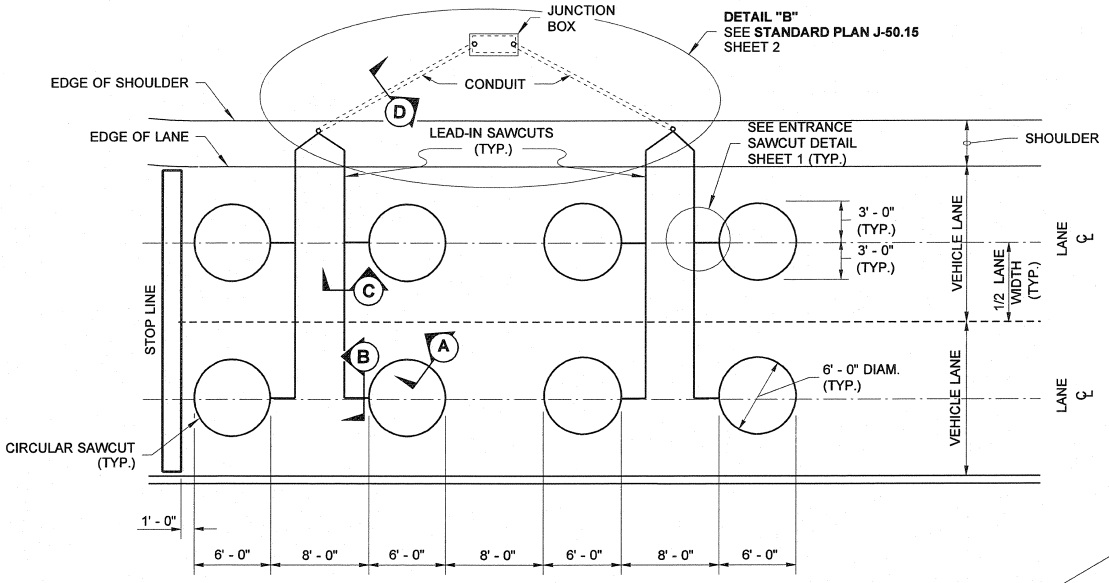

PLAN

TYPE 3A STOP LINE LOOPS

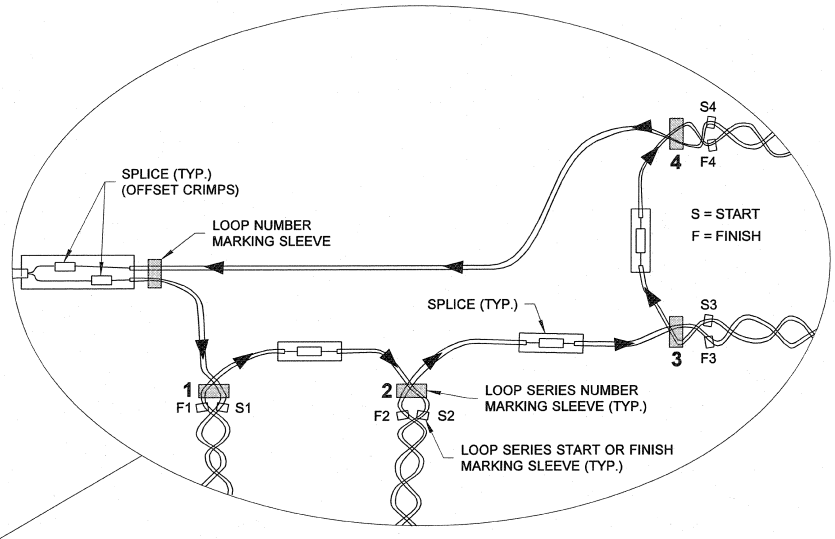

LOOP NUMBERING LAYOUT DETAIL

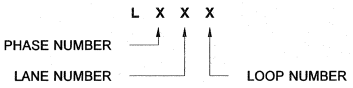

LOOP NUMBER MARKING DETAIL

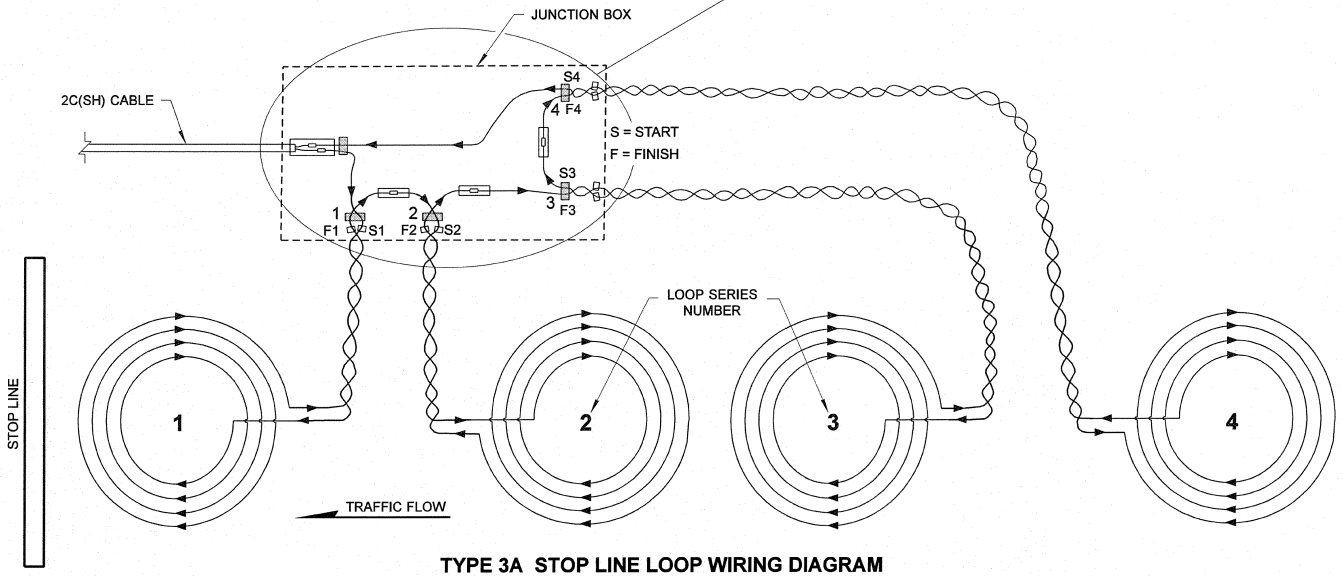

TYPE 3A STOP LINE LOOP WIRING DIAGRAM

SERIES SPLICE SHOWN

JOHN C. NISBET
STATE OF WASHINGTON
29115
REGISTERED
PROFESSIONAL ENGINEER
6/02/2011

TYPE 3 INDUCTION LOOP

STANDARD PLAN J-50.12-00

SHEET 3 OF 3 SHEETS

APPROVED FOR PUBLICATION

STATE DESIGN ENGINEER — DATE 6/3/11

Washington State Department of Transportation

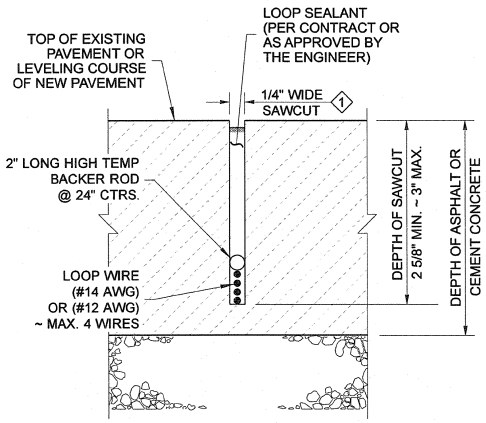

SECTION A

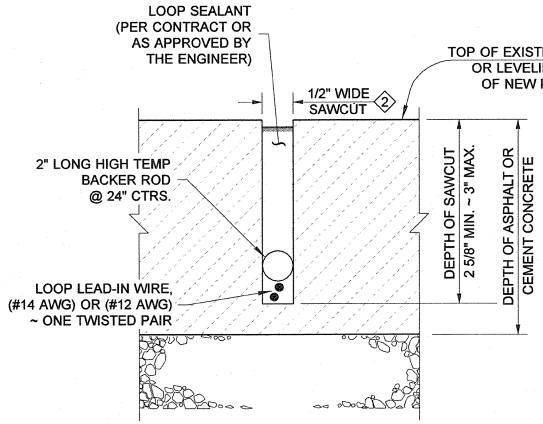

SECTION B

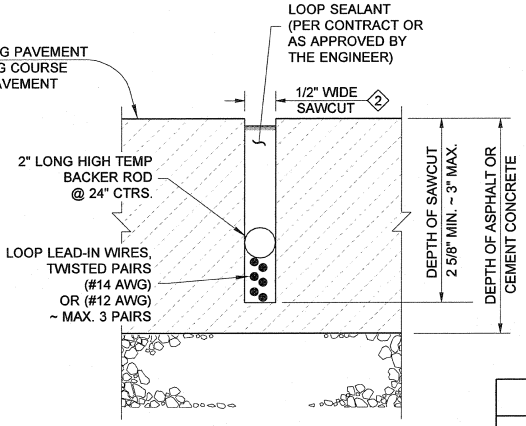

SECTION C

NOTES

1. Fill the conduit trench to the bottom of the existing or new surfacing with CSTC, sand or controlled density fill. See **Standard Specifications Section 2-09.3(1)E**.
2. Minor Regional variations are allowed in the soft pocket closure. Consult with the Engineer or see the Contract for additional requirements.
3. Conductors shall be snug to the bottom of the sawcut. High temperature backer rod shall be snug to the conductors and sides of cut.
4. Fill the sealant to within 1/8" to 3/16" from top of saw cut.
5. See **Standard Plan J-40.10** for additional Junction Box details.

PVC CONDUIT SIZING TABLE					
LOOP LEAD PAIRS	1 - 4	5 - 10	11 - 16	17 - 22	23 - 28
NUMBER AND SIZE OF CONDUITS	1 - 2"	2 - 2"	3 - 2"	4 - 2"	3 - 3"

1 ADD 1/16" TO THE SAWCUT FOR IMSA 51 - 7 CONDUCTORS

2 ADD 1/8" TO THE SAWCUT FOR IMSA 51 - 7 CONDUCTORS

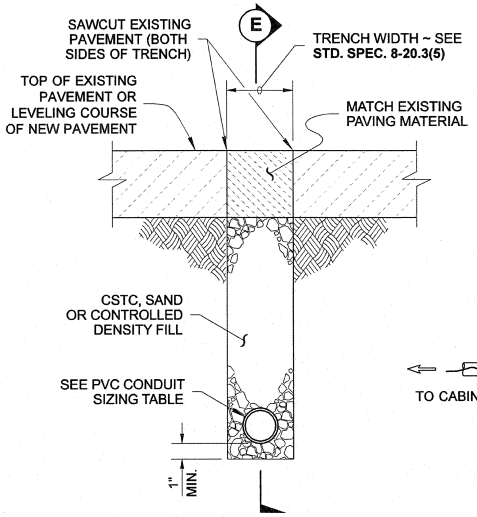

SECTION D

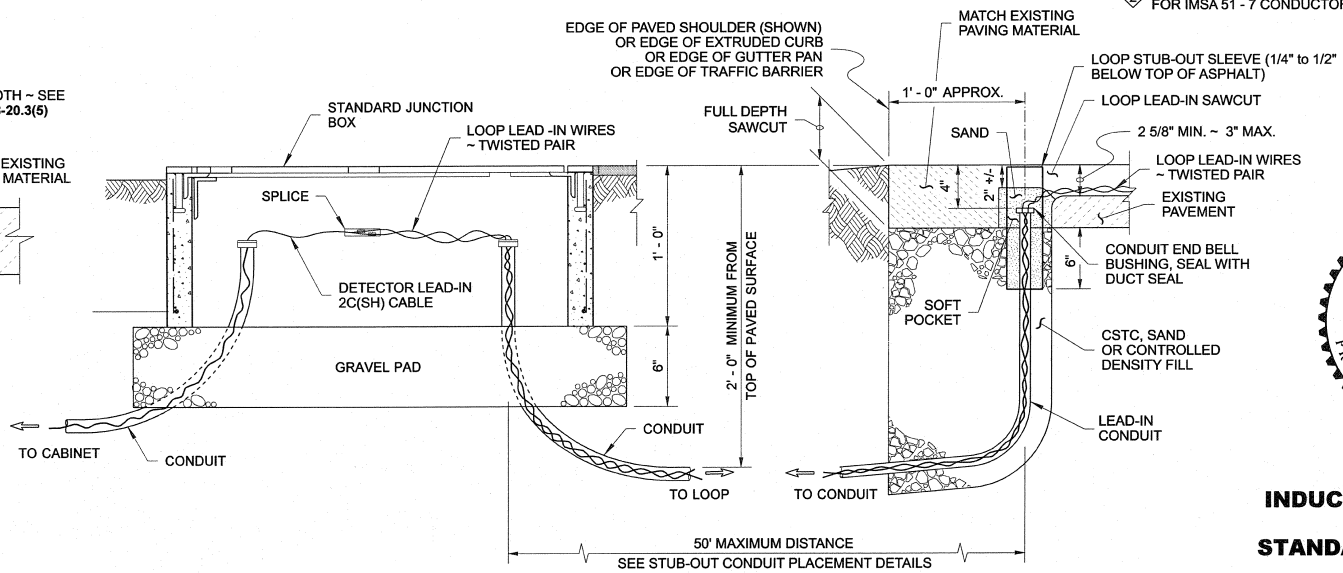

JUNCTION BOX PLACEMENT
SEE NOTE 5

LEAD-IN CONDUIT SECTION
MAX. 50 FT POCKET SECTION

SECTION E

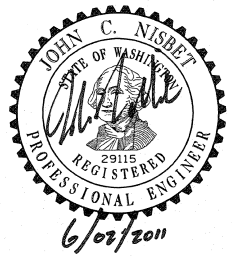

INDUCTION LOOP DETAILS

STANDARD PLAN J-50.15-00

SHEET 1 OF 3 SHEETS

APPROVED FOR PUBLICATION

STATE DESIGN ENGINEER — DATE 6/3/11

Washington State Department of Transportation

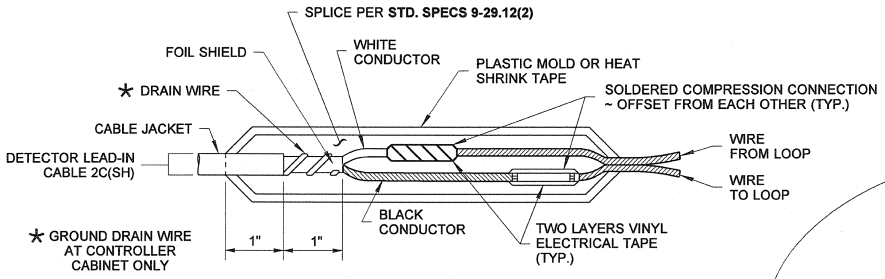

SPLICE DETAIL

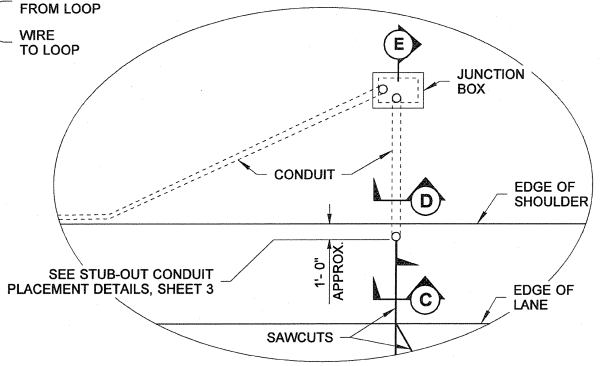

DETAIL "A"

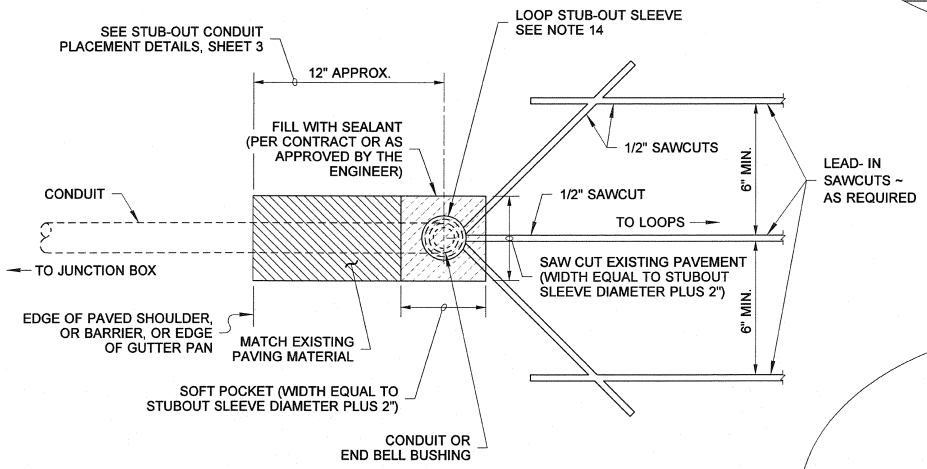

PLAN

SAWCUT AND CONDUIT CONNECTION

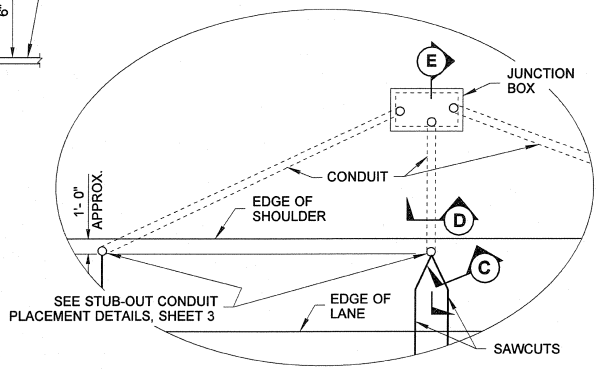

DETAIL "B"

LOOP INSTALLATION NOTES

1. Install the Junction Box and the stub-out conduit with PVC sleeve. Conduit for the loop stub-out shall be as required in the conduit size table shown on sheet 1 of this set.
2. Lay out loops and loop lead-ins to miss cracks/joints in road, when possible. Maintain 18" minimum clearance from manholes and valve boxes.
3. The opening around the loop stub shall be patched with matching paving material if opened larger than PVC sleeve + 2".
4. Sawcut the loop slots and the lead-in slots. Wash/dry cuts. File edges to remove burr of all saw-cuts into stub out sleeve.
5. Lay out the loop wire starting at the Junction Box, allowing 5' minimum slack.
6. Install the wire in the loop slot as shown.
7. Finish laying out the wire at the Junction Box and identify the leads with the loop number, the "S" for start and the "F" for the finish, the loop series number, and the loop lead-in conductor number.
8. Twist each pair of the lead-in wires a minimum of two times per foot each foot, from the loop to the Junction Box. Reverse the direction of the twist for each successive pair installed. Seal loops/sawcuts.
9. Construct a supplemental splice containing any series loop connections in the adjacent junction box as required in the plans. Supplemental splices are subject to the same requirements shown for the loop lead-in and the shielded cable splice.
10. Splice the loop lead-ins to the shielded cable as noted in the Contract.
11. All loop circuits shall be tested per **Standard Specifications 8-20.3(14)D** once installation is complete.
12. Existing stubouts shall be upgraded as necessary to conform to the conduit size table shown on sheet 1.
13. All loop lead-in sawcuts parallel to lane edge shall be at least 12" from edge of pavement and within six inches outside of lane or fog line when possible. Maintain 12" separation between parallel cuts or joints.
14. The loop stub-out sleeve shall have an inside diameter 1" larger than the outside diameter of the End Bell Bushing. Plug conduit and fill sleeve with sand untill loops are installed to keep out Hot Asphalt during paving operations.

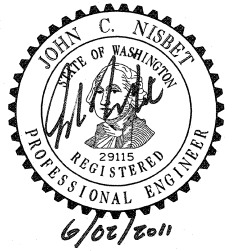

INDUCTION LOOP DETAILS

STANDARD PLAN J-50.15-00

SHEET 2 OF 3 SHEETS

APPROVED FOR PUBLICATION

STATE DESIGN ENGINEER — DATE 6/3/11

Washington State Department of Transportation

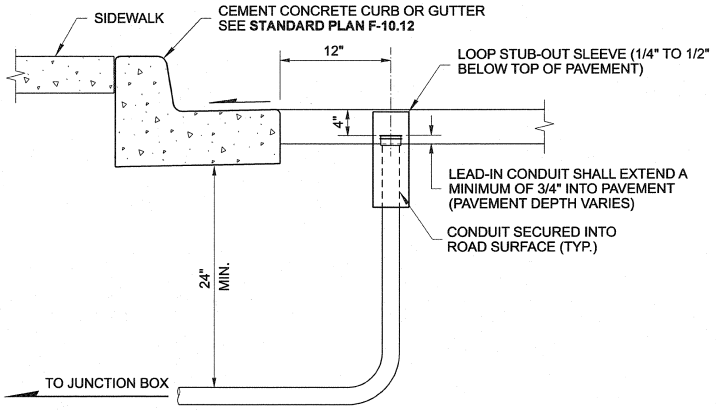

STUB-OUT DETAIL
WITH CEMENT CONCRETE CURB OR GUTTER

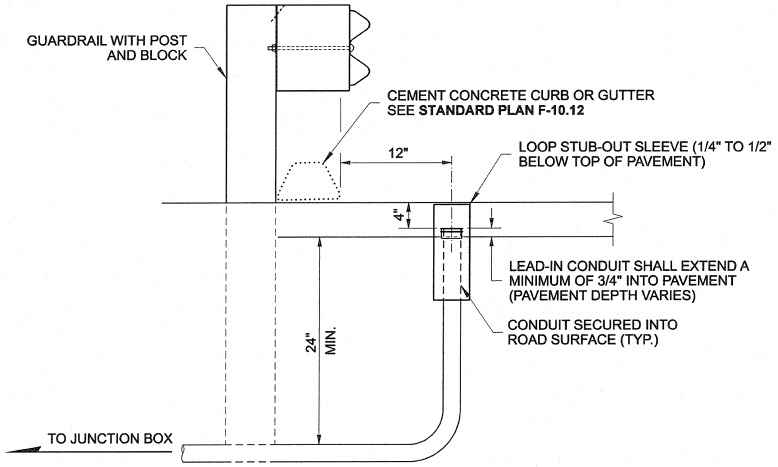

STUB-OUT DETAIL
WITH GUARDRAIL AND CURB

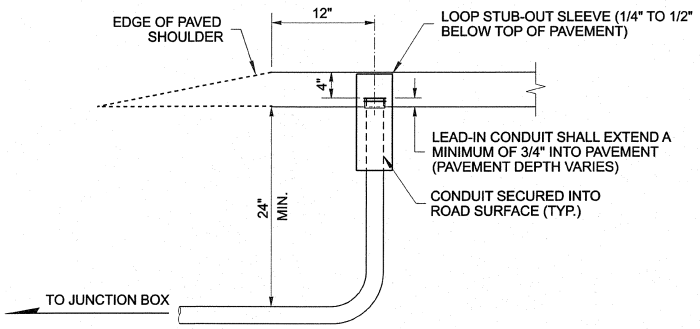

STUB-OUT DETAIL
WITH ROADWAY

STUBOUT CONDUIT PLACEMENT DETAILS

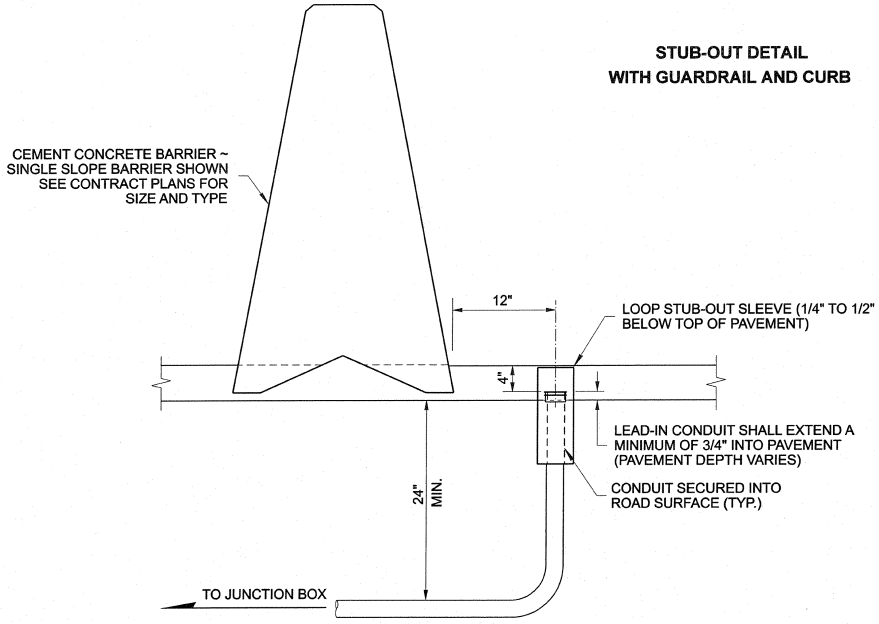

STUB-OUT DETAIL WITH
CEMENT CONCRETE BARRIER

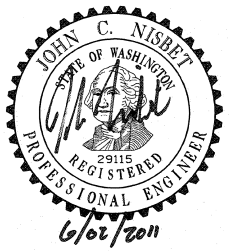

INDUCTION LOOP DETAILS

STANDARD PLAN J-50.15-00

SHEET 3 OF 3 SHEETS

APPROVED FOR PUBLICATION

6/3/11

STATE DESIGN ENGINEER — DATE

Washington State Department of Transportation

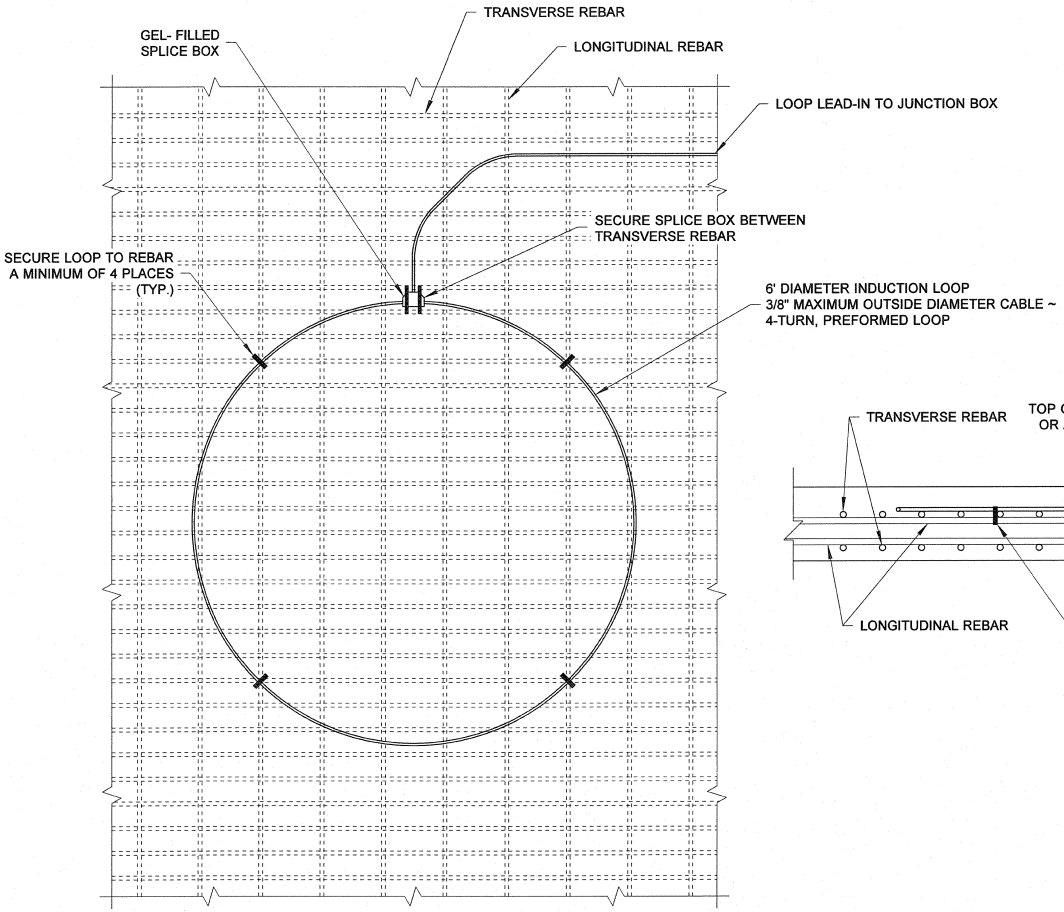

PLAN VIEW

NOTES

1. For Splice Detail, see **Standard Plan J-50.15.**
2. Performed loops shall conform to the layouts, numbering details, marking requirements, and wiring diagrams of **Standard Plan J-50.12** for the number and types of loops shown in the Contract Plans.
3. Loops shall be tested immediately prior to pouring concrete, per **Standard Spefication 8-20.3(14)D.**
4. Lay out loops and loop lead-ins to avoid joints.
5. Construct a supplemental splice containing any series loop connections in adjacent Junction Box as required in the Plans. Supplemental splices are subject to the same requirements shown for the loop lead-in and the shielded cable splice, as shown in **Standard Plan J-50.12**.

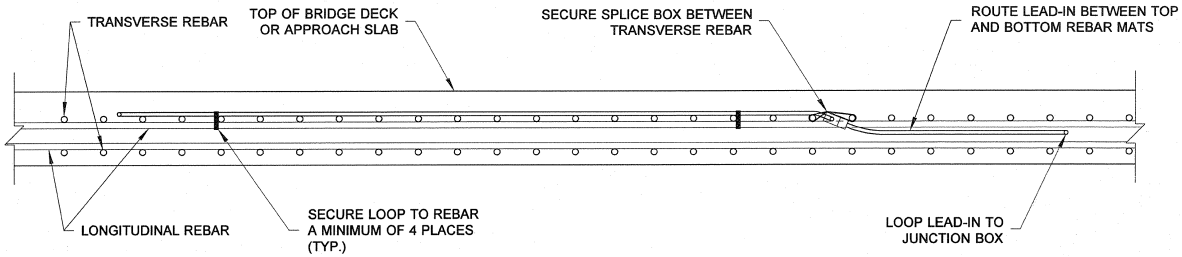

ELEVATION VIEW

JOHN C. NISBET
STATE OF WASHINGTON
29115
REGISTERED
PROFESSIONAL ENGINEER
6/02/2011

PREFORMED LOOP DETAIL IN BRIDGE DECK

STANDARD PLAN J-50.16-00

SHEET 1 OF 1 SHEET

APPROVED FOR PUBLICATION

STATE DESIGN ENGINEER — DATE 6/3/11

Washington State Department of Transportation

DRAWN BY: FERN LIDDELL

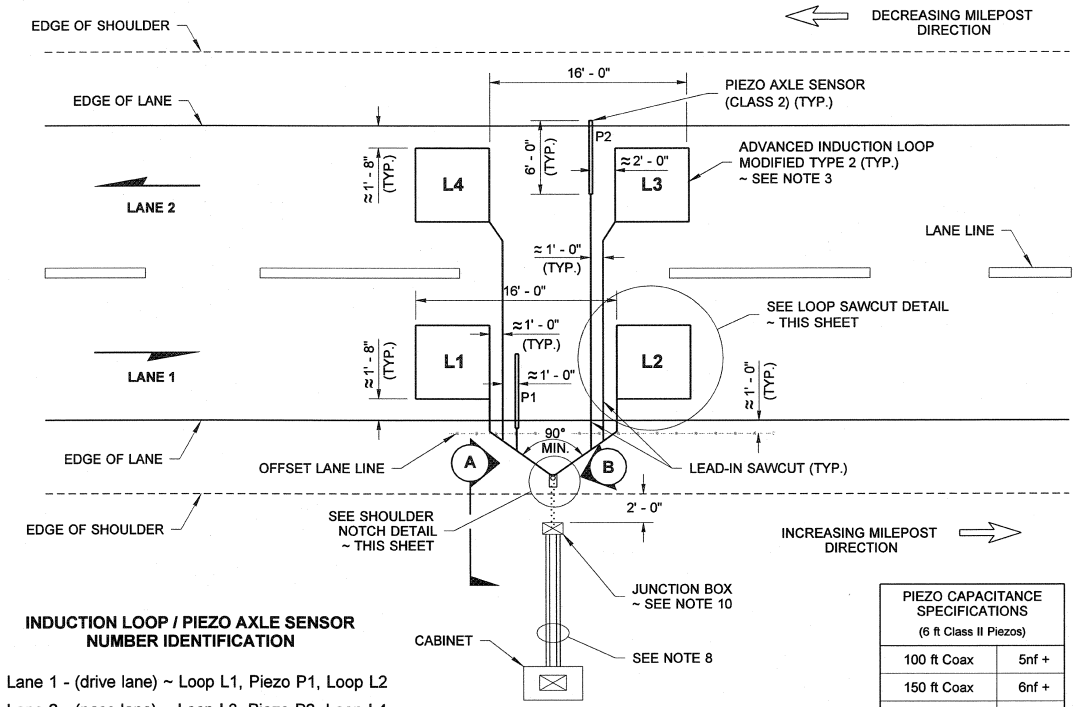

INDUCTION LOOP / PIEZO AXLE SENSOR NUMBER IDENTIFICATION

Lane 1 - (drive lane) ~ Loop L1, Piezo P1, Loop L2

Lane 2 - (pass lane) ~ Loop L3, Piezo P2, Loop L4

PLAN VIEW

PIEZO CAPACITANCE SPECIFICATIONS (6 ft Class II Piezos)	
100 ft Coax	5nf +
150 ft Coax	6nf +
200 ft Coax	7nf +
250 ft Coax	8nf +

TYPICAL 2 LANE PTR LAYOUT

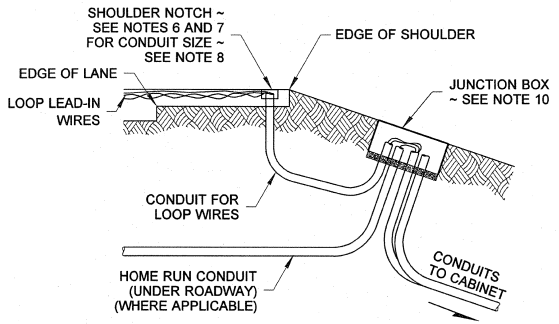

SECTION (A)

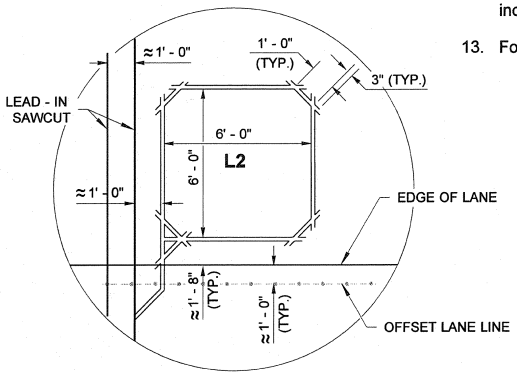

LOOP SAW CUT DETAIL

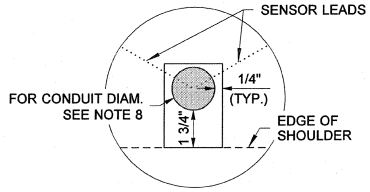

SHOULDER NOTCH

DETAIL (B)

NOTES

1. See **Standard Plan J-50.30** for Piezo axle sensor General Installation instructions, and Modified Type 2 Loop wiring details.
2. The contractor shall notify the Statewide Travel and Collision Data Office (STCDO) (formerlyTDO) a minimum of five working days prior to the scheduled site installation. An inspector from the WSDOT STCDO shall be on site for all phases of installation.
3. The loop inductance of two loops within the same lane shall be within 20 micro henries of each other. all piezo ohms readings shall be O\L from shield to center conductor. See piezo specifications for piezo capacitance readings.
4. The loops and axle sensors shall be cut in the final lift of asphalt after lane striping is completed. All PTR loops shall be spaced @16 ft. leading edge to leading edge.
5. For concrete pavement lanes with asphalt shoulders, install all of the piezo sensors and splices in the concrete lane. Also, for concrete lanes, install the loops 4" and 6" away from the expansion joints.
6. The shoulder notch length along the roadway shall be 4" or the conduit diameter plus 2" or whichever is larger. The shoulder notch width perpendicular to the roadway shall be the conduit size plus 1/4".
7. After all sensor leads are installed, seal the end of the conduit with conduit sealant. Use asphalt cold-patch to fill notch unless otherwise specified in the contract.
8. Use Schedule 40 PVC conduit from the Junction box to the Cabinet. Where there are 2 to 4 lanes, use one 1 1/4" min. conduit for each direction of travel. Where there are 5 lanes in either direction of travel, use one 2" min. conduit in each direction. Where there are 6 or more lanes in either directon, use one 3" min. conduit for each direction.
9. Use Schedule 80 PVC, HDPE, or steel conduit under the roadway. For conduit installation see **Standard Specification 8-20.3(5).**
10. Junction boxes installed in the paved shoulder or median shall be a Heavy Duty Junction box. If box is installed in unpaved shoulder, use type 1 or 2. See **Standard Plan J-40.10** for size and type. See **Standard Specification 9.29.2(1)B.** for further information.
11. All loop wire, loop leads, and piezo leads shall be labeled with colored electrical tape at all Junction Boxes, Pull Boxes and Cabinets, according to the Color Code Identification Chart. For Wire Color Code Detail see **Standard Plan J-50.30.**
12. Cabinet can be placed on either side of road depending on terrain/slope, etc. It does not have to be placed on increasing milepost side of the roadway.
13. For 6 - lane layouts and above, see Contract.

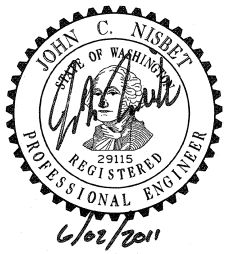

PERMANENT TRAFFIC RECORDER INSTALLATIONS

STANDARD PLAN J-50.20-00

SHEET 1 OF 3 SHEETS

APPROVED FOR PUBLICATION

STATE DESIGN ENGINEER — DATE 6/3/11

Washington State Department of Transportation

DRAWN BY: FERN LIDDELL

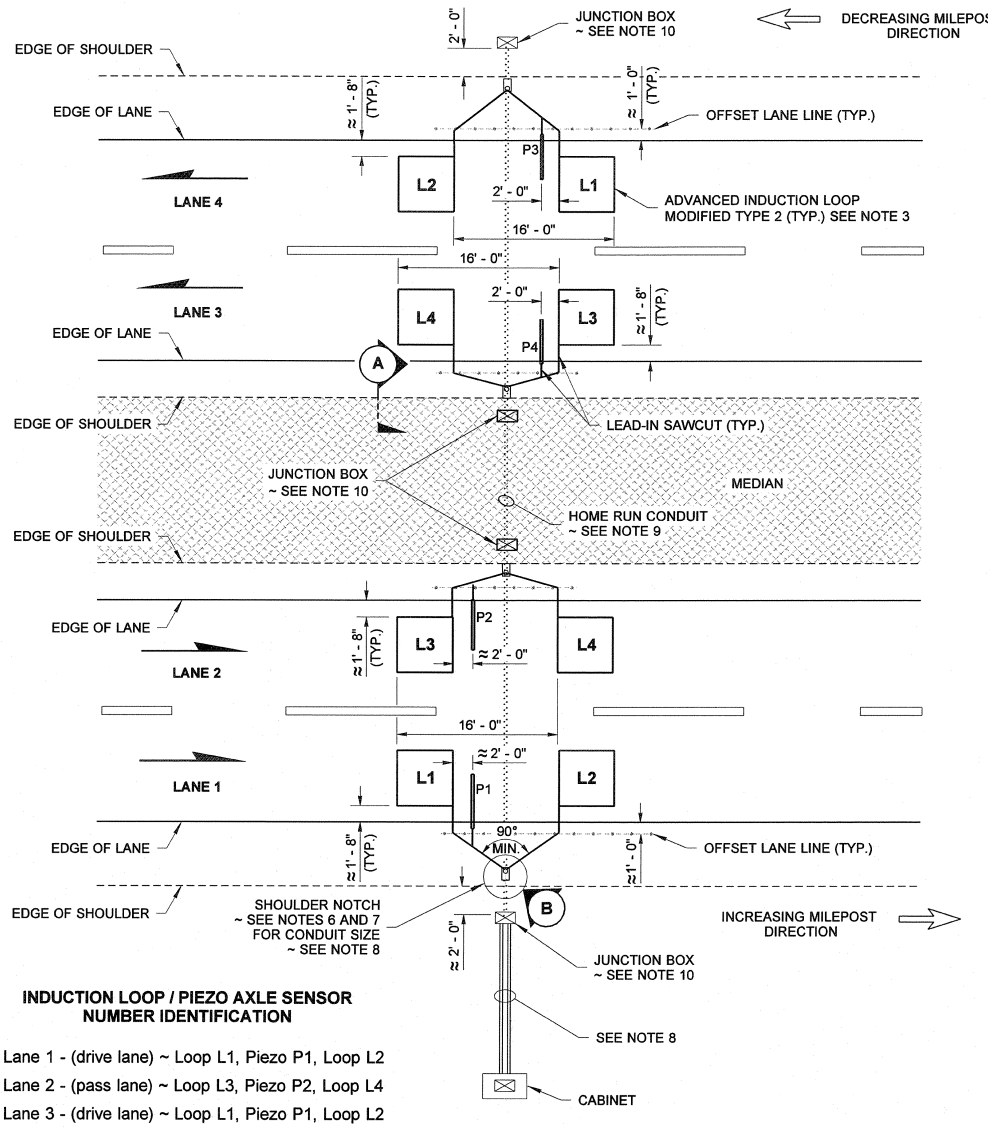

INDUCTION LOOP / PIEZO AXLE SENSOR NUMBER IDENTIFICATION

Lane 1 - (drive lane) ~ Loop L1, Piezo P1, Loop L2
Lane 2 - (pass lane) ~ Loop L3, Piezo P2, Loop L4
Lane 3 - (drive lane) ~ Loop L1, Piezo P1, Loop L2
Lane 4 - (pass lane) ~ Loop L3, Piezo P2, Loop L4

PLAN VIEW

TYPICAL 4 LANE PTR LAYOUT WITH MEDIAN

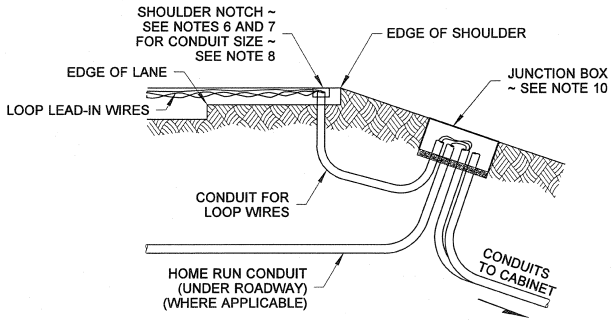

SECTION (A)

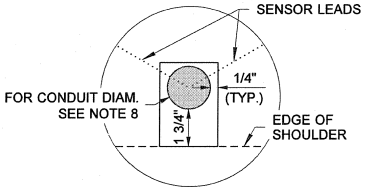

SHOULDER NOTCH

DETAIL (B)

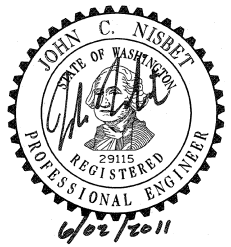

PERMANENT TRAFFIC RECORDER INSTALLATIONS

STANDARD PLAN J-50.20-00

SHEET 2 OF 3 SHEETS

APPROVED FOR PUBLICATION

STATE DESIGN ENGINEER — DATE 6/3/11

Washington State Department of Transportation

DRAWN BY: FERN LIDDELL

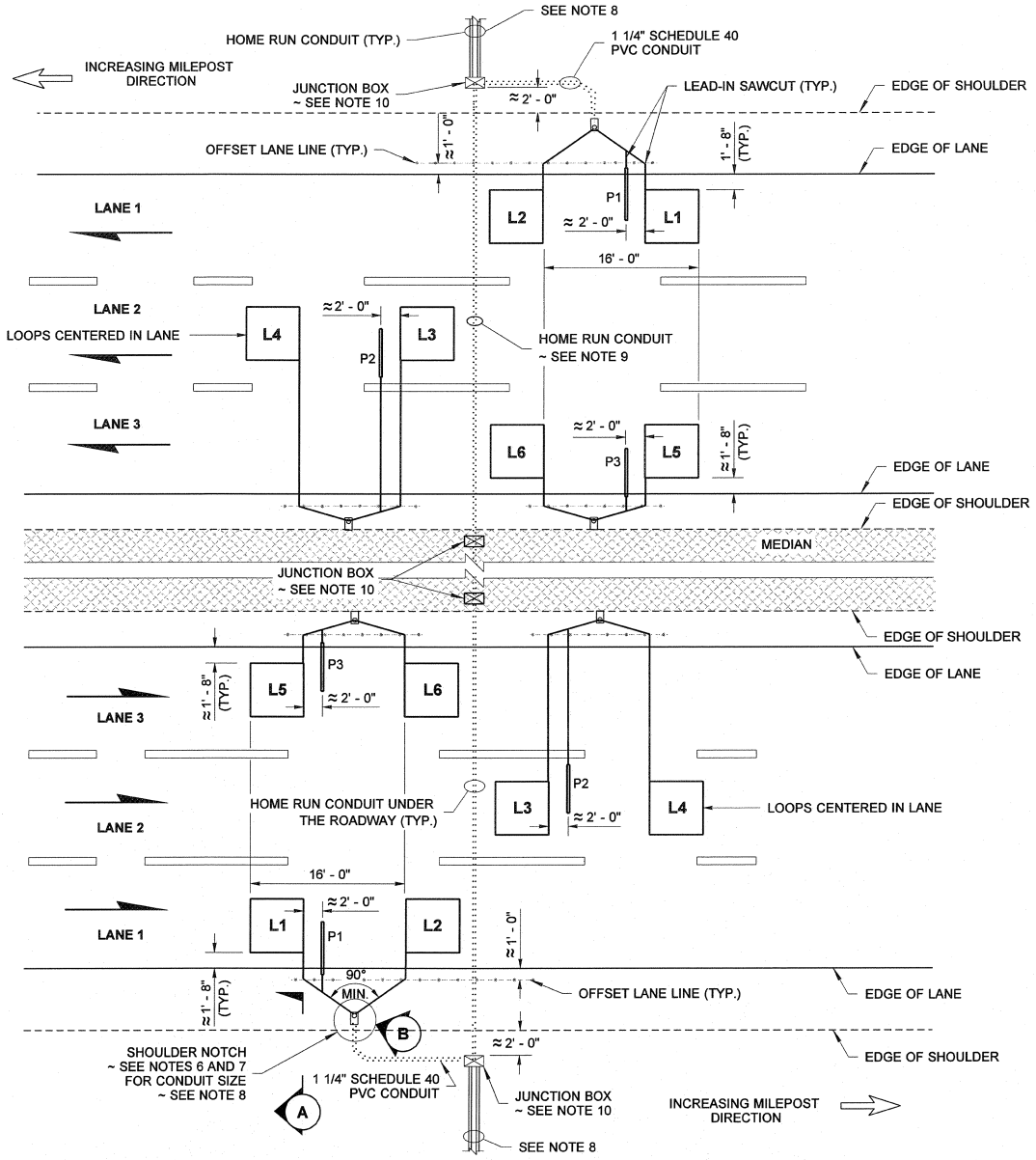

PLAN VIEW

TYPICAL 6 LANE PTR LAYOUT WITH MEDIAN

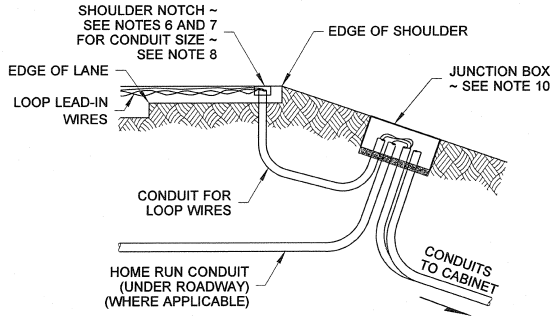

SECTION (A)

INDUCTION LOOP / PIEZO AXLE SENSOR NUMBER IDENTIFICATION

Lane 1 - (drive lane) ~ Loop L1, Piezo P1, Loop L6
Lane 2 - (center lane) ~ Loop L3, Piezo P2, Loop L4
Lane 3 - (drive lane) ~ Loop L1, Piezo P1, Loop L2

Lane 1 - (drive lane) ~ Loop L1, Piezo P1, Loop L2
Lane 2 - (center lane) ~ Loop L3, Piezo P2, Loop L4
Lane 3 - (center lane) ~ Loop L1, Piezo P1, Loop L6

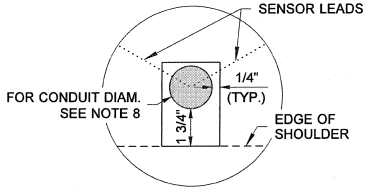

SHOULDER NOTCH

DETAIL (B)

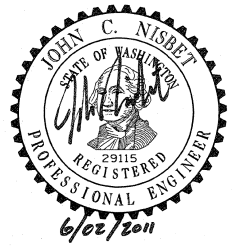

PERMANENT TRAFFIC RECORDER INSTALLATIONS

STANDARD PLAN J-50.20-00

SHEET 3 OF 3 SHEETS

APPROVED FOR PUBLICATION

STATE DESIGN ENGINEER — DATE 6/3/11

Washington State Department of Transportation

DRAWN BY: FERN LIDDELL

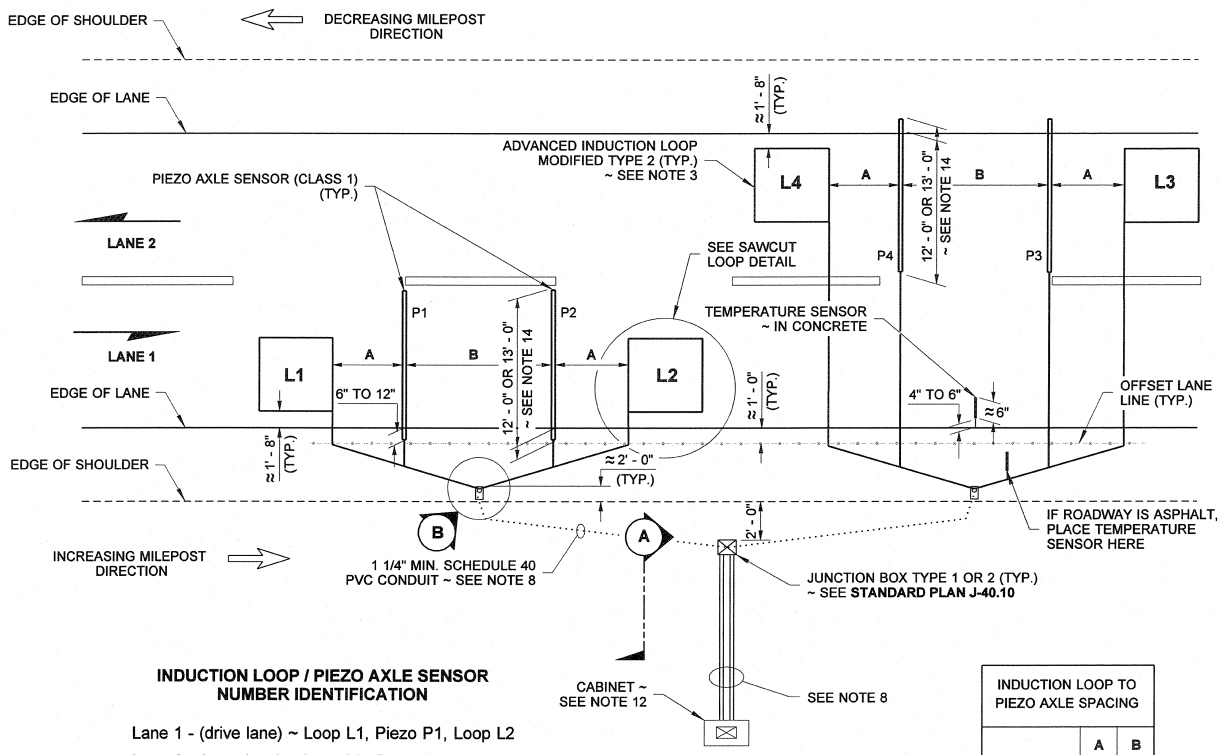

INDUCTION LOOP / PIEZO AXLE SENSOR NUMBER IDENTIFICATION

Lane 1 - (drive lane) ~ Loop L1, Piezo P1, Loop L2

Lane 2 - (pass lane) ~ Loop L3, Piezo P2, Loop L4

PLAN VIEW

TYPICAL 2 - LANE WIM LAYOUT

INDUCTION LOOP TO PIEZO AXLE SPACING		
	A	B
RURAL	6'	12'
URBAN	2'	10'

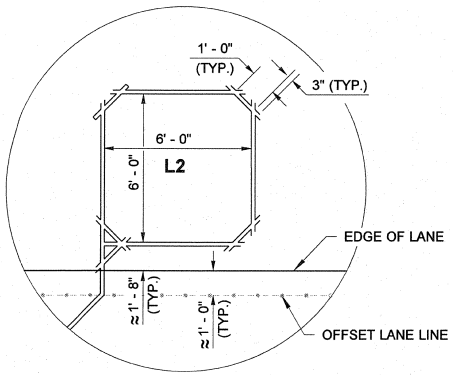

LOOP SAW-CUT DETAIL

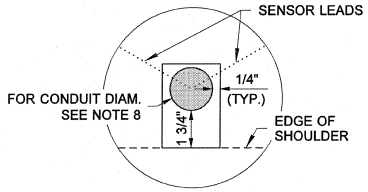

SHOULDER NOTCH DETAIL (B)

NOTES

1. See **Standard Plan J-50.30** for Piezo Axle Sensor General Installation instructions, and Modified Type 2 Loop Wiring Details.
2. The Contractor shall notify the Statewide Travel and Collision Data Office (STCDO) (formerly TDO) a minimum of five working days prior to the scheduled site installation. An inspector from the WSDOT STCDO shall be on site for all phases of installation.
3. The loop inductance of two loops within the same lane shall be within 20 micro henries of each other. All piezo ohms readings shall be O\L from shield to center conductor. Class WIM piezo capacitance shall be 8nf to 20nf.
4. The loops and axle sensors shall be cut in the final lift of asphalt after lane striping is completed. All PTR loops shall be spaced @ 16 ft. leading edge to leading edge.
5. For concrete pavement lanes with asphalt shoulders, install all of the piezo sensors and splices in the concrete lane. Also, for concrete pavement lanes, install the loops 4" to 6" away from the expansion joints.
6. The shoulder notch length along the roadway shall be 4" or the conduit diameter plus 2" or whichever is larger. The shoulder notch width perpendicular to the roadway shall be the conduit size plus 1/4".
7. After all sensor leads are installed, seal the end of the conduit with conduit sealant. Use asphalt cold-patch to fill notch unless otherwise specified in Contract.
8. Use Schedule 40 PVC conduit from the Junction Box to the Cabinet. Where there are 2 to 4 lanes, use one 1 1/4" min. conduit for each direction of travel. Where there are 5 lanes in either direction of travel, use one 2" min. conduit for each direction. Where there are 6 or more lanes in either direction, use one 3" min. conduit for each direction.
9. Use Schedule 80 PVC, HDPE, or steel conduit under the roadway. For conduit installation, see **Standard Specification 8-20.3(5).**
10. Junction Boxes installed in the paved shoulder or median shall be a Heavy Duty Junction Box. If box is installed in unpaved shoulder use type 1 or 2. **See Standard Plan J-40.10** for size and type. See **Standard Specification 9-29.2(1)B**. for further information.
11. All loop wire, loop leads, and piezo leads shall be labeled with colored electrical tape at all Junction Boxes, Pull Boxes and Cabinets. For Wire Color Code Identification Chart & Detail see **Standard Plan J-50.30.**
12. Cabinet can be placed on either side of the road depending on terrain/slope, etc. It does not have to be placed on increasing milepost side of the roadway.
13. For 6-lane layouts and above, see Contract.
14. Concrete lanes shall use 11' class 1 piezos. Asphalt lanes with 1' shoulder or less may use 12' piezos. For shoulders over 1', use 13' piezos.

JOHN C. NISBET
STATE OF WASHINGTON
29115
REGISTERED
PROFESSIONAL ENGINEER
6/02/2011

WEIGH-IN-MOTION SITE INSTALLATION DETAILS
STANDARD PLAN J-50.25-00

SHEET 1 OF 2 SHEETS

APPROVED FOR PUBLICATION

STATE DESIGN ENGINEER — DATE 6/3/11

Washington State Department of Transportation

DRAWN BY: FERN LIDDELL

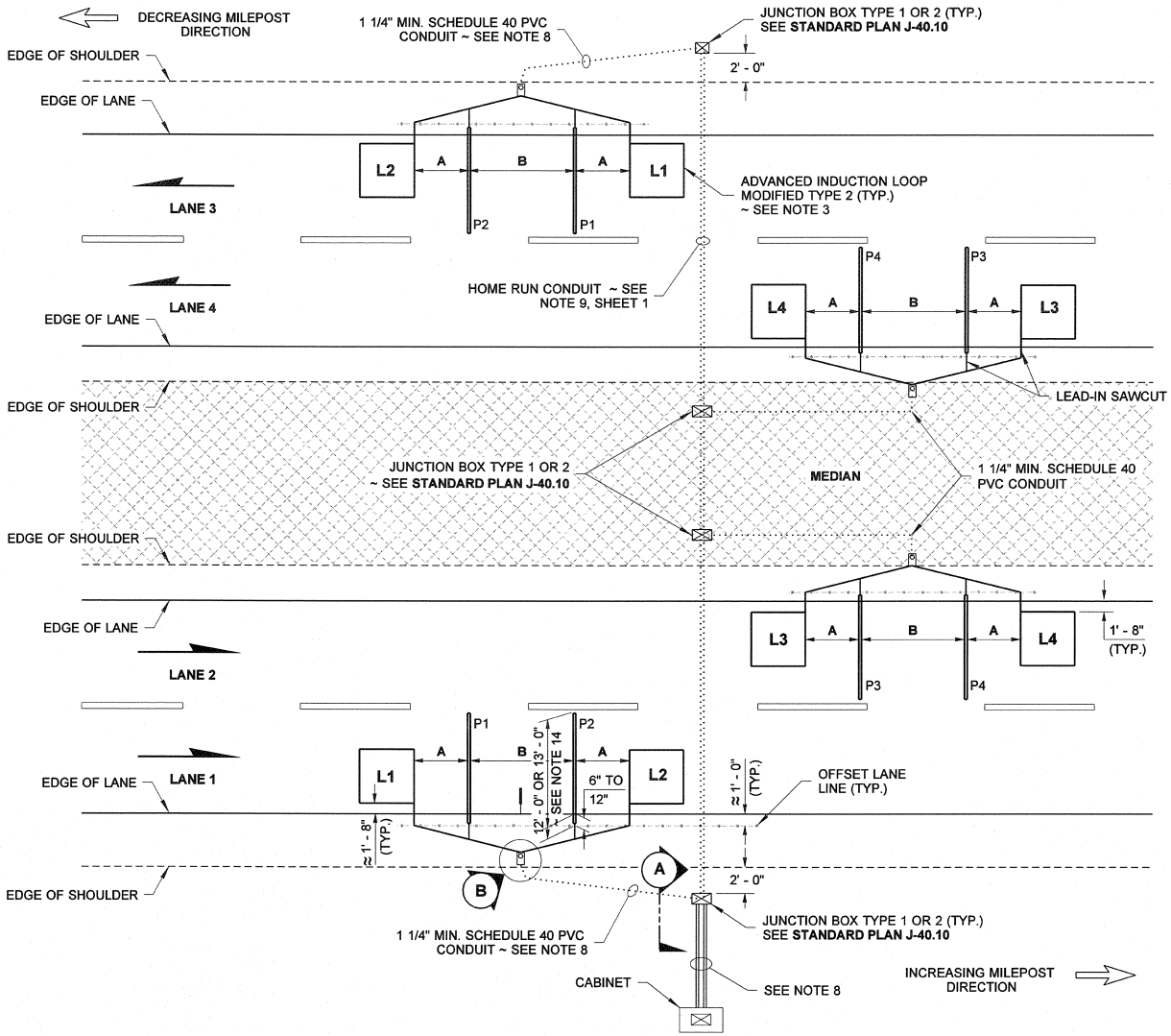

PLAN VIEW

TYPICAL 4 - LANE WIM LAYOUT WITH MEDIAN

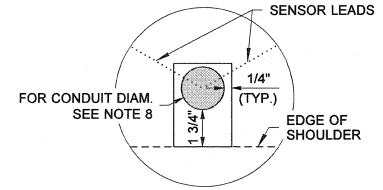

SHOULDER NOTCH

DETAIL (B)

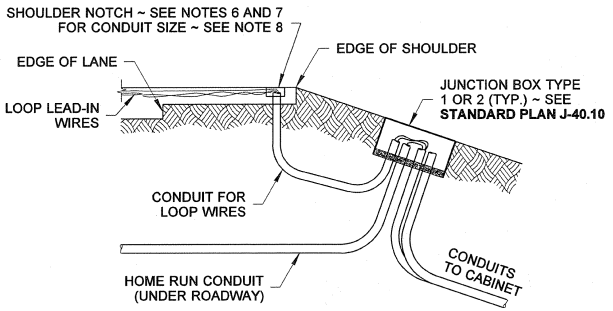

SECTION (A)

INDUCTION LOOP / PIEZO AXLE SENSOR NUMBER IDENTIFICATION

INCREASING DIRECTION	DECREASING DIRECTION
Lane 1 - (drive lane) ~ Loop L1, Piezo P1, Piezo P2, Loop L2	Lane 3 - (drive lane) ~ Loop L1, Piezo P1, Piezo P2, Loop L2
Lane 2 - (pass lane) ~ Loop L3, Piezo P3, Piezo P4, Loop L4	Lane 4 - (drive lane) ~ Loop L3, Piezo P3, Piezo P4, Loop L4

INDUCTION LOOP TO PIEZO AXLE SPACING		
	A	B
RURAL	6'	12'
URBAN	2'	10'

JOHN C. NISBET — STATE OF WASHINGTON — 29115 — REGISTERED PROFESSIONAL ENGINEER

6/02/2011

WEIGH-IN-MOTION SITE INSTALLATION DETAILS

STANDARD PLAN J-50.25-00

SHEET 2 OF 2 SHEETS

APPROVED FOR PUBLICATION

STATE DESIGN ENGINEER — DATE 6/3/11

Washington State Department of Transportation

DRAWN BY: FERN LIDDELL

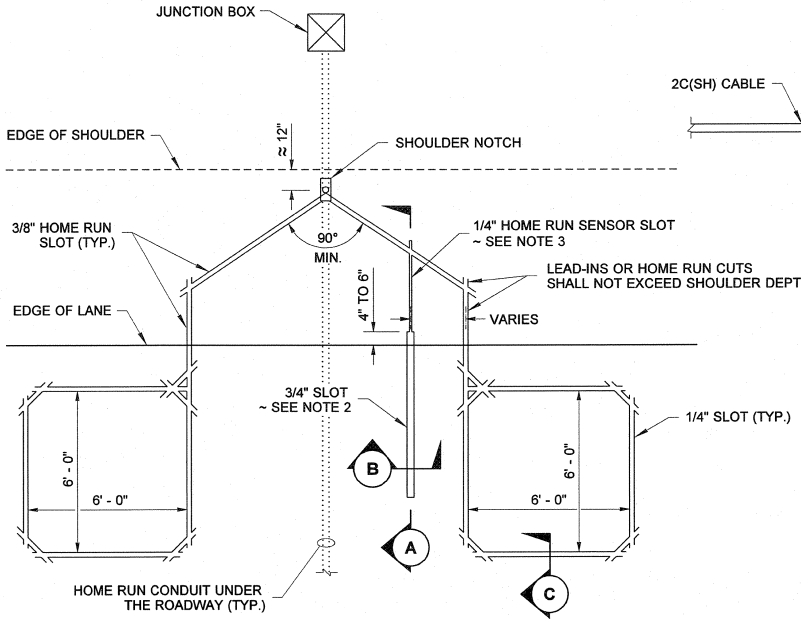

SAWCUT LAYOUT
FOR PERMANENT TRAFFIC RECORDER SITE
(MODIFIED TYPE 2 LOOP SHOWN)

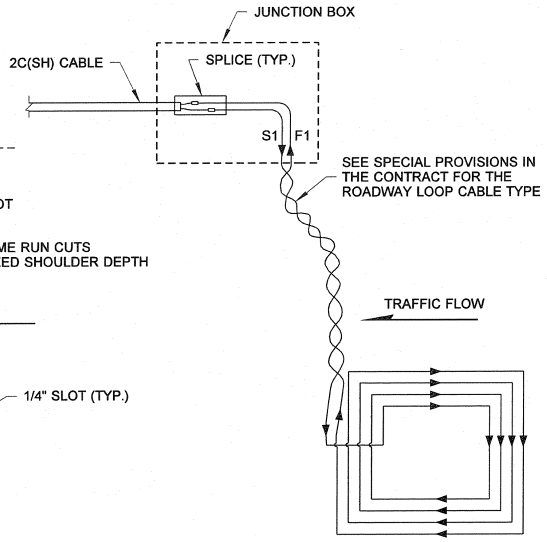

MODIFIED TYPE 2 ADVANCE
LOOP WIRING DIAGRAM

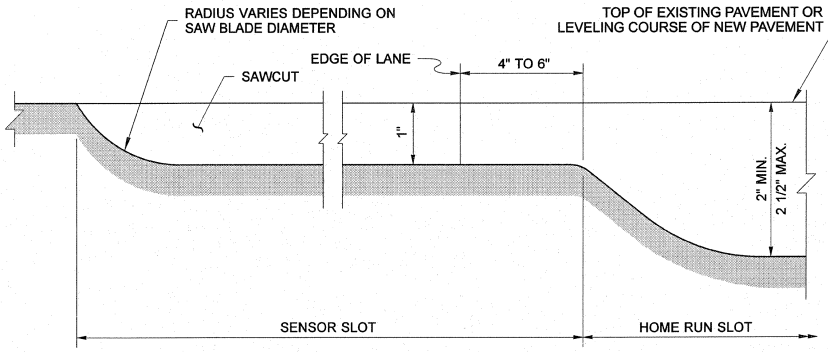

SECTION (A)

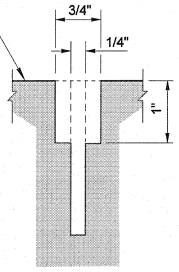

SECTION (B)

BEFORE SENSOR INSTALLATION

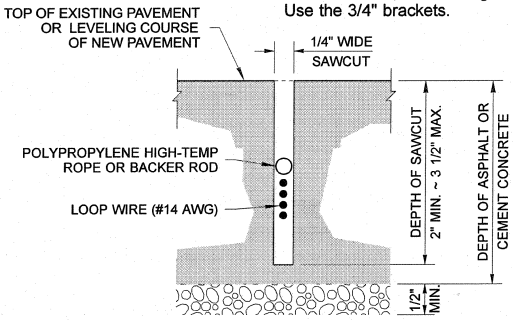

SECTION (C)

THESE ARE GENERAL INSTALLATION INSTRUCTIONS

SEE SPECIFIC MANUFACTURER'S INSTALLATION INSTRUCTIONS IN THE SPECIAL PROVISIONS OF THE CONTRACT

1. Using paint and a straight edge, carefully mark the layout of the sensor installation. Ensure sensors are placed exactly perpendicular to the flow of traffic and that all lines are straight. Verify that the piezo coax length can reach the cabinet with a minimum of 8 ft. of cable inside the cabinet.
2. Using a wet-cutting pavement saw with a 3/4" blade width, cut the piezo slot approximately 4 to 6 inches longer than the piezo length. The piezo slot depth must be a minimum of 1" to a maximum of 1 1/2".
3. Lead-in cuts for the piezo coax should be 1/4" minimum wide, at a depth of 1 1/2" to 2".
4. Using a pressure washer, remove all slurry and loose material from the piezo slot.
5. Completely dry piezo slot. No moisture or oily residue shall be allowed in piezo slot.
6. After piezo cut is dry, wire brush sides and bottom of entire piezo slot. Blow out loose debris.
7. Install the piezo according to manufacturer's recommendations. Class 2 piezo sensors shall be placed at bottom of piezo slot. Class 1 sensors must be installed at a specific depth particular to each site location. This depth will be measured and set by Statewide Travel and Collision Data Office (formerly TDO) inspector on site.
8. Place two pieces of 2" duct tape along the length of the sensor slot. Tape should be about 1/16" from slot edge.
9. Mix epoxy according to manufacturer's recommendations and pour in slot into small bead. Make sure grout pours into slot slowly to avoid air pockets. Start at the piezo end and pour toward the coax to piezo attachment point. Repeat until the slot is completely full, at least two passes.
10. Use a putty knife with a notched center to spread the epoxy smooth the length of the sensor.
11. Remove tape.
12. Class 2 sensor installation is complete after epoxy has cured. Class 1 WIM sensors shall be sanded flush with the pavement surface the entire length of the piezo sensor. Use a belt sander with a coarse grit paper to get an even surface finish.
13. Lead-in placement and saw-cut methods vary depending on Regional preference and location. Coordination between WSDOT and Contractor is needed to determine method to be used prior to installation.
14. Place the Installation Brackets on the sensor every 12" for class 2 sensor, and every 8" for class 1 sensor, for the length of the sensor. Use the 3/4" brackets.

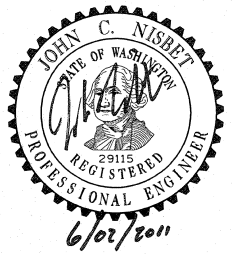

PERMANENT TRAFFIC RECORDER AND WEIGH-IN-MOTION DETAILS STANDARD PLAN J-50.30-00

SHEET 1 OF 3 SHEETS

APPROVED FOR PUBLICATION

STATE DESIGN ENGINEER — DATE 4/3/11

Washington State Department of Transportation

DRAWN BY: FERN LIDDELL

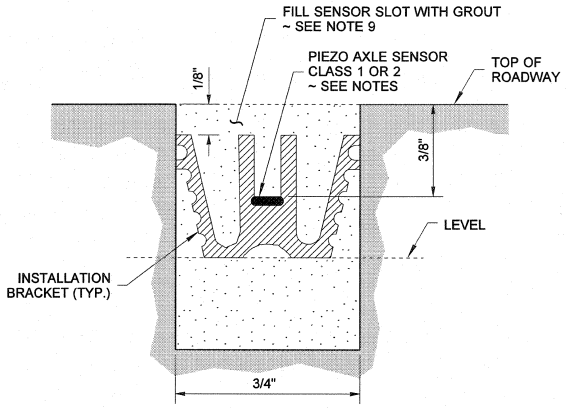

SECTION (D)

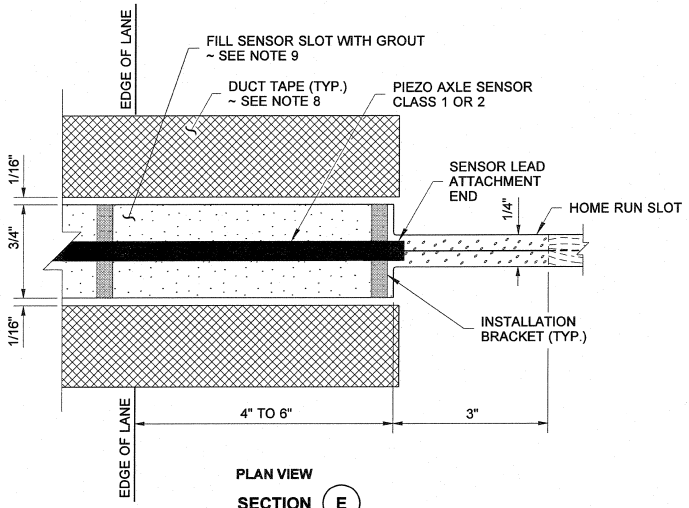

PLAN VIEW

SECTION (E)

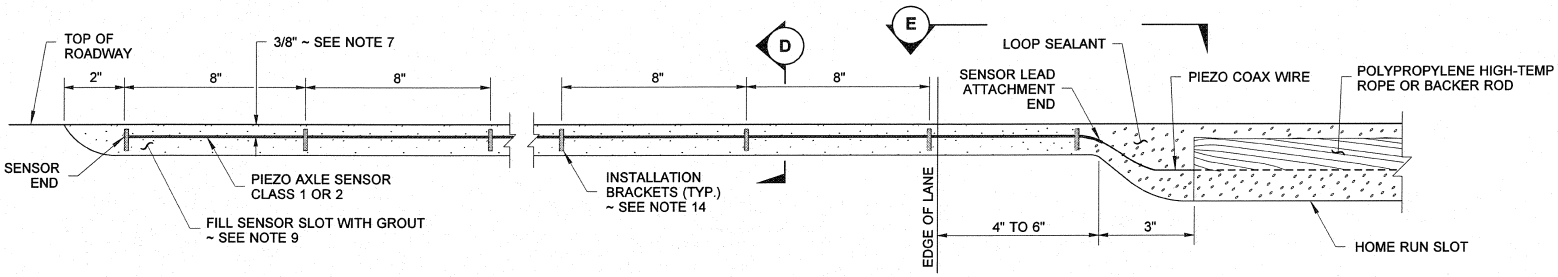

SIDE VIEW

BRACKET AND PIEZO LAYOUT

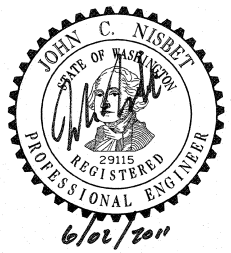

PERMANENT TRAFFIC RECORDER AND WEIGH-IN-MOTION DETAILS STANDARD PLAN J-50.30-00

SHEET 2 OF 3 SHEETS

APPROVED FOR PUBLICATION

STATE DESIGN ENGINEER — DATE 6/3/11

Washington State Department of Transportation

DRAWN BY: FERN LIDDELL

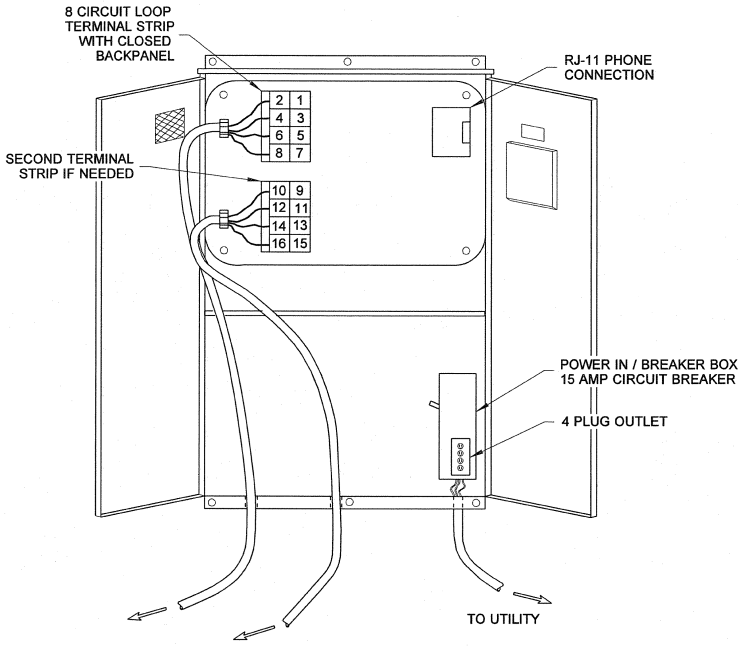

TYPICAL SERVICE CABINET

SEE NOTES 2 THRU 5

COLOR CODE IDENTIFICATION	
COLOR	**WIRE NO.**
BLACK	0
BROWN	1
RED	2
ORANGE	3
YELLOW	4
GREEN	5
BLUE	6
VIOLET	7
GRAY	8
WHITE	9
BROWN & BLACK	10
BROWN & BROWN	11
BROWN & RED	12
BROWN & ORANGE	13
BROWN & YELLOW	14
BROWN & GREEN	15
BROWN & BLUE	16
BROWN & VIOLET	17
WHITE IS ALSO USED FOR DESIGNATING INCREASING MILE POSTS	

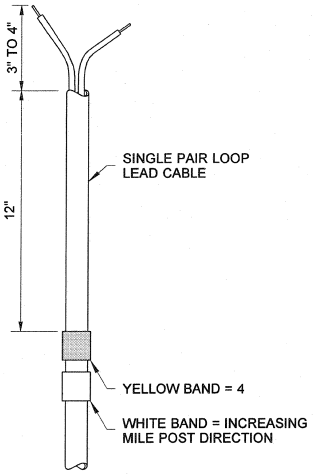

COLOR CODE WIRE DETAIL

NOTES

1. The Loop and Piezo leads in all Junction Boxes and Cabinets are to be color-coded. Use colored tape on each specific wire, see table. Wrap the tape on the wires approximately 6" beyond conduit in all Junction Boxes.
2. The maximum load in the cabinet is 5 Amps.
3. The cabinet may be pedestal or pad mount. See **Standard Plan J-10.10** for details.
4. See **Special Provisions** in the contract for the Cabinet dimensions. See **Standard Specification 9-29.24** for other requirements.
5. For Grounding Details, See **Standard Plan J-60.05**. See **Standard Specification 8-20.3(9)** for other requirements.

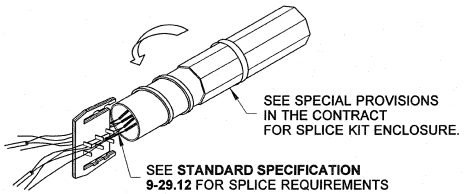

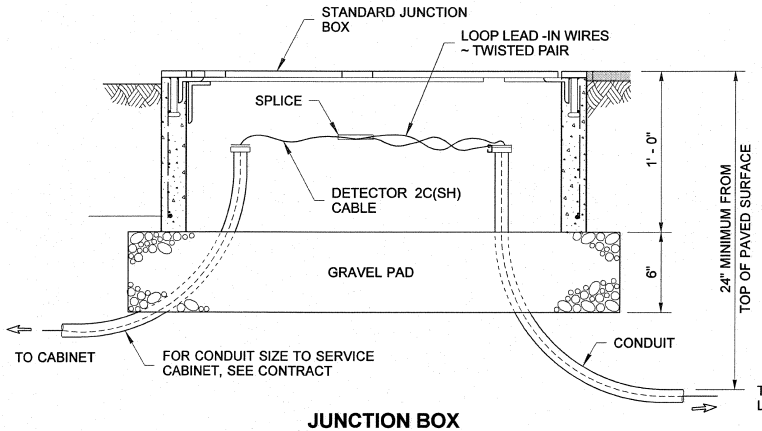

JUNCTION BOX

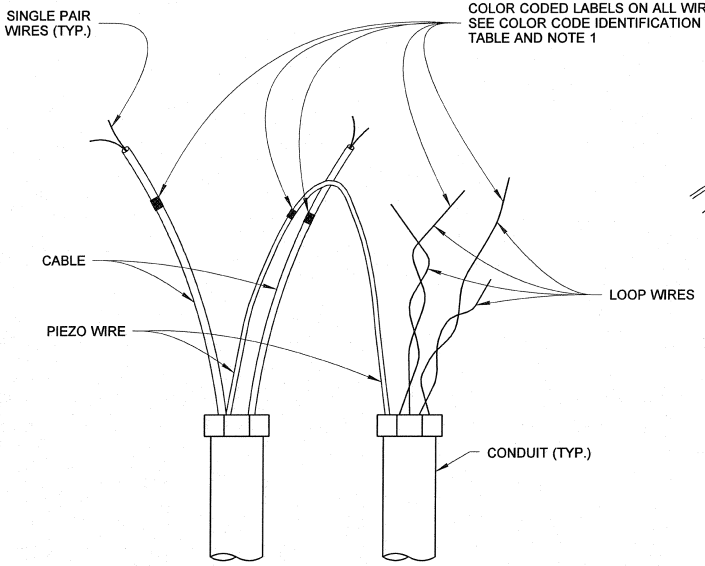

JUNCTION BOX WIRING

(SHOWN PRIOR TO SPLICING)

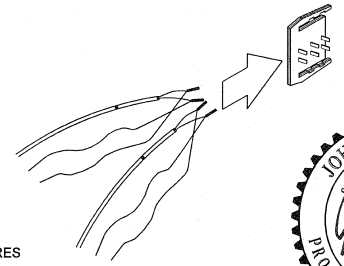

SPLICE DETAIL

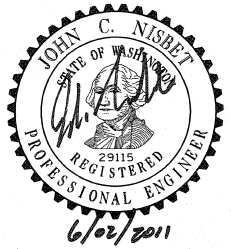

PERMANENT TRAFFIC RECORDER AND WEIGH-IN-MOTION DETAILS STANDARD PLAN J-50.30-00

SHEET 3 OF 3 SHEETS

APPROVED FOR PUBLICATION

STATE DESIGN ENGINEER — DATE 6/3/11

Washington State Department of Transportation

DRAWN BY: LISA CYFORD

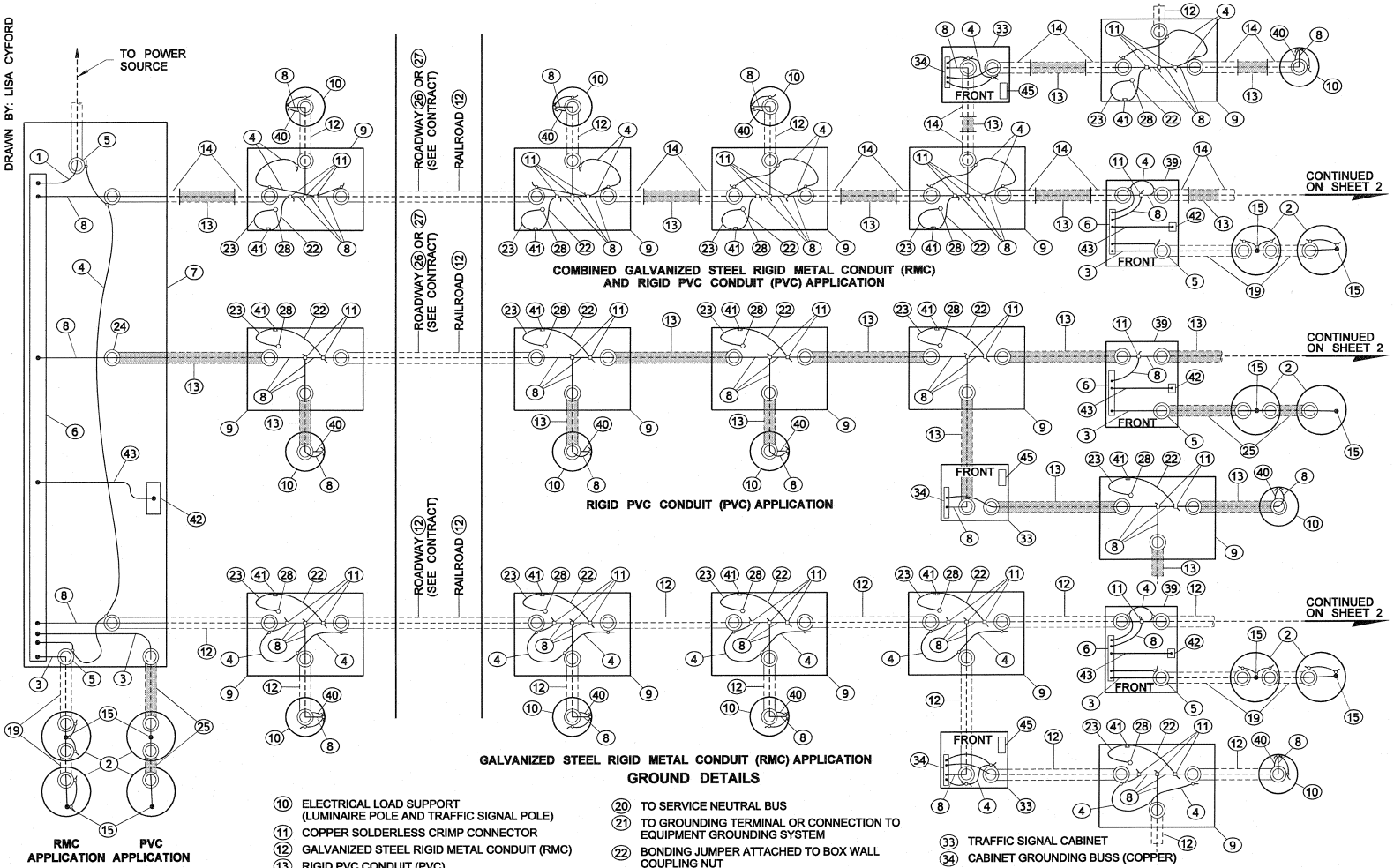

GROUND DETAILS

KEY

1. SERVICE NEUTRAL
2. SERVICE GROUND
3. GROUNDING ELECTRODE CONDUCTOR
4. BONDING JUMPER
5. GROUNDING BUSHING (TYP. ALL RMC CONDUIT TERMINATIONS)
6. GROUNDED NEUTRAL BUS (COPPER)
7. SERVICE ENCLOSURE
8. EQUIPMENT GROUNDING CONDUCTOR
9. JUNCTION BOX
10. ELECTRICAL LOAD SUPPORT (LUMINAIRE POLE AND TRAFFIC SIGNAL POLE)
11. COPPER SOLDERLESS CRIMP CONNECTOR
12. GALVANIZED STEEL RIGID METAL CONDUIT (RMC)
13. RIGID PVC CONDUIT (PVC)
14. OPTION A - 10' RMC WITH FIELD BEND
    - APPROVED ADAPTER FITTING
    - GROUNDING BUSHING

    OPTION B - 10' RMC
    - GS FACTORY ELBOWS
    - APPROVED ADAPTER FITTING
    - GS COUPLING
    - GROUNDING BUSHING
15. GROUND ROD
16. EDGE OF FOUNDATION, POLE OR SERVICE SUPPORT
17. CLAMP
18. JUNCTION BOX OR 8" DRAIN TILE WITH APPROVED COVER
19. CODE SIZE RMC
20. TO SERVICE NEUTRAL BUS
21. TO GROUNDING TERMINAL OR CONNECTION TO EQUIPMENT GROUNDING SYSTEM
22. BONDING JUMPER ATTACHED TO BOX WALL COUPLING NUT
23. BONDING JUMPER ATTACHED TO BOX LID(S) GROUND STUD. # 8 AWG (MIN.) × 4' TINNED BRAIDED COPPER.
24. END BELL BUSHING (TYP. ALL NON-METALLIC CONDUIT TERMINATIONS)
25. CODE SIZED PVC
26. HIGH-DENSITY POLYETHYLENE CONDUIT (HDPE)
27. NON-METALLIC CONDUIT (PVC) SCHEDULE 80
28. BOX LID(S) GROUND STUD
29. CABLE VAULT
30. PULL BOX
31. ITS CABINET
32. EDGE OF FOUNDATION
33. TRAFFIC SIGNAL CABINET
34. CABINET GROUNDING BUSS (COPPER)
35. RIGID PVC OUTERDUCT WITH PVC OR PE INNERDUCT
36. GALVANIZED STEEL RIGID METAL CONDUIT OUTERDUCT WITH PVC OR PE INNERDUCT
37. LOCATE WIRE. COIL 10' INSIDE CABINET, CABLE VAULT, OR PULL BOX
38. DETECTABLE UNDERGROUND WARNING TAPE. COIL 2' INSIDE CABINET, CABLE VAULT, OR PULL BOX
39. TRANSFORMER CABINET
40. GROUNDING CONDUCTOR NON-INSULATED (FROM REINFORCING CAGE)
41. BOX FRAME BONDING ATTACHMENT POINT
42. GROUND LUG WELDED TO CABINET WALL (W/ TINNED COPPER BUSS)
43. CABINET MAIN BONDING JUMPER
44. ITS CAMERA, RAMP METER, TRAFFIC DATA STATION, HIGHWAY ADVISORY RADIO
45. UNGROUNDED CABINET NEUTRAL BUSS (COPPER)

NOTES

1. If parallel circuits of different sizes are contained in one conduit, the size of the grounding conductor shall be determined on the basis of the largest conductor. Only one grounding conductor is required for each conduit, regardless of the number of circuits contained.
2. Service ground per serving utility requirement. If the utility uses aluminum service conductors, an approved Al-Cu pressure-type ground connector shall be used to secure the service neutral to the copper neutral bar in the service enclosure. Except for the above, all grounding conductors shall be copper.
3. Equipment grounding conductors and grounding electrode conductors shall be sized in accordance with the National Electric Code (No. 8 minimum).

JOHN C. NISBET — STATE OF WASHINGTON — 29115 — REGISTERED PROFESSIONAL ENGINEER

TYPICAL GROUNDING DETAILS

STANDARD PLAN J-60.05-00

SHEET 1 OF 4 SHEETS

APPROVED FOR PUBLICATION

STATE DESIGN ENGINEER — DATE 6/16/11

Washington State Department of Transportation

DRAWN BY: LISA CYFORD

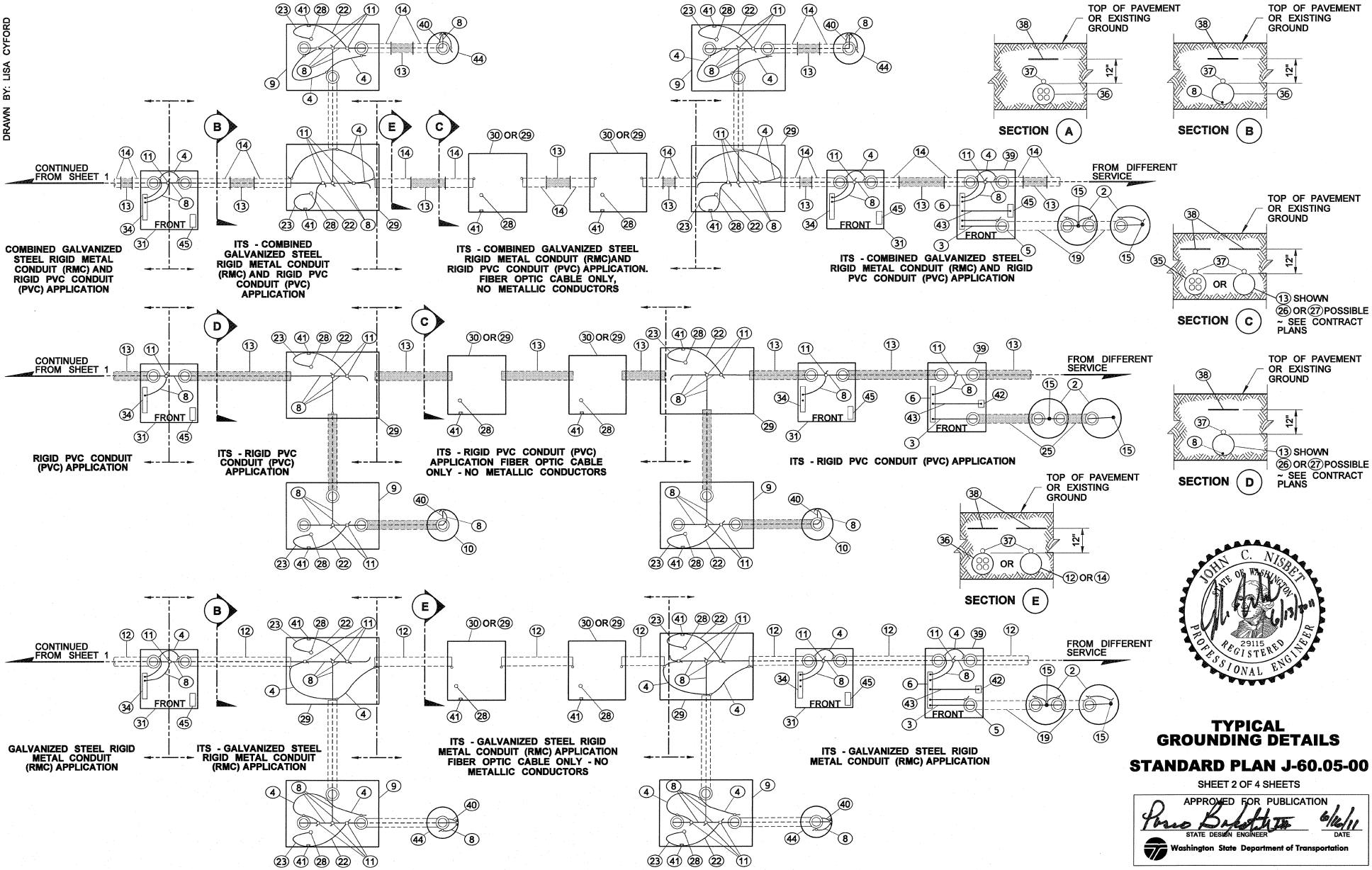

COMBINED GALVANIZED STEEL RIGID METAL CONDUIT (RMC) AND RIGID PVC CONDUIT (PVC) APPLICATION

ITS - COMBINED GALVANIZED STEEL RIGID METAL CONDUIT (RMC) AND RIGID PVC CONDUIT (PVC) APPLICATION

ITS - COMBINED GALVANIZED STEEL RIGID METAL CONDUIT (RMC)AND RIGID PVC CONDUIT (PVC) APPLICATION. FIBER OPTIC CABLE ONLY, NO METALLIC CONDUCTORS

ITS - COMBINED GALVANIZED STEEL RIGID METAL CONDUIT (RMC) AND RIGID PVC CONDUIT (PVC) APPLICATION

RIGID PVC CONDUIT (PVC) APPLICATION

ITS - RIGID PVC CONDUIT (PVC) APPLICATION

ITS - RIGID PVC CONDUIT (PVC) APPLICATION FIBER OPTIC CABLE ONLY - NO METALLIC CONDUCTORS

ITS - RIGID PVC CONDUIT (PVC) APPLICATION

GALVANIZED STEEL RIGID METAL CONDUIT (RMC) APPLICATION

ITS - GALVANIZED STEEL RIGID METAL CONDUIT (RMC) APPLICATION

ITS - GALVANIZED STEEL RIGID METAL CONDUIT (RMC) APPLICATION FIBER OPTIC CABLE ONLY - NO METALLIC CONDUCTORS

ITS - GALVANIZED STEEL RIGID METAL CONDUIT (RMC) APPLICATION

JOHN C. NISBET
STATE OF WASHINGTON
29115
REGISTERED
PROFESSIONAL ENGINEER

TYPICAL GROUNDING DETAILS

STANDARD PLAN J-60.05-00

SHEET 2 OF 4 SHEETS

APPROVED FOR PUBLICATION

STATE DESIGN ENGINEER — DATE 6/16/11

Washington State Department of Transportation

DRAWN BY: LISA CYFORD

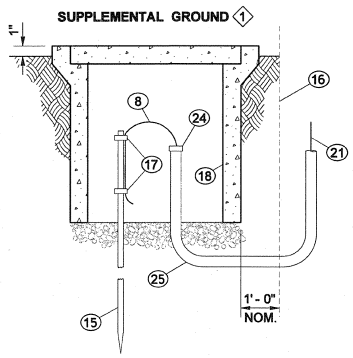

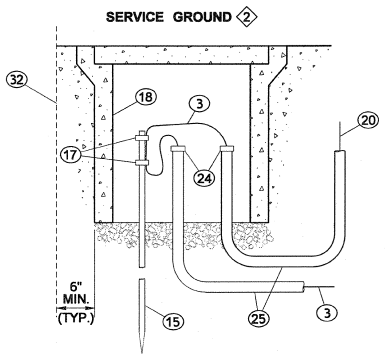

DETAIL A

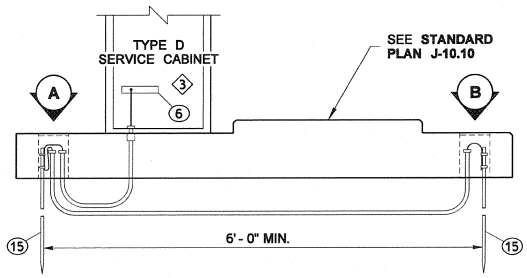

RIGID PVC CONDUIT (PVC) APPLICATION

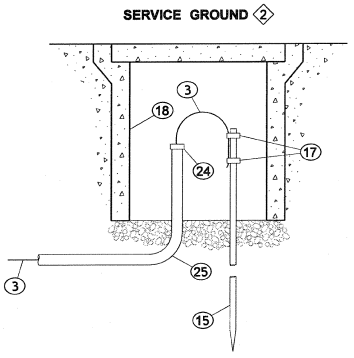

DETAIL B

SEE KEY ON SHEET 1
FOR PARTS

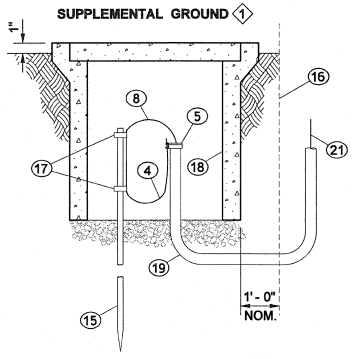

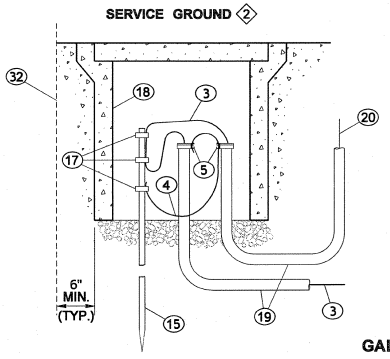

DETAIL C

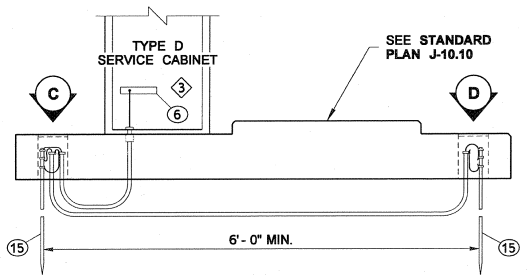

GALVANIZED STEEL RIGID METAL CONDUIT (RMC) APPLICATION

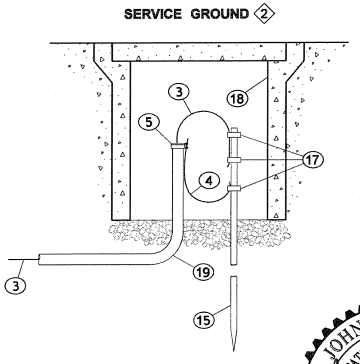

DETAIL D

1. Required to supplement equipment grounding for luminaire standards with direct burial aerial feeds, or where required in the plans
2. Required at all service and separately derived systems
3. Type D service cabinet shown. Use this concept for Type E cabinet or transformer. Type D service cabinet shall be installed on lower surface of foundation only. Type B service cabinet and transformer cabinet shall be installed on raised surface of foundation only.
4. Type B modified service cabinet
5. Grounding electrode conductor and equipment grounding conductor shall not be routed through lug on grounding bushing.

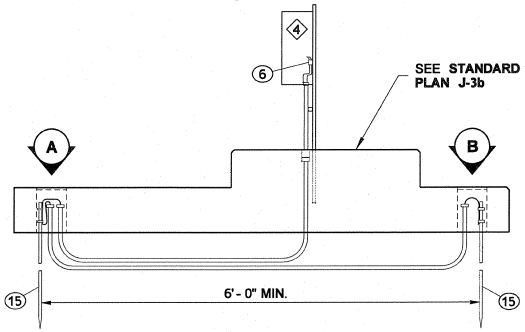

RIGID PVC CONDUIT (PVC) APPLICATION

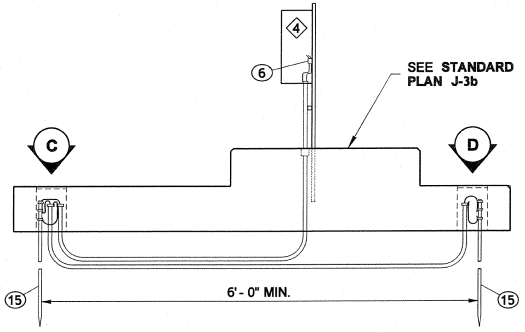

GALVANIZED STEEL RIGID METAL CONDUIT (RMC) APPLICATION

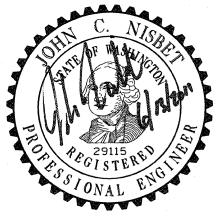

TYPICAL GROUNDING DETAILS

STANDARD PLAN J-60.05-00

SHEET 3 OF 4 SHEETS

APPROVED FOR PUBLICATION

STATE DESIGN ENGINEER — DATE 6/12/11

Washington State Department of Transportation

DRAWN BY: LISA CYFORD

(1) 3/8" × 2" × 2" Frame Bonding Stud Plate with 1/4NC × 1" Stainless Steel Bonding Stud.
- Weld Bonding Stud to Frame Bonding Plate.
- Weld to lid support frame.
- 1/4" weld ~ 3 sides.
- Grind lid bearing surface flat after welding.
- All corners rounded. Corners along exposed sheared or cut edges shall be broken by light grinding to achieve an approximate 1/16" (inch) chamfer or rounding.
- Protect conductors with fireproof cloth prior to welding.
- Omit Frame Bonding Stud Plate if the Frame Bonding point already exists.

(2) Weld all around lid bonding stud ~ 1/4 NC × 1" stainless steel ~ liberally coat entire assembly w/ anti-seize compound.

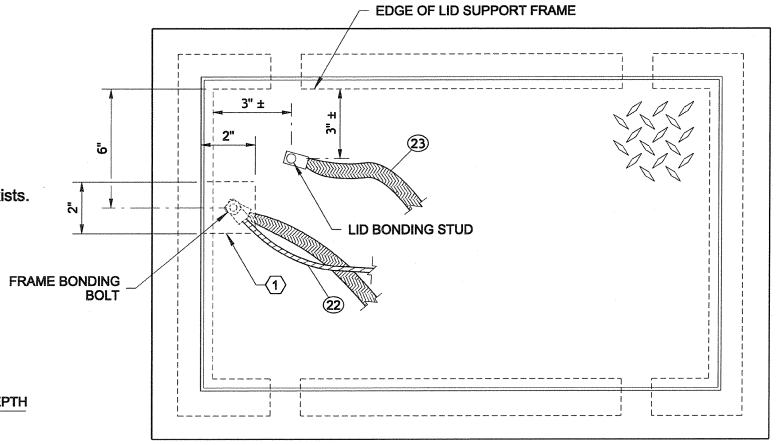

PLAN

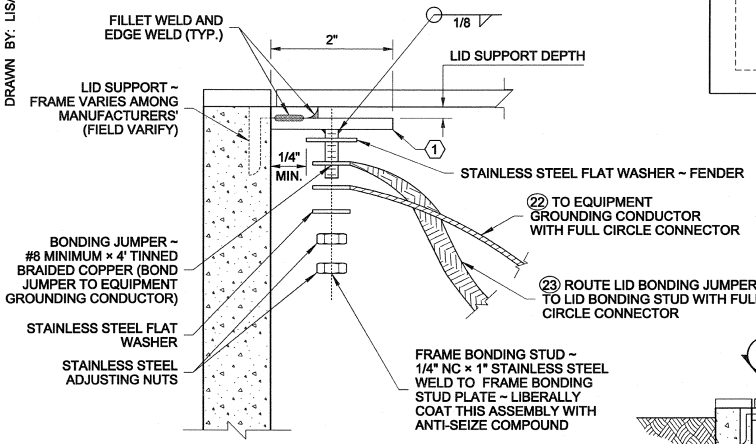

FRAME BONDING DETAIL (A)

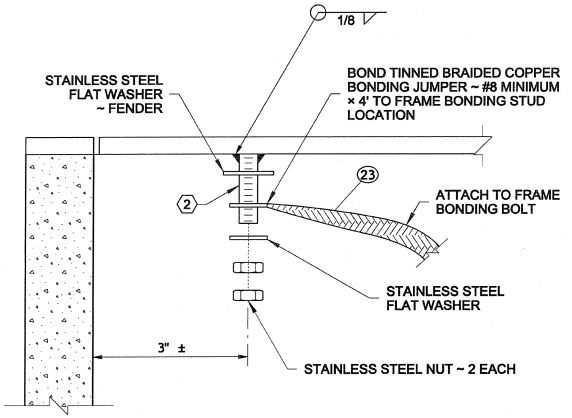

LID BONDING DETAIL (B)

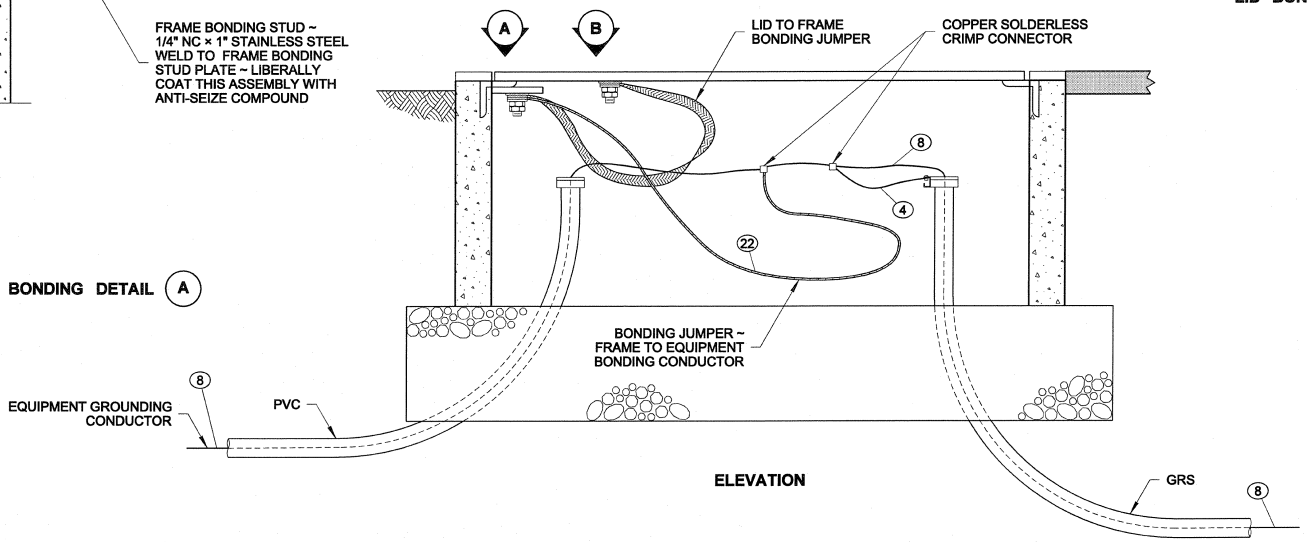

ELEVATION

JOHN C. NISBET
STATE OF WASHINGTON
29115
REGISTERED
PROFESSIONAL ENGINEER

TYPICAL GROUNDING DETAILS

STANDARD PLAN J-60.05-00

SHEET 4 OF 4 SHEETS

APPROVED FOR PUBLICATION

STATE DESIGN ENGINEER — DATE

Washington State Department of Transportation

This page left blank intentionally.

DRAWN BY: LISA CYFORD

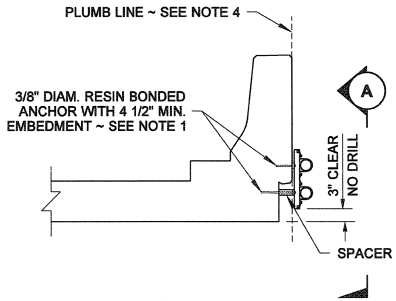

CONCRETE SLAB BRIDGE

(AUTHORIZED ONLY WITH WRITTEN BRIDGE OFFICE APPROVAL, WHERE VERTICAL CLEARANCE IS CONSTRAINED)

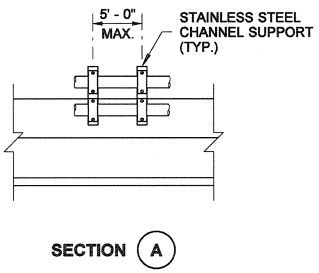

SECTION (A)

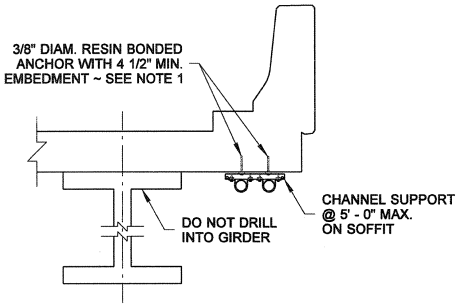

HORIZONTAL CHANNEL MOUNT

(F-SHAPE BARRIER SHOWN APPLY TO ALL BARRIER TYPES)

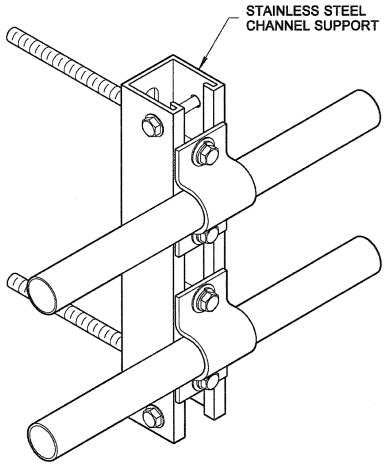

ISOMETRIC VIEW

CONDUIT SUPPORT DETAIL

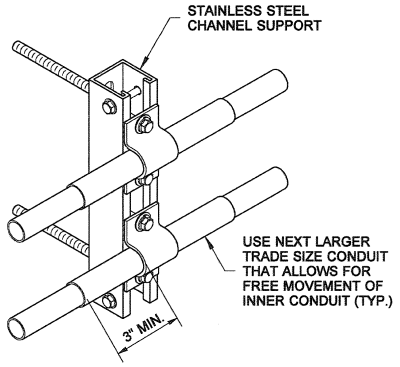

ISOMETRIC VIEW

PVC CONDUIT SUPPORT DETAIL

(FOR UTILITY COMPANY USE - ONLY ALLOWED IN RARE INSTANCES, AUTHORIZED ONLY WITH WRITTEN BRIDGE OFFICE APPROVAL, WHERE VERTICAL CLEARANCE IS CONSTRAINED)

CONDUIT DIMENSIONS ⟨1⟩	
NOMINAL TRADE SIZE (IN.)	OUTSIDE DIAMETERS
1/2	0.840
3/4	1.050
1	1.315
1 1/4	1.660
1 1/2	1.900
2	2.375
2 1/2	2.875
3	3.500
3 1/2	4.000
4	4.500
5	5.563
6	6.625

⟨1⟩ CONDUIT DIAMETERS REFLECT THE DIMENSIONS FOR RIGID GALVANIZED STEEL, SCHEDULE 40 PVC AND SCHEDULE 80 PVC (3 1/2" SCHEDULE 80 PVC IS NOT AVAILABLE)

STRAP THICKNESS CHART	
NOMINAL PIPE SIZE (IN.)	STRAP THICKNESS
1/2 - 2	> OR = 1/8"
> 2 - 5	> OR = 1/4"
6	> OR = 1/4"

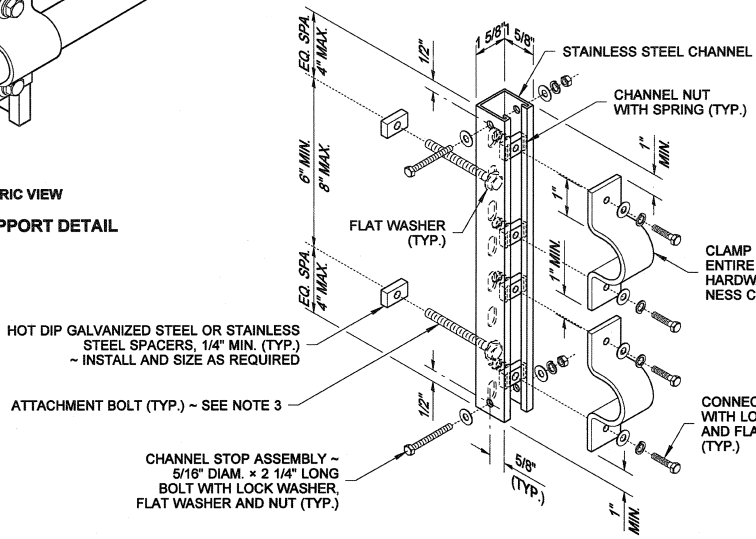

ISOMETRIC VIEW

STAINLESS STEEL CHANNEL SUPPORT DETAIL

(VERTICAL MOUNT SHOWN)

NOTES

1. Drilling through reinforcing steel is not allowed. If steel is hit while drilling, the location shall be moved and the abandoned hole filled with grout conforming to **Standard Specification 6-02.3(20).** There shall be a minimum of a 3" edge distance to the center-line of anchor holes in concrete. Mount the stainless steel support using an approved resin bonded anchor system. Anchors shall be stainless steel and shall be of 3/8" diameter (expansion anchors are not allowed). Anchor Bolt embedment of 4 1/2" minimum.
2. Number of clamps shall be determined by number of conduits to be attached to the Stainless Steel Channel Support. See Conduit Plans for conduit routing.
3. Add additional Attachment Bolts when required to maintain 8" maximum spacing between adjacent Attachment Bolts.
4. Stainless Steel Channel to be plumb to face of structure. Size spacer to maintain plumb line. When barrier is not plumb, size spacer to maintain back of barrier line.
5. See **Standard Plan J-60.14** for Column Mounting details.

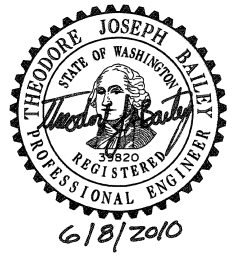

STAINLESS STEEL CHANNEL

STANDARD PLAN J-60.13-00

SHEET 1 OF 1 SHEET

APPROVED FOR PUBLICATION

STATE DESIGN ENGINEER — DATE 6/14/10

Washington State Department of Transportation

DRAWN BY: LISA CYFORD

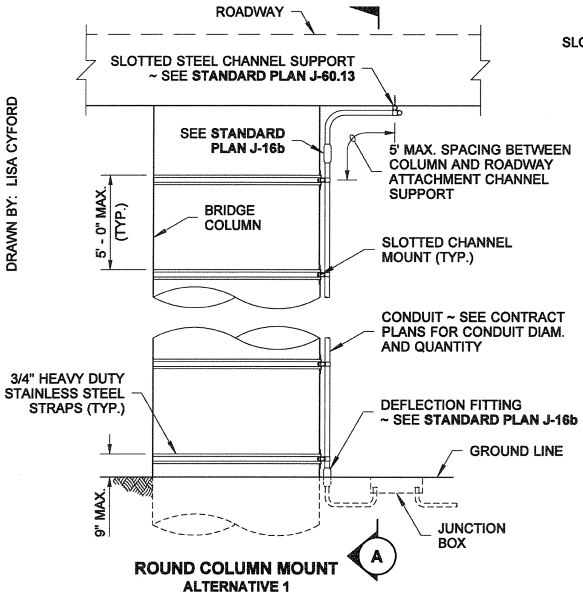

ROUND COLUMN MOUNT
ALTERNATIVE 1

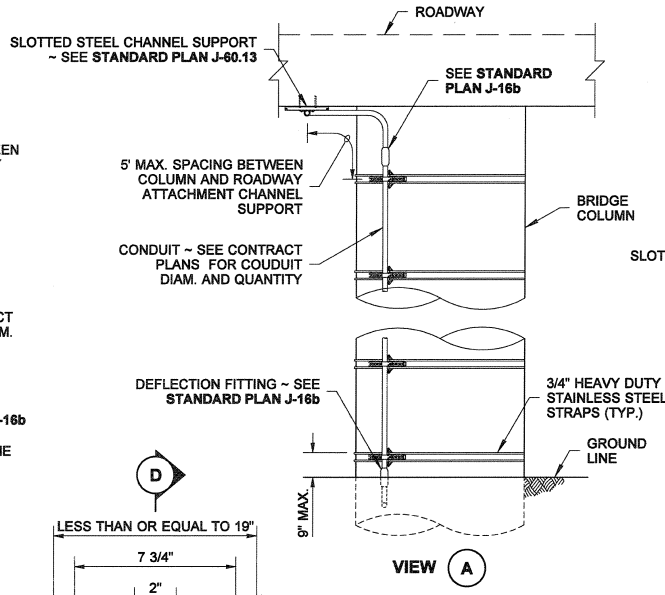

VIEW (A)

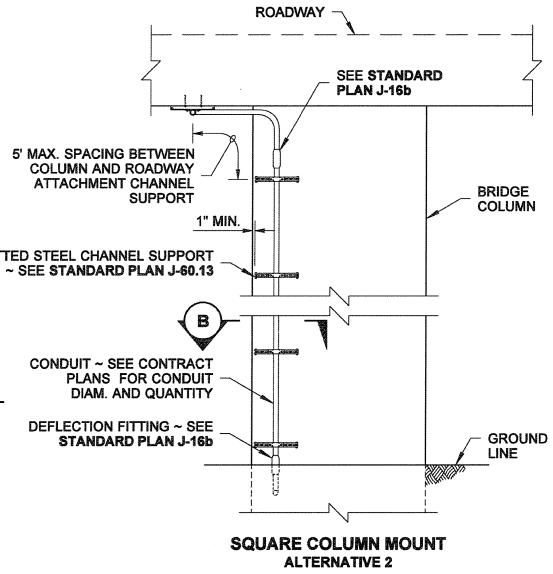

SQUARE COLUMN MOUNT
ALTERNATIVE 2

NOTES

1. See **Standard Plan J-60.13** for Slotted Steel Channel details.
2. Stainless Steel Channel to be plumb to face of structure. Size spacer to maintain plumb line.
3. Slotted Channel mounting plate shall be installed where conduit is routed along column.
4. See Contract Plans for specified Alternative attachment type.

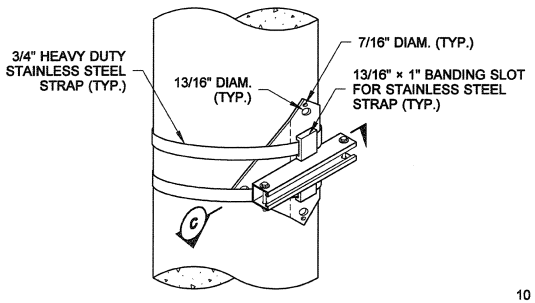

ISOMETRIC VIEW
COLUMN MOUNT DETAILS

SLOTTED CHANNEL MOUNTING PLATE

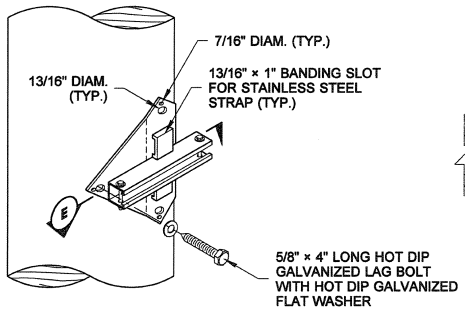

ISOMETRIC VIEW
WOOD POLE MOUNT DETAILS

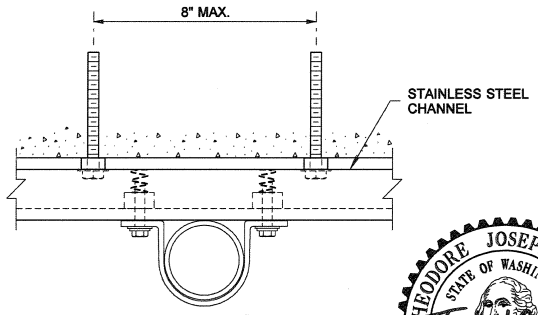

SECTION (B)
SQUARE COLUMN MOUNT SHOWN

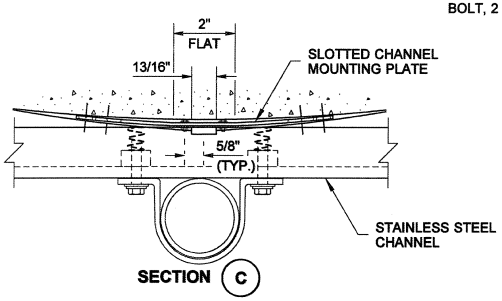

SECTION (C)

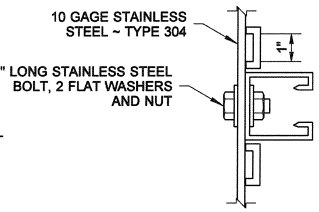

SECTION (D)

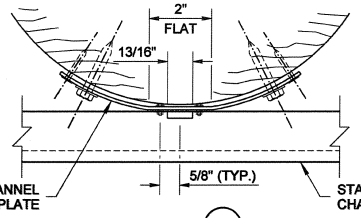

SECTION (E)

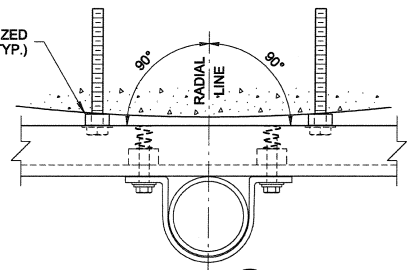

SECTION (B)
ROUND COLUMN MOUNT SHOWN

THEODORE JOSEPH BAILEY
STATE OF WASHINGTON
39820
REGISTERED
PROFESSIONAL ENGINEER
6/8/2010

STAINLESS STEEL CHANNEL MOUNTING DETAILS ON COLUMN OR POLE
STANDARD PLAN J-60.14-00

SHEET 1 OF 1 SHEET

APPROVED FOR PUBLICATION
STATE DESIGN ENGINEER — DATE 6/15/10
Washington State Department of Transportation

DRAWN BY: LISA CYFORD

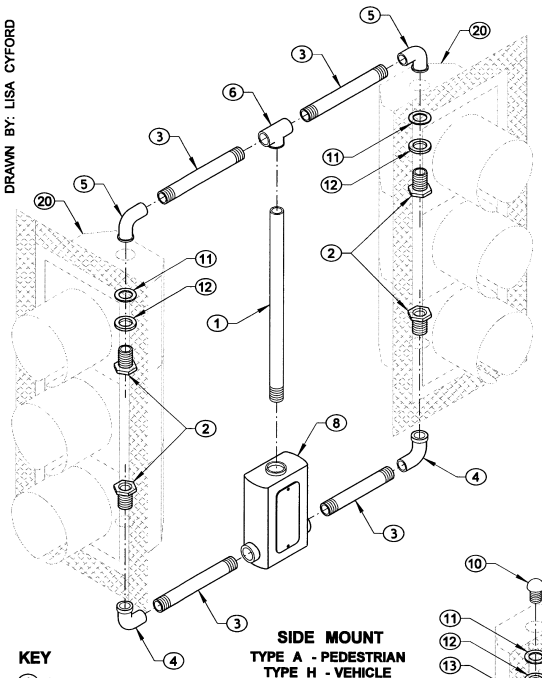

SIDE MOUNT
TYPE A - PEDESTRIAN
TYPE H - VEHICLE

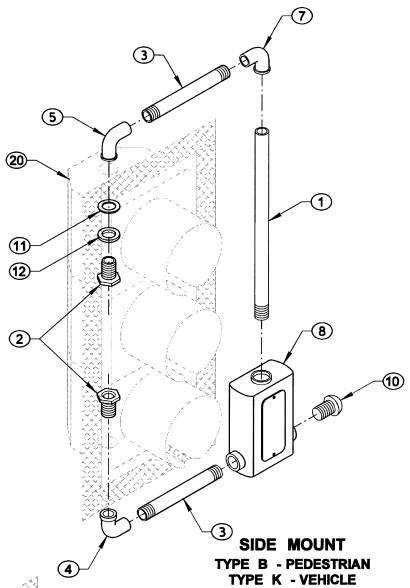

SIDE MOUNT
TYPE B - PEDESTRIAN
TYPE K - VEHICLE

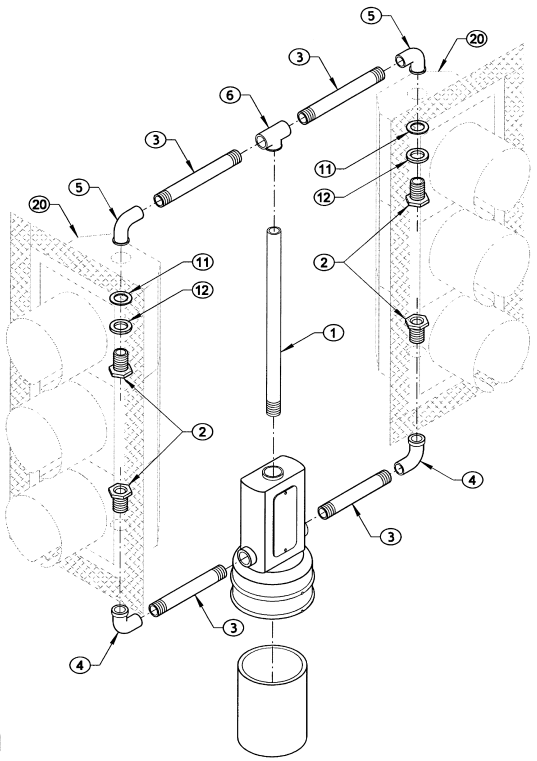

TOP MOUNT
TYPE C - PEDESTRIAN
TYPE F - VEHICLE

KEY

1. CENTER PIPE
2. LOCKNIPPLE
3. NIPPLE
4. SERRATED ELBOW
5. SERRATED OR FLANGED ELBOW
6. REAMED TEE WITH SET SCREW
7. REAMED ELBOW WITH SET SCREW
8. BRONZE TERMINAL COMPARTMENT WITH:
   - GASKETED COVER
   - FASTENERS
   - WIRE LEADS
   - MOUNTING SADDLE FOR SIDE MOUNTS
   - 1/4" DIAM. DRAIN HOLE
   - 12 POSITION TERMINAL STRIP
   - WIREWAY FOR SIDE MOUNTS
9. BRONZE COLLAR ~ 4 1/4" I.D. OFFSET OPENING W/SET SCREWS
10. ORNAMENT CAP
11. NEOPRENE GASKET
12. WASHER
13. CONDUIT LOCKNUT
14. TYPE E HINGE MOUNT ~ LEFT OR RIGHT, SEE CONTRACT
15. FASTENER WITH SPACER ~
    - 1/2" LAG SCREWS ON WOOD POLE
    - 1/2" BOLTS TAPPED TO METAL POLE
16. FLATHEAD SOCKET BOLT
17. 1/2" INSERT HOLE FOR EXTERNAL WIRE ENTRANCE (REQUIRED ON TIMBER POLE MOUNTING ONLY)
18. TERMINAL BLOCK AND PHENOLIC TAG
19. INSULINER ~ 1" MIN. DIAM. HOLE
20. SIGNAL HEAD WITH BACKPLATE

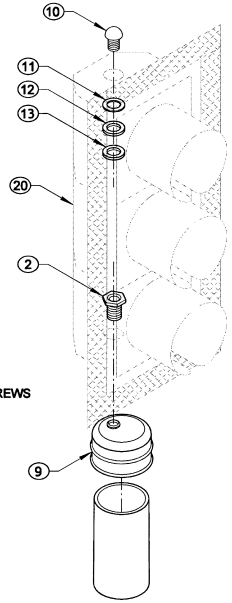

TOP MOUNT
TYPE D - PEDESTRIAN ~ OFFSET BRONZE COLLAR TO FRONT
OR VEHICLE (SHOWN) ~ OFFSET BRONZE COLLAR TO BACK

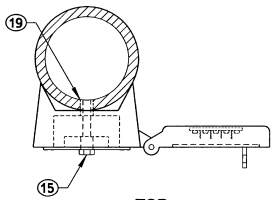

TOP

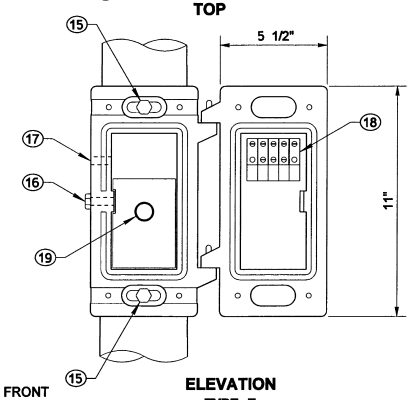

ELEVATION
TYPE E
MOUNTING DETAILS

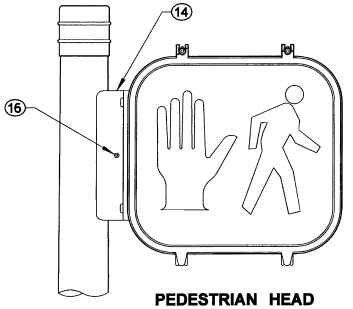

PEDESTRIAN HEAD
SIDE MOUNT
(LEFT SIDE SHOWN)
TYPE E - NEON GRID OR SIMILAR SIZE
LED PEDESTRIAN HEAD

NOTES

1. See Contract for head type, mounting height, and orientation.
2. All nipples, fittings, and center pipes shall be 1 1/2" diameter.
3. Install neoprene gasket inside head when flanged elbows are supplied.
4. Extend wire sheath a minimum of 1" inside all signal and sign housings and terminal compartments.
5. Apply bead of silicone to the serrated ring and around the perimeter of all top openings prior to installation of fittings.
6. Back plates shall be constructed of anodized aluminum and shall be mounted with stainless steel hardware. A 2-inch-wide strip of yellow retro-reflective, type IV prismatic sheeting, conforming to the requirements of **Standard Specification 9-28.12,** shall be applied in accordance with the manufacturer's recommendations. The application surface of the back plate shall be cleaned, degreased with isopropyl alcohol, and dried prior to application of the sheeting. See **Standard Specification 9-29.16(2)D.**
7. Drill a 1/4" drain hole in the bottom of each signal assembly, and one in the bottom of each pedestrian head. When signal assembly is mounted horizontally, drill a 1/4" drain hole at the lowest point of each section of the signal assembly.

SIGNAL HEAD MOUNTING DETAILS ~ POLE AND POST TOP MOUNTINGS

STANDARD PLAN J-75.10-01

SHEET 1 OF 1 SHEET

APPROVED FOR PUBLICATION

STATE DESIGN ENGINEER — DATE 6/9/11

Washington State Department of Transportation

DRAWN BY: LISA CYFORD

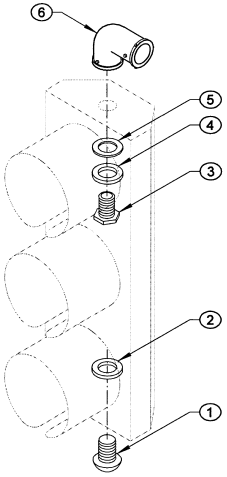

ARM MOUNT
TYPE L

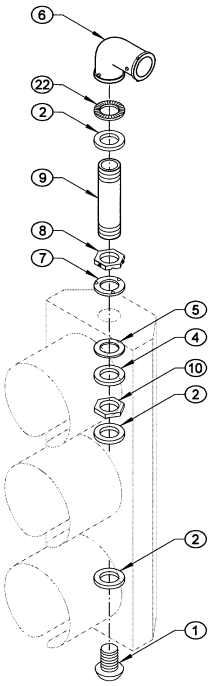

ARM MOUNT
TYPE LE
(TYPE L WITH
EXTENSION FITTINGS)

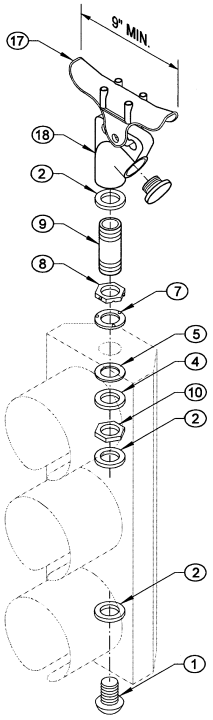

SPAN WIRE
TYPE P (1 HEAD)

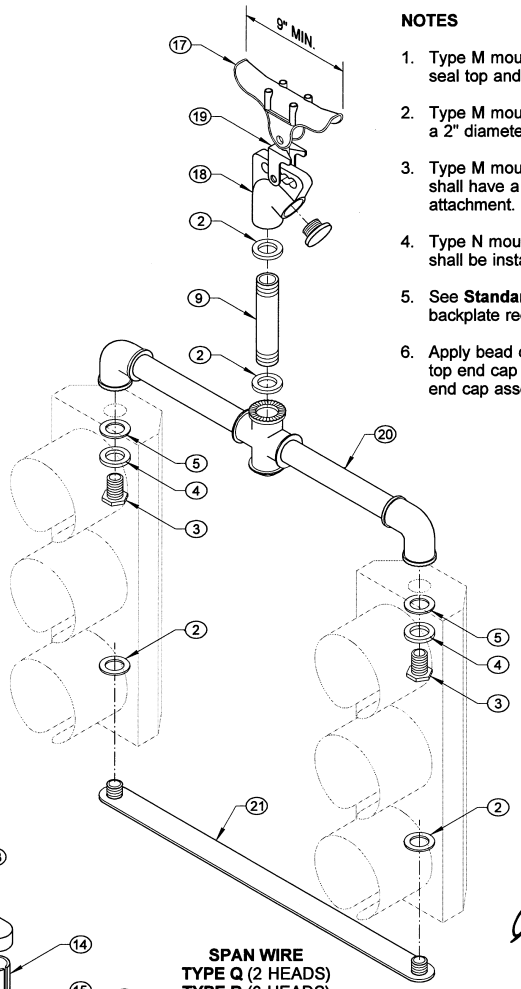

SPAN WIRE
TYPE Q (2 HEADS)
TYPE R (3 HEADS)
TYPE S (4 HEADS)

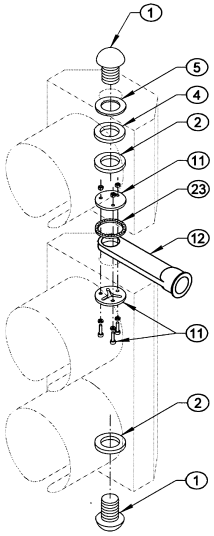

ARM MOUNT
TYPE M

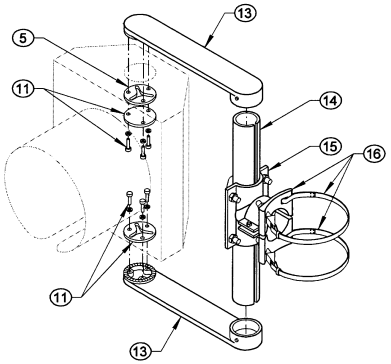

ARM MOUNT
TYPE N

KEY

1. END CAP
2. 1 1/2" DIAM. CONDUIT LOCKNUT
3. 1 1/2" DIAM. LOCKNIPPLE
4. STEEL WASHER
5. NEOPRENE GASKET
6. BRONZE SERRATED ELL FITTING WITH:
   - 3/8" STAINLESS STEEL THROUGH BOLT AND NUTS
   - THREE STAINLESS STEEL SET SCREWS AT SLIPFITTER CONNECTION
   - THREE ALLEN HEAD STAINLESS STEEL SET SCREWS AT CONDUIT NIPPLE CONNECTION
7. SERRATED RING WITH PINS
8. HEX LOCKNUT WITH:
   - TWO ALLEN HEAD STAINLESS STEEL SET SCREWS
   - PIN RECEPTACLES
9. 1 1/2" DIAM. CONDUIT NIPPLE
10. 1 1/2" DIAM. HEX LOCKNUT
11. MOUNTING ASSEMBLY
12. BRONZE ELEVATOR PLUMBIZER WITH 3/8" STAINLESS STEEL THROUGH BOLT, WASHERS, AND TWO NUTS
13. ALUMINUM ARM WITH SET SCREW
14. SLOTTED TUBE WITH CLOSURE STRIP
15. 2 1/2" I.D. MIN. TUBE CLAMP
16. INTERNALLY THREADED CLAMP ASSEMBLY WITH:
    - TWO SET SCREWS
    - 1/2" × 0.045" STAINLESS STEEL BANDS
    - 7/16" SCREW BUCKLES, WITH SWIVELS, NUTS, AND WASHERS
    - BAND CLIPS WITH ALLEN HEAD STAINLESS STEEL SET SCREWS
17. BRONZE MESSENGER HANGER WITH:
    - 1/2" DIAM. J-BOLTS
    - CABLE LOCK BAR
    - RIVET
    - COTTER KEY
18. BRONZE INTERNALLY THREADED WIRE ENTRANCE WITH:
    - BUSHING INSERT
    - ALLEN HEAD STAINLESS STEEL SET SCREW
19. BRONZE BALANCE ADJUSTER
20. MULTI-HEAD MOUNTING ASSEMBLY
21. SPIDER ASSEMBLY
22. SERRATED RING WITH NO PINS
23. SERRATED WASHER

NOTES

1. Type M mounting shall have "O" ring groove and seal top and bottom of signal attachment.
2. Type M mounting for conventional heads shall have a 2" diameter opening at the signal attachment.
3. Type M mounting for optically programmed heads shall have a 3 1/2" diameter opening at the signal attachment.
4. Type N mounting with optically programmed heads shall be installed with 14" nominal arms.
5. See **Standard Plan J-75.30** for tether wire, and backplate requirements.
6. Apply bead of silicone around the perimeter of all top end cap openings prior to installation of the end cap assembly.

THEODORE J. TREPANIER
STATE OF WASHINGTON
25335
REGISTERED
PROFESSIONAL ENGINEER

SIGNAL HEAD MOUNTING DETAILS MAST ARM AND SPAN WIRE MOUNTINGS

STANDARD PLAN J-75.20-00

SHEET 1 OF 1 SHEET

APPROVED FOR PUBLICATION

STATE DESIGN ENGINEER — DATE

Washington State Department of Transportation

DRAWN BY: LISA CYFORD

KEY

1. METAL OR TIMBER POLE
2. 2" × 3/16" STAINLESS STEEL BAND WITH 2 EACH:
   - 3/8-16 NC × 3/4" S. S. HEX HEAD BOLT
   - LOCK WASHERS AND NUTS
3. 5/16" EYE AND EYE TURNBUCKLE
4. 3/8" MILD STEEL S-HOOK
5. 1/8" S. S. WIRE ROPE CLAMP (U-BOLT TYPE)
6. 1/8" STAINLESS STEEL TETHER WIRE
7. WIRE CLAMP WITH LEAD WIRE WRAP
8. SIGNAL HEAD
9. 6 × 8.2 LB/FT CHANNEL
10. 2 EACH:
    - 1/2-13 NC × 2 1/2" HEX HEAD BOLT
    - LOCK WASHERS (DRILL AND TAP POLE TO ACCEPT)
11. WIREWAY (SEE DETAIL THIS SHEET)
12. METAL POLE
13. CABINET
14. END BUSHING
15. SEALING LOCKNUT
16. 12-13 NC × 2 1/2" S. S. HEX HEAD BOLT
17. CABINET WALL DRILLED 1/8" OVERSIZE OF NIPPLE
18. CHANNEL DRILLED 1/8" OVERSIZE OF NIPPLE
19. 2" DIAM. × 4" NIPPLE (UNLESS OTHERWISE NOTED)
20. POLE DRILLED SO BUSHING WILL PASS THROUGH
21. 6063 EXTRUDED ALUMINUM FRAME
22. F24T12/CW FLUORESCENT TUBES (4 EACH)
23. TRANSLUCENT PLEXIGLASS SIGN FACE
24. 1 1/2" CAST IRON HUB WITH 5/16" PIN AND COTTER KEY
25. SPAN WIRE MOUNT ASSEMBLY WITH:
    - 1 1/2" DIAM. CONDUIT LOCKNUT
    - 1 1/2" DIAM. CONDUIT NIPPLE
    - BRONZE MESSENGER HANGER WITH:
      - ~ 1/2" DIAM. J-BOLTS
      - ~ CABLE LOCK BAR
      - ~ RIVET
      - ~ COTTER KEY
    - BRONZE INTERNALLY THREADED WIRE ENTRANCE WITH:
      - ~ BUSHING INSERT
      - ~ ALLEN HEAD STAINLESS STEEL SET SCREW
26. ARM MOUNT ASSEMBLY WITH:
    - 1 1/2" DIAM. CONDUIT LOCKNUT
    - BRONZE SERRATED ELL FITTING WITH:
      - ~ 3/8" STAINLESS STEEL THROUGH BOLT AND NUTS
      - ~ THREE STAINLESS STEEL SET SCREWS AT SLIPFITTER CONNECTION
      - ~ THREE ALLEN HEAD STAINLESS STEEL SET SCREWS AT CONDUIT NIPPLE CONNECTION
    - 1 1/2" DIAM. CONDUIT NIPPLE
    - SERRATED RING WITH NO PINS
27. SIDE POLE MOUNT ASSEMBLY WITH:
    - 1 1/2" DIAM. CONDUIT LOCKNUT
    - 1 1/2" DIAM. CONDUIT NIPPLE
    - SERRATED RING WITH NO PINS
28. 1 1/2" SERRATED ELBOW
29. 1 1/2" DIAM. NIPPLE (DRILL AND TAP POLE TO ACCEPT)
30. 2 EACH:
    - 1/2-20 NF × 3/4" STAINLESS STEEL HEX HEAD BOLT
    - LOCK WASHERS (DRILL AND TAP POLE TO ACCEPT)
31. MOUNTING BRACKET

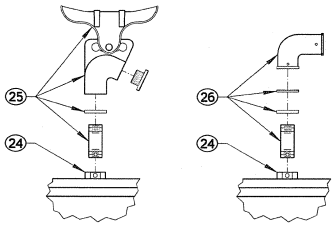

SPAN WIRE MOUNT MAST ARM MOUNT

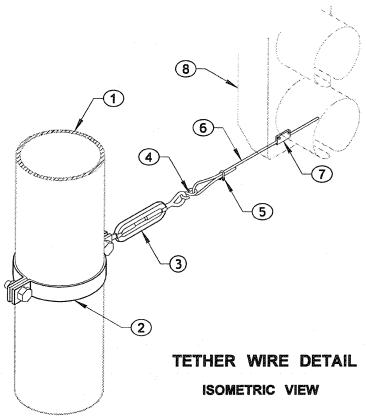

TETHER WIRE DETAIL

ISOMETRIC VIEW

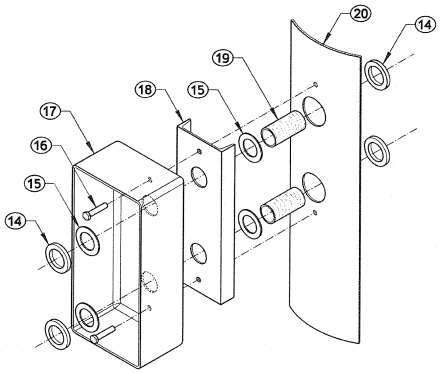

WIREWAY DETAIL

ISOMETRIC VIEW

NOTES

1. Backplates shall be installed with 6 stainless steel screws and washers.
2. Silicone top of channel and around nipples at openings into pole.

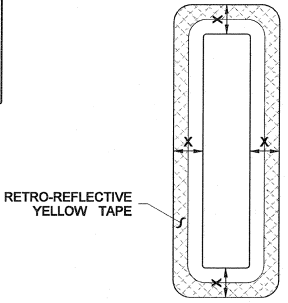

RETRO-REFLECTIVE YELLOW TAPE

BACKPLATE DETAIL

8" OR 12" SECTIONS

8" SECTION X = 8" ± 1/2"
12" SECTION X = 5 1/2" ± 1/2"

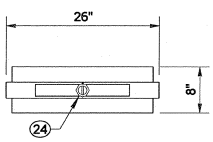

PLAN VIEW

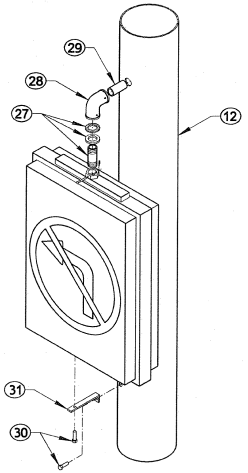

SIDE POLE MOUNT

ISOMETRIC VIEW

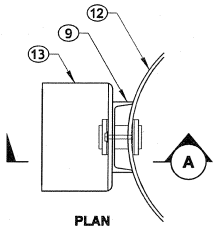

PLAN

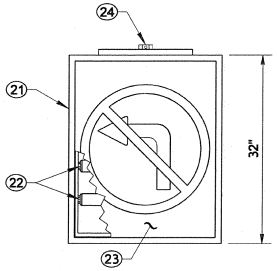

ELEVATION VIEW

INTERNALLY ILLUMINATED SIGN DETAILS

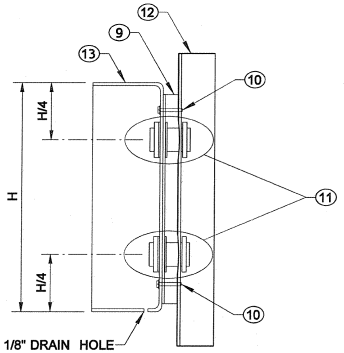

SECTION (A)

ELEVATION VIEW

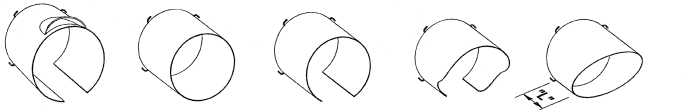

PERSPECTIVE VIEWS

VISORS

45° SHOWN ~ SEE CONTRACT PLANS FOR ANGLE AND LENGTH "L"

CABINET MOUNTING DETAILS

JOHN C. NISBET
STATE OF WASHINGTON
29115
REGISTERED
PROFESSIONAL ENGINEER

MISCELLANEOUS SIGNAL DETAILS

STANDARD PLAN J-75.30-01

SHEET 1 OF 1 SHEET

APPROVED FOR PUBLICATION

STATE DESIGN ENGINEER — DATE 5/11/11

Washington State Department of Transportation

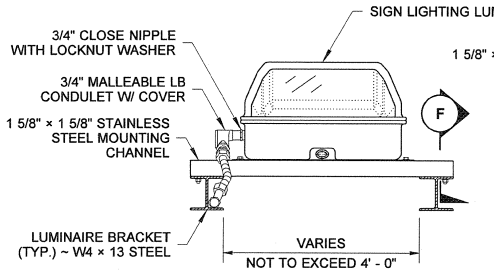

SECTION (E)

SIGN LIGHTING FIXTURE WITH RETROFIT

FOR DETAILS NOT SHOWN SEE **STANDARD PLAN G-90.40**

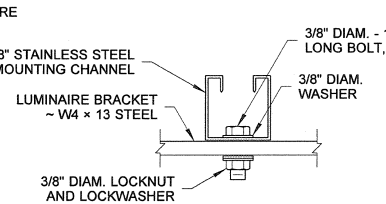

SECTION (F)

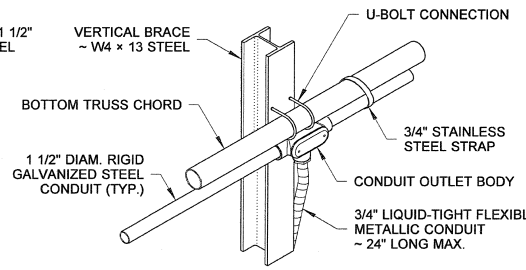

DETAIL (J)

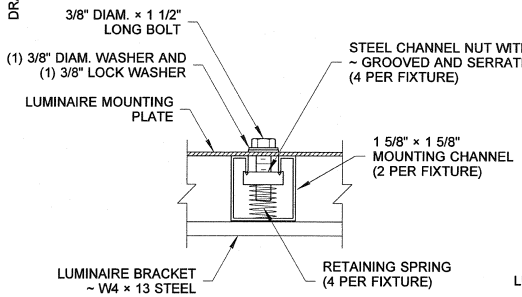

DETAIL (G)

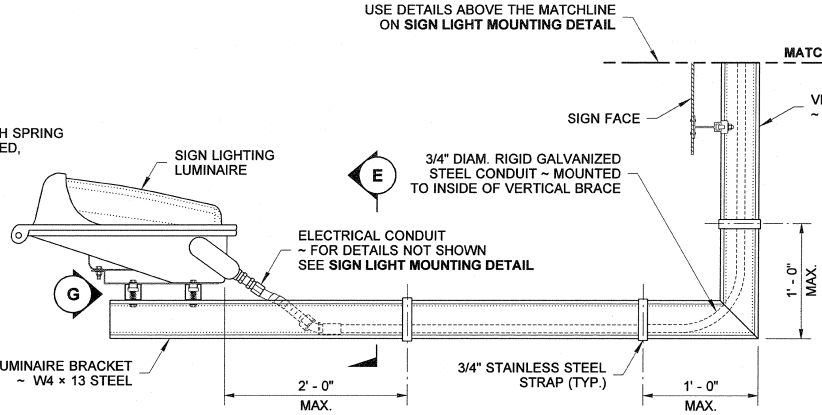

RETROFIT MOUNTING DETAIL

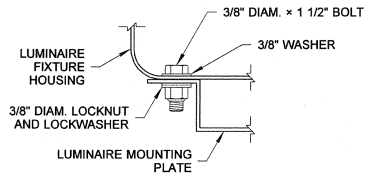

DETAIL (I)

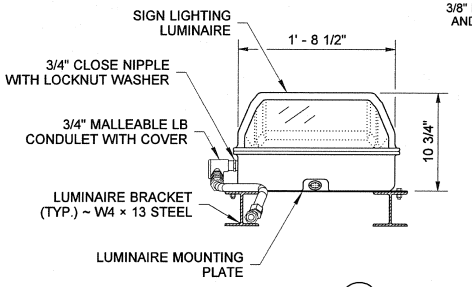

SECTION (H)

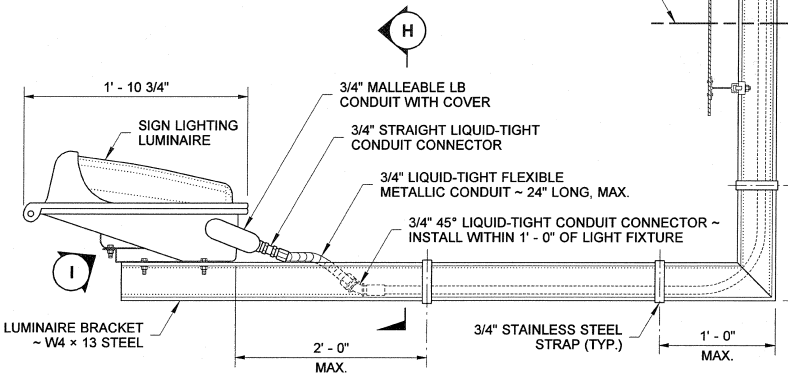

SIGN LIGHT MOUNTING DETAIL

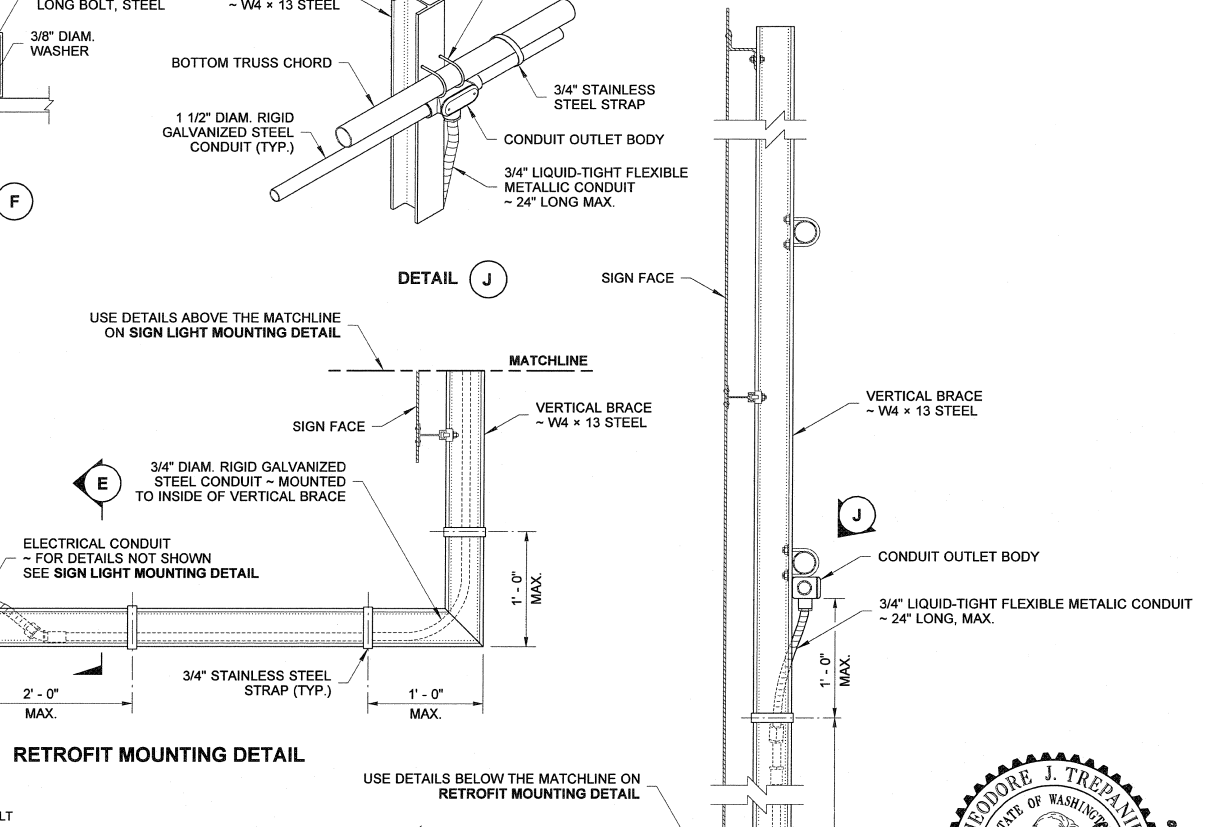

DRAWN BY: LISA CYFORD

THEODORE J. TREPANIER
STATE OF WASHINGTON
25335
REGISTERED
PROFESSIONAL ENGINEER
10/5/09

OVERHEAD SIGN ELECTRICAL DETAILS (TRUSS STRUCTURE) STANDARD PLAN J-75.45-00

SHEET 2 OF 2 SHEETS

APPROVED FOR PUBLICATION

STATE DESIGN ENGINEER — DATE 10/21/09

Washington State Department of Transportation

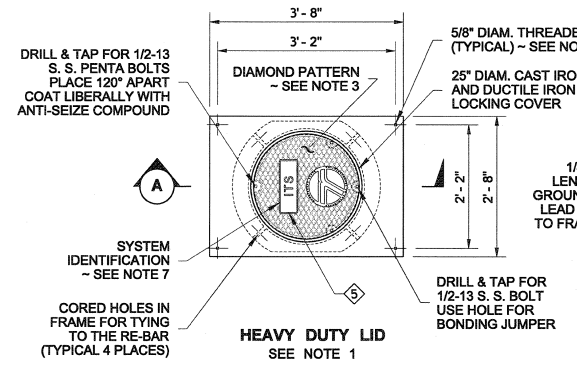

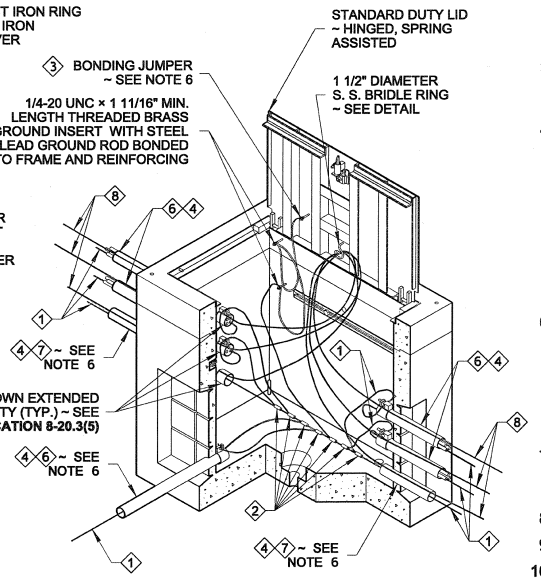

ISOMETRIC CUTAWAY

1. Equipment Grounding Conductor
2. Copper Solderless Crimp Connector
3. Equipment Bonding Jumper ~ See Note 5
4. See Contract for conduit size and number
5. Provide a 1 1/2" wide × 3 1/2" high × 3/16" thick min. flat area for lifting purposes (for Ductile Iron Lid only)
6. GRS Shown ~ See Contract for conduit type
7. PVC Shown ~ See Contract for conduit type
8. Location Wire

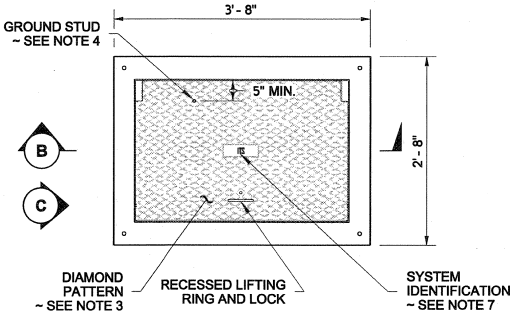

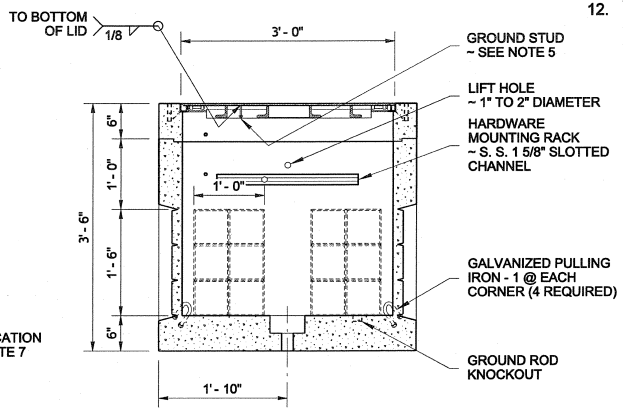

PULL BOX ASSEMBLY
(SHOWN WITH STANDARD DUTY LID)

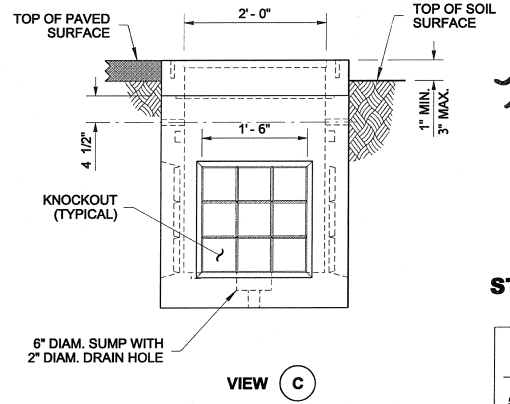

NOTES

1. The Heavy Duty Lid shall be used when a Pull Box is placed in the paved shoulder or the traveled way. Use a 9" thick lid for new Pull Box installations. Use a 6" thick Heavy Duty Lid when converting a Standard Duty Pull Box into a Heavy Duty Pull Box in the paved shoulder or the traveled way and no overlay is called for in the Contract. Otherwise, see Contract Plans for overlay depth and fabricate lid thickness to match overlay depth.
2. Use Standard Duty Pull Box and Lid when placed in unpaved areas. Use Standard Duty Pull Box in sidewalks, walkways, and shared-use paths.
3. Minimum lid thickness shown. The diamond pattern shall be a minimum of 3/32" thick.
4. Standard Duty Pull Boxes installed in sidewalks, walkways, and shared-use paths shall have a slip-resistant coating on lid and shall be installed with the surface flush with and matched to the grade of the sidewalk, walkway, and shared-use paths. The non-slip lid shall be identified with permanent marking on the underside indicating the type of surface treatment (see Contract Documents for details) and the year of manufacture. The permanent marking shall be 1/8" inch line thickness formed with a stainless steel weld bead and shall be placed prior to hot-dip galvanizing.
5. A 1/4-20 UNC × 3/4" S. S. ground stud with (2) S. S. nuts and (2) S. S. flat washers shall be attached to the Standard Duty Lid and coated with anti-seize compound. Provide a 5/8" diameter cored hole in the ductile iron lid gusset (Heavy Duty Lid) with 1/2-13 UNC × 1 1/4" S. S. bolt, (3) S. S. flat washers, and (2) S. S. nuts for the Bonding Jumper.
6. Connect a Bonding Jumper to the steel conduit bushing for GRS conduit and connect the steel conduit bushing jumper to the equipment ground at the threaded brass ground insert. Connect the equipment grounding conductors in the PVC and/or GRS conduits to the brass ground insert. The Bonding Jumper shall be #8 min. x 4' (ft.) of tinned braided copper between the lid and the frame of the Heavy Duty tops and from the Heavy Duty top to the threaded brass ground insert. The Bonding Jumper shall be #8 min. x 4' (ft.) of tinned braided copper between the lid on a Standard Duty Pull Box and the threaded brass ground insert. See Contract Plan Sheets and **Standard Plan J-60.05** for Bonding Jumper requirements.
7. The system identification letters shall be 1/8" line thickness formed by engraving, casting, stamping, or with a S. S. weld bead. See COVER MARKING DETAIL. See **Standard Specification 9-29.2(4).** Ductile iron lid lettering shall be recessed.
8. Cement concrete shall be Class 4000.
9. Plastic plugs shall be put into the lid inserts after fabrication and the lid installation.
10. Capacity - conduit diameter = 40" (in.).
11. Excavate material, place 6" crushed surfacing pad per **Standard Specification Section 8-20.3(6).** Field bend #3 reinforcing bar to allow conduit into the Pull Box. Field bend reinforcing bar back into place, wire tie in (2) places, and cast in commercial concrete (commercial concrete only allowed for box bottom/wall completion).
12. This drawing depicts a typical Pull Box assembly. Reinforcing not shown. Each manufacturer's Pull Box assembly will vary. Refer to the approved manufacturer's shop drawings for all dimensions and the actual arrangement.

PULL BOX

STANDARD PLAN J-90.10-01

SHEET 1 OF 2 SHEETS

APPROVED FOR PUBLICATION

STATE DESIGN ENGINEER — DATE

Washington State Department of Transportation

DRAWN BY: LISA CYFORD

DRAWN BY: LISA CYFORD

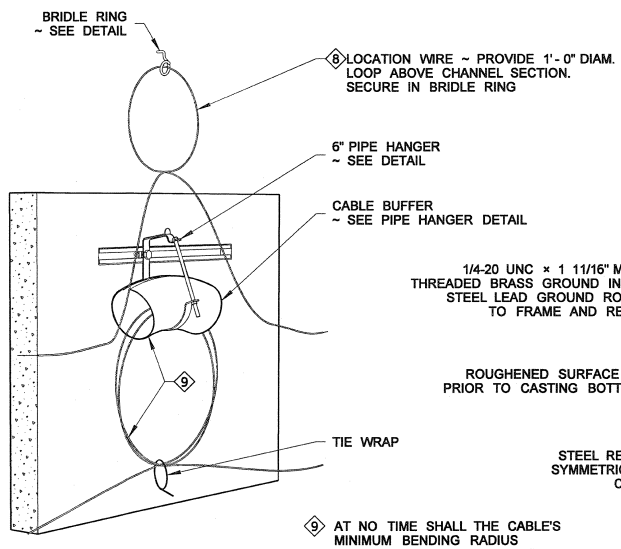

INTERNAL OBLIQUE VIEW

COIL THE CABLE BY USING A "FIGURE 8" FOLDED IN THE MIDDLE TO FORM A LOOP

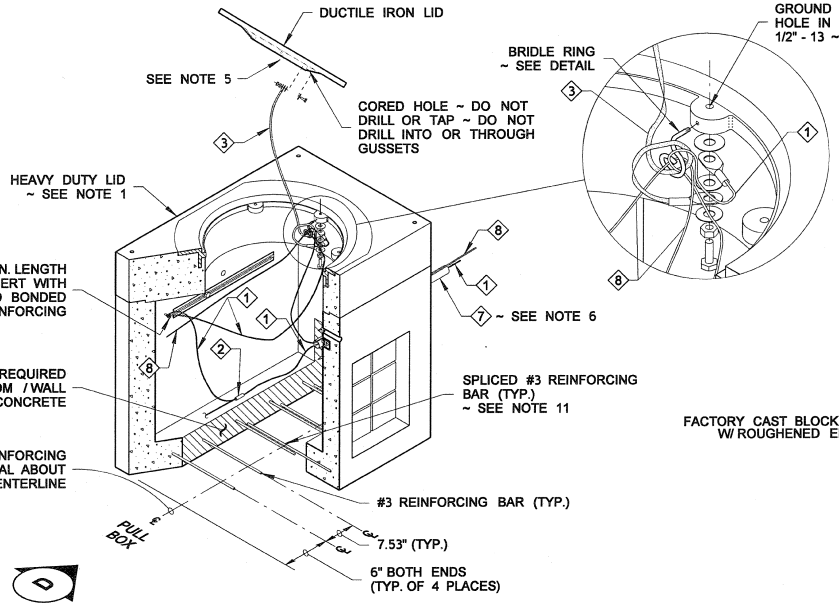

ISOMETRIC CUTAWAY

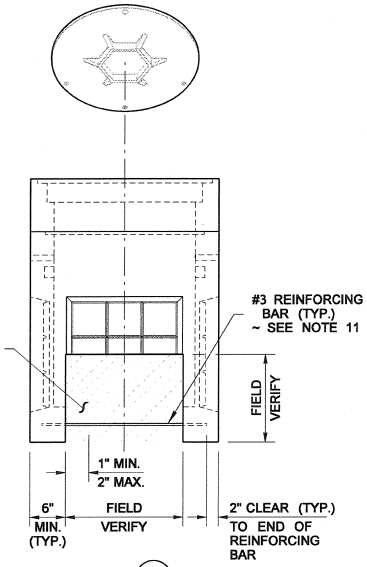

VIEW (D)

SPLIT PULL BOX ASSEMBLY

(SHOWN WITH HEAVY DUTY LID)

SEE **PULL BOX**, SHEET 1, FOR DIMENSIONS NOT SHOWN

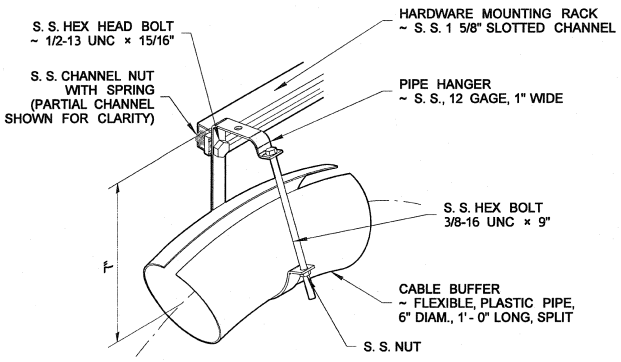

PIPE HANGER DETAIL

FABRICATE IF NOT AVAILABLE COMMERCIALLY

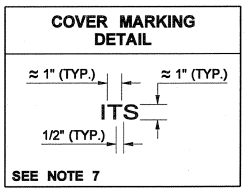

BRIDLE RING DETAIL

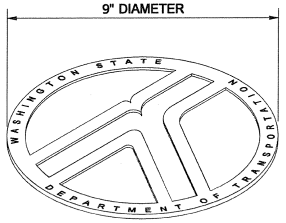

LOGO DETAIL

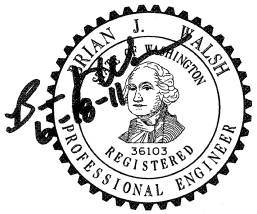

PULL BOX

STANDARD PLAN J-90.10-01

SHEET 2 OF 2 SHEETS

APPROVED FOR PUBLICATION

STATE DESIGN ENGINEER — DATE 4/25/14

Washington State Department of Transportation

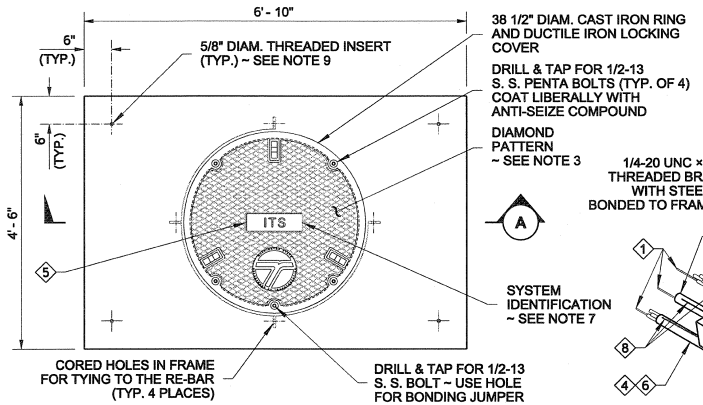

HEAVY DUTY LID
SEE NOTE 1

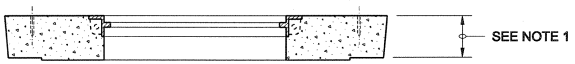

SECTION (A)
(LID NOT SHOWN)

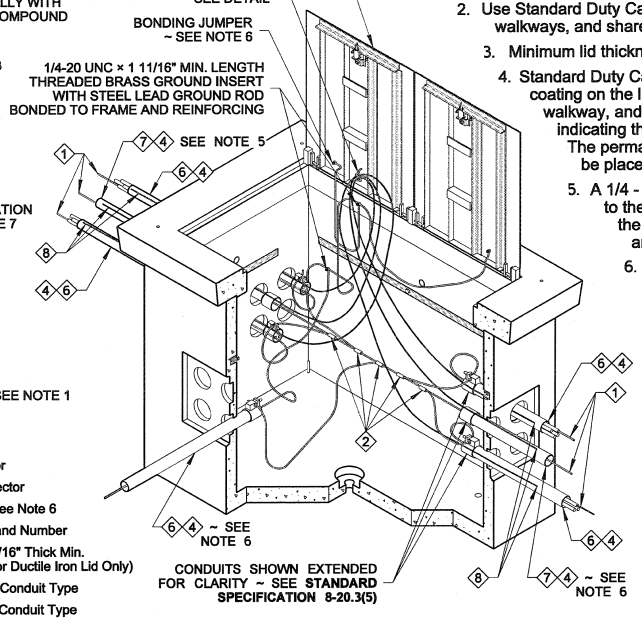

ISOMETRIC CUTAWAY

1. Equipment Grounding Conductor
2. Copper Solderless Crimp Connector
3. Equipment Bonding Jumper ~ See Note 6
4. See Contract for Conduct Size and Number
5. Provide a 5" Wide × 3" High × 3/16" Thick Min. Flat Area for Lifting Purposes (for Ductile Iron Lid Only)
6. GRS Shown ~ See Contract for Conduit Type
7. PVC Shown ~ See Contract for Conduit Type
8. Location Wire

NOTES

1. The Heavy Duty Lid shall be used when a Cable Vault is placed in the paved shoulder or the traveled way. Use a 9" thick lid for new Cable Vault installations. Use a 6" thick Heavy Duty Lid when converting a Standard Duty Cable Vault into a Heavy Duty Cable Vault in the paved shoulder or the traveled way and no overlay is called for in the Contract. Otherwise, see Contract Plans for overlay depth and fabricate lid thickness to match overlay depth.
2. Use Standard Duty Cable Vault and Lid when placed in unpaved areas. Use Standard Duty Pull Box in sidewalks, walkways, and shared-use paths.
3. Minimum lid thickness shown. The diamond pattern shall be a minimum of 3/32" thick.
4. Standard Duty Cable Vaults installed in sidewalks, walkways, and shared-use paths shall have a slip-resistant coating on the lid and shall be installed with the surface flush with and matched to the grade of the sidewalk, walkway, and shared-use paths. The non-slip lid shall be identified with permanent marking on the underside indicating the type of surface treatment (see Contract Documents for details) and the year of manufacture. The permanent marking shall be 1/8" inch line thickness formed with a stainless steel weld bead and shall be placed prior to hot-dip galvanizing.
5. A 1/4 - 20 UNC × 3/4" S. S. ground stud with (2) S. S. nuts and (2) S. S. flat washers shall be attached to the Standard Duty Lid and coated with anti-seize compound. Provide a 5/8" diameter cored hole in the ductile iron lid gusset (Heavy Duty Lid) with 1/2 - 13 UNC × 1 1/4" S. S. bolt, (3) S. S. flat washers, and (2) S. S. nuts for the Bonding Jumper.
6. Connect a Bonding Jumper to the steel conduit bushing for GRS conduit and connect the steel conduit Bushing Jumper to the equipment ground at the threaded brass ground insert. Connect the equipment grounding conductors in the PVC and/or GRS conduits to the brass ground insert. The Bonding Jumper shall be #8 min. x 4' (ft.) of tinned braided copper between the lid and the frame of the Heavy Duty tops and from the Heavy Duty top to the threaded brass ground insert. The Bonding Jumper shall be #8 min. x 4' (ft.) of tinned braided copper between the lid on a Standard Duty vault and the threaded brass ground insert. See Contract Plan Sheets and **Standard Plan J-60.05** for Bonding Jumper requirements.
7. The system identification letters shall be 1/8" line thickness formed by engraving, casting, stamping, or with a S. S. weld bead. See COVER MARKING DETAIL, **Standard Specification 9-29.2(4).** Ductile iron lid lettering shall be recessed.
8. Cement concrete shall be Class 4000.
9. Plastic plugs shall be put into the lid inserts after fabrication and the lid installation.
10. Capacity - conduit diameter = 60" (in.).
11. Excavate material, place 6" crushed surfacing pad per **Standard Specification 8-20.3(6).** Field bend #3 reinforcing bar to allow conduit into the Cable Vault. Field bend reinforcing bar back into place, wire tie in (2) places and cast in commercial concrete (commercial concrete only allowed for bottom/wall completion).
12. This drawing depicts a typical Cable Vault assembly. Reinforcing not shown. Each manufacturer's Cable Vault assembly will vary. Refer to the approved manufacturer's shop drawings for all dimensions and the actual arrangement.

DRAWN BY: LISA CYFORD

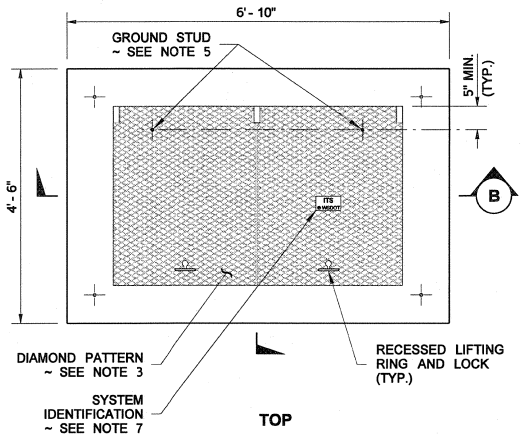

TOP

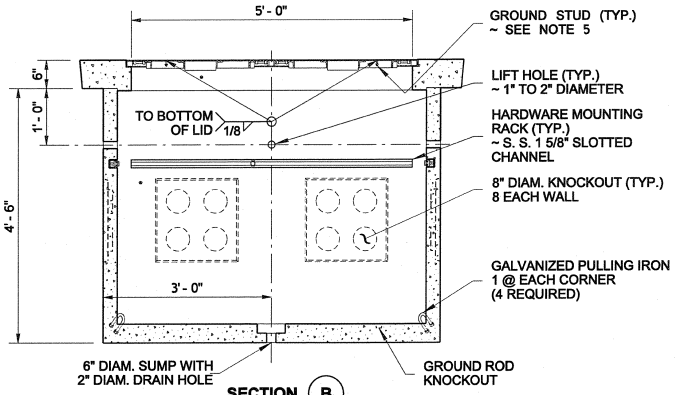

SECTION (B)

CABLE VAULT
(SHOWN WITH STANDARD DUTY LID)

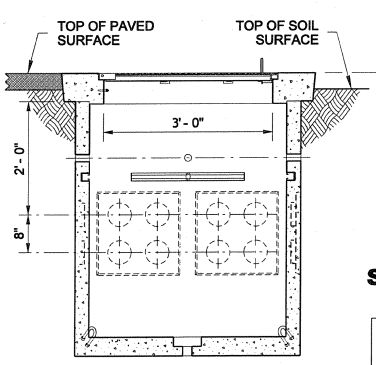

VIEW (C)

CABLE VAULT

STANDARD PLAN J-90.20-01

SHEET 1 OF 2 SHEETS

APPROVED FOR PUBLICATION

STATE DESIGN ENGINEER — DATE

Washington State Department of Transportation

DRAWN BY: LISA CYFORD

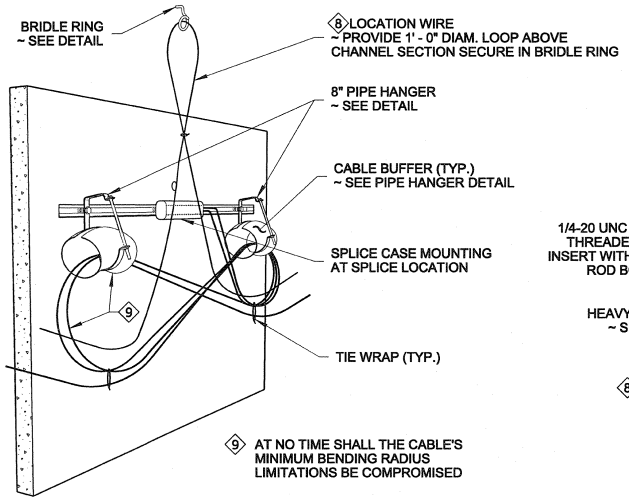

INTERNAL OBLIQUE VIEW

COVER MARKING DETAIL

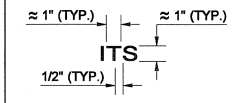

SEE NOTE 7

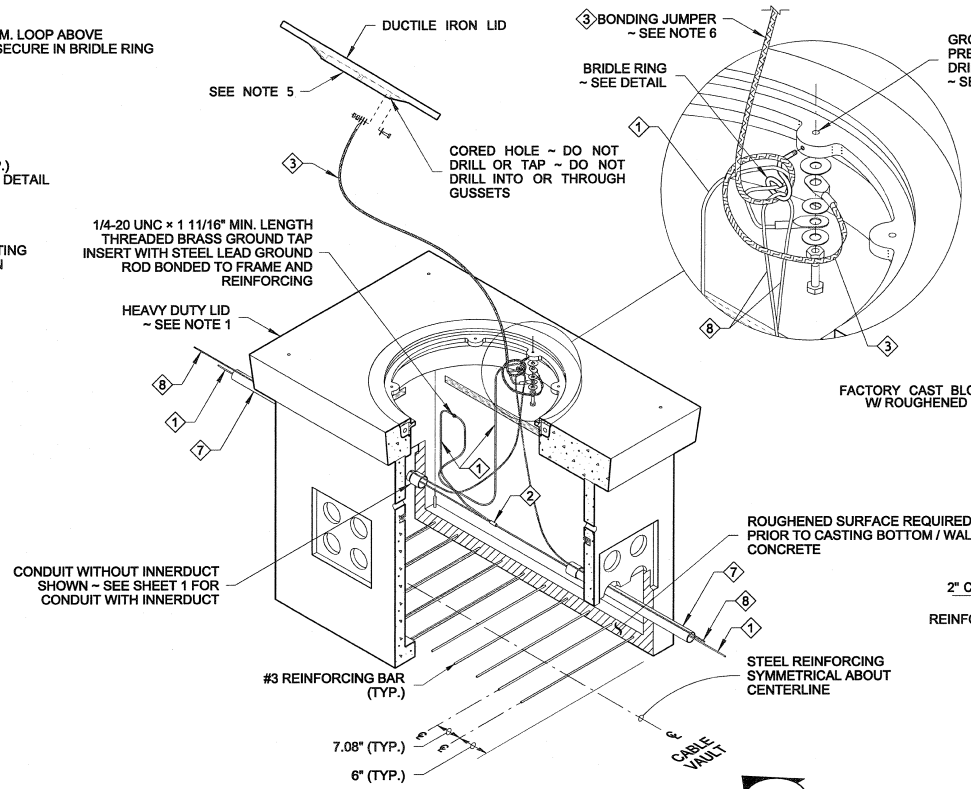

ISOMETRIC CUTAWAY

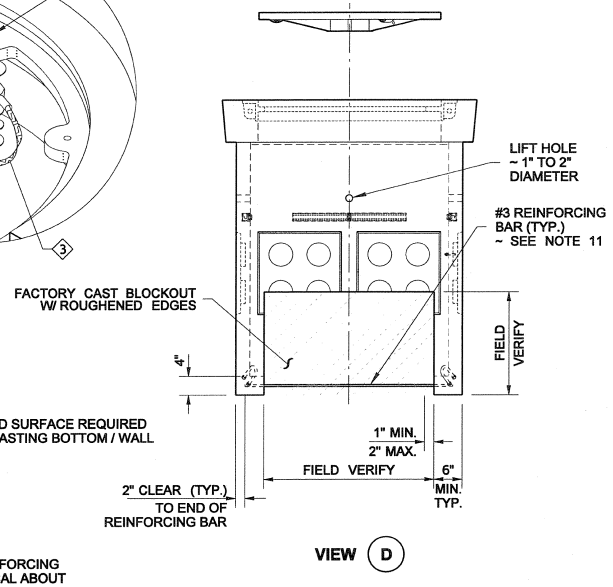

VIEW (D)

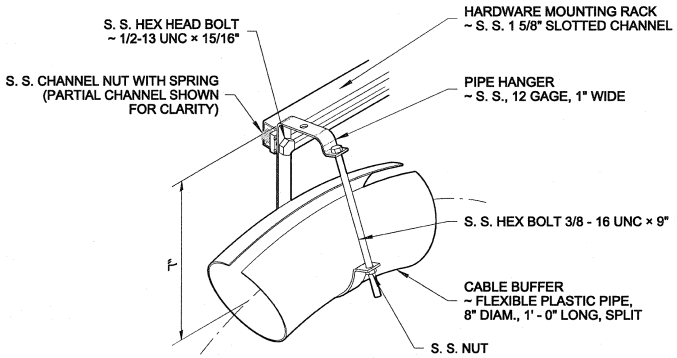

PIPE HANGER DETAIL
FABRICATE IF NOT AVAILABLE COMMERCIALLY

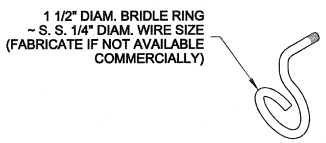

BRIDLE RING DETAIL

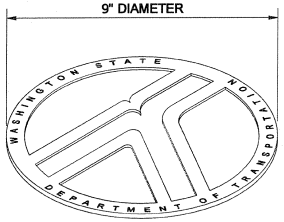

LOGO DETAIL

SPLIT CABLE VAULT
(SHOWN WITH HEAVY DUTY LID)
SEE **CABLE VAULT**, SHEET 1, FOR DIMENSIONS NOT SHOWN

CABLE VAULT

STANDARD PLAN J-90.20-01

SHEET 2 OF 2 SHEETS

APPROVED FOR PUBLICATION

STATE DESIGN ENGINEER — DATE

Washington State Department of Transportation

This page left blank intentionally.

This page left blank intentionally.

DRAWN BY: BILL BERENS

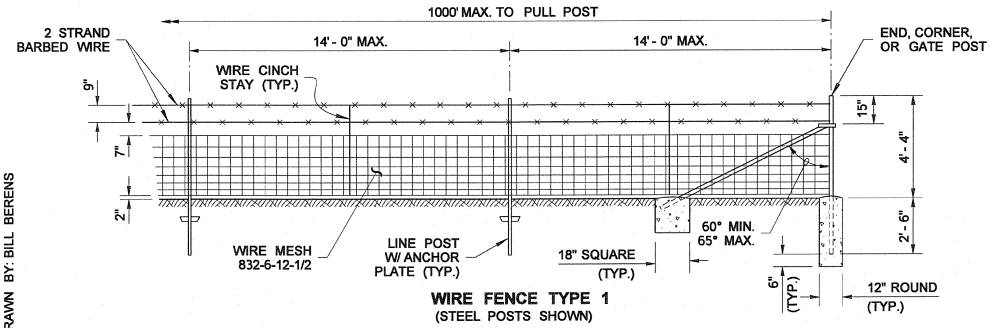

WIRE FENCE TYPE 1
(STEEL POSTS SHOWN)

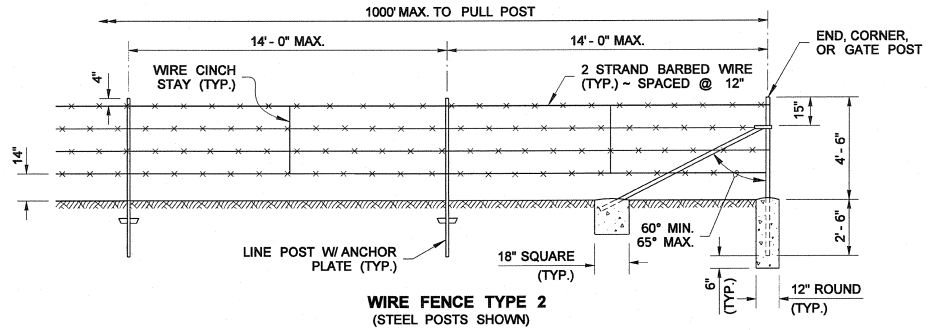

WIRE FENCE TYPE 2
(STEEL POSTS SHOWN)

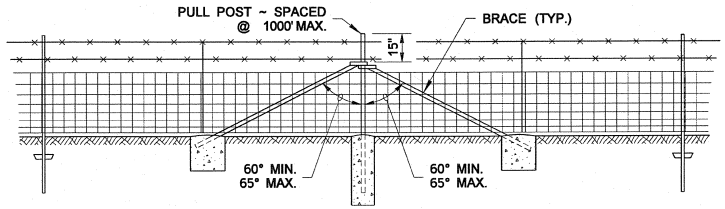

INTERMEDIATE BRACING / PULL POST
(SHOWN FOR WIRE FENCE TYPE 1)

NOTES

1. The bracing and pull post details for Wire Fence Type 2 are the same as for Type 1.
2. Attach the wire mesh to the posts using four fasteners. Three additional fasteners per post are required within and at the limits of sag conditions. Use additional fasteners on posts which mark the angle point of any sudden change in topography.
3. See **Standard Specification 9-16.2(1)** for wood post sizes. Wood anchors (for wood posts) shall be 2×4 lumber, 12" long minimum, and fastened with three 16d galvanized nails.

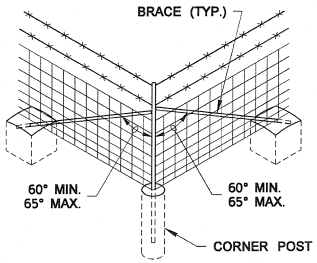

CORNER BRACING
(SHOWN FOR WIRE FENCE TYPE 1)

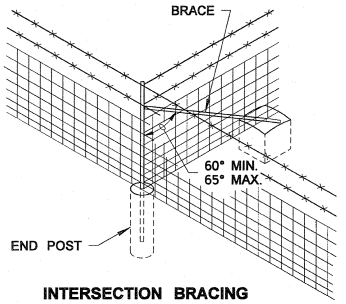

INTERSECTION BRACING
(SHOWN FOR WIRE FENCE TYPE 1)

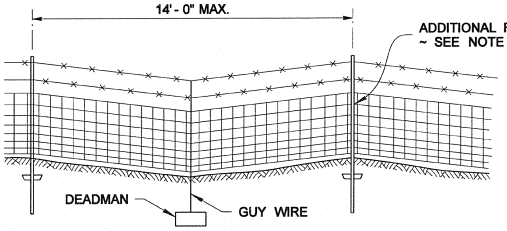

GRADE DEPRESSION (SAG) DETAIL
(STEEL POSTS SHOWN)

STEEL POSTS AND BRACES

POST AND RAIL SPECIFICATIONS					
POST	PIPE	ROLL FORMED		H - COLUMN	T-POST
	NOM. SIZE (SCH. 40) I.D.	SECTION	WEIGHT (lb/ft)	WEIGHT (lb/ft)	WEIGHT (lb/ft)
END, CORNER, OR PULL POST	2 1/2" DIAM.	Y	5.10		
LINE OR BRACE POST	2" DIAM.	Z	1.85	3.26	3.10

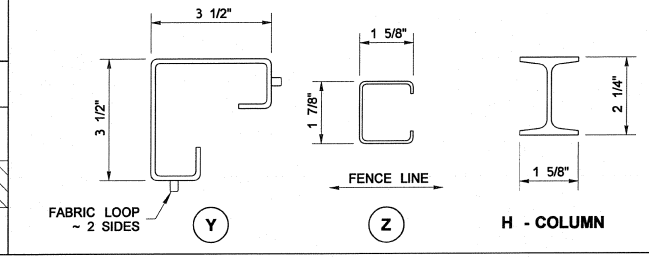

TERRY L. BERENDS
STATE OF WASHINGTON
32350
REGISTERED
PROFESSIONAL ENGINEER

6-8-2011

WIRE FENCE TYPES 1 & 2 AND WIRE GATES

STANDARD PLAN L-10.10-01

SHEET 1 OF 2 SHEETS

APPROVED FOR PUBLICATION

STATE DESIGN ENGINEER — DATE 6/8/11

Washington State Department of Transportation

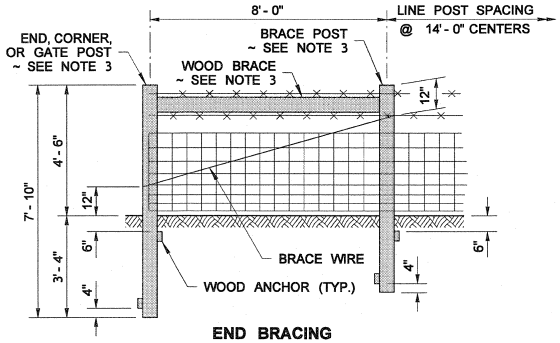

END BRACING
(WIRE FENCE TYPE 1 SHOWN)

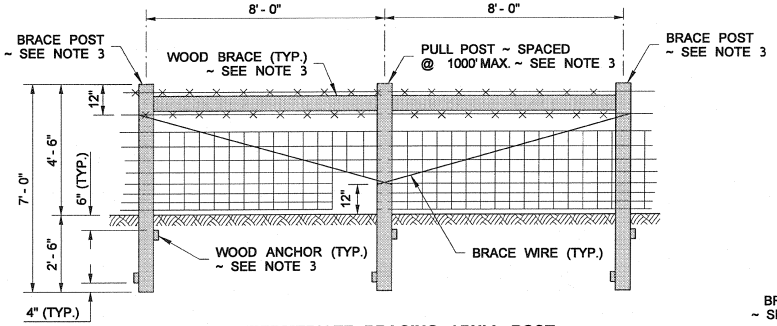

INTERMEDIATE BRACING / PULL POST
(WIRE FENCE TYPE 1 SHOWN)

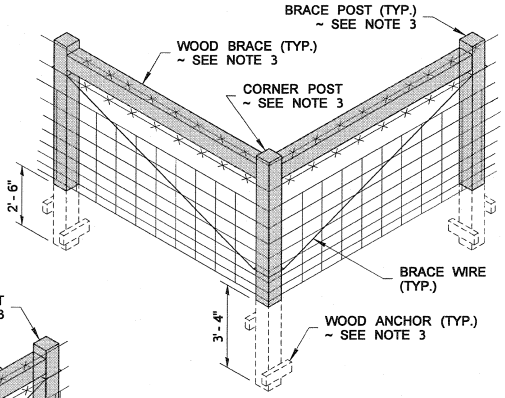

CORNER BRACING
(WIRE FENCE TYPE 1 SHOWN)

DRAWN BY: BILL BERENS

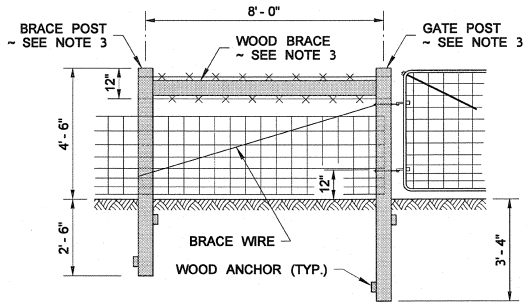

GATE BRACING
(WIRE FENCE TYPE 1 SHOWN)

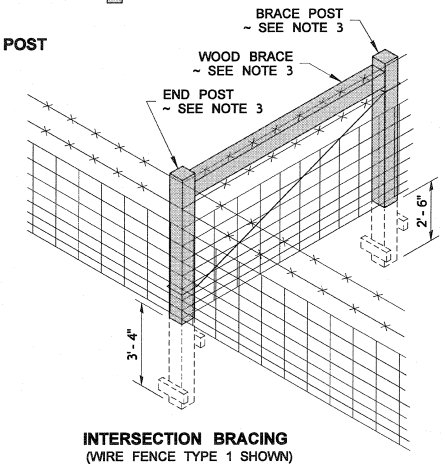

INTERSECTION BRACING
(WIRE FENCE TYPE 1 SHOWN)

WOOD POSTS AND BRACES

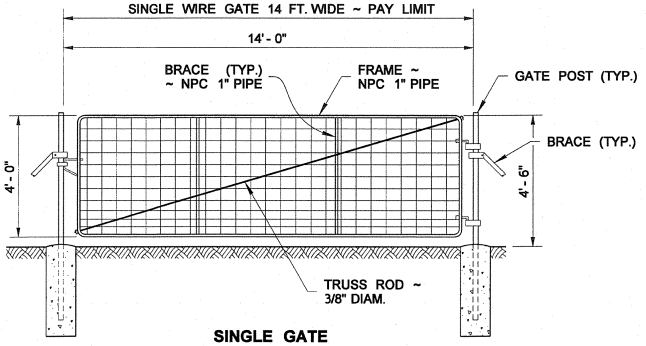

SINGLE GATE
(STEEL POSTS SHOWN)

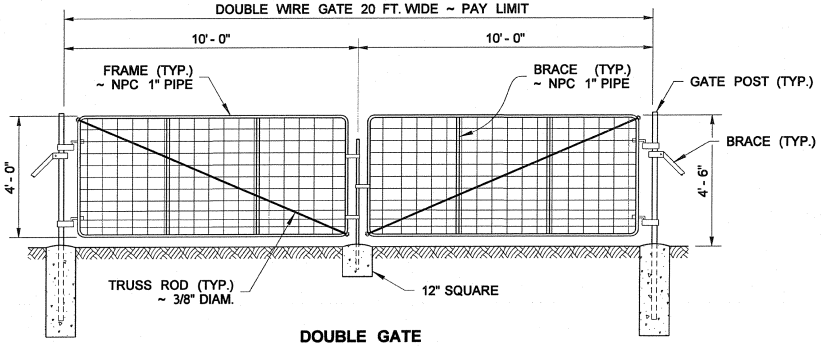

DOUBLE GATE
(STEEL POSTS SHOWN)

GATES

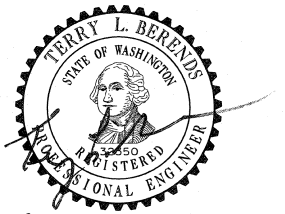

6-8-2011

WIRE FENCE TYPES 1 & 2 AND WIRE GATES

STANDARD PLAN L-10.10-01

SHEET 2 OF 2 SHEETS

APPROVED FOR PUBLICATION

STATE DESIGN ENGINEER — DATE 6/8/11

Washington State Department of Transportation

DRAWN BY: BILL BERENS

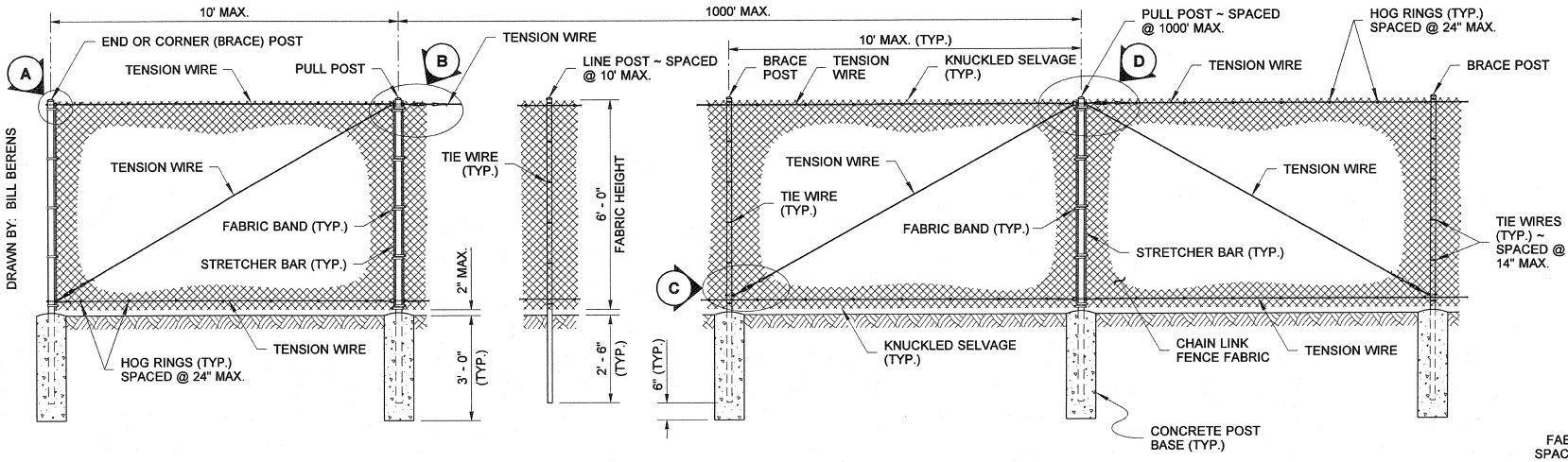

TYPE 3

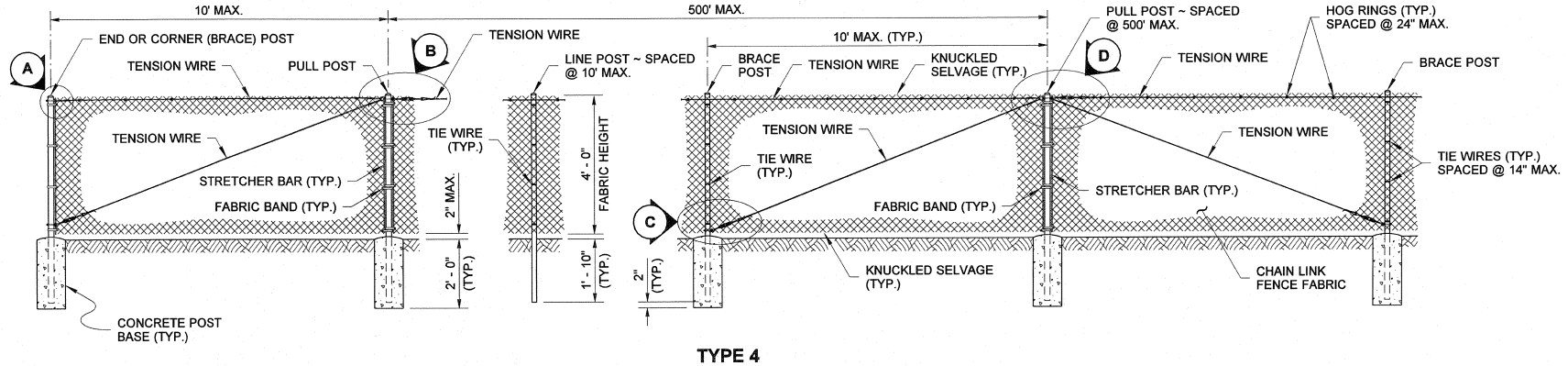

TYPE 4

NOTES

1. All concrete post bases shall be 10" minimum diameter.
2. Along the top and bottom, using Hog Rings, fasten the Chain Link Fence Fabric to the Tension Wire within the limits of the first full fabric weave.
3. Details are illustrative and shall not limit hardware design or post selection of any particular fence type.

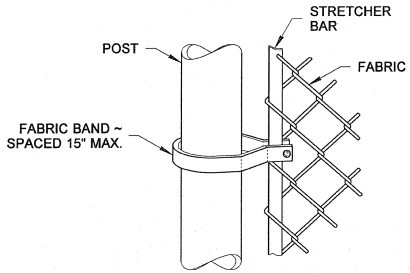

METHOD OF FASTENING STRETCHER BAR TO POST
(SHOWN FOR ROUND POST)

POST AND RAIL SPECIFICATIONS				
POST	PIPE	ROLL FORMED		H - COLUMN
	NOM. SIZE (SCH. 40) I.D.	SECTION	WEIGHT (lb/ft)	WEIGHT (lb/ft)
END, CORNER, OR PULL POST	2 1/2" DIAM.	(Y)	5.10	
LINE OR BRACE POST	2" DIAM.	(Z)	1.85	3.26

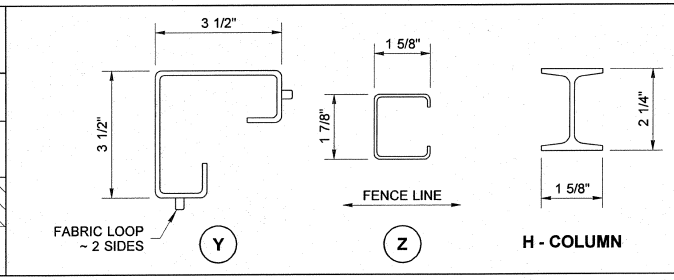

TERRY L. BERENDS
STATE OF WASHINGTON
32350
REGISTERED
PROFESSIONAL ENGINEER
5-26-2011

CHAIN LINK FENCE TYPES 3 AND 4

STANDARD PLAN L-20.10-01

SHEET 1 OF 2 SHEETS

APPROVED FOR PUBLICATION

STATE DESIGN ENGINEER — DATE 6/6/11

Washington State Department of Transportation

DRAWN BY: BILL BERENS

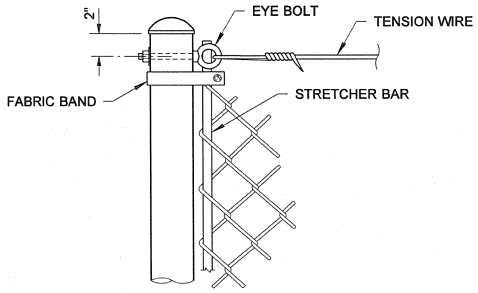

END OR CORNER (BRACE) POST

DETAIL (A)

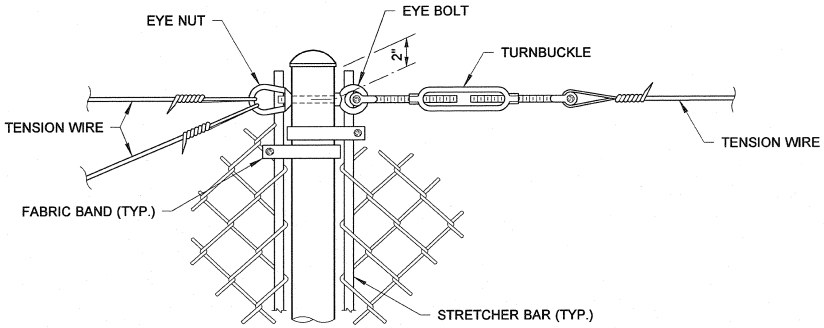

PULL POST (AT END OR CORNER)

DETAIL (B)

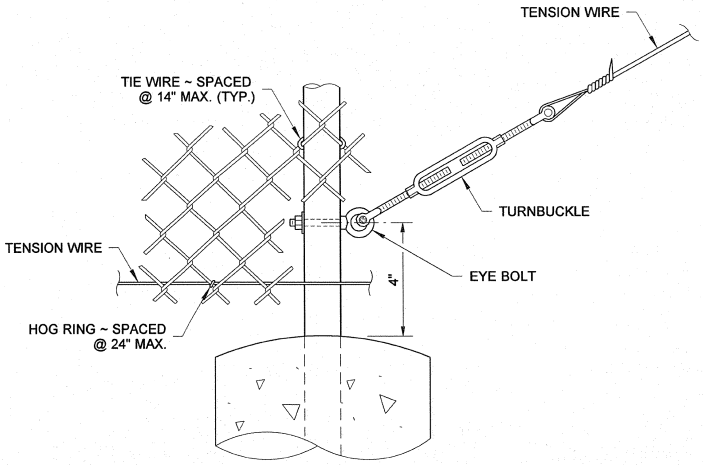

BRACE POST

DETAIL (C)

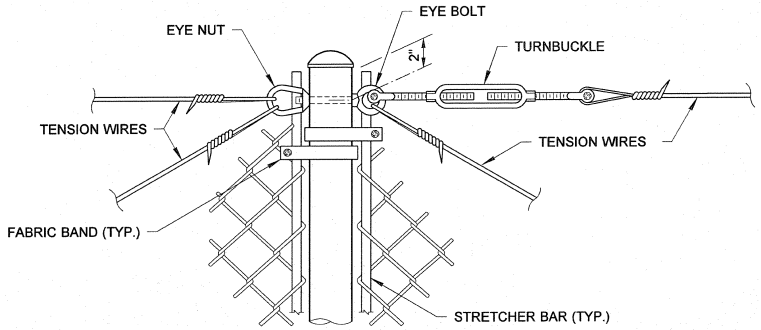

PULL POST (WITHIN RUN)

DETAIL (D)

CHAIN LINK FENCE TYPES 3 AND 4

STANDARD PLAN L-20.10-01

SHEET 2 OF 2 SHEETS

APPROVED FOR PUBLICATION

STATE DESIGN ENGINEER — DATE 6/16/11

Washington State Department of Transportation

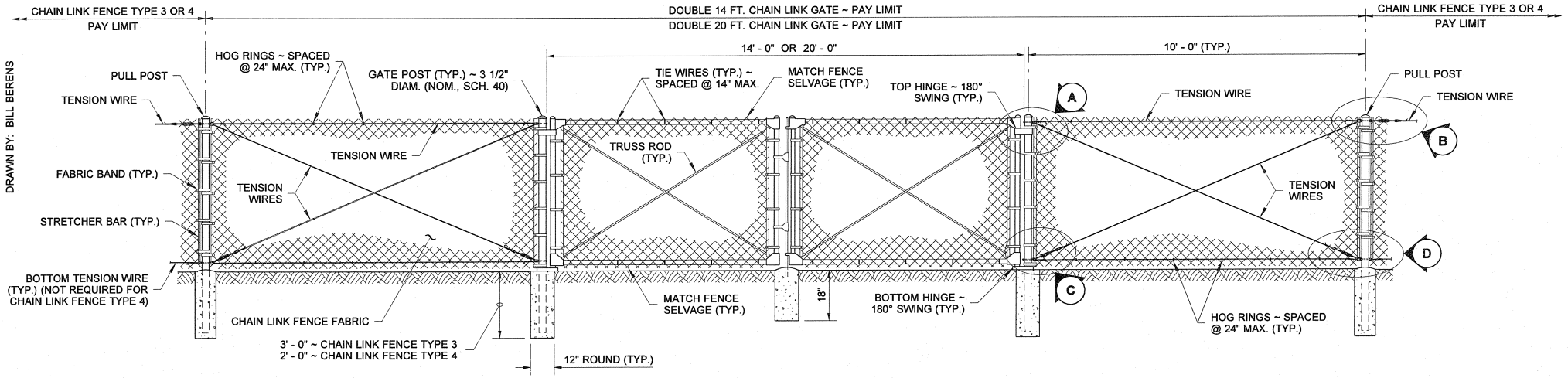

DOUBLE GATE

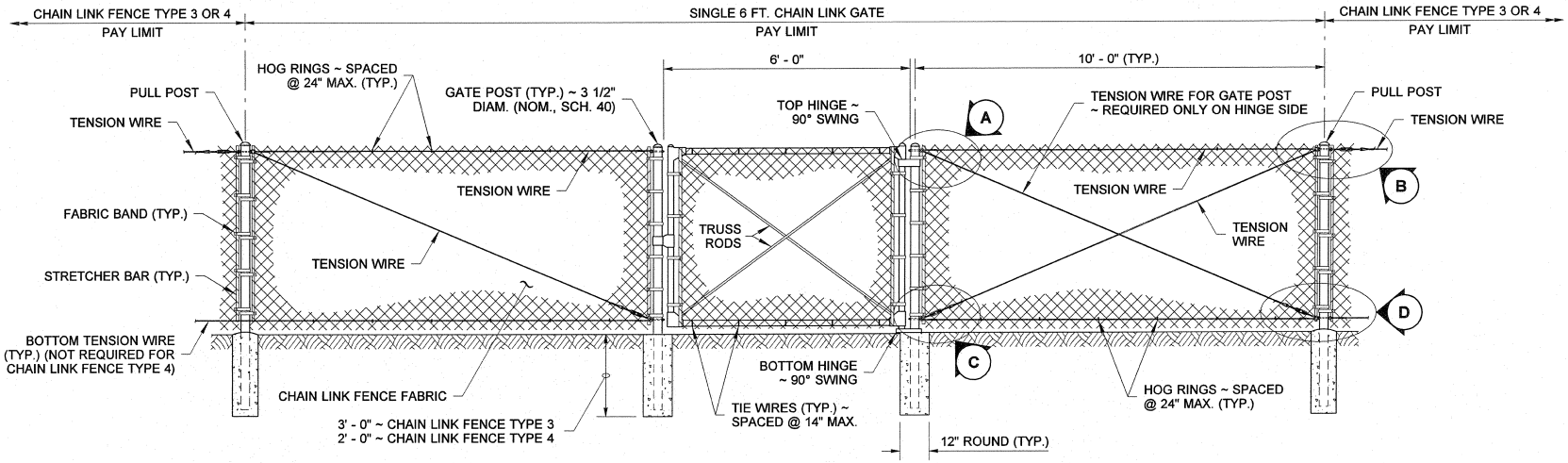

SINGLE GATE

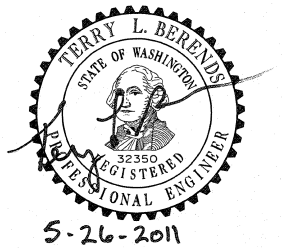

CHAIN LINK GATE

STANDARD PLAN L-30.10-01

SHEET 1 OF 2 SHEETS

APPROVED FOR PUBLICATION

Pasco Bakotich III — STATE DESIGN ENGINEER — 6/16/11 — DATE

Washington State Department of Transportation

DRAWN BY: BILL BERENS

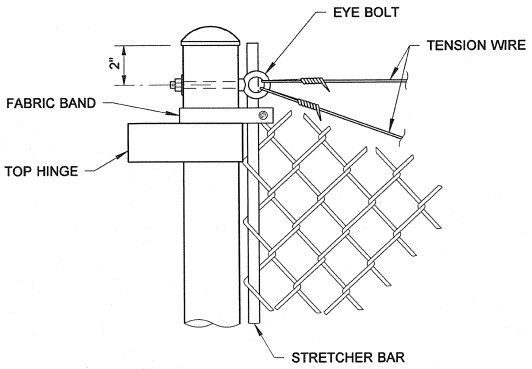

GATE POST

DETAIL (A)

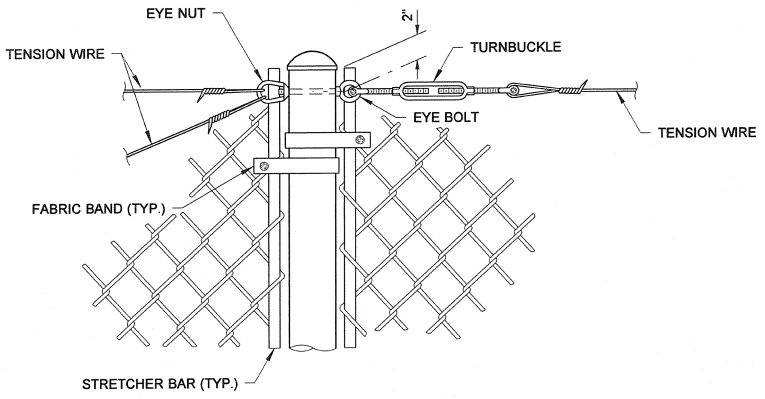

PULL POST

DETAIL (B)

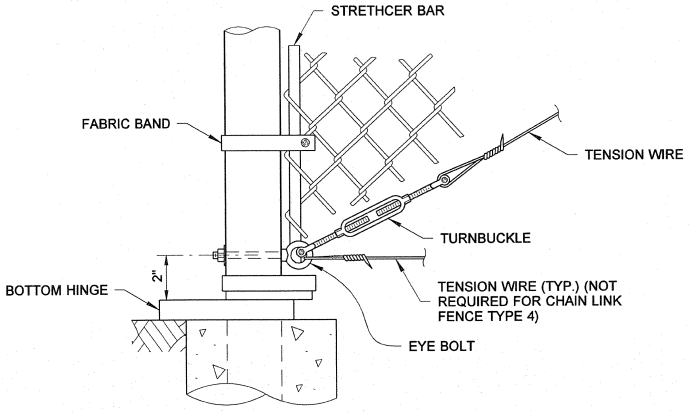

GATE POST

DETAIL (C)

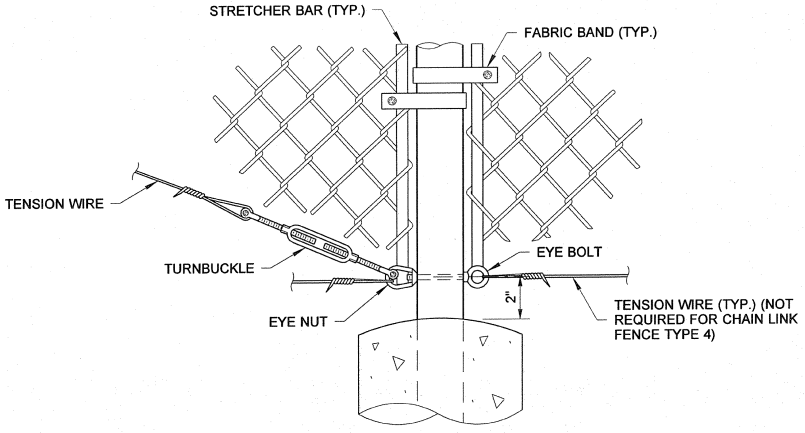

PULL POST

DETAIL (D)

TERRY L. BERENDS
STATE OF WASHINGTON
32350
REGISTERED
PROFESSIONAL ENGINEER

5-26-2011

CHAIN LINK GATE

STANDARD PLAN L-30.10-01

SHEET 2 OF 2 SHEETS

APPROVED FOR PUBLICATION

STATE DESIGN ENGINEER — DATE 6/16/11

Washington State Department of Transportation

DRAWN BY: BILL BERENS

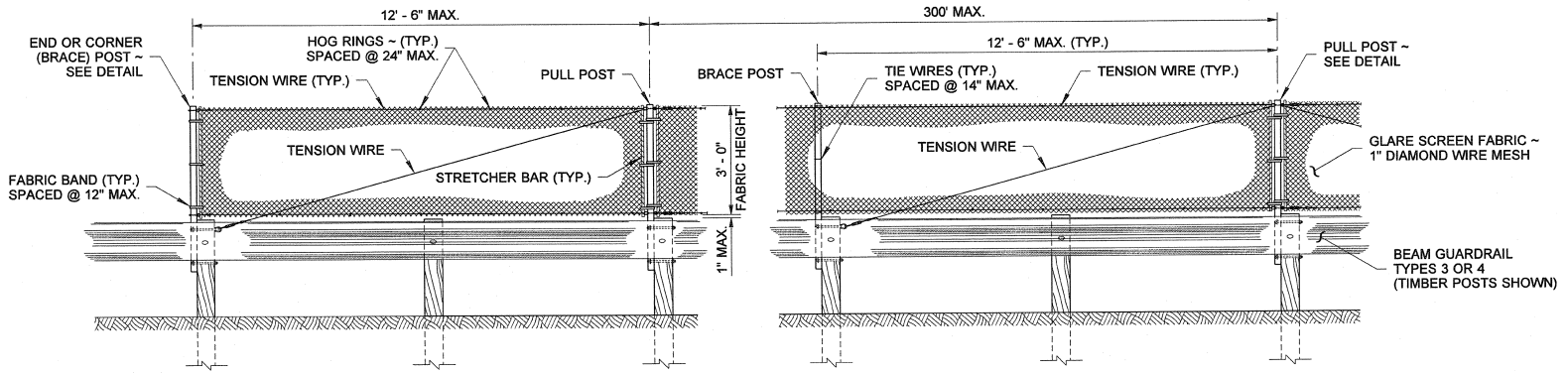

ELEVATION VIEW

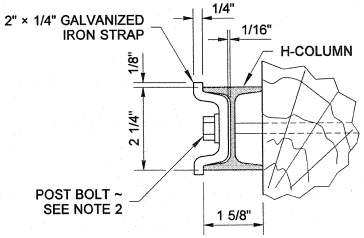

VIEW (C)

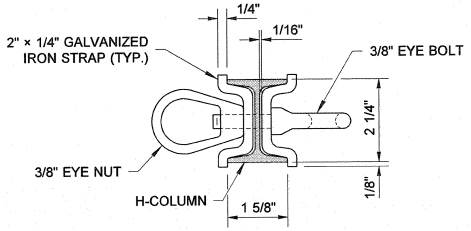

VIEW (D)

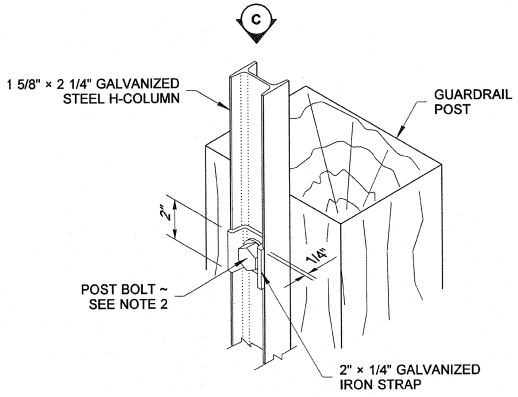

END OR CORNER (BRACE) POST

DETAIL (A)

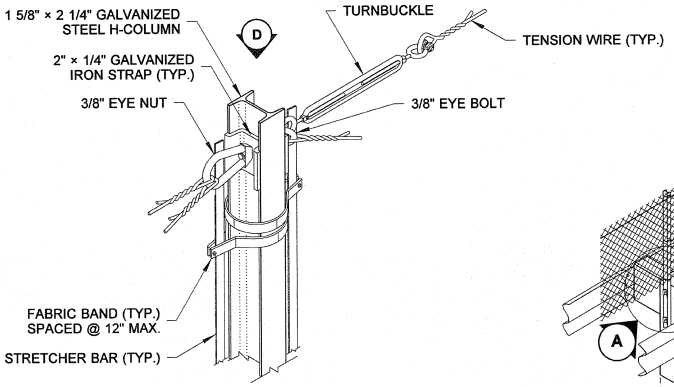

PULL POST (WITHIN RUN)

DETAIL (B)

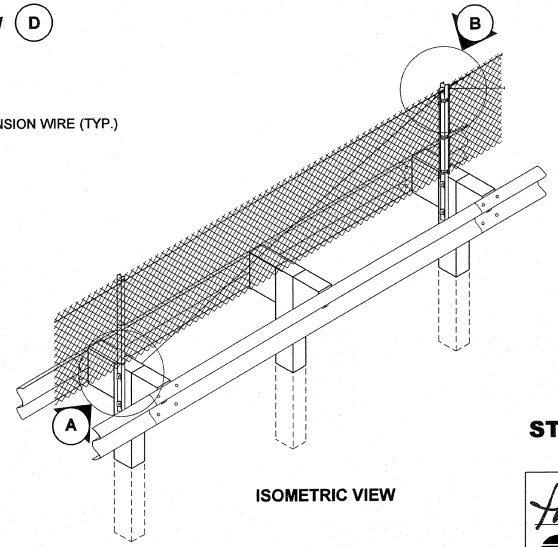

ISOMETRIC VIEW

NOTES

1. All glare screen posts shall be 1 5/8" × 2 1/4" Galvanized Steel H-Columns.
2. Post Bolts shall be:
   On Timber Posts: Hex head bolt 5/8-16 UNC × 8" with lock washer.
   On Steel Posts: Hex head bolt 5/8-16 UNC × 2 1/2" with lock washer.
   Either with hex nut and washer, or eye nut and washer where shown in the plan.

5-26-2011

GLARE SCREEN TYPE 1 DESIGN A

STANDARD PLAN L-40.10-01

SHEET 1 OF 2 SHEETS

APPROVED FOR PUBLICATION

STATE DESIGN ENGINEER — DATE 6/16/11

Washington State Department of Transportation

DRAWN BY: BILL BERENS

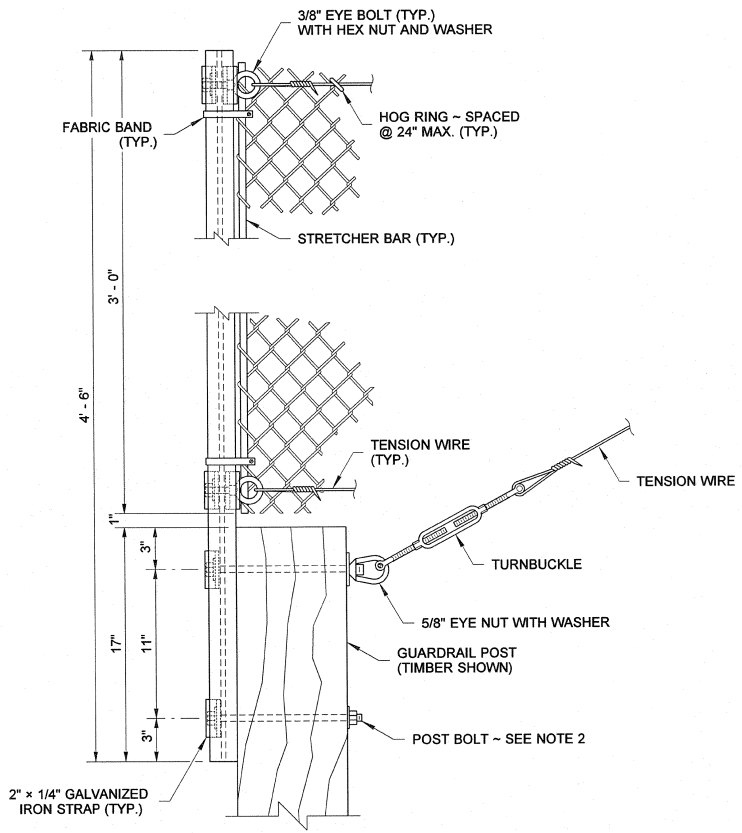

END OR CORNER, (BRACE) POST DETAIL

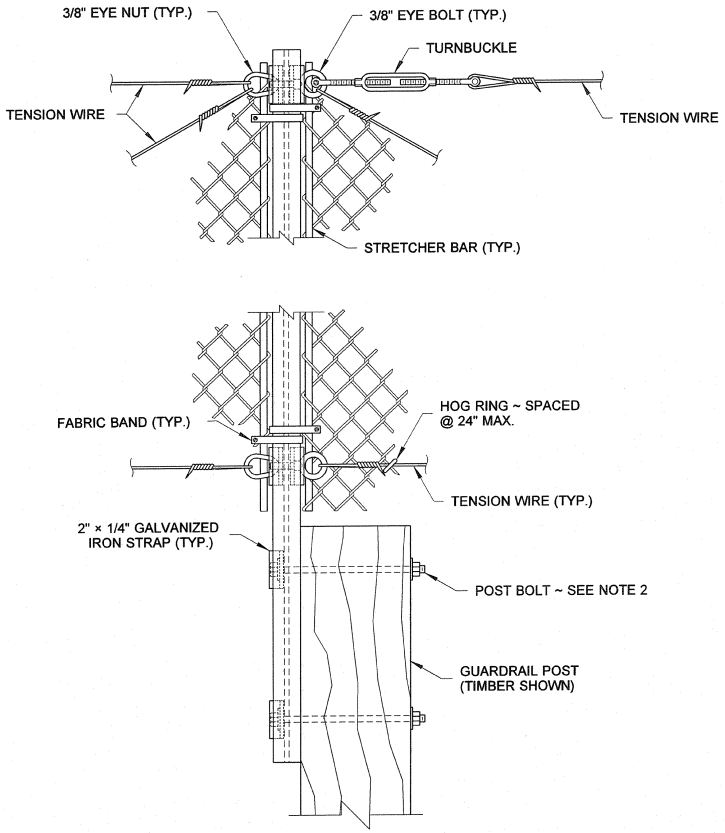

PULL POST (WITHIN RUN) DETAIL

5-26-2011

GLARE SCREEN TYPE 1
DESIGN A

STANDARD PLAN L-40.10-01

SHEET 2 OF 2 SHEETS

APPROVED FOR PUBLICATION

STATE DESIGN ENGINEER — DATE 6/14/11

Washington State Department of Transportation

DRAWN BY: BILL BERENS

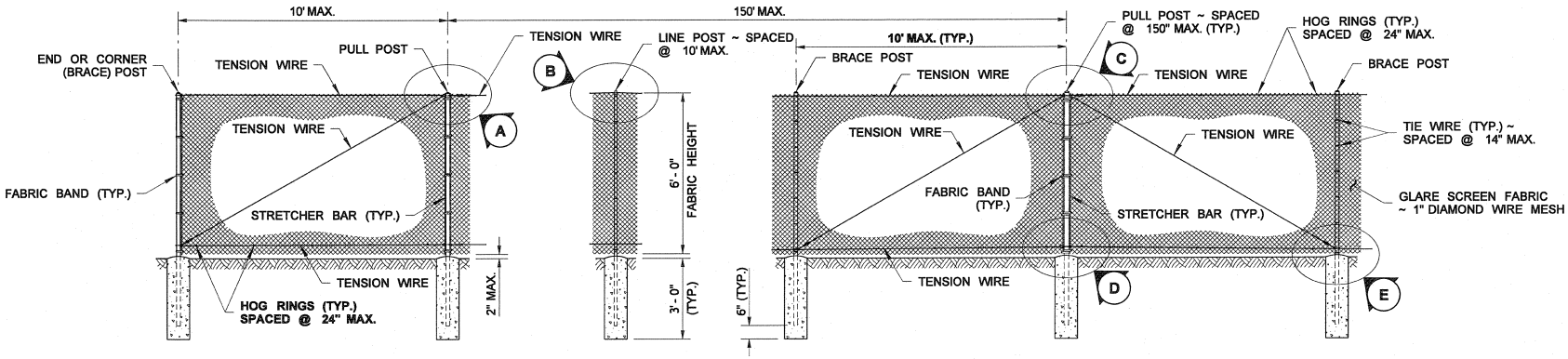

ELEVATION VIEW

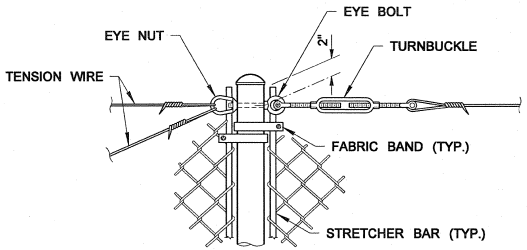

PULL POST

DETAIL A

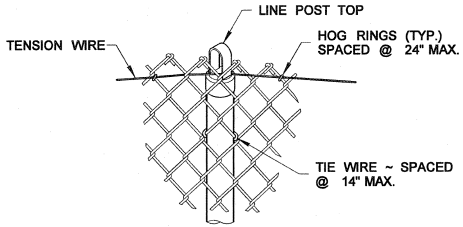

LINE POST

DETAIL B

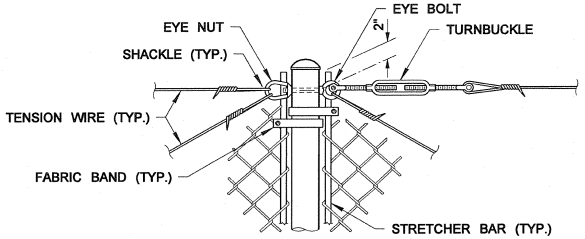

PULL POST (WITHIN RUN)

DETAIL C

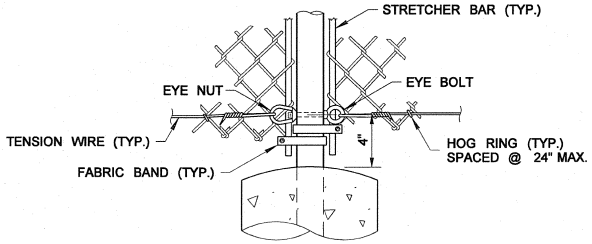

PULL POST

DETAIL D

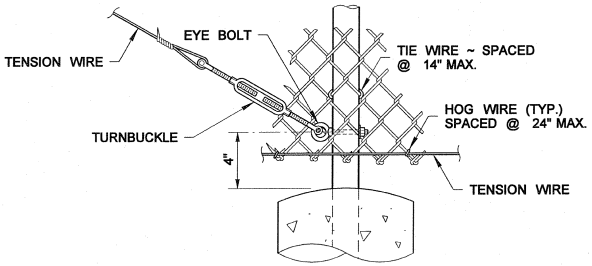

BRACE POST

DETAIL E

6-8-2011

GLARE SCREEN TYPE 1 DESIGN B

STANDARD PLAN L-40.15-01

SHEET 1 OF 1 SHEET

APPROVED FOR PUBLICATION

STATE DESIGN ENGINEER — DATE

Washington State Department of Transportation

DRAWN BY: LISA CYFORD

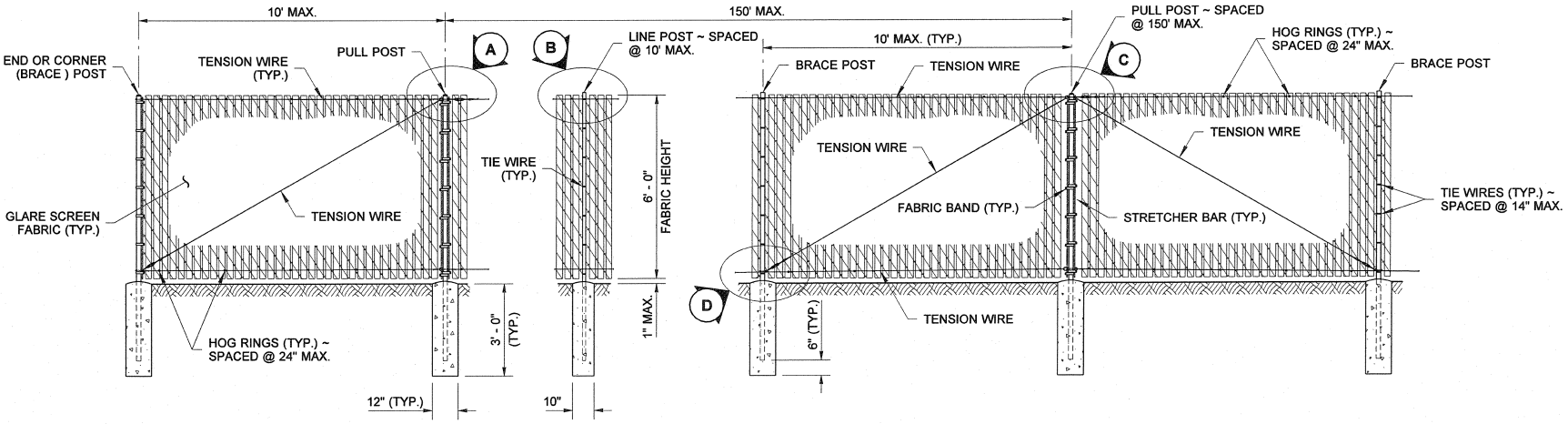

ELEVATION VIEW

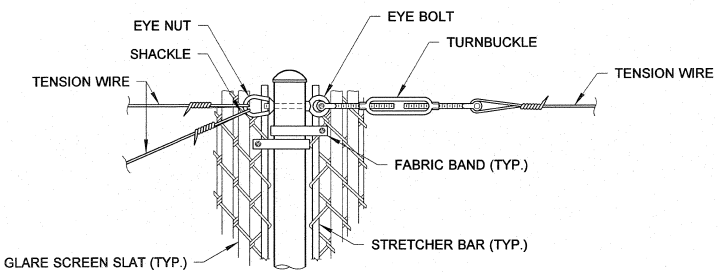

PULL POST

DETAIL (A)

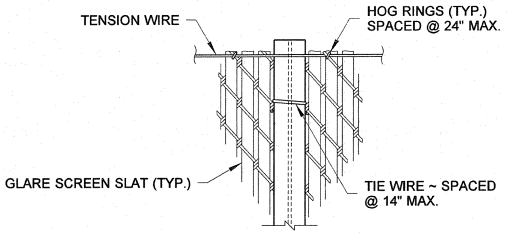

LINE POST

DETAIL (B)

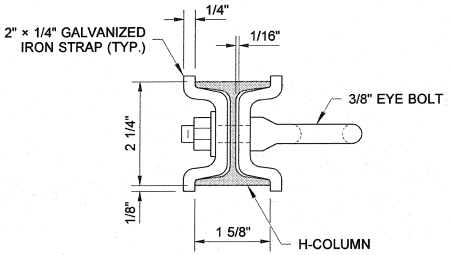

VIEW (E)

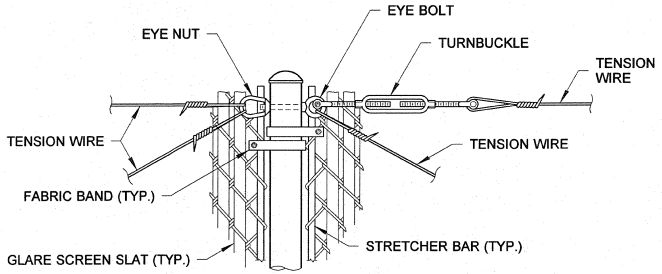

PULL POST (WITHIN RUN)

DETAIL (C)

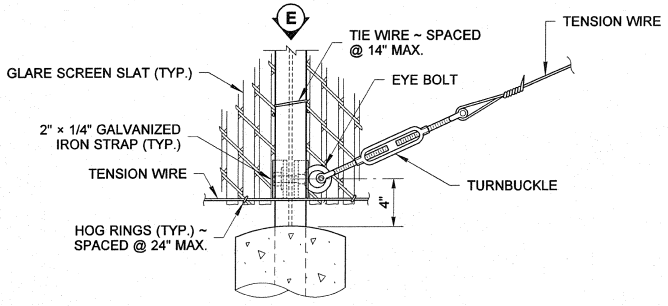

BRACE POST

DETAIL (D)

5-26-2011

GLARE SCREEN TYPE 2 (CHAIN LINK WITH SLATS)

STANDARD PLAN L-40.20-01

SHEET 1 OF 1 SHEET

APPROVED FOR PUBLICATION

STATE DESIGN ENGINEER — DATE

Washington State Department of Transportation

DRAWN BY: BILL BERENS

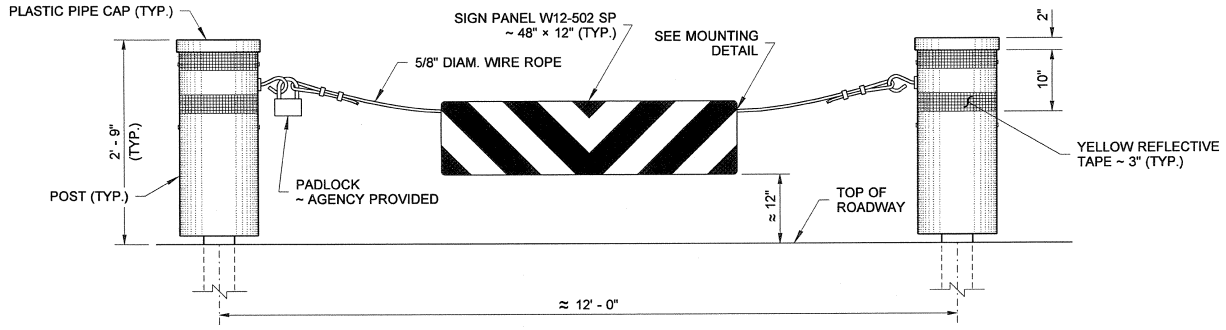

ELEVATION

NOTE

Hardware shall be stainless steel or galvanized in accordance with AASHTO M232.

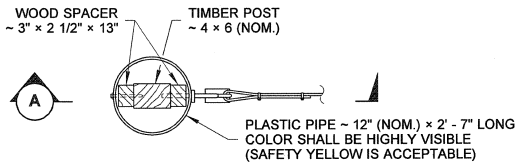

TOP VIEW
(CAP NOT SHOWN)
END POST

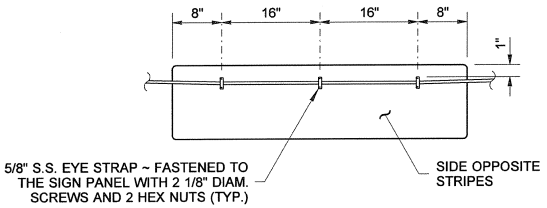

SIGN PANEL MOUNTING DETAIL

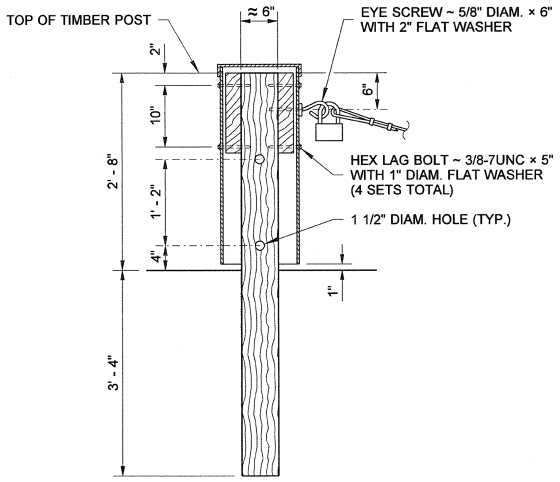

SECTION (A)

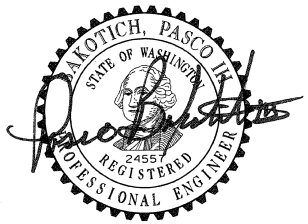

EXPIRES JUNE 19, 2008

ACCESS CONTROL GATE

STANDARD PLAN L-70.10-01

SHEET 1 OF 1 SHEET

APPROVED FOR PUBLICATION

STATE DESIGN ENGINEER — DATE 5/21/08

Washington State Department of Transportation

DRAWN BY: LISA CYFORD

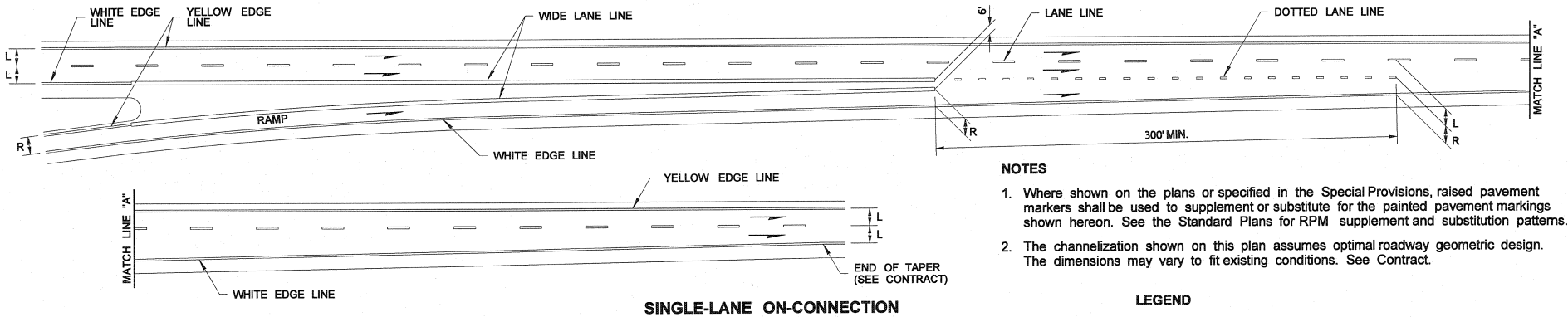

SINGLE-LANE ON-CONNECTION

NOTES

1. Where shown on the plans or specified in the Special Provisions, raised pavement markers shall be used to supplement or substitute for the painted pavement markings shown hereon. See the Standard Plans for RPM supplement and substitution patterns.
2. The channelization shown on this plan assumes optimal roadway geometric design. The dimensions may vary to fit existing conditions. See Contract.

LEGEND

R = RAMP LANE WIDTH
L = LANE WIDTH

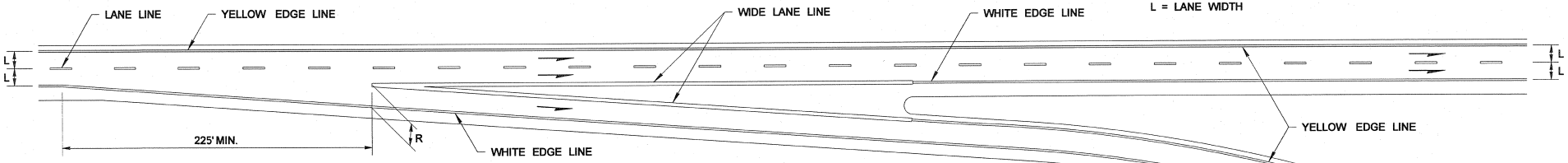

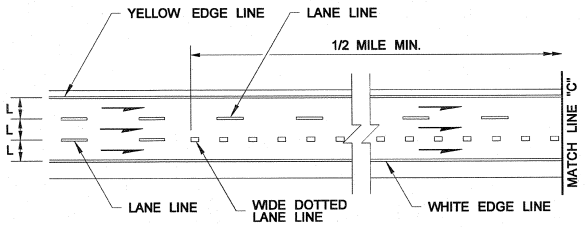

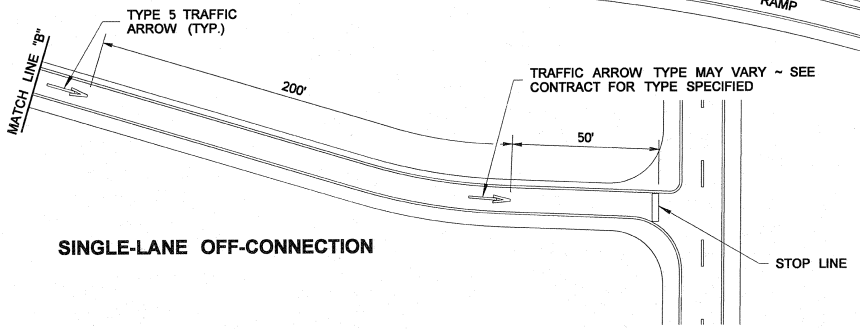

SINGLE-LANE OFF-CONNECTION

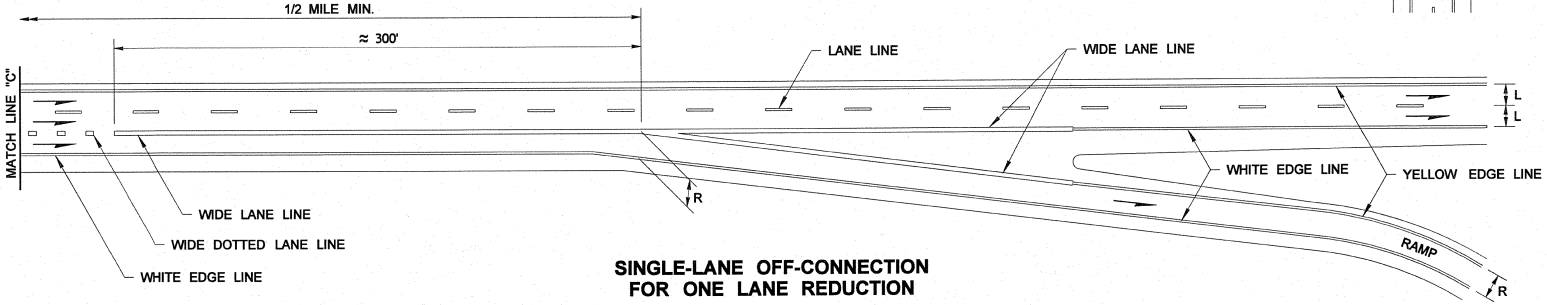

SINGLE-LANE OFF-CONNECTION FOR ONE LANE REDUCTION

JOHN C. NISBET
STATE OF WASHINGTON
29115
REGISTERED
PROFESSIONAL ENGINEER
6/3/2011

RAMP CHANNELIZATION SINGLE LANE

STANDARD PLAN M-1.20-02

SHEET 1 OF 1 SHEET

APPROVED FOR PUBLICATION

STATE DESIGN ENGINEER — DATE 6/3/11

Washington State Department of Transportation

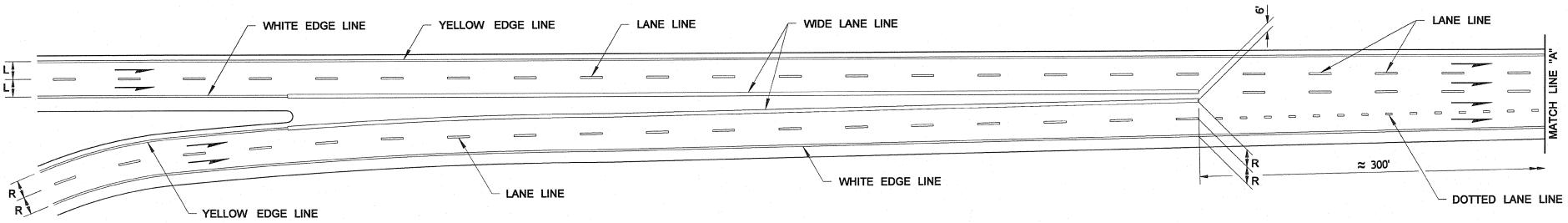

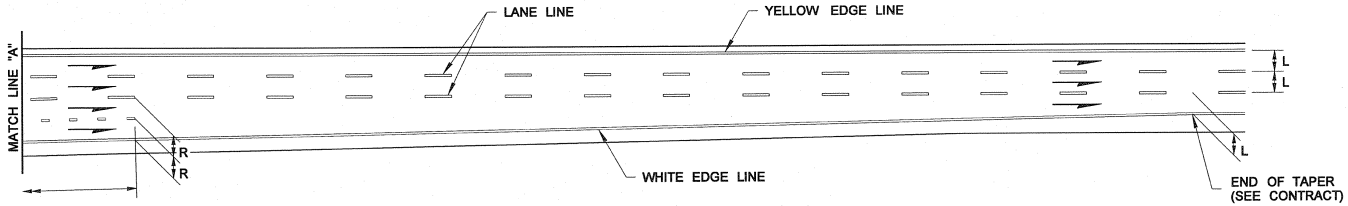

TWO-LANE ON-CONNECTION

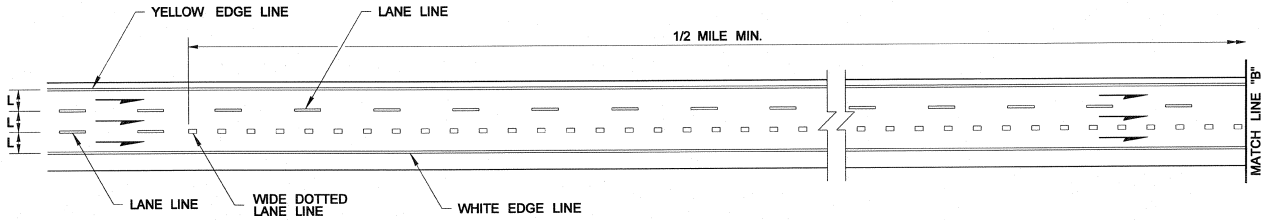

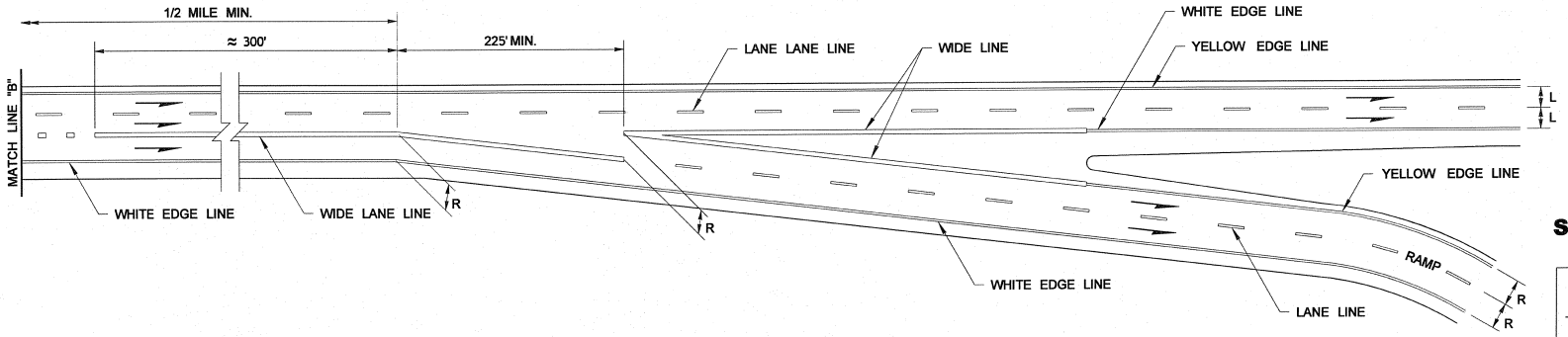

TWO-LANE OFF-CONNECTION

DRAWN BY: LISA CYFORD

NOTES

1. Where shown on the plans or specified in the Special Provisions, raised pavement markers shall be used to supplement or substitute for the painted pavement markings shown hereon. See the Standard Plans for RPM supplement and substitution patterns.

2. The channelization shown on this plan assumes optimal roadway geometric design. The dimensions may vary to fit existing conditions. See Contract.

LEGEND

R = RAMP LANE WIDTH

L = LANE WIDTH

JOHN C. NISBET
STATE OF WASHINGTON
29115
REGISTERED
PROFESSIONAL ENGINEER

RAMP CHANNELIZATION TWO LANE

STANDARD PLAN M-1.40-02

SHEET 1 OF 1 SHEET

APPROVED FOR PUBLICATION

STATE DESIGN ENGINEER — DATE 6/3/11

Washington State Department of Transportation

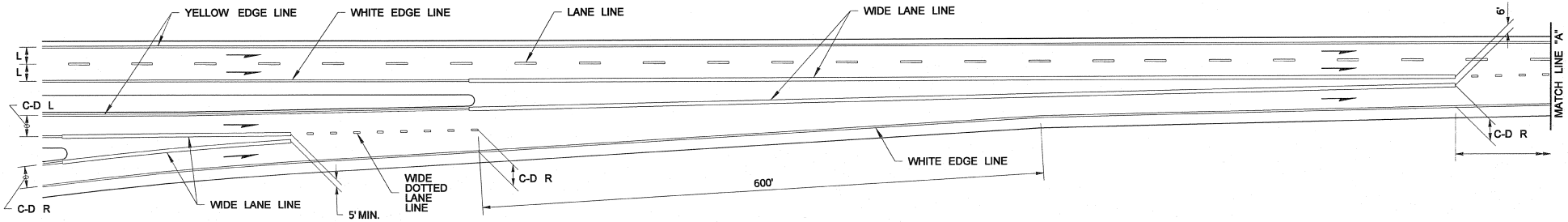

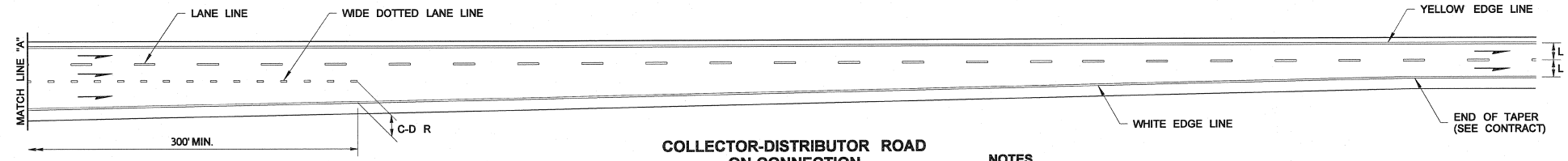

COLLECTOR-DISTRIBUTOR ROAD ON-CONNECTION

LEGEND

C-D R = COLLECTOR DISTRIBUTOR RAMP LANE WIDTH

C-D L = COLLECTOR DISTRIBUTOR LANE WIDTH

R = RAMP LANE WIDTH

L = LANE WIDTH

NOTES

1. Where shown on the plans or specified in the Special Provisions, raised pavement markers shall be used to supplement or substitute for the painted pavement markings shown hereon. See the Standard Plans for RPM supplement and substitution patterns.
2. The channelization shown on this plan assumes optimal geometric design. The dimensions may vary to fit existing conditions. See Contract.

DRAWN BY: LISA CYFORD

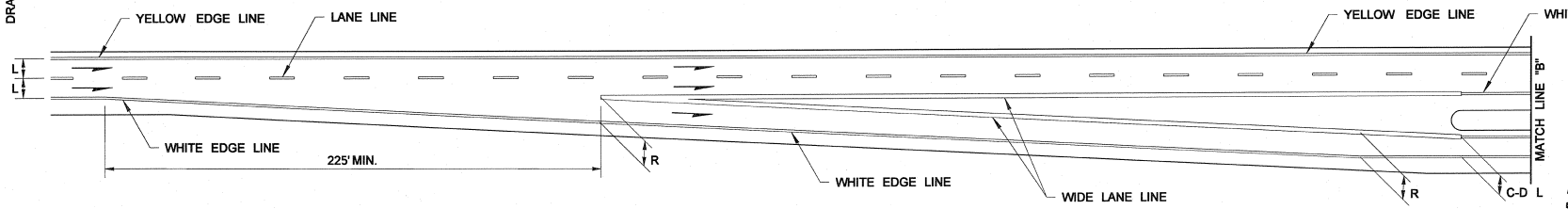

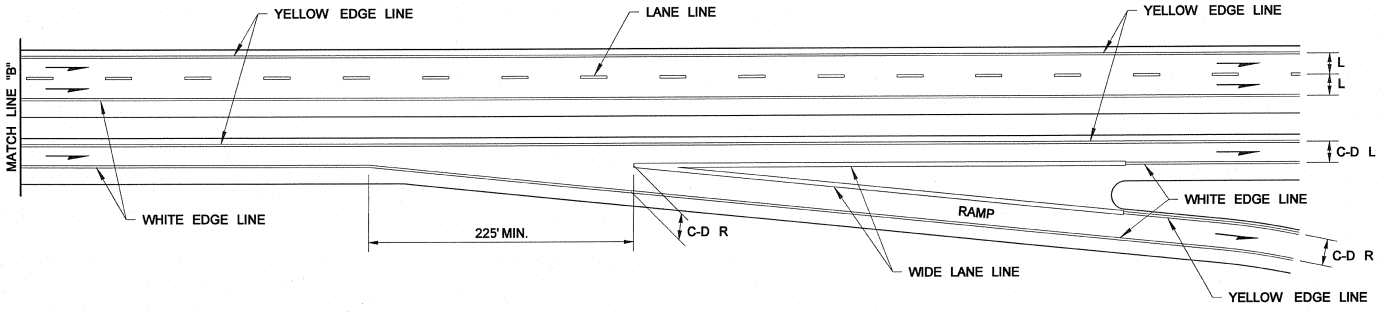

COLLECTOR-DISTRIBUTOR ROAD OFF-CONNECTION

JOHN C. NISBET
STATE OF WASHINGTON
29115
REGISTERED
PROFESSIONAL ENGINEER
7.0.11

RAMP CHANNELIZATION COLLECTOR-DISTRIBUTOR ROAD

STANDARD PLAN M-1.60-02

SHEET 1 OF 1 SHEET

APPROVED FOR PUBLICATION

STATE DESIGN ENGINEER — DATE 4/3/11

Washington State Department of Transportation

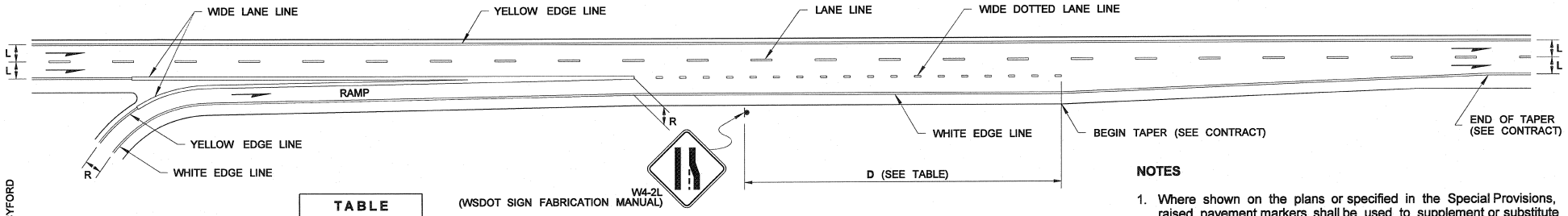

SINGLE-LANE, PARALLEL TYPE ~ ON-CONNECTION

TABLE	
POSTED MAIN LINE SPEED	D
35 MPH	565'
40 MPH	670'
45 MPH	775'
50 MPH	885'
55 MPH	990'
60 MPH	1100'
65 MPH	1200'
70 MPH	1250'

NOTES

1. Where shown on the plans or specified in the Special Provisions, raised pavement markers shall be used to supplement or substitute for the painted pavement markings shown hereon. See the Standard Plans for RPM supplement and substitution patterns.
2. When weaving section is more than 3/4 of a mile in length, use lane line.
3. The channelization shown on this plan assumes optimal roadway geometric design. The dimensions may vary to fit existing conditions. See Contract.

LEGEND

L = LANE WIDTH
R = RAMP LANE WIDTH

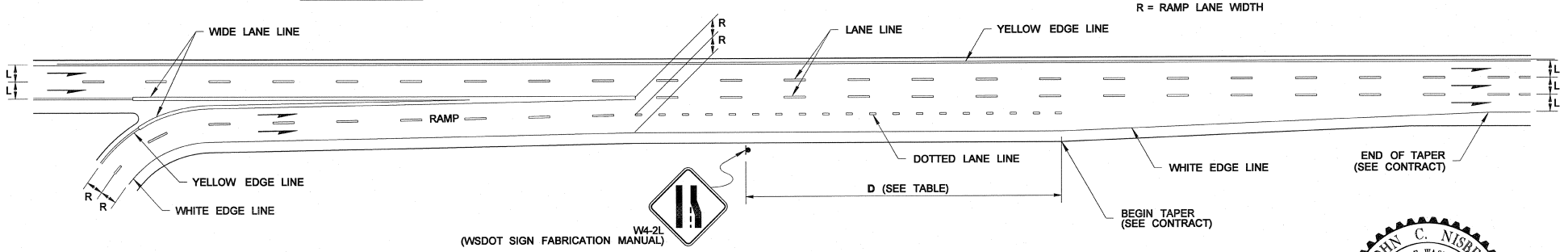

DOUBLE-LANE, PARALLEL TYPE ~ ON-CONNECTION

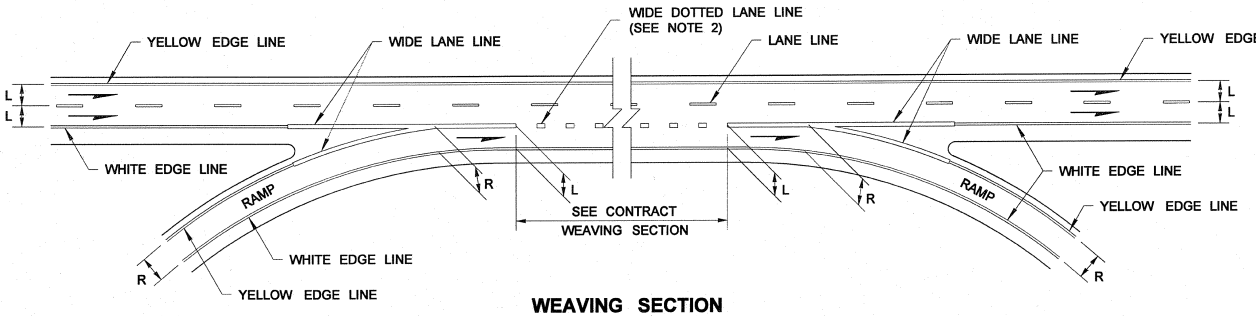

WEAVING SECTION

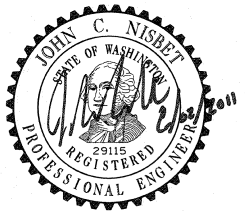

RAMP CHANNELIZATION PARALLEL ON & WEAVING SECTION

STANDARD PLAN M-1.80-03

SHEET 1 OF 1 SHEET

APPROVED FOR PUBLICATION

STATE DESIGN ENGINEER — DATE 6/3/11

Washington State Department of Transportation

DRAWN BY: LISA CYFORD

DRAWN BY: LISA CYFORD

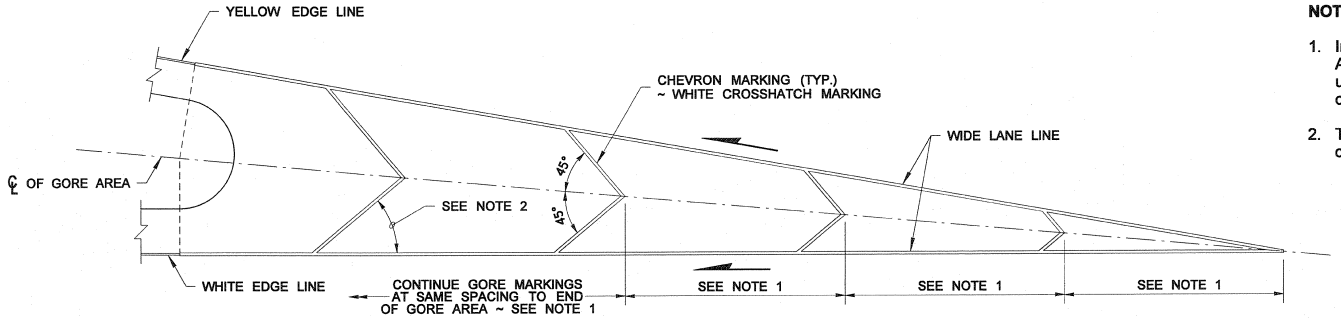

GORE AREA MARKINGS WITH CHEVERONS

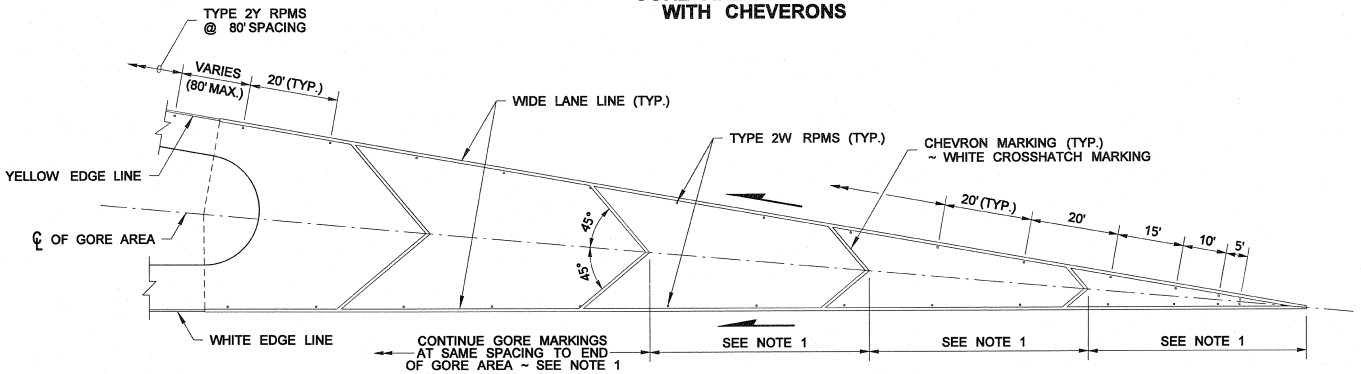

GORE AREA SUPPLEMENT WITH TYPE 2 RAISED PAVEMENT MARKERS

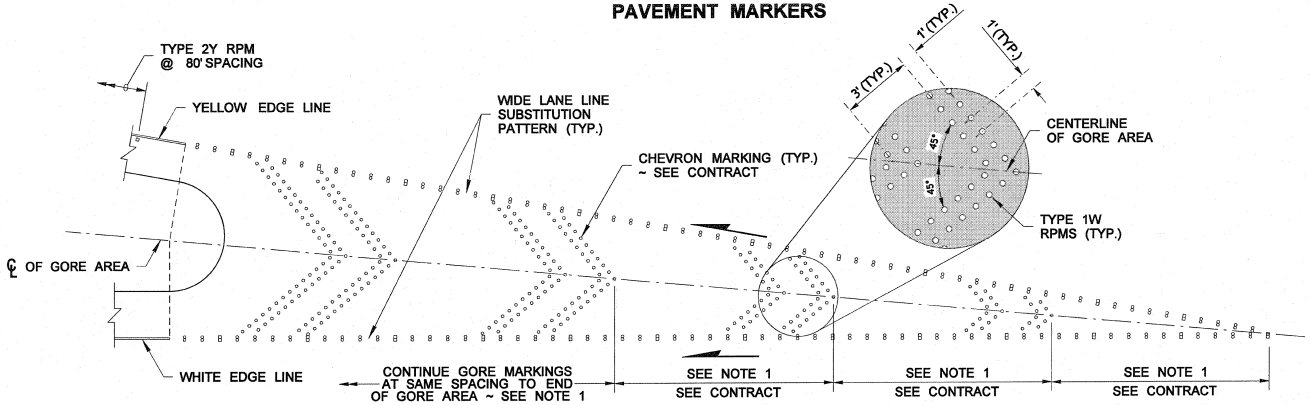

GORE AREA SUBSTITUTION WITH TYPES 1 & 2 RAISED PAVEMENT MARKERS

NOTES

1. Install a minimum of 3 sets of diagonals/chevrons in the gore area. A 50' spacing is standard; however, for gore areas shorter than 150' use a 25' spacing, and for gore areas greater than 400' a spacing of 100' may be used.

2. The acute angle of the diagonals shall always point in the direction of main line traffic.

JOHN C. NISBET
STATE OF WASHINGTON
29115
REGISTERED
PROFESSIONAL ENGINEER

GORE AREA MARKING LAYOUTS

STANDARD PLAN M-2.20-02

SHEET 1 OF 1 SHEET

APPROVED FOR PUBLICATION

STATE DESIGN ENGINEER — DATE 6/3/11

Washington State Department of Transportation

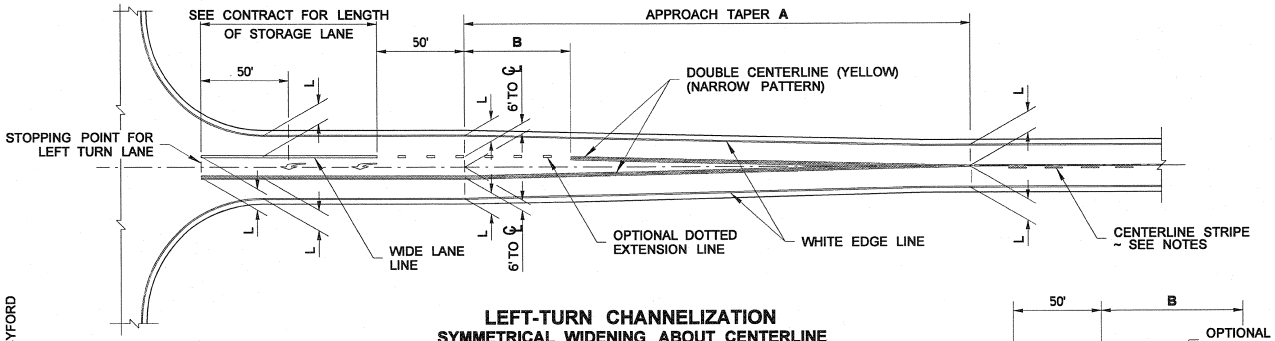

LEFT-TURN CHANNELIZATION
SYMMETRICAL WIDENING ABOUT CENTERLINE

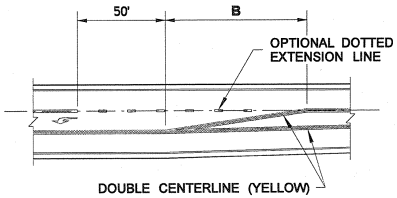

OPTIONAL MARKED DECELERATION TAPER

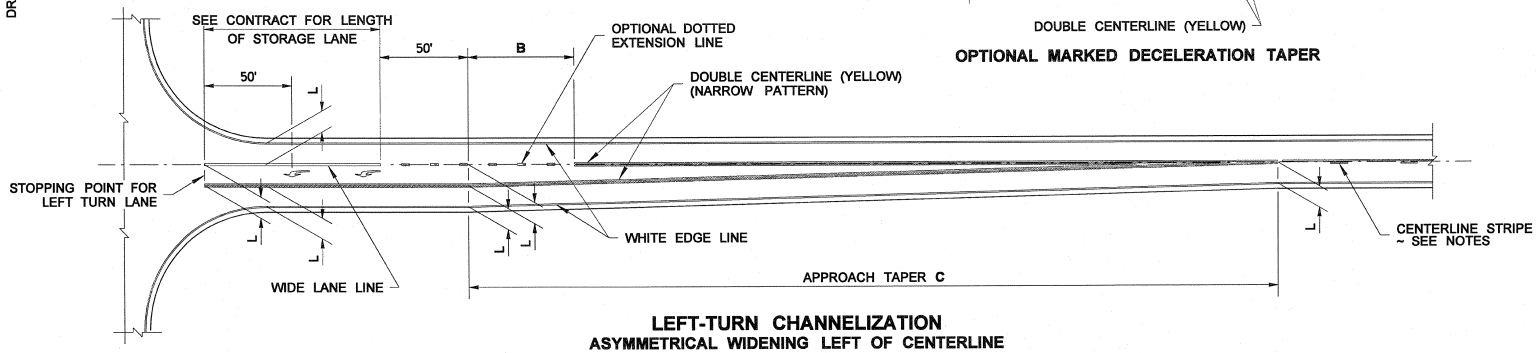

LEFT-TURN CHANNELIZATION
ASYMMETRICAL WIDENING LEFT OF CENTERLINE

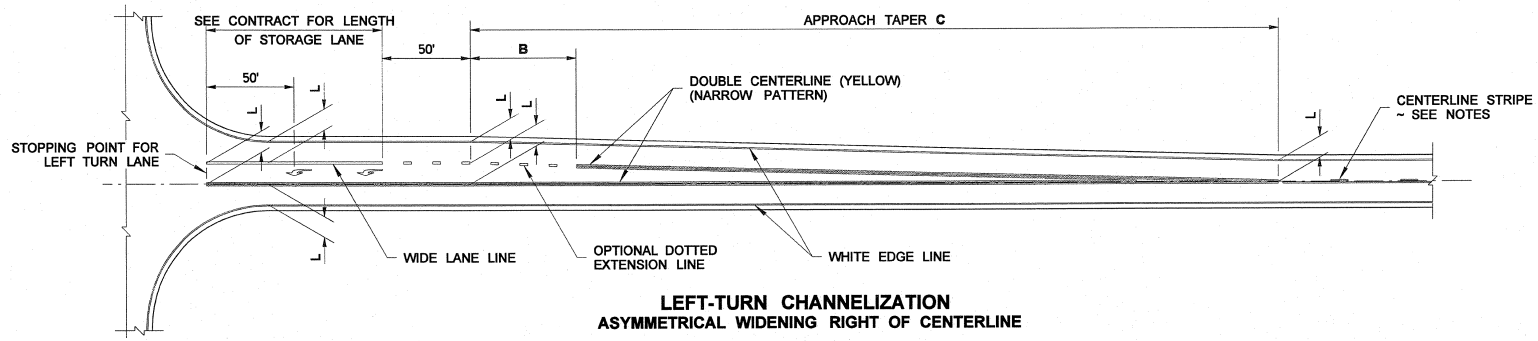

LEFT-TURN CHANNELIZATION
ASYMMETRICAL WIDENING RIGHT OF CENTERLINE

DRAWN BY: LISA CYFORD

NOTES

1. The channelization shown on this plan assumes optimal roadway geometric design. The dimensions may vary to fit existing conditions. See Contract.
2. The channelization shown on this plan is for a two-lane highway. The channelization plan may be used on four-lane undivided highways, with the appropriate considerations.
3. Centerline striping on the approach to raised channelization shall be No Pass in accordance with MUTCD figure 3B-15. Centerline striping on the departure from raised channelization shall be determined by an engineering study.
4. Centerline striping on the approach to and departure from painted channelization shall be determined by an engineering study.
5. Centerline striping on four-lane undivided highways shall be a double centerline.
6. The two Type 2L (SL) Traffic Arrows shown in the left-turn storage lane are optional, but recommended. Arrows may be added for longer storage lanes or deleted for shorter storage lanes. See Contract Plans.

LEGEND

L = 12' Typical Lane Width. See Contract for specified lane widths.

Type 2L (SL) Traffic Arrow

POSTED SPEED	APPROACH TAPER A	DIMENSION B	APPROACH TAPER C
60 MPH	360'	60'	720'
55 MPH	330'	55'	660'
50 MPH	300'	50'	600'
45 MPH	270'	45'	540'
40 MPH	240'	40'	480'
35 MPH	210'	35'	420'
30 MPH	180'	30'	360'
25 MPH	150'	25'	300'
20 MPH	120'	20'	240'

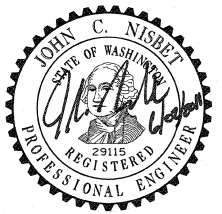

LEFT-TURN CHANNELIZATION

STANDARD PLAN M-3.10-03

SHEET 1 OF 1 SHEET

APPROVED FOR PUBLICATION

STATE DESIGN ENGINEER — DATE 4/3/11

Washington State Department of Transportation

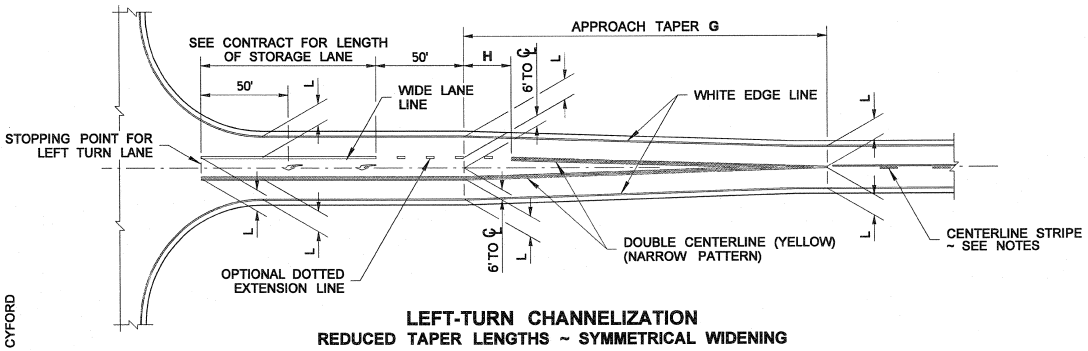

LEFT-TURN CHANNELIZATION
REDUCED TAPER LENGTHS ~ SYMMETRICAL WIDENING
(FOR LIMITED USE IN URBAN AREAS WITH POSTED SPEEDS OF 40 MPH OR LESS)

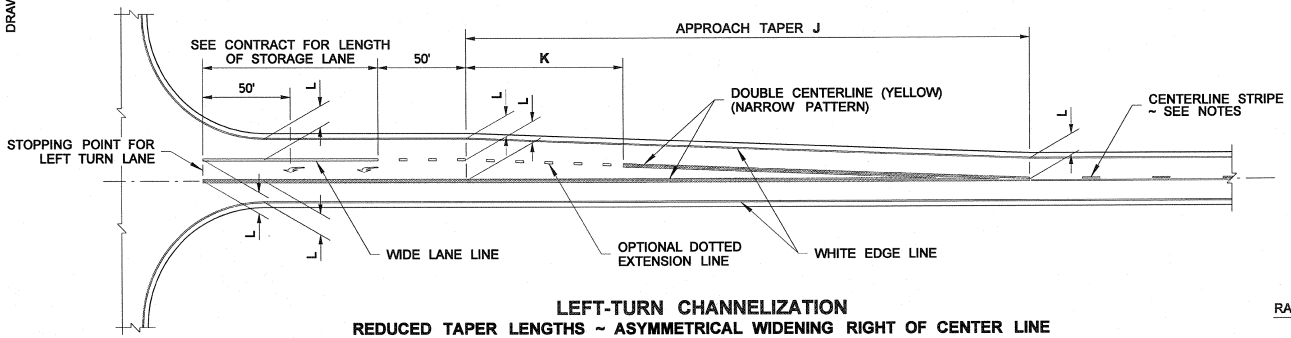

LEFT-TURN CHANNELIZATION
REDUCED TAPER LENGTHS ~ ASYMMETRICAL WIDENING RIGHT OF CENTER LINE
(FOR LIMITED USE IN URBAN AREAS WITH POSTED SPEEDS OF 40 MPH OR LESS)

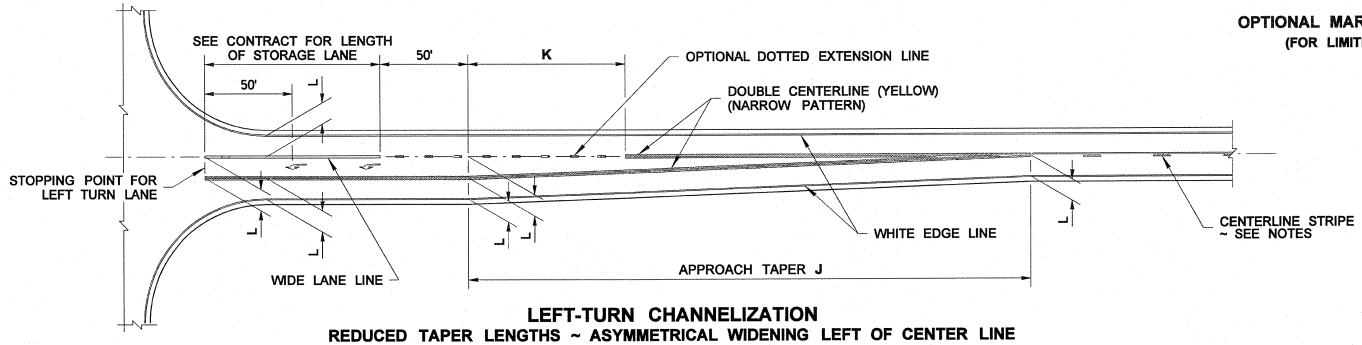

LEFT-TURN CHANNELIZATION
REDUCED TAPER LENGTHS ~ ASYMMETRICAL WIDENING LEFT OF CENTER LINE
(FOR LIMITED USE IN URBAN AREAS WITH POSTED SPEEDS OF 40 MPH OR LESS)

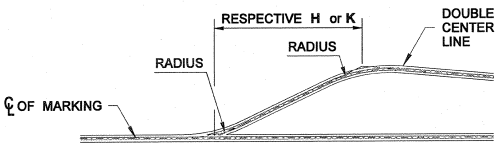

RADIUS = RESPECTIVE H or K

OPTIONAL MARKED DECELERATION TAPER
(FOR LIMITED USE IN URBAN AREAS)

NOTES

1. The channelization shown on this plan assumes optimal roadway geometric design. The dimensions may vary to fit existing conditions. See Contract.
2. The channelization shown on this plan is for a two-lane highway. The channelization plan may be used on four-lane undivided highways with the appropriate considerations.
3. Centerline striping on the approach to raised channelization shall be No Pass in accordance with MUTCD figure 3B-15. Centerline striping on the departure from raised channelization shall be determined by an engineering study.
4. Centerline striping on the approach to and departure from painted channelization shall be determined by an engineering study.
5. Centerline striping on four lane undivided highways shall be a double centerline.
6. The two Type 2L (SL) Traffic Arrows shown in the left-turn storage lane are optional, but recommended. Arrows may be added for longer storage lanes or deleted for shorter storage lanes. See Contract Plans.

LEGEND

L = 12' Typical Lane Width. See Contract for specified lane widths.

Type 2L (SL) Traffic Arrow

POSTED SPEED	APPROACH TAPER G	DIMENSION H	APPROACH TAPER J	DIMENSION K
40 MPH	160'	27'	320'	53'
35 MPH	123'	20'	245'	41'
30 MPH	90'	15'	180'	30'
25 MPH	63'	10'	125'	21'
20 MPH	40'	7'	80'	13'

DRAWN BY: LISA CYFORD

JOHN C. NISBET
STATE OF WASHINGTON
29115
REGISTERED
PROFESSIONAL ENGINEER

LEFT-TURN CHANNELIZATION REDUCED TAPERS
STANDARD PLAN M-3.20-02

SHEET 1 OF 1 SHEET

APPROVED FOR PUBLICATION

STATE DESIGN ENGINEER — DATE 6/3/11

Washington State Department of Transportation

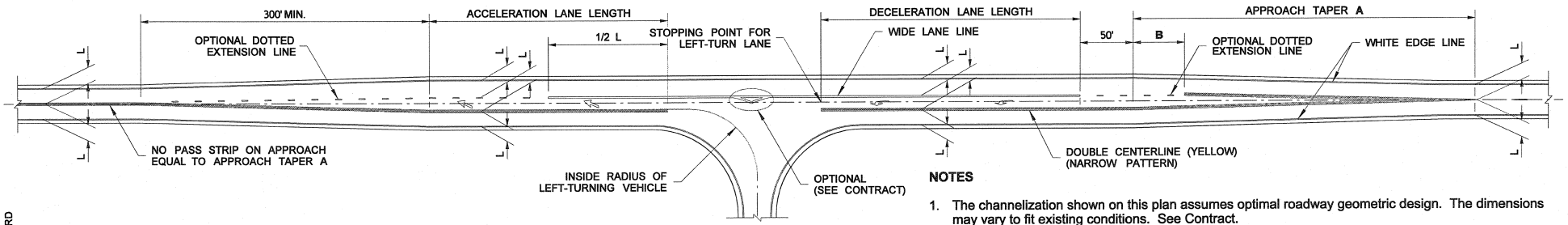

LEFT-TURN CHANNELIZATION
TEE INTERSECTION WITH ACCELERATION LANE

DRAWN BY: LISA CYFORD

NOTES

1. The channelization shown on this plan assumes optimal roadway geometric design. The dimensions may vary to fit existing conditions. See Contract.
2. The channelization shown on this plan is for a two-lane highway. The channelization plan may be used on four-lane undivided highways with the appropriate considerations.
3. Centerline striping on the approach to raised channelization shall be No Pass in accordance with MUTCD figure 3B-15. Centerline striping on the departure from raised channelization shall be determined by an engineering study.
4. Centerline striping on the approach to and departure from painted channelization shall be determined by an engineering study.
5. Centerline striping on four-lane undivided highways shall be a double centerline.
6. The two Type 2L (SL) Traffic Arrows shown in the left-turn storage lane are optional, but recommended. Arrows may be added for longer storage lanes or deleted for shorter storage lanes. See Contract Plans.

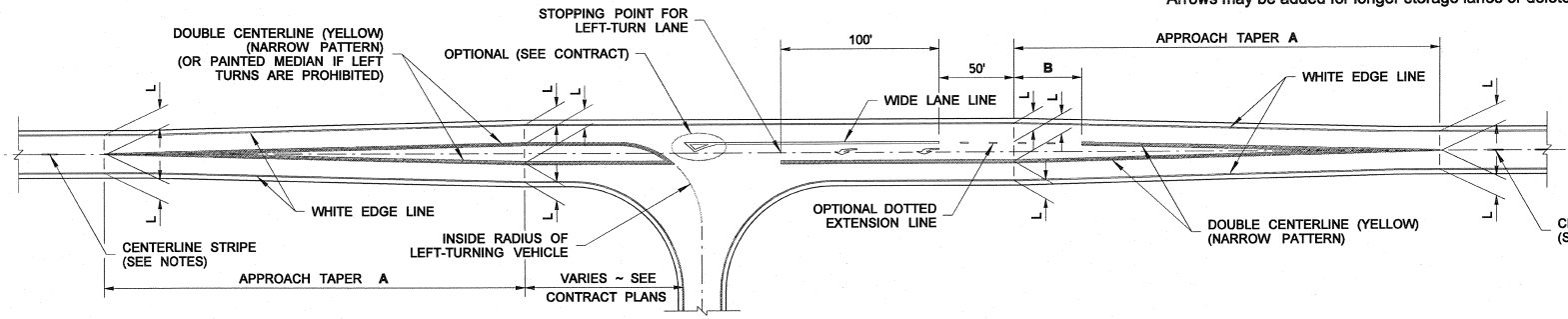

LEGEND

L = 12' Typical Lane Width. See Contract for specified lane widths.

Type 2L (SL) Traffic Arrow

Type 6R (SR) Traffic Arrow

LEFT-TURN CHANNELIZATION
TEE INTERSECTION

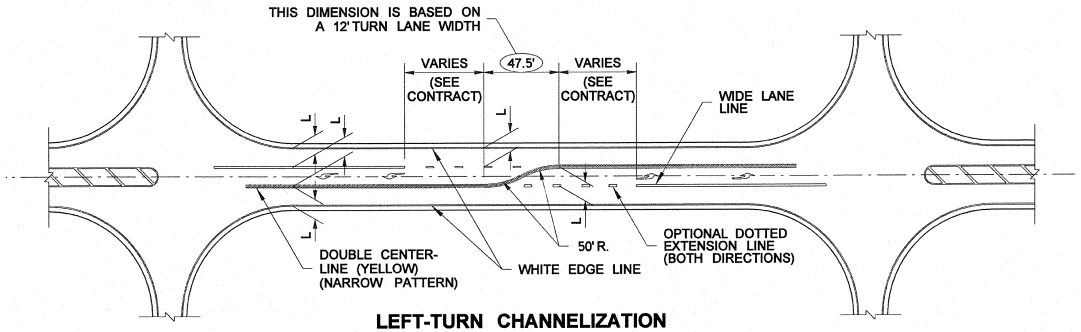

LEFT-TURN CHANNELIZATION
BACK-TO-BACK LEFT-TURN LANES

POSTED SPEED	APPROACH TAPER A	DIMENSION B
60 MPH	360'	60'
55 MPH	330'	55'
50 MPH	300'	50'
45 MPH	270'	45'
40 MPH	240'	40'
35 MPH	210'	35'
30 MPH	180'	30'
25 MPH	150'	25'
20 MPH	120'	20'

LEFT-TURN CHANNELIZATION TEE INTERSECTION AND BACK-TO-BACK TURN LANES
STANDARD PLAN M-3.30-03

SHEET 1 OF 1 SHEET

APPROVED FOR PUBLICATION

STATE DESIGN ENGINEER — DATE 6/3/11

Washington State Department of Transportation

DRAWN BY: LISA CYFORD

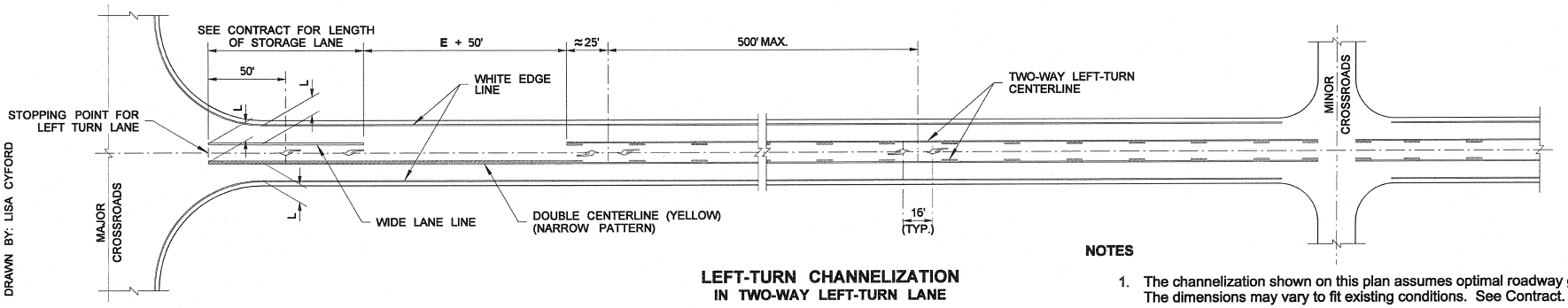

LEFT-TURN CHANNELIZATION
IN TWO-WAY LEFT-TURN LANE

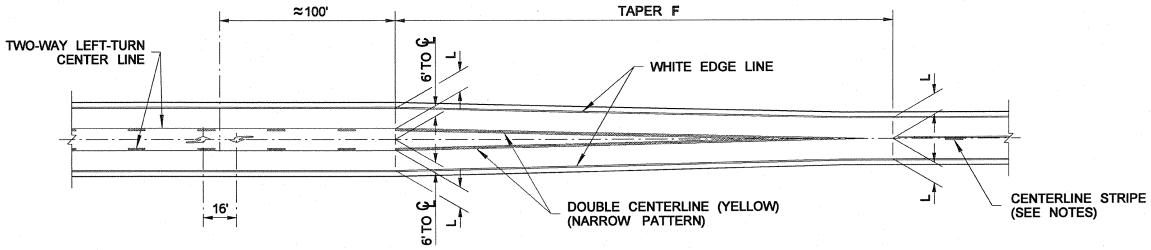

TWO-WAY LEFT-TURN LANE TRANSITION

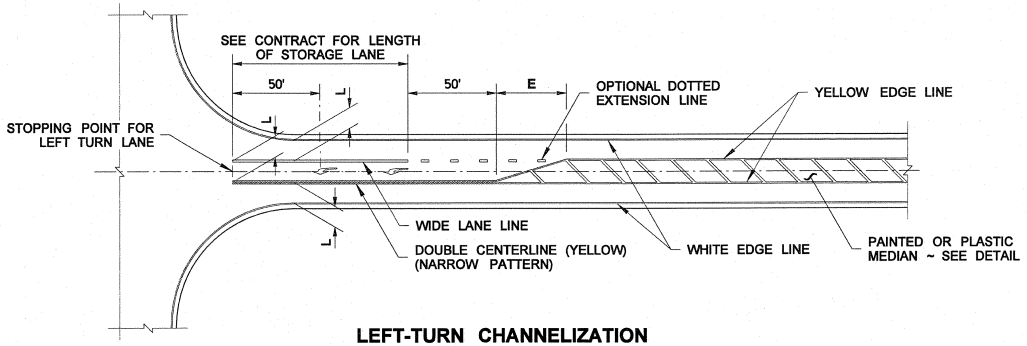

LEFT-TURN CHANNELIZATION
IN PAINTED MEDIAN

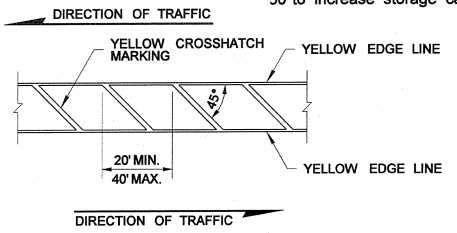

PAINTED OR PLASTIC MEDIAN
COMPOSED OF LONGITUDINAL MARKINGS

NOTES

1. The channelization shown on this plan assumes optimal roadway geometric design. The dimensions may vary to fit existing conditions. See Contract.
2. The channelization shown on this plan is for a two-lane highway. The channelization plan may be used on four-lane undivided highways with the appropriate considerations.
3. Centerline striping on the approach to raised channelization shall be No Pass in accordance with MUTCD figure 3B-15. Centerline striping on the departure from raised channelization shall be determined by an engineering study.
4. Centerline srtiping on the approach to and departure from painted channelization shall be determined by an engineering study.
5. Centerline striping on four-lane undivided highways shall be a double centerline.
6. The two Type 2L (SL) Traffic Arrows shown in the left-turn storage lane are optional, but recommended. Arrows may be added for longer storage lanes or deleted for shorter storage lanes. See Contract Plans.

POSTED SPEED	DIMENSION E ⟨1⟩	APPROACH TAPER F
HIGH SPEED		
60 MPH	180'	360'
55 MPH	180'	330'
50 MPH	180'	300'
45 MPH	180'	270'
LOW SPEED		
40 MPH	120'	240'
35 MPH	120'	210'
30 MPH	120'	180'
25 MPH	120'	150'
20 MPH	120'	120'

⟨1⟩ Can be reduced to a minimum of 50' to increase storage capacity.

LEGEND

L = 12' Typical Lane Width. See Contract for specified lane widths.

Type 2L (SL) Traffic Arrow

JOHN C. NISBET
STATE OF WASHINGTON
29115
REGISTERED
PROFESSIONAL ENGINEER

TWO-WAY LEFT-TURN AND MEDIAN CHANNELIZATION

STANDARD PLAN M-3.40-03

SHEET 1 OF 1 SHEET

APPROVED FOR PUBLICATION

STATE DESIGN ENGINEER — DATE 6/3/11

Washington State Department of Transportation

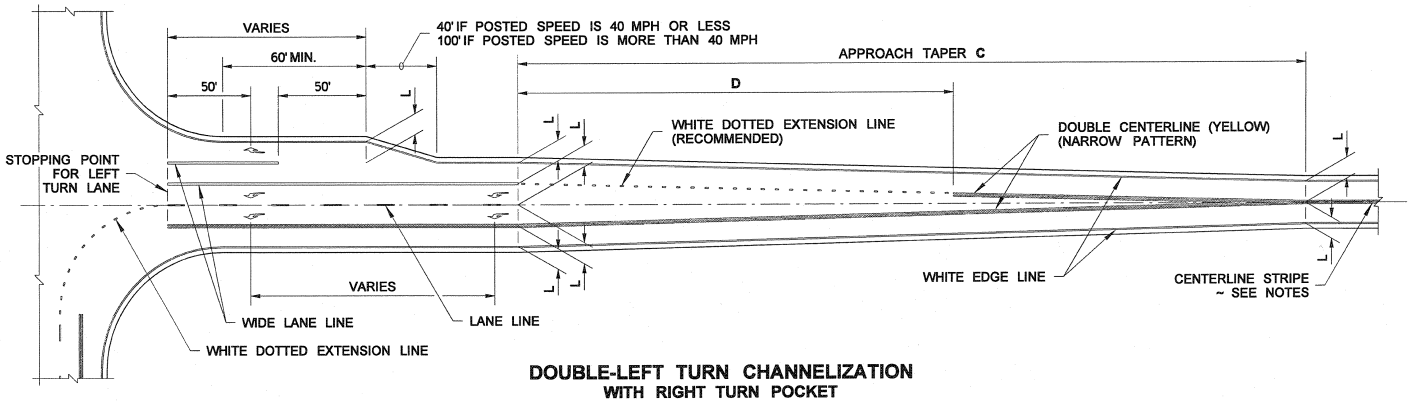

DOUBLE-LEFT TURN CHANNELIZATION
WITH RIGHT TURN POCKET

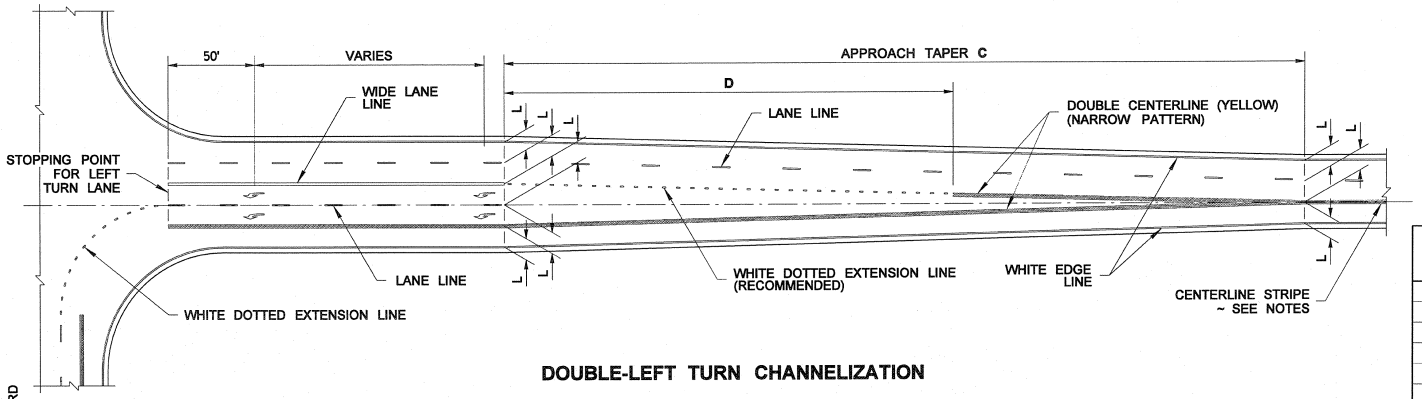

DOUBLE-LEFT TURN CHANNELIZATION

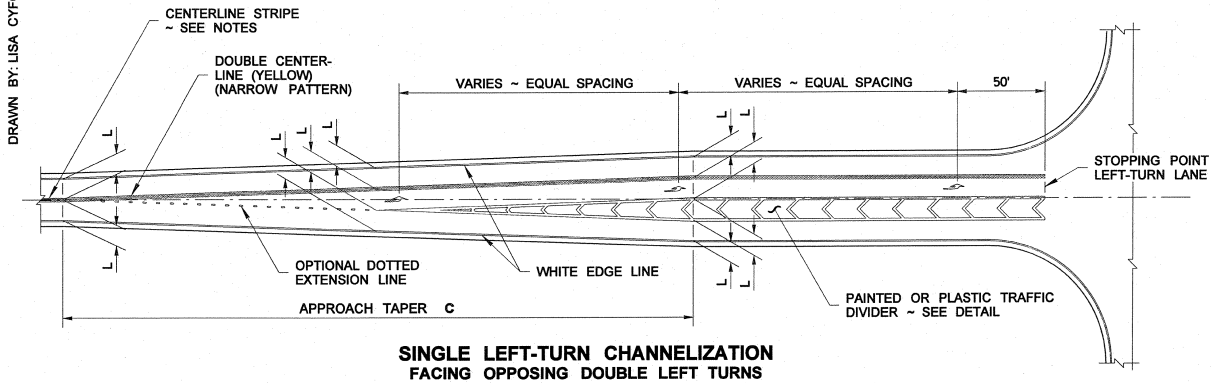

SINGLE LEFT-TURN CHANNELIZATION
FACING OPPOSING DOUBLE LEFT TURNS

DRAWN BY: LISA CYFORD

NOTES

1. The channelization shown on this plan assumes optimal roadway geometric design. The dimensions may vary to fit existing conditions. See Contract.
2. The channelization shown on this plan is for a two lane highway. The channelization plan may be used on four lane undivided highways with the appropriate consideratiions.
3. Centerline striping on the approach to raised channelization shall be No Pass in accordance with MUTCD Figure 3B-15. Centerline striping on the departure from raised channelization shall be determined by an engineering study.
4. Centerline striping on the approach to and departure from painted channelization shall be determined by an engineering study.
5. Centerline striping on four lane undivided highways shall be double centerline.
6. All turn traffic arrows are optional, but recommended. Arrows may be added for longer storage lanes or deleted for shorter storage lanes. See Contract Plans.

LEGEND

L = 12' Typical Lane Width. See Contract for specified lane widths.

Type 2L (SL) Traffic Arrow

Type 2R (SR) Traffic Arrow

POSTED SPEED	APPROACH TAPER C	D
60 MPH	720'	420'
55 MPH	660'	385'
50 MPH	600'	350'
45 MPH	540'	315'
40 MPH	480'	280'
35 MPH	420'	245'
30 MPH	360'	210'
25 MPH	300'	175'
20 MPH	240'	140'

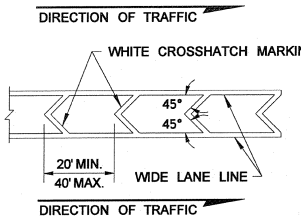

PAINTED OR PLASTIC TRAFFIC DIVIDER
COMPOSED OF LONGITUDINAL MARKINGS

JOHN C. NISBET
STATE OF WASHINGTON
29115
REGISTERED
PROFESSIONAL ENGINEER

DOUBLE LEFT-TURN CHANNELIZATION

STANDARD PLAN M-3.50-02

SHEET 1 OF 1 SHEET

APPROVED FOR PUBLICATION

STATE DESIGN ENGINEER — DATE 6/3/14

Washington State Department of Transportation

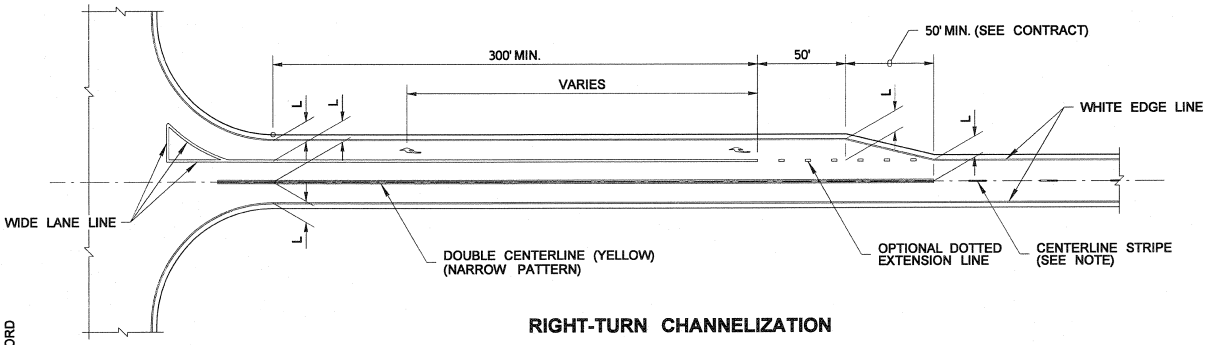

RIGHT-TURN CHANNELIZATION

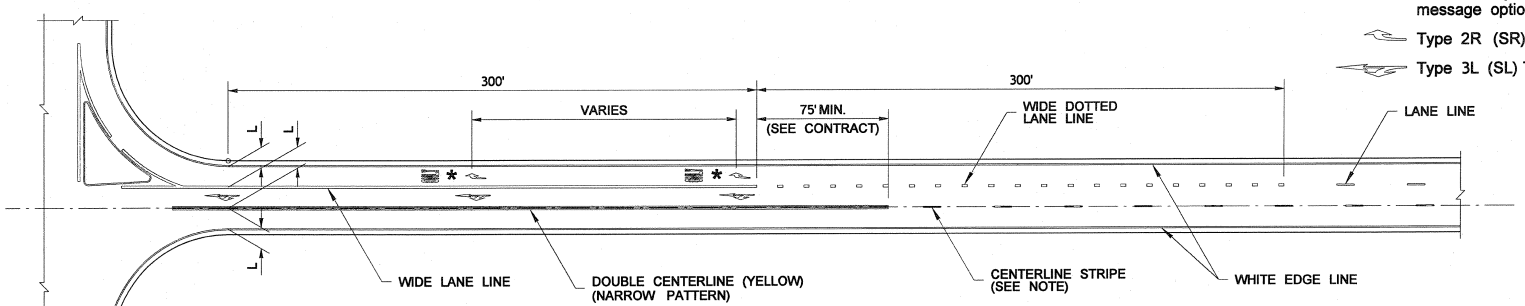

RIGHT-TURN CHANNELIZATION
WITH DROP LANE

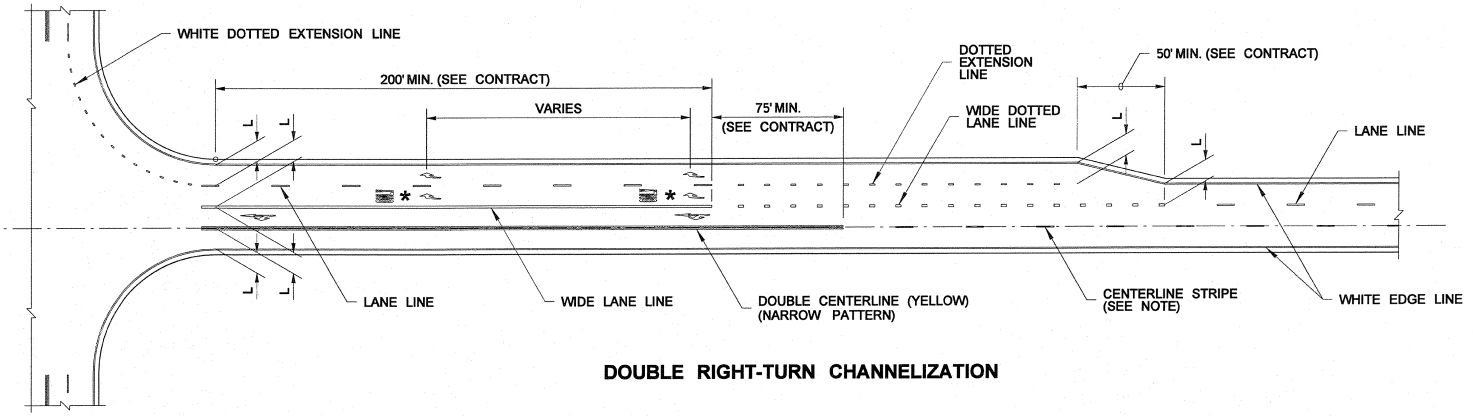

DOUBLE RIGHT-TURN CHANNELIZATION

NOTES

1. The channelization shown on this plan assumes optimal roadway geometric design. The dimensions may vary to fit existing conditions. See Contract.
2. The channelization shown on this plan is for a two-lane highway. The channelization plan may be used on four-lane undivided highways with the appropriate considerations.
3. Centerline striping on the approach to raised channelization shall be No Pass in accordance with MUTCD figure 3B-15. Centerline striping on the departure from raised channelization shall be determined by an engineering study.
4. Centerline striping on the approach to and departure from painted channelization shall be determined by an engineering study.
5. Centerline striping on four-lane undivided highways shall be a double center line.
6. All Traffic Arrows not required are optional, but recommended. Arrows may be added for longer storage lanes, or deleted for shorter storage lanes. See Contract Plans.

LEGEND

L = 12' Typical Lane Width. See Contract for specified lane widths.

* =Denotes required traffic arrow. Accompanying ONLY word message optional. See **Standard Plan M-80.10** for spacing.

Type 2R (SR) Traffic Arrow

Type 3L (SL) Traffic Arrow

DRAWN BY: LISA CYFORD

JOHN C. NISBET
STATE OF WASHINGTON
29115
REGISTERED
PROFESSIONAL ENGINEER

RIGHT-TURN CHANNELIZATION

STANDARD PLAN M-5.10-02

SHEET 1 OF 1 SHEET

APPROVED FOR PUBLICATION

STATE DESIGN ENGINEER — DATE 4/5/11

Washington State Department of Transportation

DRAWN BY: MARK SUIKA

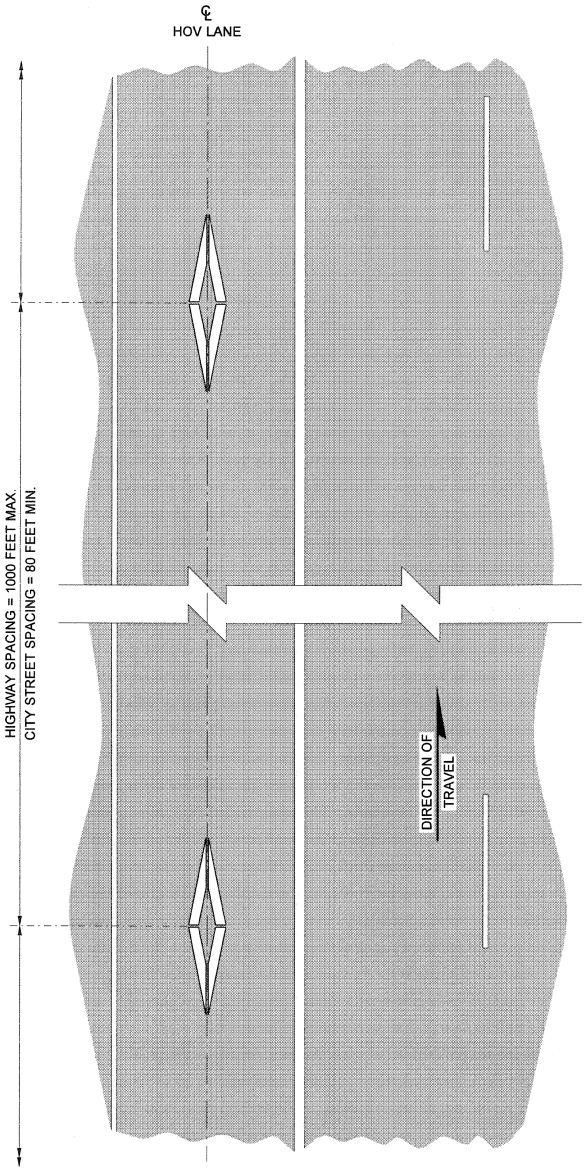

LAYOUT

NOTE

When Specified in the Contract Plans, the HOV Symbol Marking shall be installed with an offset of 1 foot max. from the lane centerline.

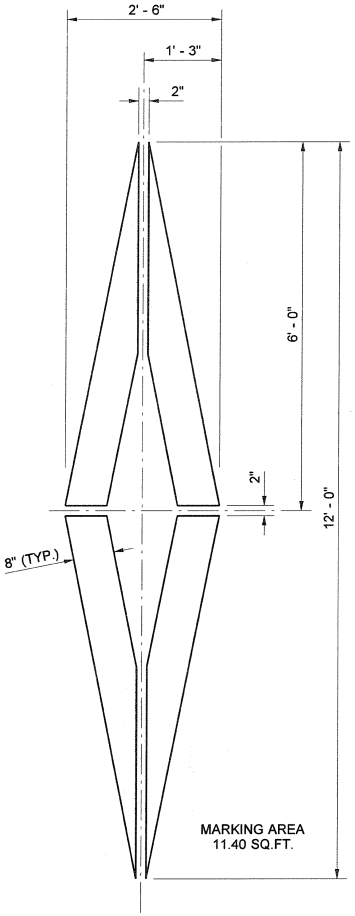

HOV LANE SYMBOL

THEODORE J. TROMBLEY
STATE OF WASHINGTON
25335
REGISTERED
PROFESSIONAL ENGINEER

EXPIRES AUGUST 9, 2007

HIGH OCCUPANCY VEHICLE (HOV) LANE SYMBOL LAYOUT
STANDARD PLAN M-7.50-01

SHEET 1 OF 1 SHEET

APPROVED FOR PUBLICATION

STATE DESIGN ENGINEER — DATE 01/30/07

Washington State Department of Transportation

DRAWN BY: LISA CYFORD

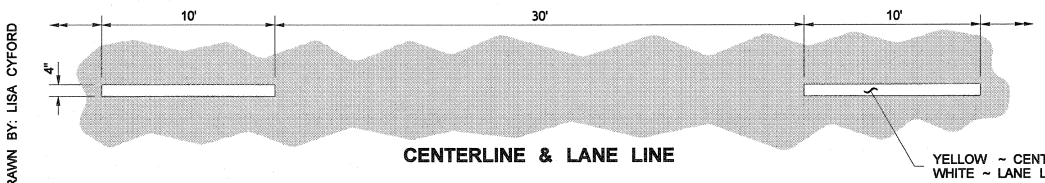

CENTERLINE & LANE LINE

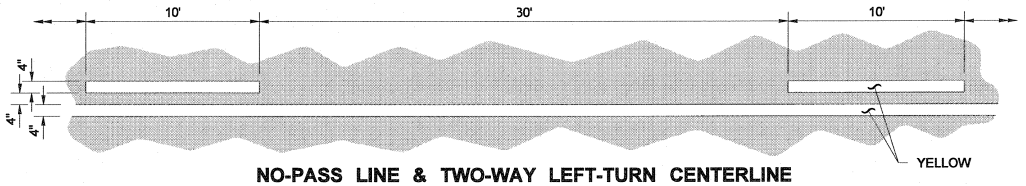

NO-PASS LINE & TWO-WAY LEFT-TURN CENTERLINE

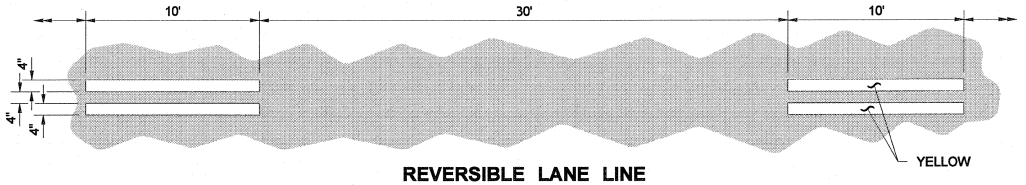

REVERSIBLE LANE LINE

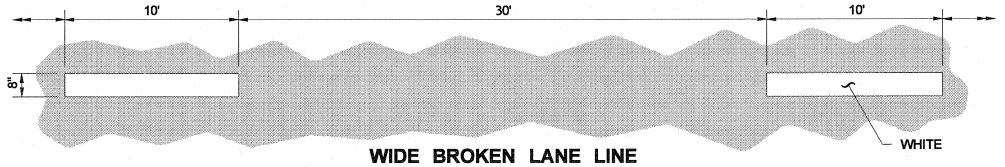

WIDE BROKEN LANE LINE

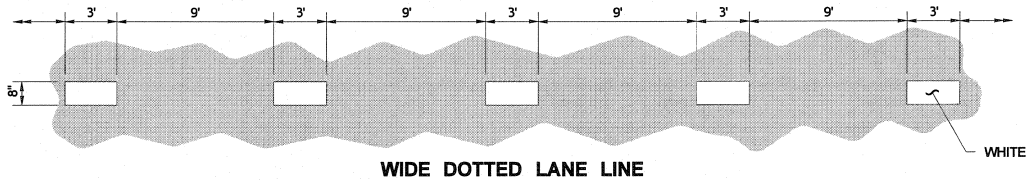

WIDE DOTTED LANE LINE

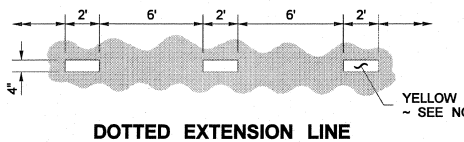

DOTTED EXTENSION LINE

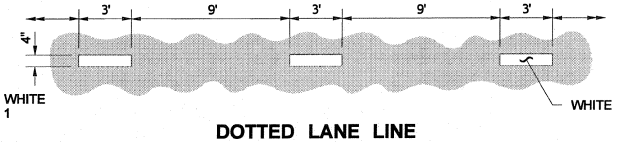

DOTTED LANE LINE

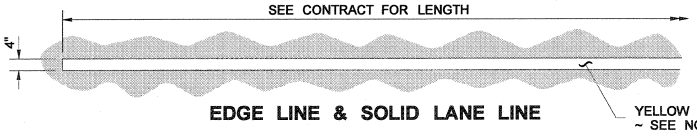

EDGE LINE & SOLID LANE LINE

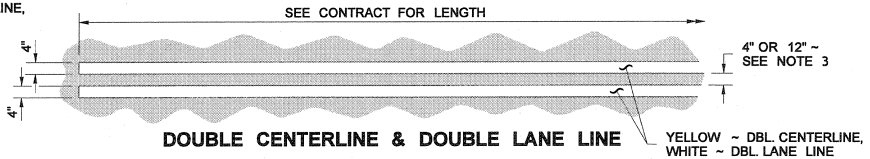

DOUBLE CENTERLINE & DOUBLE LANE LINE

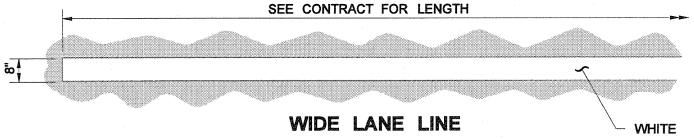

WIDE LANE LINE

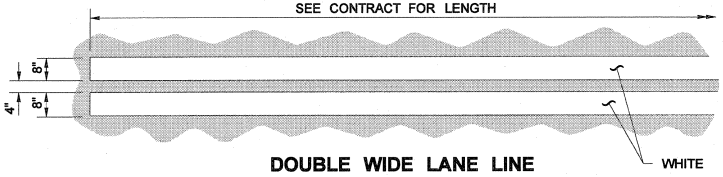

DOUBLE WIDE LANE LINE

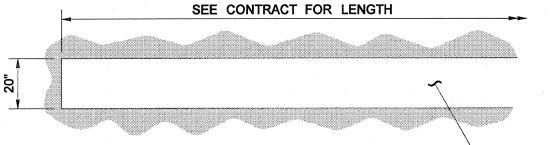

BARRIER CENTERLINE

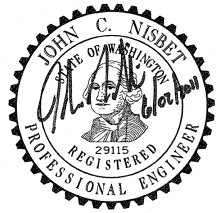

NOTES

1. Dotted Extension Line shall be the same color as the line it is extending.
2. Edge Line shall be white on the right edge of traveled way, and yellow on the left edge of traveled way (on one-way roadways). Solid Lane Line shall be white.
3. The distance between the lines of the Double Centerline shall be 12" everywhere, except 4" for left-turn channelization and narrow roadways with lane widths of 10 feet or less. Local Agencies (on non-state routes) may specify a 4" distance for all locations.

   The distance between the lines of the Double Lane Line shall be 4".

LONGITUDINAL MARKING PATTERNS

STANDARD PLAN M-20.10-02

SHEET 1 OF 1 SHEET

APPROVED FOR PUBLICATION

STATE DESIGN ENGINEER — DATE 6/3/11

Washington State Department of Transportation

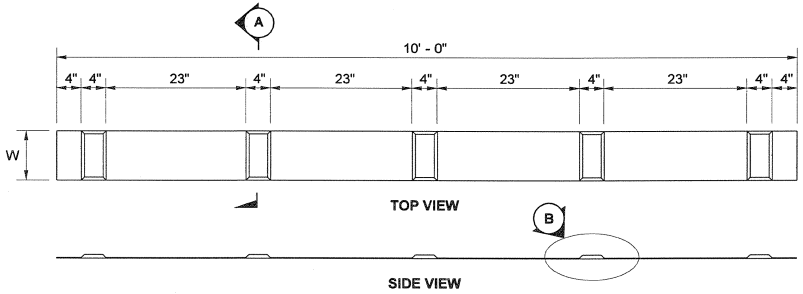

PROFILED PLASTIC
(BROKEN LINE)

FOR:
CENTER LINE & LANE LINE ~ W = 4"
NO-PASS LINE & TWO-WAY LEFT-TURN CENTER LINE ~ W = 4"
REVERSIBLE LANE LINE ~ W = 4"
WIDE BROKEN LANE LINE ~ W = 8"

GENERAL NOTE

See Standard Plan M-20.10 for pattern and color requirements.

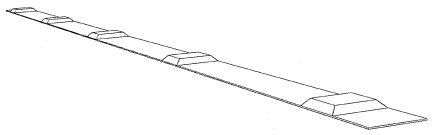

PERSPECTIVE VIEW

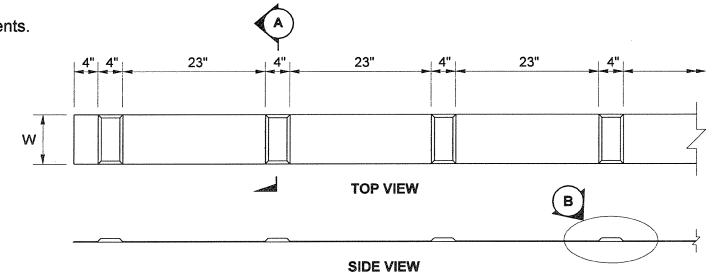

PROFILED PLASTIC
(SOLID LINE)

FOR:
NO-PASS LINE ~ W = 4"
TWO-WAY LEFT-TURN CENTER LINE ~ W = 4"
DOUBLE CENTER LINE & DOUBLE LANE LINE ~ W = 4"
EDGE LINE & SOLID LANE LINE ~ W = 4"
WIDE LANE LINE & WIDE LINE ~ W = 8"
DOUBLE WIDE LANE LINE ~ W = 8"
BARRIER CENTER LINE ~ W = 20"

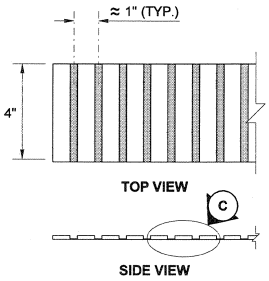

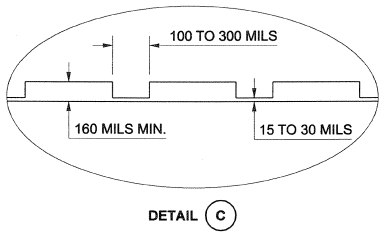

EMBOSSED PLASTIC
(SOLID OR BROKEN LINE)

FOR:
CENTER LINE & LANE LINE
NO-PASS LINE & TWO-WAY LEFT-TURN CENTER LINE
REVERSIBLE LANE LINE
DOUBLE CENTER LINE & DOUBLE LANE LINE
EDGE LINE & SOLID LANE LINE

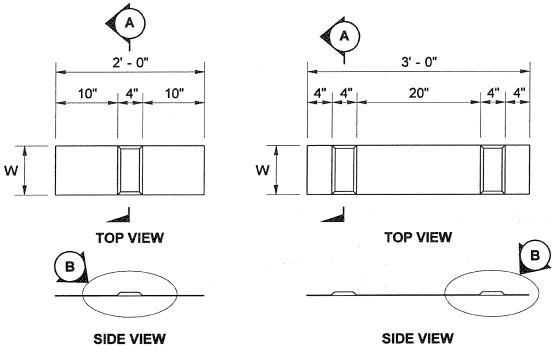

DOTTED EXTENSION LINE ~ W = 4"
WIDE DOTTED LANE LINE ~ W = 8"

DROP LANE LINE ~ W = 8"

PROFILED PLASTIC
(BROKEN LINE)

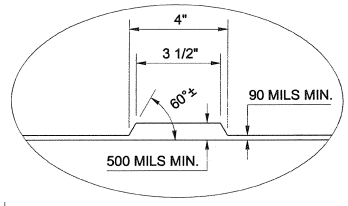

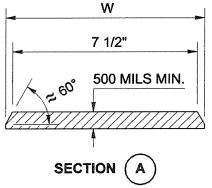

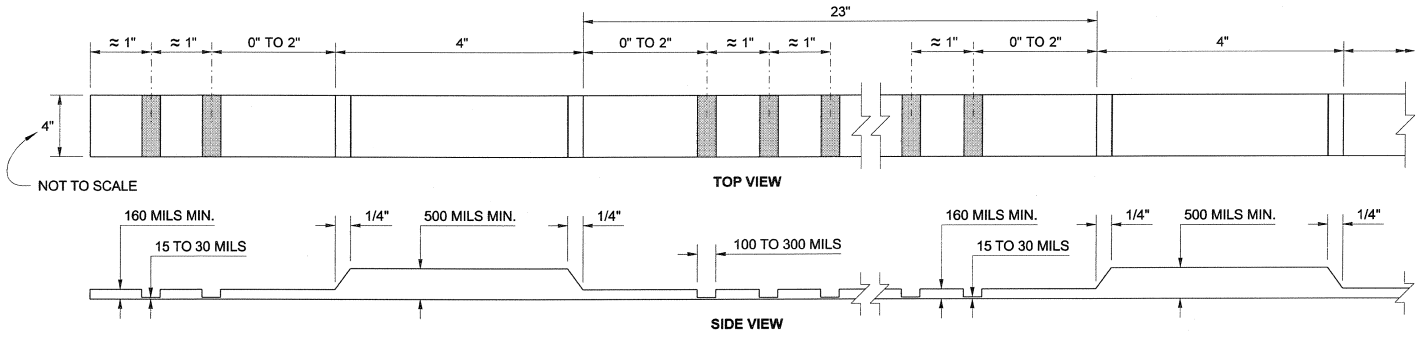

PROFILED EMBOSSED PLASTIC
(SOLID OR BROKEN LINE)

FOR:
CENTER LINE & LANE LINE
NO-PASS LINE
TWO-WAY LEFT-TURN CENTER LINE
REVERSIBLE LANE LINE
DOUBLE CENTER LINE & DOUBLE LANE LINE
EDGE LINE & SOLID LANE LINE

THEODORE J. TRE... STATE OF WASHINGTON 25335 REGISTERED PROFESSIONAL ENGINEER
1/25/07
EXPIRES AUGUST 9, 2007

PROFILED AND EMBOSSED PLASTIC LINES

STANDARD PLAN M-20.20-01

SHEET 1 OF 1 SHEET

APPROVED FOR PUBLICATION

STATE DESIGN ENGINEER — DATE 01/30/07

Washington State Department of Transportation

DRAWN BY: MARK SUJKA

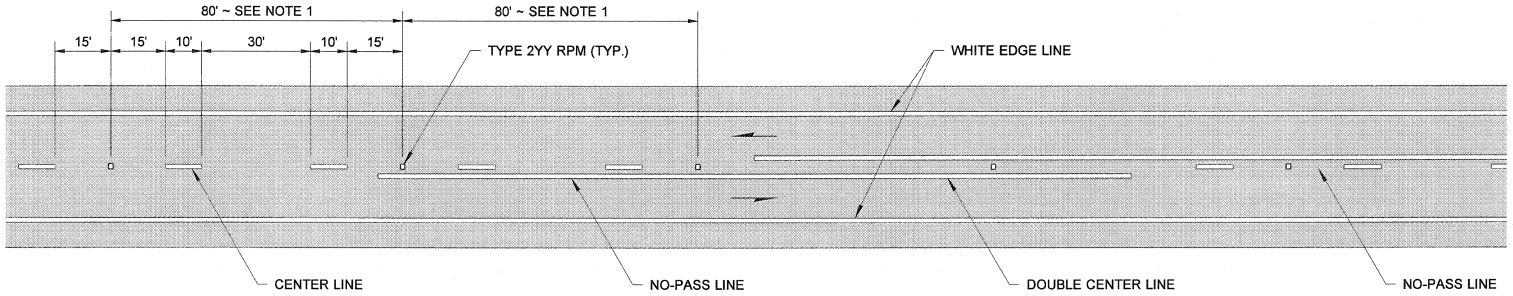

TWO LANE TWO-WAY TRAFFIC

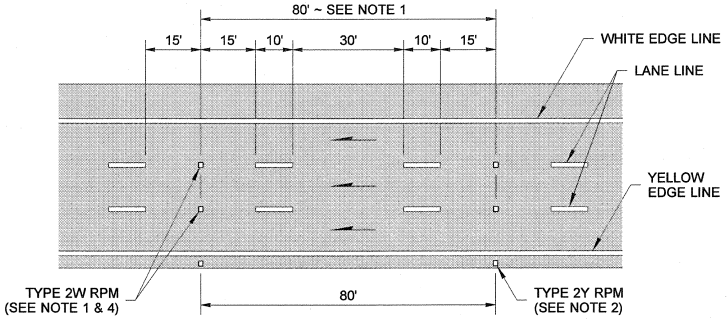

MULTILANE ONE-WAY TRAFFIC

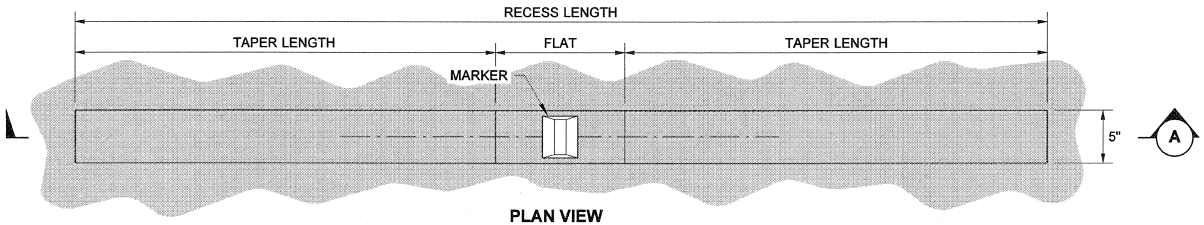

PLAN VIEW

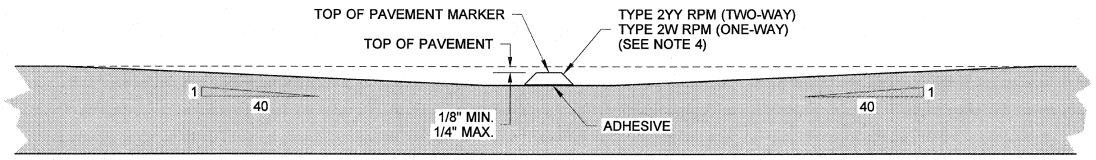

SECTION (A)

RECESSED PAVEMENT MARKER DETAILS

FOR USE WHERE SPECIFIED IN CONTRACT

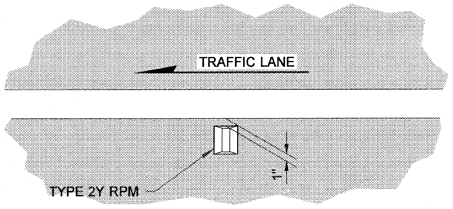

LEFT EDGE OF LANE PLACEMENT DETAIL

SEE NOTE 2

NOTES

1. Raised Pavement Markers Types 2YY and 2W shall be spaced at 80' intervals on tangents and on horizontal curves with a radius of 5000' or more, and at 40' intervals on horizontal curves having radii of less than 5000'. Center the RPM's in the gaps between the pavement marking lines.
2. Type 2Y RPM's, when specified, shall be placed outside the left Edge Line at 80' intervals. See "LEFT EDGE OF LANE PLACEMENT DETAIL".
3. Recessed pavement markers, when specified, shall be installed at the locations shown for Type 2W RPM's on multilane one-way roadways, and Type 2YY RPM's on two lane two-way roadways.
4. The Type 2W RPM's placed on multilane one-way roadways and all RPM's set in recesses shall have an abrasion resistant coating.

TYPE 2 RPM RAISED FACE COLORS	
TYPE 2YY	YELLOW AND YELLOW
TYPE 2W	WHITE ~ ONE SIDE ONLY
TYPE 2Y	YELLOW ~ ONE SIDE ONLY

THEODORE J. TREPANIER — STATE OF WASHINGTON — 25335 — REGISTERED PROFESSIONAL ENGINEER — 10/4/07

LONGITUDINAL MARKING SUPPLEMENT WITH RAISED PAVEMENT MARKERS
STANDARD PLAN M-20.30-02

SHEET 1 OF 1 SHEET

APPROVED FOR PUBLICATION

STATE DESIGN ENGINEER — DATE 10/4/07

Washington State Department of Transportation

DRAWN BY: MARK SUJKA

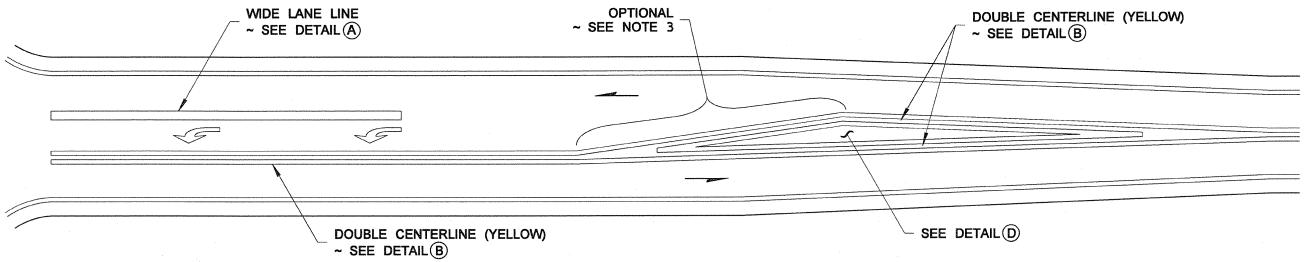

LEFT-TURN LANE
(SEE NOTE 3)

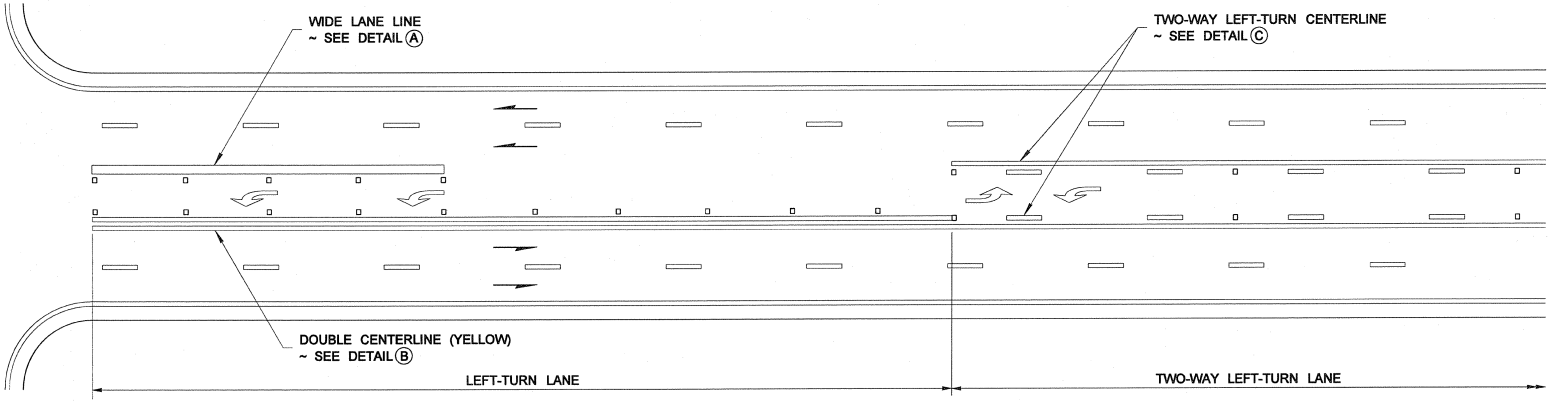

TWO-WAY LEFT-TURN LANE

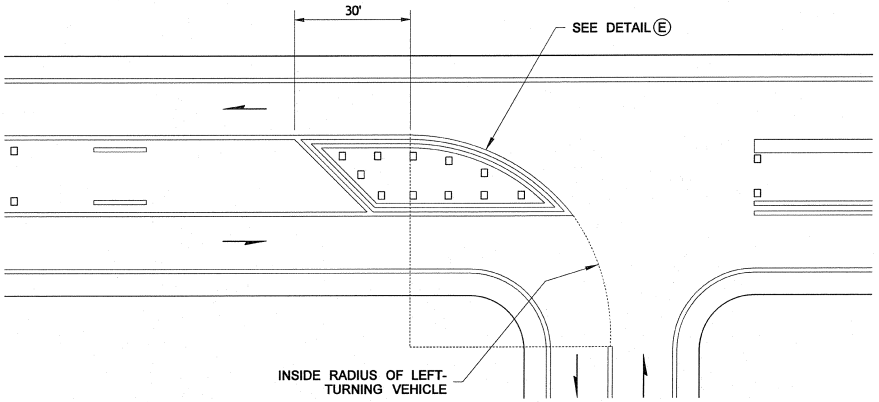

END TWO-WAY LEFT-TURN LANE

NOTES

1. Raised pavement markers shall be installed only when specified in the Contract Plans.
2. See the Standard Plans for marker designation.
3. The portion labeled "OPTIONAL" is only used when the Optional Marked Deceleration Taper (see **Standard Plans M-3.10 and M-3.20)** is specified in the Contract Plans.

Type 2L (SL) Traffic Arrow

DRAWN BY: LISA CYFORD

JOHN C. NISBET
STATE OF WASHINGTON
29115
REGISTERED
PROFESSIONAL ENGINEER

LONGITUDINAL MARKING SUPPLEMENT WITH RPMs ~ TURN LANES

STANDARD PLAN M-20.40-02

SHEET 1 OF 2 SHEETS

APPROVED FOR PUBLICATION

STATE DESIGN ENGINEER — DATE 4/3/11

Washington State Department of Transportation

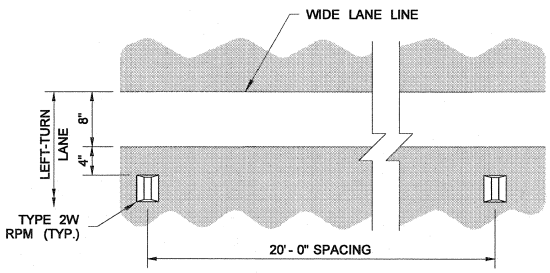

DETAIL (A)

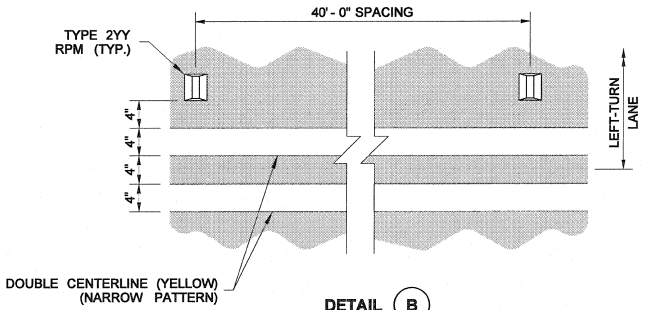

DETAIL (B)

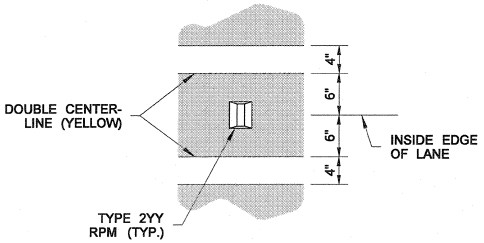

ALTERNATIVE LINE DETAIL

DRAWN BY: LISA CYFORD

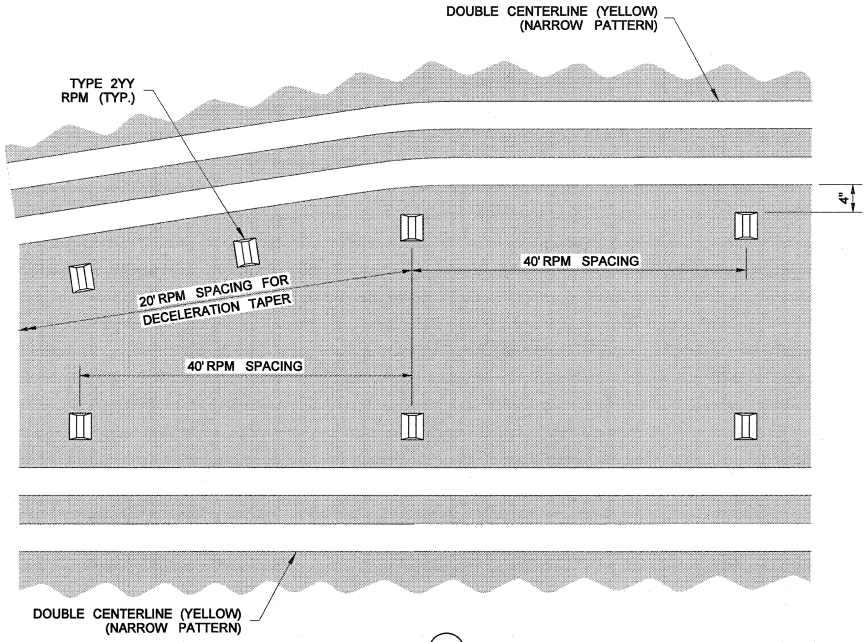

DETAIL (D)

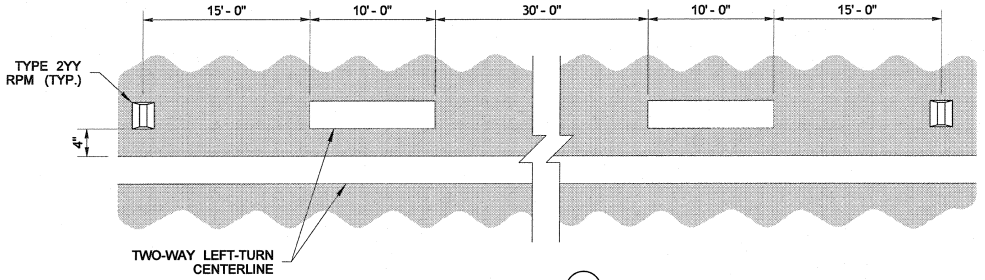

DETAIL (C)

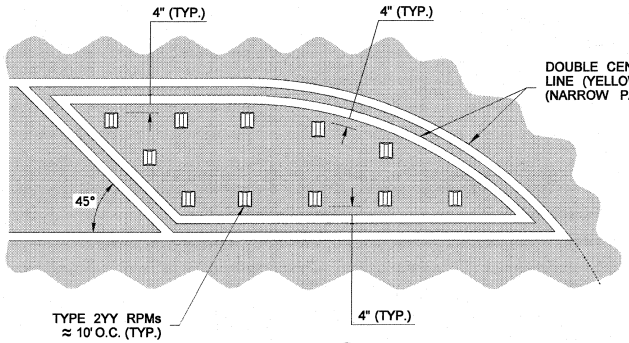

DETAIL (E)

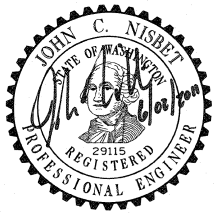

LONGITUDINAL MARKING SUPPLEMENT WITH RPMs ~ TURN LANES

STANDARD PLAN M-20.40-02

SHEET 2 OF 2 SHEETS

APPROVED FOR PUBLICATION

STATE DESIGN ENGINEER — DATE 6/3/19

Washington State Department of Transportation

DRAWN BY: LISA CYFORD

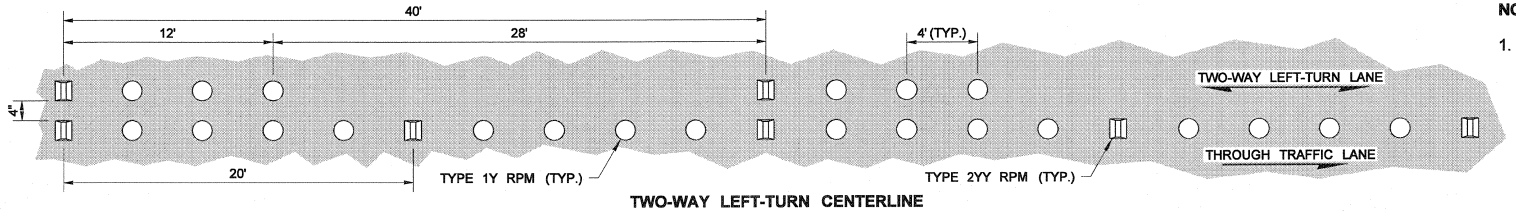

TWO-WAY LEFT-TURN CENTERLINE

NOTE

1. The NO PASS LINE (when required) is applied parallel to the CENTERLINE, 4" away, with the Type 2YY RPM's aligned (similar to TWO-WAY LEFT-TURN LINE).

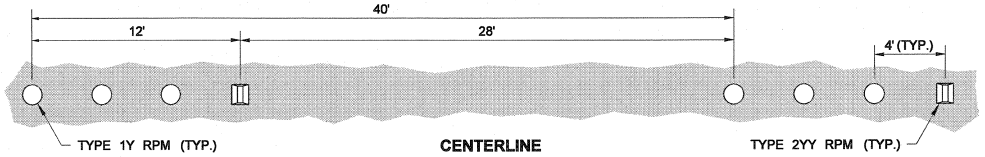

CENTERLINE

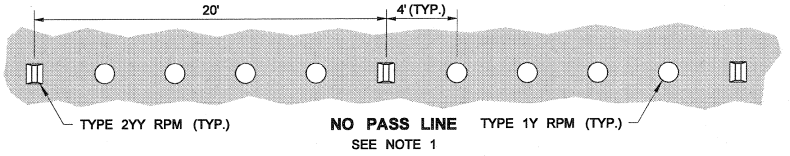

NO PASS LINE
SEE NOTE 1

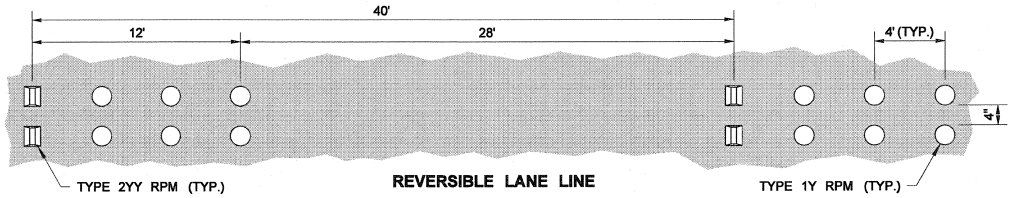

REVERSIBLE LANE LINE

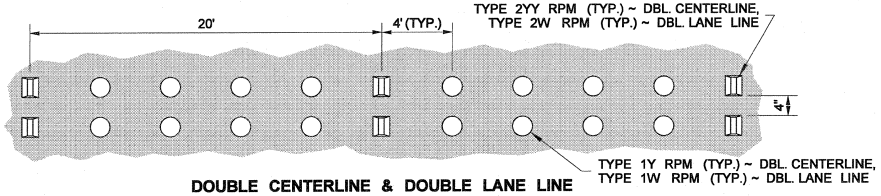

DOUBLE CENTERLINE & DOUBLE LANE LINE

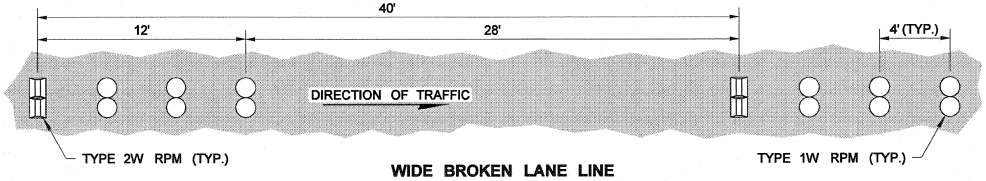

WIDE BROKEN LANE LINE

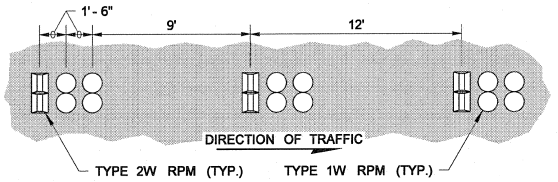

WIDE DOTTED LANE LINE

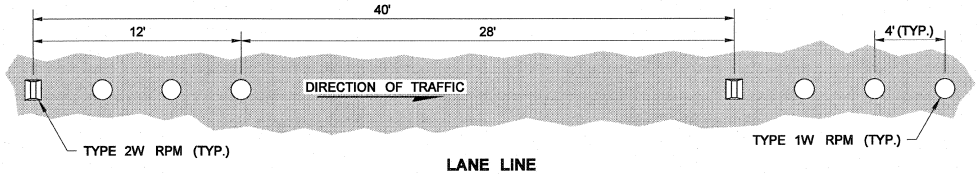

LANE LINE

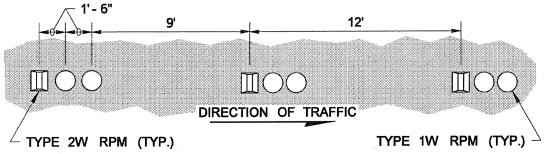

DOTTED LANE LINE

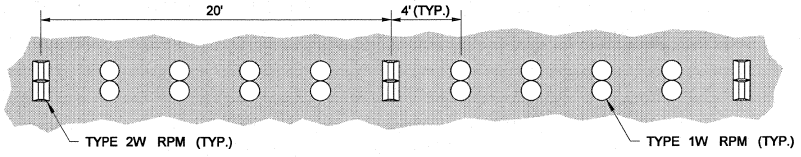

WIDE LANE LINE

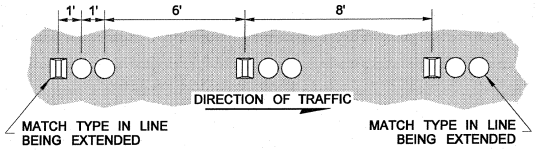

DOTTED EXTENSION LINE

LONGITUDINAL MARKING SUBSTITUTION W/RAISED PAVEMENT MARKERS

STANDARD PLAN M-20.50-02

SHEET 1 OF 1 SHEET

APPROVED FOR PUBLICATION

STATE DESIGN ENGINEER — DATE 6/3/11

Washington State Department of Transportation

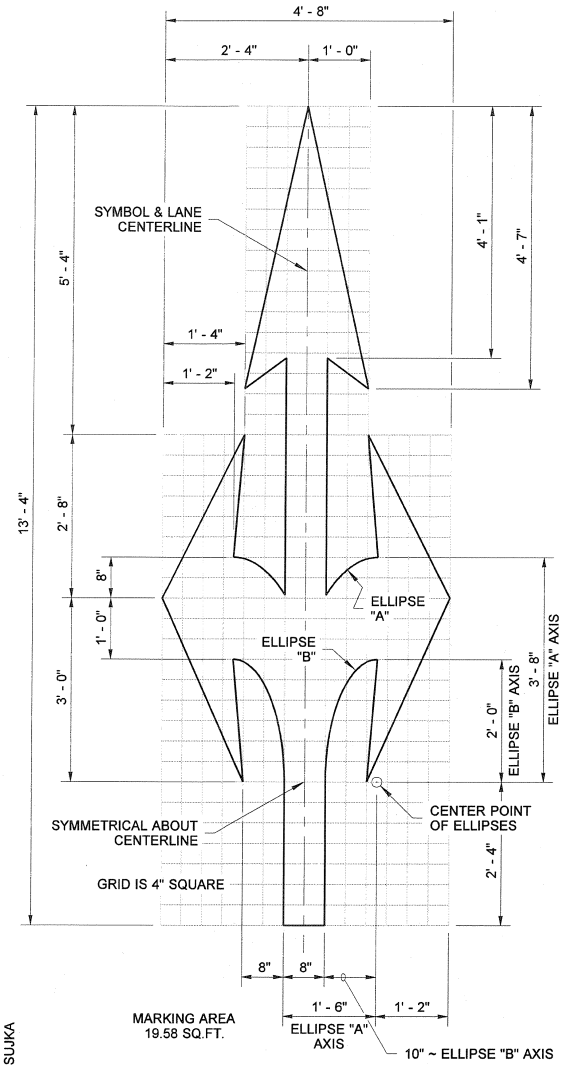

TYPE 7S TRAFFIC ARROW

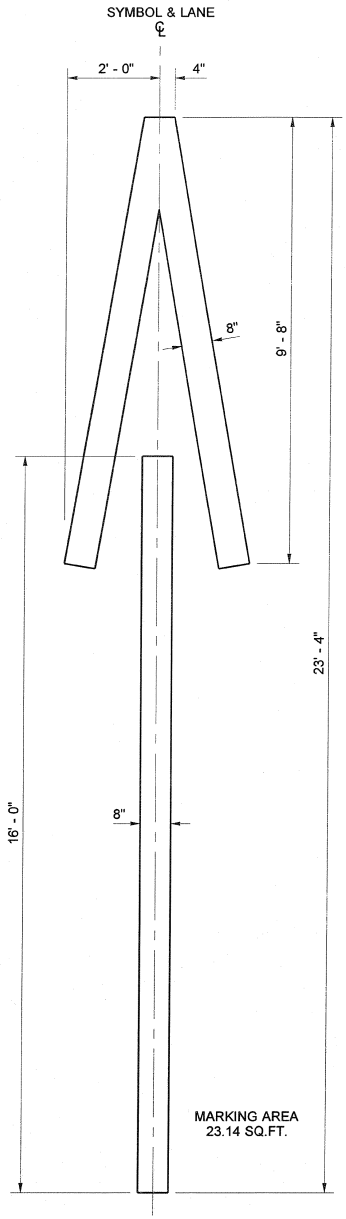

TYPE 5 TRAFFIC ARROW

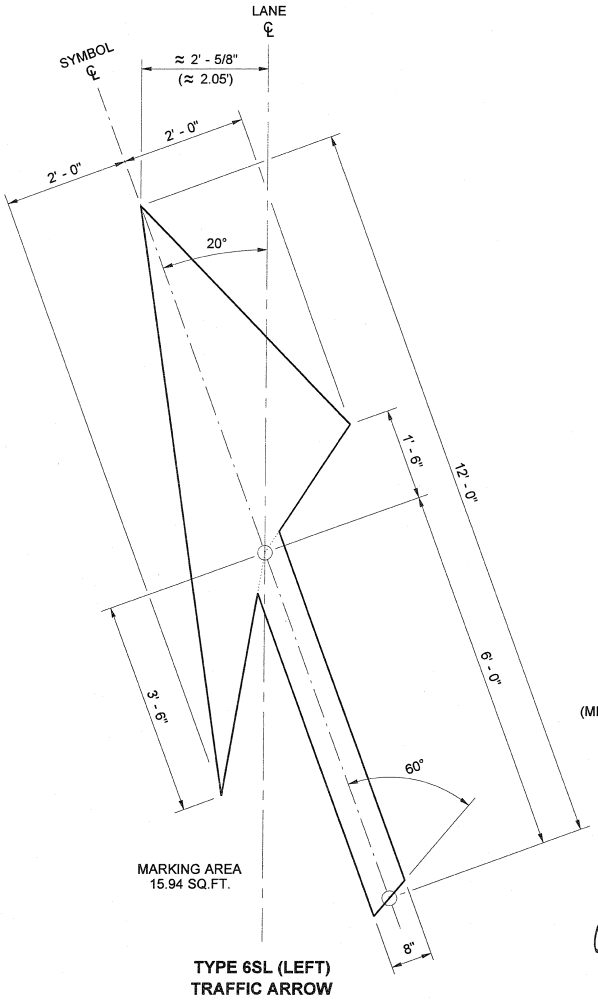

TYPE 6SL (LEFT) TRAFFIC ARROW

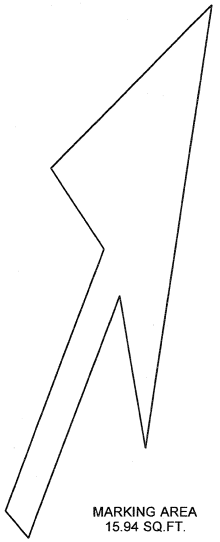

TYPE 6SR (RIGHT) TRAFFIC ARROW

MIRROR IMAGE OF TYPE 6SL
(MIRRORED ABOUT LANE CENTERLINE)
(SHOWN AT REDUCED SCALE)

EXPIRES AUGUST 9, 2007

SYMBOL MARKINGS TRAFFIC ARROWS FOR LOW SPEED ROADWAYS STANDARD PLAN M-24.40-01

SHEET 2 OF 2 SHEETS

APPROVED FOR PUBLICATION

Harold Pitts 5-31-06

STATE DESIGN ENGINEER — DATE

Washington State Department of Transportation

DRAWN BY: MARK SUJKA

DRAWN BY: FERN LIDDELL

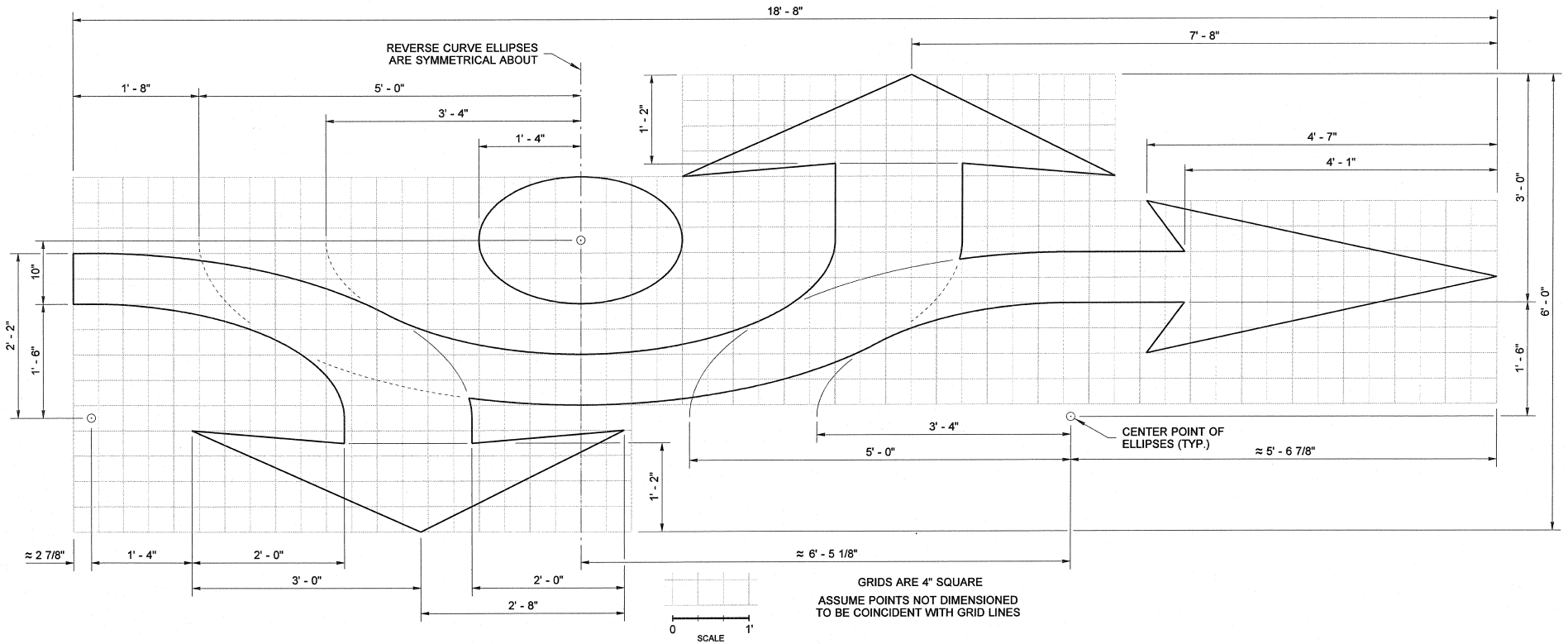

DETAIL

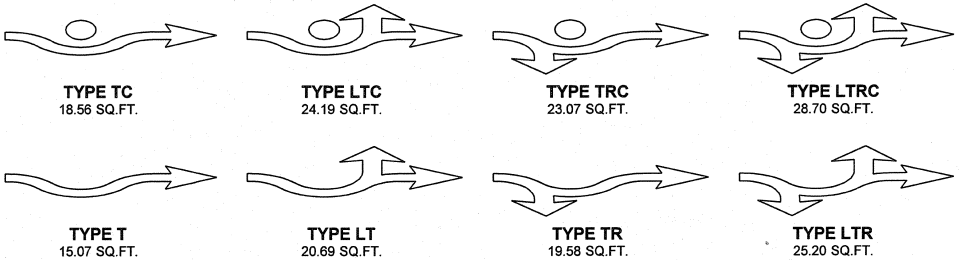

TYPE TC
18.56 SQ.FT.

TYPE LTC
24.19 SQ.FT.

TYPE TRC
23.07 SQ.FT.

TYPE LTRC
28.70 SQ.FT.

TYPE T
15.07 SQ.FT.

TYPE LT
20.69 SQ.FT.

TYPE TR
19.58 SQ.FT.

TYPE LTR
25.20 SQ.FT.

TYPE LC
18.07 SQ.FT.

PAVEMENT MARKING ~ ROUNDABOUT TRAFFIC ARROW

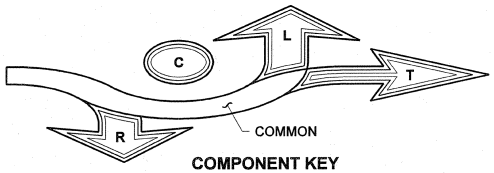

COMPONENT KEY

THE LABELED AREAS ABOVE CORRESPOND TO THE PORTIONS NEEDED FOR EACH TYPE OF ROUNDABOUT TRAFFIC ARROW.

FOR EXAMPLE: THE ROUNDABOUT TRAFFIC ARROW TYPE TRC REQUIRES THE "COMMON", "T", "R", AND "C" AREAS.

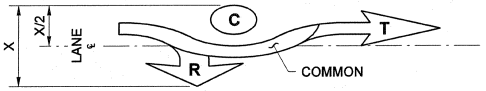

ROUNDABOUT TRAFFIC ARROW TYPE TRC

CENTER THE ARROW ON THE LANE CENTERLINE BETWEEN THE LATERAL EXTREMITIES OF THAT ARROW TYPE.

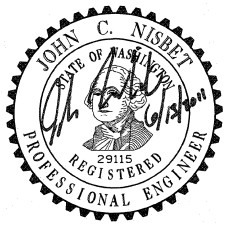

ROUNDABOUT TRAFFIC ARROWS

STANDARD PLAN M-24.50-00

SHEET 1 OF 1 SHEET

APPROVED FOR PUBLICATION

STATE DESIGN ENGINEER — DATE

Washington State Department of Transportation

This page left blank intentionally.

DRAWN BY: LISA CYFORD

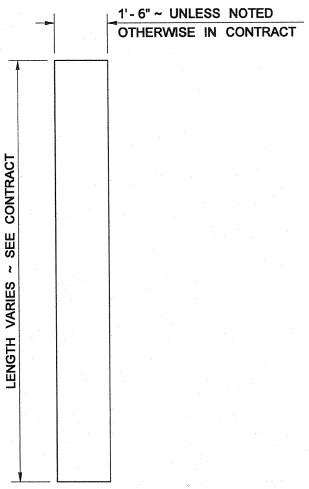

STOP LINE

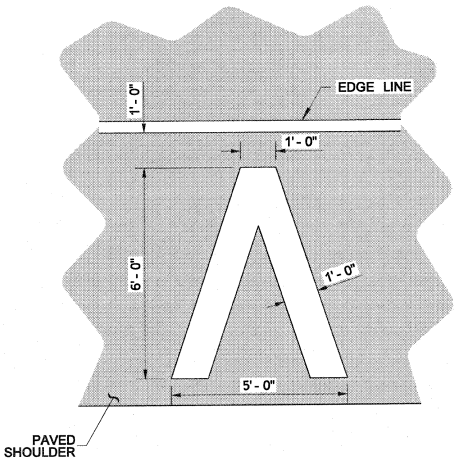

MARKING AREA = 11.73 SQ.FT.

HALF-MILE MARKER

NOTES

1. If Rumble Strips are present, install marking outside of the Rumble Strip.

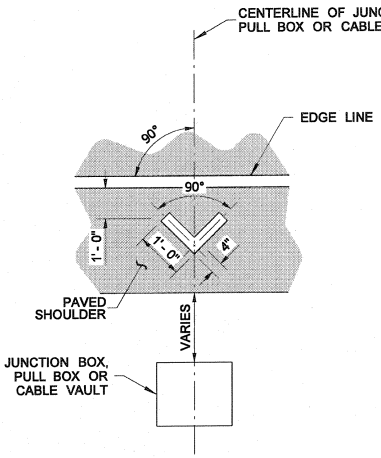

MARKING AREA = 0.56 SQ. FT.

JUNCTION BOX, PULL BOX, OR CABLE VAULT MARKINGS

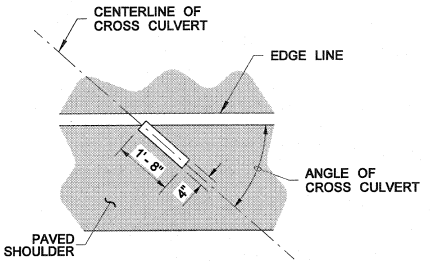

MARKING AREA = 0.56 SQ.FT.

CROSS CULVERT

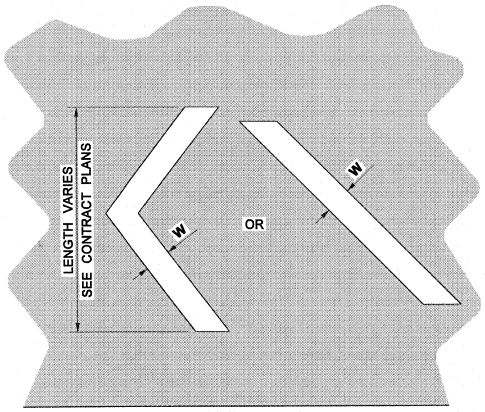

WHITE OR YELLOW ~ SEE CONTRACT PLANS

CHEVRON OR DIAGONAL

CROSSHATCH MARKING

W = 8" FOR POSTED SPEED LIMIT OF 40 MPH OR LOWER
W = 12" FOR POSTED SPEED LIMIT OF 45 MPH OR HIGHER

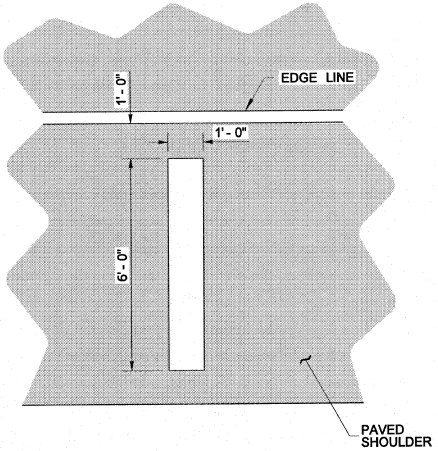

MARKING AREA = 6.00 SQ.FT.

FULL MILE MARKER

AERIAL SURVEILLANCE MARKERS

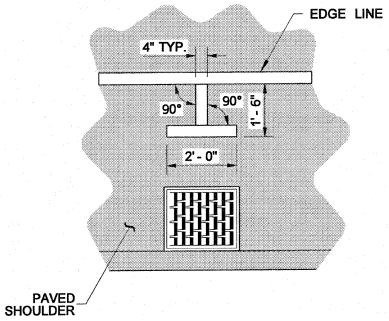

MARKING AREA = 1.06 SQ.FT.

DRAINAGE STRUCTURE INLET

DRAINAGE MARKING

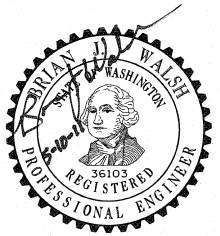

SYMBOL MARKINGS MISCELLANEOUS

STANDARD PLAN M-24.60-03

SHEET 1 OF 2 SHEETS

APPROVED FOR PUBLICATION

STATE DESIGN ENGINEER — DATE

Washington State Department of Transportation

DRAWN BY: LISA CYFORD

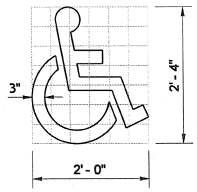

GRID IS 4" SQUARE MARKING AREA = 1.41 SQ.FT.

ACCESS PARKING SPACE SYMBOL (MINIMUM)

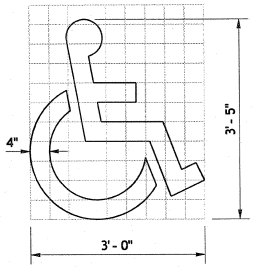

GRID IS 4" SQUARE MARKING AREA = 3.09 SQ.FT.

ACCESS PARKING SPACE SYMBOL (STANDARD)

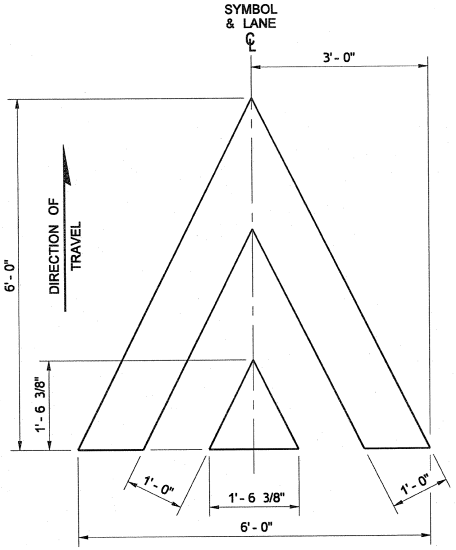

MARKING AREA = 12.08 SQ.FT.

SPEED BUMP SYMBOL

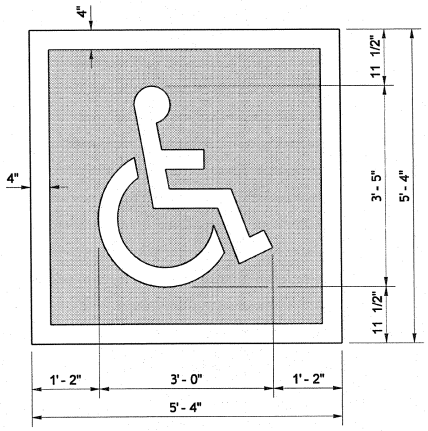

TOTAL MARKING AREA = 28.44 SQ.FT.
WHITE = 9.76 SQ.FT. BLUE = 18.69 SQ.FT.

ACCESS PARKING SPACE SYMBOL (STANDARD)
WITH BLUE BACKGROUND AND WHITE BORDER
(REQUIRED FOR CEMENT CONCRETE SURFACES)

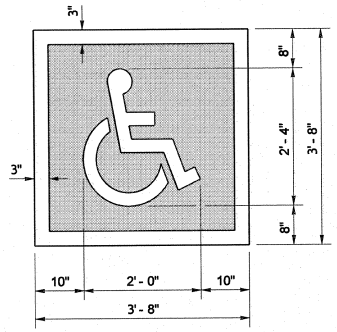

TOTAL MARKING AREA = 13.44 SQ.FT.
WHITE = 4.82 SQ.FT. BLUE = 8.62 SQ.FT.

ACCESS PARKING SPACE SYMBOL (MINIMUM)
WITH BLUE BACKGROUND AND WHITE BORDER
(REQUIRED FOR CEMENT CONCRETE SURFACES)

SYMBOL MARKING		A	B	C	D	USE	MARKING AREA
YIELD AHEAD SYMBOL	TYPE 1	6' - 0"	2' - 6"	13' - 0"	N/A	LESS THAN 45 MPH	25.90 SQ.FT.
	TYPE 2	6' - 0"	3' - 0"	20' - 0"	N/A	45 MPH OR GREATER	36.54 SQ.FT.
YIELD LINE SYMBOL	TYPE 1	1' - 0"	6"	1' - 6"	6"	LESS THAN 45 MPH	0.75 SQ.FT.
	TYPE 2	2' - 0"	1' - 0"	3' - 0"	1' - 0"	45 MPH OR GREATER	3.00 SQ.FT.
	TYPE 2	2' - 0"	1' - 0"	3' - 0"	1' - 0"	ROUNDABOUT ENTRY *	3.00 SQ.FT.

* MINIMUM OF 4 IN LANE

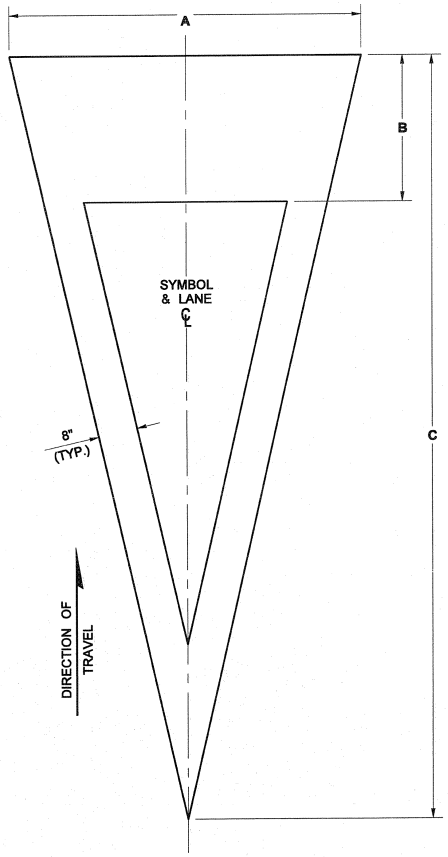

YIELD AHEAD SYMBOL

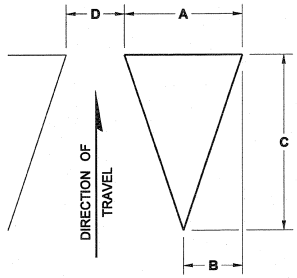

YIELD LINE SYMBOL
(MULTIPLE SYMBOLS REQUIRED FOR TRANSVERSE YIELD LINE ~ SEE CONTRACT)

SYMBOL MARKINGS MISCELLANEOUS

STANDARD PLAN M-24.60-03

SHEET 2 OF 2 SHEETS

APPROVED FOR PUBLICATION

STATE DESIGN ENGINEER — DATE 5/4/11

Washington State Department of Transportation

DRAWN BY: LISA CYFORD

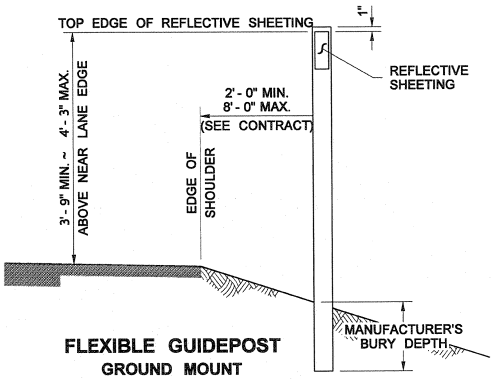

FLEXIBLE GUIDEPOST
GROUND MOUNT

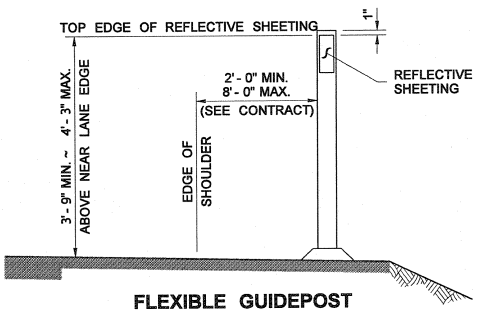

FLEXIBLE GUIDEPOST
SURFACE MOUNT

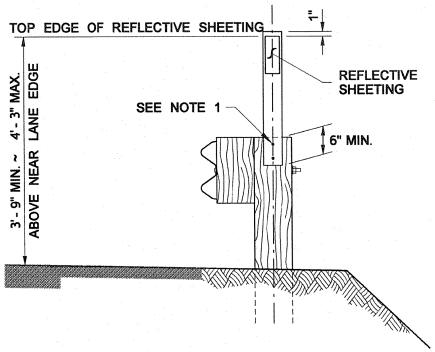

FLEXIBLE GUIDEPOST
GUARDRAIL MOUNT
(USE FOR WOODEN GUARDRAIL POSTS)

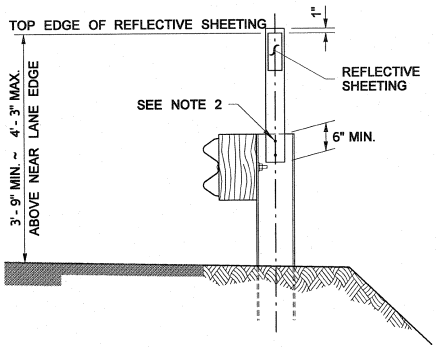

FLEXIBLE GUIDEPOST
GUARDRAIL MOUNT
(USE FOR STEEL GUARDRAIL POSTS)

NOTES

1. When the Contract Plans requires a guidepost with concurrent guardrail runs, the Contractor shall either:
   - **A.** Drive the flexible guidepost in line with the guardrail posts, or
   - **B.** Mount the shorter flexible guidepost onto the guardrail post.
2. Guideposts shall be fastened to the wooden guardrail post using two 2" × 3/8" lag screws with washers, along centerline of post. Also acceptable is any approved attachment method submitted by the guidepost manufacturer.
3. Guideposts shall be fastened to the steel guardrail posts using two galvanized 2" × 3/8" bolts with a washer on both sides, a lock washer, and nut. The nut shall be tightened to properly compress the lock washer. The drilled holes in the guardrail post web shall be painted with galvanizing repair paint as described in **Standard Specification Section 8-11.3(1)C.** Also acceptable is any approved attachment method submitted by the guidepost manufacturer.
4. When concrete barrier runs concurrent, the Contractor shall mount Barrier Delineators where guideposts are required.

GUIDEPOST TYPE DEFINITIONS ~ REFLECTIVE SHEETING APPLICATIONS

TYPE W	TYPE WW	TYPE Y	TYPE YY
○	◐	●	⊕
FACING TRAFFIC: 3" × 8", WHITE	FACING TRAFFIC: 3" × 8", WHITE; BACK SIDE: 3" × 4", WHITE	FACING TRAFFIC: 3" × 8", YELLOW	FACING TRAFFIC: 3" × 8", YELLOW; BACK SIDE: 3" × 8", YELLOW

BARRIER DELINEATOR REQUIREMENTS

- Spacing of Barrier Delineators shall be as shown in the Plans.
- The housing or bracket can be flexible or rigid, molded from a durable plastic or other durable material approved by the engineer, and shall be attached to the barrier with an adhesive recommended by the manufacturer. The attachment point on the barrier surface shall be free of dirt, curing compound, moisture, paint, or any other matter that would adversely affect the adhesive bond.
- Barrier Delineators shall be one-sided for single direction traffic, or two-sided for bi-directional traffic. Color shall be white on the right of traffic, and yellow on the left of traffic.
- The reflective surface shall be rectangular or trapezoidal.
- Reflective Sheeting: 12 square inches minimum surface area; Type III, IV, V, or VI, selected from approved materials listed in the Qualified Products List.
- Plastic Reflector: 9 square inches minimum surface area; acrylic or polycarbonate conforming to AASHTO M 290. Reflectors shall equal or exceed the following minimum values of Specific Intensity:

OBSERVATION ANGLE	ENTRANCE ANGLE	SPECIFIC INTENSITY (cd/ft-c)	
		WHITE	YELLOW
0.1°	0°	126	75
0.1°	20°	50	30

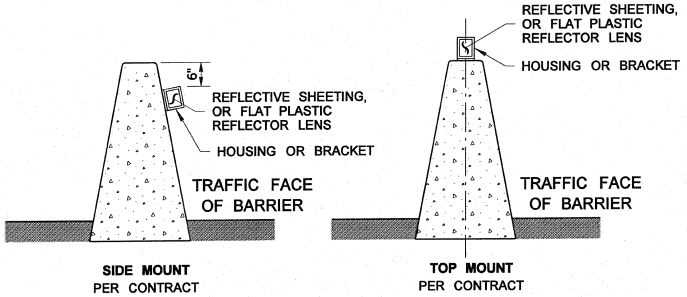

BARRIER DELINEATORS

(CONCRETE BARRIER TYPES AND LOCATIONS VARY, SINGLE SLOPE IN MEDIAN SHOWN)

GUIDEPOSTS AND BARRIER DELINEATORS

STANDARD PLAN M-40.10-02

SHEET 1 OF 1 SHEET

APPROVED FOR PUBLICATION

Pasco Bakotich — 5/2/11

STATE DESIGN ENGINEER — DATE

Washington State Department of Transportation

DRAWN BY: MARK SUJKA

NOTE

See Standard Plan M-40.10 for Guide Post details.

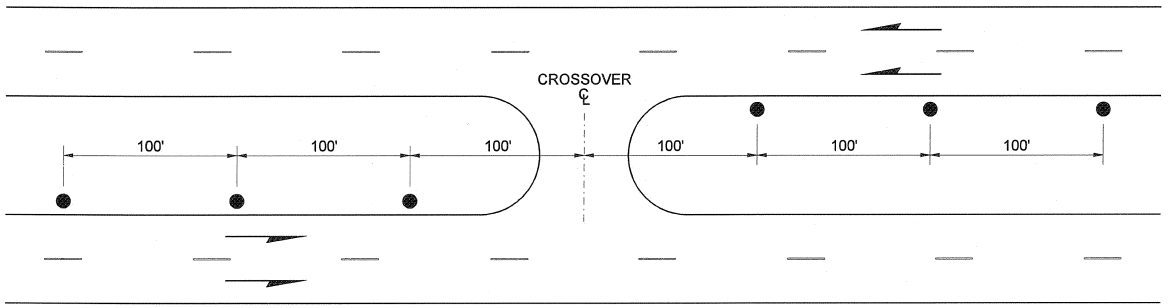

MEDIAN CROSSOVERS

LEGEND
○ TYPE W
● TYPE Y

SEE TYPE DEFINITIONS, STD. PLAN M-40.10

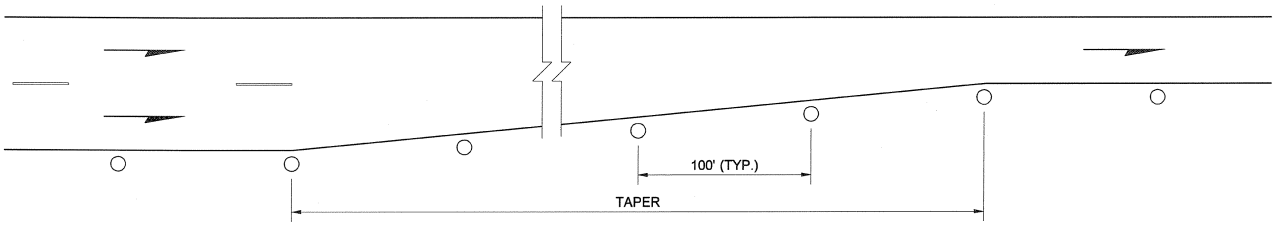

LANE REDUCTIONS

THEODORE J. TREPANIER
STATE OF WASHINGTON
25335
REGISTERED
PROFESSIONAL ENGINEER

EXPIRES AUGUST 9, 2009

GUIDE POST PLACEMENT MISCELLANEOUS

STANDARD PLAN M-40.60-00

SHEET 1 OF 1 SHEET

APPROVED FOR PUBLICATION

STATE DESIGN ENGINEER — DATE

Washington State Department of Transportation

DRAWN BY: LISA CYFORD

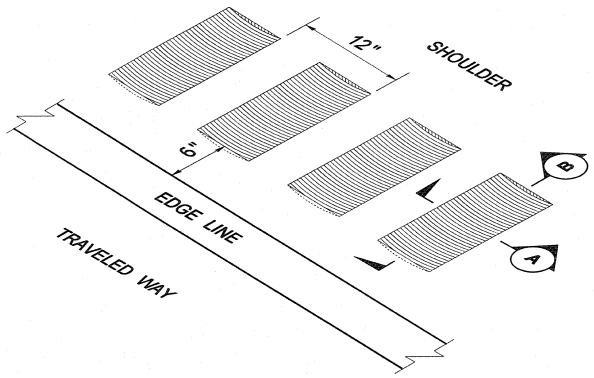

ISOMETRIC VIEW

TYPICAL SHOULDER INSTALLATION

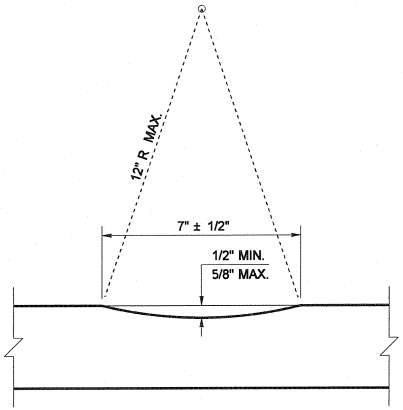

SECTION (A)

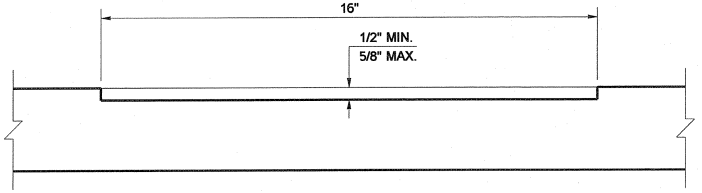

SECTION (B)

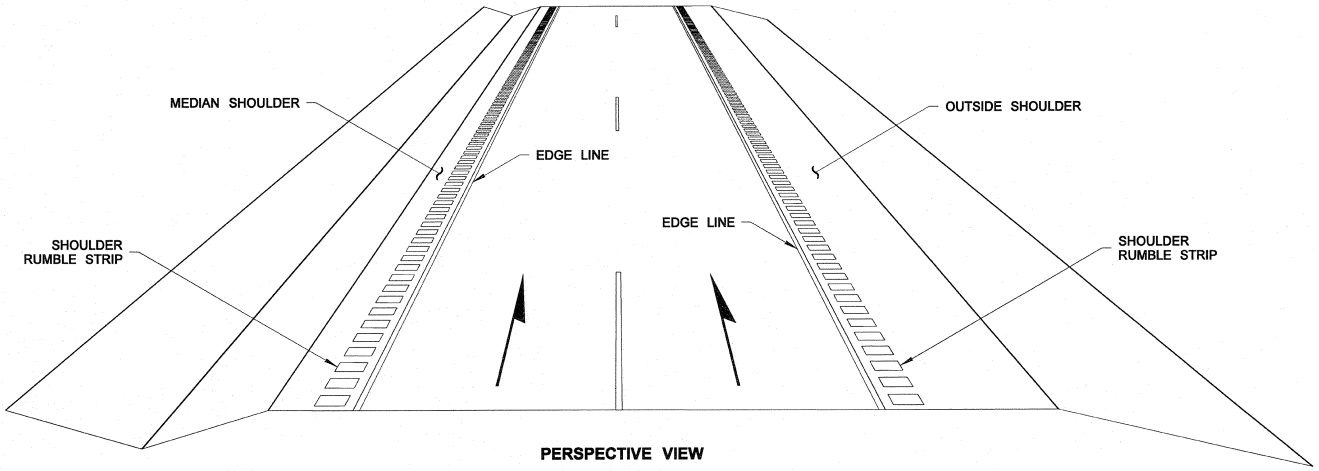

PERSPECTIVE VIEW

MULTI-LANE DIVIDED HIGHWAY

JOHN C. NISBET
STATE OF WASHINGTON
29115
REGISTERED
PROFESSIONAL ENGINEER

SHOULDER RUMBLE STRIP TYPE 1 FOR DIVIDED HIGHWAYS STANDARD PLAN M-60.10-01

SHEET 1 OF 4 SHEETS

APPROVED FOR PUBLICATION

STATE DESIGN ENGINEER — DATE 6/3/11

Washington State Department of Transportation

DRAWN BY: LISA CYFORD

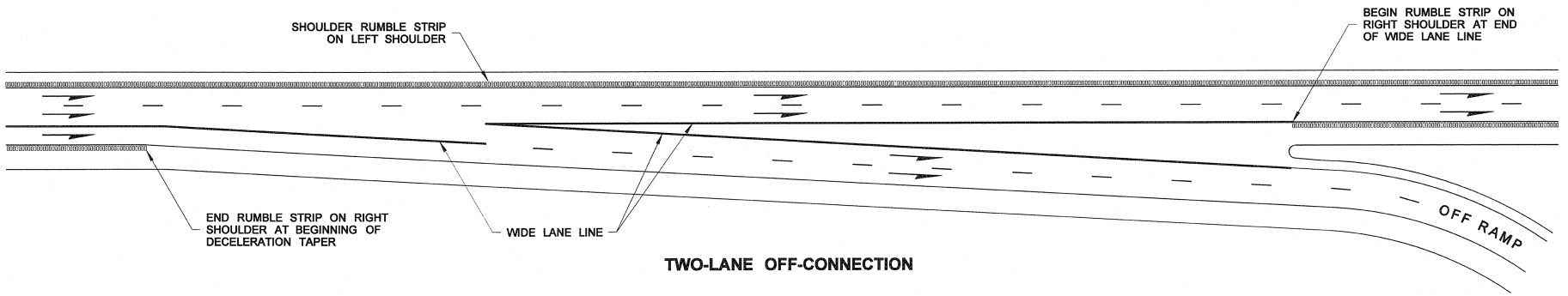

TWO-LANE OFF-CONNECTION

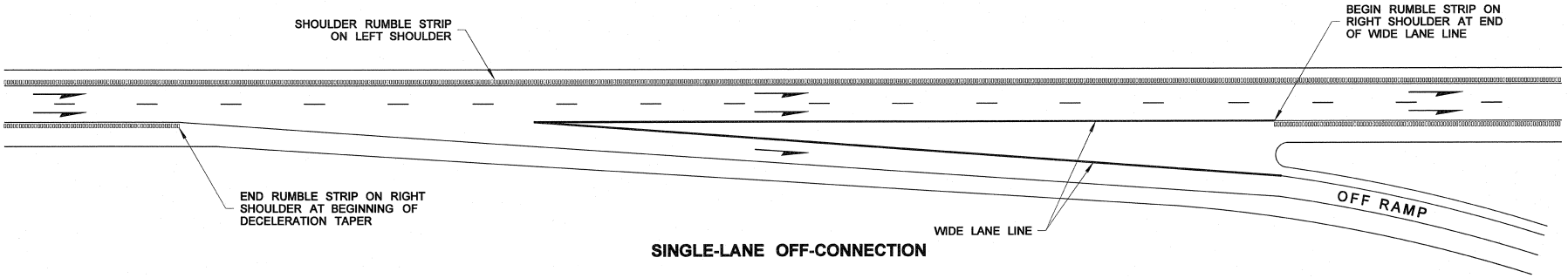

SINGLE-LANE OFF-CONNECTION

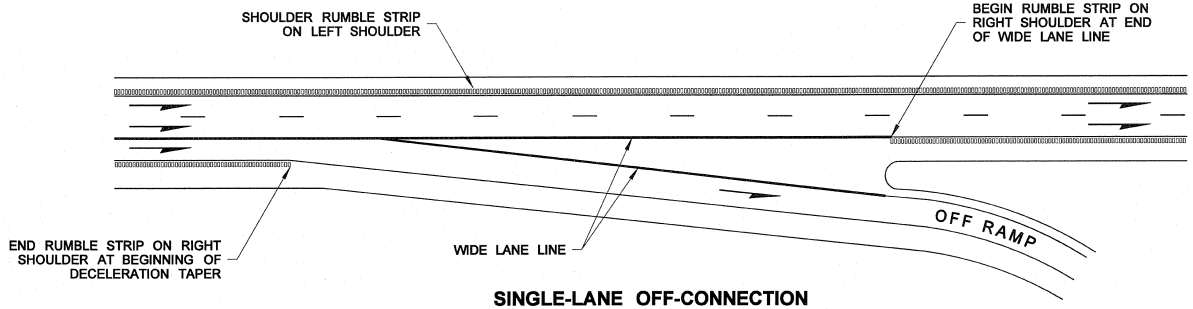

SINGLE-LANE OFF-CONNECTION FOR ONE LANE REDUCTION

SHOULDER RUMBLE STRIP TYPE 1 FOR DIVIDED HIGHWAYS STANDARD PLAN M-60.10-01

SHEET 2 OF 4 SHEETS

APPROVED FOR PUBLICATION

STATE DESIGN ENGINEER — DATE 6/3/11

Washington State Department of Transportation

DRAWN BY: LISA CYFORD

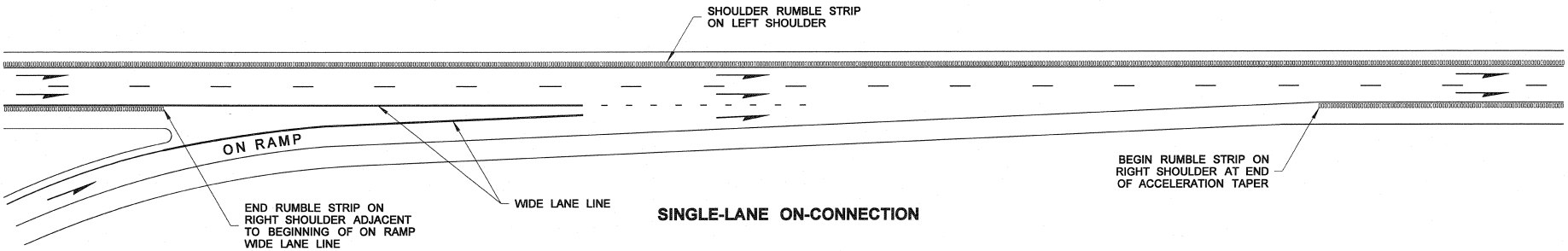

SINGLE-LANE ON-CONNECTION

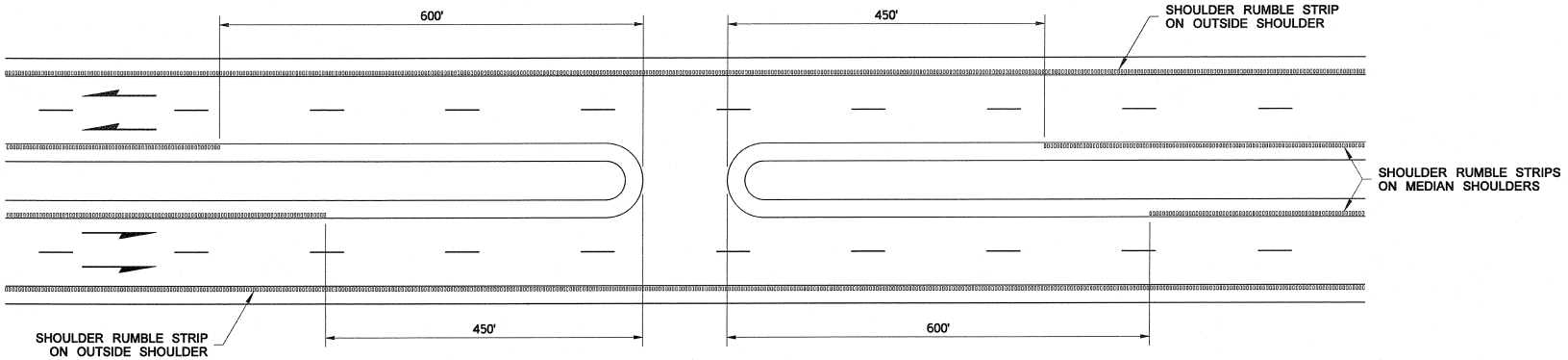

MEDIAN CROSSOVER

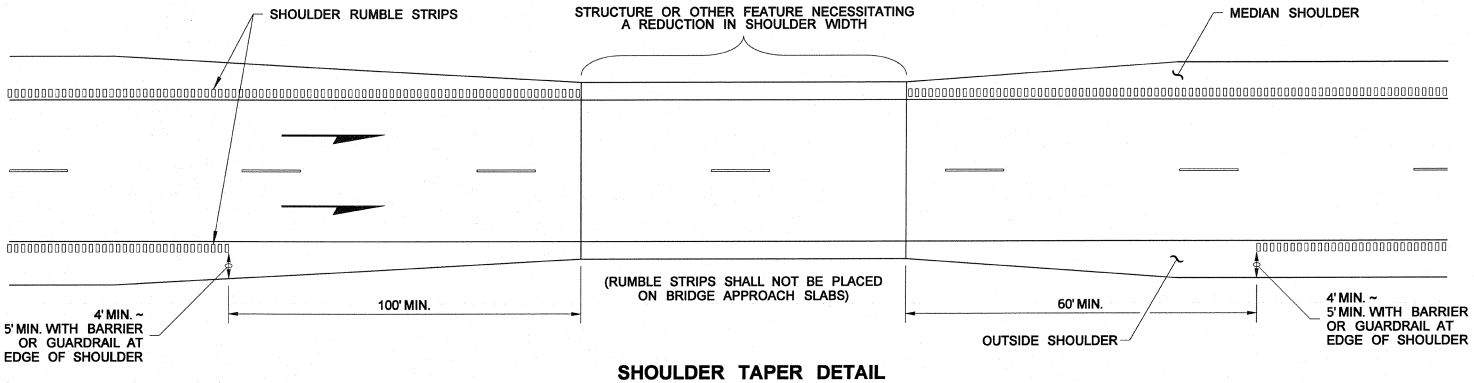

SHOULDER TAPER DETAIL

JOHN C. NISBET
STATE OF WASHINGTON
29115
REGISTERED
PROFESSIONAL ENGINEER

SHOULDER RUMBLE STRIP TYPE 1 FOR DIVIDED HIGHWAYS STANDARD PLAN M-60.10-01

SHEET 3 OF 4 SHEETS

APPROVED FOR PUBLICATION

STATE DESIGN ENGINEER — DATE 6/3/11

Washington State Department of Transportation

DRAWN BY: LISA CYFORD

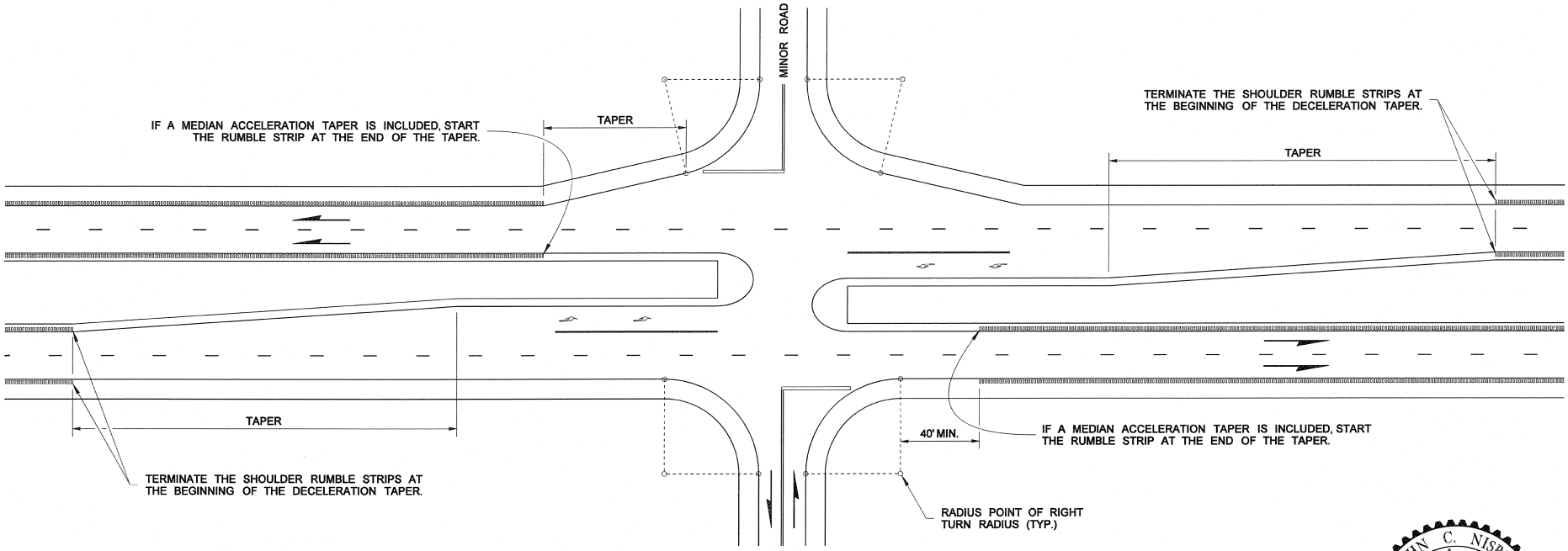

RUMBLE STRIP PLACEMENT AT INTERSECTIONS

JOHN C. NISBET
STATE OF WASHINGTON
29115
REGISTERED
PROFESSIONAL ENGINEER

SHOULDER RUMBLE STRIP TYPE 1 FOR DIVIDED HIGHWAYS STANDARD PLAN M-60.10-01

SHEET 4 OF 4 SHEETS

APPROVED FOR PUBLICATION

STATE DESIGN ENGINEER — DATE 6/3/11

Washington State Department of Transportation

DRAWN BY: FERN LIDDELL

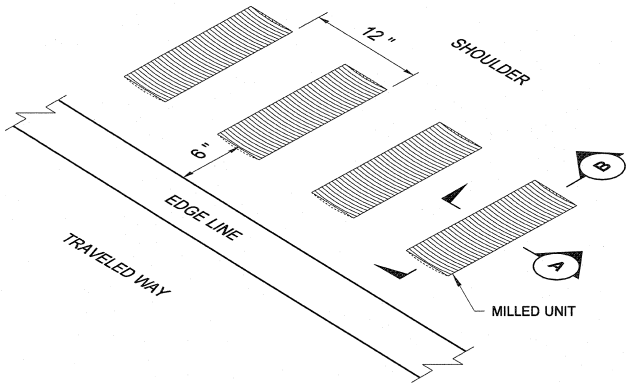

ISOMETRIC VIEW

TYPICAL SHOULDER INSTALLATION

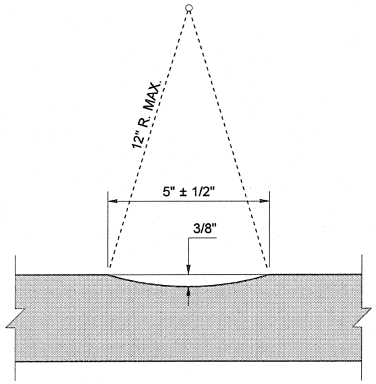

UNIT SECTION (A)

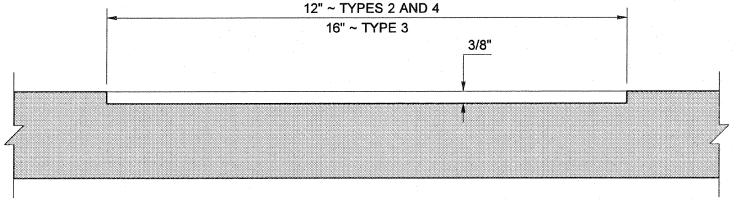

UNIT SECTION (B)

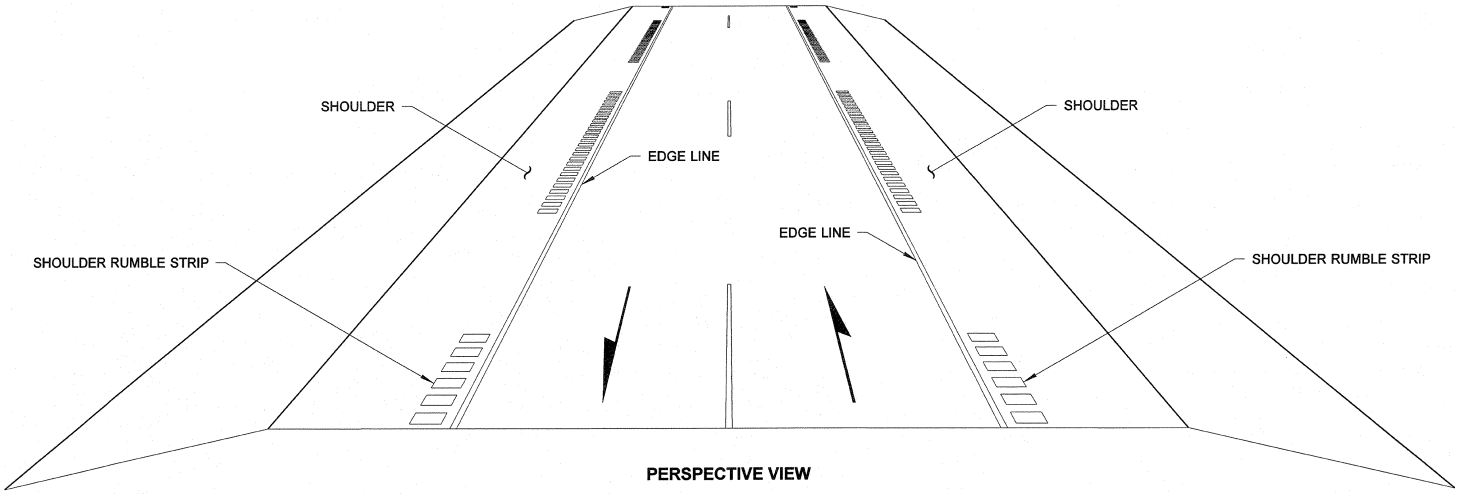

PERSPECTIVE VIEW

UNDIVIDED HIGHWAY
(TYPE 4 PATTERN SHOWN)

BAKOTICH, PASCO III
STATE OF WASHINGTON
24557
REGISTERED
PROFESSIONAL ENGINEER
6/27/11

SHOULDER RUMBLE STRIP TYPES 2, 3, AND 4 FOR UNDIVIDED HIGHWAYS STANDARD PLAN M-60.20-02

SHEET 1 OF 2 SHEETS

APPROVED FOR PUBLICATION
STATE DESIGN ENGINEER — DATE 6/27/11
Washington State Department of Transportation

DRAWN BY: FERN LIDDELL

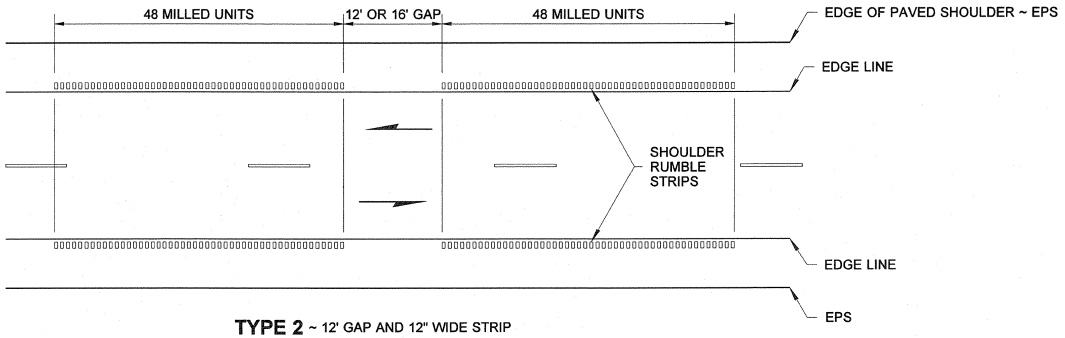

TYPE 2 ~ 12' GAP AND 12" WIDE STRIP
TYPE 3 ~ 16' GAP AND 16" WIDE STRIP

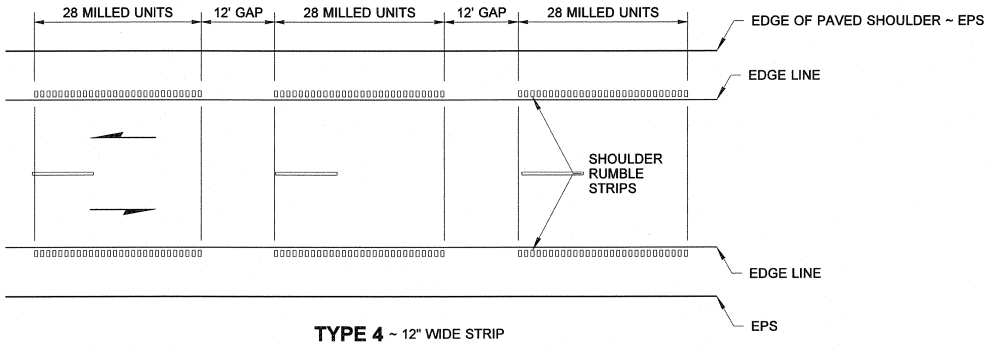

TYPE 4 ~ 12" WIDE STRIP

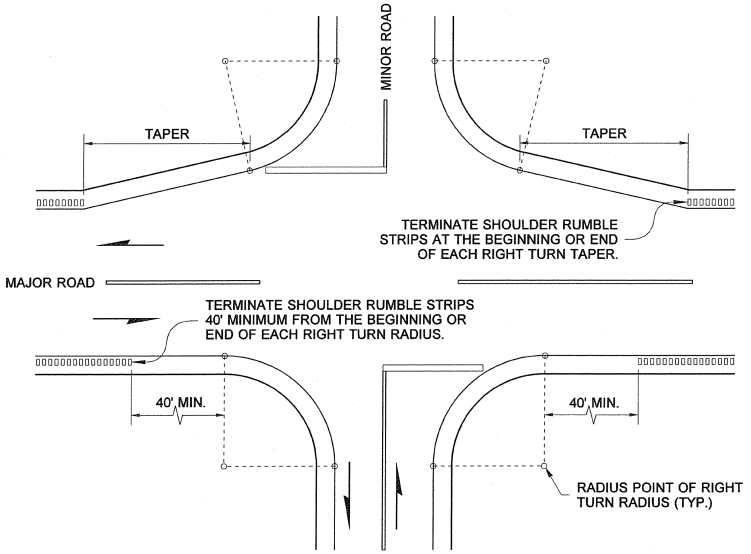

RUMBLE STRIP PLACEMENT AT INTERSECTIONS

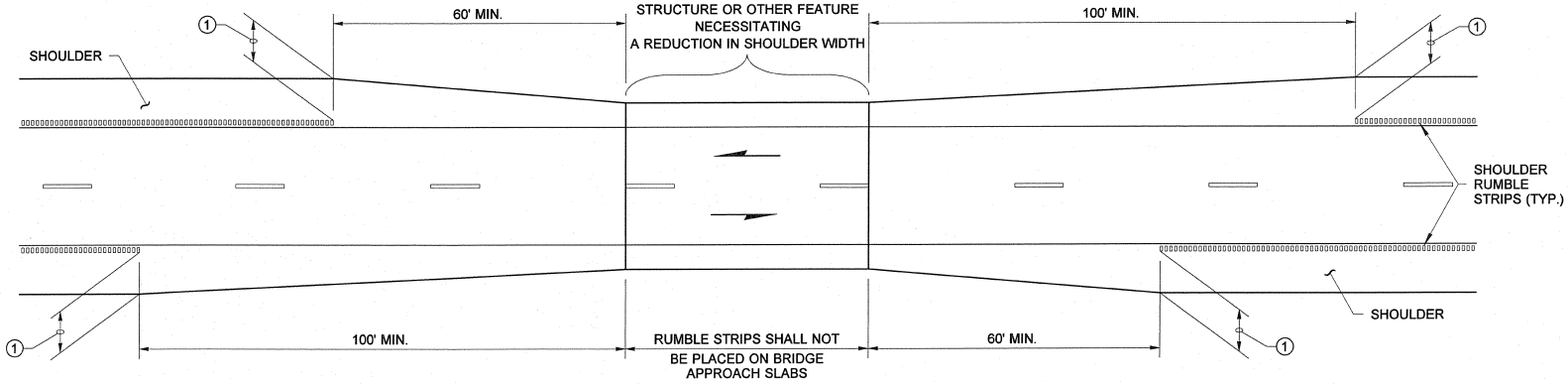

(1) NOT LESS THAN 4' ~ PROVIDE 5' WHEN BARRIER OR GUARDRAIL IS PLACED AT EDGE OF SHOULDER

SHOULDER TAPER DETAIL

BAKOTICH, PASCO III
STATE OF WASHINGTON
24557
REGISTERED
PROFESSIONAL ENGINEER
6/27/11

SHOULDER RUMBLE STRIP TYPES 2, 3, AND 4 FOR UNDIVIDED HIGHWAYS STANDARD PLAN M-60.20-02

SHEET 2 OF 2 SHEETS

APPROVED FOR PUBLICATION

STATE DESIGN ENGINEER — DATE 6/27/11

Washington State Department of Transportation

DRAWN BY: FERN LIDDELL

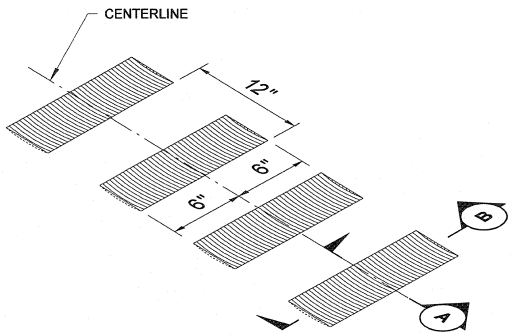

ISOMETRIC VIEW

TYPICAL INSTALLATION

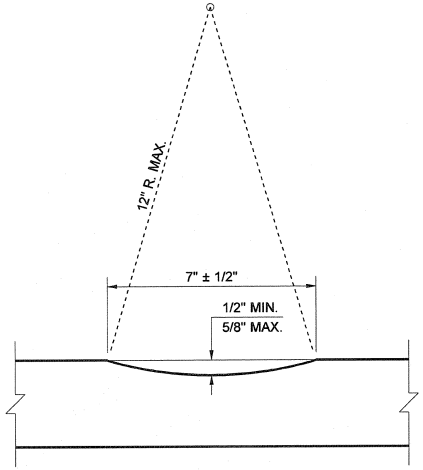

SECTION (A)

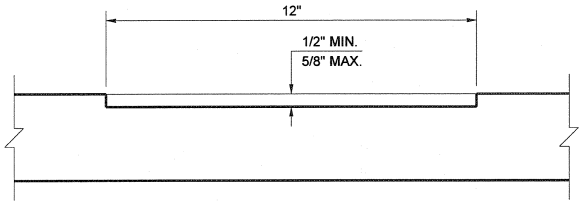

SECTION (B)

NOTES

1. Centerline Rumble Strip installation requires a minimum distance of 12 feet from Centerline to edge of paved shoulder.
2. When directed by the Engineer, Rumble Strips may be installed along the turn pocket taper where there is a history of rear-end collisions in the turn pocket.

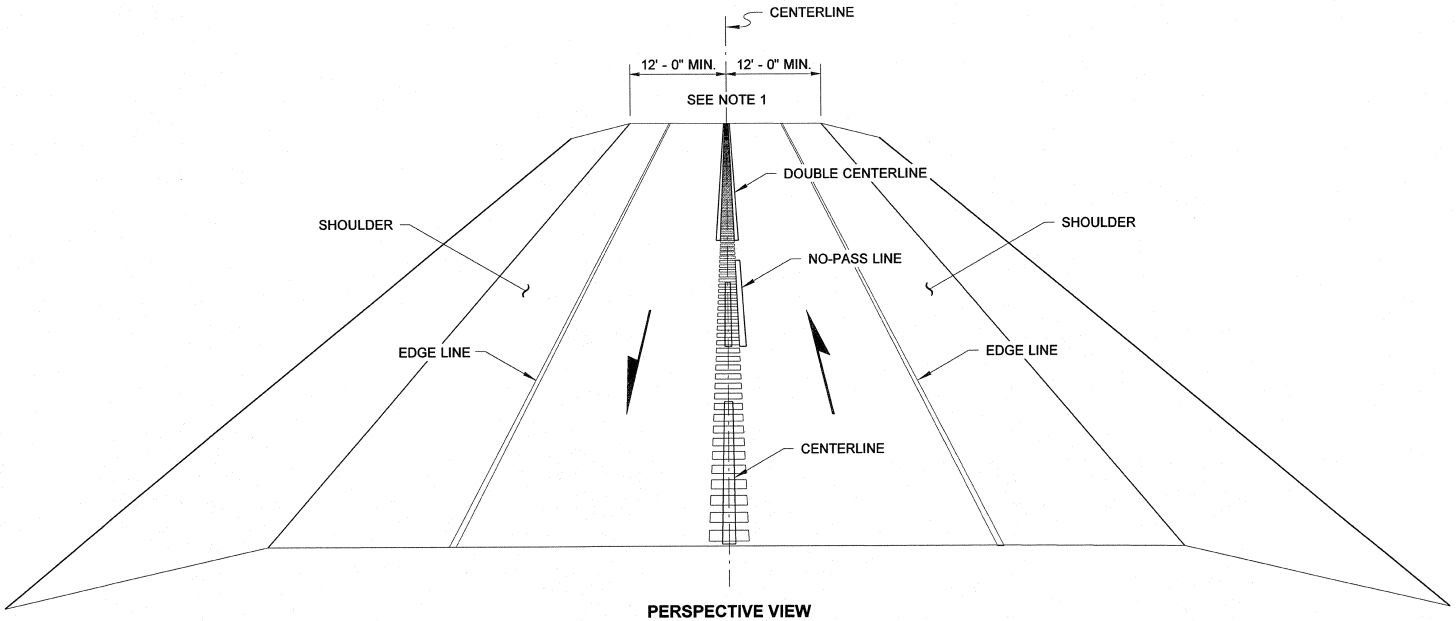

PERSPECTIVE VIEW

UNDIVIDED HIGHWAY

BAKOTICH, PASCO III
STATE OF WASHINGTON
24557
REGISTERED
PROFESSIONAL ENGINEER
5/11/11

CENTERLINE RUMBLE STRIP

STANDARD PLAN M-65.10-02

SHEET 1 OF 2 SHEETS

APPROVED FOR PUBLICATION

STATE DESIGN ENGINEER — DATE 5/11/11

Washington State Department of Transportation

DRAWN BY: FERN LIDDELL

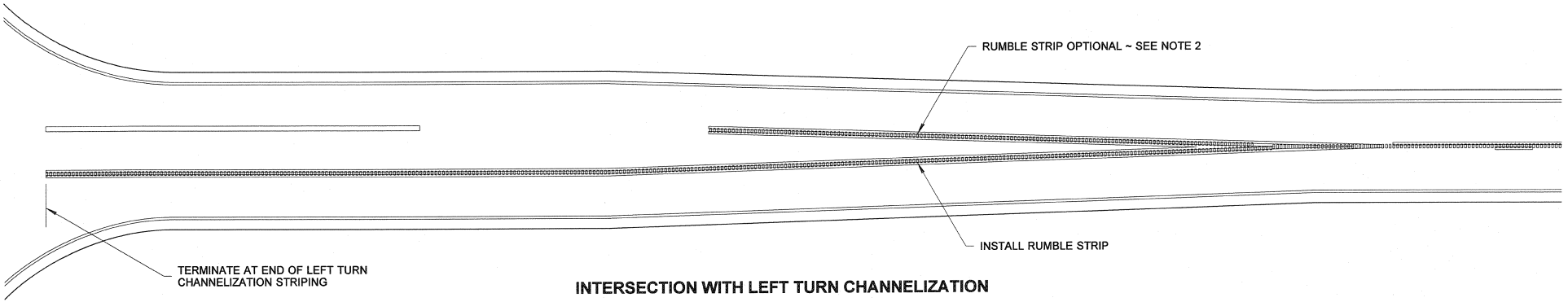

INTERSECTION WITH LEFT TURN CHANNELIZATION

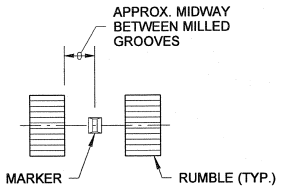

RAISED PAVEMENT MARKER
WHEN SPECIFIED IN CONTRACT

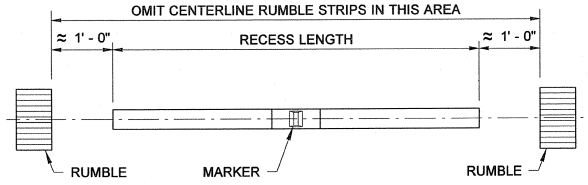

REFER TO **STANDARD PLAN M-20.30** FOR RECESSED PAVEMENT MARKER DETAIL

RECESSED PAVEMENT MARKER
WHEN SPECIFIED IN CONTRACT

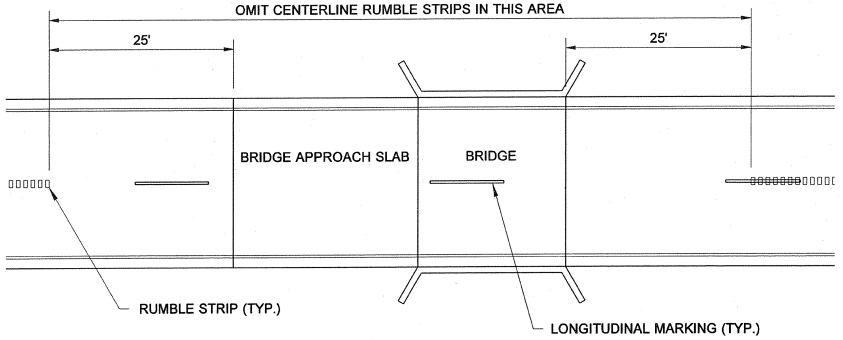

BRIDGE

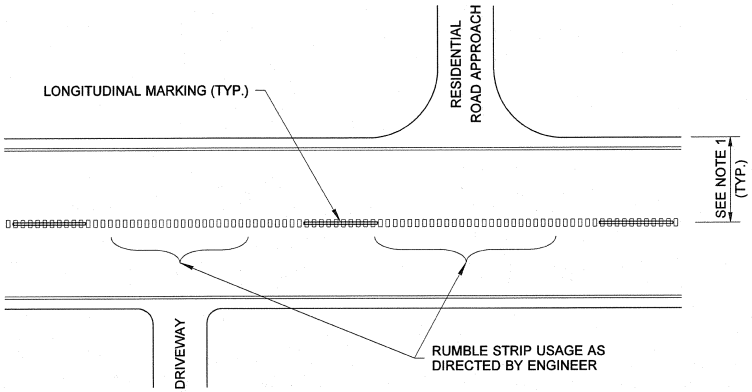

NON-COMMERCIAL ROAD APPROACHES AND DRIVEWAYS

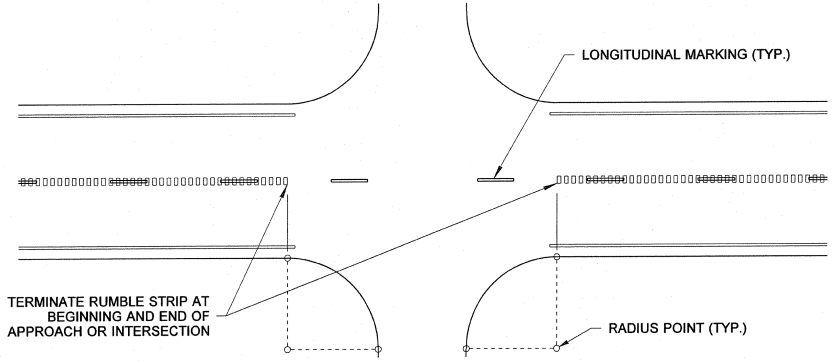

UNCHANNELIZED INTERSECTIONS AND COMMERCIAL ROAD APPROACHES

CENTERLINE RUMBLE STRIP

STANDARD PLAN M-65.10-02

SHEET 2 OF 2 SHEETS

APPROVED FOR PUBLICATION

STATE DESIGN ENGINEER — DATE 5/11/11

Washington State Department of Transportation

DRAWN BY: LISA CYFORD

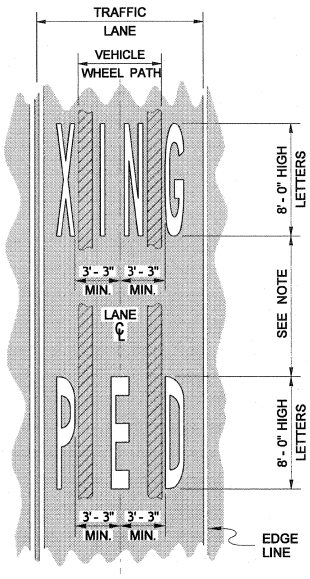

HIGH-SPEED APPLICATION

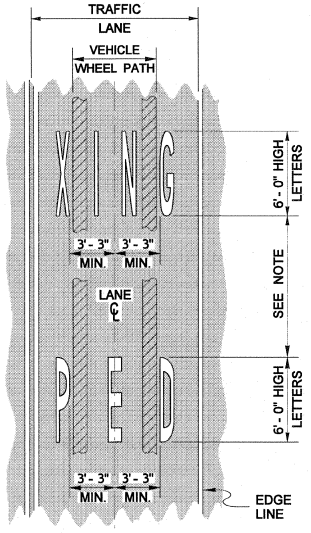

LOW-SPEED APPLICATION

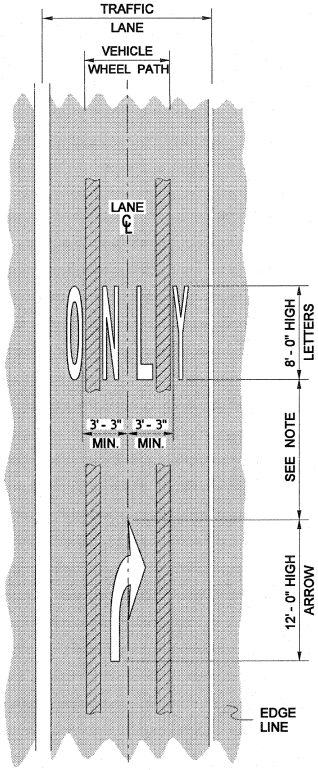

HIGH-SPEED APPLICATION

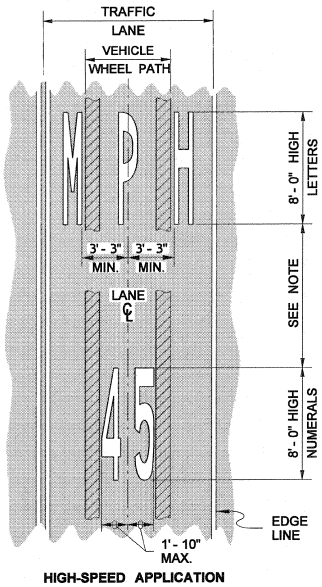

HIGH-SPEED APPLICATION

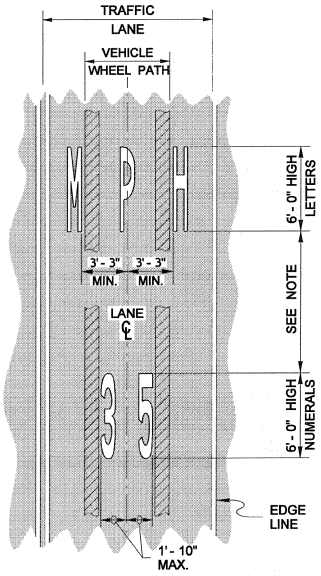

LOW-SPEED APPLICATION

NOTE

1. Typically, four times the letter or numeral height ~ minimum, up to ten times ~ maximum, or according to Plans.

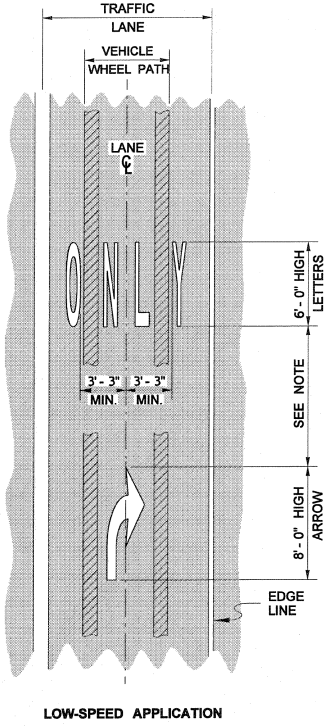

LOW-SPEED APPLICATION

TRAFFIC LETTER AND NUMERAL APPLICATIONS

STANDARD PLAN M-80.10-01

SHEET 1 OF 2 SHEETS

APPROVED FOR PUBLICATION

STATE DESIGN ENGINEER — DATE 6/3/11

Washington State Department of Transportation

DRAWN BY: LISA CYFORD

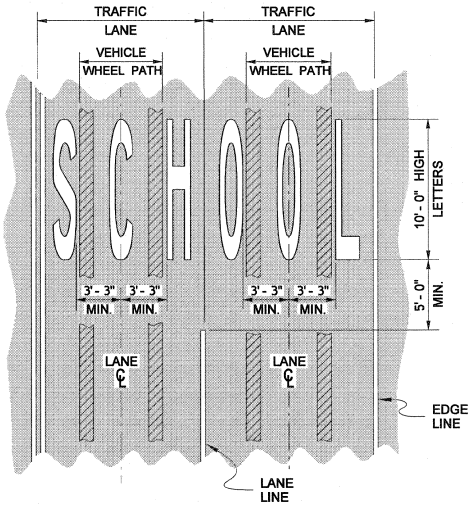

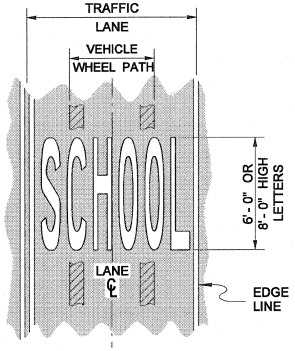

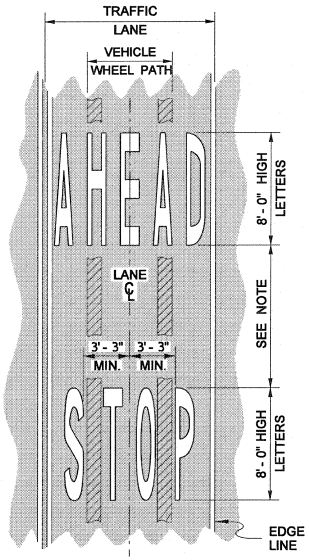

HIGH-SPEED APPLICATION

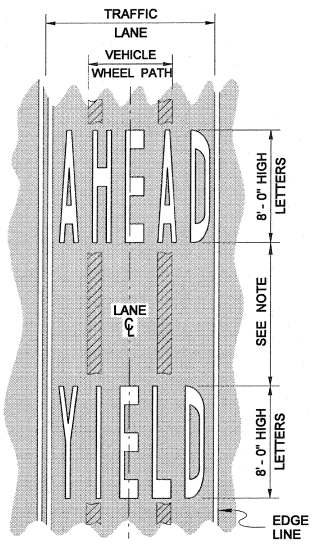

HIGH-SPEED APPLICATION

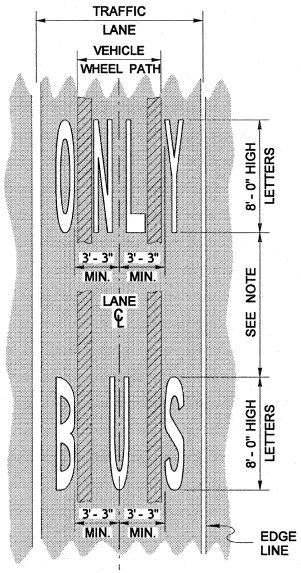

HIGH-SPEED APPLICATION

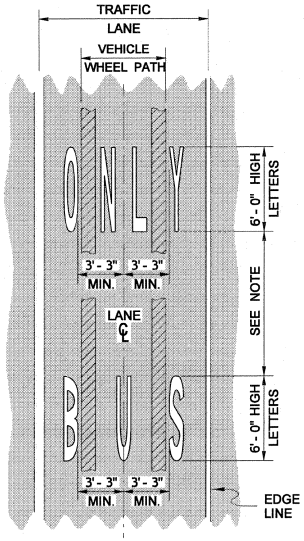

LOW-SPEED APPLICATION

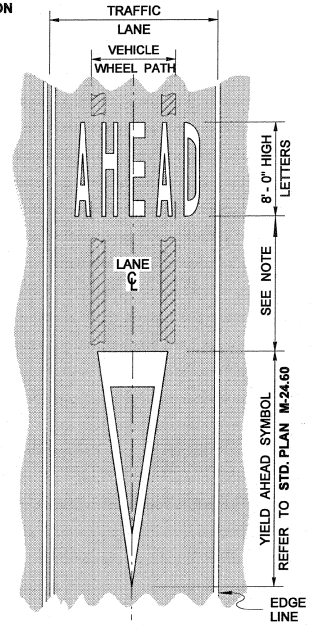

HIGH-SPEED APPLICATION

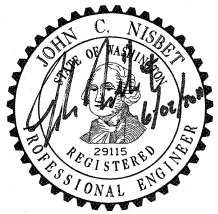

TRAFFIC LETTER AND NUMERAL APPLICATIONS

STANDARD PLAN M-80.10-01

SHEET 2 OF 2 SHEETS

APPROVED FOR PUBLICATION

STATE DESIGN ENGINEER — DATE 6/3/11

Washington State Department of Transportation

DRAWN BY: FERN LIDDELL

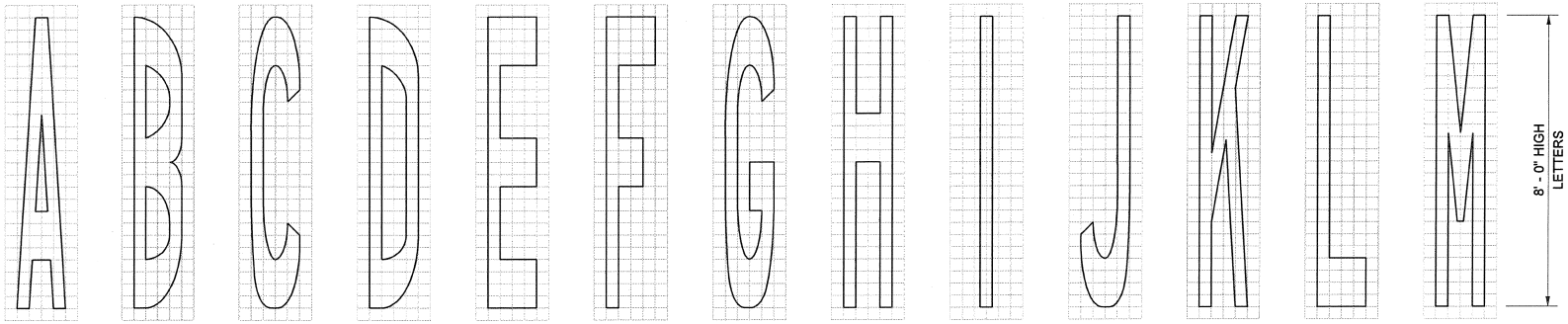

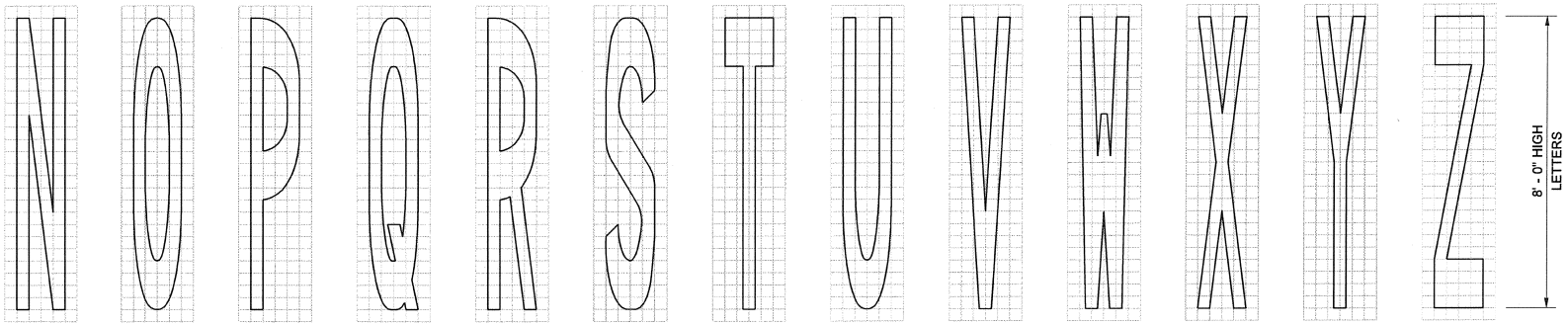

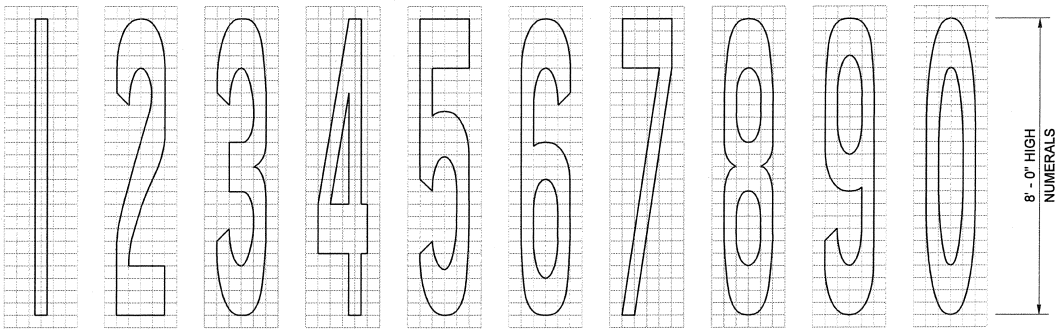

EIGHT FOOT HIGH LETTERS AND NUMERALS ARE SHOWN ON A FOUR-INCH SQUARE GRID

FOR USE ON ROADWAYS WITH A POSTED SPEED OF 45 MPH OR MORE

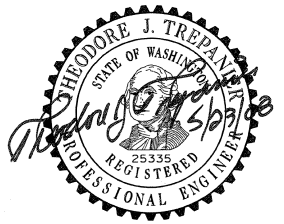

EXPIRES AUGUST 9, 2009

TRAFFIC LETTERS AND NUMERALS (HIGH SPEED ROADWAYS) STANDARD PLAN M-80.20-00

SHEET 1 OF 1 SHEET

APPROVED FOR PUBLICATION

STATE DESIGN ENGINEER — DATE 6/16/08

Washington State Department of Transportation