Washington State Department of Transportation

Publications Transmittal

Transmittal Number	Date
PT 09-013	April 6, 2009
Publication Distribution: To: ***Standard Plans** Manual* holders	
Publication Title: ***Standard Plans for Road, Bridge and Municipal Construction*** Revision	Publication Number: M 21-01
Originating Organization: Design Office - Design Standards, through Engineering Publications	

Remarks:

Additional copies may be purchased from:
Washington State Department of Transportation
Engineering Publications
Olympia, WA 98504-7304
PO BOX 47304

Phone: (360) 705-7430
Fax: (360) 705-6861
E-mail:engrpubs@wsdot.wa.gov

Please e-mail us if you no longer desire to receive updates, have a quantity change, or your address has changed.

Instructions:

1) **Remove Pages 3 through 13 from your current Manual.**
2) **Insert Pages 3 through 12.**
3) **Refer to the *REMOVE & INSERT INSTRUCTIONS* ~ Standard Plans Revision 4-6-2009.**

Distributed By	Phone Number	Signature
Administrative and Engineering Publications	(360) 705-7430 FAX: 705-6861	

REMOVE & INSERT INSTRUCTIONS ~ Standard Plans Revision 4-6-2009

REMOVE				*INSERT*			
A-40.50-00	11/8/07	Sheet 2 of 2		A-40.50-00	11/8/07	Sheet 2 of 2	Reprinted
A-60.10-00	10/5/07	Sheet 1 of 2		A-50.10-00	11/17/08	Sheet 1 of 2	New Plan
				A-50.10-00	11/17/08	Sheet 2 of 2	New Plan
				A-50.20-00	11/17/08	Sheet 1 of 2	New Plan
				A-50.20-00	11/17/08	Sheet 2 of 2	New Plan
				A-50.30-00	11/17/08	Sheet 1 of 2	New Plan
				A-50.30-00	11/17/08	Sheet 2 of 2	New Plan
				A-50.40-00	11/17/08		New Plan
				Blank			
				A-60.10-00	10/5/07	Sheet 1 of 2	Reprinted
B-90.50-00	6/8/06			B-90.50-00	6/8/06		Reprinted
B-95.20-00	6/8/06			B-95.20-01	2/3/09		Revised
Blank				Blank			
C-1	2/6/07	Sheet 1 of 2		C-1	2/10/09	Sheet 1 of 2	Revised
C-1	2/6/07	Sheet 2 of 2		C-1	2/10/09	Sheet 2 of 2	Revised
C-1a	7/3/98			C-1a	2/10/09		Revised
C-2p	10/31/03			C-2p	10/31/03		Reprinted
Blank				C-3	10/4/05		Reprinted
C-2r	3/3/05		Deleted				
C-2s	3/3/05		Deleted				
C-2t	3/3/05		Deleted				
C-3	10/4/05						
C-4	2/21/07						
C-4a	2/21/07		Deleted				
C-4b	6/8/06			C-4	2/21/07		Reprinted
Blank				C-4b	6/8/06		Reprinted
C-7a	10/31/03			C-7a	10/31/03		Reprinted
C-8	4/27/04	Sheet 1 of 2		C-8	2/10/09	Sheet 1 of 2	Revised
C-8	4/27/04	Sheet 2 of 2		C-8	2/10/09	Sheet 2 of 2	Revised
C-8a	7/25/97			C-8a	7/25/97		Reprinted
C-8b	1/11/06	Sheet 1 of 2		C-8b	2/10/09	Sheet 1 of 2	Revised
C-8b	1/11/06	Sheet 2 of 2		C-8b	2/10/09	Sheet 2 of 2	Revised
C-14h	1/11/06			C-14h	2/10/09		Revised
C-14i	12/2/03	Sheet 1 of 2		C-14i	2/10/09	Sheet 1 of 2	Revised
C-14i	12/2/03	Sheet 2 of 2		C-14i	2/10/09	Sheet 2 of 2	Revised
C-14j	12/2/03			C-14j	12/2/03		Reprinted
C-14k	1/11/06	Sheet 1 of 2		C-14k	2/10/09	Sheet 1 of 2	Revised
C-14k	1/11/06	Sheet 2 of 2		C-14k	2/10/09	Sheet 2 of 2	Revised
				C-20.42-00	2/3/09		New Plan
				C-22.14-00	2/3/09		New Plan
				C-22.16-00	2/3/09		New Plan
				Blank			
C-25.18-01	9/20/07			C-25.18-01	9/20/07		Reprinted
C-25.20-02	7/3/08			C-25.20-03	2/3/09		Revised
C-25.22-01	10/5/07			C-25.22-02	2/3/09		Revised
C-25.80-01	7/3/08			C-25.26-00	2/3/09		New Plan
C-28.40-00	2/6/07			C-25.80-01	7/3/08		Reprinted
C-90.10-00	7/3/08			C-28.40-00	2/6/07		Reprinted
				C-40.14-00	2/3/09		New Plan
				C-40.16-00	2/3/09		New Plan
				C-40.18-00	2/3/09		New Plan
				C-90.10-00	7/3/08		Reprinted

REMOVE				*INSERT*			
D-2.04-00	11/10/05	Sheet 2 of 2		D-2.04-00	11/10/05	Sheet 2 of 2	Reprinted
D-2.06-00	11/10/05	Sheet 1 of 2		D-2.06-01	1/6/09	Sheet 1 of 2	Revised
D-2.06-00	11/10/05	Sheet 2 of 2		D-2.06-01	11/10/05	Sheet 2 of 2	Revised
D-2.08-00	11/10/05	Sheet 1 of 2		D-2.08-00	11/10/05	Sheet 1 of 2	Reprinted
D-2.32-00	11/10/05	Sheet 2 of 2		D-2.32-00	11/10/05	Sheet 2 of 2	Reprinted
D-2.34-00	11/10/05	Sheet 1 of 2		D-2.34-01	1/6/09	Sheet 1 of 2	Revised
D-2.34-00	11/10/05	Sheet 2 of 2		D-2.34-01	1/6/09	Sheet 2 of 2	Revised
D-2.36-01	11/8/07	Sheet 1 of 3		D-2.36-02	1/6/09	Sheet 1 of 3	Revised
D-2.36-01	11/8/07	Sheet 2 of 3		D-2.36-02	1/6/09	Sheet 2 of 3	Revised
D-2.36-01	11/8/07	Sheet 3 of 3		D-2.36-02	1/6/09	Sheet 3 of 3	Revised
D-2.62-00	11/10/05	Sheet 2 of 2		D-2.62-00	11/10/05	Sheet 2 of 2	Reprinted
D-2.64-00	11/10/05	Sheet 1 of 2		D-2.64-01	1/6/09	Sheet 1 of 2	Revised
D-2.64-00	11/10/05	Sheet 2 of 2		D-2.64-01	1/6/09	Sheet 2 of 2	Revised
D-2.66-00	11/10/05	Sheet 1 of 2		D-2.66-00	11/10/05	Sheet 1 of 2	Reprinted
D-3a	6/30/04			D-3a	12/2/08		Revised
D-3b	6/30/04			D-3b	6/30/04		Reprinted
D-6	6/19/98			D-6	6/19/98		Reprinted
D-10.10-00	7/8/08	Sheet 1 of 2		D-10.10-01	12/2/08	Sheet 1 of 2	Revised
D-10.10-00	7/8/08	Sheet 2 of 2		D-10.10-01	12/2/08	Sheet 2 of 2	Revised
D-10.15-00	7/8/08	Sheet 1 of 2		D-10.15-01	12/2/08	Sheet 1 of 2	Revised
D-10.15-00	7/8/08	Sheet 2 of 2		D-10.15-01	12/2/08	Sheet 2 of 2	Revised
D-10.20-00	7/8/08	Sheet 1 of 2		D-10.20-00	7/8/08	Sheet 1 of 2	Reprinted
D-10.35-00	7/8/08	Sheet 2 of 2		D-10.35-00	7/8/08	Sheet 2 of 2	Reprinted
D-10.40-00	7/8/08	Sheet 1 of 2		D-10.40-01	12/2/08	Sheet 1 of 2	Revised
D-10.40-00	7/8/08	Sheet 2 of 2		D-10.40-01	12/2/08	Sheet 2 of 2	Revised
D-10.45-00	7/8/08	Sheet 1 of 2		D-10.45-01	12/2/08	Sheet 1 of 2	Revised
D-10.45-00	7/8/08	Sheet 2 of 2		D-10.45-01	12/2/08	Sheet 2 of 2	Revised
D-15.10-00	7/8/08	Sheet 1 of 2		D-15.10-01	12/2/08	Sheet 1 of 2	Revised
D-15.10-00	7/8/08	Sheet 2 of 2		D-15.10-01	12/2/08	Sheet 2 of 2	Revised
D-15.20-00	7/8/08	Sheet 1 of 2		D-15.20-01	1/6/09	Sheet 1 of 2	Revised
D-15.20-00	7/8/08	Sheet 2 of 2		D-15.20-01	1/6/09	Sheet 2 of 2	Revised
D-15.30-00	7/8/08	Sheet 1 of 2		D-15.30-01	12/2/08	Sheet 1 of 2	Revised
D-15.30-00	7/8/08	Sheet 2 of 2		D-15.30-01	12/2/08	Sheet 2 of 2	Revised
Blank				Blank			
G-9a	6/25/02	Sheet 1 of 4	Deleted				
G-9a	6/25/02	Sheet 2 of 4	Deleted				
G-9a	6/25/02	Sheet 3 of 4	Deleted				
G-9a	6/25/02	Sheet 4 of 4	Deleted				
G-24.30-00	11/8/07	Sheet 2 of 2		G-24.30-00	11/8/07	Sheet 2 of 2	Reprinted
G-24.40-00	11/8/07	Sheet 1 of 2		G-24.40-01	12/2/08	Sheet 1 of 2	Revised
G-24.40-00	11/8/07	Sheet 2 of 2		G-24.40-01	12/2/08	Sheet 2 of 2	Revised
G-24.50-00	11/8/07			G-24.50.00	11/8/07		Reprinted
G-25.10-00	11/8/07			G-25.10-01	1/6/09		Revised
G-30.10-00	11/8/07	Sheet 1 of 2		G-30.10-00	11/8/07	Sheet 1 of 2	Reprinted
				G-90.10-00	1/6/09		New Plan
				G-90.20-00	1/6/09		New Plan
				G-90.30-00	1/6/09		New Plan
				G-90.40-00	1/6/09		New Plan
H-70.20-00	9/5/07	Sheet 2 of 2		H-70.20-00	9/5/07	Sheet 2 of 2	Reprinted
H-70.30-00	9/5/07	Sheet 1 of 2		H-70.30-01	11/17/08	Sheet 1 of 2	Revised
H-70.30-00	9/5/07	Sheet 2 of 2		H-70.30-01	11/17/08	Sheet 2 of 2	Revised
Blank				Blank			

REMOVE & INSERT INSTRUCTIONS ~ Standard Plans Revision 4-6-2009

REMOVE				*INSERT*			
J-6c	4/24/98						
J-6f	4/24/98		Deleted				
J-6g	12/12/02		Deleted				
J-6h	4/24/98		Deleted				
Blank				J-6c	4/24/98		Reprinted
J-7a	9/12/01	Sheet 1 of 2		J-7a	9/12/01	Sheet 1 of 2	Reprinted
J-11a	10/12/07		Deleted				
J-11b	9/2/05	Sheet 1 of 2					
J-11b	9/2/05	Sheet 2 of 2		Blank			
J-11c	6/21/06	Sheet 1 of 2	Deleted	J-11b	9/2/05	Sheet 1 of 2	Reprinted
J-11c	6/21/06	Sheet 2 of 2	Deleted	J-11b	9/2/05	Sheet 2 of 2	Reprinted
J-12	11/8/05	Sheet 1 of 2		J-12	2/10/09	Sheet 1 of 2	Revised
J-12	11/8/05	Sheet 2 of 2		J-12	2/10/09	Sheet 2 of 2	Revised
J-15a	10/4/05	Sheet 1 of 2	Deleted	J-16a	3/4/05		Reprinted
J-15a	10/4/05	Sheet 2 of 2	Deleted				
J-15b	10/4/05	Sheet 1 of 2	Deleted				
J-15b	10/4/05	Sheet 2 of 2	Deleted				
J-16a	3/4/05						
J-16b	9/20/07			J-16b	2/10/09		Revised
J-16c	9/20/07			J-16c	2/10/09		Revised
Blank				Blank			
J-18	9/2/05	Sheet 1 of 2		J-18	2/10/09	Sheet 1 of 2	Revised
J-18	9/2/05	Sheet 2 of 2		J-18	2/10/09	Sheet 2 of 2	Revised
J-19	9/2/05			J-19	2/10/09		Revised
J-28.26-00	8/7/07			J-28.26-01	12/2/08		Revised
J-28.30-00	8/7/07	Sheet 1 of 2		J-28.30-00	8/7/07	Sheet 1 of 2	Reprinted
J-28.70-00	11/8/07			J-28.70-00	11/8/07		Reprinted
Blank				J-40.10-00	1/6/09	Sheet 1 of 2	New Plan
				J-40.10-00	1/6/09	Sheet 2 of 2	New Plan
				J-40.30-00	1/6/09	Sheet 1 of 2	New Plan
				J-40.30-00	1/6/09	Sheet 2 of 2	New Plan
				J-75.10-00	2/10/09		New Plan
				J-75.20-00	2/10/09		New Plan
				J-75.30-00	2/10/09		New Plan
				Blank			
				J-90.10-00	2/10/09	Sheet 1 of 2	New Plan
				J-90.10-00	2/10/09	Sheet 2 of 2	New Plan
				J-90.20-00	2/10/09	Sheet 1 of 2	New Plan
				J-90.20-00	2/10/09	Sheet 2 of 2	New Plan
				Blank			
M-2.60-01	1/30/07			M-2.60-01	1/30/07		Reprinted
M-3.10-01	1/30/07			M-3.10-02	2/10/09		Revised
M-3.20-01	1/30/07			M-3.20-01	1/30/07		Reprinted
M-3.30-01	1/30/07			M-3.30-02	2/10/09		Revised
M-3.40-01	1/30/07			M-3.40-02	2/10/09		Revised
M-3.50-01	1/30/07			M-3.50-01	1/30/07		Reprinted
M-9.50-01	1/30/07			M-9.50-01	1/30/07		Reprinted
M-11.10-01	1/30/07			M-9.60-00	2/10/09		New Plan
				M-11.10-01	1/30/07		Reprinted
				Blank			
M-60.10-00	9/5/07	Sheet 4 of 4		M-60.10-00	9/5/07	Sheet 4 of 4	Reprinted
M-60.20-00	9/5/07	Sheet 1 of 2		M-60.20-01	2/3/09	Sheet 1 of 2	Revised
M-60.20-00	9/5/07	Sheet 2 of 2		M-60.20-01	2/3/09	Sheet 2 of 2	Revised
M-65.10-01	5/21/08	Sheet 1 of 2		M-65.10-01	5/21/08	Sheet 1 of 2	Reprinted

Washington State
Department of Transportation

TECHNICAL MANUAL

Standard Plans

M 21-01

April 6, 2009

Environmental and Engineering Programs
Design Office

Americans with Disabilities Act (ADA) Information

Materials can be provided in alternative formats: large print, Braille, cassette tape, or on computer disk for people with disabilities by calling the Office of Equal Opportunity (OEO) at 360-705-7097. Persons who are deaf or hard of hearing may contact OEO through the Washington Relay Service at 7-1-1.

Additional copies may be purchased from:

Washington State Department of Transportation
Administrative and Engineering Publications
PO Box 47304
Olympia, WA 98504-7304

Phone: 360-705-7430
Fax: 360-705-6861
E-mail: engrpubs@wsdot.wa.gov
Internet: www.wsdot.wa.gov/publications/manuals/

Get the latest information on updates to WSDOT engineering manuals — subscribe to our update subscription service at Subscriber Preferences Page (https://service.govdelivery.com/service/user.html?code=WADOT). You will need to use your e-mail address to log in. If you have questions or problems with the subscription service, please contact support@govdelivery.com.

This service is provided by the Washington State Department of Transportation, contact us at WebFeedback@wsdot.wa.gov

Contents

Plan No.	Plan Title	Publication Approval Date	
Section A	**Roadway Construction**		
A-10.10-00	Survey Stakes	8/7/07	*2 Sheets*
A-10.20-00	Survey Monument Types 1 and 2	10/5/07	
A-10.30-00	Monument and Cover	10/5/07	
A-20.10-00	Slope Treatment	8/31/07	
A-30.10-00	Concrete Slope Protection	11/8/07	
A-30.15-00	Semi-open Concrete Masonry Slope Protection	11/8/07	
A-30.30-00	Wire Mesh Slope Protection	11/8/07	
A-30.35-00	Slope Protection Anchors	10/12/07	
A-40.10-00	Cement Concrete Pavement Joints	10/5/07	
A-40.20-00	Bridge Transverse Joint Seals for HMA	9/20/07	
A-40.50-00	Bridge Approach Slab	11/8/07	*2 Sheets*
A-50.10-00	Embankment Widening at Bridge End with Wing Wall	11/17/08	*2 Sheets*
A-50.20-00	Embankment Widening at Bridge End with Curtain Wall	11/17/08	*2 Sheets*
A-50.30-00	Embankment Widening at Bridge End with "L" Shaped Abutment	11/17/08	*2 Sheets*
A-50.40-00	Embankment Widening at Bridge End with Sidewalk	11/17/08	
A-60.10-00	Cement Concrete Pavement Repair	10/5/07	*2 Sheets*
A-60.20-00	Dowel Bar Retrofit for Cement Concrete Pavement	10/5/07	*3 Sheets*
A-60.30-00	Bridge Deck Transition for HMA Overlay	11/8/07	
A-60.40-00	HMA Overlay: Further Deck Preparation	8/31/07	
Section B	**Drainage Structures and Hydraulics**		
B-5.20-00	Catch Basin Type 1	6/1/06	
B-5.40-00	Catch Basin Type 1L	6/1/06	
B-5.60-00	Catch Basin Type 1P (for Parking Lot)	6/1/06	
B-10.20-00	Catch Basin Type 2	6/1/06	
B-10.40-00	Catch Basin Type 2 with Flow Restrictor	6/1/06	
B-10.60-00	Catch Basin Type 2 with Baffle Type Flow Restrictor	6/8/06	
B-15.20-00	Manhole Type 1	6/1/06	
B-15.40-00	Manhole Type 2	6/1/06	
B-15.60-00	Manhole Type 3	6/1/06	
B-20.20-01	Drywell Type 1 (for Swale)	11/21/06	
B-20.40-02	Drywell Type 2 (with Pipe Inlet)	6/10/08	
B-20.60-02	Drywell Type 3 (with At-Grade Inlet)	6/10/08	
B-25.20-00	Combination Inlet	6/8/06	
B-25.60-00	Concrete Inlet	6/1/06	
B-30.10-00	Rectangular Frame (Reversible)	6/8/06	
B-30.20-01	Rectangular Solid Metal Cover	11/21/06	
B-30.30-00	Rectangular Vaned Grate	6/1/06	
B-30.40-00	Rectangular Bi-Directional Vaned Grate	6/1/06	
B-30.50-00	Rectangular Herringbone Grate	6/1/06	
B-30.70-01	Circular Frame (Ring) and Cover	8/31/07	
B-30.80-00	Circular Grate	6/8/06	
B-30.90-01	Miscellaneous Details for Drainage Structures	9/20/07	
B-35.20-00	Grate Inlet Type 1 (Cast-In-Place)	6/8/06	
B-35.40-00	Grate Inlet Type 2	6/8/06	*2 Sheets*
B-40.20-00	Welded Grates for Grate Inlet	6/1/06	
B-40.40-00	Frame and Dual Vaned Grates for Grate Inlet	6/1/06	

Contents

Plan No.	Plan Title	Publication Approval Date	
B-45.20-00	Drop Inlet Type 1	6/1/06	
B-45.40-00	Drop Inlet Type 2	6/1/06	
B-50.20-00	Grates for Drop Inlet	6/1/06	
B-55.20-00	Pipe Zone Bedding and Backfill	6/1/06	
B-60.20-00	Connection Details for Dissimilar Culvert Pipe	6/8/06	
B-60.40-00	Coupling Bands for Corrugated Metal Pipe	6/1/06	
B-65.20-00	Animal/Pedestrian Underpass	6/1/06	
B-65.40-00	Equipment Underpass	6/1/06	
B-70.20-00	Beveled End Sections (for Culverts 30” Diameter or Less)	6/1/06	
B-70.60-00	Flared End Sections	6/1/06	
B-75.20-01	Headwalls for Culvert Pipe and Underpass	6/10/08	
B-75.50-01	Type 1 Safety Bars for Stepped Culvert Pipe or Pipe Arch	6/10/08	
B-75.60-00	Type 2 Safety Bars for Culvert Pipe or Pipe Arch (On Cross Road)	6/8/06	
B-80.20-00	Tapered End Section with Type 3 Safety Bars	6/8/06	
B-80.40-00	Tapered End Section with Type 4 Safety Bars (On Cross Road)	6/1/06	
B-82.20-00	Residential Storm Drain, Under Sidewalk	6/1/06	
B-85.10-01	Vertical Connection (for Sanitary Sewer Use)	6/10/08	
B-85.20-00	Side Sewer Connection (for Sanitary Sewer Use)	6/1/06	
B-85.30-00	Standing Side Sewer Connection (for Sanitary Sewer Use)	6/1/06	
B-85.40-00	8 Inch Sewer Clean-Out (for Sanitary Sewer Use)	6/8/06	
B-85.50-01	Drop Connections (for Sanitary Sewer Use)	6/10/08	
B-90.10-00	Hydrant Setting Types A and B	6/8/06	
B-90.20-00	2 Inch Blowoff Assembly	6/8/06	
B-90.30-00	Combination Air Release / Air Vacuum Valve Assembly	6/8/06	
B-90.40-00	Concrete Thrust Block	6/8/06	
B-90.50-00	Concrete Thrust Block for Convex Vertical Bends	6/8/06	
B-95.20-01	Median Barrier Drainage Installation	2/3/09	
B-95.40-00	Inlet Placement at Bridge End	6/8/06	

Section C Traffic Barrier

C-1	Beam Guardrail Types 1 ~ 4 (W-Beam)	2/10/09	*2 Sheets*
C-1a	Beam Guardrail (Thrie Beam)	2/10/09	
C-1b	Beam Guardrail Posts and Blocks	10/31/03	*2 Sheets*
C-1c	Beam Guardrail	5/30/97	
C-1d	Thrie Beam Guardrail Reducer Section	10/31/03	
C-2	Guardrail Placement (Cases 1, 2 & 3)	1/6/00	
C-2a	Guardrail Placement (Cases 4, 5 & 6)	6/21/06	
C-2b	Guardrail Placement (Cases 7 & 8)	6/21/06	
C-2c	Guardrail Placement, Median Bull Nose (Cases 9A, 9B & 9C)	6/21/06	
C-2d	Guardrail Placement (Cases 10A, 10B & 10C)	6/21/06	
C-2e	Guardrail Placement (Cases 11A, 11B & 11C)	6/21/06	
C-2f	Guardrail Placement, Weak Post Intersection Design (8' - 6" Max. Radius) (Cases 12AC, 12AD, 12BC & 12BD)	3/14/97	

Plan No.	Plan Title	Publication Approval Date	
C-2g	Guardrail Placement, Weak Post Intersection Design (35' Max. Radius) (Cases 13AC, 13AD, 13BC & 13BD)	7/27/01	
C-2h	Guardrail Placement (Case 14)	3/28/97	
C-2i	Guardrail Placement (Case 15)	3/28/97	
C-2j	Guardrail Placement (Cases 16, 17 & 18)	6/12/98	
C-2k	Guardrail Placement 12' - 6" Span (Cases 19A & 19B)	7/27/01	
C-2n	Guardrail Placement 18' - 9" Span (Case 20)	7/27/01	
C-2o	Guardrail Placement 25' Span (Case 21)	7/13/01	
C-2p	Guardrail Placement, Strong Post Intersection Design (Cases 22AC, 22AD, 22BC & 22BD)	10/31/03	
C-3	Beam Guardrail Transition Sections (Types 1, 1A, & 1B)	10/4/05	
C-3a	Beam Guardrail Transition Sections (Types 2, 4, 5, & 6)	10/4/05	
C-3b	Beam Guardrail Transition Sections (Types 10 ~ 15)	10/4/05	*2 Sheets*
C-3c	Beam Guardrail Transition Sections (Types 16, 17, & 18)	6/21/06	
C-4	Beam Guardrail Buried Terminal Type 1	2/21/07	
C-4b	Beam Guardrail Flared Terminal	6/8/06	
C-4e	Beam Guardrail Non-Flared Terminal	2/20/03	
C-4f	Beam Guardrail Bull Nose Terminal	6/30/04	*4 Sheets*
C-5	Guardrail Connection to Bridge Rail or Concrete Barrier	10/31/03	
C-6	Beam Guardrail Anchor Type 1	5/30/97	*2 Sheets*
C-6a	Beam Guardrail Anchor Type 2	3/14/97	
C-6c	Beam Guardrail Anchor Type 4	1/6/00	
C-6d	Beam Guardrail Anchor Type 5	5/30/97	
C-6f	Beam Guardrail Anchor Type 7	7/25/97	
C-7	Beam Guardrail End Sections	10/31/03	
C-7a	Thrie Beam End Sections	10/31/03	
C-8	Concrete Barrier Type 2	2/10/09	*2 Sheets*
C-8a	Concrete Barrier Type 4 and Transition Section	7/25/97	
C-8b	Concrete Barrier Light Standard Section	2/10/09	2 Sheets
C-8e	Precast Concrete Barrier Anchor ~ Type 3 (Permanent)	2/21/07	
C-8f	Concrete Barrier Transition, Type 2 to Bridge F-Shape	6/30/04	
C-10	Box Culvert Guardrail Steel Post	7/31/98	*2 Sheets*
C-13	Single Slope Concrete Barrier (Pre-Cast)	7/3/08	*3 Sheets*
C-13a	Single Slope Concrete Barrier (Pre-Cast)Transition Section	7/3/08	
C-13b	Single Slope Concrete Barrier (Pre-Cast) Vertical Back	7/3/08	
C-13c	Single Slope Concrete Barrier (Pre-Cast) Terminal	7/3/08	
C-14a	Single Slope Concrete Barrier (Cast-in-Place) Dual Faced	7/3/08	*3 Sheets*
C-14b	Concrete Barrier Transition, Type 2 to Single Slope	7/26/02	
C-14c	Single Slope Concrete Barrier (Cast-in-Place) Terminal	7/3/08	
C-14d	Single Slope Concrete Barrier (Cast-in-Place) Trans. Section	7/3/08	
C-14e	Single Slope Concrete Barrier (Cast-in-Place) Vertical Back	7/3/08	
C-14h	Single Slope Concrete Barrier Light Standard Foundation	2/10/09	

Contents

Plan No.	Plan Title	Publication Approval Date	
C-14i	Single Slope Concrete Barrier Sign Bridge Foundation	2/10/09	*2 Sheets*
C-14j	Single Slope Concrete Barrier Transition for Monotube Sign Support	12/2/03	
C-14k	Single Slope Concrete Barrier Cantilever Sign Structure Fdn.	2/10/09	*2 Sheets*
C-15a	Single Slope Concrete Barrier Placement (Split)	7/3/08	
C-15b	Single Slope Concrete Barrier Placement (Wrap)	7/3/08	
C-16a	Traffic Barrier Shoulder Widening ~ for Shoulders 8.0' and Wider	11/8/05	
C-16b	Traffic Barrier Shoulder Widening ~ for Shoulders Less Than 8.0' Wide	11/8/05	
C-20.14-00	Beam Guardrail Type 31: Placement (Cases 1A, 2A, & 5A)	2/6/07	
C-20.40-00	Beam Guardrail Type 31: Placement ~ 12'-6", 18'-9", or 25'-0" Span	2/6/07	
C-20.42-00	Guardrail Placement Strong Post ~ Type 31 Intersection Design	2/3/09	
C-22.14-00	Beam Guardrail Type 1 Buried Terminal Type 2	2/3/09	
C-22.16-00	Beam Guardrail Type 31 Buried Terminal Type 2	2/3/09	
C-22.40-01	Beam Guardrail Type 31: Non-Flared Terminal	10/5/07	
C-23.60-00	Beam Guardrail (Type 31) Anchor Type 10	2/6/07	
C-25.18-01	Beam Guardrail (Type 31) Transition Section Type 20	9/20/07	
C-25.20-03	Beam Guardrail (Type 31) Transition Section Type 21	2/3/09	
C-25.22-02	Beam Guardrail (Type 31) Transition Section Type 22	2/3/09	
C-25.26-00	Beam Guardrail (Type 31) Transition Section Type 23	2/3/09	
C-25.80-01	Beam Guardrail Type 31 to Beam Guardrail Type 1 Adapter	7/3/08	
C-28.40-00	Beam Guardrail Type 31	2/6/07	
C-40.14-00	Barrier Placement Cable to Thrie Beam Bull Nose Connection	2/3/09	
C-40.16-00	Barrier Placement ~ Cable to W-Beam Shielding for Redirectional Landform	2/3/09	
C-40.18-00	Barrier Placement ~ Cable Barrier Shielding for Redirectional Landform	2/3/09	
C-90.10-00	Impact Attenuator Inertial Barrier Configurations	7/3/08	

Section D Retaining, Noise Barrier, and Geosynthetic Walls

D-2.02-00	Noise Barrier Wall Type 1 (CIP Conc. on Trench Footing)	11/10/05	
D-2.04-00	Noise Barrier Wall Type 2 (CIP Conc. on Spread Footing)	11/10/05	*2 Sheets*
D-2.06-01	Noise Barrier Wall Type 3 (… on Offset Spread Footing)	1/6/09	*2 Sheets*
D-2.08-00	Noise Barrier Wall Type 4 (CIP Conc. on Shaft Foundation)	11/10/05	*2 Sheets*
D-2.10-00	Noise Barrier Wall Type 5 (CIP Conc. with Traffic Barrier on Trench Footing)	11/10/05	
D-2.12-00	Noise Barrier Wall Type 5SS (CIP Conc. w/ Single Slope Traffic Barrier on Trench Footing)	11/10/05	

Plan No.	Plan Title	Publication Approval Date	
D-2.14-00	Noise Barrier Wall Type 6 (CIP Conc. with Traffic Barrier on Spread Footing)	11/10/05	
D-2.16-00	Noise Barrier Wall Type 6SS (CIP Conc. w/ Single Slope Traffic Barrier on Spread Footing)	11/10/05	
D-2.18-00	Noise Barrier Wall Type 7 (CIP Conc. with Traffic Barrier on Shaft Foundation)	11/10/05	
D-2.20-00	Noise Barrier Wall Type 7SS (CIP Conc. w/ Single Slope Traffic Barrier on Shaft Fdn.)	11/10/05	
D-2.30-00	Noise Barrier Wall Type 8 (Precast Conc. on Trench Footing)	11/10/05	
D-2.32-00	Noise Barrier Wall Type 9 (Precast Conc. on Spread Footing)	11/10/05	*2 Sheets*
D-2.34-01	Noise Barrier Wall Type 10 (… on Offset Spread Footing)	1/6/09	*2 Sheets*
D-2.36-02	Noise Barrier Wall Type 11 (... on Shaft Foundation)	1/6/09	*3 Sheets*
D-2.38-00	Noise Barrier Wall Type 12 (Precast Conc. with Traffic Barrier on Trench Footing)	11/10/05	
D-2.40-00	Noise Barrier Wall Type 12SS (Precast w/ Single Slope Traffic Barrier on Trench Footing)	11/10/05	
D-2.42-00	Noise Barrier Wall Type 13 (Precast Conc. with Traffic Barrier on Spread Footing)	11/10/05	
D-2.44-00	Noise Barrier Wall Type 13SS (Precast w/ Single Slope Traffic Barrier on Spread Footing)	11/10/05	
D-2.46-00	Noise Barrier Wall Type 14 (Precast Conc. w/ Traffic Barrier on Shaft Foundation)	11/10/05	*2 Sheets*
D-2.48-00	Noise Barrier Wall Type 14SS (Precast Conc. w/ Single Slope Traffic Barrier on Shaft Fdn.)	11/10/05	*2 Sheets*
D-2.60-00	Noise Barrier Wall Type 16 (Masonry on Trench Footing)	11/10/05	*2 Sheets*
D-2-62-00	Noise Barrier Wall Type 17 (Masonry on Spread Footing)	11/10/05	*2 Sheets*
D-2.64-01	Noise Barrier Wall Type 18 (Masonry on Offset Spread Ftg.)	1/6/09	*2 Sheets*
D-2.66-00	Noise Barrier Wall Type 19 (Masonry on Shaft with Grade Beam Foundation)	11/10/05	*2 Sheets*
D-2.68-00	Noise Barrier Wall Type 20 (Masonry on Shaft Foundation)	11/10/05	*2 Sheets*
D-2.78-00	Noise Barrier Wall Type 15 (Timber Panel on Trench Footing)	11/10/05	
D-2.80-00	Noise Barrier Wall Access Door Type 1 (Cast-In-Place)	11/10/05	
D-2.82-00	Noise Barrier Wall Access Door Type 2 (Cast-In-Place)	11/10/05	*2 Sheets*
D-2.84-00	Noise Barrier Wall Access Door Type 3 (Precast)	11/10/05	
D-2.86-00	Noise Barrier Wall Access Door Type 4 (Precast)	11/10/05	*2 Sheets*
D-2.88-00	Noise Barrier Wall Access Door Type 5 (Masonry)	11/10/05	
D-2.92-00	Noise Barrier Wall Access Door & Frame	11/10/05	*2 Sheets*
D-3	Permanent Geosynthetic Wall: Types 1 ~ 6	7/13/05	*3 Sheets*
D-3a	Permanent Geosynthetic Wall: Fascia and Facing	12/2/08	
D-3b	Permanent Geosynthetic Wall: Single Slope Barrier	6/30/04	
D-3c	Permanent Geosynthetic Wall: F-Shape Barrier	6/30/04	
D-4	Backfill and Drainage for Retaining Walls	12/11/98	
D-6	Gabions	6/19/98	

Contents

Plan No.	Plan Title	Publication Approval Date	
D-10.10-01	Reinforced Concrete Retaining Wall Type 1 and 1 SW	12/2/08	*2 Sheets*
D-10.15-01	Reinforced Concrete Retaining Wall Type 2 and 2 SW	12/2/08	*2 Sheets*
D-10.20-00	Reinforced Concrete Retaining Wall Type 3 and 3 SW	7/8/08	*2 Sheets*
D-10.25-00	Reinforced Concrete Retaining Wall Type 4 and 4 SW	7/8/08	*2 Sheets*
D-10.30-00	Reinforced Concrete Retaining Wall Type 5	7/8/08	*2 Sheets*
D-10.35-00	Reinforced Concrete Retaining Wall Type 6	7/8/08	*2 Sheets*
D-10.40-01	Reinforced Concrete Retaining Wall Type 7	12/2/08	*2 Sheets*
D-10.45-01	Reinforced Concrete Retaining Wall Type 8	12/2/08	*2 Sheets*
D-15.10-01	Traffic Barrier Details for Reinforced Concrete Retaining Walls	12/2/08	*2 Sheets*
D-15.20-01	Traffic Barrier Details for Reinforced Concrete Retaining Walls	1/6/09	*2 Sheets*
D-15.30-01	Traffic Barrier Details for Reinforced Concrete Retaining Walls	12/2/08	*2 Sheets*
Section E	**Bridges and Trestles**		
E-1	Date Numeral Placement on Bridge Traffic Barrier	2/21/07	
E-2	Pile or Frame Detour Bridge with Asphalt Overlay	5/29/98	*2 Sheets*
E-4	Precast Prestressed Concrete Piles	8/27/03	
E-4a	Precast Prestressed Concrete Piles: Handling & Capping	8/27/03	
Section F	**Curbs, Sidewalks, and Driveways**		
F-10.12-00	Cement Concrete Curbs	12/20/06	
F-10.16-00	Cement Concrete Curb and Gutter Pan	12/20/06	
F-10.40-01	Extruded Curb Placement	7/3/08	
F-10.42-00	Extruded Curb	1/23/07	
F-10.62-01	Precast Concrete Sloped Mountable Curb	9/5/07	*2 Sheets*
F-10.64-02	Precast Concrete Dual Faced Sloped Mountable Curb	7/3/08	
F-30.10-00	Cement Concrete Sidewalk	1/23/07	
F-40.10-01	Sidewalk Ramp Type 1, with Layouts	10/5/07	
F-40.12-00	Sidewalk Ramp Type 2, with Layout	2/7/07	
F-40.14-00	Sidewalk Ramp Type 3A, with Layout	2/7/07	
F-40.15-00	Sidewalk Ramp Type 3B, with Layout	2/7/07	
F-40.16-00	Sidewalk Ramp Type 4A, with Layout	2/7/07	
F-40.18-00	Sidewalk Ramp Type 4B, with Layout	2/7/07	
F-40.20-00	Sidewalk Ramp Type 4C, with Layouts	10/5/07	
F-42.10-00	Sidewalk Ramp Type 5, with Layouts	10/5/07	
F-80.10-00	Cement Concrete Driveway Entrance: Types 1, 2, 3, & 4	1/23/07	*2 Sheets*
Section G	**Signs and Sign Supports**		
G-10.10-00	Milepost	9/20/07	
G-20.10-00	Ground Mounted Sign Placement	9/20/07	
G-22.10-01	Timber Sign Support	7/3/08	*3 Sheets*
G-24.10-00	Steel Sign Support Type AP, Installation Details	11/8/07	
G-24.20-00	Steel Sign Support Type AS, Installation Details	11/8/07	
G-24.30-00	Steel Sign Support, Types PL, PL-T, & PL-U, Inst. Det.	11/8/07	*2 Sheets*
G-24.40-01	Steel Sign Support, Types SB-1, SB-2 & SB-3 Installation Details	12/2/08	*2 Sheets*
G-24.50-00	Steel Sign Support, Types ST-1 ~ ST-4, Installation Details	11/8/07	
G-24.60-00	Steel Sign Support, Types TP-A & TP-B, Installation Details	11/8/07	*2 Sheets*
G-25.10-01	Steel Sign Support Foundation Details	1/6/09	

Plan No.	Plan Title	Publication Approval Date	
G-30.10-00	Sign Installation on Signal and Light Standards	11/8/07	*2 Sheets*
G-50.10-00	Sign Bracing	11/8/07	*2 Sheets*
G-60.10-00	Cantilever Sign Structure (Truss-Type)	8/31/07	*4 Sheets*
G-60.20-00	Cantilever Sign Structure (Truss-Type) Foundation Type 1	8/31/07	*2 Sheets*
G-60.30-00	Cantilever Sign Structure (Truss-Type) Fdn., Types 2 & 3	8/31/07	*2 Sheets*
G-70.10-00	Sign Bridge (Truss-Type)	10/5/07	*4 Sheets*
G-70.20-00	Sign Bridge (Truss-Type) Foundation Type1	10/5/07	
G-70.30-00	Sign Bridge (Truss-Type) Foundation Types 2 & 3	10/5/07	
G-90.10-00	Overhead Sign Bracing and Lighting Placement	1/6/09	
G-90.20-00	Overhead Sign Mounting (Monotube Structure)	1/6/09	
G-90.30-00	Overhead Sign Mounting (Truss Structure)	1/6/09	
G-90.40-00	Overhead Sign Lighting Details	1/6/09	
G-95.10-00	Maintenance Walkway for Sign Bridges	11/8/07	*3 Sheets*
G-95.20-01	Maintenance Walkway Mounting for Monotube Sign Bridge	7/10/08	*3 Sheets*
G-95.30-01	Maintenance Walkway Mounting for Truss-Type Sign Bridge	7/10/08	*2 Sheets*
Section H	**Roadside and Site Development**		
H-10.10-00	Tree and Shrub Planting Details	7/3/08	
H-10.15-00	Live Stake Installations	7/3/08	
H-30.10-00	Crest Gage	10/12/07	
H-32.10-00	Automated Ground Water Monitoring Well	9/20/07	
H-60.10-01	Bollard Type 1	7/3/08	
H-60.20-01	Bollard Type 2	7/3/08	
H-70.10-00	Mailbox Support Type 1	9/5/07	*2 Sheets*
H-70.20-00	Mailbox Support Type 2	9/5/07	*2 Sheets*
H-70.30-01	Mailbox Support Type 3	11/17/08	*2 Sheets*
Section I	**Site Preservation and Erosion Control**		
I-10.10-00	High Visibility Fence	8/31/07	
I-30.10-00	Silt Fence	9/20/07	
I-30.20-00	Erosion Control At Culvert Ends	9/20/07	
I-30.30-00	Wattle Installation On Slope	9/20/07	
I-30.40-00	Compost Sock	10/12/07	
I-30.50-00	Straw Bale Barrier	11/14/07	
I-40.10-00	Temporary Silt Fence for Inlet Protection In Unpaved Areas	9/20/07	
I-40.20-00	Storm Drain Inlet Protection	9/20/07	
I-50.10-00	Geotextile Encased Check Dam Installation	9/20/07	
I-50.20-00	Check Dams	8/31/07	
I-60.10-00	Erosion Control Blanket Placement On Slope	8/31/07	
I-60.20-00	Erosion Control Blanket Placement In Channel	8/31/07	
I-80.10-00	Miscellaneous Erosion Control Details	8/31/07	
Section J	**Illumination, Signals, and ITS**		
J-1f	Timber Light Standards	6/23/00	
J-3	Type A, B, and C Service Lighting Details	8/1/97	*2 Sheets*
J-3b	Service Cabinet Type B Modified (0 - 200 Amp Type, 120/240 Single Phase)	3/4/05	*2 Sheets*

Contents

Plan No.	Plan Title	Publication Approval Date	
J-3c	Service Cabinet Type D (0 - 200 Amp Type, 120/240 Single Phase)	6/24/02	
J-3d	Service Cabinet Type E (0 - 200 Amp Type, 240/480 Single Phase)	11/5/03	
J-5	Pedestrian Pushbutton Details	8/1/97	
J-6c	Cabinet Foundation Details	4/24/98	
J-7a	Signal Standard Type Designations and Types PPB, PS, I, RM, and FB Details	9/12/01	*2 Sheets*
J-7c	Strain Pole Standards Type IV and V	6/19/98	
J-7d	Span Wire Installation	4/24/98	
J-8a	Type 1 Induction Loop	5/20/04	
J-8b	Type 2 Induction Loop	5/20/04	*2 Sheets*
J-8c	Type 3 Induction Loop	5/20/04	*3 Sheets*
J-8d	Induction Loop Details	5/20/04	*2 Sheets*
J-9a	Typical Grounding Details	4/24/98	
J-10	Electrical Conduit Placement	7/18/97	
J-11b	Heavy Duty Junction Box, Types 4, 5, & 6	9/2/05	*2 Sheets*
J-12	Sign Post-Mounted Junction Box	2/10/09	*2 Sheets*
J-16a	Junction Box, Traffic Barrier Mounted	3/4/05	
J-16b	Conduit Installation in Traffic Barrier on Retaining Wall	2/10/09	
J-16c	Conduit Installation in Single Slope Conc. Barrier (Dual Face)	2/10/09	
J-18	Permanent Traffic Recorder Site Installations	2/10/09	*2 Sheets*
J-19	Weigh-In-Motion Site Installation	2/10/09	
J-20	Permanent Traffic Recorder and Weigh-In-Motion Details	9/2/05	*3 Sheets*
J-28.10-00	Steel Light Standard	8/7/07	*2 Sheets*
J-28.22-00	Steel Light Standard: Placement (Slip Base)	8/7/07	*2 Sheets*
J-28.24-00	Steel Light Standard: Placement (Fixed Base)	8/7/07	
J-28.26-01	Steel Light Standard: Placement ~ Miscellaneous	12/2/08	
J-28.30-00	Steel Light Standard: Foundation Types A & B	8/7/07	*2 Sheets*
J-28.40-00	Steel Light Standard: Base Mounting	8/7/07	
J-28.42-00	Steel Light Standard: Anchor/Slip Plate for Slip Base	8/7/07	
J-28.45-00	Steel Light Std.: Elbow Mounting on Bridge & Retaining Wall	8/7/07	
J-28.50-00	Steel Light Standard: Pole Base and Hand Hole Details	8/7/07	
J-28.60-00	Steel Light Standard: Barrier Mounted Base	8/7/07	
J-28.70-00	Steel Light Standard: Wiring Details	11/8/07	
J-40.10-00	Locking Lid Standard Junction Box Types 1 & 2	1/6/09	*2 Sheets*
J-40.30-00	Locking Lid Standard Duty Junction Box Type 8	1/6/09	*2 Sheets*
J-75.10-00	Signal Head Mounting Details Pole and Post Top Mountings	2/10/09	
J-75.20-00	Signal Head Mounting Details Mast Arm and Span Wire Mountings	2/10/09	
J-75.30-00	Miscellaneous Signal Details	2/10/09	
J-90.10-00	Pull Box	2/10/09	*2 Sheets*
J-90.20-00	Cable Vault	2/10/09	*2 Sheets*

Plan No.	Plan Title	Publication Approval Date	
Section K	**Work Zone Traffic Control**		
K-10.20-01	Road Closure, with Diversion	10/12/07	
K-10.40-00	Road Closure, with Off-Site Detour	2/15/07	
K-20.20-01	Lane Closure, without Flaggers ~ Low Volume Road	10/12/07	
K-20.40-00	Lane Closure, with Flagger Control	2/15/07	
K-20.60-00	Lane Closure, with Pilot Car	2/15/07	
K-22.20-01	Lane Shift, onto Passing Lane	10/12/07	
K-24.20-00	Single Lane Closure, with Encroachment	2/15/07	
K-24.40-01	Double Lane Closure, on Multilane Roadway	10/12/07	
K-24.60-00	Single Lane Closure, on Multilane Roadway	2/15/07	
K-24.80-01	Single Lane Closure, with Temporary Concrete Barrier	10/12/07	
K-26.20-00	Lane Shift, onto Two-way Left Turn Lane	2/15/07	
K-26.40-01	Left and Center Lane Closure ~ Two-Way Left Turn Lane	10/12/07	
K-30.20-00	Intersection ~ Lane Shift on 3 Lane Two-Way Left Turn Lane	2/15/07	
K-30.40-01	Intersection ~ Lane Shift on 5 Lane Two-Way Left Turn Lane	10/12/07	
K-32.20-00	Intersection ~ Right Lane Closure, Far Side	2/15/07	
K-32.40-00	Intersection ~ Left Lane Closure, Far Side	2/15/07	
K-32.60-00	Intersection ~ Multiple Lane Closure	2/15/07	
K-32.80-00	Intersection ~ Half Road Closure with Lane Shift	2/15/07	
K-34.20-00	Intersection ~ Pedestrian Detour	2/15/07	
K-36.20-00	Intersection ~ Shoulder Work	2/15/07	
K-40.20-00	Shoulder Closure ~ High Speed Roadway (45 MPH or Higher)	2/15/07	
K-40.40-00	Shoulder Closure ~ Low Speed Roadway (40 MPH or Lower)	2/15/07	
K-40.60-00	Shoulder Closure ~ Short Duration	2/15/07	
K-40.80-00	Work Beyond the Shoulder	2/15/07	
K-55.20-00	Emergency ~ Passable Hazard	2/15/07	
K-60.20-02	Speed Zone, Supplemental Signing ~ Chip Seal Project	7/3/08	
K-60.40-00	Motorcycle, Supplemental Signing	2/15/07	
K-70.20-00	Temporary Channelization	2/15/07	
K-80.10-00	Class A Construction Signing Installation	2/21/07	
K-80.20-00	Type 3 Barricade	12/20/06	*2 Sheets*
K-80.30-00	Alternative Temporary Conc. Barrier (F-Shape)	2/21/07	
K-80.35-00	Temporary Conc. Barrier Anchoring	2/21/07	
K-80.37-00	Temporary Conc. Barrier Anchoring ~ Narrow	2/21/07	
Section L	**Fence and Glare Screen**		
L-10.10-00	Wire Fence Types 1 & 2, and Wire Gates	2/21/07	*2 Sheets*
L-20.10-00	Chain Link Fence, Types 3 and 4	2/7/07	*2 Sheets*
L-30.10-00	Chain Link Gate	2/7/07	*2 Sheets*
L-40.10-00	Glare Screen Type 1, Design A	2/21/07	*2 Sheets*
L-40.15-00	Glare Screen Type 1, Design B	2/21/07	
L-40.20-00	Glare Screen Type 2 (Chain Link with Slats)	2/21/07	
L-70.10-01	Access Control Gate	5/21/08	
L-70.20-01	Access Control Double Gate	5/21/08	

Contents

Plan No.	Plan Title	Publication Approval Date	
Section M	**Roadway Delineation**		
M-1.20-01	Ramp Channelization: Single Lane	1/30/07	
M-1.40-01	Ramp Channelization: Two Lane	1/30/07	
M-1.60-01	Ramp Channelization: Collector Distributor Road	1/30/07	
M-1.80-02	Ramp Channelization: Parallel On & Weaving Section	8/31/07	
M-2.20-01	Gore Area Marking Layouts	1/30/07	
M-2.40-01	Gore Area Supplement w/ Type 2 Raised Pavement Markers	1/30/07	
M-2.60-01	Gore Area Substitution with Types 1 & 2 RPM's	1/30/07	
M-3.10-02	Left Turn Channelization	2/10/09	
M-3.20-01	Left Turn Channelization: Reduced Tapers	1/30/07	
M-3.30-02	Left Turn Channelization: Tee Intersection and Back-to-back Turn Lanes	2/10/09	
M-3.40-02	Two-way Left-Turn and Median Channelization	2/10/09	
M-3.50-01	Double Left Turn Channelization	1/30/07	
M-5.10-01	Right Turn Channelization	1/30/07	
M-7.50-01	High Occupancy Vehicle (HOV) Lane Symbol Layout	1/30/07	
M-9.50-01	Bicycle Lane Symbol Layout	1/30/07	
M-9.60-00	Shared - Use Path Markings	2/10/09	
M-11.10-01	Railroad Crossing Layout	1/30/07	
M-15.10-01	Crosswalk Layout	2/6/07	
M-17.10-02	Parking Space Layouts	7/3/08	
M-20.10-01	Longitudinal Marking Patterns	1/30/07	
M-20.20-01	Profiled and Embossed Plastic Lines	1/30/07	
M-20.30-01	Longitudinal Marking Supplement with Raised Pavement Markers (RPM's)	1/30/07	
M-20.40-01	Longitudinal Marking Supplement with RPM's ~ Turn Lanes	1/30/07	*2 Sheets*
M-20.50-01	Longitudinal Marking Substitution with RPM's	1/30/07	
M-24.20-01	Symbol Markings: Traffic Arrows for High Speed Roadways	5/31/06	*3 Sheets*
M-24.40-01	Symbol Markings: Traffic Arrows for Low Speed Roadways	5/31/06	*2 Sheets*
M-24.60-02	Symbol Markings: Miscellaneous	2/6/07	*2 Sheets*
M-40.10-00	Guide Posts and Barrier Delineators	9/20/07	
M-40.20-00	Guide Post Placement: Interchanges	10/12/07	
M-40.30-00	Guide Post Placement: Grade Intersections	9/20/07	
M-40.40-00	Guide Post Placement: Horizontal Curves	9/20/07	
M-40.50-00	Guide Post Placement: Bridges	9/20/07	
M-40.60-00	Guide Post Placement: Miscellaneous	9/20/07	
M-60.10-00	Shoulder Rumble Strip Type 1, for Divided Highways	9/5/07	*4 Sheets*
M-60.20-01	Shoulder Rumble Strip, Types 2, 3, and 4, for Undivided Highways	2/3/09	*2 Sheets*
M-65.10-01	Center Line Rumble Strip	5/21/08	*2 Sheets*
M-80.10-00	Traffic Letter and Numeral Applications	6/10/08	*2 Sheets*
M-80.20-00	Traffic Letters and Numerals (High Speed Roadways)	6/10/08	
M-80.30-00	Traffic Letters and Numerals (Low Speed Roadways)	6/10/08	

DRAWN BY: FERN LIDDELL

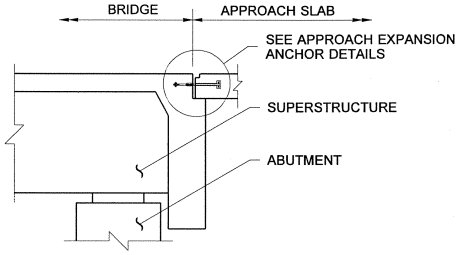

LONGITUDAL SECTION

SEMI-INTEGRAL TYPE ABUTMENT

NOTE

PAINT THE METAL COMPONENTS OF THE APPROACH EXPANSION ANCHOR WITH ONE COAT OF FORMULA A-11-99 MEETING THE REQUIREMENTS OF STD. SPEC. SECTION 9-08.2.

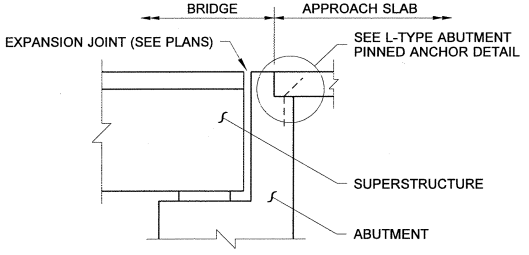

LONGITUDAL SECTION

L - TYPE ABUTMENT

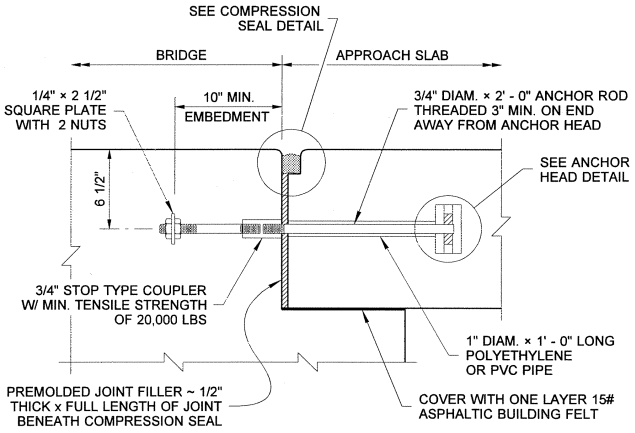

APPROACH EXPANSION ANCHOR ~ METHOD A

SEMI-INTEGRAL TYPE ONLY

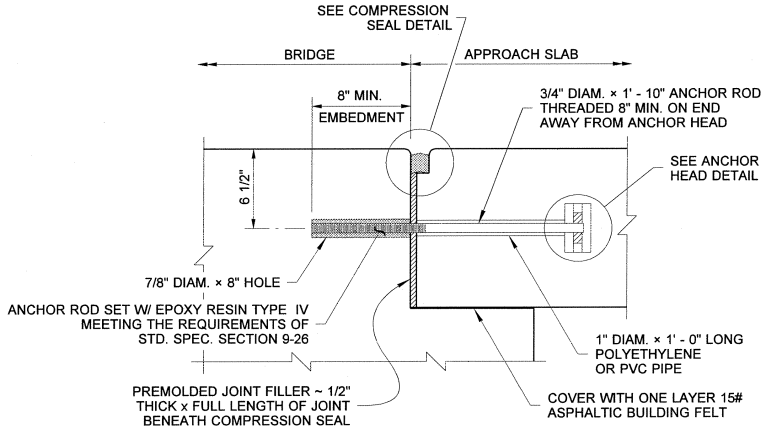

APPROACH EXPANSION ANCHOR ~ METHOD B

SEMI-INTEGRAL TYPE ONLY

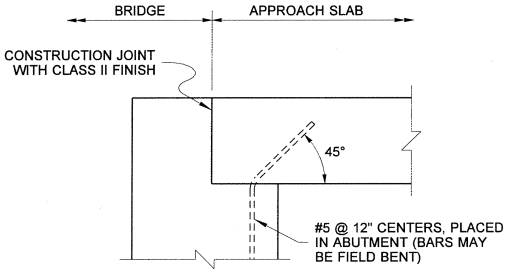

L - TYPE ABUTMENT PINNED ANCHOR DETAIL

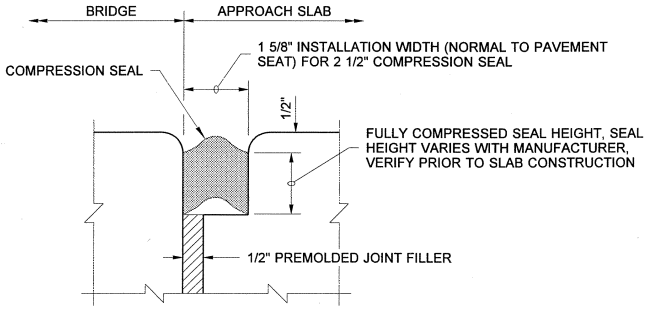

COMPRESSION SEAL DETAIL

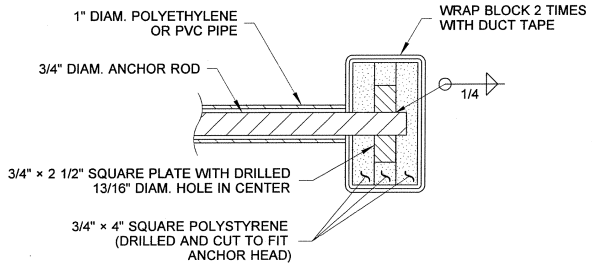

ANCHOR HEAD DETAIL

FOR LOCAL AGENCY USE ONLY

BIJAN KHALEGHI
STATE OF WASHINGTON
27695
REGISTERED PROFESSIONAL ENGINEER
11/1/07

EXPIRES AUGUST 23, 2008

BRIDGE APPROACH SLAB

STANDARD PLAN A-40.50-00

SHEET 2 OF 2 SHEETS

APPROVED FOR PUBLICATION

STATE DESIGN ENGINEER — DATE 11/8/07

Washington State Department of Transportation

DRAWN BY: FERN LIDDELL

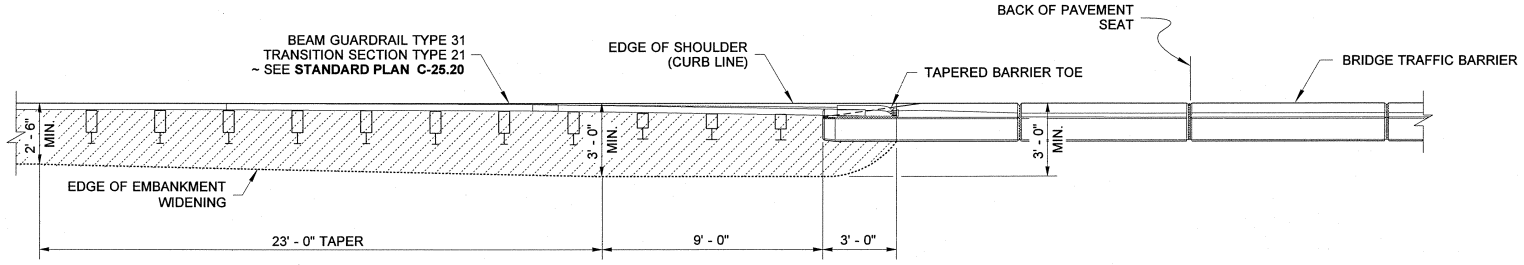

PLAN

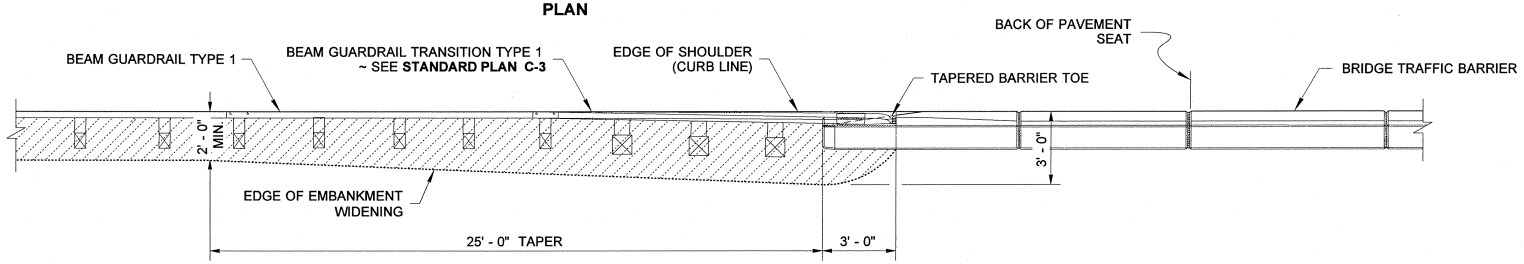

PLAN

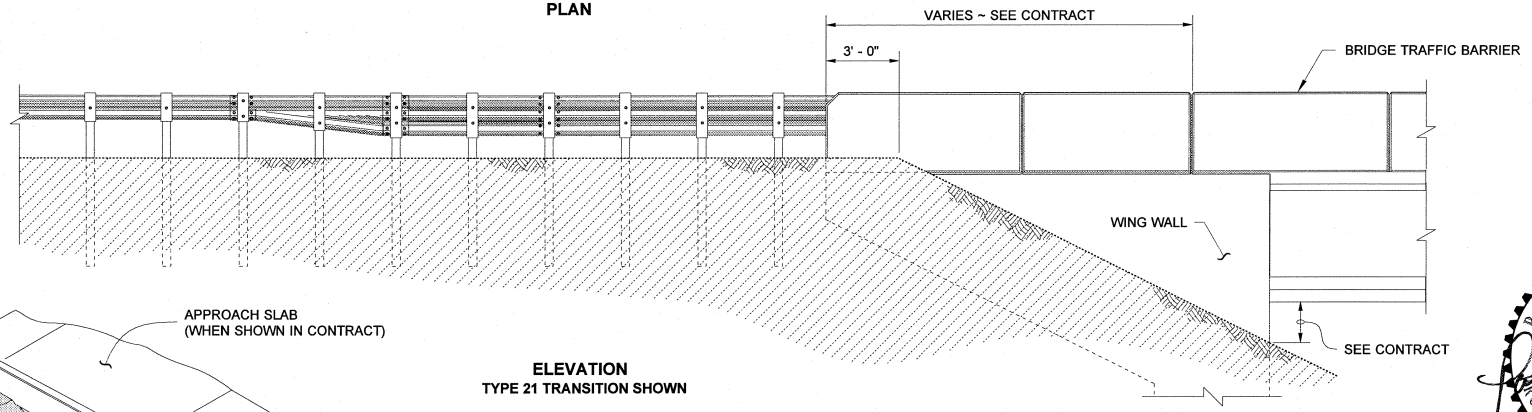

ELEVATION
TYPE 21 TRANSITION SHOWN

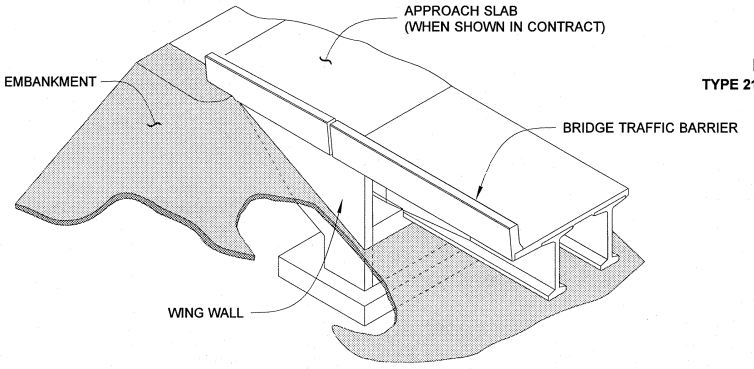

ISOMETRIC VIEW

BAKOTICH, PASCO III
STATE OF WASHINGTON
REGISTERED
PROFESSIONAL ENGINEER
11/17/08

EMBANKMENT WIDENING AT BRIDGE END WITH WING WALL STANDARD PLAN A-50.10-00

SHEET 1 OF 2 SHEETS

APPROVED FOR PUBLICATION

STATE DESIGN ENGINEER — DATE 11/17/08

Washington State Department of Transportation

BEAM GUARDRAIL CONNECTION TO BRIDGE TRAFFIC BARRIER

DRAWN BY: FERN LIDDELL

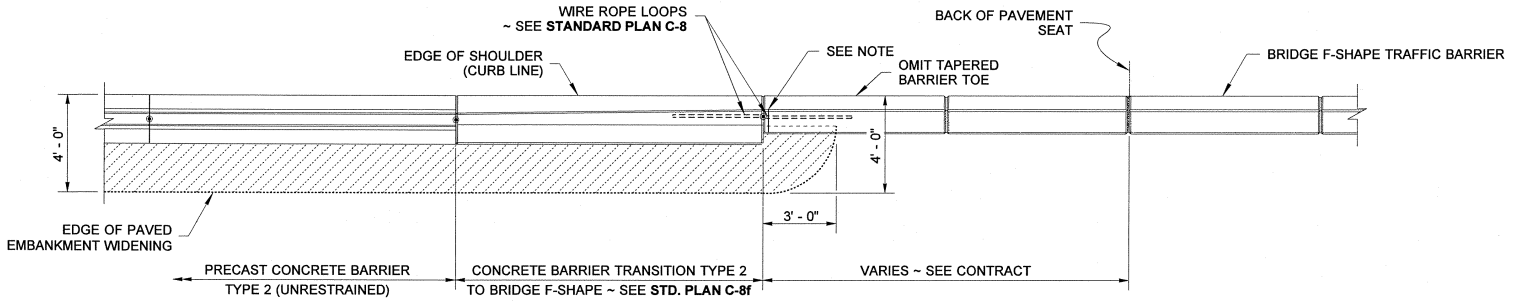

PLAN
WITH TYPE 2 UNRESTRAINED BARRIER

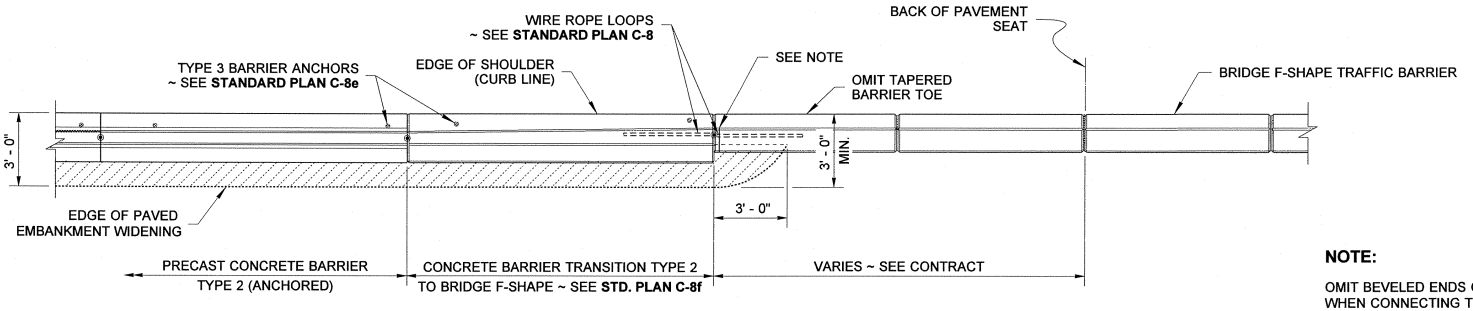

PLAN
WITH ANCHORED BARRIER

NOTE:

OMIT BEVELED ENDS ON TOP OF BRIDGE TRAFFIC BARRIER WHEN CONNECTING TO CONCRETE BARRIERS.

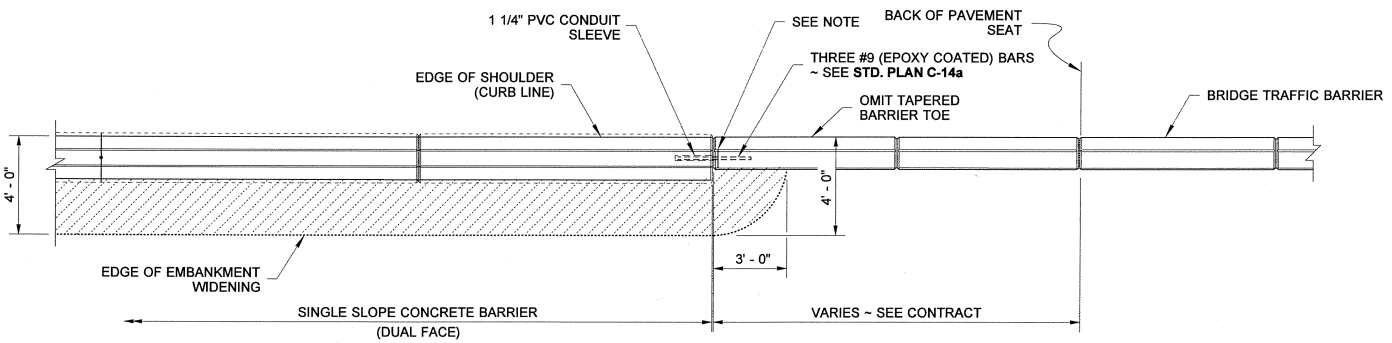

PLAN
WITH SINGLE SLOPE BARRIER

CONCRETE BARRIER CONNECTION TO BRIDGE TRAFFIC BARRIER

EMBANKMENT WIDENING
FOR BRIDGE END
WITH WING WALL
STANDARD PLAN A-50.10-00

SHEET 2 OF 2 SHEETS

APPROVED FOR PUBLICATION

STATE DESIGN ENGINEER — DATE 11/17/08

Washington State Department of Transportation

DRAWN BY: FERN LIDDELL

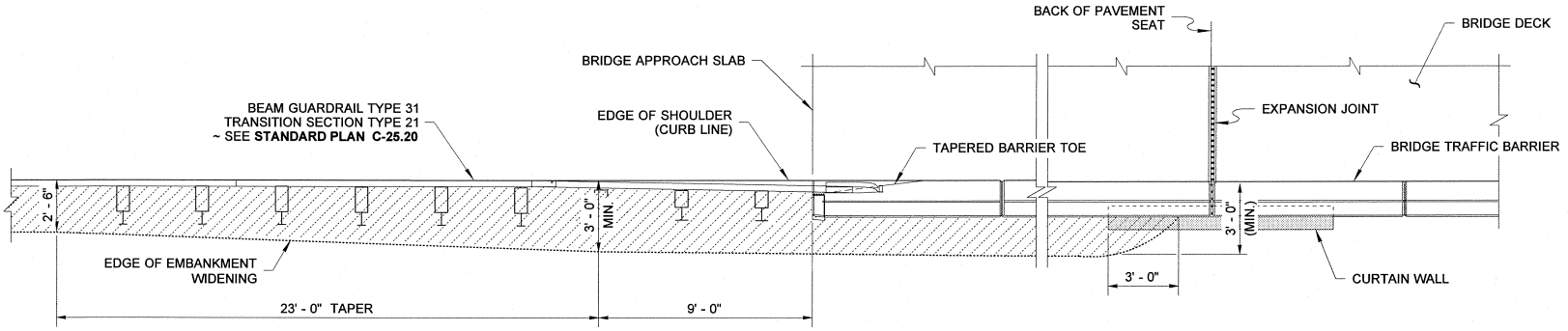

PLAN

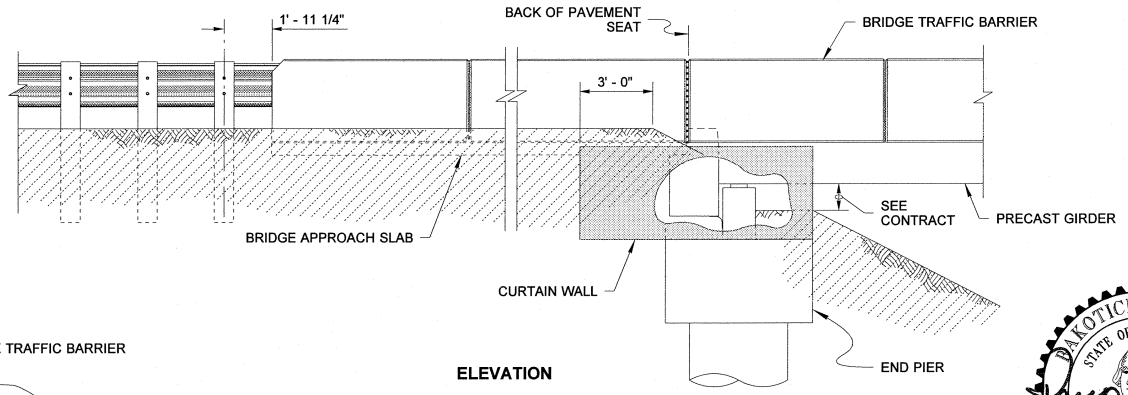

ELEVATION

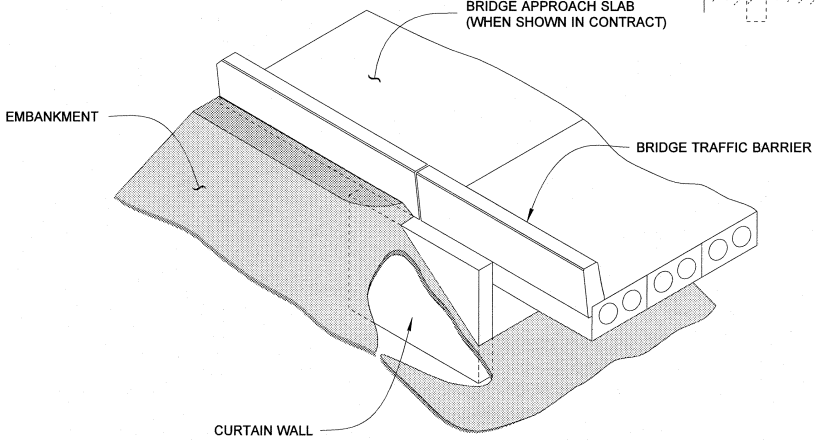

ISOMETRIC VIEW

DAKOTICH, PASCO, WA
STATE OF WASHINGTON
11/17/08
24557
REGISTERED
PROFESSIONAL ENGINEER

EMBANKMENT WIDENING AT BRIDGE END WITH CURTAIN WALL STANDARD PLAN A-50.20-00

SHEET 1 OF 2 SHEETS

APPROVED FOR PUBLICATION

STATE DESIGN ENGINEER — DATE 11/17/08

Washington State Department of Transportation

BEAM GUARDRAIL CONNECTION TO BRIDGE TRAFFIC BARRIER

DRAWN BY: FERN LIDDELL

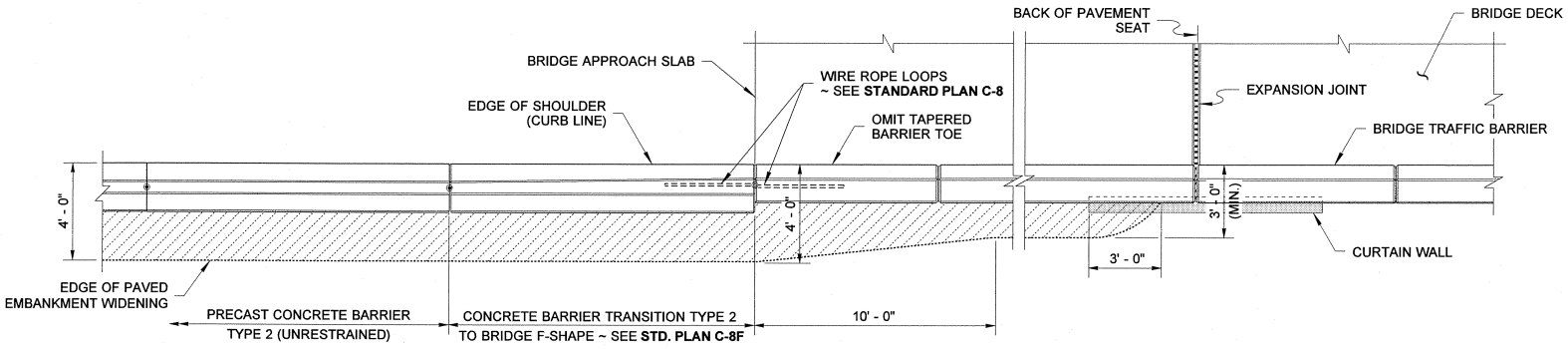

PLAN
WITH UNRESTRAINED BARRIER

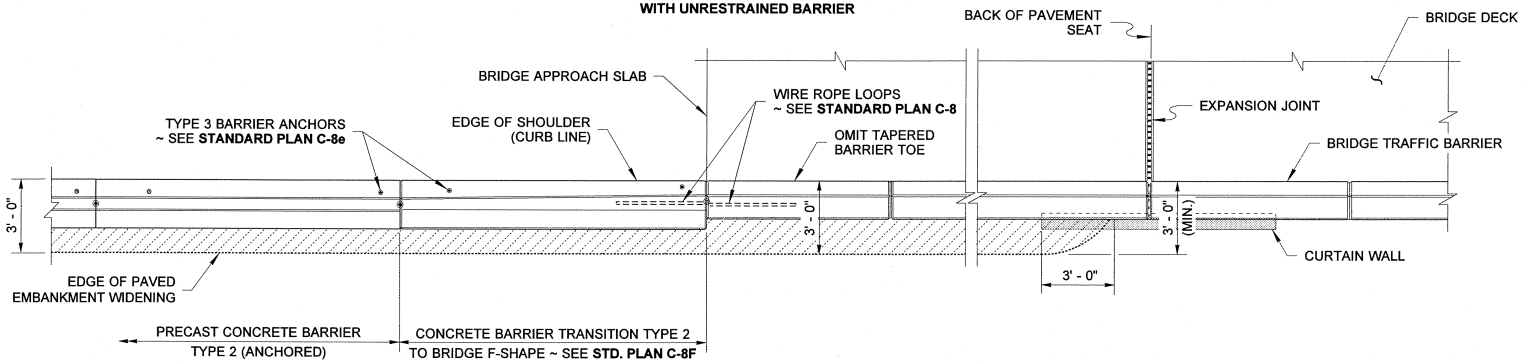

PLAN
WITH ANCHORED BARRIER

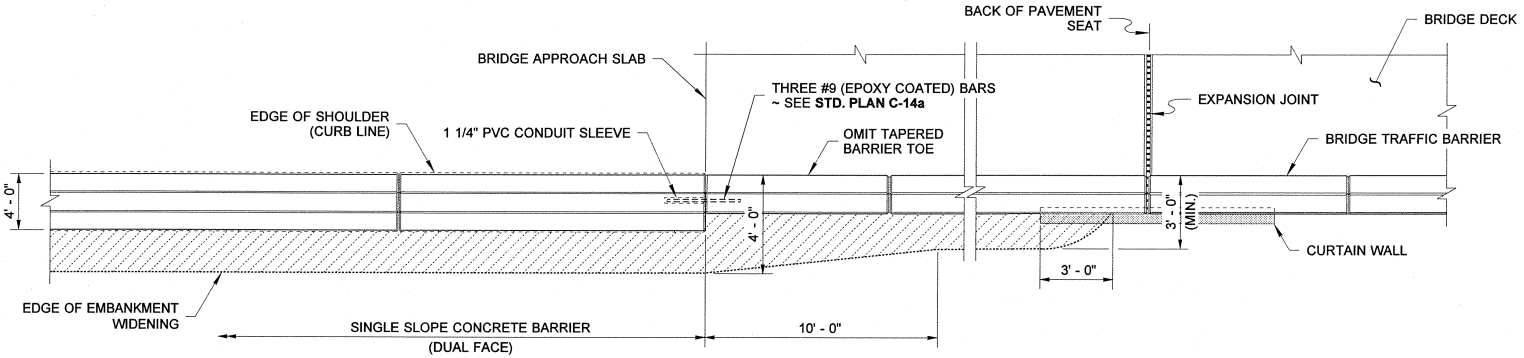

PLAN

CONCRETE BARRIER CONNECTION TO BRIDGE TRAFFIC BARRIER

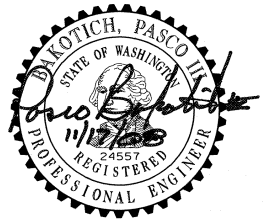

EMBANKMENT WIDENING AT BRIDGE END WITH CURTAIN WALL STANDARD PLAN A-50.20-00

SHEET 2 OF 2 SHEETS

APPROVED FOR PUBLICATION

STATE DESIGN ENGINEER — DATE 11/17/08

Washington State Department of Transportation

DRAWN BY: FERN LIDDELL

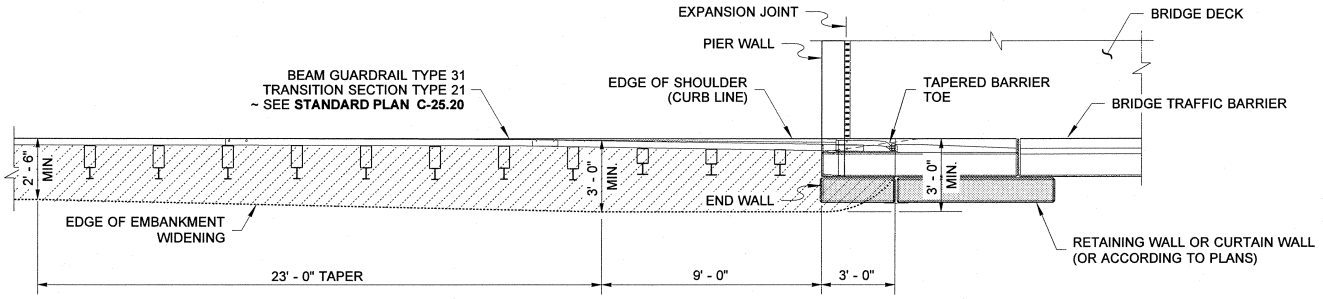

PLAN

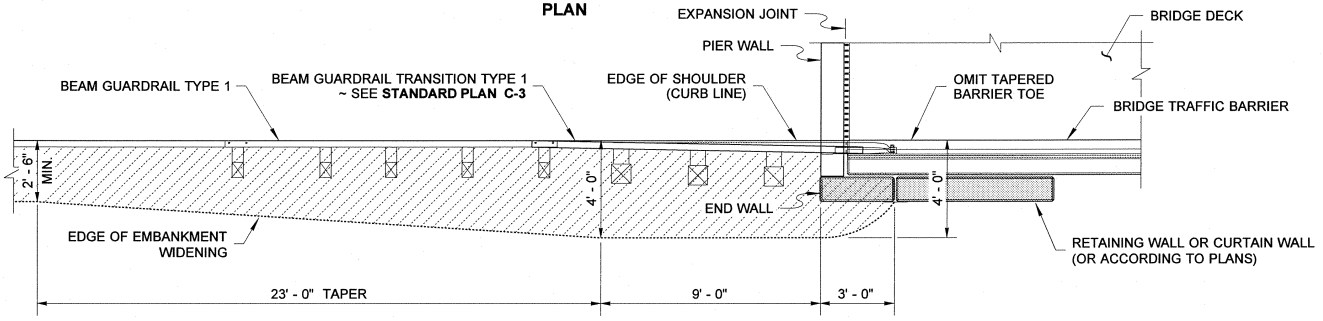

PLAN

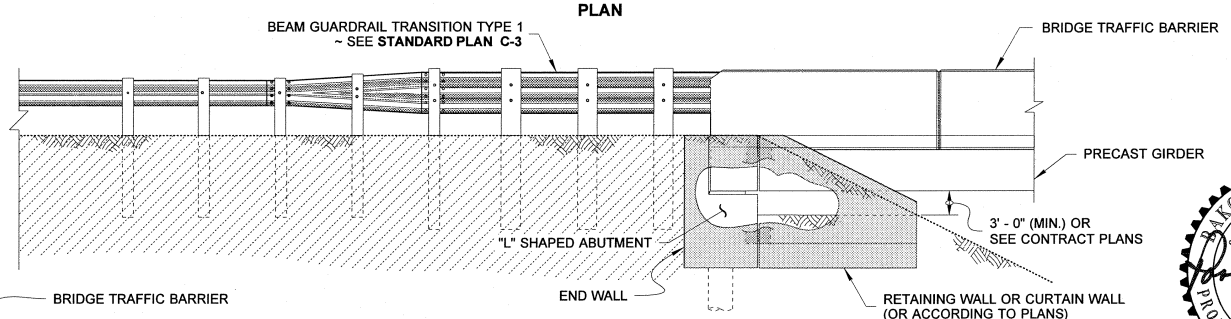

ELEVATION

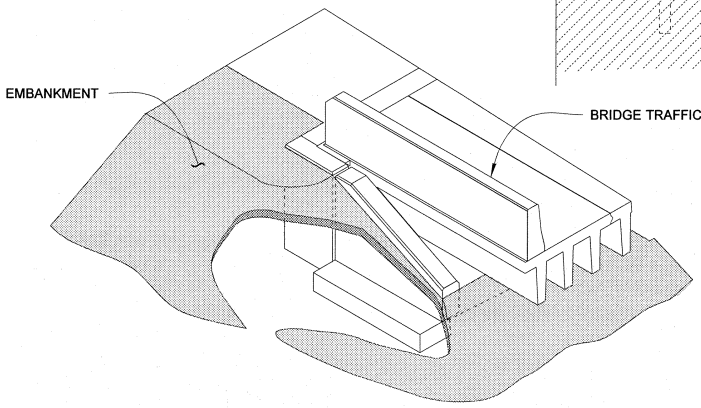

ISOMETRIC VIEW

BEAM GUARDRAIL CONNECTION TO BRIDGE TRAFFIC BARRIER

DAKOTICH, PASCO M. STATE OF WASHINGTON 24557 REGISTERED PROFESSIONAL ENGINEER 11/7/08

EMBANKMENT WIDENING AT BRIDGE END WITH "L" SHAPED ABUTMENT STANDARD PLAN A-50.30-00

SHEET 1 OF 2 SHEETS

APPROVED FOR PUBLICATION

STATE DESIGN ENGINEER — DATE 11/7/08

Washington State Department of Transportation

DRAWN BY: FERN LIDDELL

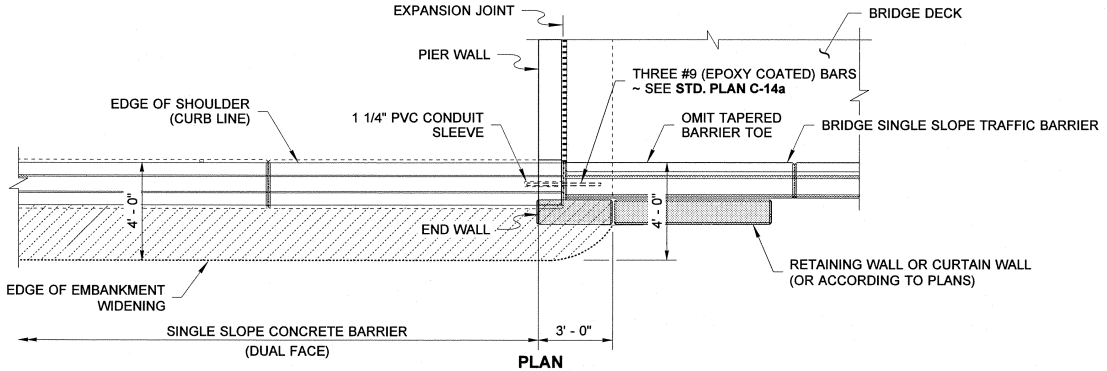

PLAN

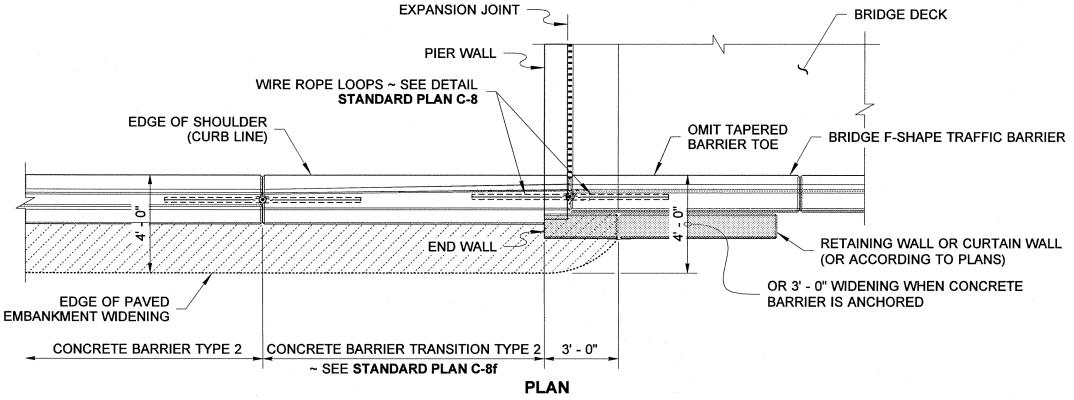

PLAN

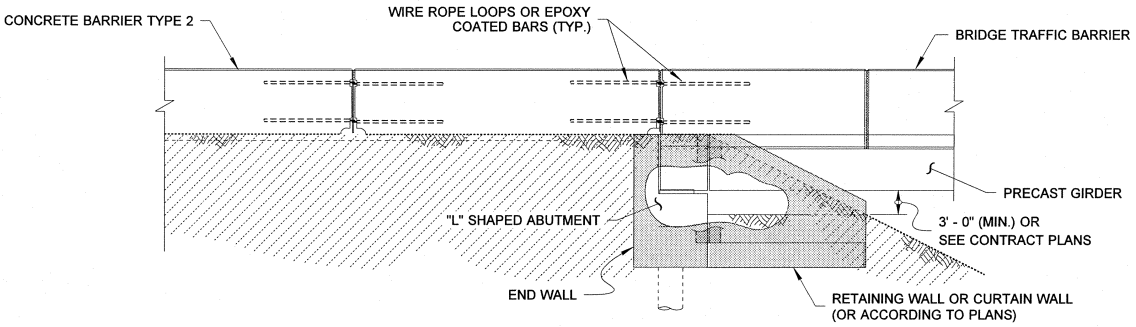

ELEVATION

CONCRETE BARRIER CONNECTION TO BRIDGE TRAFFIC BARRIER

EMBANKMENT WIDENING AT BRIDGE END WITH "L" SHAPED ABUTMENT STANDARD PLAN A-50.30-00

SHEET 2 OF 2 SHEETS

APPROVED FOR PUBLICATION

STATE DESIGN ENGINEER — DATE 11/17/08

Washington State Department of Transportation

DRAWN BY: FERN LIDDELL

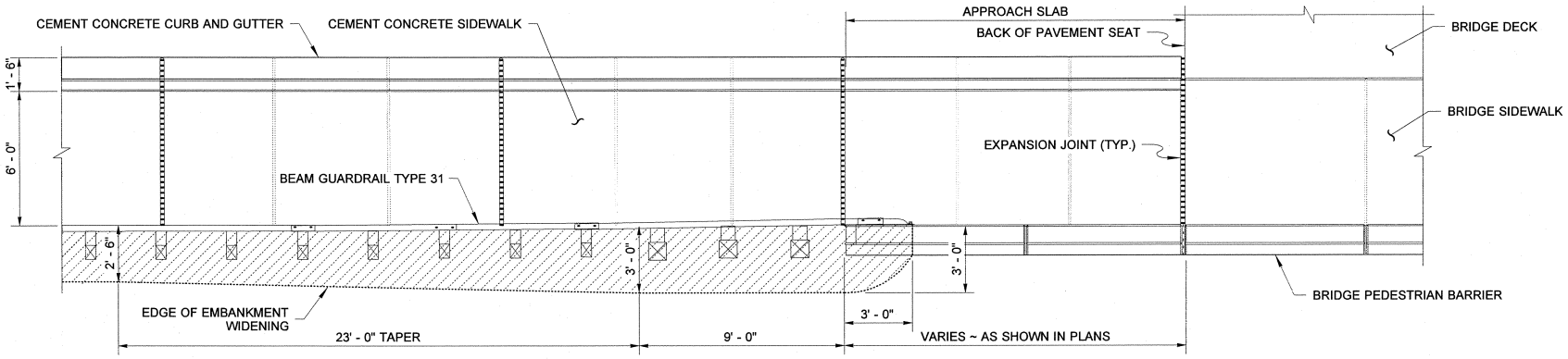

PLAN
WITH GUARDRAIL

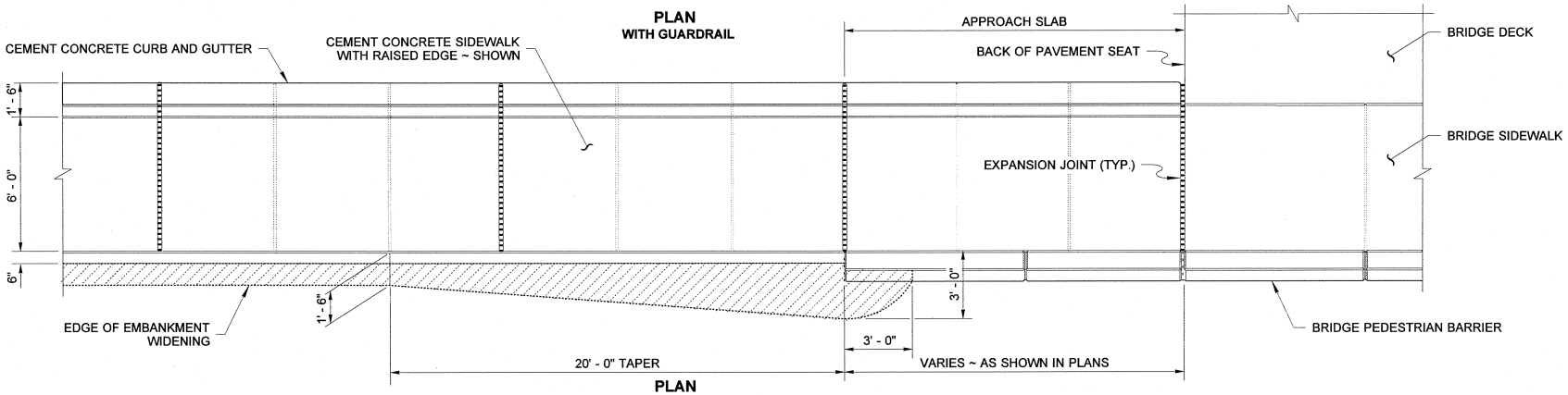

PLAN
WITH PEDESTRIAN RAILING

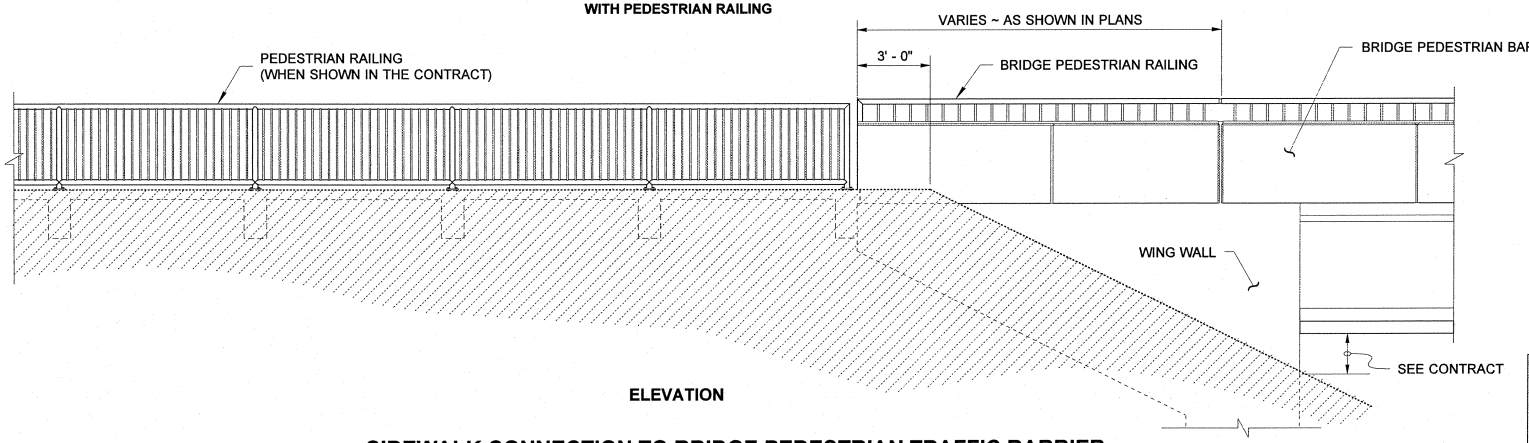

ELEVATION

SIDEWALK CONNECTION TO BRIDGE PEDESTRIAN TRAFFIC BARRIER

DAKOTICH, PASCO H. STATE OF WASHINGTON 11/1/08 24557 REGISTERED PROFESSIONAL ENGINEER

EMBANKMENT WIDENING AT BRIDGE END WITH SIDEWALK
STANDARD PLAN A-50.40-00

SHEET 1 OF 1 SHEET

APPROVED FOR PUBLICATION

STATE DESIGN ENGINEER — DATE 11/1/08

Washington State Department of Transportation

This page left blank intentionally.

DRAWN BY: FERN LIDDELL

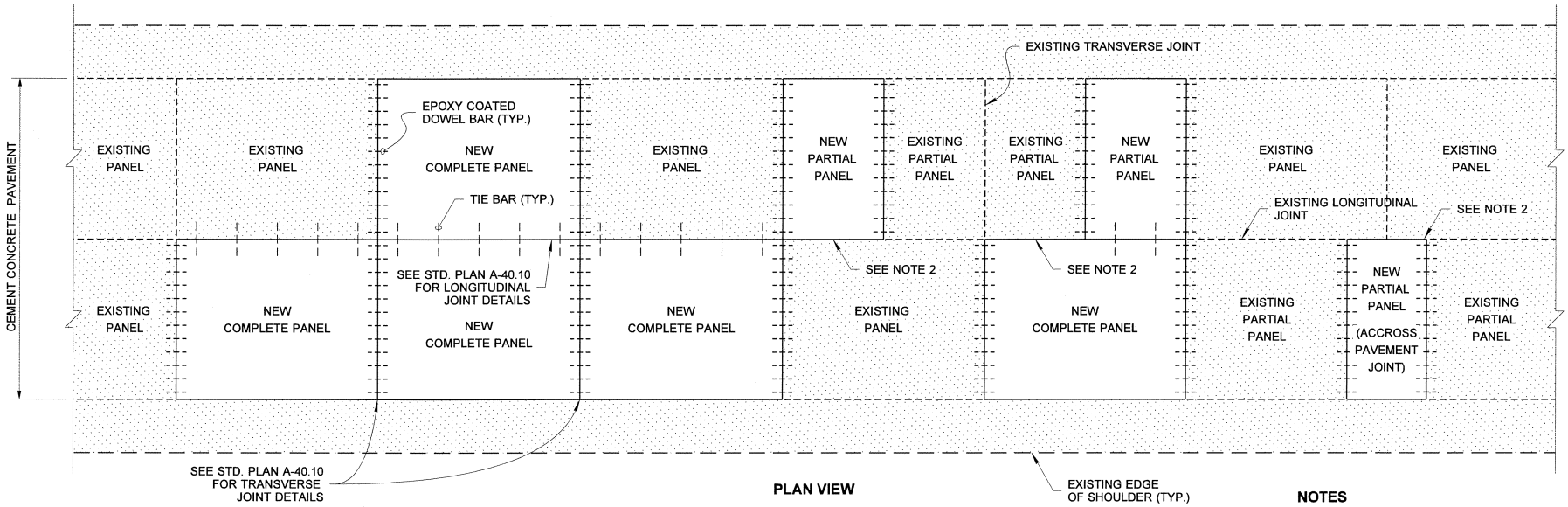

PLAN VIEW

PANEL REPLACEMENT

NOTES

1. Install tie bars along longitudinal joint between full panel replacement and existing cement concrete pavement. Tie bars are not installed between cement concrete pavement and hot mix asphalt shoulders.
2. Place polyethylene film (per AASHTO M 171) or building paper along the longitudinal joint between partial panel replacement and existing panel.

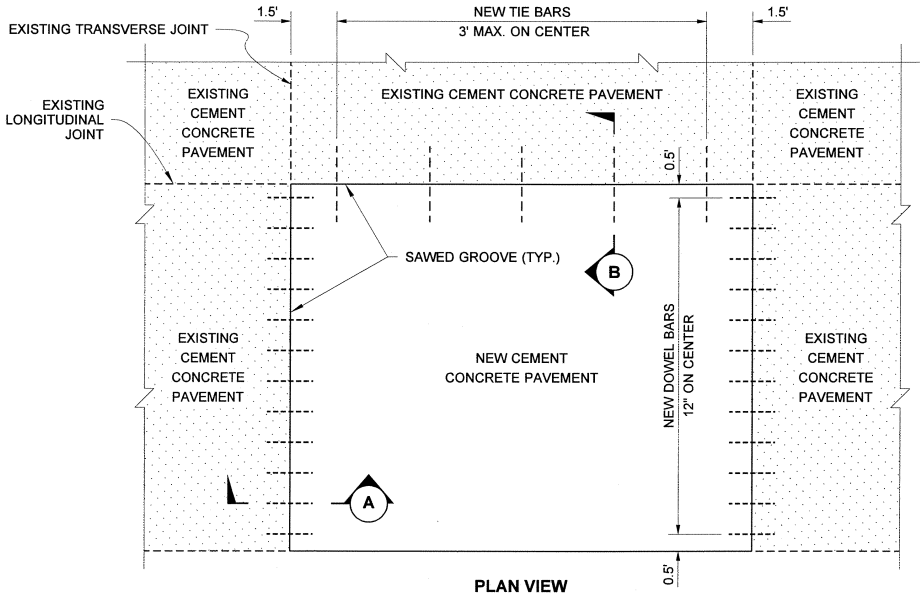

PLAN VIEW

COMPLETE PANEL REPLACEMENT DETAIL

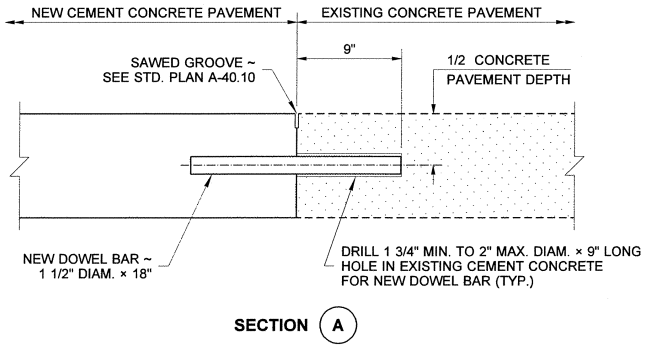

SECTION (A)

LINEA LAIRD
STATE OF WASHINGTON
24087
REGISTERED
PROFESSIONAL ENGINEER

EXPIRES MAY 5, 2008

CEMENT CONCRETE PAVEMENT REPAIR

STANDARD PLAN A-60.10-00

SHEET 1 OF 2 SHEETS

APPROVED FOR PUBLICATION

STATE DESIGN ENGINEER — DATE 5/5/07

Washington State Department of Transportation

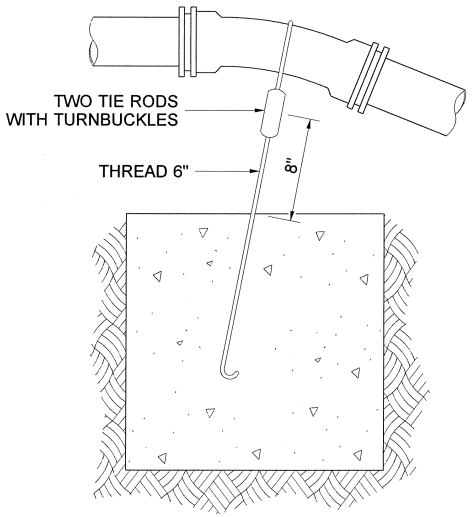

BLOCKING FOR 11.25° OR 22.5° VERTICAL BENDS

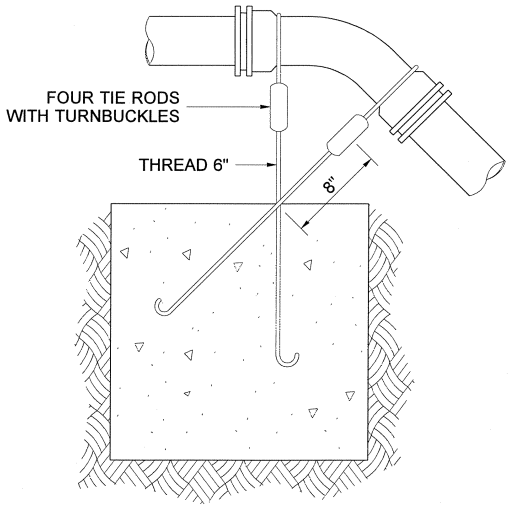

BLOCKING FOR 45° VERTICAL BENDS

NOTE

Steel tie rods to be heavily coated with asphalt after installation.

DIMENSION TABLE						
PIPE DIAM.	TEST PRESSURE (PSI)	BEND ANGLE	CONCRETE VOLUME (Ft^3)	CUBE SIZE (Ft)	TIE ROD DIAM.	TIE ROD EMBEDMENT
4"	250	11.25°	6	1.8	5/8"	17"
		22.5°	12	2.3		
		45°	22	2.8		
6"	250	11.25°	14	2.4	5/8"	17"
		22.5°	27	3.0		
		45°	50	3.7		
8"	250	11.25°	25	2.9	5/8"	17"
		22.5°	48	3.6		
		45°	89	4.5		
10"	250	11.25°	38	3.4	5/8"	17"
		22.5°	75	4.2		
		45°	139	5.2		
12"	250	11.25°	55	3.8	5/8"	17"
		22.5°	108	4.8		
		45°	200	5.8	7/8"	24"
14"	250	11.25°	75	4.2	5/8"	17"
		22.5°	147	5.3	3/4"	20"
		45°	272	6.5	1"	27"
16"	250	11.25°	98	4.6	5/8"	17"
		22.5°	192	5.8	7/8"	24"
		45°	355	7.1	1 1/8"	30"

MATTHEW J. WITECKI
STATE OF WASHINGTON
15587
REGISTERED
PROFESSIONAL ENGINEER

6/8/06

EXPIRES JULY 1, 2007

CONCRETE THRUST BLOCK FOR CONVEX VERTICAL BENDS STANDARD PLAN B-90.50-00

SHEET 1 OF 1 SHEET

APPROVED FOR PUBLICATION

STATE DESIGN ENGINEER — DATE 6-8-06

Washington State Department of Transportation

DRAWN BY: BILL BERENS

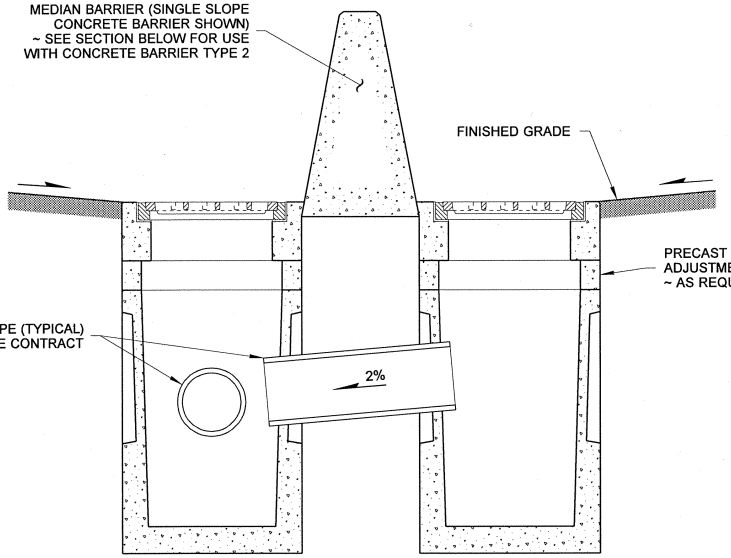

SECTION (A)

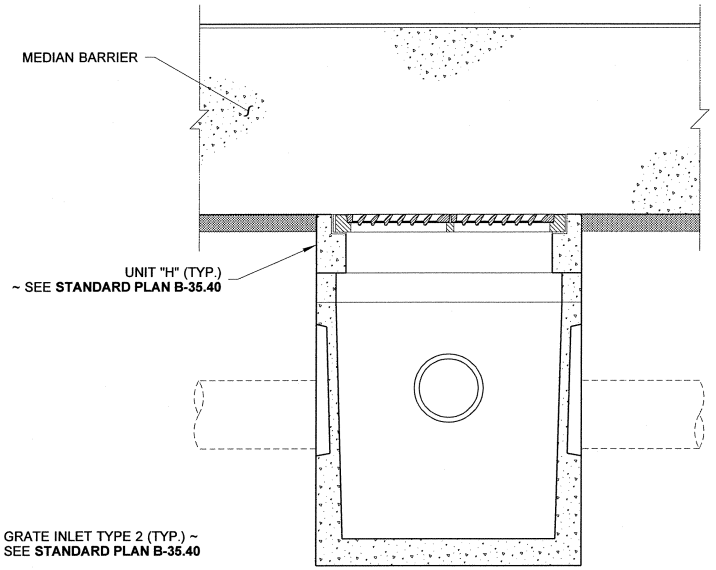

SECTION (B)

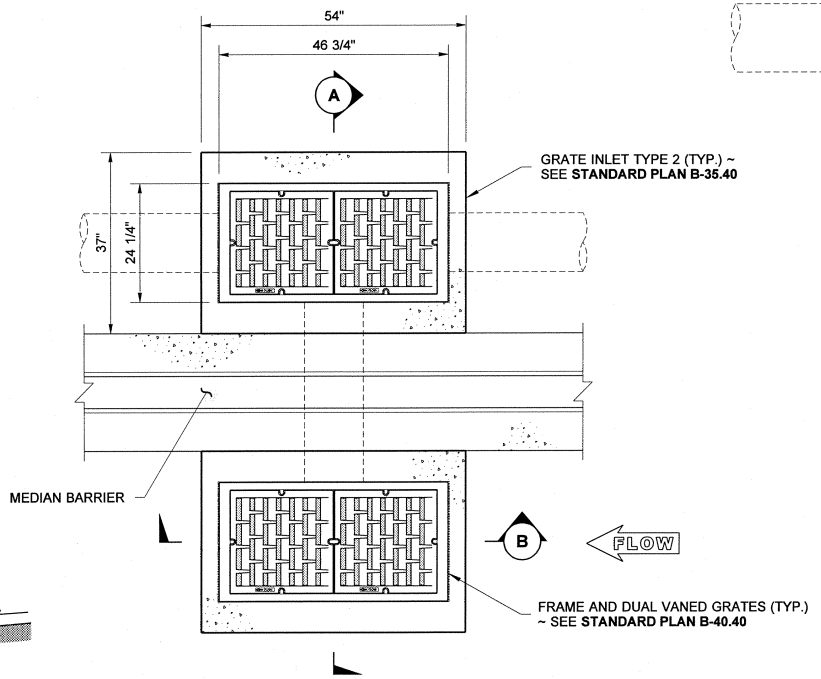

PLAN VIEW

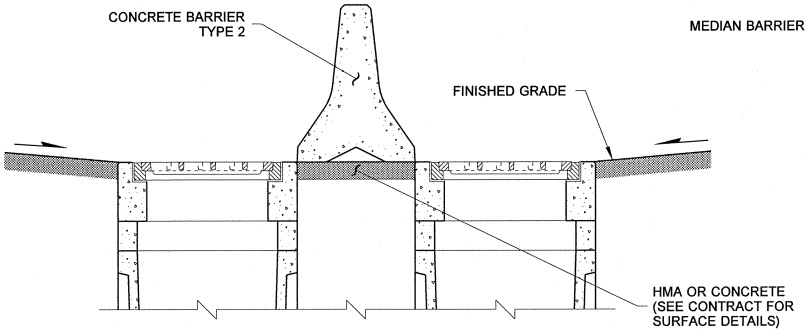

CONCRETE BARRIER TYPE 2 SECTION

SEE SECTION (A)

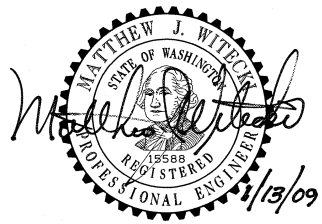

MEDIAN BARRIER DRAINAGE INSTALLATION

STANDARD PLAN B-95.20-01

SHEET 1 OF 1 SHEET

APPROVED FOR PUBLICATION

STATE DESIGN ENGINEER — DATE 2/3/09

Washington State Department of Transportation

This page left blank intentionally.

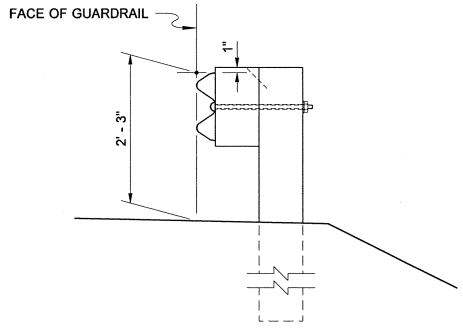

TYPE 1

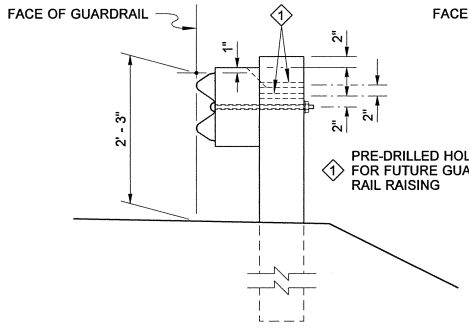

INITIAL INSTALLATION

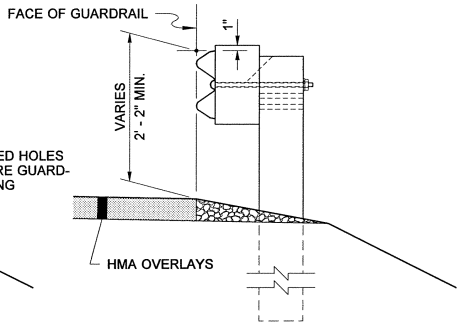

RAIL ELEMENT RAISED

TYPE 1 ALTERNATIVE

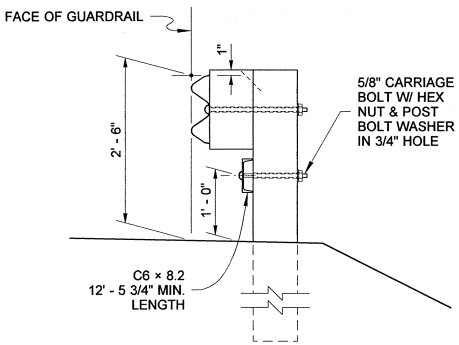

TYPE 2

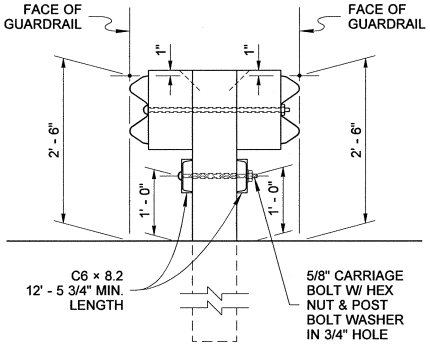

TYPE 3

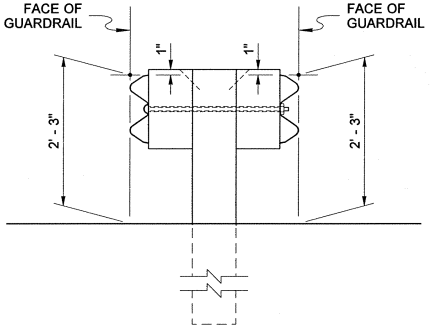

TYPE 4

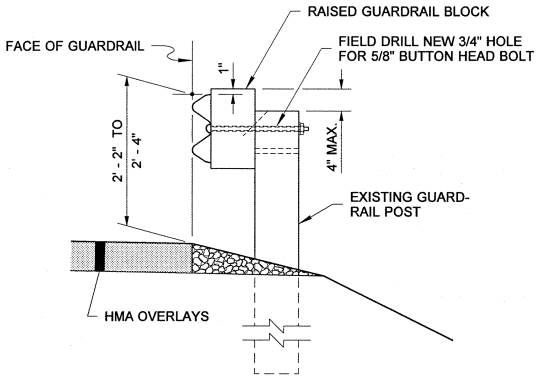

BEAM GUARDRAIL RAISING FOR HMA OVERLAYS

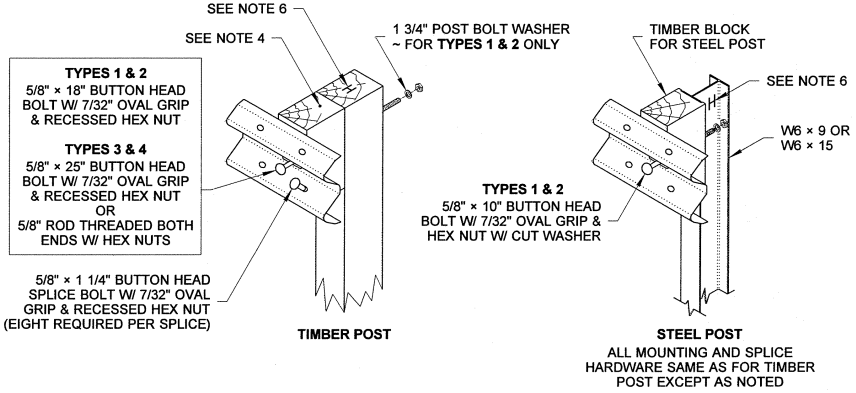

ASSEMBLY DETAIL

NOTES

1. When required by the Contract, a Snow Load Post Washer shall be used on the backside of the post (in lieu of the 1 3/4" Post Bolt Washer) and a Snow Load Rail Washer shall be placed on the face side of Beam Guardrail Types 1 and 2. Snow Load Rail Washers shall not be installed on terminals.
2. Rail Washers, also called "Snow Load Rail Washers" are not required on new installation except as called for in Note 1. Unnecessary Rail washers need not be removed from existing installations, except those on posts 2 through 8 of a BCT installation shall be removed.
3. Beam Guardrail post spacing for Types 1 through 4 shall be 6' - 3" on centers.
4. Timber blocks shall be toe-nailed to the post with a 16d galvanized nail to prevent block rotation.
5. For post and block details, see **Standard Plan C-1b**.
6. When "Beam Guardrail Type 1 - ___ Ft. Long Post" is specified in the Contract, the post length shall be stamped with numbers, 1 1/2" min. high and 1/4" deep, at the location where the letter "H" is shown in the ASSEMBLY DETAIL. After installing a Long Post, it shall be the Contractor's responsibility to ensure that the stamped numbers are still legible and 1/4" deep.
7. Existing posts shall not be raised. Replace posts as necessary to achieve required guardrail height.

BEAM GUARDRAIL TYPES 1 ~ 4 (W-BEAM) STANDARD PLAN C-1

SHEET 1 OF 2 SHEETS

APPROVED FOR PUBLICATION

STATE DESIGN ENGINEER — DATE 2/10/07

Washington State Department of Transportation

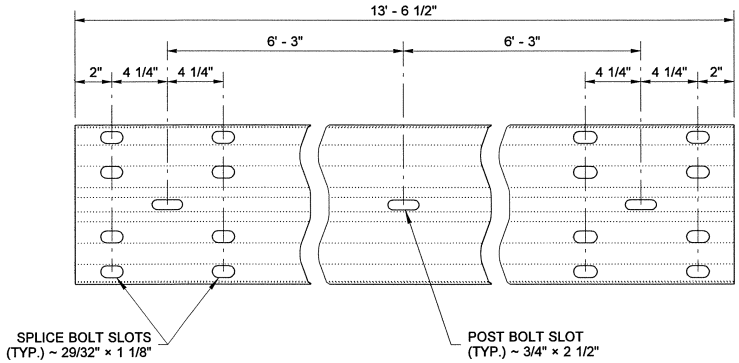

TYPICAL RAIL ELEMENT

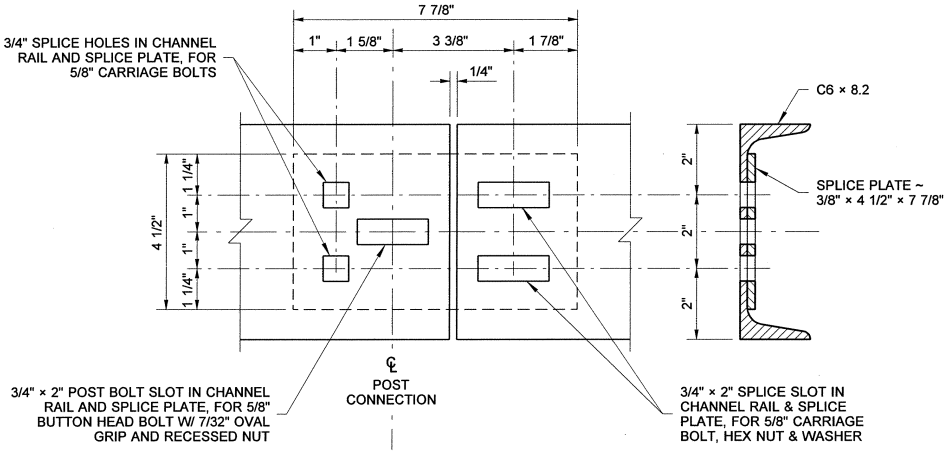

CHANNEL RAIL SPLICE

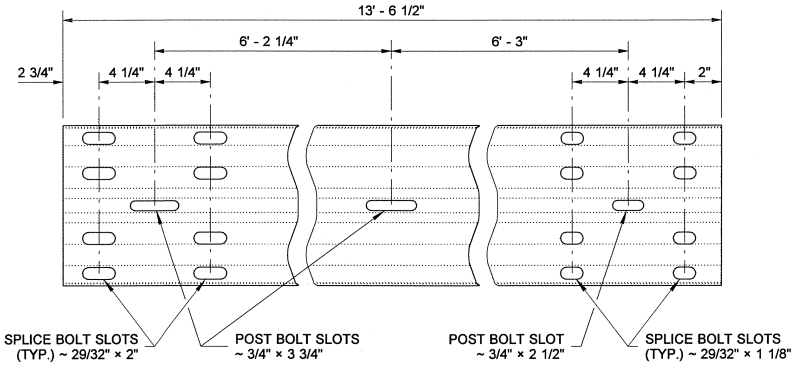

EXPANSION SECTION

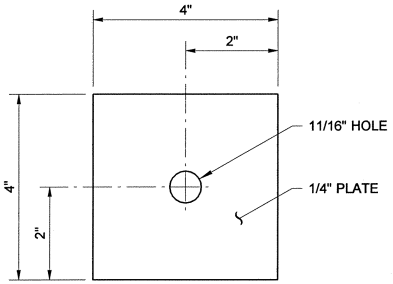

SNOW LOAD
POST WASHER
SEE NOTE 1

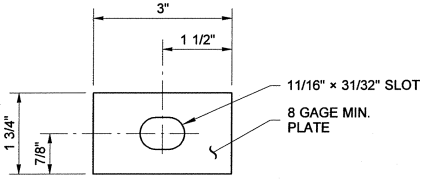

SNOW LOAD
RAIL WASHER
SEE NOTES 1 & 2

BEAM GUARDRAIL TYPES 1 ~ 4 (W-BEAM)

STANDARD PLAN C-1

SHEET 2 OF 2 SHEETS

APPROVED FOR PUBLICATION

STATE DESIGN ENGINEER — DATE 2/10/09

Washington State Department of Transportation

DRAWN BY: LISA CYFORD

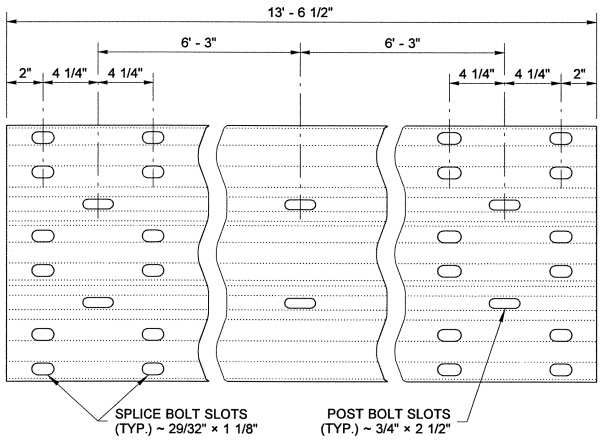

TYPICAL RAIL ELEMENT

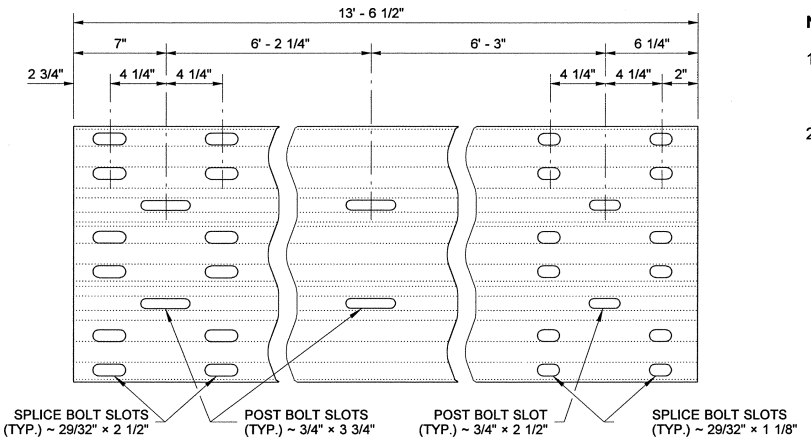

EXPANSION SECTION

NOTES

1. Type 10 posts shall be 6×8 timber or W6×9.
   Type 11 posts shall be 10×10 timber or W6×15.
   For details see **Standard Plan C-1b.**

2. Type 10 guardrail post spacing shall be 6' - 3" on center.
   Type 11 shall be a maximum of 3' - 1 1/2" on center.

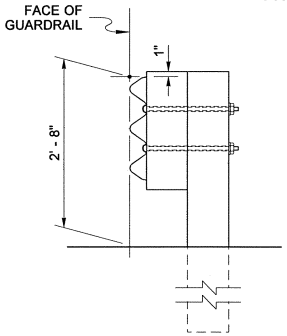

RAIL ASSEMBLY

TYPE 10

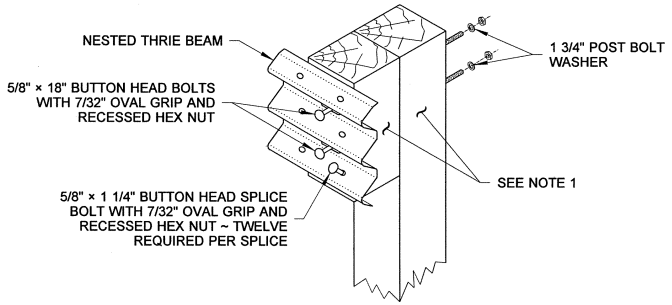

WOOD POST ASSEMBLY

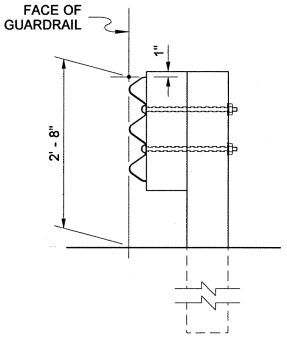

RAIL ASSEMBLY

TYPE 11

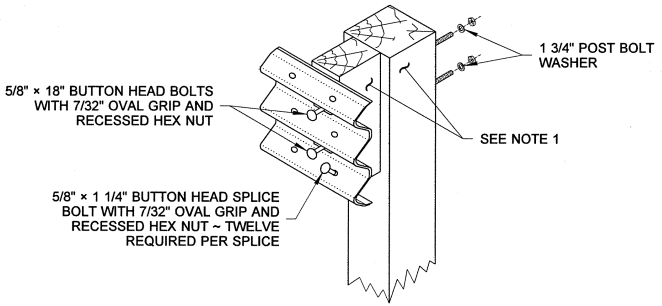

WOOD POST ASSEMBLY

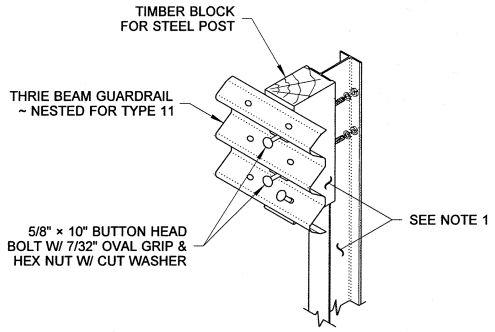

STEEL POST ASSEMBLY
TYPE 10 AND 11

MICHAEL S. FLEMING
STATE OF WASHINGTON
38777
REGISTERED
PROFESSIONAL ENGINEER
2/9/09

BEAM GUARDRAIL (THRIE BEAM)

STANDARD PLAN C-1a

SHEET 1 OF 1 SHEET

APPROVED FOR PUBLICATION

STATE DESIGN ENGINEER — DATE 2/10/09

Washington State Department of Transportation

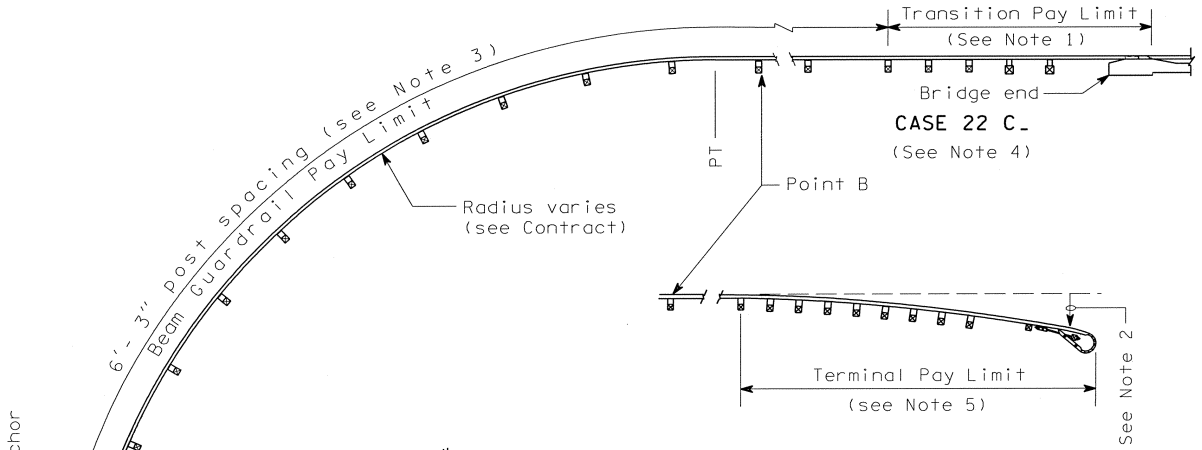

CASE 22 C_
(See Note 4)

CASE 22 D_
(See Note 4)

CASE 22 A_
(See Note 4)

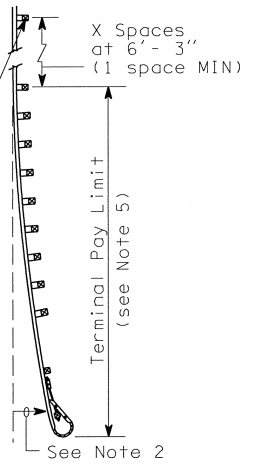

CASE 22 B_
(See Note 4)

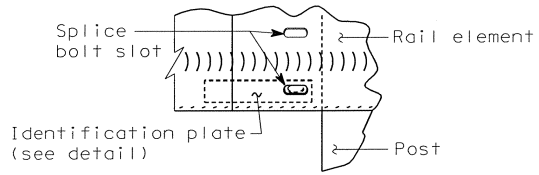

IDENTIFICATION PLATE MOUNTING DETAIL
(See Note 7)

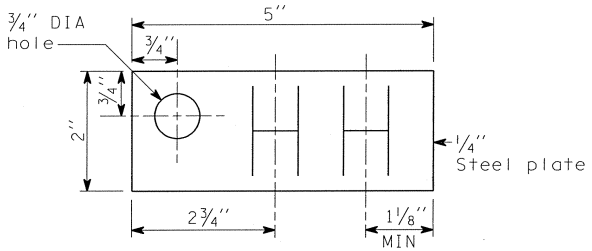

IDENTIFICATION PLATE DETAIL
(See Note 6)

NOTES

1. See Contract for transition and connection type.
2. The slope from the edge of the shoulder into the face of the guardrail should not be steeper than 10:1.
3. Guardrail installation shall be Beam Guardrail Type 1 with standard post and block.
4. First letter of case designation indicates end treatment on side road. Second letter indicates end treatment on main road. For instance a terminal on the side road and a bridge connection on the main road would be Case 22 BC.
5. For terminal type and details, see Contract and applicable Standard Plan(s).
6. Radius dimensions shall be etched into plate replacing the letters "HH" shown on the Identification Plate Detail. Digits shall be 1½" MIN height and ¾" MAX width. Plate shall be galvanized after etching.
7. The guardrail Identification Plate shall be mounted at the lower splice bolt on the back side of the rail element at the PC of the guardrail radius.

RICHARD BARSTOW ARBIN
STATE OF WASHINGTON
34042
REGISTERED
PROFESSIONAL ENGINEER
10/30/03
EXPIRES JULY 24, 2004

GUARDRAIL PLACEMENT STRONG POST INTERSECTION DESIGN STANDARD PLAN C-2p

SHEET 1 OF 1 SHEET

APPROVED FOR PUBLICATION
STATE DESIGN ENGINEER — DATE 10.31.03

DATE	REVISION	BY
09/2003	CORRECTED REFERENCES TO NOTES.	MHG

Washington State Department of Transportation

DRAWN BY: MARK SUJKA

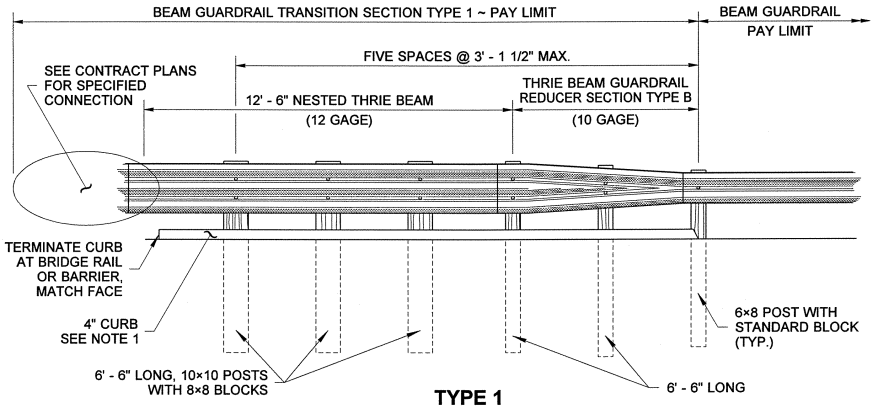

TYPE 1

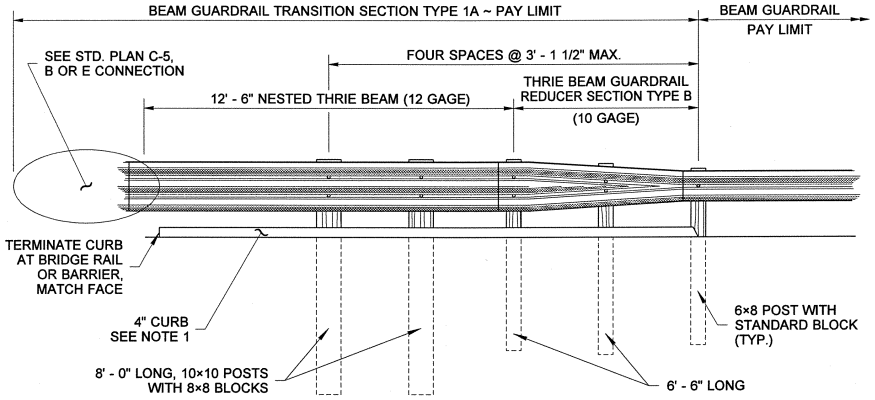

TYPE 1A

NOTE

1. Install a Type 2 Extruded Asphalt Concrete Curb (see Standard Plan F-2b) at face of Guardrail.

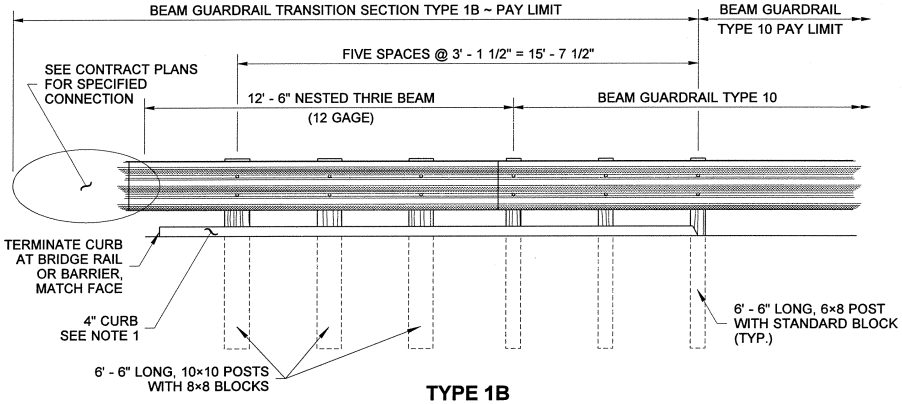

TYPE 1B

RICHARD BARSTOW BRIN
STATE OF WASHINGTON
34042
REGISTERED
PROFESSIONAL ENGINEER

9/1/05

EXPIRES JULY 24, 2006

BEAM GUARDRAIL TRANSITION SECTIONS

STANDARD PLAN C-3

SHEET 1 OF 1 SHEET

APPROVED FOR PUBLICATION

10.4.05

STATE DESIGN ENGINEER — DATE

Washington State Department of Transportation

DRAWN BY: MARK SUJKA

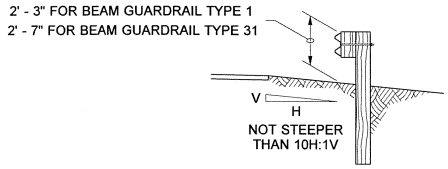

SECTION (A)

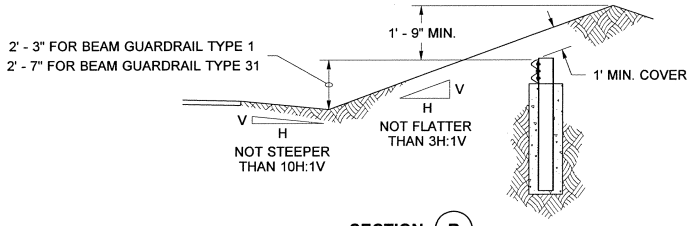

SECTION (B)

PERSPECTIVE

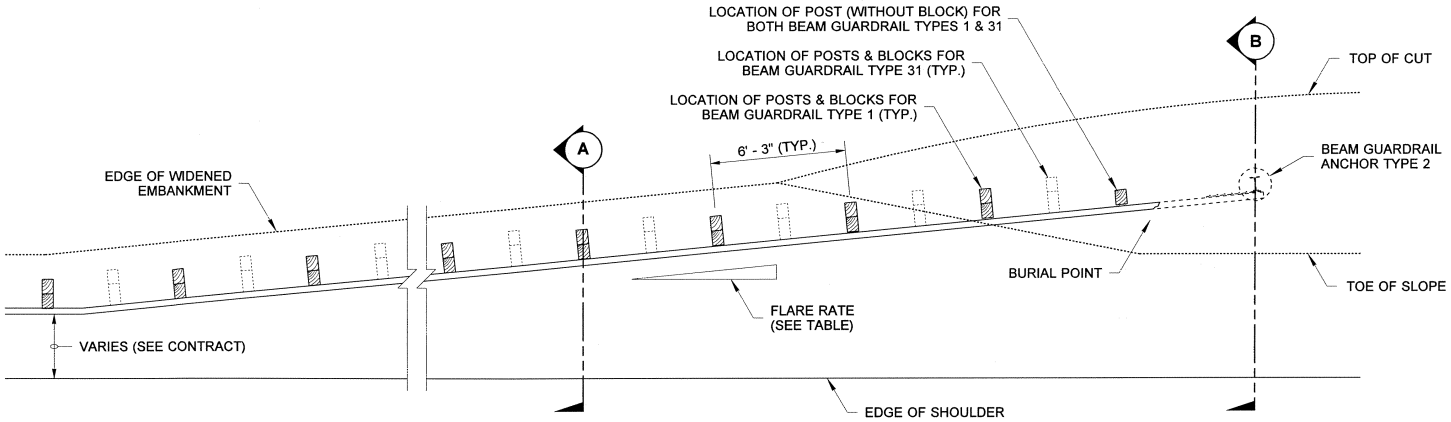

PLAN

FLARE RATE TABLE	
RATE	POSTED SPEED (mph)
15 : 1	70
14 : 1	60
12 : 1	55
11 : 1	50
10 : 1	45
9 : 1	40 or less

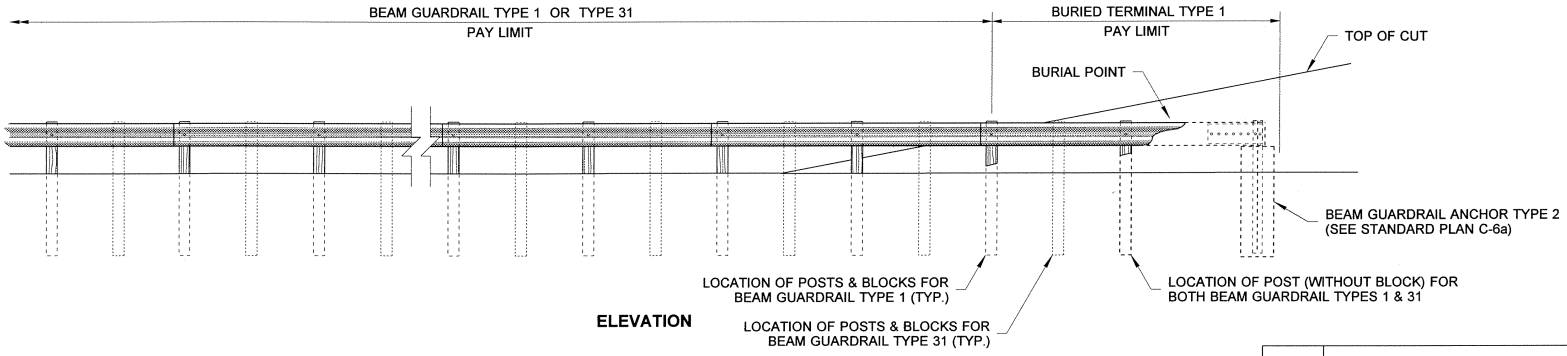

ELEVATION

2/21/2007

EXPIRES JULY 24, 2008

BEAM GUARDRAIL BURIED TERMINAL TYPE 1

STANDARD PLAN C-4

SHEET 1 OF 1 SHEET

APPROVED FOR PUBLICATION

STATE DESIGN ENGINEER — DATE 02/21/07

Washington State Department of Transportation

DATE	REVISION	BY
11/2006	REVISED TO INCLUDE 31" TALL GUARDRAIL	MAS

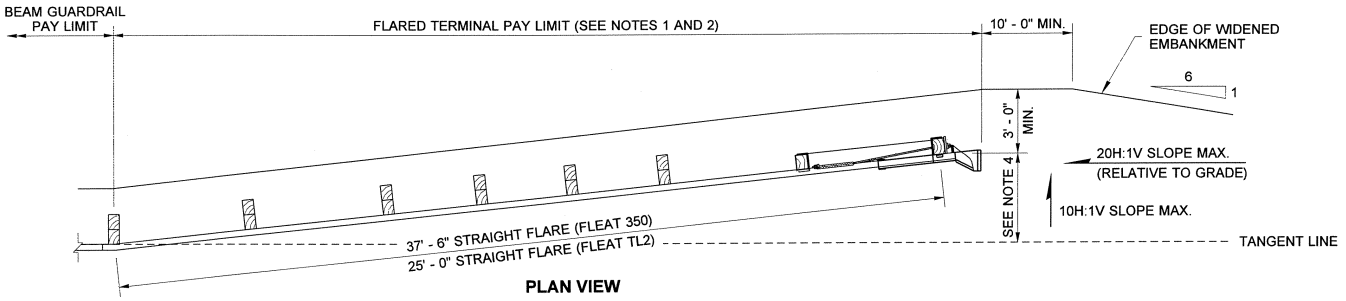

PLAN VIEW

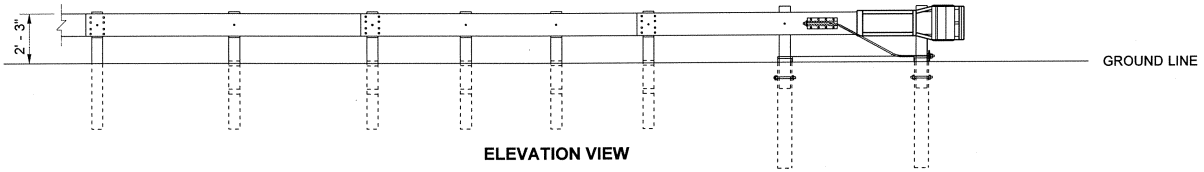

ELEVATION VIEW

FLEAT OPTION

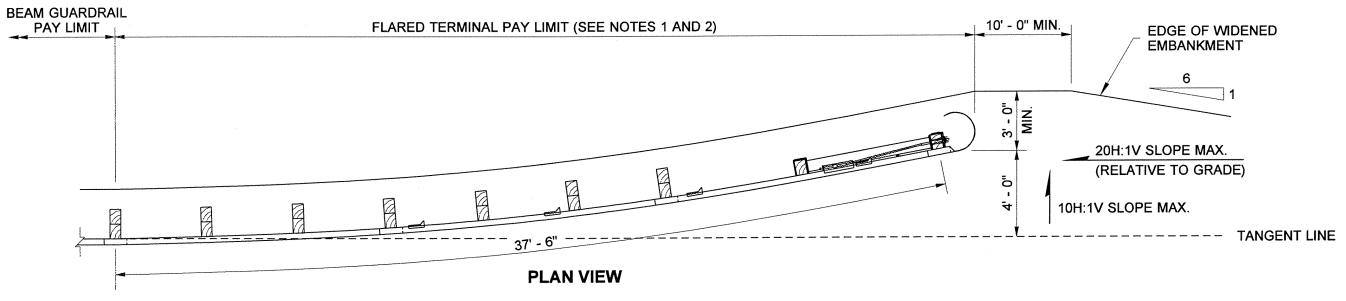

PLAN VIEW

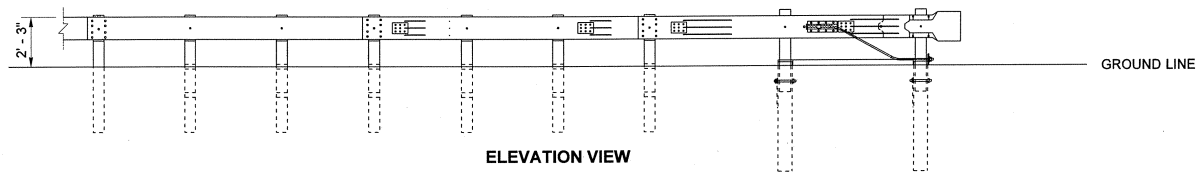

ELEVATION VIEW

SRT OPTION

NOTES

1. Unless otherwise indicated in the contract, the SRT - 350 (12.5, 8 Post) as manufactured by Trinity Industries, Inc., or a FLEAT 350 as manufactured by Road Systems Inc., shall be installed per manufacturer's recommendations. If specified in the Contract, the FLEAT TL2 as manufactured by Road Systems, Inc. shall be installed per manufacturers recommendations.

2. Where terminal is placed on a curve, and post offsets would result in the rail encroaching onto the shoulder (e.g., the inside of a curve), the posts shall be installed so that the faceof the rail is at the edge of the shoulder.

3. When snow load post washers and snow load rail washers are called for in the contract, the snow load rail washers must be omitted within the terminal limits.

4. Offset distances:
   FLEAT 350 ..... 4' - 0"
   FLEAT TL2 ..... 1' - 8" minimum

RICHARD BARSTOW — STATE OF WASHINGTON — 34042 — REGISTERED PROFESSIONAL ENGINEER — 6/7/2006

EXPIRES JULY 24, 2006

BEAM GUARDRAIL FLARED TERMINAL

STANDARD PLAN C-4b

SHEET 1 OF 1 SHEET

APPROVED FOR PUBLICATION

STATE DESIGN ENGINEER — DATE 6-8-06

Washington State Department of Transportation

DATE	REVISION	BY
04/2006	Revised FLEAT Flare Lengths	AMC

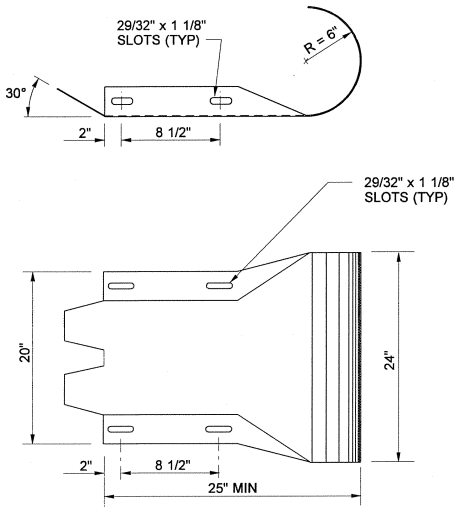

DESIGN C (THRIE BEAM)

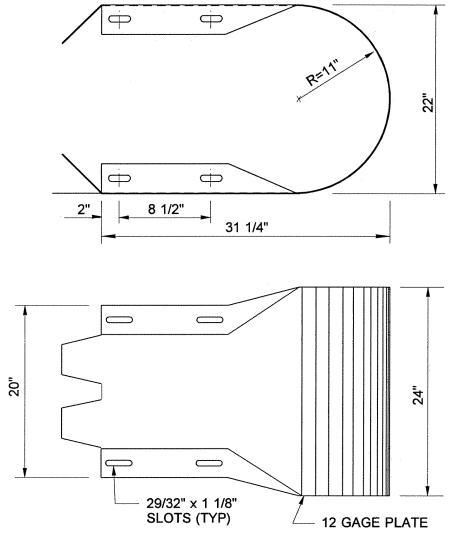

DESIGN D (THRIE BEAM)

NOTES

1. Attach guardrail to bridge rail or concrete barrier with 7/8" diameter high strength bolts (Standard Specification 9-06.5(4)) with thin slab ferrule inserts or resin bonded anchors. See the Contract Plans.
2. In cases where Design F End Section is lapped on the outside of the guardrail, a galvanized 1" ID, 2" OD, 0.134" thick, narrow Type A Plain Washer or an anchor rail washer will be placed under the splice bolt heads.

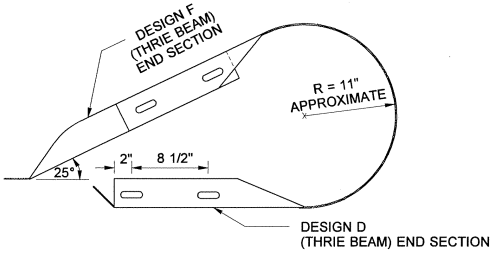

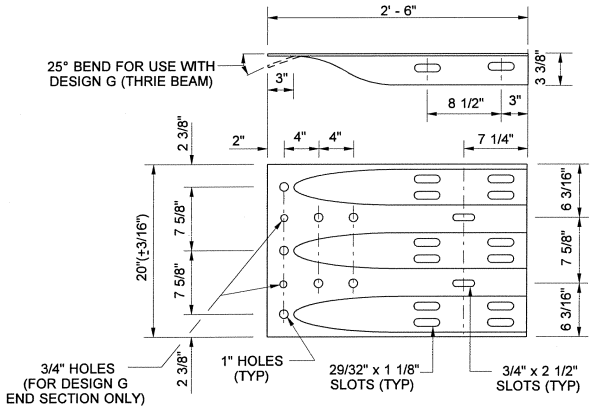

DESIGN F (THRIE BEAM)

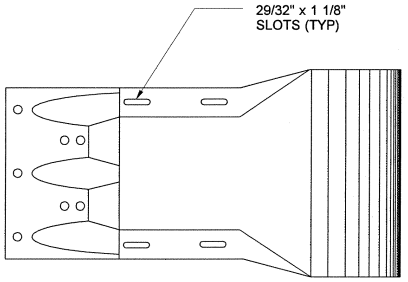

DESIGN G (THRIE BEAM)

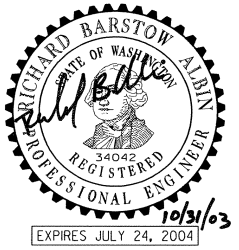

THRIE BEAM END SECTIONS

STANDARD PLAN C-7a

SHEET 1 OF 1 SHEET

APPROVED FOR PUBLICATION

STATE DESIGN ENGINEER — DATE 10.31.03

DATE	REVISION	BY
10/2003	REV. NOTE 1.	MHC

Washington State Department of Transportation

DRAWN BY: MARK SUJKA

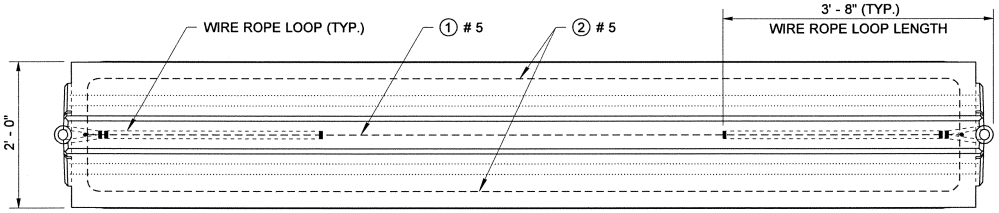

TOP VIEW

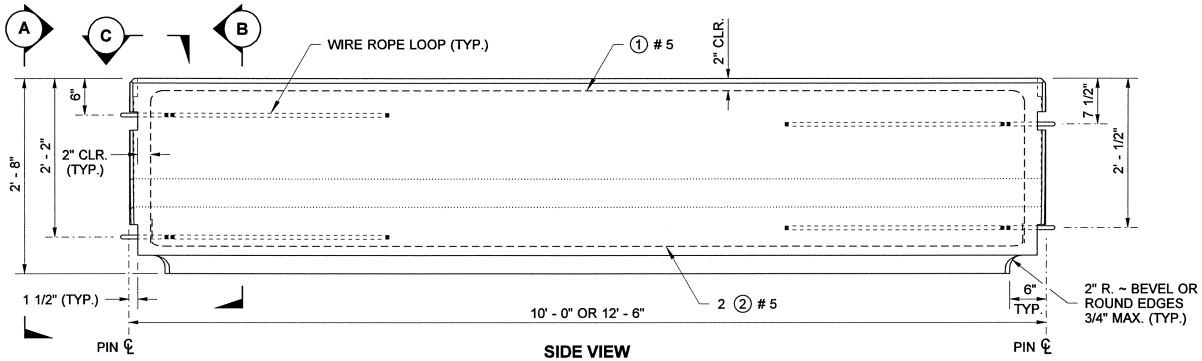

SIDE VIEW

BARRIER SECTION

NOTES

1. Wire rope loops shall be 3' - 8" long, except for the top loop of the Barrier Terminal, which shall be 2' - 0" long.
2. Except for the locations of the wire rope loops, the dimensions shown in END VIEW "A" are typical for both ends of a Barrier Section or opposing ends of Barrier Terminals.
3. Connecting and Drift Pin head designs vary among different manufacturers. Pin designs that are shaped differently than those shown in the detail are acceptable, if the bearing surface is within the minimum and maximum widths specified.
4. The vertical spacing of the Wire Rope Loops in a Barrier Terminal is determined by the end of the Barrier Segment to which it is being connected. See BARRIER CONNECTION DETAIL (Sheet 2).

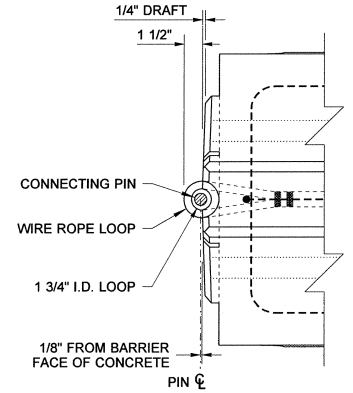

DETAIL C

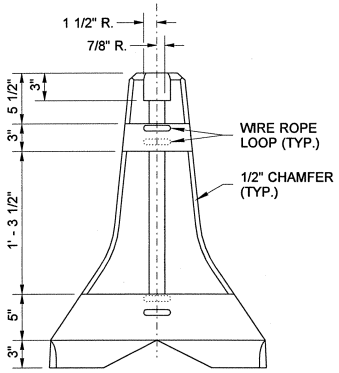

END VIEW (A)

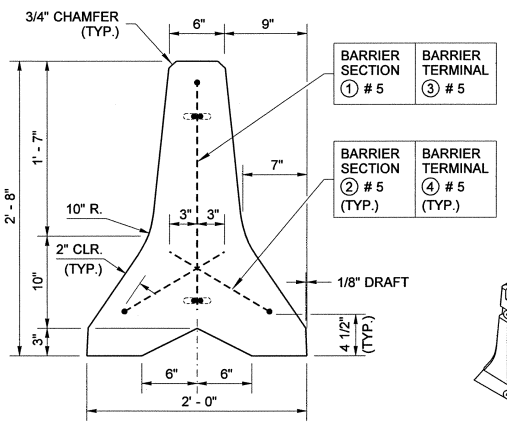

SECTION (B)

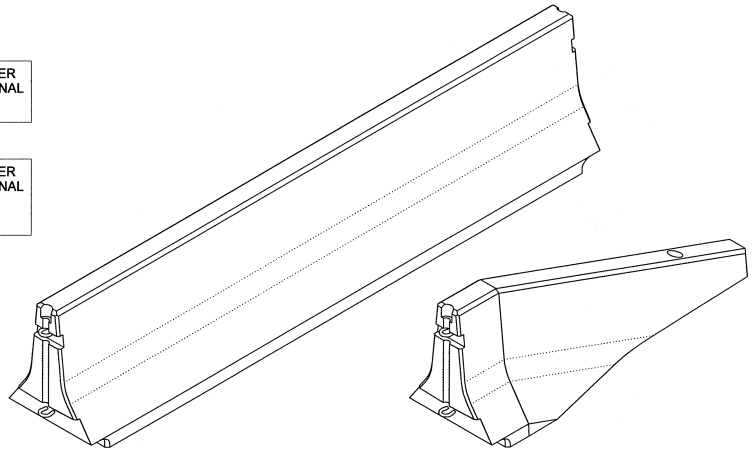

ISOMETRIC VIEWS

CONCRETE BARRIER TYPE 2

STANDARD PLAN C-8

SHEET 1 OF 2 SHEETS

APPROVED FOR PUBLICATION

STATE DESIGN ENGINEER — DATE 2/10/09

Washington State Department of Transportation

DRAWN BY: MARK SUJKA

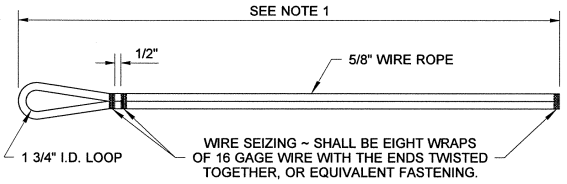

WIRE ROPE LOOP DETAIL

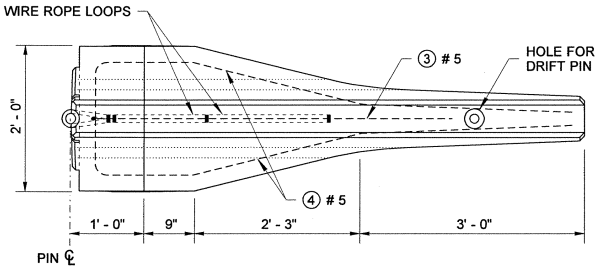

TOP VIEW

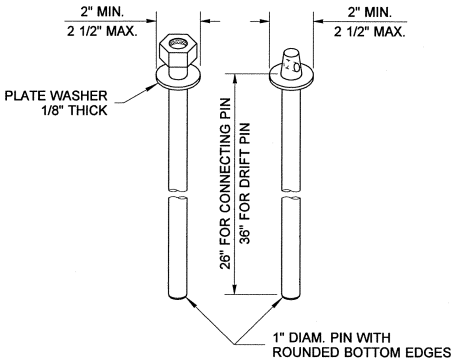

SEE NOTE 3

CONNECTING PINS AND DRIFT PINS

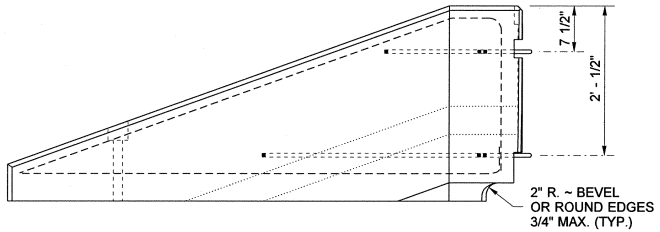

SIDE VIEW

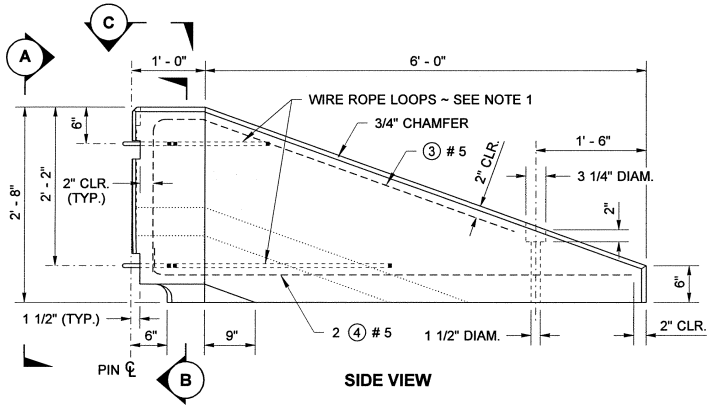

SIDE VIEW

SEE NOTE 4

BARRIER TERMINAL

BARRIER SECTION REINFORCING STEEL BENDING DIAGRAM

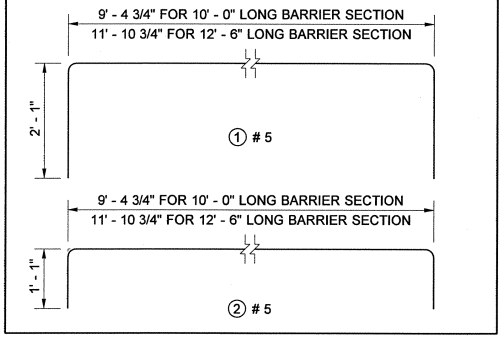

BARRIER TERMINAL REINFORCING STEEL BENDING DIAGRAM

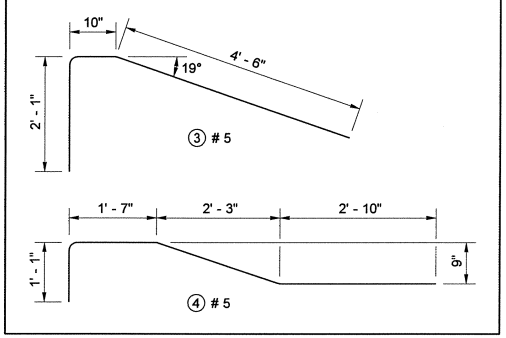

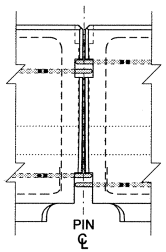

BARRIER CONNECTION DETAIL

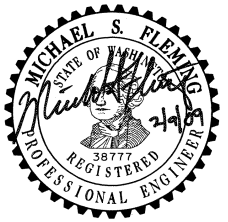

CONCRETE BARRIER TYPE 2

STANDARD PLAN C-8

SHEET 2 OF 2 SHEETS

APPROVED FOR PUBLICATION

STATE DESIGN ENGINEER — DATE 2/10/09

Washington State Department of Transportation

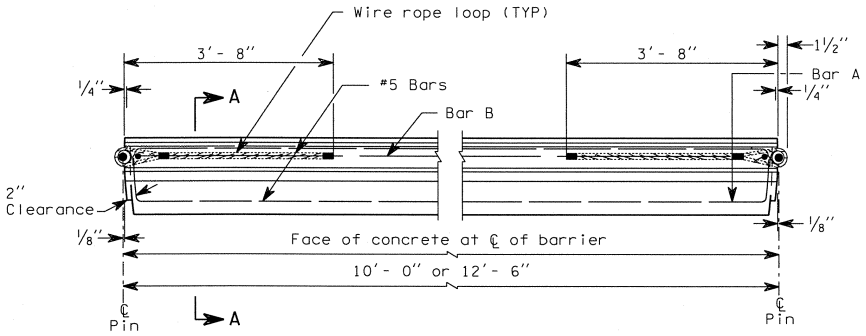

INTERMEDIATE PLAN

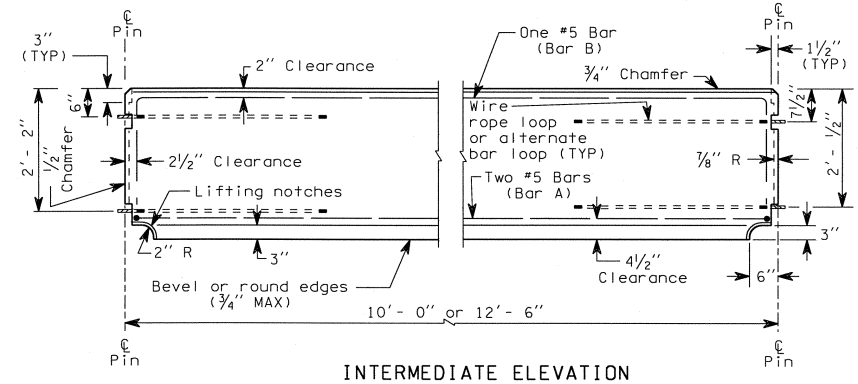

INTERMEDIATE ELEVATION

NOTE

1. For details on wire rope loop, connecting pin and end notches see Standard Plan "Concrete Barrier Type 2."

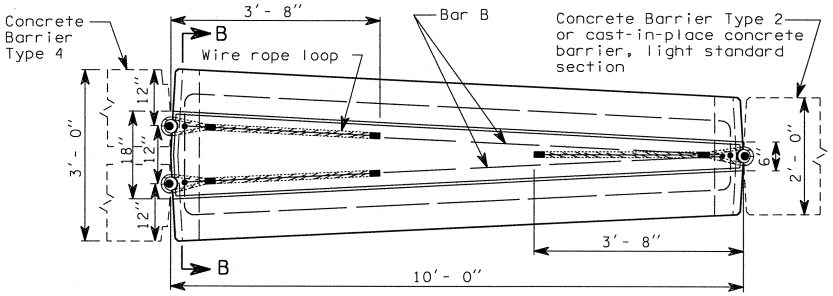

TRANSITION PLAN

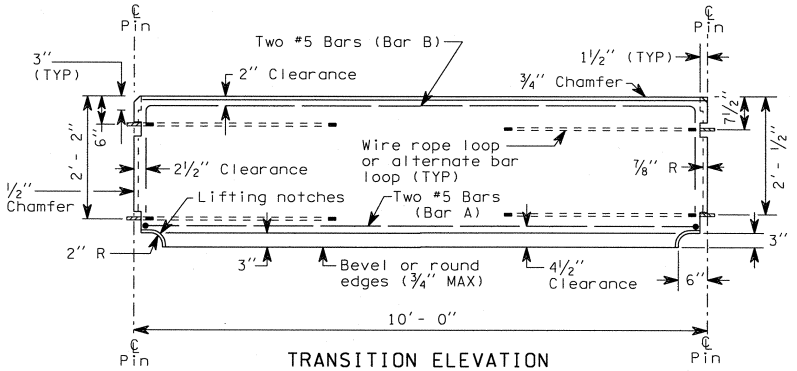

TRANSITION ELEVATION

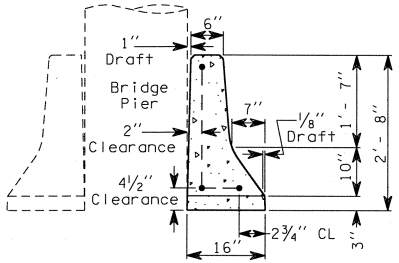

SECTION A-A
TYPE 4

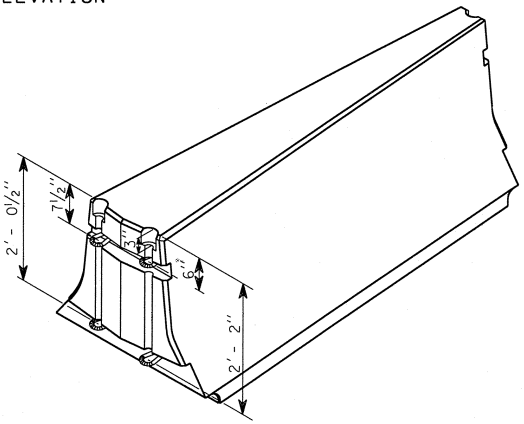

TRANSITION END VIEW

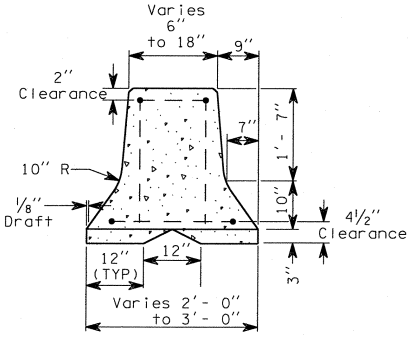

SECTION B-B
TRANSITION SECTION

CONCRETE BARRIER TYPE 4 AND TRANSITION SECTION

CLIFFORD E. MANSFIELD
STATE OF WASHINGTON
15222
REGISTERED PROFESSIONAL ENGINEER
EXPIRES MAY 3, 1998

STANDARD PLAN C-8a

APPROVED FOR PUBLICATION

STATE DESIGN ENGINEER — DATE 7/25/97

WASHINGTON STATE DEPARTMENT OF TRANSPORTATION
OLYMPIA, WASHINGTON

DRAWN BY: BILL BERENS

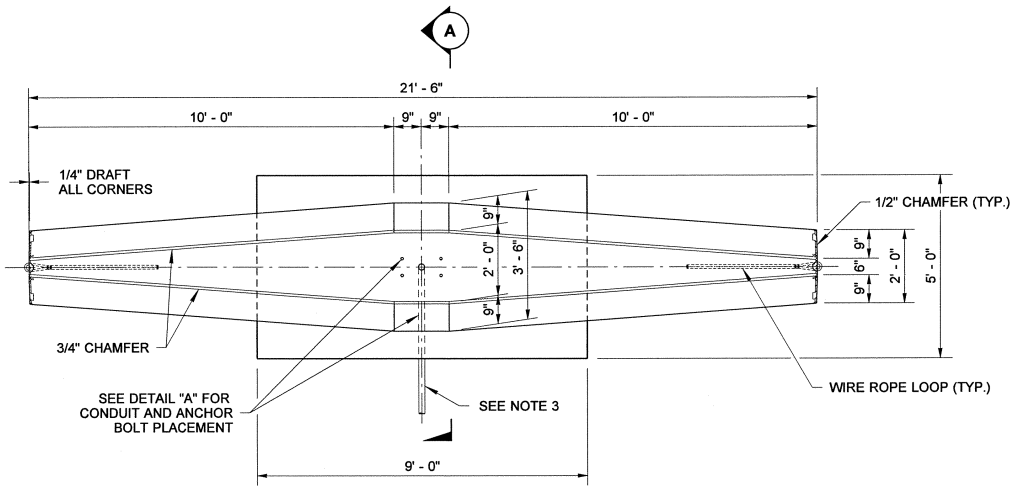

PLAN

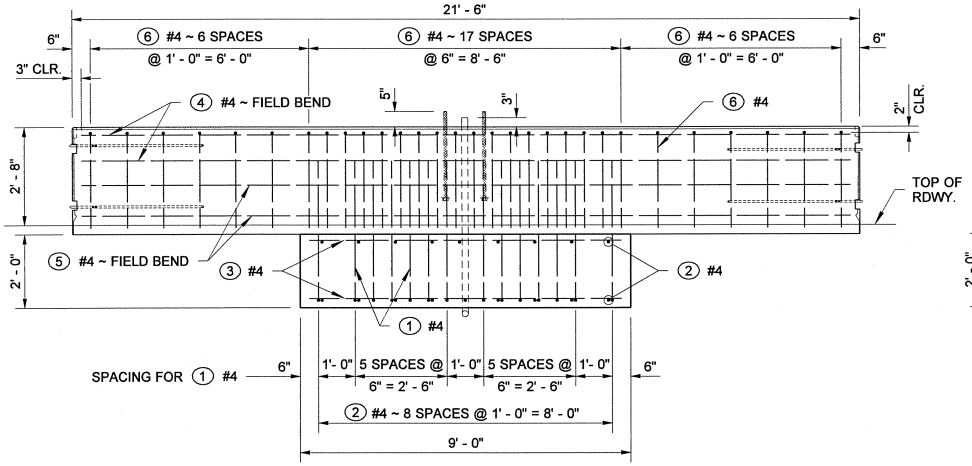

ELEVATION

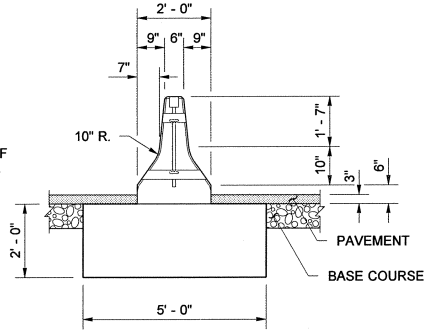

END

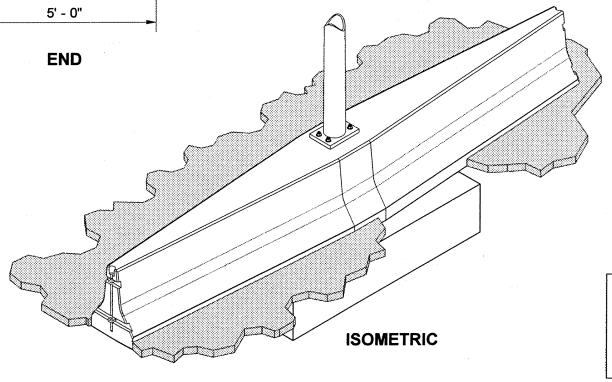

ISOMETRIC

NOTES

1. This plan shall be used for 40' and 50' Light Standards with 16' max. length double mast arms.
2. See **Standard Plan C-8** for details on barrier ends, Wire Rope Loops, and Connecting Pins.
3. See the Contract Plans for conduit placement.
4. Concrete shall be Class 4000.

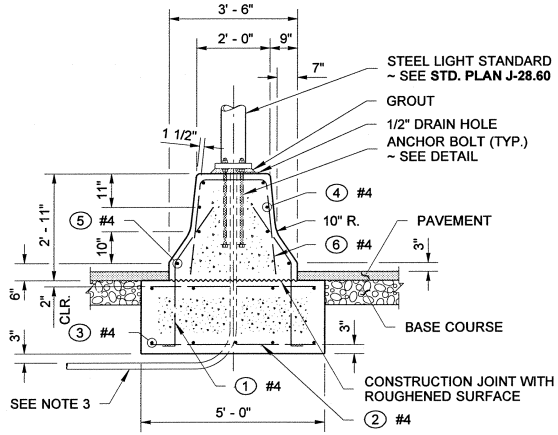

SECTION (A)

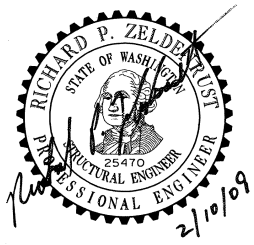

CONCRETE BARRIER LIGHT STANDARD SECTION

STANDARD PLAN C-8b

SHEET 1 OF 2 SHEETS

APPROVED FOR PUBLICATION

STATE DESIGN ENGINEER — DATE 2/10/09

Washington State Department of Transportation

DRAWN BY: BILL BERENS

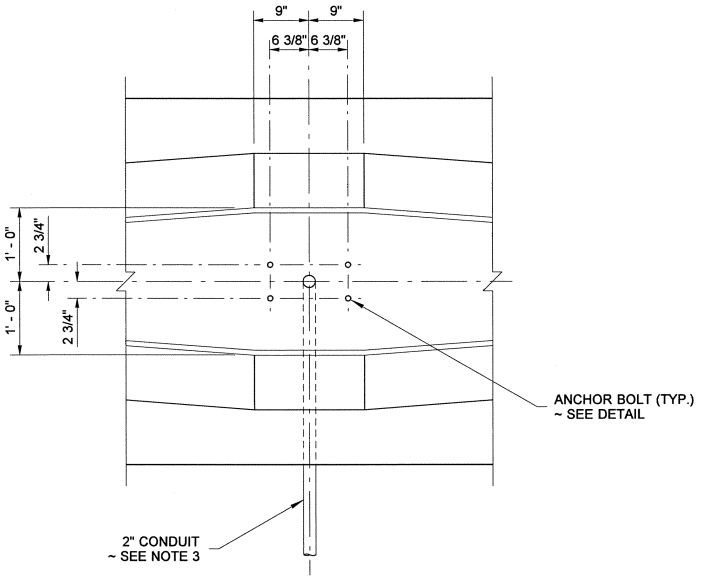

DETAIL "A"

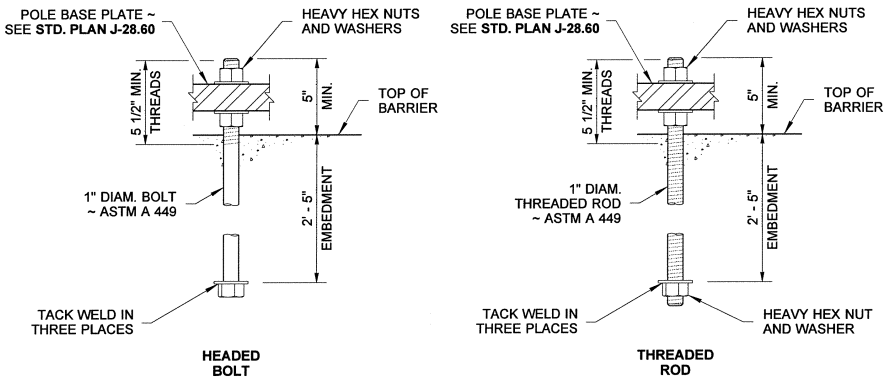

ANCHOR BOLT DETAIL

GALVANIZE EXPOSED ANCHOR ROD END 1' - 0" MIN.

BAR LIST					BENDING DIAGRAM
MARK	LOCATION	QTY.	SIZE	LENGTH	(ALL DIMENSIONS ARE OUT TO OUT)
①	FOOTING - DOWEL	28	#4	4' - 3"	
②	FOOTING	18		4' - 8"	
③	FOOTING	9		8' - 8"	
④	BARRIER	4		21' - 0"	
⑤	BARRIER	4		21' - 0"	
⑥	BARRIER	30		5' - 3" TO 6' - 9"	

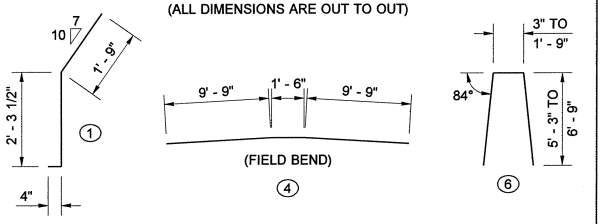

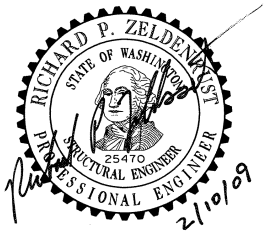

CONCRETE BARRIER LIGHT STANDARD SECTION

STANDARD PLAN C-8b

SHEET 2 OF 2 SHEETS

APPROVED FOR PUBLICATION

STATE DESIGN ENGINEER — DATE 2/10/09

Washington State Department of Transportation

DRAWN BY: MARK SUJKA

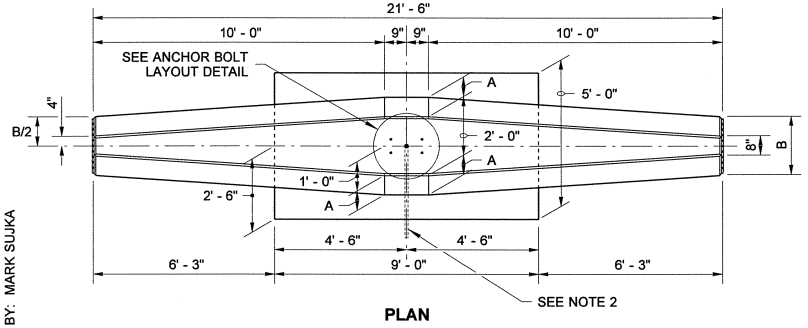

PLAN

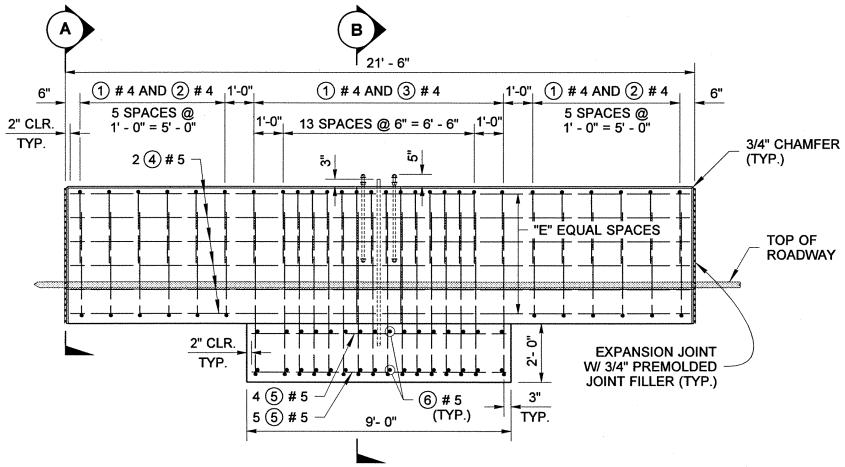

ELEVATION

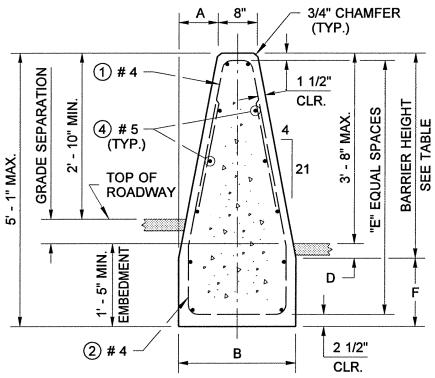

SECTION (A)

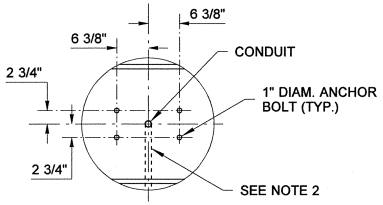

PLAN VIEW

ANCHOR BOLT LAYOUT DETAIL

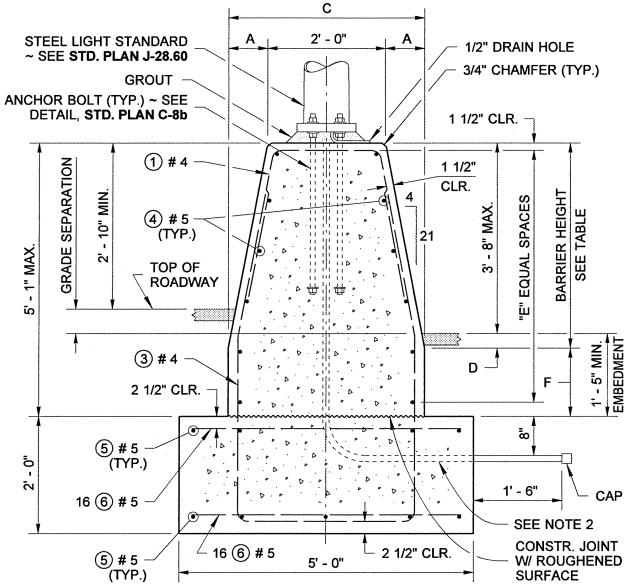

SECTION (B)

NOTES

1. When connecting between cast-in-place and precast Single Slope Barrier, provide a slot and rebar grid as shown on **Standard Plan C-13**.
2. See the Contract Plans for conduit placement.
3. Concrete shall be Class 4000.

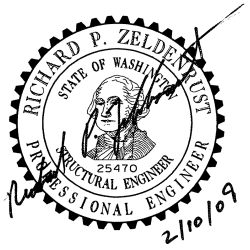

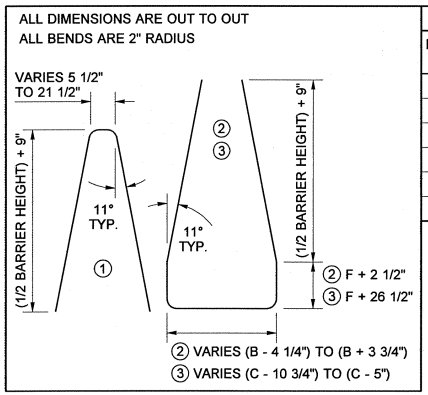

BAR LIST			
MARK NO.	LOCATION	SIZE	QUANTITY
①	BARRIER ~ TOP VERTICAL	# 4	28
②	BARRIER ~ BOTTOM VERTICAL	# 4	12
③	FND. & BARRIER ~ VERTICAL	# 4	16
④	BARRIER ~ HORIZONTAL	# 5	"Q"
⑤	FOUNDATION	# 5	9
⑥	FOUNDATION	# 5	32

TABLE								
GRADE SEPARATION	BARRIER HEIGHT	A	B	C	D	E	F	Q
0 TO 5"	3' - 6"	8"	2' - 0"	3' - 4"	3" MIN.	5	1' - 2"	12
UP TO 7"	4' - 0"	9 1/8"	2' - 2 1/4"	3' - 6 1/4"	7" MIN.	5	10"	12
UP TO 10"	4' - 6"	10 1/4"	2' - 4 1/2"	3' - 8 1/2"	10" MIN.	6	7"	14

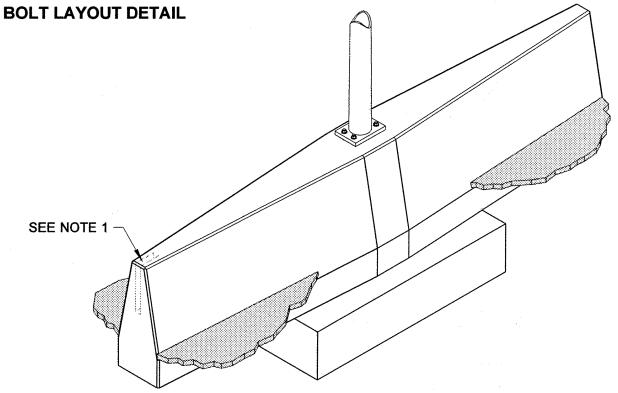

ISOMETRIC VIEW

SINGLE SLOPE CONCRETE BARRIER LIGHT STANDARD FOUNDATION STANDARD PLAN C-14h

SHEET 1 OF 1 SHEET

APPROVED FOR PUBLICATION

STATE DESIGN ENGINEER — DATE 2/10/09

Washington State Department of Transportation

DRAWN BY: MARK SUJKA

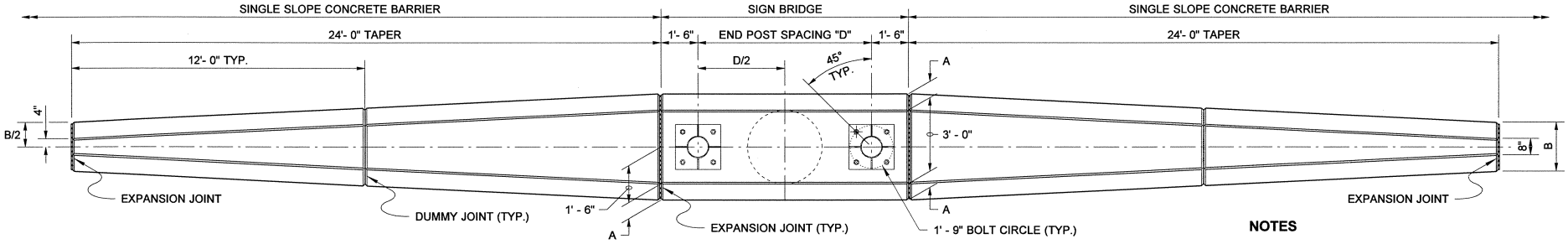

PLAN

NOTES

1. WHEN CONNECTING BETWEEN CAST-IN-PLACE AND PRECAST SINGLE SLOPE BARRIER, PROVIDE A SLOT AND REBAR GRID AS SHOWN IN **STANDARD PLAN C-13.**
2. CONCRETE SHALL BE CLASS 4000 UNLESS OTHERWISE NOTED.

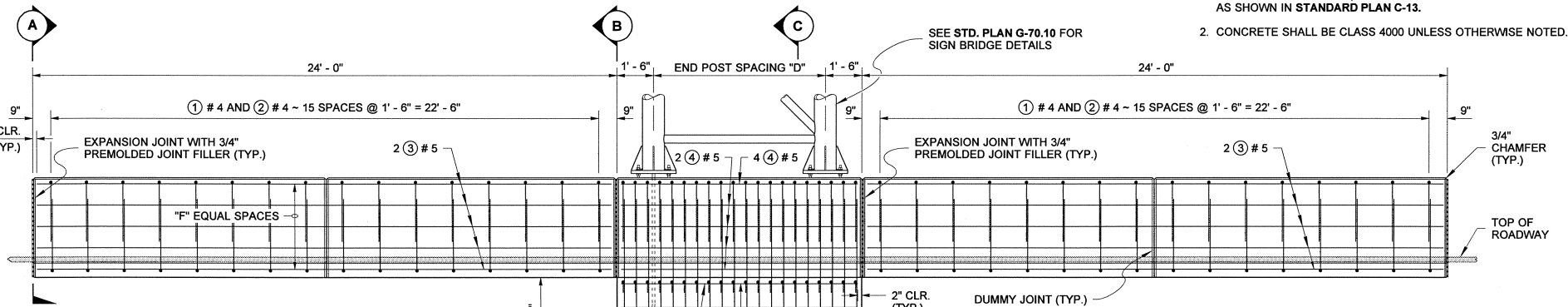

ELEVATION

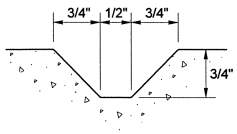

DUMMY JOINT

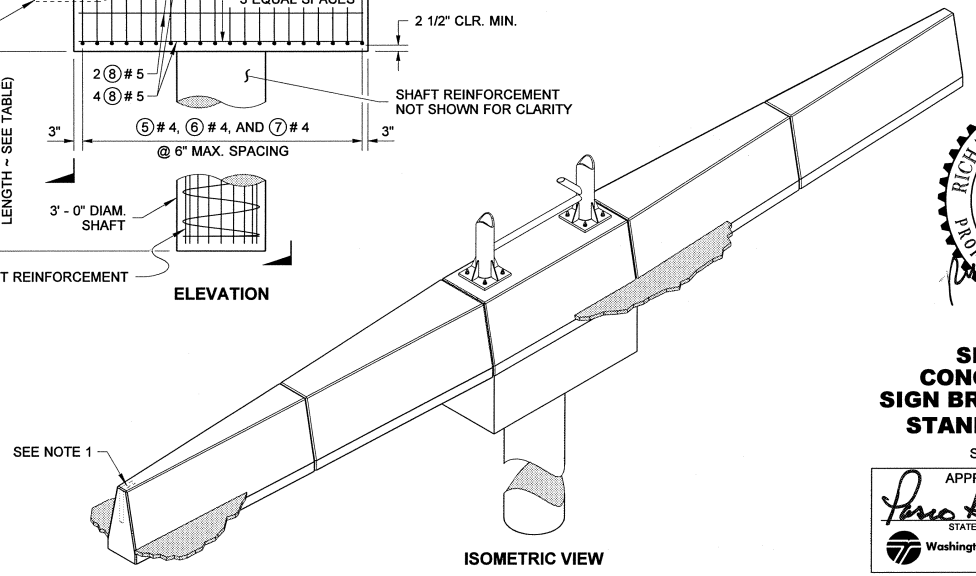

ISOMETRIC VIEW

DIMENSIONS "D" AND "Z"		
SIGN BRIDGE SPAN LENGTH	D	Z
60' OR LESS	4' - 0"	11' - 6"
61' TO 91'	5' - 0"	13' - 6"
91' TO 120'	6' - 0"	15' - 0"
121' TO 150'	7' - 0"	16' - 6"

SHAFT DEPTH "Z" IS BASED ON ALLOWABLE LATERAL BEARING PRESSURE IN EXCESS OF 1500 PSF.

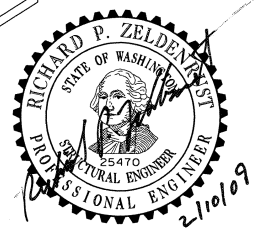

SINGLE SLOPE CONCRETE BARRIER SIGN BRIDGE FOUNDATION STANDARD PLAN C-14i

SHEET 1 OF 2 SHEETS

APPROVED FOR PUBLICATION

STATE DESIGN ENGINEER — DATE 2/10/09

Washington State Department of Transportation

DRAWN BY: MARK SUJKA

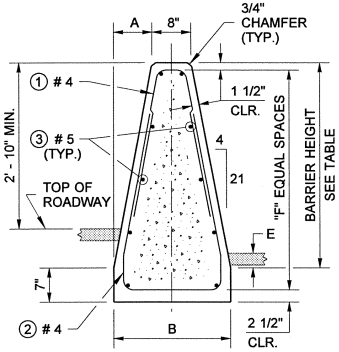

SECTION (A)

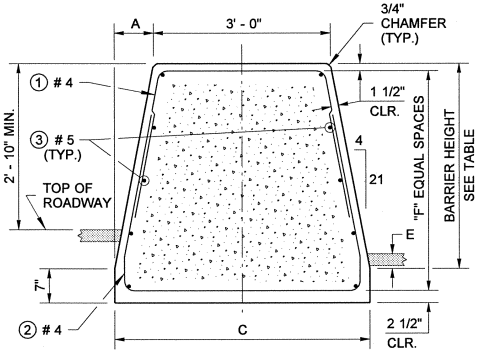

SECTION (B)

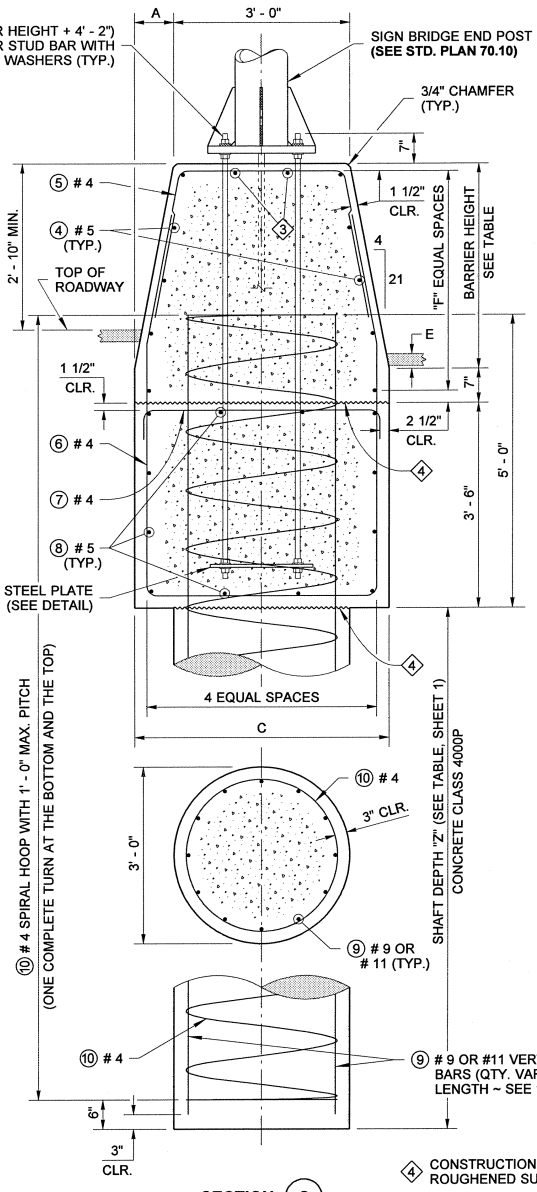

SECTION (C)

④ CONSTRUCTION JOINT WITH ROUGHENED SURFACE

TABLE							
GRADE SEPARATION	BARRIER HEIGHT	A	B	C	E	F	Q
0 TO 5"	3' - 6"	8"	2' - 0"	4' - 4"	3" MIN.	4	10 ◇3
UP TO 7"	4' - 0"	9 1/8"	2' - 2 1/4"	4' - 6 1/4"	7" MIN.	5	12 ◇3
UP TO 10"	4' - 6"	10 1/4"	2' - 4 1/2"	4' - 8 1/2"	10" MIN.	6	14 ◇3

◇3 ADD TWO ④ # 5 BARS, EQUALLY SPACED, AT THE TOP OF THE FOUNDATION BARRIER

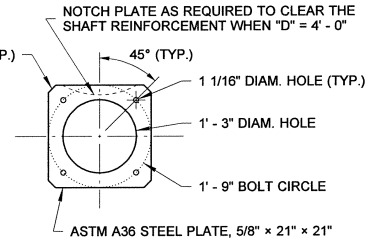

STEEL PLATE DETAIL

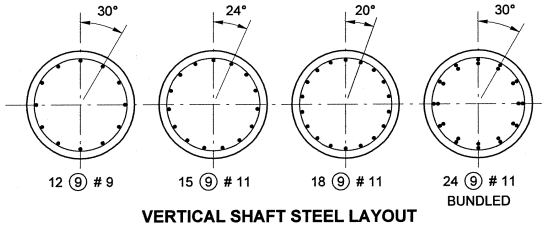

VERTICAL SHAFT STEEL LAYOUT

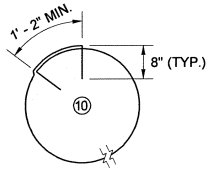

LAP SPLICE DETAIL

BAR LIST									
MARK NO.	LOCATION	SPAN LENGTH							
		60' OR LESS		61' TO 91'		91' TO 120'		121' TO 150'	
		SIZE	QTY.	SIZE	QTY.	SIZE	QTY.	SIZE	QTY.
①	BARRIER ~ TOP VERTICAL	# 4	32	# 4	32	# 4	32	# 4	32
②	BARRIER ~ BOTTOM VERTICAL	# 4	28	# 4	28	# 4	28	# 4	28
③	BARRIER ~ HORIZONTAL	# 5	◇1	# 5	◇1	# 5	◇1	# 5	◇1
④	BARRIER ~ HORIZONTAL	# 5	◇1	# 5	◇1	# 5	◇1	# 5	◇1
⑤	BARRIER ~ TOP VERTICAL	# 4	14	# 4	16	# 4	18	# 4	20
⑥	CAP & BARRIER ~ VERTICAL	# 4	14	# 4	16	# 4	18	# 4	20
⑦	CAP ~ TOP TRANSVERSE	# 4	14	# 4	16	# 4	18	# 4	20
⑧	CAP ~ HORIZONTAL	# 5	12	# 5	12	# 5	12	# 5	12
⑨	SHAFT ~ VERTICAL	# 9	12	# 11	15	# 11	18	# 11	24
⑩	SHAFT ~ SPIRAL	# 4	1 ◇2	# 4	1 ◇2	# 4	1 ◇2	# 4	1 ◇2

◇1 SEE TABLE, THIS SHEET, COLUMN "Q"

◇2 IF JOINING TWO SPIRALS, SEE LAP SPLICE DETAIL

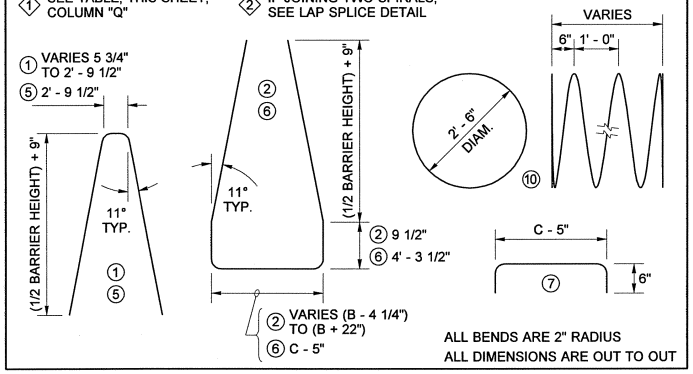

ALL BENDS ARE 2" RADIUS
ALL DIMENSIONS ARE OUT TO OUT

RICHARD P. ZELDENRUST
STATE OF WASHINGTON
25470
STRUCTURAL ENGINEER
PROFESSIONAL ENGINEER
2/10/09

SINGLE SLOPE CONCRETE BARRIER SIGN BRIDGE FOUNDATION STANDARD PLAN C-14i

SHEET 2 OF 2 SHEETS

APPROVED FOR PUBLICATION

STATE DESIGN ENGINEER — DATE 2/10/09

Washington State Department of Transportation

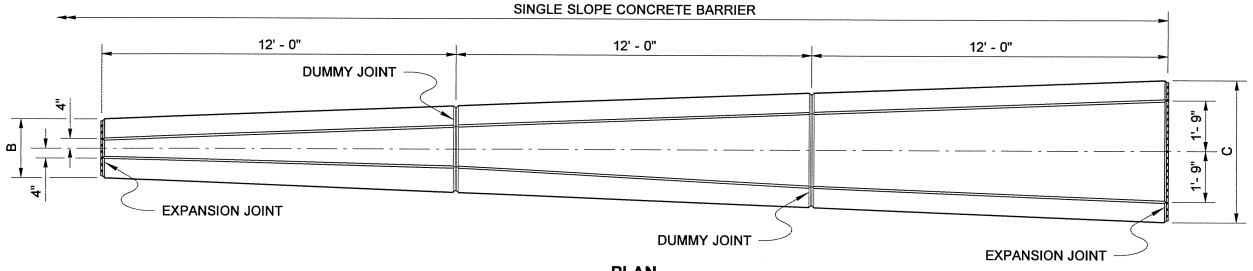

PLAN

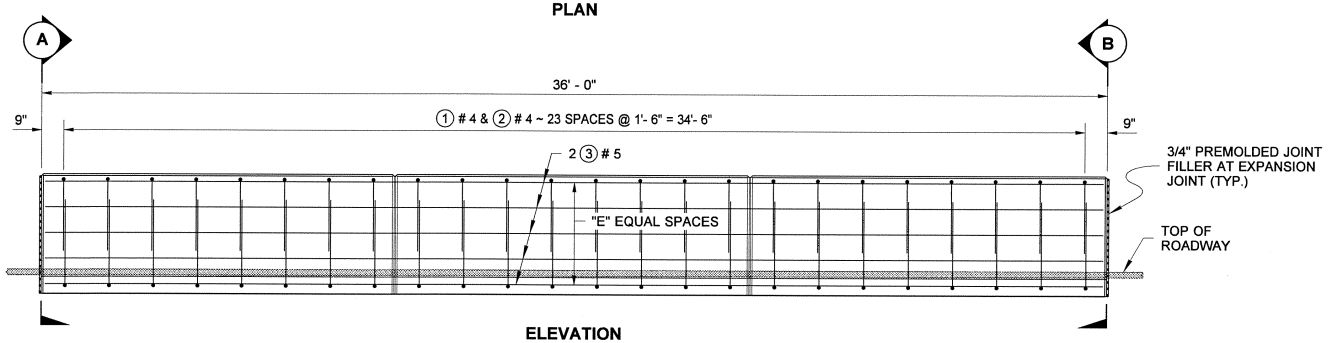

ELEVATION

NOTES

1. WHEN CONNECTING BETWEEN CAST-IN-PLACE AND PRECAST SINGLE SLOPE BARRIER, PROVIDE A SLOT AND REBAR GRID AS SHOWN IN STD. PLAN C-13.
2. ALL CONCRETE SHALL BE CLASS 4000.

BAR LIST

MARK NO.	LOCATION	SIZE	QTY.
①	BARRIER ~ TOP VERTICAL	# 4	24
②	BARRIER ~ BOTTOM VERTICAL	# 4	24
③	BARRIER ~ HORIZONTAL	# 5	◇1

◇1 SEE DIMENSION TABLE ~ NOT COUNTING SPLICES

ALL DIMENSIONS ARE OUT TO OUT
ALL BENDS ARE 2" RADIUS

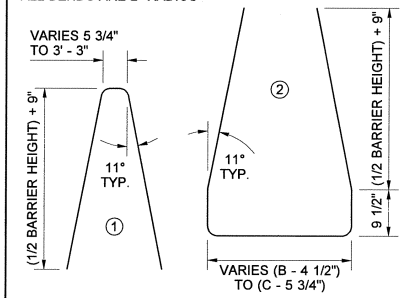

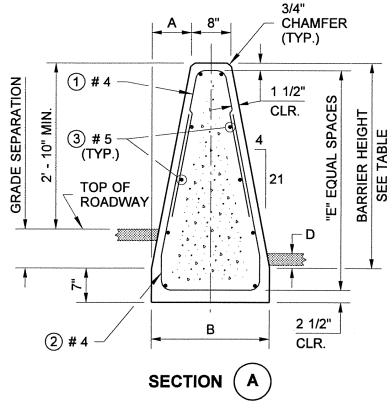

SECTION (A)

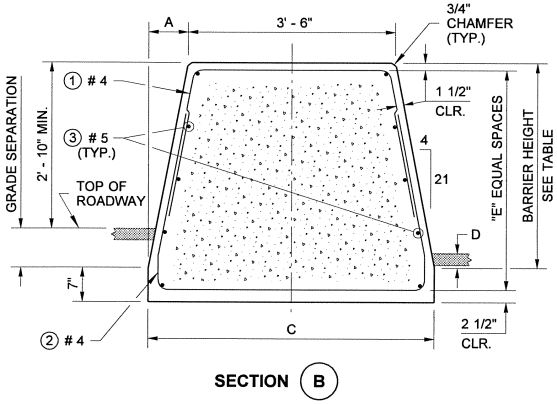

SECTION (B)

DUMMY JOINT

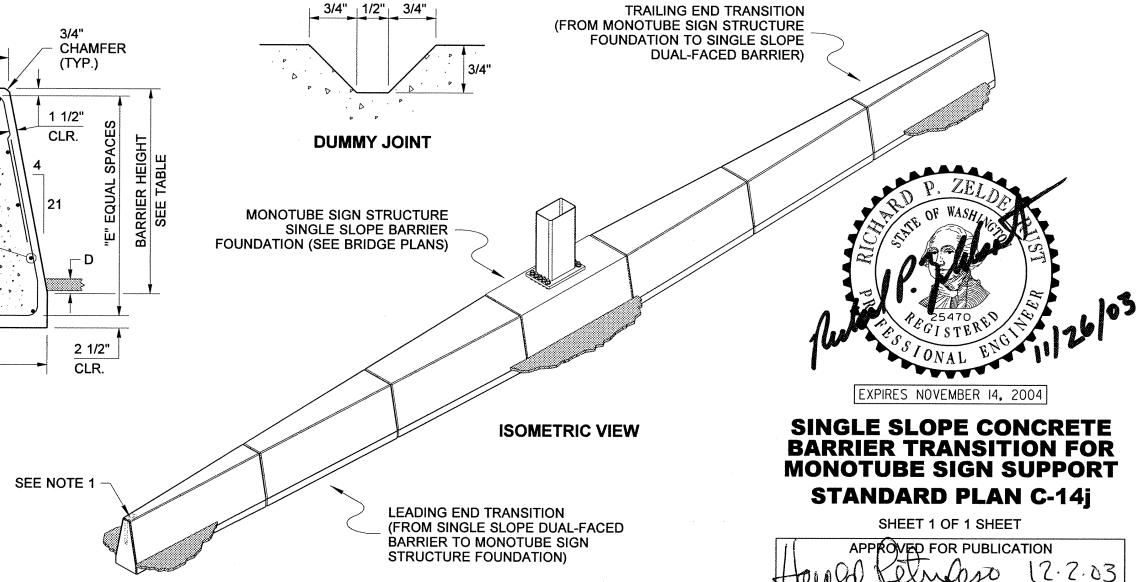

ISOMETRIC VIEW

TABLE							
GRADE SEPARATION	BARRIER HEIGHT	A	B	C	D	E	HORIZONTAL BARS (QTY.)
0 TO 5"	3' - 6"	8"	2' - 0"	4' - 10"	3" MIN.	4	10
UP TO 7"	4' - 0"	9 1/8"	2' - 2 1/4"	5' - 0 1/4"	7" MIN.	5	12
UP TO 10"	4' - 6"	10 1/4"	2' - 4 1/2"	5' - 2 1/2"	10" MIN.	6	14

EXPIRES NOVEMBER 14, 2004

SINGLE SLOPE CONCRETE BARRIER TRANSITION FOR MONOTUBE SIGN SUPPORT

STANDARD PLAN C-14j

SHEET 1 OF 1 SHEET

APPROVED FOR PUBLICATION

Harold Peterson 12-2-03

STATE DESIGN ENGINEER — DATE

Washington State Department of Transportation

DRAWN BY: BILL BERENS

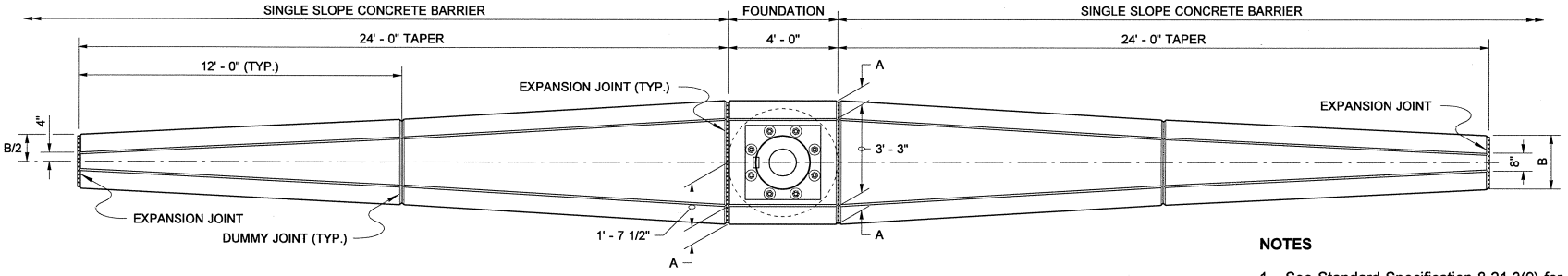

PLAN

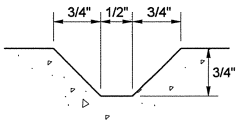

DUMMY JOINT

NOTES

1. See Standard Specification 8-21.3(9) for construction requirements.
2. Use a template to locate and secure the bolts during foundation installation.
3. When connecting between cast-in-place and precast single slope barrier, provide a slot and rebar grid as shown in **Standard Plan C-13.**

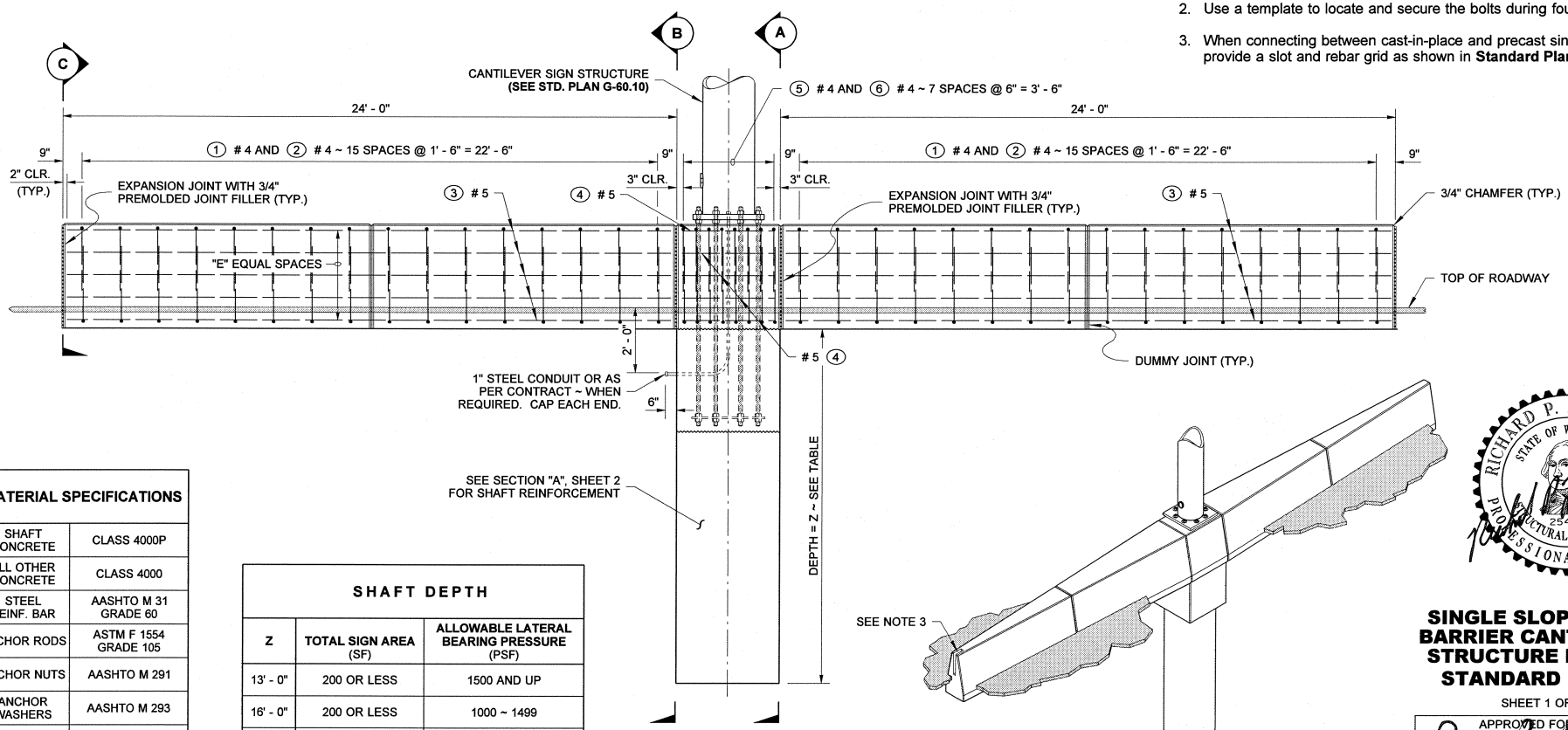

ELEVATION

ISOMETRIC

MATERIAL SPECIFICATIONS	
SHAFT CONCRETE	CLASS 4000P
ALL OTHER CONCRETE	CLASS 4000
STEEL REINF. BAR	AASHTO M 31 GRADE 60
ANCHOR RODS	ASTM F 1554 GRADE 105
ANCHOR NUTS	AASHTO M 291
ANCHOR WASHERS	AASHTO M 293
ANCHORAGE GALVANIZING	AASHTO M 232
STEEL PLATE	ASTM A 36

SHAFT DEPTH		
Z	TOTAL SIGN AREA (SF)	ALLOWABLE LATERAL BEARING PRESSURE (PSF)
13' - 0"	200 OR LESS	1500 AND UP
16' - 0"	200 OR LESS	1000 ~ 1499
18' - 0"	200 ~ 400	1500 AND UP
22' - 0"	200 ~ 400	1000 ~ 1499

SINGLE SLOPE CONCRETE BARRIER CANTILEVER SIGN STRUCTURE FOUNDATION STANDARD PLAN C-14k

SHEET 1 OF 2 SHEETS

APPROVED FOR PUBLICATION

STATE DESIGN ENGINEER — DATE 2/10/09

Washington State Department of Transportation

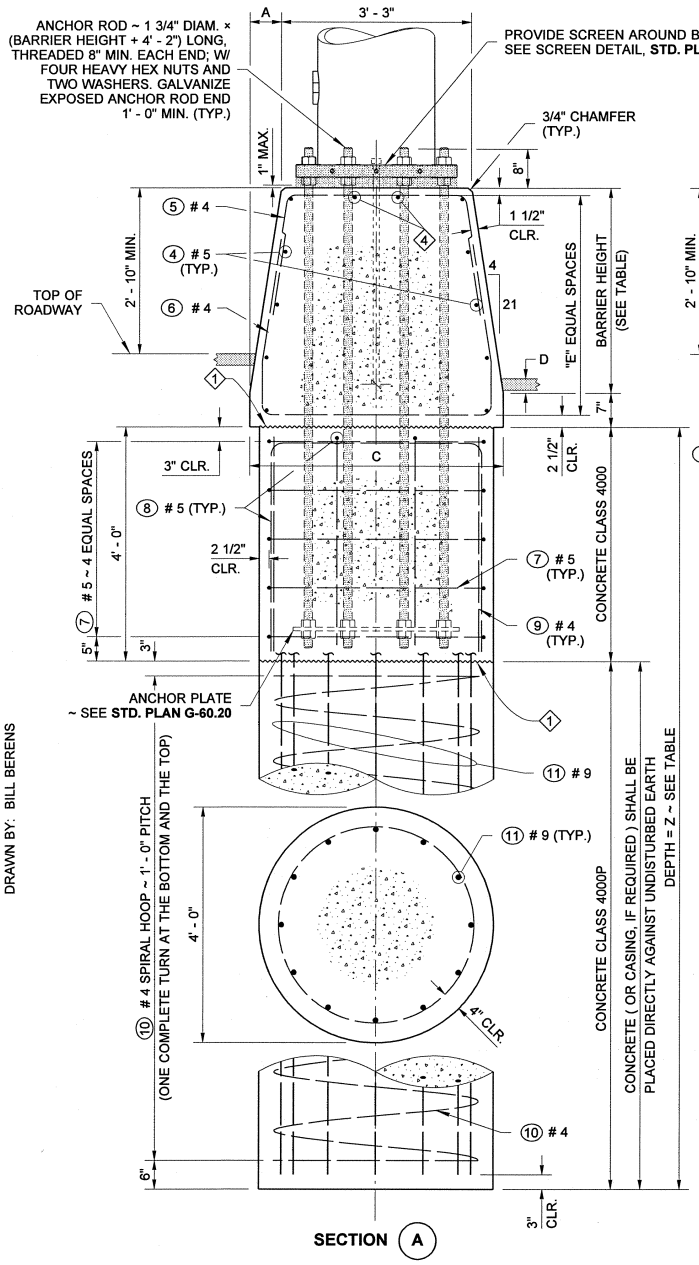

SECTION (A)

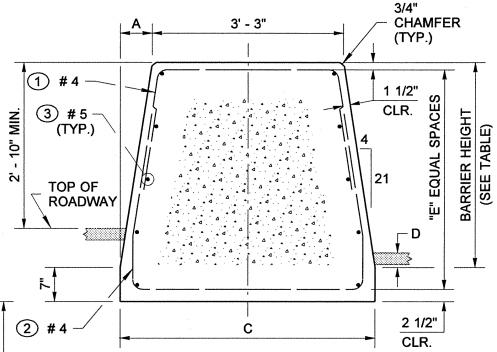

SECTION (B)

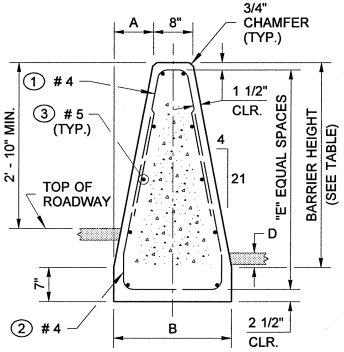

SECTION (C)

TABLE							
GRADE SEPARATION	BARRIER HEIGHT	A	B	C	D	E	Q
0 TO 5"	3' - 6"	8"	2' - 0"	4' - 7"	3" MIN.	4	10 ◇4
UP TO 7"	4' - 0"	9 1/8"	2' - 2 1/4"	4' - 9 1/4"	7" MIN.	5	12 ◇4
UP TO 10"	4' - 6"	10 1/4"	2' - 4 1/2"	4' - 11 1/2"	10" MIN.	6	14 ◇4

BAR LIST					
MARK NO.	LOCATION	QTY.	LENGTH	SIZE	TYPE
1	BARRIER ~ TOP VERTICAL	32	VARIES	# 4	
2	BARRIER ~ BOTTOM VERTICAL	32	VARIES	# 4	
3	BARRIER ~ HORIZONTAL	◇2	23' - 8"	# 5	STR.
4	BARRIER ~ HORIZONTAL	◇2	3' - 8"	# 5	STR.
5	BARRIER ~ TOP VERTICAL	8	VARIES	# 4	
6	BARRIER ~ BOTTOM VERTICAL	8	VARIES	# 4	
7	CAP ~ HOOP	5	15' - 9"	# 5	
8	CAP ~ TOP	4	10' - 10"	# 5	
9	CAP ~ VERTICAL, EACH CORNER	4	3' - 4"	# 4	STR.
10	SHAFT ~ SPIRAL	1 ◇3	AS REQ'D	# 4	
11	SHAFT ~ VERTICAL	12	"Z" MINUS CLEARANCES	# 9	STR.

◇1 CONSTRUCTION JOINT WITH ROUGHENED SURFACE

◇2 SEE TABLE, THIS SHEET, COLUMN "Q"

◇3 IF JOINING TWO SPIRALS, SEE LAP SPLICE DETAIL, **STD. PLAN G-60.20, SHEET 2**

◇4 ADD TWO (4) #5 BARS, EQUALLY SPACED, AT THE TOP OF THE FOUNDATION BARRIER

BENDING DIAGRAM

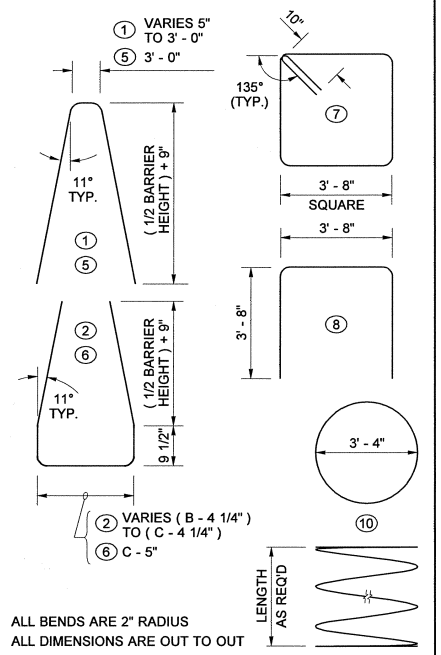

ALL BENDS ARE 2" RADIUS
ALL DIMENSIONS ARE OUT TO OUT

DRAWN BY: BILL BERENS

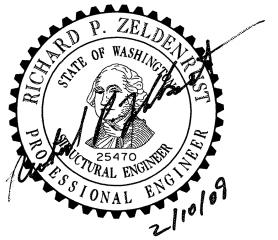

SINGLE SLOPE CONCRETE BARRIER CANTILEVER SIGN STRUCTURE FOUNDATION STANDARD PLAN C-14k

SHEET 2 OF 2 SHEETS

APPROVED FOR PUBLICATION

STATE DESIGN ENGINEER — DATE 2/10/09

Washington State Department of Transportation

DRAWN BY: FERN LIDDELL

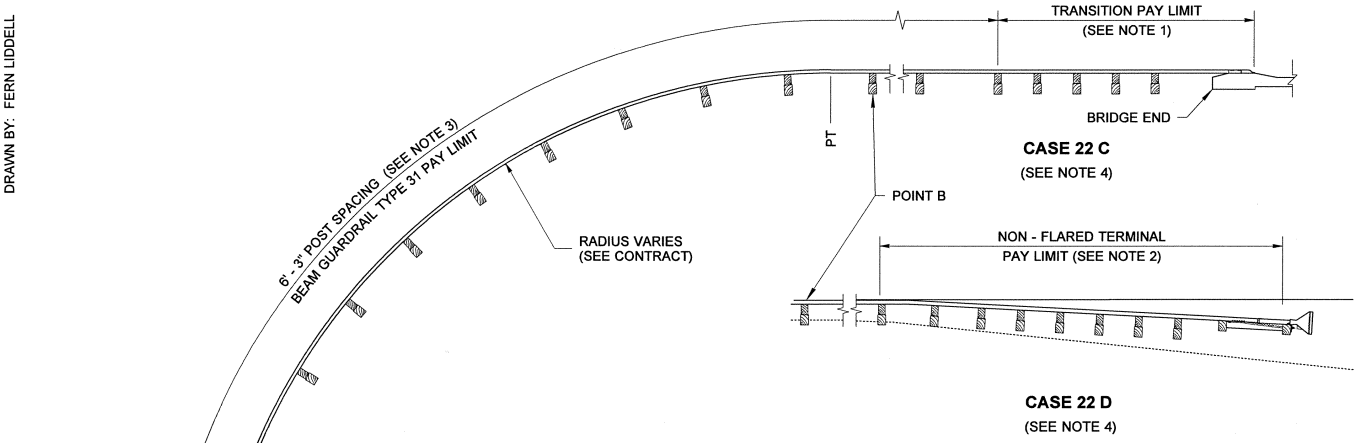

CASE 22 C
(SEE NOTE 4)

CASE 22 D
(SEE NOTE 4)

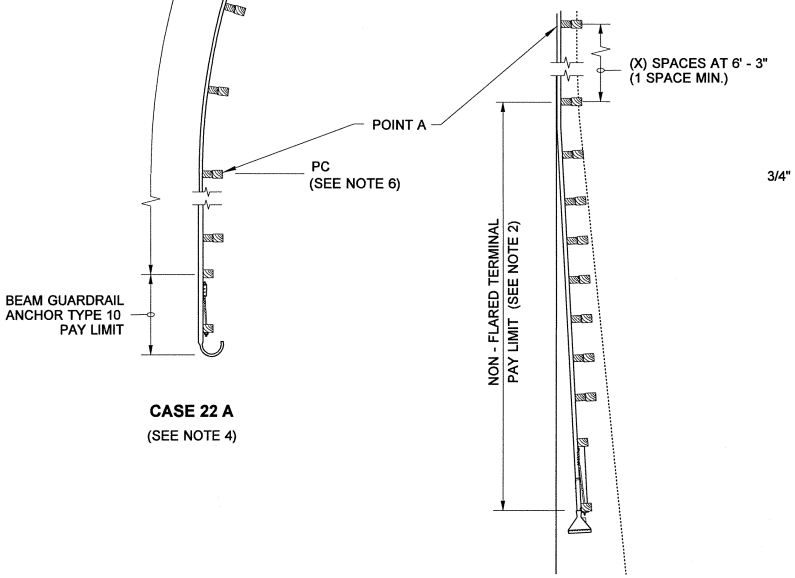

CASE 22 A
(SEE NOTE 4)

CASE 22 B
(SEE NOTE 4)

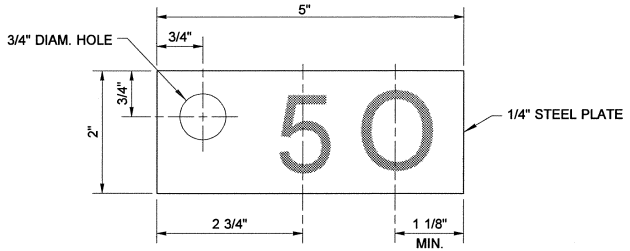

IDENTIFICATION PLATE DETAIL
(SEE NOTE 5)

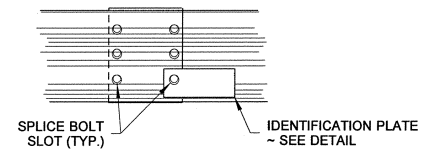

IDENTIFICATION PLATE MOUNTING DETAIL
(SEE NOTE 6)

NOTES

1. See Contract for transition and connection type.
2. For additional installation requirements for Non-Flared Terminal placement see **Standard Plan C-22.40.**
3. Guardrail installation shall be Beam Guardrail Type 31 with standard post and block.
4. The first letter of case designation indicates the end treatment on the side road. The second letter indicates the end treatment on the main road. For instance, a terminal on a side road and a bridge connection on the main road would be Case 22 BC.
5. The radius dimension shall be etched into the plate as shown in the example on the Identification Plate Detail. Numerals shall be 1 1/2" high minimum, and 3/4" wide maximum. Plate shall be galvanized after etching.
6. The guardrail Identification Plate shall be mounted at the lower splice bolt on the back side of the rail element at the PC of the guardrail radius.

MICHAEL S. FLEMING
STATE OF WASHINGTON
38777
REGISTERED
PROFESSIONAL ENGINEER
2/2/09

GUARDRAIL PLACEMENT STRONG POST ~ TYPE 31 INTERSECTION DESIGN STANDARD PLAN C-20.42-00

SHEET 1 OF 1 SHEET

APPROVED FOR PUBLICATION

STATE DESIGN ENGINEER — DATE 2/3/09

Washington State Department of Transportation

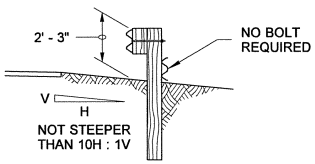

SECTION (A)

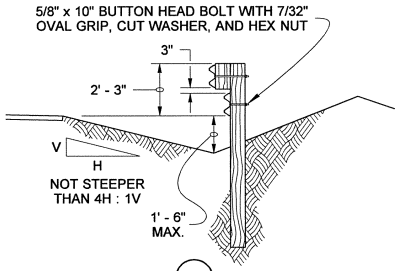

SECTION (B)

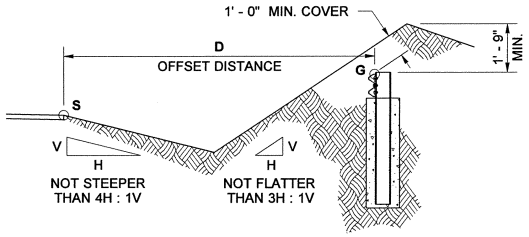

SEE NOTE 3

SECTION (C)

PERSPECTIVE

DRAWN BY: FERN LIDDELL

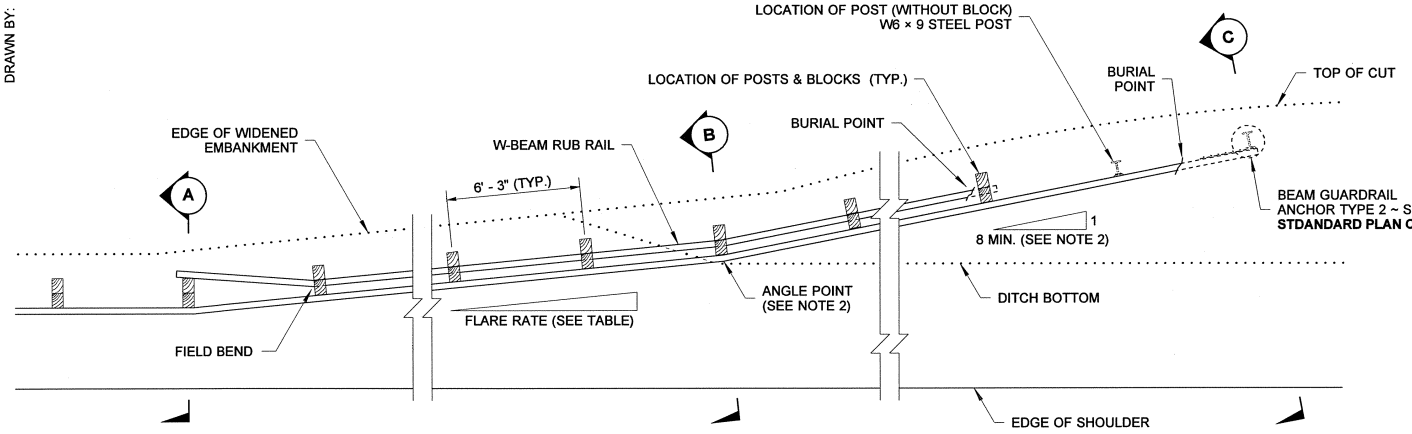

PLAN

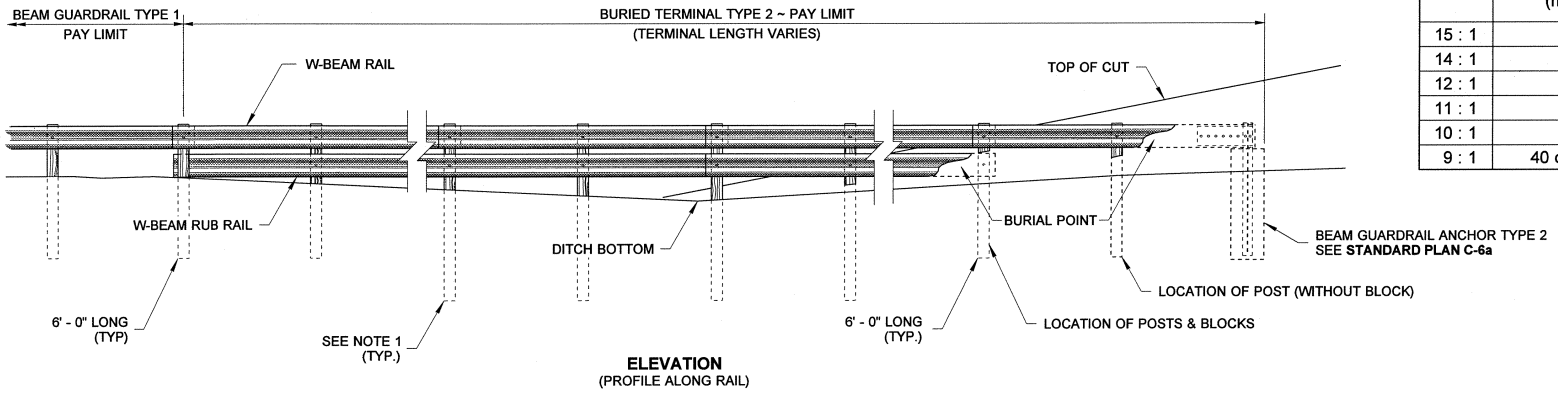

ELEVATION
(PROFILE ALONG RAIL)

NOTES

1. Posts installed on shoulder slopes steeper than 10H : 1V shall be 8' long.
2. The flare rate of the guardrail may be increased after crossing the ditch bottom to shorten the length of the terminal.
3. Determine the height of the W-Beam at the Anchor (**G**) by first calculating the perpendicular offset distance (**D**) from the edge of shoulder (**S**) to the Anchor (on station). Multiply that distance by 0.1, then subtract the product from the elevation of the same point (**S**) on the edge of shoulder used to obtain the offset distance (at the same station). Add Beam Guardrail design height (**H**) to that remainder for a sum that equals the elevation of the top of the W-Beam at the Anchor.

   Refer to SECTION "C":

   $$\text{Elevation}_{G} = \left(\text{Elevation}_{S} - D(0.1)\right) + H$$

   H = 27" (2.25') for Beam Guardrail Type 1

FLARE RATE TABLE	
RATE	**POSTED SPEED** (mph)
15 : 1	70
14 : 1	60
12 : 1	55
11 : 1	50
10 : 1	45
9 : 1	40 or less

BEAM GUARDRAIL TYPE 1
BURIED TERMINAL TYPE 2
STANDARD PLAN C-22.14-00

SHEET 1 OF 1 SHEET

APPROVED FOR PUBLICATION

STATE DESIGN ENGINEER — DATE 2/3/09

Washington State Department of Transportation

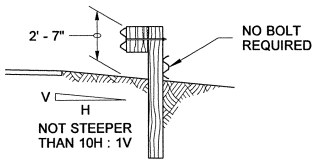

SECTION (A)

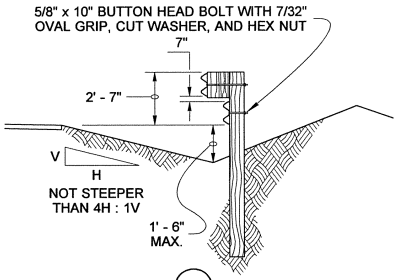

SECTION (B)

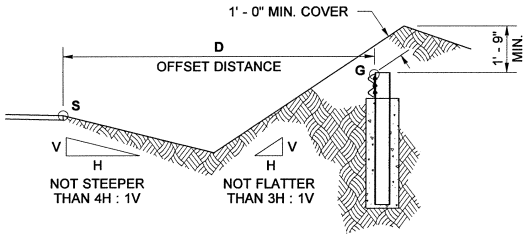

SECTION (C)
SEE NOTE 3

PERSPECTIVE

DRAWN BY: FERN LIDDELL

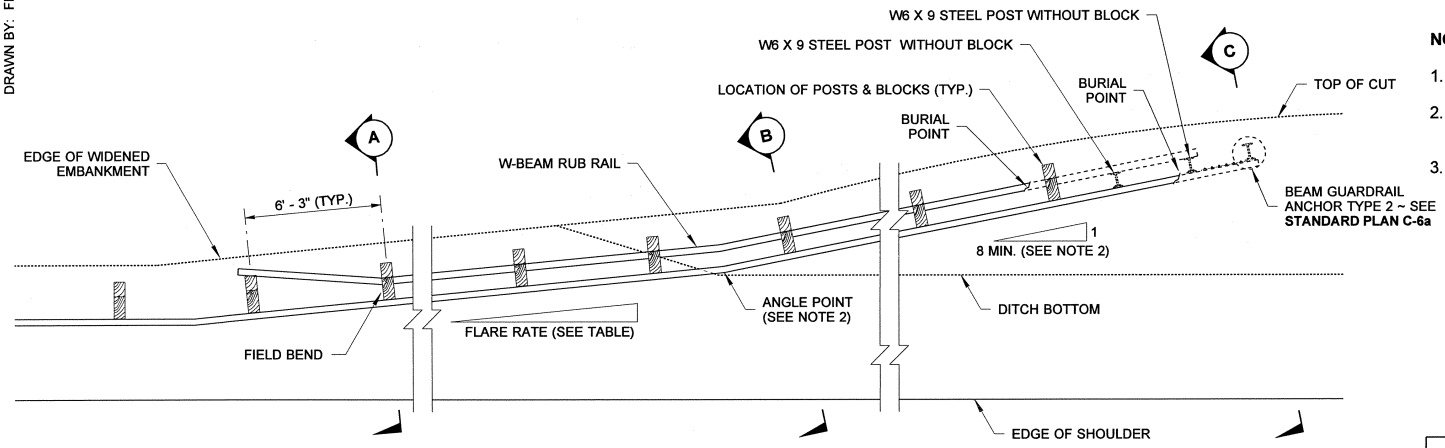

PLAN

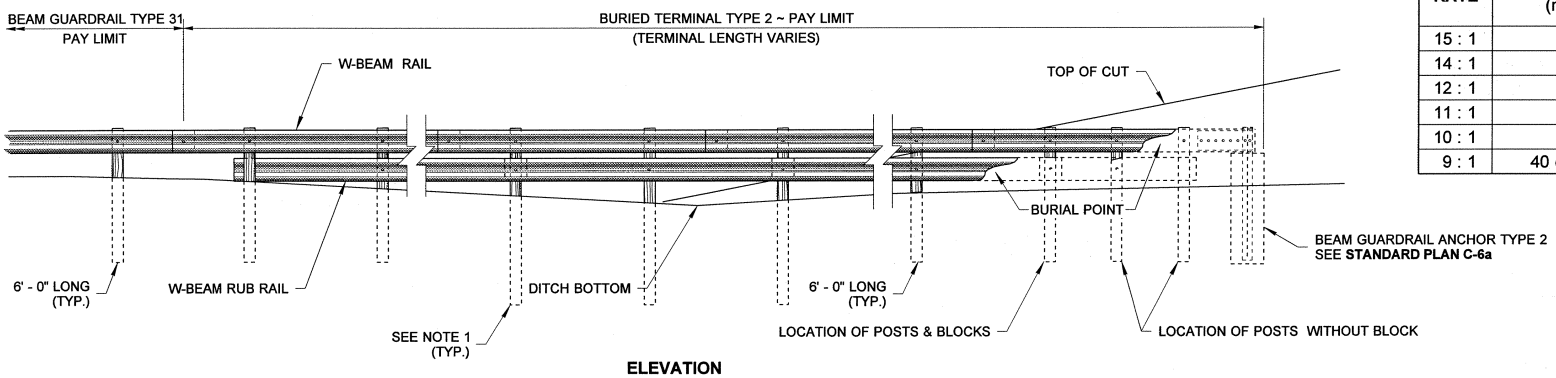

ELEVATION
(PROFILE ALONG RAIL)

NOTES

1. Posts installed on shoulder slopes steeper than 10H : 1V shall be 8' long.
2. The flare rate of the guardrail may be increased after crossing the ditch bottom to shorten the length of the terminal.
3. Determine the height of the W-Beam at the Anchor (**G**) by first calculating the perpendicular offset distance (**D**) from the edge of shoulder (**S**) to the Anchor (on station). Multiply that distance by 0.1, then subtract the product from the elevation of the same point (**S**) on the edge of shoulder used to obtain the offset distance (at the same station). Add Beam Guardrail design height (**H**) to that remainder for a sum that equals the elevation of the top of the W-Beam at the Anchor.

   Refer to SECTION "C":

   $$\text{Elevation}_{G} = \left(\text{Elevation}_{S} - D(0.1)\right) + H$$

   H = 31" (2.58') for Beam Guardrail Type 31

FLARE RATE TABLE	
RATE	**POSTED SPEED** (mph)
15 : 1	70
14 : 1	60
12 : 1	55
11 : 1	50
10 : 1	45
9 : 1	40 or less

BEAM GUARDRAIL TYPE 31
BURIED TERMINAL TYPE 2

STANDARD PLAN C-22.16-00

SHEET 1 OF 1 SHEET

APPROVED FOR PUBLICATION

STATE DESIGN ENGINEER — DATE 2/3/09

Washington State Department of Transportation

This page left blank intentionally.

DRAWN BY: BILL BERENS

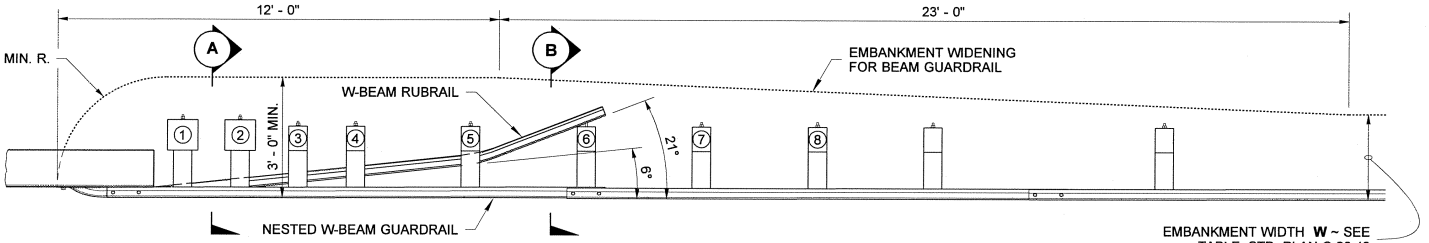

PLAN VIEW

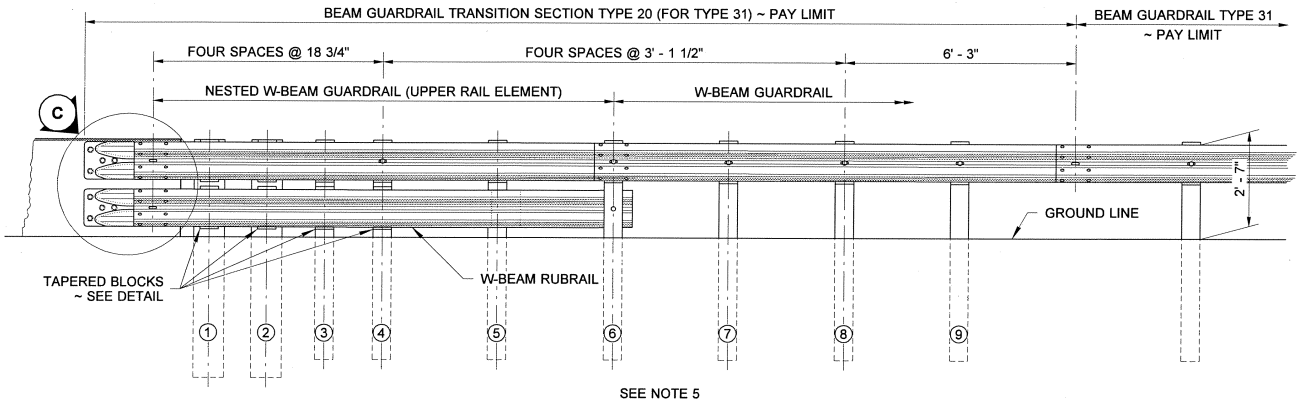

ELEVATION VIEW

NOTES

1. This guardrail transition is for connection to a vertical concrete shape or single slope barrier and cannot be connected directly to a concrete safety shape.
2. Do not bolt nested W-Beam or rubrail W-Beam to posts and blocks on posts 1,2,3 and 5. Bolt tapered blocks directly to posts.
3. The rubrail W-Beam can be shop bent to facilitate installation.
4. Posts 1,2,3,4 and 6 require an additional hole to attach tapered blocks and/or rubrail.
5. Posts 1 and 2 are 10×10 timber or W8×13 steel posts ~ 7' - 6" long. Posts 3 through 9 are 6×8 timber or W6×9 steel posts ~ 6' - 0" long.

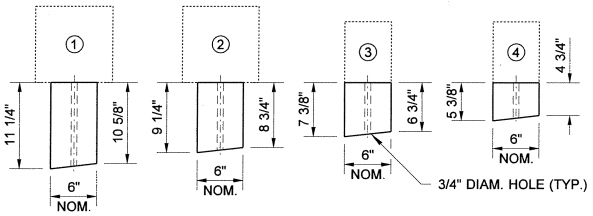

PLAN VIEW

TAPERED BLOCKS FOR RUBRAIL DETAIL

14" LONG (TYP.)

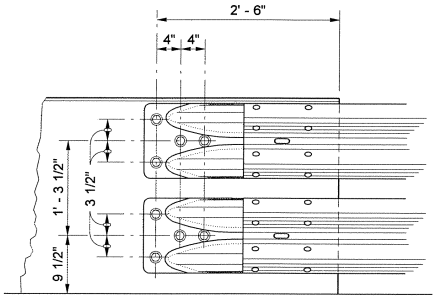

DETAIL C

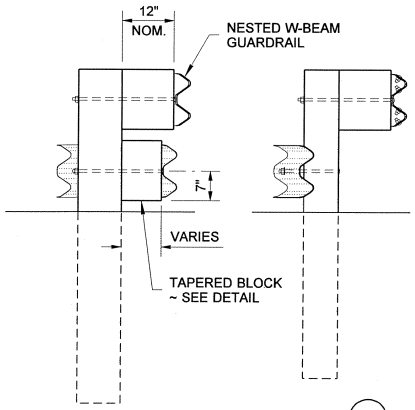

SECTION A

SECTION B

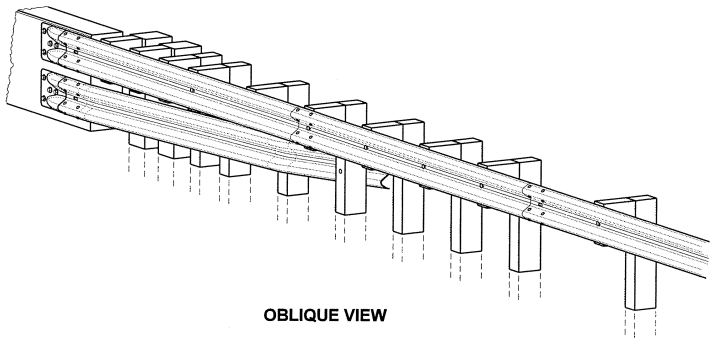

OBLIQUE VIEW

RICHARD BARSTOW LIBIN
STATE OF WASHINGTON
34042
REGISTERED
PROFESSIONAL ENGINEER
EXPIRES JULY 24, 2008
9/18/2007

BEAM GUARDRAIL (TYPE 31) TRANSITION SECTION TYPE 20

STANDARD PLAN C-25.18-01

SHEET 1 OF 1 SHEET

APPROVED FOR PUBLICATION

STATE DESIGN ENGINEER — DATE 9/20/07

Washington State Department of Transportation

DATE	REVISION	BY
08/2007	REVISED DISTANCE FROM FACE TO SLOPE HINGE	MAS

DRAWN BY: LISA CYFORD

NOTE

1. This guardrail transition is for connection to a vertical concrete shape, a single slope, or an F-shape barrier. The toe of the single slope and the F-shaped barrier shall be tapered so that it does not project past the face of the approach guardrail.

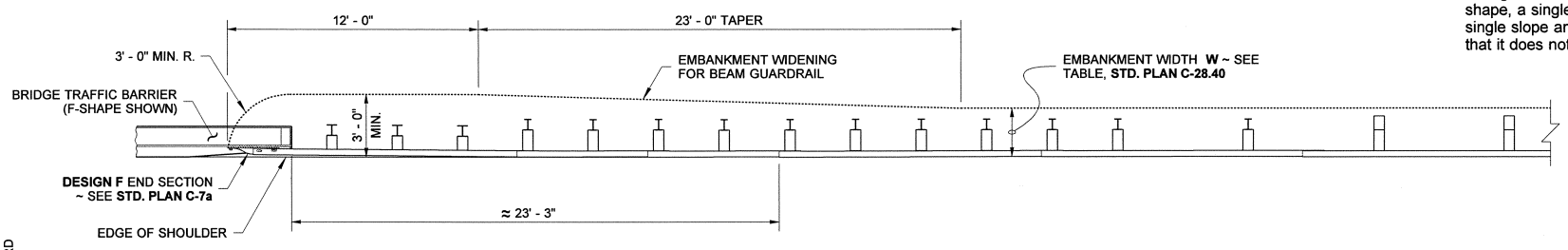

PLAN VIEW

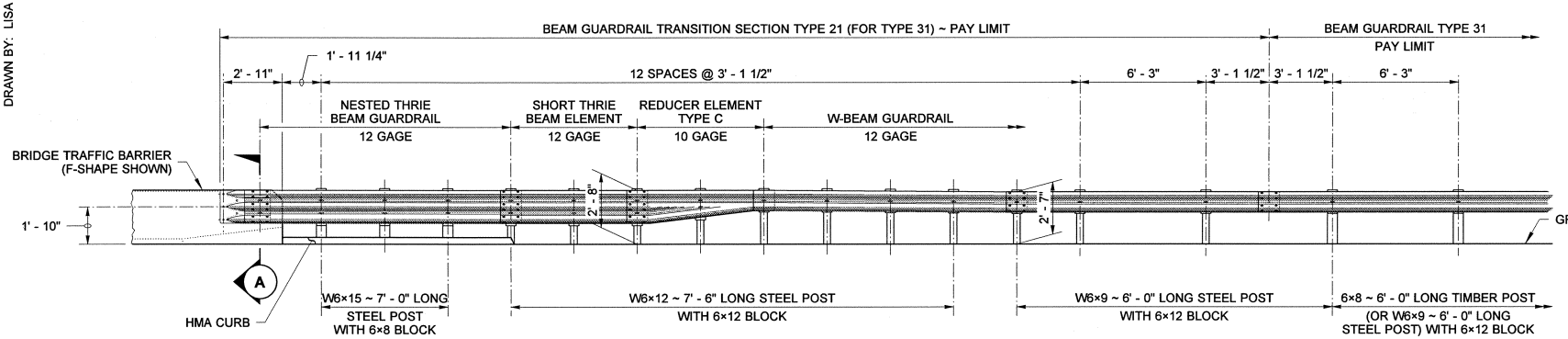

ELEVATION VIEW

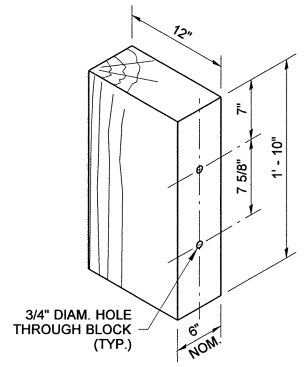

THRIE BEAM WOOD BLOCK

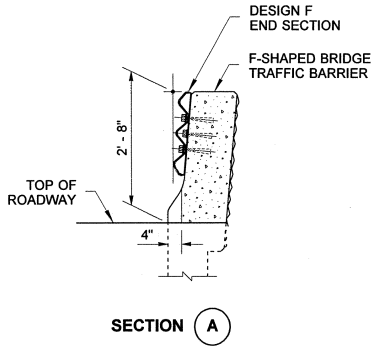

SECTION (A)

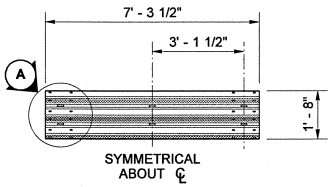

SHORT THRIE BEAM ELEMENT

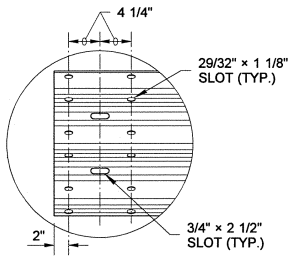

DETAIL (A)

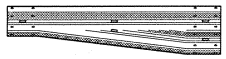

LEFT
(MIRROR OF RIGHT)

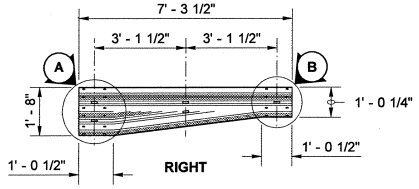

RIGHT

REDUCER ELEMENT TYPE C

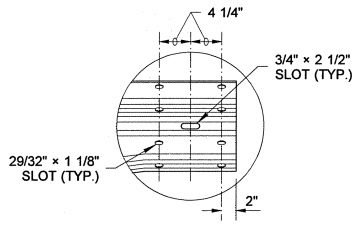

DETAIL (B)

BEAM GUARDRAIL (TYPE 31) TRANSITION SECTION TYPE 21 STANDARD PLAN C-25.20-03

SHEET 1 OF 1 SHEET

APPROVED FOR PUBLICATION

STATE DESIGN ENGINEER — DATE 2/3/09

Washington State Department of Transportation

DRAWN BY: LISA CYFORD

NOTE

1. See **Standard Plans C-1b, C-1d** and **C-25.20** for rail elements and thrie beam block details.
2. When a transition is required on the trailing end of the bridge, use a mirror image of this plan.

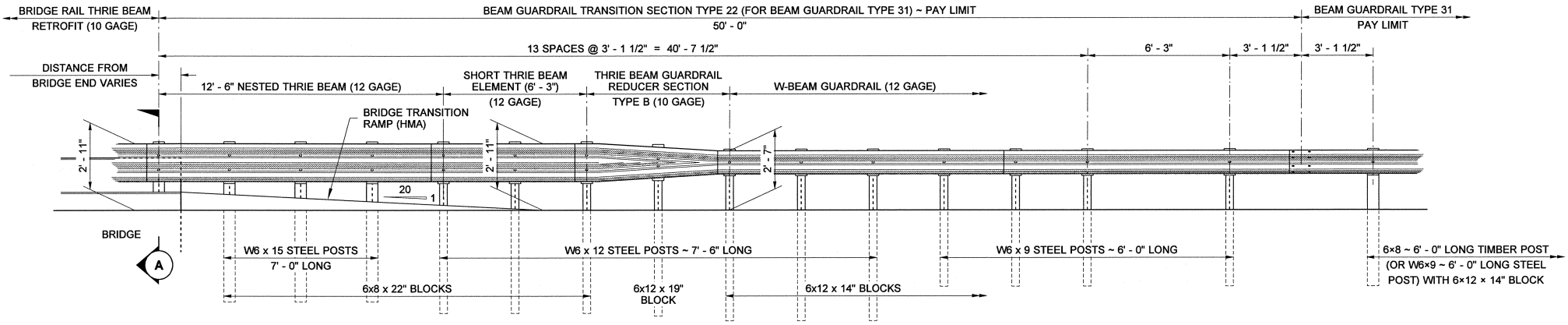

TYPE 22

APPROACH END

THRIE BEAM INSTALLED AT FACE OF BRIDGE RAIL

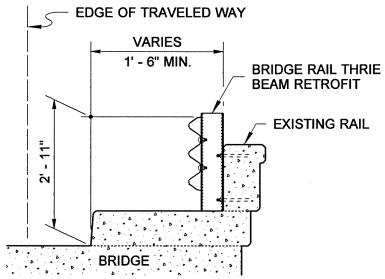

SECTION (A)

BEAM GUARDRAIL (TYPE 31) TRANSITION SECTION TYPE 22 STANDARD PLAN C-25.22-02

SHEET 1 OF 1 SHEET

APPROVED FOR PUBLICATION

STATE DESIGN ENGINEER — DATE 2/3/09

Washington State Department of Transportation

DRAWN BY: LISA CYFORD

NOTE

1. See **Standard Plan C-1b** and **C-25.20** for rail elements and thrie beam block details.
2. When a transition is required on the trailing end of the bridge, use a mirror image of this plan.
3. For additional alternatives not shown, see Contract Plans.

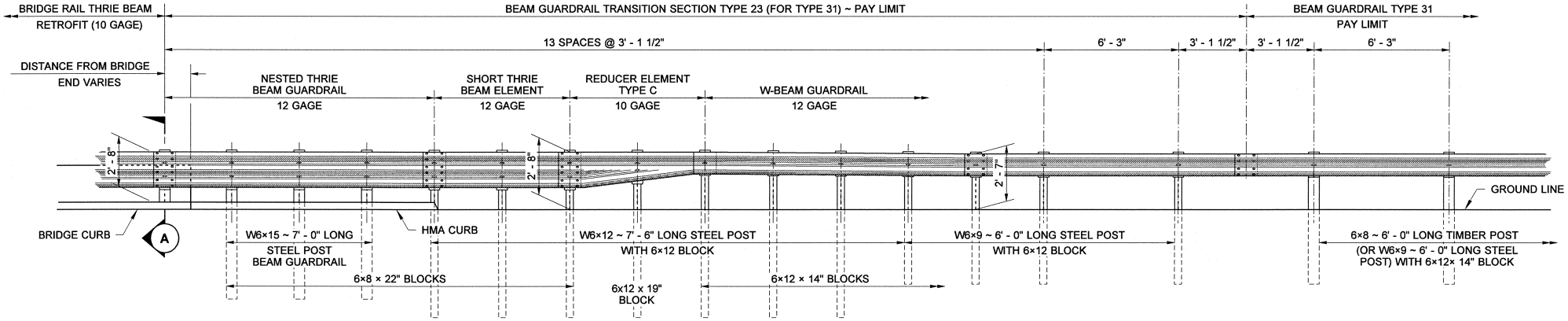

TYPE 23

APPROACH END

THRIE BEAM INSTALLED AT FACE OF BRIDGE RAIL

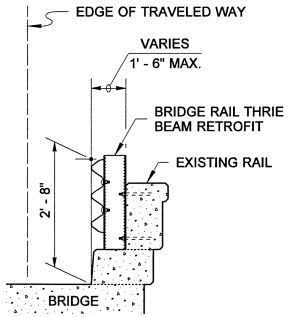

SECTION (A)

ALTERNATIVE 1

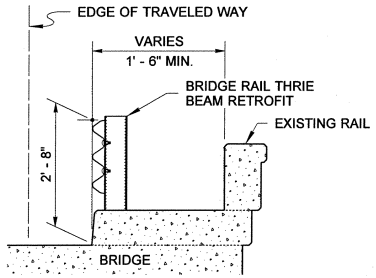

SECTION (A)

ALTERNATIVE 2

BEAM GUARDRAIL (TYPE 31) TRANSITION SECTION TYPE 23

STANDARD PLAN C-25.26-00

SHEET 1 OF 1 SHEET

APPROVED FOR PUBLICATION

STATE DESIGN ENGINEER — DATE 2/3/09

Washington State Department of Transportation

DRAWN BY: BILL BERENS

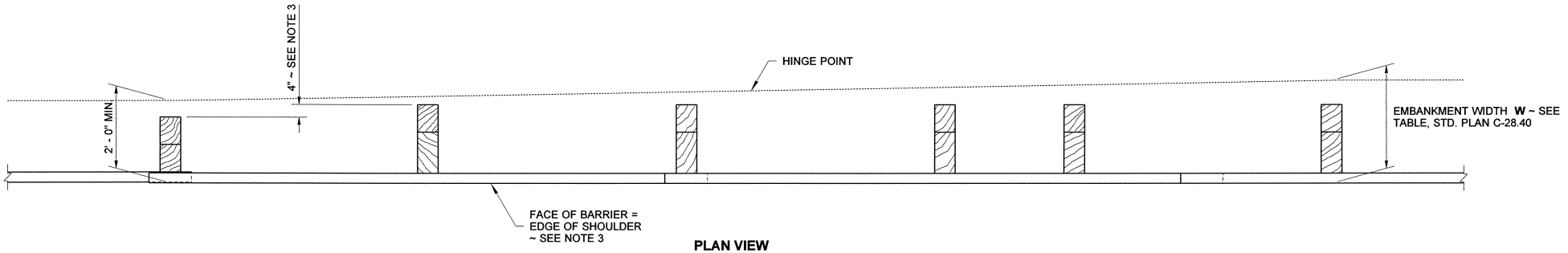

PLAN VIEW

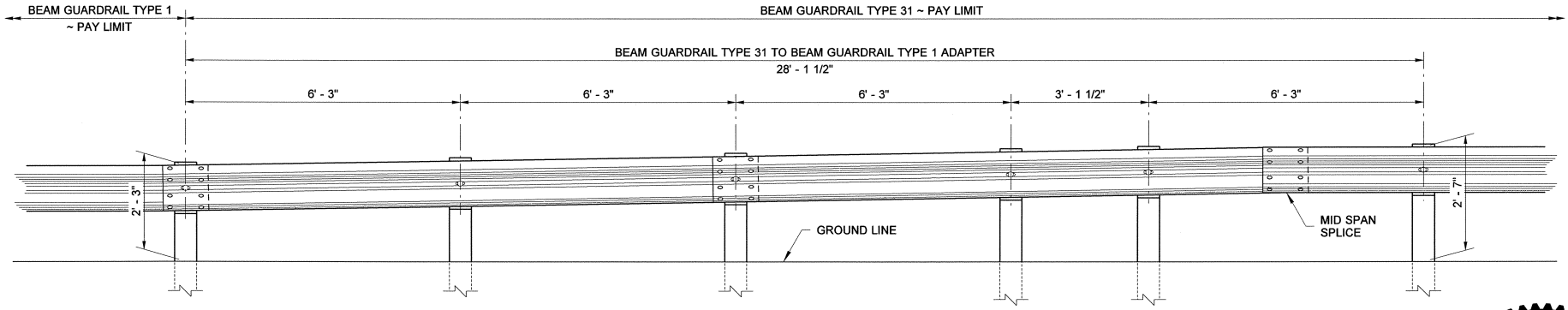

ELEVATION VIEW ~ PROFILE TAPER

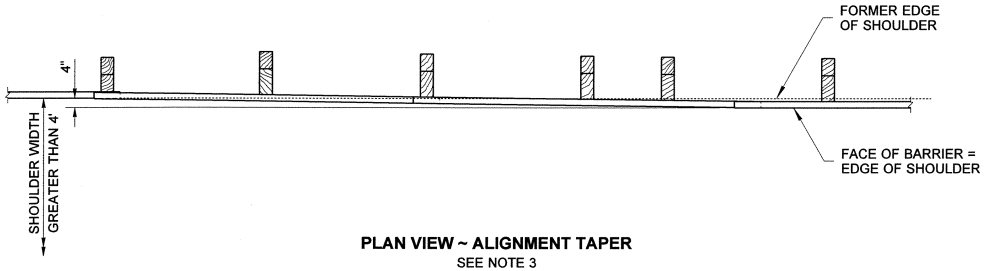

PLAN VIEW ~ ALIGNMENT TAPER
SEE NOTE 3

NOTES

1. Refer to **Standard Plan C-1** and **C-1b** for component details for Beam Guardrail Type 1 not shown on this plan.
2. Refer to **Standard Plan C-28.40** for component details for Beam Guardrail Type 31 not shown on this plan.
3. Where post off-set is constrained, and when the existing shoulder will not be widened and is wider than 4 feet, the existing shoulder may be reduced up to 4" to accomodate the 12" blockouts of the Beam Guardrail Type 31. See **PLAN VIEW ~ ALIGNMENT TAPER**.
4. All posts for any standard barrier run shall be of the same type: Timber or Steel.

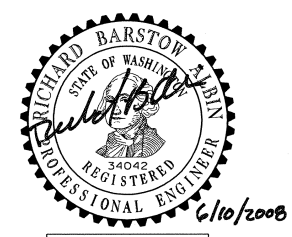

EXPIRES JULY 24, 2008

BEAM GUARDRAIL TYPE 31 TO BEAM GUARDRAIL TYPE 1 ADAPTER
STANDARD PLAN C-25.80-01

SHEET 1 OF 1 SHEET

DATE	REVISION	BY
05/2008	REVISED TITLE	BB
08/2007	REVISED DISTANCE FROM FACE TO SLOPE HINGE	MAS

APPROVED FOR PUBLICATION

Paco Bakotin III — STATE DESIGN ENGINEER — 7/3/08 DATE

Washington State Department of Transportation

DRAWN BY: BILL BERENS

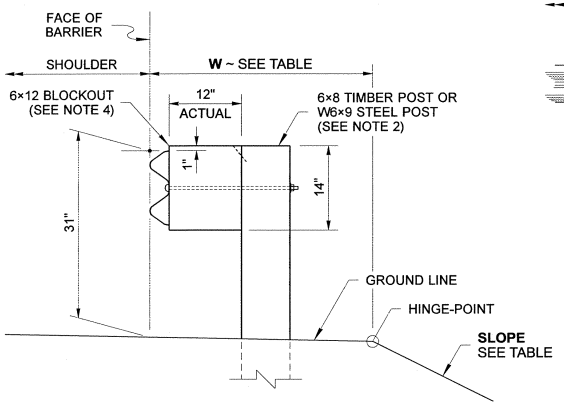

TYPICAL SECTION ~ WITHOUT CURB
(6' - 0" LONG POSTS)

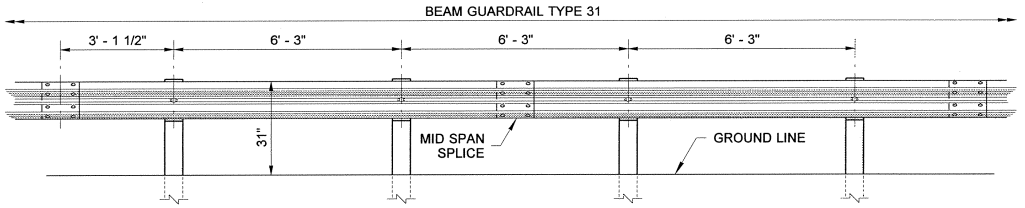

TYPICAL ELEVATION

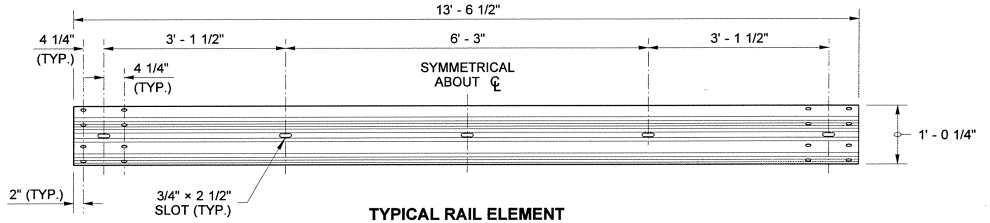

TYPICAL RAIL ELEMENT

NOTES

1. Refer to **Standard Plan C-1** and **C-1b**, for additional details not shown on this plan.
2. All posts for any standard barrier run shall be of the same type: Timber or Steel.
3. See Contract for type of curb required. See Standard Plans for dimensions.
4. Use a single or combination of blocks to achieve the actual 12" offset. See **Standard Specification 9-16.3 (2)**. Wood blocks shall be toe-nailed to post (and blocks, if block combinations are utilized) with a 16d galvanized nail to prevent block rotation.
5. On steel posts, attach blockouts using bolt holes on approaching traffic side of post web.

SLOPE \ EMBANKMENT TABLE	
SLOPE	**W**
2H:1V OR FLATTER	2.5' MIN.
STEEPER THAN 2H:1V BUT NOT STEEPER THAN 1H:1V	4.0' MIN.

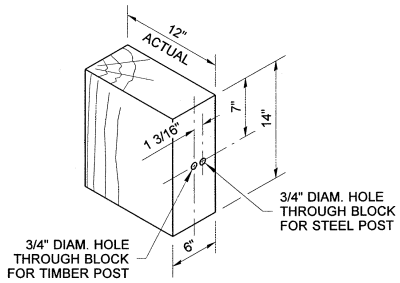

WOOD BLOCK

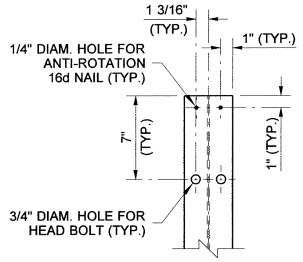

SEE NOTE 5

STEEL POST

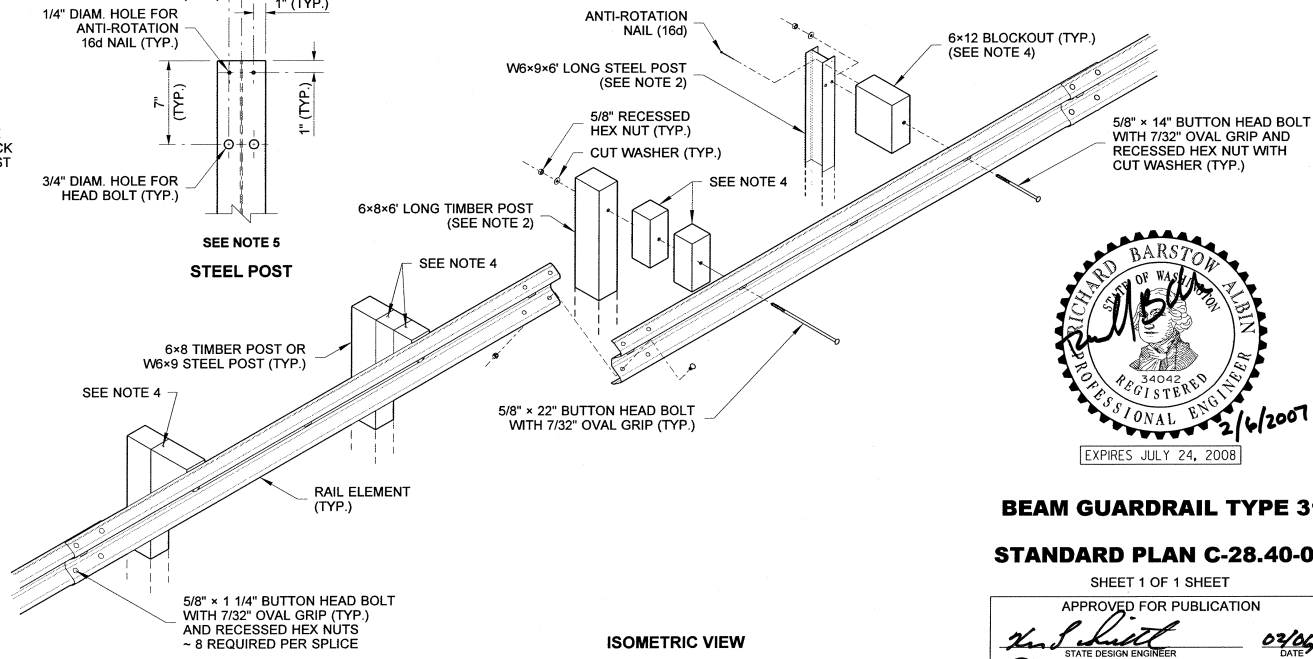

ISOMETRIC VIEW

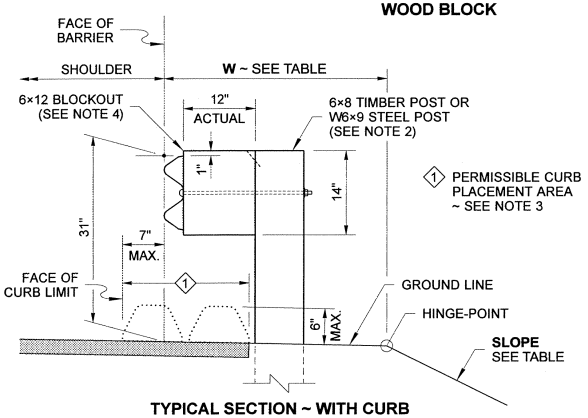

TYPICAL SECTION ~ WITH CURB
(6' - 0" LONG POSTS)

RICHARD BARSTOW ALBIN
STATE OF WASHINGTON
34042
REGISTERED
PROFESSIONAL ENGINEER
2/6/2007
EXPIRES JULY 24, 2008

BEAM GUARDRAIL TYPE 31

STANDARD PLAN C-28.40-00

SHEET 1 OF 1 SHEET

APPROVED FOR PUBLICATION

STATE DESIGN ENGINEER — DATE 02/06/07

Washington State Department of Transportation

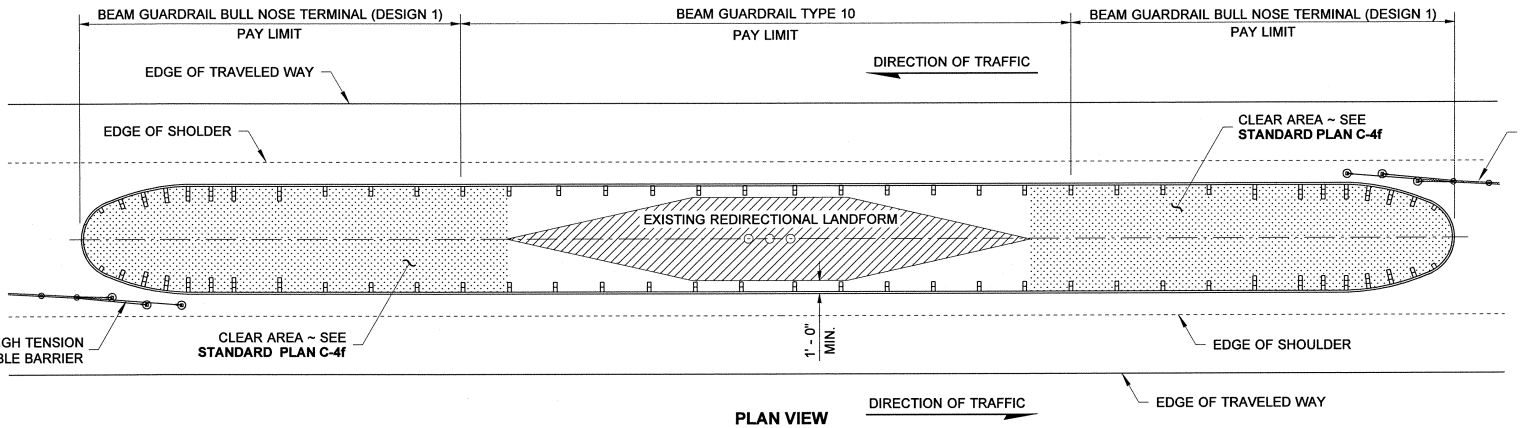

PLAN VIEW

CASE 9A

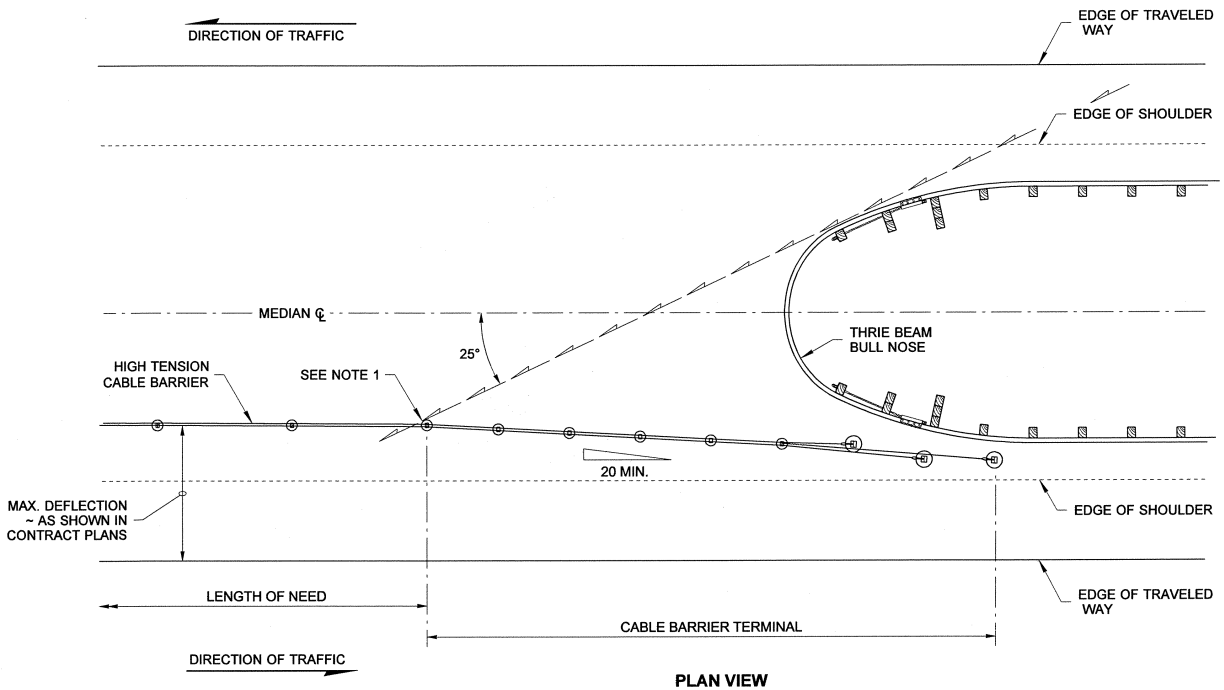

PLAN VIEW

CASE 25

NOTES

1. The Design Layout Line shall intercept the Cable Barrier at a point that is at least 12 feet (perpendicular) from the opposite Edge of Traveled Way.

LEGEND

Design Layout Line

DRAWN BY: FERN LIDDELL

MICHAEL S. FLEMING
STATE OF WASHINGTON
38777
REGISTERED
PROFESSIONAL ENGINEER
2/3/09

BARRIER PLACEMENT CABLE TO THRIE BEAM BULL NOSE CONNECTION STANDARD PLAN C-40.14-00

SHEET 1 OF 1 SHEET

APPROVED FOR PUBLICATION

STATE DESIGN ENGINEER — DATE 2/3/09

Washington State Department of Transportation

DRAWN BY: FERN LIDDELL

LEGEND

Design Layout Line

NOTES

1. The Design Layout Line shall intercept the Cable Barrier at a point that is at least 12 feet (perpendicular) from the opposite Edge of Traveled Way.

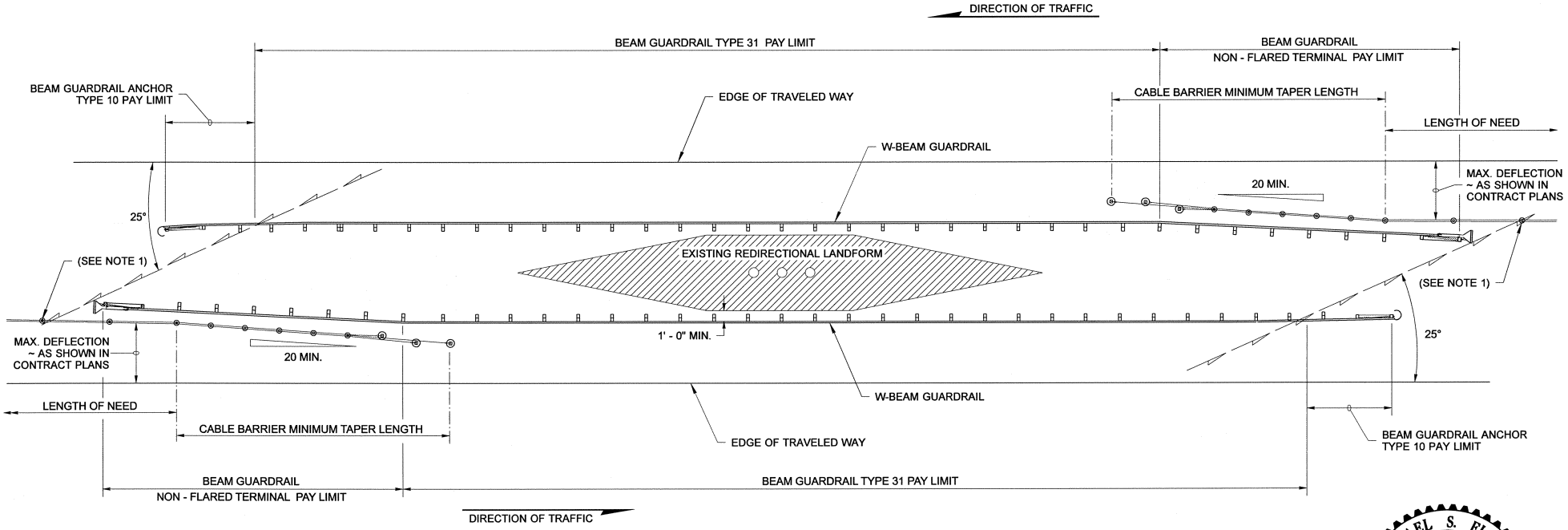

PLAN VIEW

CASE 26

BARRIER PLACEMENT ~ CABLE TO W-BEAM SHIELDING FOR REDIRECTIONAL LANDFORM

STANDARD PLAN C-40.16-00

SHEET 1 OF 1 SHEET

APPROVED FOR PUBLICATION

STATE DESIGN ENGINEER — DATE 2/3/07

Washington State Department of Transportation

DRAWN BY: FERN LIDDELL

NOTES

1. Extend the Cable Barrier until the Design Layout Line clears the opposing Cable Barrier and intercepts the Cable Barrier at a point that is at least 12 feet (perpendicular) from the opposite Edge of Traveled Way.

LEGEND

Design Layout Line

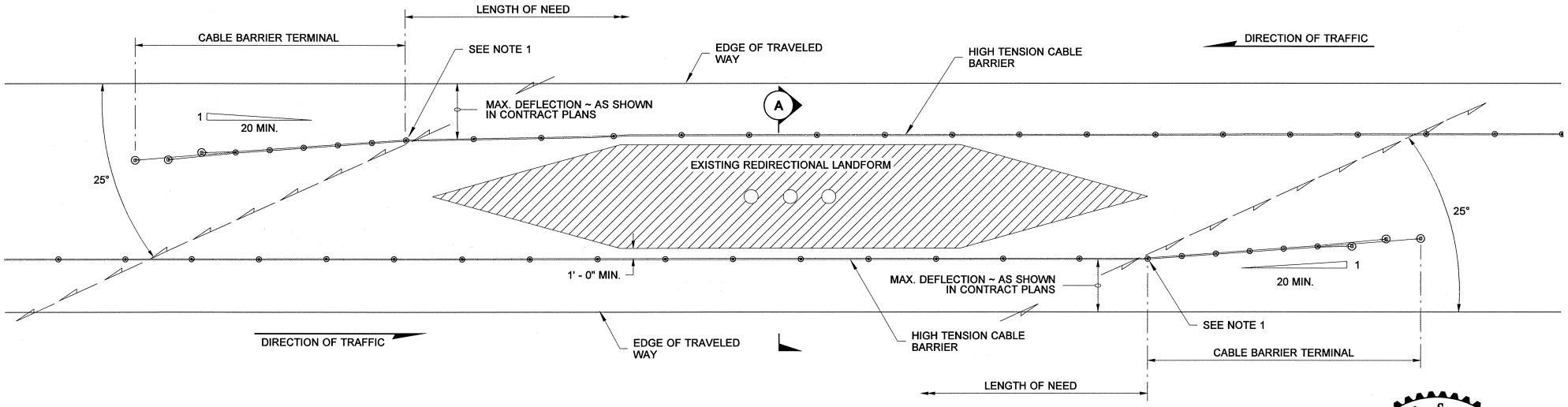

PLAN VIEW
CASE 27

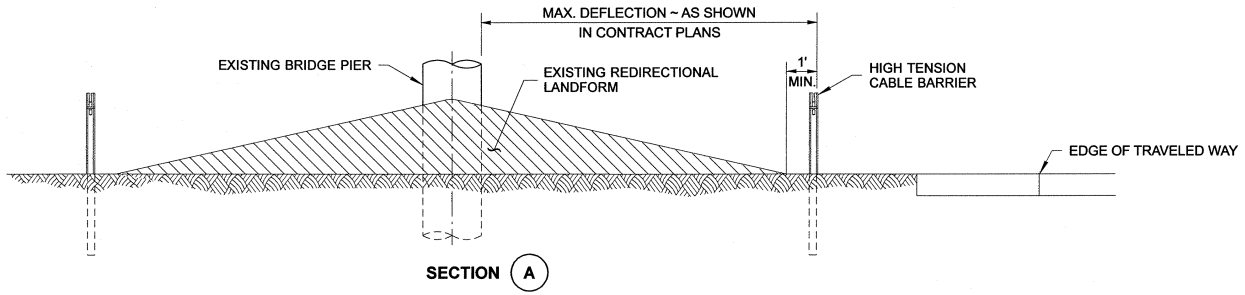

SECTION A

MICHAEL S. FLEMING
STATE OF WASHINGTON
38777
REGISTERED PROFESSIONAL ENGINEER
2/3/09

BARRIER PLACEMENT ~ CABLE BARRIER SHIELDING FOR REDIRECTIONAL LANDFORM
STANDARD PLAN C-40.18-00

SHEET 1 OF 1 SHEET

APPROVED FOR PUBLICATION

STATE DESIGN ENGINEER — DATE 2/3/09

Washington State Department of Transportation

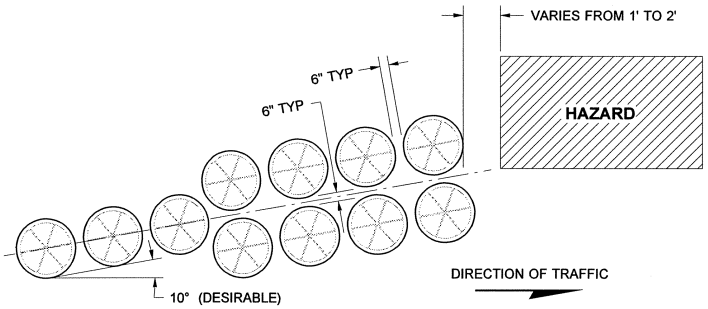

ROADSIDE INSTALLATION DETAIL

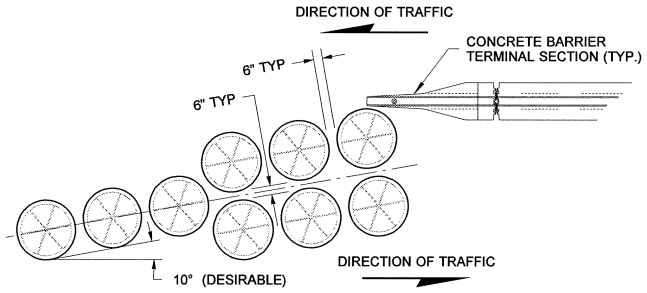

MEDIAN INSTALLATION DETAIL

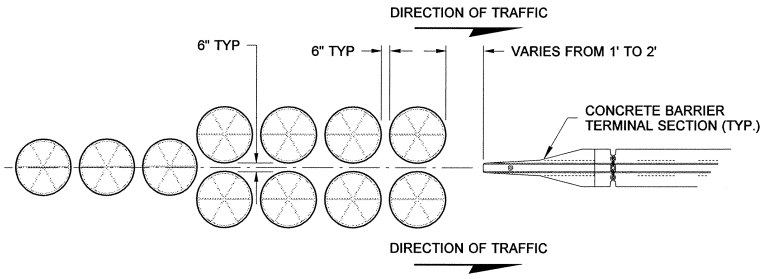

GORE INSTALLATION DETAIL

INSTALLATION DETAILS

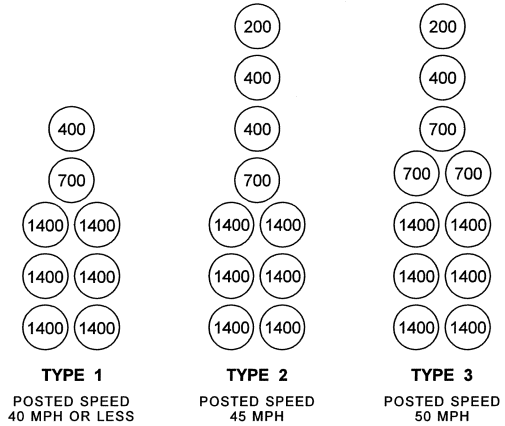

TYPE 1 POSTED SPEED 40 MPH OR LESS

TYPE 2 POSTED SPEED 45 MPH

TYPE 3 POSTED SPEED 50 MPH

PLAN VIEW

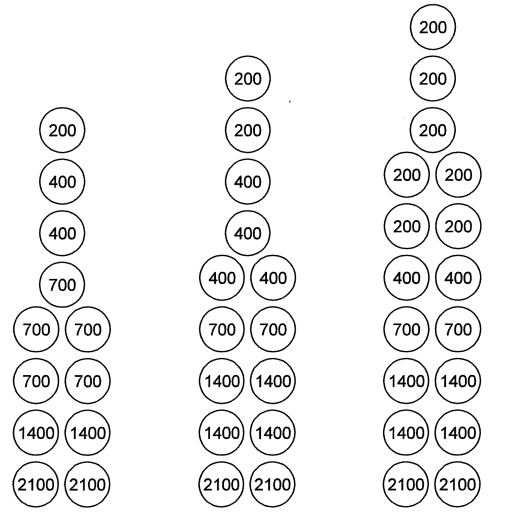

TYPE 4 POSTED SPEED 55 MPH

TYPE 5 POSTED SPEED 60 MPH

TYPE 6 POSTED SPEED 70 MPH

PLAN VIEW

ATTENUATOR CONFIGURATIONS

(NUMBERS INSIDE BARRELS INDICATE LBS.)

NOTES

1. Approved Inertial Barrier Systems (sand barrel arrays) are listed in the Qualified Products List and shall be installed in accordance with the manufacturer's recommendations. When products not listed on the Qualified Products List are considered, a Request of Approval of Materials (RAM) form is required.
2. For temporary installations, the inertial barriers may be placed on wood pallets that are 4" or less in height.

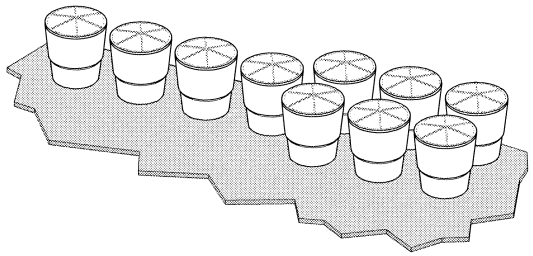

EXAMPLE CONFIGURATION

6/10/2008

EXPIRES JULY 24, 2008

IMPACT ATTENUATOR INERTIAL BARRIER CONFIGURATIONS

STANDARD PLAN C-90.10-00

SHEET 1 OF 1 SHEET

APPROVED FOR PUBLICATION

STATE DESIGN ENGINEER — DATE 7/3/08

Washington State Department of Transportation

DRAWN BY: ADAM COCHRAN

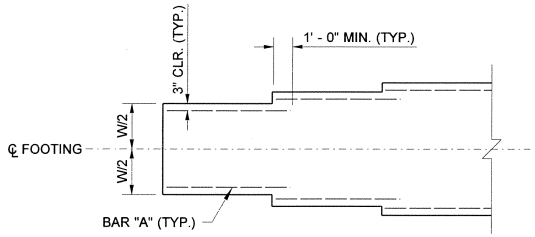

(TRANSVERSE BARS NOT SHOWN)

FOOTING WIDTH TRANSITION DETAIL
FOR LOCATIONS WITHOUT FOOTING STEP

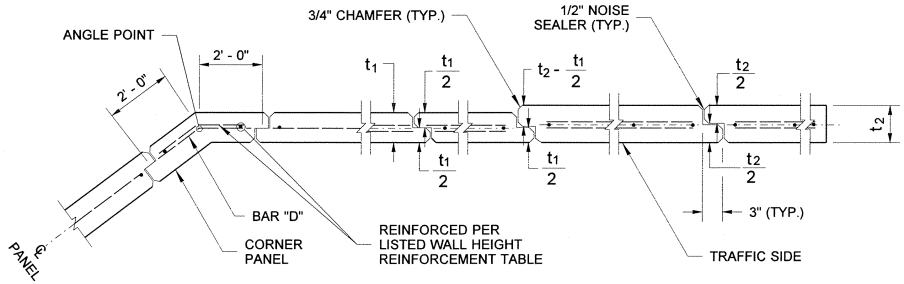

JOINT AND CORNER DETAIL

CAST-IN-PLACE CONCRETE WALL ON SPREAD FOOTING

BIJAN KHALEGHI
STATE OF WASHINGTON
27695
REGISTERED
PROFESSIONAL ENGINEER

EXPIRES AUGUST 23, 2006

NOISE BARRIER WALL TYPE 2

STANDARD PLAN D-2.04-00

SHEET 2 OF 2 SHEETS

APPROVED FOR PUBLICATION

Harold Pilkington 11.10.05

STATE DESIGN ENGINEER — DATE

Washington State Department of Transportation

DRAWN BY: ADAM COCHRAN

WALL HT H	TYPE 3A					TYPE 3B					TYPE 3C					TYPE 3D					WALL HT H
	W	t	BARS "A"&"F"	BAR "B"	BARS "D"&"E"	W	t	BARS "A"&"F"	BAR "B"	BARS "D"&"E"	W	t	BARS "A"&"F"	BAR "B"	BARS "D"&"E"	W	t	BARS "A"&"F"	BAR "B"	BARS "D"&"E"	
6' - 0"	2' - 0"	5"	3 ~ #4	#4 @ 18"	#3 @ 15"	2' - 3"	5"	3 ~ #4	#4 @ 18"	#3 @ 12"	2' - 0"	5"	3 ~ #4	#4 @ 18"	#3 @ 15"	2' - 6"	5"	3 ~ #4	#4 @ 18"	#3 @ 11"	6' - 0"
8' - 0"	2' - 3"	5"	3 ~ #4	#4 @ 18"	#3 @ 12"	2' - 9"	5"	3 ~ #4	#4 @ 18"	#4 @ 15"	2' - 6"	5"	3 ~ #4	#4 @ 18"	#3 @ 10"	3' - 3"	5"	5 ~ #4	#4 @ 18"	#4 @ 12"	8' - 0"
10' - 0"	2' - 6"	5"	3 ~ #4	#4 @ 18"	#3 @ 9"	3' - 3"	5"	5 ~ #4	#4 @ 18"	#4 @ 10"	2' - 9"	5"	3 ~ #4	#4 @ 18"	#4 @ 12"	3' - 6"	5"	5 ~ #4	#4 @ 18"	#4 @ 10"	10' - 0"
12' - 0"	3' - 0"	5"	3 ~ #4	#4 @ 18"	#4 @ 12"	3' - 9"	5"	5 ~ #4	#4 @ 18"	#4 @ 10"	3' - 3"	5"	3 ~ #4	#4 @ 18"	#4 @ 10"	4' - 3"	5"	5 ~ #4	#4 @ 18"	#5 @ 12"	12' - 0"
14' - 0"	3' - 3"	5"	3 ~ #4	#4 @ 18"	#4 @ 10"	4' - 3"	5"	5 ~ #4	#4 @ 18"	#5 @ 11"	3' - 9"	5"	5 ~ #4	#4 @ 18"	#4 @ 9"	5' - 3"	5"	5 ~ #4	#4 @ 18"	#5 @ 8"	14' - 0"
16' - 0"	3' - 9"	5"	5 ~ #4	#4 @ 18"	#4 @ 9"	5' - 3"	5"	5 ~ #4	#4 @ 18"	#6 @ 12"	4' - 3"	5"	5 ~ #4	#4 @ 18"	#5 @ 11"	6' - 3"	5"	5 ~ #4	#4 @ 18"	#6 @ 9"	16' - 0"
18' - 0"	4' - 0"	5"	5 ~ #4	#4 @ 18"	#5 @ 11"	6' - 0"	5"	5 ~ #4	#4 @ 18"	#6 @ 9"	5' - 0"	5"	5 ~ #4	#4 @ 18"	#6 @ 12"	7' - 0"	6"	5 ~ #4	#4 @ 18"	#6 @ 9"	18' - 0"
20' - 0"	5' - 0"	5"	5 ~ #4	#4 @ 18"	#6 @ 12"	7' - 0"	6"	5 ~ #4	#4 @ 18"	#6 @ 9"	5' - 9"	5"	5 ~ #4	#4 @ 18"	#6 @ 9"	8' - 0"	6"	6 ~ #4	#4 @ 12"	#6 @ 6"	20' - 0"
22' - 0"	5' - 6"	5"	5 ~ #4	#4 @ 18"	#6 @ 9"	7' - 9"	6"	6 ~ #4	#4 @ 12"	#6 @ 6"	6' - 6"	6"	5 ~ #4	#4 @ 18"	#6 @ 9"	9' - 0"	7"	7 ~ #4	#4 @ 12"	#6 @ 6"	22' - 0"
24' - 0"	6' - 3"	5"	5 ~ #4	#4 @ 18"	#6 @ 9"	8' - 6"	7"	6 ~ #4	#4 @ 12"	#6 @ 6"	7' - 6"	6"	6 ~ #4	#4 @ 12"	#6 @ 6"	9' - 9"	7"	7 ~ #4	#4 @ 15"	#6 @ 6"	24' - 0"

t = WALL THICKNESS

NOTES

1. Wall to be designated Noise Barrier Wall Type 3A, 3B, 3C or 3D. The Contract specifies actual wall designations.
2. For intermediate wall heights not listed, use the next higher H.
3. Panels shall have at least 3 feet of level ground on each side.
4. Construction joints in the footing shall be spaced at 120 feet maximum.

WIND EXPOSURE & VELOCITY		
NOISE BARRIER TYPE	WIND EXPOSURE	WIND VELOCITY (MPH)
3A	B1	80
3B	B1	90
3C	B2	80
3D	B2	90

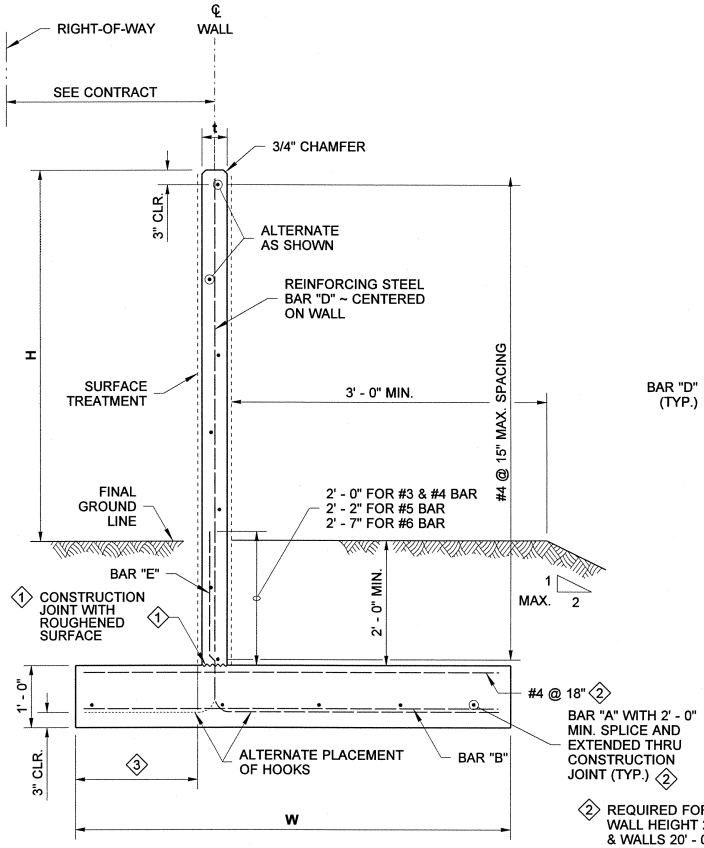

TYPICAL SECTION

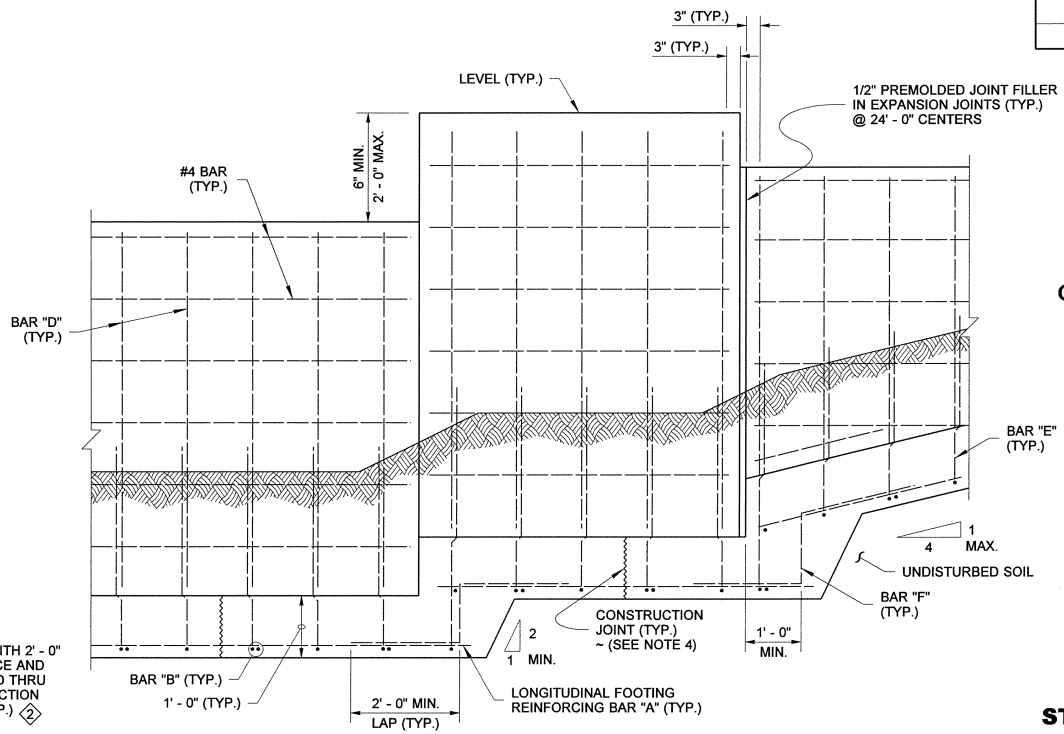

ELEVATION

2 REQUIRED FOR WALLS 24' - 0" ~ TYPE 3C, WALL HEIGHT 22' - 0" & 24' - 0" ~ TYPE 3B, & WALLS 20' - 0", 22' - 0" & 24' - 0" ~ TYPE 3D

3 WHEN **W** IS : < 2' - 6" ..... CENTER WALL ON FOOTING
2' - 6' ≤ W < 4' - 6" ..... DIM. = 1' - 0"
≥ 4' - 6" ..... DIM. = 2' - 0"

CAST-IN-PLACE CONCRETE WALL ON OFFSET SPREAD FOOTING

BIJAN KHALEGHI STATE OF WASHINGTON 27695 STRUCTURAL ENGINEER PROFESSIONAL ENGINEER
12/31/08

NOISE BARRIER WALL TYPE 3

STANDARD PLAN D-2.06-01

SHEET 1 OF 2 SHEETS

APPROVED FOR PUBLICATION

STATE DESIGN ENGINEER — DATE 1/6/09

Washington State Department of Transportation

DRAWN BY: ADAM COCHRAN

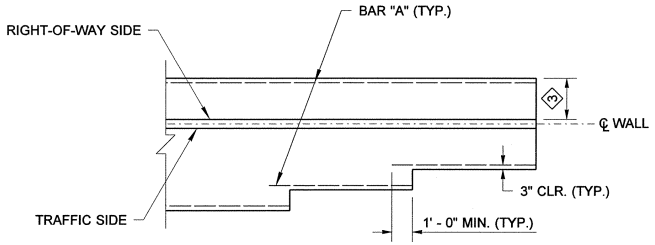

(TRANSVERSE BARS NOT SHOWN)

FOOTING WIDTH TRANSITION DETAIL
FOR LOCATIONS WITHOUT FOOTING STEP

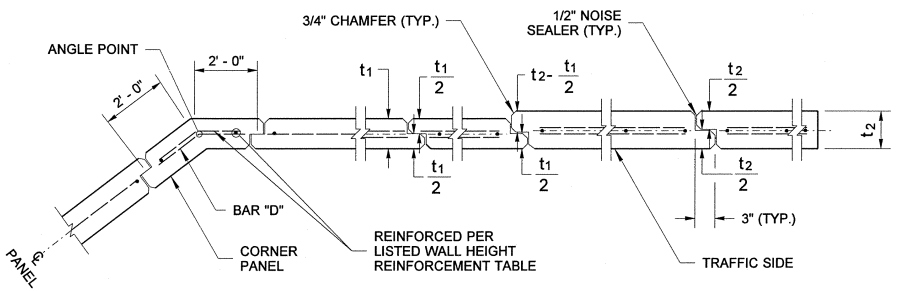

JOINT AND CORNER DETAIL

CAST-IN-PLACE CONCRETE WALL ON OFFSET SPREAD FOOTING

BIJAN KHALEGHI
STATE OF WASHINGTON
27695
STRUCTURAL ENGINEER
PROFESSIONAL ENGINEER
12/31/08

NOISE BARRIER WALL TYPE 3

STANDARD PLAN D-2.06-01

SHEET 2 OF 2 SHEETS

APPROVED FOR PUBLICATION
STATE DESIGN ENGINEER — DATE 11/6/09
Washington State Department of Transportation

DRAWN BY: ADAM COCHRAN

WALL HT H	TYPE 4A t	SHAFT DIAM. D	DEPTH D1	DEPTH D2	SHAFT REINF. BAR"P"	BARS "C"&"D"	TYPE 4B t	SHAFT DIAM. D	DEPTH D1	DEPTH D2	SHAFT REINF. BAR"P"	BARS "C"&"D"	TYPE 4C t	SHAFT DIAM. D	DEPTH D1	DEPTH D2	SHAFT REINF. BAR"P"	BARS "C"&"D"	TYPE 4D t	SHAFT DIAM. D	DEPTH D1	DEPTH D2	SHAFT REINF. BAR"P"	BARS "C"&"D"	WALL HT H
6' - 0"	5"	12"	5' - 3"	4' - 9"	6 ~ #5	#3 @ 15"	5"	12"	6' - 0"	5' - 3"	6 ~ #5	#3 @ 15"	5"	12"	5' - 9"	5' - 0"	6 ~ #5	#3 @ 15"	5"	12"	6' - 6"	5' - 9"	6 ~ #5	#3 @ 15"	6' - 0"
8' - 0"	5"	12"	6' - 0"	5' - 3"	6 ~ #5	#3 @ 15"	5"	12"	7' - 0"	6' - 0"	6 ~ #5	#3 @ 12"	5"	12"	6' - 6"	5' - 6"	6 ~ #5	#3 @ 15"	5"	12"	7' - 6"	6' - 6"	6 ~ #6	#3 @ 10"	8' - 0"
10' - 0"	5"	12"	6' - 9"	5' - 9"	6 ~ #5	#3 @ 13"	5"	12"	7' - 9"	6' - 9"	6 ~ #6	#4 @ 15"	5"	12"	7' - 3"	6' - 3"	6 ~ #5	#3 @ 10"	5"	12"	8' - 3"	7' - 0"	6 ~ #7	#4 @ 12"	10' - 0"
12' - 0"	5"	12"	7' - 3"	6' - 3"	6 ~ #5	#3 @ 9"	5"	12"	8' - 6"	7' - 3"	6 ~ #7	#4 @ 10"	5"	12"	7' - 9"	6' - 9"	6 ~ #6	#4 @ 12"	5"	14"	8' - 6"	7' - 3"	8 ~ #7	#4 @ 10"	12' - 0"
14' - 0"	5"	12"	7' - 9"	6' - 9"	6 ~ #6	#4 @ 12"	5"	14"	8' - 6"	7' - 3"	8 ~ #7	#4 @ 9"	5"	12"	8' - 6"	7' - 3"	6 ~ #7	#4 @ 10"	5"	14"	9' - 3"	8' - 0"	8 ~ #7	#5 @ 11"	14' - 0"
16' - 0"	5"	12"	8' - 6"	7' - 3"	6 ~ #7	#4 @ 10"	5"	16"	9' - 3"	8' - 0"	8 ~ #7	#5 @ 11"	5"	14"	8' - 6"	7' - 3"	8 ~ #6	#4 @ 9"	5"	16"	9' - 6"	8' - 0"	8 ~ #8	#5 @ 8"	16' - 0"
18' - 0"	5"	12"	9' - 0"	7' - 9"	6 ~ #8	#4 @ 9"	5"	16"	9' - 3"	8' - 0"	6 ~ #8	#5 @ 8"	5"	14"	9' - 0"	7' - 9"	8 ~ #7	#5 @ 11"	5"	16"	10' - 0"	8' - 6"	8 ~ #8	#6 @ 9"	18' - 0"
20' - 0"	5"	12"	9' - 3"	7' - 9"	6 ~ #9	#4 @ 7"	5"	16"	10' - 0"	8' - 6"	8 ~ #7	#5 @ 7"	5"	14"	9' - 9"	8' - 3"	8 ~ #8	#5 @ 8"	6"	16"	10' - 9"	9' - 3"	8 ~ #9	#6 @ 9"	20' - 0"
22' - 0"	5"	14"	9' - 3"	7' - 9"	8 ~ #7	#4 @ 6"	6"	16"	10' - 6"	9' - 0"	8 ~ #8	#5 @ 6"	5"	14"	10' - 3"	8' - 9"	8 ~ #9	#5 @ 8"	6"	16"	11' - 6"	9' - 9"	8 ~ #10	#6 @ 7"	22' - 0"
24' - 0"	5"	14"	9' - 9"	8' - 3"	8 ~ #8	#5 @ 8"	6"	16"	11' - 3"	9' - 6"	8 ~ #8	#6 @ 7"	6"	16"	10' - 3"	8' - 9"	8 ~ #8	#6 @ 7"	7"	18"	11' - 6"	9' - 9"	8 ~ #10	#6 @ 7"	24' - 0"

t = WALL THICKNESS

WIND EXPOSURE & VELOCITY		
NOISE BARRIER TYPE	WIND EXPOSURE	WIND VELOCITY (MPH)
4A	B1	80
4B	B1	90
4C	B2	80
4D	B2	90

SOIL TYPE	
SOIL TYPE	ANGLE OF INTERNAL FRICTION ϕ (DEGREES)
D1	32
D2	38

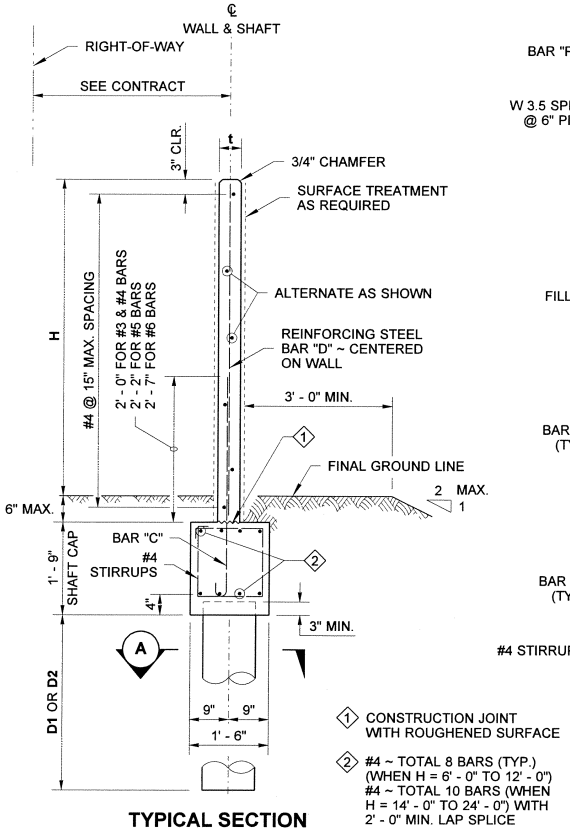

TYPICAL SECTION

1 CONSTRUCTION JOINT WITH ROUGHENED SURFACE

2 #4 ~ TOTAL 8 BARS (TYP.) (WHEN H = 6' - 0" TO 12' - 0") #4 ~ TOTAL 10 BARS (WHEN H = 14' - 0" TO 24' - 0") WITH 2' - 0" MIN. LAP SPLICE

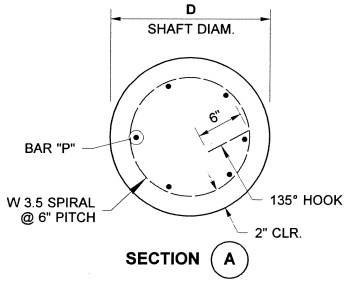

SECTION (A)

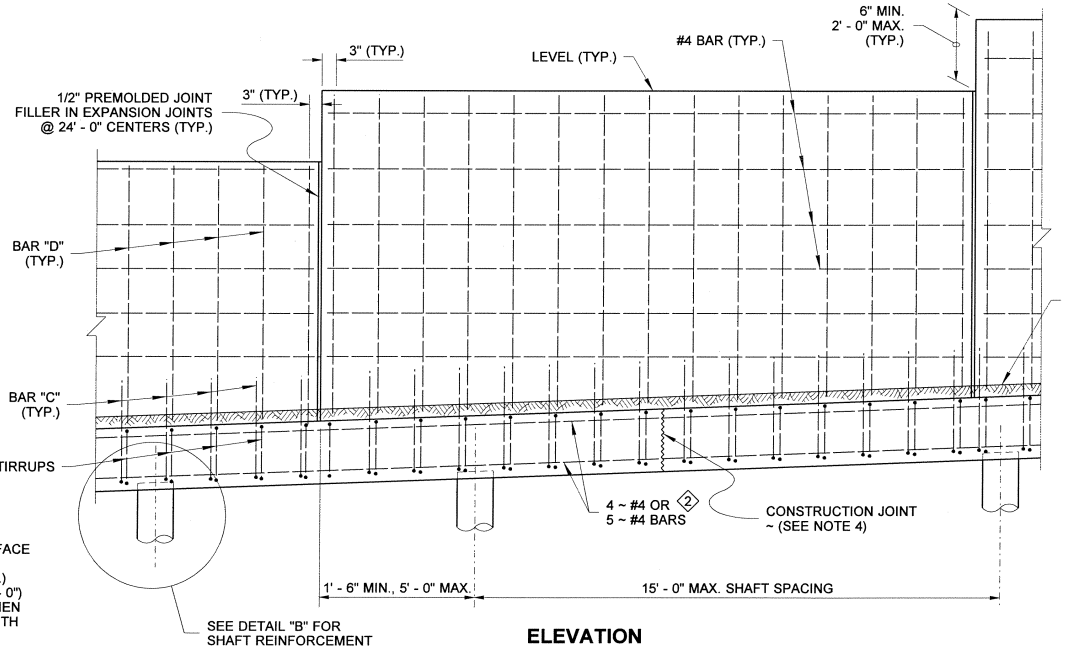

ELEVATION

NOTES

1. Wall to be designated Noise Barrier Wall Type 4A, 4B, 4C or 4D. The Contract specifies actual wall designations.
2. For intermediate wall heights, see next higher H.
3. Panels shall have at least 3 feet of level ground on each side.
4. Construction joints in the shaft cap shall be spaced at 120 feet maximum.
5. The Contract specifies actual foundation requirements D1 or D2.

CAST-IN-PLACE CONCRETE WALL ON SHAFT FOUNDATION

BIJAN KHALEGHI STATE OF WASHINGTON 27695 REGISTERED PROFESSIONAL ENGINEER

EXPIRES AUGUST 23, 2006

NOISE BARRIER WALL TYPE 4

STANDARD PLAN D-2.08-00

SHEET 1 OF 2 SHEETS

APPROVED FOR PUBLICATION

Harold Pitzpso 11-10-05

STATE DESIGN ENGINEER DATE

Washington State Department of Transportation

DRAWN BY: ADAM COCHRAN

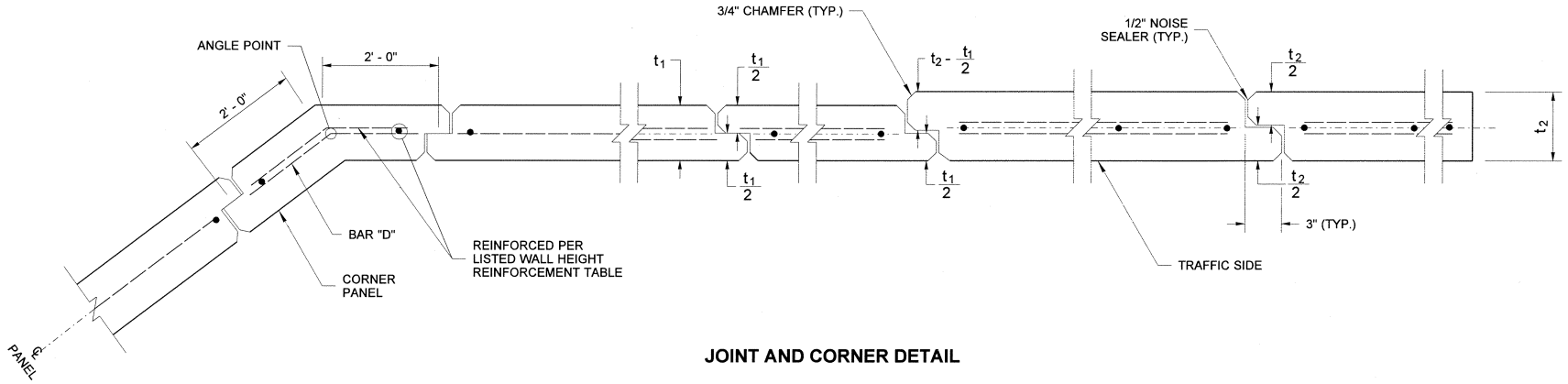

JOINT AND CORNER DETAIL

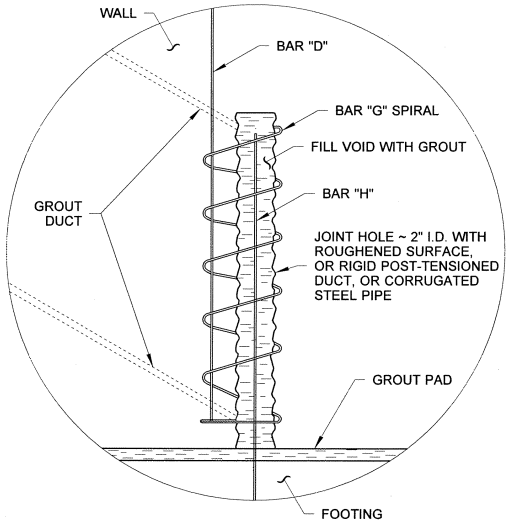

② FILL THE JOINT HOLE WITH GROUT USING DUCTS. DUCTS SHALL BE LOCATED ON PANEL FACE OPPOSITE TRAFFIC

DETAIL (A)

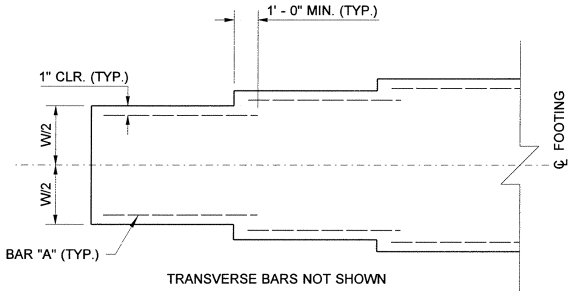

TRANSVERSE BARS NOT SHOWN

FOOTING WIDTH TRANSITION DETAIL

FOR LOCATIONS WITHOUT FOOTING STEP

PRECAST CONCRETE WALL ON SPREAD FOOTING

EXPIRES AUGUST 23, 2006

NOISE BARRIER WALL TYPE 9

STANDARD PLAN D-2.32-00

SHEET 2 OF 2 SHEETS

APPROVED FOR PUBLICATION

Harold Peterson 11-10-05

STATE DESIGN ENGINEER — DATE

Washington State Department of Transportation

DRAWN BY: ADAM COCHRAN

WALL HT H	TYPE 10A						TYPE 10B						TYPE 10C						TYPE 10D						WALL HT H
	W	BARS "A"&"F"	t	BAR "B"	SPIRAL BAR "G"	BARS "D"&"H"	W	BARS "A"&"F"	t	BAR "B"	SPIRAL BAR "G"	BARS "D"&"H"	W	BARS "A"&"F"	t	BAR "B"	SPIRAL BAR "G"	BARS "D"&"H"	W	BARS "A"&"F"	t	BAR "B"	SPIRAL BAR "G"	BARS "D"&"H"	
6' - 0"	2' - 0"	3 ~ #4	5"	#4 @ 18"	W2.0 @ 2"	#3 @ 15"	2' - 3"	3 ~ #4	5"	#4 @ 18"	W2.0 @ 2"	#3 @ 12"	2' - 0"	3 ~ #4	5"	#4 @ 18"	W2.0 @ 2"	#3 @ 15"	2' - 6"	3 ~ #4	5"	#4 @ 18"	W2.0 @ 2"	#3 @ 11"	6' - 0"
8' - 0"	2' - 3"	3 ~ #4	5"	#4 @ 18"	W2.0 @ 2"	#3 @ 12"	2' - 9"	3 ~ #4	5"	#4 @ 18"	W3.0 @ 2"	#4 @ 15"	2' - 6"	3 ~ #4	5"	#4 @ 18"	W2.0 @ 2"	#3 @ 10"	3' - 3"	5 ~ #4	5"	#4 @ 18"	W3.0 @ 2"	#4 @ 12"	8' - 0"
10' - 0"	2' - 6"	3 ~ #4	5"	#4 @ 18"	W2.0 @ 2"	#3 @ 9"	3' - 3"	5 ~ #4	5"	#4 @ 18"	W3.0 @ 2"	#4 @ 10"	2' - 9"	3 ~ #4	5"	#4 @ 18"	W3.0 @ 2"	#4 @ 12"	3' - 6"	5 ~ #4	5"	#4 @ 18"	W3.0 @ 2"	#4 @ 10"	10' - 0"
12' - 0"	3' - 0"	5 ~ #4	5"	#4 @ 18"	W3.0 @ 2"	#4 @ 12"	3' - 9"	5 ~ #4	5"	#4 @ 18"	W3.0 @ 2"	#4 @ 10"	3' - 3"	5 ~ #4	5"	#4 @ 18"	W3.0 @ 2"	#4 @ 10"	4' - 3"	5 ~ #4	5"	#4 @ 18"	W3.0 @ 1 3/4"	#5 @ 12"	12' - 0"
14' - 0"	3' - 3"	5 ~ #4	5"	#4 @ 18"	W3.0 @ 2"	#4 @ 10"	4' - 3"	5 ~ #4	5"	#4 @ 18"	W3.0 @ 1 3/4"	#5 @ 11"	3' - 9"	5 ~ #4	5"	#4 @ 18"	W3.0 @ 2"	#4 @ 9"	5' - 3"	5 ~ #4	5"	#4 @ 18"	W3.0 @ 1 3/4"	#5 @ 8"	14' - 0"
16' - 0"	3' - 9"	5 ~ #4	5"	#4 @ 18"	W3.0 @ 2"	#4 @ 9"	5' - 3"	5 ~ #4	5"	#4 @ 18"	W4.0 @ 2"	#6 @ 12"	4' - 3"	5 ~ #4	5"	#4 @ 18"	W3.0 @ 1 3/4"	#5 @ 11"	6' - 3"	5 ~ #4	5"	#4 @ 18"	W4.0 @ 2"	#6 @ 9"	16' - 0"
18' - 0"	4' - 0"	5 ~ #4	5"	#4 @ 18"	W3.0 @ 1 3/4"	#5 @ 11"	6' - 0"	5 ~ #4	5"	#4 @ 18"	W4.0 @ 2"	#6 @ 9"	5' - 0"	5 ~ #4	5"	#4 @ 18"	W4.0 @ 2"	#6 @ 12"	7' - 0"	5 ~ #4	6"	#4 @ 18"	W4.0 @ 2"	#6 @ 9"	18' - 0"
20' - 0"	5' - 0"	5 ~ #4	5"	#4 @ 18"	W3.0 @ 1 1/2"	#5 @ 9"	7' - 0"	5 ~ #4	6"	#4 @ 18"	W4.0 @ 2"	#6 @ 9"	5' - 9"	5 ~ #4	5"	#4 @ 18"	W4.0 @ 2"	#6 @ 10"	8' - 0"	6 ~ #4	6"	#4 @ 12"	W4.0 @ 1 3/4"	#6 @ 7"	20' - 0"
22' - 0"	5' - 6"	5 ~ #4	5"	#4 @ 18"	W3.0 @ 1 1/2"	#5 @ 7"	7' - 9"	5 ~ #4	6"	#4 @ 12"	W4.0 @ 1 3/4"	#6 @ 8"	6' - 6"	5 ~ #4	6"	#4 @ 18"	W4.0 @ 2"	#6 @ 9"	9' - 0"	6 ~ #4	7"	#4 @ 12"	W4.0 @ 1 3/4"	#6 @ 7"	22' - 0"
24' - 0"	6' - 3"	5 ~ #4	5"	#4 @ 15"	W3.0 @ 1 1/2"	#5 @ 6"	8' - 6"	5 ~ #4	7"	#4 @ 11"	W4.0 @ 1 3/4"	#6 @ 8"	7' - 6"	5 ~ #4	6"	#4 @ 12"	W4.0 @ 1 3/4"	#6 @ 8"	9' - 9"	6 ~ #4	7"	#4 @ 15"	W4.0 @ 1 3/4"	#6 @ 6"	24' - 0"

t = WALL THICKNESS

BENDING DIAGRAM

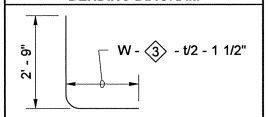

BAR "H"

WIND EXPOSURE & VELOCITY		
NOISE BARRIER TYPE	WIND EXPOSURE	WIND VELOCITY (MPH)
10A	B1	80
10B	B1	90
10C	B2	80
10D	B2	90

NOTES

1. Wall to be designated Noise Barrier Wall Type 10A, 10B, 10C or 10D. The Contract specifies actual wall designation.
2. For intermediate wall heights, use the next higher H.
3. Panels shall have at least 3' - 0" of level ground on each side.
4. Construction joints in the footing shall be spaced at 120 feet maximum.
5. All joints shall be in full contact and sealed.

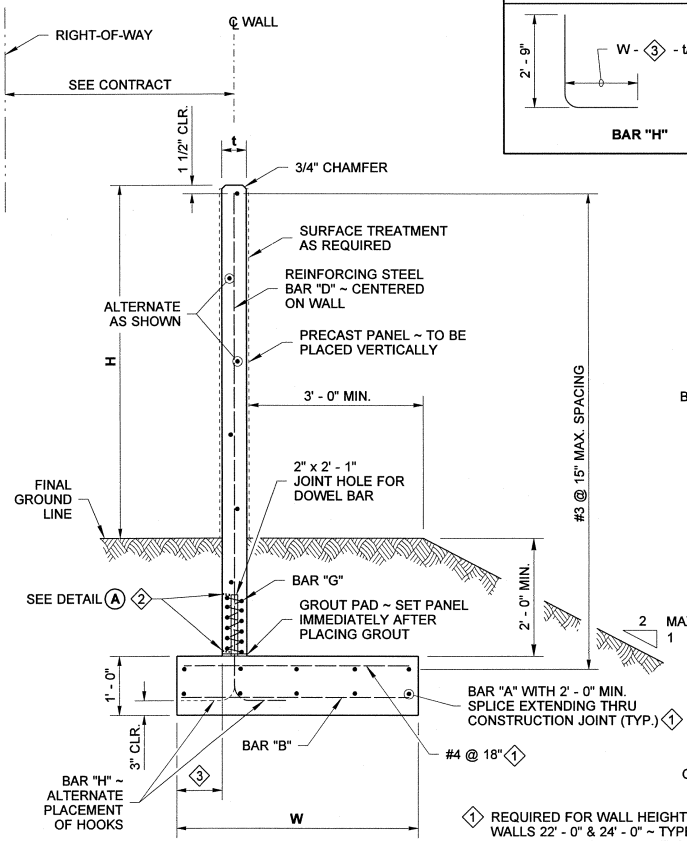

TYPICAL SECTION

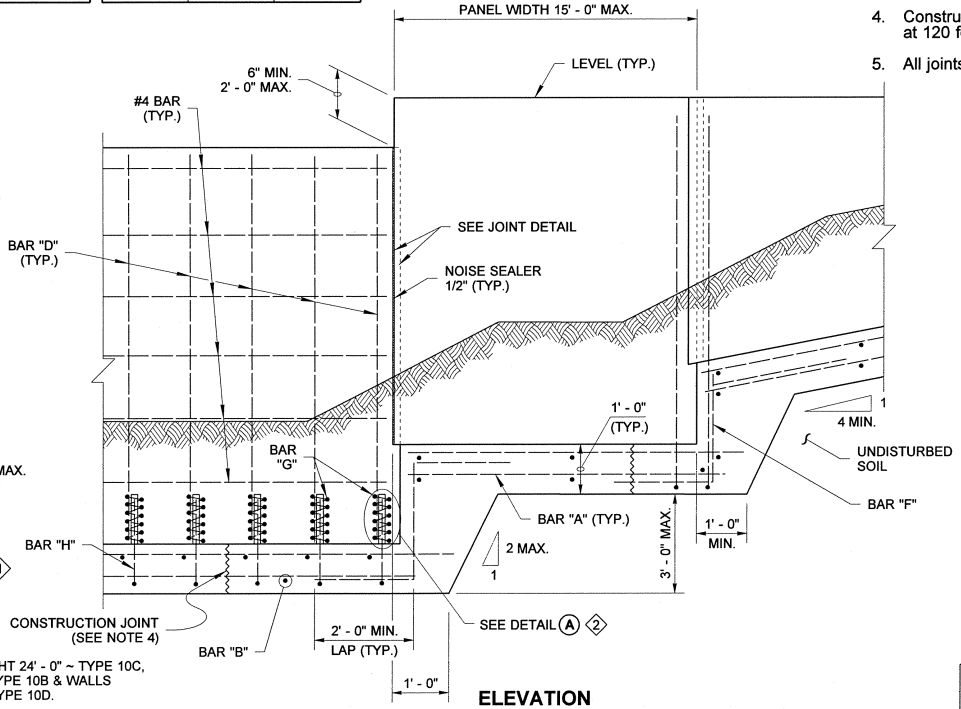

ELEVATION

1 REQUIRED FOR WALL HEIGHT 24' - 0" ~ TYPE 10C, WALLS 22' - 0" & 24' - 0" ~ TYPE 10B & WALLS 20' - 0", 22' - 0" & 24' - 0" ~ TYPE 10D.

3 WHEN W IS : < 2' - 6" ..... CENTER WALL ON FOOTING
2' - 6" ≤ W < 4' - 6" ..... DIM. = 1' - 0"
≥ 4' - 6" ..... DIM. = 2' - 0"

PRECAST CONCRETE WALL ON OFFSET SPREAD FOOTING

BIJAN KHALEGHI — STATE OF WASHINGTON — 27695 — STRUCTURAL ENGINEER — PROFESSIONAL ENGINEER — 12/31/08

NOISE BARRIER WALL TYPE 10

STANDARD PLAN D-2.34-01

SHEET 1 OF 2 SHEETS

APPROVED FOR PUBLICATION

STATE DESIGN ENGINEER — DATE 1/16/09

Washington State Department of Transportation

DRAWN BY: ADAM COCHRAN

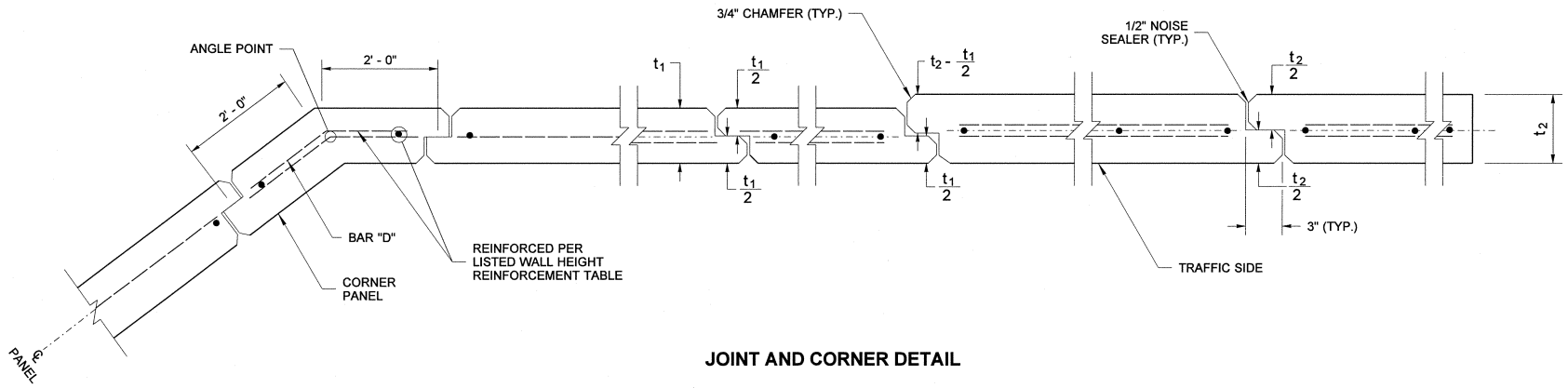

JOINT AND CORNER DETAIL

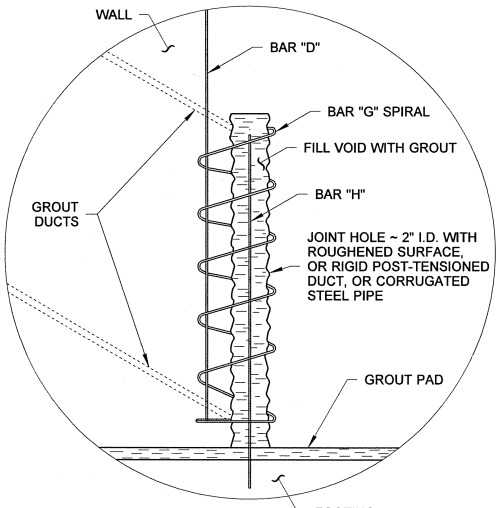

(2) FILL THE JOINT HOLE WITH GROUT USING DUCTS. DUCTS SHALL BE LOCATED ON PANEL FACE OPPOSITE TRAFFIC

DETAIL (A)

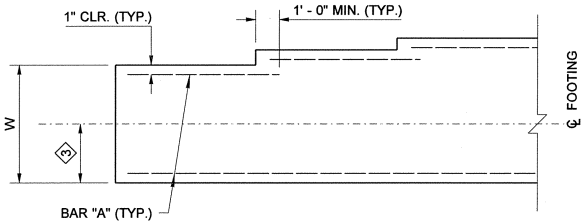

(TRANSVERSE BARS NOT SHOWN)

FOOTING WIDTH TRANSITION DETAIL

FOR LOCATIONS WITHOUT FOOTING STEP

PRECAST CONCRETE WALL ON OFFSET SPREAD FOOTING

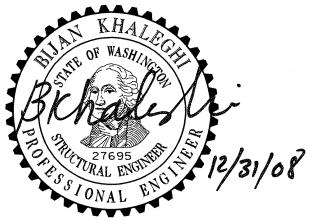

NOISE BARRIER WALL TYPE 10

STANDARD PLAN D-2.34-01

SHEET 2 OF 2 SHEETS

APPROVED FOR PUBLICATION

STATE DESIGN ENGINEER — DATE 1/6/09

Washington State Department of Transportation

DRAWN BY: MARK SUJKA

WALL HT H	TYPE 11A						TYPE 11B						TYPE 11C						TYPE 11D						WALL HEIGHT H
	DEPTH D1	DEPTH D2	BAR "A"	BAR "B"	Y	ANCHOR BOLT DIAM.	DEPTH D1	DEPTH D2	BAR "A"	BAR "B"	Y	ANCHOR BOLT DIAM.	DEPTH D1	DEPTH D2	BAR "A"	BAR "B"	Y	ANCHOR BOLT DIAM.	DEPTH D1	DEPTH D2	BAR "A"	BAR "B"	Y	ANCHOR BOLT DIAM.	
6' - 0"	5' - 0"	4' - 6"	4 ~ #3	4 ~ #7	3' - 4"	3/4"	5' - 9"	5' - 0"	4 ~ #3	4 ~ #7	3' - 4"	3/4"	5' - 3"	4' - 9"	4 ~ #3	4 ~ #7	3' - 4"	1"	6' - 3"	5' - 3"	4 ~ #3	4 ~ #7	3' - 4"	3/4"	6' - 0"
8' - 0"	5' - 6"	5' - 0"	4 ~ #3	4 ~ #7	3' - 4"	3/4"	6' - 6"	5' - 9"	4 ~ #3	4 ~ #7	3' - 4"	3/4"	6' - 0"	5' - 3"	4 ~ #3	4 ~ #7	3' - 4"	1"	7' - 0"	6' - 0"	4 ~ #3	4 ~ #7	3' - 4"	3/4"	8' - 0"
10' - 0"	6' - 3"	5' - 3"	4 ~ #3	4 ~ #7	3' - 4"	3/4"	7' - 3"	6' - 3"	4 ~ #4	4 ~ #7	3' - 4"	3/4"	6' - 9"	5' - 9"	4 ~ #3	4 ~ #7	3' - 4"	1"	8' - 0"	6' - 9"	4 ~ #4	4 ~ #7	3' - 4"	3/4"	10' - 0"
12' - 0"	6' - 9"	5' - 9"	4 ~ #3	4 ~ #7	3' - 4"	3/4"	8' - 0"	6' - 9"	4 ~ #4	4 ~ #7	3' - 4"	3/4"	7' - 6"	6' - 3"	4 ~ #4	4 ~ #7	3' - 4"	1"	8' - 9"	7' - 3"	4 ~ #5	4 ~ #7	3' - 4"	3/4"	12' - 0"
14' - 0"	7' - 3"	6' - 3"	4 ~ #4	4 ~ #7	3' - 4"	3/4"	8' - 9"	7' - 6"	4 ~ #5	4 ~ #7	3' - 4"	3/4"	8' - 0"	6' - 9"	4 ~ #4	4 ~ #7	3' - 4"	1"	9' - 6"	8' - 0"	4 ~ #5	4 ~ #9	5' - 6"	1"	14' - 0"
16' - 0"	7' - 9"	6' - 9"	4 ~ #4	4 ~ #7	3' - 4"	1"	9' - 6"	8' - 0"	4 ~ #6	4 ~ #7	3' - 4"	1"	8' - 9"	7' - 3"	4 ~ #5	4 ~ #9	5' - 6"	1"	10' - 3"	8' - 6"	4 ~ #6	4 ~ #9	5' - 6"	1"	16' - 0"
18' - 0"	8' - 6"	7' - 0"	4 ~ #5	4 ~ #9	5' - 6"	1"	10' - 3"	8' - 6"	4 ~ #6	4 ~ #9	5' - 6"	1"	9' - 3"	7' - 9"	4 ~ #6	4 ~ #9	5' - 6"	1"	11' - 0"	9' - 3"	4 ~ #7	4 ~ #11	8' - 5"	1"	18' - 0"
20' - 0"	9' - 0"	7' - 6"	4 ~ #5	4 ~ #9	8' - 5"	1"	10' - 9"	9' - 0"	4 ~ #7	4 ~ #9	8' - 5"	1"	10' - 0"	8' - 3"	4 ~ #6	4 ~ #11	8' - 5"	1"	11' - 9"	9' - 9"	4 ~ #8	6 ~ #11	8' - 5"	1"	20' - 0"
22' - 0"	9' - 6"	8' - 0"	4 ~ #6	6 ~ #11	8' - 5"	1"	11' - 6"	9' - 6"	4 ~ #8	6 ~ #11	8' - 5"	1"	10' - 6"	8' - 9"	4 ~ #7	6 ~ #11	8' - 5"	1"	12' - 6"	10' - 3"	4 ~ #8	SPECIAL DESIGN REQUIRED			22' - 0"
24' - 0"	10' - 0"	8' - 3"	4 ~ #6	SPECIAL DESIGN REQUIRED			12' - 0"	10' - 0"	4 ~ #8	SPECIAL DESIGN REQUIRED			11' - 3"	9' - 3"	4 ~ #7	SPECIAL DESIGN REQUIRED			13' - 3"	11' - 0"	4 ~ #9	SPECIAL DESIGN REQUIRED			24' - 0"

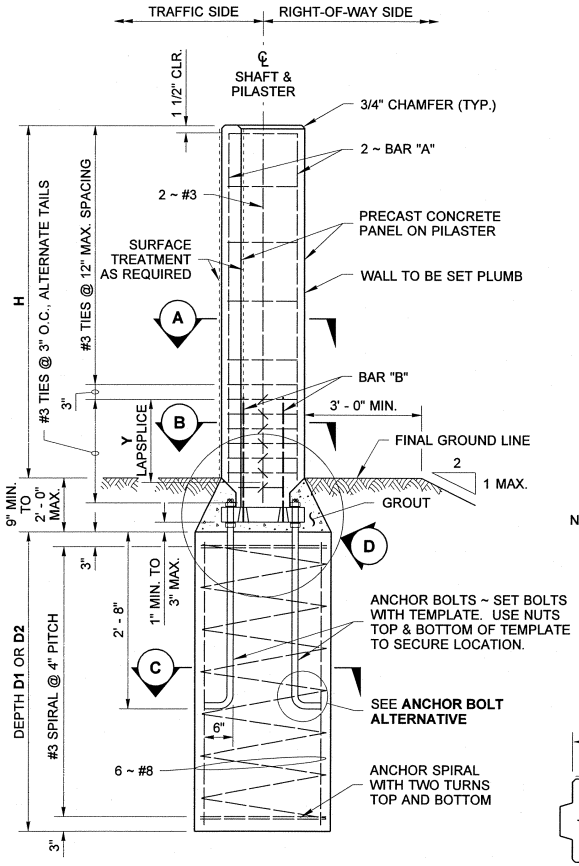

TYPICAL SECTION

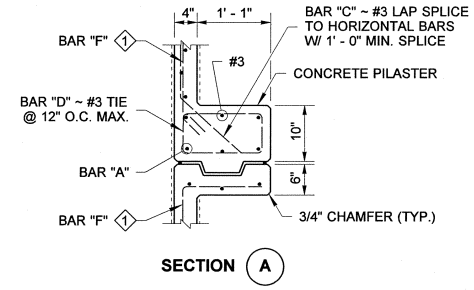

SECTION (A)

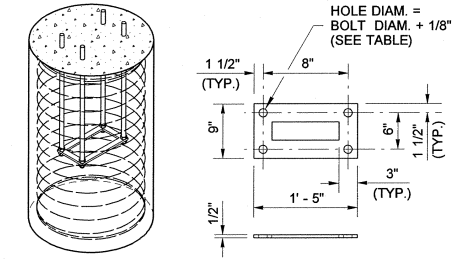

ISOMETRIC VIEW SHOWN FOR INSTALLATION

PLATE DETAIL

ANCHOR BOLT ALTERNATIVE
THREADED ROD WITH NUTS TOP AND BOTTOM

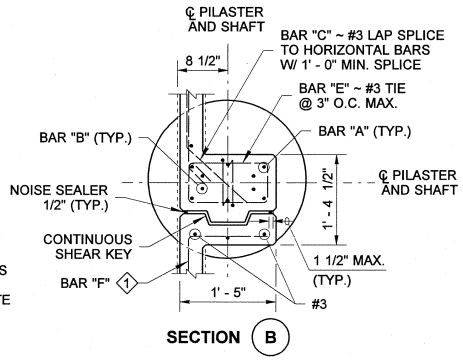

SECTION (B)

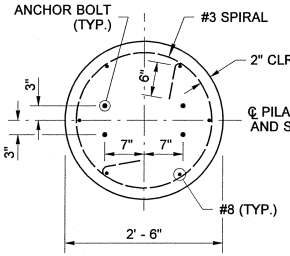

SECTION (C)

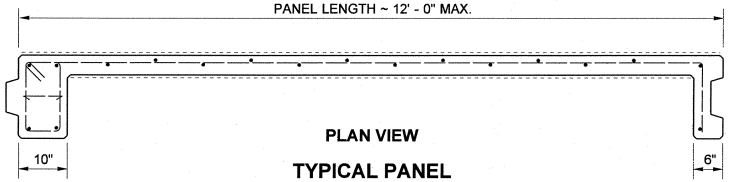

PLAN VIEW

TYPICAL PANEL

NOTES

1. Wall to be designated Noise Barrier Wall Type 11A, 11B, 11C or 11D. The Contract specifies actual wall dimensions.
2. For intermediate wall heights, use the next higher H.
3. Panels shall have at least 3 feet of level ground on each side.
4. The Contract specifies actual foundation requirements D1 or D2.
5. Maximum Panel length shall be 12 feet.

1 BAR "F" ~ #3 @ 12" BOTH DIRECTIONS, OR 6 × 6-W5.5 × W5.5, OR 12 × 12-W9.5 × W6.5, OR W9.5 (D10) HORIZONTAL @ 12" O.C. WITH W6 (D6) VERTICAL @ 12" O.C. OR EQUIVALENT. CENTER HORIZONTAL BAR ON WALL. ALTERNATE VERTICAL BARS AS SHOWN.

WIND EXPOSURE & VELOCITY		
NOISE BARRIER TYPE	WIND EXPOSURE	WIND VELOCITY (MPH)
11A	B1	80
11B	B1	90
11C	B2	80
11D	B2	90

SOIL TYPE	
SOIL TYPE	ANGLE OF INTERNAL FRICTION ϕ (DEGREES)
D1	32
D2	38

PRECAST CONCRETE WALL ON SHAFT FOUNDATION

BIJAN KHALEGHI — STATE OF WASHINGTON — 27695 — STRUCTURAL ENGINEER — PROFESSIONAL ENGINEER — 12/31/08

NOISE BARRIER WALL TYPE 11

STANDARD PLAN D-2.36-02

SHEET 1 OF 3 SHEETS

APPROVED FOR PUBLICATION

STATE DESIGN ENGINEER — DATE 11/6/09

Washington State Department of Transportation

NOTE

THE BOTTOM 9" OF **BAR "B"** SHALL BE PAINTED WITH ONE COAT OF FORMULA A-6-86 ZINC DUST OXIDE PRIMER OR, ONE COAT OF FORMULA A-11-99 PRIMER.

DIMENSION TABLE			
S	A ⟨1⟩	F ⟨1⟩	T
#7	1 21/32"	1 1/8"	1 1/2"
#9	2"	1 3/8"	1 3/4"
#11	2 15/32"	1 21/32"	2 1/4"

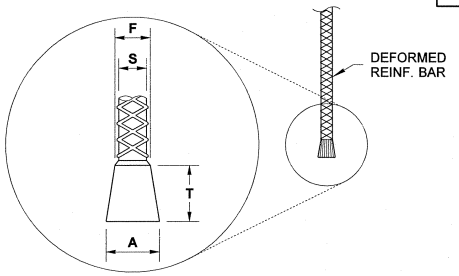

BAR "B"

THE WEDGE HEAD SHALL BEAR FIRMLY AND UNIFORMLY AGAINST THE BASE PLATE. **BAR "B"** SHALL BE HELD SECURE DURING CONCRETE PLACEMENT TO PREVENT GAPS BETWEEN THE WEDGE HEAD AND THE BASE PLATE.

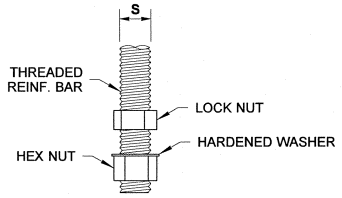

BAR "B"

THREADED BAR OPTION

⟨1⟩ NO TAPER IS REQUIRED ON THE **BASE PLATE** WHEN USING THE **THREADED BAR OPTION**, USE DIAM. **F** HOLES

NOTE

ANCHOR BOLTS, NUTS, WASHERS, BASE PLATE, AND BAR "B" SHALL HAVE A PROTECTIVE COATING OF ONE OF THE FOLLOWING: HOT DIPPED GALVANIZING AASHTO M 232 FOR HARDWARE; AASHTO M 111 FOR WASHERS AND PLATES: MECHANICAL GALVANIZING AASHTO M 298 CL 55, OR ZINC RICH PAINT, PAINT THREADS AND NUTS AFTER INSTALLATION.

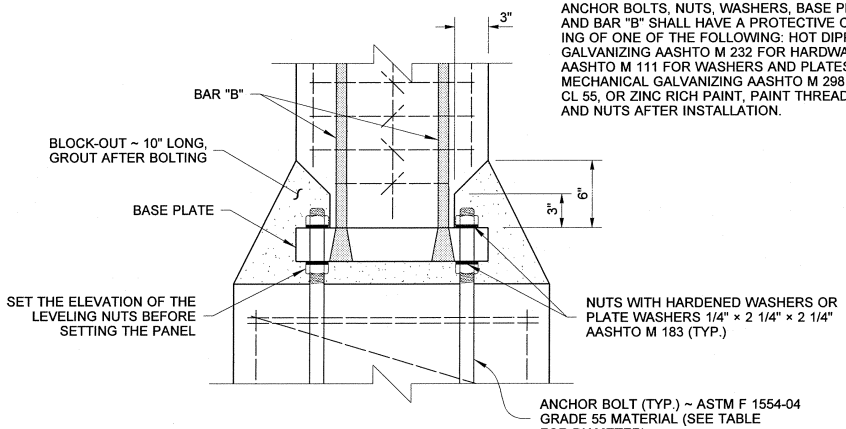

DETAIL (D)

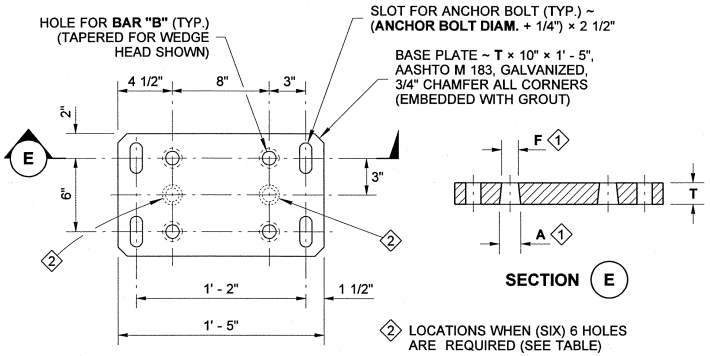

SECTION (E)

⟨2⟩ LOCATIONS WHEN (SIX) 6 HOLES ARE REQUIRED (SEE TABLE)

BASE PLATE

BAR "B" AND BASE PLATE DETAILS

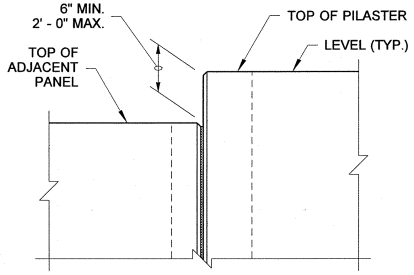

ELEVATION VIEW

STEP DETAIL

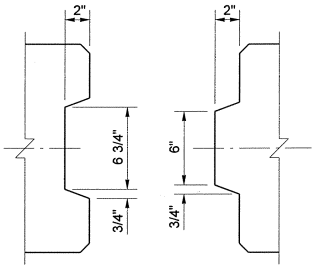

PLAN VIEW

SHEAR-KEY DETAIL

BENDING DIAGRAM

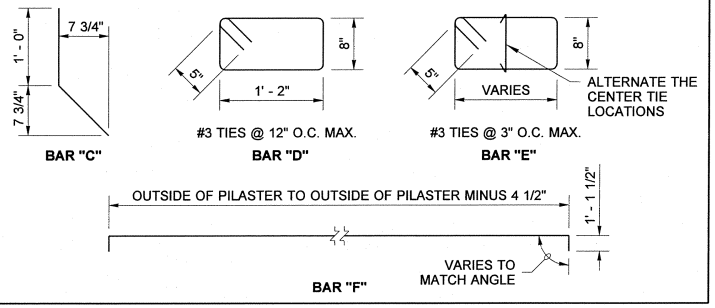

DRAWN BY: MARK SUJKA

PRECAST CONCRETE WALL ON SHAFT FOUNDATION

NOISE BARRIER WALL TYPE 11

STANDARD PLAN D-2.36-02

SHEET 2 OF 3 SHEETS

APPROVED FOR PUBLICATION

STATE DESIGN ENGINEER — DATE 1/16/09

Washington State Department of Transportation

DRAWN BY: MARK SUJKA

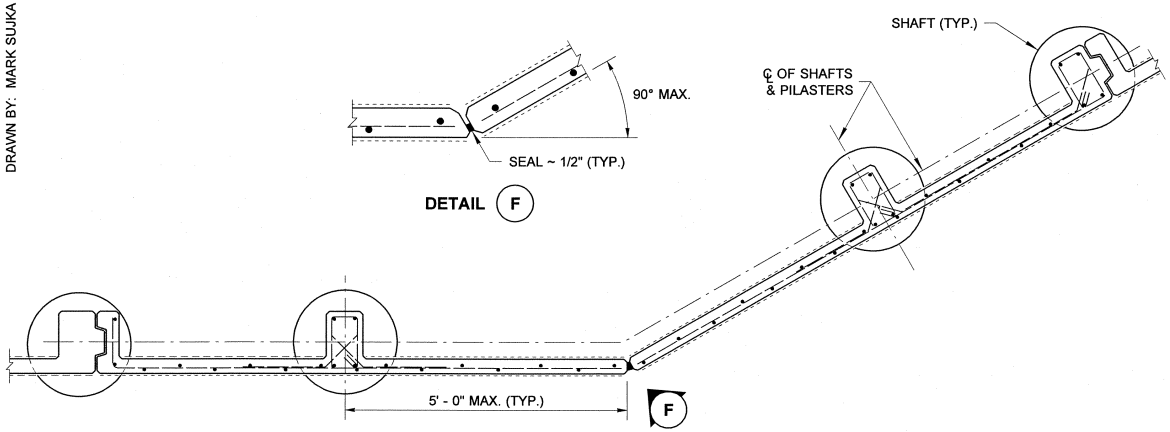

ANGLE POINT ~ CANTILEVERED

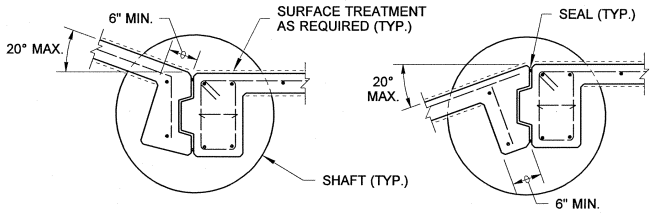

ANGLE POINT ~ ON SHAFT
ANGLE 20° OR LESS

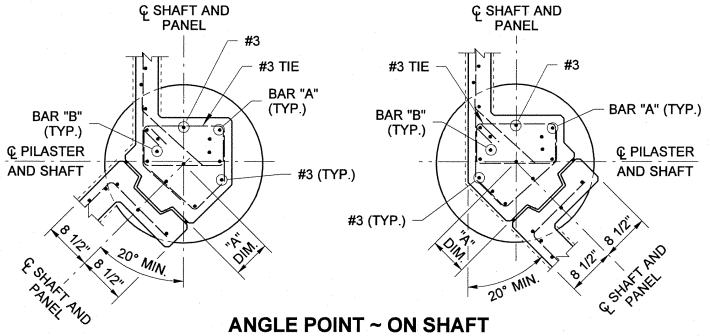

ANGLE	"A" DIMENSION
30°	4 1/2"
40°	5 1/2"
50°	6 1/2"
60°	7 1/4"
70°	7 3/4"
80°	8"
90°	9 1/4"

ANGLE POINT ~ ON SHAFT
ANGLE 20° TO 90°

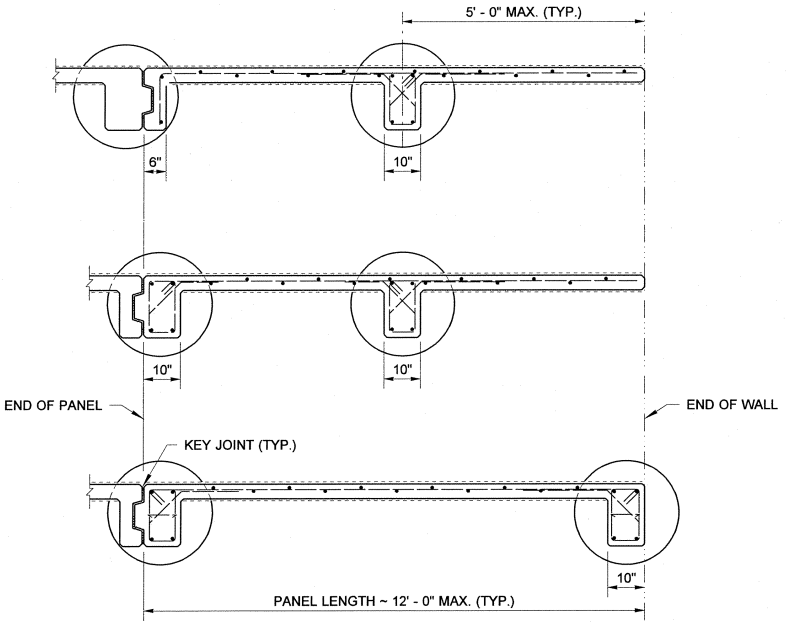

END-PANEL OPTIONS

PRECAST CONCRETE WALL ON SHAFT FOUNDATION

BIJAN KHALEGHI
STATE OF WASHINGTON
27695
STRUCTURAL ENGINEER
PROFESSIONAL ENGINEER
12/31/08

NOISE BARRIER WALL TYPE 11

STANDARD PLAN D-2.36-02

SHEET 3 OF 3 SHEETS

APPROVED FOR PUBLICATION

STATE DESIGN ENGINEER — DATE 1/6/09

Washington State Department of Transportation

DRAWN BY: ADAM COCHRAN

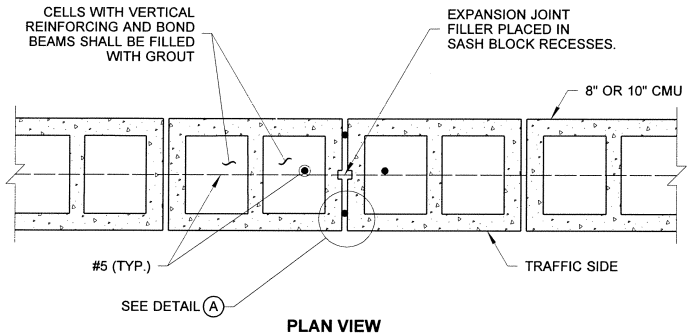

PLAN VIEW

TYPICAL EXPANSION JOINT

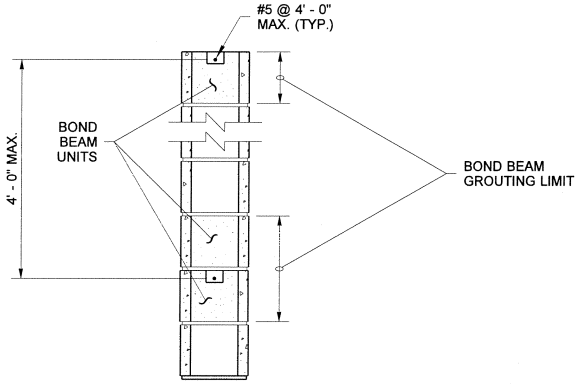

BOND BEAM DETAIL

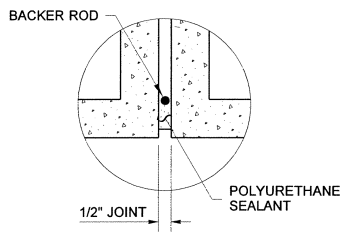

DETAIL (A)

TYPICAL BOTH SIDES OF WALL

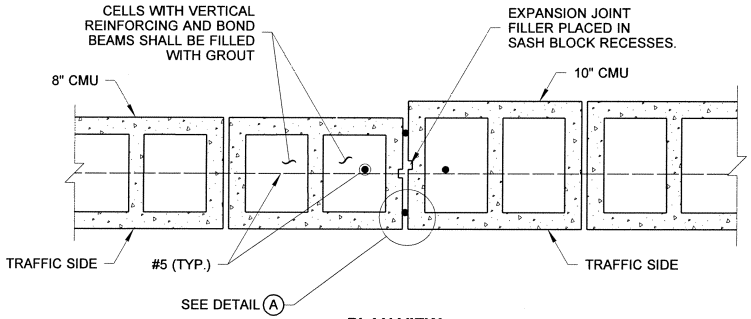

PLAN VIEW

EXPANSION JOINT AT WIDTH STEP

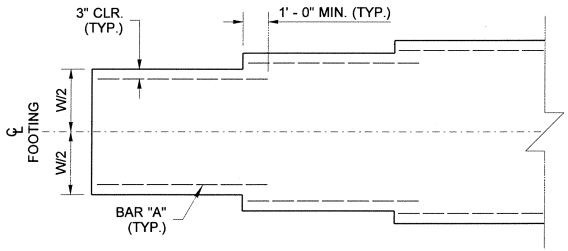

FOOTING WIDTH TRANSITION DETAIL

(FOR LOCATIONS WITHOUT FOOTING STEP)
NOTE: TRANSVERSE BARS NOT SHOWN

MASONRY WALL ON SPREAD FOOTING

BIJAN KHALEGHI
STATE OF WASHINGTON
11/9/05
27695
REGISTERED
PROFESSIONAL ENGINEER

EXPIRES AUGUST 23, 2006

NOISE BARRIER WALL TYPE 17

STANDARD PLAN D-2.62-00

SHEET 2 OF 2 SHEETS

APPROVED FOR PUBLICATION

Harold Petersen 11.10.05

STATE DESIGN ENGINEER — DATE

Washington State Department of Transportation

DRAWN BY: BILL BERENS

WIND EXPOSURE & VELOCITY		
NOISE BARRIER TYPE	WIND EXPOSURE	WIND VELOCITY (MPH)
18A	B1	80
18B	B1	90
18C	B2	80
18D	B2	90

WALL HT H	TYPE 18A						
	CMU WIDTH	X	W	BAR "A"	BAR "C"	BAR "D"	BAR "E"
6' - 0"	8"	—	2' - 0"	3 ~ #4	—	#6 @ 48"	#4 @ 18"
8' - 0"	8"	—	2' - 3"	3 ~ #4	—	#6 @ 48"	#4 @ 18"
10' - 0"	8"	—	2' - 6"	3 ~ #4	—	#6 @ 48"	#4 @ 18"
12' - 0"	8"	—	3' - 0"	4 ~ #4	—	#6 @ 48"	#4 @ 18"
14' - 0"	8"	—	3' - 3"	4 ~ #4	—	#6 @ 36"	#4 @ 18"
16' - 0"	10"	5' - 4"	3' - 9"	5 ~ #4	—	#6 @ 16"	#4 @ 18"
18' - 0"	10"	6' - 0"	4' - 0"	5 ~ #4	#6 @ 48"	#6 @ 48"	#4 @ 18"
20' - 0"	10"	6' - 8"	5' - 0"	5 ~ #4	#6 @ 32"	#6 @ 32"	#4 @ 18"
22' - 0"	10"	7' - 4"	5' - 6"	5 ~ #4	#6 @ 24"	#6 @ 24"	#4 @ 18"
24' - 0"	10"	8' - 0"	6' - 3"	5 ~ #4	#6 @ 16"	#6 @ 16"	#4 @ 18"

WALL HT H	TYPE 18B						
	CMU WIDTH	X	W	BAR "A"	BAR "C"	BAR "D"	BAR "E"
6' - 0"	8"	—	2' - 3"	3 ~ #4	—	#6 @ 48"	#4 @ 18"
8' - 0"	8"	—	2' - 9"	4 ~ #4	—	#6 @ 48"	#4 @ 18"
10' - 0"	8"	—	3' - 3"	4 ~ #4	—	#6 @ 48"	#4 @ 18"
12' - 0"	10"	4' - 0"	3' - 9"	4 ~ #4	—	#6 @ 40"	#4 @ 18"
14' - 0"	10"	4' - 8"	4' - 3"	5 ~ #4	#6 @ 40"	#6 @ 40"	#4 @ 18"
16' - 0"	10"	5' - 4"	5' - 3"	5 ~ #4	#6 @ 32"	#6 @ 32"	#4 @ 18"
18' - 0"	10"	6' - 0"	6' - 0"	6 ~ #4	#6 @ 24"	#6 @ 24"	#4 @ 18"
20' - 0"	10"	8' - 0"	7' - 0"	5 ~ #4	#7 @ 24"	#7 @ 24"	#4 @ 18"
22' - 0"	10"	10' - 0"	7' - 9"	5 ~ #4	#7 @ 16"	#7 @ 16"	#4 @ 12"
24' - 0"	10"	12' - 0"	8' - 6"	5 ~ #4	#8 @ 16"	#8 @ 16"	#4 @ 12"

WALL HT H	TYPE 18C						
	CMU WIDTH	X	W	BAR "A"	BAR "C"	BAR "D"	BAR "E"
6' - 0"	8"	—	2' - 0"	3 ~ #4	—	#6 @ 48"	#4 @ 18"
8' - 0"	8"	—	2' - 6"	3 ~ #4	—	#6 @ 48"	#4 @ 18"
10' - 0"	8"	—	2' - 9"	3 ~ #4	—	#6 @ 48"	#4 @ 18"
12' - 0"	8"	—	3' - 3"	3 ~ #4	—	#6 @ 40"	#4 @ 18"
14' - 0"	10"	4' - 0"	3' - 9"	5 ~ #4	—	#6 @ 16"	#4 @ 18"
16' - 0"	10"	4' - 8"	4' - 3"	5 ~ #4	#6 @ 40"	#6 @ 40"	#4 @ 18"
18' - 0"	10"	5' - 4"	5' - 0"	5 ~ #4	#6 @ 32"	#6 @ 32"	#4 @ 18"
20' - 0"	10"	6' - 0"	5' - 9"	5 ~ #4	#6 @ 24"	#6 @ 24"	#4 @ 18"
22' - 0"	10"	7' - 0"	6' - 6"	5 ~ #4	#6 @ 16"	#6 @ 16"	#4 @ 18"
24' - 0"	10"	8' - 0"	7' - 6"	5 ~ #4	#7 @ 16"	#7 @ 16"	#4 @ 12"

WALL HT H	TYPE 18D						
	CMU WIDTH	X	W	BAR "A"	BAR "C"	BAR "D"	BAR "E"
6' - 0"	8"	—	2' - 6"	3 ~ #4	—	#6 @ 48"	#4 @ 18"
8' - 0"	8"	—	3' - 3"	5 ~ #4	—	#6 @ 48"	#4 @ 18"
10' - 0"	10"	4' - 0"	3' - 6"	5 ~ #4	—	#6 @ 24"	#4 @ 18"
12' - 0"	10"	4' - 0"	4' - 3"	5 ~ #4	#6 @ 48"	#6 @ 32"	#4 @ 18"
14' - 0"	10"	4' - 8"	5' - 3"	5 ~ #4	#6 @ 32"	#6 @ 24"	#4 @ 18"
16' - 0"	10"	5' - 4"	6' - 3"	5 ~ #4	#6 @ 24"	#7 @ 16"	#4 @ 18"
18' - 0"	10"	7' - 4"	7' - 0"	5 ~ #4	#6 @ 16"	#7 @ 16"	#4 @ 18"
20' - 0"	10"	9' - 8"	8' - 0"	5 ~ #4	#7 @ 16"	#8 @ 16"	#4 @ 12"
22' - 0"	10"	12' - 0"	9' - 0"	5 ~ #4	#8 @ 16"	#8 @ 16"	#4 @ 12"
24' - 0"	10"	15' - 0"	9' - 9"	6 ~ #4	#9 @ 16"	#8 @ 16"	#4 @ 12"

CMU = CONCRETE MASONRY UNIT

BAR SIZE	SPLICE LENGTH
#6	2' - 8"
#7	3' - 8"
#8	4' - 10"

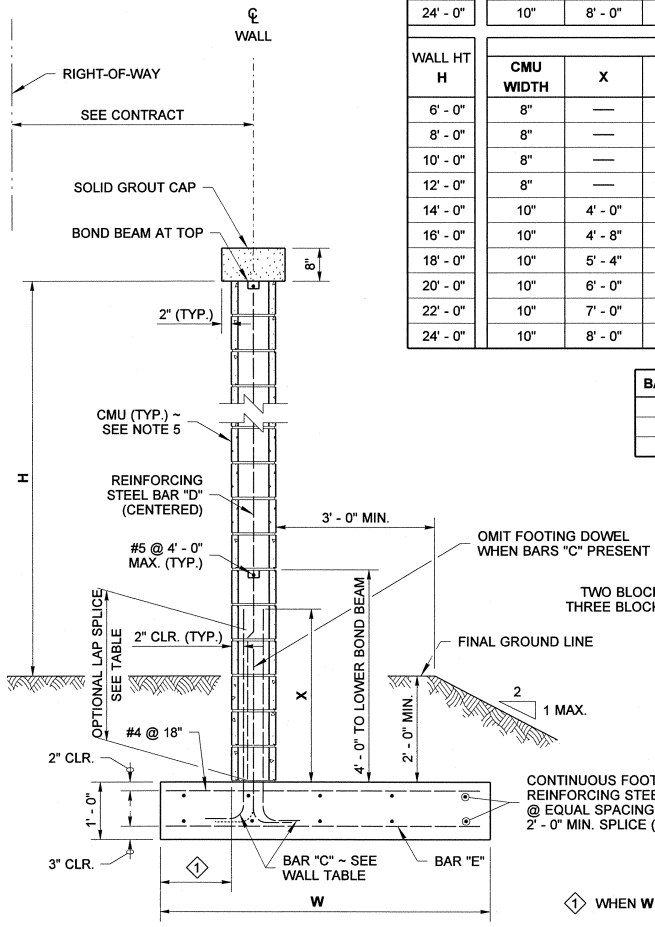

TYPICAL SECTION

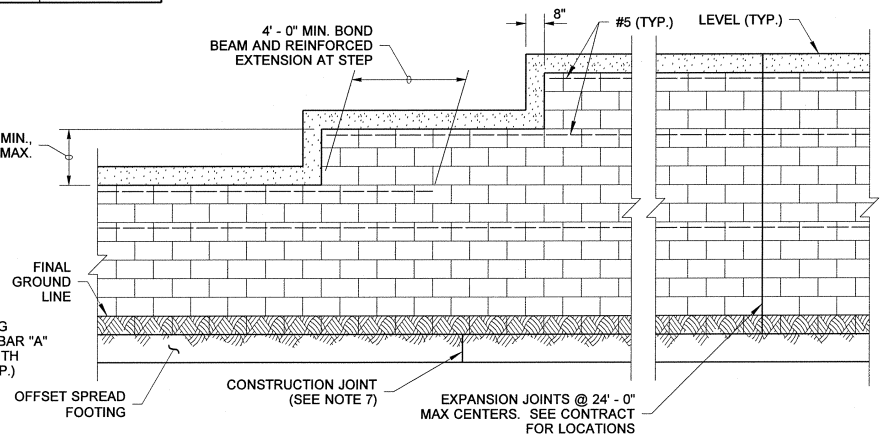

ELEVATION

1 WHEN W IS : < 2' - 6" ..... CENTER WALL ON FOOTING
2' - 6' ≤ W < 4' - 6" ..... DIM. = 1' - 0"
≥ 4' - 6" ..... DIM. = 2' - 0"

NOTES

1. Wall to be designated Noise Barrier Wall Type 18A, 18B, 18C or 18D. The Contract specifies actual wall designations.
2. For intermediate wall heights, use the next higher H.
3. All masonry shall be hollow unit and installed as running bond.
4. All masonry is to be specially inspected.
5. All Concrete Masonry Unit (CMU) cells that have vertical steel reinforcing bars or bond beam units shall be filled with grout.
6. Panels shall have at least 3 feet of level ground on each side.
7. Construction joints in the footing shall be spaced at 120 feet maximum.
8. See "Masonry Wall Finishes and Details" sheets for masonry block finishes, special shapes, sizes and layout.

MASONRY WALL ON OFFSET SPREAD FOOTING

BIJAN KHALEGHI — STATE OF WASHINGTON — 27695 — STRUCTURAL ENGINEER — PROFESSIONAL ENGINEER — 12/31/08

NOISE BARRIER WALL TYPE 18

STANDARD PLAN D-2.64-01

SHEET 1 OF 2 SHEETS

APPROVED FOR PUBLICATION

STATE DESIGN ENGINEER — DATE 11/6/09

Washington State Department of Transportation

DRAWN BY: BILL BERENS

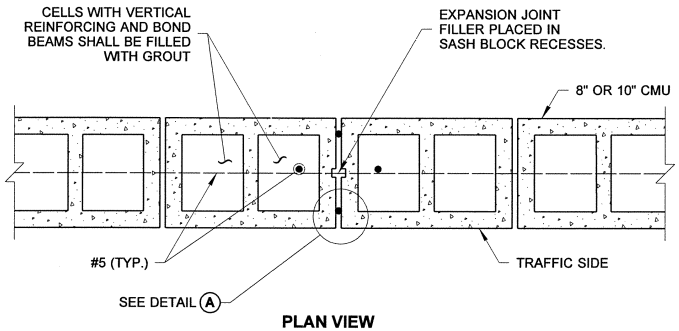

PLAN VIEW

TYPICAL EXPANSION JOINT

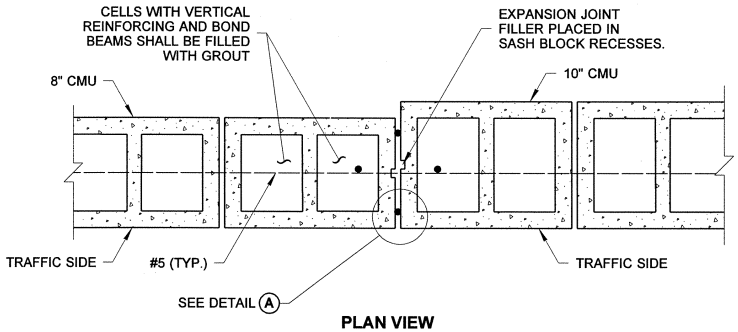

PLAN VIEW

EXPANSION JOINT AT WIDTH STEP

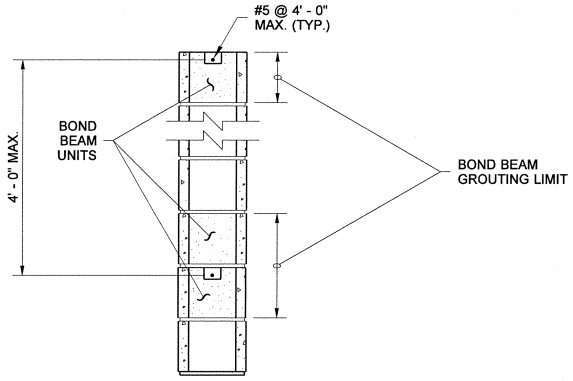

BOND BEAM DETAIL

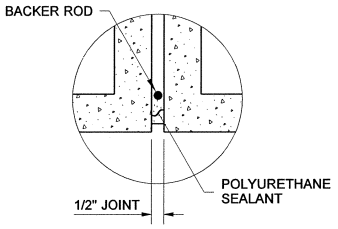

DETAIL (A)

TYPICAL BOTH SIDES OF WALL

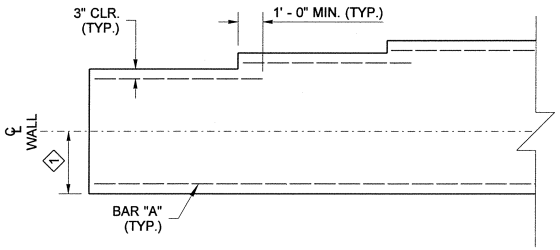

FOOTING WIDTH TRANSITION DETAIL

(FOR LOCATIONS WITHOUT FOOTING STEP)

NOTE: TRANSVERSE BARS NOT SHOWN

MASONRY WALL ON OFFSET SPREAD FOOTING

BIJAN KHALEGHI STATE OF WASHINGTON 27695 STRUCTURAL ENGINEER PROFESSIONAL ENGINEER

12/31/08

NOISE BARRIER WALL TYPE 18

STANDARD PLAN D-2.64-01

SHEET 2 OF 2 SHEETS

APPROVED FOR PUBLICATION

STATE DESIGN ENGINEER — DATE 1/6/09

Washington State Department of Transportation

DRAWN BY: ADAM COCHRAN

WALL HT H	TYPE 19A							
	CMU WIDTH	X	BAR "D"	BAR "C"	DIAM.	BAR "P"	DEPTH D1	DEPTH D2
6' - 0"	8"	—	#6 @ 48"	—	12"	6 ~ #5	5' - 3"	4' - 9"
8' - 0"	8"	—	#6 @ 48"	—	12"	6 ~ #5	6' - 0"	5' - 3"
10' - 0"	8"	—	#6 @ 48"	—	12"	6 ~ #5	6' - 9"	5' - 9"
12' - 0"	8"	—	#6 @ 48"	—	12"	6 ~ #5	7' - 3"	6' - 3"
14' - 0"	8"	—	#6 @ 32"	—	12"	6 ~ #6	7' - 9"	6' - 9"
16' - 0"	10"	5' - 4"	#6 @ 32"	—	12"	6 ~ #7	8' - 3"	7' - 0"
18' - 0"	10"	6' - 0"	#6 @ 48"	#6 @ 48"	12"	6 ~ #8	8' - 9"	7' - 6"
20' - 0"	10"	6' - 8"	#6 @ 32"	#6 @ 32"	12"	6 ~ #9	9' - 3"	7' - 9"
22' - 0"	10"	7' - 4"	#6 @ 24"	#6 @ 24"	14"	8 ~ #7	9' - 3"	7' - 9"
24' - 0"	10"	8' - 0"	#6 @ 24"	#6 @ 24"	14"	8 ~ #8	9' - 9"	8' - 3"

WALL HT H	TYPE 19B							
	CMU WIDTH	X	BAR "D"	BAR "C"	DIAM.	BAR "P"	DEPTH D1	DEPTH D2
6' - 0"	8"	—	#6 @ 48"	—	12"	6 ~ #5	6' - 0"	5' - 3"
8' - 0"	8"	—	#6 @ 48"	—	12"	6 ~ #5	7' - 0"	6' - 0"
10' - 0"	8"	—	#6 @ 48"	—	12"	6 ~ #6	7' - 9"	6' - 9"
12' - 0"	10"	4' - 0"	#6 @ 40"	—	12"	6 ~ #7	8' - 6"	7' - 3"
14' - 0"	10"	4' - 8"	#6 @ 32"	#6 @ 32"	14"	8 ~ #7	8' - 6"	7' - 3"
16' - 0"	10"	5' - 4"	#6 @ 24"	#6 @ 24"	14"	8 ~ #7	9' - 3"	8' - 0"
18' - 0"	10"	6' - 0"	#6 @ 16"	#6 @ 16"	16"	6 ~ #8	9' - 3"	8' - 0"
20' - 0"	10"	8' - 0"	#7 @ 16"	#7 @ 32"	16"	8 ~ #7	10' - 0"	8' - 6"
22' - 0"	10"	10' - 0"	#7 @ 16"	#7 @ 24"	16"	8 ~ #8	10' - 6"	9' - 0"
24' - 0"	10"	12' - 0"	#8 @ 16"	#7 @ 16"	16"	8 ~ #8	11' - 3"	9' - 6"

WALL HT H	TYPE 19C							
	CMU WIDTH	X	BAR "D"	BAR "C"	DIAM.	BAR "P"	DEPTH D1	DEPTH D2
6' - 0"	8"	—	#6 @ 48"	—	12"	6 ~ #5	5' - 9"	5' - 0"
8' - 0"	8"	—	#6 @ 48"	—	12"	6 ~ #5	6' - 6"	5' - 6"
10' - 0"	8"	—	#6 @ 48"	—	12"	6 ~ #5	7' - 3"	6' - 3"
12' - 0"	8"	—	#6 @ 40"	—	12"	6 ~ #6	7' - 9"	6' - 9"
14' - 0"	8"	5' - 4"	#6 @ 40"	—	12"	6 ~ #7	8' - 6"	7' - 3"
16' - 0"	10"	5' - 4"	#6 @ 32"	#6 @ 32"	14"	8 ~ #6	8' - 6"	7' - 3"
18' - 0"	10"	6' - 0"	#6 @ 24"	#6 @ 24"	14"	8 ~ #7	9' - 0"	7' - 9"
20' - 0"	10"	6' - 8"	#6 @ 24"	#6 @ 16"	14"	8 ~ #8	9' - 9"	8' - 3"
22' - 0"	10"	7' - 4"	#6 @ 16"	#6 @ 16"	14"	8 ~ #9	10' - 3"	8' - 9"
24' - 0"	10"	8' - 0"	#6 @ 16"	#6 @ 16"	16"	8 ~ #8	10' - 3"	8' - 9"

WALL HT H	TYPE 19D							
	CMU WIDTH	X	BAR "D"	BAR "C"	DIAM.	BAR "P"	DEPTH D1	DEPTH D2
6' - 0"	8"	—	#6 @ 48"	—	12"	6 ~ #5	6' - 6"	5' - 9"
8' - 0"	8"	—	#6 @ 48"	—	12"	6 ~ #6	7' - 6"	6' - 6"
10' - 0"	10"	4' - 0"	#6 @ 24"	—	12"	6 ~ #7	8' - 3"	7' - 0"
12' - 0"	10"	4' - 8"	#6 @ 32"	#6 @ 32"	14"	8 ~ #7	8' - 6"	7' - 3"
14' - 0"	10"	4' - 8"	#6 @ 24"	#6 @ 24"	14"	8 ~ #7	9' - 3"	8' - 0"
16' - 0"	10"	5' - 4"	#6 @ 16"	#6 @ 16"	16"	6 ~ #8	9' - 6"	8' - 0"
18' - 0"	10"	7' - 4"	#7 @ 16"	#7 @ 24"	16"	8 ~ #8	10' - 0"	8' - 6"
20' - 0"	10"	9' - 8"	#8 @ 16"	#7 @ 16"	16"	8 ~ #9	10' - 9"	9' - 3"
22' - 0"	10"	12' - 0"	#8 @ 16"	#7 @ 16"	16"	8 ~ #10	11' - 6"	9' - 9"
24' - 0"	10"	15' - 0"	#8 @ 16"	#7 @ 16"	18"	8 ~ #10	11' - 6"	9' - 9"

NOTES

1. Wall to be designated Noise Barrier Wall Type 19A, 19B, 19C, or 19D. The Contract specifies actual wall designations.
2. For intermediate wall heights, use the next higher H.
3. All masonry shall be hollow unit and installed as running bond.
4. All masonry is to be specially inspected.
5. All Concrete Masonry Unit (CMU) cells the have vertical steel reinforcing bars or bond beam units shall be filled with grout.
6. Panels shall have at least 3 feet of level ground on each side.
7. Construction joints in the shaft cap shall be spaced 120 feet maximum.
8. See "Masonry Wall Finishes and Details" sheet for masonry block finishes, special shapes, sizes and layouts.
9. The Contract specifies actual foundation requirements D1 or D2.

SOIL TYPE	
SOIL TYPE	ANGLE OF INTERNAL FRICTION ϕ (DEGREES)
D1	32
D2	38

WIND EXPOSURE & VELOCITY		
NOISE BARRIER TYPE	WIND EXPOSURE	WIND VELOCITY (MPH)
19A	B1	80
19B	B1	90
19C	B2	80
19D	B2	90

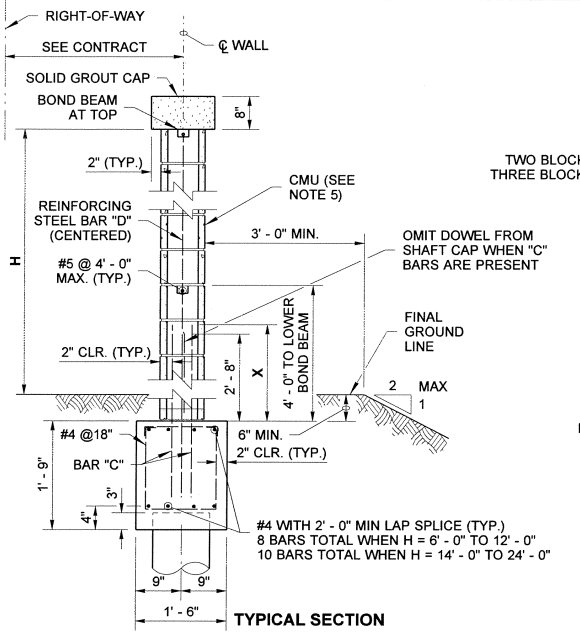

TYPICAL SECTION

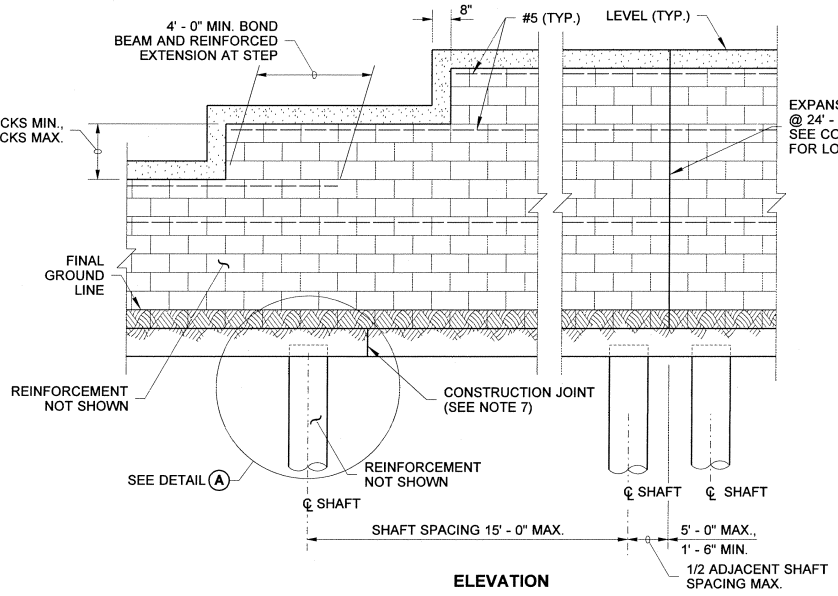

ELEVATION

MASONRY WALL ON SHAFT W/ GRADE BEAM FOUNDATION

BIJAN KHALEGHI
STATE OF WASHINGTON
11/9/05
27695
REGISTERED
PROFESSIONAL ENGINEER

EXPIRES AUGUST 23, 2006

NOISE BARRIER WALL TYPE 19

STANDARD PLAN D-2.66-00

SHEET 1 OF 2 SHEETS

APPROVED FOR PUBLICATION

Harold Peterson 11-10-05

STATE DESIGN ENGINEER — DATE

Washington State Department of Transportation

DRAWN BY: BILL BERENS

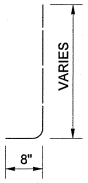

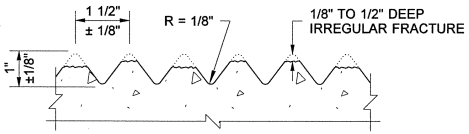

FRACTURED FIN FINISH DETAIL

FOR CAST-IN-PLACE FASCIA ONLY

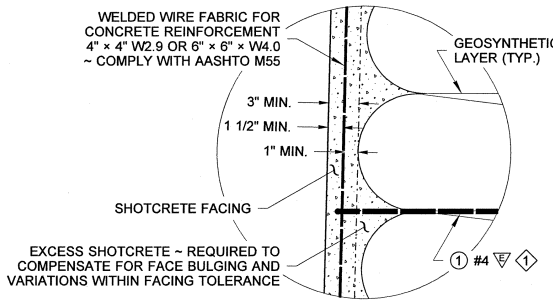

SHOTCRETE DETAIL

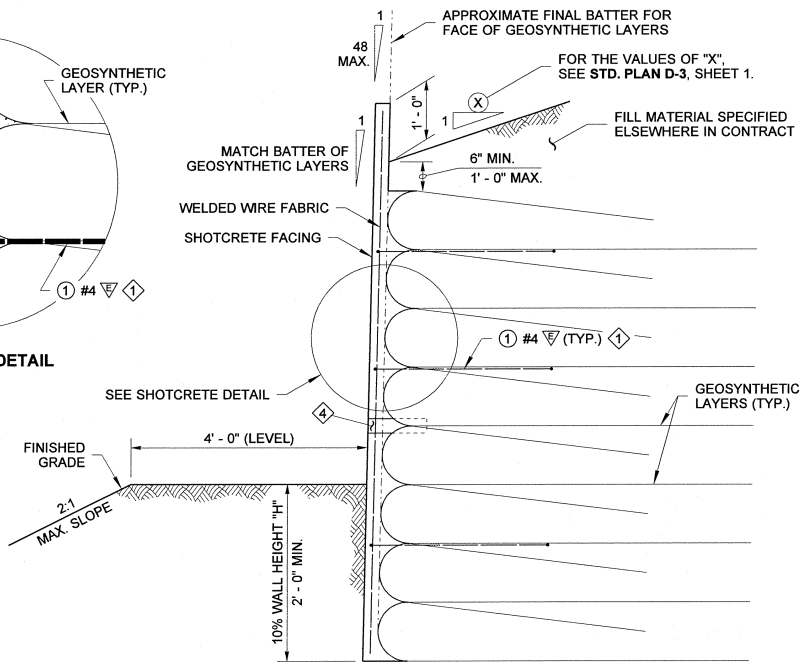

TYPICAL SECTION

PERMANENT GEOSYNTHETIC RETAINING WALL WITH SHOTCRETE FACING

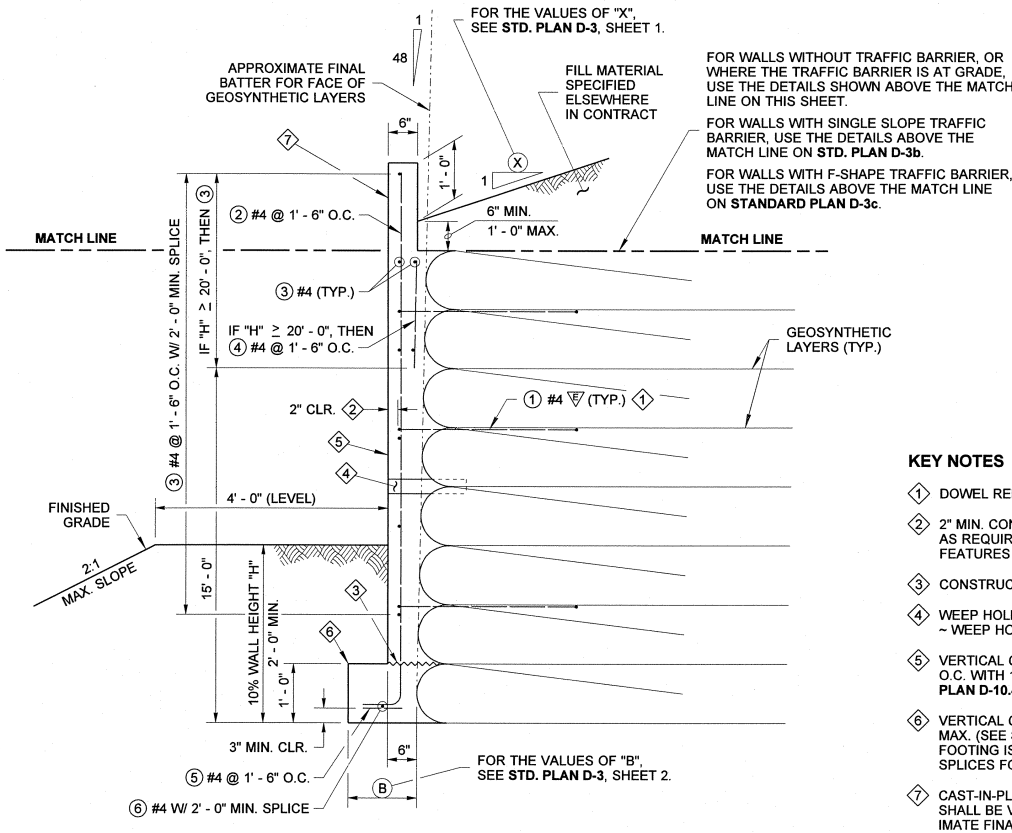

TYPICAL SECTION

PERMANENT GEOSYNTHETIC RETAINING WALL WITH CAST-IN-PLACE CONCRETE FASCIA

KEY NOTES

1. DOWEL REINFORCEMENT (SEE **STANDARD PLAN D-3**)
2. 2" MIN. CONCRETE COVER ~ INCREASE THE COVER AS REQUIRED TO ACCOMMODATE ARCHITECTURAL FEATURES AND FINISH.
3. CONSTRUCTION JOINT WITH ROUGHENED SURFACE
4. WEEP HOLE IN WALL FACING (SEE **STANDARD PLAN D-3**) ~ WEEP HOLES SHALL BE KEPT CLEAR OF CONCRETE.
5. VERTICAL CONSTRUCTION JOINTS IN FASCIA @ 24' - 0" O.C. WITH 1/2" PREMOLDED JOINT FILLER (SEE **STD. PLAN D-10.45**, SHEET 1, "SPLIT ELEVATION")
6. VERTICAL CONSTRUCTION JOINTS IN FOOTING @ 120' O.C. MAX. (SEE **STD. PLAN D-10.45**, SHEET 1, "ELEVATION"). IF THE FOOTING IS STEPPED, PROVIDE 2' - 0" NON-CONTACT LAP SPLICES FOR THE ⑥ #4 BARS AT EACH STEP.
7. CAST-IN-PLACE CONCRETE FASCIA ~ THE FASCIA FACE SHALL BE VERTICAL OR SHALL MATCH THE APPROXIMATE FINAL BATTER OF THE GEOSYNTHETIC LAYERS, WHICHEVER IS SPECIFIED IN THE CONTRACT. THE ④ BARS AND INTERIOR ③ BARS SHALL BE USED ONLY IF THE FACE IS VERTICAL. THE FASCIA FACE SHALL HAVE A FRACTURED FIN FINISH (SEE DETAIL) UNLESS SPECIFIED OTHERWISE IN THE CONTRACT.

NOTES

ALL BARS SHOWN ON THIS PLAN SHALL BE AASHTO M-31 UNLESS OTHERWISE SPECIFIED IN THE CONTRACT.

Ⓔ = EPOXY COATED

PERMANENT GEOSYNTHETIC WALL FASCIA AND FACING STANDARD PLAN D-3a

SHEET 1 OF 1 SHEET

APPROVED FOR PUBLICATION

STATE DESIGN ENGINEER — DATE 12/2/08

Washington State Department of Transportation

DRAWN BY: MARK SUJKA

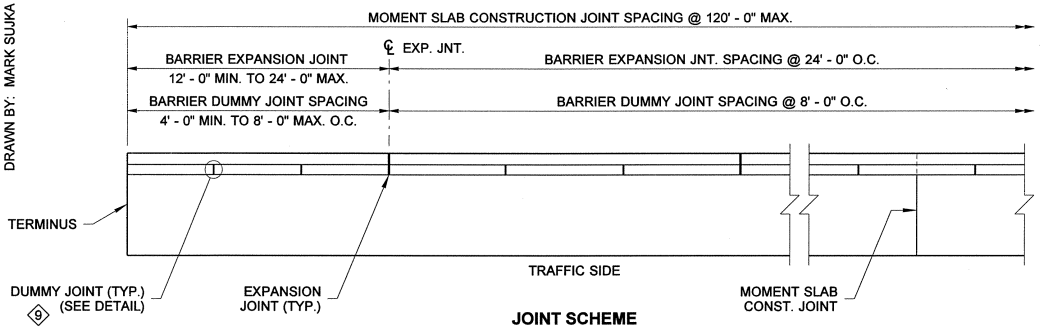

JOINT SCHEME
PLAN VIEW

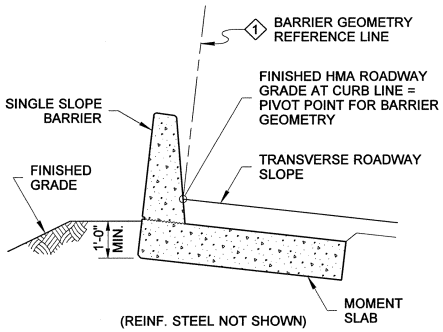

(REINF. STEEL NOT SHOWN)

TYPICAL SECTION
SHOWN AT GRADE

KEY NOTES

1. THE BARRIER GEOMETRY REFERENCE LINE (B.G.R.L.) IS PERPENDICULAR TO THE TRANSVERSE ROADWAY SLOPE (T.R.S.). FOR SUPERELEVATED TRANSVERSE ROADWAY SLOPES, THE B.G.R.L. ON THE LOW SIDE OF THE ROADWAY SHALL BE PERPENDICULAR TO THE T.R.S. UP TO A MAXIMUM OF 8% SUPERELEVATION; THE B.G.R.L. ON THE HIGH SIDE SHALL ALWAYS BE PERPENDICULAR TO THE T.R.S.
2. JUNCTION BOX & PULL BOX ~ 8" × 8" × 1' - 6" NEMA 4 X S.S. (TYP.). JUNCTION BOX CAN BE RECESSED 1/2" MAX. SEE SPECIAL PROVISIONS. SIZE CONDUIT PER WIRING SCHEDULE, SEE ELECTRICAL PLANS.
3. 1 1/2" MIN. CONCRETE COVER ~ INCREASE THE COVER AS REQUIRED TO ACCOMMODATE ARCHITECTURAL FEATURES AND FINISH.
4. CONSTRUCTION JOINT WITH ROUGHENED SURFACE
5. THE NOTCH, DETAILED BY THESE DIMENSIONS AND SPECIFICATIONS, IS REQUIRED ONLY IF THE BARRIER IS ON WALL FACING.
6. RUSTICATION ~ SEE RUSTICATION DETAIL
7. FOR STRUCTURAL DETAILS BELOW THE MATCH LINE, SEE STANDARD PLANS D-3 AND D-3a.
8. 1/2" EXPANSION JOINT WITH PREMOLDED JOINT FILLER
9. INSTALL BARRIER DUMMY JOINTS ON TRAFFIC SIDE ONLY WHEN ARCHITECTURAL FEATURES ARE SPECIFIED.

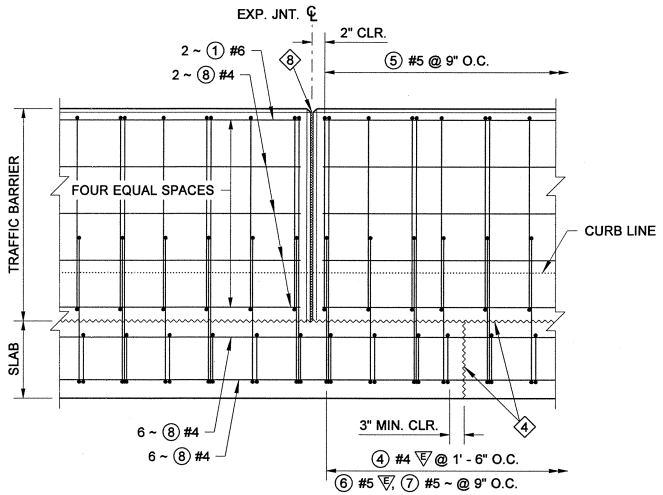

ELEVATION

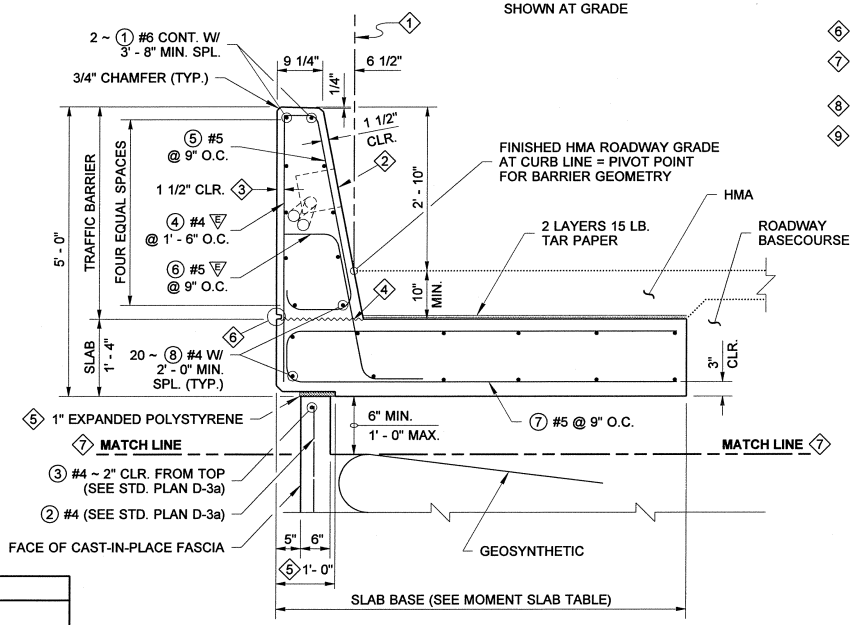

TYPICAL SECTION
SHOWN ON WALL

MOMENT SLAB TABLE		
SLAB LENGTH	SLAB BASE	
	ON WALL	AT GRADE
GREATER THAN 80' - 0"	7' - 0"	5' - 0"
BETWEEN 60' - 0" & 80' - 0"	8' - 0"	6' - 0"
BETWEEN 40' - 0" & 60' - 0"	9' - 0"	7' - 0"
LESS THAN 40' - 0"	CONTACT BRIDGE OFFICE	

REINFORCING STEEL BENDING DIAGRAM

ALL REINFORCING BARS SHOWN ON THIS PLAN SHALL BE AASHTO M 31 UNLESS OTHERWISE NOTED.

ALL DIMENSIONS ARE OUT TO OUT

Ⓔ = EPOXY COATED

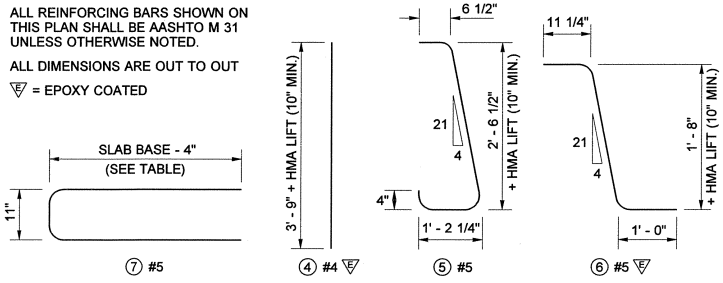

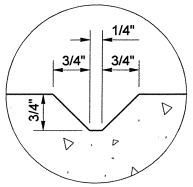

DUMMY JOINT DETAIL

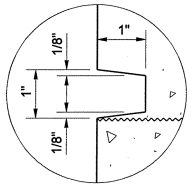

RUSTICATION DETAIL

EXPIRES MAY 19, 2006

PERMANENT GEOSYNTHETIC WALL SINGLE SLOPE BARRIER STANDARD PLAN D-3b

SHEET 1 OF 1 SHEET

APPROVED FOR PUBLICATION

Harold Peterson 6-30-04

STATE DESIGN ENGINEER — DATE

Washington State Department of Transportation

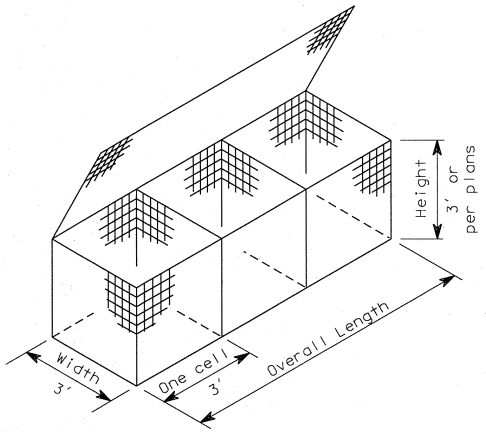

Unit A - 2 cell gabion = 6'
Unit B - 3 cell gabion = 9'
Unit C - 4 cell gabion = 12'

TYPICAL GABION

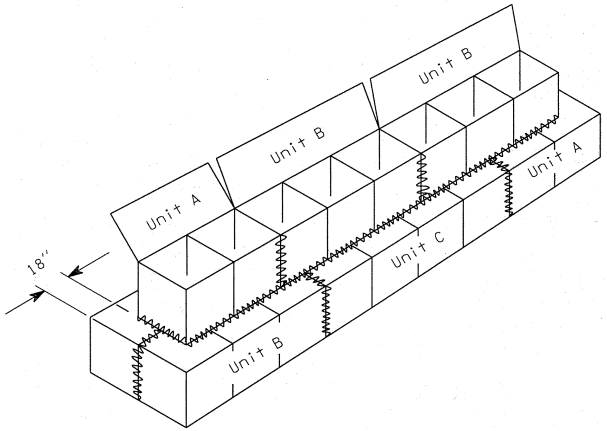

FASTENING ADJACENT BASKETS

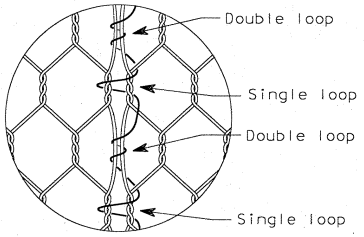

LACING DETAIL

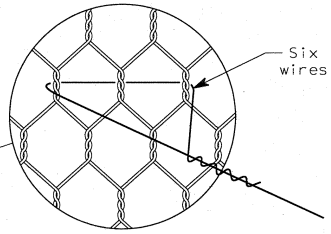

TWISTED FABRIC

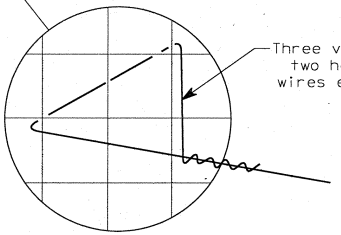

WELDED FABRIC

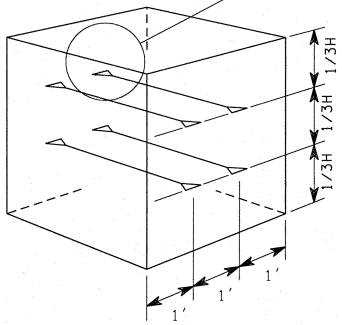

CROSS CONNECTING WIRE
PLACMENT, INTERIOR CELLS
OF FRONT GABIONS

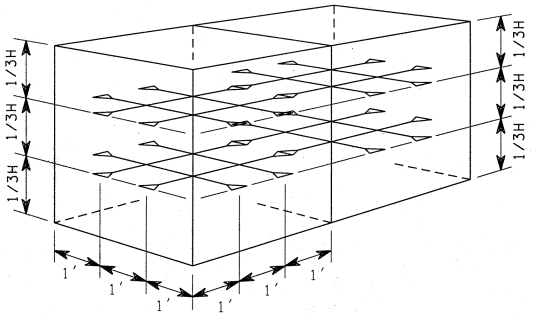

CROSS-CONNECTING WIRE
PLACEMENT, END CELLS

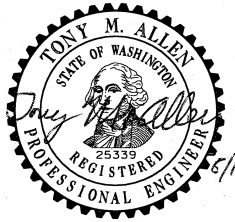

EXPIRES JULY 1, 1999

GABIONS
STANDARD PLAN D-6

APPROVED FOR PUBLICATION

Clifford E. Mansfield 6/19/98

DEPUTY STATE DESIGN ENGINEER DATE

WASHINGTON STATE DEPARTMENT OF TRANSPORTATION
OLYMPIA, WASHINGTON

DRAWN BY: BILL BERENS

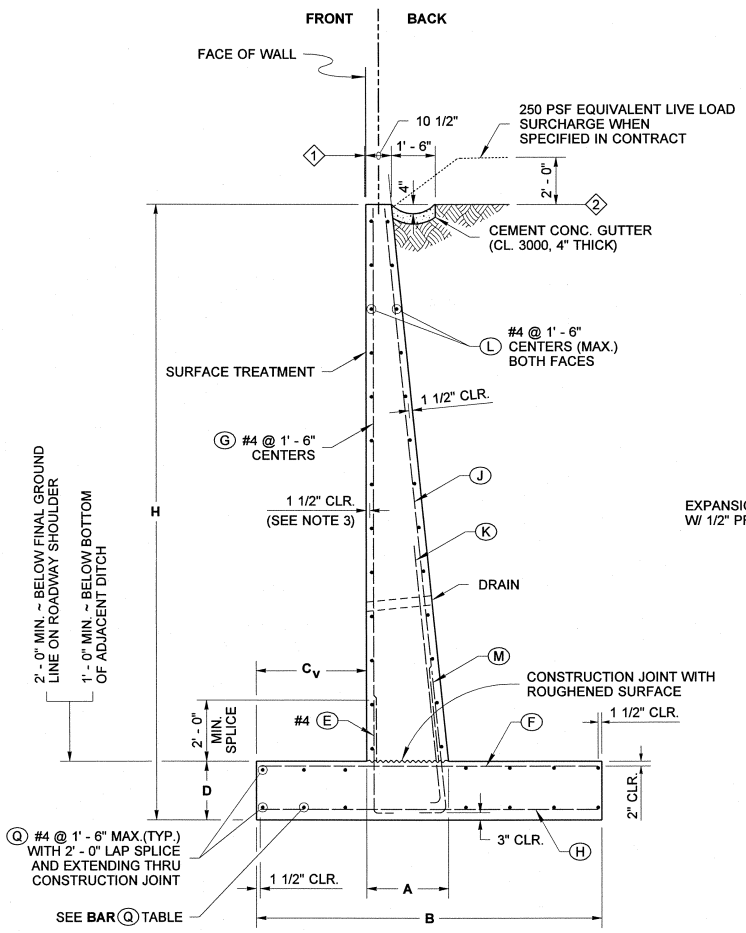

TYPICAL SECTION

BAR Q #4		
LOCATION	WALL HEIGHT (H)	QTY.
TOP OF FOOTING	≤ 16'	5
	16' ≤ 23'	7
	23' ≤ 28'	9
	29' ≤ 35'	11
BOTTOM OF FOOTING	≤ 16'	5
	16' ≤ 23'	7
	23' ≤ 28'	9
	29' ≤ 35'	11

1. OFFSET ~ SET TOP OF WALL BACK:
   H ≤ 20' ..... OFFSET = 1/2"
   H ≥ 20' ..... OFFSET (inches) = $\frac{H(ft)}{8} - 2$

2. WHEN THE CONTRACT SPECIFIES CABLE FENCE, BACKFILL AND THE CEMENT CONCRETE GUTTER SHALL BE PLACED 6" MIN. FROM THE TOP OF THE WALL

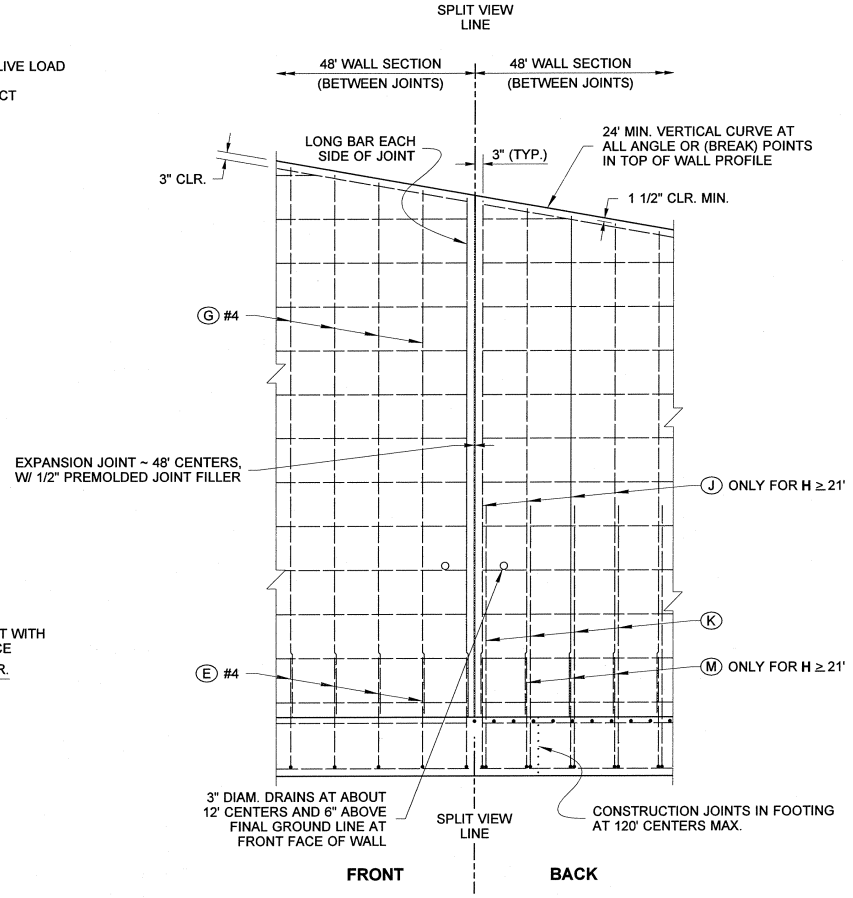

SPLIT ELEVATION VIEW
(SHOWING SEPARATE REBAR LAYERS)

NOTES

1. All concrete shall be Class 4000, except as noted.
2. For backfill requirements, see Standard Plan D-4.
3. When Wall Type 1SW (saltwater) is specified, the concrete cover over steel in the front face and the total wall thickness shall be increased by 1".
4. When Wall Type 1SW (saltwater) is specified, concrete in the table column "Material Quantity" shall be increased by (0.003 x H) CY/LF.
5. Concrete in the 48 foot wall sections shall be placed separately between expansion joints with a minimum 24 hour period before placing concrete in the adjacent section.
6. This wall has been designed in accordance with the requirements of the AASHTO LRFD Bridge Design Specifications 4th Edition 2007 and interims through 2008. The seismic design of these walls has been completed using an effective PGA of 0.51 g.
7. If Traffic Barriers are required, See Standard Plans D-15.10, D-15.20 and D-15.30.

VERTICAL FACE WALL DESIGN WITH A 250 PSF SURCHARGE OR TRAFFIC BARRIER

BIJAN KHALEGHI
STATE OF WASHINGTON
27695
STRUCTURAL ENGINEER
PROFESSIONAL ENGINEER
11/25/08

REINFORCED CONCRETE RETAINING WALL TYPE 1 AND 1SW STANDARD PLAN D-10.10-01

SHEET 1 OF 2 SHEETS

APPROVED FOR PUBLICATION

STATE DESIGN ENGINEER — DATE 12/2/08

Washington State Department of Transportation

WALL HT H	DIMENSIONS				FOOTING REINFORCEMENT																		STEM REINFORCEMENT				MATERIAL QUANTITY		MAXIMUM SOIL PRESSURE (PSF)			
					BAR (E) #4		BAR (F)			BAR (H)			BAR (K)					BAR (M)					BAR (J)			(G) #4					
	B	C_V	D	A	LENGTH	h	SIZE	SPA.	LENGTH	SIZE	SPA.	LENGTH	SIZE	SPA.	LENGTH	h	b	SIZE	SPA.	LENGTH	h	b	SIZE	SPA.	LENGTH	LENGTH	CONC. CY / LF	STEEL LBS / LF	SERVICE	STRENGTH	EXTREME EVENT 1	EXTREME EVENT 2
5'	6' - 6"	2' - 0"	1' - 0"	1' - 4"	3' - 4"	2' - 9"	#4	1' - 0"	6' - 3"	#4	1' - 6"	6' - 3"	#4	1' - 6"	5' - 2"	4' - 7 1/2"	8"	N/A	N/A	N/A	N/A	N/A	N/A	N/A	N/A	4' - 4"	0.40	25.7	915	1260	1131	1623
6'	6' - 6"	2' - 0"	1' - 0"	1' - 5 1/2"	3' - 4"	2' - 9"	#4	1' - 0"	6' - 3"	#4	1' - 6"	6' - 3"	#4	1' - 6"	6' - 2"	5' - 7 1/2"	8"	N/A	N/A	N/A	N/A	N/A	N/A	N/A	N/A	5' - 4"	0.45	28.2	992	1350	1311	1850
7'	6' - 6"	2' - 3"	1' - 0"	1' - 6 1/2"	3' - 4"	2' - 9"	#4	1' - 0"	6' - 3"	#4	1' - 6"	6' - 3"	#4	1' - 6"	7' - 2 1/2"	6' - 7 1/2"	8"	N/A	N/A	N/A	N/A	N/A	N/A	N/A	N/A	6' - 4"	0.51	29.3	1046	1443	1446	2049
8'	6' - 9"	2' - 3"	1' - 0"	1' - 7 1/2"	3' - 4"	2' - 9"	#4	1' - 0"	6' - 6"	#4	1' - 6"	6' - 6"	#4	1' - 0"	8' - 2 1/2"	7' - 7 1/2"	8"	N/A	N/A	N/A	N/A	N/A	N/A	N/A	N/A	7' - 4"	0.58	33.8	1176	1631	1660	2217
9'	7' - 0"	2' - 3"	1' - 0"	1' - 9"	3' - 4"	2' - 9"	#4	1' - 0"	6' - 9"	#4	1' - 6"	6' - 9"	#4	1' - 0"	9' - 2 1/2"	8' - 7 1/2"	8"	N/A	N/A	N/A	N/A	N/A	N/A	N/A	N/A	8' - 4"	0.65	38.1	1318	1836	1904	2402
10'	7' - 3"	2' - 3"	1' - 0"	1' - 10"	3' - 4"	2' - 9"	#4	10"	7' - 0"	#4	1' - 0"	7' - 0"	#4	1' - 0"	10' - 2 1/2"	9' - 7 1/2 "	8"	N/A	N/A	N/A	N/A	N/A	N/A	N/A	N/A	9' - 4"	0.72	43.6	1471	2060	2178	2604
11'	7' - 6"	2' - 3"	1' - 0"	1' - 11 1/2"	3' - 4"	2' - 9"	#4	9"	7' - 3"	#4	1' - 0"	7' - 3"	#4	10"	11' - 2 1/2"	10' - 8"	8"	N/A	N/A	N/A	N/A	N/A	N/A	N/A	N/A	10' - 4"	0.80	48.8	1636	2303	2486	2822
12'	7' - 9"	2' - 6"	1' - 0"	2' - 0 1/2"	3' - 4"	2' - 9"	#4	9"	7' - 6"	#4	10"	7' - 6"	#4	10"	12' - 2 1/2"	11' - 8"	8"	N/A	N/A	N/A	N/A	N/A	N/A	N/A	N/A	11' - 4"	0.88	53.0	1733	2455	2676	2958
13'	8' - 0"	2' - 6"	1' - 0"	2' - 1 1/2"	3' - 4"	2' - 9"	#4	8"	7' - 9"	#4	10"	7' - 9"	#4	8"	13' - 2 1/2"	12' - 8"	8"	N/A	N/A	N/A	N/A	N/A	N/A	N/A	N/A	12' - 4"	0.96	59.7	1915	2728	3041	3202
14'	8' - 3"	2' - 6"	1' - 0"	2' - 3"	3' - 4"	2' - 9"	#4	7"	8' - 0"	#4	8"	8' - 0"	#4	7"	14' - 2 1/2"	13' - 8"	8"	N/A	N/A	N/A	N/A	N/A	N/A	N/A	N/A	13' - 4"	1.05	67.9	2109	3022	3451	3462
15'	8' - 9"	2' - 6"	1' - 0"	2' - 4"	3' - 4"	2' - 9"	#5	8"	8' - 6"	#4	8"	8' - 6"	#4	6"	15' - 3"	14' - 8"	8"	N/A	N/A	N/A	N/A	N/A	N/A	N/A	N/A	14' - 4"	1.16	78.6	2277	3261	3804	3570
16'	9' - 3"	2' - 9"	1' - 3"	2' - 5"	3' - 7"	3' - 0"	#5	8"	9' - 0"	#4	8"	9' - 0"	#5	6"	16' - 4"	15' - 8"	10"	N/A	N/A	N/A	N/A	N/A	N/A	N/A	N/A	15' - 1"	1.33	87.1	2377	3403	4031	3628
17'	9' - 9"	3' - 0"	1' - 6"	2' - 6"	3' - 10"	3' - 3"	#5	8"	9' - 6"	#4	8"	9' - 6"	#5	8"	17' - 4"	16' - 8"	10"	N/A	N/A	N/A	N/A	N/A	N/A	N/A	N/A	15' - 10"	1.51	91.9	2478	3546	4264	3700
18'	10' - 3"	3' - 3"	1' - 6"	2' - 7"	3' - 10"	3' - 3"	#5	8"	10' - 0"	#5	10"	10' - 0"	#5	6"	18' - 4"	17' - 8"	10"	N/A	N/A	N/A	N/A	N/A	N/A	N/A	N/A	16' - 10"	1.63	108.8	2555	3658	4422	3741
19'	10' - 9"	3' - 6"	1' - 9"	2' - 8"	4' - 1"	3' - 6"	#5	8"	10' - 6"	#5	10"	10' - 6"	#6	9"	19' - 5 1/2"	18' - 8 1/2"	1' - 0"	N/A	N/A	N/A	N/A	N/A	N/A	N/A	N/A	17' - 7"	1.83	114.2	2658	3803	4664	3834
20'	11' - 6"	3' - 6"	1' - 9"	2' - 9 1/2"	4' - 1"	3' - 6"	#6	9"	11' - 3"	#5	10"	11' - 3"	#6	7"	20' - 5 1/2"	19' - 8 1/2"	1' - 0"	N/A	N/A	N/A	N/A	N/A	N/A	N/A	N/A	18' - 7"	1.97	137.0	2790	3970	4926	3905
21'	12' - 0"	3' - 9"	2' - 0"	2' - 10"	4' - 4"	3' - 9"	#6	9"	11' - 9"	#5	10"	11' - 9"	#6	1' - 4"	12' - 10 1/2"	12' - 1"	1' - 0"	#6	1' - 4"	5' - 2 1/2"	4' - 4"	1' - 0"	#6	1' - 4"	19' - 6 1/2"	19' - 4"	2.19	130.1	2892	4115	5173	4012
22'	12' - 6"	4' - 0"	2' - 0"	2' - 11 1/2"	4' - 4"	3' - 9"	#6	8"	12' - 3"	#5	8"	12' - 3"	#6	1' - 4"	14' - 2 1/2"	13' - 5"	1' - 0"	#6	1' - 4"	5' - 2 1/2"	4' - 4"	1' - 0"	#6	1' - 4"	20' - 6 1/2"	20' - 4"	2.34	143.3	2970	4227	5338	4083
23'	13' - 0"	4' - 3"	2' - 3"	3' - 0 1/2"	4' - 7"	4' - 0"	#6	9"	12' - 9"	#5	8"	12' - 9"	#6	1' - 4"	15' - 6 1/2"	14' - 9"	1' - 0"	#6	1' - 4"	5' - 5 1/2"	4' - 7"	1' - 0"	#6	1' - 4"	21' - 3 1/2"	21' - 1"	2.58	146.6	3074	4373	5592	4198
24'	13' - 9"	4' - 3"	2' - 3"	3' - 1 1/2"	4' - 7"	4' - 0"	#6	7"	13' - 6"	#5	7"	13' - 6"	#6	1' - 4"	16' - 10"	16' - 0 1/2"	1' - 0"	#6	1' - 4"	5' - 5 1/2"	4' - 7"	1' - 0"	#6	1' - 4"	22' - 3 1/2"	22' - 1"	2.75	166.0	3207	4544	5860	4311
25'	14' - 3"	4' - 6"	2' - 6"	3' - 2 1/2"	4' - 10"	4' - 3"	#6	7"	14' - 0"	#6	10"	14' - 0"	#6	1' - 4"	18' - 1 1/2"	17' - 4"	1' - 0"	#6	1' - 4"	5' - 8 1/2"	4' - 10"	1' - 0"	#6	1' - 4"	23' - 0 1/2"	22' - 10"	3.01	172.9	3310	4689	6120	4431
26'	14' - 9"	4' - 9"	2' - 6"	3' - 3 1/2"	4' - 10"	4' - 3"	#6	6"	14' - 6"	#6	9"	14' - 6"	#6	1' - 4"	19' - 4 1/2"	18' - 7 1/2"	1' - 0"	#6	1' - 4"	5' - 8 1/2"	4' - 10"	1' - 0"	#6	1' - 4"	24' - 0 1/2"	23' - 10"	3.18	188.8	3388	4802	6290	4515
27'	15' - 6"	5' - 0"	2' - 9"	3' - 4 1/2"	5' - 1"	4' - 6"	#6	6"	15' - 3"	#6	9"	15' - 3"	#6	1' - 0"	18' - 7"	17' - 9 1/2"	1' - 0"	#6	1' - 0"	5' - 11 1/2"	5' - 1"	1' - 0"	#6	1' - 0"	24' - 9 1/2"	24' - 7"	3.48	213.2	3467	4897	6454	4587
28'	16' - 0"	5' - 3"	3' - 0"	3' - 5 1/2"	5' - 4"	4' - 9"	#6	6"	15' - 9"	#6	8"	15' - 9"	#6	10"	18' - 4"	17' - 6 1/2"	1' - 0"	#6	10"	6' - 2 1/2"	5' - 4"	1' - 0"	#6	10"	25' - 6 1/2"	25' - 4"	3.77	237.8	3571	5043	6723	4713
29'	16' - 9"	5' - 6"	3' - 3"	3' - 6 1/2"	5' - 7"	5' - 0"	#7	8"	16' - 6"	#6	8"	16' - 6"	#8	1' - 4"	19' - 11 1/2"	18' - 11"	1' - 3"	#8	1' - 4"	8' - 4 1/2"	7' - 2 1/2"	1' - 3"	#8	1' - 4"	26' - 4"	26' - 1"	4.11	265.1	3653	5143	6898	4796
30'	17' - 3"	5' - 9"	3' - 3"	3' - 7 1/2"	5' - 7"	5' - 0"	#7	7"	17' - 0"	#6	7"	17' - 0"	#8	1' - 4"	21' - 3 1/2"	20' - 3"	1' - 3"	#8	1' - 4"	8' - 4 1/2"	7' - 2 1/2"	1' - 3"	#8	1' - 4"	27' - 4"	27' - 1"	4.30	287.4	3733	5257	7075	4888
31'	18' - 0"	6' - 0"	3' - 6"	3' - 8 1/2"	5' - 10"	5' - 3"	#7	7"	17' - 9"	#6	7"	17' - 9"	#8	1' - 4"	22' - 7"	21' - 6 1/2"	1' - 3"	#8	1' - 4"	8' - 7 1/2"	7' - 5 1/2"	1' - 3"	#8	1' - 4"	28' - 1"	27' - 10"	4.65	298.5	3817	5362	7258	4979
32'	18' - 6"	6' - 3"	3' - 9"	3' - 9 1/2"	6' - 1"	5' - 6"	#7	7"	18' - 3"	#6	7"	18' - 3"	#8	1' - 2"	22' - 7 1/2"	21' - 7"	1' - 3"	#8	1' - 2"	8' - 10 1/2"	7' - 8 1/2"	1' - 3"	#8	1' - 2"	28' - 10"	28' - 7"	4.99	322.9	3923	5509	7540	5111
33'	19' - 3"	6' - 6"	4' - 0"	3' - 10"	6' - 4"	5' - 9"	#7	7"	19' - 0"	#6	7"	19' - 0"	#8	1' - 0"	22' - 4 1/2"	21' - 4"	1' - 3"	#8	1' - 0"	9' - 1 1/2"	7' - 11 1/2"	1' - 3"	#8	1' - 0"	29' - 7"	29' - 4"	5.38	354.3	4009	5618	7733	5208
34'	20' - 0"	6' - 9"	4' - 3"	3' - 11"	6' - 7"	6' - 0"	#7	7"	19' - 9"	#6	7"	19' - 9"	#9	10"	19' - 2 1/2"	17' - 11 1/2"	1' - 6"	#9	10"	10' - 8 1/2"	9' - 4"	1' - 6"	#9	10"	30' - 4"	30' - 1"	5.78	444.8	4097	5729	7933	5308
35'	20' - 6"	7' - 0"	4' - 6"	4' - 0"	6' - 10"	6' - 3"	#7	7"	20' - 3"	#6	7"	20' - 3"	#10	1' - 0"	21' - 1 1/2"	19' - 9"	1' - 8"	#10	1' - 0"	12' - 4"	10' - 10"	1' - 8"	#10	1' - 0"	31' - 1"	30' - 10"	6.16	480.4	4203	5877	8224	5442

REINFORCEMENT NOTES

(1) IF TRAFFIC BARRIER IS USED, ADD 0.100 CY/LF OF CONCRETE CLASS 4000 FOR BARRIER ALTERNATE 1. ADD 0.123 CY/LF OF CONCRETE CLASS 4000 FOR BARRIER ALTERNATE 2. SEE STANDARD PLAN D-15.10

(2) ADD 28 LB/LF OF REINFORCING STEEL FOR BARRIER ALTERNATE 1 OR 19 LB/LF OF REINFORCING STEEL FOR BARRIER ALTERNATE 2. SEE STANDARD PLAN D-15.10

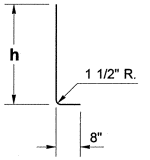

BAR (E)
@ 1' - 6" CENTERS

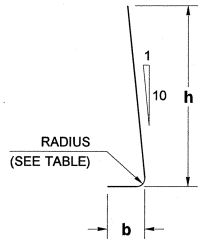

BAR	RADIUS
#4	1 1/2"
#5	1 7/8"
#6	2 1/4"
#7	2 5/8"
#8	3"
#9	4 3/4"
#10	5 3/8"
#11	6"

BARS (K) AND (M)

BAR	MIN. SPLICE
#4	2' - 0"
#5	2' - 0"
#6	2' - 0"
#7	2' - 6"
#8	3' - 3"
#9	4' - 2"
#10	5' - 3"

VERTICAL FACE WALL DESIGN WITH A 250 PSF SURCHARGE OR TRAFFIC BARRIER

BIJAN KHALEGHI STATE OF WASHINGTON 27695 STRUCTURAL ENGINEER PROFESSIONAL ENGINEER 12/25/08

REINFORCED CONCRETE RETAINING WALL TYPE 1 AND 1SW STANDARD PLAN D-10.10-01

SHEET 2 OF 2 SHEETS

APPROVED FOR PUBLICATION
STATE DESIGN ENGINEER — DATE 12/2/08
Washington State Department of Transportation

DRAWN BY: BILL BERENS

DRAWN BY: BILL BERENS

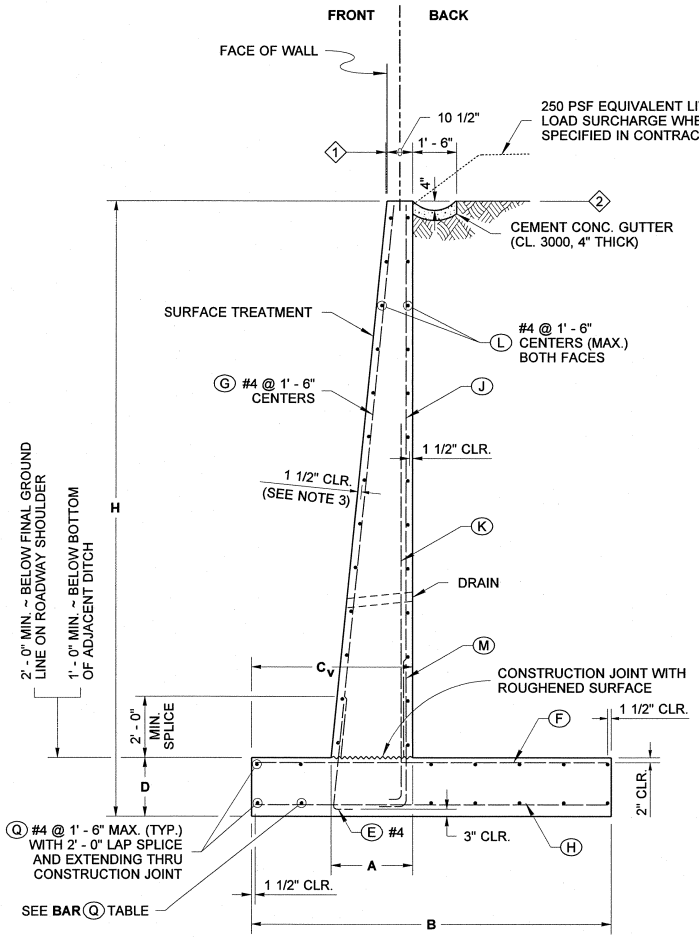

BAR Q #4		
LOCATION	WALL HEIGHT (H)	QTY.
TOP OF FOOTING	≤ 12'	5
	13' ≤ 16'	6
	17' ≤ 22'	7
	23' ≤ 28'	9
	29' ≤ 35'	11
BOTTOM OF FOOTING	≤ 12'	5
	13' ≤ 16'	6
	17' ≤ 22'	7
	23' ≤ 28'	9
	29' ≤ 35'	11

TYPICAL SECTION

1 OFFSET ~ SET TOP OF WALL BACK:
H ≤ 20' ..... OFFSET = 1/2"
H ≥ 20' ..... OFFSET (inches) = $\frac{H(ft)}{8}$ - 2

2 WHEN THE CONTRACT SPECIFIES CABLE FENCE, BACKFILL AND THE CEMENT CONCRETE GUTTER SHALL BE PLACED 6" MIN. FROM THE TOP OF THE WALL

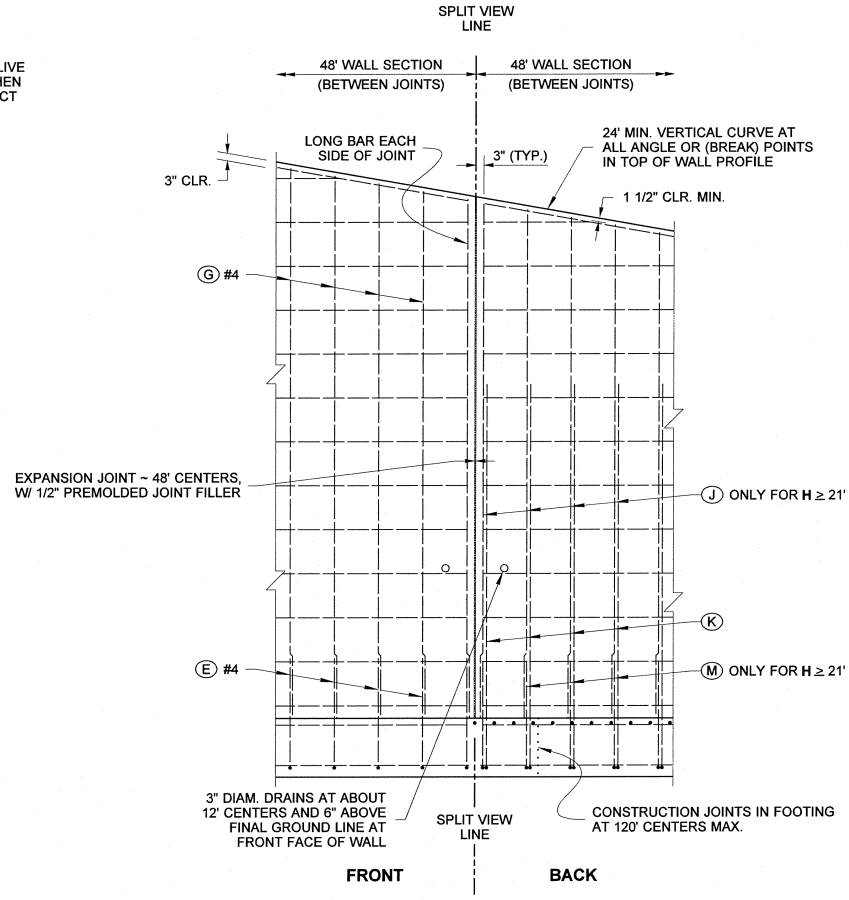

SPLIT ELEVATION VIEW
(SHOWING SEPARATE REBAR LAYERS)

NOTES

1. All concrete shall be Class 4000, except as noted.
2. For backfill requirements, see Standard Plan D-4.
3. When Wall Type 2SW (saltwater) is specified, the concrete cover over steel in the front face and the total wall thickness shall be increased by 1".
4. When Wall Type 2SW (saltwater) is specified, concrete in the table column "Material Quantity" shall be increased by (0.003 x H) CY/LF.
5. Concrete in the 48 foot wall sections shall be placed separately between expansion joints with a minimum 24 hour period before placing concrete in the adjacent section.
6. This wall has been designed in accordance with the requirements of the AASHTO LRFD Bridge Design Specifications 4th Edition 2007 and interims through 2008. The seismic design of these walls has been completed using an effective PGA of 0.51 g.
7. If Traffic Barriers are required, see Standard Plans D-15.10, D-15.20 and D-15.30.

SLOPING FACE WALL DESIGN WITH A 250 PSF SURCHARGE OR TRAFFIC BARRIER

BIJAN KHALEGHI STATE OF WASHINGTON 27695 STRUCTURAL ENGINEER PROFESSIONAL ENGINEER
12/25/08

REINFORCED CONCRETE RETAINING WALL TYPE 2 AND 2SW STANDARD PLAN D-10.15-01

SHEET 1 OF 2 SHEETS

APPROVED FOR PUBLICATION
STATE DESIGN ENGINEER — DATE 12/2/08

Washington State Department of Transportation

WALL HT H	DIMENSIONS				FOOTING REINFORCEMENT																		STEM REINFORCEMENT				MATERIAL QUANTITY		MAXIMUM SOIL PRESSURE (PSF)			
					BAR (E) #4		BAR (F)			BAR (H)			BAR (K)					BAR (M)					BAR (J)			(G) #4						
	B	C_V	D	A	LENGTH	h	SIZE	SPA.	LENGTH	SIZE	SPA.	LENGTH	SIZE	SPA.	LENGTH	h	b	SIZE	SPA.	LENGTH	h	b	SIZE	SPA.	LENGTH	LENGTH	CONC. CY / LF	STEEL LBS / LF	SERVICE	STRENGTH	EXTREME EVENT 1	EXTREME EVENT 2
5'	6' - 9"	3' - 0"	1' - 0"	1' - 4"	2' - 7"	2' - 0"	#4	1' - 6"	6' - 6"	#4	1' - 6"	6' - 6"	#4	1' - 6"	5' - 2"	4' - 7"	8"	N/A	N/A	N/A	N/A	N/A	N/A	N/A	N/A	3' - 10 1/2"	0.41	23.8	900	1244	1163	1620
6'	6' - 9"	3' - 0"	1' - 0"	1' - 5 1/2"	2' - 7"	2' - 0"	#4	1' - 6"	6' - 6"	#4	1' - 6"	6' - 6"	#4	1' - 6"	6' - 2"	5' - 7"	8"	N/A	N/A	N/A	N/A	N/A	N/A	N/A	N/A	4' - 10 1/2"	0.46	26.3	987	1351	1380	1878
7'	7' - 0"	3' - 3"	1' - 0"	1' - 6 1/2"	2' - 7"	2' - 0"	#4	1' - 6"	6' - 9"	#4	1' - 6"	6' - 9"	#4	1' - 6"	7' - 2"	6' - 7"	8"	N/A	N/A	N/A	N/A	N/A	N/A	N/A	N/A	5' - 10 1/2"	0.53	28.9	1076	1476	1548	2006
8'	7' - 0"	3' - 3"	1' - 0"	1' - 7 1/2"	2' - 7"	2' - 0"	#4	1' - 0"	6' - 9"	#4	1' - 6"	6' - 9"	#4	1' - 0"	8' - 2"	7' - 7"	8"	N/A	N/A	N/A	N/A	N/A	N/A	N/A	N/A	6' - 10 1/2"	0.58	34.7	1225	1687	1837	2332
9'	7' - 3"	3' - 6"	1' - 0"	1' - 9"	2' - 7"	2' - 0"	#4	1' - 0"	7' - 0"	#4	1' - 6"	7' - 0"	#4	1' - 0"	9' - 2"	8' - 7"	8"	N/A	N/A	N/A	N/A	N/A	N/A	N/A	N/A	7' - 10 1/2"	0.65	37.7	1325	1833	2043	2486
10'	7' - 6"	3' - 6"	1' - 0"	1' - 10"	2' - 7"	2' - 0"	#4	9"	7' - 3"	#4	1' - 6"	7' - 3"	#4	1' - 0"	10' - 2"	9' - 7"	8"	N/A	N/A	N/A	N/A	N/A	N/A	N/A	N/A	8' - 10 1/2"	0.73	42.2	1493	2075	2385	2744
11'	7' - 9"	3' - 6"	1' - 0"	1' - 11 1/2"	2' - 7"	2' - 0"	#4	7"	7' - 6"	#4	1' - 6"	7' - 6"	#4	10"	11' - 2"	10' - 7"	8"	N/A	N/A	N/A	N/A	N/A	N/A	N/A	N/A	9' - 10 1/2"	0.81	48.6	1677	2341	2780	3027
12'	8' - 0"	3' - 9"	1' - 0"	2' - 0 1/2"	2' - 7"	2' - 0"	#5	9"	7' - 9"	#4	1' - 6"	7' - 9"	#4	9"	12' - 2"	11' - 7"	8"	N/A	N/A	N/A	N/A	N/A	N/A	N/A	N/A	10' - 11"	0.89	53.8	1797	2522	3066	3221
13'	8' - 3"	3' - 9"	1' - 0"	2' - 1 1/2"	2' - 7"	2' - 0"	#5	7"	8' - 0"	#4	1' - 6"	8' - 0"	#4	8"	13' - 2"	12' - 7"	8"	N/A	N/A	N/A	N/A	N/A	N/A	N/A	N/A	11' - 11"	0.97	62.7	2004	2826	3563	3545
14'	8' - 9"	3' - 9"	1' - 0"	2' - 3"	2' - 7"	2' - 0"	#5	5"	8' - 6"	#4	1' - 6"	8' - 6"	#4	7"	14' - 2"	13' - 7"	8"	N/A	N/A	N/A	N/A	N/A	N/A	N/A	N/A	12' - 11"	1.07	74.4	2190	3089	3977	3706
15'	9' - 6"	3' - 9"	1' - 3"	2' - 4"	2' - 10"	2' - 3"	#5	5"	9' - 3"	#4	1' - 6"	9' - 3"	#4	7"	15' - 2"	14' - 7"	8"	N/A	N/A	N/A	N/A	N/A	N/A	N/A	N/A	13' - 8"	1.25	80.4	2359	3313	4280	3766
16'	10' - 0"	4' - 0"	1' - 3"	2' - 5"	2' - 10"	2' - 3"	#6	6"	9' - 9"	#4	1' - 6"	9' - 9"	#4	6"	16' - 2"	15' - 7"	8"	N/A	N/A	N/A	N/A	N/A	N/A	N/A	N/A	14' - 8"	1.36	95.6	2459	3455	4496	3845
17'	10' - 6"	4' - 3"	1' - 6"	2' - 6"	3' - 1"	2' - 6"	#6	6"	10' - 3"	#4	1' - 6"	10' - 3"	#4	5"	17' - 2"	16' - 7"	8"	N/A	N/A	N/A	N/A	N/A	N/A	N/A	N/A	15' - 5"	1.55	103.9	2572	3615	4733	3951
18'	11' - 0"	4' - 6"	1' - 6"	2' - 7"	3' - 1"	2' - 6"	#6	5"	10' - 9"	#4	1' - 0"	10' - 9"	#5	7"	18' - 3"	17' - 7"	10"	N/A	N/A	N/A	N/A	N/A	N/A	N/A	N/A	16' - 5"	1.67	121.6	2671	3756	4951	4047
19'	11' - 6"	5' - 0"	1' - 9"	2' - 8"	3' - 4"	2' - 9"	#6	6"	11' - 3"	#4	1' - 0"	11' - 3"	#5	6"	19' - 3"	18' - 7"	10"	N/A	N/A	N/A	N/A	N/A	N/A	N/A	N/A	17' - 2"	1.87	126.5	2701	3800	4989	4051
20'	12' - 3"	5' - 0"	1' - 9"	2' - 9 1/2"	3' - 4"	2' - 9"	#6	5"	12' - 0"	#4	1' - 0"	12' - 0"	#5	5"	20' - 3"	19' - 7"	10"	N/A	N/A	N/A	N/A	N/A	N/A	N/A	N/A	18' - 2"	2.02	149.0	2855	4005	5275	4186
21'	12' - 9"	5' - 6"	2' - 0"	2' - 10"	3' - 7"	3' - 0"	#7	7"	12' - 6"	#4	11"	12' - 6"	#6	1' - 4"	10' - 4 1/2"	9' - 7"	12"	#6	1' - 4"	5' - 2"	4' - 4"	11"	#6	1' - 4"	19' - 4"	18' - 11 1/2"	2.25	141.1	2888	4052	5322	4207
22'	13' - 3"	5' - 9"	2' - 0"	2' - 11 1/2"	3' - 7"	3' - 0"	#7	6"	13' - 0"	#4	10"	13' - 0"	#6	1' - 4"	11' - 5"	10' - 7 1/2"	12"	#6	1' - 4"	5' - 2"	4' - 4"	11"	#6	1' - 4"	20' - 4"	19' - 11 1/2"	2.39	157.4	2987	4193	5540	4323
23'	13' - 9"	6' - 0"	2' - 3"	3' - 0 1/2"	3' - 10"	3' - 3"	#7	6"	13' - 6"	#4	10"	13' - 6"	#6	1' - 4"	12' - 6 1/2"	11' - 9"	12"	#6	1' - 4"	5' - 5"	4' - 7"	11"	#6	1' - 4"	21' - 1"	20' - 8 1/2"	2.64	164.2	3103	4356	5786	4462
24'	14' - 3"	6' - 3"	2' - 3"	3' - 1 1/2"	3' - 10"	3' - 3"	#7	6"	14' - 0"	#4	8"	14' - 0"	#6	1' - 4"	13' - 7"	12' - 9 1/2"	12"	#6	1' - 4"	5' - 5"	4' - 7"	11"	#6	1' - 4"	22' - 1"	21' - 8 1/2"	2.79	175.1	3202	4497	6004	4582
25'	14' - 9"	6' - 6"	2' - 6"	3' - 2 1/2"	4' - 1"	3' - 6"	#7	6"	14' - 6"	#4	8"	14' - 6"	#6	1' - 4"	14' - 8"	13' - 10 1/2"	12"	#6	1' - 4"	5' - 8"	4' - 10"	11"	#6	1' - 4"	22' - 10"	22' - 5 1/2"	3.06	180.6	3318	4660	6252	4725
26'	15' - 6"	6' - 9"	2' - 6"	3' - 3 1/2"	4' - 1"	3' - 6"	#8	7"	15' - 3"	#4	7"	15' - 3"	#6	1' - 4"	15' - 8 1/2"	14' - 11"	12"	#6	1' - 4"	5' - 8"	4' - 10"	11"	#6	1' - 4"	23' - 10"	23' - 5 1/2"	3.24	198.4	3391	4753	6346	4785
27'	16' - 0"	7' - 0"	2' - 9"	3' - 4 1/2"	4' - 4"	3' - 9"	#8	7"	15' - 9"	#4	7"	15' - 9"	#6	1' - 2"	16' - 9 1/2"	16' - 0"	12"	#6	1' - 2"	5' - 11"	5' - 1"	11"	#6	1' - 2"	24' - 7"	24' - 2 1/2"	3.53	214.5	3508	4916	6593	4933
28'	16' - 6"	7' - 3"	3' - 0"	3' - 5 1/2"	4' - 7"	4' - 0"	#8	7"	16' - 3"	#4	7"	16' - 3"	#6	10"	15' - 11"	15' - 1 1/2"	12"	#6	10"	6' - 2"	5' - 4"	11"	#6	10"	25' - 4"	24' - 11 1/2"	3.83	243.9	3626	5079	6842	5082
29'	17' - 0"	7' - 6"	3' - 3"	3' - 6 1/2"	4' - 10"	4' - 3"	#8	7"	16' - 9"	#4	6"	16' - 9"	#8	1' - 4"	16' - 0"	15' - 0"	1' - 3"	#8	1' - 4"	8' - 4"	7' - 2"	1' - 3"	#8	1' - 4"	26' - 1"	25' - 8 1/2"	4.14	267.4	3743	5243	7092	5232
30'	17' - 6"	8' - 0"	3' - 3"	3' - 7 1/2"	4' - 10"	4' - 3"	#8	6"	17' - 3"	#5	9"	17' - 3"	#8	1' - 4"	17' - 0 1/2"	16' - 0"	1' - 3"	#8	1' - 4"	8' - 4"	7' - 2"	1' - 3"	#8	1' - 4"	27' - 1"	26' - 9"	4.33	290.5	3765	5279	7128	5258
31'	18' - 0"	8' - 3"	3' - 6"	3' - 8 1/2"	5' - 1"	4' - 6"	#8	6"	17' - 9"	#5	8"	17' - 9"	#8	1' - 4"	18' - 1 1/2"	17' - 1"	1' - 3"	#8	1' - 4"	8' - 7"	7' - 5 1/2"	1' - 3"	#8	1' - 4"	27' - 10"	27' - 6"	4.65	303.1	3883	5444	7379	5411
32'	18' - 9"	8' - 6"	3' - 9"	3' - 9 1/2"	5' - 4"	4' - 9"	#8	6"	18' - 6"	#5	8"	18' - 6"	#8	1' - 2"	19' - 2 1/2"	18' - 2"	1' - 3"	#8	1' - 2"	8' - 10"	7' - 8"	1' - 3"	#8	1' - 2"	28' - 7"	28' - 3"	5.03	330.6	3978	5563	7509	5512
33'	19' - 3"	8' - 9"	4' - 0"	3' - 10"	5' - 7"	5' - 0"	#8	6"	19' - 0"	#5	8"	19' - 0"	#8	1' - 0"	19' - 2"	18' - 1 1/2"	1' - 3"	#8	1' - 0"	9' - 1"	7' - 11"	1' - 3"	#8	1' - 0"	29' - 4"	29' - 0"	5.38	361.5	4096	5727	7760	5667
34'	19' - 9"	9' - 0"	4' - 3"	3' - 11"	5' - 10"	5' - 3"	#8	6"	19' - 6"	#5	7"	19' - 6"	#9	10"	17' - 4 1/2"	16' - 1 1/2"	1' - 6"	#9	10"	10' - 8"	9' - 3 1/2"	1' - 6"	#9	10"	30' - 1"	29' - 9"	5.74	454.5	4214	5892	8012	5822
35'	20' - 3"	9' - 3"	4' - 6"	4' - 0"	6' - 1"	5' - 6"	#8	6"	20' - 0"	#5	7"	20' - 0"	#10	1' - 0"	18' - 9"	17' - 4 1/2"	1' - 8"	#10	1' - 0"	12' - 3 1/2"	10' - 9 1/2"	1' - 8"	#10	1' - 0"	30' - 10"	30' - 6"	6.12	487.8	4332	6057	8265	5978

REINFORCEMENT NOTES

(1) IF TRAFFIC BARRIER IS USED, ADD 0.110 CY OF CONCRETE CLASS 4000 FOR BARRIER ALTERNATE 1. ADD 0.152 CY/LF OF CONCRETE CLASS 4000 FOR BARRIER ALTERNATE 2. SEE STANDARD PLAN D-15.10

(2) ADD 16 LB/LF OF REINFORCING STEEL FOR BARRIER ALTERNATE 1 OR 23 LB/LF OF REINFORCING STEEL FOR BARRIER ALTERNATE 2. SEE STANDARD PLAN D-15.10

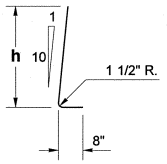

BAR (E)
@ 1' - 6" CENTERS

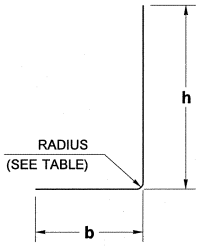

BAR	RADIUS
#4	1 1/2"
#5	1 7/8"
#6	2 1/4"
#7	2 5/8"
#8	3"
#9	4 3/4"
#10	5 3/8"
#11	6"

BARS (K) AND (M)

BAR	MIN. SPLICE
#4	2' - 0"
#5	2' - 0"
#6	2' - 0"
#7	2' - 6"
#8	3' - 3"
#9	4' - 2"
#10	5' - 3"

SLOPING FACE WALL DESIGN WITH A 250 PSF SURCHARGE

BIJAN KHALEGHI — STATE OF WASHINGTON — 27695 — STRUCTURAL ENGINEER — PROFESSIONAL ENGINEER

11/25/08

REINFORCED CONCRETE RETAINING WALL TYPE 2 AND 2SW STANDARD PLAN D-10.15-01

SHEET 2 OF 2 SHEETS

APPROVED FOR PUBLICATION

STATE DESIGN ENGINEER — DATE 12/2/08

Washington State Department of Transportation

DRAWN BY: BILL BERENS

DRAWN BY: BILL BERENS

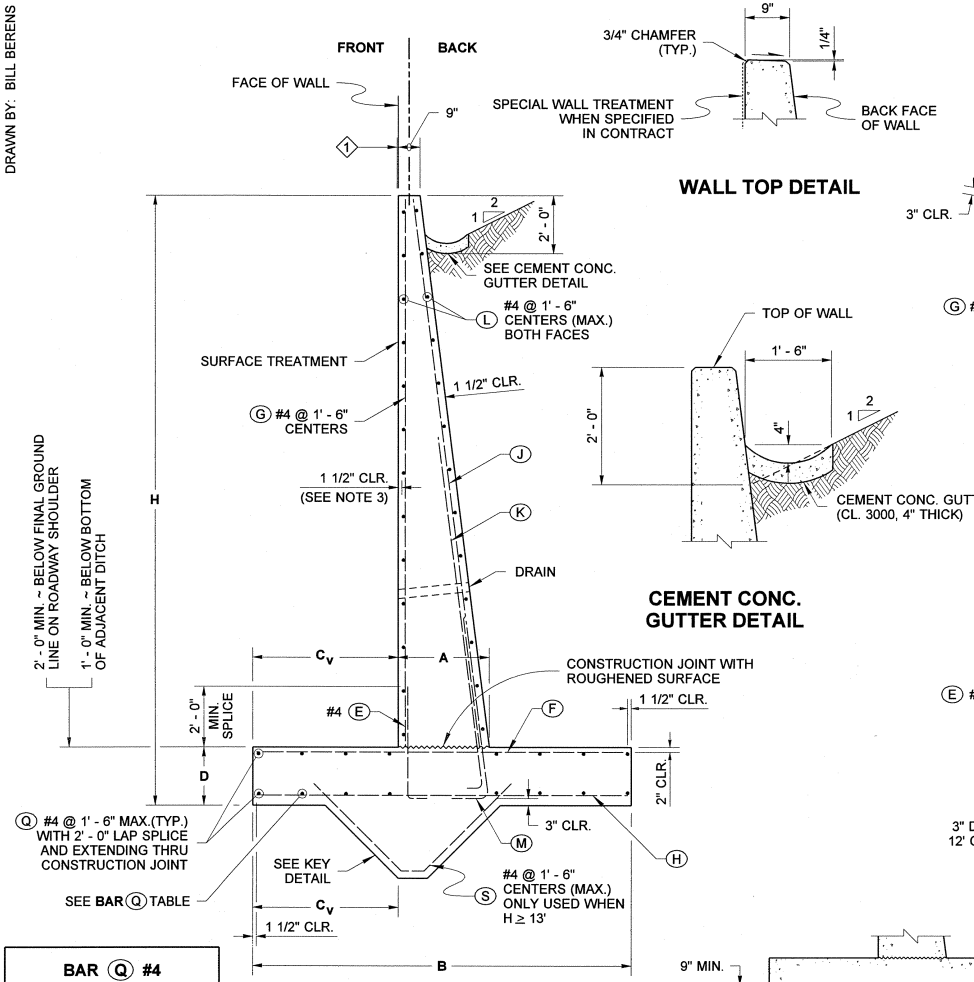

TYPICAL SECTION

WALL TOP DETAIL

CEMENT CONC. GUTTER DETAIL

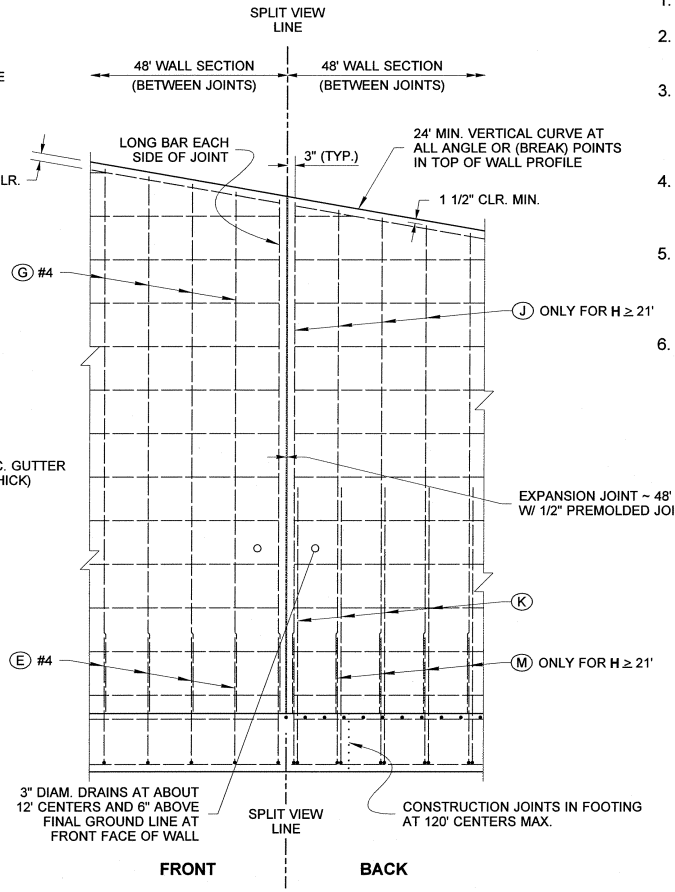

SPLIT ELEVATION VIEW
(SHOWING SEPARATE REBAR LAYERS)

BAR Q #4		
LOCATION	WALL HEIGHT (H)	QTY.
TOP OF FOOTING	≤ 11'	4
	12' ≤ 18'	6
	19' ≤ 24'	8
	25' ≤ 30'	10
	31' ≤ 35'	12
BOTTOM OF FOOTING	≤ 11'	4
	12' ≤ 18'	6
	19' ≤ 24'	8
	25' ≤ 30'	10
	31' ≤ 35'	12

1 OFFSET ~ SET TOP OF WALL BACK:
H ≤ 20' ..... OFFSET = 1/2"
H ≥ 20' ..... OFFSET (inches) = $\frac{H(ft)}{8}$ - 2

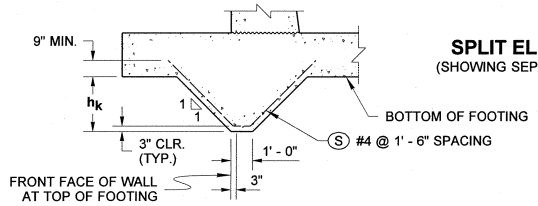

KEY DETAIL
REQUIRED ON WALLS WHERE H ≥ 13'

NOTES

1. All concrete shall be Class 4000, except as noted.
2. For backfill requirements, see Standard Plan D-4.
3. When Wall Type 3SW (saltwater) is specified, the concrete cover over steel in the front face and the total wall thickness shall be increased by 1".
4. When Wall Type 3SW (saltwater) is specified, concrete in the table column "Material Quantity" shall be increased by (0.003 x H) CY/LF.
5. Concrete in the 48 foot wall sections shall be placed separately between expansion joints with a minimum 24 hour period before placing concrete in the adjacent section.
6. This wall has been designed in accordance with the requirements of the AASHTO LRFD Bridge Design Specifications 4th Edition 2007 and interims through 2008. The seismic design of these walls has been completed using an effective PGA of 0.51 g.

VERTICAL FACE WALL DESIGN WITH 2 :1 BACKSLOPE

BIJAN KHALEGHI
STATE OF WASHINGTON
27695
STRUCTURAL ENGINEER
PROFESSIONAL ENGINEER

REINFORCED CONCRETE RETAINING WALL TYPE 3 AND 3SW STANDARD PLAN D-10.20-00

SHEET 1 OF 2 SHEETS

APPROVED FOR PUBLICATION
STATE DESIGN ENGINEER — DATE 7/6/08

Washington State Department of Transportation

WALL HT H	DIMENSIONS					FOOTING REINFORCEMENT																		STEM REINFORCEMENT				MATERIAL QUANTITY		MAXIMUM SOIL PRESSURE (PSF)		
						BAR (E) #4		BAR (F)			BAR (H)			BAR (K)					BAR (M)					BAR (J)			(G) #4					
	B	C_V	D	h_K	A	LENGTH	h	SIZE	SPA.	LENGTH	SIZE	SPA.	LENGTH	SIZE	SPA.	LENGTH	h	b	SIZE	SPA.	LENGTH	h	b	SIZE	SPA.	LENGTH	LENGTH	CONC. CY / LF	STEEL LBS / LF	SERVICE	STRENGTH	EXTREME EVENT 1
5'	4' - 3"	2' - 9"	1' - 0"	N/A	1' - 1 1/2"	3' - 4"	2' - 9"	#4	1' - 6"	4' - 0"	#4	1' - 6"	4' - 0"	#4	1' - 6"	5' - 1 1/2"	4' - 7"	8"	N/A	N/A	N/A	N/A	N/A	N/A	N/A	N/A	3' - 9"	0.30	20.5	591	771	733
6'	4' - 3"	2' - 9"	1' - 0"	N/A	1' - 3"	3' - 4"	2' - 9"	#4	1' - 6"	4' - 0"	#4	1' - 6"	4' - 0"	#4	1' - 6"	6' - 1 1/2"	5' - 7"	8"	N/A	N/A	N/A	N/A	N/A	N/A	N/A	N/A	4' - 9"	0.34	23.0	709	925	871
7'	4' - 3"	2' - 9"	1' - 0"	N/A	1' - 4"	3' - 4"	2' - 9"	#4	1' - 6"	4' - 0"	#4	1' - 6"	4' - 0"	#4	1' - 6"	7' - 1 1/2"	6' - 7"	8"	N/A	N/A	N/A	N/A	N/A	N/A	N/A	N/A	5' - 9"	0.39	24.1	815	1061	992
8'	4' - 3"	3' - 0"	1' - 0"	N/A	1' - 5"	3' - 4"	2' - 9"	#4	1' - 6"	4' - 0"	#4	1' - 6"	4' - 0"	#4	1' - 6"	8' - 1 1/2"	7' - 7"	8"	N/A	N/A	N/A	N/A	N/A	N/A	N/A	N/A	6' - 9"	0.44	26.6	887	1146	1066
9'	4' - 3"	3' - 0"	1' - 0"	N/A	1' - 6 1/2"	3' - 4"	2' - 9"	#4	1' - 6"	4' - 0"	#4	1' - 6"	4' - 0"	#4	1' - 6"	9' - 1 1/2"	8' - 7"	8"	N/A	N/A	N/A	N/A	N/A	N/A	N/A	N/A	7' - 10 1/2"	0.50	27.7	998	1354	1236
10'	4' - 3"	3' - 3"	1' - 0"	N/A	1' - 7 1/2"	3' - 4"	2' - 9"	#4	1' - 6"	4' - 0"	#4	1' - 6"	4' - 0"	#4	1' - 6"	10' - 1 1/2"	9' - 7"	8"	N/A	N/A	N/A	N/A	N/A	N/A	N/A	N/A	8' - 9 1/2"	0.56	31.5	1145	1580	1412
11'	4' - 9"	3' - 3"	1' - 3"	N/A	1' - 8 1/2"	3' - 7"	3' - 0"	#4	1' - 6"	4' - 6"	#4	1' - 6"	4' - 6"	#4	1' - 0"	11' - 1 1/2"	10' - 7"	8"	N/A	N/A	N/A	N/A	N/A	N/A	N/A	N/A	9' - 6 1/2"	0.67	36.8	1368	1892	1686
12'	5' - 6"	3' - 3"	1' - 3"	N/A	1' - 10"	3' - 7"	3' - 0"	#4	1' - 6"	5' - 3"	#4	1' - 6"	5' - 3"	#4	1' - 0"	12' - 1 1/2"	11' - 7"	8"	N/A	N/A	N/A	N/A	N/A	N/A	N/A	N/A	10' - 6 1/2"	0.77	38.8	1540	2125	1899
13'	6' - 0"	3' - 6"	1' - 3"	N/A	1' - 11"	3' - 7"	3' - 0"	#4	1' - 6"	5' - 9"	#4	1' - 6"	5' - 9"	#4	9"	13' - 1 1/2"	12' - 7"	8"	N/A	N/A	N/A	N/A	N/A	N/A	N/A	N/A	11' - 6 1/2"	0.86	46.2	1664	2305	2049
14'	6' - 6"	3' - 6"	1' - 3"	N/A	2' - 0"	3' - 7"	3' - 0"	#4	1' - 0"	6' - 3"	#4	1' - 6"	6' - 3"	#4	7"	14' - 1 1/2"	13' - 7"	8"	N/A	N/A	N/A	N/A	N/A	N/A	N/A	N/A	12' - 6 1/2"	0.96	54.5	1875	2604	2310
15'	7' - 3"	3' - 9"	1' - 6"	N/A	2' - 1"	3' - 10"	3' - 3"	#4	1' - 0"	7' - 0"	#4	1' - 6"	7' - 0"	#4	6"	15' - 1 1/2"	14' - 7"	8"	N/A	N/A	N/A	N/A	N/A	N/A	N/A	N/A	13' - 3 1/2"	1.12	62.7	1987	2754	2450
16'	7' - 9"	3' - 9"	1' - 6"	N/A	2' - 2"	3' - 10"	3' - 3"	#4	9"	7' - 6"	#4	1' - 6"	7' - 6"	#5	8"	16' - 2 1/2"	15' - 7"	9"	N/A	N/A	N/A	N/A	N/A	N/A	N/A	N/A	14' - 3 1/2"	1.22	72.1	2202	3058	2716
17'	8' - 3"	4' - 0"	1' - 9"	N/A	2' - 3"	4' - 1"	3' - 6"	#4	9"	8' - 0"	#4	1' - 6"	8' - 0"	#5	7"	17' - 2 1/2"	16' - 7"	9"	N/A	N/A	N/A	N/A	N/A	N/A	N/A	N/A	15' - 0 1/2"	1.39	80.1	2348	3265	2894
18'	9' - 0"	4' - 3"	1' - 9"	N/A	2' - 4 1/2"	4' - 1"	3' - 6"	#4	7"	8' - 9"	#4	1' - 6"	8' - 9"	#5	6"	18' - 2 1/2"	17' - 7"	9"	N/A	N/A	N/A	N/A	N/A	N/A	N/A	N/A	16' - 1"	1.52	93.9	2441	3391	3010
19'	9' - 9"	4' - 6"	2' - 0"	N/A	2' - 5"	4' - 4"	3' - 9"	#4	6"	9' - 6"	#4	1' - 6"	9' - 6"	#6	7"	19' - 4"	18' - 7"	11"	N/A	N/A	N/A	N/A	N/A	N/A	N/A	N/A	16' - 10"	1.73	110.7	2556	3545	3153
20'	10' - 3"	4' - 9"	2' - 3"	N/A	2' - 6"	4' - 7"	4' - 0"	#4	6"	10' - 0"	#4	1' - 6"	10' - 0"	#6	6"	20' - 4"	19' - 7"	11"	N/A	N/A	N/A	N/A	N/A	N/A	N/A	N/A	17' - 7"	1.93	123.5	2702	3752	3331
21'	11' - 0"	5' - 0"	2' - 3"	N/A	2' - 7 1/2"	4' - 7"	4' - 0"	#5	7"	10' - 9"	#4	1' - 6"	10' - 9"	#7	1' - 4"	10' - 3 1/2"	9' - 4 1/2"	1' - 1"	#7	1' - 4"	6' - 2"	5' - 2"	1' - 1"	#7	1' - 4"	18' - 6"	18' - 7"	2.09	125.5	2800	3886	3454
22'	12' - 0"	5' - 3"	2' - 3"	N/A	2' - 8 1/2"	4' - 7"	4' - 0"	#6	8"	11' - 9"	#4	1' - 6"	11' - 9"	#7	1' - 0"	9' - 3 1/2"	8' - 4 1/2"	1' - 1"	#7	1' - 0"	6' - 2"	5' - 2"	1' - 1"	#7	1' - 0"	19' - 6"	19' - 7"	2.27	153.1	2876	3983	3552
23'	12' - 3"	5' - 6"	2' - 6"	N/A	2' - 9 1/2"	4' - 10"	4' - 3"	#6	8"	12' - 0"	#4	1' - 6"	12' - 0"	#7	1' - 0"	10' - 5"	9' - 6"	1' - 1"	#7	1' - 0"	6' - 5"	5' - 5"	1' - 1"	#7	1' - 0"	20' - 3"	20' - 4"	2.48	160.1	3046	4229	3756
24'	13' - 0"	5' - 9"	2' - 6"	N/A	2' - 10 1/2"	4' - 10"	4' - 3"	#6	7"	12' - 9"	#4	1' - 6"	12' - 9"	#7	10"	10' - 0 1/2"	9' - 1 1/2"	1' - 1"	#7	10"	6' - 5"	5' - 5"	1' - 1"	#7	10"	21' - 3"	21' - 4"	2.66	184.9	3147	4368	3883
25'	13' - 9"	6' - 3"	2' - 9"	N/A	2' - 11 1/2"	5' - 1"	4' - 6"	#6	7"	13' - 6"	#4	1' - 6"	13' - 6"	#7	10"	11' - 1 1/2"	10' - 3"	1' - 1"	#7	10"	6' - 8"	5' - 8"	1' - 1"	#7	10"	22' - 0"	22' - 1"	2.94	197.0	3190	4424	3933
26'	13' - 9"	6' - 6"	2' - 9"	2' - 0"	3' - 1"	5' - 1"	4' - 6"	#6	7"	13' - 6"	#4	1' - 0"	13' - 6"	#8	1' - 4"	14' - 5 1/2"	13' - 5"	1' - 3"	#8	1' - 4"	7' - 9"	6' - 8"	1' - 3"	#8	1' - 4"	23' - 0"	23' - 1"	3.27	194.2	3248	4543	3997
27'	14' - 3"	7' - 0"	2' - 9"	2' - 0"	3' - 2"	5' - 1"	4' - 6"	#6	7"	14' - 0"	#4	1' - 0"	14' - 0"	#8	1' - 4"	15' - 5 1/2"	14' - 5 1/2"	1' - 3"	#8	1' - 4"	7' - 9"	6' - 8"	1' - 3"	#8	1' - 4"	24' - 0"	24' - 1 1/2"	3.44	201.9	3298	4620	4054
28'	14' - 9"	7' - 3"	3' - 0"	2' - 0"	3' - 3"	5' - 4"	4' - 9"	#6	7"	14' - 6"	#4	1' - 0"	14' - 6"	#8	1' - 2"	15' - 7"	14' - 6 1/2"	1' - 3"	#8	1' - 2"	8' - 0"	6' - 11"	1' - 3"	#8	1' - 2"	24' - 9"	24' - 10 1/2"	3.71	222.8	3450	4832	4238
29'	15' - 6"	7' - 6"	3' - 0"	2' - 0"	3' - 4"	5' - 4"	4' - 9"	#6	6"	15' - 3"	#4	11"	15' - 3"	#8	1' - 0"	15' - 4"	14' - 3 1/2"	1' - 3"	#8	1' - 0"	8' - 0"	6' - 11"	1' - 3"	#8	1' - 0"	25' - 9"	25' - 10 1/2"	3.92	255.3	3556	4976	4370
30'	16' - 6"	8' - 0"	3' - 3"	2' - 0"	3' - 5"	5' - 7"	5' - 0"	#7	7"	16' - 3"	#4	10"	16' - 3"	#9	10"	13' - 5 1/2"	12' - 3"	1' - 6"	#9	10"	9' - 7"	8' - 3"	1' - 6"	#9	10"	26' - 6"	26' - 7 1/2"	4.28	341.4	3591	5010	4414
31'	16' - 9"	8' - 3"	3' - 6"	2' - 0"	3' - 6"	5' - 10"	5' - 3"	#7	7"	16' - 6"	#4	10"	16' - 6"	#9	10"	14' - 6 1/2"	13' - 4"	1' - 6"	#9	10"	9' - 10"	8' - 6"	1' - 6"	#9	10"	27' - 3"	27' - 4 1/2"	4.56	353.0	3760	5254	4616
32'	17' - 3"	8' - 6"	3' - 9"	2' - 0"	3' - 7"	6' - 1"	5' - 6"	#7	7"	17' - 0"	#4	9"	17' - 0"	#10	1' - 0"	16' - 3"	14' - 10 1/2"	1' - 8"	#10	1' - 0"	11' - 5 1/2"	10' - 0"	1' - 8"	#10	1' - 0"	28' - 0"	28' - 1 1/2"	4.88	387.7	3910	5464	4799
33'	17' - 9"	8' - 9"	4' - 0"	2' - 0"	3' - 7 1/2"	6' - 4"	5' - 9"	#7	7"	17' - 6"	#4	9"	17' - 6"	#10	10"	15' - 5 1/2"	14' - 1"	1' - 8"	#10	10"	11' - 8 1/2"	10' - 3"	1' - 8"	#10	10"	28' - 9"	28' - 10 1/2"	5.21	442.0	4060	5675	4982
34'	18' - 9"	9' - 3"	4' - 0"	2' - 0"	3' - 9"	6' - 4"	5' - 9"	#7	6"	18' - 6"	#4	8"	18' - 6"	#10	10"	16' - 4"	15' - 1"	1' - 8"	#10	10"	11' - 8 1/2"	10' - 3"	1' - 8"	#10	10"	29' - 9"	29' - 10 1/2"	5.50	471.7	4072	5680	4997
35'	19' - 3"	9' - 6"	4' - 3"	2' - 0"	3' - 10"	6' - 7"	6' - 0"	#7	6"	19' - 0"	#4	7"	19' - 0"	#10	9"	16' - 2 1/2"	14' - 11 1/2"	1' - 8"	#10	9"	11' - 11 1/2"	10' - 6"	1' - 8"	#10	9"	30' - 6"	30' - 7 1/2"	5.86	516.0	4221	5889	5179

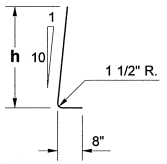

BAR (E)
@ 1' - 6" CENTERS

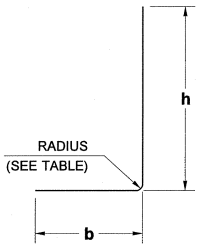

BAR	RADIUS
#4	1 1/2"
#5	1 7/8"
#6	2 1/4"
#7	2 5/8"
#8	3"
#9	4 3/4"
#10	5 3/8"
#11	6"

BARS (K) AND (M)

BAR	MIN. SPLICE
#4	2' - 0"
#5	2' - 0"
#6	2' - 0"
#7	2' - 6"
#8	3' - 3"
#9	4' - 2"
#10	5' - 3"

DRAWN BY: BILL BERENS

SLOPING FACE WALL DESIGN WITH 2 :1 BACKSLOPE

BIJAN KHALEGHI — STATE OF WASHINGTON — 27695 — STRUCTURAL ENGINEER — PROFESSIONAL ENGINEER — 7/1/08

REINFORCED CONCRETE RETAINING WALL TYPE 6
STANDARD PLAN D-10.35-00

SHEET 2 OF 2 SHEETS

APPROVED FOR PUBLICATION

STATE DESIGN ENGINEER — DATE 7/5/08

Washington State Department of Transportation

DRAWN BY: BILL BERENS

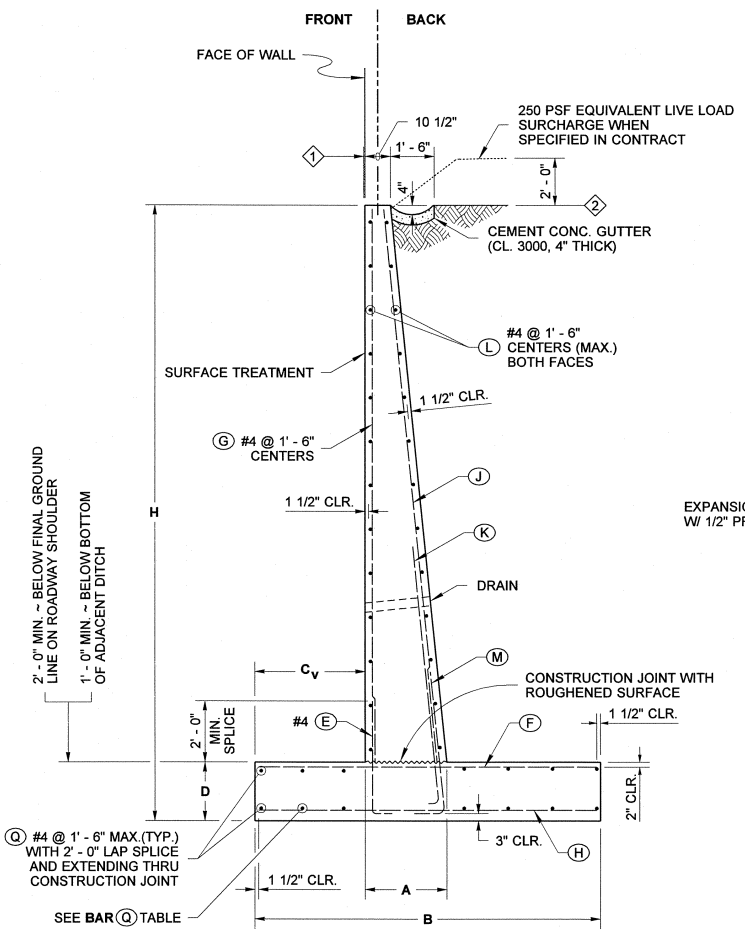

TYPICAL SECTION

BAR Q #4		
LOCATION	WALL HEIGHT (H)	QTY.
TOP OF FOOTING	≤ 16'	5
	16' ≤ 23'	7
	23' ≤ 28'	9
	29' ≤ 35'	11
BOTTOM OF FOOTING	≤ 16'	5
	16' ≤ 23'	7
	23' ≤ 28'	9
	29' ≤ 35'	11

1. OFFSET ~ SET TOP OF WALL BACK:
   H ≤ 20' ..... OFFSET = 1/2"
   H ≥ 20' ..... OFFSET (inches) = $\frac{H(ft)}{8} - 2$

2. WHEN THE CONTRACT SPECIFIES CABLE FENCE, BACKFILL AND THE CEMENT CONCRETE GUTTER SHALL BE PLACED 6" MIN. FROM THE TOP OF THE WALL

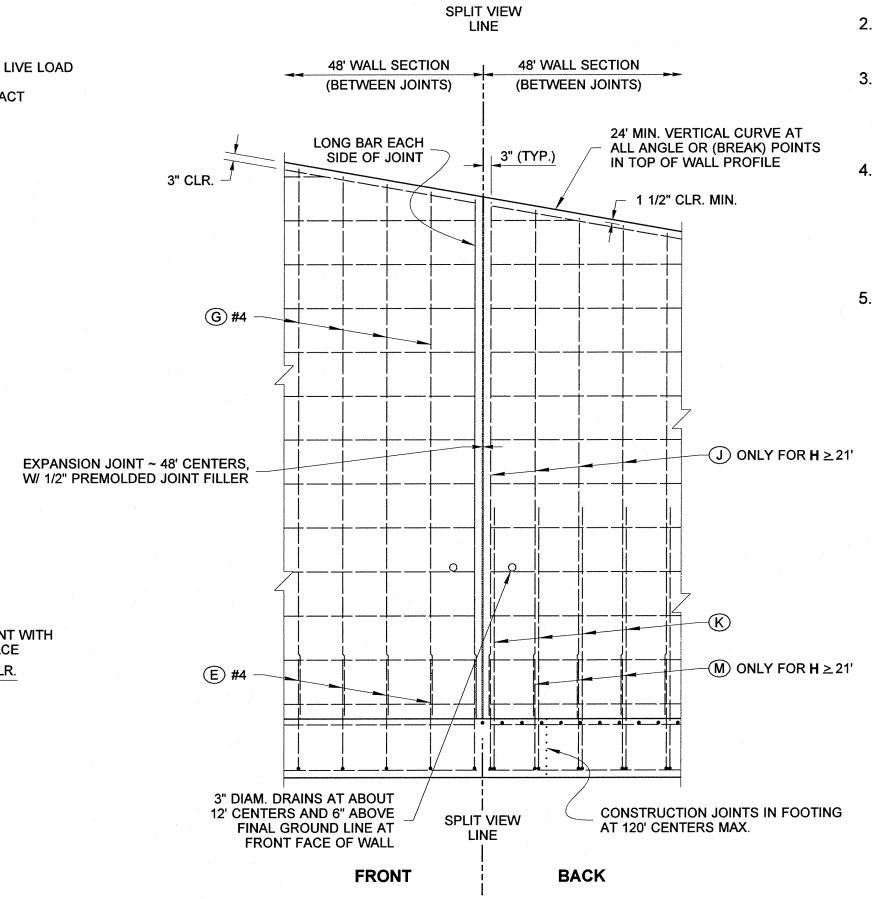

SPLIT ELEVATION VIEW
(SHOWING SEPARATE REBAR LAYERS)

NOTES

1. All concrete shall be Class 4000, except as noted.
2. For backfill requirements, see Standard Plan D-4.
3. Concrete in the 48 foot wall sections shall be placed separately between expansion joints with a minimum 24 hour period before placing concrete in the adjacent section.
4. This wall has been designed in accordance with the requirements of the AASHTO LRFD Bridge Design Specifications 4th Edition 2007 and interims through 2008. The seismic design of these walls has been completed using an effective PGA of 0.20 g.
5. If Traffic Barriers are required, See Standard Plans D-15.10, D-15.20 and D-15.30.

VERTICAL FACE WALL DESIGN WITH A 250 PSF SURCHARGE OR TRAFFIC BARRIER

REINFORCED CONCRETE RETAINING WALL TYPE 7
STANDARD PLAN D-10.40-01

SHEET 1 OF 2 SHEETS

APPROVED FOR PUBLICATION

STATE DESIGN ENGINEER — DATE 12/4/08

Washington State Department of Transportation

WALL HT H	DIMENSIONS				FOOTING REINFORCEMENT																		STEM REINFORCEMENT				MATERIAL QUANTITY		MAXIMUM SOIL PRESSURE (PSF)			
					BAR (E) #4		BAR (F)			BAR (H)			BAR (K)					BAR (M)					BAR (J)			(G) #4					
	B	C_V	D	A	LENGTH	h	SIZE	SPA.	LENGTH	SIZE	SPA.	LENGTH	SIZE	SPA.	LENGTH	h	b	SIZE	SPA.	LENGTH	h	b	SIZE	SPA.	LENGTH	LENGTH	CONC. CY / LF	STEEL LBS / LF	SERVICE	STRENGTH	EXTREME EVENT 1	EXTREME EVENT 2
5'	6' - 6"	2' - 0"	1' - 0"	1' - 4"	3' - 4"	2' - 9"	#4	1' - 0"	6' - 3"	#4	1' - 6"	6' - 3"	#4	1' - 6"	5' - 2"	4' - 7 1/2"	8"	N/A	N/A	N/A	N/A	N/A	N/A	N/A	N/A	4' - 4"	0.40	25.7	915	1260	1108	1623
6'	6' - 6"	2' - 0"	1' - 0"	1' - 5 1/2"	3' - 4"	2' - 9"	#4	1' - 0"	6' - 3"	#4	1' - 6"	6' - 3"	#4	1' - 6"	6' - 2"	5' - 7 1/2"	8"	N/A	N/A	N/A	N/A	N/A	N/A	N/A	N/A	5' - 4"	0.45	28.2	992	1350	1272	1850
7'	6' - 6"	2' - 3"	1' - 0"	1' - 6 1/2"	3' - 4"	2' - 9"	#4	1' - 0"	6' - 3"	#4	1' - 6"	6' - 3"	#4	1' - 6"	7' - 2 1/2"	6' - 7 1/2"	8"	N/A	N/A	N/A	N/A	N/A	N/A	N/A	N/A	6' - 4"	0.51	29.3	1046	1443	1384	2049
8'	6' - 9"	2' - 3"	1' - 0"	1' - 7 1/2"	3' - 4"	2' - 9"	#4	1' - 0"	6' - 6"	#4	1' - 6"	6' - 6"	#4	1' - 0"	8' - 2 1/2"	7' - 7 1/2"	8"	N/A	N/A	N/A	N/A	N/A	N/A	N/A	N/A	7' - 4"	0.58	33.8	1176	1631	1572	2217
9'	7' - 0"	2' - 3"	1' - 0"	1' - 9"	3' - 4"	2' - 9"	#4	1' - 0"	6' - 9"	#4	1' - 0"	6' - 9"	#4	1' - 0"	9' - 2 1/2"	8' - 7 1/2"	8"	N/A	N/A	N/A	N/A	N/A	N/A	N/A	N/A	8' - 4"	0.65	39.6	1318	1836	1781	2402
10'	7' - 3"	2' - 3"	1' - 0"	1' - 10"	3' - 4"	2' - 9"	#4	10"	7' - 0"	#4	1' - 0"	7' - 0"	#4	1' - 0"	10' - 2 1/2"	9' - 7 1/2"	8"	N/A	N/A	N/A	N/A	N/A	N/A	N/A	N/A	9' - 4"	0.72	43.6	1471	2060	2011	2604
11'	7' - 6"	2' - 3"	1' - 0"	1' - 11 1/2"	3' - 4"	2' - 9"	#4	9"	7' - 3"	#4	1' - 0"	7' - 3"	#4	10"	11' - 2 1/2"	10' - 8"	8"	N/A	N/A	N/A	N/A	N/A	N/A	N/A	N/A	10' - 4"	0.80	48.8	1636	2303	2264	2822
12'	7' - 9"	2' - 6"	1' - 0"	2' - 0 1/2"	3' - 4"	2' - 9"	#4	9"	7' - 6"	#4	10"	7' - 6"	#4	9"	12' - 2 1/2"	11' - 8"	8"	N/A	N/A	N/A	N/A	N/A	N/A	N/A	N/A	11' - 4"	0.88	53.0	1733	2455	2400	2958
13'	8' - 0"	2' - 6"	1' - 0"	2' - 1 1/2"	3' - 4"	2' - 9"	#4	8"	7' - 9"	#4	10"	7' - 9"	#4	8"	13' - 2 1/2"	12' - 8"	8"	N/A	N/A	N/A	N/A	N/A	N/A	N/A	N/A	12' - 4"	0.96	59.7	1915	2728	2685	3202
14'	8' - 3"	2' - 6"	1' - 0"	2' - 3"	3' - 4"	2' - 9"	#4	7"	8' - 0"	#4	8"	8' - 0"	#4	7"	14' - 2 1/2"	13' - 8"	8"	N/A	N/A	N/A	N/A	N/A	N/A	N/A	N/A	13' - 4"	1.05	65.9	2109	3022	2995	3462
15'	8' - 9"	2' - 6"	1' - 0"	2' - 4"	3' - 4"	2' - 9"	#5	8"	8' - 6"	#4	8"	8' - 6"	#5	10"	15' - 4"	14' - 8"	10"	N/A	N/A	N/A	N/A	N/A	N/A	N/A	N/A	14' - 4"	1.16	77.5	2277	3261	3287	3570
16'	9' - 3"	2' - 9"	1' - 3"	2' - 5"	3' - 7"	3' - 0"	#5	8"	9' - 0"	#4	8"	9' - 0"	#5	10"	16' - 4"	15' - 8"	10"	N/A	N/A	N/A	N/A	N/A	N/A	N/A	N/A	15' - 1"	1.33	82.0	2377	3403	3466	3628
17'	9' - 9"	3' - 0"	1' - 3"	2' - 6 1/2"	3' - 7"	3' - 0"	#5	8"	9' - 6"	#4	8"	9' - 6"	#5	8"	17' - 4"	16' - 8"	10"	N/A	N/A	N/A	N/A	N/A	N/A	N/A	N/A	16' - 1"	1.44	93.3	2453	3514	3585	3658
18'	10' - 3"	3' - 3"	1' - 3"	2' - 7 1/2"	3' - 7"	3' - 0"	#5	7"	10' - 0"	#5	10"	10' - 0"	#5	8"	18' - 4"	17' - 8"	10"	N/A	N/A	N/A	N/A	N/A	N/A	N/A	N/A	17' - 1"	1.56	102.9	2530	3625	3705	3700
19'	10' - 6"	3' - 6"	1' - 3"	2' - 8 1/2"	3' - 7"	3' - 0"	#6	10"	10' - 3"	#5	8"	10' - 3"	#6	10"	19' - 5 1/2"	18' - 8 1/2"	1' - 0"	N/A	N/A	N/A	N/A	N/A	N/A	N/A	N/A	18' - 1"	1.66	115.4	2642	3809	3864	3859
20'	11' - 0"	3' - 6"	1' - 3"	2' - 10"	3' - 7"	3' - 0"	#6	7"	10' - 9"	#5	7"	10' - 9"	#6	9"	20' - 5 1/2"	19' - 8 1/2"	1' - 0"	N/A	N/A	N/A	N/A	N/A	N/A	N/A	N/A	19' - 1"	1.79	132.9	2808	4043	4169	4012
21'	11' - 6"	3' - 9"	1' - 3"	2' - 11"	3' - 7"	3' - 0"	#6	7"	11' - 3"	#5	6"	11' - 3"	#5	8"	4' - 8 1/2"	4' - 1"	10"	#5	8"	3' - 10 1/2"	3' - 2"	10"	#5	8"	20' - 3 1/2"	20' - 1"	1.92	148.7	2883	4152	4288	4067
22'	12' - 0"	4' - 0"	1' - 6"	3' - 0"	3' - 10"	3' - 3"	#6	7"	11' - 9"	#5	7"	11' - 9"	#5	8"	6' - 5"	5' - 9"	10"	#5	8"	4' - 1 1/2"	3' - 5"	10"	#5	8"	21' - 0 1/2"	20' - 10"	2.13	152.3	2985	4296	4481	4169
23'	12' - 9"	4' - 3"	1' - 6"	3' - 1"	3' - 10"	3' - 3"	#6	6"	12' - 6"	#5	6"	12' - 6"	#5	8"	8' - 0"	7' - 4 1/2"	10"	#5	8"	4' - 1 1/2"	3' - 5"	10"	#5	8"	22' - 0 1/2"	21' - 10"	2.28	170.8	3026	4335	4561	4151
24'	13' - 0"	4' - 3"	1' - 9"	3' - 2"	4' - 1"	3' - 6"	#6	6"	12' - 9"	#5	6"	12' - 9"	#5	8"	9' - 7"	8' - 11"	10"	#5	8"	4' - 4 1/2"	3' - 8"	10"	#5	8"	22' - 9 1/2"	22' - 7"	2.50	178.0	3252	4672	4990	4448
25'	13' - 6"	4' - 6"	1' - 9"	3' - 3 1/2"	4' - 1"	3' - 6"	#6	6'	13' - 3"	#6	8"	13' - 3"	#5	8"	11' - 1 1/2"	10' - 5 1/2"	10"	#5	8"	4' - 4 1/2"	3' - 8"	10"	#5	8"	23' - 9 1/2"	23' - 7"	2.65	190.1	3328	4782	5112	4520
26'	14' - 3"	4' - 9"	2' - 0"	3' - 4"	4' - 4"	3' - 9"	#7	7"	14' - 0"	#6	7"	14' - 0"	#5	8"	12' - 7"	11' - 11 1/2"	10"	#5	8"	4' - 7 1/2"	3' - 11"	10"	#5	8"	24' - 6 1/2"	24' - 4"	2.93	212.7	3395	4855	5268	4562
27'	14' - 9"	5' - 0"	2' - 0"	3' - 5 1/2"	4' - 4"	3' - 9"	#7	7"	14' - 6"	#6	7"	14' - 6"	#5	8"	14' - 0 1/2"	13' - 4 1/2"	10"	#5	8"	4' - 7 1/2"	3' - 11"	10"	#5	8"	25' - 6 1/2"	25' - 4"	3.09	221.6	3472	4966	5393	4642
28'	15' - 3"	5' - 3"	2' - 3"	3' - 6 1/2"	4' - 7"	4' - 0"	#7	6"	15' - 0"	#6	7"	15' - 0"	#6	1' - 0"	16' - 4"	15' - 6 1/2"	1' - 0"	#6	1' - 0"	5' - 5 1/2"	4' - 7"	1' - 0"	#6	1' - 0"	26' - 4"	26' - 1"	3.36	238.4	3576	5112	5600	4765
29'	16' - 0"	5' - 6"	2' - 3"	3' - 7 1/2"	4' - 7"	4' - 0"	#7	6"	15' - 9"	#6	6"	15' - 9"	#6	1' - 0"	17' - 8 1/2"	16' - 11"	1' - 0"	#6	1' - 0"	5' - 5 1/2"	4' - 7"	1' - 0"	#6	1' - 0"	27' - 4"	27' - 1"	3.55	255.7	3623	5162	5686	4789
30'	16' - 6"	5' - 9"	2' - 6"	3' - 8 1/2"	4' - 10"	4' - 3"	#7	6"	16' - 3"	#6	6"	16' - 3"	#6	1' - 0"	19' - 1"	18' - 3 1/2"	1' - 0"	#6	1' - 0"	5' - 8 1/2"	4' - 10"	1' - 0"	#6	1' - 0"	28' - 1"	27' - 10"	3.85	263.4	3727	5308	5897	4916
31'	17' - 0"	6' - 0"	2' - 6"	3' - 9 1/2"	4' - 10"	4' - 3"	#7	6"	16' - 9"	#6	6"	16' - 9"	#6	1' - 0"	20' - 5"	19' - 7 1/2"	1' - 0"	#6	1' - 0"	5' - 8 1/2"	4' - 10"	1' - 0"	#6	1' - 0"	29' - 1"	28' - 10"	4.03	273.8	3805	5421	6027	5005
32'	17' - 6"	6' - 3"	2' - 9"	3' - 10 1/2"	5' - 1"	4' - 6"	#7	6"	17' - 3"	#7	7"	17' - 3"	#6	1' - 0"	21' - 8 1/2"	20' - 11 1/2"	1' - 0"	#6	1' - 0"	5' - 11 1/2"	5' - 1"	1' - 0"	#6	1' - 0"	29' - 10"	29' - 7"	4.35	291.4	3910	5568	6242	5134
33'	18' - 3"	6' - 6"	3' - 0"	3' - 11 1/2"	5' - 4"	4' - 9"	#8	7"	18' - 0"	#7	7"	18' - 0"	#6	10"	21' - 2"	20' - 5"	1' - 0"	#6	10"	6' - 2 1/2"	5' - 4"	1' - 0"	#6	10"	30' - 7"	30' - 4"	4.70	327.3	3989	5660	6421	5215
34'	18' - 9"	6' - 9"	3' - 0"	4' - 0 1/2"	5' - 4"	4' - 9"	#8	7"	18' - 6"	#7	7"	18' - 6"	#6	8"	19' - 10 1/2"	19' - 1 1/2"	1' - 0"	#6	8"	6' - 2 1/2"	5' - 4"	1' - 0"	#6	8"	31' - 7"	31' - 4"	4.90	358.8	4067	5774	6554	5307
35'	19' - 3"	7' - 0"	3' - 3"	4' - 1 1/2"	5' - 7"	5' - 0"	#8	7"	19' - 0"	#7	7"	19' - 0"	#7	8"	21' - 9 1/2"	20' - 10 1/2"	1' - 2"	#7	8"	7' - 3"	6' - 3"	1' - 2"	#7	8"	32' - 4"	32' - 1"	5.25	423.0	4173	5922	6776	5440

REINFORCEMENT NOTES

(1) IF TRAFFIC BARRIER IS USED, ADD 0.100 CY/LF OF CONCRETE CLASS 4000 FOR BARRIER ALTERNATE 1. ADD 0.123 CY/LF OF CONCRETE CLASS 4000 FOR BARRIER ALTERNATE 2. SEE STANDARD PLAN D-15.10

(2) ADD 28 LB/LF OF REINFORCING STEEL FOR BARRIER ALTERNATE 1 OR 19 LB/LF OF REINFORCING STEEL FOR BARRIER ALTERNATE 2. SEE STANDARD PLAN D-15.10

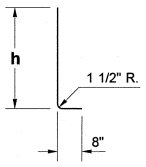

BAR (E)
@ 1' - 6" CENTERS

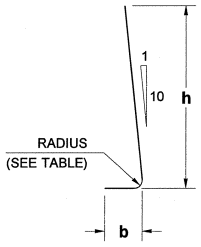

BAR	RADIUS
#4	1 1/2"
#5	1 7/8"
#6	2 1/4"
#7	2 5/8"
#8	3"
#9	4 3/4"
#10	5 3/8"
#11	6"

BARS (K) AND (M)

BAR	MIN. SPLICE
#4	2' - 0"
#5	2' - 0"
#6	2' - 0"
#7	2' - 6"
#8	3' - 3"
#9	4' - 2"
#10	5' - 3"

VERTICAL FACE WALL DESIGN WITH A 250 PSF SURCHARGE OR TRAFFIC BARRIER

BIJAN KHALEGHI — STATE OF WASHINGTON — 27695 — STRUCTURAL ENGINEER — PROFESSIONAL ENGINEER

11/25/08

REINFORCED CONCRETE RETAINING WALL TYPE 7
STANDARD PLAN D-10.40-01

SHEET 2 OF 2 SHEETS

APPROVED FOR PUBLICATION

STATE DESIGN ENGINEER — DATE 12/2/08

Washington State Department of Transportation

DRAWN BY: BILL BERENS

DRAWN BY: BILL BERENS

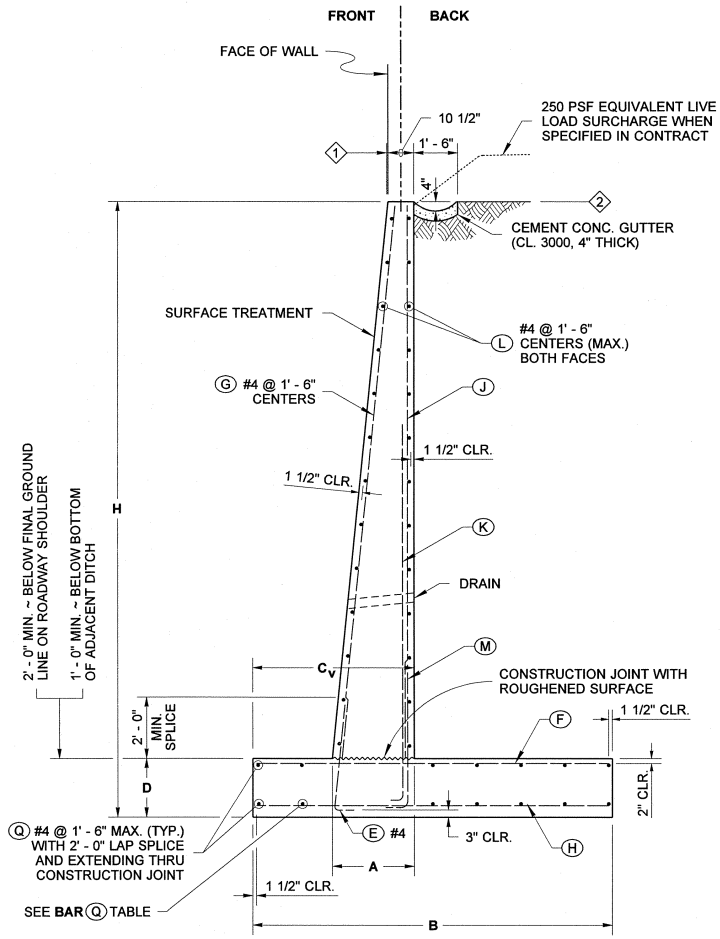

BAR Q #4		
LOCATION	WALL HEIGHT (H)	QTY.
TOP OF FOOTING	≤ 12'	5
	13' ≤ 16'	6
	17' ≤ 22'	7
	23' ≤ 28'	9
	29' ≤ 35'	11
BOTTOM OF FOOTING	≤ 12'	5
	13' ≤ 16'	6
	17' ≤ 22'	7
	23' ≤ 28'	9
	29' ≤ 35'	11

TYPICAL SECTION

1. OFFSET ~ SET TOP OF WALL BACK:
   H ≤ 20' ..... OFFSET = 1/2"
   H ≥ 20' ..... OFFSET (inches) = $\frac{H(ft)}{8}$ - 2

2. WHEN THE CONTRACT SPECIFIES CABLE FENCE, BACKFILL AND THE CEMENT CONCRETE GUTTER SHALL BE PLACED 6" MIN. FROM THE TOP OF THE WALL

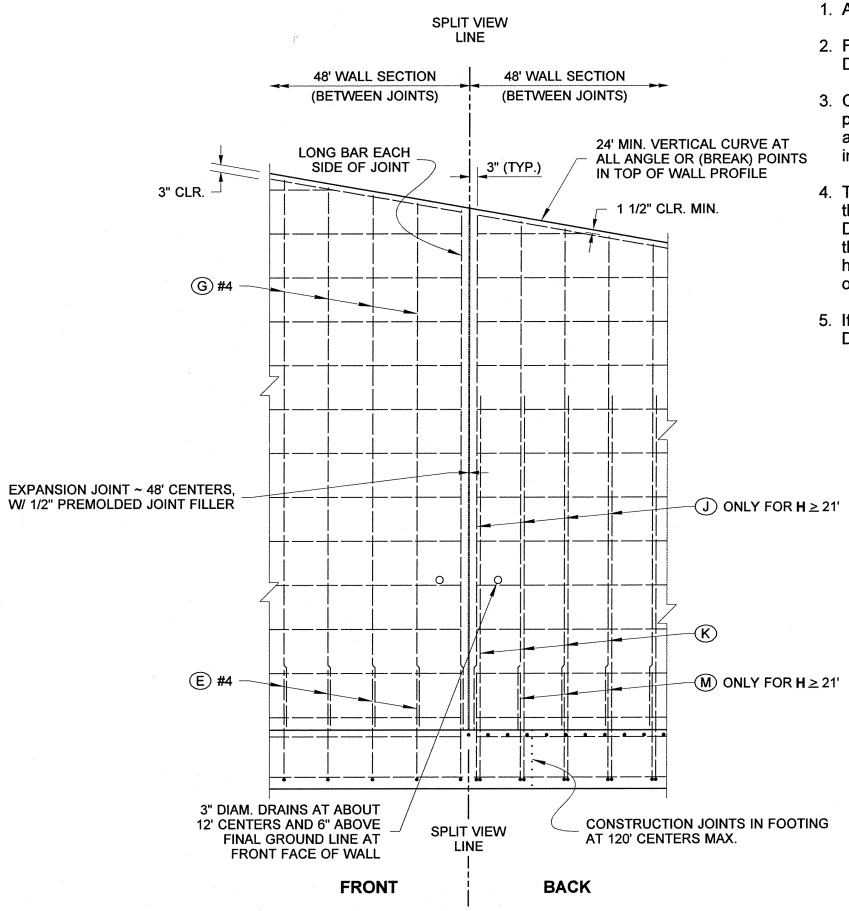

SPLIT ELEVATION VIEW
(SHOWING SEPARATE REBAR LAYERS)

NOTES

1. All concrete shall be Class 4000, except as noted.
2. For backfill requirements, see Standard Plan D-4.
3. Concrete in the 48 foot wall sections shall be placed separately between expansion joints with a minimum 24 hour period before placing concrete in the adjacent section.
4. This wall has been designed in accordance with the requirements of the AASHTO LRFD Bridge Design Specifications 4th Edition 2007 and interims through 2008. The seismic design of these walls has been completed using an effective PGA of 0.20 g.
5. If Traffic Barriers are required, See Standard Plans D-15.10, D-15.20 and D-15.30.

SLOPING FACE WALL DESIGN WITH A 250 PSF SURCHARGE OR TRAFFIC BARRIER

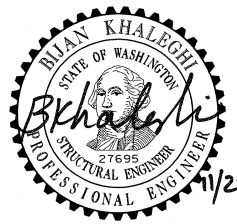

REINFORCED CONCRETE RETAINING WALL TYPE 8
STANDARD PLAN D-10.45-01

SHEET 1 OF 2 SHEETS

APPROVED FOR PUBLICATION

STATE DESIGN ENGINEER — DATE 12/2/08

Washington State Department of Transportation

WALL HT H	DIMENSIONS				FOOTING REINFORCEMENT																		STEM REINFORCEMENT				MATERIAL QUANTITY		MAXIMUM SOIL PRESSURE (PSF)			
					BAR (E) #4		BAR (F)			BAR (H)			BAR (K)					BAR (M)					BAR (J)			(G) #4						
	B	C_V	D	A	LENGTH	h	SIZE	SPA.	LENGTH	SIZE	SPA.	LENGTH	SIZE	SPA.	LENGTH	h	b	SIZE	SPA.	LENGTH	h	b	SIZE	SPA.	LENGTH	LENGTH	CONC. CY / LF	STEEL LBS / LF	SERVICE	STRENGTH	EXTREME EVENT 1	EXTREME EVENT 2
5'	6' - 9"	3' - 0"	1' - 0"	1' - 4"	2' - 7"	2' - 0"	#4	1' - 6"	6' - 6"	#4	1' - 6"	6' - 6"	#4	1' - 6"	5' - 2"	4' - 7"	8"	N/A	N/A	N/A	N/A	N/A	N/A	N/A	N/A	3' - 10 1/2"	0.41	23.8	900	1244	1140	1620
6'	6' - 9"	3' - 0"	1' - 0"	1' - 5 1/2"	2' - 7"	2' - 0"	#4	1' - 6"	6' - 6"	#4	1' - 6"	6' - 6"	#4	1' - 6"	6' - 2"	5' - 7"	8"	N/A	N/A	N/A	N/A	N/A	N/A	N/A	N/A	4' - 10 1/2"	0.46	26.3	987	1351	1339	1878
7'	7' - 0"	3' - 3"	1' - 0"	1' - 6 1/2"	2' - 7"	2' - 0"	#4	1' - 0"	6' - 9"	#4	1' - 6"	6' - 9"	#4	1' - 6"	7' - 2"	6' - 7"	8"	N/A	N/A	N/A	N/A	N/A	N/A	N/A	N/A	5' - 10 1/2"	0.53	30.5	1076	1476	1488	2006
8'	7' - 0"	3' - 3"	1' - 0"	1' - 7 1/2"	2' - 7"	2' - 0"	#4	1' - 0"	6' - 9"	#4	1' - 6"	6' - 9"	#4	1' - 0"	8' - 2"	7' - 7"	8"	N/A	N/A	N/A	N/A	N/A	N/A	N/A	N/A	6' - 10 1/2"	0.58	34.7	1225	1687	1741	2332
9'	7' - 3"	3' - 6"	1' - 0"	1' - 9"	2' - 7"	2' - 0"	#4	1' - 0"	7' - 0"	#4	1' - 6"	7' - 0"	#4	1' - 0"	9' - 2"	8' - 7"	8"	N/A	N/A	N/A	N/A	N/A	N/A	N/A	N/A	7' - 10 1/2"	0.65	37.7	1325	1833	1911	2486
10'	7' - 6"	3' - 6"	1' - 0"	1' - 10"	2' - 7"	2' - 0"	#4	8"	7' - 3"	#4	1' - 6"	7' - 3"	#4	1' - 0"	10' - 2"	9' - 7"	8"	N/A	N/A	N/A	N/A	N/A	N/A	N/A	N/A	8' - 10 1/2"	0.73	43.0	1493	2075	2200	2744
11'	7' - 9"	3' - 6"	1' - 0"	1' - 11 1/2"	2' - 7"	2' - 0"	#4	6"	7' - 6"	#4	1' - 6"	7' - 6"	#4	10"	11' - 2"	10' - 7"	8"	N/A	N/A	N/A	N/A	N/A	N/A	N/A	N/A	9' - 10 1/2"	0.81	50.1	1677	2341	2526	3027
12'	8' - 0"	3' - 9"	1' - 0"	2' - 0 1/2"	2' - 7"	2' - 0"	#5	8"	7' - 9"	#4	1' - 6"	7' - 9"	#4	9"	12' - 2"	11' - 7"	8"	N/A	N/A	N/A	N/A	N/A	N/A	N/A	N/A	10' - 11"	0.89	55.1	1797	2522	2739	3221
13'	8' - 3"	3' - 9"	1' - 0"	2' - 1 1/2"	2' - 7"	2' - 0"	#5	7"	8' - 0"	#4	1' - 6"	8' - 0"	#4	8"	13' - 2"	12' - 7"	8"	N/A	N/A	N/A	N/A	N/A	N/A	N/A	N/A	11' - 11"	0.97	62.7	2004	2826	3126	3545
14'	8' - 9"	3' - 9"	1' - 0"	2' - 3"	2' - 7"	2' - 0"	#6	7"	8' - 6"	#4	1' - 6"	8' - 6"	#4	7"	14' - 2"	13' - 7"	8"	N/A	N/A	N/A	N/A	N/A	N/A	N/A	N/A	12' - 11"	1.07	75.0	2190	3089	3470	3706
15'	9' - 0"	3' - 9"	1' - 0"	2' - 4"	2' - 7"	2' - 0"	#6	6"	8' - 9"	#4	1' - 6"	8' - 9"	#4	6"	15' - 2"	14' - 7"	8"	N/A	N/A	N/A	N/A	N/A	N/A	N/A	N/A	13' - 11"	1.17	83.3	2420	3430	3928	4064
16'	9' - 6"	4' - 0"	1' - 3"	2' - 5"	2' - 10"	2' - 3"	#6	6"	9' - 3"	#4	1' - 6"	9' - 3"	#5	10"	16' - 3"	15' - 7"	10"	N/A	N/A	N/A	N/A	N/A	N/A	N/A	N/A	14' - 8"	1.34	91.3	2532	3588	4115	4129
17'	10' - 0"	4' - 3"	1' - 3"	2' - 6 1/2"	2' - 10"	2' - 3"	#6	6"	9' - 9"	#4	1' - 6"	9' - 9"	#5	9"	17' - 3"	16' - 7"	10"	N/A	N/A	N/A	N/A	N/A	N/A	N/A	N/A	15' - 8"	1.45	98.7	2630	3730	4284	4194
18'	10' - 6"	4' - 6"	1' - 3"	2' - 7 1/2"	2' - 10"	2' - 3"	#7	7"	10' - 3"	#4	1' - 0"	10' - 3"	#5	8"	18' - 3"	17' - 7"	10"	N/A	N/A	N/A	N/A	N/A	N/A	N/A	N/A	16' - 8"	1.57	115.7	2728	3871	4453	4270
19'	11' - 3"	5' - 0"	1' - 6"	2' - 8 1/2"	3' - 1"	2' - 6"	#7	7"	11' - 0"	#4	1' - 0"	11' - 0"	#5	7"	19' - 3"	18' - 7"	10"	N/A	N/A	N/A	N/A	N/A	N/A	N/A	N/A	17' - 5"	1.78	121.1	2715	3838	4366	4131
20'	11' - 6"	5' - 0"	1' - 6"	2' - 9 1/2"	3' - 1"	2' - 6"	#7	7"	11' - 3"	#4	1' - 0"	11' - 3"	#5	7"	20' - 3"	19' - 7"	10"	N/A	N/A	N/A	N/A	N/A	N/A	N/A	N/A	18' - 5"	1.89	130.2	2940	4172	4815	4466
21'	12' - 3"	5' - 6"	1' - 9"	2' - 10 1/2"	3' - 4"	2' - 9"	#7	6"	12' - 0"	#4	9"	12' - 0"	#5	1' - 0"	7' - 9 1/2"	7' - 1 1/2"	10"	#5	1' - 0"	4' - 4 1/2"	3' - 7 1/2"	10"	#5	1' - 0"	19' - 7"	19' - 2 1/2"	2.12	141.8	2930	4143	4734	4358
22'	12' - 9"	5' - 9"	1' - 9"	2' - 11 1/2"	3' - 4"	2' - 9"	#7	6"	12' - 6"	#4	9"	12' - 6"	#5	1' - 0"	8' - 11 1/2"	8' - 3 1/2"	10"	#5	1' - 0"	4' - 4 1/2"	3' - 7 1/2"	10"	#5	1' - 0"	20' - 7"	20' - 2 1/2"	2.26	148.6	3028	4284	4905	4466
23'	13' - 3"	6' - 0"	2' - 0"	3' - 0 1/2"	3' - 7"	3' - 0"	#7	6"	13' - 0"	#4	8"	13' - 0"	#5	10"	8' - 7"	7' - 11"	10"	#5	10"	4' - 7 1/2"	3' - 11"	10"	#5	10"	21' - 4"	20' - 11 1/2"	2.50	162.3	3145	4448	5104	4600
24'	13' - 9"	6' - 3"	2' - 0"	3' - 1 1/2"	3' - 7"	3' - 0"	#7	6"	13' - 6"	#4	8"	13' - 6"	#5	10"	9' - 8 1/2"	9' - 0 1/2"	10"	#5	10"	4' - 7 1/2"	3' - 11"	10"	#5	10"	22' - 4"	21' - 11 1/2"	2.65	172.2	3243	4589	5276	4714
25'	14' - 3"	6' - 6"	2' - 3"	3' - 2 1/2"	3' - 10"	3' - 3"	#7	6"	14' - 0"	#4	8"	14' - 0"	#5	9"	10' - 10"	10' - 2"	10"	#5	9"	4' - 10 1/2"	4' - 1 1/2"	10"	#5	9"	23' - 1"	22' - 8 1/2"	2.91	179.4	3360	4753	5476	4854
26'	15' - 0"	6' - 9"	2' - 6"	3' - 3 1/2"	4' - 1"	3' - 6"	#8	7"	14' - 9"	#4	7"	14' - 9"	#5	9"	11' - 0"	10' - 4"	10"	#5	9"	5' - 1 1/2"	4' - 4 1/2"	10"	#5	9"	23' - 10"	23' - 5 1/2"	3.20	200.1	3445	4856	5603	4917
27'	15' - 6"	7' - 0"	2' - 6"	3' - 4 1/2"	4' - 1"	3' - 6"	#8	7"	15' - 3"	#4	7"	15' - 3"	#5	8"	11' - 1 1/2"	10' - 5 1/2"	10"	#5	8"	5' - 1 1/2"	4' - 4 1/2"	10"	#5	8"	24' - 10"	24' - 5 1/2"	3.37	213.7	3544	4996	5776	5039
28'	16' - 0"	7' - 3"	2' - 9"	3' - 5 1/2"	4' - 4"	3' - 9"	#8	7"	15' - 9"	#4	6"	15' - 9"	#5	7"	12' - 1 1/2"	11' - 6"	10"	#5	7"	5' - 4 1/2"	4' - 7 1/2"	10"	#5	7"	25' - 7"	25' - 3"	3.66	234.3	3661	5161	5977	5186
29'	16' - 6"	7' - 6"	2' - 9"	3' - 7"	4' - 4"	3' - 9"	#8	6"	16' - 3"	#4	6"	16' - 3"	#6	1' - 0"	14' - 0"	13' - 2 1/2"	1' - 0"	#6	1' - 0"	5' - 11"	5' - 0 1/2"	1' - 0"	#6	1' - 0"	26' - 7"	26' - 3"	3.84	245.8	3760	5301	6150	5310
30'	17' - 3"	8' - 0"	3' - 0"	3' - 7 1/2"	4' - 7"	4' - 0"	#8	6"	17' - 0"	#4	6"	17' - 0"	#6	1' - 0"	15' - 1"	14' - 4"	1' - 0"	#6	1' - 0"	6' - 2"	5' - 4"	1' - 0"	#6	1' - 0"	27' - 4"	27' - 0"	4.17	255.9	3770	5303	6116	5291
31'	17' - 9"	8' - 3"	3' - 3"	3' - 8 1/2"	4' - 10"	4' - 3"	#8	6"	17' - 6"	#5	8"	17' - 6"	#6	1' - 0"	16' - 1 1/2"	15' - 4"	1' - 0"	#6	1' - 0"	6' - 5"	5' - 7"	1' - 0"	#6	1' - 0"	28' - 1"	27' - 9"	4.49	269.6	3888	5469	6319	5443
32'	18' - 3"	8' - 6"	3' - 3"	3' - 10"	4' - 10"	4' - 3"	#8	6"	18' - 0"	#5	8"	18' - 0"	#6	1' - 0"	17' - 2 1/2"	16' - 5 1/2"	1' - 0"	#6	1' - 0"	6' - 5"	5' - 7"	1' - 0"	#6	1' - 0"	29' - 1"	28' - 9"	4.69	278.2	3986	5609	6491	5571
33'	18' - 9"	8' - 9"	3' - 6"	3' - 10 1/2"	5' - 1"	4' - 6"	#8	6"	18' - 6"	#5	8"	18' - 6"	#6	10"	18' - 3 1/2"	17' - 6 1/2"	1' - 0"	#6	10"	6' - 8"	5' - 10"	1' - 0"	#6	10"	29' - 10"	29' - 6"	5.03	301.9	4105	5774	6694	5725
34'	19' - 3"	9' - 0"	3' - 9"	3' - 11 1/2"	5' - 4"	4' - 9"	#8	6"	19' - 0"	#5	8"	19' - 0"	#6	10"	17' - 9"	17' - 0"	1' - 0"	#6	10"	6' - 11"	6' - 0 1/2"	1' - 0"	#6	10"	30' - 7"	30' - 3"	5.38	308.1	4223	5940	6898	5879
35'	19' - 9"	9' - 3"	4' - 0"	4' - 0 1/2"	5' - 7"	5' - 0"	#9	7"	19' - 6"	#5	7"	19' - 6"	#6	8"	16' - 7"	15' - 9 1/2"	1' - 0"	#6	8"	7' - 2"	6' - 4"	1' - 0"	#6	8"	31' - 4"	31' - 0"	5.74	353.2	4342	6106	7102	6034

REINFORCEMENT NOTES

(1) IF TRAFFIC BARRIER IS USED, ADD 0.110 CY OF CONCRETE CLASS 4000 FOR BARRIER ALTERNATE 1. ADD 0.152 CY/LF OF CONCRETE CLASS 4000 FOR BARRIER ALTERNATE 2. SEE STANDARD PLAN D-15.10

(2) ADD 16 LB/LF OF REINFORCING STEEL FOR BARRIER ALTERNATE 1 OR 23 LB/LF OF REINFORCING STEEL FOR BARRIER ALTERNATE 2. SEE STANDARD PLAN D-15.10

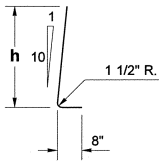

BAR (E)
@ 1' - 6" CENTERS

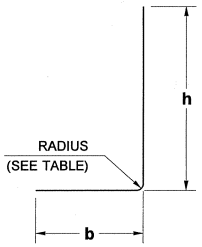

BAR	RADIUS
#4	1 1/2"
#5	1 7/8"
#6	2 1/4"
#7	2 5/8"
#8	3"
#9	4 3/4"
#10	5 3/8"
#11	6"

BARS (K) AND (M)

BAR	MIN. SPLICE
#4	2' - 0"
#5	2' - 0"
#6	2' - 0"
#7	2' - 6"
#8	3' - 3"
#9	4' - 2"
#10	5' - 3"

SLOPING FACE WALL DESIGN WITH A 250 PSF SURCHARGE

BIJAN KHALEGHI STATE OF WASHINGTON 27695 STRUCTURAL ENGINEER PROFESSIONAL ENGINEER 11/25/08

REINFORCED CONCRETE RETAINING WALL TYPE 8 STANDARD PLAN D-10.45-01

SHEET 2 OF 2 SHEETS

APPROVED FOR PUBLICATION

STATE DESIGN ENGINEER — DATE 12/2/08

Washington State Department of Transportation

DRAWN BY: BILL BERENS

DRAWN BY: BILL BERENS

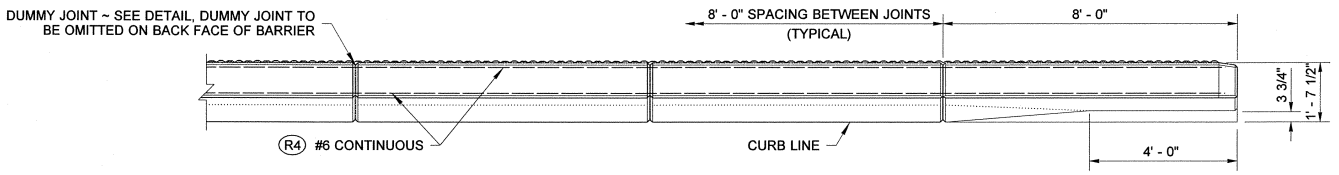

PLAN

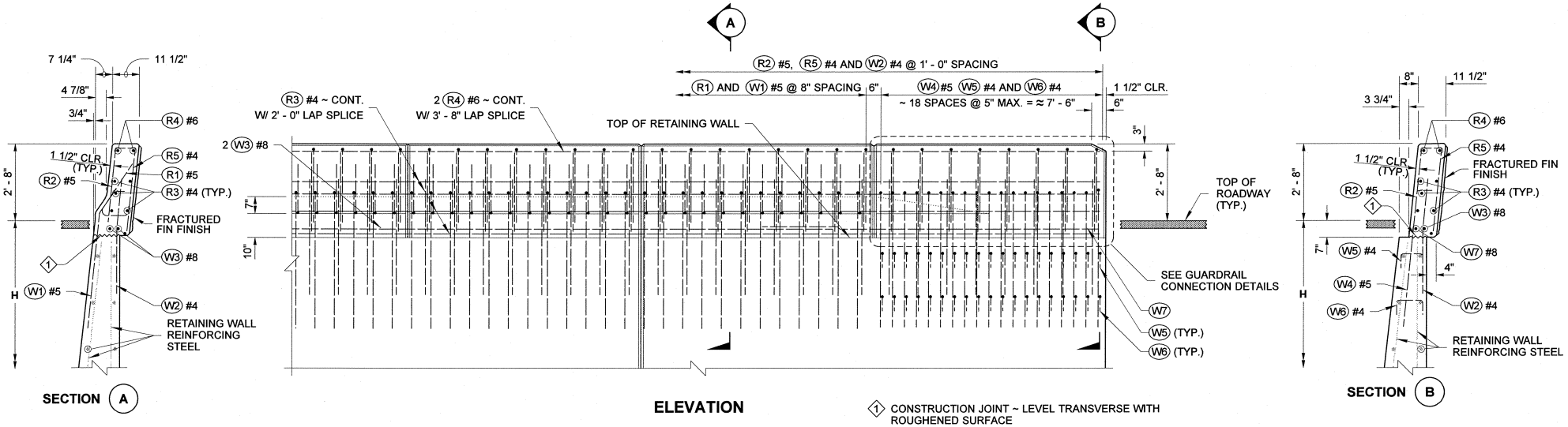

SECTION A

ELEVATION

1 CONSTRUCTION JOINT ~ LEVEL TRANSVERSE WITH ROUGHENED SURFACE

SECTION B

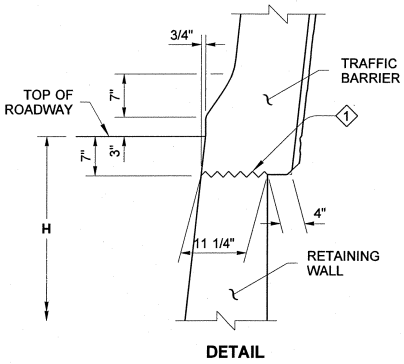

DETAIL

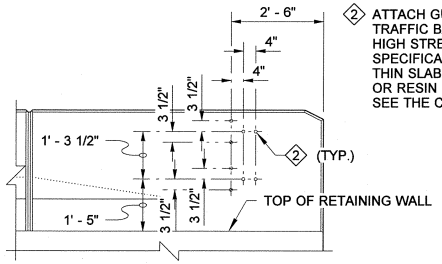

2 ATTACH GUARDRAIL TO CONCRETE TRAFFIC BARRIER WITH 7/8" DIAM. HIGH STRENGTH BOLTS (STANDARD SPECIFICATION 9-06.5(4)) WITH THIN SLAB FERRULE INSERTS OR RESIN BONDED ANCHORS. SEE THE CONTRACT PLANS.

BEAM GUARDRAIL TRANSITION TYPE 20 CONNECTION

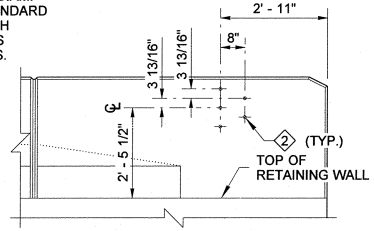

BEAM GUARDRAIL TRANSITION TYPE 21 CONNECTION

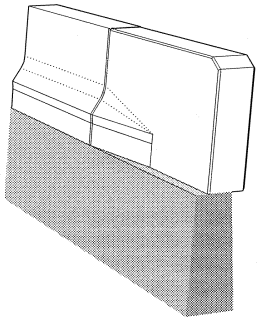

PERSPECTIVE VIEW

F-SHAPE TRAFFIC BARRIER ON RETAINING WALL

BIJAN KHALEGHI STATE OF WASHINGTON 27695 STRUCTURAL ENGINEER PROFESSIONAL ENGINEER 11/25/08

TRAFFIC BARRIER DETAILS FOR REINFORCED CONCRETE RETAINING WALLS

STANDARD PLAN D-15.10-01

SHEET 1 OF 2 SHEETS

APPROVED FOR PUBLICATION

STATE DESIGN ENGINEER — DATE 12/2/08

Washington State Department of Transportation

DRAWN BY: BILL BERENS

REINFORCING STEEL BENDING DIAGRAM

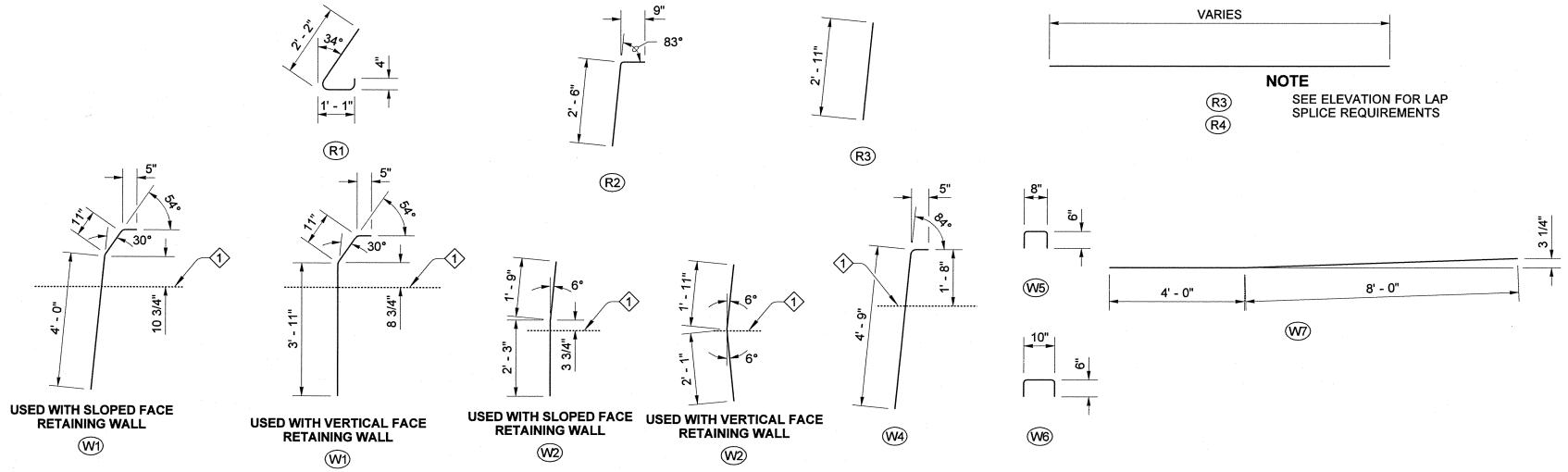

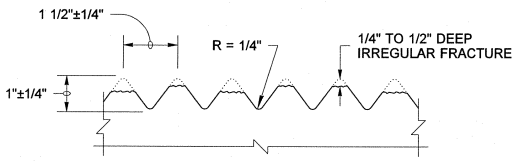

PLAN VIEW

FRACTURED FIN FINISH DETAIL

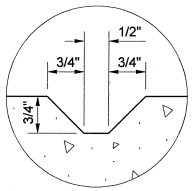

DUMMY JOINT DETAIL

TRAFFIC BARRIER DETAILS FOR REINFORCED CONCRETE RETAINING WALLS
STANDARD PLAN D-15.10-01

SHEET 2 OF 2 SHEETS

APPROVED FOR PUBLICATION

STATE DESIGN ENGINEER — DATE 12/2/08

Washington State Department of Transportation

DRAWN BY: BILL BERENS

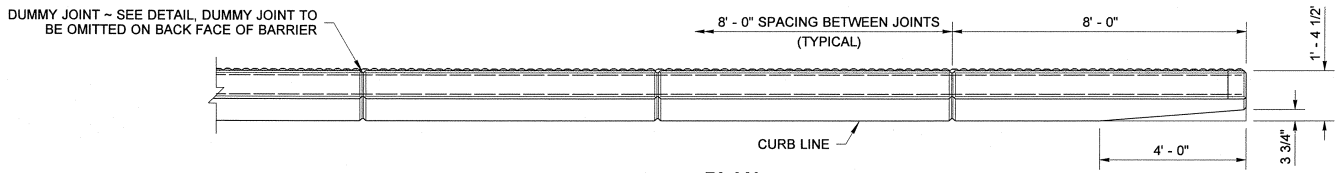

PLAN

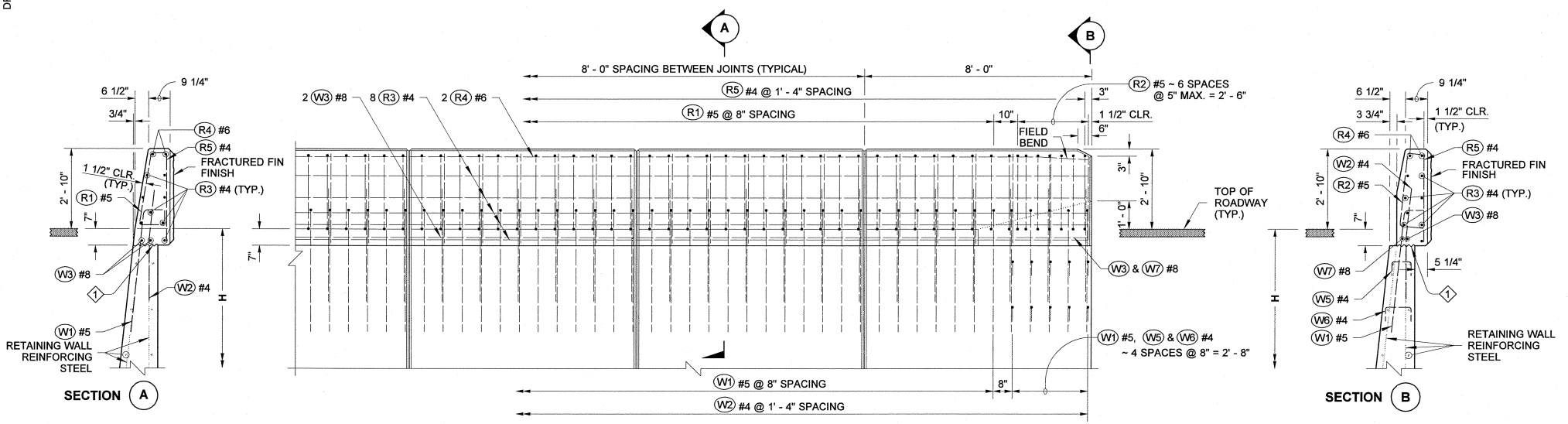

1 CONSTRUCTION JOINT ~ LEVEL TRANSVERSE WITH ROUGHENED SURFACE

ELEVATION

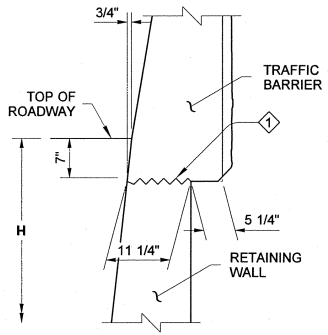

DETAIL

2 ATTACH GUARDRAIL TO CONCRETE TRAFFIC BARRIER WITH 7/8" DIAM. HIGH STRENGTH BOLTS (STANDARD SPECIFICATION 9-06.5(4)) WITH THIN SLAB FERRULE INSERTS OR RESIN BONDED ANCHORS. SEE THE CONTRACT PLANS.

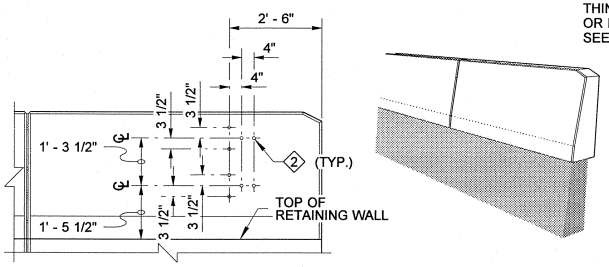

ELEVATION

PERSPECTIVE VIEW

BEAM GUARDRAIL TRANSITION TYPE 20 CONNECTION

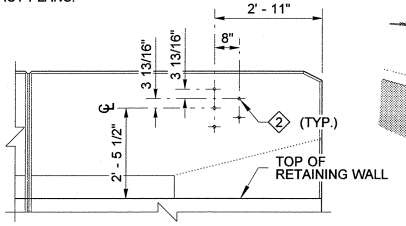

ELEVATION

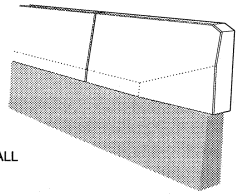

PERSPECTIVE VIEW

BEAM GUARDRAIL TRANSITION TYPE 21 CONNECTION

SINGLE SLOPE TRAFFIC BARRIER ON RETAINING WALL

TRAFFIC BARRIER DETAILS FOR REINFORCED CONCRETE RETAINING WALLS

STANDARD PLAN D-15.20-01

SHEET 1 OF 2 SHEETS

APPROVED FOR PUBLICATION

STATE DESIGN ENGINEER — DATE 1/6/09

Washington State Department of Transportation

DRAWN BY: BILL BERENS

REINFORCING STEEL BENDING DIAGRAM

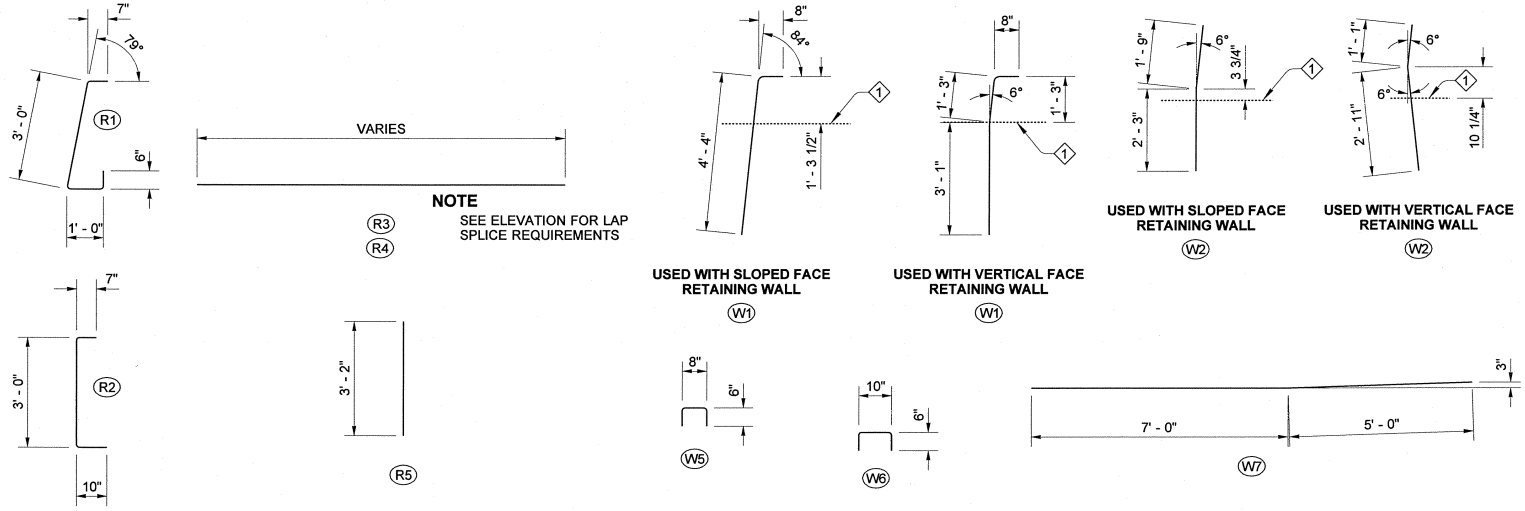

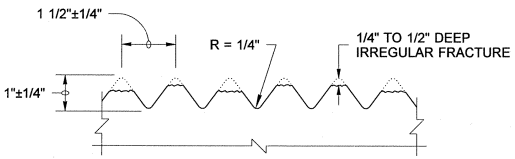

PLAN VIEW

FRACTURED FIN FINISH DETAIL

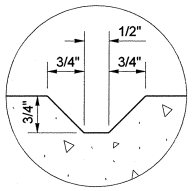

DUMMY JOINT DETAIL

TRAFFIC BARRIER DETAILS FOR REINFORCED CONCRETE RETAINING WALLS
STANDARD PLAN D-15.20-01

SHEET 2 OF 2 SHEETS

APPROVED FOR PUBLICATION

STATE DESIGN ENGINEER — DATE 1/6/09

Washington State Department of Transportation

DRAWN BY: BILL BERENS

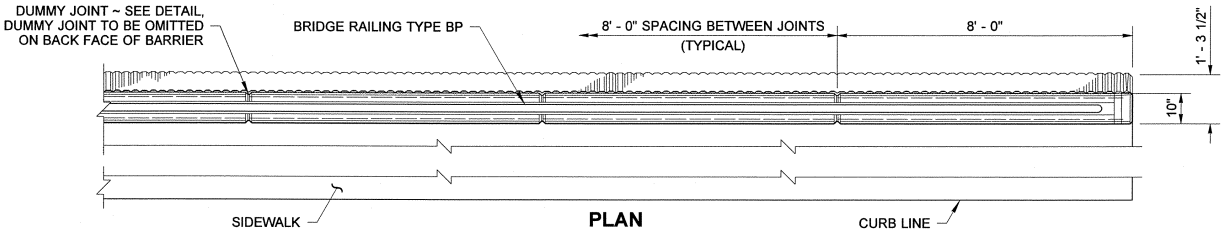

PLAN

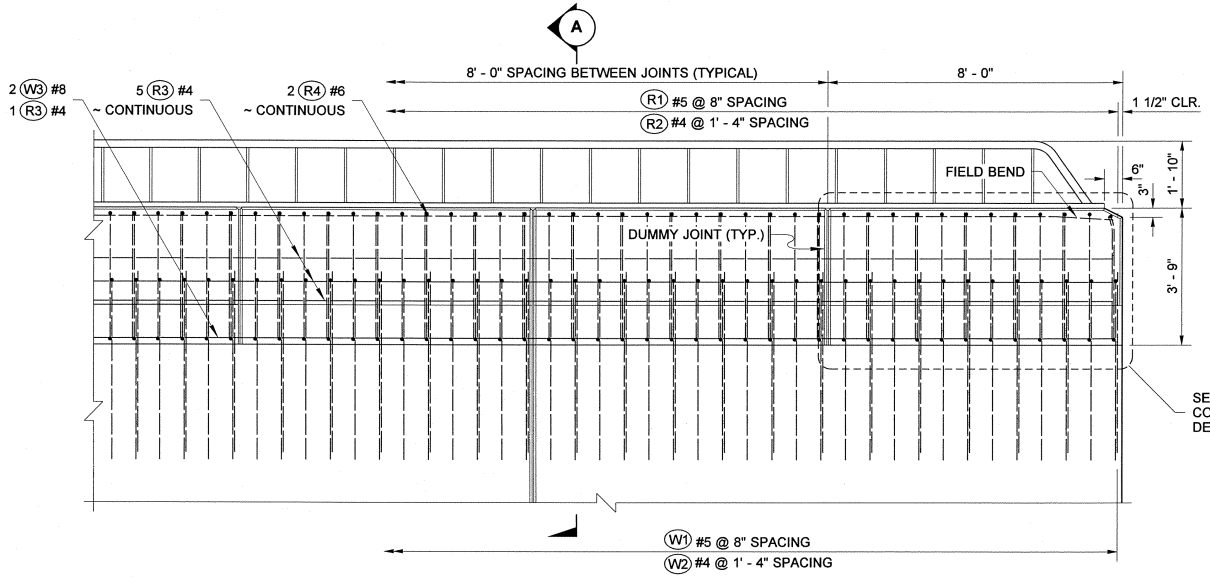

ELEVATION

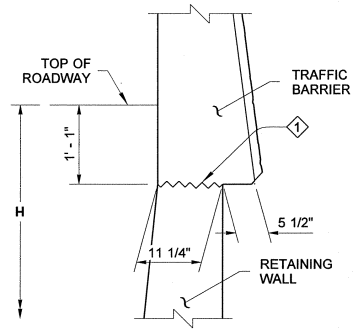

DETAIL

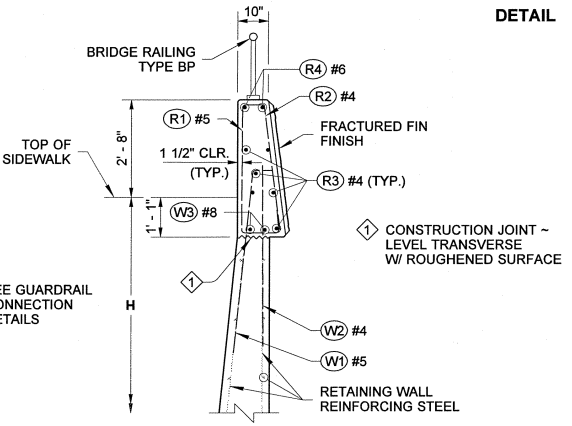

SECTION A

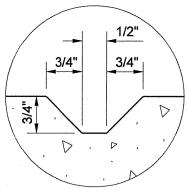

DUMMY JOINT DETAIL

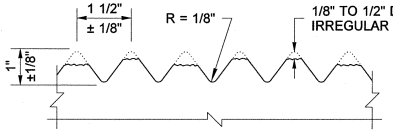

PLAN VIEW

FRACTURED FIN FINISH DETAIL

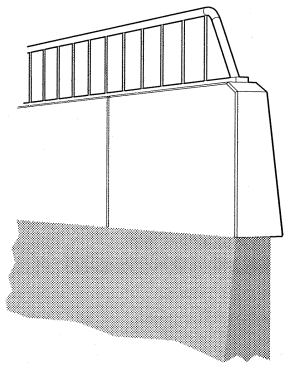

OBLIQUE VIEW

TRAFFIC BARRIER DETAILS FOR REINFORCED CONCRETE RETAINING WALLS

STANDARD PLAN D-15.30-01

SHEET 1 OF 2 SHEETS

APPROVED FOR PUBLICATION

STATE DESIGN ENGINEER — DATE 12/2/08

Washington State Department of Transportation

DRAWN BY: BILL BERENS

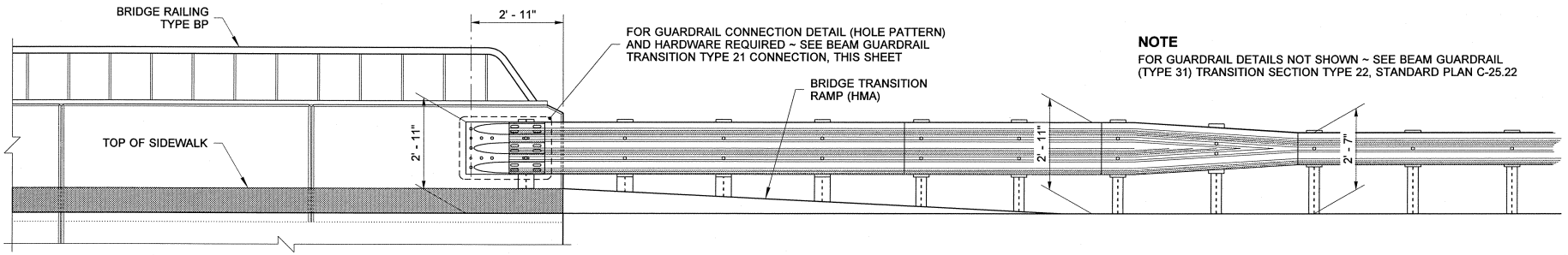

NOTE

FOR GUARDRAIL DETAILS NOT SHOWN ~ SEE BEAM GUARDRAIL (TYPE 31) TRANSITION SECTION TYPE 22, STANDARD PLAN C-25.22

SIDEWALK @ RETAINING WALL

BEAM GUARDRAIL TRANSITION TO BRIDGE END CONNECTION

NOTE

FOR GUARDRAIL DETAILS NOT SHOWN ~ SEE BEAM GUARDRAIL (TYPE 31) TRANSITION SECTION TYPE 20, STANDARD PLAN C-25.18

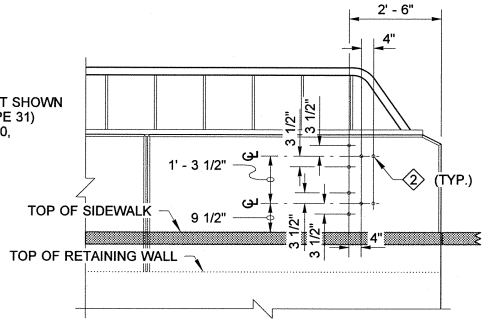

2 ATTACH GUARDRAIL TO CONCRETE TRAFFIC BARRIER WITH 7/8" DIAM. HIGH STRENGTH BOLTS (STANDARD SPECIFICATION 9-06.5(4)) WITH THIN SLAB FERRULE INSERTS OR RESIN BONDED ANCHORS. SEE THE CONTRACT PLANS.

SIDEWALK @ RETAINING WALL AND CONTINUING BEYOND

BEAM GUARDRAIL TRANSITION TYPE 20 CONNECTION

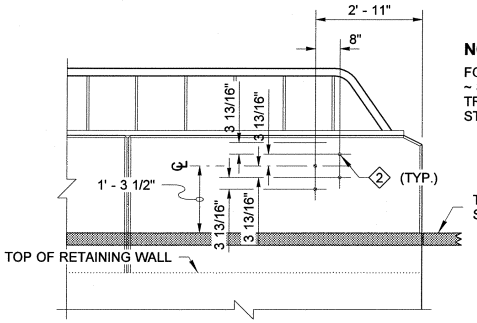

NOTE

FOR GUARDRAIL DETAILS NOT SHOWN ~ SEE BEAM GUARDRAIL (TYPE 31) TRANSITION SECTION TYPE 21, STANDARD PLAN C-25.20

SIDEWALK @ RETAINING WALL AND CONTINUING BEYOND

BEAM GUARDRAIL TRANSITION TYPE 21 CONNECTION

REINFORCING STEEL BENDING DIAGRAM

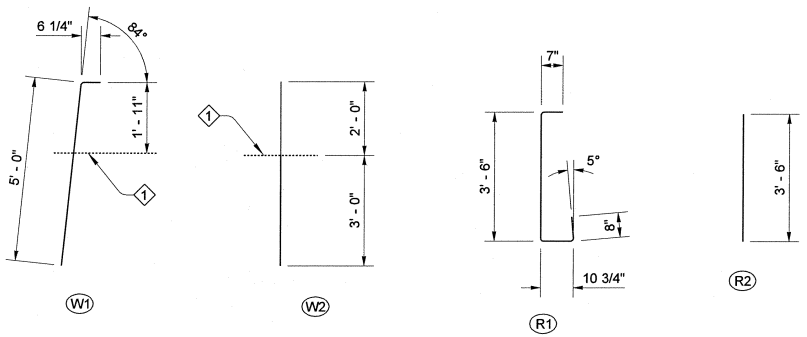

1 CONSTRUCTION JOINT ~ LEVEL TRANSVERSE WITH ROUGHENED SURFACE

ALL DIMENSIONS ARE OUT TO OUT

SEE STD. SPEC. FOR BENDING DIAMETERS

BIJAN KHALEGHI · STATE OF WASHINGTON · 27695 · STRUCTURAL ENGINEER · PROFESSIONAL ENGINEER

11/25/08

TRAFFIC BARRIER DETAILS FOR REINFORCED CONCRETE RETAINING WALLS

STANDARD PLAN D-15.30-01

SHEET 2 OF 2 SHEETS

APPROVED FOR PUBLICATION

STATE DESIGN ENGINEER — DATE 12/2/08

Washington State Department of Transportation

This page left blank intentionally.

DRAWN BY: LISA CYFORD

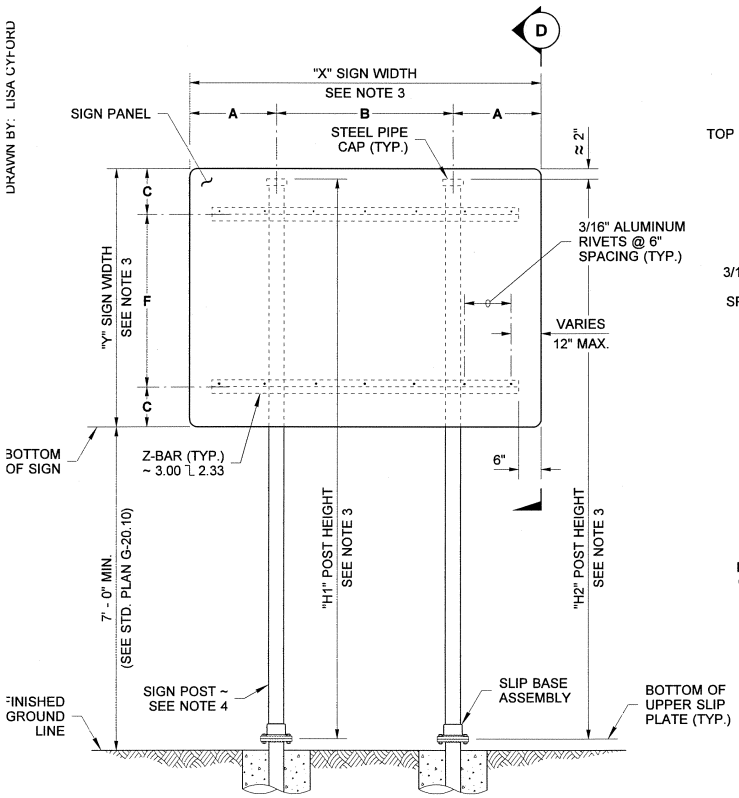

ELEVATION
TYPE PL SIGN SUPPORT
DUAL POST INSTALLATION

	"X" SIGN WIDTH		
	6' - 0"	8' - 0"	10' - 0"
A	1' - 0"	2' - 0"	3' - 0"
B	3' - 0"	4' - 0"	4' - 0"

	"Y" SIGN HEIGHT		
	6' - 0"	8' - 0"	10' - 0"
C	1' - 0"	2' - 0"	3' - 0"
F	4' - 0"	4' - 0"	4' - 0"

A, B, C, & F, MAY BE INTERPOLATED
FOR INTERMEDIATE SIGN SIZES

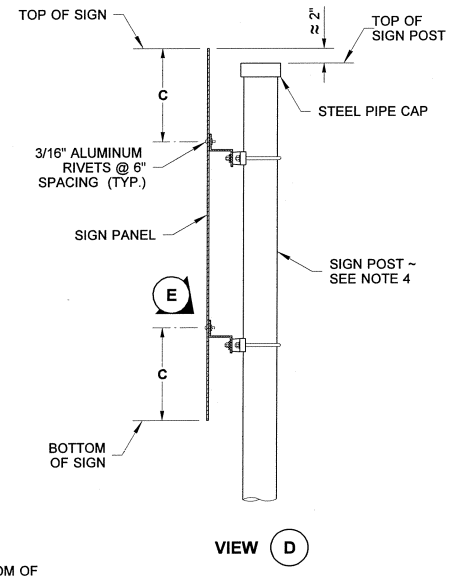

VIEW (D)

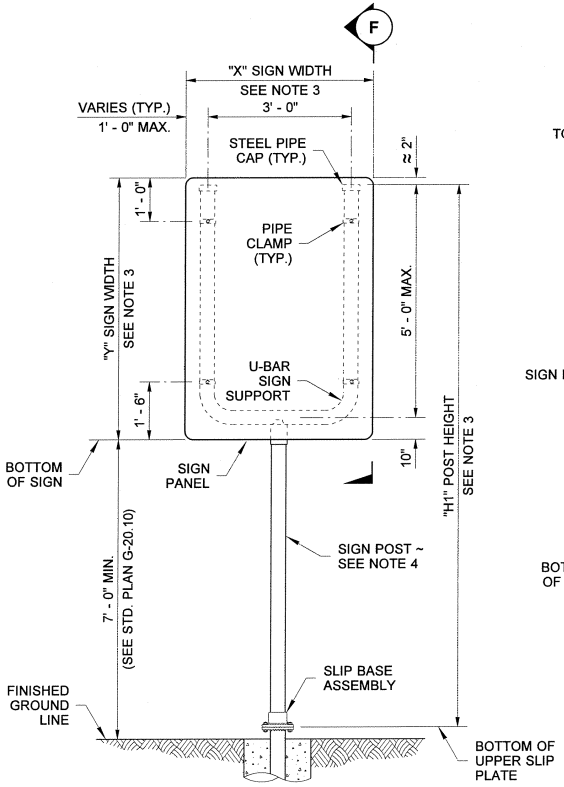

ELEVATION
TYPE PL-U SIGN SUPPORT

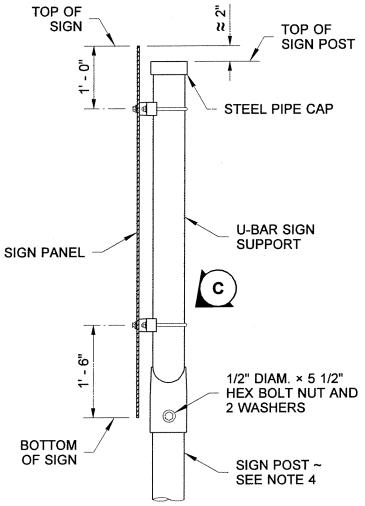

VIEW (F)

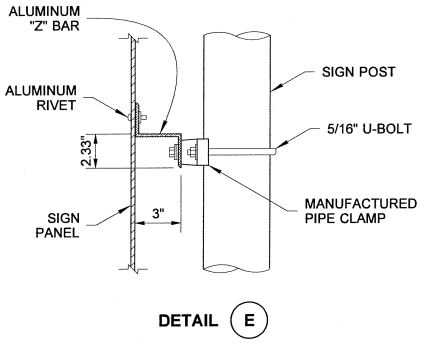

DETAIL (E)

EXPIRES AUGUST 9, 2009

STEEL SIGN SUPPORT TYPES PL, PL-T, & PL-U INSTALLATION DETAILS STANDARD PLAN G-24.30-00

SHEET 2 OF 2 SHEETS

APPROVED FOR PUBLICATION

STATE DESIGN ENGINEER — DATE 11/8/07

Washington State Department of Transportation

DRAWN BY: LISA CYFORD

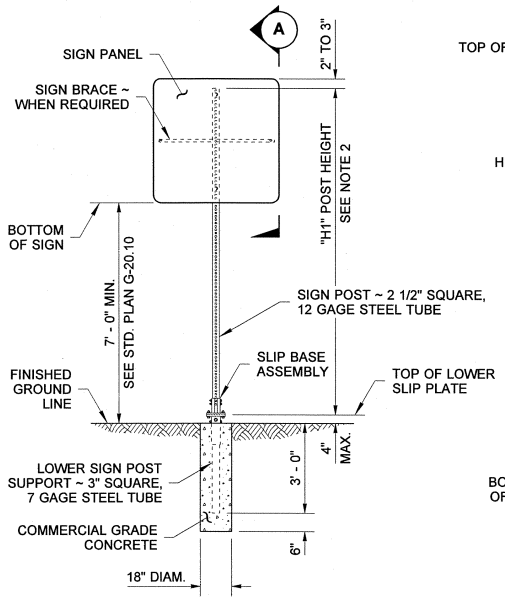

ELEVATION

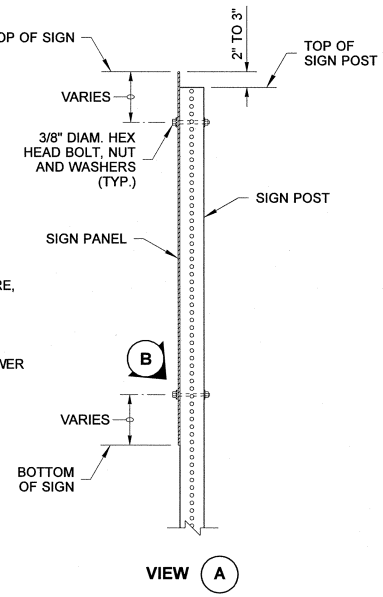

VIEW A

TYPE SB-1, SB-2 & SB-3 SIGN SUPPORT

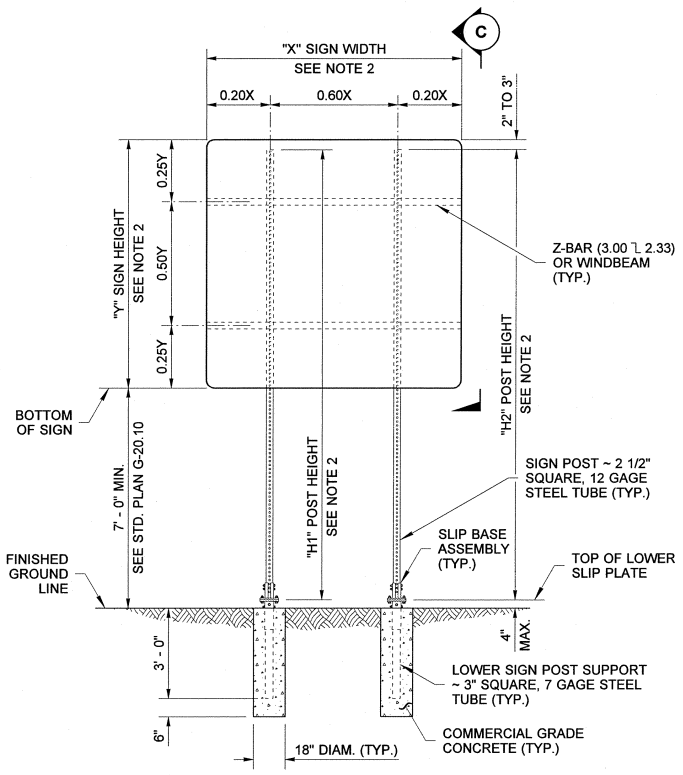

ELEVATION

TYPE SB-1, SB-2 & SB-3 SIGN SUPPORT
DUAL POST INSTALLATION

NOTES

1. For "W", Horizontal distance from edge of traveled way to center of nearest post, and "V", Vertical distance from edge of traveled way to bottom of sign, see Standard Plan G-20.10.
2. For "X", "Y", "H1", "H2", "H3", and "H4" refer to the Sign Specification Sheet in the Contract.

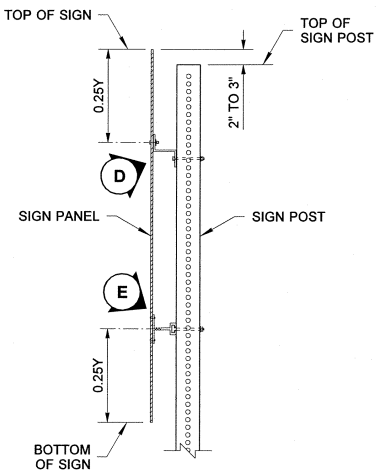

VIEW C

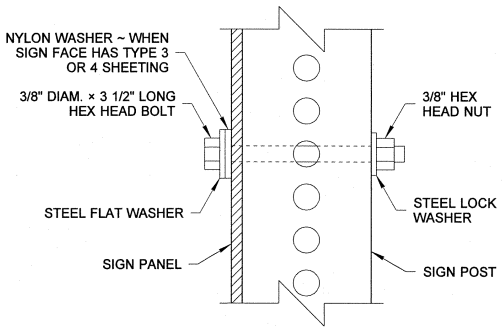

DETAIL B

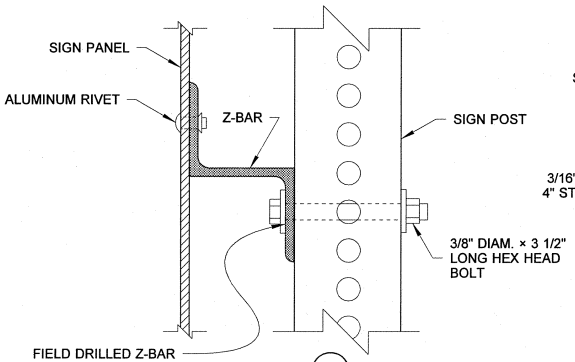

DETAIL D

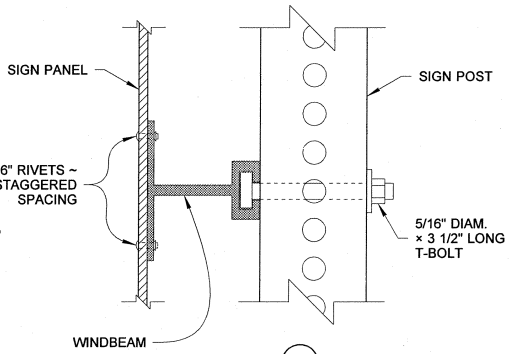

DETAIL E

THEODORE J. TREPANIER
STATE OF WASHINGTON
25408
REGISTERED PROFESSIONAL ENGINEER

STEEL SIGN SUPPORT TYPES SB-1, SB-2 & SB-3 INSTALLATION DETAILS STANDARD PLAN G-24.40-01

SHEET 1 OF 2 SHEETS

APPROVED FOR PUBLICATION

STATE DESIGN ENGINEER — DATE 12/2/08

Washington State Department of Transportation

DRAWN BY: LISA CYFORD

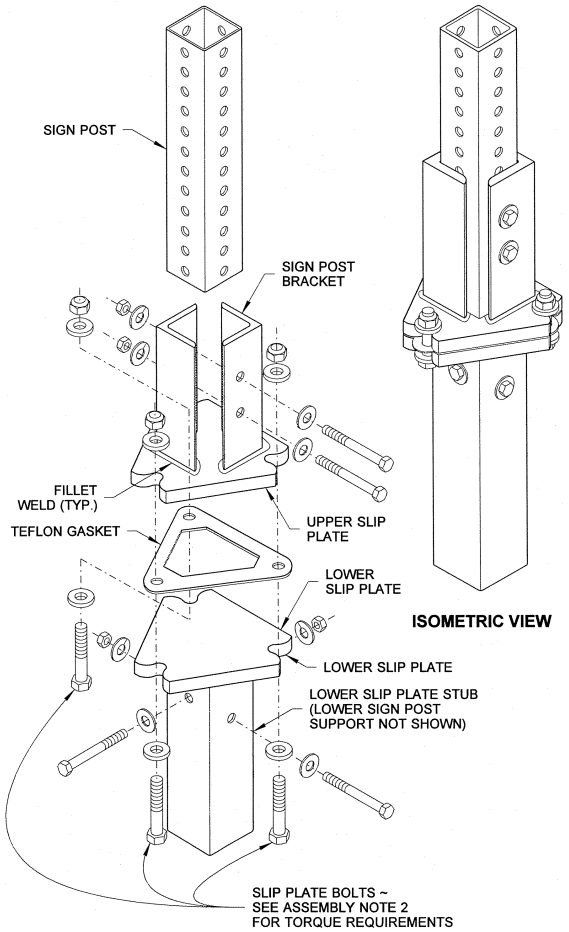

ISOMETRIC VIEW

EXPLODED VIEW

TYPE SB-1
SLIP BASE ASSEMBLY

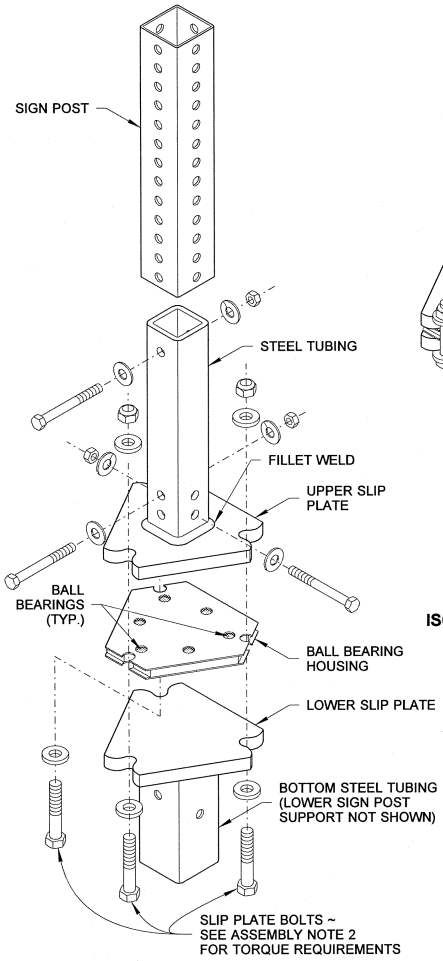

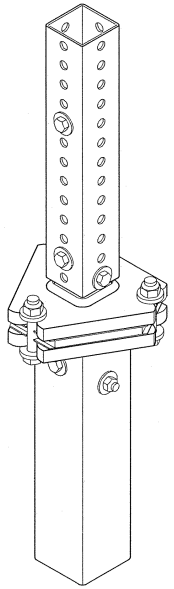

ISOMETRIC VIEW

EXPLODED VIEW

TYPE SB-2
SLIP BASE ASSEMBLY

ASSEMBLY NOTES

1. Dimensions for the parts used to assemble the base connections are intentionally not shown. Base connections are patented, manufactured products that are in compliance with NCHRP 350 crash test criteria. The base connection details are only shown on this plan to illustrate how the parts are assembled.

2. Do not tighten any single Slip Plate Bolt to the recommended torque before pre-tightening the other bolts. Progressively tighten the three Slip Plate Bolts in 10 ft-lb increments, alternately, to a final torque of 40 ft-lbs on each.

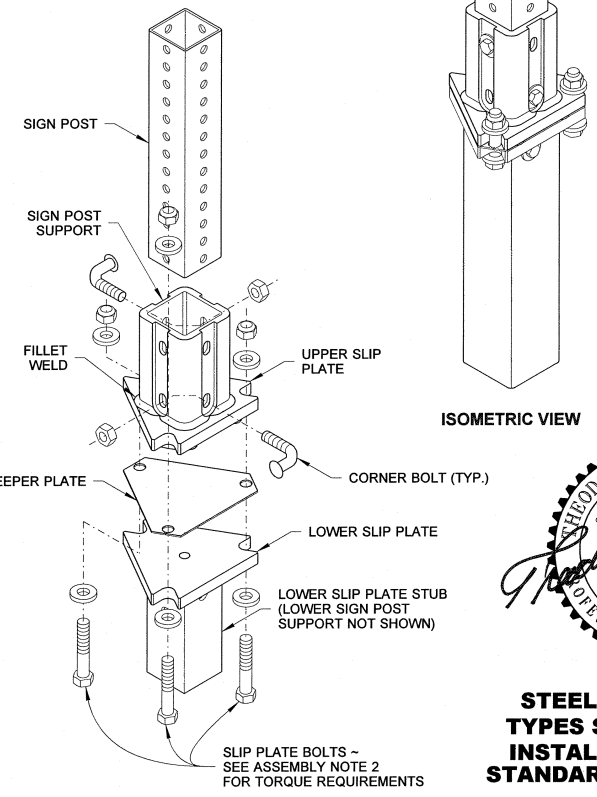

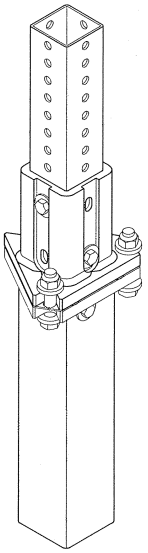

ISOMETRIC VIEW

EXPLODED VIEW

TYPE SB-3
SLIP BASE ASSEMBLY

THEODORE J. TREPANIER
STATE OF WASHINGTON
REGISTERED PROFESSIONAL ENGINEER
12-1-08

STEEL SIGN SUPPORT TYPES SB-1, SB-2 & SB-3 INSTALLATION DETAILS STANDARD PLAN G-24.40-01

SHEET 2 OF 2 SHEETS

APPROVED FOR PUBLICATION

STATE DESIGN ENGINEER — DATE 12/2/08

Washington State Department of Transportation

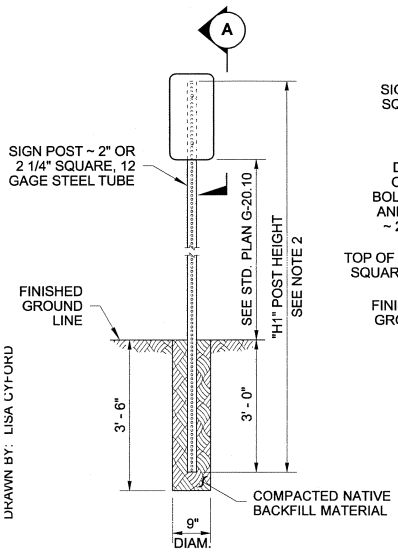

ELEVATION

TYPE ST-1 SIGN SUPPORT

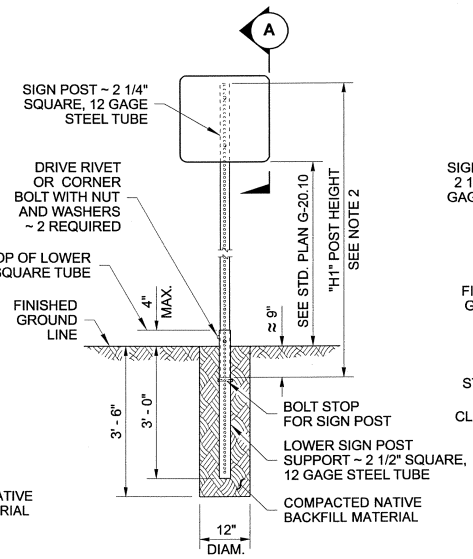

ELEVATION

TYPE ST-2 SIGN SUPPORT

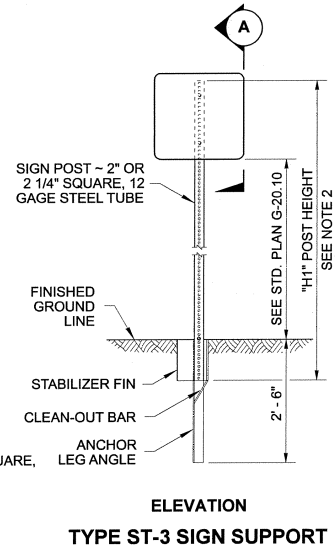

ELEVATION

TYPE ST-3 SIGN SUPPORT

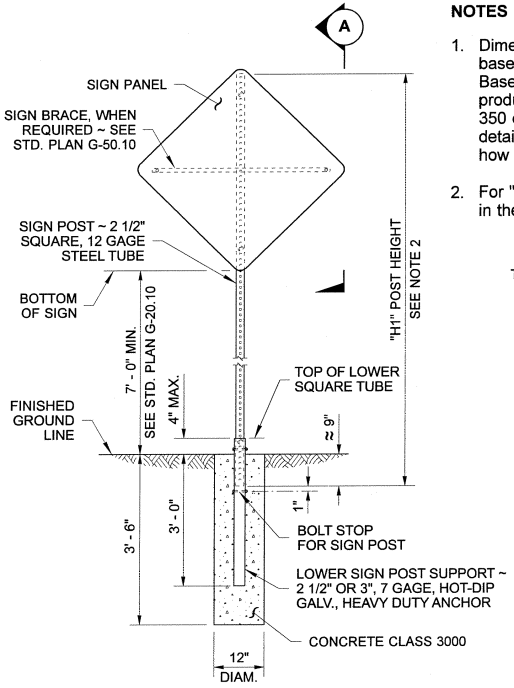

ELEVATION

TYPE ST-4 SIGN SUPPORT

NOTES

1. Dimensions for the parts used to assemble the base connections are intentionally not shown. Base connections are patented, manufactured products that are in compliance with NCHRP 350 crash test criteria. The base connection details are only shown on this plan to illustrate how the parts are assembled.

2. For "H1" refer to the Sign Specification Sheet in the Contract.

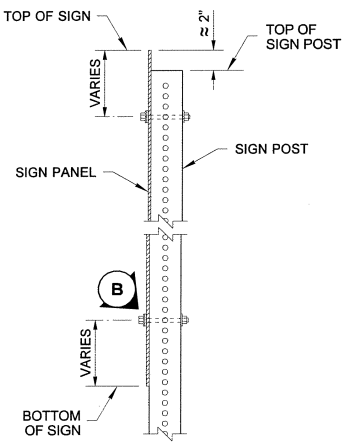

VIEW (A)

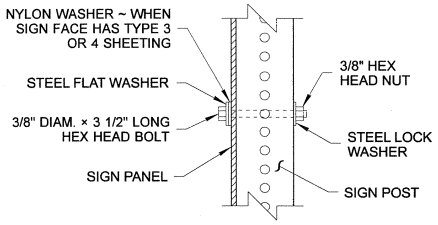

DETAIL (B)

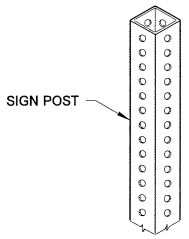

TYPE ST-1

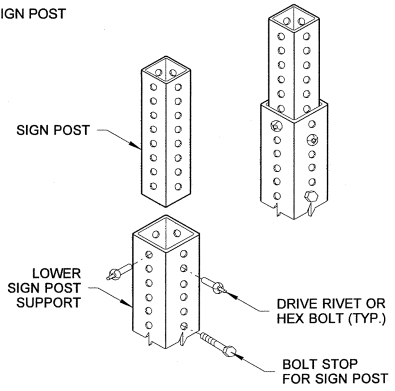

TYPE ST-2

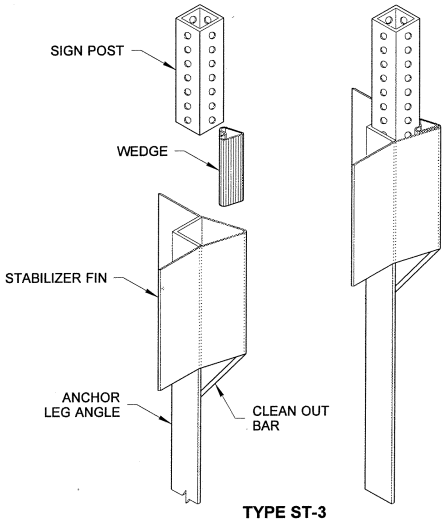

TYPE ST-3

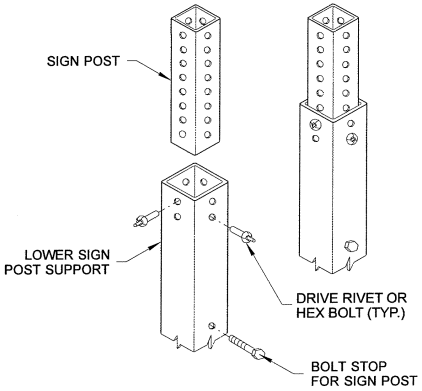

TYPE ST-4

EXPIRES AUGUST 9, 2009

STEEL SIGN SUPPORT TYPES ST-1 ~ ST-4 INSTALLATION DETAILS STANDARD PLAN G-24.50.00

SHEET 1 OF 1 SHEET

APPROVED FOR PUBLICATION

STATE DESIGN ENGINEER — DATE 11/8/07

Washington State Department of Transportation

DRAWN BY: LISA CYFORD

DRAWN BY: LISA CYFORD

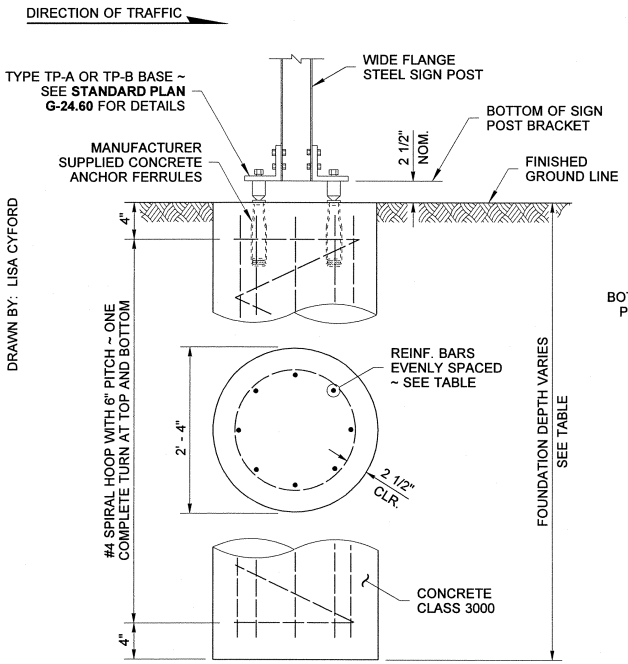

ELEVATION VIEW

TYPE TP-A & TYPE TP-B FOUNDATION

TYPE TP-A & TP-B FOUNDATION TABLE SEE NOTE 1					
POST SIZE		MAX. XYZ		VERTICAL REBAR	FDN. DEPTH ◇1
ASTM A 36	ASTM A 992	2 POST ◇3	3 POST		
W6 x 12	W6 x 9	1570	2355	8 ~ # 5	4' - 0"
W6 x 16	W6 x 12	2340	3510	8 ~ # 5	5' - 0"
W8 x 21	W8 x 18	4120	6180	8 ~ # 6	7' - 0"
W10 x 26	W10 x 22	6320	9480	8 ~ # 7	8' - 0"
W12 x 30	W12 x 26	8700	----	8 ~ # 7	9' - 0"

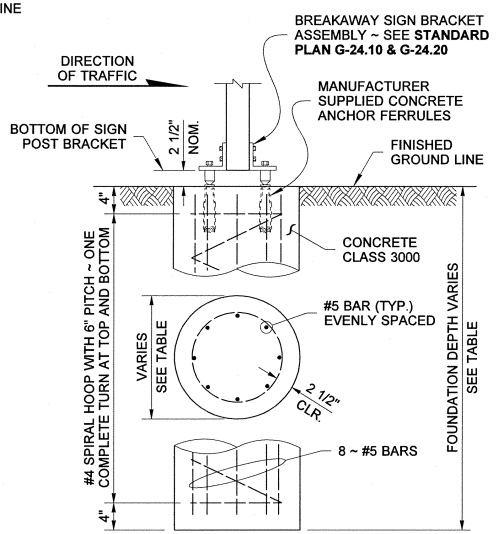

ELEVATION VIEW

TYPE AS & TYPE AP FOUNDATION

TYPE AS FOUNDATION TABLE			
POST SIZE	MAX. XYZ	FDN. DIAM.	FDN. DEPTH ◇1
4" SQ.	250	18"	4' - 0"

TYPE AP FOUNDATION TABLE			
POST SIZE	MAX. XYZ	FDN. DIAM.	FDN. DEPTH ◇1
3" O.D.	225	18"	3' - 6"
3 1/2" O.D.	250	18"	4' - 0"
4" O.D.	275	24"	4' - 0"
4 1/2" O.D.	300	24"	4' - 0"

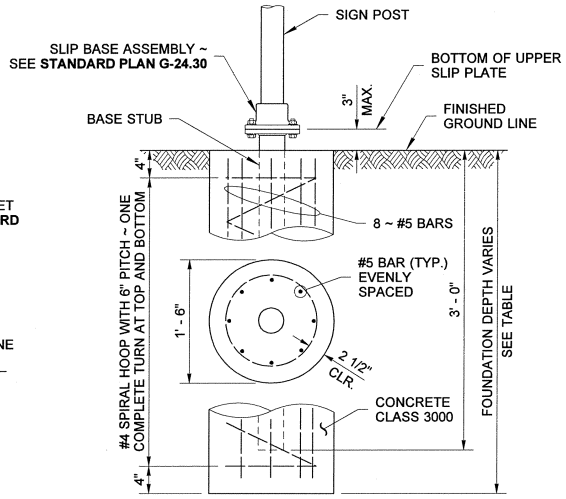

ELEVATION VIEW

TYPE PL, TYPE PL-T & TYPE PL-U FOUNDATION

TYPE PL, TYPE PL-T & TYPE PL-U FOUNDATION TABLE	
MAX. XYZ	FDN. DEPTH ◇1
225	3' - 6"
265	4' - 0"
300	4' - 6"
600 ◇2	4' - 6"

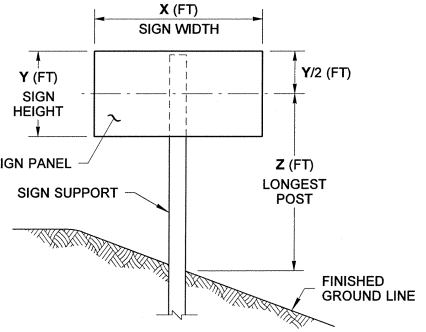

XYZ CALCULATION

$XYZ\ (FT^3) = X \times Y \times Z$

USED TO DETERMINE POST SIZE
~ SEE FOUNDATION TABLES

NOTES

1. Per TRANSPO: 5" to 8" square steel posts are acceptable, and require type TP-B foundations.
2. Install conduit for post-mounted Junction Box in the concrete foundation, when required. See **Standard Plan J-12, Sheet 2.**

KEY NOTES

◇1 Foundation depths based on allowable lateral bearing pressure in excess of 2500 PSF.

◇2 Two post installation.

◇3 Single Post installations require square steel posts. For Single Post installations, divide the 2 post MAX. XYZ in half.

RICHARD P. ZELDENRUST — STATE OF WASHINGTON — 25470 — STRUCTURAL ENGINEER — PROFESSIONAL ENGINEER

12/31/2008

STEEL SIGN SUPPORT FOUNDATION DETAILS

STANDARD PLAN G-25.10-01

SHEET 1 OF 1 SHEET

APPROVED FOR PUBLICATION

STATE DESIGN ENGINEER — DATE 11/16/07

Washington State Department of Transportation

DRAWN BY: ELENA BRUNSTEIN

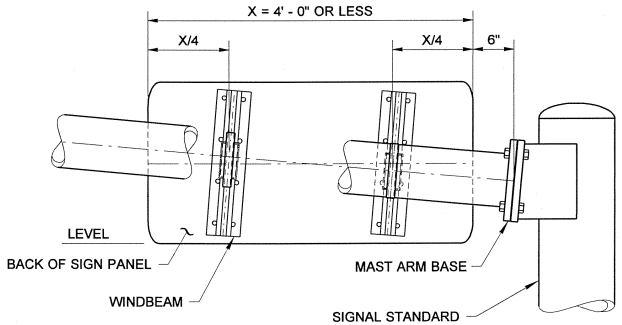

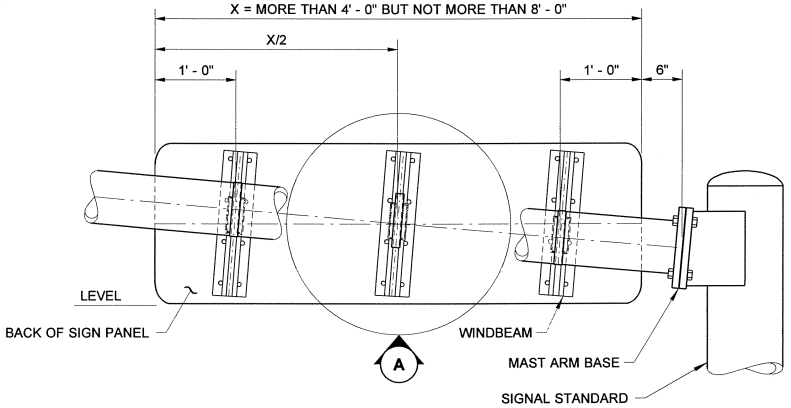

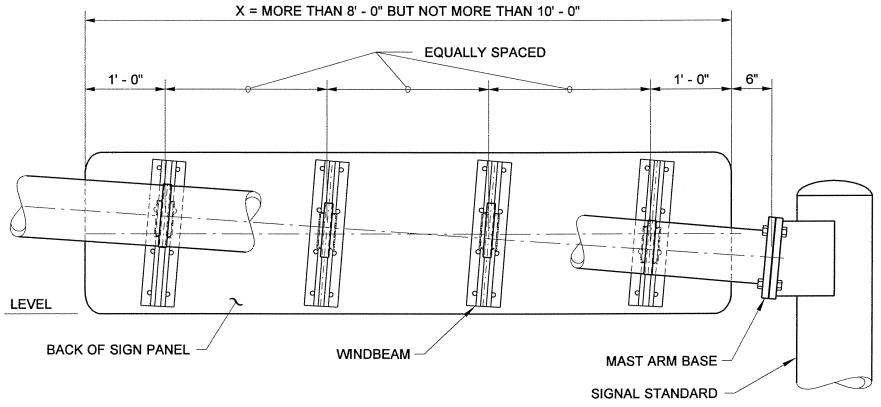

MAST ARM MOUNTED STREET NAME SIGNS

NOTES

1. Mounting brackets with steel straps shall be a stainless steel band and buckle system product or an approved equal. Mounting brackets shall be universal channel clamps; steel straps shall be 3/4" wide and 0.030" thick.
2. All signs installed on mast arms or standards (poles) require windbeams. All signs shall be installed with horizontal edges level. A skewed windbeam is required only when the sign is mounted within 12" of the mast arm base (see Detail "A").

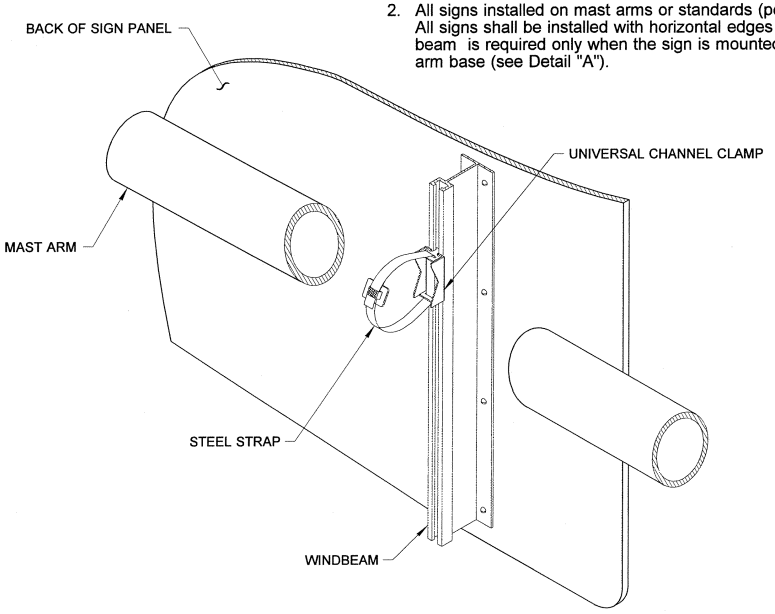

TYPICAL MAST ARM INSTALLATION

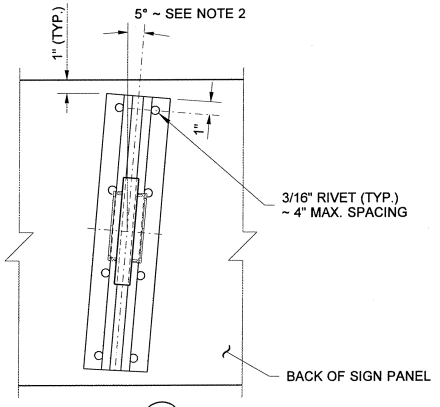

DETAIL (A)

TYPICAL FOR EACH CONNECTION

THEODORE J. TREPANIER
STATE OF WASHINGTON
25335
REGISTERED
PROFESSIONAL ENGINEER
11/8/07

EXPIRES AUGUST 9, 2009

SIGN INSTALLATION ON SIGNAL AND LIGHT STANDARDS
STANDARD PLAN G-30.10-00

SHEET 1 OF 2 SHEETS

APPROVED FOR PUBLICATION

STATE DESIGN ENGINEER — DATE 11/8/07

Washington State Department of Transportation

DRAWN BY: LISA CYFORD

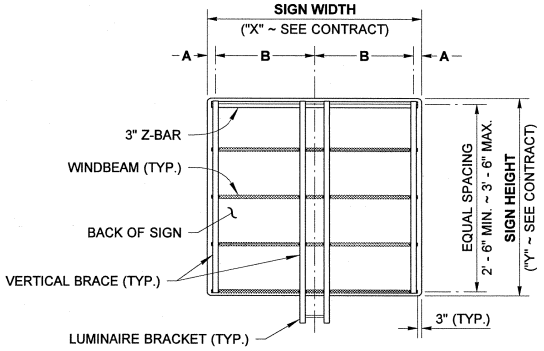

ONE SIGN LIGHTING LUMINAIRE
BRACE PLACEMENT

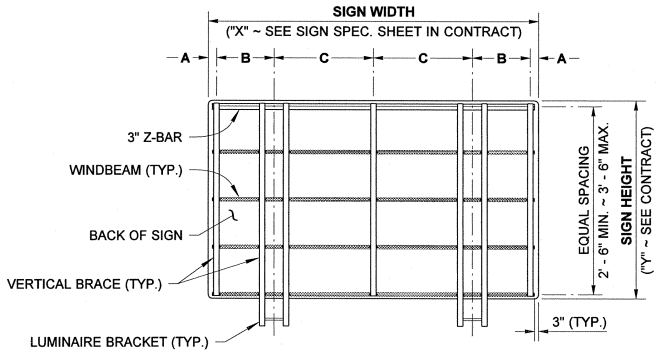

TWO SIGN LIGHTING LUMINAIRES
BRACE PLACEMENT

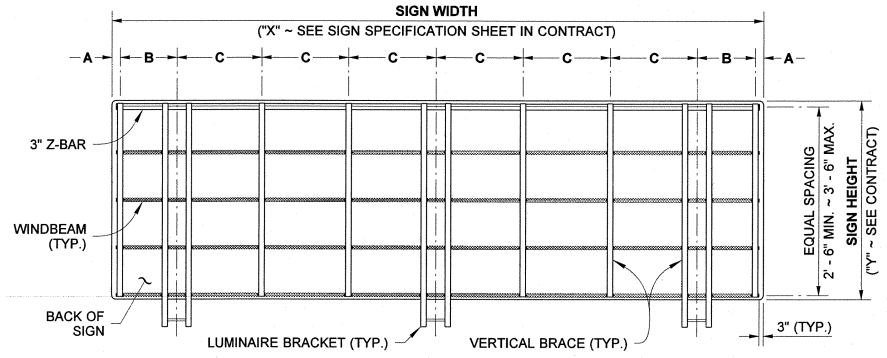

THREE SIGN LIGHTING LUMINAIRES
BRACE PLACEMENT

VERTICAL BRACE SPACING
WITH SIGN LIGHTING

SIGN WIDTH	A	B	C
ONE SIGN LIGHTING LUMINAIRE			
8' - 0"	6"	3' - 6"	-
10' - 0"	6"	4' - 6"	-
12' - 0"	6"	5' - 6"	-
14' - 0"	1' - 0"	6' - 0"	-
16' - 0"	2' - 0"	6' - 0"	-
TWO SIGN LIGHTING LUMINAIRES			
18' - 0"	6"	3' - 6"	5' - 0"
20' - 0"	6"	3' - 6"	6' - 0"
22' - 0"	6"	3' - 6"	4' - 8"
24' - 0"	6"	3' - 6"	5' - 4"
26' - 0"	6"	4' - 6"	5' - 4"
28' - 0"	6"	5' - 6"	5' - 4"
30' - 0"	1' - 0"	6' - 0"	5' - 4"
32' - 0"	2' - 0"	6' - 0"	5' - 4"
THREE SIGN LIGHTING LUMINAIRES			
34' - 0"	6"	3' - 6"	4' - 4"
36' - 0"	6"	3' - 6"	4' - 8"

NOTES

1. Install Sign Lighting Luminaires (and Brackets) only when required in the Contract.
2. Windbeam and 3" Z-Bar are aluminum. All nuts, bolts, washers, and other hardware shall be stainless steel, except as noted.
3. See **Standard Plan G-90.20** (Monotube), or **G-90.30** (Truss) for additional Overhead Sign Mounting details.
4. Galvanize all non-stainless steel parts.

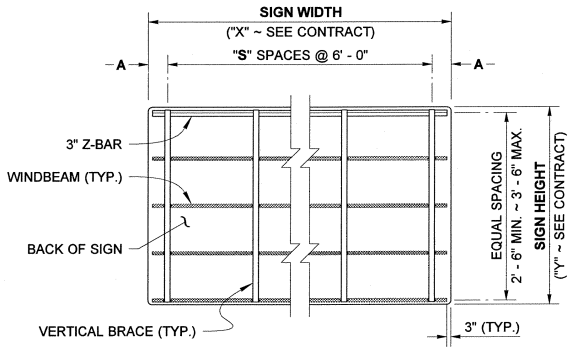

WITHOUT SIGN LIGHTING
BRACE PLACEMENT

VERTICAL BRACE SPACING
WITHOUT SIGN LIGHTING

SIGN WIDTH	A	S (SPACES)
8' - 0"	1' - 0"	1
10' - 0"	2' - 0"	1
12' - 0"	3' - 0"	1
14' - 0"	1' - 0"	2
16' - 0"	2' - 0"	2
18' - 0"	3' - 0"	2
20' - 0"	1' - 0"	3
22' - 0"	2' - 0"	3
24' - 0"	3' - 0"	3
26' - 0"	1' - 0"	4
28' - 0"	2' - 0"	4
30' - 0"	3' - 0"	4
32' - 0"	1' - 0"	5
34' - 0"	2' - 0"	5
36' - 0"	3' - 0"	5

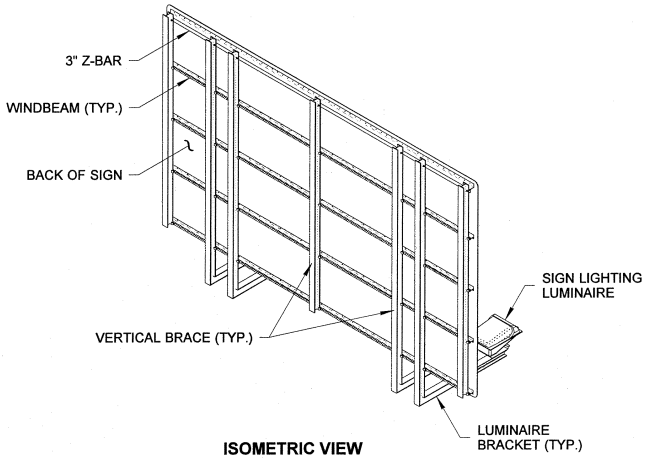

ISOMETRIC VIEW

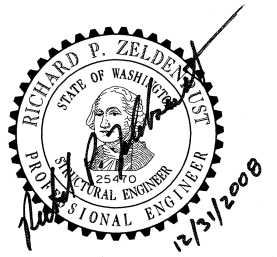

OVERHEAD SIGN BRACING AND LIGHTING PLACEMENT

STANDARD PLAN G-90.10-00

SHEET 1 OF 1 SHEET

APPROVED FOR PUBLICATION

STATE DESIGN ENGINEER — DATE 11/6/09

Washington State Department of Transportation

DRAWN BY: LISA CYFORD

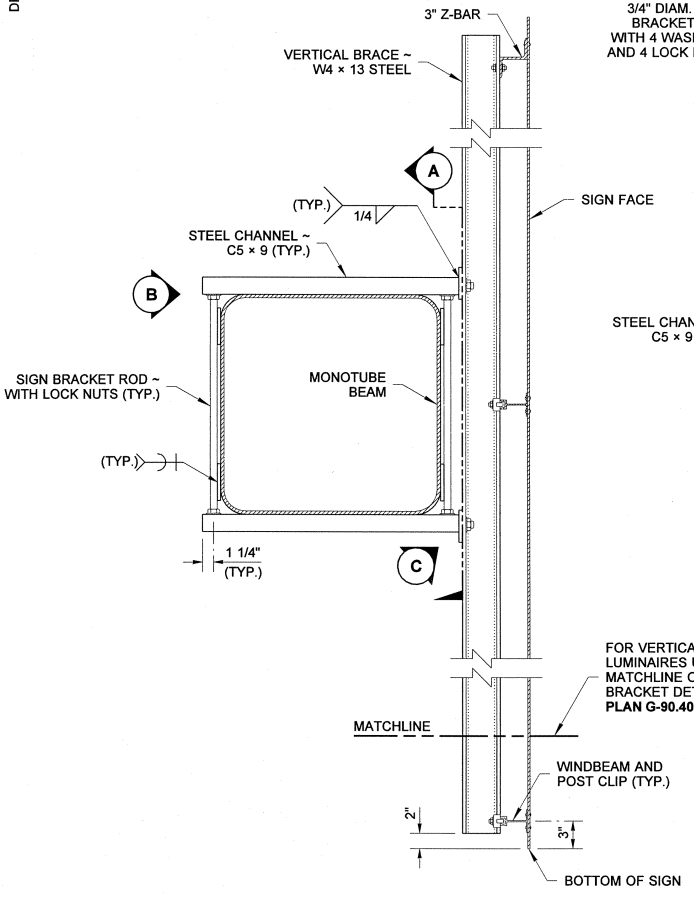

SIDE VIEW
MONOTUBE CONNECTION

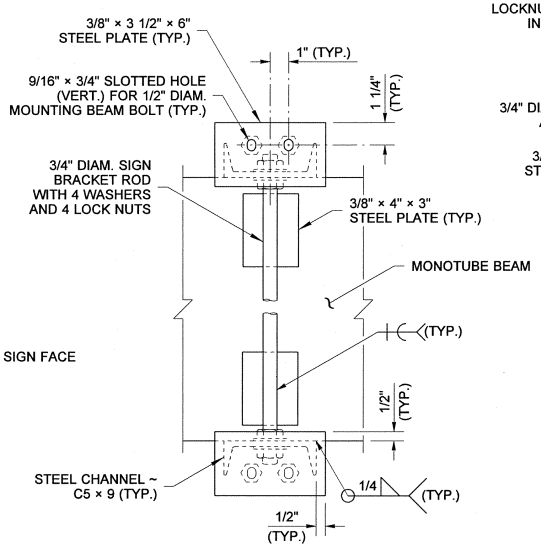

SECTION (A)

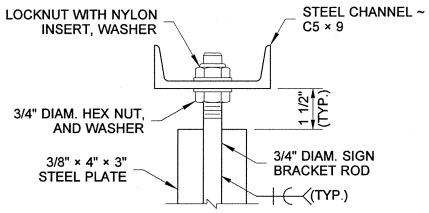

VIEW (B)

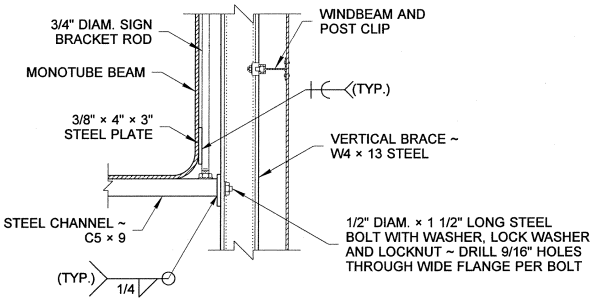

DETAIL (C)

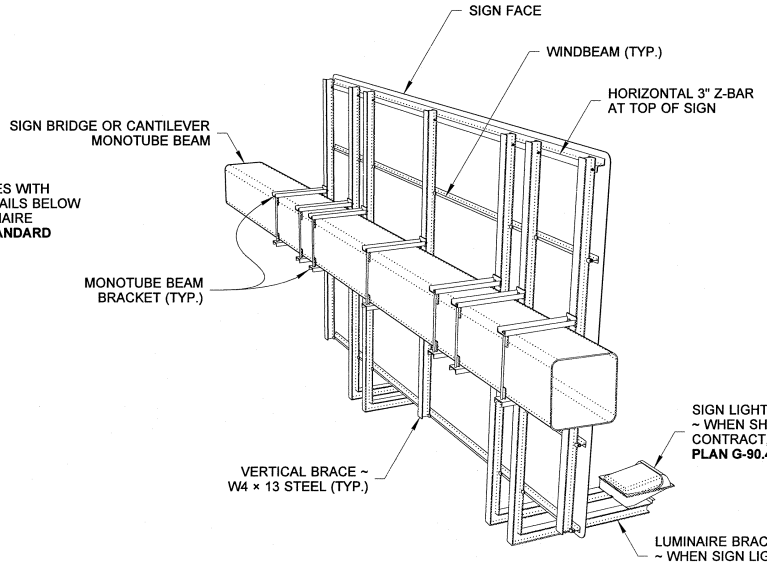

PERSPECTIVE VIEW
MONOTUBE STRUCTURE

NOTES

1. Refer to Contract Plans for Monotube Beam Bracket element sizes, dimensions and weld symbols.
2. See **Standard Plan G-90.10** for Sign Bracing and Lighting Placement details.
3. Galvanize all non-stainless steel parts.
4. See **Standard Plan G-90.40** for Sign Lighting details.

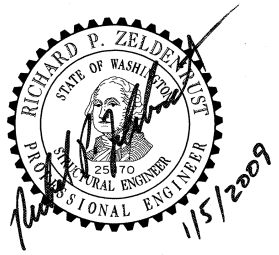

OVERHEAD SIGN MOUNTING (MONOTUBE STRUCTURE)

STANDARD PLAN G-90.20-00

SHEET 1 OF 1 SHEET

APPROVED FOR PUBLICATION

STATE DESIGN ENGINEER — DATE 1/6/09

Washington State Department of Transportation

DRAWN BY: LISA CYFORD

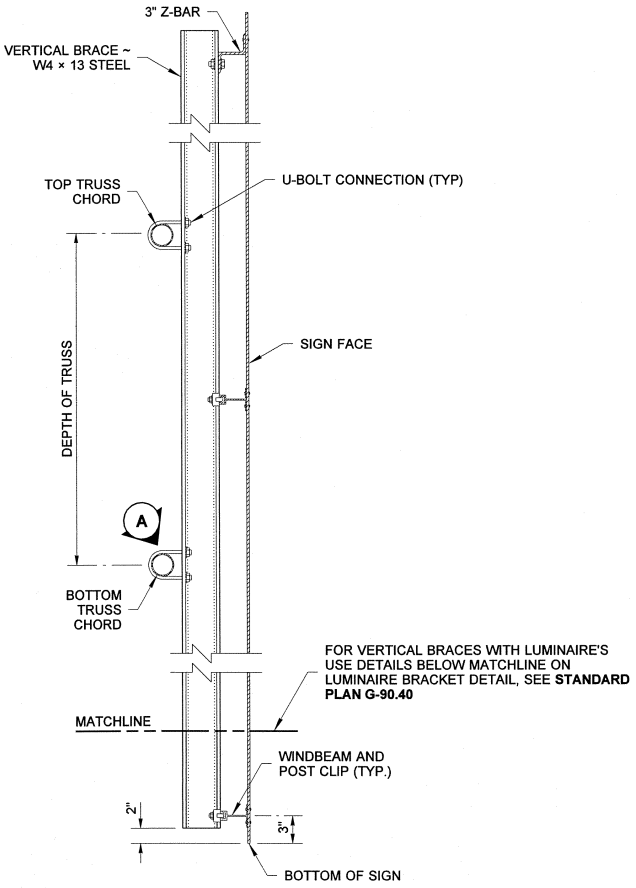

SIDE VIEW
TRUSS CONNECTION

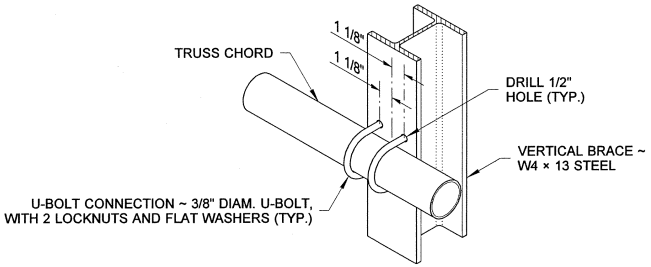

DETAIL (A)

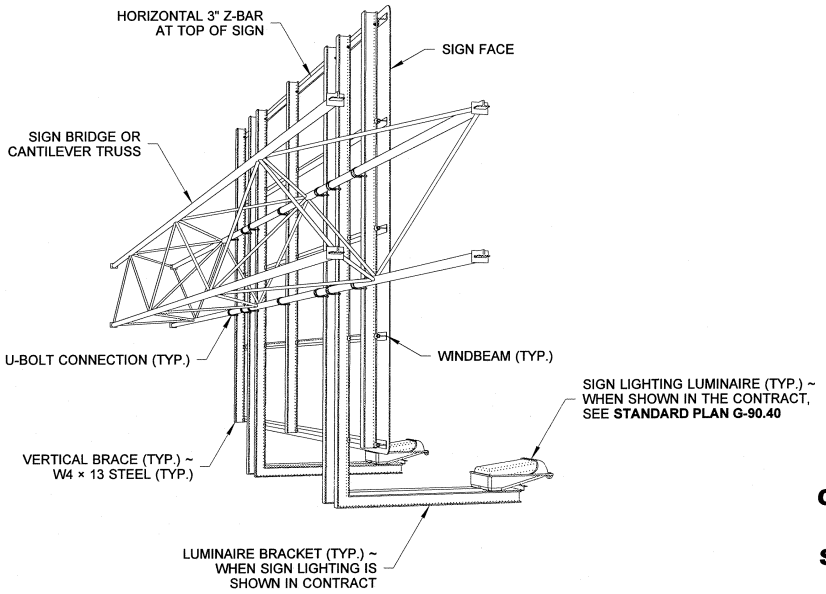

PERSPECTIVE VIEW
TRUSS STRUCTURE

NOTES

1. U-Bolts, Washers and Nuts shall be stainless steel, except as noted.
2. See **Standard Plan G-90.10** for Overhead Sign Lighting details.
3. Galvanize all non-stainless steel parts.

OVERHEAD SIGN MOUNTING (TRUSS STRUCTURE)

STANDARD PLAN G-90.30-00

SHEET 1 OF 1 SHEET

APPROVED FOR PUBLICATION

STATE DESIGN ENGINEER — DATE 1/6/09

Washington State Department of Transportation

DRAWN BY: LISA CYFORD

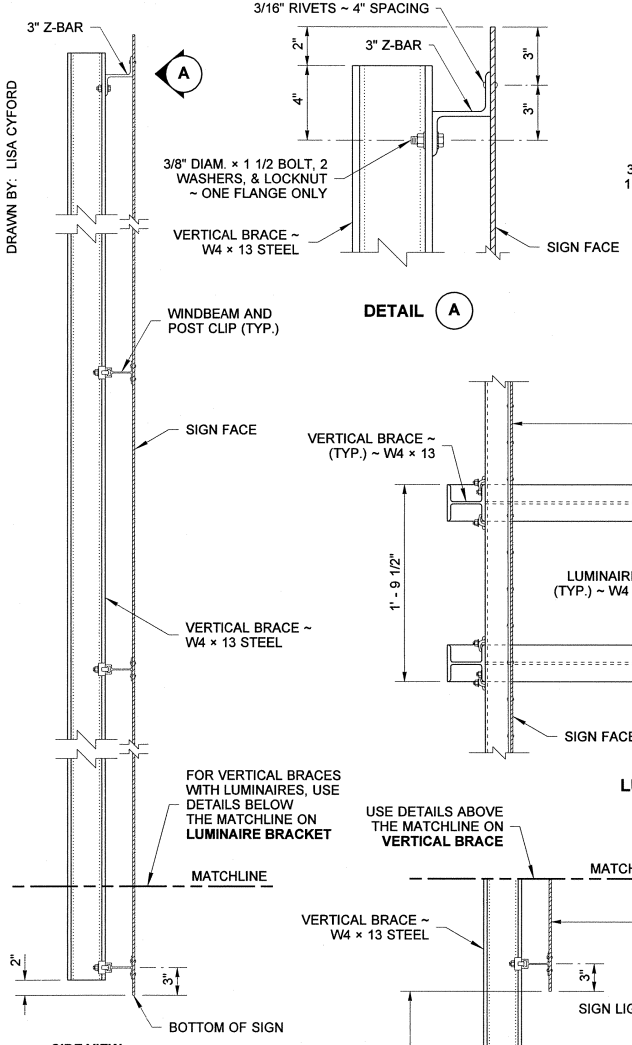

SIDE VIEW
VERTICAL BRACE

DETAIL (A)

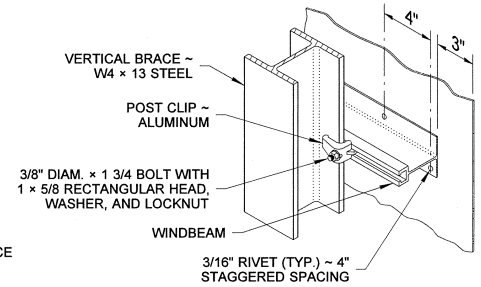

WINDBEAM CONNECTION DETAIL

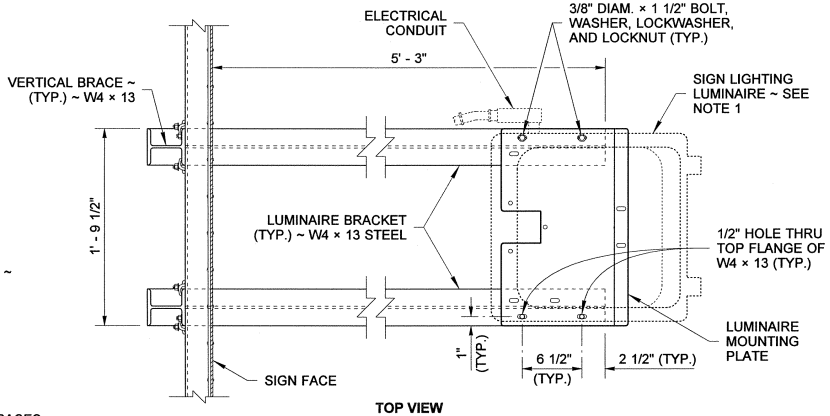

TOP VIEW
LUMINAIRE BRACKET

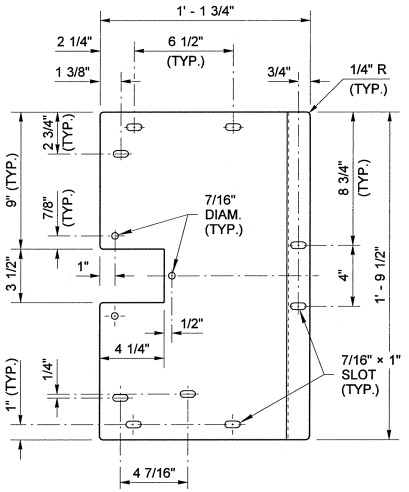

TOP VIEW

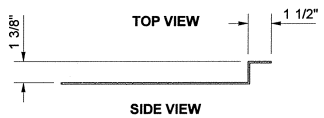

SIDE VIEW

10 GAGE GALV. STEEL PLATE ~ ITEM AVAILABLE FROM LUMINAIRE MANUFACTURER

LUMINAIRE MOUNTING PLATE

NOTES

1. Sign Lighting Luminaire shall include a 3/4" threaded side entry, a gasketed front entry, a door prop, and 4 mounting holes. Refer to **Standard Spec. 8-20.3(13)** for additional requirements.
2. See **Standard Plan J-45.50** and **J-45.60** for Sign Light Luminaire Electrical Details.

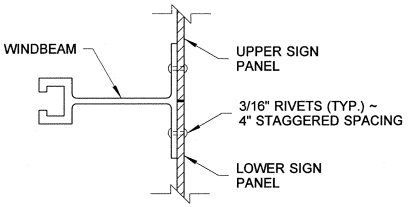

HORIZONTAL SIGN PANEL SPLICE

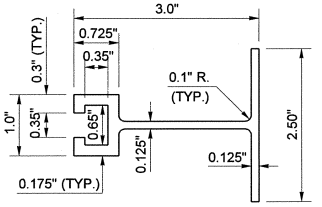

WINDBEAM DETAIL

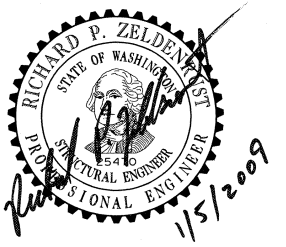

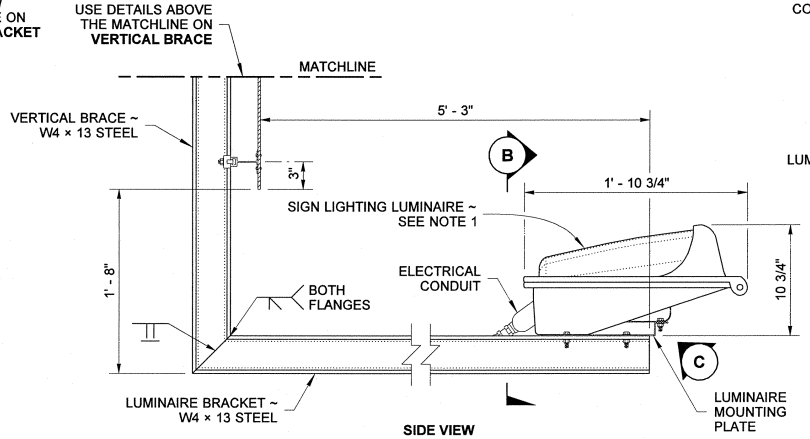

SIDE VIEW
LUMINAIRE BRACKET

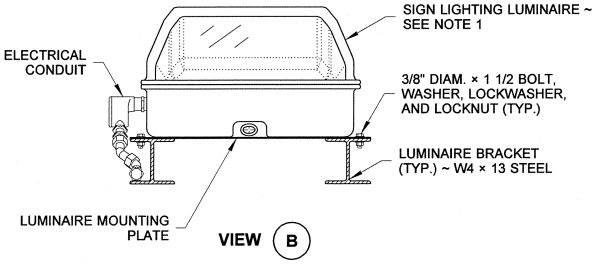

VIEW (B)

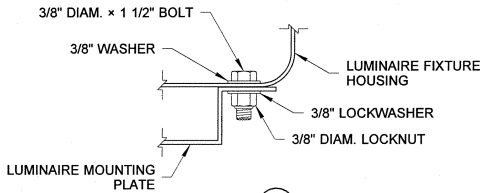

DETAIL (C)

OVERHEAD SIGN LIGHTING DETAILS

STANDARD PLAN G-90.40-00

SHEET 1 OF 1 SHEET

APPROVED FOR PUBLICATION

STATE DESIGN ENGINEER — DATE 1/6/09

Washington State Department of Transportation

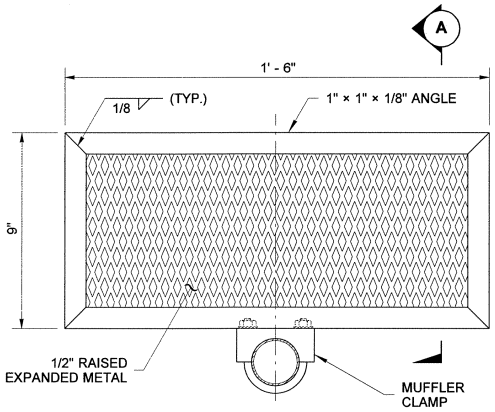

FRONT VIEW

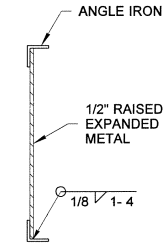

SECTION (A)

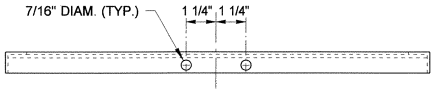

BOTTOM VIEW

SNOW GUARD DETAIL

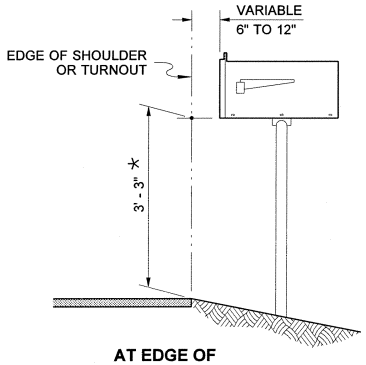

AT EDGE OF SHOULDER

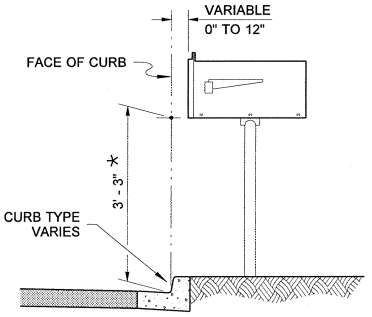

BEHIND CURB

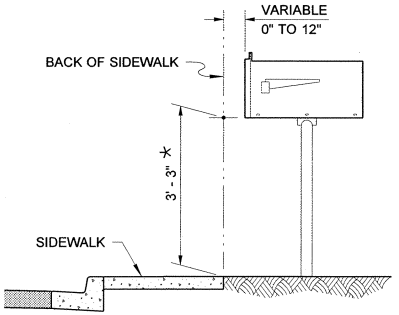

BEHIND SIDEWALK

* UNLESS OTHERWISE SHOWN IN THE PLANS

MAILBOX PLACEMENT SECTIONS

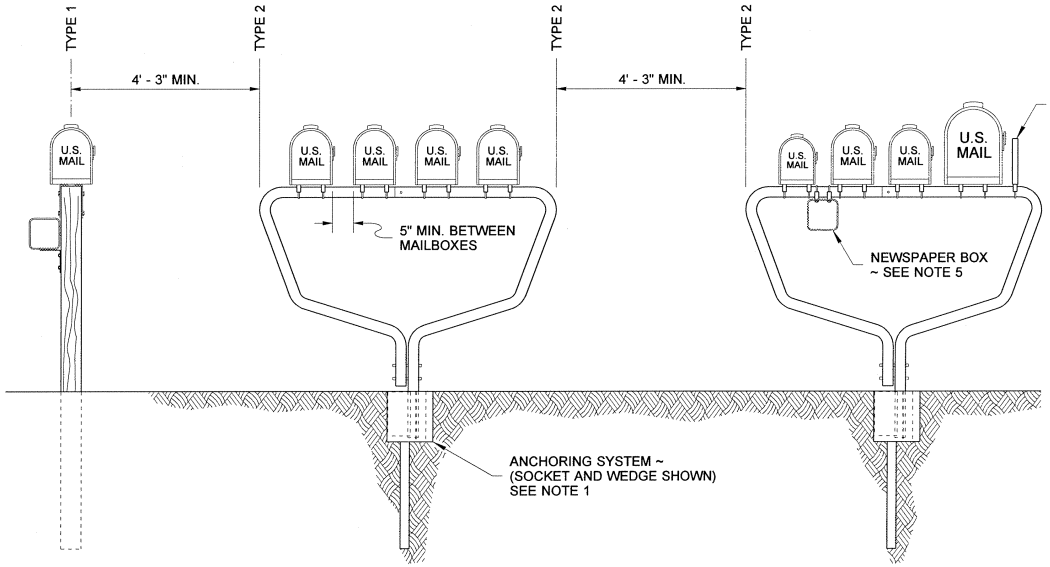

MAILBOX SUPPORT TYPE 1
(WOOD POST SHOWN)

FOR DETAILS
SEE STD. PLAN I-70.10

MAILBOX SUPPORTS TYPE 2

SPACING DETAIL

DRAWN BY: MARK SUJKA

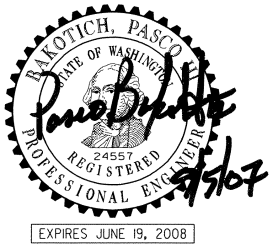

EXPIRES JUNE 19, 2008

MAILBOX SUPPORT TYPE 2

STANDARD PLAN H-70.20-00

SHEET 2 OF 2 SHEETS

APPROVED FOR PUBLICATION

Pasco Bakotich III — 9/5/07

STATE DESIGN ENGINEER — DATE

Washington State Department of Transportation

DRAWN BY: MARK SUJKA

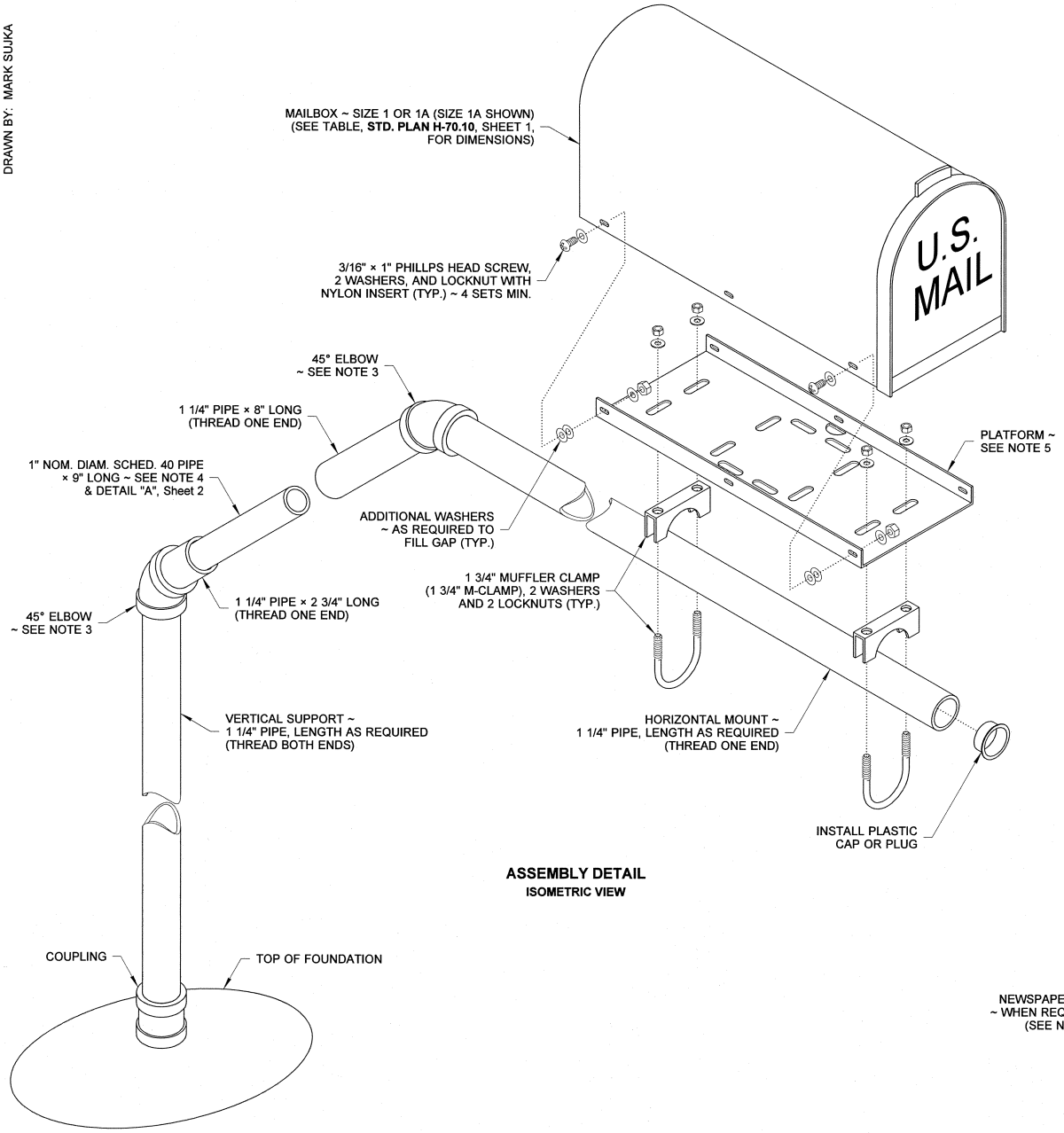

ASSEMBLY DETAIL
ISOMETRIC VIEW

NOTES

1. The insert pipe is 1" nominal diameter, Schedule 40 steel pipe, as indicated; all other pipe shown on this plan is 1 1/4" nominal diameter, Schedule 40 steel pipe. All pipe, couplings, and elbows shall be galvanized in accordance with ASTM A 153.
2. The vertical support may be cast in a concrete foundation, or bolted to a U-channel post (see PLACEMENT DETAIL, Sheet 2). Avoid placing the vertical support in the flow line of a ditch.
3. The pipe angles required in this design may be achieved by using pipe fittings, or by bending the pipes. See DETAIL "A", Sheet 2.
4. Coat the 1" diam. pipe with grease (petroleum) before sliding the 1 1/4" diam. pipe (cantilever arm) onto it, to aid rotation and to guard against corrosion.
5. The Platform design shown in this plan is detailed in the PLATFORM DETAIL, **Standard Plan H-70.10**, Sheet 2. The design features slots that accomodate several types of mailbox supports; only those slots necessary for assembling the type being installed are required.
6. Match the edge of the mailbox platform to the end of the horizontal pipe mount. Center the mailbox on the platform to ensure space for the mailbox door to open and to allow space for installing the fasteners. Spacing of mailbox mounting holes varies among manufacturers. Attachment of the mailbox to the platform may require drilling additional holes through the mailbox to fit the platform. See ALIGNMENT DETAIL.
7. Attach a newspaper box to the pipe with two 1 3/4" muffler clamps spaced 4" apart. Newspaper boxes must not extend beyond the front of the mailbox when the mailbox door is closed.

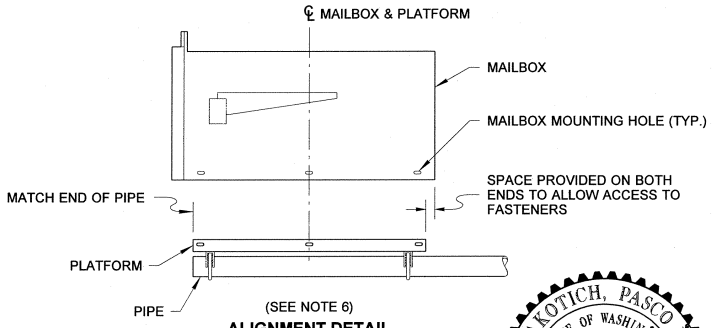

ALIGNMENT DETAIL
SIDE VIEW

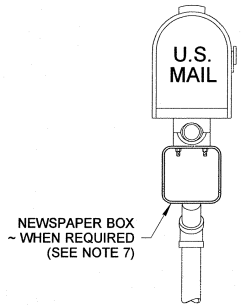

NEWSPAPER BOX ATTACHMENT DETAIL
ELEVATION VIEW

BAKOTICH, PASCO M.
STATE OF WASHINGTON
11/7/08
24557
REGISTERED
PROFESSIONAL ENGINEER

MAILBOX SUPPORT TYPE 3

STANDARD PLAN H-70.30-01

SHEET 1 OF 2 SHEETS

APPROVED FOR PUBLICATION

STATE DESIGN ENGINEER — DATE 11/7/08

Washington State Department of Transportation

DRAWN BY: MARK SUJKA

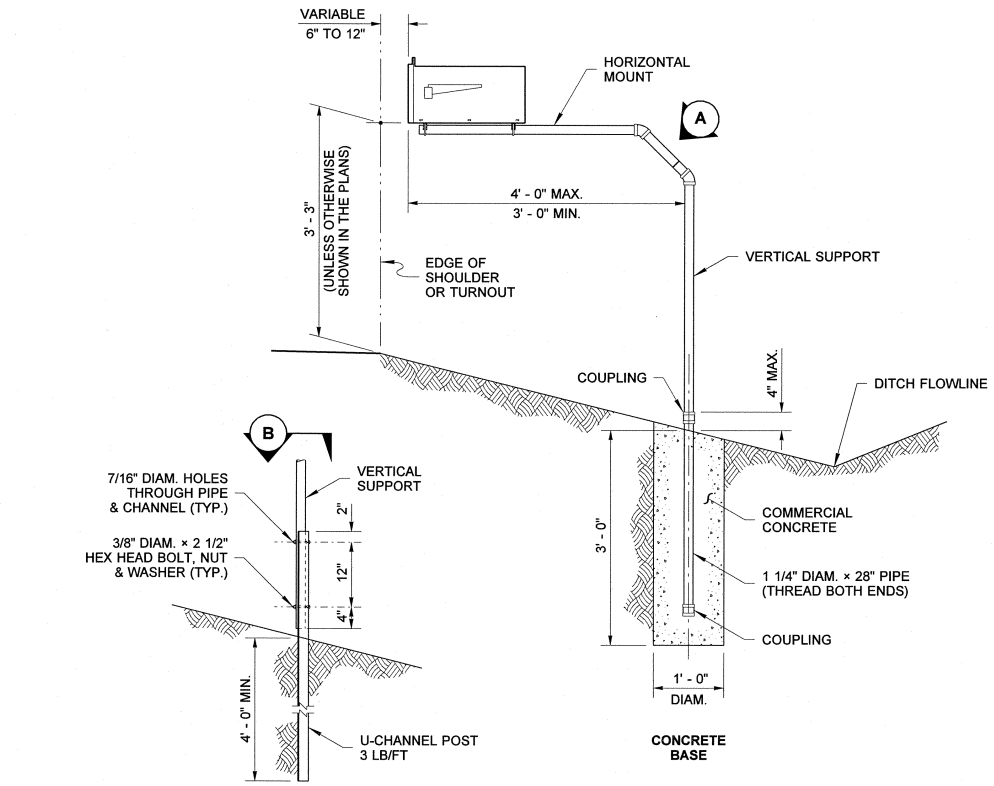

PLACEMENT DETAIL
SECTION VIEW

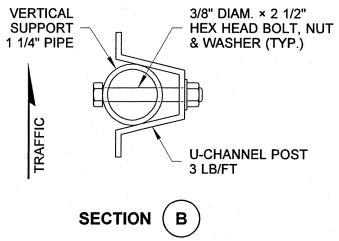

SECTION (B)

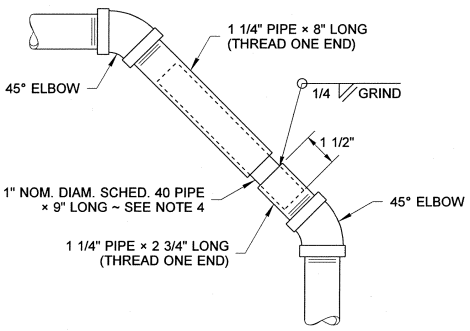

PIPE FITTING ANGLES

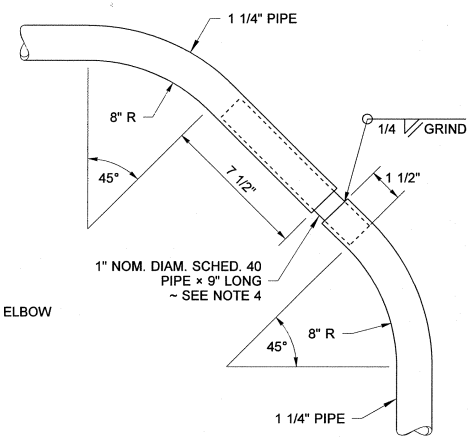

PIPE BENDING ANGLES

DETAIL (A)

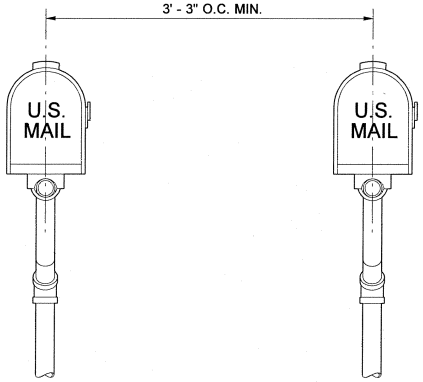

SPACING DETAIL
ELEVATION VIEW

MAILBOX SUPPORT TYPE 3

STANDARD PLAN H-70.30-01

SHEET 2 OF 2 SHEETS

APPROVED FOR PUBLICATION

STATE DESIGN ENGINEER — DATE 11/7/08

Washington State Department of Transportation

This page left blank intentionally.

NOTES

1. Where pad or pedestal mounts are located in a sidewalk, construct mount top flush with sidewalk grade, omitting chamfer where top and sidewalk abut.
2. Pad mount design is typical.
3. Place a silicone seal between the cabinet foundation and the cabinet for the pad mount design.

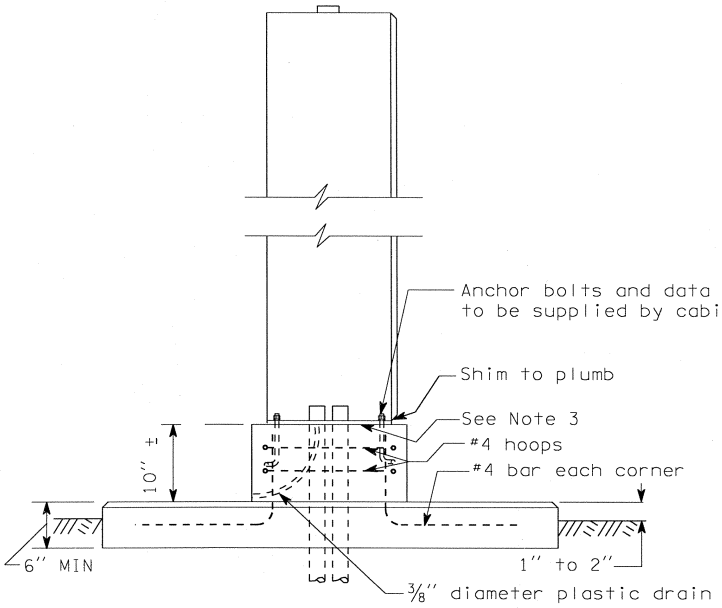

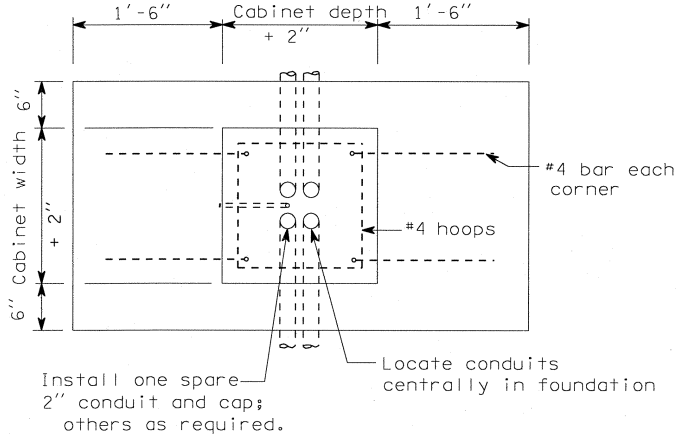

PAD MOUNT

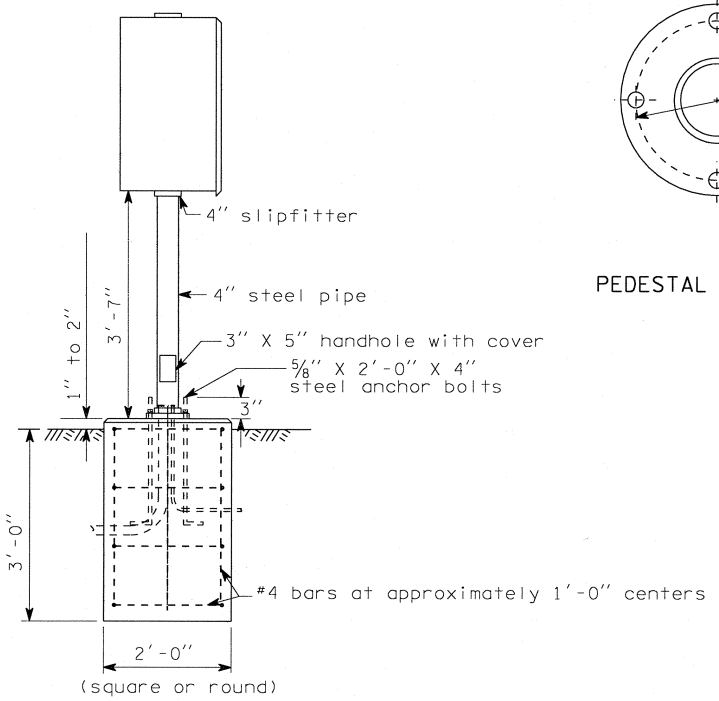

PEDESTAL MOUNT

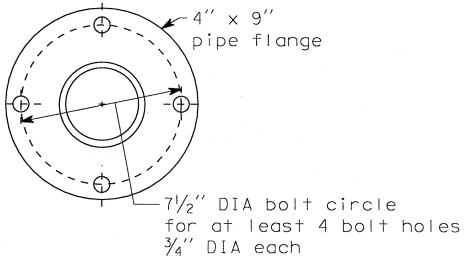

PEDESTAL BASE DETAILS

DAVID K. PEACH
STATE OF WASHINGTON
00011089
REGISTERED
PROFESSIONAL ENGINEER
4/23/98
EXPIRES JUNE 4, 1999

CABINET FOUNDATION DETAILS

STANDARD PLAN J-6c

APPROVED FOR PUBLICATION
Clifford E. Mansfield 4/24/98
DEPUTY STATE DESIGN ENGINEER DATE
WASHINGTON STATE DEPARTMENT OF TRANSPORTATION
OLYMPIA, WASHINGTON

TYPE PPB, PS, & I STANDARD DETAILS

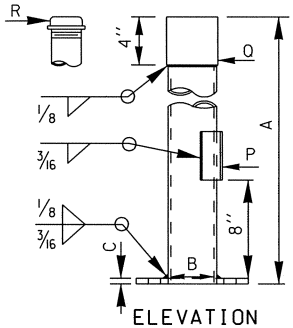

ELEVATION

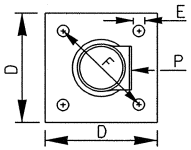

PLAN

ANCHOR BOLT, NUT, & WASHER SIZES		
MARK	STANDARD	DIMENSIONS
S	TYPE PPB	4 - 1/2" DIA x 12" x 2"
S	TYPE PS & I	4 - 3/4" DIA x 30" x 4"
S	TYPE FB & RM	3 - 3/4" DIA x 30" x 4"

SIGNAL STANDARD TYPE DESIGNATIONS

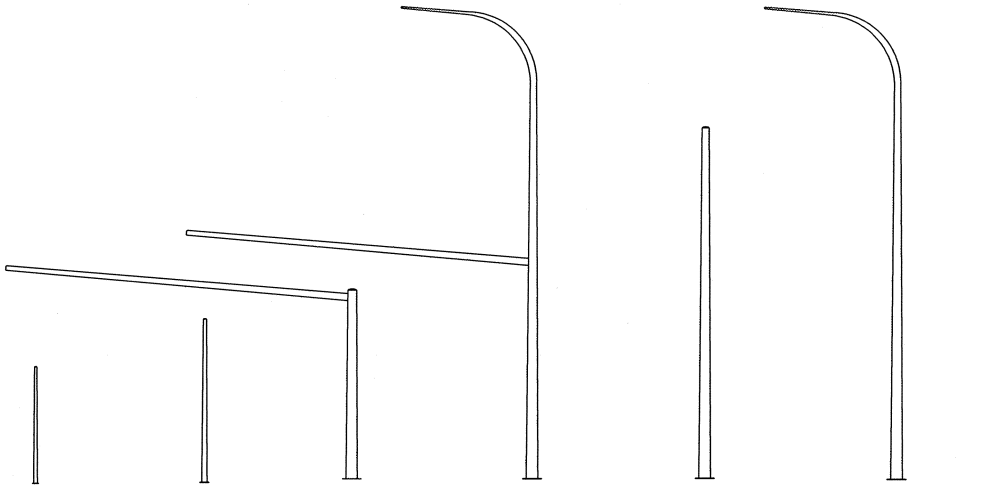

TYPE PPB PED. PUSH BUTTON POST

TYPE PS PED. HEAD STANDARD

TYPE I & RM VEHICLE HEAD AND RAMP METER STANDARD

TYPE FB FLASHING BEACON STANDARD

TYPE II MAST ARM STANDARD

TYPE III LIGHTING AND MAST ARM STANDARD

TYPE IV STRAIN POLE STANDARD

TYPE V LIGHTING AND STRAIN POLE STANDARD

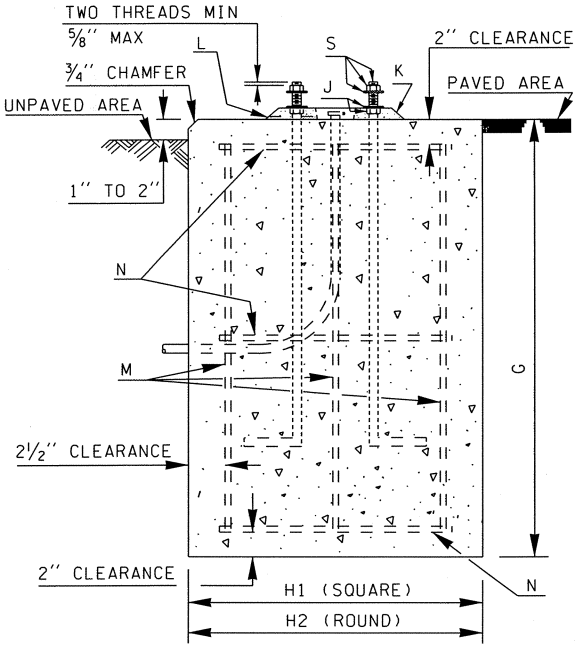

FOUNDATION DETAILS

TYPE PPB, PS, I, RM & FB STANDARD DIMENSION CHART						
MARK	ITEM	TYPE PPB	TYPE PS	TYPE I	TYPE RM	TYPE FB
A	HEIGHT	4'-6"	8'-0"	10'-0"	SEE SHEET 2	SEE SHEET 2
B	POLE BASE DIA	2 1/2"	*	*	*	*
C	PLATE THICKNESS	1/2"	1/2"	1/2"	SEE SHEET 2	SEE SHEET 2
D	PLATE WIDTH	5"	9"	9"	SEE SHEET 2	SEE SHEET 2
E	HOLE DIA	5/8"	1"	1"	SEE SHEET 2	SEE SHEET 2
F	BOLT CIRCLE	4 1/2"	8 1/2"	8 1/2"	SEE SHEET 2	SEE SHEET 2
G	FOUNDATION DEPTH	1'-6"	3'-0"	3'-0"	3'-0"	3'-0"
H1	FOUNDATION WIDTH	1'-6"	2'-0"	2'-0"	2'-0"	2'-0"
H2	FOUNDATION DIA	2'-0"	2'-3"	2'-3"	2'-3"	2'-3"
J	NUT & WASHER	Four 1/2"	3/4"	3/4"	3/4"	3/4"
K	GROUT PAD THICKNESS	NONE	**	**	SEE SHEET 2	SEE SHEET 2
L	PLASTIC DRAIN TUBE DIA	NONE	3/8"	3/8"	3/8"	3/8"
M	VERTICAL RE-BAR	NONE	Eight #4	Eight #4	Eight #4	Eight #4
N	HORIZ. RE-BAR HOOP	NONE	Three #4	Three #4	Three #4	Three #4
P	HANDHOLE SIZE	NONE	3 1/2" x 4"	3 1/2" x 4"	3 1/2" x 4"	3 1/2" x 4"
Q	SLIPFITTER DIA (I.D.)	NONE	4"	4"	4"	4"
R	CAP DIA	2 1/2"	NONE	NONE	NONE	NONE

* TAPERED ROUND OR OCTAGONAL SHAFT, 11 GAGE, 4" OD AT SLIPFITTER WELD. TAPER = 0.14 INCHES/FT.

** LEVELING NUT HEIGHT 1" MAXIMUM.
LEVELING NUTS NOT REQUIRED FOR TYPE PPB STANDARD

9/5/2001
TOBY D. RICKMAN
STATE OF WASHINGTON
24655
REGISTERED
PROFESSIONAL ENGINEER

EXPIRES OCTOBER 26, 2002

SIGNAL STANDARD TYPE DESIGNATIONS AND TYPE PPB, PS, I, RM, & FB DETAILS

STANDARD PLAN J-7a

SHEET 1 OF 2 SHEETS

APPROVED FOR PUBLICATION

Harold Petrufeso 9.12.01

STATE DESIGN ENGINEER DATE

Washington State Department of Transportation

This page left blank intentionally.

DRAWN BY: ELENA BRUNSTEIN

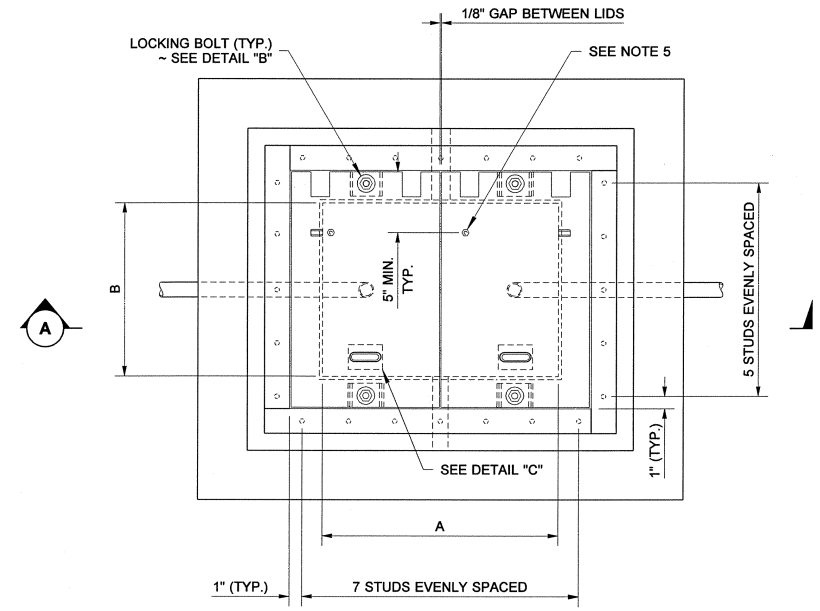

TOP VIEW

MARK	ITEM	BOX TYPE		
		TYPE 4	TYPE 5	TYPE 6
A	BOX INSIDE LENGTH	19"	28"	36"
B	BOX INSIDE WIDTH	14"	17"	24"
C	LID LENGTH	19"	22"	29"
D	LID WIDTH	11 15/16"	16 7/16"	20 7/16"
W	STIFFENER SPACING	4"	5 1/2"	6 3/4"
X	STIFFENER LENGTH	3 1/16"	4 9/16"	5 43/48"
Y	STIFFENER SPACING	6"	7"	9 1/2"
Z	STIFFENER LENGTH	18 1/4"	21 1/4"	28 1/4"
CAPACITY ~ CONDUIT DIAM.		6"	12"	24"

JUNCTION BOX DIMENSION TABLE

NOTES

1. All box dimensions are approximate. Exact configurations vary among manufacturers.
2. All lid thicknesses are minimum. The diamond pattern shall be 3/32" minimum thick.
3. Lid stiffener plates shall bear on frame. Mill to bearing seat and perimeter bar for full even contact after fabrication of frame and lid. Lid and frame units with uneven bearing will be rejected.
4. The installed lid and frame shall fit with full even contact around the perimeter of a junction box after installation. Care shall be taken to prevent debris accumulation on the contact surfaces.
5. A 1/4-20NC × 3/4" S.S. ground stud shall be welded to the bottom of each lid; include S.S. nut and flat washer.
6. The hinges shall allow the lids to open 180°.
7. Bolts and nuts shall be liberally coated with anti-seize compound.
8. Connect a bonding jumper to steel conduit bushing for GRS conduit; connect to equipment grounding conductor for PVC conduit. As an alternative, the bonding jumper shall be attached to the front face of the hinge pocket with a 5/16-20NC × 3/4" bolt, S.S. nut, and flat washer. Bonding Jumper shall be #8 min. × 4' of tinned braided copper.
9. The System Identification letters shall be 1/8" line thickness formed by engraving, stamping, or with a S.S. weld bead. Grind off diamond pattern before forming letters. See System Identification Detail.
10. A 1% tolerance is allowed for all dimensions.
11. See the Standard Specifications for class of concrete.

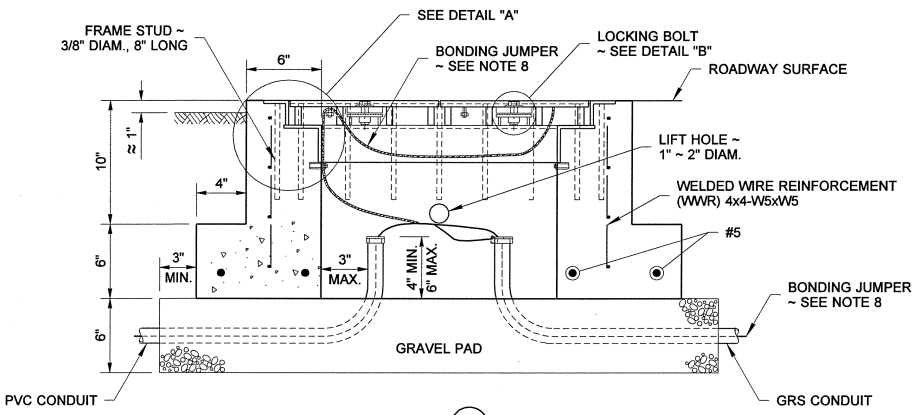

SECTION (A)

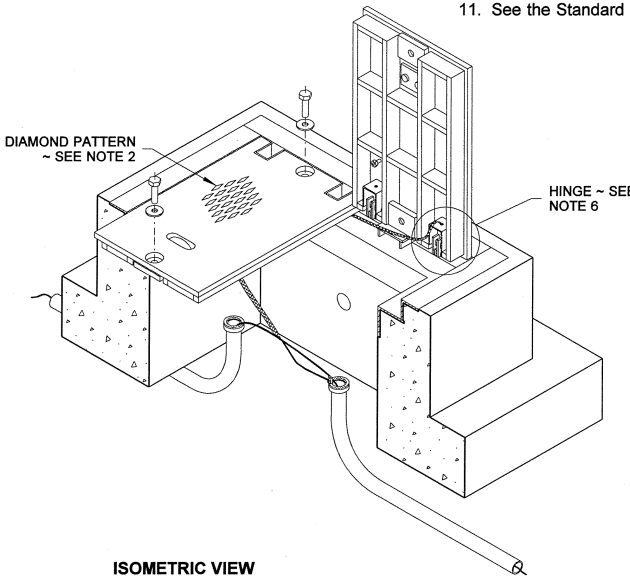

ISOMETRIC VIEW

R. SCOTT MILLER
STATE OF WASHINGTON
28680
REGISTERED
PROFESSIONAL ENGINEER
8-31-05

EXPIRES MAY 5, 2007

HEAVY DUTY JUNCTION BOX TYPES 4, 5, & 6

STANDARD PLAN J-11b

SHEET 1 OF 2 SHEETS

APPROVED FOR PUBLICATION

Harold Peterson 9.2.05

STATE DESIGN ENGINEER — DATE

Washington State Department of Transportation

DRAWN BY: ELENA BRUNSTEIN

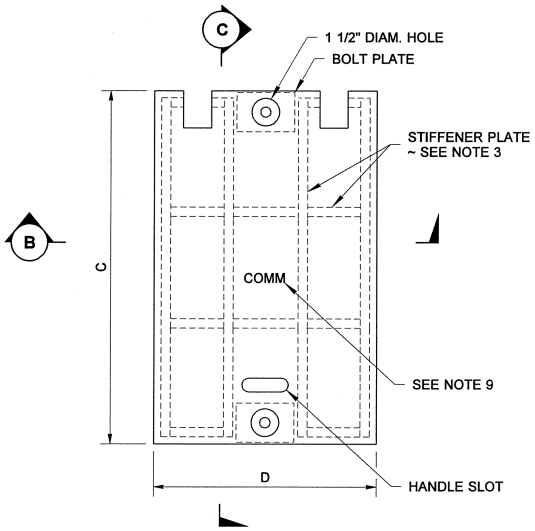

PLAN VIEW
LID

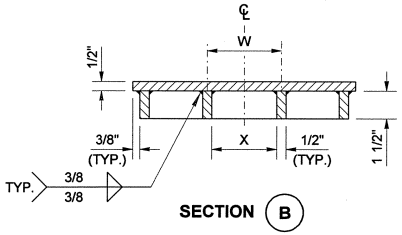

SECTION (B)

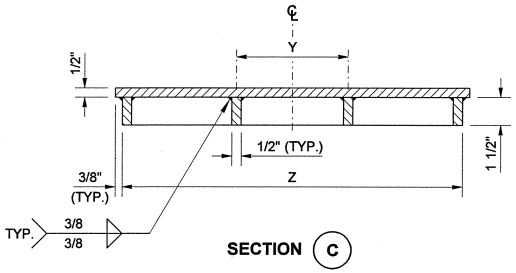

SECTION (C)

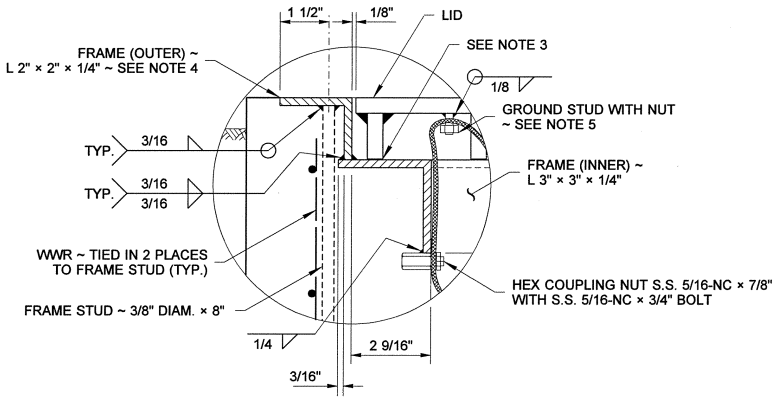

DETAIL "A"

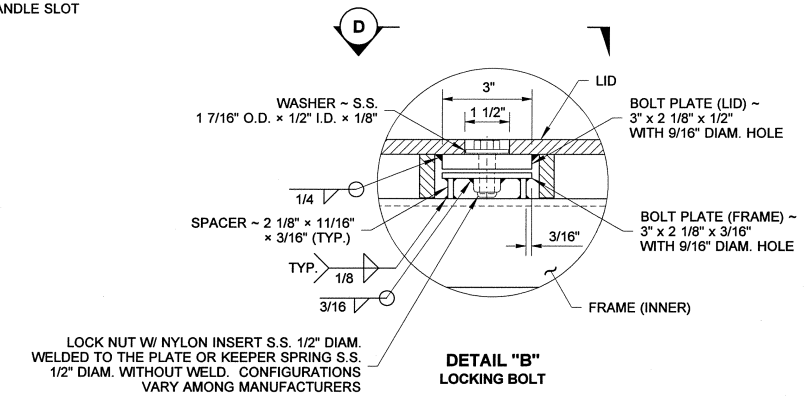

DETAIL "B"
LOCKING BOLT

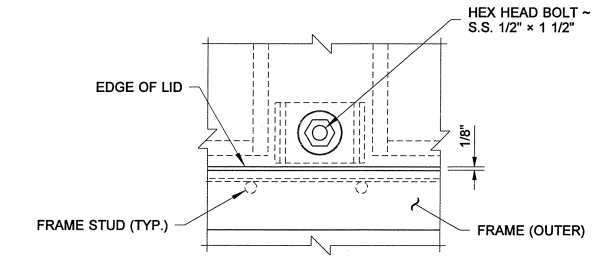

VIEW (D)

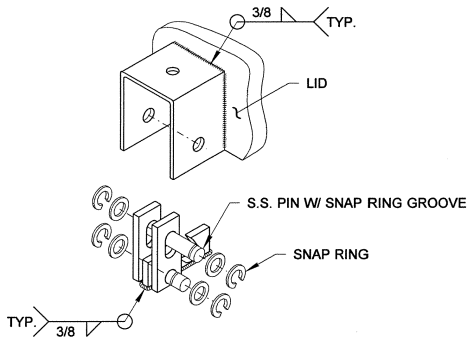

DETAIL "D"
HINGE

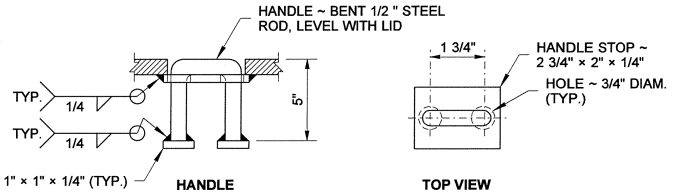

HANDLE **TOP VIEW**

DETAIL "C"

SYSTEM IDENTIFICATION DETAIL

≈ 1" (TYP.) ≈ 1" (TYP.)

ITS
INTELLIGENT TRANSPORTATION SYSTEM

COMM
COMMUNICATION SYSTEM

LT
LIGHTING SYSTEM

TS
TRAFFIC SIGNAL SYSTEM

TEL
TELEPHONE SYSTEM

R. SCOTT ZELLER
STATE OF WASHINGTON
28680
REGISTERED
PROFESSIONAL ENGINEER
8/31/05

EXPIRES MAY 5, 2007

HEAVY DUTY JUNCTION BOX TYPES 4, 5, & 6

STANDARD PLAN J-11b

SHEET 2 OF 2 SHEETS

APPROVED FOR PUBLICATION

Harold Peterson 9.2.05
STATE DESIGN ENGINEER DATE

Washington State Department of Transportation

DRAWN BY: MARK SUJKA

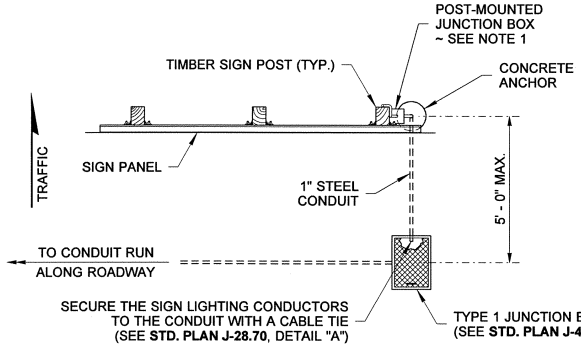

PLAN

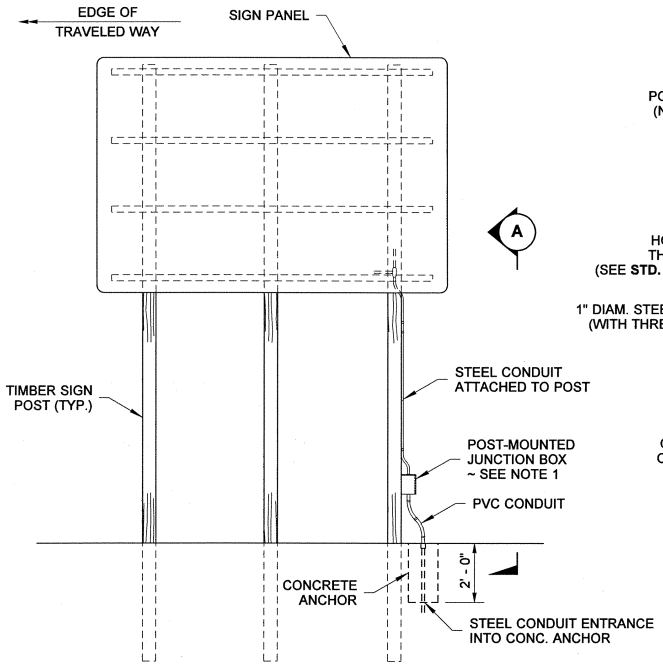

ELEVATION

JUNCTION BOX ATTACHMENT TO TIMBER SIGN SUPPORT

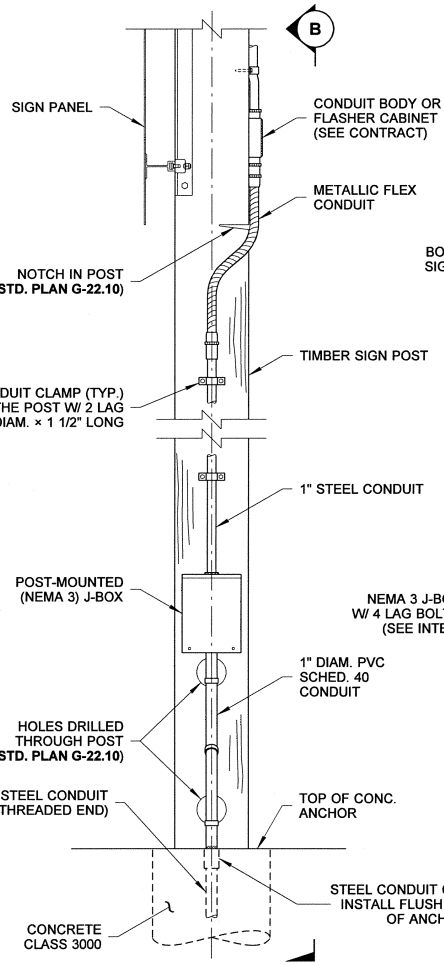

DETAIL VIEW (A)

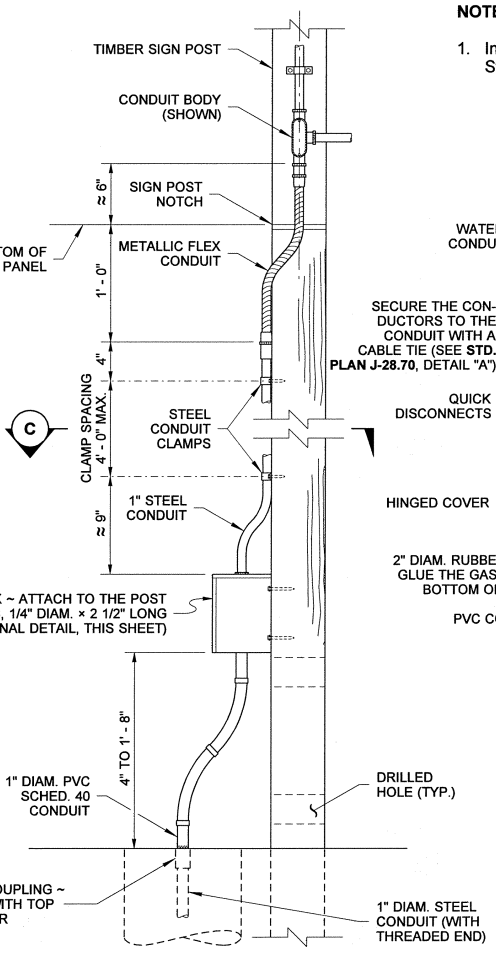

DETAIL VIEW (B)

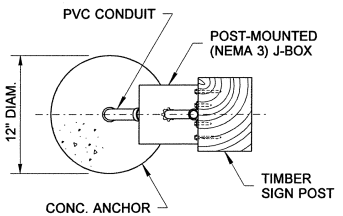

SECTION (C)

NOTE

1. Install the Junction Box on the Timber Sign Post, or the Steel Sign Support, that is farthest from the roadway.

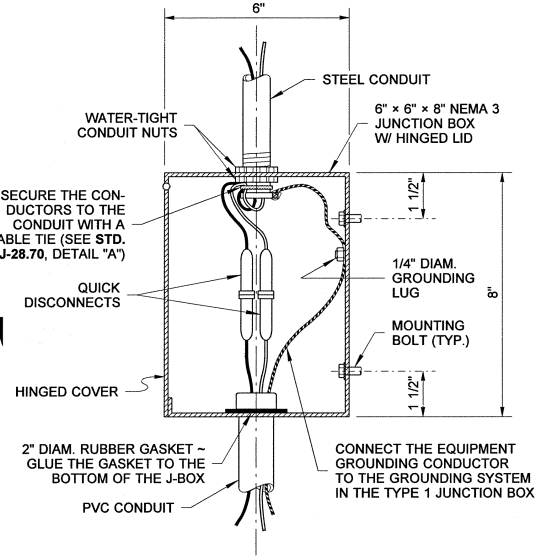

JUNCTION BOX INTERNAL DETAIL

SIGN POST-MOUNTED JUNCTION BOX

STANDARD PLAN J-12

SHEET 1 OF 2 SHEETS

APPROVED FOR PUBLICATION

STATE DESIGN ENGINEER — DATE 2/10/09

Washington State Department of Transportation

DRAWN BY: MARK SUJKA

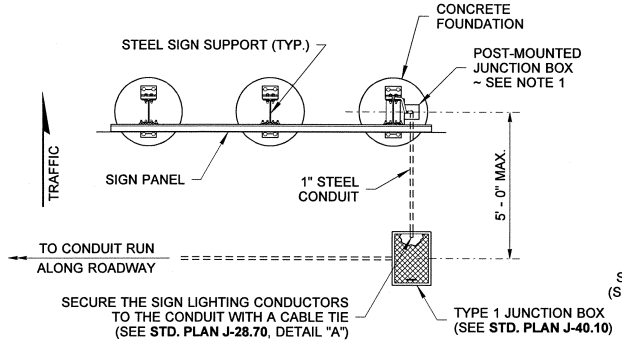

PLAN

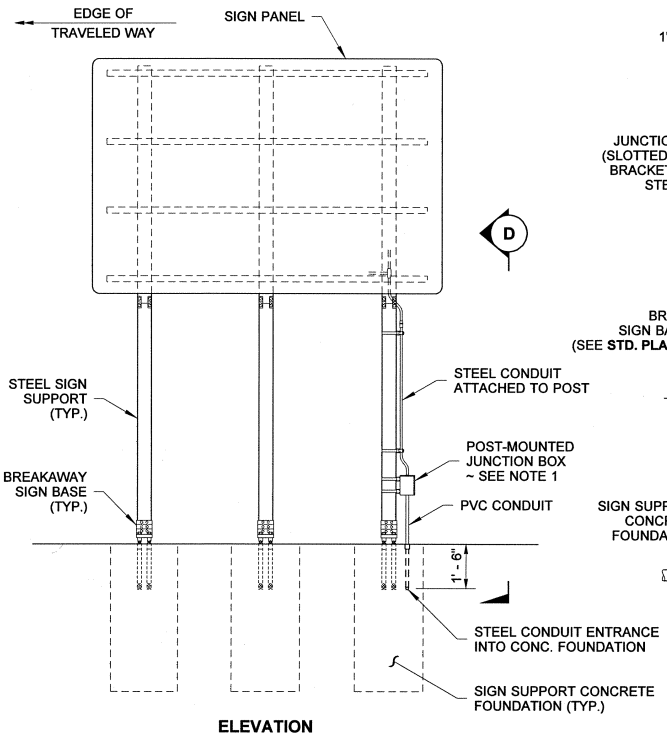

ELEVATION

JUNCTION BOX ATTACHMENT TO STEEL SIGN SUPPORT

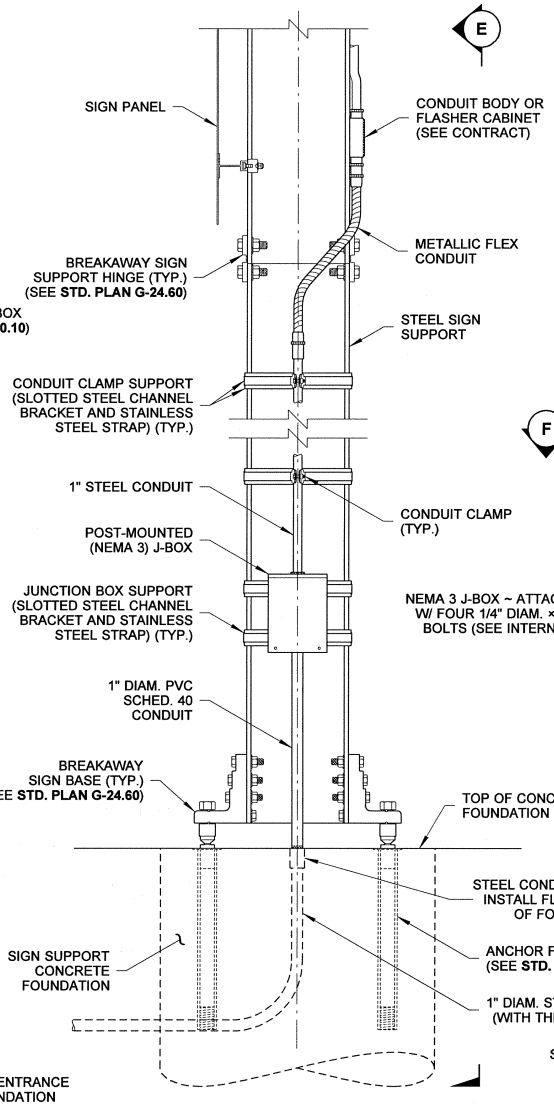

DETAIL VIEW (D)

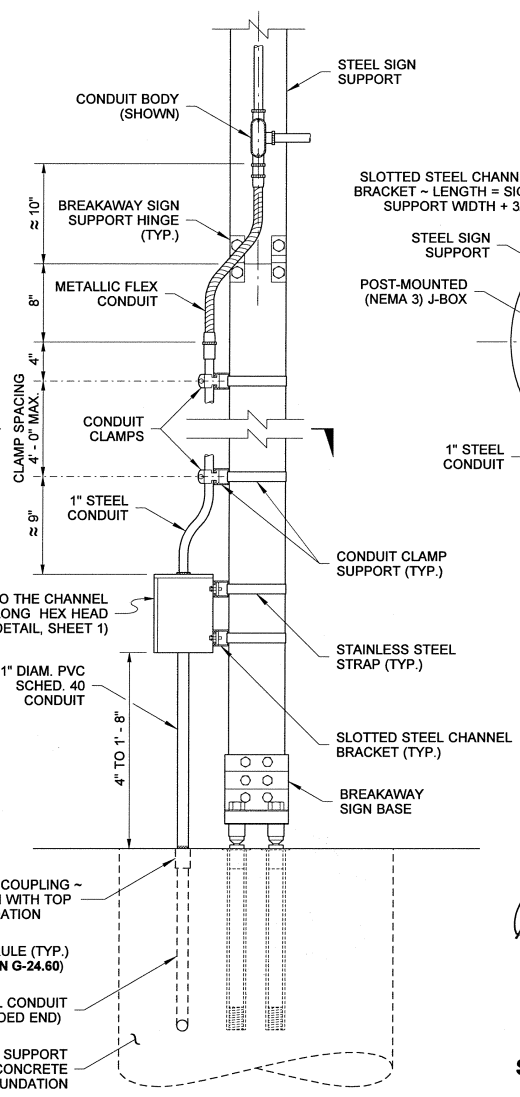

DETAIL VIEW (E)

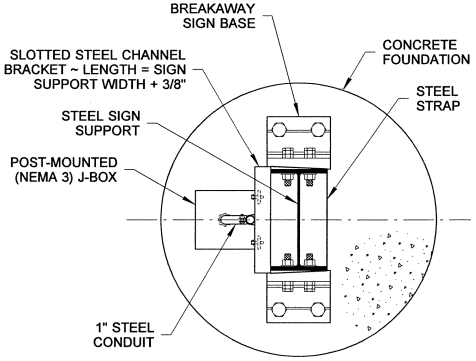

SECTION (F)

SIGN POST-MOUNTED JUNCTION BOX

STANDARD PLAN J-12

SHEET 2 OF 2 SHEETS

APPROVED FOR PUBLICATION

STATE DESIGN ENGINEER — DATE 2/10/09

Washington State Department of Transportation

DRAWN BY: ELENA BRUNSTEIN

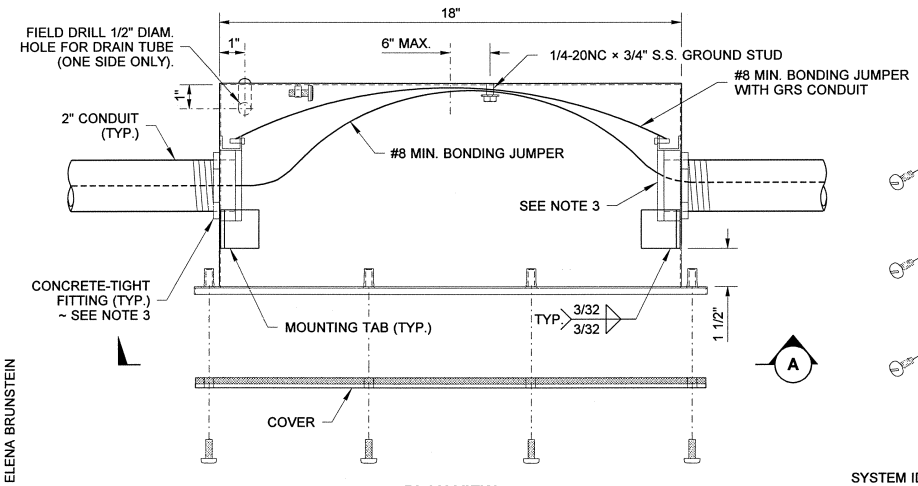

PLAN VIEW

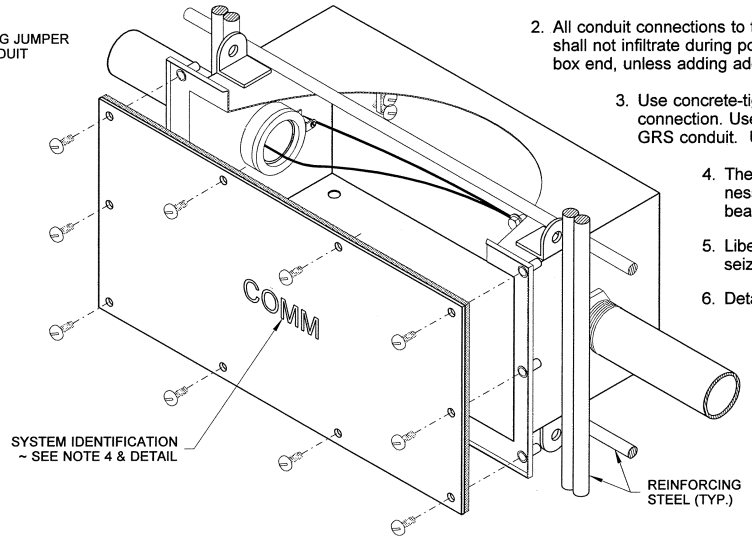

ISOMETRIC VIEW
SHOWN MOUNTED IN REINFORCING STEEL

NOTES

1. The Junction Box shall be of type 304 stainless steel, welded seam construction: #12 gage backbox with #2B finish, #12 gage cover with #4 finish, and #12 gage mounting tabs.
2. All conduit connections to the Junction Box shall be concrete-tight (wet concrete shall not infiltrate during pour). Field drill or punch the holes in the center of the box end, unless adding additional conduit. (See SECTION "B")
3. Use concrete-tight fittings on the outside of the junction box conduit connection. Use an insulated, grounded end bushing on the inside for GRS conduit. Use an end bell bushing on the inside for PVC conduit.
4. The System Identification letters shall be 1/16" line thickness formed by engraving, stamping, or with a S.S. weld bead. See Detail.
5. Liberally coat the threads of the cover fasteners with anti-seize compound during construction & before final closure.
6. Details shown for box installation in stationary forms.

SYSTEM IDENTIFICATION DETAIL

≈ 1" (TYP.) ≈ 1" (TYP.)

ITS
INTELLIGENT TRANSPORTATION SYSTEM

COMM
COMMUNICATION SYSTEM

LT
LIGHTING SYSTEM

TS
TRAFFIC SIGNAL SYSTEM

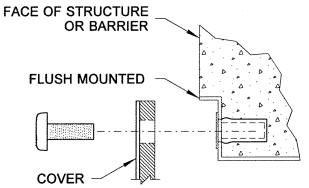

MOUNTING DETAIL
SECTION VIEW

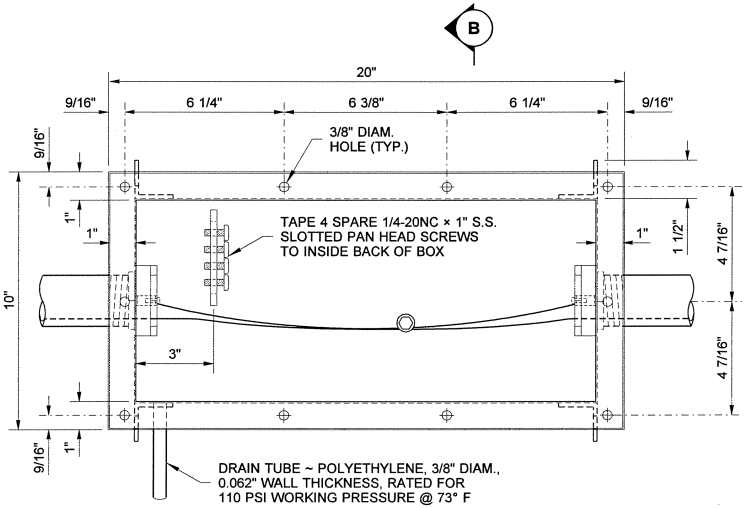

VIEW (A)

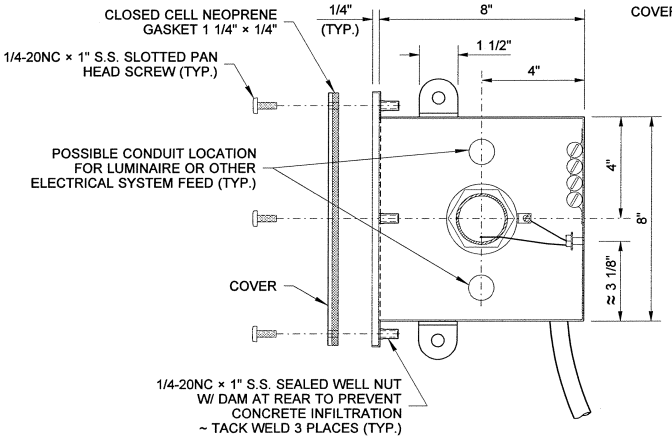

SECTION (B)

R. SCOTT ZELLER
STATE OF WASHINGTON
28680
REGISTERED
PROFESSIONAL ENGINEER
3-3-05
EXPIRES MAY 5, 2005

JUNCTION BOX TRAFFIC BARRIER MOUNTED

STANDARD PLAN J-16a

SHEET 1 OF 1 SHEET

APPROVED FOR PUBLICATION
Harold Petersen 3-4-05
STATE DESIGN ENGINEER DATE
Washington State Department of Transportation

DRAWN BY: ELENA BRUNSTEIN

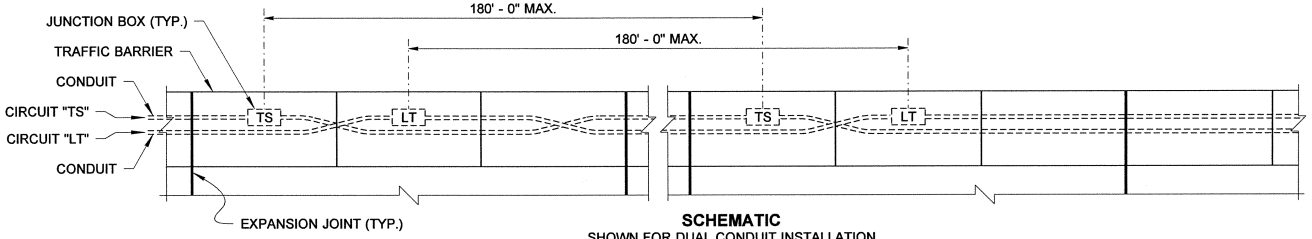

SCHEMATIC
SHOWN FOR DUAL CONDUIT INSTALLATION
~ CIRCUIT TYPES MAY VARY

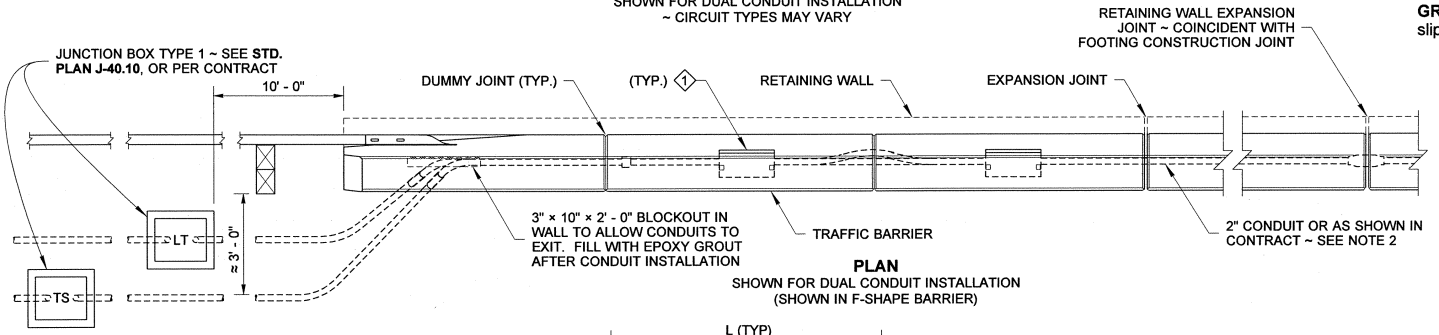

PLAN
SHOWN FOR DUAL CONDUIT INSTALLATION
(SHOWN IN F-SHAPE BARRIER)

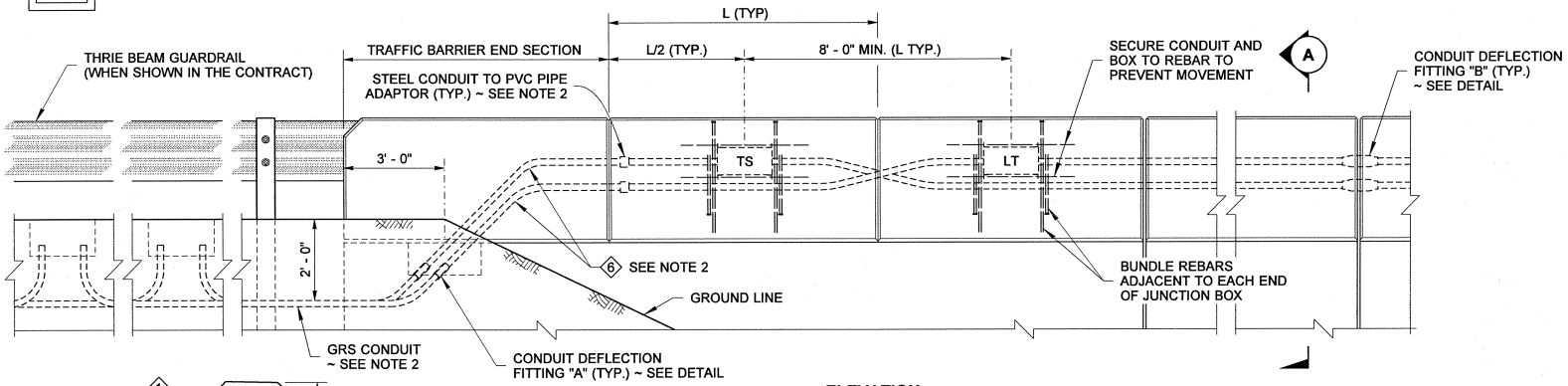

ELEVATION
SHOWN FOR DUAL CONDUIT INSTALLATION
(SHOWN IN F-SHAPE BARRIER)

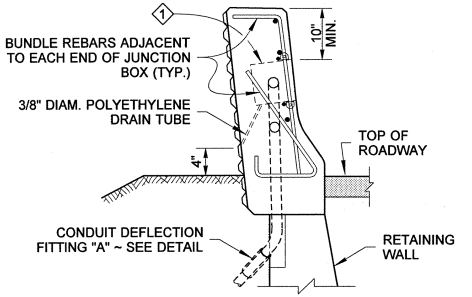

SECTION (A)

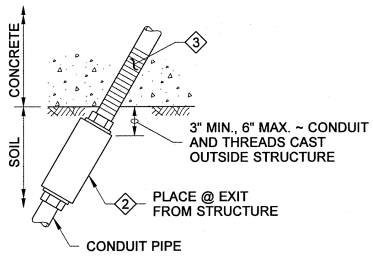

CONDUIT DEFLECTION FITTING "A" DETAIL

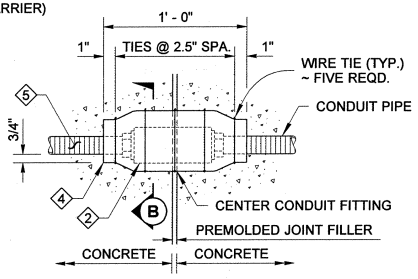

CONDUIT DEFLECTION FITTING "B" DETAIL

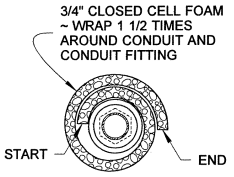

SECTION (B)

NOTES

1. Conduit pipes placed in retaining wall traffic barriers shall be fitted with Conduit Deflection (CD) Fittings spaced at 120' maximum. The CD Fittings shall be placed at the traffic barrier open joints that coincide with the retaining wall stem expansion joints nearest to the transverse construction joints in the wall footing.

2. Install Galvanized Rigid Steel (GRS) conduit between the Junction Box(es) Type 1 and the CD Fitting(s) "A". GRS conduit shall also be used from the CD Fitting(s) "A" to the PVC adaptor in the barrier.

   PVC Conduit may be used only in stationary-form barriers. Connect to GRS using a PVC adaptor.

   GRS Conduit may be used in stationary-form barriers, but it shall be used in slipform barriers.

KEY NOTES

1. Junction Box ~ 8" × 8" × 18" NEMA 4X in stationary-form barrier, adjustable NEMA 3R in slipform barrier (junction box can be recessed up to 1/8"). **See Standard Plan J-16a.**
2. Conduit Fitting with Internal Bonding Jumper ~ Type DX for deflection of 30° & 3/4" movement.
3. Where conduit exits from a structure, wrap the conduit pipe for 1' - 0" on each side from the exiting point. Pipe-wrap tape shall be 2" wide, 20 mil thick, & installed w/ 1" minimum overlap.
4. 1' - 0" long, 3/4" thick expanded closed cell foam sleeve around conduit and conduit fitting. After placing wire ties, duct tape seams and ends to seal and prevent concrete from bonding with fitting and conduit.
5. Where conduit in a structure is routed across a joint, wrap the conduit pipe for 1' - 0" on each side of joint. Pipe-wrap tape shall be 2" wide, 20 mil thick, & installed w/ 1" min. overlap.
6. 10' long section of GRS Conduit

CONDUIT INSTALLATION IN TRAFFIC BARRIER ON RETAINING WALL

STANDARD PLAN J-16b

SHEET 1 OF 1 SHEET

APPROVED FOR PUBLICATION

STATE DESIGN ENGINEER — DATE 2/10/09

Washington State Department of Transportation

DRAWN BY: ELENA BRUNSTEIN

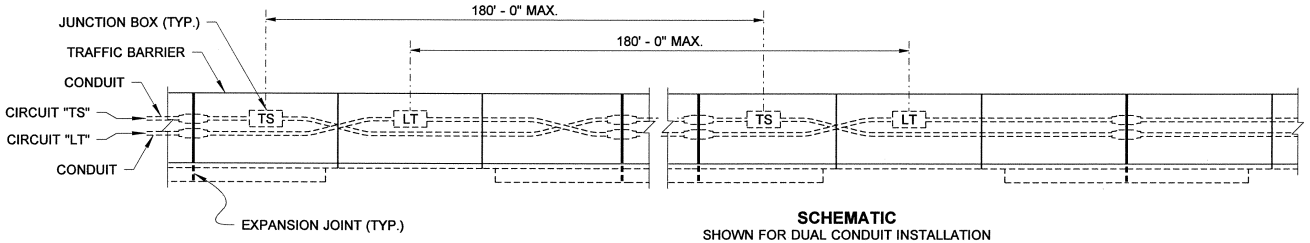

SCHEMATIC
SHOWN FOR DUAL CONDUIT INSTALLATION
~ CIRCUIT TYPES MAY VARY

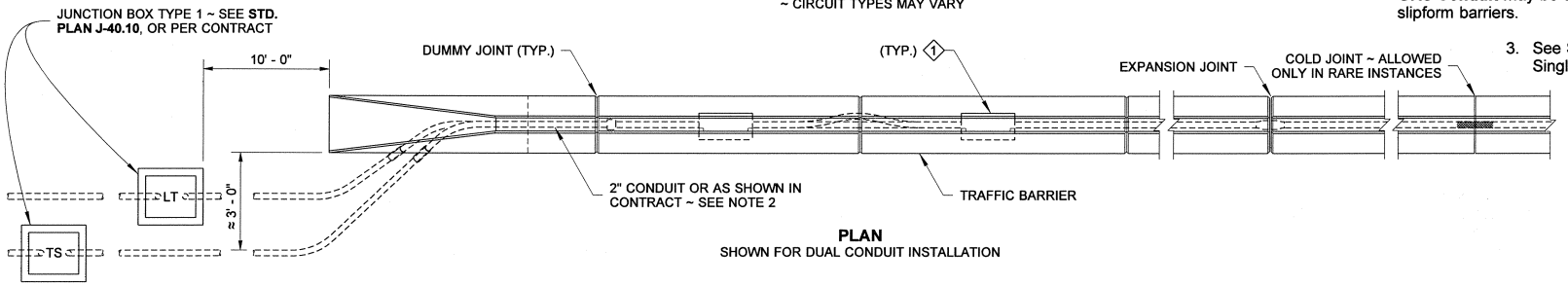

PLAN
SHOWN FOR DUAL CONDUIT INSTALLATION

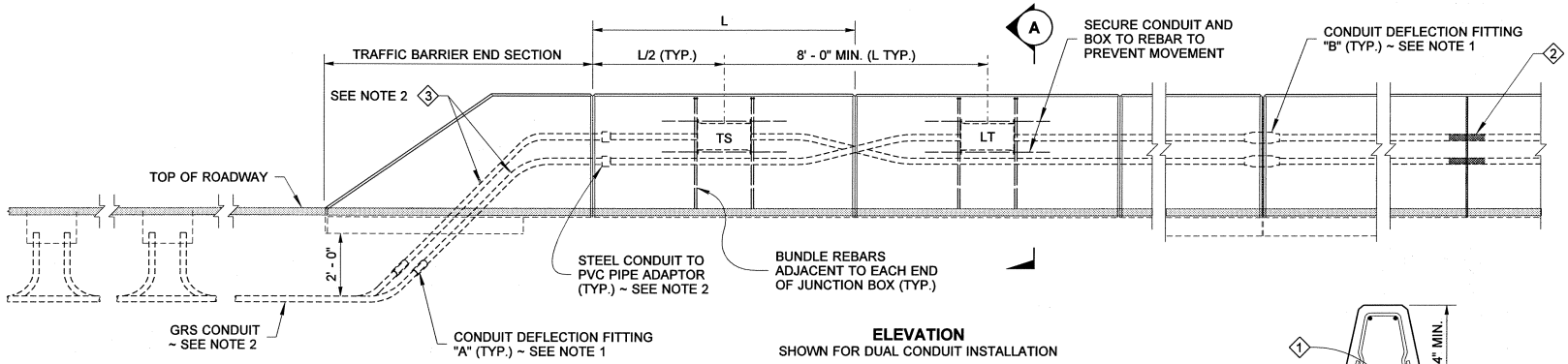

ELEVATION
SHOWN FOR DUAL CONDUIT INSTALLATION

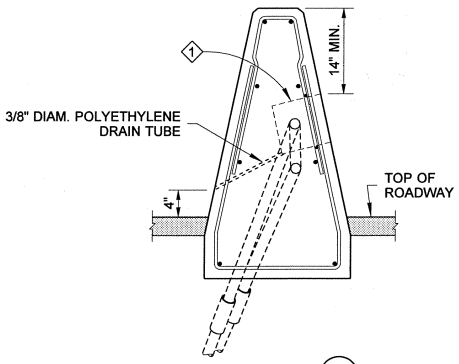

SECTION A

NOTES

1. Install a Conduit Deflection (CD) Fitting "A" at the exit from the barrier. Install a Conduit Deflection Fitting "B" to connect conduit ends at each concrete barrier expansion joint. See **Standard Plan J-16b** for Conduit Deflection Fitting details.
2. Install Galvanized Rigid Steel (GRS) conduit between the Junction Box(es) Type 1 and the CD Fitting(s) "A". GRS conduit shall also be used from the CD Fitting(s) "A" to the PVC adaptor in the barrier.

   PVC Conduit may be used only in stationary-form barriers. Connect to GRS using a PVC adaptor.

   GRS Conduit may be used in stationary-form barriers, but it shall be used in slipform barriers.
3. See **Standard Plan C-14a** for additional information on Single Slope Concrete Barrier.

KEY NOTES

1. Junction Box ~ 8" × 8" × 18" NEMA 4X in stationary-form barrier, adjustable NEMA 3R in slipform barrier (junction box can be recessed up to 1/8"). **See Standard Plan J-16a.**
2. Where conduit in a structure is routed across a cold joint with continuous reinforcing steel, install premolded joint filler and wrap the conduit pipe for 1' - 0" on each side of joint. Pipe-wrap tape shall be 2" wide, 20 mil thick, & installed w/ 1" min. overlap.
3. 10' long section of GRS Conduit.

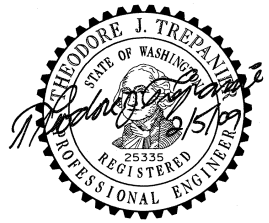

CONDUIT INSTALLATION IN SINGLE SLOPE CONCRETE BARRIER (DUAL FACE) STANDARD PLAN J-16c

SHEET 1 OF 1 SHEET

APPROVED FOR PUBLICATION

STATE DESIGN ENGINEER — DATE 2/16/09

Washington State Department of Transportation

This page left blank intentionally.

DRAWN BY: BILL BERENS

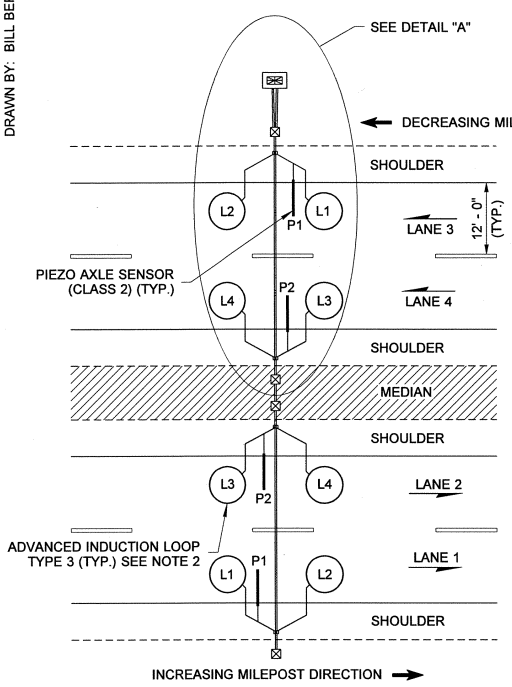

PLAN VIEW

INDUCTION LOOP / PIEZO AXLE SENSOR NUMBER IDENTIFICATION

Lane 1 - (drive lane) ~ Loop L1, Piezo P1, Loop L2

Lane 2 - (pass lane) ~ Loop L3, Piezo P2, Loop L4

Lane 3 - (drive lane) ~ Loop L1, Piezo P1, Loop L2

Lane 4 - (pass lane) ~ Loop L3, Piezo P2, Loop L4

TYPICAL 4 LANE FREEWAY WITH MEDIAN

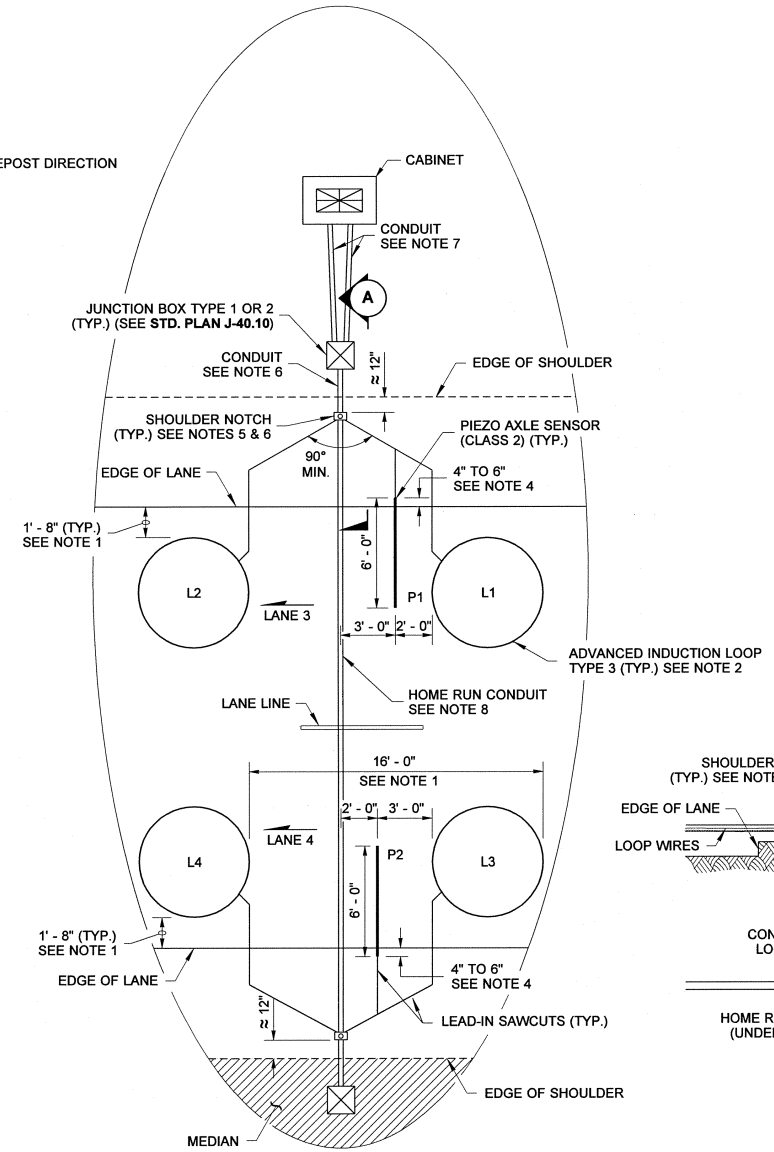

DETAIL "A"

NOTES

1. The Traffic Data Collection Loop spacing shall be 16' - 0" from leading edge to leading edge. The loops shall be centered inside lanes without an adjacent shoulder; the loops in lanes adjacent to shoulders, including the median shoulder, shall be located 1' - 8" from the edge of lane, see Detail "A".
2. Type 2 Advanced Induction Loops may also be used, see **Standard Plan J-8b**.
3. The loops and axle sensors shall be cut in the final lift of asphalt.
4. For concrete pavement lanes with asphalt shoulders, install all of the Piezo sensor and splice in the concrete lane. Also for concrete pavement lanes install the loops 4" to 6" away from the expansion joints.
5. The shoulder notch length along the roadway shall be 4" or the conduit size plus 2", whichever is larger. The shoulder notch width perpendicular to the roadway shall be the conduit size plus 1/4".
6. After all the wire leads are installed, seal the end of the conduit with Conduit Sealant. See the Special Provisions in the contract for the material used to fill the notch in the shoulder, or use an asphalt cold-patch.
7. Use Schedule 40 PVC conduit from the junction box to the cabinet. When there are four or more total lanes, use one conduit for each direction of travel. For conduit installation, see **Standard Specification 8-20**.
8. Use Schedule 80 PVC, HDPE, or Steel Conduit under the roadway. For conduit installation, see **Standard Specification 8-20**.
9. An inspector from the Traffic Data Office (TDO) shall be on site during all phases of the Traffic Recorder installation. The Contractor shall alert the Engineer 10 days prior to the beginning of any installation activity.
10. See **Standard Plan J-20** for Piezo Axle Sensor General Installation Instructions.

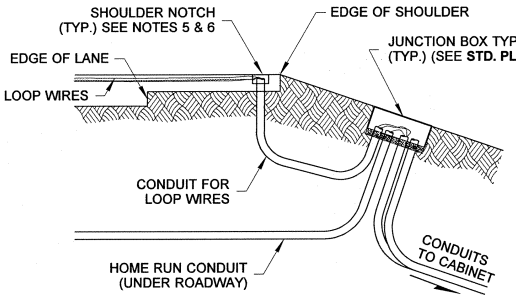

SECTION (A)

PERMANENT TRAFFIC RECORDER SITE INSTALLATIONS STANDARD PLAN J-18

SHEET 1 OF 2 SHEETS

APPROVED FOR PUBLICATION

STATE DESIGN ENGINEER — DATE 2/10/09

Washington State Department of Transportation

DRAWN BY: BILL BERENS

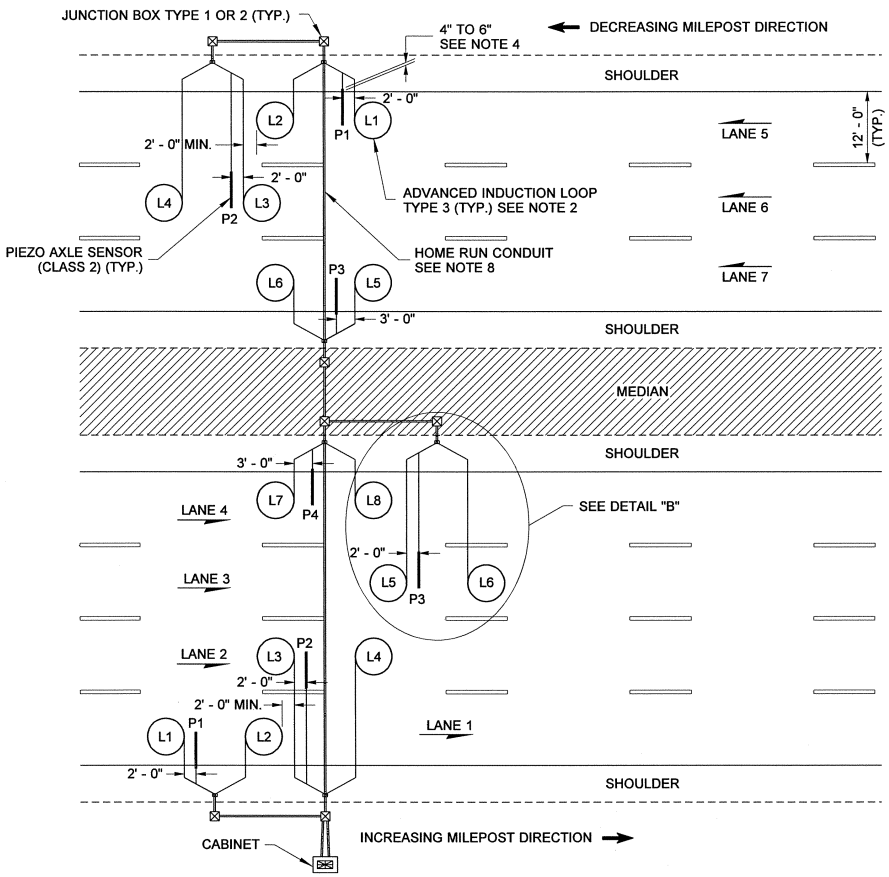

PLAN VIEW

INDUCTION LOOP / PIEZO AXLE SENSOR NUMBER IDENTIFICATION

Lane 1 - (drive lane) ~ Loop L1, Piezo P1, Loop L2

Lane 2 - (drive lane) ~ Loop L3, Piezo P2, Loop L4

Lane 3 - (drive lane) ~ Loop L5, Piezo P3, Loop L6

Lane 4 - (pass lane) ~ Loop L7, Piezo P4, Loop L8

Lane 5 - (drive lane) ~ Loop L1, Piezo P1, Loop L2

Lane 6 - (drive lane) ~ Loop L3, Piezo P2, Loop L4

Lane 7 - (pass lane) ~ Loop L5, Piezo P3, Loop L6

TYPICAL 7 LANE FREEWAY WITH MEDIAN

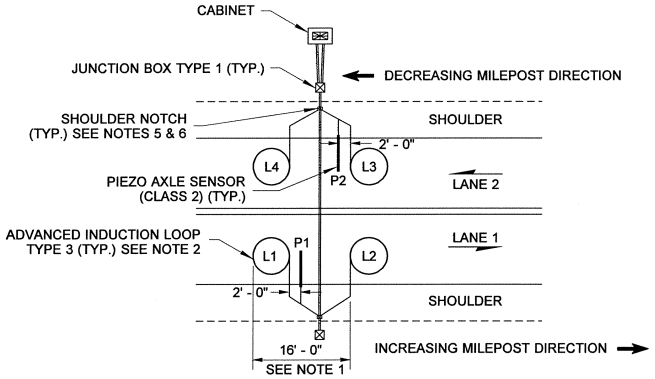

PLAN VIEW

INDUCTION LOOP / PIEZO AXLE SENSOR NUMBER IDENTIFICATION

Lane 1 - (drive lane) ~ Loop L1, Piezo P1, Loop L2

Lane 2 - (drive lane) ~ Loop L3, Piezo P2, Loop L4

TYPICAL 2 WAY ROADWAY

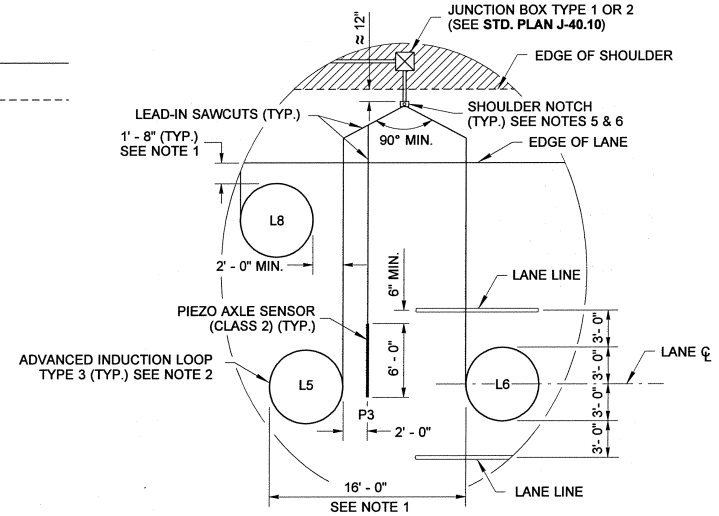

DETAIL "B"

THEODORE J. TREPANIER
STATE OF WASHINGTON
25335
REGISTERED
PROFESSIONAL ENGINEER
2/5/09

PERMANENT TRAFFIC RECORDER SITE INSTALLATIONS STANDARD PLAN J-18

SHEET 2 OF 2 SHEETS

APPROVED FOR PUBLICATION

STATE DESIGN ENGINEER — DATE 2/10/09

Washington State Department of Transportation

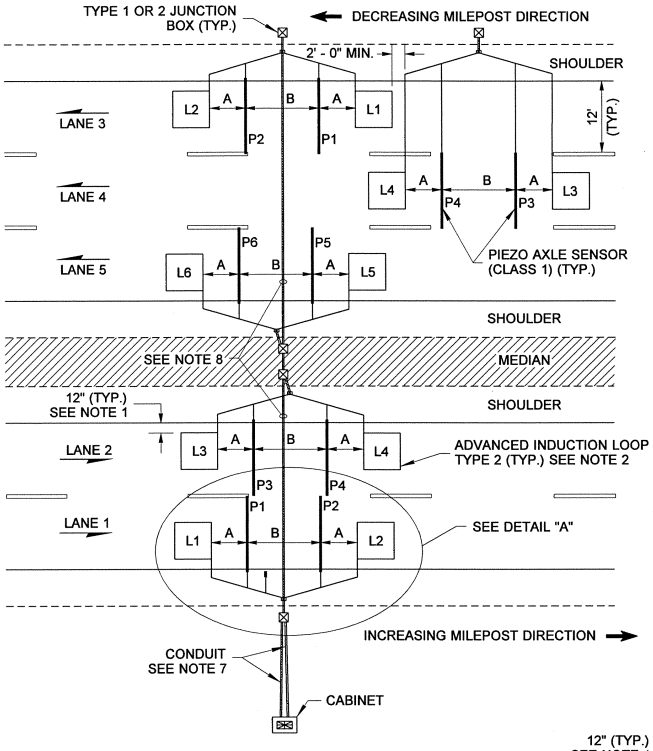

PLAN VIEW

INDUCTION LOOP / PIEZO AXLE SENSOR NUMBER IDENTIFICATION

Lane 1 - (drive lane) ~ Loop L1, Piezo P1, Piezo P2, Loop L2

Lane 2 - (pass lane) ~ Loop L3, Piezo P3, Piezo P4, Loop L4

Lane 3 - (drive lane) ~ Loop L1, Piezo P1, Piezo P2, Loop L2

Lane 4 - (drive lane) ~ Loop L3, Piezo P3, Piezo P4, Loop L4

Lane 5 - (pass lane) ~ Loop L5, Piezo P5, Piezo P6, Loop L6

TYPICAL 5 LANE FREEWAY WITH MEDIAN

INDUCTION LOOP TO PIEZO AXLE SPACING		
	A	B
RURAL	6'	12'
URBAN	2'	10'

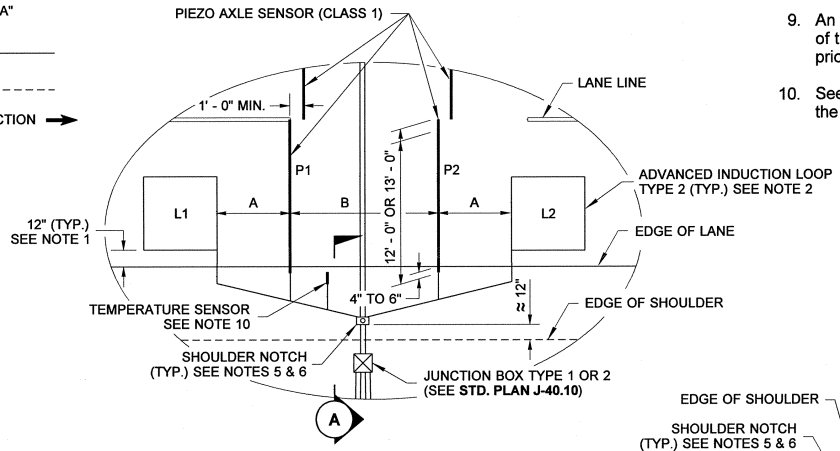

DETAIL "A"

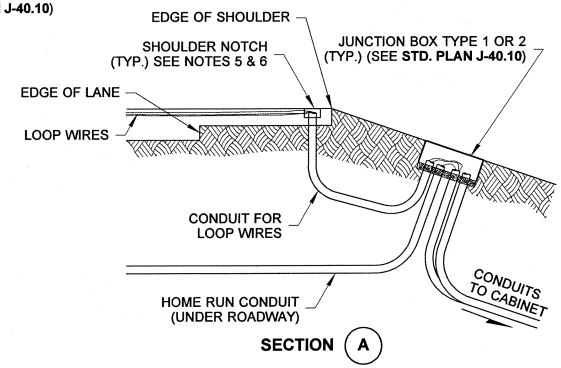

SECTION A

NOTES

1. The Traffic Data Collection Loops shall be centered inside lanes without an adjacent shoulder; the loops in lanes adjacent to shoulders, including the median shoulder, shall be located 12" from the edge of lane, see Detail "A".
2. Type 3 Advanced Induction Loops may also be used, see **Standard Plan J-8b**.
3. The loops and axle sensors shall be cut in the final lift of asphalt.
4. For concrete pavement lanes with asphalt shoulders, install all of the Piezo sensor and splice in the concrete lane. Also for concrete pavement lanes install the loops 4" to 6" away from the expansion joints.
5. The shoulder notch length along the roadway shall be 4" or the conduit size plus 2", whichever is larger. The shoulder notch width perpendicular to the roadway shall be the conduit size plus 1/4".
6. After all the wire leads are installed, seal the end of the conduit with Conduit Sealant. See the Special Provisions in the contract for the material used to fill the notch in the shoulder, or use an asphalt cold-patch.
7. Use Schedule 40 PVC conduit from the junction box to the cabinet. When there are four or more total lanes, use one conduit for each direction of travel. See **Standard Specification 8-20** for conduit installation.
8. Use Schedule 80 PVC, HDPE, or steel conduit under the roadway. See **Standard Specification 8-20** for conduit installation.
9. An inspector from the Traffic Data Office (TDO) shall be on site during all phases of the Traffic Recorder installation. The Contractor shall alert the Engineer 10 days prior to the beginning of any installation activity.
10. See **Standard Plan J-20** for Piezo Axle Sensor General installation instructions. See the Special Provisions in the contract for Temperature Sensor installation instructions.

THEODORE J. TREPANIER
STATE OF WASHINGTON
25335
REGISTERED
PROFESSIONAL ENGINEER
2/5/09

WEIGH-IN-MOTION SITE INSTALLATION

STANDARD PLAN J-19

SHEET 1 OF 1 SHEET

APPROVED FOR PUBLICATION

STATE DESIGN ENGINEER — DATE 2/10/09

Washington State Department of Transportation

DRAWN BY: BILL BERENS

DRAWN BY: BILL BERENS

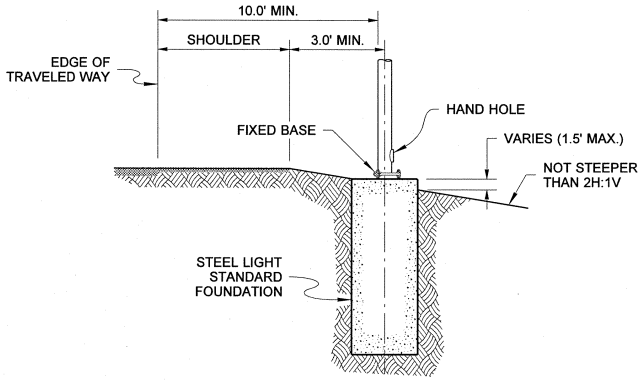

SECTION VIEW

CASE I

POSTED SPEED LIMIT LESS THAN 35 MPH

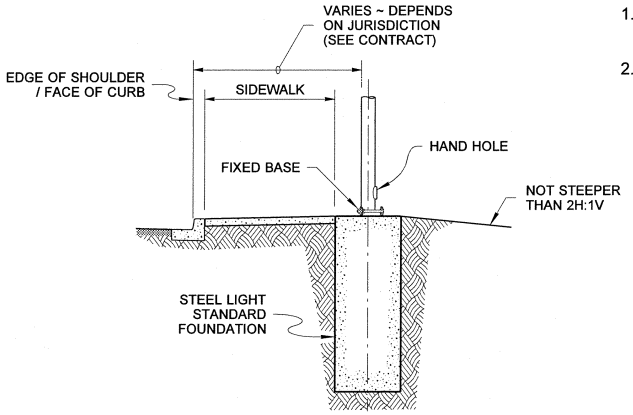

SECTION VIEW

CASE J

POSTED SPEED LIMIT LESS THAN 35 MPH

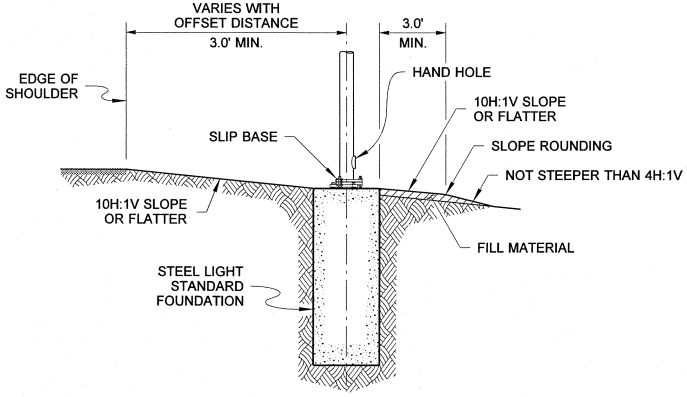

SECTION VIEW

CASE K

ROADWAYS WITH 10H:1V OR FLATTER SIDE SLOPES

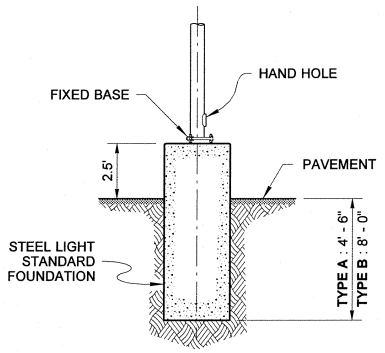

SECTION VIEW

CASE L

PARKING LOTS

NOTES

1. See **Standard Plan J-28.30** for foundation details and construction methods.
2. See **Standard Plan J-28.50** for pole base and hand hole details.

STEEL LIGHT STANDARD PLACEMENT MISCELLANEOUS STANDARD PLAN J-28.26-01

SHEET 1 OF 1 SHEET

APPROVED FOR PUBLICATION

STATE DESIGN ENGINEER — DATE 12/2/08

Washington State Department of Transportation

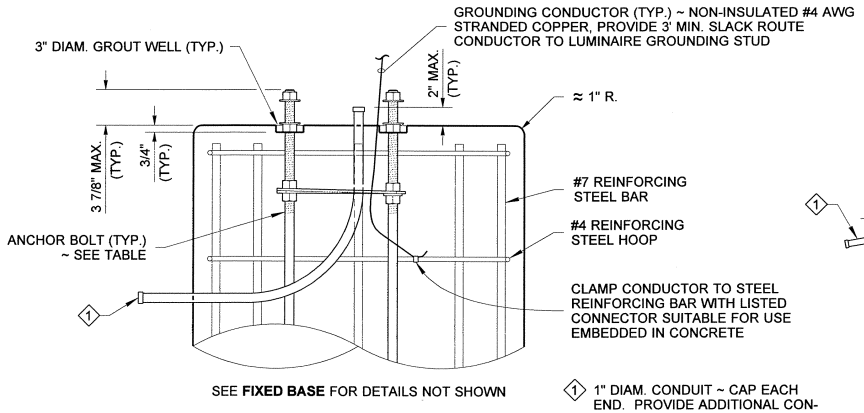

PARTIAL ELEVATION VIEW

SLIP BASE

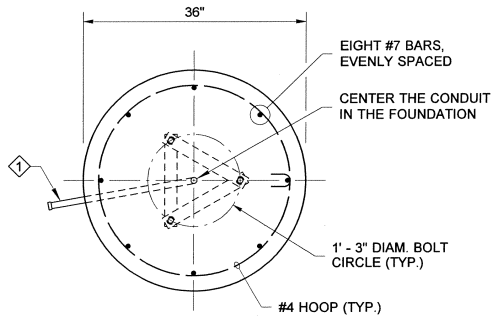

TOP VIEW

FIXED BASE

1 1" DIAM. CONDUIT ~ CAP EACH END. PROVIDE ADDITIONAL CONDUIT FOR COMMUNICATION OR SIGNAL CABLE WHERE SHOWN IN THE CONTRACT.

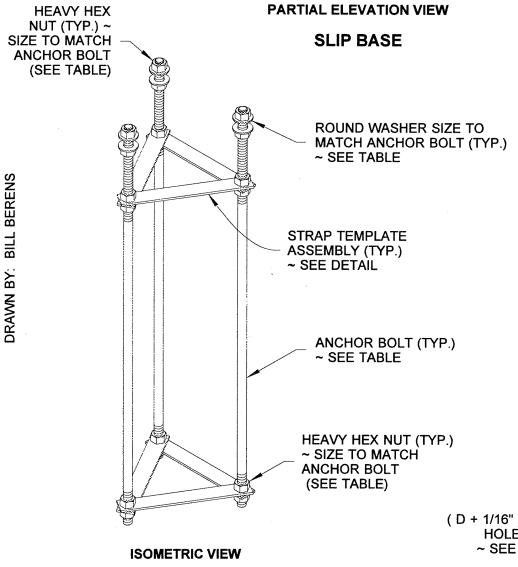

ISOMETRIC VIEW

ANCHOR BOLT ASSEMBLY

(SLIP BASE SHOWN)

DRAWN BY: BILL BERENS

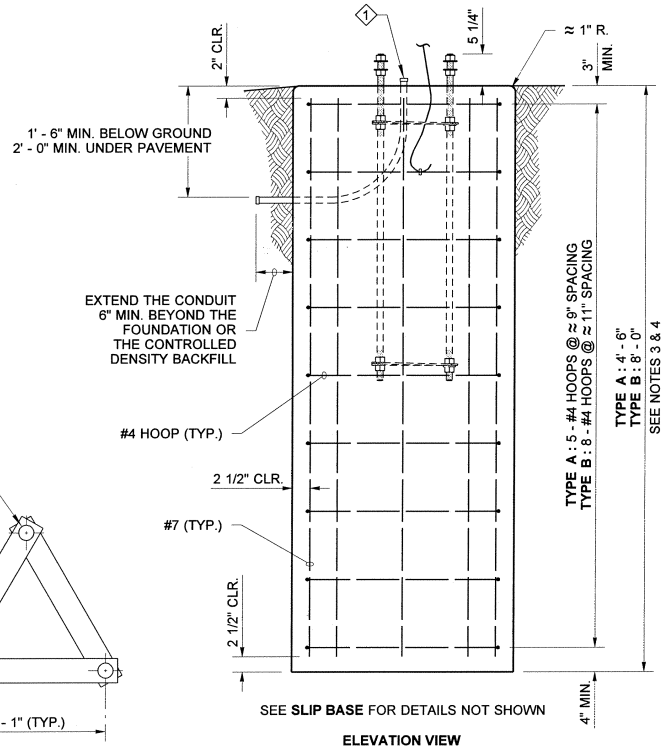

SEE **SLIP BASE** FOR DETAILS NOT SHOWN

ELEVATION VIEW

FIXED BASE

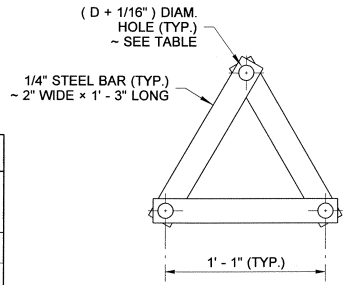

TOP VIEW

STRAP TEMPLATE ASSEMBLY

ANCHOR BOLT TABLE			
LUMINAIRE HEIGHT (H1)	MAST ARM TYPE	MAST ARM LENGTH	ANCHOR BOLT DIAMETER " D "
20' TO 50'	SINGLE	6' TO 16'	1"
20' TO 50'	DOUBLE	6' TO 8'	1"
20' TO 45'	DOUBLE	10' TO 16'	1"
46' TO 50'	DOUBLE	10' TO 16'	1 1/8"

NOTES

1. See **Standard Plan J-28.40** for luminaire pole base mounting details.
2. The Strap Templates shall be held in place by nuts, 6" from the top of the foundation and 3" from the bottom of the anchor bolts. 18 heavy duty hex nuts and 6 round washers are required for a Slip Base assembly. 18 heavy duty hex nuts and 6 plate washers are required for a Fixed Base assembly.
3. Use Steel Light Standard Foundation **Type A** on level ground or slopes not exceeding 4H:1V. Use **Type B** for slopes steeper than 4H:1V, but not exceeding 2H:1V. Slopes steeper than 2H:1V shall require a special design.
4. These foundations are designed for a minimum of 2,000 PSF (**TYPE A**) or 1,500 PSF (**TYPE B**) allowable lateral bearing pressure for the soil. A special foundation shall be required for soil with lower allowable lateral bearing pressure than 1,500 PSF.
5. The Luminaire Pole height shall not exceed 50' (H1).
6. Slip Bases shall not be installed on 50' (H1) poles with Double Mast Arms, nor on poles weighing more than 1000 lbs.
7. Slip Bases are not required on poles placed outside of the Design Clear Zone, nor on poles installed behind traffic barrier.
8. Foundations constructed within Ecology Embankments shall be increased in depth by the depth of the Ecology Embankment.
9. Exposed portions of the foundation shall be formed to create a smooth finished surface. All forming shall be removed upon completion of foundation construction.
10. For excavation, concrete placement, and backfill options, see METHOD 1 and METHOD 2 on Sheet 2 of 2.
11. The Anchor Bolts shall be high strength steel, manufactured from ASTM A449, with heavy hex nuts and hardened washers. Galvanize the Anchor Bolts according to AASHTO M232.
12. The foundation shall meet the requirements of Standard Specification Sect. 8-20.3(9).
13. See Standard Plan C-8b and C-14h for steel light standards on traffic barrier.

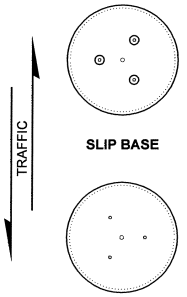

SLIP BASE

FIXED BASE

ANCHOR BOLT LAYOUT

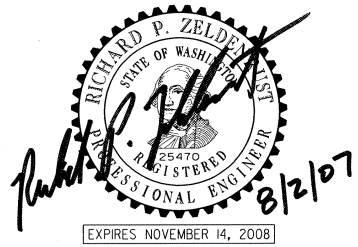

STEEL LIGHT STANDARD FOUNDATION TYPES A & B

STANDARD PLAN J-28.30-00

SHEET 1 OF 2 SHEETS

APPROVED FOR PUBLICATION

STATE DESIGN ENGINEER — DATE 9/7/07

Washington State Department of Transportation

DRAWN BY: MARK SUJKA

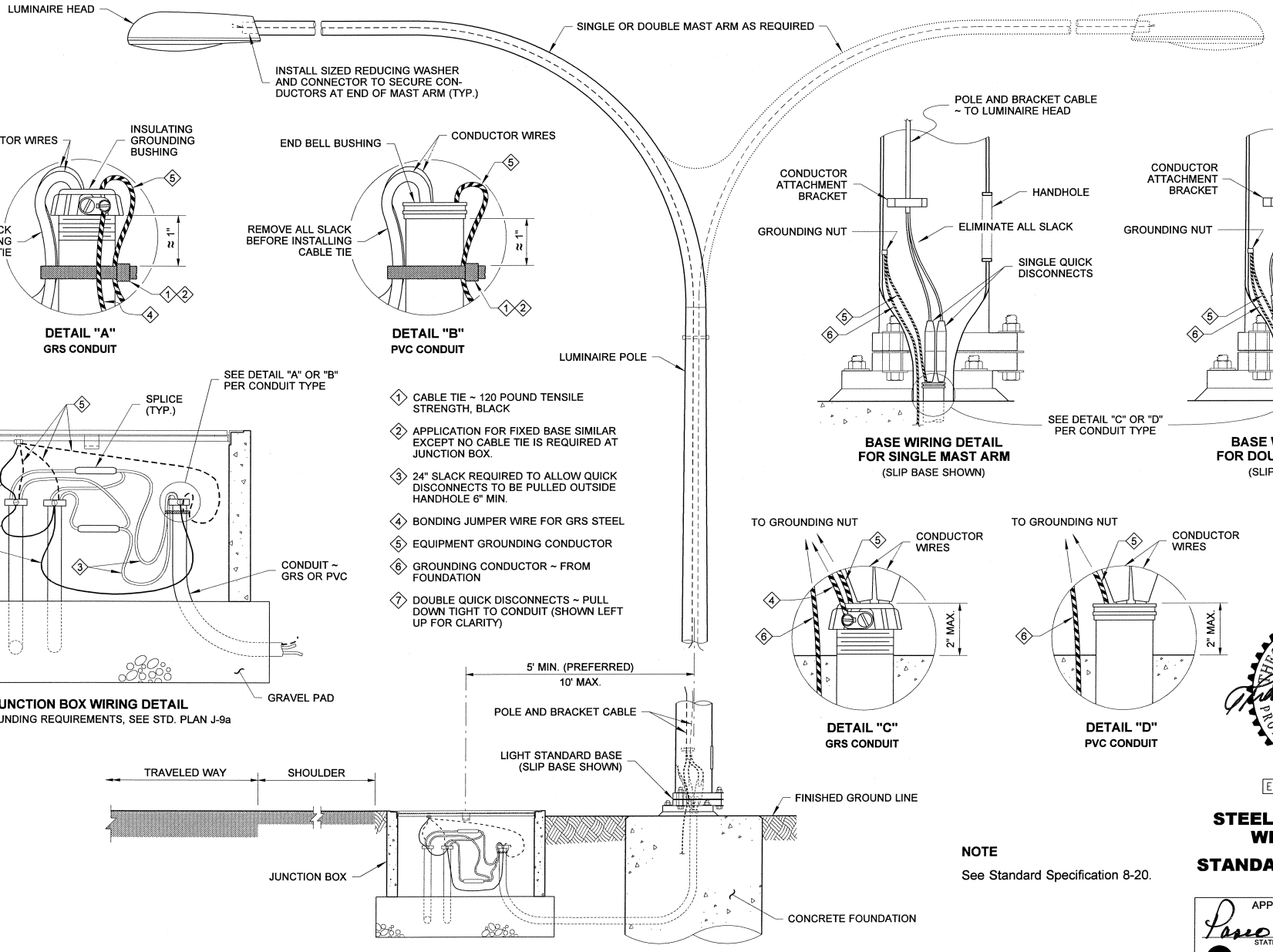

THEODORE J. TREPANIER
STATE OF WASHINGTON
25335
REGISTERED
PROFESSIONAL ENGINEER
EXPIRES AUGUST 9, 2009

NOTE

See Standard Specification 8-20.

STEEL LIGHT STANDARD WIRING DETAILS

STANDARD PLAN J-28.70-00

SHEET 1 OF 1 SHEET

APPROVED FOR PUBLICATION

STATE DESIGN ENGINEER — DATE 11/8/07

Washington State Department of Transportation

DRAWN BY: LISA CYFORD

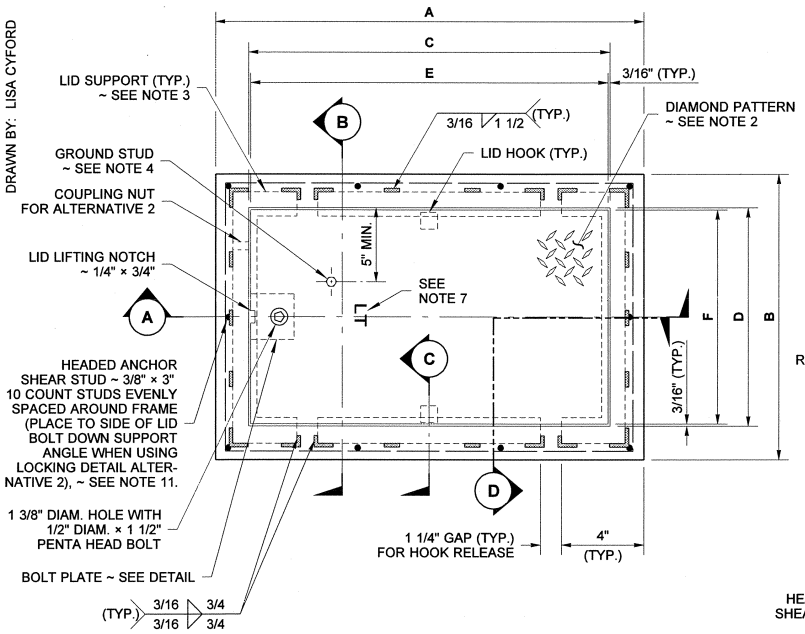

LOCKING LID STANDARD DUTY JUNCTION BOX

(CONDUITS NOT SHOWN)

JUNCTION BOX DIMENSION TABLE

MARK	ITEM	BOX TYPE	
		TYPE 1	TYPE 2
A	OUTSIDE LENGTH OF JUNCTION BOX	22"	33"
B	OUTSIDE WIDTH OF JUNCTION BOX	17"	22 1/2"
C	INSIDE LENGTH OF JUNCTION BOX	18" ~ 19"	28" ~ 29"
D	INSIDE WIDTH OF JUNCTION BOX	13" ~ 14"	17" ~ 18"
E	LID LENGTH	17 5/8"	28 5/8"
F	LID WIDTH	12 5/8"	18 1/8"
CAPACITY ~ CONDUIT DIAMETER		6"	12"

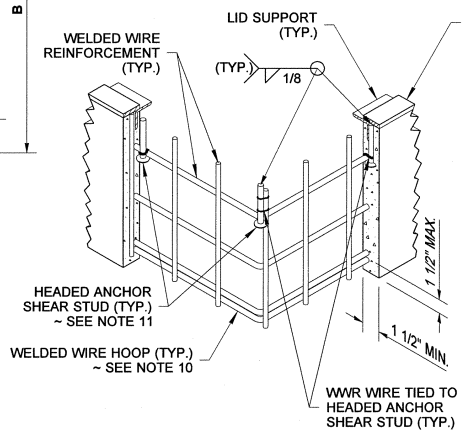

SECTION D

PERSPECTIVE VIEW

NOTES

1. All box dimensions are approximate. Exact configurations vary among manufacturers.
2. The lid thicknesses are minimum. The diamond pattern shall be 28% minimum of overall thickness.
3. Lid support members shall be 3/16" minimum thick steel C, L, or T shape, welded to the frame.
4. A 1/4-20NC × 3/4" S.S. ground stud shall be welded to the bottom of the lid; include 2 S.S. nuts and 2 flat washers.
5. Bolts and nuts shall be liberally coated with anti-seize compound.
6. Connect a Bonding Jumper to steel conduit bushing for GRS conduit; connect to Equipment grounding conductor for PVC conduit. Bonding Jumper shall be #8 min. × 4' of tinned braided copper.
7. The System Identification letters shall be 1/8" line thickness formed by engraving, stamping, or with a S. S. weld bead. Grind off diamond pattern before forming letters. For System Identification Detail see **Standard Plan J-40.30.**
8. When required in the Contract, Type 2 boxes shall be provided with a 10" x 27 1/2", 10 gage divider plate complete with fasteners.
9. The Junction Box Type 2 shall be provided with a 12" deep extension when specified in the Contract.
10. See the Standard Specifications for alternative reinforcement and class of concrete.
11. Headed Anchor Shear Studs must be welded to the Steel Cover Lip Plate and wire tied in two places to the vertical Welded Reinforcement Wire when in contact with each other. Wire tie all other Headed Anchor Shear Studs to the horizontal Welded Reinforcement Wire.
12. Lid Bolt Down Attachment Tab provides a method of retrofitting by using a mechanical process in lieu of welding. Attachment Tab shown depicts a typical component arrangement, actual configurations of assembly will vary among manufacturers. See approved manufacturers shop drawing for specifics.
13. Unless otherwise noted in the plans or approved by the Engineer, Junction Boxes, Cable Vaults and Pull Boxes shall not be placed within the traveled way or paved shoulders. All Junction Boxes, Cable Vaults and Pull Boxes placed within the traveled way or paved shoulders shall be heavy-duty.

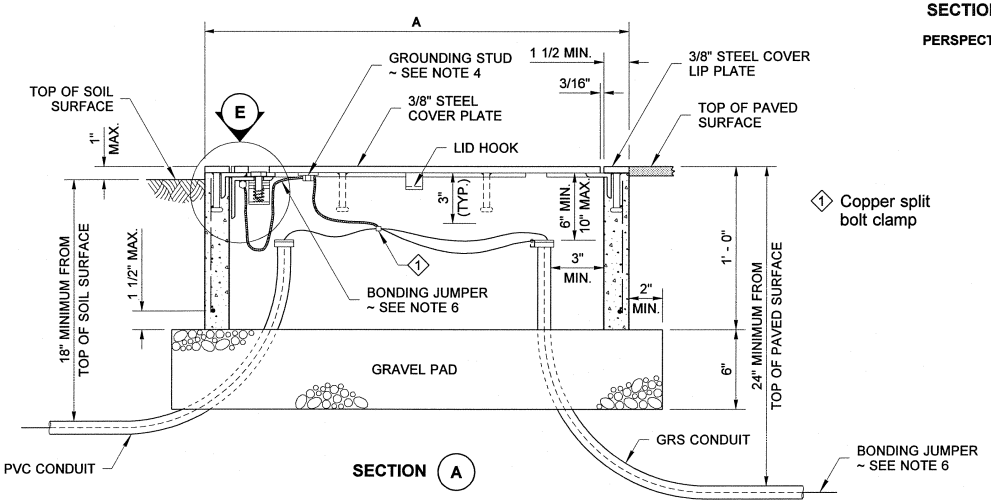

SECTION A

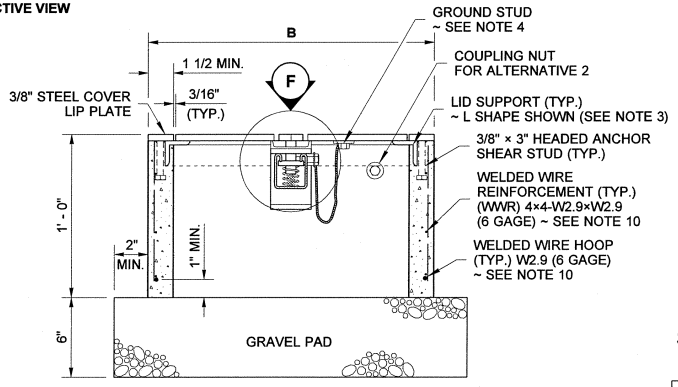

SECTION B

(CONDUITS NOT SHOWN)

LOCKING LID STANDARD JUNCTION BOX TYPES 1 & 2 STANDARD PLAN J-40.10-00

SHEET 1 OF 2 SHEETS

APPROVED FOR PUBLICATION

STATE DESIGN ENGINEER — DATE 1/6/09

Washington State Department of Transportation

DRAWN BY: LISA CYFORD

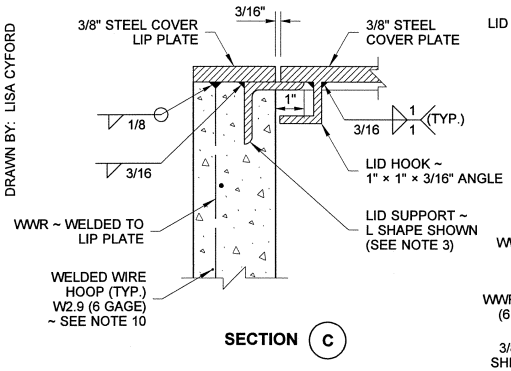

SECTION (C)

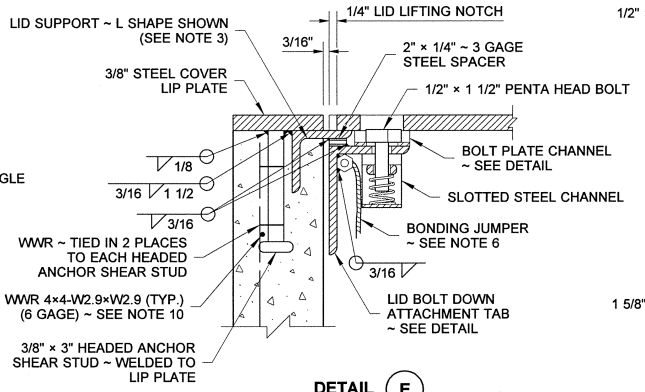

DETAIL (E)
ALTERNATIVE 1 SHOWN

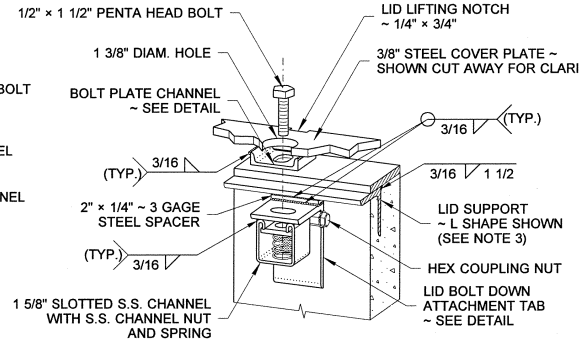

DETAIL (F)
ALTERNATIVE 1 SHOWN PERSPECTIVE VIEW

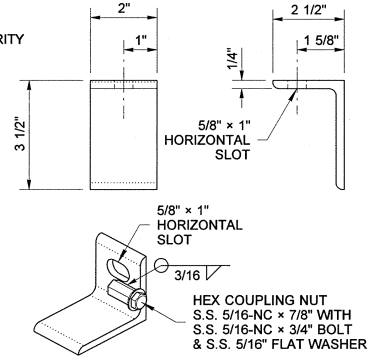

ALTERNATIVE 1
LID BOLT DOWN ATTACHMENT TAB
(SEE NOTE 12)

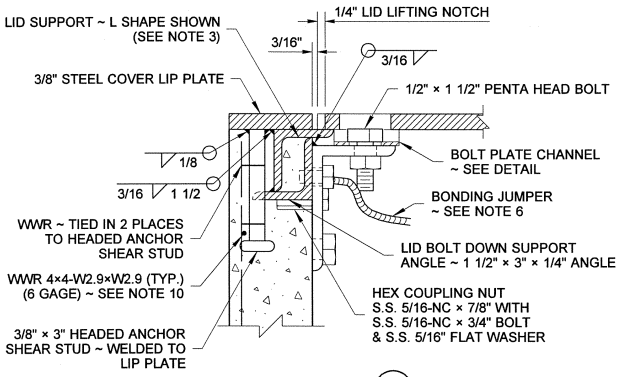

DETAIL (E)
ALTERNATIVE 2 SHOWN

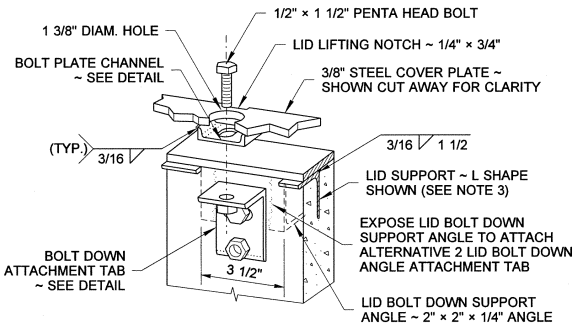

DETAIL (F)
ALTERNATIVE 2 SHOWN PERSPECTIVE VIEW

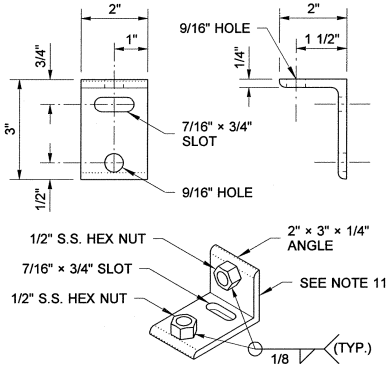

ALTERNATIVE 2
LID BOLT DOWN ATTACHMENT TAB
(SEE NOTE 12)

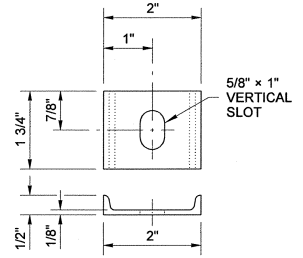

BOLT PLATE CHANNEL

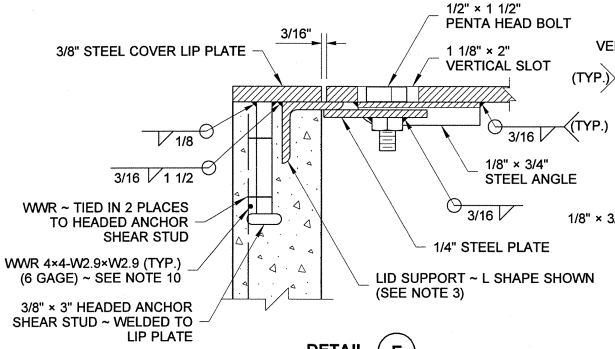

DETAIL (E)
ALTERNATIVE 3 SHOWN

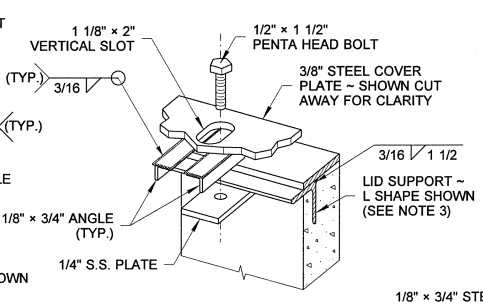

DETAIL (F)
ALTERNATIVE 3 SHOWN PERSPECTIVE VIEW

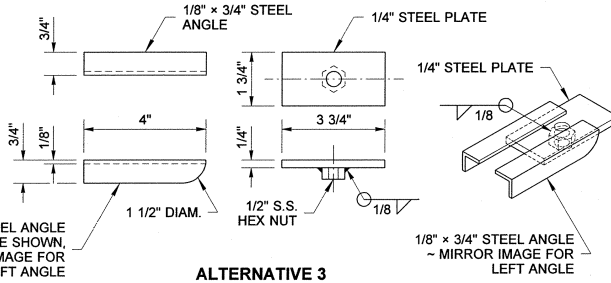

ALTERNATIVE 3
LID BOLT DOWN ATTACHMENT TAB
(SEE NOTE 12)

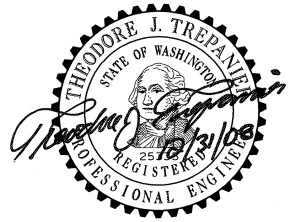

LOCKING LID STANDARD JUNCTION BOX TYPES 1 & 2

STANDARD PLAN J-40.10-00

SHEET 2 OF 2 SHEETS

APPROVED FOR PUBLICATION

STATE DESIGN ENGINEER — DATE 1/6/09

Washington State Department of Transportation

DRAWN BY: LISA CYFORD

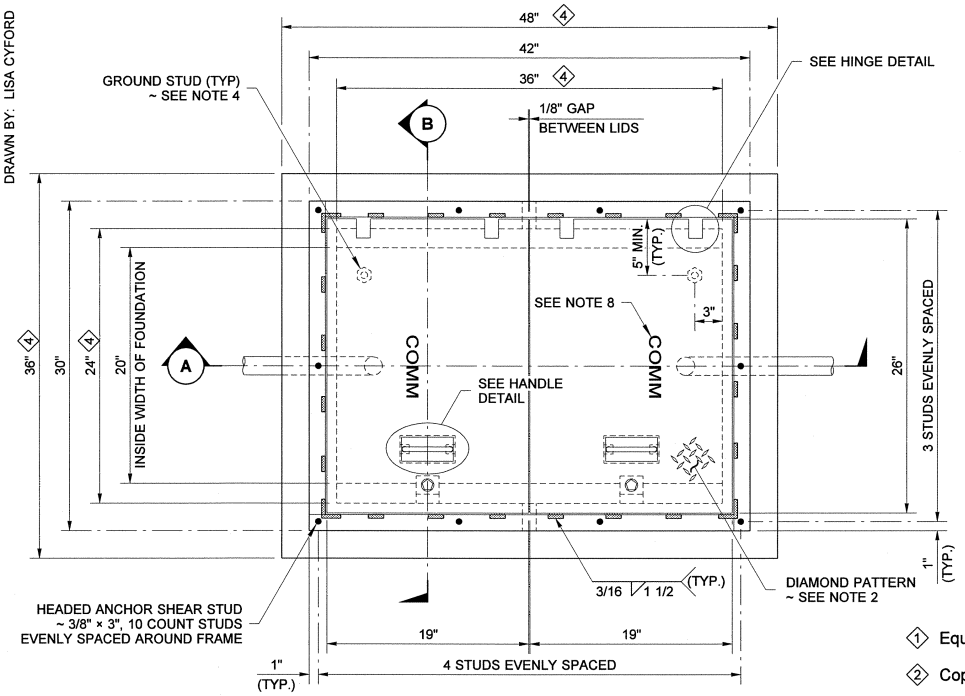

PLAN VIEW

LOCKING LID STANDARD DUTY JUNCTION BOX

CONDUITS NOT SHOWN

SYSTEM IDENTIFICATION DETAIL

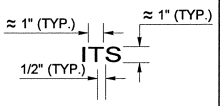

INTELLIGENT TRANSPORTATION SYSTEM

COMM
COMMUNICATION SYSTEM

LT
LIGHTING SYSTEM

TS
TRAFFIC SIGNAL SYSTEM

TEL
TELEPHONE SYSTEM

1. Equipment grounding conductor
2. Copper split bolt clamp
3. Equipment bonding jumper ~ see note 7
4. Foundation
5. See Contract Plan for conduit size and number.

NOTES

1. All box dimensions are approximate. Exact configurations vary among manufacturers.
2. All lid thicknesses are minimum. The diamond pattern shall be 3/32" minimum thick.
3. Lid support members shall be 3/16" min. thick steel C, L, or T shape, welded to the frame. Exact configurations vary among manufacturers.
4. A 1/4-20NC × 3/4" S.S. ground stud shall be welded to the bottom of each lid; include 2 S. S. nuts and 2 flat washers.
5. The hinges shall allow the lids to open 180°.
6. Bolts and nuts shall be liberally coated with anti-seize compound.
7. Connect an equipment bonding jumper to steel conduit bushing for GRS conduit; connect to equipment grounding conductor for PVC conduit. As an alternative to the ground stud connection, the equipment bonding jumper shall be attached to the front face of the hinge pocket with a 5/16-20NC × 3/4" S.S. bolt, nut, and flat washer. Equipment Bonding Jumper shall be #8 min. × 4' of tinned braided copper.
8. The System Identification letters shall be 1/8" line thickness formed by engraving, stamping, or with a S.S. weld bead. Grind off diamond pattern before forming letters. See System Identification Detail.
9. See the Standard Specifications for alternative reinforcement and class of concrete.
10. See **Standard Plan J-40.10** for Welded Wire Reinforcement and Headed Anchor Shear Stud attachment details.
11. Capacity ~ conduit diameter = 24"
12. Lid Bold Down Attachment Tab provides a method of retrofitting by using a mechanical process in lieu of welding. Attachment Tab shown depicts a typical component arrangement, actual configurations of assembly will vary among manufacturers. See approved manufacturers shop drawing for specifics.
13. Unless otherwise noted in the plans or approved by the Engineer, Junction Boxes, Cable Vaults and Pull boxes shall not be places within the traveled way or paved shoulders. All Junction boxes, Cable Vaults and Pull boxes placed within the traveled way or paved shoulders shall be heavy-duty.

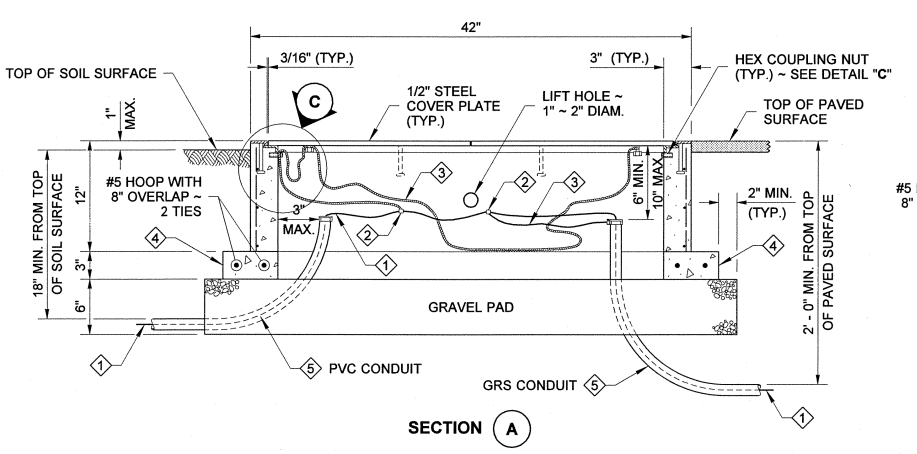

SECTION (A)

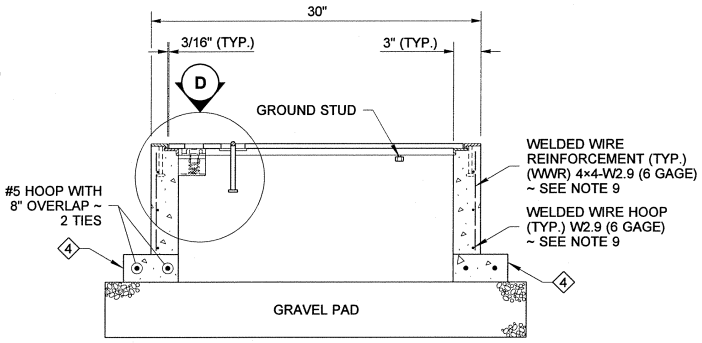

SECTION (B)

CONDUITS NOT SHOWN

LOCKING LID STANDARD DUTY JUNCTION BOX TYPE 8 STANDARD PLAN J-40.30-00

SHEET 1 OF 2 SHEETS

APPROVED FOR PUBLICATION

STATE DESIGN ENGINEER — DATE 11/26/19

Washington State Department of Transportation

DRAWN BY: LISA CYFORD

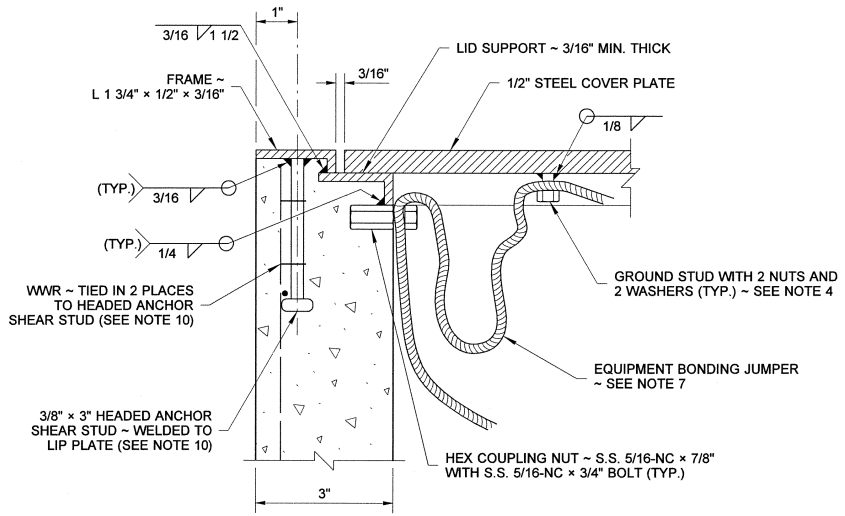

DETAIL (C)

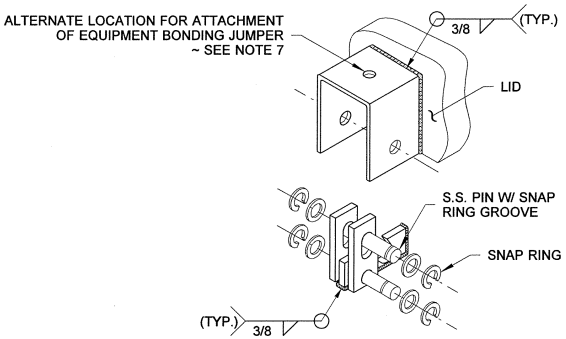

HINGE DETAIL

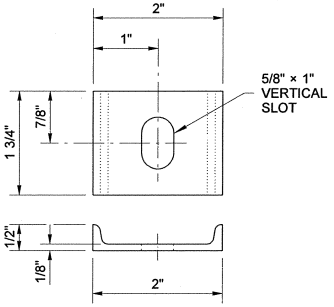

BOLT PLATE CHANNEL

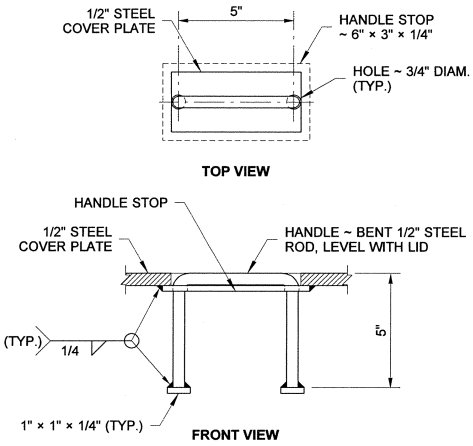

HANDLE DETAIL

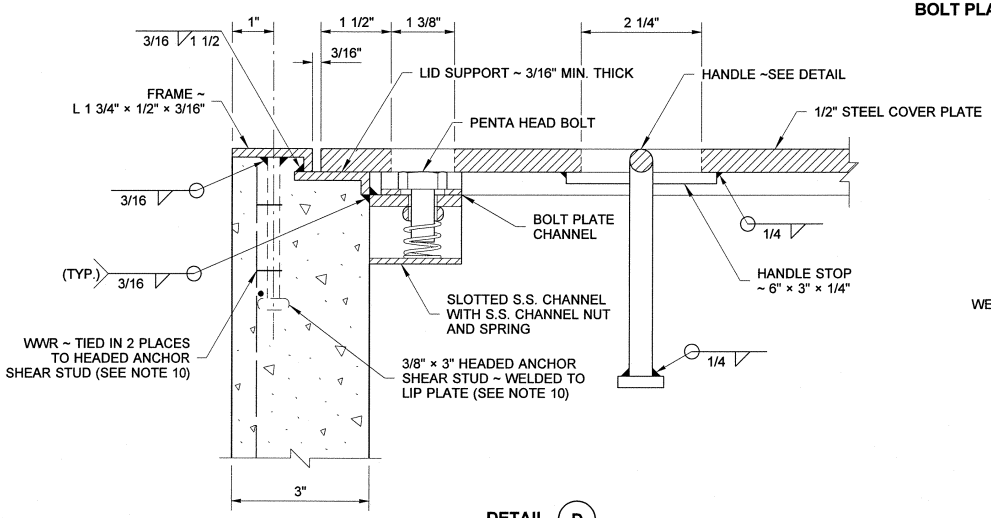

DETAIL (D)

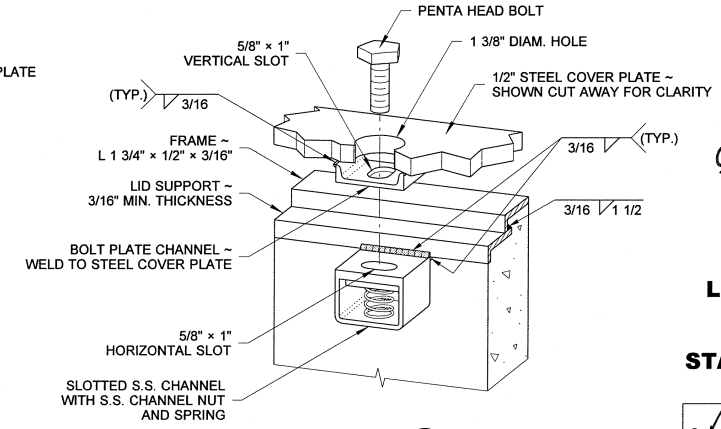

DETAIL (D)
ISOMETRIC VIEW

LOCKING LID STANDARD DUTY JUNCTION BOX TYPE 8 STANDARD PLAN J-40.30-00

SHEET 2 OF 2 SHEETS

APPROVED FOR PUBLICATION

STATE DESIGN ENGINEER — DATE 1/6/09

Washington State Department of Transportation

DRAWN BY: LISA CYFORD

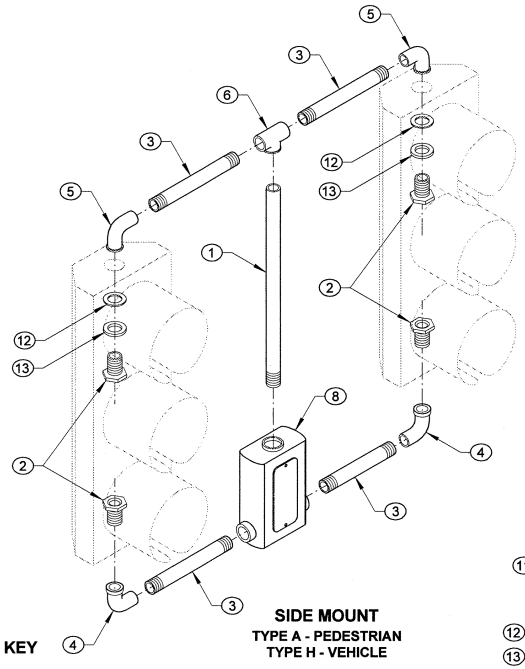

SIDE MOUNT
TYPE A - PEDESTRIAN
TYPE H - VEHICLE

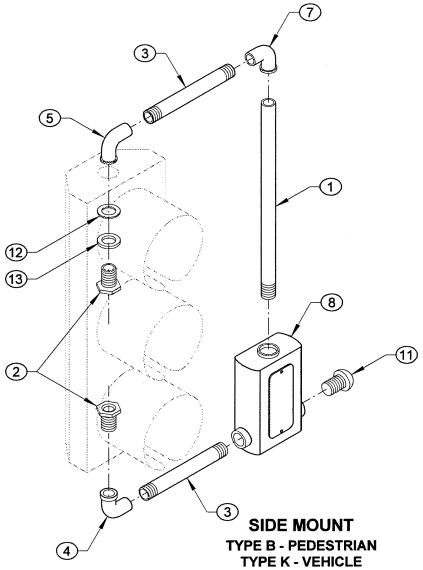

SIDE MOUNT
TYPE B - PEDESTRIAN
TYPE K - VEHICLE

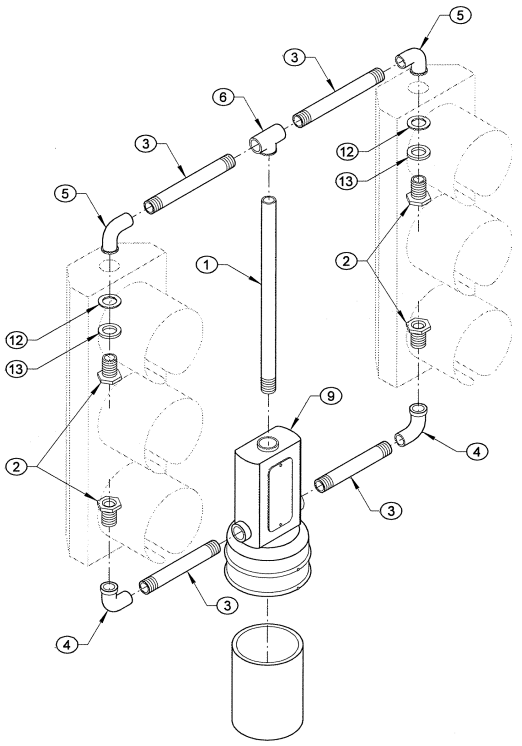

TOP MOUNT
TYPE C - PEDESTRIAN
TYPE F - VEHICLE

KEY

1. CENTER PIPE
2. LOCKNIPPLE
3. NIPPLE
4. SERRATED ELBOW
5. SERRATED OR FLANGED ELBOW
6. REAMED TEE WITH SET SCREW
7. REAMED ELBOW WITH SET SCREW
8. BRONZE TERMINAL COMPARTMENT WITH:
   - GASKETED COVER
   - FASTENERS
   - WIRE LEADS
   - MOUNTING SADDLE FOR SIDE MOUNTS
   - 1/4" DIAM. DRAIN HOLE
   - 12 POSITION TERMINAL STRIP
   - WIREWAY FOR SIDE MOUNTS
9. COMBINATION OF (8) & (10)
10. BRONZE COLLAR ~ 4 1/4" I.D. WITH SET SCREWS
11. ORNAMENT CAP
12. NEOPRENE GASKET
13. WASHER
14. CONDUIT LOCKNUT
15. TYPE E HINGE MOUNTING
16. FASTENER WITH SPACER ~
    - 1/2" LAG SCREWS ON WOOD POLE
    - 1/2" BOLTS TAPPED TO METAL POLE
17. FLATHEAD SOCKET BOLT
18. 1/2" INSERT HOLE FOR EXTERNAL WIRE ENTRANCE (REQUIRED ON TIMBER POLE MOUNTING ONLY)
19. TERMINAL BLOCK AND PHENOLIC TAG
20. INSULINER

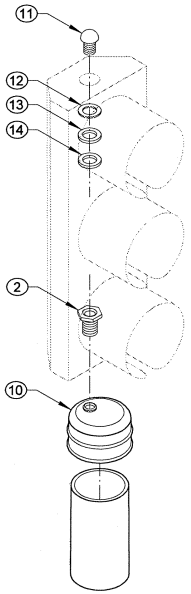

TOP MOUNT
TYPE D - PEDESTRIAN
OR VEHICLE

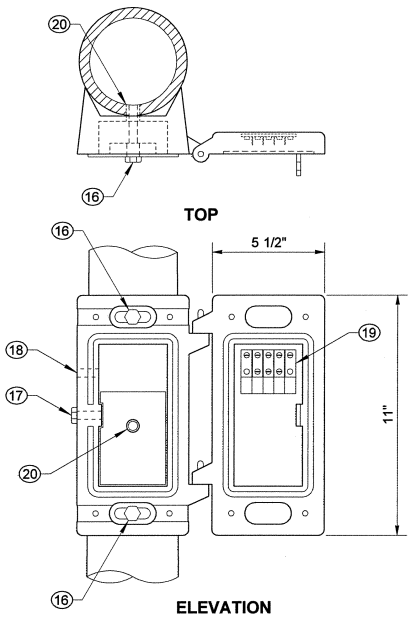

ELEVATION
TYPE E
MOUNTING DETAILS

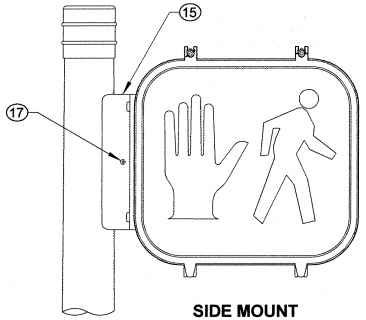

SIDE MOUNT
TYPE E - NEON GRID OR SIMILAR SIZE
INCANDESCENT PEDESTRIAN HEAD

NOTES

1. See Contract for head type, mounting height and orientation.
2. All nipples, fittings and center pipes shall be 1 1/2" diameter.
3. Install neoprene gasket outside head when flanged elbows are supplied.
4. Extend wire sheath, a minimum of 1" inside all signal and sign housings, and terminal compartments.
5. Apply bead of silicone around the perimeter of all top end cap openings prior to installation of the end cap assembly.

THEODORE J. TREPANIER
STATE OF WASHINGTON
25335
REGISTERED
PROFESSIONAL ENGINEER
2/5/09

SIGNAL HEAD MOUNTING DETAILS POLE AND POST TOP MOUNTINGS STANDARD PLAN J-75.10-00

SHEET 1 OF 1 SHEET

APPROVED FOR PUBLICATION

STATE DESIGN ENGINEER — DATE 2/10/09

Washington State Department of Transportation

DRAWN BY: LISA CYFORD

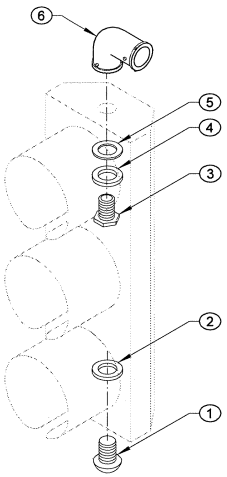

ARM MOUNT TYPE L

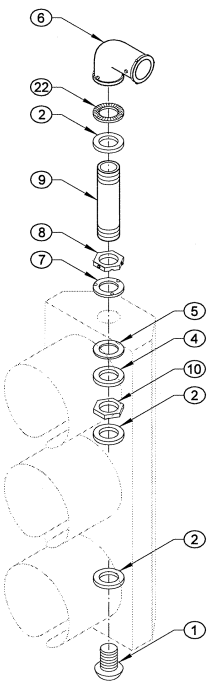

ARM MOUNT TYPE LE
(TYPE L WITH EXTENSION FITTINGS)

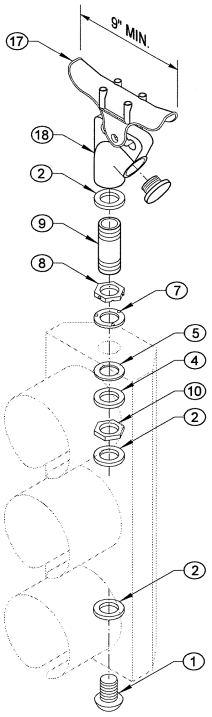

SPAN WIRE TYPE P (1 HEAD)

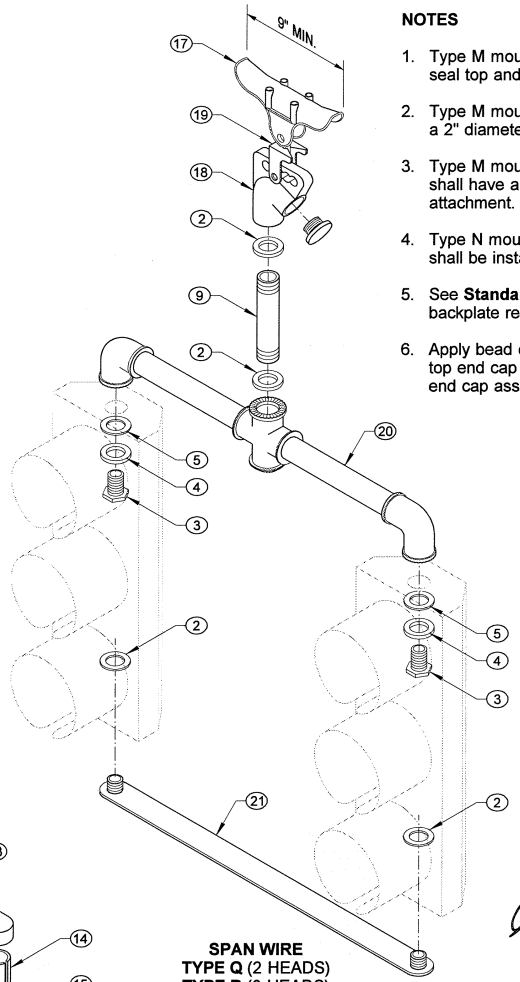

SPAN WIRE
TYPE Q (2 HEADS)
TYPE R (3 HEADS)
TYPE S (4 HEADS)

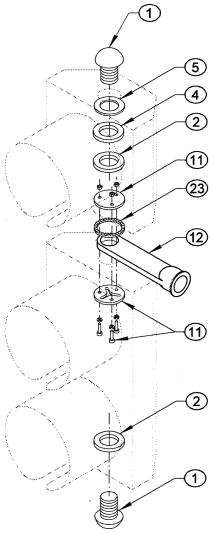

ARM MOUNT TYPE M

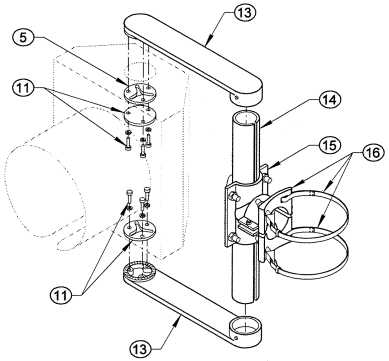

ARM MOUNT TYPE N

KEY

1. END CAP
2. 1 1/2" DIAM. CONDUIT LOCKNUT
3. 1 1/2" DIAM. LOCKNIPPLE
4. STEEL WASHER
5. NEOPRENE GASKET
6. BRONZE SERRATED ELL FITTING WITH:
   - 3/8" STAINLESS STEEL THROUGH BOLT AND NUTS
   - THREE STAINLESS STEEL SET SCREWS AT SLIPFITTER CONNECTION
   - THREE ALLEN HEAD STAINLESS STEEL SET SCREWS AT CONDUIT NIPPLE CONNECTION
7. SERRATED RING WITH PINS
8. HEX LOCKNUT WITH:
   - TWO ALLEN HEAD STAINLESS STEEL SET SCREWS
   - PIN RECEPTACLES
9. 1 1/2" DIAM. CONDUIT NIPPLE
10. 1 1/2" DIAM. HEX LOCKNUT
11. MOUNTING ASSEMBLY
12. BRONZE ELEVATOR PLUMBIZER WITH 3/8" STAINLESS STEEL THROUGH BOLT, WASHERS, AND TWO NUTS
13. ALUMINUM ARM WITH SET SCREW
14. SLOTTED TUBE WITH CLOSURE STRIP
15. 2 1/2" I.D. MIN. TUBE CLAMP
16. INTERNALLY THREADED CLAMP ASSEMBLY WITH:
    - TWO SET SCREWS
    - 1/2" × 0.045" STAINLESS STEEL BANDS
    - 7/16" SCREW BUCKLES, WITH SWIVELS, NUTS, AND WASHERS
    - BAND CLIPS WITH ALLEN HEAD STAINLESS STEEL SET SCREWS
17. BRONZE MESSENGER HANGER WITH:
    - 1/2" DIAM. J-BOLTS
    - CABLE LOCK BAR
    - RIVET
    - COTTER KEY
18. BRONZE INTERNALLY THREADED WIRE ENTRANCE WITH:
    - BUSHING INSERT
    - ALLEN HEAD STAINLESS STEEL SET SCREW
19. BRONZE BALANCE ADJUSTER
20. MULTI-HEAD MOUNTING ASSEMBLY
21. SPIDER ASSEMBLY
22. SERRATED RING WITH NO PINS
23. SERRATED WASHER

NOTES

1. Type M mounting shall have "O" ring groove and seal top and bottom of signal attachment.
2. Type M mounting for conventional heads shall have a 2" diameter opening at the signal attachment.
3. Type M mounting for optically programmed heads shall have a 3 1/2" diameter opening at the signal attachment.
4. Type N mounting with optically programmed heads shall be installed with 14" nominal arms.
5. See **Standard Plan J-75.30** for tether wire, and backplate requirements.
6. Apply bead of silicone around the perimeter of all top end cap openings prior to installation of the end cap assembly.

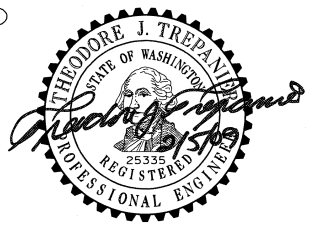

SIGNAL HEAD MOUNTING DETAILS MAST ARM AND SPAN WIRE MOUNTINGS

STANDARD PLAN J-75.20-00

SHEET 1 OF 1 SHEET

APPROVED FOR PUBLICATION

STATE DESIGN ENGINEER — DATE 2/10/09

Washington State Department of Transportation

DRAWN BY: LISA CYFORD

KEY

1. METAL OR TIMBER POLE
2. 2" × 3/16" STAINLESS STEEL BAND WITH 2 EACH:
   - 3/8-16NC × 3/4" S.S. HEX HEAD BOLT
   - LOCK WASHERS AND NUTS
3. 5/16" EYE AND EYE TURNBUCKLE
4. 3/8" MILD STEEL S-HOOK
5. 1/8" S.S. WIRE ROPE CLAMP (U-BOLT TYPE)
6. 1/8" STAINLESS STEEL TETHER WIRE
7. WIRE CLAMP WITH LEAD WIRE WRAP
8. SIGNAL HEAD
9. 6 × 8.2 LB/FT CHANNEL
10. 2 EACH:
    - 1/2-13NC × 2 1/2" HEX HEAD BOLT
    - LOCK WASHERS (DRILL AND TAP POLE TO ACCEPT)
11. WIREWAY (SEE DETAIL THIS SHEET)
12. METAL POLE
13. CABINET
14. END BUSHING
15. SEALING LOCKNUT
16. 12-13NC × 2 1/2" S.S. HEX HEAD BOLT
17. CABINET WALL DRILLED 1/8" OVERSIZE OF NIPPLE
18. CHANNEL DRILLED 1/8" OVERSIZE OF NIPPLE
19. 2" DIAM. × 4" NIPPLE (UNLESS OTHERWISE NOTED)
20. POLE DRILLED SO BUSHING WILL PASS THROUGH
21. 6063 EXTRUDED ALUMINUM FRAME
22. F24T12/CW FLUORESCENT TUBES (4 EACH)
23. TRANSLUCENT PLEXIGLASS SIGN FACE
24. 1 1/2" CAST IRON HUB WITH 5/16" PIN AND COTTER KEY
25. SPAN WIRE MOUNT ASSEMBLY WITH:
    - 1 1/2" DIAM. CONDUIT LOCKNUT
    - 1 1/2" DIAM. CONDUIT NIPPLE
    - BRONZE MESSENGER HANGER WITH:
      - ~ 1/2" DIAM. J-BOLTS
      - ~ CABLE LOCK BAR
      - ~ RIVET
      - ~ COTTER KEY
    - BRONZE INTERNALLY THREADED WIRE ENTRANCE WITH:
      - ~ BUSHING INSERT
      - ~ ALLEN HEAD STAINLESS STEEL SET SCREW
26. ARM MOUNT ASSEMBLY WITH:
    - 1 1/2" DIAM. CONDUIT LOCKNUT
    - BRONZE SERRATED ELL FITTING WITH:
      - ~ 3/8" STAINLESS STEEL THROUGH BOLT AND NUTS
      - ~ THREE STAINLESS STEEL SET SCREWS AT SLIPFITTER CONNECTION
      - ~ THREE ALLEN HEAD STAINLESS STEEL SET SCREWS AT CONDUIT NIPPLE CONNECTION
    - 1 1/2" DIAM. CONDUIT NIPPLE
    - SERRATED RING WITH NO PINS
27. SIDE POLE MOUNT ASSEMBLY WITH:
    - 1 1/2" DIAM. CONDUIT LOCKNUT
    - 1 1/2" DIAM. CONDUIT NIPPLE
    - SERRATED RING WITH NO PINS
28. 1 1/2" SERRATED ELBOW
29. 1 1/2" DIAM. NIPPLE (DRILL AND TAP POLE TO ACCEPT)
30. 2 EACH:
    - 1/2-20NF × 3/4" STAINLESS STEEL HEX HEAD BOLT
    - LOCK WASHERS (DRILL AND TAP POLE TO ACCEPT)
31. MOUNTING BRACKET

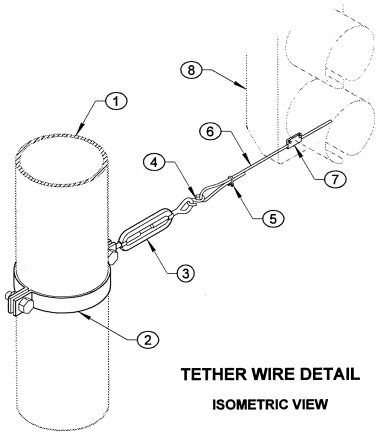

TETHER WIRE DETAIL

ISOMETRIC VIEW

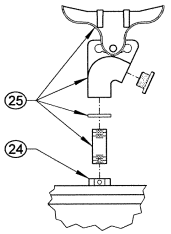

SPAN WIRE MOUNT

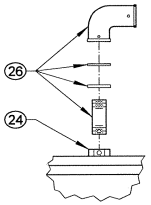

MAST ARM MOUNT

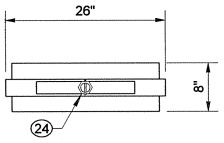

PLAN VIEW

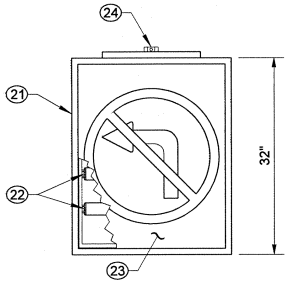

ELEVATION VIEW

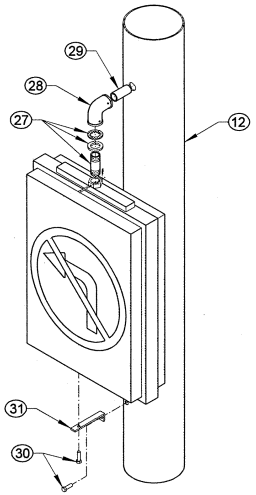

SIDE POLE MOUNT

ISOMETRIC VIEW

INTERNALLY ILLUMINATED SIGN DETAILS

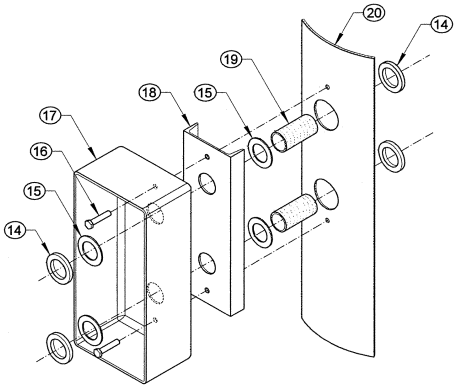

WIREWAY DETAIL

ISOMETRIC VIEW

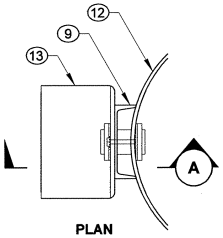

PLAN

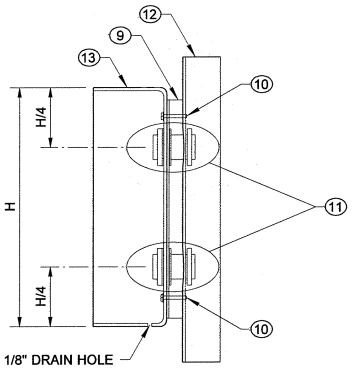

SECTION (A)

ELEVATION VIEW

CABINET MOUNTING DETAILS

NOTES

1. Backplates shall be installed with 6 stainless steel screws and washers.
2. Silicone top of channel and around nipples at openings into pole.

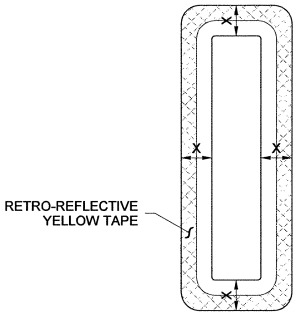

BACKPLATE DETAIL

8" OR 12" SECTIONS

8" SECTION X = 8" ± 1/2"
12" SECTION X = 5 1/2" ± 1/2"

THEODORE J. TREPANIER — STATE OF WASHINGTON — 25335 — REGISTERED PROFESSIONAL ENGINEER — 2/5/09

MISCELLANEOUS SIGNAL DETAILS

STANDARD PLAN J-75.30-00

SHEET 1 OF 1 SHEET

APPROVED FOR PUBLICATION

STATE DESIGN ENGINEER — DATE 2/10/09

Washington State Department of Transportation

This page left blank intentionally.

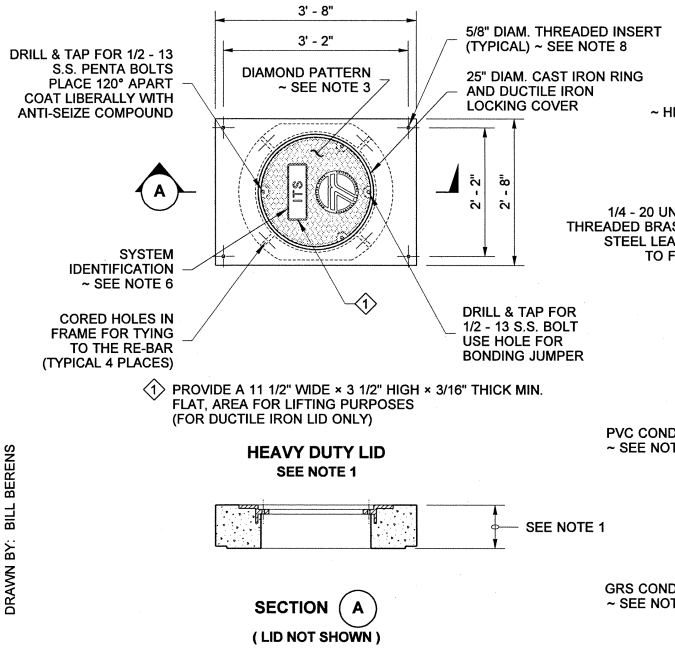

HEAVY DUTY LID
SEE NOTE 1

SECTION (A)
(LID NOT SHOWN)

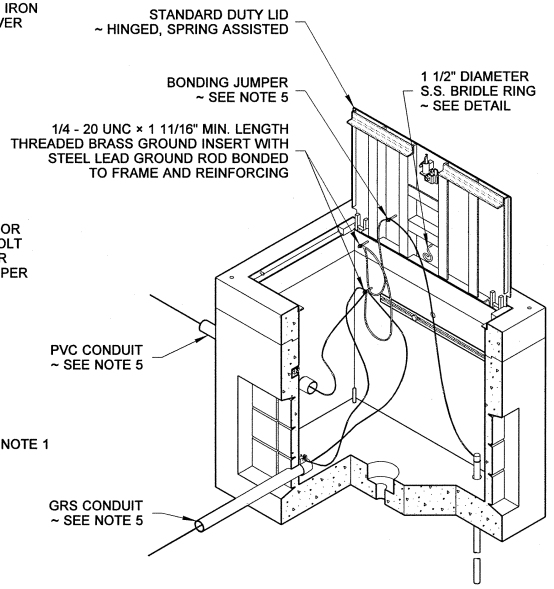

ISOMETRIC CUTAWAY

NOTES

1. The Heavy Duty Lid shall be used when a Pull Box is placed in the paved shoulder or the traveled way. Use a 9" thick lid for new Pull Box installations. Use a 6" thick Heavy Duty Lid when converting a Standard Duty Pull Box into a Heavy Duty Pull Box in the paved shoulder or the traveled way and no overlay is called for in the contract. Otherwise, see contract plans for overlay depth and fabricate lid thickness to match overlay depth.
2. Use Standard Duty Pull Box and Lid when placed in unpaved areas.
3. The diamond pattern shall be 3/32" minimum thick.
4. A 1/4 - 20 UNC × 3/4" S.S. ground stud with 2 S.S. nuts and 2 S.S. flat washers shall be attached to the Standard Duty Lid and coated with anti-seize compound. Provide a 5/8" diameter cored hole in the ductile iron lid gusset (Heavy Duty Lid) with 1/2 - 13 UNC × 1 1/4" S.S. bolt, 2 S.S. flat washers and 2 S.S. nuts for the Bonding Jumper.
5. Connect a Bonding Jumper to the steel conduit bushing for GRS conduit and connect the steel conduit bushing jumper to the equipment ground at the threaded brass ground insert. Connect the equipment grounding conductors in the PVC and/or GRS conduits to the brass ground insert. The bonding jumper shall be #8 min. x 4' (ft.) of tinned braided copper between the lid and the frame of the Heavy Duty tops and from the Heavy Duty top to the threaded brass ground insert. The Bonding Jumper shall be #8 min. x 4' (ft.) of tinned braided copper between the lid on a Standard Duty box and the threaded brass ground insert. See contract plan sheets for Bonding Jumper requirements.
6. The system identification letters shall be 1/8" line thickness formed by engraving, casting, stamping or with a weld bead. See SYSTEM IDENTIFICATION DETAIL, **Standard Plan J-40.10**. Ductile iron lid lettering shall be recessed.
7. Cement concrete shall be Class 4000.
8. Plastic plugs shall be put into the lid inserts after fabrication and the lid installation.
9. Capacity - conduit diameter = 40" (in.).
10. Excavate material, place 6" crushed surfacing pad per **Std. Specification Section 8-20.3(6)**. Field bend #3 reinforcing bar to allow conduit into the Pull Box. Field bend reinf. bar back into place, wire tie in 2 places and cast commercial concrete (commercial concrete only allowed for box bottom/wall completion).
11. This drawing depicts a typical Pull Box assembly. Reinforcing not shown. Each manufacturer's Pull Box assembly will vary. Refer to the approved manufacturer's shop drawings for all dimensions and the actual arrangement.

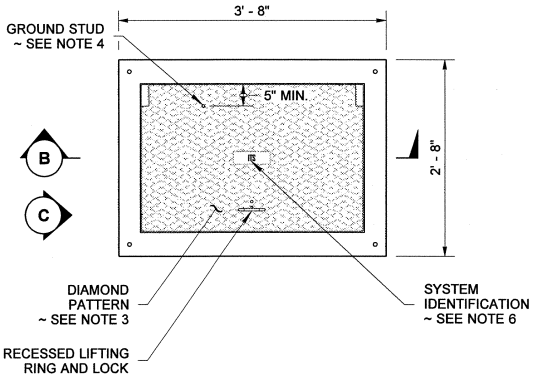

TOP

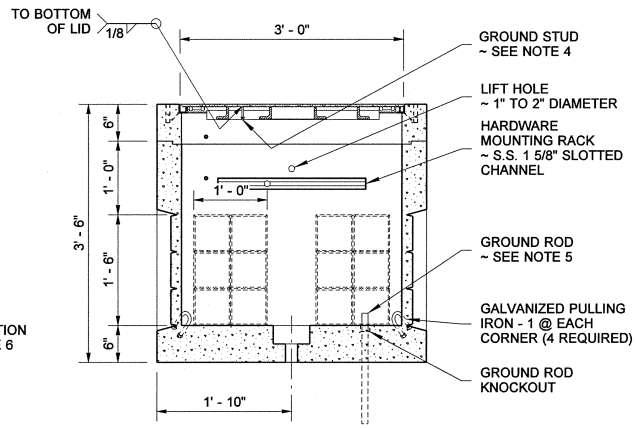

SECTION (B)

PULL BOX ASSEMBLY
(SHOWN WITH STANDARD DUTY LID)

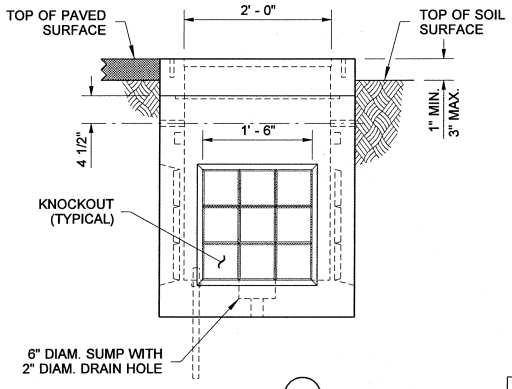

VIEW (C)

THEODORE J. TREPANIER
STATE OF WASHINGTON
25335
REGISTERED
PROFESSIONAL ENGINEER
5/07

PULL BOX

STANDARD PLAN J-90.10-00

SHEET 1 OF 2 SHEETS

APPROVED FOR PUBLICATION
STATE DESIGN ENGINEER — DATE 2/10/09

Washington State Department of Transportation

DRAWN BY: BILL BERENS

DRAWN BY: BILL BERENS

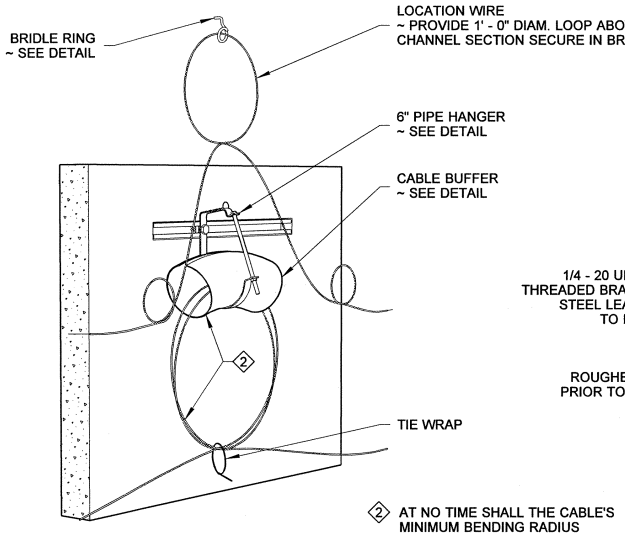

INTERNAL OBLIQUE VIEW

COIL THE CABLE BY USING A "FIGURE 8 " FOLDED IN THE MIDDLE TO FORM A LOOP

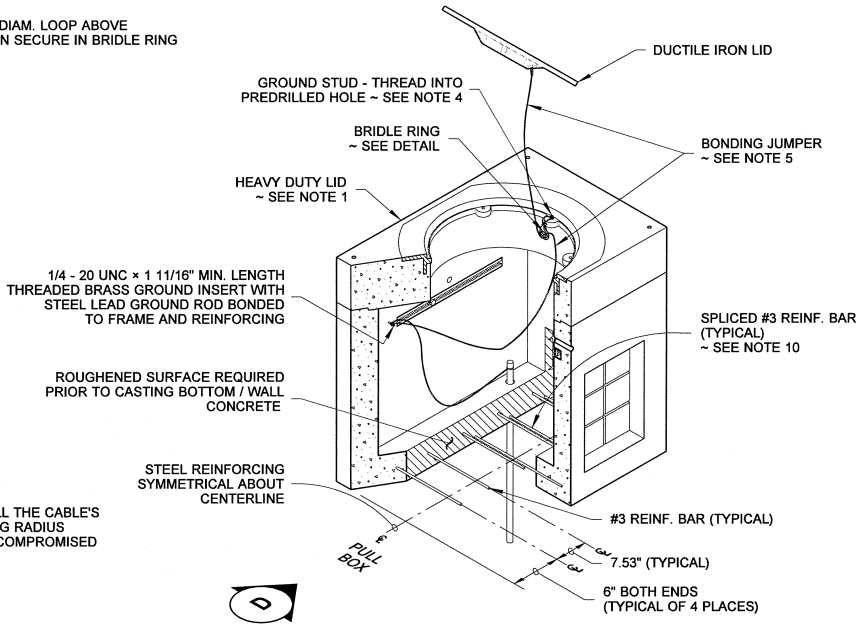

ISOMETRIC CUTAWAY

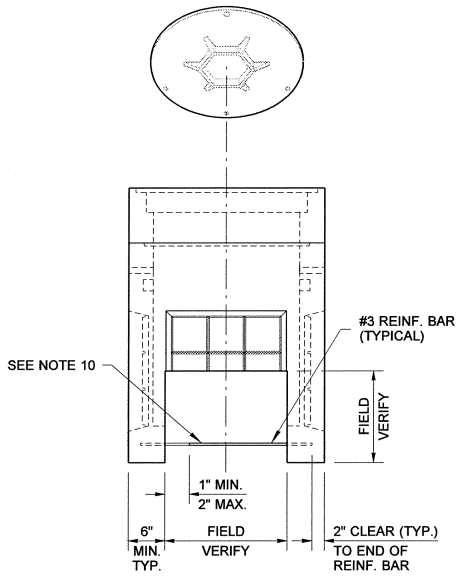

VIEW (D)

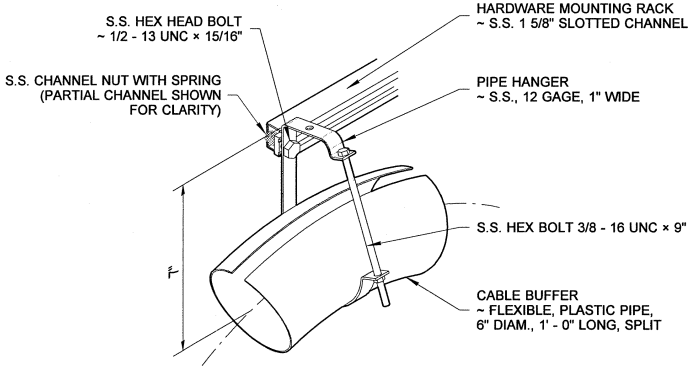

PIPE HANGER DETAIL

FABRICATE IF NOT AVAILABLE COMMERCIALLY

SPLIT PULL BOX ASSEMBLY

(SHOWN WITH HEAVY DUTY LID)

SEE **PULL BOX**, SHEET 1, FOR DIMENSIONS NOT SHOWN

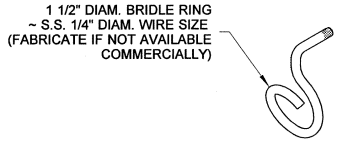

BRIDLE RING DETAIL

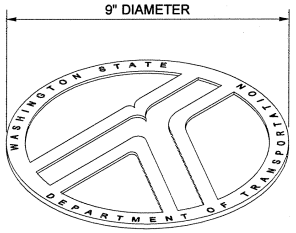

LOGO DETAIL

PULL BOX

STANDARD PLAN J-90.10-00

SHEET 2 OF 2 SHEETS

APPROVED FOR PUBLICATION

STATE DESIGN ENGINEER — DATE 2/10/09

Washington State Department of Transportation

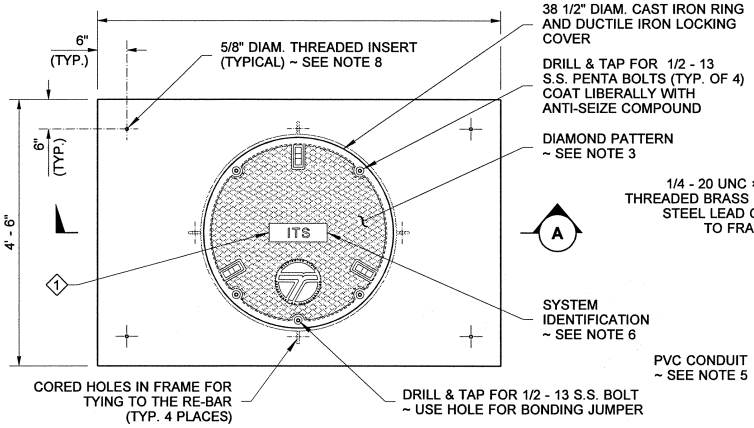

HEAVY DUTY LID
SEE NOTE 1

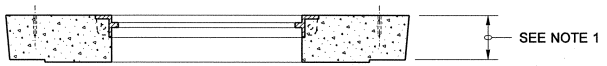

SECTION (A)

(LID NOT SHOWN)

(C)

(1) PROVIDE A 5" WIDE × 3" HIGH × 3/16" THICK MIN. FLAT, STEEL PLATE FOR LIFTING PURPOSES (FOR DUCTILE IRON LID ONLY)

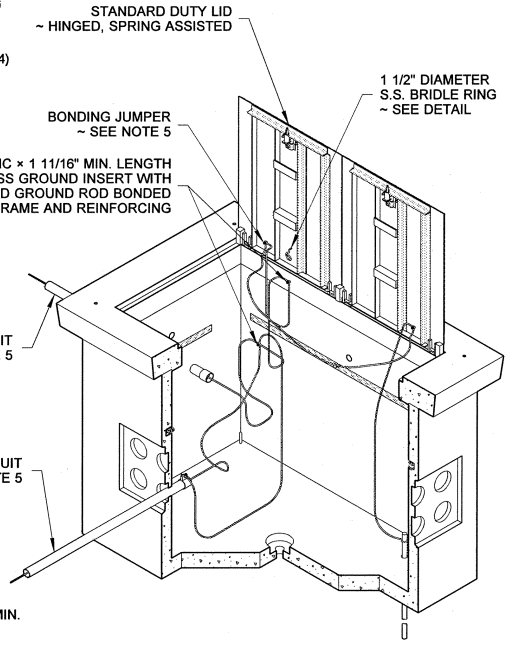

ISOMETRIC CUTAWAY

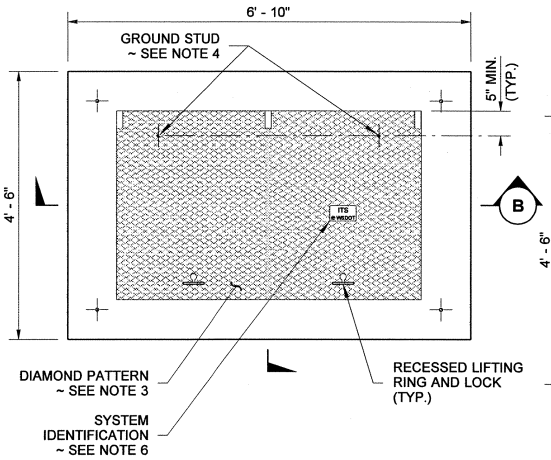

TOP

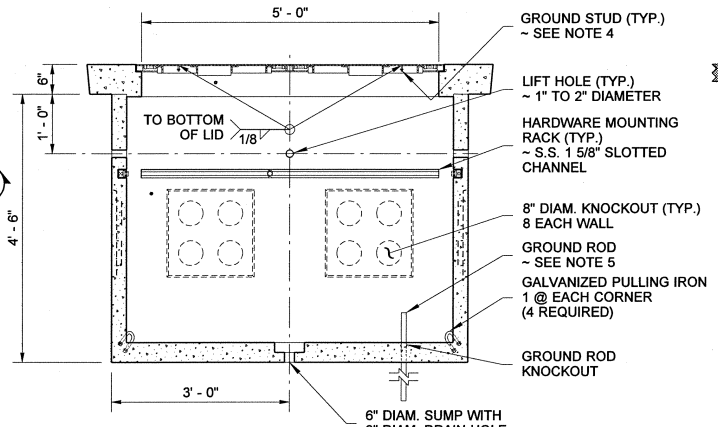

SECTION (B)

CABLE VAULT
(SHOWN WITH STANDARD DUTY LID)

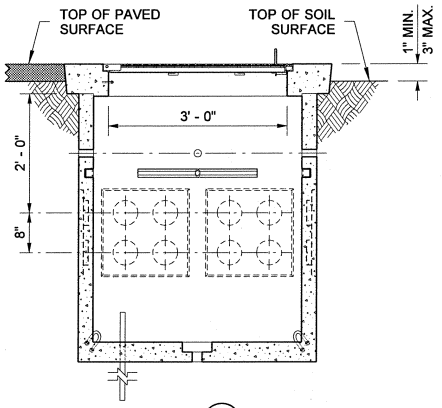

VIEW (C)

NOTES

1. The Heavy Duty Lid shall be used when a Cable Vault is placed in the paved shoulder or the traveled way. Use a 9" thick lid for new Cable Vault installations. Use a 6" thick Heavy Duty Lid when converting a Standard Duty Cable Vault into a Heavy Duty Cable Vault in the paved shoulder or the traveled way and no overlay is called for in the contract. Otherwise, see contract plans for overlay depth and fabricate lid thickness to match overlay depth.
2. Use Standard Duty Cable Vault and Lid when placed in unpaved areas.
3. The diamond pattern shall be 3/32" minimum thick.
4. A 1/4 - 20 UNC × 3/4" S.S. ground stud with 2 S.S. nuts and 2 S.S. flat washers shall be attached to the Standard Duty Lid and coated with anti-seize compound. Provide a 5/8" diameter cored hole in the ductile iron lid gusset (Heavy Duty Lid) with 1/2 - 13 UNC × 1 1/4" S.S. bolt, 2 S.S. flat washers and 2 S.S. nuts for the Bonding Jumper.
5. Connect a Bonding Jumper to the steel conduit bushing for GRS conduit and connect the steel conduit bushing jumper to the equipment ground at the threaded brass ground insert. Connect the equipment grounding conductors in the PVC and/or GRS conduits to the brass ground insert. The bonding jumper shall be #8 min. x 4' (ft.) of tinned braided copper between the lid and the frame of the Heavy Duty tops and from the Heavy Duty top to the threaded brass ground insert. The Bonding Jumper shall be #8 min. x 4' (ft.) of tinned braided copper between the lid on a Standard Duty vault and the threaded brass ground insert. See contract plan sheets for Bonding Jumper requirements.
6. The system identification letters shall be 1/8 " line thickness formed by engraving, casting, stamping or with a weld bead. See SYSTEM IDENTIFICATION DETAIL, **Standard Plan J-40.10**. Ductile iron lid lettering shall be recessed.
7. Cement concrete shall be Class 4000.
8. Plastic plugs shall be put into the lid inserts after fabrication and the lid installation.
9. Capacity - conduit diameter = 60" (in.).
10. Excavate material, place 6" crushed surfacing pad per **Std. Specification Section 8-20.3(6)**. Field bend #3 reinforcing bar to allow conduit into the Cable Vault. Field bend reinf. bar back into place, wire tie in 2 places and cast commercial concrete (commercial concrete only allowed for bottom/wall completion).
11. This drawing depicts a typical Cable Vault assembly. Reinforcing not shown. Each manufacturer's Cable Vault assembly will vary. Refer to the approved manufacturer's shop drawings for all dimensions and the actual arrangement.

CABLE VAULT

STANDARD PLAN J-90.20-00

SHEET 1 OF 2 SHEETS

APPROVED FOR PUBLICATION

STATE DESIGN ENGINEER — DATE

Washington State Department of Transportation

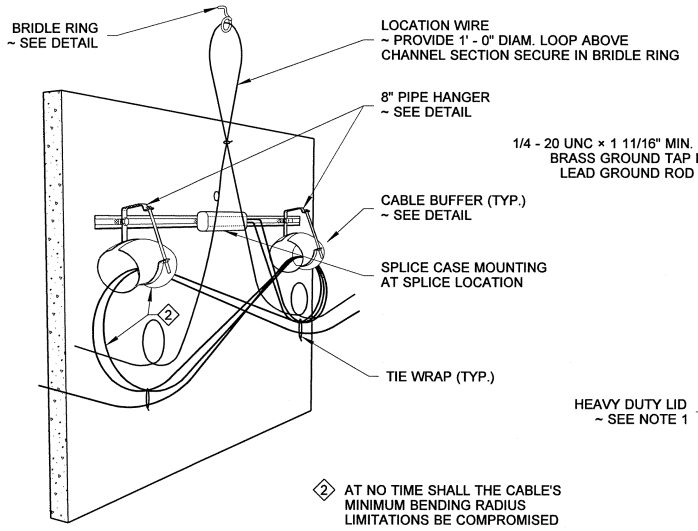

INTERNAL OBLIQUE VIEW

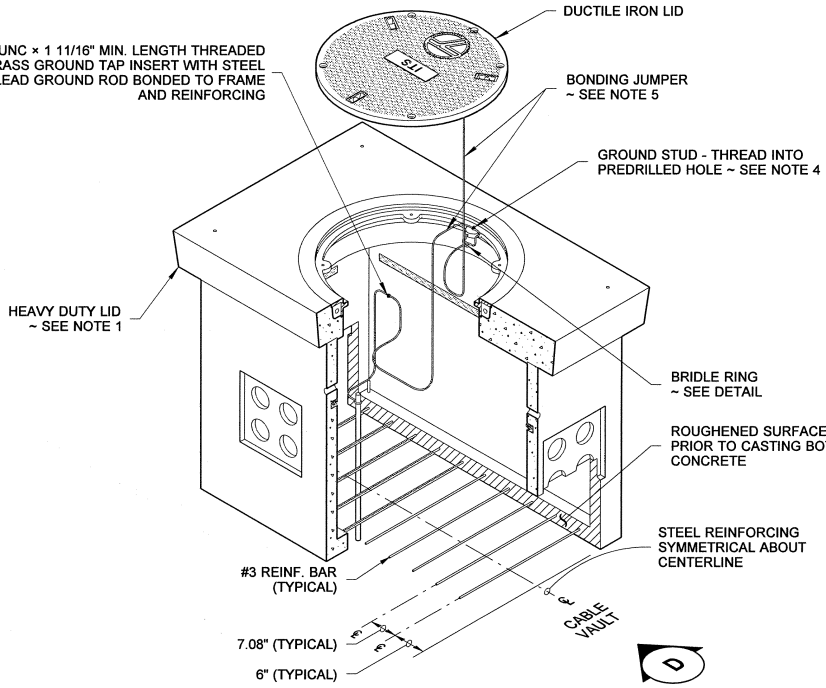

ISOMETRIC CUTAWAY

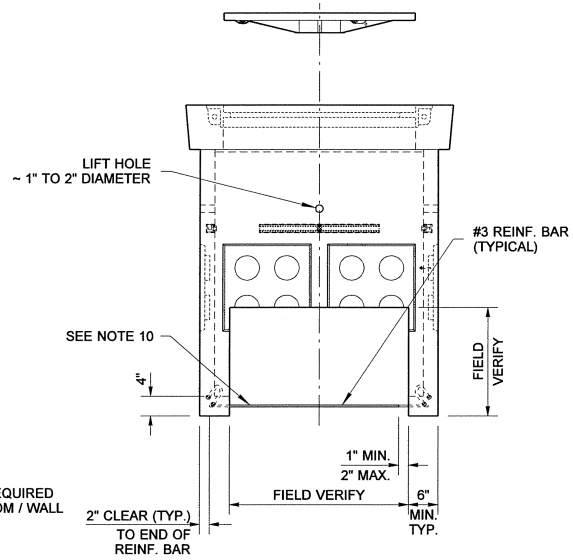

VIEW (D)

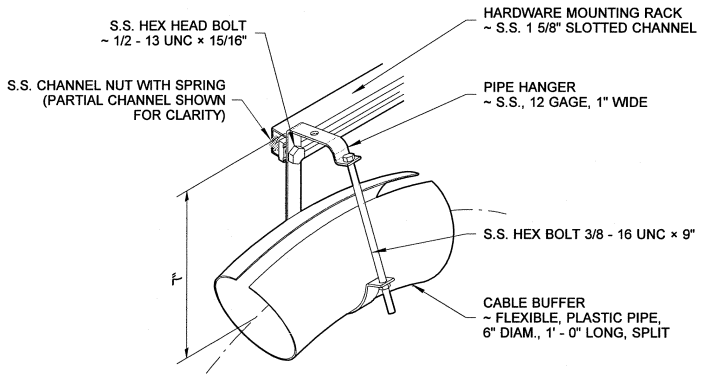

PIPE HANGER DETAIL
FABRICATE IF NOT AVAILABLE COMMERCIALLY

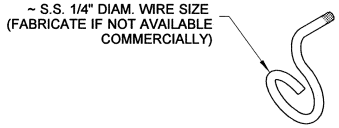

BRIDLE RING DETAIL

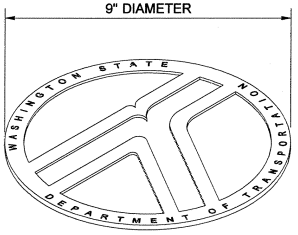

LOGO DETAIL

CABLE VAULT

STANDARD PLAN J-90.20-00

SHEET 2 OF 2 SHEETS

APPROVED FOR PUBLICATION

STATE DESIGN ENGINEER — DATE 2/10/09

Washington State Department of Transportation

SPLIT CABLE VAULT
(SHOWN WITH HEAVY DUTY LID)

SEE **CABLE VAULT**, SHEET 1, FOR DIMENSIONS NOT SHOWN

This page left blank intentionally.

DRAWN BY: ADAM COCHRAN

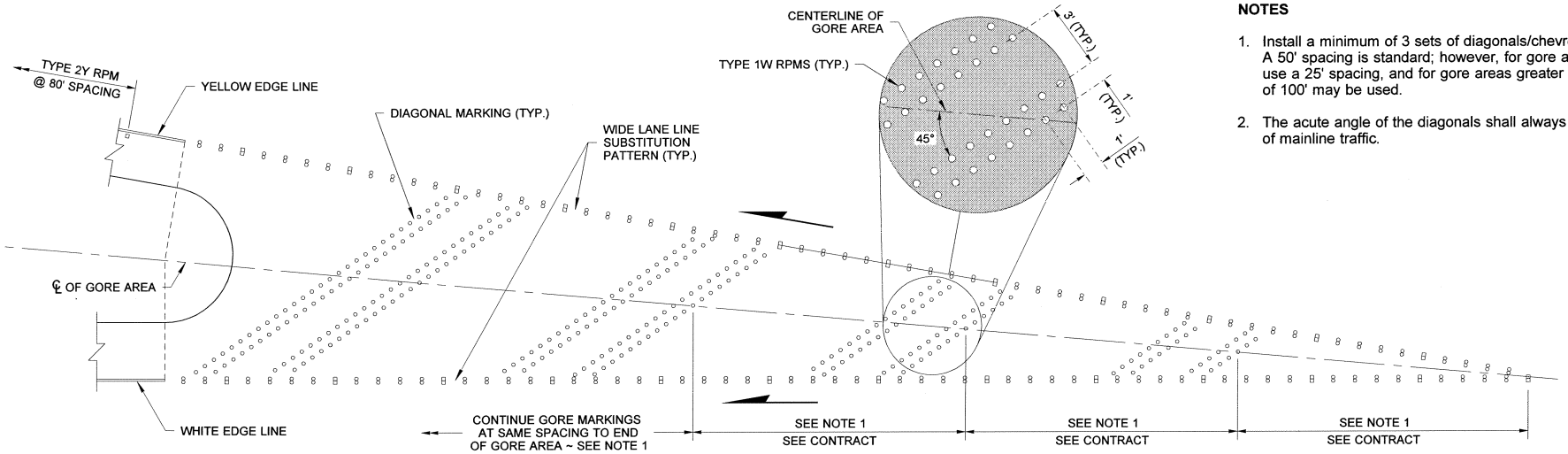

GORE AREA MARKINGS WITH DIAGONALS

NOTES

1. Install a minimum of 3 sets of diagonals/chevrons in the gore area. A 50' spacing is standard; however, for gore areas shorter than 150' use a 25' spacing, and for gore areas greater than 400' a spacing of 100' may be used.
2. The acute angle of the diagonals shall always point in the direction of mainline traffic.

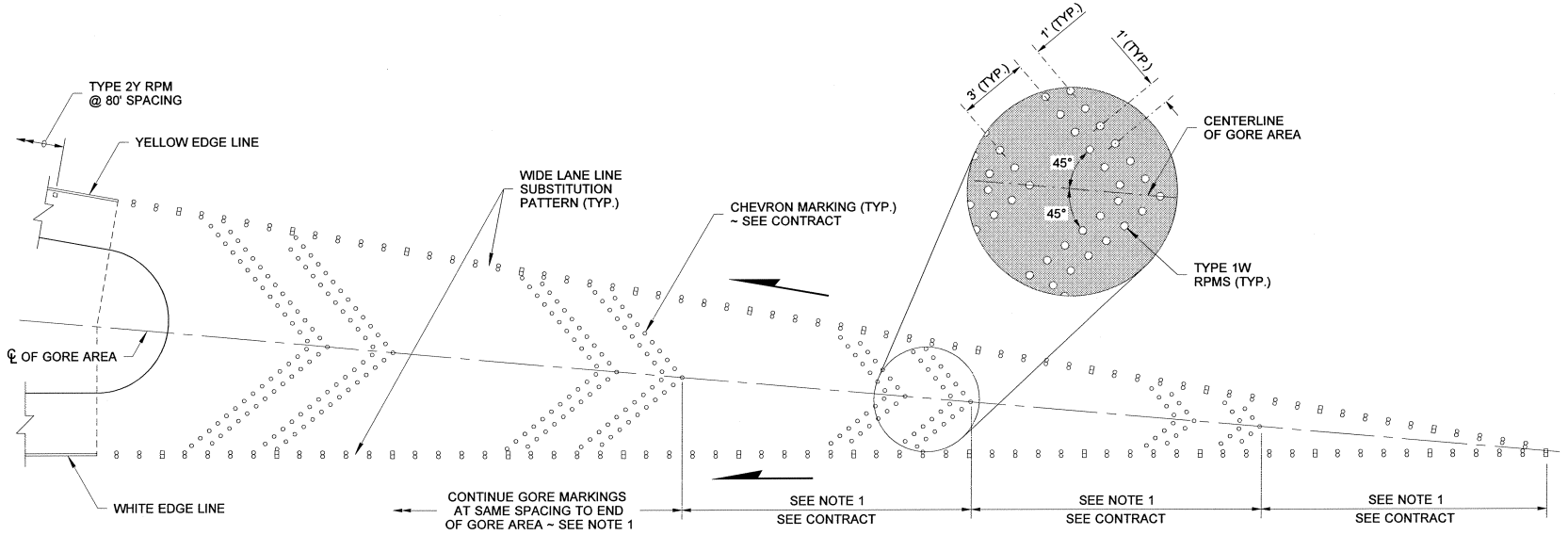

GORE AREA MARKINGS WITH CHEVRONS

THEODORE J. TREFRY
STATE OF WASHINGTON
25335
REGISTERED
PROFESSIONAL ENGINEER
1/25/07

EXPIRES AUGUST 9, 2007

GORE AREA SUBSTITUTION WITH TYPES 1 & 2 RAISED PAVEMENT MARKERS STANDARD PLAN M-2.60-01

SHEET 1 OF 1 SHEET

APPROVED FOR PUBLICATION

STATE DESIGN ENGINEER — DATE 01/30/07

Washington State Department of Transportation

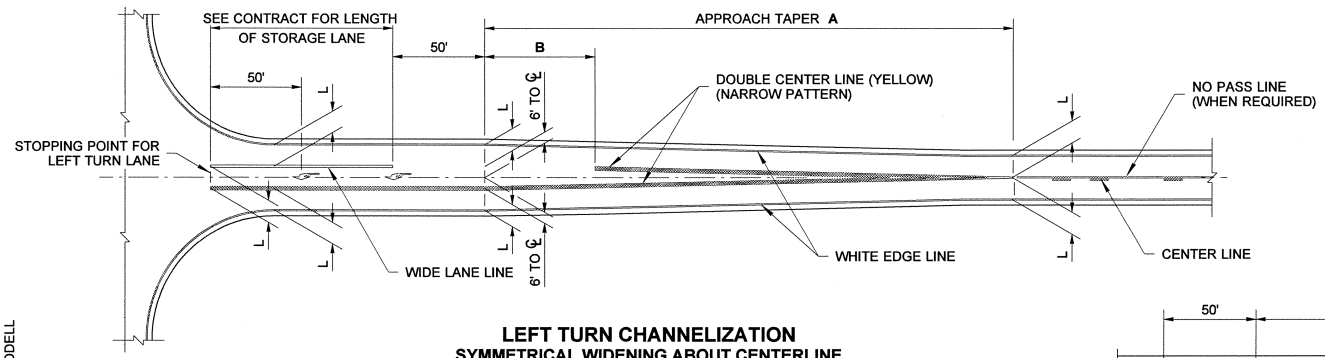

LEFT TURN CHANNELIZATION
SYMMETRICAL WIDENING ABOUT CENTERLINE

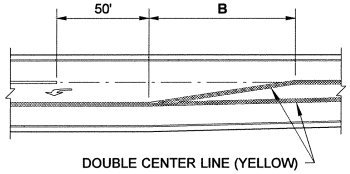

OPTIONAL MARKED DECELERATION TAPER

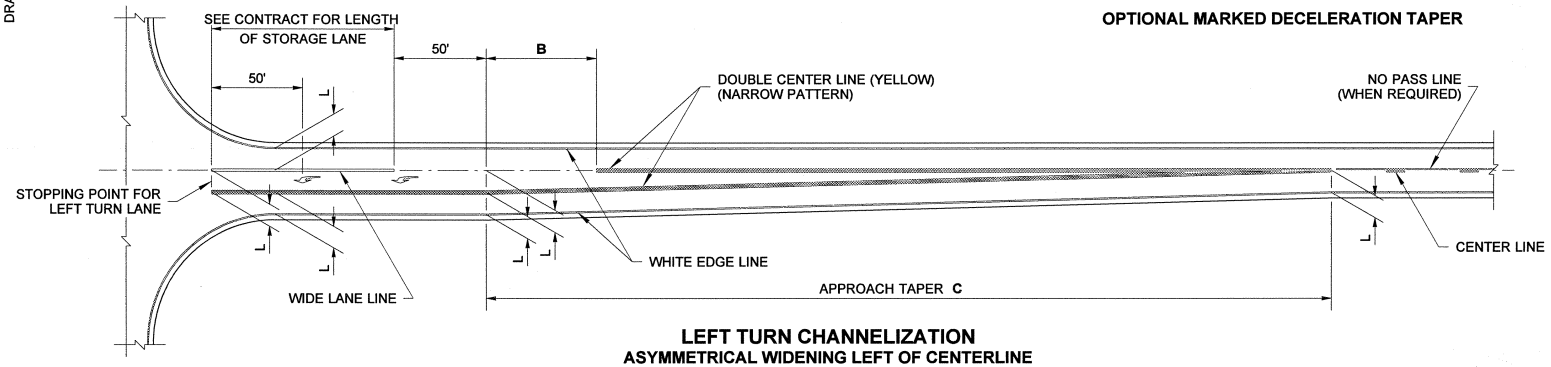

LEFT TURN CHANNELIZATION
ASYMMETRICAL WIDENING LEFT OF CENTERLINE

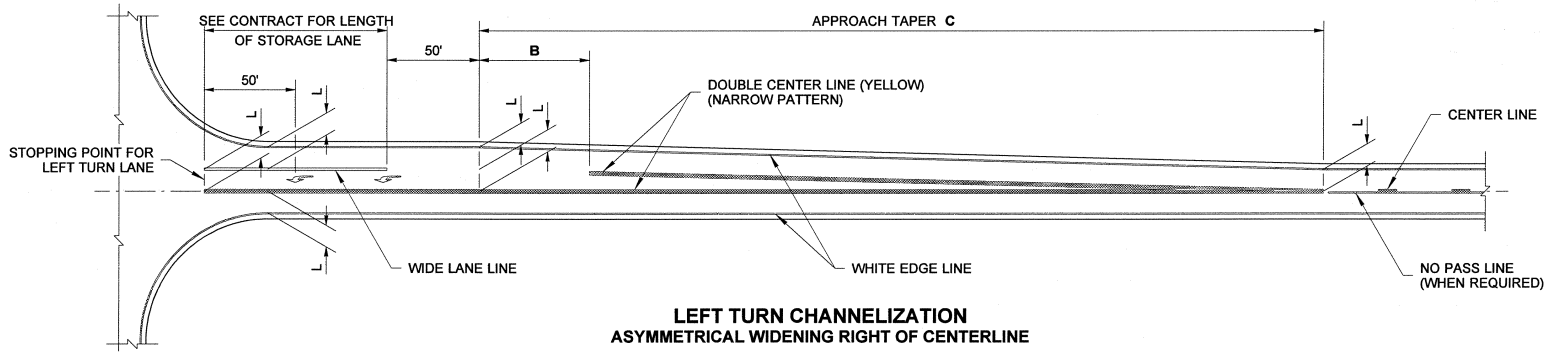

LEFT TURN CHANNELIZATION
ASYMMETRICAL WIDENING RIGHT OF CENTERLINE

DRAWN BY: FERN LIDDELL

GENERAL NOTES

1. The channelization shown on this plan assumes optimal roadway geometric design. The dimensions may vary to fit existing conditions. See Contract.

L = 12' Typical Lane Width. See Contract for specified lane widths.

LEGEND

Type 2L Traffic Arrow

POSTED SPEED	APPROACH TAPER A	DIMENSION B	APPROACH TAPER C
60 MPH	360'	60'	720'
55 MPH	330'	55'	660'
50 MPH	300'	50'	600'
45 MPH	270'	45'	540'
40 MPH	240'	40'	480'
35 MPH	210'	35'	420'
30 MPH	180'	30'	360'
25 MPH	150'	25'	300'
20 MPH	120'	20'	240'

LEFT TURN CHANNELIZATION

STANDARD PLAN M-3.10-02

SHEET 1 OF 1 SHEET

APPROVED FOR PUBLICATION

STATE DESIGN ENGINEER — DATE 2/10/09

Washington State Department of Transportation

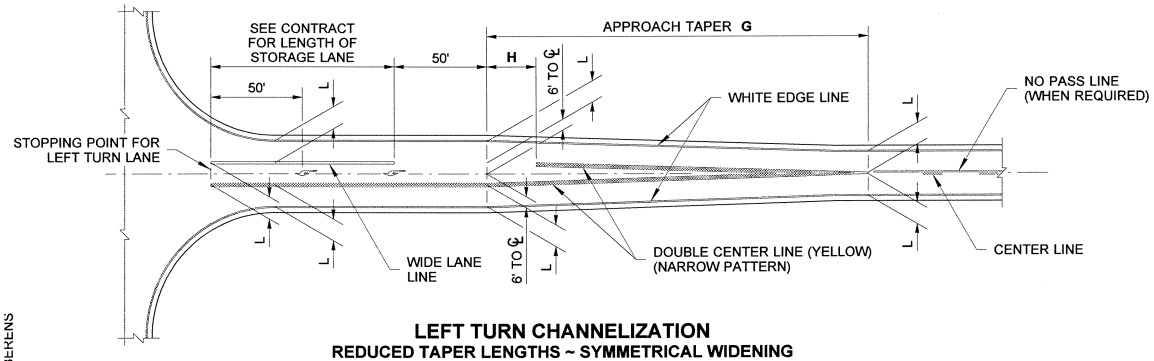

LEFT TURN CHANNELIZATION
REDUCED TAPER LENGTHS ~ SYMMETRICAL WIDENING
(FOR LIMITED USE IN URBAN AREAS WITH POSTED SPEEDS OF 40 MPH OR LESS)

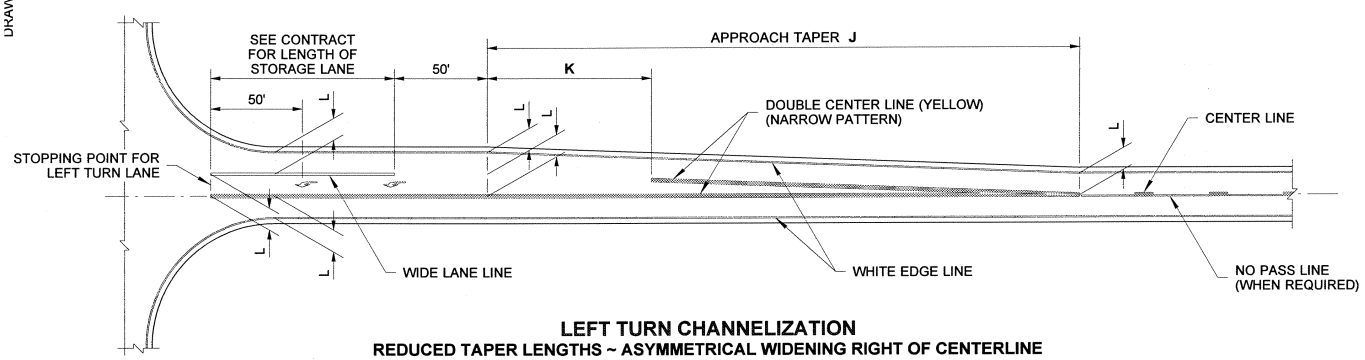

LEFT TURN CHANNELIZATION
REDUCED TAPER LENGTHS ~ ASYMMETRICAL WIDENING RIGHT OF CENTERLINE
(FOR LIMITED USE IN URBAN AREAS WITH POSTED SPEEDS OF 40 MPH OR LESS)

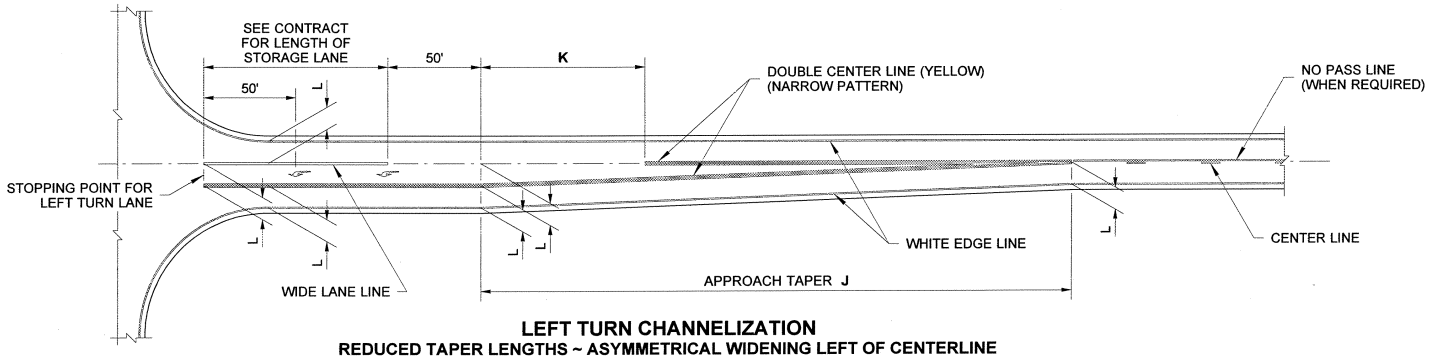

LEFT TURN CHANNELIZATION
REDUCED TAPER LENGTHS ~ ASYMMETRICAL WIDENING LEFT OF CENTERLINE
(FOR LIMITED USE IN URBAN AREAS WITH POSTED SPEEDS OF 40 MPH OR LESS)

DRAWN BY: BILL BERENS

GENERAL NOTES

1. The channelization shown on this plan assumes optimal roadway geometric design. The dimensions may vary to fit existing conditions. See Contract.

L = 12' Typical Lane Width. See Contract for specified lane widths.

LEGEND

Type 2L Traffic Arrow

POSTED SPEED	APPROACH TAPER G	DIMENSION H	APPROACH TAPER J	DIMENSION K
40 MPH	160'	27'	320'	53'
35 MPH	123'	20'	245'	41'
30 MPH	90'	15'	180'	30'
25 MPH	63'	10'	125'	21'
20 MPH	40'	7'	80'	13'

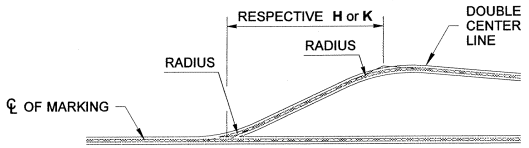

RADIUS = RESPECTIVE **H** or **K**

OPTIONAL MARKED DECELERATION TAPER
(FOR LIMITED USE IN URBAN AREAS)

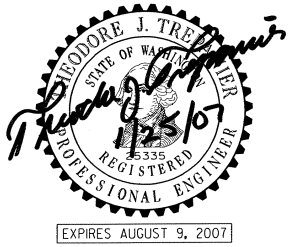

EXPIRES AUGUST 9, 2007

LEFT TURN CHANNELIZATION REDUCED TAPERS
STANDARD PLAN M-3.20-01

SHEET 1 OF 1 SHEET

APPROVED FOR PUBLICATION

STATE DESIGN ENGINEER — DATE 01/30/07

Washington State Department of Transportation

DRAWN BY: FERN LIDDELL

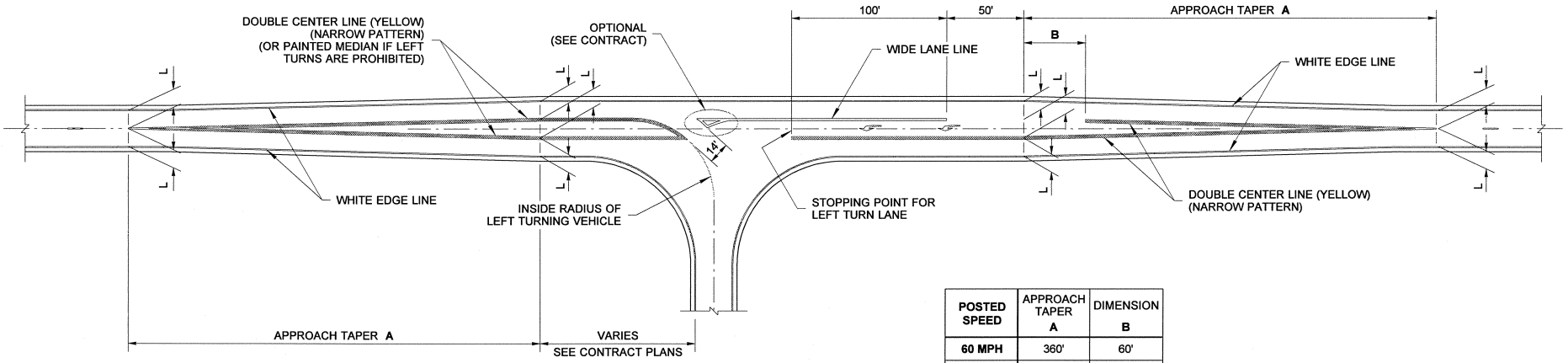

LEFT TURN CHANNELIZATION
TEE INTERSECTION

POSTED SPEED	APPROACH TAPER A	DIMENSION B
60 MPH	360'	60'
55 MPH	330'	55'
50 MPH	300'	50'
45 MPH	270'	45'
40 MPH	240'	40'
35 MPH	210'	35'
30 MPH	180'	30'
25 MPH	150'	25'
20 MPH	120'	20'

GENERAL NOTES

1. The channelization shown on this plan assumes optimal roadway geometric design. The dimensions may vary to fit existing conditions. See Contract.

L = 12' Typical Lane Width. See Contract for specified lane widths.

LEGEND

Type 2L Traffic Arrow

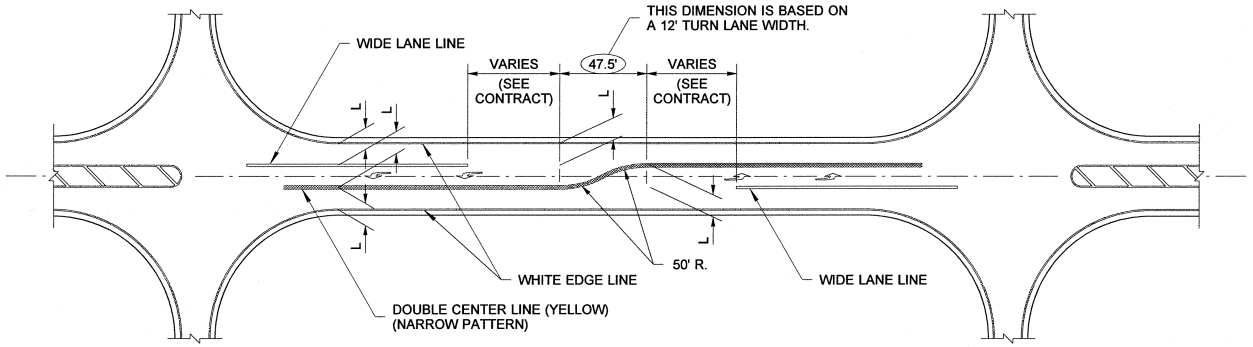

LEFT TURN CHANNELIZATION
BACK TO BACK LEFT TURN LANES

THEODORE J. TREPANIER
STATE OF WASHINGTON
25335
REGISTERED
PROFESSIONAL ENGINEER

LEFT TURN CHANNELIZATION TEE INTERSECTION AND BACK TO BACK TURN LANES STANDARD PLAN M-3.30-02

SHEET 1 OF 1 SHEET

APPROVED FOR PUBLICATION

STATE DESIGN ENGINEER — DATE 2/10/05

Washington State Department of Transportation

DRAWN BY: FERN LIDDELL

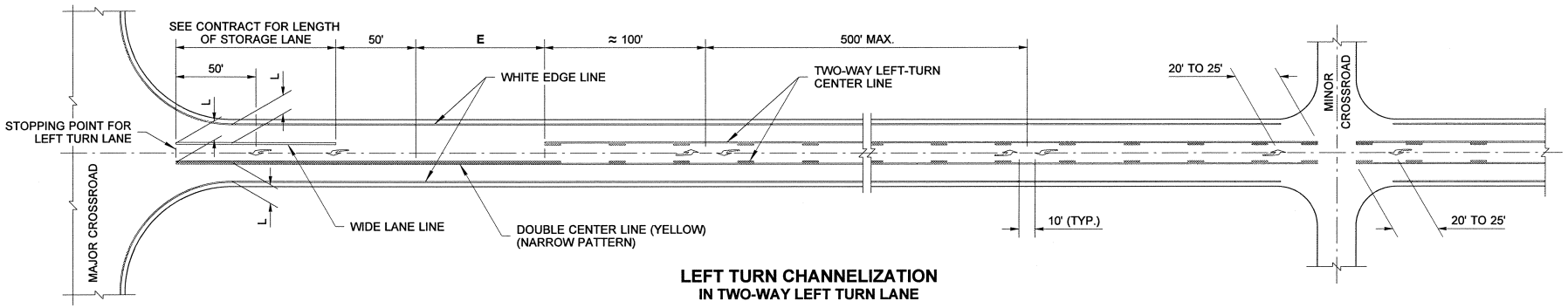

LEFT TURN CHANNELIZATION
IN TWO-WAY LEFT TURN LANE

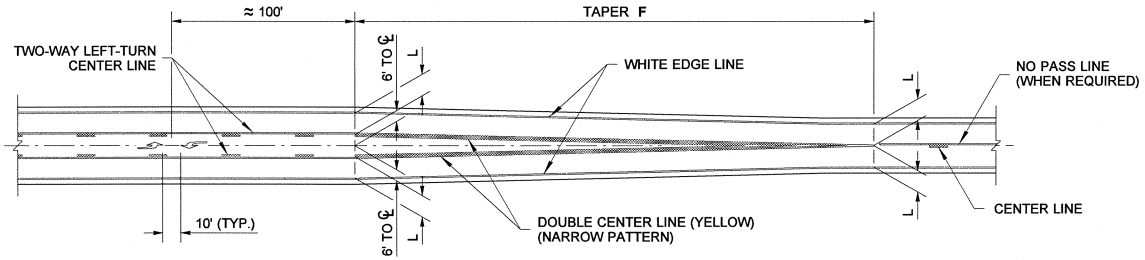

TWO-WAY LEFT TURN LANE TRANSITION

POSTED SPEED	DIMENSION E ①	APPROACH TAPER F
HIGH SPEED		
60 MPH	180'	360'
55 MPH	180'	330'
50 MPH	180'	300'
45 MPH	180'	270'
LOW SPEED		
40 MPH	120'	240'
35 MPH	120'	210'
30 MPH	120'	180'
25 MPH	120'	150'
20 MPH	120'	120'

GENERAL NOTES

1. The channelization shown on this plan assumes optimal roadway geometric design. The dimensions may vary to fit existing conditions. See Contract.

L = 12' Typical Lane Width. See Contract for specified lane widths.

LEGEND

Type 2L Traffic Arrow

① Can be reduced to a mnimum of 50' to increase storage capacity.

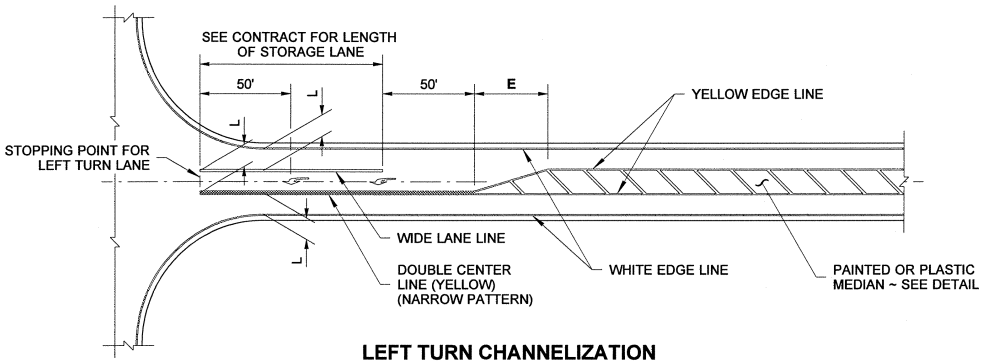

LEFT TURN CHANNELIZATION
IN PAINTED MEDIAN

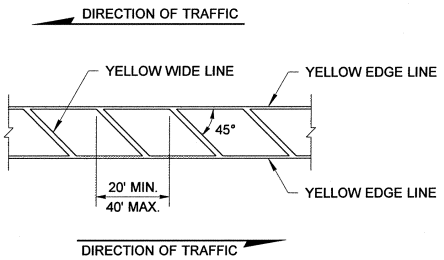

PAINTED OR PLASTIC MEDIAN
COMPOSED OF LONGITUDINAL MARKINGS

THEODORE J. TREPANIER — STATE OF WASHINGTON — 25335 — REGISTERED PROFESSIONAL ENGINEER — 2/6/09

TWO-WAY LEFT-TURN AND MEDIAN CHANNELIZATION STANDARD PLAN M-3.40-02

SHEET 1 OF 1 SHEET

APPROVED FOR PUBLICATION

STATE DESIGN ENGINEER — DATE 2/10/09

Washington State Department of Transportation

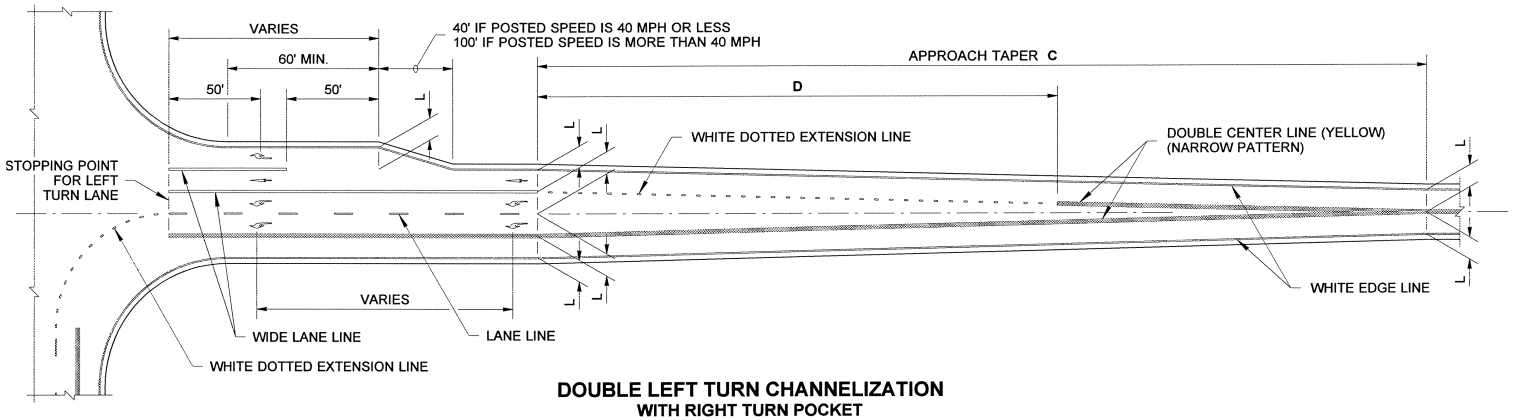

DOUBLE LEFT TURN CHANNELIZATION
WITH RIGHT TURN POCKET

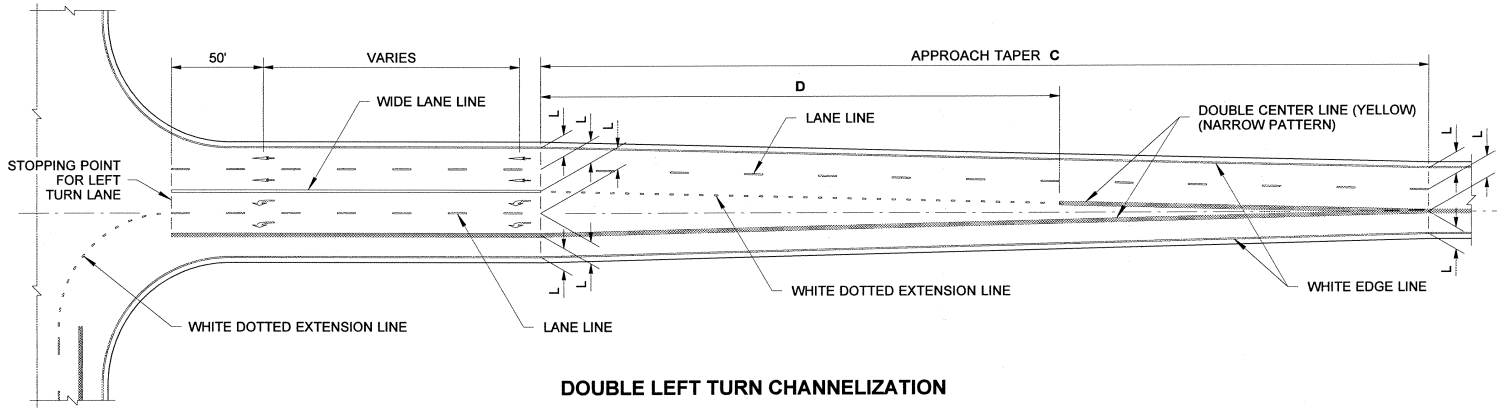

DOUBLE LEFT TURN CHANNELIZATION

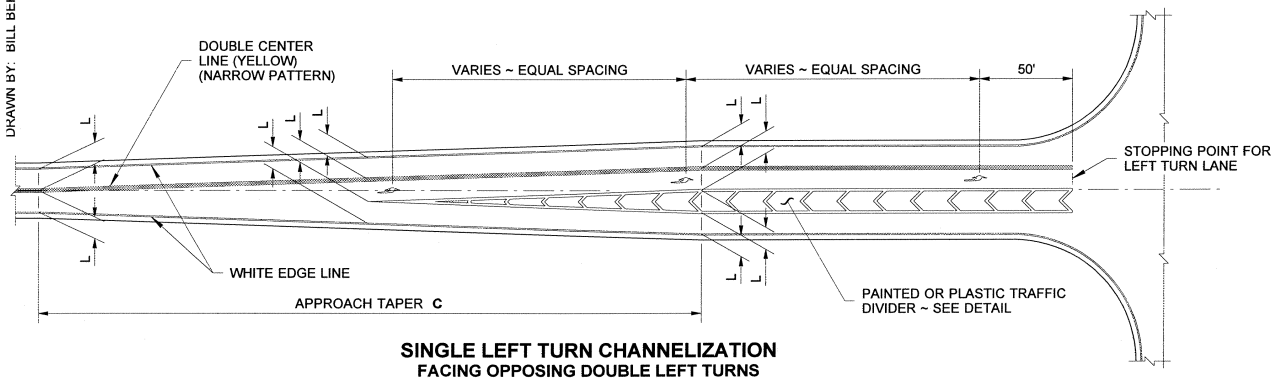

SINGLE LEFT TURN CHANNELIZATION
FACING OPPOSING DOUBLE LEFT TURNS

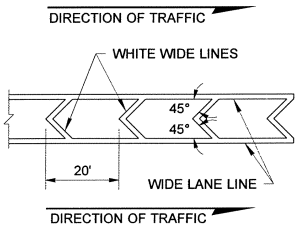

PAINTED OR PLASTIC TRAFFIC DIVIDER
COMPOSED OF LONGITUDINAL MARKINGS

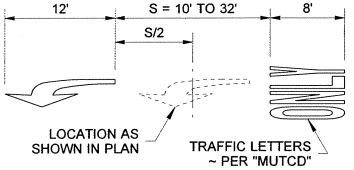

LANE MESSAGE DETAIL
OPTIONAL ~ SEE GENERAL NOTE 2

GENERAL NOTES

1. The channelization shown on this plan assumes optimal roadway geometric design. The dimensions may vary to fit existing conditions. See Contract.
2. The lane message "ONLY" may be added to the Traffic Arrow Type 2L locations shown, in which case, substitute the Arrow as per the LANE MESSAGE DETAIL.

POSTED SPEED	APPROACH TAPER C	D
60 MPH	720'	420'
55 MPH	660'	385'
50 MPH	600'	350'
45 MPH	540'	315'
40 MPH	480'	280'
35 MPH	420'	245'
30 MPH	360'	210'
25 MPH	300'	175'
20 MPH	240'	140'

L = 12' Typical Lane Width. See Contract for specified lane widths.

LEGEND

- Type 2L Traffic Arrow
- Type 2R Traffic Arrow
- Type 1 Traffic Arrow (Optional)

THEODORE J. TRENCHER — STATE OF WASHINGTON — 25335 — REGISTERED PROFESSIONAL ENGINEER
1/25/07
EXPIRES AUGUST 9, 2007

DOUBLE LEFT TURN CHANNELIZATION
STANDARD PLAN M-3.50-01

SHEET 1 OF 1 SHEET

APPROVED FOR PUBLICATION
STATE DESIGN ENGINEER — DATE 01/30/07
Washington State Department of Transportation

DRAWN BY: BILL BERENS

DRAWN BY: MARK SUJKA

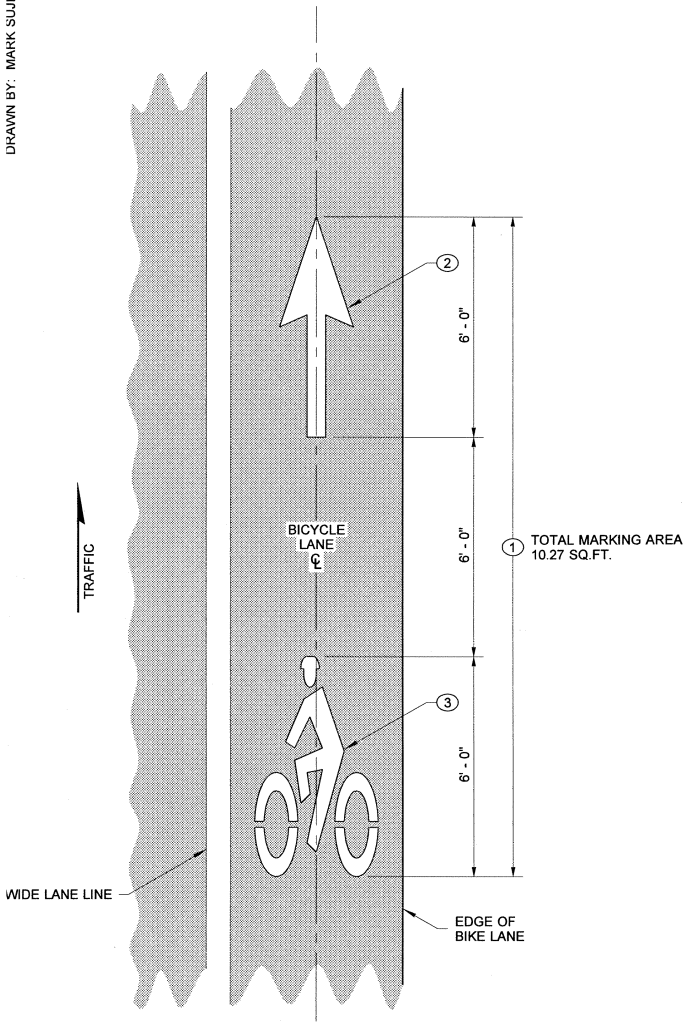

BICYCLE LANE SYMBOL LAYOUT

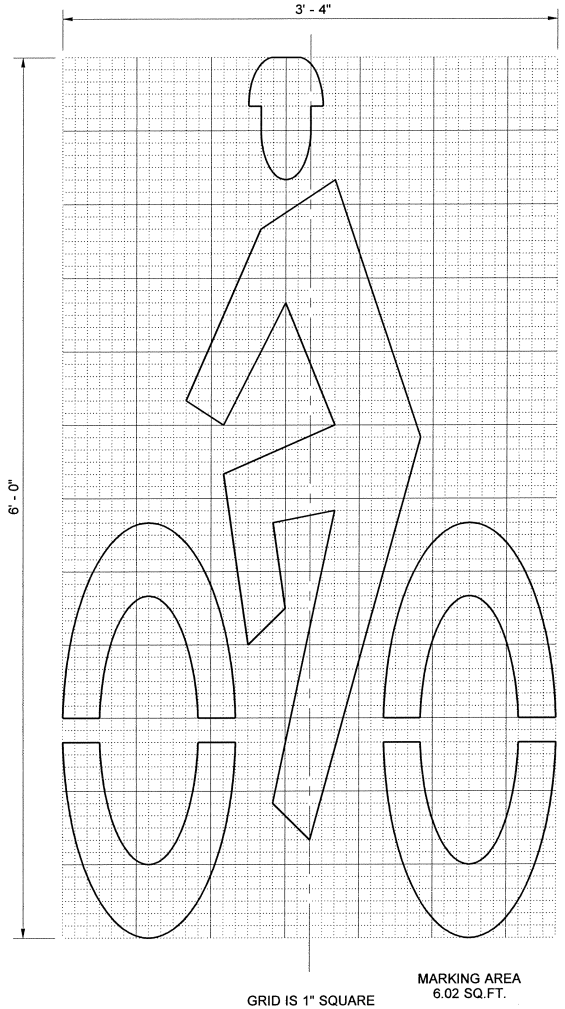

BIKE RIDER SYMBOL DETAIL

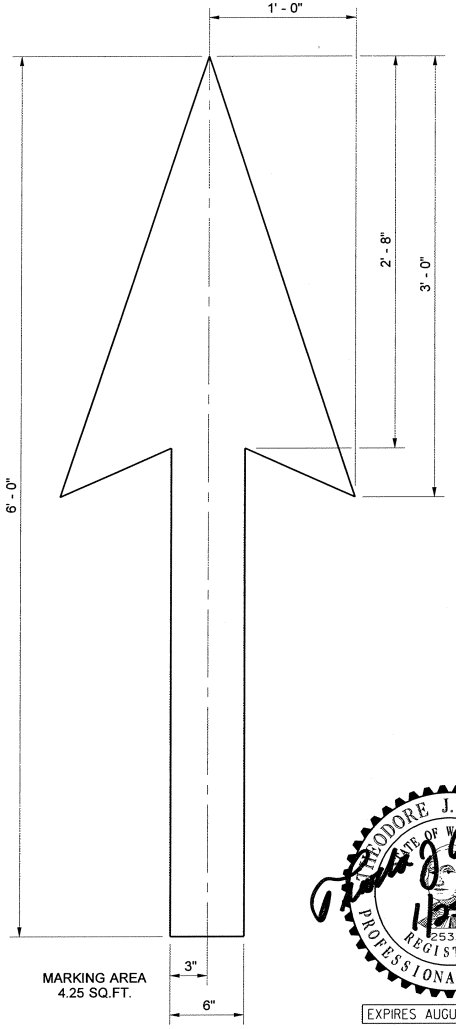

BIKE LANE ARROW DETAIL

KEY NOTES

1. Bid Item "Bicycle Lane Symbol" includes Bike Lane Arrow and Bike Rider Symbol.
2. 2' x 6' White Bike Lane Arrow
3. Bike Rider Symbol

GENERAL NOTE

See contract for location and material requirements.

THEODORE J. TRENNER — STATE OF WASHINGTON — 25335 — REGISTERED PROFESSIONAL ENGINEER
1/25/07
EXPIRES AUGUST 9, 2007

BICYCLE LANE SYMBOL LAYOUT

STANDARD PLAN M-9.50-01

SHEET 1 OF 1 SHEET

APPROVED FOR PUBLICATION

STATE DESIGN ENGINEER — DATE 01/30/07

Washington State Department of Transportation

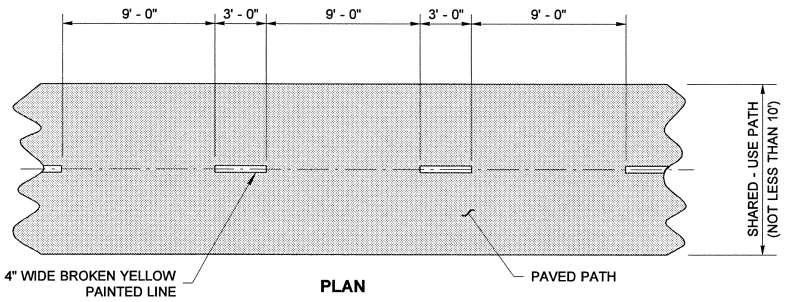

PLAN
CENTERLINE MARKING

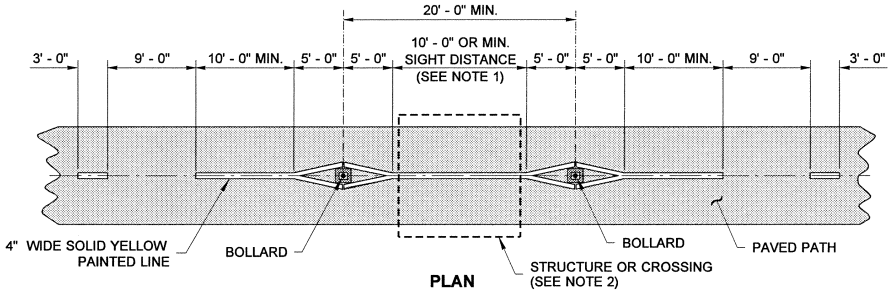

PLAN
MARKING AROUND MULTIPLE BOLLARDS
SHOWN AT REDUCED DRAWING SCALE

NOTE:

1. In cases where the bollard location is not visible to an approaching bicyclist, use the minimum sight distance for the Solid Yellow Painted Line (taper portion), to extend the Solid Yellow Painted Line as needed to provide advanced warning of the upcoming obstruction.
2. In cases where there is a crossing, bridge or other structure on the path that does not support or accomodate a vehicle. (See Contract).
3. Provide Breakaway Bollards within the Roadway Design Clear Zone.

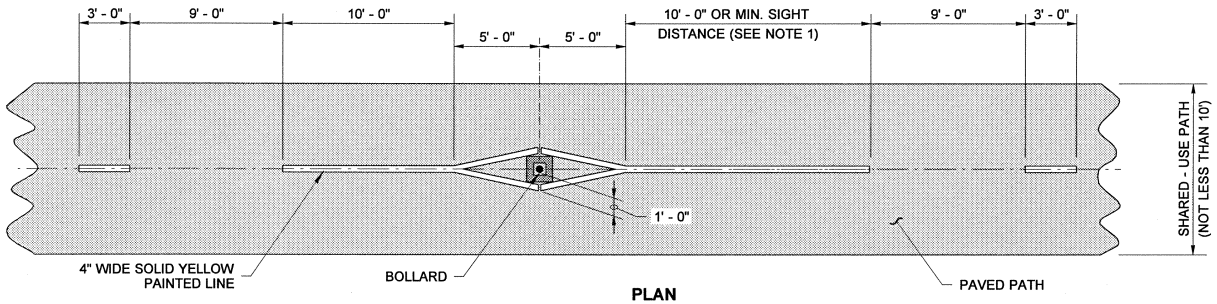

PLAN
MARKING AROUND BOLLARD

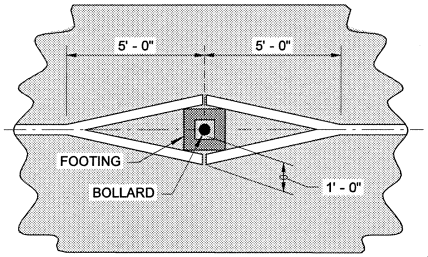

DETAIL

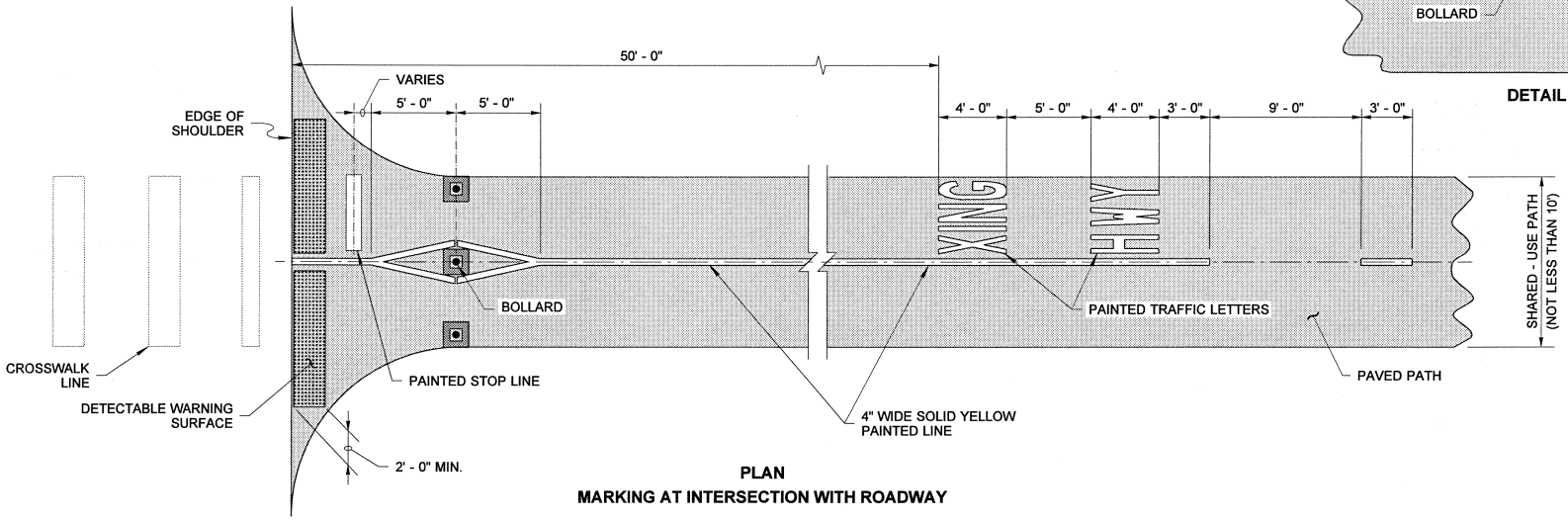

PLAN
MARKING AT INTERSECTION WITH ROADWAY

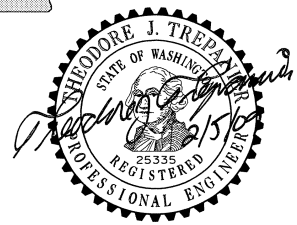

SHARED - USE PATH MARKINGS

STANDARD PLAN M-9.60-00

SHEET 1 OF 1 SHEET

APPROVED FOR PUBLICATION

STATE DESIGN ENGINEER — DATE 2/10/09

Washington State Department of Transportation

DRAWN BY: MARK SUJKA

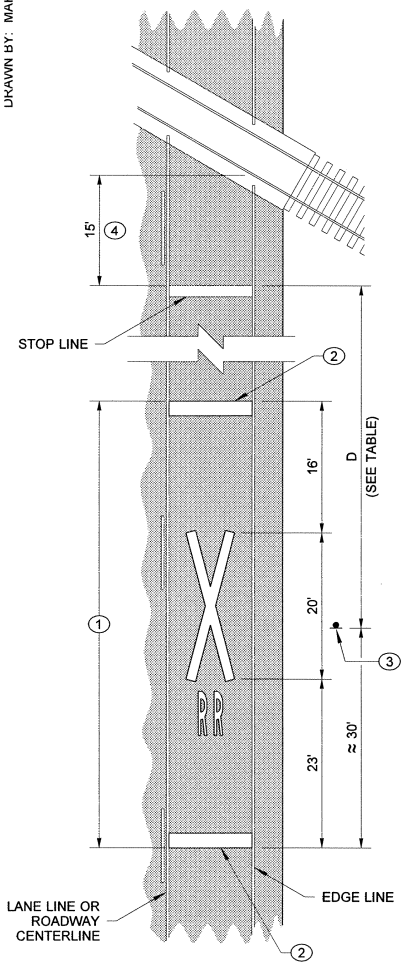

LAYOUT

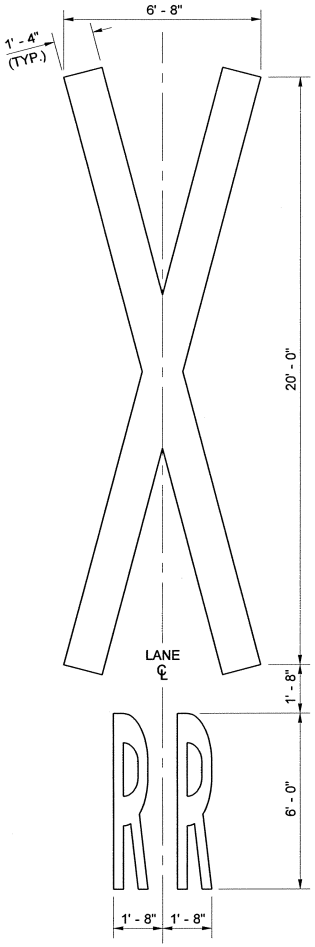

SYMBOL DETAIL

① TOTAL MARKING AREA
(PER 12' WIDE LANE)
= 109.75 SQ.FT.

STANDARD SYMBOL

GENERAL NOTE

See contract for location and material requirements.

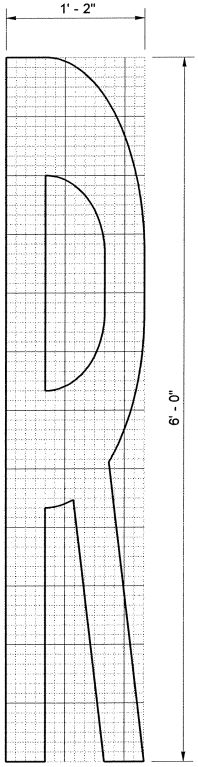

GRID IS 1" SQUARE

"R" DETAIL

MPH	D*
25	50 Ft.
30	100 Ft.
35	150 Ft.
40	225 Ft.
45	300 Ft.
50	375 Ft.
55	450 Ft.
60	550 Ft.
65	650 Ft.

* DIMENSIONS SHOWN ARE APPROXIMATE. SEE CONTRACT.

KEY NOTES

① Bid Item "Railroad Crossing Symbol" includes "X" symbol, letters, and two 24" white transverse lines.

② 24" white transverse line

③ W10-1 Advance Warning Sign (not included in RR Crossing Symbol Bid Item)

④ Place Stop Line 15' from the nearest rail or approximately 8 feet from RR gate, if present.

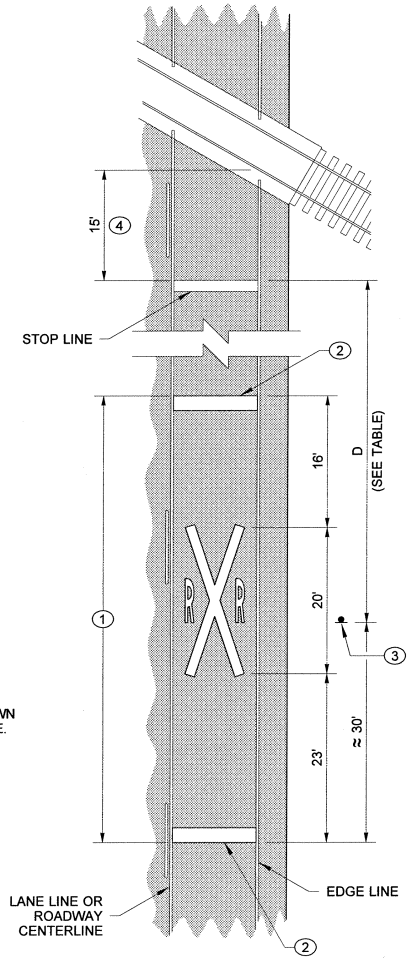

LAYOUT

① TOTAL MARKING AREA
(PER 12' WIDE LANE)
= 111.59 SQ.FT.

ALTERNATIVE SYMBOL

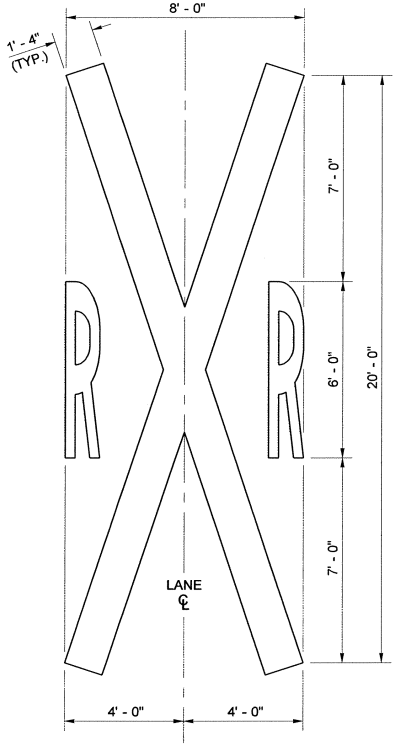

SYMBOL DETAIL

THEODORE J. TREFON
STATE OF WASHINGTON
25335
REGISTERED
PROFESSIONAL ENGINEER
12/5/07
EXPIRES AUGUST 9, 2007

RAILROAD CROSSING LAYOUT

STANDARD PLAN M-11.10-01

SHEET 1 OF 1 SHEET

APPROVED FOR PUBLICATION

STATE DESIGN ENGINEER — DATE 01/30/07

Washington State Department of Transportation

This page left blank intentionally.

DRAWN BY: MARK SUJKA

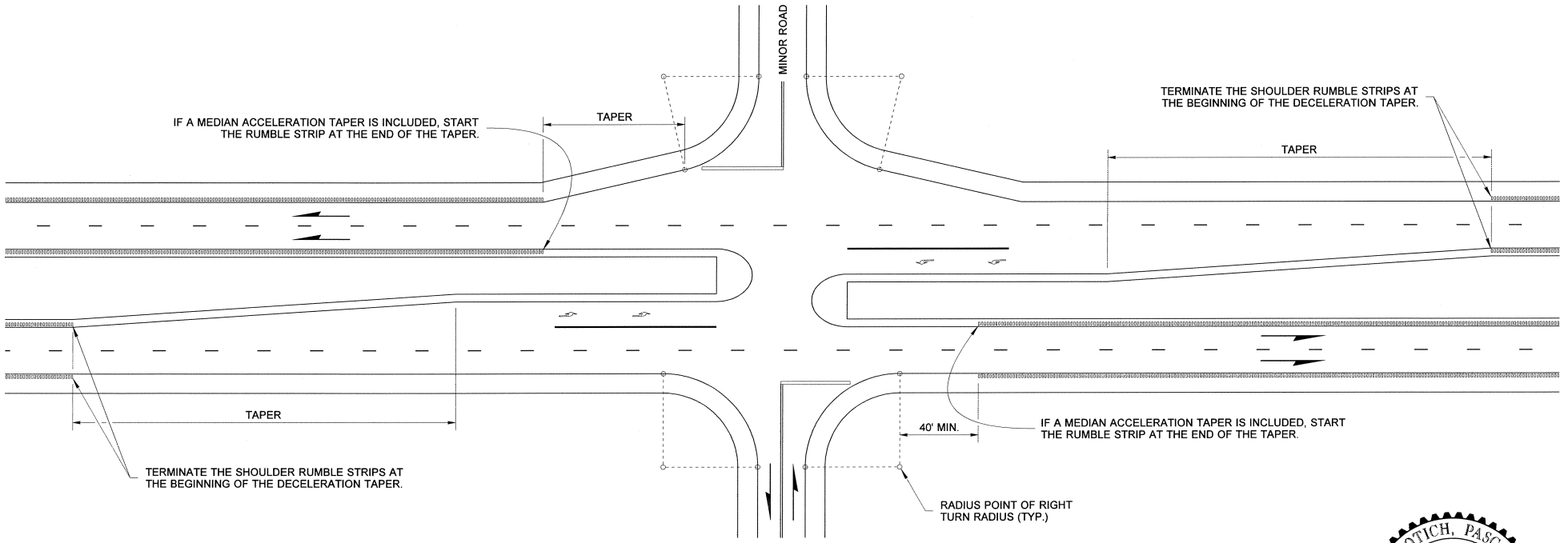

RUMBLE STRIP PLACEMENT AT INTERSECTIONS

BAKOTICH, PASCO M. STATE OF WASHINGTON 24557 REGISTERED PROFESSIONAL ENGINEER 9/5/07

EXPIRES JUNE 19, 2008

SHOULDER RUMBLE STRIP TYPE 1 FOR DIVIDED HIGHWAYS STANDARD PLAN M-60.10-00

SHEET 4 OF 4 SHEETS

APPROVED FOR PUBLICATION

STATE DESIGN ENGINEER — DATE 9/5/07

Washington State Department of Transportation

DRAWN BY: FERN LIDDELL

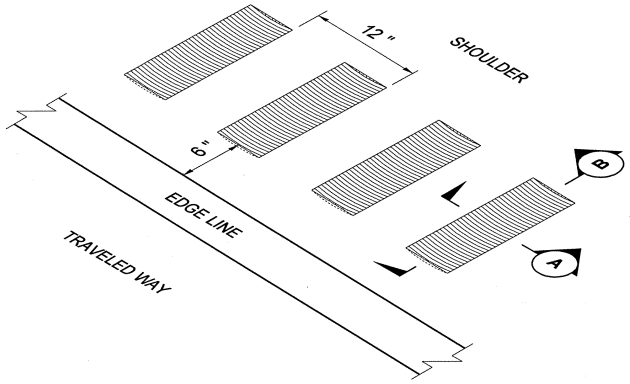

ISOMETRIC VIEW

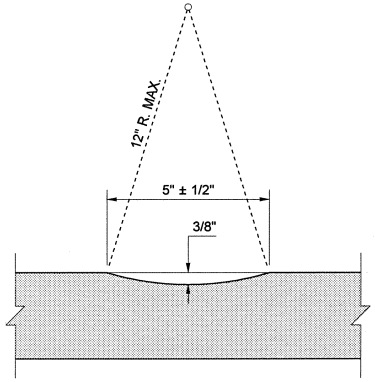

SECTION (A)

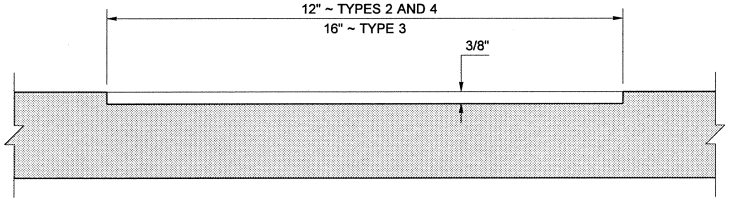

SECTION (B)

TYPICAL SHOULDER INSTALLATION

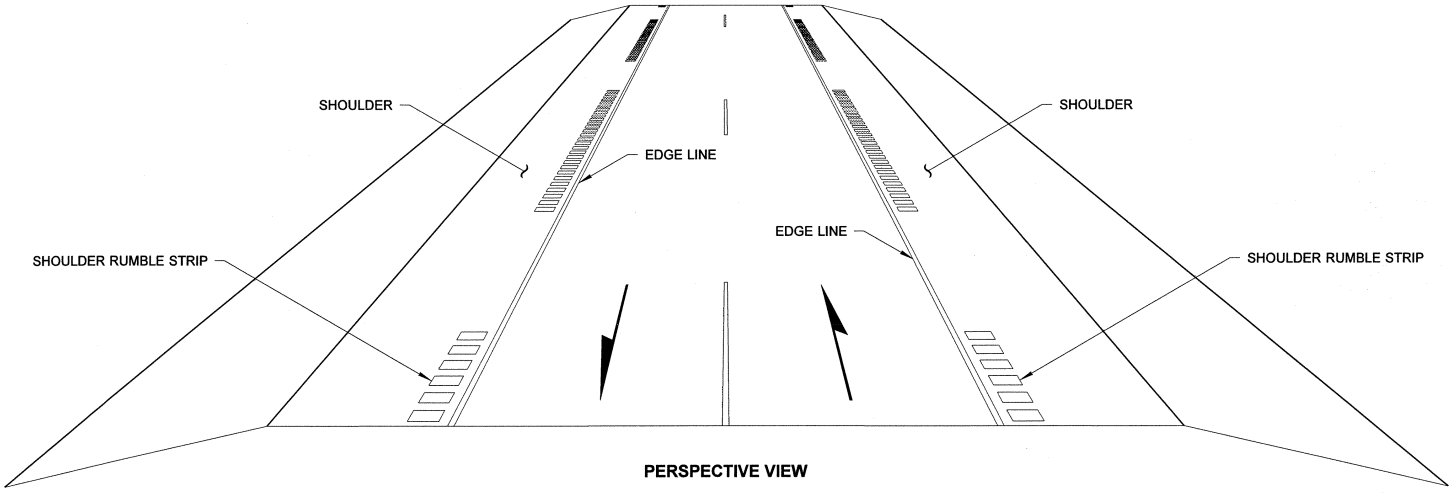

PERSPECTIVE VIEW

UNDIVIDED HIGHWAY
(TYPE 4 PATTERN SHOWN)

SHOULDER RUMBLE STRIP TYPES 2, 3, AND 4 FOR UNDIVIDED HIGHWAYS STANDARD PLAN M-60.20-01

SHEET 1 OF 2 SHEETS

APPROVED FOR PUBLICATION

STATE DESIGN ENGINEER — DATE 2/3/09

Washington State Department of Transportation

DRAWN BY: FERN LIDDELL

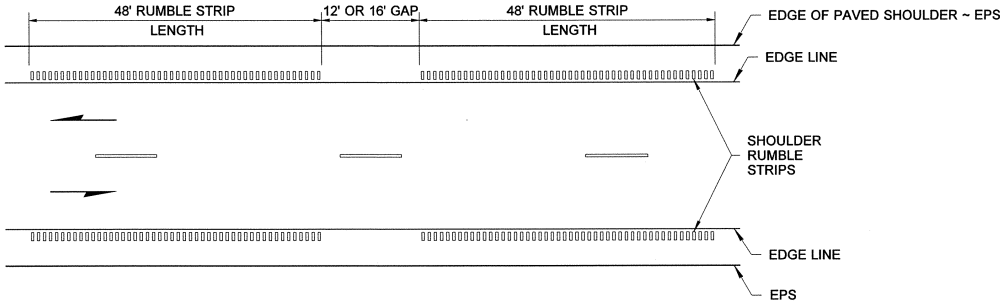

TYPE 2 ~ 12' GAP AND 12" WIDE STRIP
TYPE 3 ~ 16' GAP AND 16" WIDE STRIP

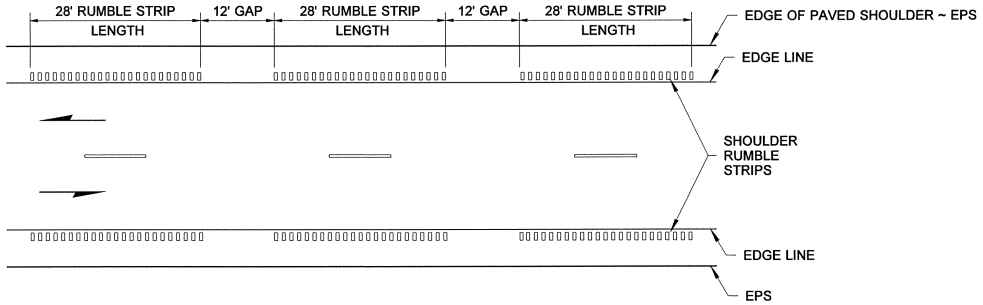

TYPE 4 ~ 12" WIDE STRIP

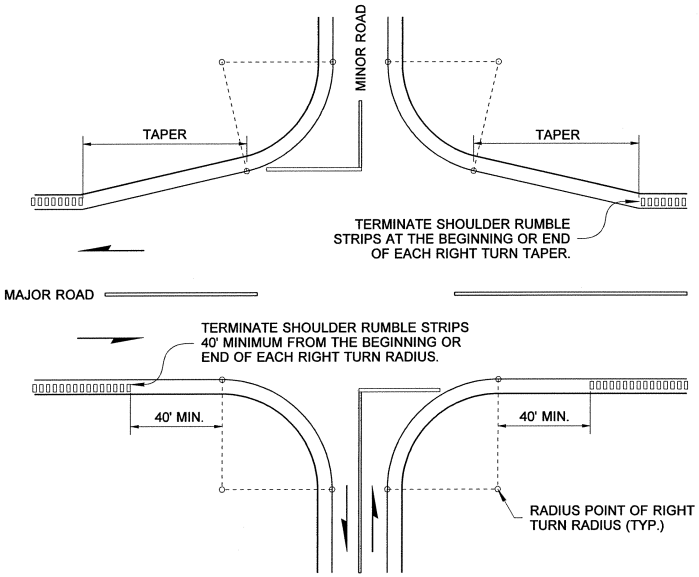

RUMBLE STRIP PLACEMENT AT INTERSECTIONS

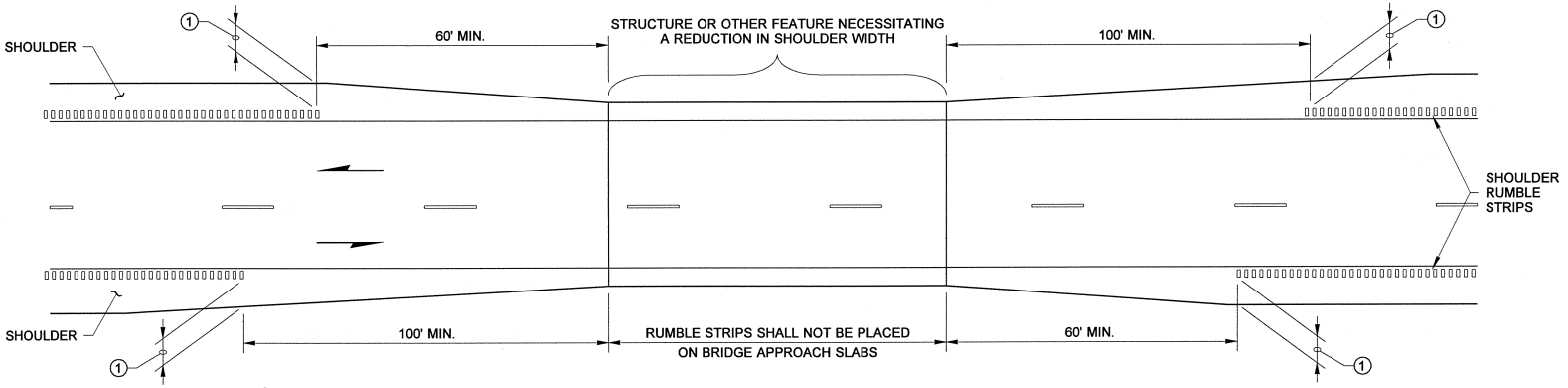

① NOT LESS THAN 4' ~ PROVIDE 5' WHEN BARRIER OR GUARDRAIL IS PLACED AT EDGE OF SHOULDER

SHOULDER TAPER DETAIL

DAKOTICH, PASCO II
STATE OF WASHINGTON
2/3/09
24557
REGISTERED
PROFESSIONAL ENGINEER

SHOULDER RUMBLE STRIP TYPES 2, 3, AND 4 FOR UNDIVIDED HIGHWAYS STANDARD PLAN M-60.20-01

SHEET 2 OF 2 SHEETS

APPROVED FOR PUBLICATION

STATE DESIGN ENGINEER — DATE 2/3/09

Washington State Department of Transportation

DRAWN BY: BILL BERENS

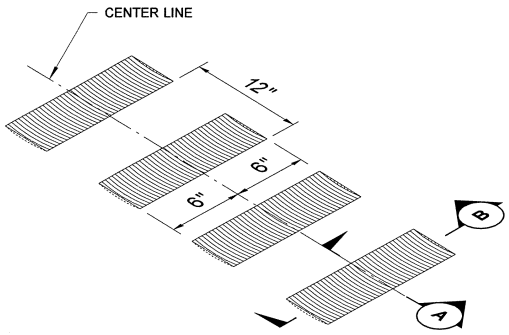

ISOMETRIC VIEW

TYPICAL INSTALLATION

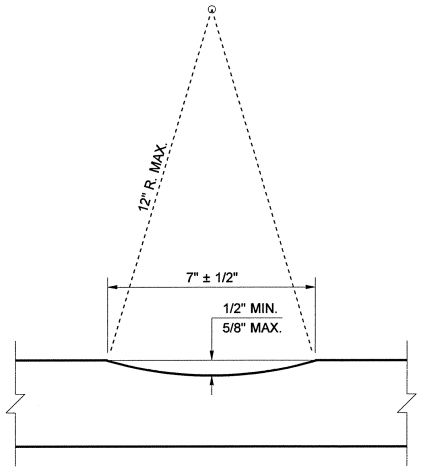

SECTION (A)

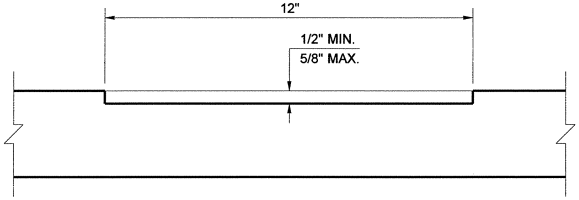

SECTION (B)

NOTES

1. Center Line Rumble Strip installation requires a minimum distance of 12 feet from Center Line to edge of paved shoulder.
2. When directed by the Engineer, Rumble Strips may be installed along the turn pocket taper where there is a history of rear-end collisions in the turn pocket.

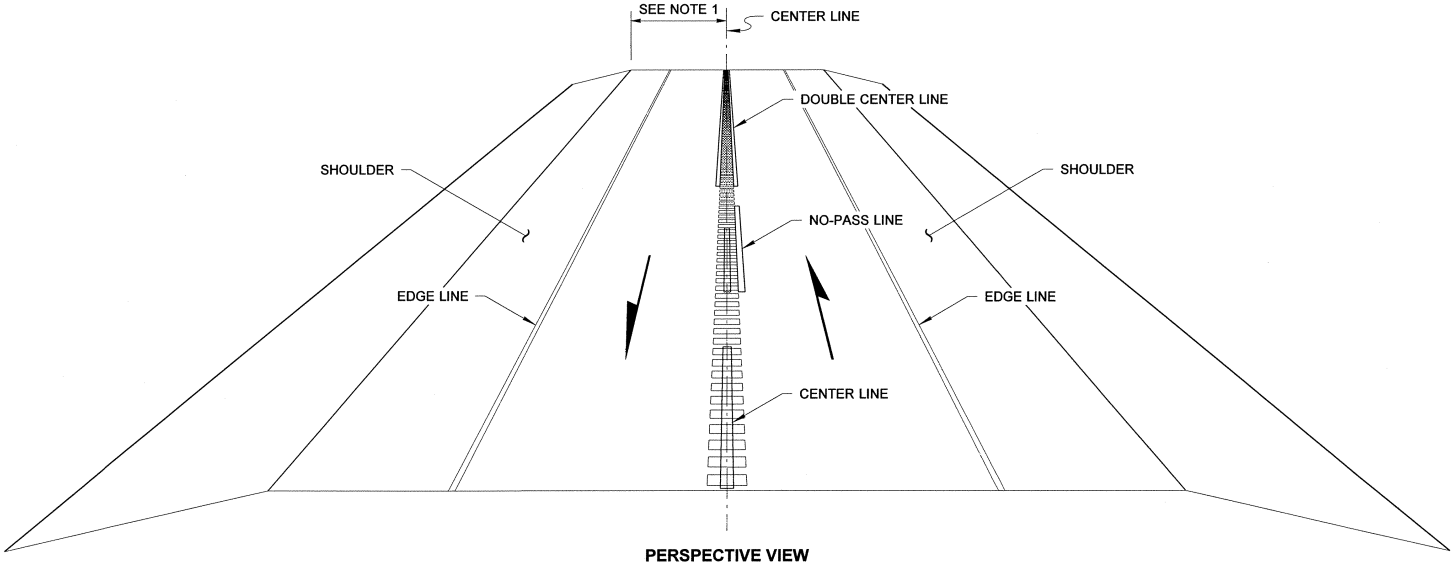

PERSPECTIVE VIEW

UNDIVIDED HIGHWAY

DAKOTICH, PASCO H. STATE OF WASHINGTON 24557 REGISTERED PROFESSIONAL ENGINEER

EXPIRES JUNE 19, 2008

CENTER LINE RUMBLE STRIP

STANDARD PLAN M-65.10-01

SHEET 1 OF 2 SHEETS

APPROVED FOR PUBLICATION

STATE DESIGN ENGINEER — DATE 5/21/08

Washington State Department of Transportation