Section 9

Culvert Design

Hydraulics of Culverts

The hydraulic theory of culvert design is a fairly complex topic. However, there are a few basic principles that, once understood, will apply to most culvert applications that will be experienced in the field.

Energy is required to force flow through a culvert. This energy takes the form of an increased water surface elevation on the upstream end of the culvert. The depth of the upstream water surface elevation measured from the invert of the culvert is referred to as the headwater depth **HW**.

The HW elevation will continue to rise until enough energy is present to overcome the effects of energy losses through the culvert. Once this happens, the water will move through the culvert at the design flow.

The one culvert design parameter that we are generally most concerned with is determining the HW elevation for a given flow. In order to determine this, we need to determine what type of flow control exists on the culvert.

There are two basic types of flow control. A culvert flows in either inlet control or outlet control.

Inlet Control - The barrel of the culvert is capable of conveying more flow than the inlet will accept. Therefore, the inlet is controlling the amount of flow that will pass through the culvert

The upstream culvert opening is the section that will control the amount of HW that will be created. Nothing downstream of the opening will influence the amount of HW required to pass a given amount of flow.

Outlet Control - The inlet of the culvert is capable of conveying more flow than the barrel or outlet of the culvert will accept. Therefore, the outlet is controlling the amount of flow passing through the barrel

The barrel characteristics or the tailwater characteristics, or some combination of the two, will determine the amount of HW required.

There are two different methods used to determine the HW, one for inlet control and one for outlet control. If the culvert is flowing in inlet control, the HW depth is calculated using inlet control equations. If the culvert is flowing in outlet control, the HW depth is calculated using outlet control equations.

Much of the time, it is not known whether a culvert is flowing in inlet control or outlet control. It is therefore necessary to calculate the HW that will be produced for both inlet and outlet control, then compare the results. The larger headwater will be the one that controls and that HW will be the one that will be used in the design of the culvert.

Culvert Design

The general procedure for designing a culvert can be broken up into 5 components. A detailed description of each of the components is located in Section 3-3 of the *Hydraulics Manual.*

Part 1: Calculate the design flows

Part 2: Determine the allowable headwater

Part 3: Determine the tailwater elevation

Part 4: Determine the flow control that exists, either inlet or outlet control

Part 5: Calculate the outlet velocities

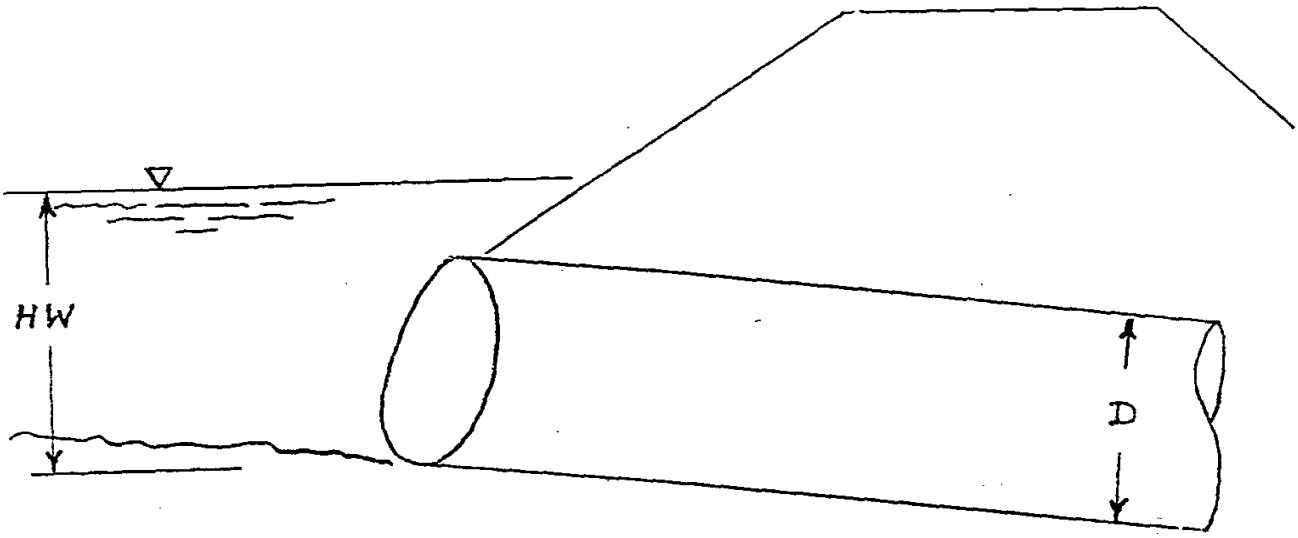

Inlet Control

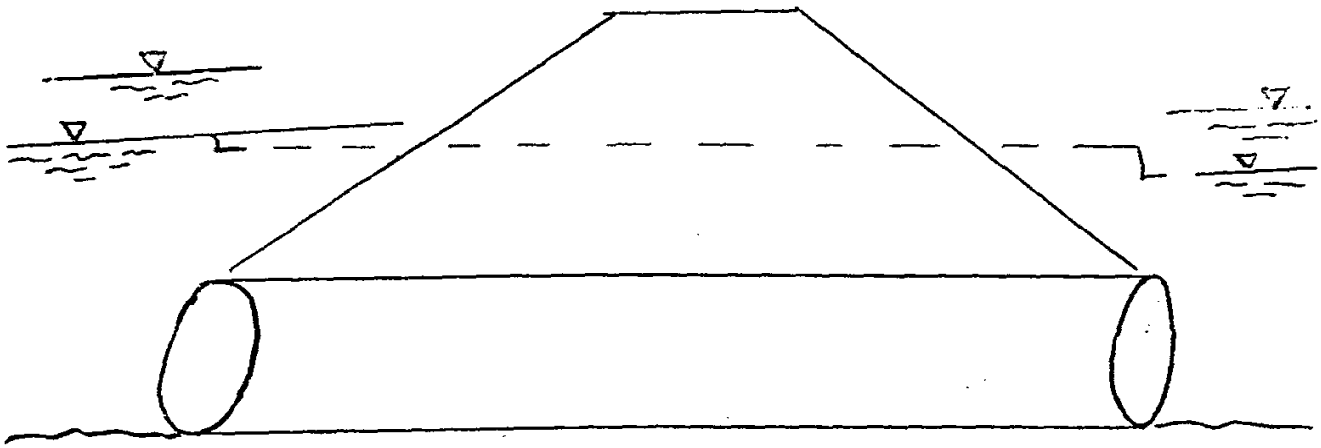

Outlet Control

9-3

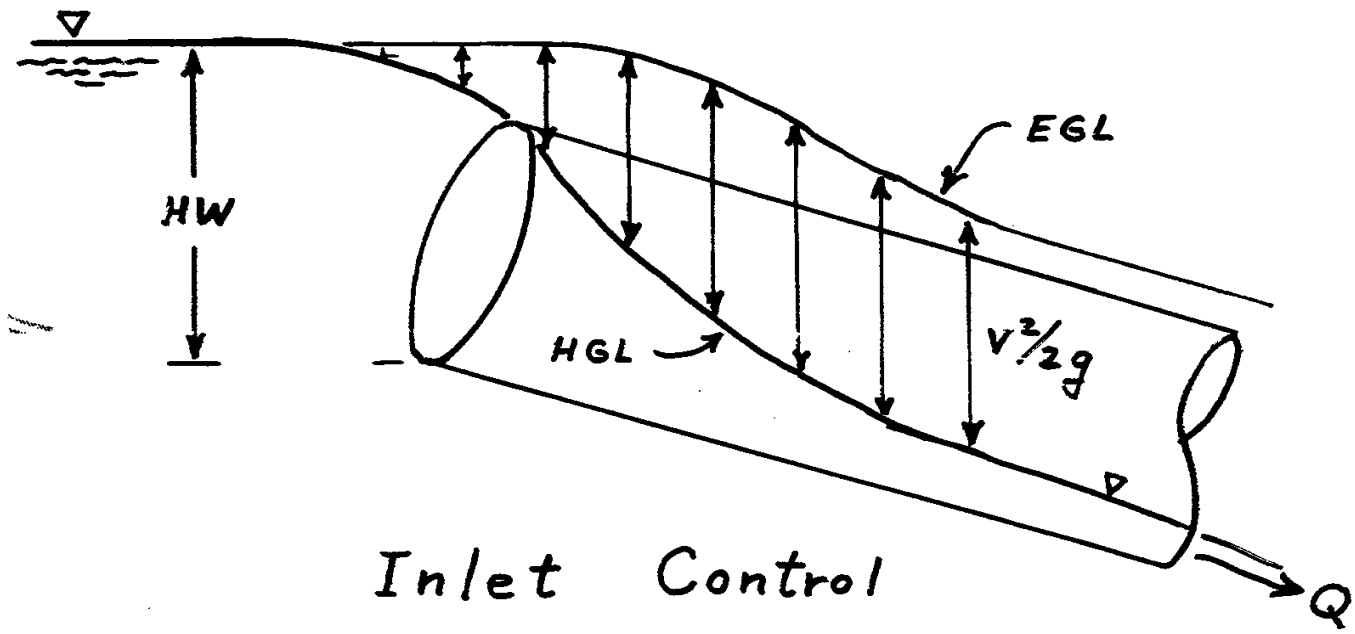

Inlet Control

9-4

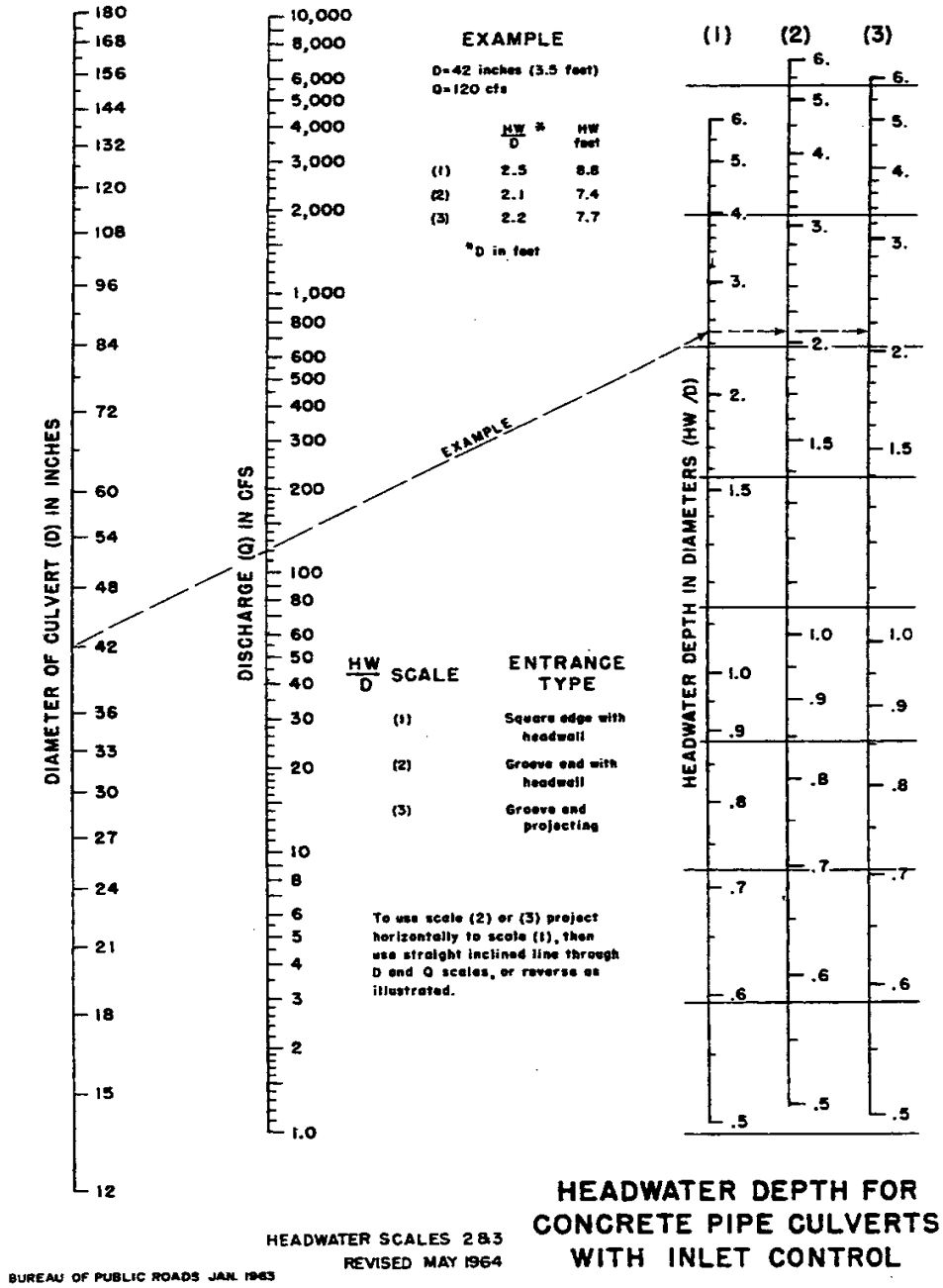

Figure 3-3.4.2A
Concrete Pipe Inlet Control Nomograph

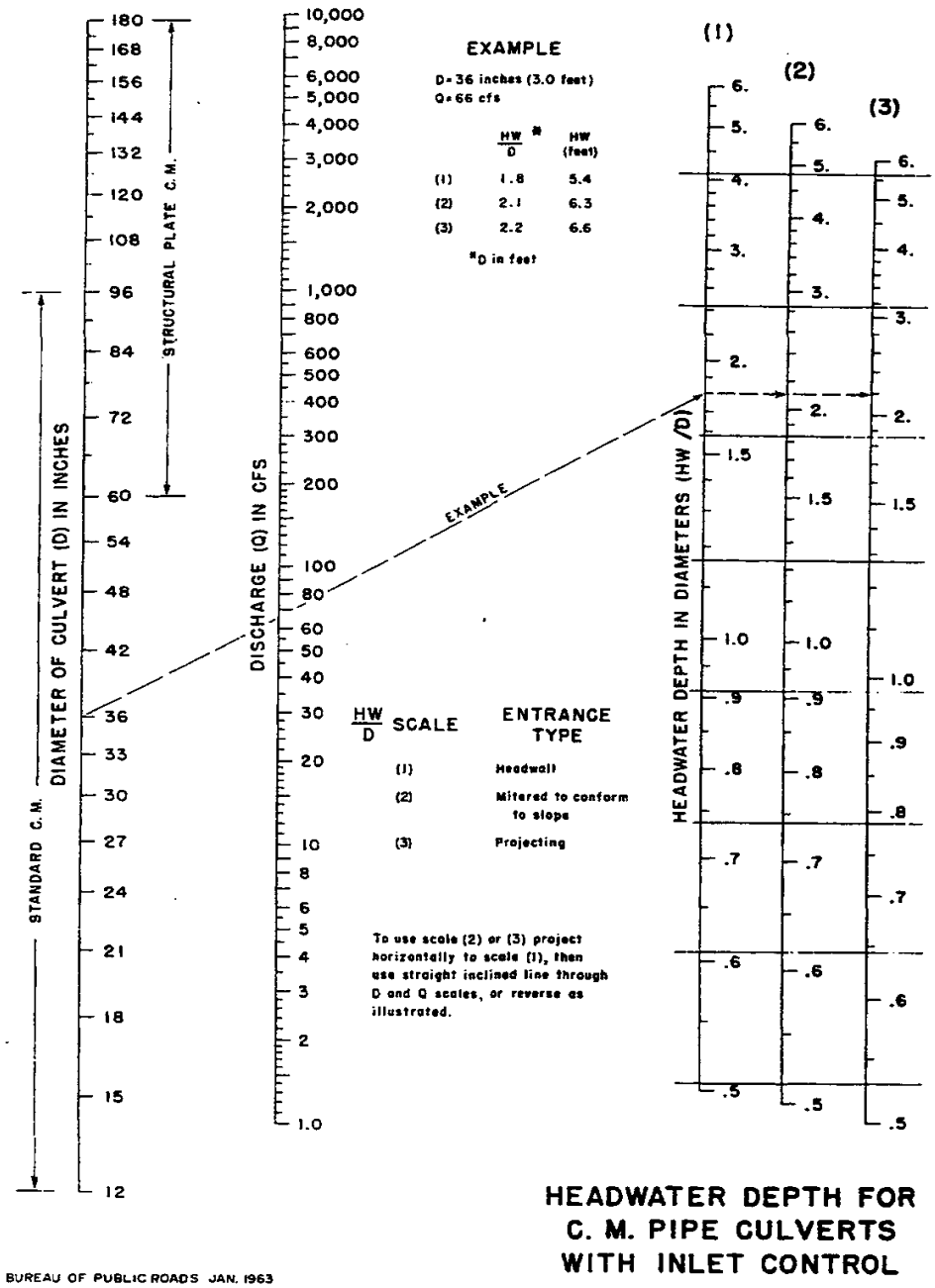

HEADWATER DEPTH FOR C. M. PIPE CULVERTS WITH INLET CONTROL

Figure-3-3.4.2B
Corrugated Metal and Thermoplastic Pipe Inlet Control Nomograph

Outlet Control

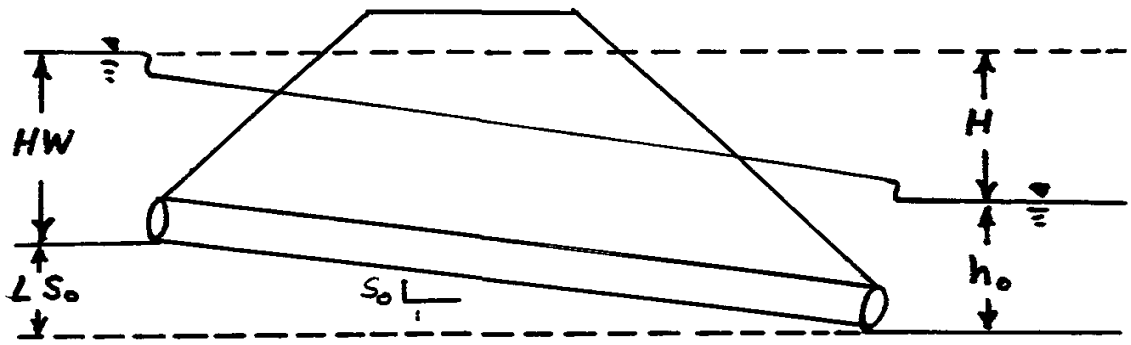

HW = Depth @ Inlet

$L S_o$ = Length x Slope

H = Entrance, Exit & Barrel Losses

h_o = Depth @ Outlet

$$H = \left[K_e + K_o + \frac{29 L n^2}{R^{4/3}}\right] \frac{V^2}{2g}$$

$$HW = H + h_o - L S_o$$

9-7

$$H_e = k_e \frac{V^2}{2g}$$

Type of Structure and Entrance Design	k_e	Standard Plan
Concrete Pipe		
Projecting from fill, no headwall		
Socket end (groove end)	0.2	
Square cut end	0.5	
Mitered to conform to fill slope (beveled end section)	0.7	B-7a
Mitered to conform to fill slope, with concrete headwall	0.7	B-9
Flared end sections, metal or concrete	0.5	B-7 Design B
Vertical headwall with wingwalls		
Socket end (groove end)	0.2	B-6 Series**
Square cut end	0.5	B-6 Series**
Rounded (radius = 1/12 D)	0.2*	B-6 Series**
Metal and Thermoplastic Pipe or Pipe Arch		
Projecting from fill, no headwall	0.9	
Tapered end section	0.9	B-9c, B9-d
Mitered to conform to fill slope (beveled end section)	0.7	B-7a
Mitered to conform to fill slope, with concrete headwall	0.7	B-9
Flared metal or thermoplastic end sections	0.5	B-7 Design A
Vertical headwall with wingwalls	0.5	B-6 Series**
Any headwall with beveled inlet edges	0.2*	
Reinforced Concrete Box		
Mitered concrete headwall to conform to fill slope		
Square-edged on 3 edges	0.5	
Rounded or beveled edges on 3 sides	0.2	
Wingwalls at 30 degrees to 75 degrees to barrel		
Square edge at crown	0.4	
Rounded or beveled edge at crown	0.2*	
Wingwalls at 10 degrees to 25 degrees to barrel		
Square edge at crown	0.5	
Wingwalls parallel to barrel		
Square edge at crown	0.7	
Side or slope tapered inlet	0.2*	

*Reference Section 3-4.6 for the design of special improved inlets with very low entrance losses
**Modified for round pipe.

Figure 3-3.4.5H
Entrance Loss Coefficient k_e
Outlet Control

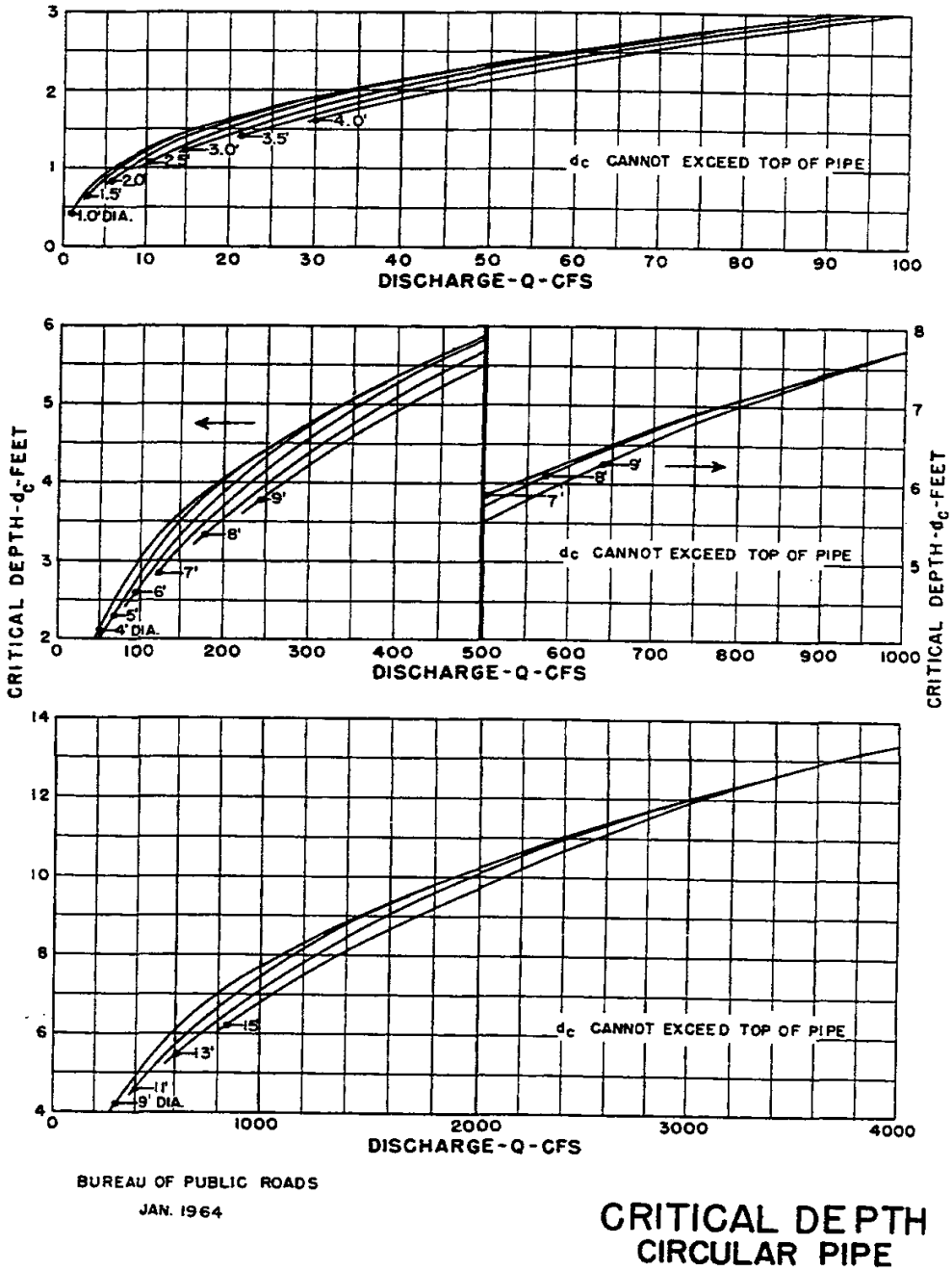

Figure 3-3.4.5I
Critical Depth for Circular Pipe

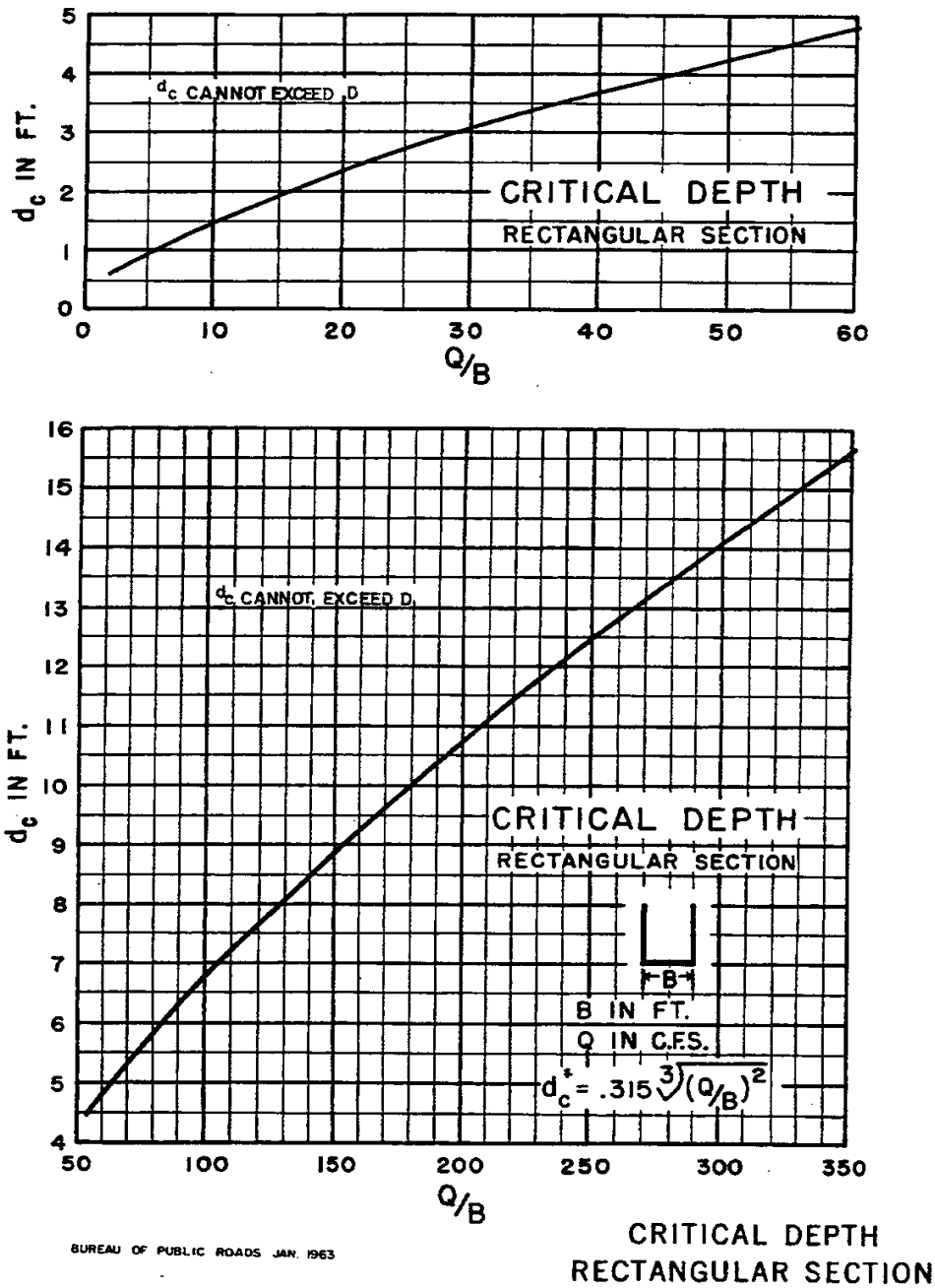

Figure 3-3.4.5J
Critical Depth for Rectangular Shapes

h_o: h_o is an approximation of the hydraulic grade line at the outlet of the culvert and is equal to the tailwater or $(d_c + D)/2$, whichever is greater. The term $(d_c + D)/2$ represents an approximation of the hydraulic grade line at the outlet of the culvert, where d_c is equal to the critical depth at the outlet of the culvert and D is the culvert diameter or rise. When free surface flow occurs in a culvert operating in outlet control, the most accurate method for determining the HW elevation is to perform a backwater analysis through the culvert. This, however, can be a tedious and time-consuming process. Making the assumption that $(d_c + D)/2$ represents the hydraulic grade line simplifies the design procedure. The approximate method will produce reasonably accurate results when the headwater is 0.75 D and greater, where D is the culvert diameter or rise. In situations where the headwater is less than 0.75 D, the culvert should be designed using a computer software program, as discussed in Section 3-3.7. Most programs will perform a backwater analysis through the culvert and arrive at a more accurate solution for the headwater elevation than the approximate method.

As shown in Figure 3-3.4.4B, (dc + D)/2 does not represent the actual water surface elevation at the outlet of the culvert and therefore should not be used for determining the corresponding outlet velocity. The method for determining the outlet velocity is discussed in Section 3-3.5.2

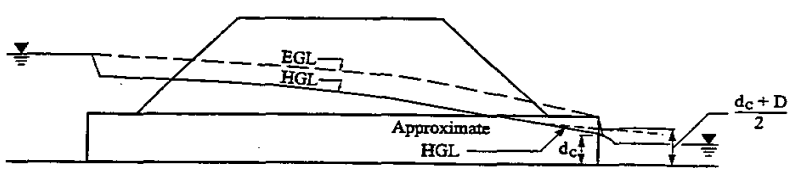

Figure 3-3.4.4B
Hydraulic Grade Line Approximation

LS_o: LS_o is the culvert length (L) multiplied by the culvert slope (S_o).

9-11

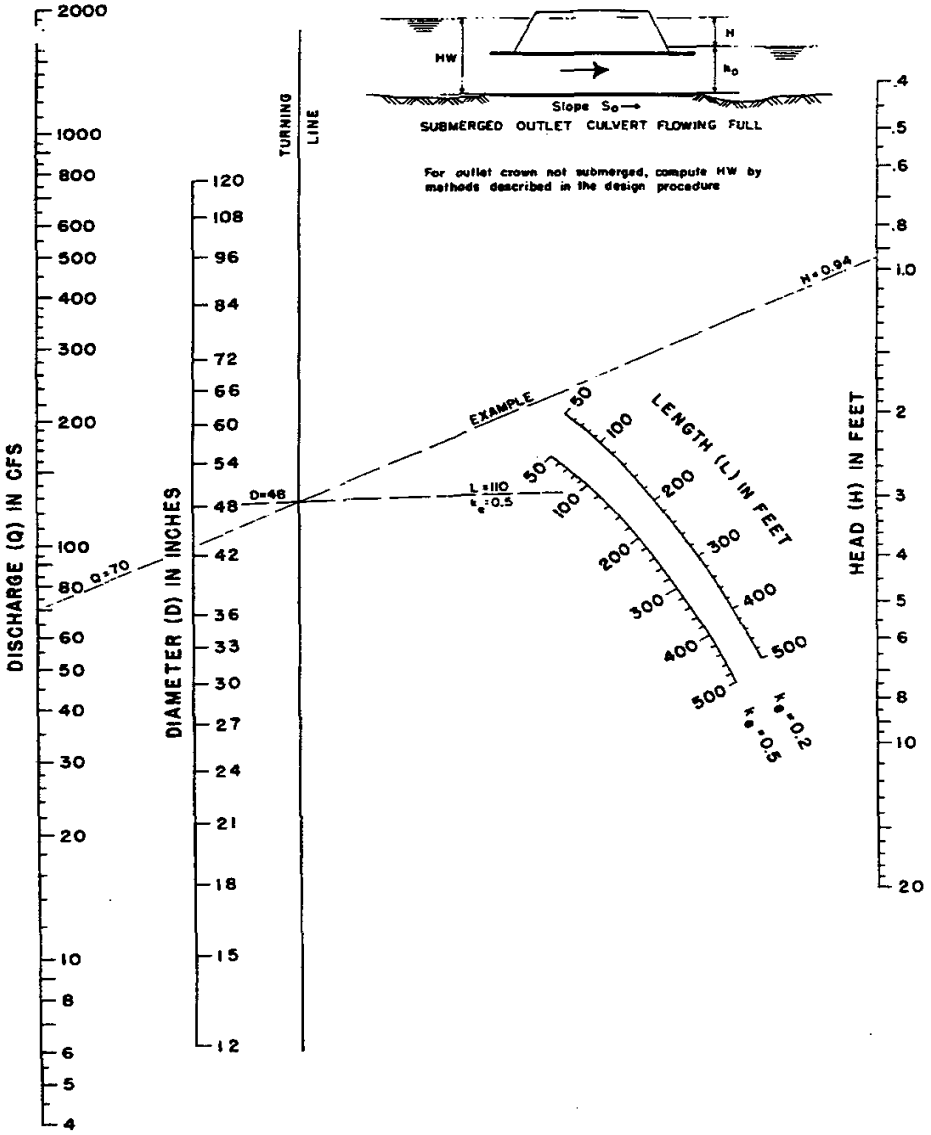

HEAD FOR
CONCRETE PIPE CULVERTS
FLOWING FULL
n = 0.012

BUREAU OF PUBLIC ROADS JAN. 1963

Figure 3-3.4.5B
Concrete and Thermoplastic Pipe Outlet Control Nomograph

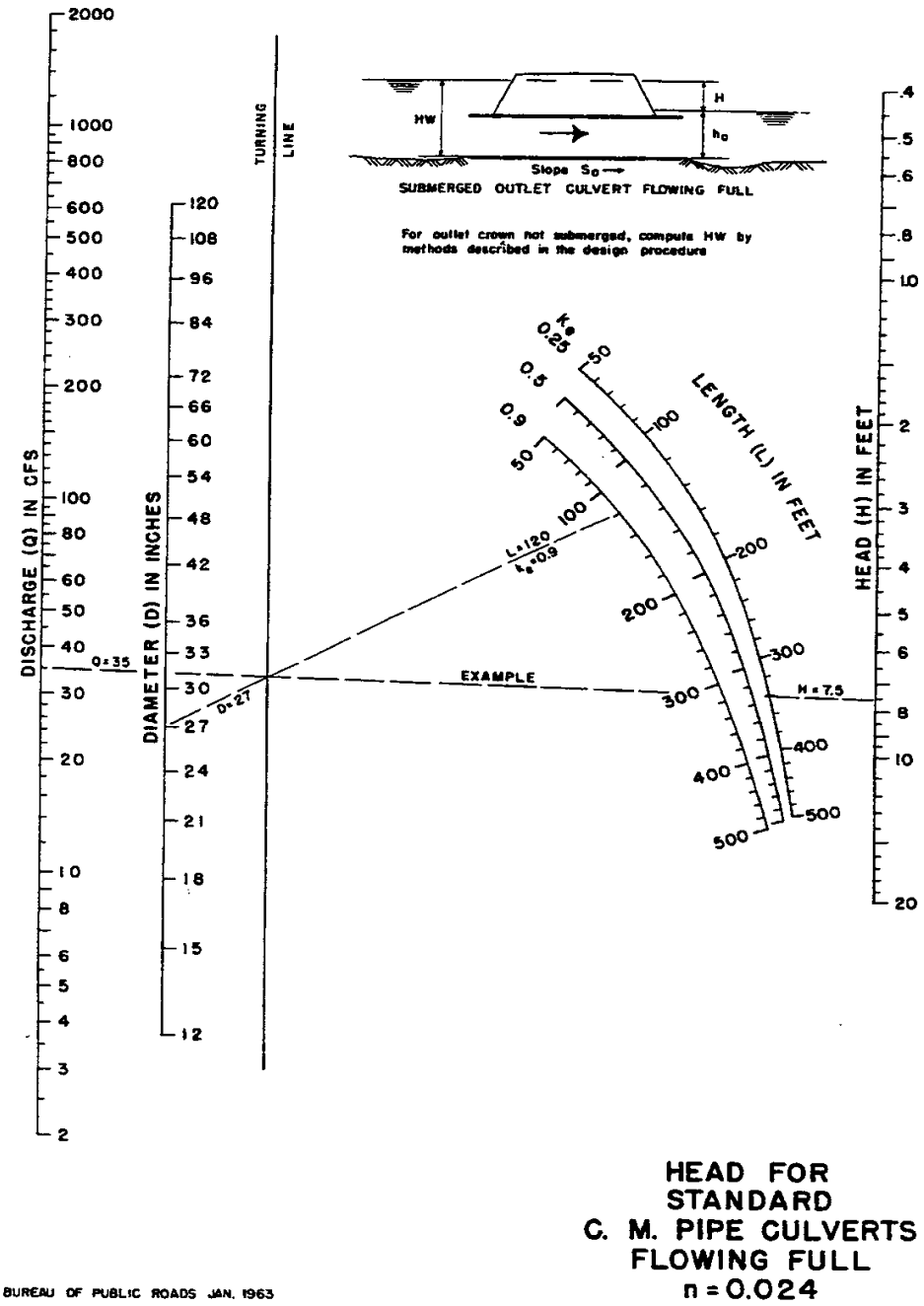

Figure 3-3.4.5C
Corrugated Metal Pipe Outlet Control Nomograph

Outlet Velocity

For **non-circular** culverts flowing with **Inlet Control**, the velocity can be determined as shown below, using the trial and error approach discussed in the Open Channel section:

$$V = Q/A$$

$$Q = \frac{1}{n} A R^{2/3} S^{1/2} \qquad \text{(metric units)}$$

or

$$Q = \frac{1.486}{n} R^{2/3} S^{1/2} \qquad \text{(English units)}$$

where: Q = mean flow in channel, m^3/sec (ft^3/sec)
n = Manning's roughness coefficient (see Appendix 4-1)
S = channel slope, m/m (ft/ft)
R = A/P = hydraulic radius, m (ft)
A = area of the cross section of water, m^2 (ft^2)
P = wetted perimeter, m (ft)

For **circular culverts** flowing with **Inlet Control**, a simplified version of Manning's equation can be used to calculate the velocity in the culvert. The simplified equation is given by:

$$V_n = \frac{0.863\, S^{0.366} Q^{0.268}}{D^{0.048}\, n^{0.732}}$$

where: S = pipe slope (ft/ft)
Q = flow rate (cfs)
D = pipe diameter (ft)
n = Manning's roughness coefficient
V_n = normal velocity for partial flow (ft/sec)

9-14

3-3.5.2 Calculating Outlet Velocity for Culverts in Outlet Control

When a culvert is flowing in outlet control, the average outlet velocity can be found by dividing the discharge by the cross-sectional area of flow at the outlet. There are three general water surface conditions that can exist at the outlet and affect the cross-sectional area of flow. The designer must determine which one of the three conditions exist and calculate the outlet velocity accordingly.

Condition 1: If the tailwater is greater than the diameter of the culvert, the total area of the culvert is used to calculate the outlet velocity.

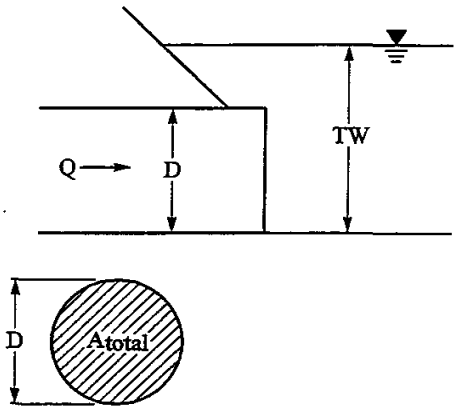

Condition 1:

If TW > D

then

$V_{outlet} = Q/A_{total}$

Condition 2: If the tailwater is greater than critical depth but less than the diameter of the culvert, the tailwater depth is used to calculate the area of flow in the pipe and the corresponding outlet velocity.

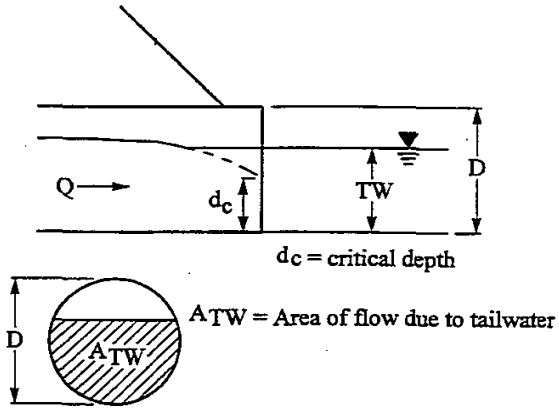

Condition 2:

If dc < TW < D

then

$V_{outlet} = Q/A_{TW}$

In culverts flowing with outlet control, the flow profile tends to converge toward critical depth as flow approaches the outlet. In Condition 2, the flow profile is converging to critical depth near the outlet, but a tailwater depth exists that is greater than the critical depth. Therefore, the tailwater depth will dictate the corresponding area of flow to be used in the velocity calculation.

9-15

Condition 3: If the tailwater is equal to or less than critical depth, critical depth is used to calculate the area of flow and corresponding outlet velocity.

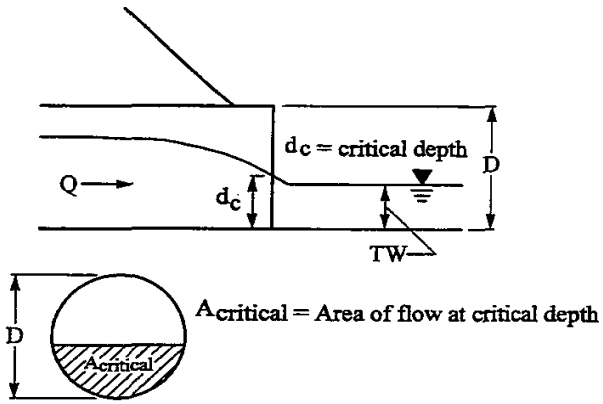

Condition 3:

If $TW > D_c$

then

$V_{outlet} = Q/A_{total}$

Condition 3 represents a situation where a culvert flowing with outlet control is allowed to freely discharge out of the end of the culvert. The tailwater in this case has no effect on the depth of flow at the outlet. Instead, critical depth is used to determine the flow area and corresponding outlet velocity. Critical depth for various shapes can be calculated from the equations shown in Section 4-4 or read from the critical depth charts shown in Figures 3-3.4.5I to L.

Once it has been determined which of the three outlet conditions exist for a given design, the corresponding area of flow for the outlet depth can be determined. The geometrical relationship between the depth of flow and area of flow can range from very simple for structures such as box culverts to very complex for structures such as pipe arches and bottomless culverts. Generally, utilizing a computer program, as discussed in Section 3-3.7, is the most accurate method for completing a culvert design that includes complex shapes.

For circular culverts, the area of flow for a given outlet depth can be determined using the proportional flow curves shown in Figure 3-3.5.2. The curves give the proportional area, discharge, velocity and hydraulic radius of a circular culvert when the culvert is flowing less than full. Once the area has been calculated, the corresponding outlet velocity can be determined. The following example illustrates how to use the chart:

Assume that a design was completed on a 1800 mm (6 ft) diameter pipe with a flow of 4.3 cms (150 cfs). The pipe was found to be in outlet control and a tailwater of 1.5 m (5 ft) was present. Determine the flow condition that exists and calculate the outlet velocity.

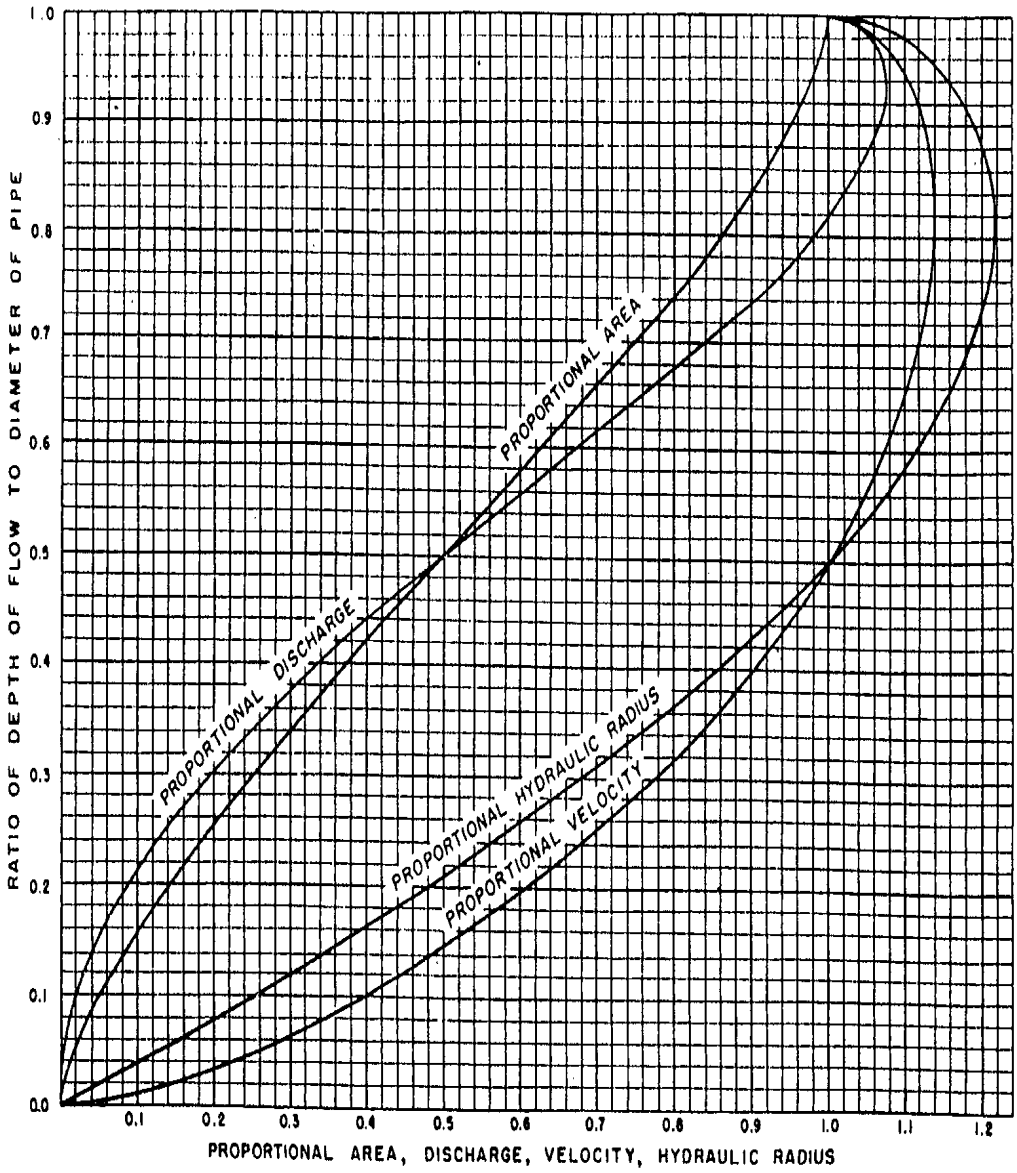

Figure 3-3-5.2
Proportional Flow Curve

9-17

Culvert Design Problem

Given: A concrete culvert with the grooved end projecting is to be placed at a site with the following conditions:

HW/D = 1.25

Q_{25} = 100 cfs

S_o = 0.008

Length = 300 ft

TW = 0

Find: Appropriate size

Controlling HW

Outlet velocity

9-18

Project: _____ Designer: _____

SR: _____ Date: _____

Hydrologic and Channel Information

Q_1:_____ TW_1:_____

Q_2:_____ TW_2:_____

Q_3:_____ TW_3:_____

Sketch

Station: _____

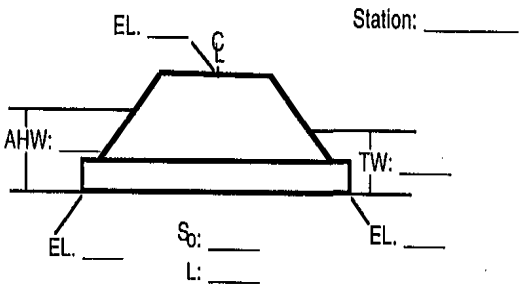

Culvert Type	Q	Size	Headwater Computations									Cont. HW	Outlet Vel.	Comments
			Inlet Control		Outlet Control									
			$\frac{HW}{D}$	HW	k_e	d_c	$\frac{d_c+D}{2}$	h_o	H	LS_o	HW			

Summary and Recommendations: