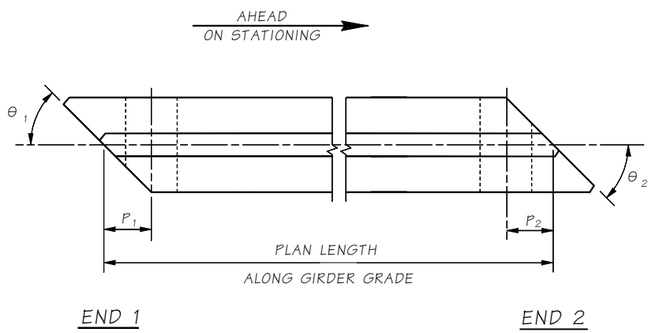

GIRDER PLAN

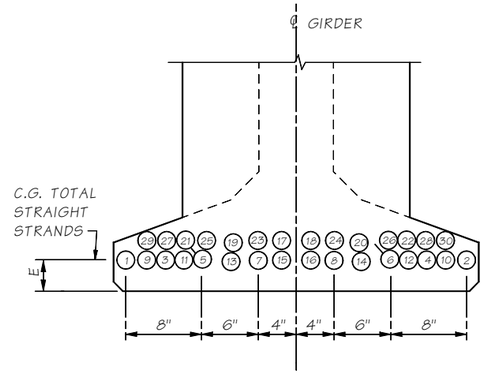

STRAND PATTERN PRESCAST END SEGMENTS

STRAIGHT STRAND LOCATION SEQUENCE SHALL BE AS SHOWN (1),(2),(3), ... ETC.

○ INDICATES DEBOND STRAND FOR A TOTAL OF 6'-0" FROM END OF GIRDER.

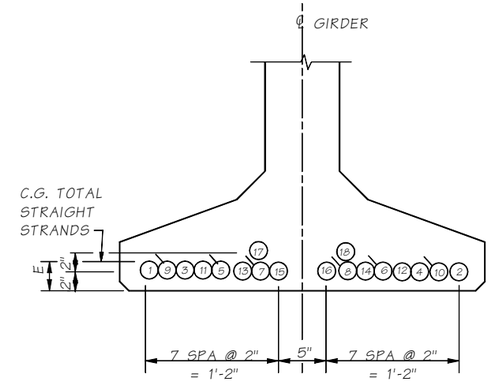

STRAND PATTERN PRECAST MID-SEGMENT

STRAIGHT STRAND LOCATION SEQUENCE SHALL BE AS SHOWN (1),(2),(3) , ... ETC.

○ INDICATES DEBOND STRAND IF NEEDED FOR A TOTAL OF 6'-0" FROM END OF GIRDER.

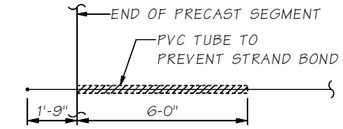

STRAND DEBONDING DETAIL

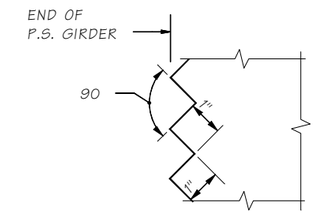

SAWTEETH DETAIL

SAWTEETH ARE FULL WIDTH ~ USE SAWTEETH KEYS, IN AREA OUTSIDE OF PT. DUCTS AS SHOWN IN SECTION B/2

DIMENSION "A" AT ℄ BEARINGS = BASED ON GIRDER DEFLECTION = "D" AT TIME OF SLAB POUR (120 DAYS)

SPAN	GIRDER	MIN. CONC. COMPR. STRENGTH @ 28 DAYS F'C MPa	MIN. CONC. COMPR. STRENGTH @ RELEASE F'CI MPa	END SEGMENT 1 END 1 TYPE	END SEGMENT 1 END 2 TYPE	END SEGMENT 1 L	END SEGMENT 1 θ1	END SEGMENT 1 θ2	END SEGMENT 1 P1	END SEGMENT 1 PLAN LENGTH (ALONG GIRDER GRADE)	END SEGMENT 1 STRAIGHT NO. OF STRANDS	END SEGMENT 1 STRAIGHT JACKING FORCE (LBS)	END SEGMENT 1 C.G. STRANDS (IN.) E	END SEGMENT 1 Ld (IN.)	MID-SEGMENT END 1 TYPE	MID-SEGMENT END 2 TYPE	MID-SEGMENT L	MID-SEGMENT θ1	MID-SEGMENT θ2	MID-SEGMENT PLAN LENGTH (ALONG GIRDER GRADE)	MID-SEGMENT STRAIGHT NO. OF STRANDS	MID-SEGMENT STRAIGHT JACKING FORCE (LBS)	MID-SEGMENT C.G. STRANDS (IN.) E	MID-SEGMENT Ld (IN.)	END SEGMENT 2 END 1 TYPE	END SEGMENT 2 END 2 TYPE	END SEGMENT 2 L	END SEGMENT 2 θ1	END SEGMENT 2 θ2	END SEGMENT 2 P2	END SEGMENT 2 PLAN LENGTH (ALONG GIRDER GRADE)	END SEGMENT 2 STRAIGHT NO. OF STRANDS	END SEGMENT 2 STRAIGHT JACKING FORCE (LBS)	END SEGMENT 2 C.G. STRANDS (IN.) E	END SEGMENT 2 Ld (IN.)

BENDING DIAGRAM

≠ ≠ ≠ DESIGNER TO MODIFY FOR SPECIFIC PROJECT

MARK	LOCATION	SIZE	
G2		5	
G3	GIRDER TOP FLANGE	5	STR.
G4	GIRDER LONGIT. FULL LENGTH	5	STR.
G5	GIRDER LONGIT.	7	STR.
G6	GIRDER END TIES	W12	≠
G7	GIRDER BOTTOM FLANGE TIES	3	
G9	GIRDER LONGIT. FULL LENGTH	4	STR.
G10	GIRDER TOP FLANGE STIRRUPS	4	

ALL DIMENSIONS ARE OUT TO OUT

* = VARIES FOR SKEWED SPANS

NOTE:
FOR DIMENSION "A", SEE "GIRDER SCHEDULE"

≠ #3 OR #4 MAY BE SUBSTITUTED FOR FOR W12, FIELD BENDING IS OPTIONAL.

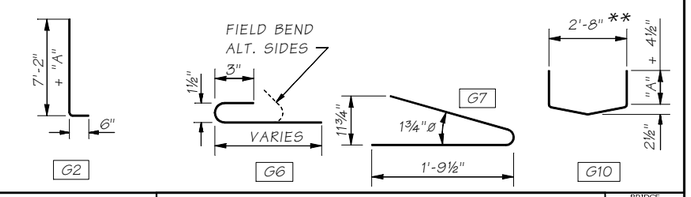

Bridge Design Engr.	M:\STANDARDS\Girders\PT Wide Flange\W83PTG5.MAN							
Supervisor				REGION NO.	STATE	FED. AID PROJ. NO.	SHEET NO.	TOTAL SHEETS
Designed By				10	WASH.			
Checked By								
Detailed By				JOB NUMBER				
Bridge Projects Engr.								
Prelim. Plan By								
Architect/Specialist	DATE	REVISION	BY	APP'D				

BRIDGE AND STRUCTURES OFFICE

Washington State Department of Transportation

STANDARD PRESTRESSED CONCRETE GIRDERS

W83PTG SPLICED GIRDER DETAILS 5 OF 5

BRIDGE SHEET NO.

SHEET OF SHEETS

SR ___ JOB NO. ___ SHEET 1 ___

5.9-A2-5

Tue .Jan 09 11:34:14 2007