SIGN BRACKET NO.	Z° (CONTRACTOR TO VERIFY)			
	SUPPORT #1	SUPPORT #2	SUPPORT #3	SUPPORT #4
1	78°	72°	66°	60°

NOTES TO DESIGNER:
1. REMOVE DETAIL C IF BRACING ROD IN NOT USED. ALSO REMOVE CALL OUTS AND LINEWORK FROM OTHER DETAILS.

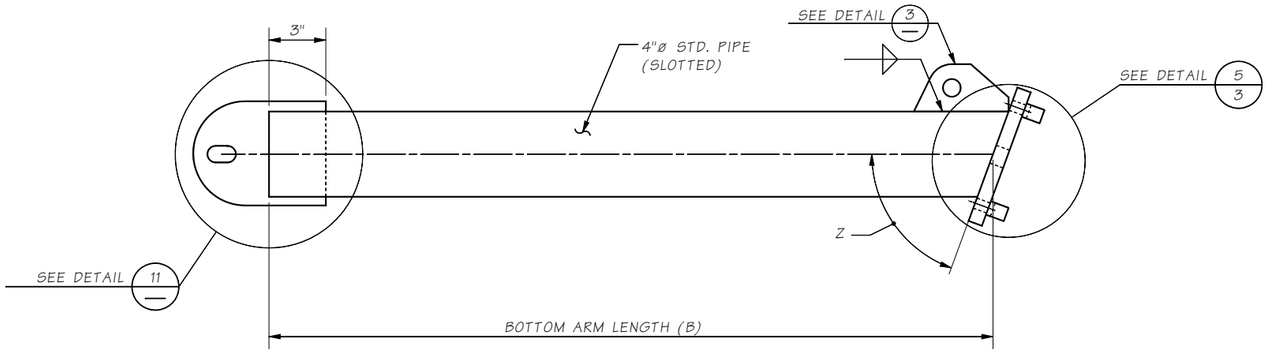

DETAIL 2/2

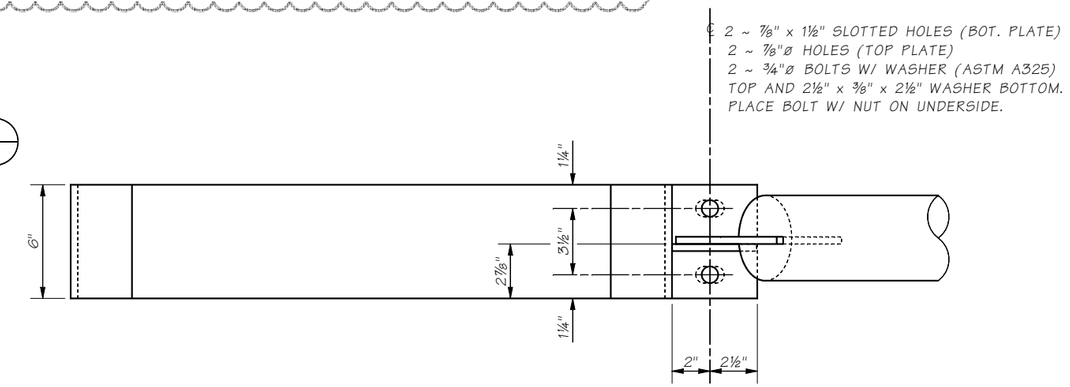

VIEW G

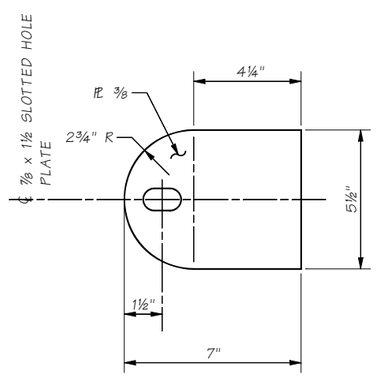

DETAIL 11

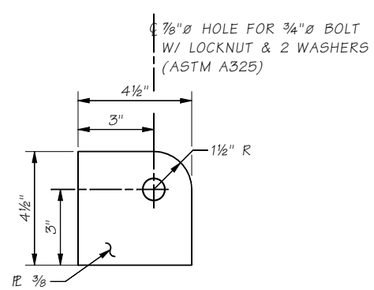

DETAIL 17

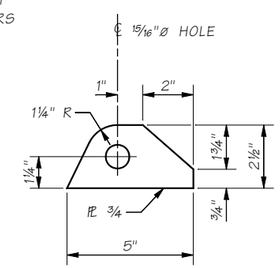

DETAIL 3

G

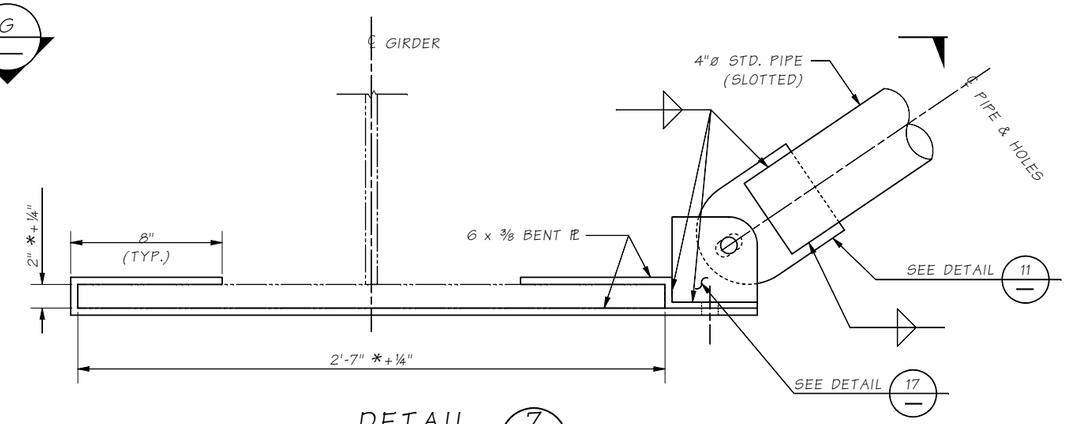

DETAIL 7/2

* CONTRACTOR TO FIELD VERIFY PRIOR TO FABRICATION

LAST REVISED ON: 03/10/2014

SR ____ FILE NO. ____ Job ____ SHEET 1

Bridge Design Engr.		M:\STANDARDS\Bridge Mounted Sign Brackets\4c - BMSB DETAILS 2 OF 3 - STEEL GIRDER.MAN			REGION NO.	STATE	FED. AID PROJ. NO.	SHEET NO.	TOTAL SHEETS
Supervisor	Sup				10	WASH.			
Designed By	Designer Date				JOB NUMBER				
Checked By	Checker Date								
Detailed By	Detailer Date								
Bridge Projects Engr.									
Prelim. Plan By									
Architect/Specialist		DATE	REVISION	BY	APP'D				

Thu Apr 28 08:28:50 2016

BRIDGE AND STRUCTURES OFFICE

Washington State Department of Transportation

Project Title 1
Project Title 2
Project Title 3
Structure Name

BRIDGE MOUNTED SIGN BRACKET DETAILS 2 OF 3

BRIDGE SHEET NO. 4

SHEET ____ OF ____ SHEETS