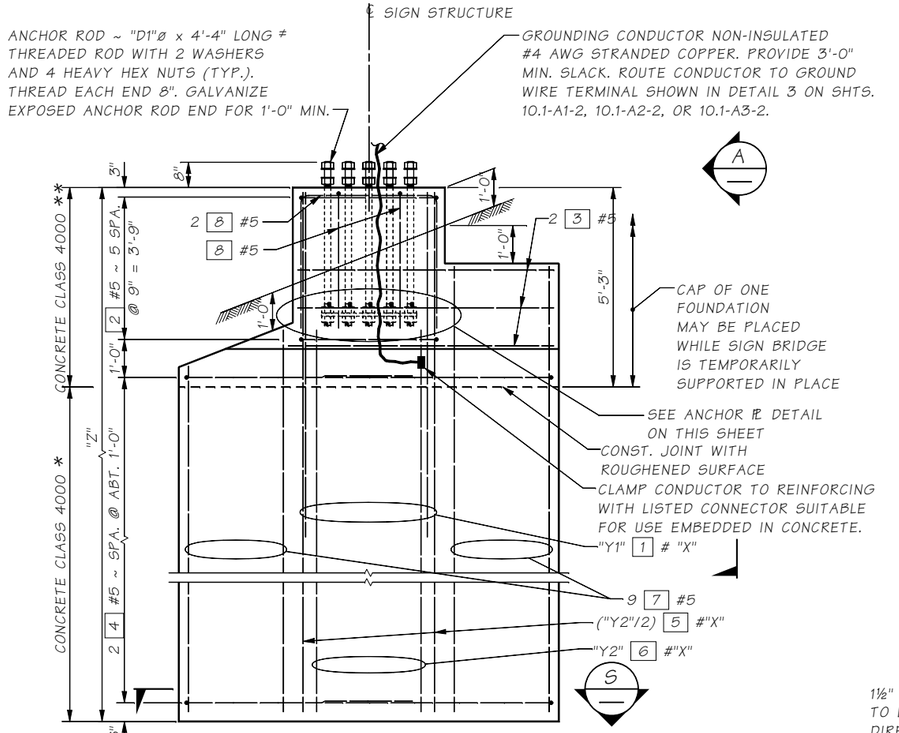

ELEVATION

* USE CONCRETE CLASS 4000P AND TREMIE IF WATER IS PRESENT IN THE EXCAVATION. PLACE CONCRETE DIRECTLY AGAINST SOIL

** BACKFILL/COMPACTION REQUIREMENTS. SEE STD. SPEC. 2-09.3(1)E COMPACTION ITEM 1.

THE FOUNDATION DEPTH "Z" IS BASED ON AN ALLOWABLE LATERAL BEARING PRESSURE OF _____.

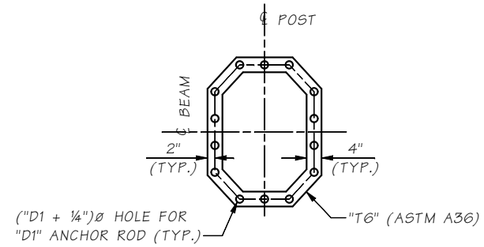

ANCHOR ℄ DETAIL

SEE SIGN STRUCTURE BASE PLATE FOR ANCHOR ROD PATTERN.

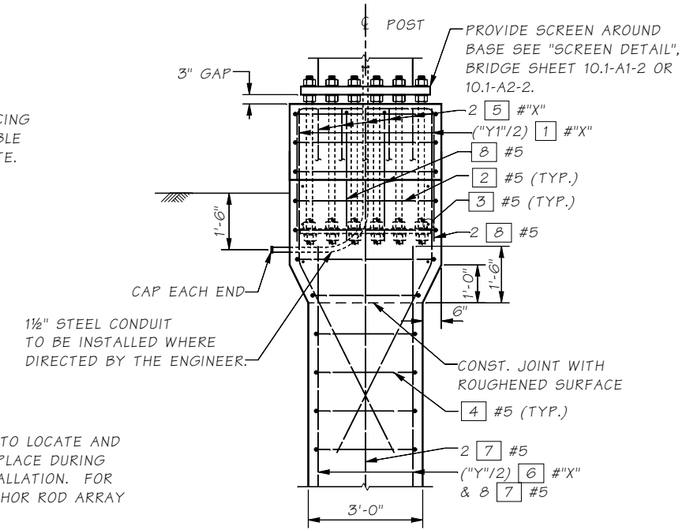

NOTE:
USE A TEMPLATE TO LOCATE AND SECURE RODS IN PLACE DURING FOUNDATION INSTALLATION. FOR DETAILS, SEE ANCHOR ROD ARRAY ON THIS SHEET.

VIEW A

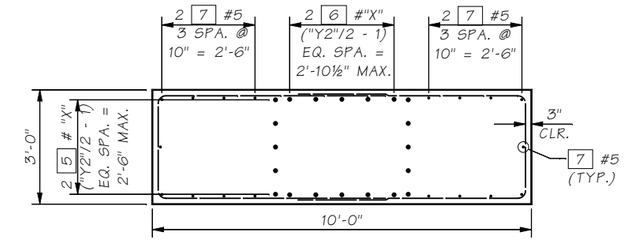

SECTION S

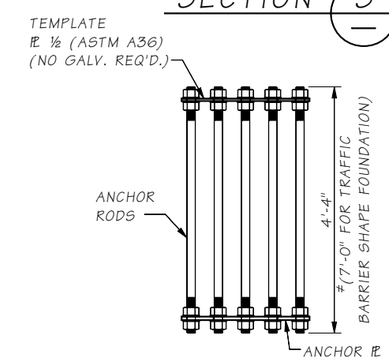

ANCHOR ROD ARRAY

SHIP THE ANCHOR ROD ARRAY ASSEMBLY AS A COMPLETE UNIT.

BENDING DIAGRAM

MARK	LOCATION	SIZE	NO. REQ'D.	LENGTH	
1	CAP VERTICAL	"X"	"Y1"	9'-8"	
2	CAP HOOPS	5	6	16'-0"	
3	CAP HORIZONTAL	5	6	"A"	
4	FOUNDATION HOOPS	5	16	15'-5"	STR.
5	FOUNDATION VERTICAL	"X"	"Y2"	"Z" - 6"	
6	FOUNDATION VERTICAL	"X"	"Y2"	"Z" = 4'-0"	
7	FOUNDATION VERTICAL	5	18	"A"	STR.
8	CAP TOP	5	4	10'-4"	STR.

NOTE:
CONCRETE COVER SHALL BE 1½" UNLESS SHOWN OTHERWISE.

"A" ~ DETERMINE FROM PLANS

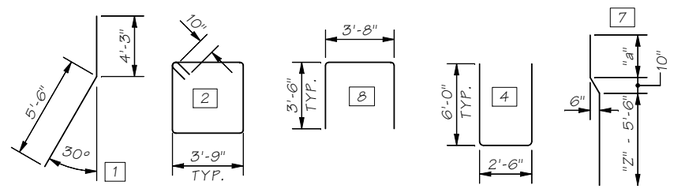

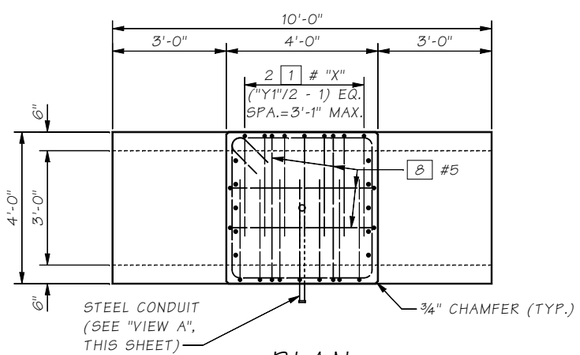

PLAN

ANCHOR BOLTS NOT SHOWN.

TYPE 2 FOUNDATION TABLE*

STRUCTURE TYPE	SPAN LENGTH ("S")	* DEPTH ("Z")	REINFORCEMENT SIZE ("X")	SPACING ("Y1")	SPACING ("Y2")
CANTILEVER SIGN	LESS THAN 20'-0"	7'-3"	9	8	4
	20'-0" TO 30'-0"	9'-6"	9	12	8
	30'-0" TO 35'-0"	11'-0"	9	16	12
SIGN BRIDGE	LESS THAN 60'-0"	9'-0"	9	12	8
	60'-0" TO 90'-0"	11'-0"	9	16	12
	90'-0" TO 120'-0"	12'-9"	11	14	10
	120'-0" TO 180'-0"	13'-6"	11	16	14

* SHAFT DEPTH "Z" IS BASED ON ALLOWABLE LATERAL BEARING PRESSURE OF 2500 PSF OR MORE.

TYPE 3 FOUNDATION TABLE**

STRUCTURE TYPE	SPAN LENGTH ("S")	** DEPTH ("Z")	REINFORCEMENT SIZE ("X")	SPACING ("Y1")	SPACING ("Y2")
CANTILEVER SIGN	LESS THAN 20'-0"	11'-0"	9	8	4
	20'-0" TO 30'-0"	13'-9"	9	12	8
	30'-0" TO 35'-0"	15'-6"	9	12	8
SIGN BRIDGE	LESS THAN 60'-0"	12'-9"	9	16	12
	60'-0" TO 90'-0"	15'-6"	9	16	12
	90'-0" TO 120'-0"	17'-9"	11	14	10
	120'-0" TO 180'-0"	19'-6"	11	16	14

** SHAFT DEPTH "Z" IS BASED ON ALLOWABLE LATERAL BEARING PRESSURE BETWEEN 1500 PSF AND 2499 PSF.

Bridge Design Engr.	M:\STANDARDS\Sign Bridges\MT_SIGN_BRIDGE_FND_TYPE_2_AND_3.MAN			
Supervisor				
Designed By				
Checked By				
Detailed By				
Bridge Projects Engr.				
Prelim. Plan By				
Architect/Specialist	DATE	REVISION	BY	APP'D

REGION NO.	STATE	FED. AID PROJ. NO.	SHEET NO.	TOTAL SHEETS
10	WASH.			
JOB NUMBER				

BRIDGE AND STRUCTURES OFFICE

Washington State Department of Transportation

STANDARD MONOTUBE SIGN STRUCTURES

MONOTUBE SIGN STRUCTURES FOUNDATION TYPES 2 AND 3

BRIDGE SHEET NO.

SHEET OF SHEETS

Last revised on : 4/25/2016

SHEET

JOB NO.

SR 10.1-A4-3

Wed May 25 07:59:25 2016