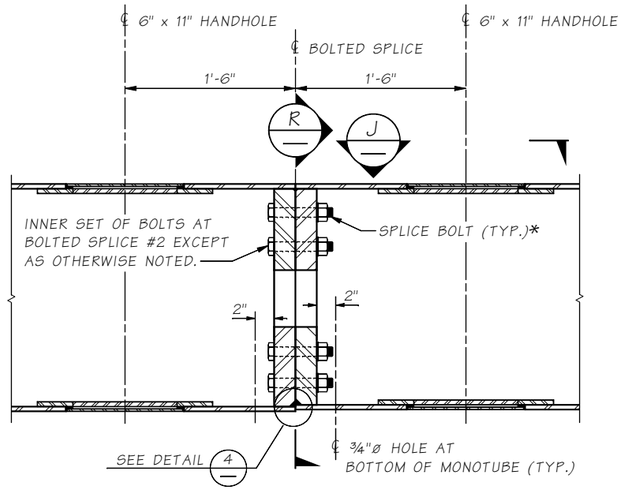

DETAIL 2

SECTION THROUGH BEAM AT BOLTED SPLICE #2. BOLTED SPLICE #1 SIMILAR.

10.1-A1-1

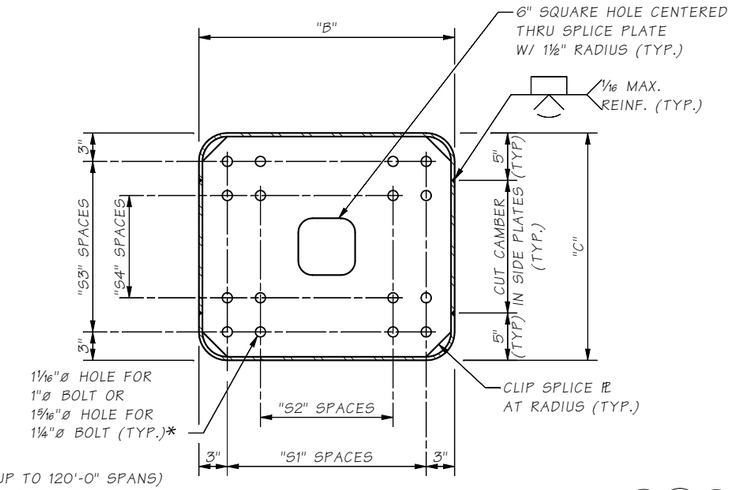

* 1"ø SPLICE BOLT (TYP. UP TO 120'-0" SPANS)
1¼"ø SPLICE BOLT (TYP. 120' - 180' SPANS)

SECTION R

designer to delete non-applicable details

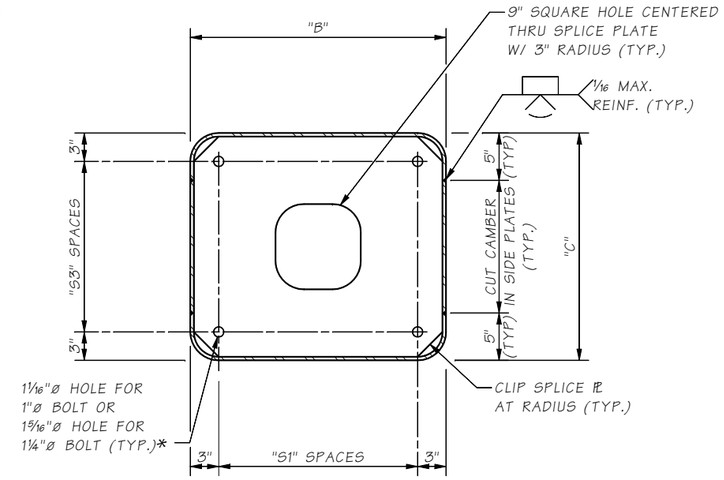

SECTION R

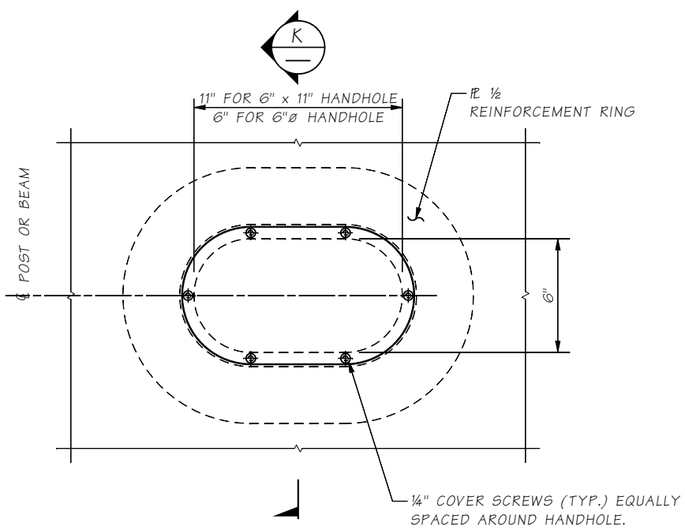

VIEW J

6" x 11" HANDHOLE SHOWN. 6"ø HANDHOLE SIMILAR EXCEPT AS NOTED.

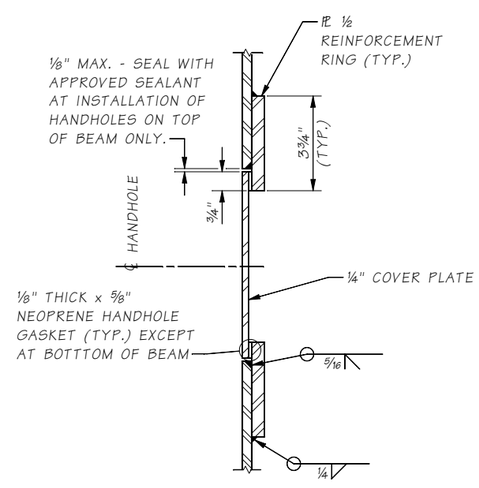

SECTION K

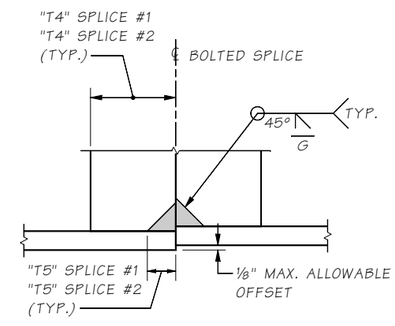

DETAIL 4

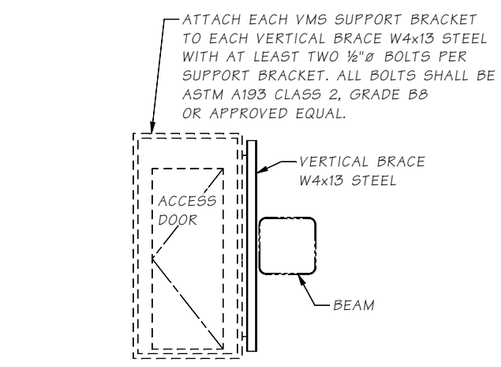

for vms signs only

SECTION T

SUPPORT BRACKET NOT SHOWN FOR CLARITY

10.1-A1-1

Last revised on : 4/26/2016

SHEET

JOB NO. 10.1-A1-3

SK

Bridge Design Engr.	M:\STANDARDS\Sign Bridges\MT_SIGN_BRIDGE_STRUCT_DETAILS_2.MAN				REGION NO.	STATE	FED. AID PROJ. NO.	SHEET NO.	TOTAL SHEETS
Supervisor					10	WASH.			
Designed By					JOB NUMBER				
Checked By									
Detailed By									
Bridge Projects Engr.									
Prelim. Plan By									
Architect/Specialist	DATE	REVISION	BY	APP'D					

BRIDGE AND STRUCTURES OFFICE

Washington State Department of Transportation

STANDARD MONOTUBE SIGN STRUCTURES

MONOTUBE SIGN BRIDGE STRUCTURAL DETAILS 2

BRIDGE SHEET NO.

SHEET OF SHEETS

Wed May 25 07:59:18 2016