April 2014

Tech Notes

Highways for Life

Bridge and Structures Office

Washington State Department of Transportation

The innovative bridge features include the following:

- Unique socket connection of precast concrete column to footing
- Precast concrete columns fabricated in segments and joined by bars grouted in ducts
- Precast concrete cap beam made in two segments that were joined by a cast-in-place concrete closure
- Precast concrete superstructure with cast-in-place concrete closure at intermediate pier
- Precast concrete end and intermediate diaphragms
- Grouted duct connection between column segments and column-to-pier cap connection

From Research to Practice

Bridge construction frequently leads to traffic delays, which incur costs that can be measured in terms of time, wasted fuel, and emotional distress. Transportation agencies are therefore seeking methods for accelerated bridge construction (ABC). Use of precast concrete for bridge substructures offers potential time savings on- site and represents promising technology for ABC. Furthermore, limiting the amount of on-site work improves safety for both the motoring public and highway workers and reduces environmental impacts. For these reasons, transportation agencies are gradual- ly embracing ABC for many of their urban construction projects.

Connections in precast concrete substructures are typically made at the beam-column and column-foundation interfaces to facilitate fabrication and transportation. However, for structures in seismic regions, those interfaces represent locations of high moments and shears and large inelastic cyclic strain reversals. Devising connections that can accommodate inelastic cyclic deformations and are readily constructible is the primary challenge for ABC in seismic regions. This paper describes the development, experimental validation, and implementation of a precast concrete bridge bent system that is intended to meet those challenges. This development was possible only by close cooperation among members of the team, which included the disciplines of design, research, precast concrete fabrication, and construction.

Potential benefits of ABC and criteria for selection

The primary benefits of ABC accrue from saving time on site. Conventional bridge construction typically induces traffic congestion and extended delays. The traffic congestion adversely affects individual travelers' budgets and the region's economy, air quality due to increased vehicle emissions, and quality of life due to personal time delays. Also, untimely service due to delays for the workforce, suppliers, and customers can impose significant costs on the traveling public and regional businesses. Prefabrication of structural elements is the essence of accelerated construction. Although prefabrication can decrease total contract time, reduction of the time spent on-site is the critical component.

Precast concrete units are often constructed in specialized plants. There, repetitive construction permits investment in high-quality steel forms, which facilitate high-quality finishes and accurate dimensional control. Plant precasting also allows tight quality control of materials, rapid production, good schedule control, and the possibility of prestressing. Site precasting offers other advantages, such as allow- ing workers to work at ground level and removing the need for, and limitations of transportation to the site. While precasting the substructure may impose a con- struction cost premium, it can often be offset by the economic benefits of the time saved through ABC.

For many years the State of Washington has designed and constructed precast, prestressed concrete girder superstructures because they have proved to be durable and cost effective. Girder technology has been continually improved so that spans in excess of 200 ft are now possible.

However, precast concrete substructures have seldom been used in high seismic regions, such as western Washington. Transverse seismic forces cause the largest moments to occur at connections (Fig. 1). Those connections must be moment resisting and robust under cyclic loading to maintain the integrity of the structure; if the members are precast, the connections must also be easy to assemble on-site. Achieving both characteristics simultaneously represents a significant design challenge.

In Washington, the cap beam is typically constructed in two stages. In a cast-in-place concrete bridge bent, the lower stage is cast on the columns, the girders are set on it, and finally the upper stage is cast with the deck slab.

Under longitudinal seismic loading, a moment connection between the girders and cap beam is desirable. Such a system is referred to as an integral bent cap and is commonly achieved by casting the upper- stage cap beam around bars and strands that project from the girder ends, thereby connecting them rigidly to the completed cap beam. In the absence of such a moment connection the columns must act as cantilevers, and such a system is not as efficient as one in which plastic hinging occurs at both the top and bot- tom of the columns.

Design specifications and guidelines

There are two methods for seismic design of bridges: force-based design by the American Association of State Highway and Transportation Officials' AASHTO LRFD Bridge Design Specifications3 and displacement-based design by the AASHTO Guide Specification for LRFD Seismic Bridge Design.

WSDOT's seismic design is based on the AASHTO guide specification modified by the WSDOT Bridge Design Manual. Displacement-based design is intended to achieve a no-collapse condition for bridges using one level of seismic safety evaluation. The fundamental design principle is capacity protection, where selected elements are identified for plastic hinging while others are protected against potential damage by providing them with sufficient strength to resist the forces consistent with the plastic hinge strengths.

Displacement-based analysis is an inelastic static analysis using the expected material properties of the modeled members. This methodology, commonly referred to as pushover analysis, is used to determine the reliable displacement capacity of a structure as it reaches its limit of structural stability.

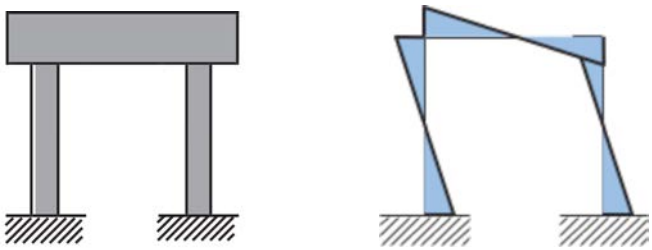

Figure 1a. Moment diagram of a bridge pier with fixed connections.

Figure 1b. Bridge bent configuration selected.

Figure 1

Figure 1 shows the configuration of the bridge bent system that was developed. It consists of a st-in-place concrete spread footing, a precast concrete column, and a precast concrete first-stage cap beam. The second-stage cap beam is cast in place, just as it would be in a fully cast-in-place concrete system. The footing-to-column and column-to-cap beam connections are the critical elements that lead to the system's viability, and the genesis of each is reviewed here.

The footing-to-column connection is referred to as a socket connection (Fig. 3). It is made by placing the precast concrete column in the excavation, placing the footing steel, then casting the footing concrete. Alternatively, the footing steel may be placed before the column is set. The precast concrete column-to-footing connection's primary advantage is construction speed because it allows a footing and a column to be cast in little more time than that needed to cast a footing alone. Furthermore, because the finished connection can carry vertical forces greater than the weight of the cap beam, the footing needs to gain only a fraction of its full strength before the cap beam can be placed. The time to the start of setting girders on the cap beam is a critical measure of the savings provided by the bent system.

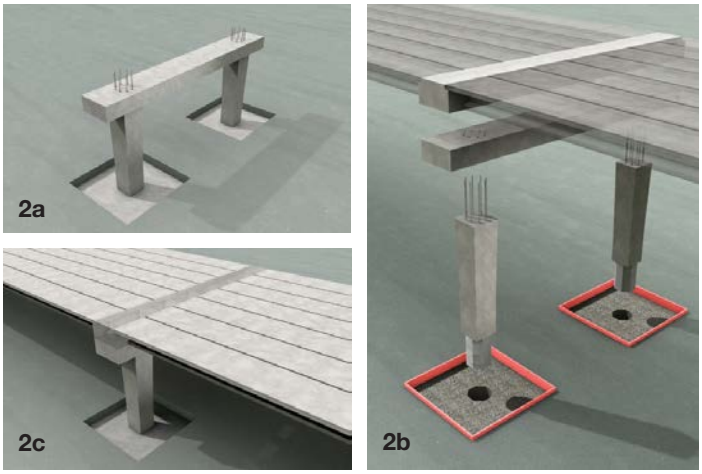

Figures 2a, 2b, 2c. Precast concrete bent system configuration.

The socket concept was used previously in Washington in a modified form. In that case, the contract called for cast-in-place concrete columns, but the contractor elected to precast them on-site and use a socket connection to save time. The footing was 6 ft thick, the columns were 4 ft square, and the connection between them was made by roughening the column surface locally and adding horizontal form-saver bars. Those bars screwed into threaded couplers embedded in the face of the column within the depth of the footing to provide shear friction across the interface and were inserted after the column had been placed.

Figure 3. Socket connection concept.

The column-to-cap beam connection was made with vertical bars projecting from the column that were grouted into ducts in the cap beam. Again, this concept has been used previously, but primarily in regions of low seismicity where the number of bars needed for the connection was small and the loading was not cyclic. The concept was also used once in the high seismic zone in western Washington. Figure 4 shows fabrication and subsequent placement of that precast concrete cap beam. The bridge site is in a congested urban area with high visibility from the traveling public and high scrutiny from associated municipalities. To open the bridge as quickly as possible, the contractor proposed precasting the cap beams for the intermediate piers instead of casting them in place as shown on the contract plans. This change saved the owner and the contractor several weeks. The columns were reinforced with the same fourteen no. 14 column bars as on the original plans. They were grouted into 4 in. galvanized steel ducts that were placed in the precast concrete cap beam using a template. The cap beams weighed approximately 200 kip each and were precast on the ground adjacent to the columns.

Figure 4. Previous use of precast concrete cap beam that used a large number of column bars in a seismic area of Washington State.

For the precast concrete bent system described in this paper, the grouted bar-beam connection was modified by using the largest bars possible, up to and including no.18

(57M) bars. That choice allows the ducts to be large in diameter and few in number; both features facilitate fit-up on-site and reduce the probability of accidental misalignment. However, anchorage of such large bars within the depth of the cap beam is not possible if the development length equations of the AASHTO LRFD specifications must be satisfied. Previous studies6 had indicated that bars grouted into ducts resulted in significantly shorter development lengths than predicted by the standard equations due to the confinement provided by the duct, but those studies examined smaller bars and tighter ducts than proposed here. Research was therefore undertaken to determine the development properties of large bars grouted into large-diameter ducts and the response of such connections to cyclic lateral loading. That research is described in detail in the following paragraphs.

Figure 5 shows the cap beam–to–column connection for the proposed system. The precast concrete column has six no.18 vertical column bars that project from its top. The precast concrete cap beam, which contains 8 in. diameter corrugated metal ducts, is fitted over the column bars and grouted in place, completing the bent. The selection of six no. 18 vertical column bars reduces the congestion at the column-to-cap beam connection while providing generous assembly tolerances.

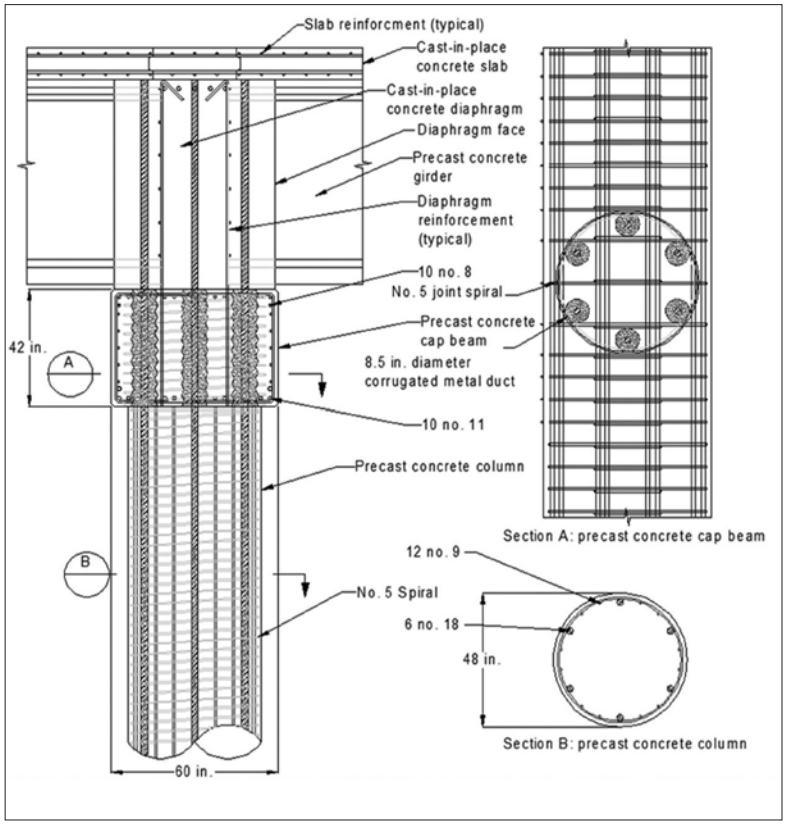

Figure 5. Column-to-cap beam connection.

The top and bottom connections are different because although the seismic performance requirements are similar in both locations, the construction needs are not. A spread footing for a typical overpass is generally too heavy for precasting to be viable, so it is likely to be cast in place. Then, the socket connection provides generous tolerances and fast construction. However, a socket connection at the top would require casting the cap beam in place, and that would eliminate much of the time advantage of prefabrication. Thus a socket connection at the base and a grouted-duct connection at the top were selected as practical solutions to this problem.

The connections may be compared with other alternatives, such as those given in Marsh et al.9 For example, grouted sleeves have been adopted for the base connection by a number of agencies, such as the Utah Department of Transportation. The sleeves are typically cast into the column and fit over bars projecting upward from the footing. The socket system proposed here has the advantages that the placement tolerances for the column are significantly greater than those available with a commercially available sleeve system, and the connection requires no special or proprietary hardware.

Supporting research: Cap beam connection

To investigate the development of bars grouted in corrugated steel ducts, 14 monotonic pullout tests were performed with bars as large as no.18. They supplemented a previous test series at a smaller scale.

Figure 6 summarizes the results of the pullout tests. It shows the bar stress at failure plotted against the ratio of embedment length to bar diameter le/dbto permit comparison among different bar sizes. In the nomenclature for the tests, 18N06 means a no. 18 bar with no fiber in the grout embedded 6 bar diameters. The letter F signifies fibers in the grout, N signifies no fibers, and S indicates a failure near the surface, which was controlled by a tension failure cone in the concrete surrounding the duct, rather than a shear failure in the grout.

Three outcomes can be seen from the tests. First, the bar stress at failure is essentially proportional to le/db. This implies that the bond stress is constant along the bar and the same in all specimens and that failure was by plastic shear failure in the grout. Visual observations supported that finding. Second, the bar can be anchored to reach yield and fracture if the embedment lengths are 6db and 10db, respectively.

Additional research by the team had a goal of combining the upper connection and the socket footing connection into a complete bent, which would be taken to the point of implementation. To achieve that goal, three socket connections were tested in the laboratory, and a demonstration bridge was then constructed with the bridge bent system over Interstate 5 (I-5).

The goal of the laboratory tests was to evaluate the connection's response to combined cyclic lateral load and constant vertical load. The test specimens consisted of 20 in. diameter precast concrete columns embedded in cast-in-place concrete foundations. The columns were cantilevers and were loaded at a location that corresponded to the inflection point in the prototype column. The cantilever height was 60 in. or three column diameters. Figure 8 illustrates the construction and testing.

In each of the first two tests, the column contained a splice. The purpose was to determine where splices could be located in the event that constructability constraints in some future project might require a segmental column. The splice detail was an optional feature of the bent to permit the use of taller columns.

In all three cases, the column surface was roughened where it was embedded in the footing. The roughening was achieved using small timber strips that represented, at laboratory scale, the sawtooth pattern used on the ends of standard Washington prestressed concrete girders.

Site implementation

Following the testing of the foundation connection, and based on the success of the column-to-cap beam connection, a demonstration project that uses these connections was planned and executed. The objective of the project was to demonstrate the constructability of the bent system on a bridge project that would be competitively bid. The demonstration project is a replacement bridge that was built on an alignment parallel to an existing bridge and crosses I-5 in Washington. The bridge has two spans, tall abutments at each end, and a center guide specification are not needed if the bent that is located in the median strip of the freeway.

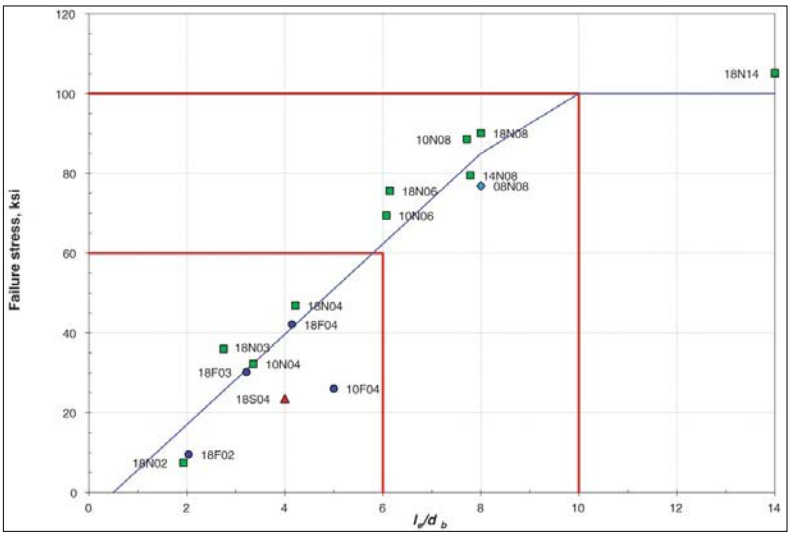

Figure 6. Grouted bar-duct pullout test results. Note: db = bar diameter; le = embedment length.

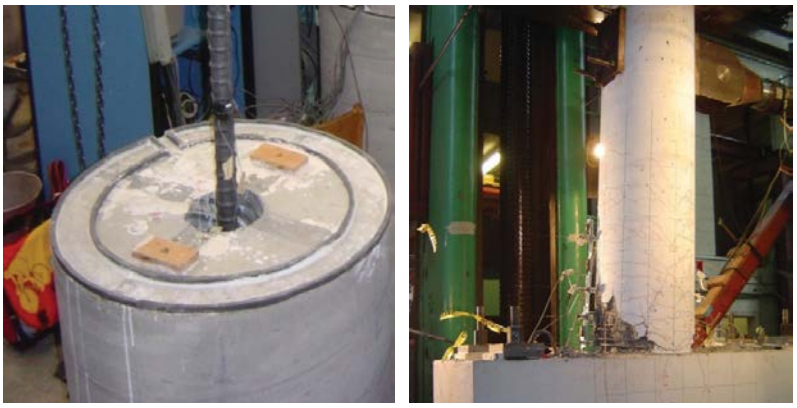

Figure 7a, 7b. Test setups of large bar-duct pullout and column-to-cap beam connection.

Figure 8. Construction and testing of precast concrete column-to-footing connection.

Figures 9 through 12 show the details of this project. The bridge features include the following:

- unique socket connection of precast concrete column to footing
- precast concrete columns fabricated in segments and joined by bars grouted in ducts
- precast concrete cap beam made in two segments that were joined by a cast-in-place concrete closure
- precast concrete superstructure with cast-in-place concrete closure at intermediate pier
- precast concrete end and intermediate diaphragms

The columns used in this project were fabricated in segments and spliced on-site. Although the columns of the demonstration project were small enough to be handled as a single piece, the segmental concept was used to demonstrate the technology for use on other projects where the columns are larger and cannot be transported or lifted as a single piece.

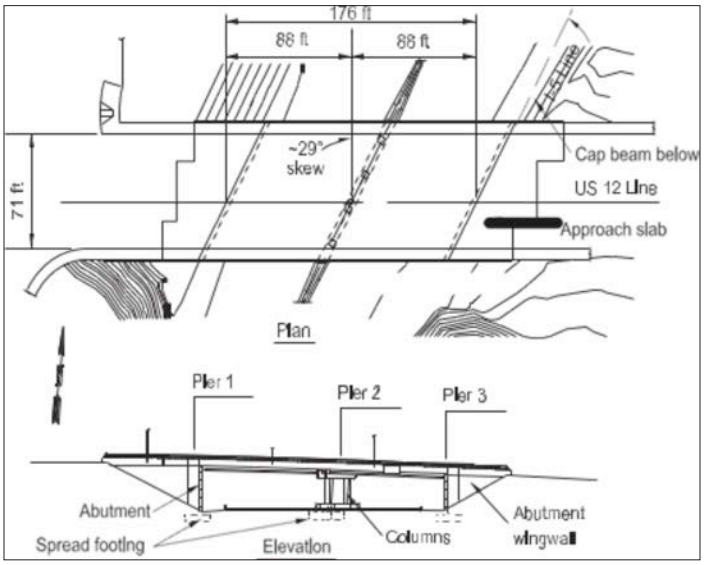

Figure 9. Bridge layout for demonstration project. Note: Elevations are in feet.

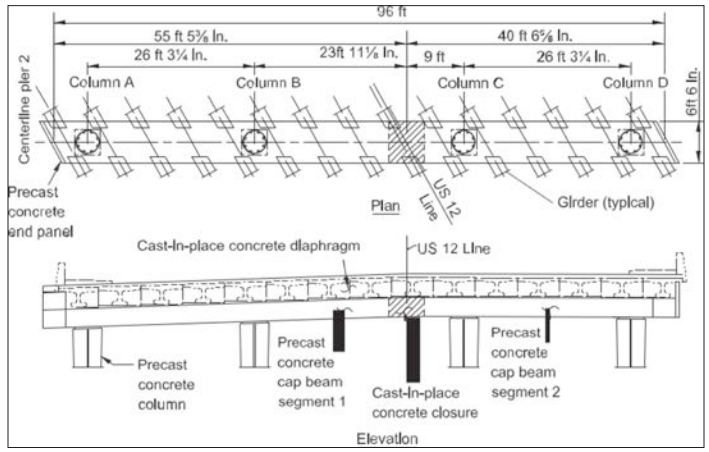

Figure 10. Bridge plan and elevation at pier for demonstration project.

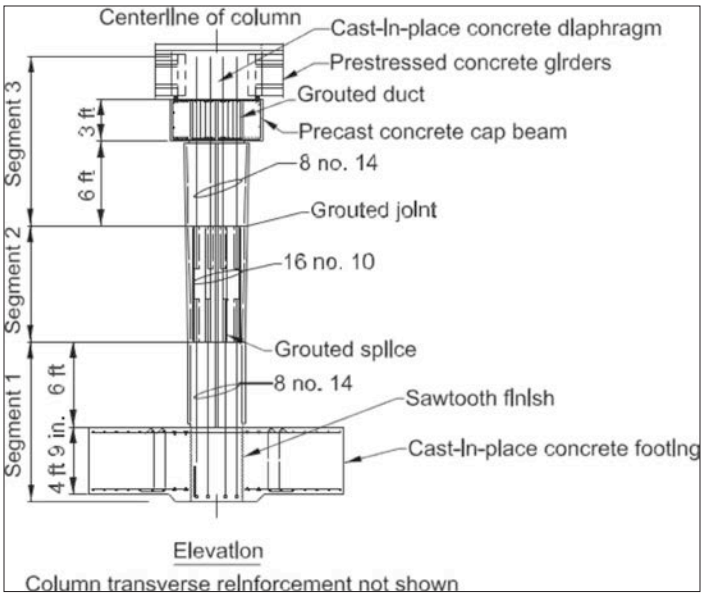

Figure 11. Demonstration bridge column details for elevation.

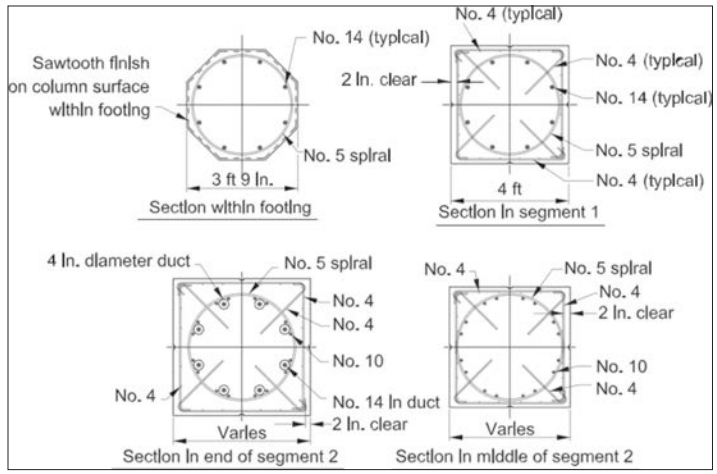

Figure 12. Demonstration bridge segmental column detail sections.

Following are steps in the construction sequence for placement of precast concrete column segments and cap beam (Fig. 14 and 15):

This system provides longitudinal moment transfer from the bent columns through the cap beam to the girders. The precast concrete first-stage cap beam for the demonstration bridge was built in two pieces that were integrated with a closure near midwidth of the bridge. This was required because the bridge is 84 ft (25.6 m) wide, including sidewalks. Ideally, the precast concrete first-stage cap would be built as a single piece to avoid the time required for splicing segments, but lifting and shipping weight restrictions led to the two-piece solution in this case. This decision will vary by project.

The joints between column segments and the column-to-cap beam were all grouted at one time. The grouting process included the following steps:

1. Install grout forms and seal.
2. Pump grout and close grout tubes.
3. Remove grout forms and inspect grout in joint and grout tubes.
4. Repair unfilled grout tubes and patch back grout tubes.

Because of the relatively small size of the column and precast concrete cap beam segments, all pieces on this bent could be stacked and braced before any joint grouting was necessary, and this approach minimized the number of separate grouting operations. This would not necessarily be the case if larger segments were required, such as might be expected in taller column segments. In those cases, intermediate grouting steps would be necessary to ensure structural stability during construction.

Figure 13a, 13b . Construction sequences for placement of precast concrete column segment into footing.

Figure 14a, 14b, 14c. Placement of column segment.

Conclusion

A precast concrete bridge bent system is presented that is conceptually simple, can be constructed rap- idly, and offers excellent seismic performance. The following conclusions are drawn:

- The system described here addresses the demands of both seismic performance and constructability. It provides an example of a successful transfer of research to practice but was possible only through the close cooperation between team members representing research, design, fabrication, and construction.
- Precast concrete bridge systems are an economical and effective means for rapid bridge construction. Precasting eliminates traffic disruptions during bridge construction while maintaining quality and long-term performance.
- The use of precast concrete cap beams results in time and cost savings by eliminating the need for elevated falsework and shoring. It also improves worker safety because reinforcement and concrete can be placed at ground level.
- The column-to-cap beam connection is made with a small number of large bars grouted into ducts in the cap beam. Their small number and the correspondingly large ducts sizes that are possible lead to a connection that can be assembled easily on-site.
- The development length of a reinforcing bar grouted into a corrugated steel pipe is much shorter than implied by current code equations for a bar embedded directly in concrete.
- The socket connection between the cast-in- place spread footing and the precast concrete column provides excellent performance under combined constant vertical and cyclic lateral loading and is quick and easy to construct.

Figure 15. Placement of precast concrete cap beam.

Figure 16. Placement of precast concrete girders and casting slab concrete.

Final report with design specifications and examples at:

http://www.fhwa.dot.gov/hfl/partnerships/bergerabam/index.cfm

Video at:

http://www.fhwa.dot.gov/hfl/partnerships/bergerabam/index.cfm

Webinars for initial testing, early construction and final testing and completed construction recorded 2012 and 2013 at:

www.fhwa.dot.gov/hfl/commtool.cfm

www.fhwa.dot.gov/hfl/n134083201308/

For general information

Tom Baker, PE
State Bridge & Structures Engineer
360-705-7207
bakert@wsdot.wa.gov

Harvey Coffman, PE, SE
Bridge Preservation Engineer
360-570-2556
coffmah@wsdot.wa.gov

Bijan Khaleghi, PhD, PE, SE
State Bridge Design Engineer
360-705-7181
khalegb@wsdot.wa.gov

DeWayne Wilson, PE
Bridge Management Engineer
360-705-7214
wilsond@wsdot.wa.gov

For specific information

Bijan Khaleghi, PhD, PE, SE
State Bridge Design Engineer
360-705-7181
khalegb@wsdot.wa.gov

Washington State Department of Transportation
HQ Bridge & Structures Office
7345 Linderson Way SW
Tumwater, WA 98501

Washington State Department of Transportation

Americans with Disabilities Act (ADA) Information: Materials can be provided in alternative formats for people with disabilities by calling Shawn Murinko at 360-705-7097 or murinks@wsdot.wa.gov. Persons who are deaf or hard of hearing may contact Office of Equal Opportunity through the Washington Relay Service at 7-1-1.

Title VI Statement to Public: WSDOT ensures full compliance with Title VI of the Civil Rights Act of 1964 by prohibiting discrimination against any person on the basis of race, color, national origin or sex in the provision of benefits and services resulting from its federally assisted programs and activities. For questions regarding WSDOT's Title VI Program contact Jonté Sulton at 360-705-7082 or SultonJ@wsdot.wa.gov.

14-04-0002496