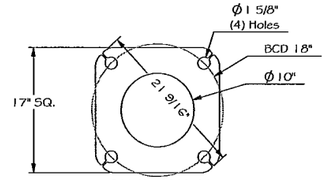

211-TP-0019-01
Anchor plate for poles with
Mast Arm <=45'

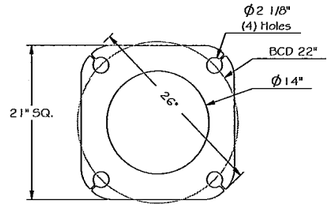

211-TP-0019-02
Anchor plate for poles with
Mast Arm >45'

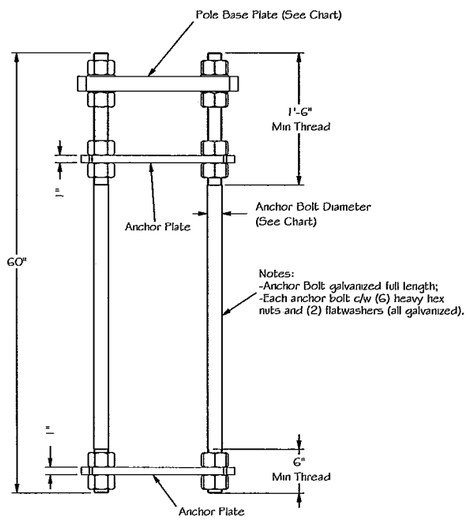

Anchor Bolt Cage Detail

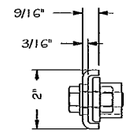

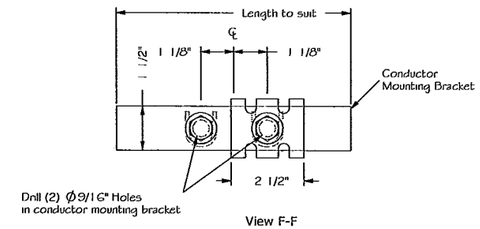

View F-F

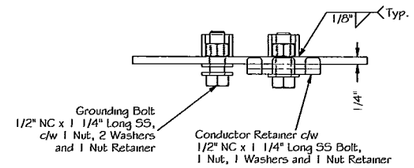

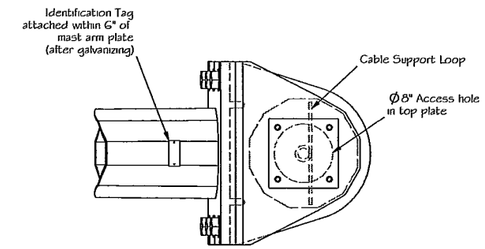

View J-J

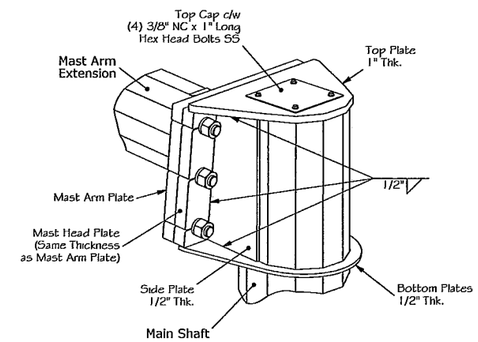

Type II
Mast Head Detail

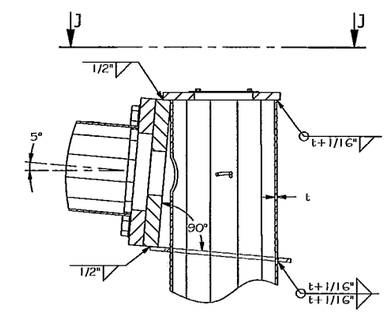

Detail 7
Mast Head Type II
(Middle Section)

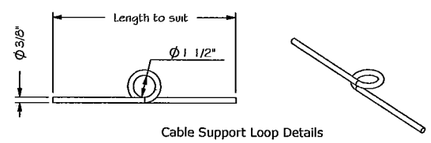

Cable Support Loop Details

APPROVED

Manufacturer's Pole Plan
Approved For Listing As A
Pre-Approved Drawing
WSDOT Bridge & Structures Office
By GB Date 3/5/08

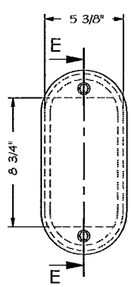

Hand Hole Detail

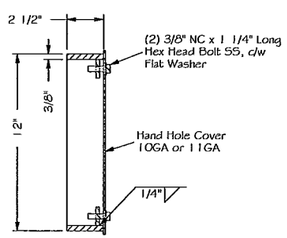

Section E-E

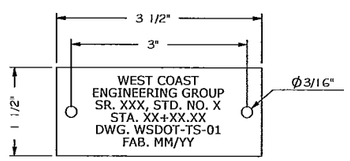

Identification Tag Detail

Notes:
-Material: 18GA Aluminum or SS
-Secure to pole with (2) 0.125" rivets
-Tag stamped or etched as shown

THE INFORMATION CONTAINED IN THIS DRAWING IS THE PROPERTY OF WEST COAST ENGINEERING GROUP, AND ANY INFORMATION OBTAINED FROM ITS CONTENT SHALL BE USED ONLY FOR THE SPECIFIC PURPOSE AUTHORIZED BY WEST COAST ENGINEERING GROUP.

DESIGNED: LUISS BARCAN
CHECKED: IOAN GIOSAN
APPROVED: TED BROCKMAN

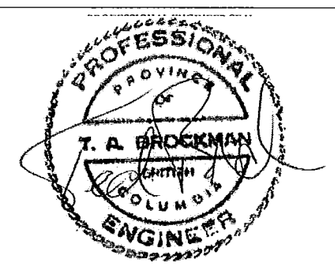

Dec.14, 2007

DATE: 01-Apr-2004

West Coast Engineering Group Inc.
6823 NORTHGATE WAY
FERNDALE, WA, USA, 98248-8309
Ph.(360) 366-3400, Fx.(360) 366-3401
www.wceng.com

PROJECT: TRAFFIC SIGNAL STRUCTURES
STATE OF WASHINGTON
-

SCALE: NTS
QTY: -
JOB #: -
SHEET 3 OF 3
DWG. #: WSDOT-TS-01
REV. 3