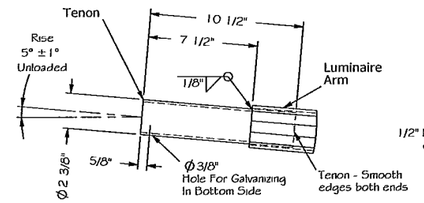

Detail 1
Luminaire Tenon

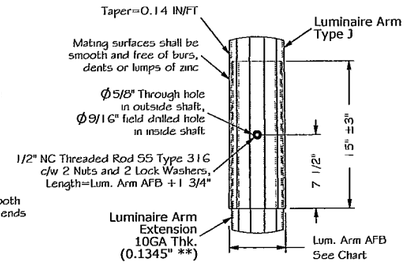

Detail 2
Luminaire Arm Slip Joint

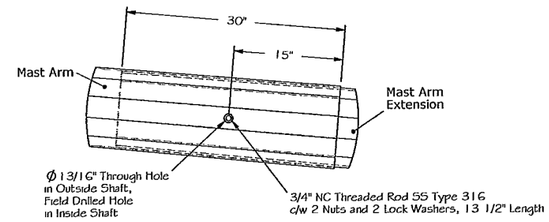

Detail 5
Mast Arm Slip Joint
(41'-65' Mast Arms Only)

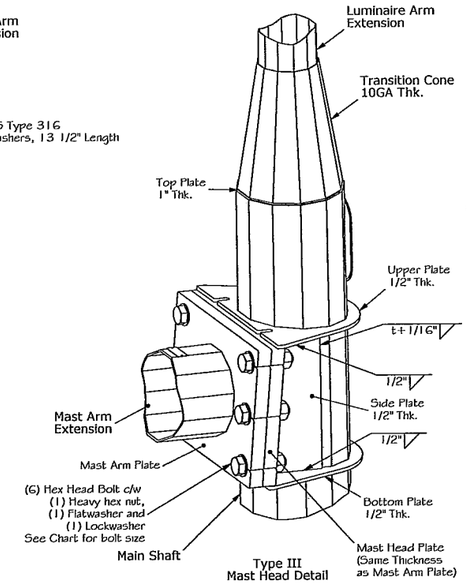

Type III
Mast Head Detail

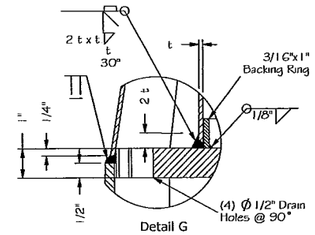

Detail G

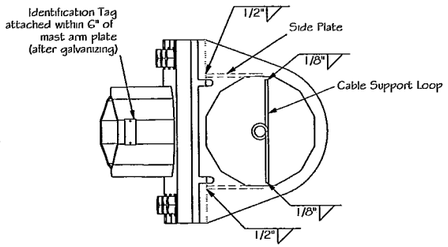

Section C-C

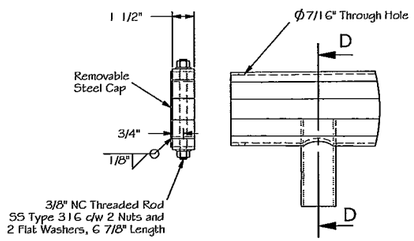

Detail 6
Removable Cap
(Top View)

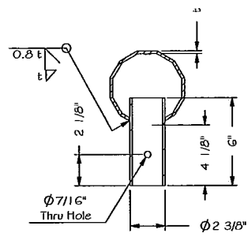

Section D-D
Signal Tenon

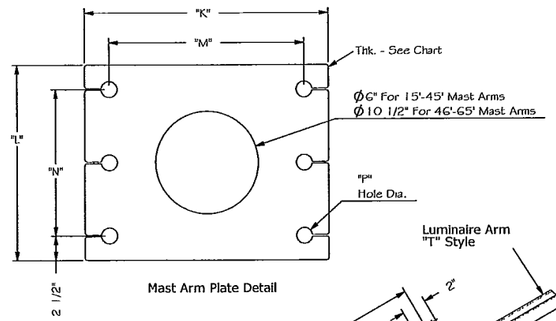

Mast Arm Plate Detail

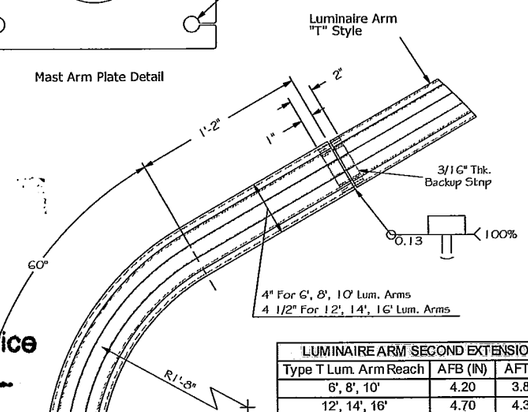

Detail 8
Slip Joint & Elbow
For Luminaire Type "T"

LUMINAIRE ARM SECOND EXTENSION		
Type T Lum. Arm Reach	AFB (IN)	AFT (IN)
6', 8', 10'	4.20	3.875
12', 14', 16'	4.70	4.375

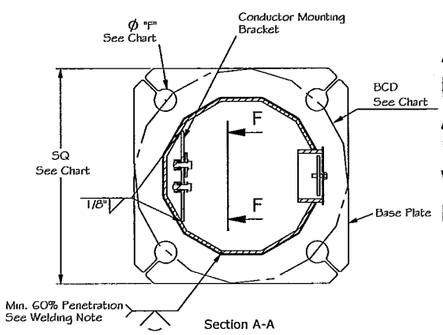

Section A-A

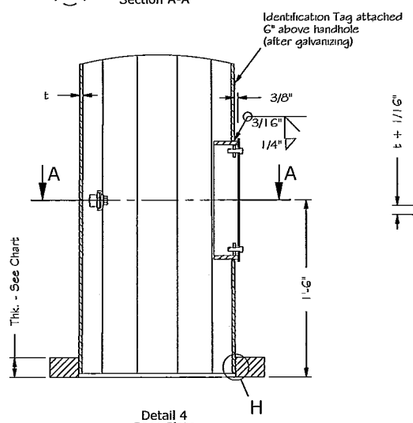

Detail 4
Base Plate

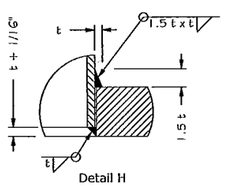

Detail H

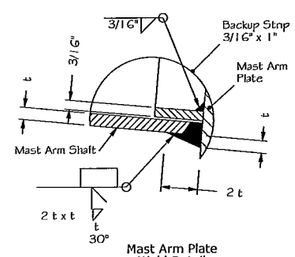

Mast Arm Plate
Weld Detail

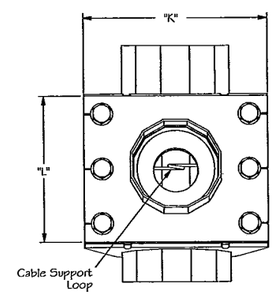

View B-B

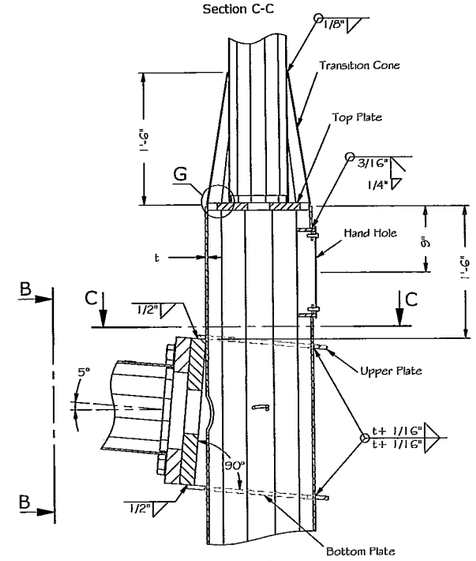

Detail 3
Mast Head Type III
(Middle Section)

APPROVED

Manufacturer's Pole Plan
Approved For Listing As A
Pre-Approved Drawing
WSDOT Bridge & Structures Office
By GB Date 3/5/08

THE INFORMATION CONTAINED IN THIS DRAWING IS THE PROPERTY OF WEST COAST ENGINEERING GROUP, AND ANY INFORMATION OBTAINED FROM ITS CONTENT SHALL BE USED ONLY FOR THE SPECIFIC PURPOSE AUTHORIZED BY WEST COAST ENGINEERING GROUP.

DESIGNED: LUISS BARCAN
CHECKED: IOAN GIOSAN
APPROVED: TED BROCKMAN

PROFESSIONAL ENGINEER — PROVINCE OF BRITISH COLUMBIA — T. A. BROCKMAN

Dec.14, 2007

DATE: 01-Apr-2004

West Coast Engineering Group Inc.
6823 NORTHGATE WAY
FERNDALE, WA, USA, 98248-8309
Ph.(360) 366-3400, Fx.(360) 366-3401
www.wceng.com

PROJECT: TRAFFIC SIGNAL STRUCTURES
STATE OF WASHINGTON
-

SCALE: NTS
QTY: -
JOB #: -
SHEET 2 OF 3
DWG. #: WSDOT-TS-01
REV. 3