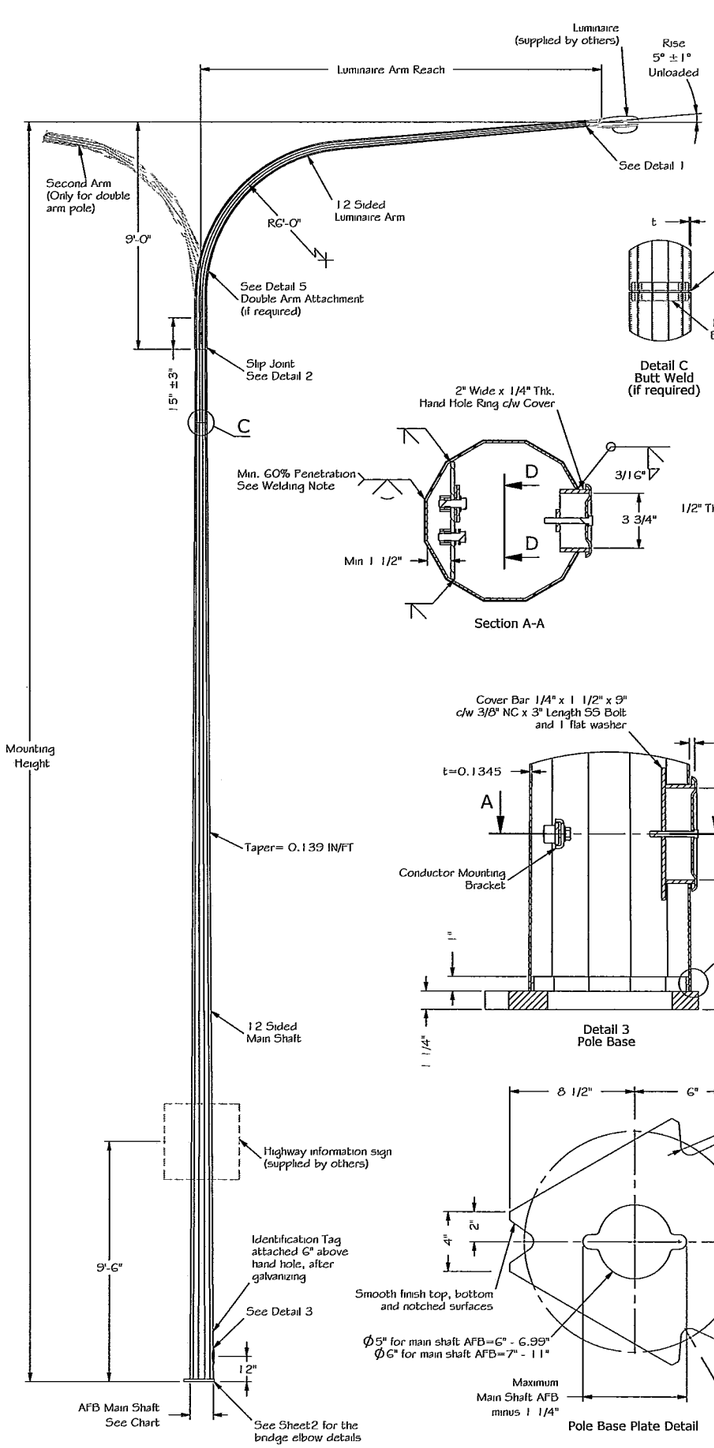

Section A-A

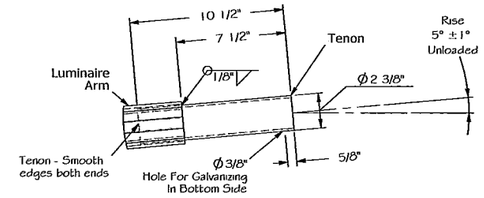

Detail 1
Luminaire Tenon

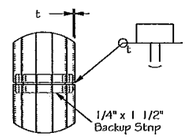

Detail C
Butt Weld
(if required)

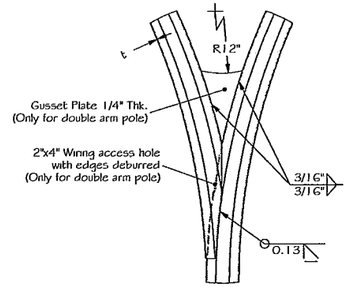

Detail 5
Double Arm Attachment
(Only for double arm pole)

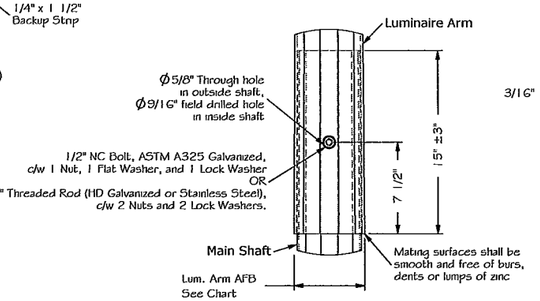

Detail 2
Slip Joint

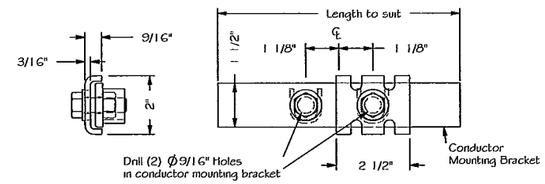

View D-D

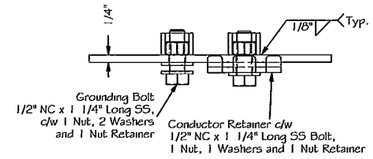

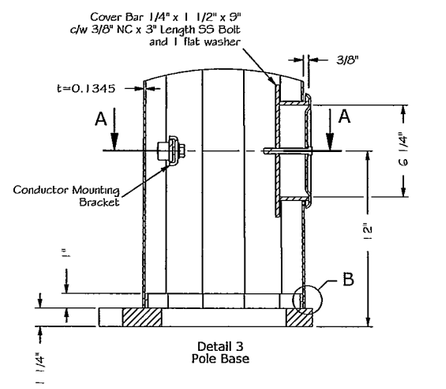

Detail 3
Pole Base

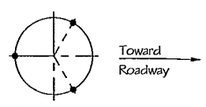

Bolt Layout
Bridge Elbow

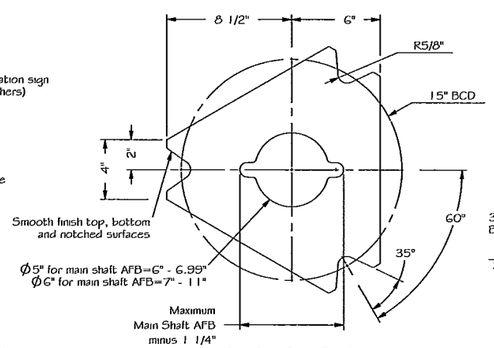

Pole Base Plate Detail

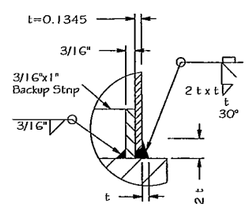

Detail B

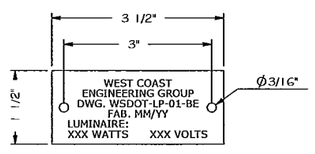

Identification Tag Detail

Notes:
-Material: 18GA Aluminum or SS
-Secure to pole with (2) 0.125" rivets
-Tag stamped or etched as shown

	MAIN SHAFT					
	Mounting Height x Lum. Arm	Main Shaft AFB * (IN)	Main Shaft AFT * (IN)	Main Shaft Length (IN)	THK ***	Connection Bolt Dia.
	25'x 6'	6.24	3.85	206	0.1345"	1"
	25'x 8'	6.47	4.08	206	0.1345"	1"
**	25'x10'	6.73	4.34	206	0.1345"	1"
**	25'x12'	7.00	4.61	206	0.1345"	1"
	30'x 6'	6.94	3.85	266	0.1345"	1"
	30'x 8'	7.17	4.08	266	0.1345"	1"
**	30'x10'	7.42	4.34	266	0.1345"	1"
**	30'x12'	7.70	4.61	266	0.1345"	1"
	35'x 6'	7.63	3.85	326	0.1345"	1"
	35'x 8'	7.87	4.08	326	0.1345"	1"
**	35'x10'	8.12	4.34	326	0.1345"	1"
**	35'x12'	8.40	4.61	326	0.1345"	1"
	40'x 6'	8.33	3.85	386	0.1345"	1"
	40'x 8'	8.56	4.08	386	0.1345"	1"
**	40'x10'	8.82	4.34	386	0.1345"	1"
**	40'x12'	9.09	4.61	386	0.1345"	1"
	45'x 6'	9.03	3.85	446	0.1345"	1"
	45'x 8'	9.26	4.08	446	0.1345"	1"
**	45'x10'	9.52	4.34	446	0.1345"	1"
**	45'x12'	9.79	4.61	446	0.1345"	1"
	50'x 6'	9.72	3.85	506	0.1345"	1"
	50'x 8'	9.96	4.08	506	0.1345"	1"
**	50'x10'	10.21	4.34	506	0.1345"	1"
**	50'x12'	10.49	4.61	506	0.1345"	1"

** DOUBLE DAVIT NOT ALLOWED

	LUMINAIRE ARM TYPE "J"				
	Luminaire Arm Reach	AFB * (IN)	AFT * (IN)	THK *** (IN)	Shaft Length (FT)
	6'	4.41	2 3/4"	0.1345"	11.94
	8'	4.65	2 3/4"	0.1345"	13.61
**	10'	4.90	2 3/4"	0.1345"	15.45
**	12'	5.28	2 7/8"	3/16"	17.28

NOTES

WELDING:
Welding of structures shall be in accordance with the latest edition of the AWS Structural Welding Code D1.1-Steel
Longitudinal seam weld is 60% minimum penetration except for 6 inches from end of section at base plate, slip joint, and but joint it is 100% penetration.

FINISH: All components to be hot dip galvanized as per ASTM A123 / A153.

All tapered tubes are 12 sided
* AFB - across the flats at the base of the shaft, AFT - across the flats at the top of the shaft.
** Double davit not allowed
*** 0.1345" Nominal thickness, 0.1265" minimum thickness.
The bridge elbow is designed as per WSDOT Standard Plan J-1b.

LOADING INFORMATION

DESIGN CRITERIA:
Design Standard: 2001 AASHTO Standard Specifications For Structural Supports For Highway Signs, Luminaires And Traffic Signals.
- Design wind speed - 90 mph (3 second gust wind speed)
- Design life / recurrence interval - 50 years
- Maximum 2 luminaires per pole
- Luminaire data: Area=3.3 ft^2, Weight=60 Lbs
- Highway information sign (max. area=10 ft^2) mounted @ 9'-6" from base.
- Type of pole allowed on a bridge elbow: single arm 12' or less and double arm 8' or less

CAFL AT CRITICAL
-Pole to base plate connection = E
-Slip Joint = B
-Pole shaft = B '

MATERIAL DATA	
COMPONENT	GRADE
Tubes with thk. = 0.1345"	A1011 GR.50
All other tubes	A572 GR.50
Base Plate	A572 GR.50
Slip Base Plates	A572 GR.50
Keeper Plate	A446 GR.A
Pipes	A53 GR.B
Anchor Bolts	ASTM F1554 GR.105
Connection Bolts	A325 - Type1
Nuts	A563-DH
Washers	ASTM F436
Handhole Ring & Cover	ASTM A36

APPROVED
Manufacturer's Pole Plan
Approved For Listing As A
Pre-Approved Drawing
WSDOT Bridge & Structures Office
By GB Date 3/5/08

REV.	DESCRIPTION	DATE	BY	APPRD
3	Modified the design criteria, and the materials for anchor bolts & shafts with 0.1345" thk.	12/6/2007	LB	TB
2	Increased the I.D. of fabric pad (item#11) to 5 1/2"	3/8/2006	LB	TB
1	Modified anchor plate and parapet flange, added min. thk. for the nominal 0.1345" thk.	12/06/2005	LB	TB

DESIGNED: TED BROCKMAN
DRAWN: LUISS BARCAN
APPROVED: TED BROCKMAN

PROFESSIONAL ENGINEER — PROVINCE OF BRITISH COLUMBIA — T. A. BROCKMAN
Dec.14, 2007
DATE: 18-Aug-2005

West Coast Engineering Group Inc.
6823 NORTHGATE WAY
FERNDALE, WA, USA, 98248-8309
Ph.(360) 366-3400, Fx.(360) 366-3401
www.wceng.com

PROJECT: LIGHTING POLE
Type J on BRIDGE ELBOW
STATE OF WASHINGTON

SCALE: NTS
QTY: -
SW #: WSDOT-LP-01-BE
W #: -
SHEET 1 OF 2
DWG. #: WSDOT-LP-01-BE
REV. 3

THE INFORMATION CONTAINED IN THIS DRAWING IS THE PROPERTY OF WEST COAST ENGINEERING GROUP, AND ANY INFORMATION OBTAINED FROM ITS CONTENT SHALL BE USED ONLY FOR THE SPECIFIC PURPOSE AUTHORIZED BY WEST COAST ENGINEERING GROUP.