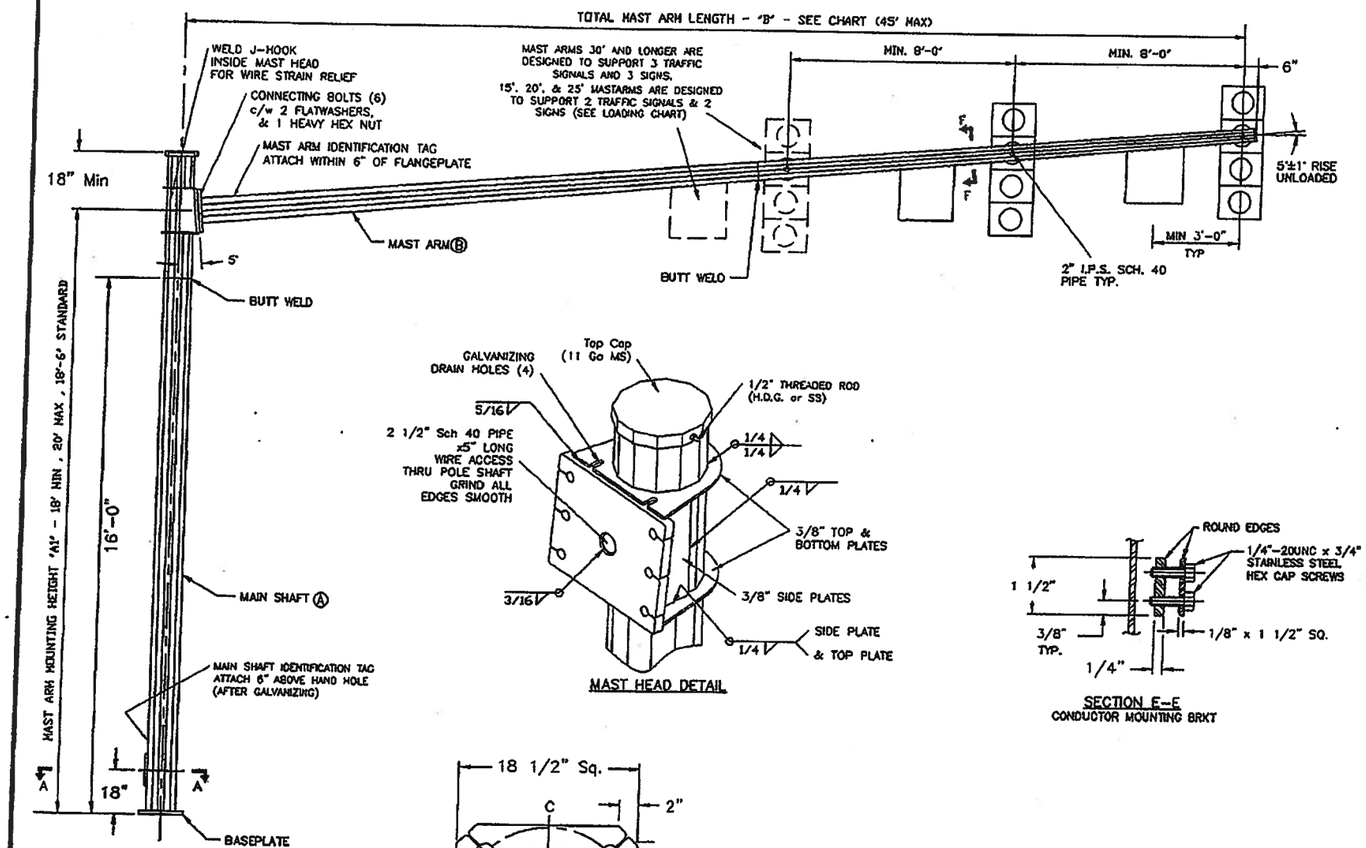

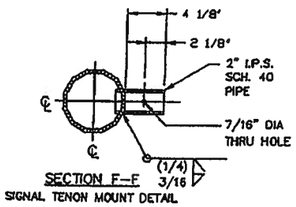

SECTION F-F
SIGNAL TENON MOUNT DETAIL

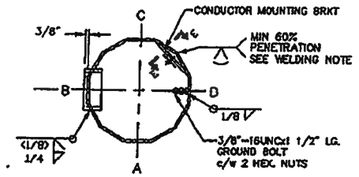

SEC A-A - HAND HOLE DETAIL

MAST HEAD DETAIL

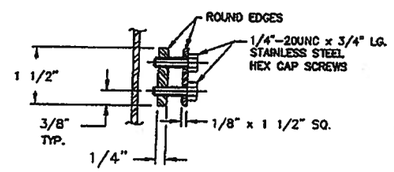

SECTION E-E
CONDUCTOR MOUNTING BRKT

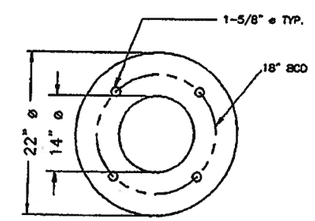

APS-L-07
ANCHOR PLATE
(1" PLT)

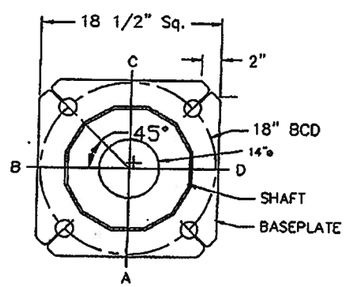

APS-L-05
BASE PLATE
(2" PLT)

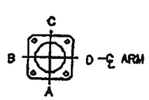

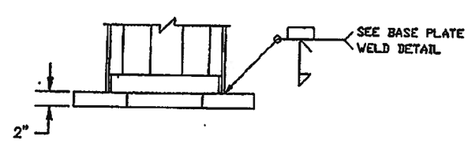

POLE BASEPLATE ATTACHMENT DETAIL
WSDOT FATIGUE CATEGORY D

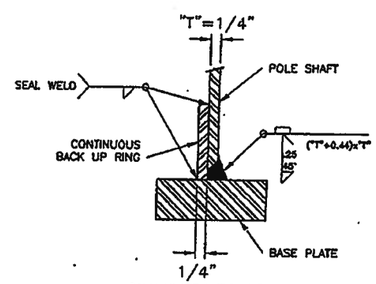

BASE PLATE WELD DETAIL
WSDOT FATIGUE CATEGORY D

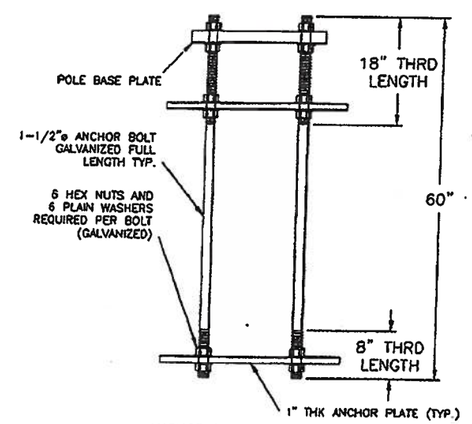

ANCHOR BOLT CAGE DETAIL

Ⓐ MAIN SHAFT (1)			
AFB(3)	AFT(4)	THK	LENGTH
13"	12"	1/4"	22' 0" MAX

(1) DODECAGON SECTION (12 SIDED)
(2) X-SECTION AREA OF SIGNAL OR SIGN x DISTANCE FROM CENTERLINE OF SIGNAL OR SIGN TO CENTERLINE OF MAIN SHAFT
(3) AFB - "ACROSS THE FLATS" AT THE BASE OF THE SHAFT
(4) AFT - "ACROSS THE FLATS" AT THE TOP OF THE SHAFT

Ⓑ MAST ARM SHAFT (1)				CONNECTING BOLTS (6 SETS)		SIGN & SIGNAL MAX. (2) LOADING XYZ
MAST ARM LENGTH "B"	AFB(3)	AFT(4)	THICKNESS IN.	DIA.	LENGTH	
15'	7 1/2	5"	0.1345"	1 1/4	5"	268.2
20'	8-1/4	5"	0.1348"	1 1/4	5"	410.2
25'	9"	5"	0.1345"	1 1/4	5"	552.2
30'	9-3/4"	5"	3/16	1 1/4	5"	870.9
35'	10 1/2"	5"	3/16	1 1/4	5"	1083.9
40'	11-1/4"	5"	3/16	1 1/4	5"	1298.9
45'	12"	5"	3/16	1 1/4	5"	1509.9

DESIGN: ALL STANDARDS ARE DESIGNED TO THE 2009 AASHTO STANDARD SPECIFICATIONS FOR STRUCTURAL SUPPORTS FOR HIGHWAY SIGNS, LUMINAIRES AND TRAFFIC SIGNALS.
DESIGN WIND SPEED - 90 MPH (3 SECOND GUST WIND SPEED)
DESIGN LIFE / RECURRENCE INTERVAL - 50 YEARS
FATIGUE CATEGORY - III (GALLOPING, NATURAL & TRUCK GUSTS)
MAXIMUM TRUCK GUST WIND SPEED - 65 MPH
EACH STRUCTURE HAS A LOAD CAPACITY AS SHOWN IN THE ABOVE CHART. DESIGN AREAS OF SIGNS AS SIGNALS AS FOLLOWS:

TRAFFIC SIGNAL
FACE AREA = 9.2 FT.^{2}
WIND DRAG COEFFICIENT = 1.2
WEIGHT = 60 LB.
ICE AREA = 23 FT.^{2}

TRAFFIC SIGN
FACE AREA = 5.0 FT.^{2}
WIND DRAG COEFFICIENT = 1.12
WEIGHT = 60 LB.
ICE AREA = 5.0 FT.^{2}

WELDING: WELDING OF STRUCTURES SHALL BE IN ACCORDANCE WITH THE CURRENT AASHTO SPECIFICATIONS FOR STRUCTURAL SUPPORTS OF HIGHWAY SIGNS, LUMINAIRES & TRAFFIC SIGNALS. LONGITUDINAL SEAM WELD IS 60% MINIMUM PENETRATION EXCEPT IN 6 INCHES FROM END OF SECTIONS IT IS 100% PENETRATION.

FINISH: ALL COMPONENTS TO BE HOT DIP GALVANIZED AS PER ASTM A123 / A153

MATERIAL DATA (UNLESS OTHERWISE NOTED)	
COMPONENT	GRADE
ALL TAPERED TUBES	ASTM A572 GR. 50 OR A1011 GR.50
BASE PLATE	ASTM A36
FLANGE PLATES	ASTM A36
PIPE TENONS	ASTM A53 GR. B
CONNECTING BOLTS	ASTM A325 - Type 1
NUTS	ASTM A563-DH
FLAT WASHERS	ASTM F436
ANCHOR PLATE	ASTM A36
ANCHOR BOLTS	ASTM F1554 GR.105

APPROVED
Manufacturer's Pole Plan
Approved For Listing As A
Pre-Approved Drawing
WSDOT Bridge & Structures Office
By GB Date 6-20-2011

THOMAS S. LACH
STATE OF WASHINGTON
6-14-11
42082
REGISTERED PROFESSIONAL ENGINEER
Expires 11-17-12

No. REV'D.	V.O. No.	FILE No.	DATE		PO. No.	CUSTOMER	LOCATION
8	CHANGED SHT VELD NOTES			ECH	06-11	APS L.L.C. American Pole Structures L.L.C.	
7	UPDATED PER G. BEH 04-13-06			CHK	05-10		
6	UPDATED PER T. LACH 08-11-00			DRW	08-08		
5	UPDATED PER T. LACH 08-07-08			DRW	08-08	TITLE WSDOT TYPE II TRAFFIC STRUCTURE 45' MAX. MAST ARM LENGTH	
4	UPDATED PER T. LACH 08-06-08			DRW	07-08		
REV.No	CHANGE			BY	APP.	DATE	
DRAWN BY	E.B.	APP. BY				DWG. No. WS-T2-L	REV. No. 8
DATE	10-AUG-02	SCALE	N.T.S.				SHT. 1 of 6 SHTS.