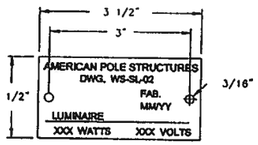

IDENTIFICATION TAG

MAT'L - 14 GAUGE ALUMINUM
SECURE TO POLE WITH TWO (2)
0.125" SS OR ALUMINUM RIVETS
LETTERS TO BE STAMPED OR ENGRAVED
MINIMUM LETTER HEIGHT = 3/16"

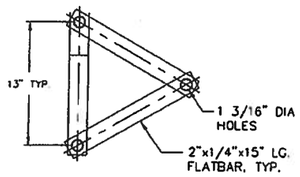

STRAP TEMPLATE DETAIL
PLACE OVER ANCHOR BOLTS
(GALVANIZING NOT REQUIRED
FOR STRAP TEMPLATE.)

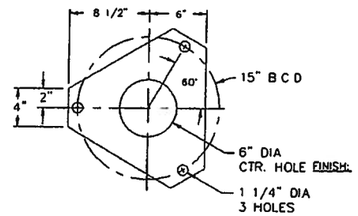

KEEPER PLATE DETAIL
GALVANIZED 28GA SHEET

(1) RADIUS TO INSIDE SURFACE
(2) TOP END 3 7/8"A/F FOR 6, 8 & 10 FT. LUM. ARMS
TOP END 4 3/8"A/F FOR 12, 14 & 16 FT. LUM. ARMS
(3) AFB - "ACROSS THE FLATS" AT THE BASE OF THE SHAFT
(4) AFT - "ACROSS THE FLATS" AT THE TOP OF THE SHAFT

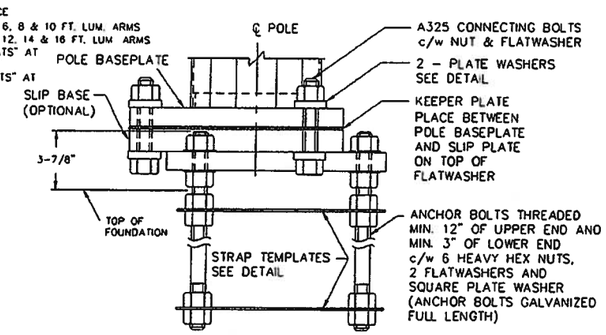

SLIP BASE ASSEMBLY

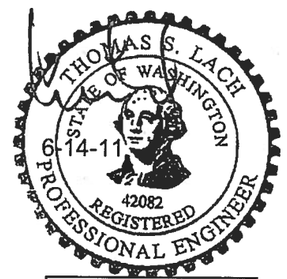

Expires 11-17-12

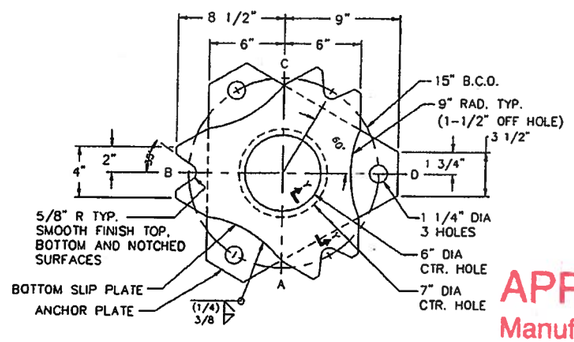

SLIP BASE DETAIL

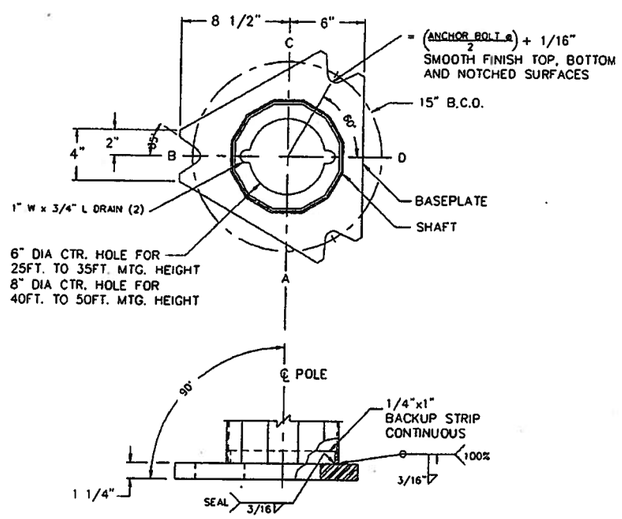

POLE BASEPLATE ATTACHMENT DETAIL

APPROVED
Manufacturer's Pole Plan
Approved For Listing As A
Pre-Approved Drawing
WSDOT Bridge & Structures Office
By GB Date 6-20-2011

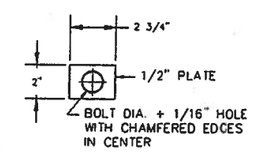

PLATE WASHER DETAIL

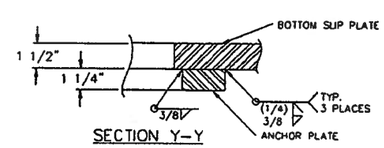

SECTION Y-Y

No. REQ'D.	W.O. No.	FILE No.	DATE	P.O. No.			CUSTOMER	LOCATION
7	UPDATED DRAWING AS PER C Beth			ECH		JUN 14 2011	APS LLC American Pole Structures LLC	
6	ADDED WELD SEAM ON ARM			ECH		JUNE 9 2011		
5	ADDED NOTE ON SIGN SIZE			ECH		JUNE 2 2011		
4	UPDATED DRAWING AS PER Sam			BDA		FEB 28 2011	TITLE STATE OF WASHINGTON ELBOW TYPE ST. LIGHT POLES	
REV No.	CHANGE			BY	APP	DATE		
DRAWN BY	L.B.		APP. BY	S.B.			DWG. No. WS-SL-02	REV No. 7 / SHT. 2 of 2 SHTS
DATE	APRIL 10, 03		SCALE	N.T.S.				