NO SPLICE IN BOTTOM THIRD OF POLE HEIGHT

100% PEN-WELDED & 100% MAG. PARTICAL TESTED

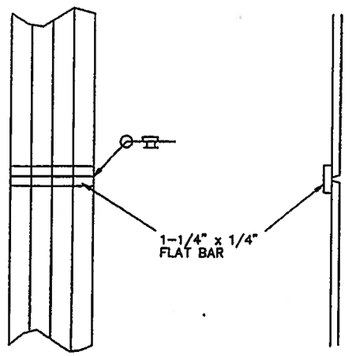

POLE BUTT WELD DETAIL

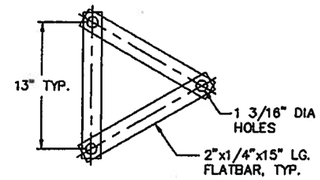

STRAP TEMPLATE DETAIL

PLACE OVER ANCHOR BOLTS (GALVANIZING NOT REQUIRED FOR STRAP TEMPLATE.)

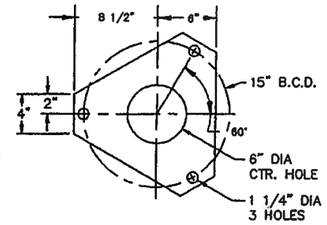

WS-SL-KP

KEEPER PLATE DETAIL

GALVANIZED 28GA SHEET

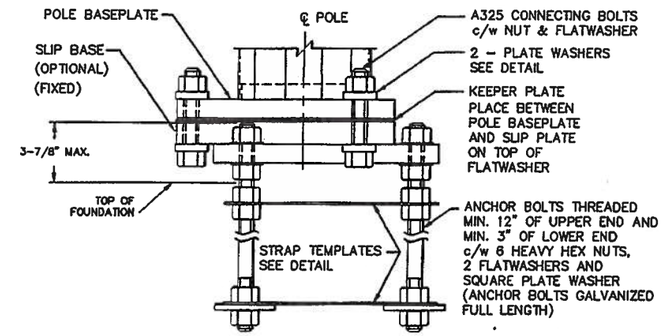

SLIP BASE ASSEMBLY

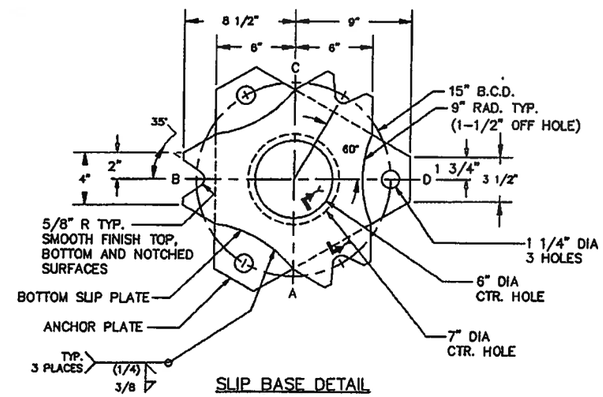

SLIP BASE DETAIL

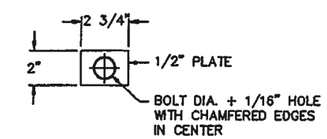

PLATE WASHER DETAIL

DRAIN SLOT TABLE	
POLE I.D.	"X"
LESS THAN 8"	SLOT NOT REQ.
8" TO 8.99"	0.50"
9" TO 9.99"	1.0"
10" +	1.5"

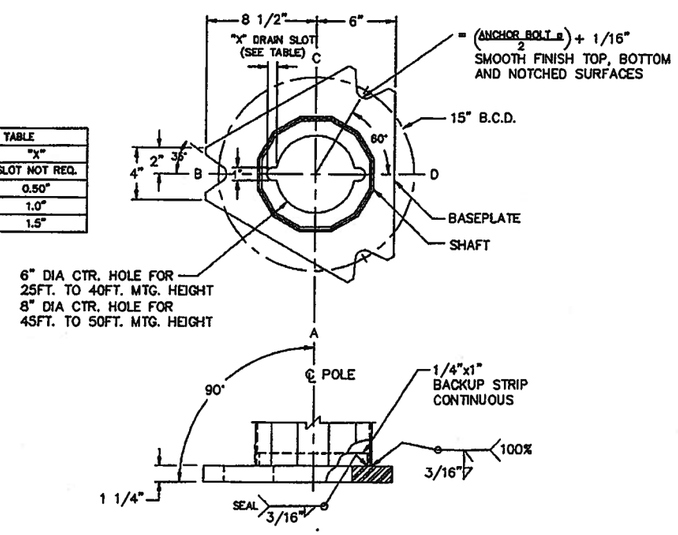

POLE BASEPLATE ATTACHMENT DETAIL

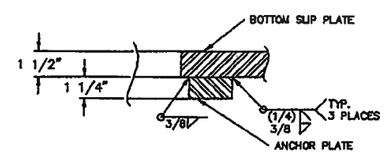

SECTION Y-Y

APPROVED
Manufacturer's Pole Plan
Approved For Listing As A
Pre-Approved Drawing
WSDOT Bridge & Structures Office
By GB Date 6-20-2011

No. REQ'D.	W.O. No.	FILE No.	DATE	P.O. No.			CUSTOMER	LOCATION
7	CHANGED WELD SEAM NOTES			ECH		JUNE 9 2011		
6	UPDATED DRAWING AS PER D. Bedi ADDED SHEET 2			CMK		MAY 18 2010		
5	UPDATED DRAWING AS PER D. Bedi NOTES AUG 28-2008			DRK		AUG 28 2008		
4	UPDATED DRAWING AS PER T LACH NOTES AUG 14-2008			DRK		AUG 18 2008		
REV.No.	CHANGE			BY	APP.	DATE		

APS L.L.C.
American Pole Structures L.L.C.

TITLE
STATE OF WASHINGTON
DAVIT TYPE ST. LIGHT POLES

DRAWN BY	L.B.	APP. BY	S.B.	DWG. No.	REV. No.	SHT. 2 of 2 SHTS.
DATE	APRIL 10, 03	SCALE	N.T.S.	WS-SL-01	7	